STATE OF CALIFORNIA • DEPARTMENT OF TRANSPORTATION

TECHNICAL REPORT DOCUMENTATION PAGE

TR0003 (REV 10/98)

ADA Notice

For individuals with sensory disabilities, this document is available in alternate formats. For information call (916) 654-6410 or TDD (916) 654-3880 or write Records and Forms Management, 1120 N Street, MS-89, Sacramento, CA 95814.

1. REPORT NUMBER	2. GOVERNMENT ASSOCIATION NUMBER	3. RECIPIENT'S CATALOG NUMBER
FHWA/CA/SD/2004/01		

4. TITLE AND SUBTITLE	5. REPORT DATE
Vehicular Crash Tests of The California ST-20 Bridge Rail	July 2004
	6. PERFORMING ORGANIZATION CODE
7. AUTHOR	8. PERFORMING ORGANIZATION REPORT NO.
John Jewell	FHWA/CA/SD/2004/01
9. PERFORMING ORGANIZATION NAME AND ADDRESS	10. WORK UNIT NUMBER
Materials Engineering and Testing Services California Department of Transportation 5900 Folsom Blvd. Sacramento, CA. 95819	11. CONTRACT OR GRANT NUMBER F2000SD202
12. SPONSORING AGENCY AND ADDRESS	13. TYPE OF REPORT AND PERIOD COVERED
California Department of Transportation 5900 Folsom Blvd. Sacramento CA. 95819	Final
	14. SPONSORING AGENCY CODE

15. SUPPLEMENTARY NOTES

This project was performed in cooperation with the US Department of Transportation, Federal Highway Administration, under the research project titled “F2000SD202”.

16. ABSTRACT

Over the course of this project a see-through steel bridge rail (Type California ST-20) was developed and tested. The ST-20, as tested, is at the limits of meeting the NCHRP Report 3501 TL-4 test matrix. The bridge rail also met the requirements established in the AASHTO Bridge Design Specifications2 for use as a bicycle rail and is considered an aesthetically pleasing see-through bridge rail. The barrier, as tested, uses steel posts at 3-m spacing to support four boxbeam rails and one additional handrail to meet the height requirements for bicycles. Because the ST-20 is based on a TL-4 bridge rail from Wyoming DOT3,4, only Test 4-11 (NCHRP Report 350) was considered necessary. Results from Test 4-11 and the computer modeling indicated that the ST-20 passed NCHRP Report 350. However, the level of hood snagging demonstrated that the ST-20 pushed the limits of acceptability. In order to lessen the level of hood snagging, the ST-20 was redesigned with deeper rail elements and given the new designation of California ST-20S. Because the ST-20S resists hood snagging more than the ST-20, the California ST-20S is recommended for approval on California highways requiring TL-4 bridge rails without further testing.

17. KEY WORDS	18. DISTRIBUTION STATEMENT
Bridge Rail, See-through, ST-20, Steel, TL-4, ST-20S, bicycle, Wyoming	No Restrictions. This document is available through the National Technical Information Service, Springfield, VA 22161

19. SECURITY CLASSIFICATION *(of this report)*	20. NUMBER OF PAGES	21. COST OF REPORT CHARGED
Unclassified	59	

Reproduction of completed page authorized.

VEHICULAR CRASH TESTS OF THE CALIFORNIA ST-20 BRIDGE RAIL

FINAL REPORT # FHWA/CA/SD/2004/01

STATE OF CALIFORNIA

DEPARTMENT OF TRANSPORTATION

ENGINEERING SERVICES

MATERIALS ENGINEERING AND TESTING SERVICES

July 2004

Supervised by ..... Dan Speer, P.E.

Principal Investigator ..... Sudhakar Vatti, P.E.

Report Prepared by ..... John Jewell, P.E.

Research Performed by ..... Roadside Safety Technology Branch

July, 2004

STATE OF CALIFORNIA
DEPARTMENT OF TRANSPORTATION
ENGINEERING SERVICES
MATERIALS ENGINEERING AND TESTING SERVICES

VEHICULAR CRASH TESTS OF THE CALIFORNIA ST-20 BRIDGE RAIL

FINAL REPORT # FHWA/CA/SD/2004/01

CALTRANS STUDY # 680323

Supervised by ..... Dan Speer, P.E.

Principal Investigator ..... Sudhakar Vatti, P.E.

Report Prepared by ..... John Jewell, P.E.

Research Performed by ..... Roadside Safety Technology Branch

DANIEL H. SPEER, Chief
Office of Structural Materials
Materials Engineering and Testing Services
Division of Engineering Services

SUDHAKAR VATTI, Chief
Roadside Safety Technology Branch
Office of Structural Materials
Materials Engineering and Testing Services

PHIL STOLARSKI
Deputy Division Chief
Materials Engineering and Testing Services
Division of Engineering Services

July, 2004

NOTICE

The contents of this report reflect the views of the Materials Engineering and Testing Services, which is responsible for the facts and the accuracy of the data presented herein. The contents do not necessarily reflect the official views or policies of the State of California or the Federal Highway Administration. This report does not constitute a standard specification or regulation.

Neither the State of California nor the United States Government endorses products or manufacturers. Trade or manufacturers' names appear herein only because they are considered essential to the objective of this document.

SI CONVERSION FACTORS

To Convert From	To	Multiply By
	ACCELERATION	
m/s^2	ft/s^2	3.281
	AREA	
m^2	ft^2	10.76
	ENERGY	
Joule (J)	$ft\text{-}lb_f$	0.7376
	FORCE	
Newton (N)	lb_f	0.2248
	LENGTH	
m	ft	3.281
m	in	39.37
cm	in	0.3937
mm	in	0.03937
	MASS	
kg	lb_m	2.205
	PRESSURE OR STRESS	
kPa	psi	0.1450
	VELOCITY	
km/h	mph	0.6214
m/s	ft/s	3.281
km/h	ft/s	0.9113

ACKNOWLEDGMENTS

This work was accomplished in cooperation with the United States Department of Transportation, Federal Highway Administration.

Special appreciation is due to the following staff members of Materials Engineering and Testing Services and the Division of Research and Innovation for their enthusiastic and competent help on this project:

Thanks to Mike White, Mike O'Keeffe, Erin McCrory and Larry Moore for test preparation, data reduction, vehicle preparation, and film processing. Thanks to Dave Bengal, Independent Camera Operator. Thanks to Bob Cullen, Eric Jacobson and Ed Ung for their help with the electronic instrumentation. Thanks to Bill Poroshin, Michael Said, and Martin Zanotti for their support in the machine shop.

Other persons from Caltrans also making important contribution include: Nahed Abdin (Division of Engineering Services - Office of Structures) helped with the general design and structural calculations. Ellis Hirst (Division of Traffic Operations - Safety) acted as the Traffic Operation consultant. Don Tateishi (Headquarters Photography) helped to ensure that our photographic record was complete.

Additional thanks also go to Robert J. Frank Construction for their quick response and willingness to make changes in mid-construction.

TABLE OF CONTENTS

NOTICE ..... **II**

1. INTRODUCTION **1**

1.1. PROBLEM 1
1.2. OBJECTIVE 1
1.3. BACKGROUND 1
1.4. LITERATURE SEARCH 5
1.5. SCOPE 6

2. TECHNICAL DISCUSSION **6**

2.1. BARRIER DESIGN 6
2.2. TEST CONDITIONS 7
2.2.1. Test Facilities *7*
2.2.2. Construction *8*
2.2.3. Test Vehicle *13*
2.2.4. Data Acquisition System *16*
2.3. TEST 651 16
2.3.1. Impact Description and Results *16*
2.3.2. Barrier Damage *18*
2.3.3. Vehicle Damage *20*
2.4. DISCUSSION OF TEST RESULTS 25
2.4.1. General - Evaluation Methods *25*
2.4.2. Structural Adequacy *25*
2.4.3. Occupant Risk *25*
2.4.4. Vehicle Trajectory *25*

3. CONCLUSIONS **28**

4. RECOMMENDATIONS **28**

5. IMPLEMENTATION **29**

6. APPENDIX **30**

6.1. TEST VEHICLE EQUIPMENT 30
6.2. TEST VEHICLE GUIDANCE SYSTEM 32
6.3. PHOTO - INSTRUMENTATION 32
6.4. ELECTRONIC INSTRUMENTATION AND DATA 34
6.5. COMPUTER MODELING OF ST-20 37
6.6. DETAILED DRAWINGS 44

7. REFERENCES **50**

LIST OF FIGURES

Figure 1-1 - Type 18 2
Figure 1-2 - Type 115 3
Figure 1-3 - Wyoming Bridge Rail 4
Figure 1-4 - Type 80 Bridge Rail 4
Figure 1-5 - California ST-10 5
Figure 2-1 - California ST-20 7
Figure 2-2 - Site Excavation 8
Figure 2-3 - Formwork 9
Figure 2-4 - Anchor Block Reinforcing Steel and Forms 10
Figure 2-5 - Overhang Steel and Forms 10
Figure 2-6 - Curb Concrete with Protruding Post Bolts 11
Figure 2-7 - Post-to-Curb Connection 12
Figure 2-8 - Handrail Position and Weld Set-up 12
Figure 2-9 - Completed ST-20 Barrier Prior to Testing 13
Figure 2-10 - Test Vehicle 651, Right Side 14
Figure 2-11 - Test Vehicle 651, Front Right Corner 14
Figure 2-12 - Test Vehicle 651, Underside of the Hood 15
Figure 2-13 - Test Vehicle 651, Right Hinge 15
Figure 2-14 - Test 651 Vehicle Relative to Barrier Elevations 16
Figure 2-15 - Test 651 Hood Buckling, 66 ms After Impact 17
Figure 2-16 - Test 651 Maximum Hood Penetration, 64 ms After Impact 18
Figure 2-17 - Test 651 Rail Scuffing 19
Figure 2-18 - Test 651 Post 3 Scuffing 19
Figure 2-19 - Test 651 Vehicle Damage, Front Right Corner 20
Figure 2-20 - Test 651 Vehicle Damage, Hood and Windshield 21
Figure 2-21 - Test 651 Vehicle Damage, Right Side of Truck Bed 21
Figure 2-22 - Test 651 Vehicle Damage, Floor Deformation 22
Figure 2-23 - Test 651 Data Summary Sheet 23
Figure 4-1 - California ST-20S (Proposed) 29
Figure 6-1 - Camera Locations 33
Figure 6-2 - Tape Switch Layout 34
Figure 6-3 - Vehicle Accelerometer Sign Convention 36
Figure 6-4 - Test 651 Vehicle Longitudinal Acceleration, Velocity and Distance -Vs- Time 41
Figure 6-5 - Test 651 Vehicle Lateral Acceleration, Velocity and Distance -Vs- Time 42
Figure 6-6 - Test 651 Vehicle Roll, Pitch and Yaw -Vs- Time 43
Figure 6-7 - California ST-20 Detail No. 1 (Tested Barrier) 45
Figure 6-8 - California ST-20 Detail No. 2 (Tested Barrier) 46
Figure 6-9 - California ST-20 Detail No. 3 (Transition Design) 47
Figure 6-10 – California ST-20S Detail No. 1 (Proposed Design Change to ST-20) 48

LIST OF TABLES

TABLE 1-1 - TEST MATRIX 1
TABLE 1-2 - TARGET IMPACT CONDITIONS 6
TABLE 2-1 - CONCRETE STRENGTHS 9
TABLE 2-2 - TEST 651 ASSESSMENT SUMMARY 26
TABLE 2-3 - VEHICLE TRAJECTORIES AND SPEEDS 27
TABLE 6-1 - TEST 651 VEHICLE DIMENSIONS 31
TABLE 6-2 - CAMERA TYPES AND LOCATIONS 33
TABLE 6-3 - ACCELEROMETER SPECIFICATIONS FOR TEST 651 35

1. INTRODUCTION

1.1. Problem

California has a number of scenic highways, some of which must be able to handle everything from trucks to bicycles. A bridge rail that has to handle highway-speed truck traffic must meet NCHRP Report 350 guidelines at a TL-4 rating. Bridges that also handle regular bicycle traffic must also satisfy the AASHTO Bridge Design Specifications for bicycle rails. The problem is designing a bridge rail that minimizes the impact on scenic views while at the same time is acceptable as a bicycle rail and has a TL-4 rating.

1.2. Objective

The objective of this project was to develop/modify and crash test a bridge rail that will successfully meet the NCHRP Report 350 TL-4 test matrix (see Table 1-1 below). The bridge rail must also meet the requirements established in the AASHTO Bridge Design Specifications and minimize the impact on potentially scenic views.

Table 1-1 - Test Matrix

Test Designation	Vehicle	Nominal Speed (Km/h)	Nominal Angle, ø (deg)
4-10*	820C	100	20
4-11	2000P	100	25
4-12**	8000S	80	15

* Test 4-10 was considered unnecessary because the Wyoming barrier, upon which the ST-20 is based, has wider opening between the curb and rails. Therefore the ST-20 bridge rail is considered a more conservative rail than the Wyoming rail. (See Section 1.3 below).

** Test 4-12 was considered unnecessary because the Wyoming barrier, upon which the ST-20 is based, is taller, has more longitudinal rail, and has thicker post plates. Therefore, the ST-20 bridge rail should perform as well as, or better than, the Wyoming rail. (See Section 1.3 below).

1.3. Background

For many years California has prided itself on the aesthetics of its highway bridges. Where possible, the California Department of Transportation's bridge personnel have tried to design bridge rails that are aesthetically pleasing, yet still meet current crash-testing guidelines.

Many bridge rails have been designed to incorporate both aesthetics and function. Baluster rails made from either steel or concrete were very common in the 1950's and earlier. They

allowed for good see-through characteristics, but were not very crashworthy. In order to meet the increasing need for safer barriers, bridge rails of the early 1960's had concrete parapets with steel or aluminum rails 250 to 300 mm above the parapet. Use of the parapet rails was eventually phased out due, in part, to problems with hood snagging and rail failure. In the 1970's and 80's greater emphasis was placed on designing all-steel bridge rails, resulting in the Type 18 bridge rail (Figure 1-1) in 1983 and the Type 115 bridge rail (Figure 1-2) in 1989. Neither of these steel designs was tested to the current NCHRP Report 350 guidelines.

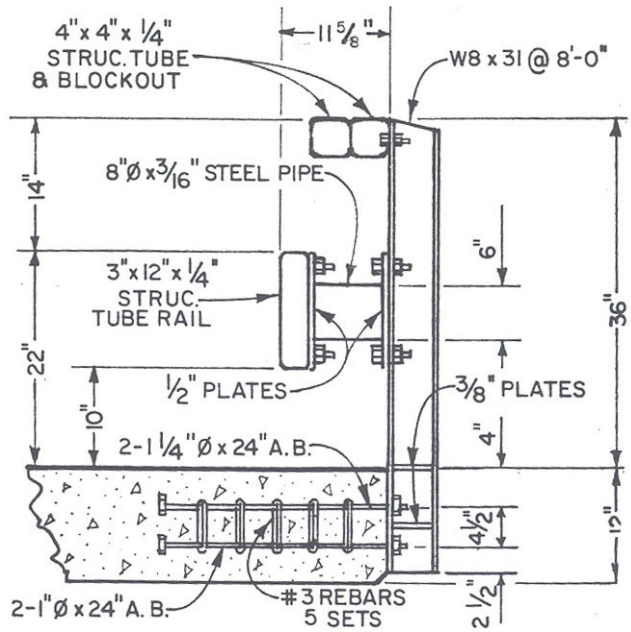

Figure 1-1 - Type 18

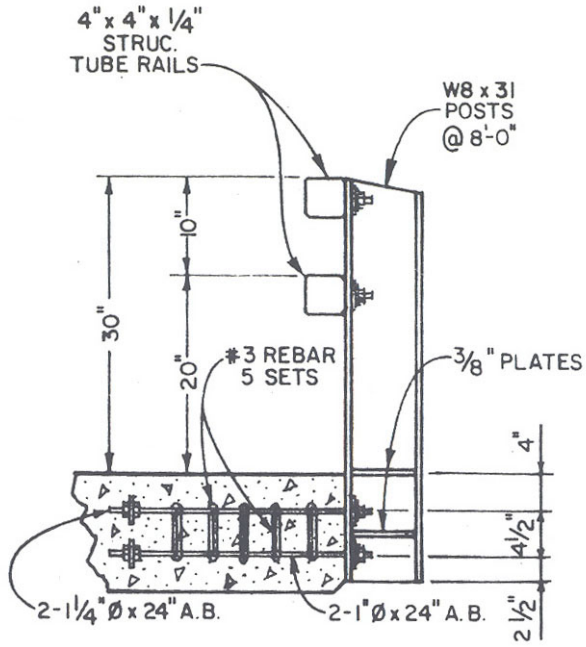

Figure 1-2 - Type 115

The Wyoming Department of Transportation developed a steel TL-4 bridge rail in the mid-1990's that was tested under NCHRP REPORT 350 guidelines by the Texas Transportation Institute and accepted by the Federal Highway Administration. The design incorporates a 150-mm curb with a total rail height of 830 mm. It has two rail elements. The top rail is a TS 152 x 102 x 7.9 box-beam and the bottom rail is a TS 152 x 76 x 6.4 box-beam. A problem with bumper snagging was detected during testing, but was not considered to be sufficient basis to fail the test.

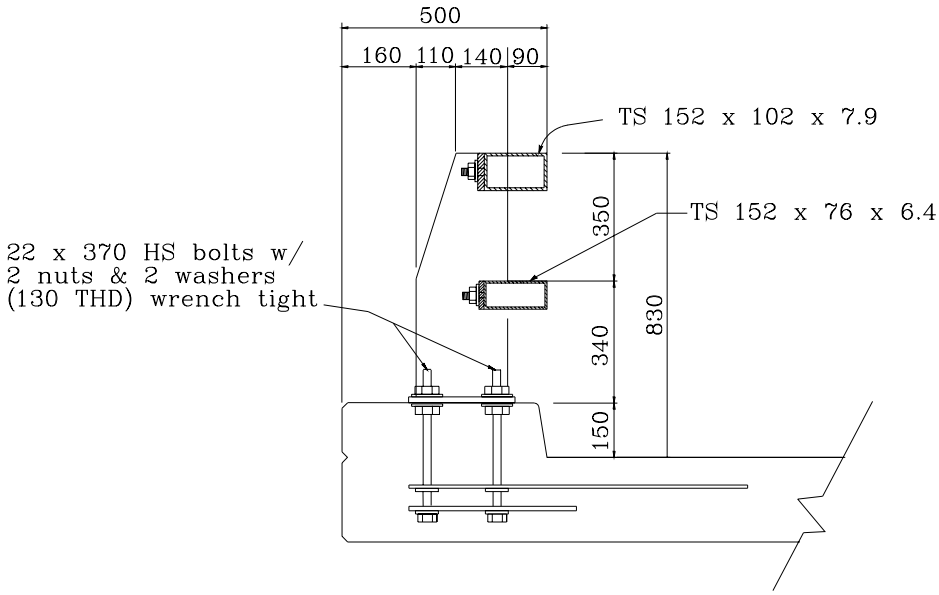

Figure 1-3 - Wyoming Bridge Rail

In 1999 a concrete, see-through bridge rail, designated the Type 80, was tested by Caltrans to a TL-4 rating. Concrete, instead of steel, was used as the structural material on the Type 80 because of its low-maintenance properties in locations near the ocean. This bridge rail design however, sacrificed some see-through potential for increased strength. Attempting to modify the Type 80 to satisfy the bicycle rail specifications would have compromised the see-through characteristics of the Type 80 even further.

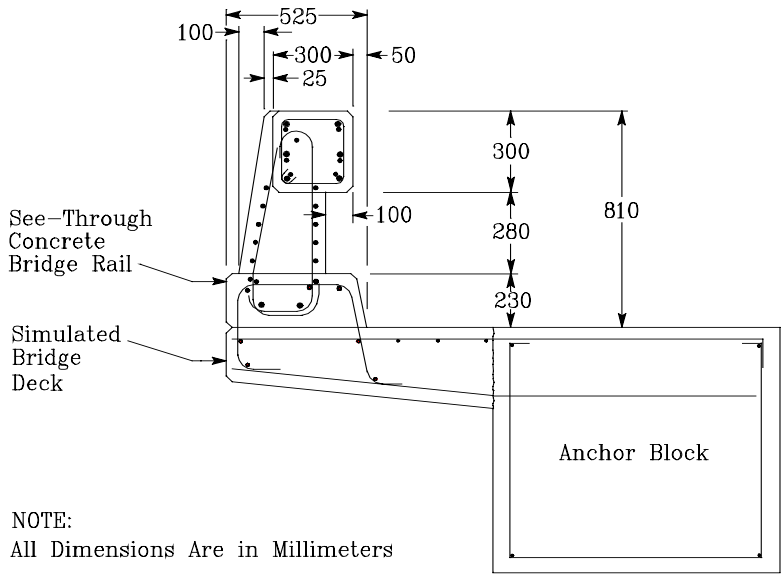

Figure 1-4 - Type 80 Bridge Rail

Since steel has a higher strength-to-weight ratio, and could therefore have greater see-through characteristics than concrete, it was decided the next series of see-through bridge rails would incorporate steel as the primary structural component. The work done by Wyoming and TTI was used as a starting point for design work. The California ST-10 (Figure 1-5) is a modification of the Wyoming TL-4 bridge rail. Modifications were made to overcome some of the snagging issues that were detected during crash testing. This was accomplished by increasing the size of the face of the lower rail from 76 mm to 102 mm.

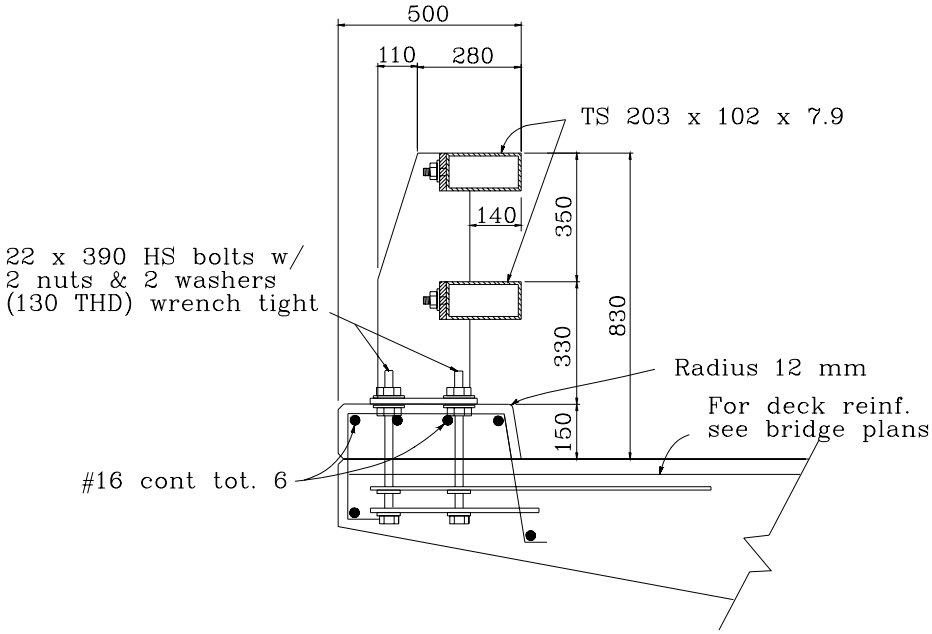

Figure 1-5 - California ST-10

1.4. Literature Search

A search for information about see-through TL-4 bridge rails that would also meet the requirements as a bicycle rail was conducted. Since the starting point for this design was the California ST-10 Bridge Rail, the literature search was narrowed to reports that would dictate the design parameters and test requirements for a bicycle-friendly variation of the ST-10. The literature search included a review of the report database located at Caltrans' Roadside Safety Technology Branch and at the Caltrans Headquarters Library in Sacramento.

The literature research led to the understanding that some work had been done on TL-2 bicycle-friendly bridge rails. However, very little work had been done in the area of TL-4 bridge rails that are bicycle-friendly.

1.5. Scope

One full-scale crash test was performed and evaluated in accordance with NCHRP Report 350. Computer modeling was also performed with the intent of determining the level of snagging and the critical impact point. The test matrix established for this project is shown in Table 1-2 below. The primary purpose of the test was to determine if the hood would snag on a post causing the hood to rotate back into the windshield.

Table 1-2 - Target Impact Conditions

Test Number	Barrier Type	Vehicle Mass (kg)	Nominal speed (Km/h)	Nominal Impact Angle, ø (deg)
651	ST-20	2000	100	25

Applied Research Associates, Inc. did computer modeling on the ST-20 design. (Results of the modeling are shown in the Appendix in Section 6.5.). Because the computer modeling indicated a potential for hood snagging, it was determined that the critical impact point would be mid-span between two posts.

2. TECHNICAL DISCUSSION

2.1. Barrier Design

The design criteria for the ST-20 were:

1. Must meet NCHRP Report 350, Test Level-4
2. Must meet the bicycle requirements established in the AASHTO "2000 Guide Specifications for Bridge Rails"
3. Good Aesthetics
4. Good see-through characteristic for the motoring public
5. Preference for steel construction materials[1]

The Wyoming barrier (see Section 1.3) was evaluated and later modified by Caltrans in order to lower the snag potential of the barrier. The new bridge rail designation was the California ST-10. The ST-10 was approved internal to Caltrans Traffic Operations Program in November 2003 and was the starting point for what was to become the California ST-20.

The ST-20 was modified from the ST-10 in the following ways:

(Refer to Figure 2-1 - California ST-20, and Figure 6-7 through Figure 6-9)

[1] The California Coastal Commission preferred steel because of aesthetics and greater see-through potential.

1. The ST-20 has 4-horizontal box-beam rail elements, the top is TS 152 x 76 x 7.9, the bottom is TS 152 x 76 x 7.9 and the two middle rail elements are TS 152 x 102 x 7.9.
2. The gaps between the elements satisfy the bicycle/pedestrian requirements set forth in the 2000 AASHTO Bridge Design Specifications.
3. The height of the ST-20 is 1372 mm compared to 830 mm for the ST-10.
4. The ST-20 rail has two 16-mm-thick steel plates with nominal dimensions of 300 mm deep x 1016 mm tall compared to 250 x 664 for the ST-10. These plates act as posts for the box-beam rail elements.
5. The ST-20 has a tubular handrail on top of the vertical support to increase the height of the rail by 181 mm, thus meeting the 1370-mm bicycle height requirement.

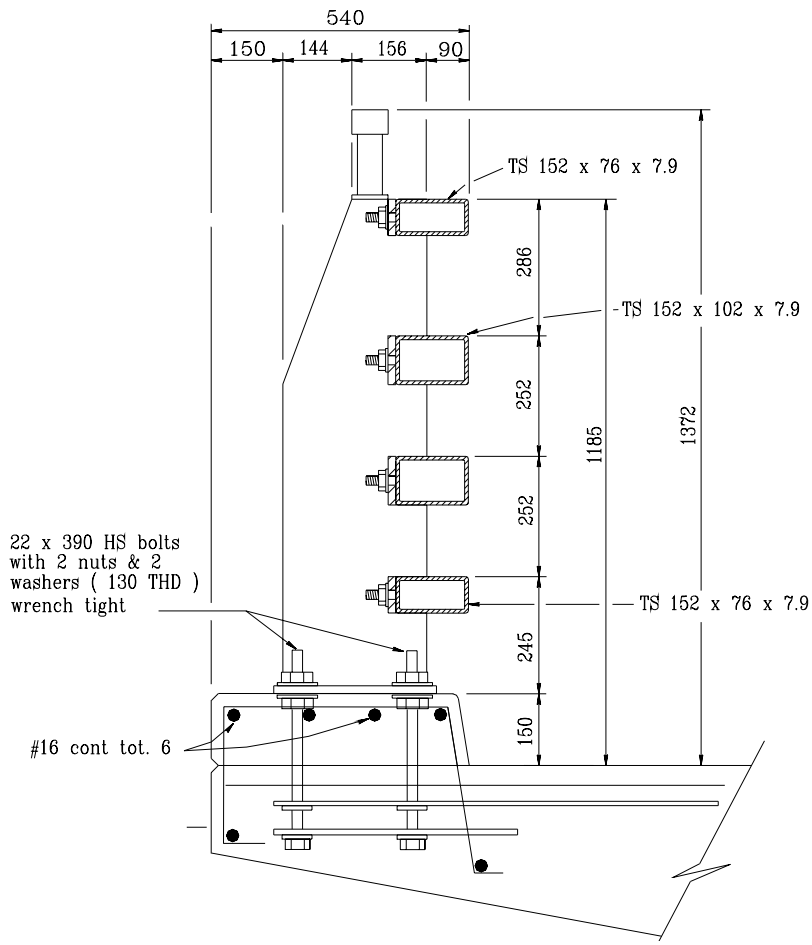

Figure 2-1 - California ST-20

2.2. Test Conditions

2.2.1. Test Facilities

The computer modeling work was done at Applied Research Associates, Inc. located in Mountain View, California.

Crash testing was conducted at the Caltrans Dynamic Test Facility in West Sacramento, California. The test area is a large, flat, asphalt concrete surface. At the time of testing there were no obstructions nearby except for a 2-m-high earth berm 40 m downstream from the end of the barrier.

2.2.2. Construction

The test barrier for the ST-20 was constructed at the north end of the Caltrans Dynamic Test Facility. The construction details for the test section are based on the detail drawings located in Section 6.6 of the Appendix.

The asphalt concrete was cut away and the underlying earth was removed to allow for the placement of the 1830 mm x 914 mm x 24.23 m anchor block and the simulated bridge deck overhang. The formwork for the concrete placement was fabricated adjacent to the excavation and put in place once the excavation was complete.

Figure 2-2 - Site Excavation

Figure 2-3 - Formwork

The concrete was placed in three phases: the anchor block, the overhang of the deck, and the curb for the ST-20 (see Figure 2-4 to Figure 2-9). The 28-day concrete strength for each section is shown in Table 2-1.

Table 2-1 - Concrete Strengths

Location	28-Day Strength (MPa)	28-Day Strength (psi)
Anchor Block	28.3	4100
Overhang	28.9	4190
Curb	32.9	4770

Once the formwork for the anchor block was complete, the reinforcing steel was positioned. Holes were drilled in the forms where some of the connection steel passed between the anchor block and the overhang (Figure 2-4).

Figure 2-4 - Anchor Block Reinforcing Steel and Forms

The anchor block was cast on July 28, 2003.

Figure 2-5 - Overhang Steel and Forms

The overhang was cast 3 days after the anchor block was cast. In order to protect the structural integrity of the concrete, no vehicles were allowed on the anchor block during work on the overhang and curb sections.

Figure 2-6 - Curb Concrete with Protruding Post Bolts

The concrete curb was cast one day after the overhang. Once the concrete had a ten-day cure, the posts and rails were bolted into position. The handrail was later welded to the top of the post. (See Figure 2-8 Figure 2-9). The steel was not treated because the testing of the barrier was schedule to take place immediately after the concrete had reached full strength. Field installations of the ST-20 will require treating the steel for protection from the environment.

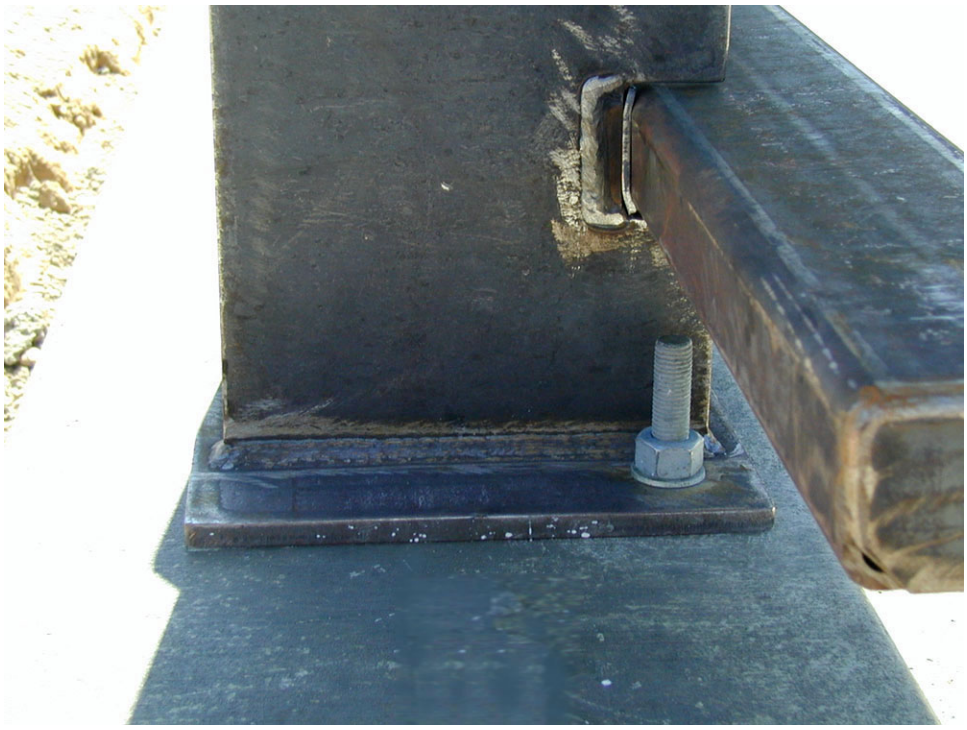

Figure 2-7 - Post-to-Curb Connection

Figure 2-8 - Handrail Position and Weld Set-up

Figure 2-9 - Completed ST-20 Barrier Prior to Testing

2.2.3. Test Vehicle

The test vehicle complied with NCHRP Report 350. The vehicle, a1992[2] Chevy 2500 was in good condition, free of major body damage and was not missing structural parts. It had standard equipment and a front-mounted engine. There was 47 kg of ballast added to the pickup bed. The inertial mass of 1961 kg was within recommended limits of NCHRP Report 350.

The pickup truck was self-powered. A speed-control device limited acceleration once the impact speed had been reached. Steering was accomplished by means of a guidance rail anchored to the ground. Remote braking was possible at any time during the test via radio control. A short distance before the point of impact the vehicle was released from the guidance rail and the ignition was turned off. A detailed description of the test vehicle equipment and guidance systems is contained in Sections 6.1 and 6.2 of the Appendix.

Since one of the primary purposes of this test was to ascertain the level of post snagging, additional photos of the hood and hinges are shown in Figure 2-10 through Figure 2-13.

[2] NCHRP Report 350 recommends that test vehicles be less than six years old at the time of testing. Although the vehicle was a 1992 (five years older than the NCHRP Report 350 age limit), the body style for the test vehicle is not significantly different from 1997 model, which is within the six-year age limit. The body style for the 2500 pickup did not change until 1999. In 1999 and 2000 the older body style was still available for new purchase.

Figure 2-10 - Test Vehicle 651, Right Side

Figure 2-11 - Test Vehicle 651, Front Right Corner

Figure 2-12 - Test Vehicle 651, Underside of the Hood

Figure 2-13 - Test Vehicle 651, Right Hinge

Figure 2-14 - Test 651 Vehicle Relative to Barrier Elevations

2.2.4. Data Acquisition System

The test was documented through the use of still cameras, video cameras, and transient data recorders (TDRs) to record accelerations and rotational rate changes.

The impact phase of the crash test was recorded with seven high-speed digital video cameras, one Beta format video camera, and one 35-mm still camera. The test vehicle and the barrier were photographed before and after impact with a normal-speed Beta format video camera and a color 35-mm still camera. A video report of this project was assembled using edited portions of the recorded coverage.

Two sets of orthogonal accelerometers were mounted at the center of gravity of the test vehicle. Rate gyro transducers were also placed at the center of gravity of the test vehicle to measure the roll, pitch and yaw rates. The data were used in calculating the occupant impact velocities, ridedown accelerations, and maximum vehicle rotation.

A TDR, manufactured by GMH Engineering and referred to as a Data Brick II, was used to record electronic data during the tests. The digital data were analyzed using a desktop computer.

2.3. TEST 651

2.3.1. Impact Description and Results

The vehicle tracked smoothly into the barrier, impacting 815 mm downstream of post #2. The impact point, mid-span between posts #2 and #3, was selected to ensure the maximum hood

penetration. The impact speed and angle were 100.4 km/h and 26 degrees, respectively. At 15 ms past impact the hood and right fender started to buckle. The hood passed between the top two rail elements (excluding the handrailing) (Figure 2-15).

Figure 2-15 - Test 651 Hood Buckling, 66 ms After Impact

Maximum penetration of the hood occurred 64 ms after initial contact. From the overhead camera angle (see Figure 2-16), the hood penetrated 410 mm past the face of the barrier (or 320 mm past the face of the post). At 70 ms the hood contacted the third post. The leading edge of the hood started to pull away from the bridge rail as the back of the hood started to rotate back toward the windshield. A fold in the hood knocked the windshield wiper blade back, but did not penetrate the windshield. The hood lost contact with the third post 96 ms after impact.

The vehicle continued to track smoothly into the barrier. It was parallel to the rail at 180 ms.. Contact between the vehicle and the ST-20 ended 260 ms after impact at which point the exit angle was 0 degrees. The subsequent exit trajectory was 8 degrees

Although impact caused the right front tire to lock up, the vehicle continued to track in a straight line until coming to rest on an earth berm about 40 m downstream of the test barrier.

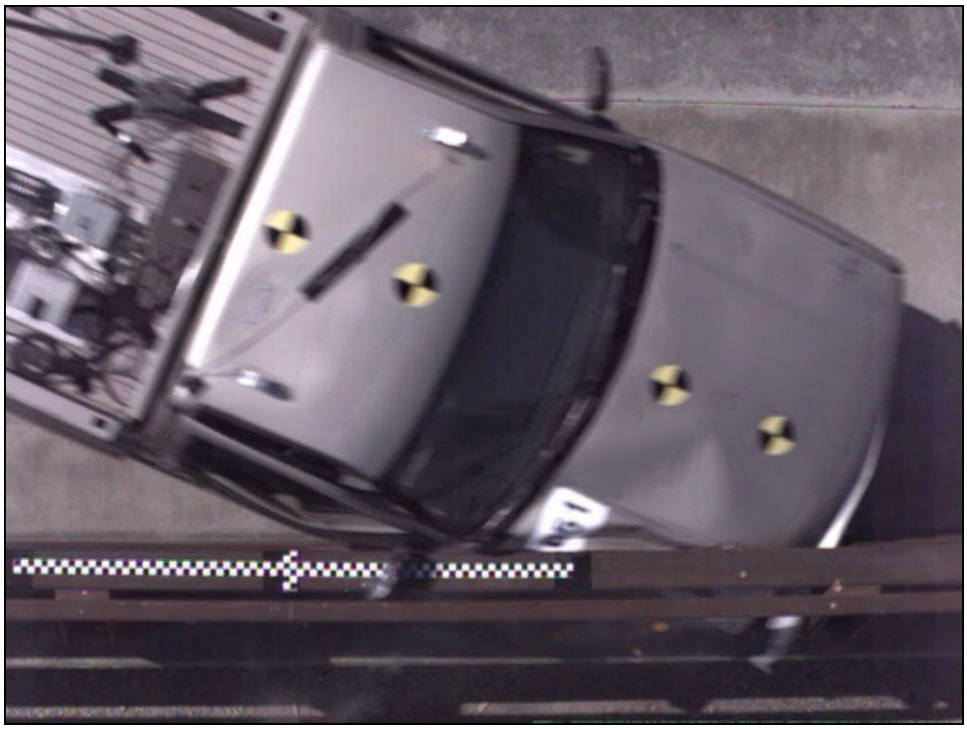

Figure 2-16 - Test 651 Maximum Hood Penetration, 64 ms After Impact

2.3.2. Barrier Damage

Barrier damage was limited to minor spalling of the concrete curb and minor deflection of the rail. Rail deflections were measured mid-span between posts 2 and 3. The maximum dynamic deflection of the top rail of the ST-20 was 25 mm. The maximum permanent deflection of the barrier was 5 mm. Damage to the barrier was considered cosmetic and would not have required field repairs.

Figure 2-17 - Test 651 Rail Scuffing

Figure 2-18 - Test 651 Post 3 Scuffing

2.3.3. Vehicle Damage

The front right corner of the test vehicle sustained most of the damage. Additional damage also occurred to the windshield, the right side door, the side of the truck bed, and the floorboard of the passenger side of the cab.

The grill, bumper and hood sustained damage that indicates vehicle snagging (Figure 2-19). The right quarter of the grill was sheared off. The bumper was folded back. The right quarter of the hood was crumpled and pulled back toward the hinge. The hinge did not fail. The hood did not release from its latch. The front right tire was flat and the rim was damaged. Additionally, the wheel assembly was pushed back into the wheel well, eliminating the ability to steer the vehicle after the initial impact.

The windshield was severely cracked, but not penetrated (Figure 2-20). Cracks indicated that the windshield failed under flexure, instead of direct contact. The windshield wiper was pushed back and up.

The right door was jammed and creased. The roll-down window was broken inside the door cavity. There was a 100-mm separation between the cab and the top of the window frame. There was no evidence of the cab being compromised through the right door.

Figure 2-19 - Test 651 Vehicle Damage, Front Right Corner

Figure 2-20 - Test 651 Vehicle Damage, Hood and Windshield

Figure 2-21 - Test 651 Vehicle Damage, Right Side of Truck Bed

The floorboard buckled due to the tire being pushed back in the wheel well (Figure 2-22). The maximum floorboard deformation was 25 mm and was located at the rise of the transmission hump midway between the front and rear of the cab.

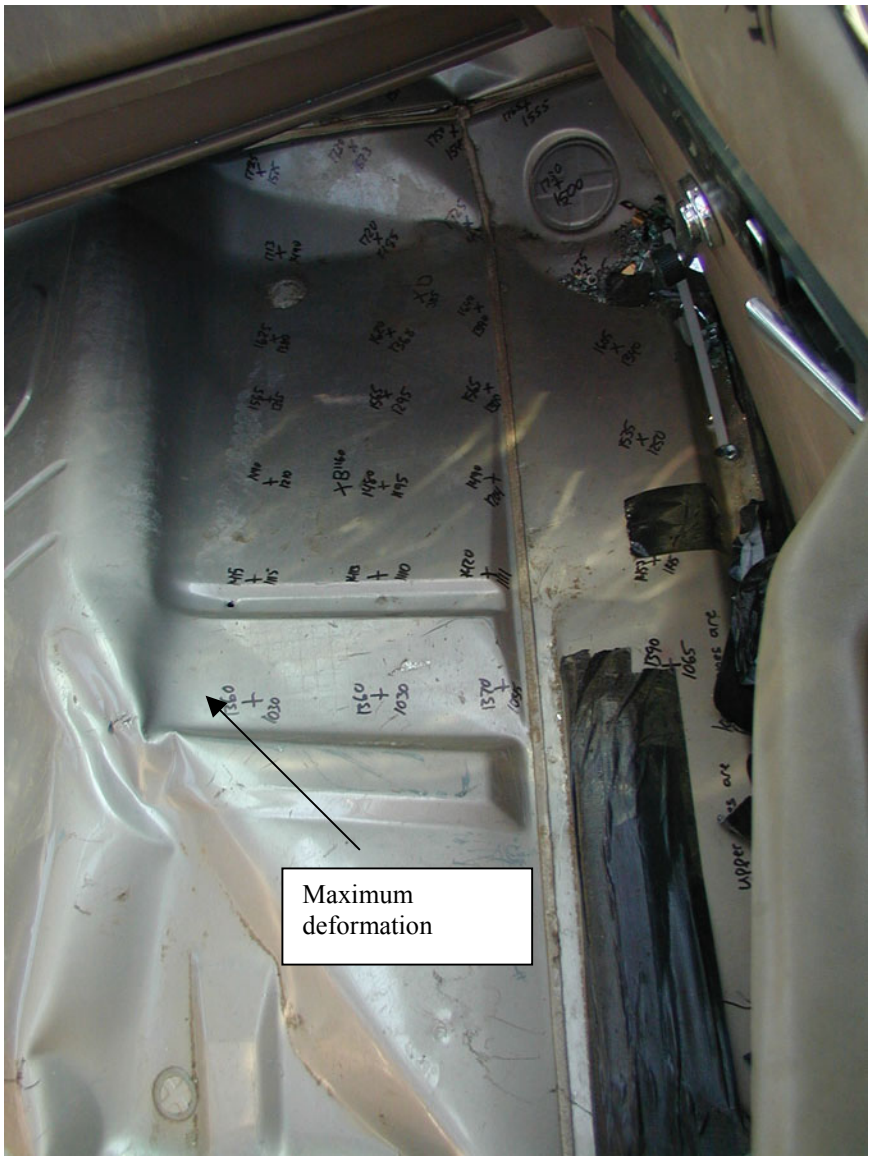

Figure 2-22 - Test 651 Vehicle Damage, Floor Deformation

Figure 2-23 - Test 651 Data Summary Sheet

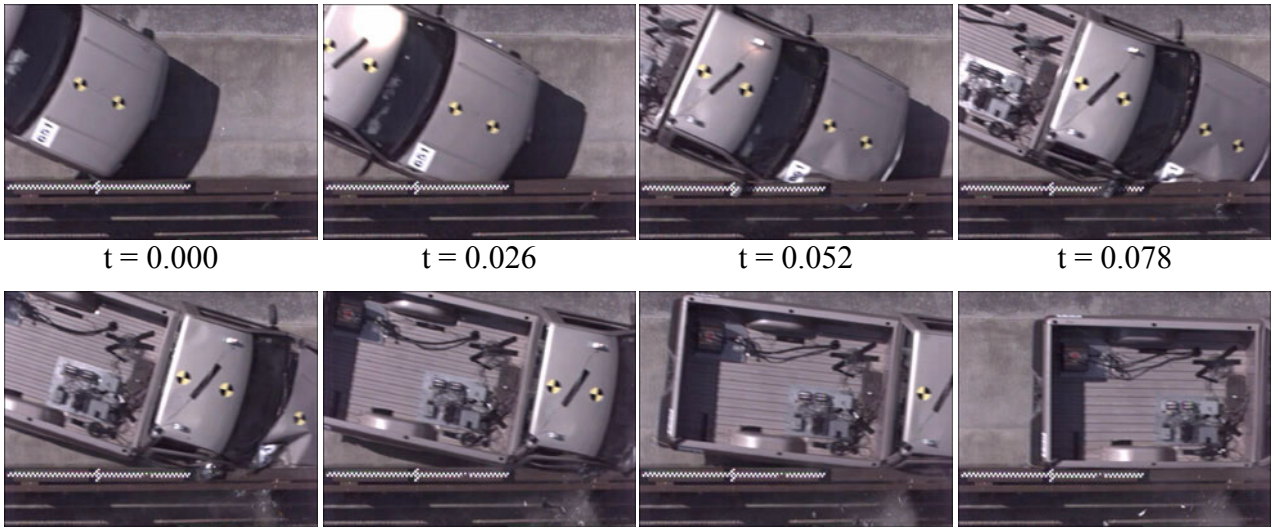

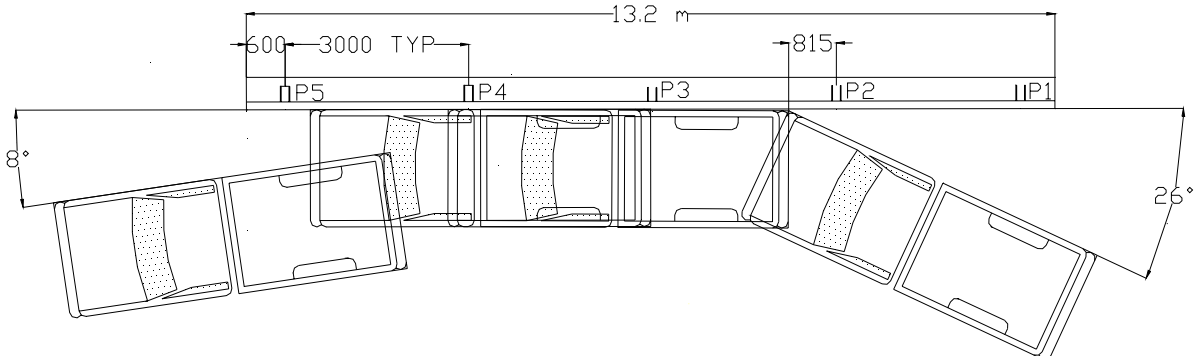

General Information:
- Test Agency ---------- California DOT
- Test Number ---------- 651
- Test Date ---------- September 30, 2003

Test Article:
- Name ---------- ST-20 Bridge Rail
- Installation Length --- 13.2 m
- Description ---------- 1372 mm-tall, steel, see-through bridge rail on a simulated bridge deck

Test Vehicle:
- Model ---------- 1992 Chevy 2500
- Inertial Mass ---------- 1961 kg

Impact Conditions:
- Velocity ---------- 100.4 km/h
- Angle ---------- °26

Exit Conditions:
- Velocity ---------- 83 km/h
- Angle ---------- 0°
- Trajectory ..... 8°

Test Dummy:
- Type ---------- NA
- Weight / Restraint ----- NA
- Position ---------- NA

Vehicle Interior:
- OCDI ---------- RF0001000
- VDS[5] FR-4
- CDC[6] 02RFEW6

Occupant Risk Values	*Longitudinal*	*Lateral*
Occupant Impact Velocity	6.18 m/s	Not avail.
Ridedown Acceleration	-7.00 g	Not avail.

The vehicle exited smoothly. The front right tire was locked up, but the vehicle continued to track off of the left front wheel.

2.4. Discussion of Test Results

2.4.1. General - Evaluation Methods

NCHRP Report 350 recommends that crash test performance be assessed according to three evaluation factors: 1) Structural Adequacy, 2) Occupant Risk, and 3) Vehicle Trajectory.

The structural adequacy, occupant risk and vehicle trajectory associated with the bridge rail testing were evaluated using the evaluation criteria found in Tables 3.1 and 5.1 of NCHRP Report 350.

2.4.2. Structural Adequacy

The structural adequacy is acceptable because the movement of the rail during these tests was acceptable. During the time of contact between the test vehicle and the barrier there were minor amounts of scraping and spalling. The permanent deflection to the rail (5 mm) would not have rendered the barrier ineffective and nor would it have required immediate repair. The rail elements did not buckle, nor show potential for buckling in the test performed.

A detailed assessment summary of the structural adequacy of this design is shown in (Table 2-2 - Test 651 Assessment Summary).

2.4.3. Occupant Risk

The occupant risk is at the limits of acceptability because the hood nearly penetrated the windshield. The debris from the test was limited to flying glass and plastic from the front of the vehicle. The floorboard deformation was 25 mm. The occupant compartment was not compromised. The yaw, pitch and roll of the vehicle were well within acceptable limits.

Please refer to Table 2-2 - Test 651 Assessment Summary of the occupant risk for the ST-20.

2.4.4. Vehicle Trajectory

The vehicle trajectory was acceptable. After impact, the vehicle tracked in a straight line. Although the vehicle trajectory brought it back into traffic, the exit angle and rate of return into traffic were minimal. The longitudinal occupant impact velocity and ridedown acceleration were each well below the maximums allowed.

Please refer to Table 2-2 - Test 651 Assessment Summary of the vehicle trajectory for the ST-20.

Table 2-2 - Test 651 Assessment Summary

Test No. 651
Date 9/30/2003
Test agency California Dept. of Transportation

Evaluation Criteria	Test Results	Assessment
Structural Adequacy		
A. Test article should contain and redirect the vehicle; the vehicle should not penetrate, underride, or override the installation although controlled lateral deflection of the article is acceptable	The vehicle was contained and smoothly redirected.	Pass
Occupant Risk		
D. Detached elements, fragments or other debris from the test article should not penetrate or show potential for penetrating the occupant compartment, or present an undue hazard to other traffic, pedestrians, or personnel in a work zone. Deformation of, or intrusions into, the occupant compartment that could cause serious injuries should not be permitted.	Only moderate amounts of rail scraping and concrete spalling were created during impact. The maximum floorboard deformation was 25 mm. There was no significant debris from the vehicle. The fact that the hood rotated back toward the windshield puts the ST-20 at the limits of acceptability. (Penetration of the windshield would have failed the test.).	Marginal pass
F. The vehicle should remain upright during and after collision although moderate roll, pitching and yawing are acceptable	The maximum roll, pitch and yaw were measured from film analysis to be 15°, 5°, and 26°, respectively. These are all acceptable.	Pass
Vehicle Trajectory		
K. After collision it is preferable that the vehicle's trajectory not intrude into adjacent traffic lanes	The vehicle maintained a relatively straight course after exiting the barrier. The exit trajectory was less than 8°	Pass
L. The occupant impact velocity in the longitudinal direction should not exceed 12 m/sec and the occupant ridedown acceleration in the longitudinal direction should not exceed 20 G's	The longitudinal occupant impact velocity and ridedown acceleration were 6.18 m/sec and –7 G's, respectively. Each are within the limits.	Pass
M. The exit angle from the test article preferably should be less that 60 percent of the test impact angle, measured at time of vehicle loss of contact with test device."	The exit angle was 0 degrees, which is less than 60% of impact angle. Less than the 15 degree maximum. (The exit trajectory for the center of mass was 8 degrees).	Pass

Longitudinal Occupant Impact Velocity limit (m/s)	Longitudinal Ridedown Acceleration limit (G's)
12	20

Table 2-3 - Vehicle Trajectories and Speeds

Test Number	Impact Angle [deg]	60% of Intended Impact Angle [deg]	Exit Angle [deg]	Impact Speed, V_i [km/h]	Exit Speed, V_e [km/h]	Speed Change $V_i - V_e$ [km/h]
651	26.0	15.0	0	100.4	83	17.4

3. CONCLUSIONS

Based on the performance of the computer modeling, the physical crash testing involved in this project, and the physical crash testing done by Texas Transportation Institute on the Wyoming TL-4 Bridge Rail, the following conclusions can be drawn:

1. The California ST-20 bridge rail can successfully redirect a 2000-kg pickup impacting at 100 km/h and 25 degrees with potential hood snagging that is at the limits of acceptability.

2. The California ST-20 bridge rail can successfully redirect a 8000-kg single unit cargo van impacting at 80 km/h and 15 degrees.

3. Damage to the California ST-20 in accidents similar to the testing done in this project will likely require minimal repairs, if any.

4. The California ST-20 bridge rail meets the criteria set in the National Cooperative Highway Research Program's Report 350 "Recommended Procedures for the Safety Performance Evaluation of Highway Safety Features" as a Test Level 4 Longitudinal Barrier.

4. RECOMMENDATIONS

1. It is recommended that the California ST-20, as tested, **not** be approved (see items 3-4 below)

2. It is recommended that the California ST-20 be modified in order to lessen the level of snagging demonstrated in Test 651. Modifications include extending the rail further away from the post by increasing the rail width an additional 50 mm and increasing the curb width by the same amount. (see Figure 4-1 and Figure 6-9)

3. It is recommended that the California **ST-20S** be approved for use as a TL-4 bridge rail.

4. Any redesign of this bridge rail should not allow for widening of the space between the rails or narrowing of the rail faces.

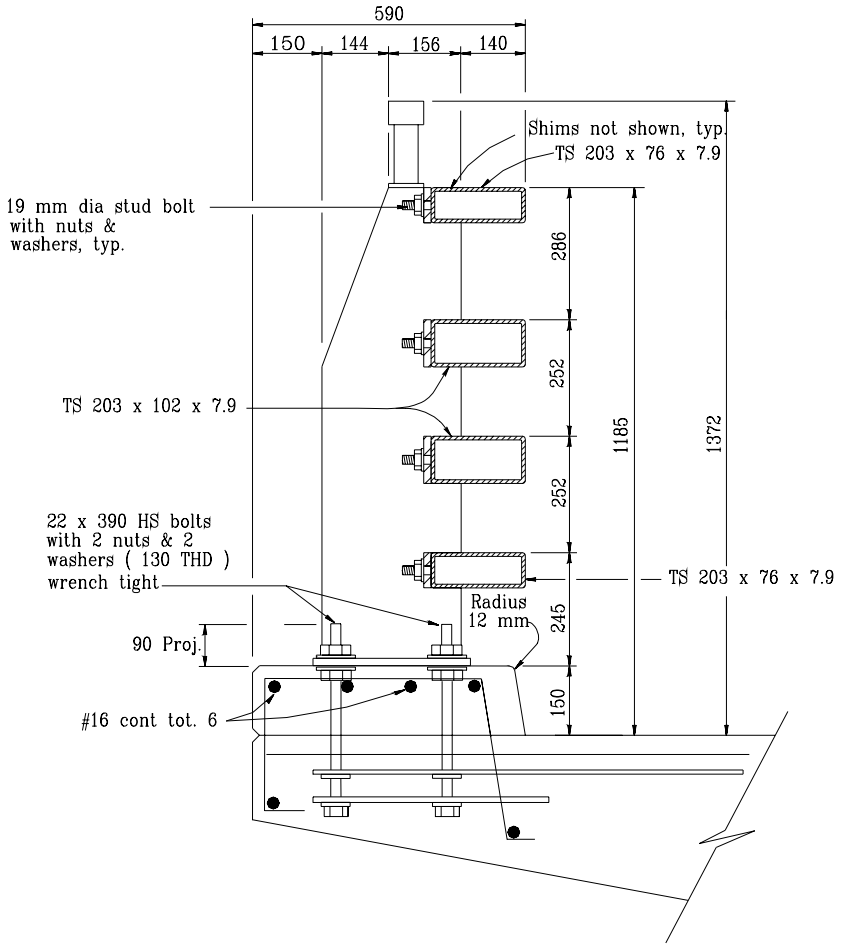

Figure 4-1 - California ST-20S (Proposed)

5. IMPLEMENTATION

The California Department of Transportation's Division of Engineering Services will be responsible for the preparation of Standard Plans (if required) and specifications for the California ST-20S bridge rail, with technical support from the Division of Materials Engineering and Testing Services and Headquarters Division of Traffic Operations.

6. APPENDIX

6.1. Test Vehicle Equipment

The test vehicle were modified as follows for the crash tests:

- The gas tank on the test vehicle was disconnected from the fuel supply line and drained. A safety gas tank was installed in the truck bed and connected to the fuel supply line. The stock fuel tanks had gaseous CO_2 added in order to purge the fuel vapors and eliminate oxygen.

- A 12-volt, gel-cell battery was mounted in the vehicle. The battery operated the solenoid-valve braking/accelerator system, powered the rate gyros and the electronic control box. A second pair of 12-volt, deep cycle gel-cell batteries powered the transient data recorders.

- A 2400-kPa CO_2 system, actuated by a solenoid valve, controlled remote braking after impact and could have been used for emergency braking if necessary. Part of this system includes a pneumatic ram, which was attached to the brake pedal. The operating pressure for the ram was adjusted through a pressure regulator during a series of trial runs prior to the actual test. Adjustments were made to assure the shortest stopping distance without locking up the wheels. When activated, the brakes could be applied in less than 100 milliseconds.

- The brakes were applied via radio control. Having a range of 3 km, the remote braking system, by GMH Engineering. The braking system could automatically engage in the event of a lost signal between the transmitter and the receiver.

- An accelerator switch was located on the rear fender. Activating the switch opened an electric solenoid which, in turn, released compressed CO_2 from a reservoir into a pneumatic ram that was attached to the accelerator pedal. The CO_2 pressure for the accelerator ram was regulated to the same pressure as the braking ram. In order to keep the gas pedal from depressing too quickly, a valve was used to adjust CO_2 flow rate to the accelerator ram.

- An electronic speed controller was used to regulate the speed of the test vehicle. This speed control measured the signal from the vehicle transmission speed sensor and cut power to the ignition coil based on the measured speed. Cutout speed could be adjusted by turning a potentiometer located on the speed controller.

- A microswitch was mounted below the front bumper and was connected to the ignition system. A trip plate on the ground near the impact point triggered the switch when the vehicle passed over it. The switch permanently opened the ignition circuit and shut off the vehicle's engine prior to impact.

Table 6-1 - Test 651 Vehicle Dimensions

DATE: 9/30/2003 **TEST NO:** 651 **VIN NO:** 1GTFC24H1NZ524869 **MAKE:** Chevy

MODEL: 2500 Pick-Up **YEAR:** 1992 **ODOMETER:** 141575 (MI) **TIRE SIZE:** LT225/75/R19

TIRE INFLATION PRESSURE (psi): LF 55 **RF** 55 **LR** 55 **RR** 55

MASS DISTRIBUTION (kg) LF 554 **RF** 529 **LR** 440 **RR** 437

DESCRIBE ANY DAMAGE TO VEHICLE PRIOR TO TEST: NONE

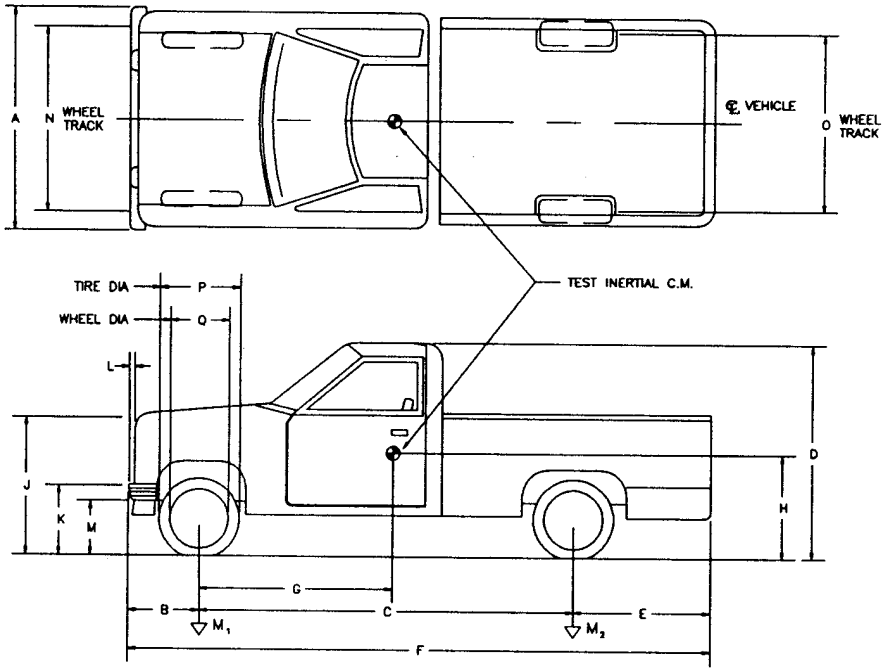

ENGINE TYPE: V8

ENGINE CID: 305

TRANSMISSION TYPE :

X **AUTO**

____ **MANUAL**

OPTIONAL EQUIPMENT:

A/C

DUMMY DATA:

TYPE: NA

MASS: NA

SEAT POSITION: NA

GEOMETRY (mm)

A 1920	**D** 1770	**G** 1499	**K** 625	**N** 1560	**Q** 440
B 860	**E** 1310	**H** not measured	**L** 80	**O** 1625	
C 3350	**F** 5520	**J** 1030	**M** 425	**P** 720	

MASS (kg)	**CURB**	**TEST INERTIAL**	**GROSS STATIC**
M1	1067	1079	1079
M2	809	882	882
MT	1876	1961	1961

6.2. Test Vehicle Guidance System

A rail guidance system directed the vehicle into the barrier. The guidance rail, anchored at 3.8-m intervals along its length, was used to guide a mechanical arm, which was attached to the front left wheel of the test vehicle. A plate and lever were used to trigger the release mechanism on the guidance arm, thereby releasing the vehicle from the guidance system before impact.

6.3. Photo - Instrumentation

Several high-speed video cameras recorded the impact during the tests. The types of cameras and their locations are shown in Figure 6-1 and Table 6-2.

All of these cameras were mounted on tripods except for three that were mounted on a 10.7 m-high tower directly over the impact point on the test barrier.

A manually operated video camera panned through the movement of the vehicle during the test. A tape switch located on the ground and connected to a computer was used to trigger the high-speed cameras. Both the vehicle and the barrier were photographed before and after impact with a normal-speed beta video camera, a 35-mm still camera, and a digital still camera. A video report of this project has been assembled using selected portions of the crash testing coverage.

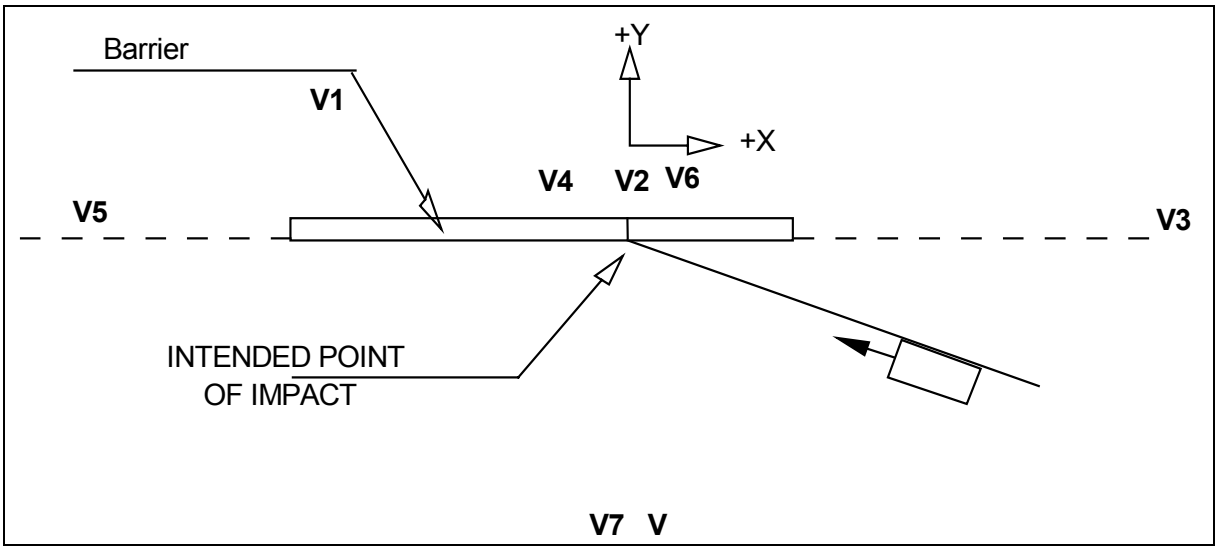

Figure 6-1 - Camera Locations

Typical Coordinates, m					
Camera Label	Camera Type	Rate: (fr./sec.)	Test 517		
			X*	Y*	Z*
V1	Visario 1	500	-22.7 m	9.5 m	1.2 m
V2	Visario 2	500	0.0 m	0.0 m	9.1 m
V3	Visario 3	500	29.2 m	0.0 m	1.2 m
V4	Visario 4	500	-0.5 m	0.0 m	9.1 m
V5	Visario 5	500	-84.3 m	0.0 m	2.4 m
V6	Visario 6	500	0.5 m	0.0 m	9.1 m
V7	Visario 7	500	0.9 m	-23.9 m	1.7 m
V	SONY BETACAM	30	-3.0 m	-21.2 m	1.7 m
Note: Camera location measurements were surveyed after each test. *X, Y and Z distances are relative to the impact point.					

Table 6-2 - Camera Types and Locations

The following are the pretest procedures that were required to enable film data reduction to be performed using a film motion analyzer or video analysis software:

1) Butterfly targets were attached to the top and sides of the test vehicle. The targets were located on the vehicle at intervals of 500 mm (1.64 ft) and 1000 mm (3.28 feet.). The targets along the side of the vehicle were located 0.90 m above the pavement. The targets established scale factors and horizontal and vertical alignment.

2) Flashbulbs, mounted on the test vehicle, were electronically triggered to establish a) initial vehicle-to-barrier-contact, and b) the time of the application of the vehicle brakes. The impact flashbulbs begin to glow immediately upon activation, but have a delay of several milliseconds before reaching full intensity.

3) High-speed digital video cameras were all time-coded through the use of a portable computer and were triggered as the test vehicle passed over a tape switch located on the vehicle path upstream of impact.

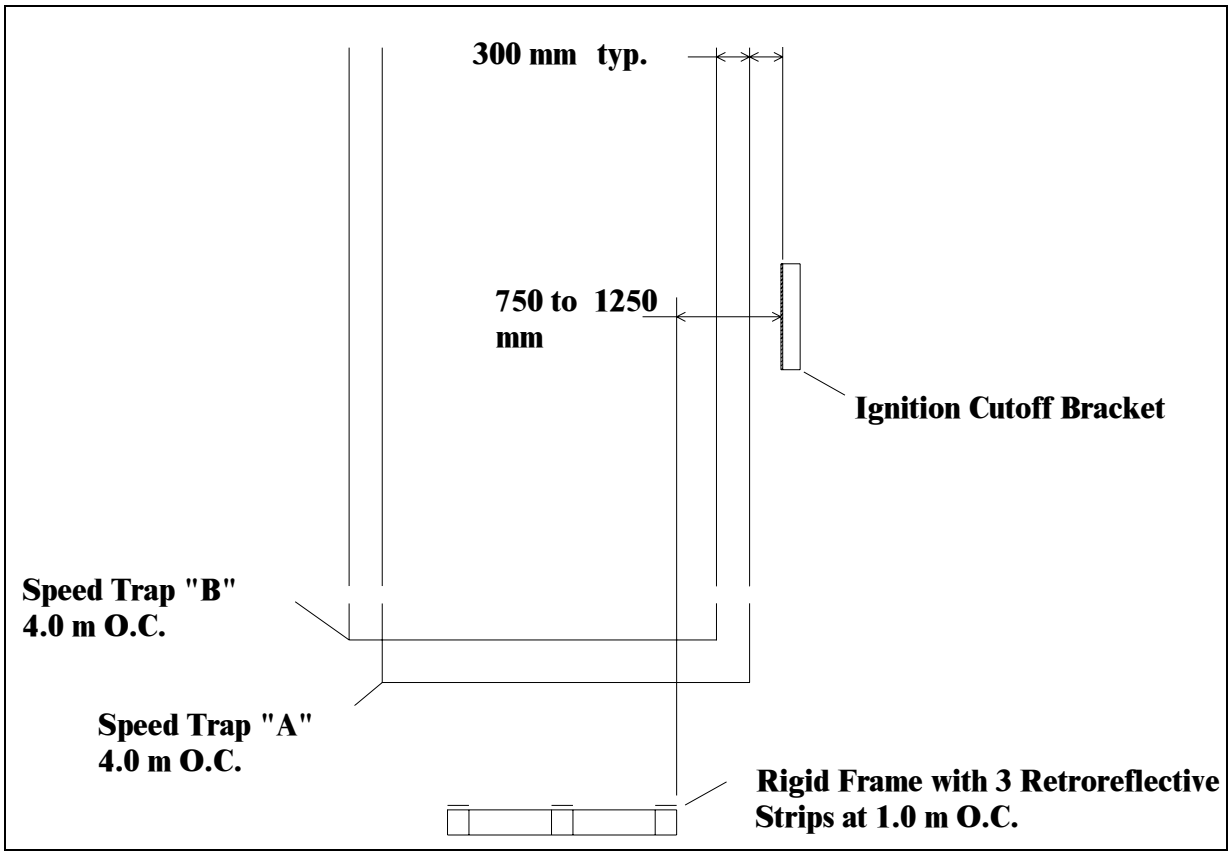

Figure 6-2 - Tape Switch Layout

6.4. Electronic Instrumentation and Data

Transducer data were recorded on two separate GMH Engineering, Data Brick, Model II, digital transient data recorders (TDRs) that were mounted in the test vehicle. These transducers included two sets of accelerometers and one set of rate gyros at the center of gravity. The TDR data were reduced using a desktop personal computer running DADiSP 4.1.

Accelerometer specifications are shown in Table 6-3. The vehicle accelerometer sign convention used throughout this report is the same as that described in NCHRP Report 350 and is shown in Figure 6-3.

A rigid stand with three retro-reflective 90° polarizing tape strips was placed on the ground near the test article and alongside the path of the test vehicle. The strips were spaced at carefully measured intervals of 1000 mm. The test vehicle had an onboard optical sensor that produced sequential impulses or "event blips" as the vehicle passed the reflective tape strips. The event blips were recorded concurrently with the accelerometer signals on the TDR, serving as "event markers". The impact velocity of the vehicle could be determined from these sensor impulses,

the data record rate, and the known distance between the tape strips. A pressure sensitive tape switch on the front bumper of the vehicle closed at the instant of impact and triggered two events: 1) an "event marker" was added to the recorded data, and 2) a flashbulb mounted on the top of the vehicle was activated. Two sets of pressure sensitive tape switches, connected to a speed trap, were placed 4 m apart just upstream of the test article specifically to establish the impact speed of the test vehicle. The layout for all of the pressure sensitive tape switches and the reflective tape is shown in Figure 6-2

The data curves are shown in Figure 6-4 through Figure 6-6 and include the accelerometer and rate gyro records from the test vehicle. They also show the velocity and displacement curves for the longitudinal components (Lateral acceleration data is not available due to a failure with the accelerometers. These plots were needed to calculate the occupant impact velocity defined in NCHRP Report 350. All data were analyzed using software written by DADiSP and modified by Caltrans.

Table 6-3 - Accelerometer Specifications for Test 651

TYPE	LOCATION	RANGE	ORIENTATION
ENDEVCO	VEHICLE C.G.	100 G	LONGITUDINAL
ENDEVCO	VEHICLE C.G.	100 G	LATERAL
ENDEVCO	VEHICLE C.G.	100 G	VERTICAL
HUMPHREY	VEHICLE C.G.	180 DEG/S	ROLL
HUMPHREY	VEHICLE C.G.	90 DEG/S	PITCH
HUMPHREY	VEHICLE C.G.	180 DEG/S	YAW
ENDEVCO	VEHICLE C.G.	100 G	LONGITUDINAL
ENDEVCO	VEHICLE C.G.	100 G	LATERAL
ENDEVCO	VEHICLE C.G.	100 G	VERTICAL

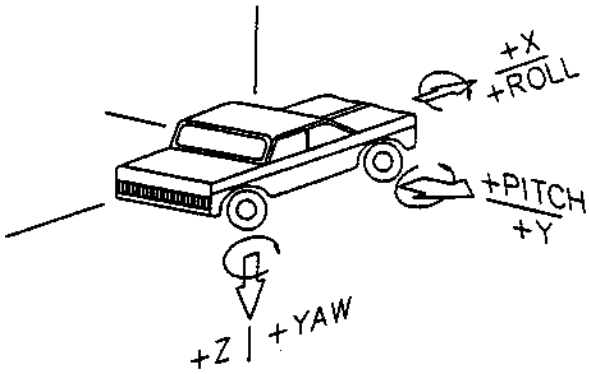

Figure 6-3 - Vehicle Accelerometer Sign Convention

6.5. Computer Modeling of ST-20

APPLIED RESEARCH ASSOCIATES, INC.

PRELIMINARY OBSERVATIONS OF THE CALIFORNIA ST-20 RAIL AND DETAILED C2500 PICKUP MODEL

CENTER OF EXCELLENCE IN FINITE ELEMENT CRASH ANALYSIS

FHWA Cooperative Agreement No.:
DTFH61-02-X-00058

ARA Project Number 5551

July 21, 2003

Prepared by:
Steven Kirkpatrick and Robert T. Bocchieri
Applied Research Associates, Inc.
2672 Bayshore Parkway, Suite 1035
Mountain View, California 94043

Results of Preliminary Impact Simulations

We have performed two preliminary simulations of the California ST-20 Rail design impacted by a Chevrolet C2500 pickup. Impact conditions are 100 km/hr at an angle of 25 degrees. Two impact points relative to the rail posts were investigated, as shown in Figure 1. The NCAC Detailed Chevrolet C2500 Pickup Model was used for this simulation with several minor modifications. The most significant modification is the addition of a missing attachment of the back end of the rear leaf springs to the truck frame. This rear suspension connection was missing in the NCAC model currently available on the NCAC website.

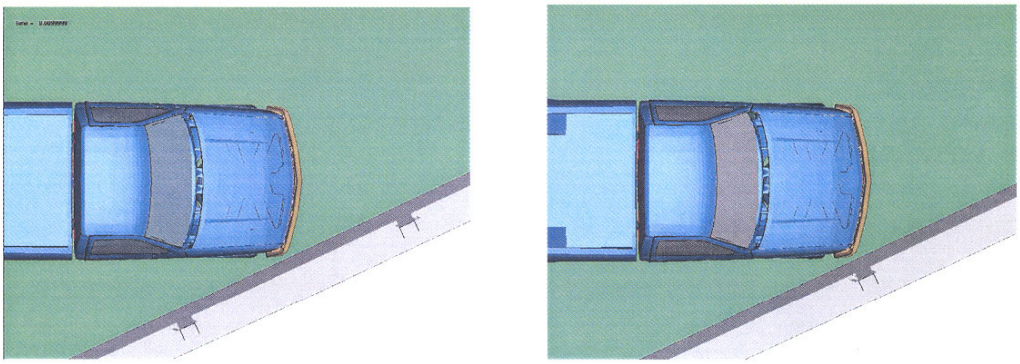

(a) Severe snagging configuration **(b) Minor Snagging Configuration**

Figure 1. Impact conditions analyzed for the California ST-20 Bridge Rail Design.

The main objective of these preliminary simulations was to assess the likelihood and severity of hood snag on a rail post. The two impact points were selected to have two different impact conditions on the rail. The conditions selected were for a severe snagging potential as shown in Figure 1(a), and for minor snagging potential shown in Figure 1(b). Case (a) results in a large hood overlap over the third rail from the bottom at the time of hood-to-post impact. Both simulations are for a truck front bumper height of 447 mm.

Results from impact case (a) are shown in Figure 2 and Figure 3. Here the hood did snag and was pushed back through the windshield. This behavior indicates that the hood snag has a high potential of contributing to undesirable cab deformations and vehicle motions.

Further simulations need to be performed with the truck initialized with gravity so that the bumper height closely matches the measured bumper height of 426 mm. Work on gravity initialization is still in progress. However, as shown in Figure 2, a difference of 20 mm will still allow the hood to pass between the top two rails on the ST-20 railing. In addition, a lower bumper height will likely cause the bumper to more easily pass between the first and second rails from the bottom, possibly causing greater hood override and an even greater likelihood of snagging.

Results from impact case (b) indicated a minor hood snag on the post that has a small effect on the cab deformations and collision response. The hood did impact the rail post, but the overlap was small and vehicle motions were sufficiently redirected so that large snagging forces did not develop.

Further assessment of the C2500 Detailed model is still needed as well as comparison with the Simplified Model. However, because the hood snagging occurs early in the crash sequence, and therefore model deficiencies may not be as significant as for longer-time behavior, we feel that these results indicate that hood snagging will be a problem for the current ST-20 configuration.

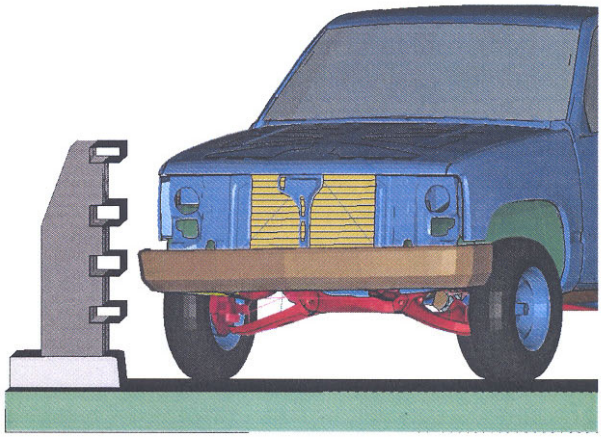

t = 0.01s

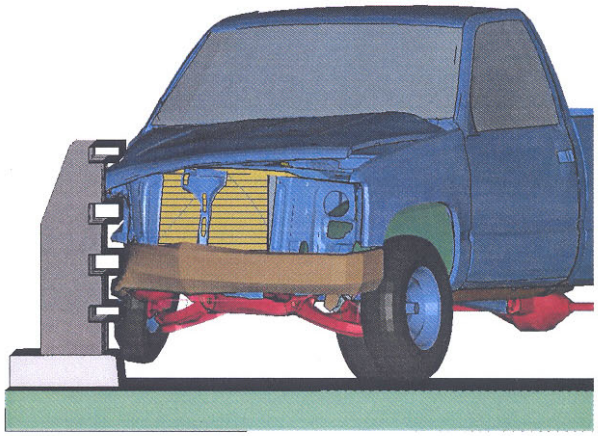

t = 0.06 s

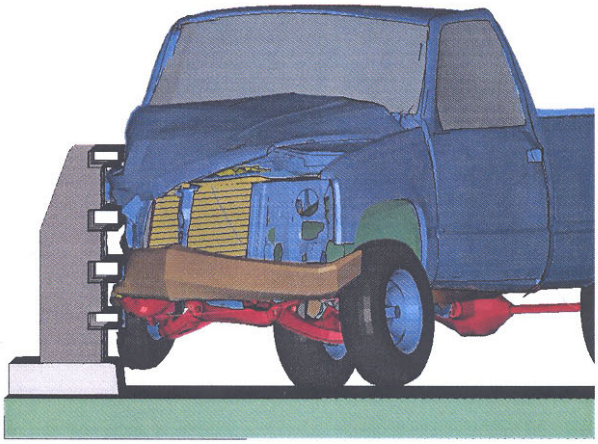

t = 0.09s

Figure 2. Front view of impact with the California ST-20 Bridge Rail.

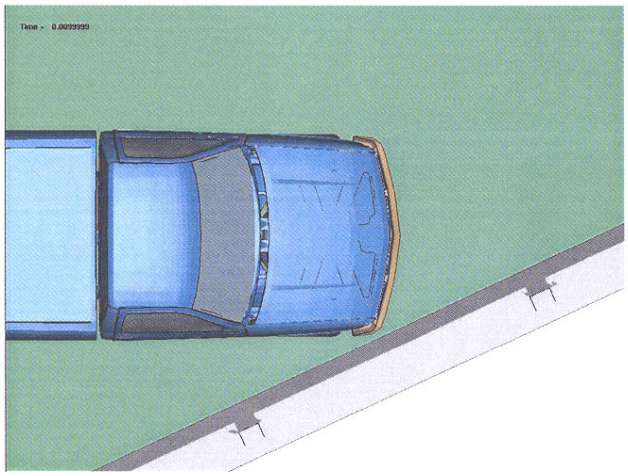

t = 0.01 s

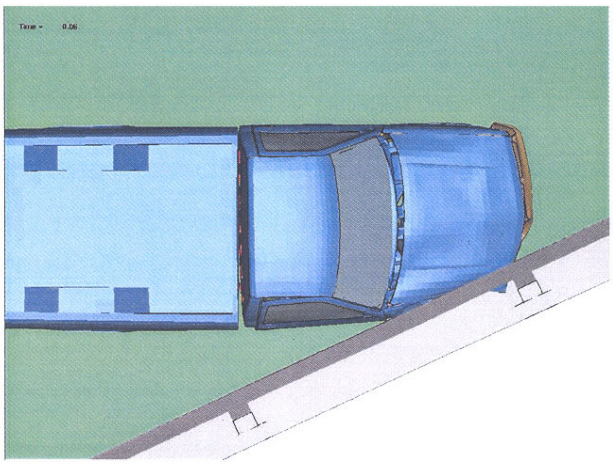

t = 0.06 s

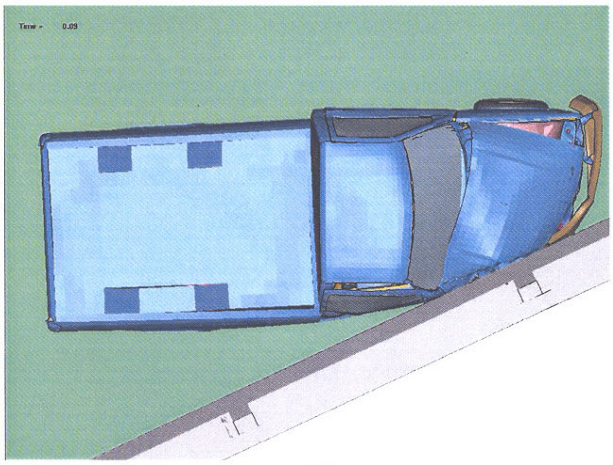

t = 0.09 s

Figure 3. Top view of impact with the California ST-20 Bridge Rail.

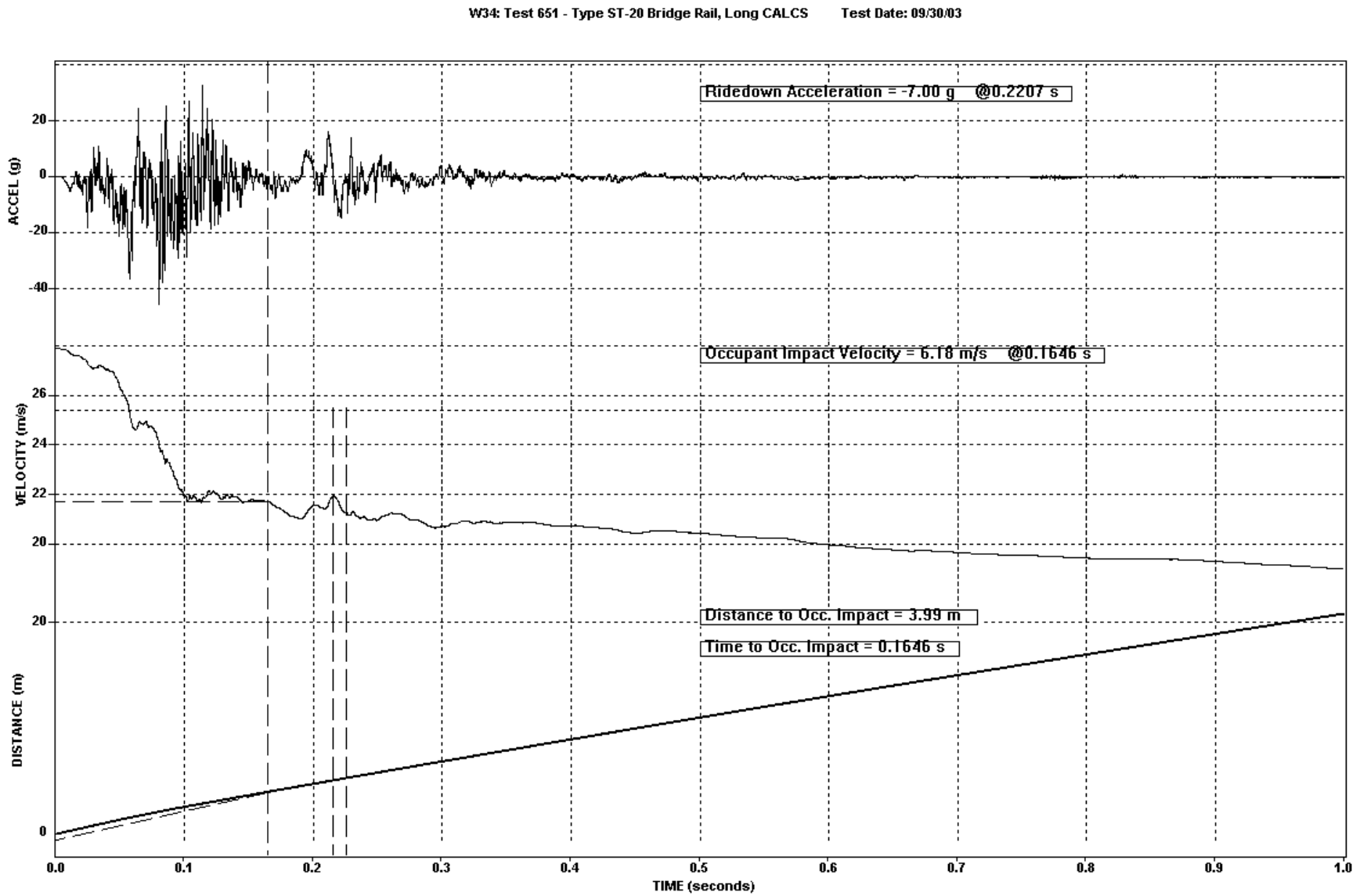

Figure 6-4 - Test 651 Vehicle Longitudinal Acceleration, Velocity and Distance -Vs- Time

(Not available due to failure of primary and secondary lateral accelerometers.)

Figure 6-5 - Test 651 Vehicle Lateral Acceleration, Velocity and Distance -Vs- Time

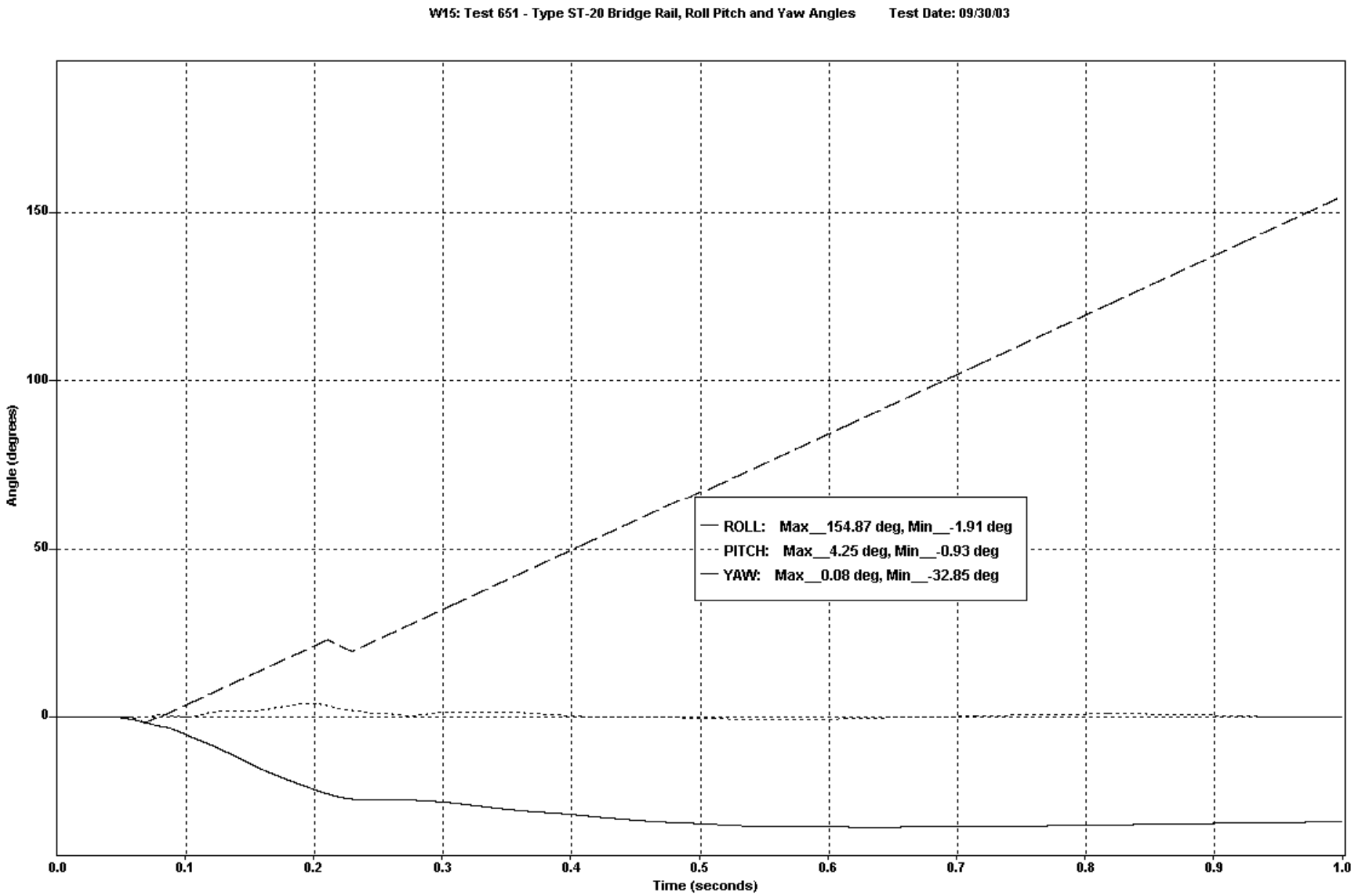

Figure 6-6 - Test 651 Vehicle Roll, Pitch and Yaw -Vs- Time

6.6. Detailed Drawings

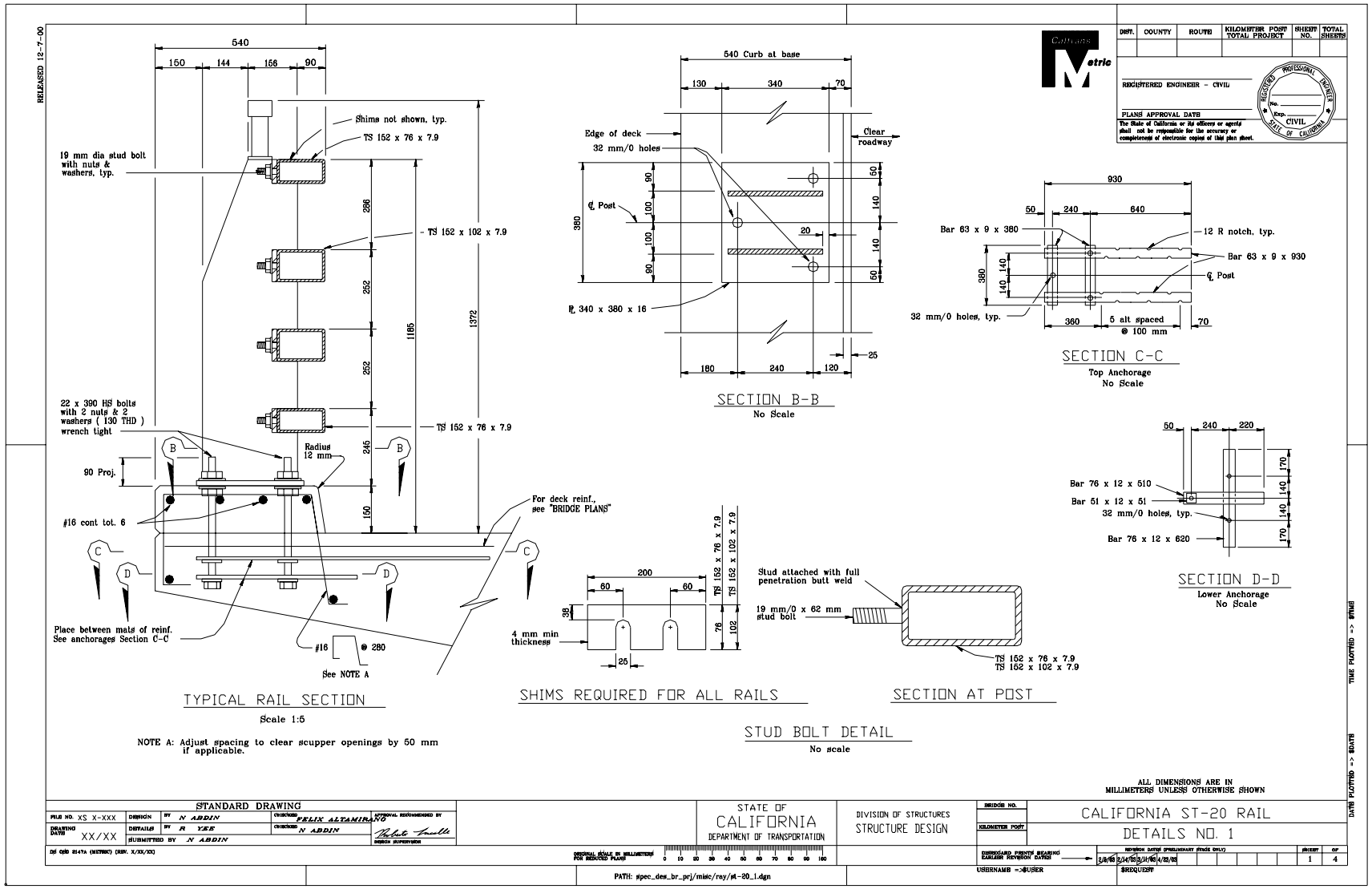

Figure 6-7 - California ST-20 Detail No. 1 (Tested Barrier)

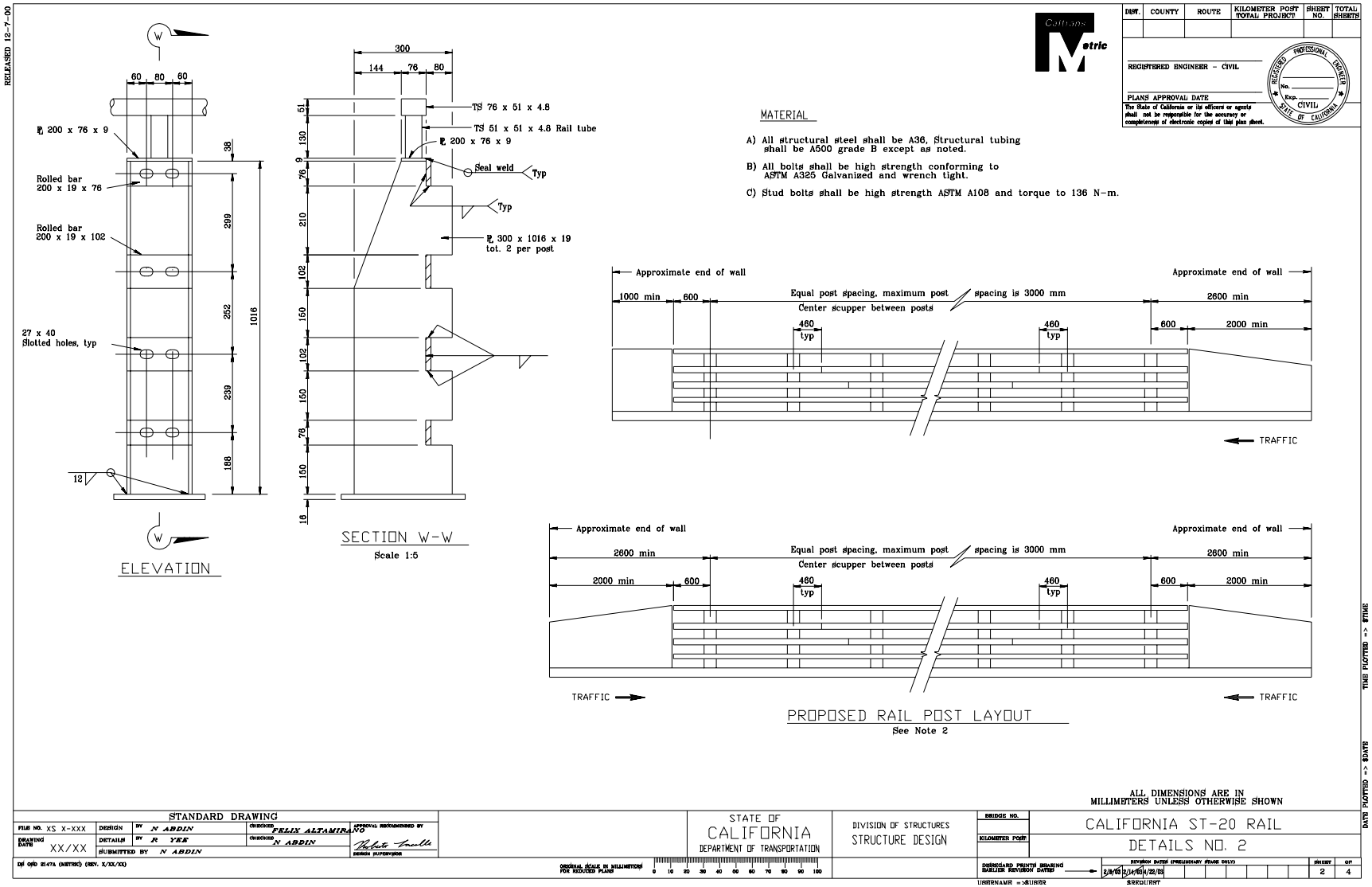

Figure 6-8 - California ST-20 Detail No. 2 (Tested Barrier)

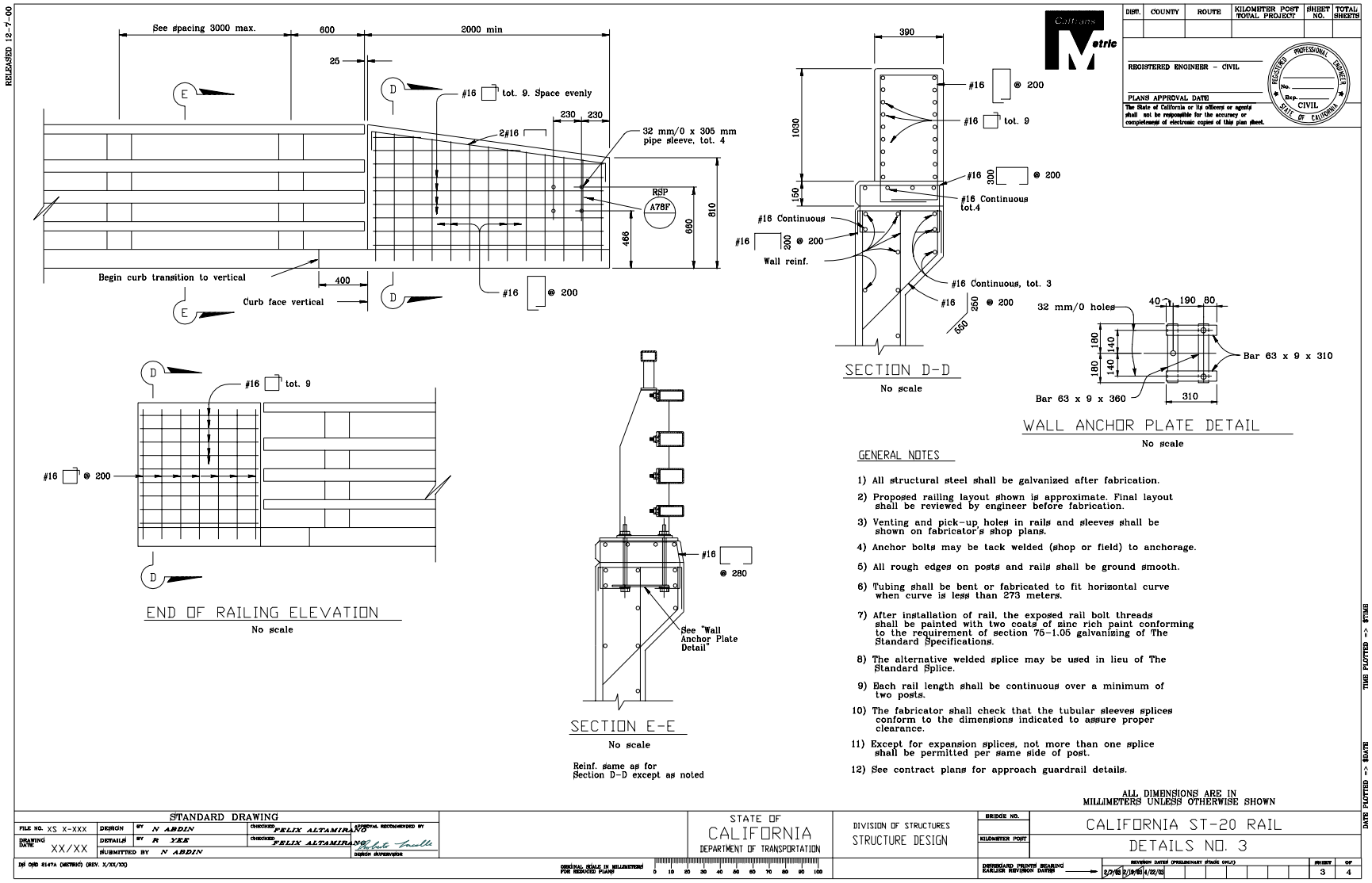

Figure 6-9 - California ST-20 Detail No. 3 (Transition Design)

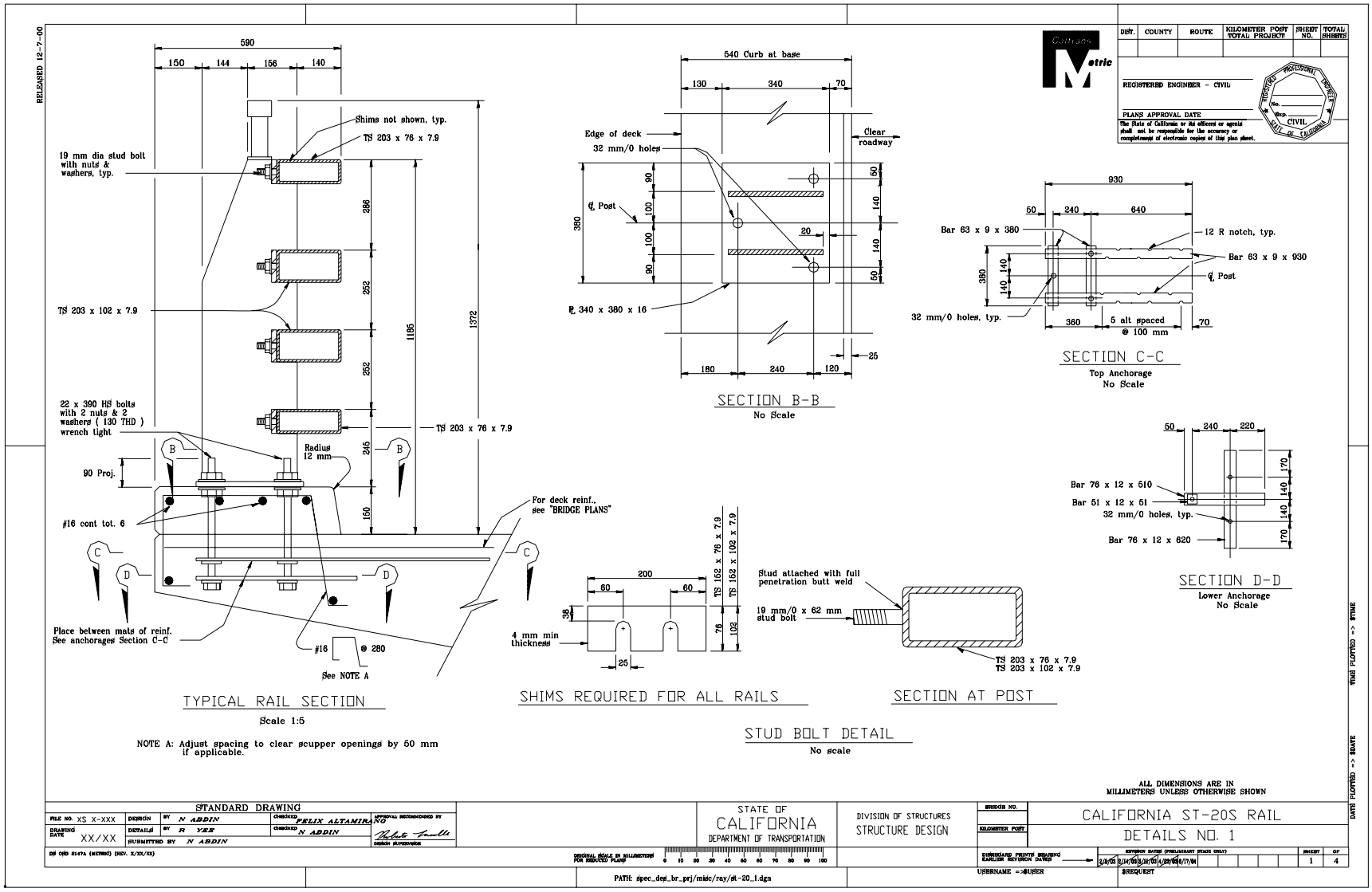

Figure 6-10 – California ST-20S Detail No. 1 (Proposed Design Change to ST-20)

7. REFERENCES

[1] "Recommended Procedures for the Safety Performance Evaluation of Highway Features", Transportation Research Board, National Cooperative Highway Research Program Report 350, 1993.

[2] "AASHTO Bridge Design Specifications", American Association of State Highway and Transportation Officials, Washington, D. C., 2000

[3] Mak, K. K., Menges, Wanda, and Bullard, D. L., "Wyoming Test Level 4 Bridge Rail," TTI Project No. 472610, Texas Transportation Institute, Texas A&M University System, College Station, Texas, January 1996

[4] Mak, K. K., Buth, Eugene C., Bligh, Roger P., and Menges, Wanda, "NCHRP Report 350 Testing and Evaluation of the Wyoming TL-3 and TL-4 Bridge Rail TO Box-Beam Guardrail Transition Designs," TTI Project No. 473160, Texas Transportation Institute, Texas A&M University System, College Station, Texas, September 1999

[5] "Vehicle Damage Scale for Traffic Accident Investigators", Traffic Accident Data Project, National Safety Council, 1968.

[6] "Collision Deformation Classification" - SAE J224 Mar80, SAE Recommended Practices, 1980.