Caltrans Metric

07-LA-5, KP 23.7/24.3 (PM 14.7/15.1)
07-351 22400K
SHOPP 310 CODE
FEBRUARY 2003

PROJECT STUDY REPORT

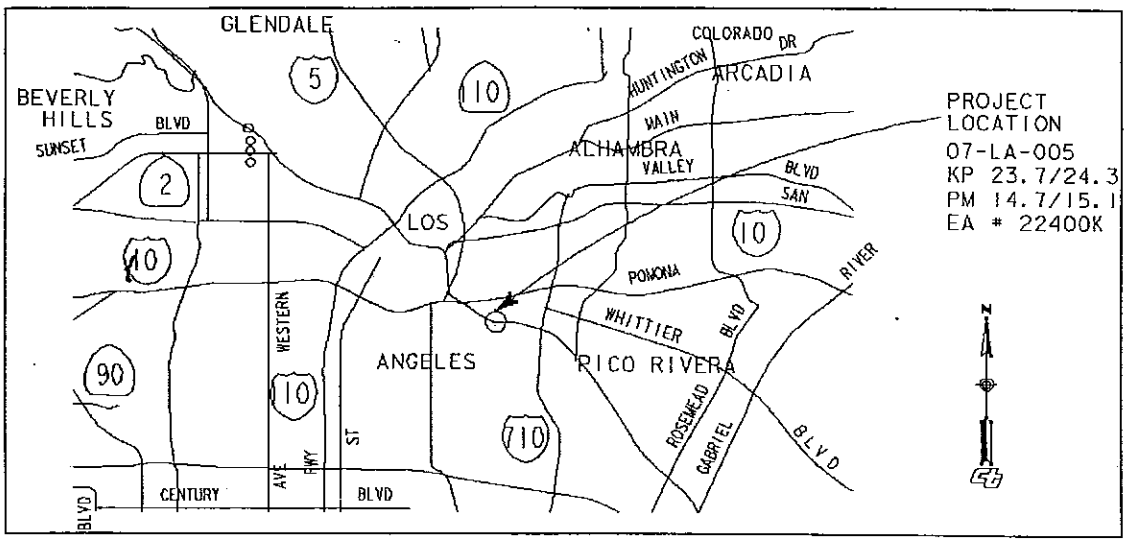

On Route 5
Between Calzona Street
And Ditman Avenue

I have reviewed the right-of-way information contained in this Project Study Report and the R/W Data Sheet attached hereto, and find the data to be complete, current, and accurate.

Lawrence J. Staley
Right-of-Way Project Delivery Manager

APPROVAL RECOMMENDED:

Diaa A. Yassin, Project Manager

CONCURRED BY:

for Lari Saadatnejadi, Chief Design A

APPROVED:

Douglas R. Failing, District Director

3/28/03
DATE

07-LA-5, KP 23.7/24.3 (PM 14.7/15.1)
07-351 22400K
SHOPP 310 CODE

This Project Study Report has been prepared under the direction of the following Registered Engineer. The registered Civil Engineer attests to the technical information contained therein and has judged the qualifications of any technical specialists providing engineering data upon which recommendations, conclusions and decisions are based.

REGISTERED PROFESSIONAL ENGINEER
YU-YING CHU
No. C057185
Exp. 12/31/05
CIVIL
STATE OF CALIFORNIA

YU-YING CHU, *REGISTERED CIVIL ENGINEER*

2/7/03
DATE

PROJECT STUDY REPORT

07-LA-5, KP 23.7/24.3 (PM 14.7/15.1)
07-351 22400K
SHOPP 310 CODE
BETWEEN CALZONA STREET AND DITMAN AVENUE

I. INTRODUCTION

This Project Study Report (PSR) proposes to add an auxiliary lane for a segment of southbound Route 5 between Ditman Street off-ramp (off-ramp) and Calzona Avenue on-ramp (on-ramp), KP 23.7/24.3 (PM 14.7/15.1) in Los Angeles County. The existing segment of this route consists of five mixed flow (MF) lanes. The on-ramp consists of one metered single-occupancy vehicle (SOV) lane and the off-ramp consists of one SOV lane. Two "build" alternatives have been developed for this PSR to help minimize potential damage to the existing facility due to inadequate deceleration of the vehicles exiting the freeway at the off-ramp; and to alleviate the exposure of the California Department of Transportation (Department) maintenance crews to traffic for the repair of the potential damage. The costs of the alternatives presented in this PSR range from $4,100,000 for Alternative B to $4,300,000 for Alternative C. The "no-build" alternative would not address the safety issues at the off-ramp. It is anticipated that this project will be funded through the 2004 State Highway Operation Protection Program (SHOPP).

II. BACKGROUND

The segment of Route 5 in the study area is referred to as the Santa Ana Freeway and is used for interstate, interregional, and intraregional travel and shipping. In addition, it is also used as a major commuter route. This segment of Route 5 is part of the Federal Aid Interstate (FAI) system, which is a subset of the National Highway System, and is categorized as an urban principal arterial. This segment of Route 5 is also included as part of Surface Transportation Assistance Act (STAA), Strategic Highway Corridor Network (STRAHNET), Interregional Road System (IRRS), Intermodal Corridors of Economic Significance (ICES), and Lifeline system. However, this segment of Route 5 is not included as part of the Rural and Single Interstate Routes.

Due to the need for frequent repairs, the Division of Maintenance requested that a project be developed to replace the existing metal beam guard rail (MBGR) with a concrete barrier at the left shoulder of the southbound Route 5 hook off-ramp to Ditman Avenue. According to the correspondence from the Division of Maintenance, the MBGR was repaired at a rate of five times per year during the period between 1995 and 1998. After further analysis, the Office of Traffic Investigations recommended that the deceleration lane also be lengthened as part of this project. Consequently, this project includes adding an auxiliary lane that will entail widening of an existing undercrossing (UC) structure at KP 24.050 (PM 14.944, Indiana Street UC, 53-0604) to a width of 7 meters (m), and re-aligning the off-ramp.

III. NEED AND PURPOSE

A. Existing Conditions

Within the project study area, Route 5 is a ten-lane freeway that generally traverses in the north-south direction. The southbound Route 5 consists of a total of five MF lanes that are 3.35 m width each. The median width within the study area is approximately 1.82 m and the width of the right shoulder ranges from approximately 0.3 to 7.0 m. A Type 50 concrete median barrier separates northbound and southbound traffic. The on-ramp consists of one metered SOV lane and the off-ramp consists of one SOV lane.

B. Existing Traffic Conditions

According to the Traffic Monitoring Unit with the Office of Freeway Operations, Route 5 in the project study area currently has an Annual Average Daily Traffic (AADT) of 263,000 (including both directions). In addition, the current truck volume is approximately 9.1 percent. According to the Transportation Concept Report (TCR) prepared by the Office of Advance Planning in November 1998, AM peak hour volume is 10,000 vehicles per hour (vph) and PM peak volume is 9,100 vph in the northbound direction. The AM peak volume is 8,350 vph and PM peak volume is 9,000 vph in the southbound direction.

The southbound Ditman off-ramp has an Average Daily Traffic (ADT) of 1,500 with AM peak volume of 100 vph and PM peak volume of 148 vph. The Traffic Monitoring Unit reports that the current truck volume at the off-ramp and on-ramp is estimated at approximately 5 percent each.

The Office of Transportation Planning and LARTS (Los Angeles Regional Transportation Study) has prepared volume projections to year 2025 as follows:

Year 2025 Volume Projection	AADT/ADT	AM Peak (vph)	PM Peak (vph)
Southbound Route 5 Mainline	181,750	10,300	10,850
Southbound Calzona On-ramp	4,600	280	410
Southbound Ditman Off-ramp	2,350	150	220

The following table summarizes rates of accidents per million-vehicle kilometer according to TASAS Table B prepared by the Office of Traffic Investigations for a 3-year period from January 1, 1998 until December 31, 2001:

Southbound Route 5 Mainline
(KP 23.496/24.460, PM 14.60/15.199)

	Fatal	Fatal + Injury	Total
Actual	0.000	0.19	0.95
Average	0.004	0.25	0.76

Southbound Off-ramp to Ditman Avenue
(KP 23.836, PM 14.811).

	Fatal	Fatal + Injury	Total
Actual	0.000	0.85	2.27
Average	0.003	0.24	0.71

Southbound On-ramp from Indiana Street and Calzona Street
(KP 24.319, PM 15.111)

	Fatal	Fatal + Injury	Total
Actual	0.000	0.00	0.27
Average	0.001	0.12	0.34

C. Deficiency and Justification

The southbound Route 5 off-ramp to Ditman Avenue is a one-lane hook off-ramp curving to the right. The existing off-ramp does not currently meet Caltrans standards for shoulder width, deceleration lane length, curve radius, and width of traveled way for truck turns.

A total of 175 accidents occurred on the southbound Route 5 during the three-year period from January 1, 1998 until December 31, 2001. Speeding was the primary collision factor with the largest number of accidents (96). Other violations (37) and Improper turn (18) were the primary collision factors with the second and third largest number of accidents, respectively. Approximately 93 accidents were rear-end type of collisions, 40 were sideswipe, and 37 hit-object types of collisions (See Attachment 15).

A total of eight accidents occurred at the off-ramp during the three-year period. Speeding (7) and Alcohol (1) were primary collision factors. Types of collisions varied from hit-object (5) to overturn, rear-end, and broadside with one accident each. According to TASAS records, four of the eight accidents resulted in damaging the MBGR at the off-ramp (See Attachment 15).

There have been a series of complaints from the Division of Maintenance that the MBGR at the off-ramp has been repeatedly damaged and maintenance crews are frequently exposed to traffic to make necessary repairs to the damaged MBGR. The MBGR has been repeatedly damaged by vehicles exiting with excessive speeds as indicated in the TASAS records.

After further analysis by the Office of Traffic Investigations, the addition of an auxiliary lane, structure widening, and ramp realignment were deemed necessary to minimize future damage to the existing facility and alleviate the exposure of maintenance crews to traffic at the off-ramp. Along with the necessary improvements, the existing facility will also need to be modified to meet current standards, including the installation of concrete barriers and Reusable Energy Absorbing Crash Terminal (REACT) crash cushions.

IV. ALTERNATIVES

Alternatives have been developed to sufficiently address the safety concerns expressed by the Division of Maintenance and to improve the operational deficiencies defined in previous sections of this PSR. Three alternatives are described below.

1. Alternative A – No Build

This alternative proposes the 'do nothing' option. This alternative is not recommended because it is not consistent with the Departments' policy to continuously improve safety and operations on the State Highway System.

2. Alternative B – Add Auxiliary Lane, Widen Structure, and Increase Off-Ramp Lane Width

According to Index 504.5 of the Highway Design Manual (HDM), an auxiliary lane is required in all cases when the weaving distance is less than 600 m. The existing weaving distance between the on-ramp and the off-ramp is approximately 453 m. Alternative B proposes to add one 3.6 m lane as an auxiliary lane between the on-ramp and the off-ramp. The addition of the auxiliary lane will provide sufficient accelerating length for vehicles merging into the mainline (ML) from the on-ramp, and prevent potential damage to the facility due to inadequate deceleration from vehicles exiting the freeway at the off-ramp. The addition of the auxiliary lane entails widening of an existing UC structure at KP 24.050 (PM 14.944, Indiana Street UC, 53-0604). The UC structure will be widened to a width of approximately 7 m to match the full width of the traveled way and paved shoulders on the approaches according to Index 208.1(1) of the HDM.

Alternative B also proposes the following enhanced off-ramp features to address the Division of Maintenance concerns and to comply with current HDM standards:

- Increase the SOV lane width from 4.6 m to 5.6 m to accommodate relatively high levels of truck volume (Index 504.3);
- Add left and right shoulders of 1.2 m and 2.4 m in width, respectively, to bring the off-ramp to the current standard (Index 504.2);
- Construct a Type 60 concrete barrier along the left shoulder of the off-ramp (request by the Division of Maintenance and Index 7-04.4 of Traffic Manual [TM]);
- Install REACT crash cushion on both sides of the Type 60 concrete barrier (Index 7-05 of TM); and
- Acquire additional right-of-way to ensure that the sight distance will not be obstructed by future development.

Provision is made for the relocation of communication boxes, light poles, traffic signals, electrical pull boxes, MBGR, drainage systems, asphalt walkway, and irrigation systems. Existing and proposed layouts for Alternative B, including typical cross-section drawings, are included in Attachment 2.

This proposal requires the acquisition of approximately 175 square meters of new right-of-way. The total cost for this alternative is estimated at $4,100,000 in 2001 dollars. A preliminary cost estimate summary for this Alternative is included in Attachment 6.

3. Alternative C – Add Auxiliary Lane, Widen Structure, and Increase Curve Radius

Alternative C proposes to add a 3.6 m auxiliary lane between the on-ramp and the off-ramp, according to Index 504.5 of the HDM. The addition of the auxiliary lane will provide sufficient accelerating length for vehicles merging into the ML from the on-ramp, and prevent potential damage to the facility due to inadequate deceleration from vehicles exiting the freeway at the off-ramp. The addition of the auxiliary lane entails widening of an existing UC structure at KP 24.050 (PM 14.944, Indiana Street UC, 53-0604). The UC structure will be widened to a width of approximately 7 m to match the full width of the traveled way and paved shoulders on the approaches according to Index 208.1(1) of the HDM.

Alternative C also proposes to increase the off-ramp curve radius from approximately 15 m to 45 m. This will improve mobility and minimize abrupt deceleration of exiting vehicles due to the existing sharp turn. The improvement in the stopping sight distance and the curve radius will increase the design speed at the off-ramp to 45 kilometers per hour (km/h) and will provide for a more comfortable turning movement. The following safety improvements are proposed for Alternative C:

- Increase in the width of the off-ramp traveled lane from existing 4.6 m to proposed 4.9 m;
- Standardization of the left and right shoulders at the off-ramp to 1.2 and 2.4 m, respectively;
- Installation of Type 60 concrete barrier at the left edge of shoulder at the off-ramp;
- Installation of REACT crash cushions at the beginning and end of the proposed concrete barrier at the off-ramp;
- Removal of existing MBGR near the UC structure and its replacement with concrete barrier-mounted sound walls;
- Increase in the curve radius at the off-ramp from 15 m to 45 m;
- Increase in the deceleration length from existing 55 m to proposed 128.9 m;
- Increase in the stopping sight distance from existing 49 m to proposed 58 m; and
- Acquisition of additional right-of-way to ensure that the sight distance will not be obstructed by future development.

Due to the restrictive conditions at the off-ramp, a few of the aforementioned safety improvement features were not able to meet the HDM mandatory standards. A Fact Sheet was prepared to appropriately address the non-standard features and was approved by Lan Saadatnejadi, Chief of Design A on January 29, 2003. The approval was concurred with by Jim De Luca, Project Development Coordinator for the Headquarters Division of Design on the same date. A copy of the Fact Sheet is included in Attachment 19, for the following non-standard features:

- Deceleration length;
- Stopping sight distance; and
- Curve radius.

Provision is made for the relocation of communication boxes, light poles, traffic signals, electrical pull boxes, metal beam guardrail, a manhole, drainage systems, asphalt walkway, and irrigation systems. Existing and proposed layouts for Alternative C, including typical cross-section drawings, are included in Attachments 2 and 3.
This proposal requires the acquisition of approximately 1,075 square meters of new right-of-way. The total cost for this alternative is estimated at $ 4,300,000 in 2001 dollars. A preliminary cost estimate summary for this Alternative is included in Attachment 6.

V. RIGHT-OF-WAY

The proposed Alternatives involve the acquisition of additional right-of-way as indicated in the proposed layouts in Attachments 2 and 3. The current total estimated costs for the acquisition of the additional right-of-way, including necessary escrow costs and relocation costs, are $243,034 and $253,348 in 2001 dollars for Alternatives B and C, respectively. Right-of-way data sheets for the project are included in Attachment 7.

VI. VALUE ANALYSIS

The cost and scope of this project does not meet the district requirement for a Value Analysis Study.

VII. SYSTEM PLANNING

The TCR indicates that two alternatives have been developed for a Year 2020 concept facility. The Year 2020 concept facility within the project study area includes five MF lanes and one truck lane with either one or two high occupancy vehicle (HOV) lanes, depending on the alternatives. An Ultimate Transportation Corridor (UTC) alternative has also been developed for the project study area and includes six MF lanes, one truck lane, and two HOV lanes.

Other projects within the vicinity of the project area that are currently underway or in the planning phase include the following:

- EA 2N540, HB71, New curb ramps on Route 5 (PM 0.0/15.7);
- EA 44431, HB5, Freeway transit to be shelved on Route 5 (PM 0.0/16.9); and
- EA 4F910, HB4N, Lengthen deceleration lane and widen SB Calzona off-ramp (PM 15.165).

This proposed project is consistent with the goals and objectives of the region to provide adequate capacity for improved traffic movement.

VIII. HAZARDOUS MATERIAL/WASTE

There is a potential for hazardous waste contamination due to aerially deposited lead in the unpaved areas requiring excavation. A Site Investigation (SI) will be required for this project during the design phase to evaluate and/or determine the impact of Aerially Deposited Lead

(ADL). The total of $350,000 for Alternatives B and $420,000 for Alternative C have been provided for the handling and disposal of ADL contaminated soil.

Dewatering may be required for widening of the UC structure. A SI may also be required for potential dewatering effort that shall be allocated for complying with National Pollutant Discharge Elimination System (NPDES) requirements (The cost of SI and Dewatering, which are not included in this PSR, are subject to further study.)

The proposed re-striping activity would require removal and disposal of existing yellow striping. The yellow stripe is considered a hazardous material due to high lead and chromium content and needs to be disposed of at a Class 1 disposal site. The cost of removal and disposal is included in the ADL item of Section 4 and Minor Item of Section 6.

IX. TRAFFIC MANAGEMENT PLAN (TMP)

Widening of the UC structure and the off-ramp will be accomplished with the use of the shoulder and the off-ramp using K-rails. Most construction activities can be performed behind the K-rails with minimal elements of TMP required. Construction Zone Enhanced Enforcement Program (COZEEP) will be required during the placement and removal of the temporary K-rails. The work will be accomplished in accordance with the Lane Closure Charts provided in the Maintaining Traffic Specification.

A total of $26,000 has been allocated for implementing TMP elements for each project alternative. TMP data sheets for Alternatives B and C are included in Attachment 14.

X. ENVIRONMENTAL DOCUMENT

A request for a Preliminary Environmental Assessment Report (PEAR) was sent on October 9, 2002, to the Office of Environmental Planning. The PEAR was completed in December 2002, and recommended that the appropriate document for the proposed activities be a Negative Declaration/Finding of No Significant Impact (ND/FONSI), if the work is carefully planned out to avoid any adverse impacts. The PEAR is included in Attachment 22.

AIR QUALITY

The Clean Air Act Amendments (CAAAs) of 1990 require that transportation plans, programs, and projects that are funded by or approved under Title 23 U.S.C. or Federal Transit Act conform to state or federal Air Quality Plans. In order to be found in conformance, a project must come from approved transportation plans and programs such as the State Implementation Plan (SIP), the Regional Transportation Plan (RTP) and the Regional Transportation Improvement Program (RTIP). This project is not identified in the federally approved 1998/99 – 2004/05 RTIP and, therefore, does not conform to the CAAAs of 1990. Steps need to be taken to get this project included in a future RTIP. Inclusion in the RTIP is essential to federal funding.

NOISE MITIGATION

Sound walls exist within the project area located in a primarily residential area. Two sound walls (numbered as 156 and 2) are approximately 2.4 m in height and separated by the UC structure. Both sound walls taper toward an existing concrete barrier installed on the side of the UC structure. The tapered portions of the sound walls will be removed and reconstructed after the UC structure widening is completed. Proposed layouts for the removal and reconstruction of the sound walls are included in Attachment 2 and 3 for Alternatives B and C, respectively. Noise and Vibration Investigation Branch has prepared a preliminary Noise Impact Assessment/Study, included in Attachment 10.

WATER POLLUTION

This project may involve disturbance to any natural groundwater path and dewatering may be required for the widening of the UC structure. Best Management Practices (BMP's) will be implemented in accordance with guidelines in Caltrans Storm Water Management Plan.

XI. FUNDING AND SCHEDULING

It is anticipated that this project will be included in the 2004 SHOPP cycle candidate project listing. The schedule is contingent upon the availability of funds for design and construction. The tentative fund allocation and milestone schedule is shown below.

Project Cost Distribution (in $1,000's)

Support Cost	FY2003	FY 2004	FY 2005	FY 2006	FY2007	TOTAL
Project Management	$5,513	$9,038	$9,003	$9,003	$7,642	
Project Development			$282,371			
Structure Design			$118,896			
Construction				$182,964	$207,952	
Right of Way				$30,400		
TOTAL	$5,513	$9,038	$410,270	$222,367	$215,594	$862,782

(1) Proposed Project Schedule

Milestone	Date
PID	2/07/2003
PA & ED	6/02/2003
PS&E Completion	5/30/2005
Ready to List	7/26/2005
Job Completion	2/13/2007

XII. FEDERAL INVOLVEMENT

This project is eligible for federal funding and Route 5 is part of the NHS.

XIII. PERFORMANCE MEASURE

ACCT CODE	PROGRAM	PERFORMANCE MEASURE
201.310	SHOPP	55144 vehicle-hr/yr of savings.

Please refer to Attachment 18 for Priority Index Number (PIN).

XIV. PUBLIC HEARING PROCESS

Not applicable to this project.

XV. FREEWAY AGREEMENT

Not applicable to this project.

XVI. RIGHT-OF-WAY CERTIFICATION

The Office of Right-of-Way Planning and Management has prepared the right-of-way data sheets for Alternatives B and C as included in Attachment 7.

XVII. RECOMMENDATION

It is recommended that this PSR be approved and that the project report and design phase commence. The addition of the auxiliary lane as well as safety improvements on roadway geometry and other upgrades as identified in this project should improve operations and increase safety for both the traveling public as well as Department Maintenance personnel.

XVIII. PROJECT REVIEWS

		DATE
Safety Review (Yes/No)?	Yes	8/02
District Maintenance (Yes/No)?	Yes	9/02
Geometric Review (Yes/No)?	Yes	10/02
HQ Traffic Reviewer (Jerry Champa)	No	-
HQ Structures (APS)	Yes	8/02
FHWA Transportation Engineer (Yes/No)?	Yes	8/02

XIX. DISTRICT CONTACTS

The following individuals should be contacted for information pertaining to this Project Study Report:

ANDREW U. YOON CALNET 647-7695
Transportation Engineer, Office of Freeway Operations

ELPIDIO DELOS REYES, JR. CALNET 647-4784
Transportation Engineer, Office of Freeway Operations

YU-YING CHU CALNET 647-6091
Senior Transportation Engineer, Office of Freeway Operations

MARCO RUANO CALNET 647-0266
Chief, Office of Freeway Operations

DIAA A. YASSIN CALNET 647-3920
Project Manager, Division of Program/Project Management

STEVE CHAN CALNET 647-3646
District Hazardous Waste Coordinator, South Region

TOM MCVARISH CALNET 647-4831
Senior Transportation Engineer, Right-of-Way Planning and Management

VIN KUMAR CALNET 647-9336
Senior Transportation Engineer, Transportation Planning and LARTS

DENIS KATAYAMA CALNET 647-4680
Senior Transportation Engineer, Office of District Traffic Manager

KIRSTEN STAHL CALNET 647-0470
Senior Transportation Engineer, Materials Investigations

RALPH M. SASAKI CALNET 647-7534
Senior Transportation Engineer, Office of Engineering Services – Hydraulic

JACQUELINE TAN CALNET 647-4698
Senior Transportation Electrical Engineer, Office of ITS Development

KENNETH HATAI CALNET 647-4655
Senior Transportation Engineer, Office of Traffic Investigations

JIN LEE CALNET 647-9533
Senior Transportation Engineer, Office of Environmental Engineering and Feasibility Studies
Noise and Vibration Investigations Unit

STEVE MALKSON CALNET 647-0335
Traffic Monitoring Coordinator, Office of Freeway Operations

GARY IVERSON CALNET 647-3818
Division of Environmental Planning, Cultural Resource Services

LAN SAADATNEJADI CALNET 647-4644
Office Chief, Design Branch A

XVI. ATTACHMENTS

(1) Vicinity Map and Location Map
(2) Layout Plan and Typical Cross Section (Alternative B)
(3) Layout Plan and Typical Cross Section (Alternative C)
(4) Traffic Volume: Present
(5) Traffic Volume: Projected
(6) Preliminary Cost Estimate (Alternative B & C)
(7) Right-of-Way Data Sheet
(8) Weaving Analysis
(9) Drainage System Cost Estimate
(10) Preliminary Noise Impact Assessment/Study
(11) Initial Site Assessment
(12) Communication System Cost Estimate
(13) Recommended Structural Section
(14) Traffic Management Plan
(15) TASAS/Table B
(16) FHWA Involvement
(17) Structure Design Section
(18) Priority Index Number Calculation
(19) Fact Sheet Exception to Mandatory Design Standards
(20) Visual Impact Assessment
(21) Workplan Spreadsheet
(22) Preliminary Environmental Assessment Report
(23) PSR Performance Measure Checklist

ATTACHMENT 1

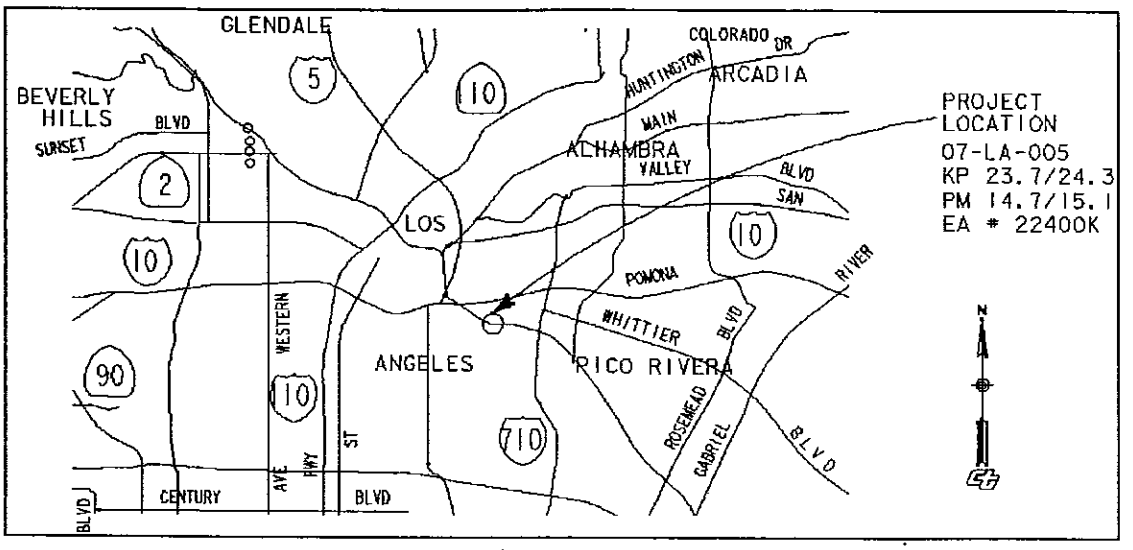

VICINITY MAP/LOCATION MAP

ATTACHMENT 2

ATTACHMENT 3

DIST	COUNTY	ROUTE	KILOMETER POST TOTAL PROJECT	SHEET No	TOTAL SHEETS

REGISTERED CIVIL ENGINEER

PLANS APPROVAL DATE

REGISTERED PROFESSIONAL ENGINEER NO. EXP. CIVIL STATE OF CALIFORNIA

The State of California or its officers or agents shall not be responsible for the accuracy or completeness of electronic copies of this plan sheet.

Caltrans now has a web site! To get to the web site, go to: http://www.dot.ca.gov

Caltrans Metric

CURVE DATA

NO	R	Δ	T	L
①	13.67	65°17'11"	8.76	15.58
②	101.04	8°37'09"	7.61	15.20
③	328.24	6°33'32"	18.81	37.57
④	917.40	9°33'41"	76.72	153.09
⑤	914.40	11°21'41"	90.96	181.32

* SUBJECT TO VERIFY
** SUBJECT TO FURTHER STUDY

NEW PROPOSED SECTION

(2) 570 mm FULL DEPTH AC, TYPE B
105 mm AB, CLASS 3

(3) 260 mm PCC
150 mm LCB
105 mm AB, CLASS 3

(4) 360 mm FULL DEPTH AC, TYPE A
105 mm AB, CLASS 3

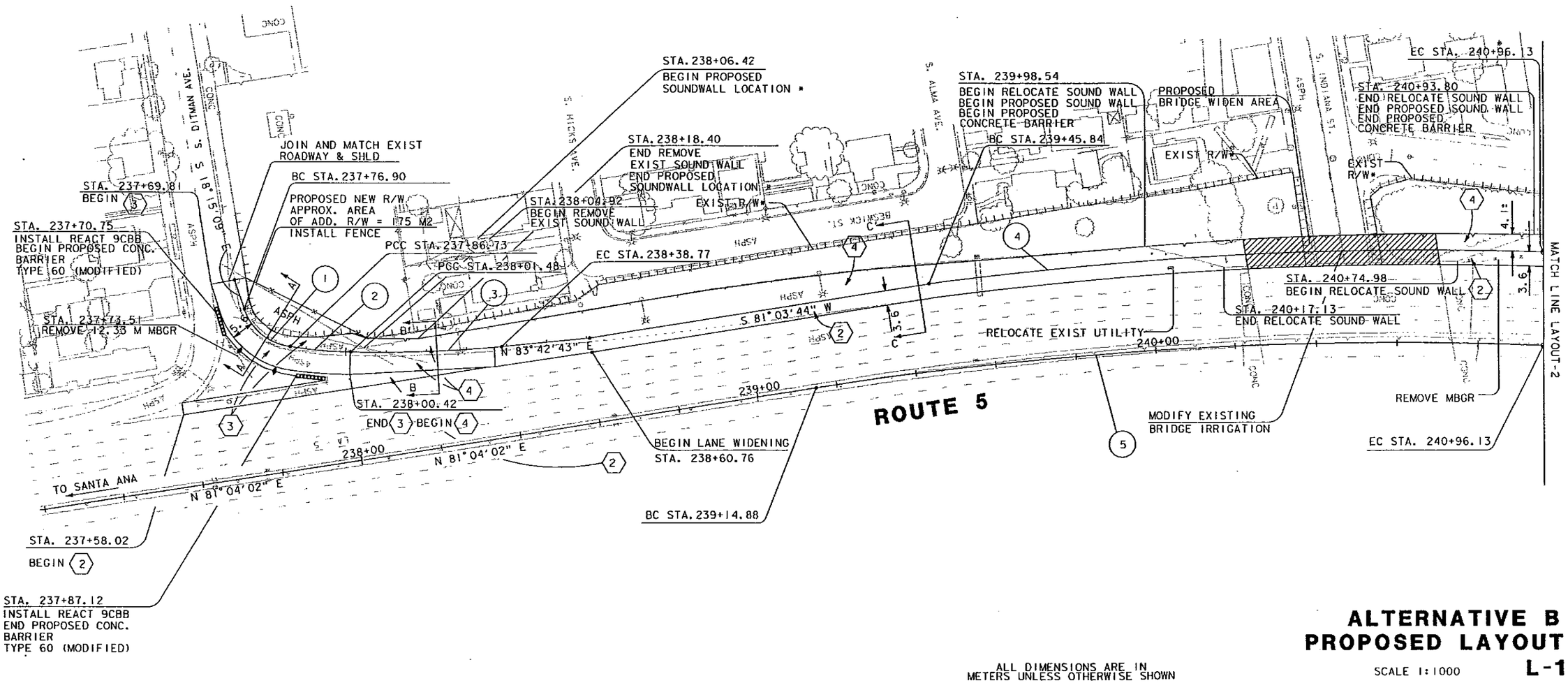

ALL DIMENSIONS ARE IN METERS UNLESS OTHERWISE SHOWN

ALTERNATIVE B PROPOSED LAYOUT

SCALE 1:1000

L-1

STATE OF CALIFORNIA - DEPARTMENT OF TRANSPORTATION

Caltrans

PROJECT ENGINEER

CALCULATED/DESIGNED BY

CHECKED BY

REVISED BY | DATE REVISED | DATE

LAST REVISION 12-11-02

DATE PLOTTED => 05 FEB 2003
TIME PLOTTED => 15:38:58

FOR REDUCED PLANS ORIGINAL SCALE IS IN MILLIMETERS 0 20 40 60 80

USERNAME => ayoon
DGN FILE => c:\documents and settings\ayoon\my documents\projects\ea 22400k\alt_b_l_07_03.dgn

CU 07385

EA 22400K

DIST	COUNTY	ROUTE	KILOMETER POST TOTAL PROJECT	SHEET No	TOTAL SHEETS

REGISTERED CIVIL ENGINEER

PLANS APPROVAL DATE

REGISTERED PROFESSIONAL ENGINEER — NO. — EXP. — CIVIL — STATE OF CALIFORNIA

The State of California or its officers or agents shall not be responsible for the accuracy or completeness of electronic copies of this plan SHEET.

Caltrans now has a web site! To get to the web site, go to: http://www.dot.ca.gov

Caltrans Metric

CURVE DATA

NO	R	Δ	T	L
6	925.32	11°24'14"	92.39	184.17
7	914.40	0°12'53"	1.71	3.43
8	914.40	16°09'38"	129.82	257.91

* SUBJECT TO VERIFY
** SUBJECT TO FURTHER STUDY

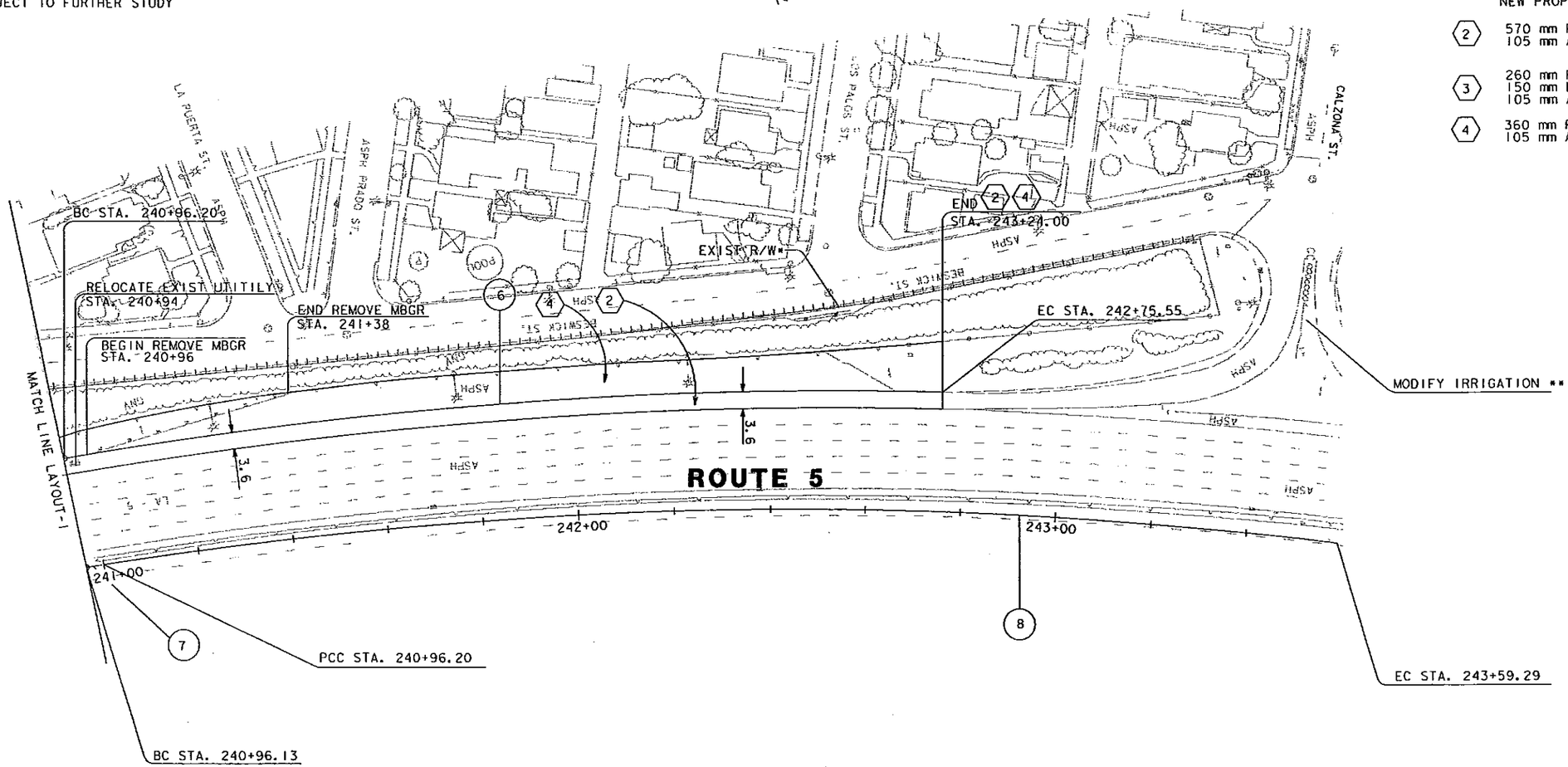

NEW PROPOSED SECTION

(2) 570 mm FULL DEPTH AC, TYPE B
105 mm AB, CLASS 3

(3) 260 mm PCC
150 mm LCB
105 mm AB, CLASS 3

(4) 360 mm FULL DEPTH AC, TYPE A
105 mm AB, CLASS 3

ALL DIMENSIONS ARE IN METERS UNLESS OTHERWISE SHOWN

ALTERNATIVE B PROPOSED LAYOUT

SCALE 1:1000

L-2

DATE	REVISED BY	DATE REVISED

CALCULATED/DESIGNED BY

CHECKED BY

PROJECT ENGINEER

STATE OF CALIFORNIA - DEPARTMENT OF TRANSPORTATION

Caltrans

LAST REVISION 12-11-02

DATE PLOTTED => 05 FEB 2003
TIME PLOTTED => 15:39:10

FOR REDUCED PLANS ORIGINAL SCALE IS IN MILLIMETERS 0 20 40 60 80

USERNAME => ayoon
DGN FILE => c:\documents and settings\ayoon\my documents\projects\ea 22400k\alt_b_l_07_03.dgn

CU 07385

EA 22400K

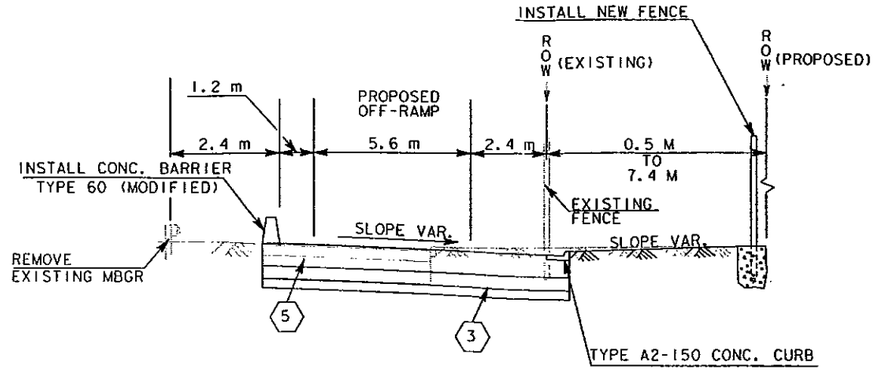

EXISTING AND PROPOSED STRUCTURAL CROSS SECTION A-A

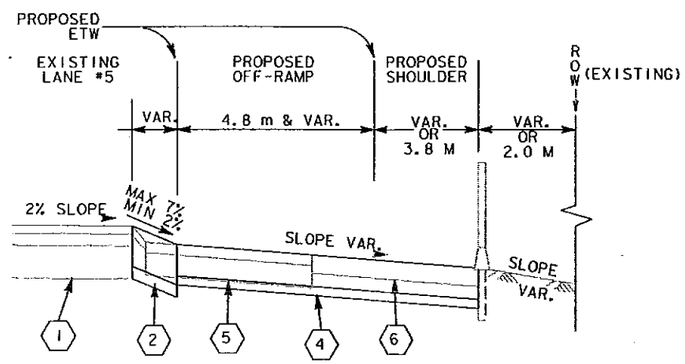

EXISTING AND PROPOSED STRUCTURAL CROSS SECTION B-B

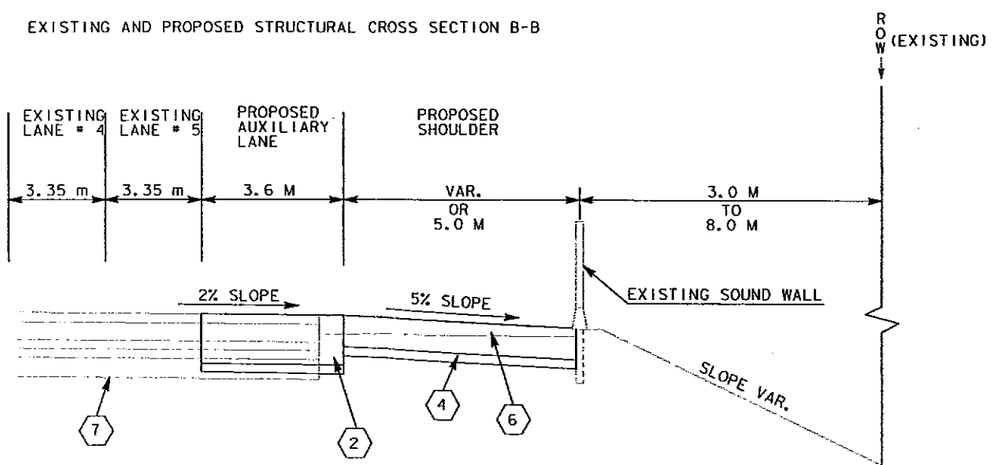

EXISTING AND PROPOSED STRUCTURAL CROSS SECTION C-C

NOTES

1. 100 mm AC WITH PRF
   120 mm AC
   380 mm LCB (EXISTING)
2. 570 mm FULL DEPTH AC, TYPE B
   105 mm AB, CLASS 3 (PROPOSED)
3. 260 mm PCC
   150 mm LCB
   105 mm AB, CLASS 3 (PROPOSED)
4. 360 mm FULL DEPTH AC, TYPE A
   105 mm AB, CLASS 3 (PROPOSED)
5. 120 mm AC, TYPE B
   260 mm LCB (EXISTING)
6. MIN. 210 mm AC (EXISTING)
7. 100 m AC WITH PRF
   200 m PCC
   100 m CTB
   100 m AB
   VAR. AS (EXISTING)

AC	ASPHALT CONCRETE
LCB	LEAN CONCRETE BASE
PRF	PAVEMENT REINFORCING FABRIC
PCC	PORTLAND CEMENT CONCRETE
CTB	CEMENT TREATED BASE
AB	AGGREGATE BASE
AS	AGGREGATE SUBBASE

ALTERNATIVE B
PROPOSED CROSS SECTIONS

X-1

EXISTING AND PROPOSED STRUCTURAL CROSS SECTIONS FOR ALTERNATIVE B

NOT TO SCALE

ALL DIMENSIONS ARE IN METERS UNLESS OTHERWISE SHOWN

DIST	COUNTY	ROUTE	KILOMETER POST TOTAL PROJECT	SHEET No	TOTAL SHEETS

REGISTERED CIVIL ENGINEER

PLANS APPROVAL DATE

REGISTERED PROFESSIONAL ENGINEER No. Exp. CIVIL STATE OF CALIFORNIA

The State of California or its officers or agents shall not be responsible for the accuracy or completeness of electronic copies of this plan sheet.

Caltrans now has a web site! To get to the web site, go to: http://www.dot.ca.gov

Caltrans Metric

STATE OF CALIFORNIA - DEPARTMENT OF TRANSPORTATION

Caltrans

PROJECT ENGINEER

CALCULATED/DESIGNED BY

CHECKED BY

DATE REVISED BY

DATE REVISED

LAST REVISION 12-12-02

DATE PLOTTED => 05 FEB 2003
TIME PLOTTED => 15:39:28

FOR REDUCED PLANS ORIGINAL SCALE IS IN MILLIMETERS 0 2 4 6 8

USERNAME => ayoon
DGN FILE => c:\documents and settings\ayoon\my documents\projects\ea 22400k\alt_b_1_07_03.dgn

CU 07385

EA 22400K

DIST	COUNTY	ROUTE	KILOMETER POST TOTAL PROJECT	SHEET No	TOTAL SHEETS

REGISTERED CIVIL ENGINEER

PLANS APPROVAL DATE

REGISTERED PROFESSIONAL ENGINEER No. Exp. CIVIL STATE OF CALIFORNIA

The State of California or its officers or agents shall not be responsible for the accuracy or completeness of electronic copies of this plan sheet.

Caltrans now has a web site! To get to the web site, go to: http://www.dot.ca.gov

Caltrans Metric

CURVE DATA

NO	R	Δ	T	L
1	42.55	87°30'57"	40.74	64.99
2	917.40	9°33'41"	76.72	153.09
3	914.40	11°21'41"	90.96	181.32

* SUBJECT TO VERIFY

** SUBJECT TO FURTHER STUDY

NEW PROPOSED SECTION

(2) 570 mm FULL DEPTH AC, TYPE B
105 mm AB, CLASS 3

(3) 260 mm PCC
150 mm LCB
105 mm AB, CLASS 3

(4) 360 mm FULL DEPTH AC, TYPE A
105 mm AB, CLASS 3

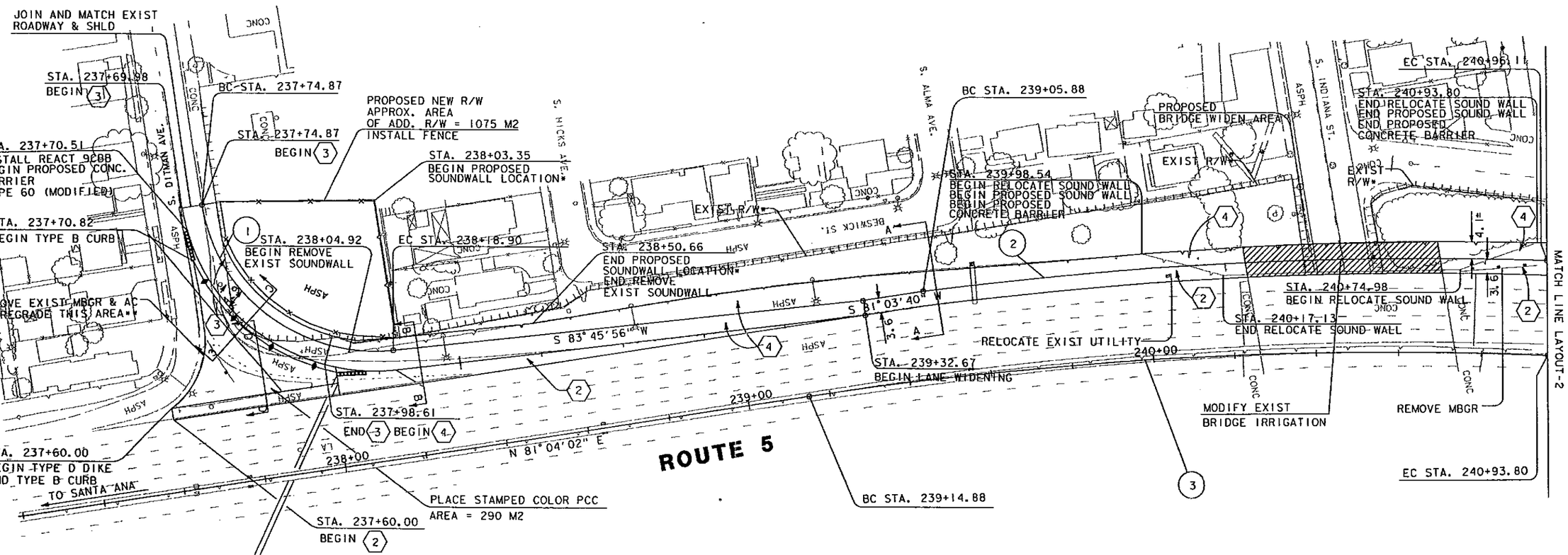

ALTERNATIVE C
PROPOSED LAYOUT

ALL DIMENSIONS ARE IN METERS UNLESS OTHERWISE SHOWN

SCALE 1:1000

L-1

STATE OF CALIFORNIA - DEPARTMENT OF TRANSPORTATION

PROJECT ENGINEER

CALCULATED/DESIGNED BY

CHECKED BY

REVISED BY

DATE REVISED

DATE

LAST REVISION 12-11-02

DATE PLOTTED => 07 FEB 2003
TIME PLOTTED => 10:40:24

FOR REDUCED PLANS ORIGINAL SCALE IS IN MILLIMETERS 0 20 40 60 80

USERNAME => oyoon
DGN FILE => bc:\documents and settings\oyoon\my documents\projects\ea 22400k\alt_c_1_07_03.dgn

CU 07385

EA 22400K

DIST	COUNTY	ROUTE	KILOMETER POST TOTAL PROJECT	SHEET No	TOTAL SHEETS

REGISTERED CIVIL ENGINEER

PLANS APPROVAL DATE

REGISTERED PROFESSIONAL ENGINEER — No. — Exp. — CIVIL — STATE OF CALIFORNIA

The State of California or its officers or agents shall not be responsible for the accuracy or completeness of electronic copies of this plan sheet.

Caltrans now has a web site! To get to the web site, go to: http://www.dot.ca.gov

Metric

CURVE DATA

NO	R	Δ	T	L
4	925.32	11°24'14"	92.39	184.17
5	914.40	00°14'17"	1.90	3.80
6	914.40	16°09'38"	129.82	257.91

* SUBJECT TO VERIFY

** SUBJECT TO FURTHER STUDY

NEW PROPOSED SECTION

(2) 570 mm FULL DEPTH AC, TYPE B
105 mm AB, CLASS 3

(3) 260 mm PCC
150 mm LCB
105 mm AB, CLASS 3

(4) 360 mm FULL DEPTH AC, TYPE A
105 mm AB, CLASS 3

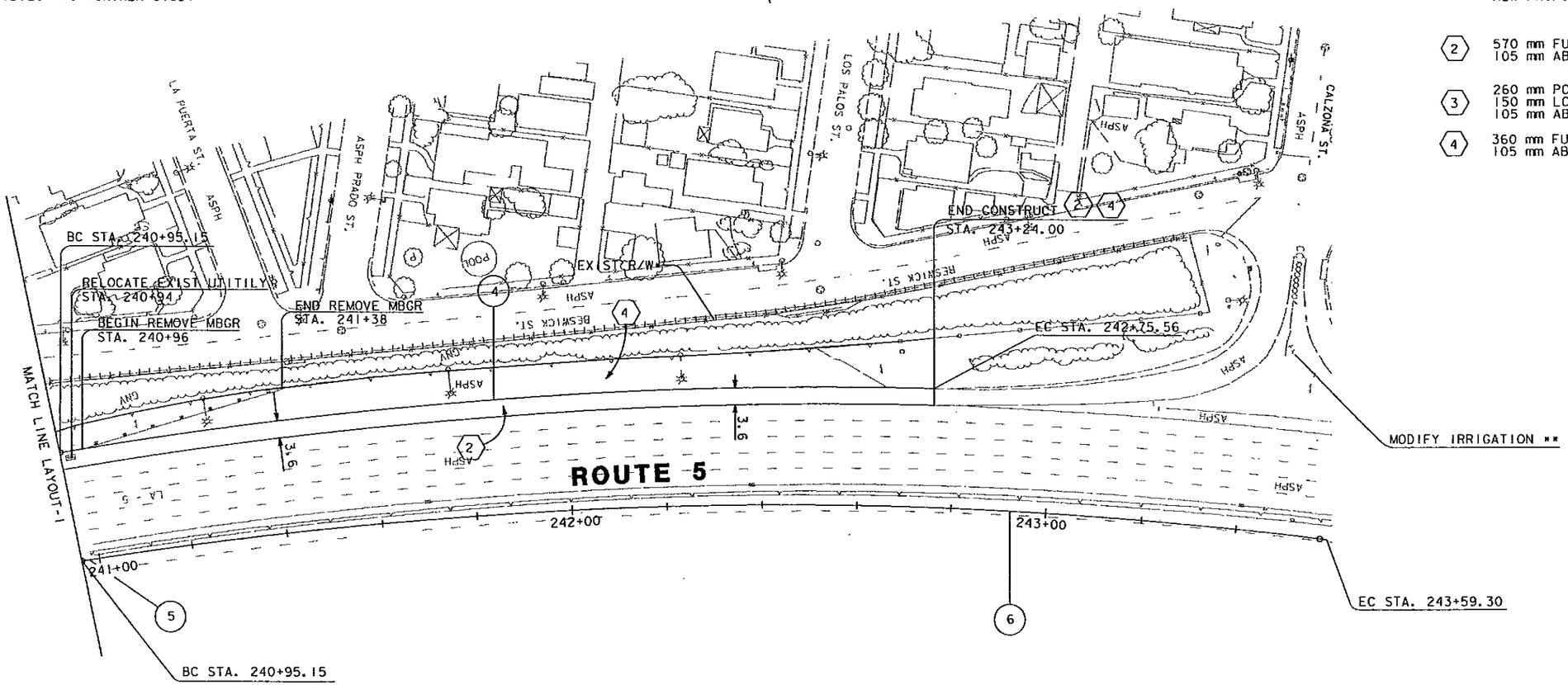

ALTERNATIVE C
PROPOSED LAYOUT

SCALE 1:1000

L-2

ALL DIMENSIONS ARE IN METERS UNLESS OTHERWISE SHOWN

FOR REDUCED PLANS ORIGINAL SCALE IS IN MILLIMETERS 0 20 40 60 80

USERNAME => gyoon
DGN FILE => c:\documents and settings\gyoon\my documents\projects\ea 22400k\rolt_c_l_07_03.dgn

CU 07385

EA 22400K

LAST REVISION 12-11-02

DATE PLOTTED => 05 FEB 2003
TIME PLOTTED => 15:36:34

STATE OF CALIFORNIA - DEPARTMENT OF TRANSPORTATION

Caltrans

PROJECT ENGINEER

CALCULATED/DESIGNED BY

CHECKED BY

DATE REVISED BY

DATE REVISED

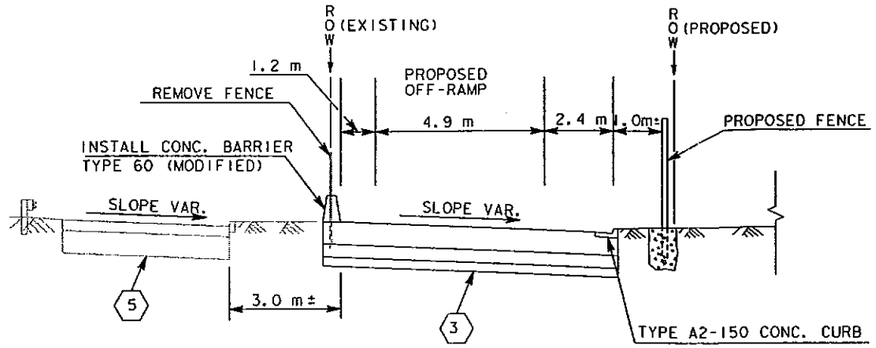

EXISTING AND PROPOSED STRUCTURAL CROSS SECTION C-C

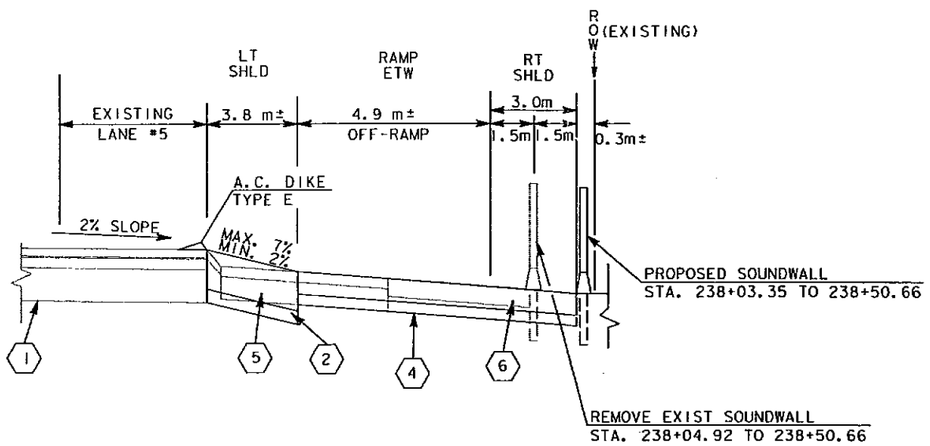

EXISTING ANDPROPOSED STRUCTURAL CROSS SECTION B-B
e_{max}= 12%

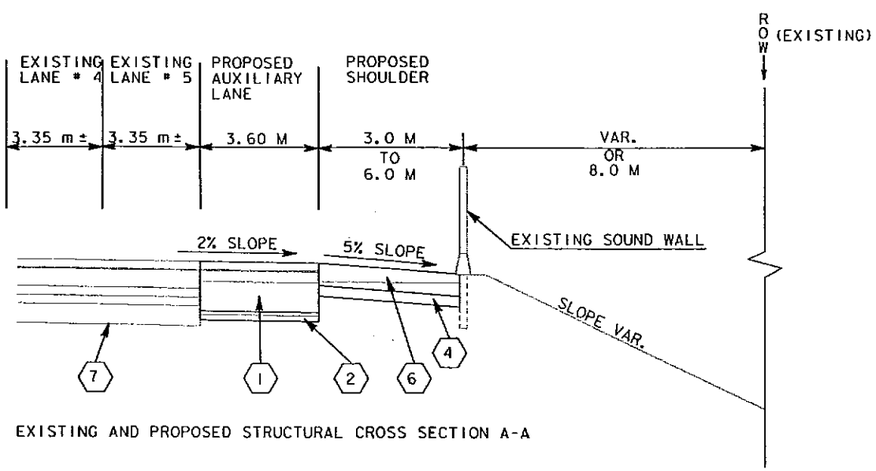

EXISTING AND PROPOSED STRUCTURAL CROSS SECTION A-A

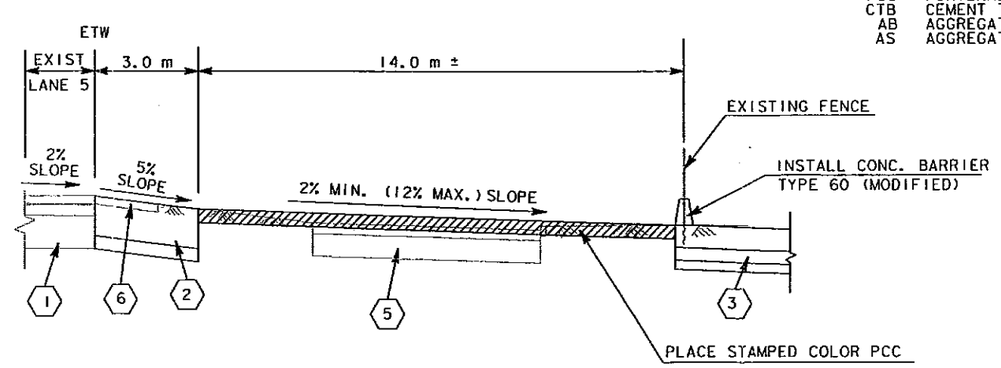

EXISTING AND PROPOSED STRUCTURAL CROSS SECTION D-D

NOTES

1. 100 mm AC WITH PRF
   120 mm AC
   380 mm LCB (EXISTING)
2. 570 mm FULL DEPTH AC, TYPE B
   105 mm AB, CLASS 3 (PROPOSED)
3. 260 mm PCC
   150 mm LCB
   105 mm AB, CLASS 3 (PROPOSED)
4. 360 mm FULL DEPTH AC, TYPE A
   105 mm AB, CLASS 3 (PROPOSED)
5. 120 mm AC, TYPE B
   260 mm LCB (EXISTING)
6. MIN. 210 mm AC (EXISTING)
7. 100 m AC WITH PRF
   200 m PCC
   100 m CTB
   100 m AB
   VAR. AS (EXISTING)

AC	ASPHALT CONCRETE
LCB	LEAN CONCRETE BASE
PRF	PAVEMENT REINFORCING FABRIC
PCC	PORTLAND CEMENT CONCRETE
CTB	CEMENT TREATED BASE
AB	AGGREGATE BASE
AS	AGGREGATE SUBBASE

EXISTING AND PROPOSED STRUCTURAL CROSS SECTIONS
FOR ALTERNATIVE C

NOT TO SCALE

ALL DIMENSIONS ARE IN
METERS UNLESS OTHERWISE SHOWN

ALTERNATIVE C
PROPOSED CROSS SECTIONS
X-1

DIST	COUNTY	ROUTE	KILOMETER POST TOTAL PROJECT	SHEET NO	TOTAL SHEETS

REGISTERED CIVIL ENGINEER

PLANS APPROVAL DATE

REGISTERED PROFESSIONAL ENGINEER No. Exp. CIVIL STATE OF CALIFORNIA

The State of California or its officers or agents shall not be responsible for the accuracy or completeness of electronic copies of this plan sheet.

Caltrans now has a web site! To get to the web site, go to: http://www.dot.ca.gov

Caltrans Metric

DATE	REVISED BY	DATE REVISED

CALCULATED/DESIGNED BY

CHECKED BY

PROJECT ENGINEER

STATE OF CALIFORNIA - DEPARTMENT OF TRANSPORTATION

Caltrans

LAST REVISION 12-11-02

DATE PLOTTED => 05 FEB 2003
TIME PLOTTED => 15:36:47

FOR REDUCED PLANS ORIGINAL SCALE IS IN MILLIMETERS 0 2 4 6 8

USERNAME => ayoon
DGN FILE => c:\documents and settings\ayoon\my documents\projects\ea 22400k\alt_c_1_07_03.dgn

CU 07385

EA 22400K

ATTACHMENT 4

MINI-MEMO

Date: July 2, 2001

To: Yu-Ying Chu
Office of Freeway Operations

From: Nicholas R. (Nick) Jones
Traffic Monitoring Unit
Office of Freeway Operations
Phone : (213) 897-0335
FAX: (213) 897-0320

Subject: TRAFFIC DATA FOR LA-5-KP 23.8/24.3

Following is the traffic data that you requested in your memo dated 5/10/00:

K.P.	2000 ADT	2000 DHV	Trucks	20 Yr T.I. Inside Lns	20 Yr T.I. Outside Lns
23.82/24.04	261,000	20,900	8.8%	12.5	15.0
24.04/24.30	265,000	21,200	9.4%	12.5	15.0

Ramp	2000 ADT	2020 ADT (Est)	Trucks (Est)	T.I.
S/B 5 Off to Ditman	1,500	1,900	5%	10.0
S/B 5 On from Calzona	3,100	3,900	5%	10.0

If you have any questions, please call me at the above number.

Sincerely,

ATTACHMENT 5

State of California

Business, Transportation and Housing Agency

Memorandum

To: Yu-Ying Chu, Sr. T.E.
Office of Freeway Operations

Date: April 26, 2001

File: 07-LA-5
KP 23.8/24.3
PM 14.8/15.1
EA No. 22400K

From: DAVE GILSTRAP
DEPARTMENT OF TRANSPORTATION
TRANSPORTATION PLANNING & LARTS

Subject: 2025 traffic volume projections

The requested volume projections for the above-referenced project are:

2025	ADT	AM Peak	PM Peak
S/B Rte 5 Mainline	181750	10300	10850
Calzona S/B on-ramp	4600	280	410
Ditman S/B Off-ramp	2350	150	220

If you have any questions please contact me at extension 7-4643 or Guillermo Gutierrez of my staff at 7-5598.

DAVE GILSTRAP
Senior Transportation Engineer,
Regional Transportation Planning
And LARTS

ATTACHMENT 6

PRELIMINARY PROJECT COST ESTIMATE SUMMARY

Caltrans Metric

DIST-CO-RTE	07-LA-005
Type of Estimate (Pre-PSR, PSR, PR, etc.):	PSR
Program Code:	SHOPP CODE 310
KP(PM)	23.7/24.3 (PM 14.720/15.120)
EA	22400K
PP NO.	2154

Project Description:

Limits: Southbound Rte. 5 from Calzona on-ramp to Ditman off-ramp
Alternative B

Proposed Improvement (Scope): Add one auxiliary lane in the southbound direction from Calzona on-ramp to Ditman off-ramp; widen Indiana St. UC structure 53-0604; remove and replace portions of existing sound walls; construct new sound walls; remove existing metal beam guard railing; install Type 60 concrete barrier at the Ditman off-ramp; install REACT crash cushions; acquire additional R/W; increase lane width at the off-ramp.

Alternate:

TOTAL ROADWAY ITEMS	$ 3,200,000
TOTAL STRUCTURE ITEMS	$ 650,000
SUBTOTAL CONSTRUCTION COSTS	$ 3,850,000
RIGHT OF WAY (Current Value)	$ 243,034
TOTAL PROJECT CAPITAL OUTLAY COSTS	$ 4,093,034
USE	$ $4,100,000

			Phone No.	Date
Reviewed by Program Manager	Signature			
Approved by Project Manager	Signature			

PRELIMINARY PROJECT COST ESTIMATE SUMMARY--ALTERNATIVE B

DIST-CO-RTE	07-LA-005
KP(PM)	23.7/24.3
	(PM 14.720/15.120)
EA	22400K

I. ROADWAY ITEMS

Section 1 Earthwork	Quantity	Unit	Unit Price	Unit Cost	Section Cost
Roadway Excavation	2,700	M3	$30.00	$81,000	
Clearing & Grubbing	1	LS	$5,000.00	$5,000	
Develop Water Supply	1	LS	$4,500.00	$4,500	
Others					
				Subtotal Earthwork	$90,500

Section 2 Structural Section					
PCC Pavement (Ramp Termini, 260 mm)	100	M3	$250.00	$25,000	
Ashpalt Concrete (Type A)	2,500	tonne	$180.00	$450,000	
Ashpalt Concrete (Type B)	2,400	tonne	$180.00	$432,000	
Lean Concrete Base	60	M3	$165.00	$9,900	
Aggregate Base (Class 3)	525	M3	$30.00	$15,750	
Misc. AC	100	M2	$50.00	$5,000	
				Subtotal Structural Items	$937,650

Section 3 Drainage					
Modify Drainage system		LS			
				Subtotal Drainage	

PRELIMINARY PROJECT COST ESTIMATE SUMMARY–ALTERNATIVE B

DIST-CO-RTE	07-LA-005
KP(PM)	23.7/24.3
	(PM 14.720/15.120)
EA	22400K

Section 4 Specialty Items	Quantity	Unit	Unit Price	Unit Cost
Remove Sound Walls with Barrier	402	M2	$100.00	$40,200
Struct. Excavation, Ret. Wall (Sound Wall)	211	M3	$85.00	$17,935
Soundwalls, Masonry with Barrier	125	M	$150.00	$18,750
Remove Railing (MBGR)	75	M	$100.00	$7,500
Remove Concrete Curb	39	M	$45.00	$1,755
Remove Concrete Sidewalk	45	M2	$25.00	$1,125
Minor Concrete (Curb and Gutter)	45	M	$60.00	$2,700
Dispose of yellow striping	150	M	$7.00	$1,050
Dispose of Aerially Deposited Lead Soil	1,000	M3	$350.00	$350,000
R/W Disposal Material	35	M3	$250.00	$8,750
Crash Cushion (Type REACT 9CBB)	2	EA	$40,000.00	$80,000
Remove Concrete Barrier	48	M	$40.00	$1,920
Concrete Barrier (Type 732)	110	M	$350.00	$38,500
Concrete Barrier (Type 60)	25	M	$300.00	$7,500
Replace Commications System	1	LS	$230,000.00	$230,000
Landscape and Irrigation	1	LS	$50,000.00	$50,000
Asbestos Contained Material (ACM)	1	LS	$2,000.00	$2,000
WPCP	1	LS	$90,000.00	$90,000

Subtotal Specialty Items $1,079,685

Section 5 Traffic Items				
Remove Signs (Wood post)	8	EA	$150.00	$1,200
Relocate Roadway Signs - Wood Post	7	EA	$300.00	$2,100
Transportation Management Plan	1	LS	$26,000.00	$26,000
Traffic Control Systems	1	LS	$70,000.00	$70,000
Temporary Crash Cushions	1	EA	$230.00	$230
Temporary Railing Type K	600	M	$36.00	$21,600
Construction Area Signs	1	LS	$13,000.00	$13,000
Striping	150	M	$5.00	$750
Thermoplastic Pavement Marking	80	M	$10.00	$800
Detector Loops	4	EA	$450.00	$1,800
Modify Lighting Systems	1	LS	$50,000.00	$50,000
Cantilver Sign Structure	2	EA	$50,000.00	$100,000

Subtotal Traffic Items $287,480

SUBTOTAL SECTIONS 1-5 $2,395,315

PRELIMINARY PROJECT COST ESTIMATE SUMMARY--ALTERNATIVE B

DIST-CO-RTE	07-LA-005
KP(PM)	23.7/24.3
	(PM 14.720/15.120)
EA	22400K

				Item Cost	Section Cost
Section 6 Minor Items					
Subtotal Sections 1-5	$2,395,315	X	5.00% (5% - 10%)	$119,766	
				TOTAL MINOR ITEMS	$119,766
Section 7 Roadway Mobilization					
Subtotal Sections 1-5	$2,395,315				
Subtotal Section 6 Minor Items	$119,766				
Sum of Subtotal Sections 1-6	$2,515,081	X	10.00% (5% - 10%)	$251,508	
				TOTAL ROADWAY MOBILIZATION	$251,508
Section 8 Roadway Additions					
Supplemental Work					
Additional Electrical Work					
Additional Asphalt Concrete					
Additional Replace Concrete Pavement					
Federal Trainee Program					
Maintain Traffic					
Additional Grout (Mudjacking)					
Disputes Review Board					
State Furnished Materials					
COZEEP	$11,000				
Resident Engineer's Office	$36,000				
Partnering					
Contingencies					
Subtotal Sections 1-6	$2,515,081				
Sum	$2,562,081	X	15.00% (*)	$384,312	
				TOTAL ROADWAY ADDITIONS	$431,312
				TOTAL ROADWAY ITEMS (Subtotals Sections 1-8)	$3,197,901
				USE	$3,200,000

		Phone #	Date
Estimate Prepared By	Elpidio Delos Reyes, Jr (Print Name)	(213) 897-4784	12/9/2002
Estimate Checked By	Yu-Ying Chu (Print Name)	(213) 897-6091	

*Use appropriate Percentage per Chapter 3-50 of Project Development Procedures Manual.

PRELIMINARY PROJECT COST ESTIMATE SUMMARY–ALTERNATIVE B

DIST-CO-RTE	07-LA-005
KP(PM)	23.7/24.3
	(PM 14.720/15.120)
EA	22400K

II. STRUCTURES ITEMS

	STRUCTURE No. 1	No. 2	No. 3	No. 4
Bridge Name	Indiana St. UC			
Structure Type				
Width (out to out) - (m)	7.01			
Span Lengths - (m)	47.244			
Total Area - (m^2)	331.2			
Footing Type (Pile/Spread)	Spread			
Cost Per m^2 (include 10% mobilization and 25% contingency)	$227,500			
Total Cost for Structure	$650,000			
Removal Cost				

SUBTOTAL STRUCTURES ITEMS	$650,000
Railroad Related Costs	
SUBTOTAL RAILROAD ITEMS	
TOTAL STRUCTURES ITEMS	$650,000
USE	$650,000

COMMENTS:

		Phone #	Date
Estimate Prepared By	Masoud Esnaashari (Print Name)	(916) 227-8341	August-02

PRELIMINARY PROJECT COST ESTIMATE SUMMARY-ALTERNATIVE B

DIST-CO-RTE 07-LA-005
KP(PM) 23.7/24.3
(PM 14.720/15.120)
EA 22400K

III. RIGHT OF WAY

	Current Values (Future Use)	Escalation Rates	Escalated Values*
A. Acquisition, including excess lands, damages to remainder(s), and Goodwill	$125,508		$125,601
B. Utility Relocation (State share)	$115,000		$115,000
C. Relocation Assistance			
C. Clearance/Demolition			
E. Title and Escrow Fees	$2,527		$2,529

TOTAL RIGHT OF WAY ITEMS $243,130
(Escalated Value)

Anticipated Date of Right of Way Certification _____
(Date to which Values are Escalated)

F. CONSTRUCTION CONTRACT WORK

Brief Description of Work:

_____

Right of Way Branch Cost Estimate for Work* _____

*This dollar amount is to be included in the Roadway and/or Structures Items of Work, as appropriate.

COMMENTS:

Estimate Prepared By _____ Phone # _____ Date _____
(Print Name)

Please see Attachment 7 for Right of Way Data Sheet.

PRELIMINARY PROJECT COST ESTIMATE SUMMARY

Caltrans Metric

DIST-CO-RTE	07-LA-005
Type of Estimate (Pre-PSR, PSR, PR, etc.):	PSR
Program Code:	SHOPP CODE 310
KP(PM)	23.7/24.3 (PM 14.720/15.111)
EA	22400K
PP NO.	2154

Project Description:

Limits: Southbound Rte. 5 from Calzona on-ramp to Ditman off-ramp
Alternative C

Proposed Improvement (Scope): Add one auxiliary lane in the southbound direction from Calzona on-ramp to Ditman off-ramp; widen Indiana St. UC structure 53-0604; remove and replace portions of existing sound walls; construct new sound walls; remove existing metal beam guard railing; install Type 60 concrete barrier at the Ditman off-ramp; install REACT crash cushions; acquire additional R/W; increase lane width at the off-ramp; increase radius of curvature at the off-ramp.

Alternate:

TOTAL ROADWAY ITEMS	$	3,350,000
TOTAL STRUCTURE ITEMS	$	650,000
SUBTOTAL CONSTRUCTION COSTS	$	4,000,000
RIGHT OF WAY (Current Value)	$	253,468
TOTAL PROJECT CAPITAL OUTLAY COSTS	$	4,253,468
USE	$	4,300,000

			Phone No.	Date
Reviewed by Program Manager	Signature			
Approved by Project Manager	Signature			

PRELIMINARY PROJECT COST ESTIMATE SUMMARY--ALTERNATIVE C

DIST-CO-RTE	07-LA-005
KP(PM)	23.7/24.3
	(PM 14.720/15.111)
EA	22400K

I. ROADWAY ITEMS

Section 1 Earthwork	Quantity	Unit	Unit Price	Unit Cost	Section Cost
Roadway Excavation	3,100	M3	$30.00	$93,000	
Clearing & Grubbing	1	LS	$5,000.00	$5,000	
Develop Water Supply	1	LS	$4,500.00	$4,500	
				Subtotal Earthwork	$102,500

Section 2 Structural Section					
PCC Pavement (Ramp Termini, 260 mm)	130	M3	$250.00	$32,500	
Ashpalt Concrete (Type A)	2,700	tonne	$180.00	$486,000	
Ashpalt Concrete (Type B)	2,350	tonne	$180.00	$423,000	
Lean Concrete Base	80	M3	$165.00	$13,200	
Aggregate Base (Class 3)	575	M3	$30.00	$17,250	
Place Asphalt Concrete (Miscellaneous Area)	450	M2	$50.00	$22,500	
Pavement Reinforcing Fabric		M2	$131.00		
				Subtotal Structural Items	$994,450

Section 3 Drainage					
Modify Drainage system		LS	$10,000.00		
				Subtotal Drainage	

PRELIMINARY PROJECT COST ESTIMATE SUMMARY--ALTERNATIVE C

DIST-CO-RTE	07-LA-005
KP(PM)	23.7/24.3
	(PM 14.720/15.111)
EA	22400K

Section 4 Specialty Items	Quantity	Unit	Unit Price	Unit Cost
Remove Sound Walls with Barrier	402	M2	$100.00	$40,200
Struct. Excavation, Ret. Wall (Sound Wall)	211	M3	$85.00	$17,935
Soundwalls, Masonry with Barrier	180	M	$150.00	$27,000
Remove Railing (MBGR)	80	M	$100.00	$8,000
Remove Concrete Curb	64	M	$45.00	$2,880
Remove Concrete Sidewalk	130	M2	$25.00	$3,250
Minor Concrete (Curb and Gutter)	130	M	$75.00	$9,750
Dispose of yellow striping	150	M	$7.00	$1,050
Dispose of Aerially Deposited Lead Soil	1,200	M3	$350.00	$420,000
Crash Cushion (Type REACT 9CBB)	2	EA	$40,000.00	$80,000
Remove Concrete Barrier	48	M	$40.00	$1,920
Concrete Barrier (Type 732)	110	M	$350.00	$38,500
Concrete Barrier (Type 60)	35	M	$300.00	$10,500
R/W Disposal Material	160	M3	$250.00	$40,000
Remove Concrete on Off-ramp	490	M2	$103.75	$50,824
Replace Commications System	1	LS	$230,000.00	$230,000
Place Asphalt Concrete Dike Type D	50	M	$85.00	$4,250
Landscape and Irrigation	1	LS	$50,000.00	$50,000
Stamped Colored PCC	290	M2	$60.00	$17,400
Asbestos Contained Material (ACM)	1	LS	$2,000.00	$2,000
WPCP	1	LS	$90,000.00	$90,000
			Subtotal Specialty Items	$1,145,459

Section 5 Traffic Items				
Remove Signs (Wood post)	8	EA	$150.00	$1,200
Relocate Roadway Signs - Wood Post	7	EA	$300.00	$2,100
Transportation Management Plan	1	LS	$26,000.00	$26,000
Traffic Control Systems	1	LS	$70,000.00	$70,000
Temporary Crash Cushions	1	EA	$230.00	$230
Temporary Railing Type K	600	M	$36.00	$21,600
Construction Area Signs	1	LS	$13,000.00	$13,000
Striping	150	M	$5.00	$750
Termoplastic Pavement Marking	80	M	$2.00	$160
Detector Loops	4	LS	$450.00	$1,800
Modify Lighting Systems	1	LS	$50,000.00	$50,000
Cantilver Sign Structure	2	EA	$50,000.00	$100,000
			Subtotal Traffic Items	$286,840
			SUBTOTAL SECTIONS 1-5	$2,529,249

PRELIMINARY PROJECT COST ESTIMATE SUMMARY--ALTERNATIVE C

DIST-CO-RTE	07-LA-005
KP(PM)	23.7/24.3 (PM 14.720/15.111)
EA	22400K

				Item Cost	Section Cost
Section 6 Minor Items					
Subtotal Sections 1-5	$2,529,249	X	5.00% (5% - 10%)	$126,462	
			TOTAL MINOR ITEMS		$126,462
Section 7 Roadway Mobilization					
Subtotal Sections 1-5	$2,529,249				
Subtotal Section 6 Minor Items	$126,462				
Sum of Subtotal Sections 1-6	$2,655,711	X	10.00% (5% - 10%)	$265,571	
			TOTAL ROADWAY MOBILIZATION		$265,571
Section 8 Roadway Additions					
Supplemental Work					
Additional Electrical Work					
Additional Asphalt Concrete					
Additional Replace Concrete Pavement					
Federal Trainee Program					
Maintain Traffic					
Additional Grout (Mudjacking)					
Disputes Review Board					
State Furnished Materials					
COZEEP	$11,000				
Resident Engineer's Office	$36,000				
Partnering					
Contingencies					
Subtotal Sections 1-6	$2,655,711				
Sum	$2,702,711	X	15.00% (*)	$405,407	
			TOTAL ROADWAY ADDITIONS		$452,407
			TOTAL ROADWAY ITEMS (Subtotals Sections 1-8)		$3,373,689
			USE		$3,350,000

Estimate Prepared By	Elpidio Delos Reyes, Jr. (Print Name)	Phone # (213) 897-4784	Date 12/9/2002
Estimate Checked By	Yu-Ying Chu (Print Name)	Phone # (213) 897-6091	Date

*Use appropriate Percentage per Chapter 3-50 of Project Development Procedures Manual.

PRELIMINARY PROJECT COST ESTIMATE SUMMARY--ALETRNTIVE C

DIST-CO-RTE	07-LA-005
KP(PM)	23.7/24.3
	(PM 14.720/15.111)
EA	22400K

II. STRUCTURES ITEMS

	STRUCTURE No. 1	No. 2	No. 3	No. 4
Bridge Name	Indiana St. UC			
Structure Type				
Width (out to out) - (m)	7.01			
Span Lengths - (m)	47.244			
Total Area - (m^2)	331.2			
Footing Type (Pile/Spread)	Spread			
Cost Per m^2 (include 10% mobilization and 20% contingency)	$227,500			
Total Cost for Structure	$650,000			
Removal Cost				

SUBTOTAL STRUCTURES ITEMS	$650,000
Railroad Related Costs	
SUBTOTAL RAILROAD ITEMS	
TOTAL STRUCTURES ITEMS	$650,000
USE	$650,000

COMMENTS:

Estimate Prepared By	Masoud Esnaashari (Print Name)	Phone # (916) 227-8341	Date August-02

PRELIMINARY PROJECT COST ESTIMATE SUMMARY--ALTERNATIVE C

DIST-CO-RTE 07-LA-005
KP(PM) 23.7/24.3
(PM 14.720/15.111)
EA 22400K

III. RIGHT OF WAY

	Current Values (Future Use)	Escalation Rates	Escalated Values*
A. Acquisition, including excess lands, damages to remainder(s), and Goodwill	$125,820		$130,839
B. Utility Relocation (State share)	$125,000		$125,000
C. Relocation Assistance			
C. Clearance/Demolition			
E. Title and Escrow Fees	$2,528		$2,629

TOTAL RIGHT OF WAY ITEMS $258,468
(Escalated Value)

Anticipated Date of Right of Way Certification _____
(Date to which Values are Escalated)

F. CONSTRUCTION CONTRACT WORK

Brief Description of Work:

_____

Right of Way Branch Cost Estimate for Work* _____

*This dollar amount is to be included in the Roadway and/or Structures Items of Work, as appropriate.

COMMENTS:

Estimate Prepared By _____ Phone # _____ Date _____
(Print Name)

Please see Attachment 7 for Right of Way Data Sheet.

ATTACHMENT 7

TO Yu-ying Chu
ATTN Andrew Yoon
PHONE 7-7695
SENIOR R/W P&M Jorge Cabrera
ROUTE LA-005
PM_KM 14.72/15.12
EA 22400K
ALT B

R/W DATA SHEET

WBS
REVISED
UPDATED 11-12-2002
DATE 5/7/2001
PROJ._DESC Add aux lane, widen bridge widen off ramp

ID NO
24

This cost estimate is pursuant to the following statements which are based on information provided by Yu-ying Chu.

This cost estimate is valid for the above scoping report only. This is an estimate only and not an appraisal. It may be based on worse case scenarios. The estimate is subject to change and revision.

The mapping did not provide sufficient nor adequate detail to determine the limits of thr Right of Way required and effects on the improvements.

The transportation facilities have not been sufficiently designed for our estimator to determine the damages to any of the remainder parcels affected by the project.

Residential displacement is not involved .

Utility facilities or Utility Right of Way are affected.

Railroad facilities or R.R. Right of Way are not affected.

Right of Way work will be performed by Caltrans staff.

Major items of Construction Contract Work are not anticipated.

No material borrow and/or disposal sites are not required.

There are no potential relinquishments and/or abandonments.

Hazardous waste parcels are not evident

Time constraints were not a factor in the completion of this cost estimate.

The time schedule provided by the requesting party did not permit time for a field inspection.

RW COST ESTIMATE

	CURRENT VALUE	ESCALATED VALUE
R/ w acq.(incl.contingency G.w-condem.-adm.s'tl.)Permits	$125,508	$125,601
Clearance	NONE	NONE
RAP (cont rate.)	NONE	NONE
Escrow costs (cont rate.)	$2,527	$2,529
Utility relocation costs	$115,000	$115,000
Total estimated cost	$243,034	$243,129

ESCALATION RATE RW .07
ESCALATION RATE Utilities
CERT.DATE 5/11/01
Date of this Data Sheet 9/19/01
YEARS TO CERT DATE .01

ROUTE LA-005
PM_KM 14.72/15.12
EA 22400K
ALT B

PARCEL COUNT

PARCEL TYPES		DUAL APPR.
A		
B	2	
C		
D		
F		
W		

RIGHTS NEEDED	
FEE	2
EASE	
TCE	

TAKES	
FULL	
PART	2
TOTAL	2

DISPLACEMENT OF UNITS	
SFR	
MULTI	
BUS	

PARCELS WITH RAP
0

POTENTIAL CLEARANCE PARCELS

POTENTIAL CONDEMNATION PARCELS

POTENTIAL EXCESS PARCELS
not known at this time.

ESTIMATE OF PY'S

APPRAISALS

	PY	HOURS
A		
B	.0882	156.2
C		
D		
F		
W		

ACQUISITIONS

	PY	HOURS
A		
B	.1054	156.2
C		
D		
F		

UTILITIES

	PY	HOURS
PY U4 1	.128	226.5
PY U4 2		
PY U4 3		
PY U4 4		
PY U5 7		
PY U5 8		
PY U5 9	.1638	289.8

RAILROAD

	PY	HOURS
C & M		
SC		
LIC/RE		

CONDEMNATION

PY	HOURS

CLEARANCE

PY	HOURS

RELOCATION

PY	HOURS

PERMITS

PY	HOURS
.00368	6.52

UTILITY INFORMATION

Are Utilities affected: Yes

	Quantities	Estimated Costs
2 " M So. Cal.GAS 16" WE at Indiana	$250	$15,000
8 Du pt. 8 T co. 3' WE at Indiana	$250	$25,000
4" C.I. water Cal. Wtr. Serv. Co. 5' WE at Indiana	$250	$20,000
3" wtr. Cal Wtr Serv. Co. 14' WE <Aband>at Indiana		
8" HP Wtr DWP 18' EW	$250	$25,000
Electric Pole DWP at Indiana	$1	$30,000

Are utility easements required no

No. of easements

Are Utility agreements required Yes

Types of Util. Facilities & agrmts. required Description

TOTAL CURRENT COST $115,000

CONST. COMPLETION DATE

UTILITY ESCALATION RATE

ESCALATED VALUE TO UTILITY CONSTRUCTION COMPLETION DATE $115,000

RR INFORMATION

Are RR affected NO

Describe affected RR

WHEN BRANCH LINES OR SPURS ARE AFFECTED ,WOULD ACQUISITION AND OR PAYMENT OF DAMAGES TO BUSINESSES AND OR INDUSTRIES SERVED BY THE RAILROAD FACILITY BE MORE COST EFFECTIVE THAN SERVICE CONTRACTS ,OR GRADE SEPARATIONS REQUIRING CONSTRUCTION AND MAINTENANCE AGREEMENTS INVOLVED?

Explain Branch lines

DISCUSS TYPES OF AGREEMENTS AND RIGHTS REQUIRED FROM THE RAILROADS. ARE GRADE XING REQUIRING SERVICE CONTRACTS ,OR GRADE SEPARATIONS REQUIRING CONSTRUCTION AND MAINTENANCE AGREEMENTS INVOLVED.

ESTIMATED COST TO THE STATE FOR ALL R.R. INVOLVEMENTS.

		DATE
Right of Way Estimate prepared by	DAVID LAW	9/19/01
Railroad Estimate prepared by	Ken Moore	7/3/01
Utilities Estimate prepared by	Norm Juarez	8/29/01
SR. R/W Agent	Jorge Cabrera	
Project Manager	DIAA A. YASSIN	

I have personally reviewed this R/W Data Sheet and all supporting information I certify that the probable highest and best use estimated values and assumptions are reasonable and proper subject to the limiting conditions set forth and I find this Data Sheet complete and current.

This Data Sheet is not to be signed by Chief unless accompanied by final scoping report(PR,PSR,PSSR) for review and/or signature.

CHIEF _____ 3/3/03

ADDITIONAL UTILITIES

TO Yu-Ying Chu
ATTN Andrew Yoon
PHONE 7-7695
SENIOR R/W P&M Jorge Cabrera
ROUTE LA-005
PM_KM 14.72/15.12
EA 22400K
ALT c

R/W DATA SHEET

WBS
REVISED
UPDATED 11-12-2002
DATE 5/7/2001
PROJ._DESC Add aux lane, widen bridge, re-align off ramp

ID NO
26

This cost estimate is pursuant to the following statements which are based on information provided by Yu-Ying Chu.

This cost estimate is valid for the above scoping report only. This is an estimate only and not an appraisal. It may be based on worse case scenarios. The estimate is subject to change and revision.

The mapping did not provide sufficient nor adequate detail to determine the limits of thr Right of Way required and effects on the improvements.

The transportation facilities have not been sufficiently designed for our estimator to determine the damages to any of the remainder parcels affected by the project.

Residential displacement is not involved .

Utility facilities or Utility Right of Way are affected.

Railroad facilities or R.R. Right of Way are not affected.

Right of Way work will be performed by Caltrans staff.

Major items of Construction Contract Work are anticipated

No material borrow and/or disposal sites are not required.

There are no potential relinquishments and/or abandonments.

Hazardous waste parcels are not evident

Time constraints precluded a detailed cost estimate.

The time schedule provided by the requesting party allowed for a field inspection.

RW COST ESTIMATE

	CURRENT VALUE	ESCALATED VALUE
R/ w acq.(incl.contingency G.w-condem.-adm.s'tl.)Permits	$125,820	$130,839
Clearance	NONE	NONE
RAP (cont rate.)	NONE	NONE
Escrow costs (cont rate.)	$2,528	$2,629
Utility relocation costs	$125,000	$125,000
Total estimated cost	$253,348	$258,468

ESCALATION RATE RW .07
ESCALATION RATE Utilities
CERT.DATE 12/4/01
Date of this Data Sheet 9/19/01
YEARS TO CERT DATE .58

ROUTE LA-005
PM_KM 14.72/15.12
EA 22400K
ALT c

PARCEL COUNT

	PARCEL TYPES	DUAL APPR.
A		
B	2	
C		
D		
F		
W		

RIGHTS NEEDED	
FEE	2
EASE	
TCE	

TAKES	
FULL	1
PART	1
TOTAL	2

DISPLACEMENT OF UNITS	
SFR	
MULTI	
BUS	

PARCELS WITH RAR
0

POTENTIAL CLEARANCE PARCELS

POTENTIAL CONDEMNATION PARCELS

POTENTIAL EXCESS PARCELS
not known at this time.

ESTIMATE OF PY'S

APPRAISALS

	PY	HOURS
A		
B	.0882	158.2
C		
D		
F		
W		

ACQUISITIONS

	PY	HOURS
A		
B	.1054	158.2
C		
D		
F		

UTILITIES

	PY	HOURS
PY U4 1	.1538	271.8
PY U4 2		
PY U4 3		
PY U4 4		
PY U5 7		
PY U5 8		
PY U5 9	.1911	338.1

RAILROAD

	PY	HOURS
C & M		
SC		
LIC/RE		

CONDEMNATION

PY	HOURS

CLEARANCE

PY	HOURS

RELOCATION

PY	HOURS

PERMITS

PY	HOURS
.00368	6.52

UTILITY INFORMATION

Are Utilities affected: Yes

	Quantities	Estimated Costs
2" M So. Cal Gas 16" WE at Indiana	$250	$15,000
8 Du Pt 8T Co. 3' WE	$250	$25,000
4" CI wtr. Cal Wtr. Serv. Co. 5' WE in Indiana	$250	$20,000
6" HP Wtr DWP 16' WE	$250	$25,000
Electric Pole DWP at Indiana	$1	$30,000
6" Cal W S 6' EW at Ditman	$100	$10,000

Are utility easements required _____ No. of easements _____ Are Utility agreements required Yes

TOTAL CURRENT COST $125,000

CONST. COMPLETION DATE _____

UTILITY ESCALATION RATE _____

ESCALATED VALUE TO UTILITY CONSTRUCTION COMPLETION DATE $125,000

Types of Util. Facilities & agmts. required Description _____

RR INFORMATION

Are RR affected NO

Describe affected RR

WHEN BRANCH LINES OR SPURS ARE AFFECTED ,WOULD ACQUISITION AND OR PAYMENT OF DAMAGES TO BUSINESSES AND OR INDUSTRIES SERVED BY THE RAILROAD FACILITY BE MORE COST EFFECTIVE THAN SERVICE CONTRACTS ,OR GRADE SEPARATIONS REQUIRING CONSTRUCTION AND MAINTENANCE AGREEMENTS INVOLVED?

Explain Branch lines

DISCUSS TYPES OF AGREEMENTS AND RIGHTS REQUIRED FROM THE RAILROADS. ARE GRADE XING REQUIRING SERVICE CONTRACTS ,OR GRADE SEPARATIONS REQUIRING CONSTRUCTION AND MAINTENANCE AGREEMENTS INVOLVED.

ESTIMATED COST TO THE STATE FOR ALL R.R. INVOLVEMENTS. _____

		DATE
Right of Way Estimate prepared by	DAVID LAW	9/19/01
Railroad Estimate prepared by	Ken Moore	7/3/01
Utilities Estimate prepared by	Noorm Juarez	8/29/01
SR. R/W Agent	Jorge Cabrera	
Project Manager	DIAA A. YASSIN	

I have personally reviewed this R/W Data Sheet and all supporting information I certify that the probable highest and best use estimated values and assumptions are reasonable and proper subject to the limiting conditions set forth and I find this Data Sheet complete and current.

This Data Sheet is not to be signed by Chief unless accompanied by final scoping report(PR,PSR,PSSR) for review and/or signature.

CHIEF _____ 3/3/03

ADDITIONAL UTILITIES

ATTACHMENT 8

State of California **Business, Transportation and Housing**

Date : October 2, 2001

MEMORANDUM

To: Yu-Ying Chu, Senior Transportation Engineer
Office of Freeway Operations
Traffic Operations Strategy Branch

From: Dinh Dao
Office of Freeway Operations
Area Operations East

Subject: REVIEW WEAVING ANALYSIS

We have reviewed the weaving analysis for the proposed auxiliary lane between the Cazona St. on-ramp and the Ditman Avenue off-ramp (PM 14.8 to PM 15.1) along the Southbound Santa Ana Freeway (I-5) and we concur with the analysis performed by your office. The results are acceptable.

Should you have any questions, please call me at 7-4654.

Dinh Dao
Act. Senior Transportation Engineer

Memorandum

To: Dinh Dao
Senior Transportation Engineer
Office of Freeway Operations East
Area Operations Branch

Date: September 25, 2001

File No.: 07-LA-5
KP 23.8/24.3
(PM 14.8/15.1)
22400K

From: **DEPARTMENT OF TRANSPORTATION**
Yu-Ying Chu, Senior Transportation Engineer
Office of Freeway Operations
Traffic Operations Strategy Branch

Subject: REVIEW WEAVING ANALYSIS

The Office of Freeway Operations is currently preparing a PROJECT STUDY REPORT (PSR) for a segment of southbound Route 5 between Ditman off-ramp and Calzona on-ramp, KP 23.8/24.3 (PM 14.8/15.1) in Los Angeles County. The existing segment of the route consists of five mixed flow lanes. The Calzona on-ramp consists of one metered SOV lane and the Ditman off-ramp consists of one SOV lane. Two "build" alternatives have been developed for the PSR in order to: minimize potential damage to the existing facility due to inadequate deceleration of the vehicles exiting the freeway at the Ditman off-ramp; and alleviate the exposure of Caltrans maintenance crews to the traffic for the repair of the potential damage.

Both alternatives (Alternatives B and C) propose to add an auxiliary lane that will entail widening of an existing under crossing (UC) structure at KP 24.1 (PM 15.0, Indiana Street UC, 53-0604) to a width of 7 meters. In addition to the structure widening, Alternative B proposes to increase the lane width at the Ditman off-ramp to accommodate relatively high truck traffic volume. Alternative C proposes to increase the curve radius and lane width of the Ditman off-ramp.

Headquarter Geometric Reviewer, Paul Engstrom, has requested that a weaving analysis be performed for each Alternative in preparation of a Fact Sheet for the project. Andrew Yoon of my staff has performed the analysis for the Alternatives as attached, using a Highway Capacity Software (HCS2000). Please review the attached weaving analyses and verify that they have been performed appropriately and the indicated results are acceptable. As requested by the Geometric Reviewer, please provide us with your concurrence on the attached weaving analyses by August 28, 2001. Should you have any questions or require further information, please contact Andrew Yoon of my staff via email or by phone at extension 7-7695.

Yu-Ying Chu
Senior Transportation Engineer

Andrew Yoon
Caltrans
120 S. Spring St.
Los Angeles, CA

Phone: 213-897-7695 Fax:
E-mail: Andrew.Yoon@dot.ca.gov

Operational Analysis

Analyst: Andrew Yoon
Agency/Co.: Caltrans
Date Performed: 8/14/2001
Analysis Time Period:
Freeway/dir or Travel: Route I-5
Weaving Location: KP 23.8/24.3
Jurisdiction: State
Analysis Year: 2001
Description: Add an auxiliary lane, Alternative B

Inputs

Freeway free-flow speed, SFF	90	km/h	
Weaving number of lanes, N	2		
Weaving segment length, L	446	m	
Terrain type	Level		
Grade	%		
Length	km		
Weaving type	A	Multilane or C-D	
Volume ratio, VR	0.11		
Weaving ratio, R	0.34		

Conversion to pc/h Under Base Conditions

	Non-Weaving V A-C	Non-Weaving V B-D	Weaving V A-D	Weaving V B-C	
Volume, V	1159	10	68	130	veh/h
Peak-hour factor, PHF	0.64	0.90	0.90	0.90	
Peak 15-min volume, v15	453	3	19	36	v
Trucks and buses	9	5	5	5	%
Recreational vehicles	1	1	1	1	%
Trucks and buses PCE, ET	1.5*	1.5	1.5	1.5	
Recreational vehicle PCE, ER	1.2	1.2	1.2	1.2	
Heavy vehicle adjustment, fHV	0.955	0.974	0.974	0.974	
Driver population factor, fP	1.00	1.00	1.00	1.00	
Flow rate, v	1896	11	77	148	pc/h

Weaving and Non-Weaving Speeds

	Weaving	Non-Weaving
Weaving intensity factor, Wi	0.48	0.19
Weaving and non-weaving speeds, Si	74.17	86.14
Number of lanes required for constrained operation, Nw (Exhibit 24-7)	0.42	
Maximum number of lanes, Nw (max) (Exhibit 24-7)	1.40	
Type of operation is	Unconstrained	

Weaving Segment Speed, Density, Level of Service and Capacity

Weaving segment speed, S	84.70	km/h
Weaving segment density, D	12.59	pc/km/ln
Level of service, LOS	C	
Capacity for base condition, cb		pc/h

Limitations on Weaving Segments

	Analyzed	If Max Exceeded See Note Maximum	Note
Weaving flow rate, Vw	225	2800	a
Average flow rate (pc/h/ln)	1066	2250	b
Volume ratio, VR	0.11	1.00	c
Weaving ratio, R	0.34	N/A	d
Weaving length (m)	446	750	e

Notes:

a. Capacity constrained by maximum allowable weaving flow rate.
b. Capacity constrained by basic freeway capacity.
c. Segments do not operate well at VR's exceeding max. Poor operations and some local queuing are expected in such cases.
d. Breakdown may occur in some cases for Type C segments.
e. When length exceeds these limits, merge and diverge are treated as isolated junctions and analyzed accordingly (HCM Chapter 25, HCS Ramps.)

HCS2000: Freeway Weaving Release 4.1

Andrew Yoon
Caltrans
0 S. Spring St.
Los Angeles, CA

Phone: 213-897-7695 Fax:
E-mail: Andrew.Yoon@dot.ca.gov

Operational Analysis

Analyst: Andrew Yoon
Agency/Co.: Caltrans
Date Performed: 8/14/2001
Analysis Time Period:
Freeway/dir or Travel: Route I-5
Weaving Location: KP 23.8/24.3
Jurisdiction: State
Analysis Year: 2001
Description: Add an auxiliary lane, Alternative C

Inputs

Freeway free-flow speed, SFF	90	km/h	
Weaving number of lanes, N	2		
Weaving segment length, L	446	m	
Terrain type	Level		
Grade	%		
Length	km		
Weaving type	A	Multilane or C-D	
Volume ratio, VR	0.11		
Weaving ratio, R	0.34		

Conversion to pc/h Under Base Conditions

	Non-Weaving V A-C	Non-Weaving V B-D	Weaving V A-D	Weaving V B-C	
Volume, V	1159	10	68	130	veh/h
Peak-hour factor, PHF	0.64	0.90	0.90	0.90	
Peak 15-min volume, v15	453	3	19	36	v
Trucks and buses	9	5	5	5	%
Recreational vehicles	1	1	1	1	%
Trucks and buses PCE, ET	1.5*	1.5	1.5	1.5	
Recreational vehicle PCE, ER	1.2	1.2	1.2	1.2	
Heavy vehicle adjustment, fHV	0.955	0.974	0.974	0.974	
Driver population factor, fP	1.00	1.00	1.00	1.00	
Flow rate, v	1896	11	77	148	pc/h

Weaving and Non-Weaving Speeds

	Weaving	Non-Weaving
Weaving intensity factor, Wi	0.48	0.19
Weaving and non-weaving speeds, Si	74.17	86.14
Number of lanes required for constrained operation, Nw (Exhibit 24-7)	0.42	
Maximum number of lanes, Nw (max) (Exhibit 24-7)	1.40	
Type of operation is	Unconstrained	

Weaving Segment Speed, Density, Level of Service and Capacity

Weaving segment speed, S	84.70	km/h
Weaving segment density, D	12.59	pc/km/ln
Level of service, LOS	C	
Capacity for base condition, cb		pc/h

Limitations on Weaving Segments

	Analyzed	Maximum	If Max Exceeded See Note Note
Weaving flow rate, Vw	225	2800	a
Average flow rate (pc/h/ln)	1066	2250	b
Volume ratio, VR	0.11	1.00	c
Weaving ratio, R	0.34	N/A	d
Weaving length (m)	446	750	e

Notes:

a. Capacity constrained by maximum allowable weaving flow rate.
b. Capacity constrained by basic freeway capacity.
c. Segments do not operate well at VR's exceeding max. Poor operations and some local queuing are expected in such cases.
d. Breakdown may occur in some cases for Type C segments.
e. When length exceeds these limits, merge and diverge are treated as isolated junctions and analyzed accordingly (HCM Chapter 25, HCS Ramps.)

ATTACHMENT 9

State of California

Business, Transportation and Housing Agency

Memorandum

To: **Yu-Ying Chu**
Senior Transportation Engineer
Office of Freeway Operations

Date: May 9, 2001
File No.: 07-LA-5
KP 23.8/24.3
(PM 14.8/15.1)
EA: 07-22400K

From: **Ralph M. Sasaki**
Senior Transportation Engineer
Office of Engineering Services - Hydraulics

Subject: **Request for Drainage System Cost Estimate**

At the present time, there are no costs associated with the addition of an Auxilliary lane for Alternatives B or C of the Project Study Report. Based on the field review and initial calculations of the above location, it was concluded that:

1. There are no existing drainage inlets that need to be relocated due to the widening of the existing U.C structure at Indiana St.
2. The existing drainage inlet on Rte-5 just past the U.C bridge is adequate to accommodate the increased flow due to the addition of the auxiliary lane.

If there are any questions, please call Sid Rana at 7-0447.

Sincerely,

Ralph M. Sasaki
Senior Transportation Engineer

ATTACHMENT 10

Memorandum

Flex your power!
Be energy efficient!

To: **Yu-Ying Chu**, Senior Transportation Engineer
District 7, Office of Freeway Operations
Division of Traffic Operations

Date: August 9, 2002

File: 07-LA-5
Calzona Street and
Ditman Ave.
KP R23.8/R24.3
EA 07-22400K

From: **Jin S Lee, Senior Transportaion Engineer**
Noise & Vibration Branch
District 7, Office of Environmental Engineering & Feasibility Studies

Subject: Review of Project Study Report Draft.

Per your request of August 5, 2002, the Noise and Vibration Branch has reviewed the above referenced project and has the following comments for the noise mitigation section.

Based on the preliminary noise impact study completed on August 10, 2001, it has been determined that the extension of existing soundwalls are considered not feasible. However, since there are gaps in the existing soundwalls at the Indiana Street Undercrossing, soundwalls over this bridge could be considered as gap closures. If you have any questions regarding this review, please contact me at (213) 897-3312 .

Jin S Lee
Senior Transportation Engineer
Noise & Vibration Branch
Office of Environmental Engineering & Feasibility Studies

Attached State of California

Business, Transportation and Housing Agency

Memorandum

To: **Yu-Ying Chu, Senior Transportation Engineer**
Department of Transportation
Office of Freeway Operations

Date: August 10, 2001

File: 07-LA-5 KP 23.8/24.3
EA 22400K
Add Auxiliary Lane & Ramp Modifications

From: DEPARTMENT OF TRANSPORTATION
Jin S Lee, Senior Transportation Engineer
Office of Environmental Engineering and Feasibility Studies

Subject: **Preliminary Noise Impact Assessment/Study**

The Noise and Vibration Investigation Branch has completed the preliminary noise impact study to determine the traffic noise impacts that would result from the above referenced project.

This is considered a Type I project. There are noise sensitive areas within the project limits and there will be noise impacts resulting from the construction of either of the build alternatives. There are existing soundwalls on both sides of the freeway. The only exceptions are gaps across the Indiana Street Undercrossing. These soundwalls currently provide substantial reductions in noise levels for the noise sensitive areas adjacent to the project.

Based on the information provided, our analysis has determined that the horizontal and vertical extensions of existing soundwalls do not provide the required minimum noise reduction of 5 dBA, Leq per State and Federal Guidelines. Therefore, extensions of existing soundwalls are considered not feasible within the project limits and no noise abatement measures are being recommended for this project. However, since there are gaps in the existing soundwalls at the Indiana Street Undercrossing, soundwalls over this bridge could be considered and recommended, as gap closures.

A formal detailed noise study will be required during the PA&ED phase.

If you have any questions, please contact me, at extension 7-3312 or Ralph Thunstrom of my staff at 7-4311.

Sincerely,

Jin S. Lee, P. E.
Senior Transportation Engineer
Noise and Vibration Investigation Branch

ATTACHMENT 11

State of California

Business, Transportation and Housing Agency

Memorandum

Flex your power!
Be energy efficient!

To: Yu-Ying Chu, STE
Office of Traffic Investigation

Attn: Elpidio Delos Reyes
Project Engineer

Date: September 30, 2002
File: 07-LA-5 KP 23.7/24.3
Auxiliary Lane addition
Between Calzona Street
and Ditman Avenue

EA: 07-333-22400K

From: **DEPARTMENT OF TRANSPORTATION**
OEEFS- HAZARDOUS WASTE BRANCH, SOUTH REGION MS-16

Subject: *Supplemental Initial Site Assessment (ISA)*

This updated initial site assessment (ISA) shall supplement our previous issued assessment memorandum (dated 5/17/01). This hazardous waste assessment re-evaluation is mainly to update the changes in the scope of work. The project is proposing to acquire new right of way to accommodate the lane widening and to construct a bypass at the north side of the mainline to replace the communication system (conduits)

Based on our field reconnaissance and subsurface database record research, the parcels, which will be acquired for the project is a former service station (APN 5242-006-113). The site is currently an unpaved vacant lot and is under the ownership of "Union Oil Company of California". There is very limited information available for review under this "former" service station site. It is therefore our recommendation to include the parcel testing as part of our site investigation during PAED or PS&E phases. Information obtain from the site investigation will assists us in determining the soil handling procedure as well as preparing the remediation cost estimate for proper right of way appraisal.

In addition, with the proposed bypass, which will involve soil disturbance and roadway excavation, we will incorporate this change into our site investigation to determine the soil handling procedure.

Please note that at this time, without accurate field data, it is difficult to assess the potential remediation cost to clean up the property. However, you can apply a conservative unit cost estimate for contaminated soil disposal at $200-$250 per cubic meter (soil removal only). Further cost assessment will be made if groundwater contamination exists.

If you require additional information, I can be reached at 897-3646 or contact Ruben Decastro of

my staff at 897-0715.

Steve Chan

Steve Chan, STE
District Hazardous Waste Coordinator, South Region
Office of Environmental Engineering and Feasibility Studies

Attachment: Original ISA Memorandum (dated 5/17/01)

c: File
Gary Iverson – Division of Environmental Planning

State of California

Business, Transportation and Housing Agency

Memorandum

To: YU-YING CHU
SENIOR TRANSPORTATION ENGINEER
OFFICE OF FREEWAY OPERATIONS

Date: May 17, 2001
File: 07-LA-Rte 5
KP 23.8/24.3
(PM 14.8/15.1)
EA: 07-333-22400K

From: **DEPARTMENT OF TRANSPORTATION**
OFFICE OF ENVIRONMENTAL ENGINEERING AND FEASIBILITY STUDIES

Subject: Comments on the Revised Request for Initial Site Assesment

This is in response to your memo dated April 12, 2001 requesting an Initial Site Assesment (ISA) for a segment of southbound Route 5 between Ditman off-ramp and Calzona on-ramp, KP 23.8/24.3 (PM 14.8/15.1) in Los Angeles County. This ISA will be included in the Project Study Report (PSR). This PSR proposes two alternatives (Alternative B and C). Both alternatives propose to add an auxiliary lane that will entail widening of an existing under crossing (UC) structure at KP 24.1 (PM 15.0, Indiana Street UC) to a width of 7 meters. In addition to the structure widening, Alternative B proposes to increase the lane width at the Ditman off-ramp while Alternative C proposes to increase the curve radius and lane width of the Ditman off-ramp. Alternative B and C also involve: a) the removal of yellow striping from the on-ramp and off-ramp; b) remove soundwall; c) remove utility pole; d) remove and relocate communication box; e) install adiem; f) install concrete barrier (type 60); g) remove MBGR; and h) install fence for proposed ROW.

During the site visit performed on May 4, 2001, it was observed that potential hazardous waste concern is present at the site due to the following:

(a) The yellow stripes exist on the left edgeline of the on-ramp and off-ramp. Typically, yellow stripe poses a potential HW due to the high lead and chromium content.
(b) The widening of lane at the unpaved areas will generate excess soil during excavation. This activity poses a concern for soil contaminated with Aerially Deposited Lead (ADL).

Based on the site visit and the information provided by the project engineer, it is recommended that the PSR Hazardous Waste Section include the following:

1. A site investigation (SI) during the design phase to evaluate and/or determine the impact of Aerially Deposit Lead (ADL) on the project. Additional funding should be considered for the handling and disposal of ADL contaminated soil. For estimation purposes, the average ADL disposal cost ranged between \$300-\$350 per m^3.
2. If dewatering is anticipated due to the presence of groundwater during the widening of bridge no. 53-0604 structure, a site investigation for this activity should be considered as well. The SI is necessary to comply with National Pollutant Discharge Elimination System (NPDES).
3. The re-striping activity should include the removal and disposal cost of yellow striping. This activity requires disposal to a Class 1 disposal site at an estimated cost of \$5-\$7 per meter. The removal and disposal of pavement striping from the roadway surface is addressed in the Standard Specifications in Sections 15-2.02B & 15.20.2C.

If you require additional information, I can be reached at 897-3646 or contact Ruben Decastro of my staff at 897-0715.

STEVE CHAN, P.E.
District HW Coordinator, South Region

cc: File
George Ghebranious - District HW Coordinator, North Region
Gary Iverson - Environmental Planning

RDecastro\EA 22400K\Rte 5

ATTACHMENT 12

State of California | Business, Transportation and Housing Agency

Memorandum

To : Yu-Ying Chu
Office of Freeway Operations

Date : May 3, 2001

File : 07-LA-5
KP 23.8/24.3
(PM 14.8/15.1)
EA 22400K

From : Jacqueline Tan, STEE
Office of ITS Development

Subject : I-5 Structure Widening Project Review

Thank you for routing I-5 Project for our review. Based on our findings, there are conflicts with the existing splice vaults, communication conduits and your proposed work.

The replacement of the two splice vaults identified in the southbound Route 5 entails that the communications system routing shall be replaced as well. New conductors and conduits along this segment shall be installed. To minimize the introduction of new losses, fiber optics shall be spliced between splice vaults. This will include splicing of the fiber at another splice vault located east of Ditman Avenue, KP 23.69 (PM 14.72) which is outside of your project limits.

Per your request, we estimated $730,000 to replace the existing communications infrastructure considering either of your proposed alternatives. Please refer to the attached estimate. Also, please extend the KP limits to your project.

If you have any question or require additional information, please contact me at (213) 897-4698 or Leila Sy of my staff via email.

Jacqueline Tan

JACQUELINE TAN
Senior Transportation Electrical Engineer
Office of ITS Development

Attachment
Cc: L. Sy

DRAFT COST ESTIMATE
FOR 5 WIDENING PROJECT
(EA 22400K)

Item Description	Unit	Quantity	Price	Amount
2 -103 mm CONDUITS (TRENCHED IN ASPHALT)	m	475	$72	$34,200.00
2 -103 mm CONDUITS (ATTACHED TO BRIDGE)	m	200	$60	$12,000.00
1 -103 mm CONDUITS (TRENCHED IN SOIL)	m	10	$43	$430.00
3 -52 mm CONDUITS (TRENCHED IN ASPHALT)	m	9	$60	$540.00
SPLICE VAULTS	m	2	$2,800	$5,600.00
COMMUNICATIONS PULLBOX	EA	3	$980	$2,940.00
CAMERA VIDEO INTERFACE CABLE*	m	20	$20	$400.00
PAN/TILT CONTROL CABLE*	m	20	$20	$400.00
LENS CONTROL CABLE*	m	20	$20	$400.00
CAMERA POWER CABLE*	m	20	$20	$400.00
CAMERA GROUND CABLE*	m	20	$20	$400.00
100 PAIR CABLE #22	m	410	$7	$2,870.00
12 SINGLE MODE FIBER OPTIC CABLE	m	450	$5	$2,160.00
18 MULTI MODE FIBER OPTIC CABLE*	m	450	$15	$6,750.00
2 MULTI MODE FIBER OPTIC CABLE*	m	270	$15	$4,050.00
2 PAIR COMMUNICATION DISTRIBUTION CABLE*	m	230	$7	$1,610.00
SPLICE CLOSURE, FIBER OPTIC	EA	2	$4,000	$8,000.00
2 - 32 mm INNERDUCT	m	700	$5	$3,500.00
REMOVE & SALVAGE EQUIPMENT	LS	LS	$1,500	$1,500.00
SYSTEM TESTING AND DOCUMENTATION	LS	LS	$15,000	$15,000.00

TOTAL		$103,150.00
CONTINGENCIES 25%	$	25,787.50
GRAND TOTAL	$	128,937.50
CALL	**$**	**130,000.00**

$ 100,000.00

$230,000.00

22400K_estimate.xls,Sheet1
5/3/01

DIST	COUNTY	ROUTE	KILOMETER POST TOTAL PROJECT	SHEET NO	TOTAL SHEETS
07	VEN	118/23			

REGISTERED CIVIL ENGINEER DATE

PLANS APPROVAL DATE

The State of California or its officers or agents shall not be responsible for the accuracy or completeness of electronic copies of this plan sheet.

REGISTERED PROFESSIONAL ENGINEER — NO. EXP. CIVIL — STATE OF CALIFORNIA

ALL DIMENSIONS ARE IN MILLIMETERS UNLESS OTHERWISE INDICATED.

DRAFT
NOT FOR CONSTRUCTION

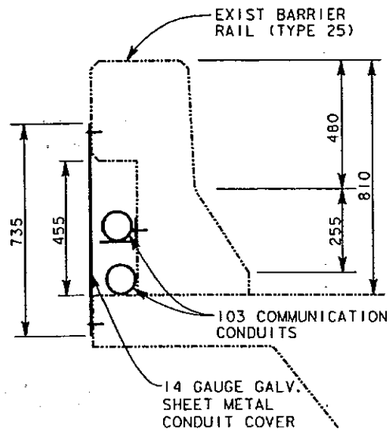

CASE A
(BARRIER TYPE 25)

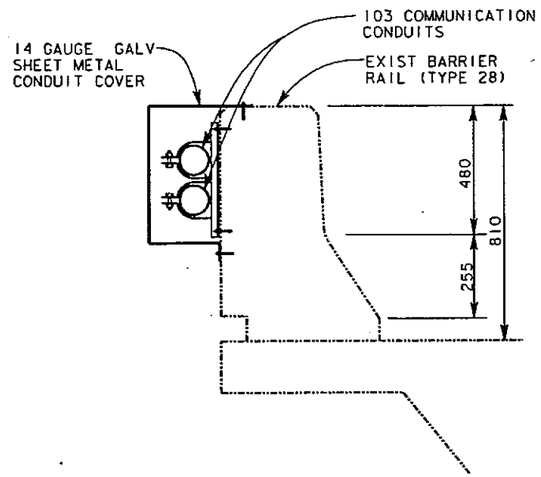

ALTERNATIVE 1

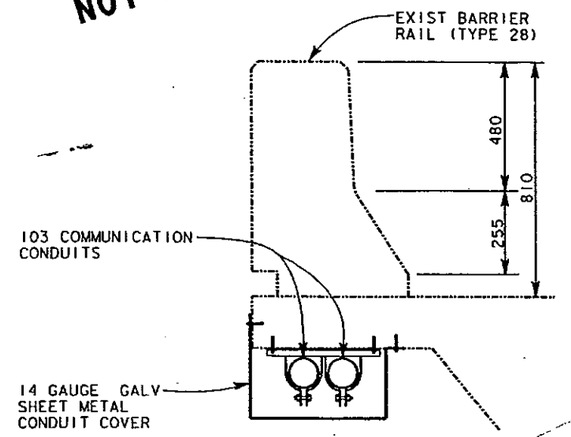

ALTERNATIVE 2

CASE B
(BARRIER TYPE 28)

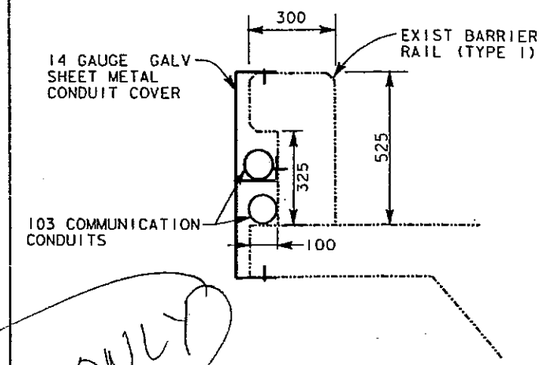

SAMPLE ONLY

CASE C
(BARRIER TYPE 1)

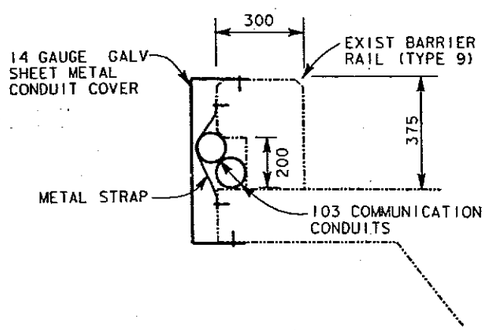

CASE D
(BARRIER TYPE 9)

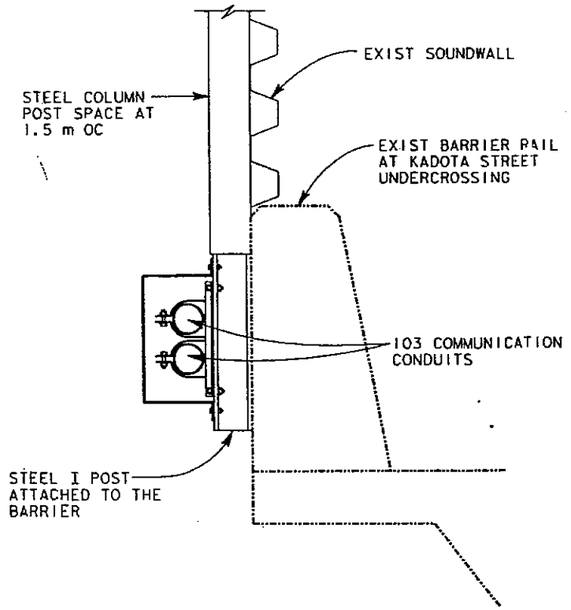

CASE E
(BARRIER TYPE 27 MODIFIED)

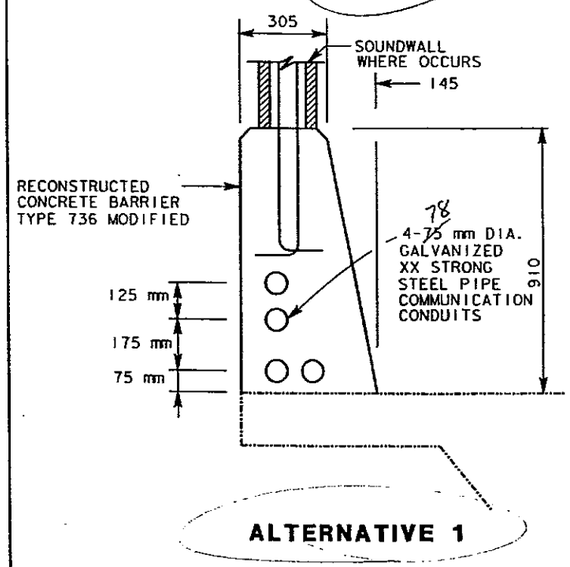

ALTERNATIVE 1

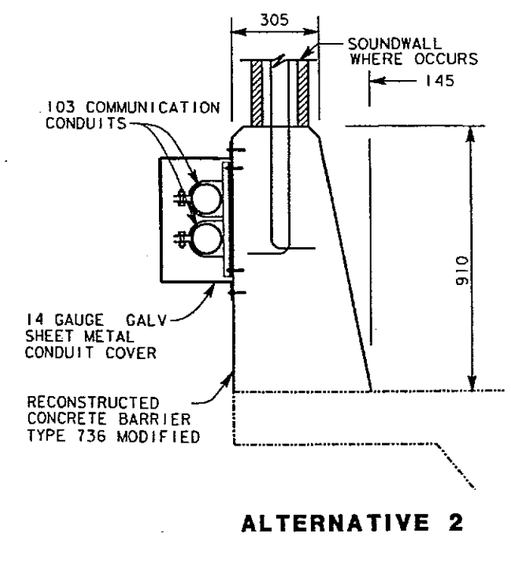

ALTERNATIVE 2

CASE F
(BARRIER TYPE 736 MODIFIED)

DATE	REVISED BY	DATE REVISED

CALCULATED/DESIGNED BY	CHECKED BY
--	--

PROJECT ENGINEER --

STATE OF CALIFORNIA - DEPARTMENT OF TRANSPORTATION
Caltrans ITS DEVELOPMENT

LAST REVISION 00-00-00

DATE PLOTTED => 29 AUG 2002
TIME PLOTTED => 11:07:43

FOR REDUCED PLANS ORIGINAL SCALE IS IN MILLIMETERS 0 20 40 60 80

USERNAME => $(USER)
DGN FILE => ...\rolling-attach-details-1.dgn

CU 07388

EA 000000

DIST	COUNTY	ROUTE	TOTAL PROJECT	NO	SHEET
07	LA	60	6.3/9.0		

Caltrans Metric

REGISTERED CIVIL ENGINEER

PLANS APPROVAL DATE

REGISTERED PROFESSIONAL ENGINEER No. Exp. CIVIL STATE OF CALIFORNIA

The State of California or its officers or agents shall not be responsible for the accuracy or completeness of electronic copies of this plan sheet.

SAMPLE ONLY

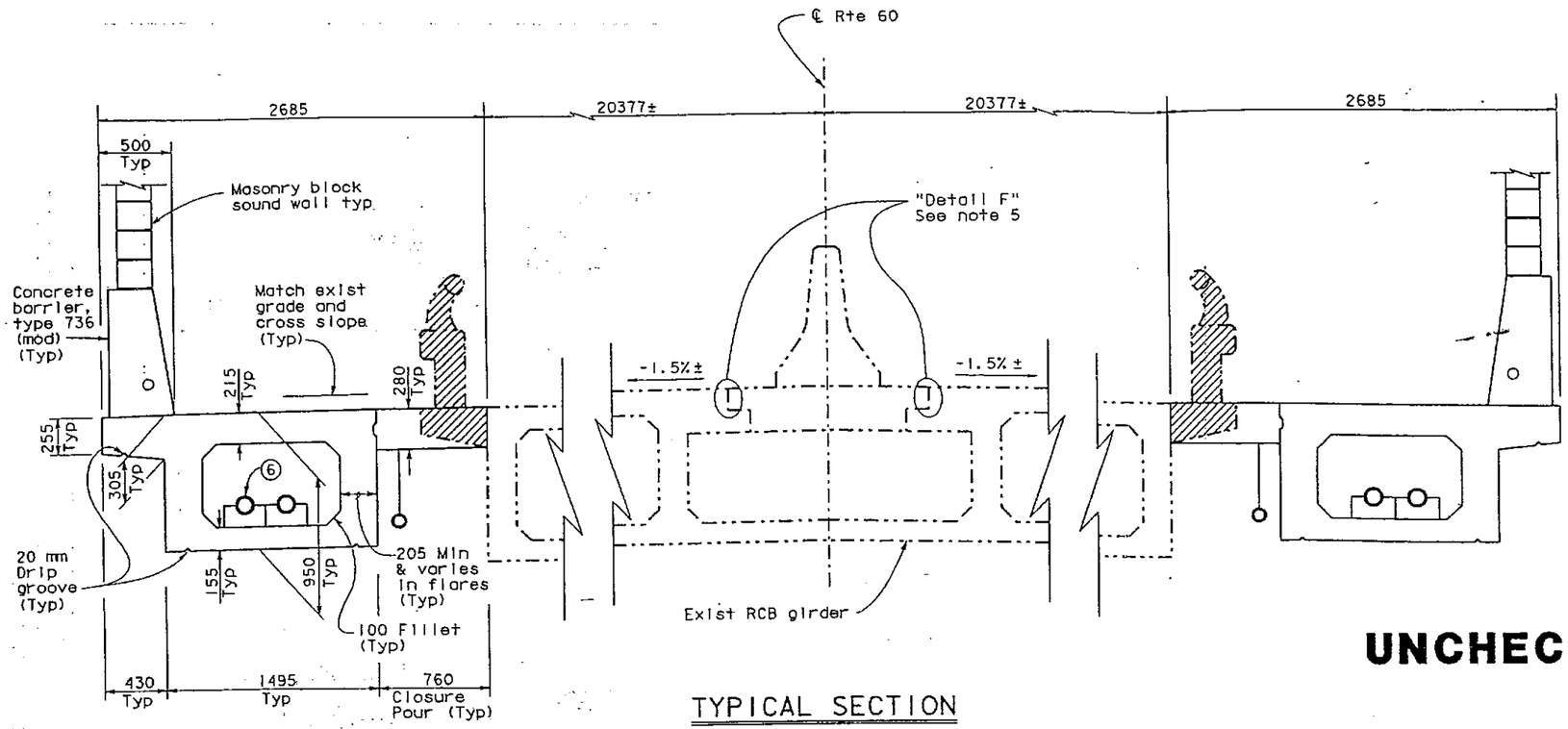

TYPICAL SECTION

1:20

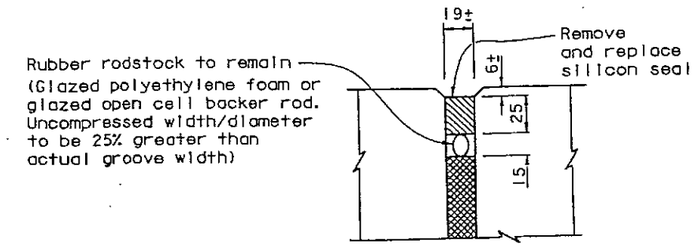

DETAIL F

NO SCALE

UNCHECKED DETAILS

INCOMPLETE PLAN FOR DESIGN STUDY PRINTED

DATE: 18-JAN-2002

Office of Structure Design

STATE OF CALIFORNIA

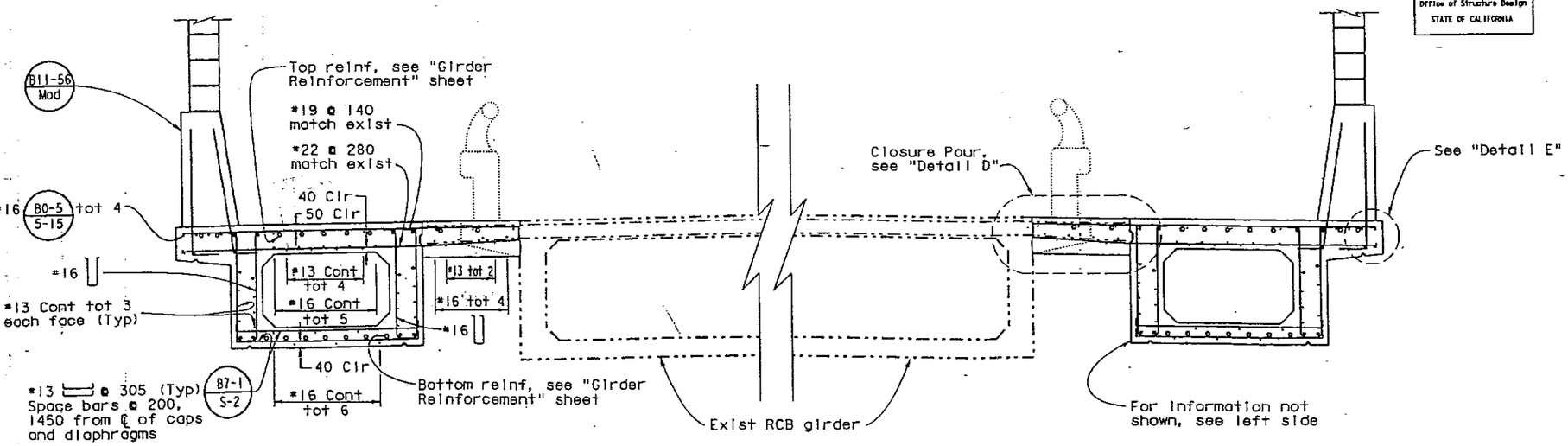

PART TYPICAL SECTION B7-1

1:20

NOTES:

1. Dimensions, reinf and utilities symmetric about ℄ Rte 60.
2. For dimensions & reinf not shown see " Sound Wall-Masonry Block on Bridge" sheet.
3. For Detail D and E see "Miscellaneous Details No. 1" sheet
4. For utility dimensions and layout, see "Miscellaneous Details No. 2" sheet.
5. Remove and replace longitudinal deck joints.
6. For location of utilites see "Miscellaneous Details No. 2" sheet.

LEGEND:

New Structure

Existing Structure

Bridge Removal, Portion

NOTE:
THE CONTRACTOR SHALL VERIFY ALL CONTROLLING FIELD DIMENSIONS BEFORE ORDERING OR FABRICATING ANY MATERIAL.

ALL DIMENSIONS ARE IN MILLIMETERS UNLESS OTHERWISE SHOWN

	BY	CHECKED
DESIGN	Serb Nagl	William Addlespurger
DETAILS	R S. Ford / TD / RL	William Addlespurger
QUANTITIES		

STATE OF CALIFORNIA DEPARTMENT OF TRANSPORTATION

DIVISION OF STRUCTURES STRUCTURE DESIGN 12

BRIDGE NO. 53-1693

KILOMETER POST 8.304

FINDLAY AVE UC (SOUND WALL AND WI

TYPICAL SECTION

CU 07
EA 002531

FILE => oftypcl01.dgn

DISREGARD PRINTS BEARING EARLIER REVISION DATES

REVISION DATES (PRELIMINARY STAGE ONLY) 10-25-01 10-29-01 11-2-01 11-14-01 12-17-01 1-9-02

SHEET 10

STRUCTURES DESIGN DETAIL SHEET (METRIC) (REV. 4/20/00)

ORIGINAL SCALE IN MILLIMETERS FOR REDUCED PLANS 0 10 20 30 40 50 60 70 80 90 100

DIST.	COUNTY	ROUTE	TOTAL PROJECT	NO	SH
07	LA	60	6.3/9.0		

Caltrans Metric

REGISTERED CIVIL ENGINEER

PLANS APPROVAL DATE

The State of California or its officers or agents shall not be responsible for the accuracy or completeness of electronic copies of this plan sheet.

REGISTERED PROFESSIONAL ENGINEER NO. EXP. CIVIL STATE OF CALIFORNIA

SAMPLE ONLY

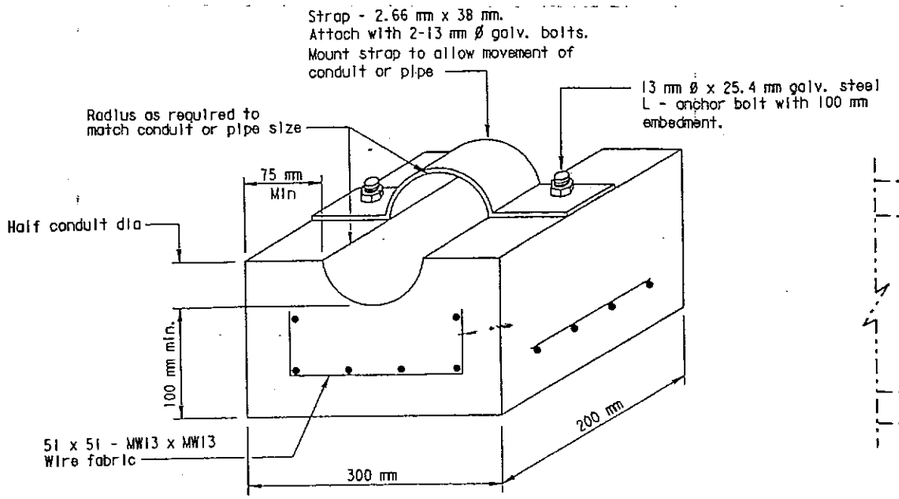

CONCRETE CRADLE

NO SCALE

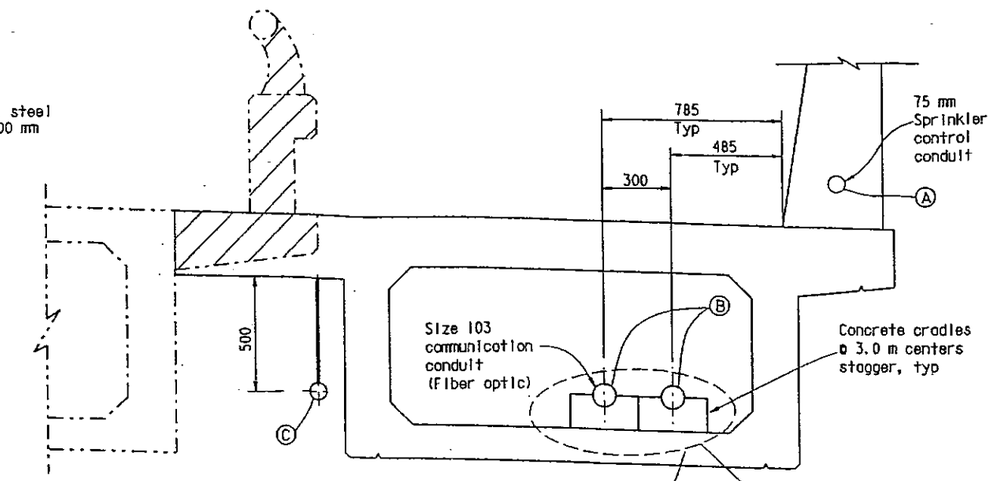

UTILITIES ELEVATION

NO SCALE

Notes:

1. All steel shall be galvanized after fabrication.
2. - - - - - - - - - - - - - - Indicates existing structure.
3. Seal utilities at abutment with mortar, after tightly wrapping utility with two layers of 7 kg building paper.
4. Cradles to be precast concrete.
5. Secure all cradles to bottom slab of bridge with adhesive, except under the first cradle support inside bridge near abutment or hinge, epoxy 12 gage galvanize steel sheet (800 mm x 400 mm) to the floor or cell. Do not secure cradle to steel sheet. Cradle shall be free to slide to accomodate lateral movement.
6. Utilities Reinforcement Detail applies to Abut, Pier, and Diaphragm.

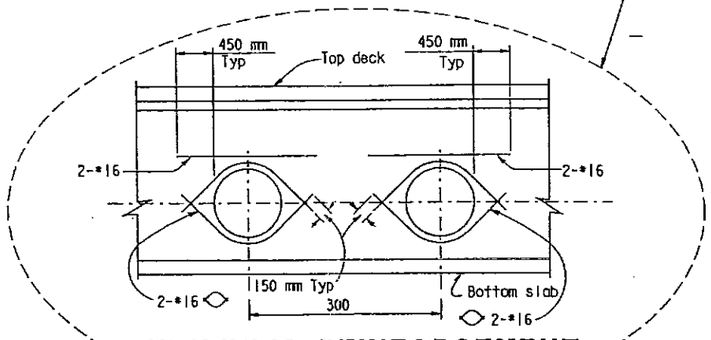

UTILITIES REINFORCEMENT

NO SCALE

UTILITY OPENINGS			
LOCATION	UTILITY	CONDUIT SIZE	UTILITY OPENING
A	Sprinkler control conduit	78 mm	Through concrete barrier
B	Fiber Optics	2-103 mm	2 Ea 140 mm Diameter
C	Irrigation supply line	75 mm	115 mm Diameter

B14-3 B14-4 B14-

Note: Supports are to be located 600 mm maximum each side of expansion assemblies. ES-9B XY

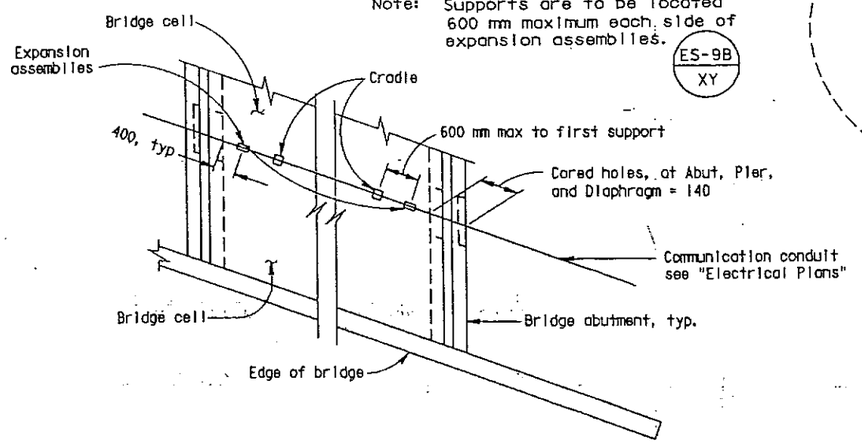

PLAN

COMMUNICATION CONDUIT

NO SCALE

UNCHECKED DETAILS

INCOMPLETE PLAN FOR DESIGN STUDY PRINTED
DATE: 18-JAN-2002
Office of Structure Design
STATE OF CALIFORNIA

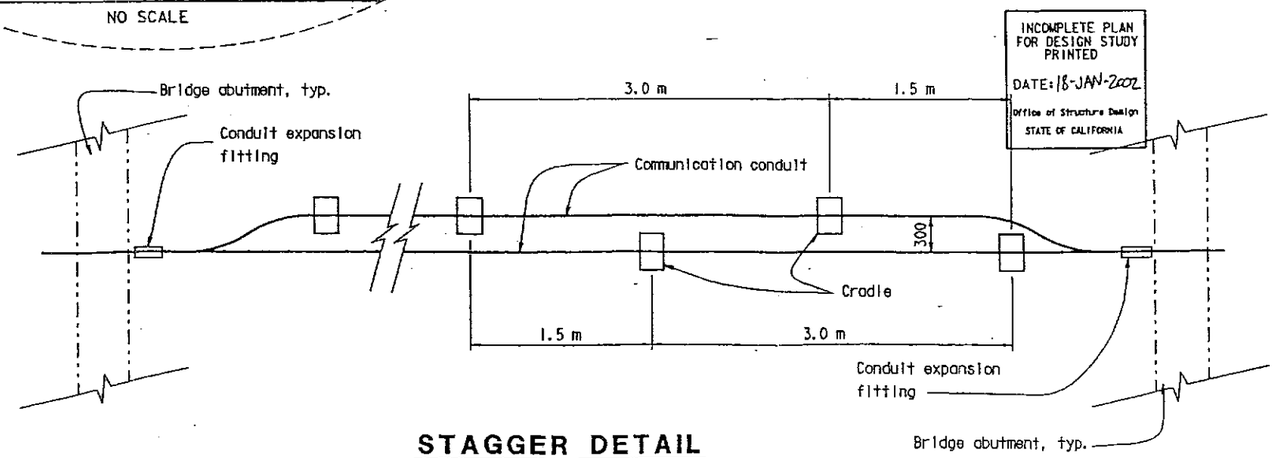

STAGGER DETAIL

NO SCALE

ALL DIMENSIONS ARE IN MILLIMETERS UNLESS OTHERWISE SHOWN

NOTE:
THE CONTRACTOR SHALL VERIFY ALL CONTROLLING FIELD DIMENSIONS BEFORE ORDERING OR FABRICATING ANY MATERIAL.

DESIGN	BY W. Addlespurger	CHECKED	
DETAILS	BY Micheal Slayton	CHECKED	
QUANTITIES	BY	CHECKED	

STATE OF CALIFORNIA
DEPARTMENT OF TRANSPORTATION

DIVISION OF STRUCTURES
STRUCTURE DESIGN 12

BRIDGE NO. 53-1693
KILOMETER POST 8.304

FINDLAY AVE UC (SOUND WALL AND WID
MISCELLANEOUS DETAILS NO. 2

STRUCTURES DESIGN DETAIL SHEET (METRIC) REV. 4/20/001

ORIGINAL SCALE IN MILLIMETERS FOR REDUCED PLANS 0 10 20 30 40 50 60 70 80 90 100

CU 07
EA 002531
FILE => ckmsc02.dgn

DISREGARD PRINTS BEARING EARLIER REVISION DATES

REVISION DATES (PRELIMINARY STAGE ONLY) 1-11-91

SHEET 14

ATTACHMENT 13

Memorandum

To : **Yu-Ying Chu**
Senior Transportation Engineer
Office of Freeway Operations

Date : July 20, 2001

File No.: 07-LA-5, KP 23.8/24.3
(PM 14.8/15.1)

Kirsten Stahl, P.E.
Office of Engineering Services, Materials Investigations **07 – 22400K**
From : **DEPARTMENT OF TRANSPORTATION**

Subject: **STRUCTURAL SECTIONS RECOMMENDATIONS**

As requested, Materials Investigations has reviewed the above mentioned project and offers the following recommendations based on the information at hand, for estimating purposes only:

(I) Auxiliary Lane and Shoulder:

T. I. = 15.0, R = 15

Alternative 1:
285 mm Portland Cement Concrete (PCC)
150 mm Lean Concrete Base (LCB)
215 mm Aggregate Base (AB), Class 3
650 mm Total

Alternative 2:
225 mm Asphalt Concrete (AC), Type B
180 mm Lean Concrete Base (LCB)
525 mm Aggregate Subbase (AS), Class 4
930 mm Total

Alternative 3:
570 mm Full Depth AC, Type B
105 mm AB Class 3
675 mm Total

Cross slope for shoulder is to be 2%, same as the traveled lane.

(II) Ramp and Shoulder:

T. I. = 10.0, R = 15

Alternative 1:
165 mm PCC
120 mm LCB
315 mm AB, Class 3
600 mm Total

Alternative 2: 360 mm Full Depth AC, Type A
105 mm AB, Class 3
465 mm Total

(III) PCC Ramp termini shall be placed on the off-ramps and shall be a minimum length of 45 m, depending on the queues of stopped traffic. Materials recommends the following off ramp termini structural section:

260 mm PCC
150 mm LCB
105 mm AB, Class 3 (working table)
515 mm Total

(IV) For areas where loop detectors or ramp meter pads will be constructed, Materials recommends the following:

105 mm AC, Type B
----------Pavement Reinforcing Fabric (PRF)
105 mm AC, Type B***
105mm LCB
105 mm AB, Class 3 (working table)
420 mm Total

***The traffic loop should be cut and epoxy filled in this layer of Asphalt Concrete, Type B, prior to placing the fabric and final layer. Materials Investigations does not recommend using PCC where loops will be placed since cracks will propagate within the PCC slab and may cause wire loop distress.

If you have any questions, please call me at 7-0470 or Harry Hung of my staff at extension 7-0425.

Kirsten Stahl, P.E.
Civil Engineering License No. C46857 – Exp. 06/30/03
District Materials Engineer

REGISTERED PROFESSIONAL ENGINEER
KIRSTEN R. STAHL
No. C46857
Exp. 6/30/03
CIVIL
STATE OF CALIFORNIA

ATTACHMENT 14

PUBLIC AWARENESS CAMPAIGN

GOLDEN STATE FREEWAY

WIDEN INDIANA STREET UNDERCROSSING
TO ADD AN AUXILIARY LANE AND
INCREASE LANE WIDTH AT DITMAN OFF-RAMP FOR TRUCK TRAFFIC

1. PRESS RELEASE ANNOUNCING UPCOMING PROJECT. WILL BE SENT TO ALL MEDIA OUTLETS IN LOS ANGELES, CHAMBER OF COMMERCE, AUTO CLUB, EMERGENCY SERVICES, CALIFORNIA TRUCKING ASSOCIATION, LOCAL SCHOOLS, MTA, ELECTED OFFICIALS AND OTHERS

2. FLYERS WITH MAP OF DETOUR WILL BE SENT TO RESIDENTS/ BUSINESSES, LOCAL SCHOOLS, TRUCKING ASSOCIATION AND MTA IN AND AROUND THE AREA

3. PRESS RELEASES

   * START OF WORK
   * PROJECT UPDATES
   * COMPLETION

3. FUNDING ELEMENTS:

* PUBLIC MEETING ROOM RENTAL TO DISCUSS PROPOSALS (MAY BE ABLE TO USE LOCAL SCHOOL AUDITORIUM, SERVICE CLUB OR CHURCH HALL)	$ 500.00
* POSTAGE FOR FLYERS/MAPS	$15,000.00

CONTACT: MARGIE TIRITILLI
CHIEF, MEDIA RELATIONS/PUBLIC AFFAIRS
213-897-3800

Ke 5/9/04

TRANSPORTATION MANAGEMENT PLAN DATA SHEET
(Preliminary TMP Elements and Costs)

Co/Rte/PM LA 5 14.8 / 15.1 EA 22400K Alternative No. B

Project Limit Ditman Off-Ramp to Calzona On-Ramp on Southbound Route 5 Freeway

Project Description Add an auxiliary lane and increase lane width at the Ditman Off-Ramp to accommodate high truck traffic demand.

1) Public Information

- [x] a. Brochures and Mailers $15,000
- [ ] b. Press Release
- [ ] c. Paid Advertising $
- [ ] d. Public Information Center/Kiosk $
- [ ] e. Public Meeting/Speakers Bureau
- [ ] f. Telephone Hotline
- [x] g. Internet
- [ ] h. Others _____ $

2) Motorists Information Strategies

- [ ] a. Changeable Message Signs (Fixed) $
- [ ] b. Changeable Message Signs (Portable) $
- [ ] c. Ground Mounted Signs $
- [ ] d. Highway Advisory Radio $
- [ ] e. Caltrans Highway Information Network (CHIN)
- [ ] f. Others _____ $

3) Incident Management

- [x] a. Construction Zone Enhanced Enforcement Program (COZEEP) $11,000
- [ ] b. Freeway Service Patrol $
- [ ] c. Traffic Management Team
- [ ] d. Helicopter Surveillance $
- [ ] e. Traffic Surveillance Stations (Loop Detector and CCTV) $
- [ ] f. Others _____ $

4) Construction Strategies

- [x] a. Lane Closure Chart
- [ ] b. Reversible Lanes
- [ ] c. Total Facility Closure
- [ ] d. Contra Flow
- [ ] e. Truck Traffic Restrictions $ _____
- [ ] f. Reduced Speed Zone $ _____
- [x] g. Connector and Ramp Closures
- [ ] h. Incentive and Disincentive $ _____
- [ ] i. Moveable Barrier $ _____
- [ ] j. Others _____ $ _____

5) Demand Management

- [ ] a. HOV Lanes/Ramps (New or Convert) $ _____
- [ ] b. Park and Ride Lots $ _____
- [ ] c. Rideshare Incentives $ _____
- [ ] d. Variable Work Hours
- [ ] e. Telecommute
- [ ] f. Ramp Metering (Temporary Installation) $ _____
- [ ] g. Ramp Metering (Modify Existing) $ _____
- [ ] h. Others _____ $ _____

6) Alternative Route Strategies

- [ ] a. Add Capacity to Freeway Connector $ _____
- [ ] b. Street Improvement (widening, traffic signal... etc) $ _____
- [ ] c. Traffic Control Officers $ _____
- [ ] d. Parking Restrictions
- [ ] e. Others _____ $ _____

7) Other Strategies

- [ ] a. Application of New Technology $ _____
- [ ] e. Others _____ $ _____

TOTAL ESTIMATED COST OF TMP ELEMENTS = $26,000

Project Notes:

The work shall be done in accordance with the Lane Closure Charts provided in the Maintaining Traffic Specification.

COZEEP Cost = 10 days x 10 Hrs/day x $110.00 = $ 11,000.00

PREPARED BY _____ DATE 5/24/01

APPROVAL RECOMMENDED BY _____ DATE 5/24/01

APPROVED BY _____ DATE 5/30/01

TRANSPORTATION MANAGEMENT PLAN DATA SHEET
(Preliminary TMP Elements and Costs)

Co/Rte/PM LA 5 14.8 / 15.1 EA 22400K Alternative No. C

Project Limit Ditman Off-Ramp to Calzona On-Ramp on Southbound Route 5 Freeway

Project Description Add an auxiliary lane and increase ramp curve radius and width at the Ditman Off-Ramp.

1) Public Information

- [x] a. Brochures and Mailers $15,000
- [ ] b. Press Release
- [ ] c. Paid Advertising $
- [ ] d. Public Information Center/Kiosk $
- [ ] e. Public Meeting/Speakers Bureau
- [ ] f. Telephone Hotline
- [x] g. Internet
- [ ] h. Others _____ $

2) Motorists Information Strategies

- [ ] a. Changeable Message Signs (Fixed) $
- [ ] b. Changeable Message Signs (Portable) $
- [ ] c. Ground Mounted Signs $
- [ ] d. Highway Advisory Radio $
- [ ] e. Caltrans Highway Information Network (CHIN)
- [ ] f. Others _____ $

3) Incident Management

- [x] a. Construction Zone Enhanced Enforcement Program (COZEEP) $11,000
- [ ] b. Freeway Service Patrol $
- [ ] c. Traffic Management Team
- [ ] d. Helicopter Surveillance $
- [ ] e. Traffic Surveillance Stations (Loop Detector and CCTV) $
- [ ] f. Others _____ $

4) Construction Strategies

- [x] a. Lane Closure Chart
- [ ] b. Reversible Lanes
- [ ] c. Total Facility Closure
- [ ] d. Contra Flow
- [ ] e. Truck Traffic Restrictions $ _____
- [ ] f. Reduced Speed Zone $ _____
- [x] g. Connector and Ramp Closures
- [ ] h. Incentive and Disincentive $ _____
- [ ] i. Moveable Barrier $ _____
- [ ] j. Others _____ $ _____

5) Demand Management

- [ ] a. HOV Lanes/Ramps (New or Convert) $ _____
- [ ] b. Park and Ride Lots $ _____
- [ ] c. Rideshare Incentives $ _____
- [ ] d. Variable Work Hours
- [ ] e. Telecommute
- [ ] f. Ramp Metering (Temporary Installation) $ _____
- [ ] g. Ramp Metering (Modify Existing) $ _____
- [ ] h. Others _____ $ _____

6) Alternative Route Strategies

- [ ] a. Add Capacity to Freeway Connector $ _____
- [ ] b. Street Improvement (widening, traffic signal... etc) $ _____
- [ ] c. Traffic Control Officers $ _____
- [ ] d. Parking Restrictions
- [ ] e. Others _____ $ _____

7) Other Strategies

- [ ] a. Application of New Technology $ _____
- [ ] e. Others _____ $ _____

TOTAL ESTIMATED COST OF TMP ELEMENTS = $26,000

Project Notes:

The work shall be done in accordance with the Lane Closure Charts provided in the Maintaining Traffic Specification.

COZEEP Cost = 10 days x 10 Hrs/day x $110.00 = $ 11,000.00

PREPARED BY _____ DATE 5/24/01

APPROVAL RECOMMENDED BY _____ DATE 5/24/01

APPROVED BY _____ DATE 5/30/01

ATTACHMENT 15

Rev 31-3/99

Division of Operations – Office of Traffic Investigations

Traffic Accident Surveillance and Analysis System (TASAS)

ACCIDENT DATA REQUEST FORM

(REQUESTS FOR LEGAL OR CLAIMS ARE PROCESSED BY THE LEGAL UNIT)

Purpose of Request PREPARE PSR

Log Number 166

NO NUMBER–NO DATA

From: (SQUAD) KEN HATAI Requested by TAM NGUYEN Location 29 Phone 7-8336

County LA Route 5 **P.M.**. From 14.6 to 15.2

(VERIFY POSTMILES IN P.M. BOOK. IS THERE A POSTMILE PREFIX?)

Accident Location: ALL ___ HWY X INT ___ RAMP ___

Time Period: (DATE) from 1-1-98 to 12-31-01 (Inclusive)

Microfiche *(CHECK WITH TASAS UNIT BEFORE ORDERING)*

___ TABLE A – Cumulative Number of Accidents by Postmile

✓ TABLE C - ALL — High Accident Concentration Locations

✓ TABLE C - WET — High Accident Concentration Locations

✓ **TABLE B Accident Rates**

Years ✓ Combined? ___ Separate?

Direction ___ Combined? ✓ Separate?

___ Data to Calculate a Safety Index ___ Include Ramps ___ Exclude Ramps

___ Data for a Speed Zone Survey - (B)

OK

✓ **TASAS Selective Accident Retrieval**

✓ With Detail Listing of Accidents ___ Summary Only

Years ✓ Combined? ___ Separate? (ONLY HIGHWAY WILL BE SEPARATE)

Direction ___ Combined? ✓ Separate? ✓ Exclude Ramps?

WHAT TYPES OF SELECTED ACCIDENTS OR LOCATIONS ARE YOU REQUESTING?

SB 5 MAINLINE BETWEEN 14.6 & 15.2

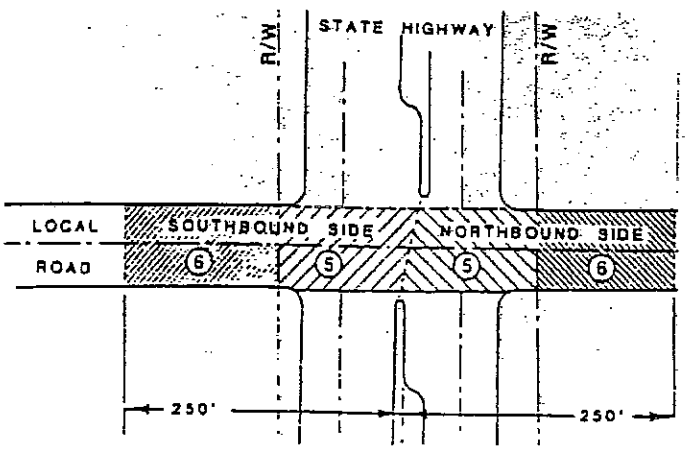

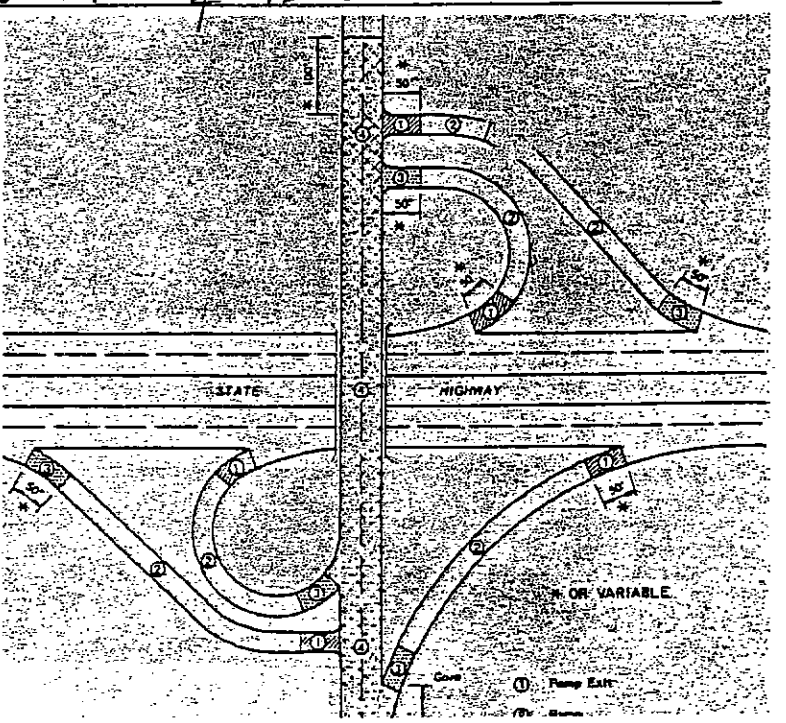

SELECTIVE ACCIDENT RATE CALCULATION
ROUTE SEQUENCE

LOCATION DESCRIPTION	RA GRP (RUS)	*-NUMBER OF ACCIDENTS/SIGNIFICANCE* TOT	FAT	INJ	MULTI F+I	VEH	WET	DARK	PER KLD INJ	*ADT * MAIN X-ST	TOTAL MV+ OR MVM	*-ACCIDENT RATE ACCS/MV+ OR MVM-* ACTUAL FAT	F+I	TOT	AVERAGE FAT	F+I	TOT
005 LA 14.600 THRU LA 015.199 NORTH	H	310	0	65	65	290	47	80	0	130.8	114.61	.000	.57	2.70	.007	.40	1.23
07-0001 0.600M 98-01-01 01-12-31 48 MO	NA	H99		H99	H99		H99	H99	92								
005 LA 14.600 THRU LA 015.199 SOUTH	H	175	0	36	36	146	42	66	0	130.8	114.61	.000	.31	1.53	.007	.40	1.23
07-0001 0.600M 98-01-01 01-12-31 48 MO	NA	H99					H99	H92	61								

SUBMITTORS DISTRICT 72 - MESSAGES -

SUBMITTORS NAME YUEH-S

ACCIDENTS SELECTED 310

LOCATION CRITERIA -

DISTRICT	07	POSTMILE	FROM	014.600	TO	015.200		DATE RANGE	FROM	01-01-98	TO	12-31-01
ROUTE	005		OR FROM		TO		AND		OR FROM		TO	
COUNTY	LA		OR FROM		TO				OR FROM		TO	

ACCIDENT AND HIGHWAY CRITERIA -

11	AN	508	ACC FILE TYPE	EQ	H
12	AN	514	ACC SIDE OF HIGHWAY	EQ	N

DIST	RTES NO	U F	CO	P LOC R POST E MILE	<-----HIGHWAY-----> H G	A C	M T	B A	LANES LT	RI RT	UO	I F T	S R L	D O H	A Y	ACCIDENT DATE MO	DA	YR	TIME HHMM	COMMON ACCIDENT NUMBER	P C F	ENVIR COND W	L S	R C	R W C	T O C	NO MTR VEH	P T R	D I	H I	V I	S K	PERSN I	O S P	L O C	O S O	L O C	O S O	L O C	O S O	OA F 12	M O V	SD P 12
07	005		LA	014.600	D	F	H	D	04	04	UO	H	-	N	5	08	09	01	1550	959015831		A	A	A	H	D	H	02	A	N	1	<	00	00	V2E	---	---	---	<<	R	G<
																												D	N	1	<	00	00	V1E	---	---	---	<<	R	G<
07	005		LA	014.600	D	F	H	D	04	04	UO	H	-	N	5	06	28	01	1530	953516472	6	A	A	A	H	D	B	02	F	N	1	C	00	00	V2E	---	---	---	M<	J	A<
																												A	N	1	C	00	01	V1E	---	---	---	N<	B	A<
07	005		LA	014.600	D	F	H	D	04	04	UO	H	-	N	7	05	26	01	1845	953514558	5	B	A	A	H	D	C	02	D	N	1	C	00	00	V2E	---	---	---	FG	B	A<
																												A	N	1	D	00	00	V1E	---	---	---	G<	A	A<
07	005		LA	014.600	D	F	H	D	04	04	UO	H	-	N	4	08	30	00	1330	953514245	6	B	A	A	H	D	B	02	A	N	1	<	00	00	V2E	---	---	---	G<	J	A<
																												G	N	1	<	00	00	V1E	---	---	---	G<	B	A<
07	005		LA	014.600	D	F	H	D	04	04	UO	H	-	N	7	08	19	00	1420	953516004	6	A	A	A	H	D	B	02	A	N	1	<	00	00	V2E	---	---	---	G<	J	A<
																												A	N	1	<	00	00	V1E	---	---	---	G<	B	A<
07	005		LA	014.600	D	F	H	D	04	04	UO	H	-	N	3	08	01	00	0930	953513259	6	A	A	A	H	D	B	02	A	N	1	<	00	00	V2F	---	---	---	N<	J	A<
																												D	N	1	<	00	00	V1E	---	---	---	N<	J	A<
07	005		LA	014.600	D	F	H	D	04	04	UO	H	-	N	5	02	10	00	1700	953514811	2	B	A	B	H	D	C	03	A	N	1	<	00	00	V3D	---	---	---	G<	A	A<
																												A	N	1	<	00	00	---	V3D	---	---	2<	B	A<
																												D	N	1	<	00	00	V1D	V2D	---	---	G<	B	A<
07	005		LA	014.600	D	F	H	D	04	04	UO	H	-	N	2	06	07	99	0700	953508119	6	A	A	A	H	D	B	03	A	N	1	<	00	00	---	---	---	---	N<	J	G<
																												A	N	1	<	00	00	V3E	---	---	---	N<	B	A<
																												A	N	1	<	00	00	V2E	---	---	---	N<	B	A<
07	005		LA	014.600	D	F	H	D	04	04	UO	H	-	N	4	06	02	99	0905	953513427	2	B	A	A	H	D	C	02	A	N	1	<	00	00	V2D	---	---	---	G<	B	A<
																												A	N	1	<	00	00	V1D	---	---	---	G<	H	A<
07	005		LA	014.600	D	F	H	D	04	04	UO	H	-	N	4	11	25	98	1640	953512125	6	A	A	A	H	D	B	02	A	N	1	<	00	00	V2E	---	---	---	N<	J	A<
																												A	N	1	<	00	00	V1F	---	---	---	N<	B	A<
07	005		LA	014.600	D	F	H	D	04	04	UO	H	-	N	6	10	23	98	1530	953512125	5	A	A	A	H	D	C	02	A	N	1	<	00	00	V2D	---	---	---	G<	B	A<
																												A	N	1	<	00	00	V1D	---	---	---	G<	A	A<
07	005		LA	014.600	D	F	H	D	04	04	UO	H	-	N	4	03	25	98	0305	953514545	5	C	C	B	H	D	E	01	D	N	1	<	00	00	16B	---	---	---	N<	B	A<
07	005		LA	014.610	D	F	H	D	04	04	UO	H	-	N	2	05	14	01	0900	953516306	5	B	A	A	H	D	C	02	G	N	1	D	00	00	V2E	---	---	---	G<	B	A<
																												A	N	1	D	00	01	V1E	---	---	---	G<	B	A<
07	005		LA	014.610	D	F	H	D	04	04	UO	H	-	N	5	08	10	00	1550	953508119	5	A	A	A	H	D	C	02	A	N	1	<	00	00	V2E	---	---	---	N<	B	A<
																												D	N	1	<	00	00	V1E	---	---	---	N<	A	A<
07	005		LA	014.610	D	F	H	D	04	04	UO	H	-	N	5	05	28	98	1550	953511990	6	A	A	A	H	D	B	02	A	N	1	<	00	00	V2D	---	---	---	N<	J	A<
																												A	N	1	<	00	00	V1E	---	---	---	N<	B	A<
07	005		LA	014.620	D	F	H	D	04	04	UO	H	-	N	6	08	11	00	1650	953508119	2	A	A	A	H	D	C	02	D	N	1	<	00	00	V2E	---	---	---	G<	B	A<
																												A	N	1	<	00	00	V1E	---	---	---	G<	H	A<
07	005		LA	014.620	D	F	H	D	04	04	UO	H	-	N	7	07	31	99	0950	953515710	6	A	A	A	H	D	B	03	F	N	1	<	00	00	V2E	---	---	---	N<	J	A<
																												A	N	1	<	00	00	V1E	V3E	---	---	N<	B	A<
																												A	N	1	<	00	00	---	V2D	---	---	N<	B	A<
07	005		LA	014.630	D	F	H	D	04	04	UO	H	-	N	6	03	05	99	0805	953513427	5	B	A	A	H	D	C	03	D	N	1	<	00	00	V2D	---	---	---	G<	B	A<
																												A	N	1	<	00	01	V1D	V3D	---	---	G<	H	A<
																												A	N	1	<	00	01	---	V2D	---	---	G<	H	A<
07	005		LA	014.630	D	F	H	D	04	04	UO	H	-	N	6	07	10	98	1910	953514843	1	A	A	A	H	D	B	02	C	N	1	<	00	01	V2D	---	---	---	6<	J	B<
																												A	N	1	<	00	00	V1E	---	---	---	G<	B	G<
07	005		LA	014.640	D	F	H	D	04	04	UO	H	-	N	6	03	02	01	0650	953508119	5	B	A	A	H	D	C	02	A	N	1	<	00	00	V2E	---	---	---	N<	B	A<
																												A	N	1	<	00	00	V1E	---	---	---	N<	A	A<
07	005		LA	014.640	D	F	H	D	04	04	UO	H	-	N	1	11	08	98	0500	953513748	5	B	C	B	H	D	E	01	A	N	1	<	00	00	16B	---	---	---	N<	B	C<
07	005		LA	014.640	D	F	H	D	04	04	UO	H	-	N	1	11	08	98	0505	953513665	5	B	C	B	C	D	D	02	A	N	1	<	00	00	V2D	---	---	---	I<	B	A<
																												A	N	1	<	00	00	V1D	---	---	---	I<	R	<<

DIST	RTES NO	U F	CO	P LOC R POST E MILE	<-----HIGHWAY-----> H G	A C	M T	B A	LANES LT	RT	UO	I T	S L	D R O A H Y	ACCIDENT DATE MO	DA	YR	TIME HHMM	COMMON ACCIDENT NUMBER	P C F	ENVIR COND W	L	S	R C	R W C	T O C	NO MTR VEH	P T	D I R	V H I	S I	PERSN K	O I	L S P	O S C	L O C	O S O	L O C	O S O	L O C O	L O C	OA F 12	M O V	SD P 12
07	005		LA	014.640	D	F	H	D	04	04	UO	H	-	N	3	05	12	98	1710	953509688	5	C	A	B	H	D	E	01	A	N	1	<	00	00	16B	---	---	---	N<	B	A<
07	005		LA	014.650	D	F	H	D	04	04	UO	H	-	N	2	07	24	00	1420	953514245	5	A	A	A	H	D	C	02	A	N	1	<	00	00	V2D	---	---	---	G<	A	A<
																													A	N	1	<	00	00	V1D	---	---	---	G<	B	A<
07	005		LA	014.650	D	F	H	D	04	04	UO	H	-	N	3	10	12	99	0715	953513427	5	A	A	A	H	D	C	02	D	N	1	<	00	00	V2F	---	---	---	G<	B	A<
																													A	N	1	<	00	01	V1F	---	---	---	G<	A	A<
07	005		LA	014.660	D	F	H	D	04	04	UO	H	-	N	6	05	07	99	0925	953515489	6	A	A	A	H	D	B	02	G	N	1	<	00	00	V2E	---	---	---	N<	J	A<
																													A	N	1	<	00	00	V1E	---	---	---	N<	B	A<
07	005		LA	014.660	D	F	H	D	04	04	UO	H	-	N	6	02	13	98	0615	953513427	5	A	A	A	H	D	C	02	A	N	1	<	00	00	V2E	---	---	---	G<	B	G<
																													A	N	1	<	00	00	V1E	---	---	---	G<	A	A<
07	005		LA	014.670	D	F	H	D	04	04	UO	H	-	N	1	10	21	01	1600	953516472	2	B	A	A	H	D	C	02	A	N	1	C	00	00	V2D	---	---	---	G<	B	A<
																													A	N	1	C	00	00	V1D	---	---	---	G<	A	A<
07	005		LA	014.670	D	F	H	D	04	04	UO	H	-	N	7	09	08	01	1050	953516521	6	A	A	A	H	D	B	02	F	N	1	D	00	00	V2E	---	---	---	N<	J	A<
																													A	N	1	D	00	00	V1E	---	---	---	N<	B	A<
07	005		LA	014.670	D	F	H	D	04	04	UO	H	-	N	5	02	08	01	1820	953514245	5	A	C	A	H	D	C	02	A	N	1	<	00	00	V2D	---	---	---	G<	A	A<
																													A	N	1	<	00	00	V1D	---	---	---	G<	B	A<
07	005		LA	014.670	D	F	H	D	04	04	UO	H	-	N	3	01	16	01	1830	953514245	5	A	C	A	H	D	C	02	D	N	1	<	00	00	V2D	---	---	---	G<	A	A<
																													A	N	1	<	00	00	V1D	---	---	---	G<	B	A<
07	005		LA	014.670	D	F	H	D	04	04	UO	H	-	N	3	08	03	99	1425	953514438	2	A	A	A	H	D	C	03	A	N	1	<	00	00	V2D	---	---	---	G<	B	A<
																													A	N	1	<	00	00	V1D	V3D	---	---	G<	A	A<
																													D	N	1	<	00	00	---	V2D	---	---	G<	A	A<
07	005		LA	014.680	D	F	H	D	04	04	UO	H	-	N	4	02	23	00	1045	953509881	4	B	A	B	H	D	E	01	A	N	1	<	00	00	30H	---	---	---	N<	B	A<
07	005		LA	014.690	D	F	H	D	04	04	UO	H	-	N	4	06	06	01	1530	953516531	5	A	A	A	H	D	C	03	A	N	1	D	00	02	---	V2D	---	---	2G	B	A<
																													A	N	1	D	00	00	V3D	V1D	V3D	---	G<	B	A<
																													A	N	1	D	00	00	V2D	V2D	---	---	G<	A	A<
07	005		LA	014.690	D	F	H	D	04	04	UO	H	-	N	3	05	12	98	1730	953509688	2	C	A	B	H	D	C	02	D	N	1	<	00	00	V2E	---	---	---	G<	B	A<
																													A	N	1	<	00	00	V1E	---	---	---	G<	A	A<
07	005		LA	014.700	D	F	H	D	04	04	UO	H	-	N	2	11	20	00	1825	953516252	5	A	C	A	H	D	C	02	A	N	1	<	00	01	V2D	---	---	---	G<	B	A<
																													A	N	1	<	00	01	V1D	---	---	---	G<	H	A<
07	005		LA	014.700	D	F	H	D	04	04	UO	H	-	N	3	02	09	99	1630	953514558	5	B	A	B	H	D	C	02	D	N	1	<	00	00	V2D	---	---	---	N<	B	A<
																													A	N	1	<	00	01	V1D	16B	---	---	N<	H	A<
07	005		LA	014.710	D	F	H	D	04	04	UO	H	-	N	7	08	25	01	0625	953515870	5	A	A	A	D	D	C	03	A	N	1	C	00	00	V2D	V3E	---	---	6G	B	A<
																													A	N	1	C	00	00	V1E	---	---	---	G<	H	A<
																													G	N	1	C	00	00	---	V1E	---	---	GH	H	A<
07	005		LA	014.710	D	F	H	D	04	04	UO	H	-	N	2	04	05	99	0945	953508119	2	A	A	A	H	D	C	03	D	N	1	<	00	00	V2E	---	---	---	G<	B	A<
																													D	N	1	<	00	00	V1E	V3E	---	---	G<	H	A<
																													F	N	1	<	00	00	---	V2E	---	---	G<	A	A<
07	005		LA	014.720	D	F	H	D	04	04	UO	H	-	N	6	03	10	00	2350	953515994	5	A	D	A	C	D	C	02	A	N	1	<	00	00	V2E	---	---	---	G<	B	G<
																													A	N	1	<	00	00	V1E	---	---	---	G<	A	A<
07	005		LA	014.730	D	F	H	D	04	04	UO	H	-	N	4	12	16	98	1948	953514843	5	A	C	A	H	D	C	02	A	N	1	<	00	00	V2F	---	---	---	G<	B	A<
																													A	N	1	<	00	00	V1F	---	---	---	G<	A	A<
07	005		LA	014.740	D	F	H	D	04	04	UO	H	-	N	1	02	27	00	1250	953515636	5	B	A	B	H	D	B	02	A	N	1	<	00	00	V2E	---	---	---	N<	B	A<
																													A	N	1	<	00	00	V1D	16B	---	---	N<	B	A<
07	005		LA	014.750	D	F	H	D	04	04	UO	H	-	N	6	10	05	01	0505	953516301	6	A	C	A	H	D	C	04	A	N	1	C	00	00	V4F	V2D	V3D	---	N<	B	A<
																													D	N	1	C	00	00	---	V1D	16B	---	N<	B	A<
																													D	N	1	C	00	00	---	V1E	---	---	N<	B	A<
																													M	N	1	D	00	00	V1F	---	---	---	N<	J	D<

DIST	RTES NO	U F	CO	P LOC R POST E MILE	H	A	M	B	<-----HIGHWAY-----> LANES	RI	F	R	O	A	I	S	D	ACCIDENT DATE MO	DA	YR	TIME HHMM	COMMON ACCIDENT NUMBER	P C F	COND W	ENVIR L	R S	R C	T W	O C	NO MTR VEH	P T	D R	V I	S I	PERSN K	O I	L S P	O S C	L O O	O S C	L O O	O S C	L O C	OA 12	M F V	SD O 12 P
07	005		LA	014.750	D	F	H	D	04	04	UO	H	-	N	6	10	05	01	0900	953516285	6	A	A	A	H	D	B	02	G	N	1	D	00	00	V2D	---	---	---	---	---	---	---	GH	J	A<
																													A	N	1	D	00	00	V1E	---	---	---	---	---	---	---	G<	B	A<
07	005		LA	014.750	D	F	H	D	04	04	UO	H	-	N	5	11	30	00	0830	953512825	5	A	A	A	H	D	C	03	A	N	1	<	00	00	---	V2D	---	---	---	---	---	---	N<	A	A<
																													A	N	1	<	00	00	V3D	V1D	---	---	---	---	---	---	N<	A	A<
																													A	N	1	<	00	00	V2D	---	---	---	---	---	---	---	N<	H	A<
07	005		LA	014.750	D	F	H	D	04	04	UO	H	-	N	1	03	05	00	0040	953515336	4	B	D	B	H	D	E	01	A	N	1	<	00	02	16B	30H	---	---	---	---	---	---	N<	R	A<
07	005		LA	014.750	D	F	H	D	04	04	UO	H	-	N	7	01	15	00	1200	953515698	2	B	A	A	H	D	C	02	A	N	1	<	00	00	V2D	---	---	---	---	---	---	---	G<	B	A<
																													A	N	1	<	00	00	V1D	---	---	---	---	---	---	---	G<	A	A<
07	005		LA	014.760	D	F	H	D	04	04	UO	H	-	N	1	11	18	01	2114	953516646	6	A	C	A	H	D	B	03	A	N	1	D	00	00	---	---	---	---	---	---	---	N<	J	G<
																													A	N	1	D	00	00	V3E	---	---	---	---	---	---	---	N<	B	A<
																													G	N	1	D	00	00	V2E	---	---	---	---	---	---	---	N<	B	A<
07	005		LA	014.760	D	F	H	D	04	04	UO	H	-	N	6	07	20	01	1740	953516374	5	A	A	A	H	D	C	02	D	N	1	C	00	00	V2E	---	---	---	---	---	---	---	G<	B	A<
																													A	N	1	C	00	02	V1E	---	---	---	---	---	---	---	G<	A	A<
07	005		LA	014.770	D	F	H	D	04	04	UO	H	-	N	1	09	30	01	2255	953516252	1	A	C	A	H	D	E	01	D	N	1	C	00	00	16B	---	---	---	---	---	---	---	4<	B	B<
07	005		LA	014.770	D	F	H	D	04	04	UO	H	-	N	4	01	17	01	2115	953515941	4	A	D	A	H	D	E	01	A	N	1	<	00	00	16B	---	---	---	---	---	---	---	N<	R	A<
07	005		LA	014.770	D	F	H	D	04	04	UO	H	-	N	4	01	10	01	0800	953508246	2	B	A	A	H	D	C	02	A	N	1	<	00	00	V2D	---	---	---	---	---	---	---	G<	B	A<
																													A	N	1	<	00	00	V1D	---	---	---	---	---	---	---	G<	A	A<
07	005		LA	014.780	D	F	H	D	04	04	UO	H	-	N	1	02	25	01	0445	953515844	5	C	C	B	H	D	B	02	A	N	1	<	00	01	V2D	16B	---	---	---	---	---	---	N<	H	A<
																													G	N	1	<	00	00	V1E	---	---	---	---	---	---	---	N<	B	A<
07	005		LA	014.780	D	F	H	D	04	04	UO	H	-	N	1	02	25	01	0446	953515844	5	C	C	B	H	D	C	02	A	N	1	<	00	01	V2D	---	---	---	---	---	---	---	I<	B	A<
																													A	N	1	<	00	00	V1D	---	---	---	---	---	---	---	I<	A	<<
07	005		LA	014.780	D	F	H	D	04	04	UO	H	-	N	4	09	01	99	1700	953512125	5	A	A	A	H	D	C	03	D	N	1	<	00	00	V2D	---	---	---	---	---	---	---	G<	B	A<
																													A	N	1	<	00	00	V1D	V3D	---	---	---	---	---	---	G<	A	A<
																													A	N	1	<	00	02	---	V2D	---	---	---	---	---	---	G<	B	A<
07	005		LA	014.790	D	F	H	D	04	04	UO	H	-	N	6	12	21	01	1030	953513953	5	B	A	A	H	D	C	02	A	N	1	C	00	00	V2E	---	---	---	---	---	---	---	G<	B	A<
																													A	N	1	C	00	00	V1E	---	---	---	---	---	---	---	G<	H	A<
07	005		LA	014.790	D	F	H	D	04	04	UO	H	-	N	1	07	15	01	1615	953516287	2	A	A	A	H	D	C	03	A	N	1	C	00	00	V2F	---	---	---	---	---	---	---	G<	B	A<
																													A	N	1	C	00	00	V1F	V3F	---	---	---	---	---	---	G<	A	A<
																													A	N	1	C	00	00	---	V2F	---	---	---	---	---	---	G<	A	A<
07	005		LA	014.790	D	F	H	D	04	04	UO	H	-	N	5	04	26	01	1005	953516306	2	A	A	A	H	D	C	02	A	N	1	<	00	00	V2F	---	---	---	---	---	---	---	G<	B	A<
																													D	N	1	<	00	00	V1F	---	---	---	---	---	---	---	G<	A	A<
07	005		LA	014.790	D	F	H	D	04	04	UO	H	-	N	4	11	24	99	0850	953513509	2	A	A	A	H	D	C	03	D	N	1	<	00	00	V2D	---	---	---	---	---	---	---	G<	B	A<
																													D	N	1	<	00	00	V1D	V3D	---	---	---	---	---	---	G<	H	A<
																													A	N	1	<	00	00	---	V2D	---	---	---	---	---	---	G<	A	A<
07	005		LA	014.790	D	F	H	D	04	04	UO	H	-	N	4	07	15	98	1535	953514558	5	A	A	A	H	D	C	03	A	N	1	<	00	00	V2F	---	---	---	---	---	---	---	G<	B	A<
																													A	N	1	<	00	00	V1F	V3F	---	---	---	---	---	---	G<	A	A<
																													M	N	1	<	00	00	---	V2F	---	---	---	---	---	---	G<	A	G<
07	005		LA	014.800	D	F	H	D	04	04	UO	H	-	N	1	02	20	00	0700	953515914	2	C	A	B	H	D	C	02	D	N	1	<	00	00	V2E	---	---	---	---	---	---	---	N<	B	A<
																													D	N	1	<	00	00	V1E	---	---	---	---	---	---	---	N<	A	A<
07	005		LA	014.800	D	F	H	D	04	04	UO	H	-	N	3	05	26	98	1336	953515384	5	A	A	A	H	D	C	04	G	N	1	<	00	00	V2D	---	---	---	---	---	---	---	G<	B	A<
																													D	N	1	<	00	00	V1D	V3D	---	---	---	---	---	---	G<	A	A<
																													A	N	1	<	00	01	---	V2D	V4D	---	---	---	---	---	G<	A	A<
																													A	N	1	<	00	00	---	V3D	---	---	---	---	---	---	G<	A	A<
07	005		LA	014.810	D	F	H	D	04	04	UO	H	-	N	6	05	18	01	1755	953512125	5	A	A	A	H	D	C	02	A	N	1	D	00	00	V2E	---	---	---	---	---	---	---	G<	H	A<
																													D	N	1	D	00	00	V1E	---	---	---	---	---	---	---	EG	B	A<
07	005		LA	014.810	D	F	H	D	04	04	UO	H	-	N	6	08	11	00	0800	953508246	5	A	A	A	H	D	C	02	F	N	1	<	00	00	V2E	---	---	---	---	---	---	---	G<	B	A<
																													D	N	1	<	00	00	V1E	---	---	---	---	---	---	---	G<	A	A<

DIST	RTES NO	U F	CO	P LOC R POST E MILE	<-----HIGHWAY-----> H G	A C	M T	B A	LANES LT	RI RT	UO	I F T	S R L	D O H	A Y	ACCIDENT DATE MO	DA	YR	TIME HHMM	COMMON ACCIDENT NUMBER	P C F	ENVIR COND W	L S	R C	R W C	T O C	NO MTR VEH	P T R	D I	H I	V I	S K	PERSN I	O L P	O S C	L O O	O S C	L O O	O S C	O C	L O C	OA F 12	M O V	SD P 12
07	005		LA	014.810	D	F	H	D	04	04	UO	H	-	N	3	05	02	00	1510	953514245	4	A	A	A	H	D	B	02	A	N	1	<	00	00	V2F	---	---	---				N<	B	A<
																													D	N	1	<	00	00	V1J	---	---	---				N<	P	A<
07	005		LA	014.810	D	F	H	D	04	04	UO	H	-	N	1	03	05	00	0750	953515705	4	C	A	B	H	D	E	01	A	N	1	<	00	00	18H	13H	29H	---				N<	R	A<
07	005		LA	014.810	D	F	H	D	04	04	UO	H	-	N	7	04	03	99	1450	959015570	4	B	A	A	H	D	B	02	G	N	1	<	00	00	V2F	---	---	---				N<	B	A<
																													A	N	1	<	00	00	V1J	17H	---	---				H<	P	G<
07	005		LA	014.810	D	F	H	D	04	04	UO	H	-	N	1	10	18	98	1515	953514438	5	A	A	A	H	D	C	03	A	N	1	<	00	00	V2E	---	---	---				G<	B	G<
																													A	N	1	<	00	01	V1E	V3E	---	---				G<	A	A<
																													A	N	1	<	00	00	---	V2E	---	---				G<	A	A<
07	005		LA	014.810	D	F	H	D	04	04	UO	H	-	N	3	10	06	98	0550	953508246	2	A	C	A	H	D	C	03	J	N	1	<	00	00	V2D	---	---	---				N<	B	A<
																													A	N	1	<	00	00	V1D	V3D	---	---				N<	A	A<
																													A	N	1	<	00	00	---	V2D	---	---				N<	A	G<
07	005		LA	014.810	D	F	H	D	04	04	UO	H	-	N	6	08	14	98	0640	953513427	2	A	A	A	H	D	C	02	A	N	1	<	00	00	V2E	---	---	---				G<	B	A<
																													D	N	1	<	00	00	V1E	---	---	---				G<	H	A<
07	005		LA	014.810	D	F	H	D	04	04	UO	H	-	N	7	03	14	98	1110	953514558	5	A	A	A	D	D	B	05	G	N	1	<	00	00	V2E	V4F	---	---				4<	B	A<
																													F	N	1	<	00	00	V1F	V5G	V3G	---				N<	R	<<
																													F	N	1	<	00	00	---	V2G	---	---				N<	O	<<
																													F	N	1	<	00	00	---	V1G	---	---				N<	O	<<
																													V	N	-	<	00	01	---	V2-	---	---				N<	5	A<
07	005		LA	014.820	D	F	H	D	04	04	UO	H	-	N	1	06	20	99	1640	953515720	5	A	A	A	H	D	C	02	A	N	1	<	00	00	V2E	---	---	---				G<	B	A<
																													D	N	1	<	00	00	V1E	---	---	---				G<	A	A<
07	005		LA	014.820	D	F	H	D	04	04	UO	H	-	N	4	06	16	99	1120	953508119	6	A	A	A	H	D	B	02	A	N	1	<	00	00	V2F	15H	---	---				N<	B	A<
																													F	N	1	<	00	00	V1E	---	---	---				N<	J	G<
07	005		LA	014.820	D	F	H	D	04	04	UO	H	-	N	7	11	28	98	0840	953515382	5	B	A	B	H	D	D	02	A	N	1	<	00	01	V2E	16B	---	---				H<	P	A<
																													A	N	1	<	00	02	V1E	---	---	---				N<	B	A<
07	005		LA	014.820	D	F	H	D	04	04	UO	H	-	N	6	07	10	98	2040	953514558	5	A	C	A	H	D	C	02	D	N	1	<	00	00	V2E	---	---	---				G<	B	A<
																													A	N	1	<	00	00	V1E	---	---	---				G<	A	A<
07	005		LA	014.830	D	F	H	D	04	04	UO	H	-	N	6	07	13	01	1540	953514245	5	A	A	A	H	D	C	04	A	N	1	D	00	00	---	V2D	---	---				G<	A	G<
																													A	N	1	D	00	00	---	V3D	V1D	---				G<	A	A<
																													A	N	1	D	00	00	V4D	V2D	---	---				G<	A	A<
																													A	N	1	D	00	00	V3D	---	---	---				G<	B	A<
07	005		LA	014.830	D	F	H	D	04	04	UO	H	-	N	1	02	25	01	0448	953515800	5	B	D	B	H	D	C	02	A	N	1	<	00	00	V2E	---	---	---				I<	B	A<
																													A	N	1	<	00	00	V1E	---	---	---				I<	A	A<
07	005		LA	014.830	D	F	H	D	04	04	UO	H	-	N	4	05	26	99	1135	953512409	5	A	A	A	H	D	C	03	A	N	1	<	00	00	V2D	---	---	---				G<	B	A<
																													A	N	1	<	00	00	V1D	V3D	---	---				G<	A	A<
																													D	N	1	<	00	00	---	V2D	---	---				G<	A	A<
07	005		LA	014.830	D	F	H	D	04	04	UO	H	-	N	7	08	08	98	0840	953508246	6	A	A	A	H	D	B	04	F	N	1	<	00	00	V2E	---	---	---				N<	J	G<
																													A	N	1	<	00	00	V1F	V3E	16B	---				N<	B	A<
																													D	N	1	<	00	00	---	V2E	V4E	---				N<	<	<<
																													G	N	1	<	00	00	---	V3F	---	---				N<	B	G<
07	005		LA	014.830	D	F	H	D	04	04	UO	H	-	N	5	07	16	98	0730	953508246	5	A	A	A	H	D	C	03	A	N	1	<	00	00	V2D	---	---	---				G<	B	G<
																													J	N	1	<	00	01	V1D	V3D	---	---				G<	A	A<
																													A	N	1	<	00	01	---	V2D	---	---				G<	A	A<
07	005		LA	014.830	D	F	H	D	04	04	UO	H	-	N	6	05	22	98	1730	953515280	2	A	A	A	H	D	C	02	A	N	1	<	00	00	V2E	---	---	---				G<	B	A<
																													D	N	1	<	00	00	V1E	---	---	---				G<	A	A<
07	005		LA	014.840	D	F	H	D	04	04	UO	H	-	N	1	11	21	99	1840	953515767	5	A	C	A	H	D	C	04	A	N	1	<	00	00	V2E	---	---	---				G<	B	A<
																													A	N	1	<	00	00	V1E	V3E	---	---				G<	H	A<
																													A	N	1	<	00	00	---	V2E	V4E	---				G<	H	A<
																													A	N	1	<	00	00	---	V3E	---	---				G<	H	A<

DIST	RTES NO	U F	CO	P LOC R POST E MILE	<-----HIGHWAY-----> H G	A C	M T	B A	LANES LT	RT	RI UO	F T	I S D R O A L H Y	ACCIDENT DATE MO DA YR	TIME HHMM	COMMON ACCIDENT NUMBER	P C F	ENVIR COND W L S	R C	R W C	T O C	NO MTR VEH	P T	D I R	V H I	S I	PERSN K	O I	L O S P	O S C	L O S C	O L O C	L O S O	O S C	L O C	OA F 12	M O V	SD P 12
07	005		LA	014.840	D	F	H	D	04	04	UO	H	- N 5	02-19-98	2245	953513665	5	C C B	H	D	E	01	D	N	1	<	00	00	16B	---	---	---	---	N<	B	A<
07	005		LA	014.840	D	F	H	D	04	04	UO	H	- N 6	02-06-98	1415	953513421	5	B A B	H	D	E	01	A	N	1	<	00	00	18H	15H	---	---	---	N<	B	A<
07	005		LA	014.850	D	F	H	D	04	04	UO	H	- N 7	08-11-01	1100	953516472	2	A A A	H	D	C	02	A	N	1	C	00	00	V2E	---	---	---	---	G<	B	A<
																							A	N	1	C	00	00	V1E	---	---	---	---	G<	A	A<
07	005		LA	014.850	D	F	H	D	04	04	UO	H	- N 2	06-18-01	1545	953513741	5	A A A	H	D	C	02	A	N	1	D	00	00	V2D	---	---	---	---	G<	B	A<
																							A	N	1	D	00	01	V1D	---	---	---	---	G<	A	A<
07	005		LA	014.850	D	F	H	D	04	04	UO	H	- N 1	05-06-01	0745	953516306	2	A A A	H	D	C	02	A	N	1	<	00	00	V2D	---	---	---	---	N<	B	A<
																							A	N	1	<	00	00	V1D	---	---	---	---	N<	H	A<
07	005		LA	014.850	D	F	H	D	04	04	UO	H	- N 5	04-12-01	0910	953508246	2	B A A	H	D	C	03	A	N	1	<	00	00	V2E	---	---	---	---	G<	B	A<
																							D	N	1	<	00	00	V1E	V3E	---	---	---	G<	A	A<
																							D	N	1	<	00	00	---	V2E	---	---	---	G<	A	A<
07	005		LA	014.850	D	F	H	D	04	04	UO	H	- N 6	10-08-99	1745	953512125	5	A A A	H	D	C	02	A	N	1	<	00	00	V2D	---	---	---	---	G<	B	A<
																							A	N	1	<	00	00	V1D	---	---	---	---	G<	A	A<
07	005		LA	014.850	D	F	H	D	04	04	UO	H	- N 6	04-16-99	0935	953515710	5	A A A	H	D	C	03	F	N	1	<	00	00	V2E	---	---	---	---	G<	B	A<
																							D	N	1	<	00	00	V1E	V3E	---	---	---	G<	A	A<
																							A	N	1	<	00	00	---	V2E	---	---	---	G<	A	A<
07	005		LA	014.850	D	F	H	D	04	04	UO	H	- N 7	03-13-99	2200	953515446	4	B C A	H	D	C	02	A	N	1	<	00	00	V2E	---	---	---	---	6<	J	A<
																							D	N	1	<	00	00	V1E	---	---	---	---	I<	A	A<
07	005		LA	014.850	D	F	H	D	04	04	UO	H	- N 6	02-05-99	0033	953515489	4	C D B	H	D	E	01	A	N	1	<	00	00	30H	---	---	---	---	N<	J	A<
07	005		LA	014.850	D	F	H	D	04	04	UO	H	- N 2	12-07-98	0630	953514704	5	A A A	D	D	C	03	A	N	1	<	00	00	V2E	V2E	---	---	---	G<	A	A<
																							A	N	1	<	00	00	V1E	V3E	V1E	---	---	G<	B	A<
																							A	N	1	<	00	01	---	V2E	---	---	---	6<	H	A<
07	005		LA	014.850	D	F	H	D	04	04	UO	H	- N 4	11-18-98	0750	953515489	5	A A A	H	D	C	02	D	N	1	<	00	00	V2F	---	---	---	---	G<	B	A<
																							A	N	1	<	00	00	V1F	---	---	---	---	G<	H	A<
07	005		LA	014.850	D	F	H	D	04	04	UO	H	- N 2	10-19-98	1100	953515636	5	A A A	H	D	C	02	A	N	1	<	00	00	V2D	---	---	---	---	N<	B	A<
																							A	N	1	<	00	00	V1D	---	---	---	---	N<	A	A<
07	005		LA	014.850	D	F	H	D	04	04	UO	H	- N 1	08-16-98	1700	953515570	2	A A A	H	D	C	03	D	N	1	<	00	00	V2E	---	---	---	---	G<	H	A<
																							A	N	1	<	00	01	V1E	V3E	---	---	---	G<	A	A<
																							A	N	1	<	00	00	---	V2E	---	---	---	G<	A	A<
07	005		LA	014.850	D	F	H	D	04	04	UO	H	- N 3	06-16-98	1020	953508246	2	B A A	H	D	C	02	D	N	1	<	00	00	V2E	---	---	---	---	G<	B	A<
																							G	N	1	<	00	00	V1E	---	---	---	---	G<	A	A<
07	005		LA	014.860	D	F	H	D	04	04	UO	H	- N 6	09-21-01	1420	953516531	5	A A A	H	D	C	02	A	N	1	D	00	00	V2D	---	---	---	---	G<	B	A<
																							A	N	1	D	00	00	V1D	---	---	---	---	G<	A	A<
07	005		LA	014.860	D	F	H	D	04	04	UO	H	- N 1	02-25-01	0449	953515720	5	B C B	H	D	D	02	A	N	1	<	00	00	V2D	16B	---	---	---	I<	B	A<
																							A	N	1	<	00	00	V1D	---	---	---	---	I<	A	<<
07	005		LA	014.860	D	F	H	D	04	04	UO	H	- N 5	03-30-00	1425	953515797	2	A A A	H	D	C	02	D	N	1	<	00	00	V2F	---	---	---	---	G<	B	A<
																							D	N	1	<	00	00	V1F	---	---	---	---	G<	A	A<
07	005		LA	014.870	D	F	H	D	04	04	UO	H	- N 1	02-25-01	0450	953514976	5	B C B	H	D	E	01	A	N	1	<	00	01	42E	---	---	---	---	I<	B	A<
07	005		LA	014.870	D	F	H	D	04	04	UO	H	- N 3	12-28-99	2100	958014751		< C	<	<	<	H 02	D	N	1	<	00	00	V2F	---	---	---	---	<<	B	<<
																							A	N	1	<	00	00	V1E	---	---	---	---	<<	B	<<
07	005		LA	014.870	D	F	H	D	04	04	UO	H	- N 7	07-11-98	0900	953513427	2	A A A	H	D	C	02	A	N	1	<	00	00	V2E	---	---	---	---	G<	B	A<
																							A	N	1	<	00	00	V1E	---	---	---	---	G<	H	A<
07	005		LA	014.880	D	F	H	D	04	04	UO	H	- N 6	06-29-01	1718	953515959	5	A A A	H	D	C	03	F	N	1	C	00	00	V2F	---	---	---	---	G<	B	A<
																							D	N	1	C	00	00	V1F	V3F	---	---	---	G<	A	C<
																							A	N	1	C	00	00	---	V2F	---	---	---	G<	A	A<
07	005		LA	014.880	D	F	H	D	04	04	UO	H	- N 4	04-18-01	0930	953515941	2	B A A	H	D	C	03	A	N	1	<	00	00	V2E	---	---	---	---	G<	B	A<
																							A	N	1	<	00	02	V1E	V3E	---	---	---	G<	A	A<
																							A	N	1	<	00	02	---	V2E	---	---	---	G<	A	A<

DIST	RTES NO	U F	CO	P LOC R POST E MILE	<-----HIGHWAY-----> H G	A C	M T	B A	LANES LT	RT	UO	I F T	S R L	O H	D A Y	ACCIDENT DATE MO	DA	YR	TIME HHMM	COMMON ACCIDENT NUMBER	P C F	ENVIR COND W	L S	R C	R W C	T O C	NO MTR VEH	P T R	D I	V H I	S I	PERSN K	O I	L O S P	O S C	L O S C	O S O	L O S C	O S O	L O C	OA F O 12	M O V	SD P 12
07	005		LA	014.880	D	F	H	D	04	04	UO	H	-	N	1	02	25	01	0451	953513584	6	C	C	B	H	D	C	02	A	N	1	<	00	00	V2E	16B	---	---	I<	J	A<
																													A	N	1	<	00	00	V1E	---	---	---	I<	B	A<
07	005		LA	014.880	D	F	H	D	04	04	UO	H	-	N	4	01	10	01	2320	953516277	5	C	C	B	H	D	C	03	A	N	1	<	00	00	V2D	---	---	---	N<	B	A<
																													A	N	1	<	00	00	V1E	V3E	---	---	N<	B	A<
																													A	N	1	<	00	00	---	V2E	---	---	2<	B	A<
07	005		LA	014.880	D	F	H	D	04	04	UO	H	-	N	4	01	10	01	2325	953516277	5	C	D	B	H	D	C	05	A	N	1	<	00	00	V4E	V2E	---	---	I<	B	A<
																													A	N	1	<	00	00	---	V1E	---	---	I<	A	A<
																													A	N	1	<	00	00	---	V4E	---	---	I<	A	A<
																													A	N	1	<	00	01	V1E	V3E	V5E	---	I<	A	A<
																													A	N	1	<	00	00	---	V4E	---	---	I<	A	A<
07	005		LA	014.880	D	F	H	D	04	04	UO	H	-	N	1	02	27	00	1515	953515612	6	C	A	B	H	D	H	03	G	N	1	<	00	00	V2E	---	---	---	G<	G	A<
																													A	N	1	<	00	00	V1E	V3E	---	---	G<	A	A<
																													A	N	1	<	00	00	---	V2E	---	---	G<	A	A<
07	005		LA	014.880	D	F	H	D	04	04	UO	H	-	N	7	07	18	98	1100	953514316	2	A	A	A	H	D	C	03	A	N	1	<	00	01	V2E	---	---	---	G<	B	A<
																													D	N	1	<	00	00	V1E	V3E	---	---	G<	A	A<
																													D	N	1	<	00	00	---	V2E	---	---	G<	A	A<
07	005		LA	014.880	D	F	H	D	04	04	UO	H	-	N	6	05	15	98	1630	953515280	2	A	A	A	H	D	C	03	A	N	1	<	00	00	V2D	---	---	---	G<	B	A<
																													A	N	1	<	00	00	V1D	V3D	---	---	G<	A	A<
																													D	N	1	<	00	00	---	V2D	---	---	G<	A	A<
07	005		LA	014.880	D	F	H	D	04	04	UO	H	-	N	6	01	02	98	2015	953515429	6	C	D	B	H	D	C	02	A	N	1	<	00	00	V2E	---	---	---	5<	J	A<
																													D	N	1	<	00	01	V1E	---	---	---	N<	B	A<
07	005		LA	014.890	D	F	H	D	04	04	UO	H	-	N	1	03	18	01	1415	953515606	5	A	A	A	H	D	C	03	M	N	1	<	00	00	V2E	---	---	---	G<	B	G<
																													A	N	1	<	00	00	V1E	V3E	---	---	G<	A	A<
																													A	N	1	<	00	00	---	V2E	---	---	G<	A	G<
07	005		LA	014.890	D	F	H	D	04	04	UO	H	-	N	7	08	26	00	1655	953515941	2	A	A	A	H	D	C	02	A	N	1	<	00	00	V2D	---	---	---	G<	B	A<
																													A	N	1	<	00	00	V1D	---	---	---	G<	A	A<
07	005		LA	014.890	D	F	H	D	04	04	UO	H	-	N	6	12	17	99	1535	953515532	5	A	A	A	H	D	C	03	D	N	1	<	00	00	V2D	---	---	---	G<	B	A<
																													A	N	1	<	00	00	V1D	V3D	---	---	G<	A	A<
																													A	N	1	<	00	00	---	V2D	---	---	G<	A	A<
07	005		LA	014.890	D	F	H	D	04	04	UO	H	-	N	1	10	17	99	2006	953514735	5	A	D	A	H	D	C	03	A	N	1	<	00	00	---	V2E	---	---	5<	B	A<
																													A	N	1	<	00	00	V3E	V1E	---	---	I<	B	A<
																													A	N	1	<	00	00	V2E	---	---	---	I<	H	G<
07	005		LA	014.890	D	F	H	D	04	04	UO	H	-	N	7	09	25	99	1745	953515280	2	B	A	A	H	D	C	02	A	N	1	<	00	00	V2E	---	---	---	N<	B	A<
																													D	N	1	<	00	00	V1E	---	---	---	N<	H	A<
07	005		LA	014.890	D	F	H	D	04	04	UO	H	-	N	1	05	23	99	0840	953515653	5	B	A	B	H	D	E	01	D	N	1	<	00	00	15H	---	---	---	N<	B	A<
07	005		LA	014.890	D	F	H	D	04	04	UO	H	-	N	3	03	30	99	1250	953515698	6	A	A	A	H	D	B	02	A	N	1	<	00	00	V2E	---	---	---	6<	B	A<
																													G	N	1	<	00	00	V1E	---	---	---	6<	B	A<
07	005		LA	014.890	D	F	H	D	04	04	UO	H	-	N	3	01	19	99	1930	953512125	6	A	C	A	H	D	C	02	A	N	1	<	00	00	V2E	---	---	---	N<	B	A<
																													D	N	1	<	00	00	V1E	---	---	---	N<	J	A<
07	005		LA	014.890	D	F	H	D	04	04	UO	H	-	N	3	01	05	99	0735	953508119	5	A	A	A	H	D	C	02	F	N	1	<	00	00	V2F	---	---	---	G<	B	A<
																													A	N	1	<	00	02	V1F	---	---	---	G<	A	A<
07	005		LA	014.890	D	F	H	D	04	04	UO	H	-	N	6	05	15	98	1700	953515462	5	A	A	A	H	D	C	03	D	N	1	<	00	00	V2E	---	---	---	G<	H	A<
																													A	N	1	<	00	01	V1E	V3E	---	---	G<	A	A<
																													A	N	1	<	00	00	---	V2E	---	---	G<	A	A<
07	005		LA	014.890	D	F	H	D	04	04	UO	H	-	N	5	05	07	98	2220	953514655	5	A	D	A	H	D	E	01	A	N	1	<	00	00	42D	16B	---	---	N<	B	A<
07	005		LA	014.890	D	F	H	D	04	04	UO	H	-	N	5	02	12	98	0945	953513427	2	A	A	A	H	D	C	03	A	N	1	<	00	00	V2E	V3E	---	---	G<	B	A<
																													A	N	1	<	00	00	V1E	---	---	---	G<	H	A<
																													D	N	1	<	00	00	---	V1E	---	---	2<	B	A<

DIST	RTES NO	U F	CO	P LOC R POST E MILE	<-----HIGHWAY-----> H G	A C	M T	B A	LANES LT	RT	UO	I T	S L	R H	D A Y	ACCIDENT DATE MO DA YR	TIME HHMM	COMMON ACCIDENT NUMBER	P C F	ENVIR COND W L S	R C	R W C	T O C	NO MTR VEH	P T R	D I	V H I	S I	PERSN K	O I P	L O C	O S O	L O C	O S O	L O C	O S O	L O C	OA F 12	M O V	SD P 12
07	005		LA	014.900	D	F	H	D	04	04	UO	H	-	N	2	09-03-01	1455	953516531	6	A A A	H	D	B	02	A	N	1	C	00	00	V2F	---	---	---	M<	J	A<
																									A	N	1	C	00	00	V1E	---	---	---	N<	B	A<
07	005		LA	014.900	D	F	H	D	04	04	UO	H	-	N	2	08-06-01	1300	953507348	6	A A A	H	D	B	02	A	N	1	D	00	00	V2E	---	---	---	N<	A	A<
																									A	N	1	D	00	00	V1E	---	---	---	N<	J	G<
07	005		LA	014.900	D	F	H	D	04	04	UO	H	-	N	4	03-14-01	1045	953508246	5	A A A	H	D	C	04	A	N	1	<	00	01	V2F	V4F	---	---	G<	B	A<
																									D	N	1	<	00	00	V1F	V3F	---	---	G<	A	A<
																									A	N	1	<	00	00	---	V2F	---	---	G<	A	A<
																									A	N	1	<	00	00	---	V1F	---	---	2G	B	A<
07	005		LA	014.900	D	F	H	D	04	04	UO	H	-	N	1	02-25-01	2005	194216136	5	C C B	H	D	B	02	D	N	1	<	00	01	V2D	---	---	---	4<	B	A<
																									G	N	1	<	00	00	V1E	---	---	---	N<	B	G<
07	005		LA	014.900	D	F	H	D	04	04	UO	H	-	N	4	12-13-00	2300	953516004	5	A C A	H	D	C	02	A	N	1	<	00	00	V2F	---	---	---	G<	B	G<
																									A	N	1	<	00	00	V1F	---	---	---	G<	A	A<
07	005		LA	014.900	D	F	H	D	04	04	UO	H	-	N	1	10-08-00	1900	953514735	2	A C A	H	D	C	02	A	N	1	<	00	00	V2E	---	---	---	G<	J	A<
																									A	N	1	<	00	00	V1E	---	---	---	G<	H	A<
07	005		LA	014.900	D	F	H	D	04	04	UO	H	-	N	6	08-25-00	1945	953512125	6	A C A	H	D	B	02	A	N	1	<	00	00	V2F	---	---	---	N<	B	A<
																									G	N	1	<	00	00	V1E	---	---	---	N<	J	A<
07	005		LA	014.900	D	F	H	D	04	04	UO	H	-	N	6	08-18-00	1415	953508119	5	A A A	H	<	E	02	A	N	1	<	00	00	16B	V2D	---	---	G<	B	A<
																									J	N	1	<	00	00	---	V1D	---	---	G<	A	A<
07	005		LA	014.900	D	F	H	D	04	04	UO	H	-	N	2	08-14-00	1530	953508119	5	A A A	H	D	C	02	F	N	1	<	00	00	V2F	---	---	---	N<	B	A<
																									F	N	1	<	00	00	V1F	---	---	---	N<	A	A<
07	005		LA	014.900	D	F	H	D	04	04	UO	H	-	N	7	06-10-00	1220	953515985	5	A A A	H	D	C	03	D	N	1	<	00	00	V2D	---	---	---	G<	H	A<
																									A	N	1	<	00	00	V1D	V3D	---	---	G<	H	A<
																									A	N	1	<	00	00	---	V2D	---	---	G<	A	A<
07	005		LA	014.900	D	F	H	D	04	04	UO	H	-	N	1	06-04-00	0830	953515848	5	A A A	H	D	C	02	A	N	1	<	00	00	V2F	---	---	---	N<	B	A<
																									D	N	1	<	00	00	V1F	---	---	---	N<	H	A<
07	005		LA	014.900	D	F	H	D	04	04	UO	H	-	N	1	03-05-00	0600	953514335	5	C A B	H	D	B	02	A	N	1	<	00	00	V2D	---	---	---	N<	B	A<
																									D	N	1	<	00	01	V1E	30H	---	---	N<	B	A<
07	005		LA	014.900	D	F	H	D	04	04	UO	H	-	N	6	03-03-00	2300	953512747	6	C D B	H	D	B	03	A	N	1	<	00	00	V2D	V3D	16B	---	N<	J	A<
																									D	N	1	<	00	00	V1E	---	---	---	N<	B	A<
																									A	N	1	<	00	00	---	V1D	---	---	N<	B	A<
07	005		LA	014.900	D	F	H	D	04	04	UO	H	-	N	2	01-10-00	1830	953512125	5	A C A	H	D	C	02	G	N	1	<	00	00	V2D	---	---	---	G<	H	G<
																									A	N	1	<	00	00	V1D	---	---	---	G<	B	A<
07	005		LA	014.900	D	F	H	D	04	04	UO	H	-	N	4	12-15-99	1700	953515767	5	A C A	H	D	C	02	D	N	1	<	00	00	V2E	---	---	---	G<	B	A<
																									A	N	1	<	00	00	V1E	---	---	---	G<	B	A<
07	005		LA	014.900	D	F	H	D	04	04	UO	H	-	N	2	12-13-99	1850	953515844	2	A C A	H	D	C	04	A	N	1	<	00	00	---	V2F	---	---	2<	B	A<
																									A	N	1	<	00	00	---	V3F	V1F	---	2<	B	A<
																									A	N	1	<	00	00	V4F	V2F	---	---	G<	B	A<
																									A	N	1	<	00	00	V3F	---	---	---	G<	H	<<
07	005		LA	014.900	D	F	H	D	04	04	UO	H	-	N	3	10-20-98	0555	953515446	5	A C A	H	D	C	02	A	N	1	<	00	00	V2E	---	---	---	G<	B	A<
																									A	N	1	<	00	00	V1E	---	---	---	G<	H	G<
07	005		LA	014.900	D	F	H	D	04	04	UO	H	-	N	6	10-09-98	1500	953511990	5	A A A	H	D	C	03	D	N	1	<	00	00	V2D	---	---	---	G<	B	A<
																									A	N	1	<	00	00	V1D	V3D	---	---	G<	A	A<
																									A	N	1	<	00	00	---	V2D	---	---	G<	A	A<
07	005		LA	014.900	D	F	H	D	04	04	UO	H	-	N	7	08-22-98	0940	953507348	5	A A A	H	D	C	02	A	N	1	<	00	02	V2E	---	---	---	N<	H	A<
																									F	N	1	<	00	00	V1E	---	---	---	N<	B	A<
07	005		LA	014.900	D	F	H	D	04	04	UO	H	-	N	4	08-19-98	1745	953512125	5	A A A	H	D	C	02	A	N	1	<	00	01	V2D	---	---	---	G<	B	A<
																									A	N	1	<	00	01	V1D	---	---	---	G<	A	A<

DIST	RTES NO	U F	CO	P LOC R POST E MILE	<-----HIGHWAY-----> H G	A C	M T	B A	LANES LT	RT	RI UO	F T	I L	S R H	O	D A Y	ACCIDENT DATE MO	DA	YR	TIME HHMM	COMMON ACCIDENT NUMBER	P C F	ENVIR COND W L S	R W C	R C	T O C	NO MTR VEH	P T	D I R	V H I	S I	PERSN K	O I P	L O S C	O S O	L O S C	O S O	O S C	L O C	OA F 12	M O V	SD P 12
07	005		LA	014.900	D	F	H	D	04	04	UO	H	-	N	7	06	13	98	1500	953514843	2	A	A A H	D	C	02	D	N	1	<	00	00	V2E	---	---	---	G<	B	A<
																											D	N	1	<	00	00	V1E	---	---	---	G<	A	A<
07	005		LA	014.900	D	F	H	D	04	04	UO	H	-	N	7	04	18	98	1153	953514727	2	A	A A H	D	B	03	G	N	1	<	00	00	V2E	V3E	---	---	G<	B	A<
																											M	N	1	<	00	00	V1E	---	---	---	G<	H	A<
																											D	N	1	<	00	01	---	V1E	---	---	G<	A	A<
07	005		LA	014.900	D	F	H	D	04	04	UO	H	-	N	4	03	04	98	1235	953512394	2	A	A A H	D	C	03	A	N	1	<	00	00	V2E	---	---	---	G<	B	G<
																											A	N	1	<	00	00	V1E	V3E	---	---	G<	A	A<
																											A	N	1	<	00	00	---	V2E	---	---	G<	A	A<
07	005		LA	014.910	D	F	H	D	04	04	UO	H	-	N	6	07	13	01	1940	953512125	5	A	A A H	D	E	04	A	N	1	D	00	00	15H	V2F	---	---	N<	B	A<
																											A	N	1	D	00	00	---	V1F	V3E	---	N<	B	A<
																											A	N	1	D	00	00	---	V2E	V4E	15H	N<	B	A<
																											G	N	1	D	00	00	---	V3E	---	---	N<	B	A<
07	005		LA	014.910	D	F	H	D	04	04	UO	H	-	N	1	02	25	01	2041	953515941	6	B	D B H	D	B	02	A	N	1	<	00	00	V2E	---	---	---	N<	J	A<
																											A	N	1	<	00	00	V1F	15H	---	---	N<	B	A<
07	005		LA	014.910	D	F	H	D	04	04	UO	H	-	N	2	01	08	01	1150	953512952	6	B	A B H	D	B	02	A	N	1	<	00	00	V2E	---	---	---	N<	B	A<
																											A	N	1	<	00	00	V1E	---	---	---	N<	B	A<
07	005		LA	014.910	D	F	H	D	04	04	UO	H	-	N	6	10	20	00	2030	953515178	5	A	C A H	D	C	03	A	N	1	<	00	00	V2E	---	---	---	G<	B	G<
																											A	N	1	<	00	00	V1E	V3E	---	---	G<	A	A<
																											M	N	1	<	00	00	---	V2E	---	---	G<	A	G<
07	005		LA	014.910	D	F	H	D	04	04	UO	H	-	N	7	09	23	00	0100	953515848	5	C	D B H	D	B	02	A	N	1	<	00	00	V2D	---	---	---	N<	B	A<
																											A	N	1	<	00	00	V1E	---	---	---	N<	B	A<
07	005		LA	014.910	D	F	H	D	04	04	UO	H	-	N	7	08	26	00	1555	953516004	5	A	A A H	D	B	02	A	N	1	<	00	00	V2E	---	---	---	K<	B	G<
																											A	N	1	<	00	00	V1E	---	---	---	N<	B	A<
07	005		LA	014.910	D	F	H	D	04	04	UO	H	-	N	1	07	30	00	1435	953516012	5	A	A A H	D	C	02	A	N	1	<	00	00	V2F	---	---	---	G<	A	G<
																											D	N	1	<	00	01	V1F	---	---	---	G<	B	A<
07	005		LA	014.910	D	F	H	D	04	04	UO	H	-	N	3	01	25	00	0446	953515743	5	C	C B H	D	E	02	D	N	1	<	00	01	16B	V2E	---	---	N<	B	A<
																											G	N	1	<	00	00	---	V1E	---	---	N<	B	A<
07	005		LA	014.910	D	F	H	D	04	04	UO	H	-	N	2	12	13	99	1825	953512125	6	A	C A H	D	B	02	A	N	1	<	00	00	V2F	---	---	---	6<	B	A<
																											F	N	1	<	00	00	V1E	---	---	---	6<	B	A<
07	005		LA	014.910	D	F	H	D	04	04	UO	H	-	N	1	10	17	99	2005	953514735	5	A	D A H	D	C	03	D	N	1	<	00	00	V2E	---	---	---	G<	B	A<
																											A	N	1	<	00	00	V1E	V3E	---	---	G<	A	A<
																											A	N	1	<	00	00	---	V2E	---	---	G<	A	G<
07	005		LA	014.910	D	F	H	D	04	04	UO	H	-	N	2	08	03	98	1300	953508119	5	A	A A H	D	C	04	D	N	1	<	00	00	V2D	---	---	---	G<	B	A<
																											A	N	1	<	00	00	V1D	V3D	---	---	G<	A	A<
																											D	N	1	<	00	00	---	V2D	V4D	---	G<	A	A<
																											D	N	1	<	00	00	---	V3D	---	---	G<	A	A<
07	005		LA	014.910	D	F	H	D	04	04	UO	H	-	N	6	06	05	98	1515	953509688	6	A	A A H	D	C	02	D	N	1	<	00	00	V2E	---	---	---	G<	H	A<
																											A	N	1	<	00	00	V1E	---	---	---	G<	H	A<
07	005		LA	014.910	D	F	H	D	04	04	UO	H	-	N	4	02	25	98	0730	953508119	5	A	A A H	D	C	02	A	N	1	<	00	00	V2E	---	---	---	G<	B	A<
																											A	N	1	<	00	00	V1E	---	---	---	G<	A	A<
07	005		LA	014.920	D	F	H	D	04	04	UO	H	-	N	4	12	12	01	1010	953515705	6	A	A A H	D	B	02	F	N	1	C	00	00	V2E	---	---	---	G<	J	A<
																											A	N	1	C	00	00	V1E	---	---	---	G<	B	A<
07	005		LA	014.920	D	F	H	D	04	04	UO	H	-	N	2	11	05	01	1820	953507348	5	B	C A H	A	C	03	A	N	1	D	00	00	V2D	---	---	---	N<	A	A<
																											A	N	1	D	00	01	V1D	V3D	---	---	N<	B	A<
																											D	N	1	D	00	00	---	V2D	---	---	N<	A	A<
07	005		LA	014.920	D	F	H	D	04	04	UO	H	-	N	6	10	19	01	1625	953516644	6	A	A A H	D	B	02	A	N	1	D	00	00	V2E	---	---	---	G<	J	G<
																											G	N	1	C	00	00	V1E	---	---	---	G<	B	A<

DIST	RTES NO	U F	CO	P LOC R POST E MILE	<-----HIGHWAY-----> H G	A C	M T	B A	LANES LT	RT	RI UO	F T	I S D R O A L H Y	ACCIDENT DATE MO DA YR	TIME HHMM	COMMON ACCIDENT NUMBER	P C F	ENVIR COND W L S	R C	R W C	T O C	NO MTR VEH	P T	D I R	V H I	S I	PERSN K	I	O P	L S C	O O	L O C	O O	L S O	O C	L O C	OA F 12	M O V	SD P 12
07	005		LA	014.920	D	F	H	D	04	04	UO	H	-	N 2 06-04-01	1740	953516374	5	A A A	H	D	C	02	A	N	1	D	00	00	V2E	---	---	---	---	6G	B	G<
																							D	N	1	C	00	01	V1E	---	---	---	---	G<	B	A<
07	005		LA	014.920	D	F	H	D	04	04	UO	H	-	N 5 04-05-01	1445	953515869	5	B A A	H	D	C	02	A	N	1	<	00	00	V2D	---	---	---	---	G<	B	A<
																							D	N	1	<	00	01	V1D	---	---	---	---	G<	A	A<
07	005		LA	014.920	D	F	H	D	04	04	UO	H	-	N 6 02-09-01	0450	953515914	5	A D A	D	D	C	02	D	N	1	<	00	00	V2E	---	---	---	---	N<	H	A<
																							D	N	1	<	00	00	V1E	---	---	---	---	N<	B	A<
07	005		LA	014.920	D	F	H	D	04	04	UO	H	-	N 3 08-15-00	0900	953508119	2	A A A	H	D	C	03	A	N	1	<	00	00	V2E	---	---	---	---	G<	B	A<
																							A	<	1	<	00	00	V1E	V3E	---	---	---	G<	A	A<
																							A	N	1	<	00	00	---	V2E	---	---	---	G<	A	A<
07	005		LA	014.920	D	F	H	D	04	04	UO	H	-	N 5 04-13-00	1550	959015948	6	B A A	H	D	B	02	A	N	1	<	00	00	V2E	---	---	---	---	N<	B	A<
																							D	N	1	<	00	00	V1E	---	---	---	---	N<	J	G<
07	005		LA	014.920	D	F	H	D	04	04	UO	H	-	N 2 02-07-00	0830	953513259	5	A A A	H	D	C	03	A	N	1	<	00	00	V2E	---	---	---	---	G<	B	A<
																							A	N	1	<	00	00	V1E	V3E	---	---	---	G<	A	A<
																							A	N	1	<	00	00	---	V2E	---	---	---	G<	A	A<
07	005		LA	014.920	D	F	H	D	04	04	UO	H	-	N 2 01-24-00	0545	953515922	5	B C A	H	D	C	03	D	N	1	<	00	00	---	V2E	---	---	---	G<	A	A<
																							A	N	1	<	00	00	V3E	V1E	---	---	---	G<	A	A<
																							A	N	1	<	00	00	V2E	---	---	---	---	G<	B	A<
07	005		LA	014.920	D	F	H	D	04	04	UO	H	-	N 4 12-22-99	1750	953514735	6	A D A	H	D	B	02	A	N	1	<	00	00	V2F	---	---	---	---	G<	P	A<
																							I	N	1	<	00	00	V1F	---	---	---	---	G<	B	A<
07	005		LA	014.920	D	F	H	D	04	04	UO	H	-	N 4 01-27-99	0850	953515701	6	A A A	H	D	C	02	A	N	1	<	00	00	V2F	---	---	---	---	N<	B	A<
																							F	N	1	<	00	00	V1F	---	---	---	---	N<	A	A<
07	005		LA	014.920	D	F	H	D	04	04	UO	H	-	N 1 11-01-98	1235	953515446	5	A A A	H	D	C	03	A	N	1	<	00	01	V2E	---	---	---	---	G<	B	A<
																							A	N	1	<	00	00	V1E	V3E	---	---	---	G<	A	A<
																							A	N	1	<	00	00	---	V2E	---	---	---	G<	A	A<
07	005		LA	014.920	D	F	H	D	04	04	UO	H	-	N 6 08-07-98	1350	953514637	5	A A A	H	D	C	03	A	N	1	<	00	00	V2D	---	---	---	---	G<	B	A<
																							A	N	1	<	00	00	V1D	V3D	---	---	---	G<	H	A<
																							A	N	1	<	00	00	---	V2D	---	---	---	G<	H	A<
07	005		LA	014.920	D	F	H	D	04	04	UO	H	-	N 5 06-18-98	1615	953507348	5	A A A	H	D	C	04	A	N	1	<	00	00	---	V2D	---	---	---	N<	A	A<
																							A	N	1	<	00	00	---	V3D	V1D	---	---	G<	A	A<
																							A	N	1	<	00	00	V4D	V2D	---	---	---	N<	H	A<
																							D	N	1	<	00	01	V3D	---	---	---	---	N<	J	A<
07	005		LA	014.920	D	F	H	D	04	04	UO	H	-	N 2 06-15-98	1025	953512394	6	A A A	H	D	C	02	A	N	1	<	00	00	V2E	---	---	---	---	G<	J	A<
																							D	N	1	<	00	00	V1E	---	---	---	---	G<	H	A<
07	005		LA	014.920	D	F	H	D	04	04	UO	H	-	N 3 03-31-98	1850	953514735	4	B D B	H	D	B	02	D	N	1	<	00	00	V2J	---	---	---	---	G<	P	A<
																							G	N	1	<	00	00	V1F	---	---	---	---	G<	B	A<
07	005		LA	014.920	D	F	H	D	04	04	UO	H	-	N 6 03-13-98	1910	953515446	6	B C B	H	D	B	02	A	N	1	<	00	00	V2E	---	---	---	---	N<	J	G<
																							C	N	1	<	00	01	V1F	---	---	---	---	N<	B	A<
07	005		LA	014.920	D	F	H	D	04	04	UO	H	-	N 1 03-08-98	1905	953514245	5	A C A	H	D	C	05	D	N	1	<	00	00	V2D	---	---	---	---	G<	B	A<
																							D	N	1	<	00	00	V1D	V3D	V4D	---	---	G<	A	A<
																							A	N	1	<	00	00	---	V2D	---	---	---	G<	A	A<
																							A	N	1	<	00	00	---	V2D	V5D	---	---	G<	A	G<
																							A	N	1	<	00	00	---	V4D	---	---	---	G<	A	A<
07	005		LA	014.930	D	F	H	D	04	04	UO	H	-	N 2 06-25-01	2150	953516292	2	A D A	H	D	C	02	A	N	1	C	00	00	V2D	---	---	---	---	6<	A	A<
																							A	N	1	C	00	00	V1D	---	---	---	---	L<	B	A<
07	005		LA	014.930	D	F	H	D	04	04	UO	H	-	N 6 03-30-01	1930	959016351	6	A C A	H	D	C	02	G	N	1	<	00	00	V2E	---	---	---	---	N<	G	A<
																							A	N	1	<	00	00	V1E	---	---	---	---	N<	A	A<

DIST	RTES NO	U F	CO	P LOC R POST E MILE	<-----HIGHWAY-----> H A M B LANES RI F R O A G C T A LT RT UO T L H Y	I S D ACCIDENT DATE MO DA YR	TIME HHMM	COMMON ACCIDENT NUMBER	P C F	ENVIR COND W L S	R R T NO C W O MTR C C VEH	P T	D I R	V H I	S I	PERSN K	O I P	L O S C	O L O S C	L O O S C	L O O S C	L O S C	L C	OA F 12	M O V	SD P 12
07	005		LA	014.930	D F H D 04 04 UO H - N	2 12-25-00	1040	953507348	4	A A A H	D B 03	A	N	1	<	00	00	V3F	---	---	---		N<	B	A<
												A	N	1	<	00	02	---	V3E	16B	---		<<	B	C<
												A	N	1	<	00	00	V1G	15H	V2E	---		6<	R	A<
07	005		LA	014.930	D F H D 04 04 UO H - N	5 11-09-00	1645	953507348	5	A A A H	D C 02	A	N	1	<	00	00	V2D	---	---	---		N<	H	A<
												A	N	1	<	00	00	V1D	---	---	---		N<	B	A<
07	005		LA	014.930	D F H D 04 04 UO H - N	1 03-26-00	0950	953515698	2	A A A H	D B 03	A	N	1	<	00	00	V2D	---	---	---		6<	J	A<
												A	N	1	<	00	00	V1E	V3E	---	---		N<	B	A<
												A	N	1	<	00	01	---	V2E	30H	---		N<	B	A<
07	005		LA	014.930	D F H D 04 04 UO H - N	5 02-11-99	2100	959015120	5	A C A H	D C 02	A	N	1	<	00	00	V2D	---	---	---		N<	A	A<
												D	N	1	<	00	00	V1D	---	---	---		N<	B	A<
07	005		LA	014.930	D F H D 04 04 UO H - N	5 11-05-98	2230	959013018	5	A C A H	D B 03	G	N	1	<	00	00	V2E	---	---	---		N<	H	A<
												A	N	1	<	00	00	V1E	V3D	---	---		N<	B	A<
												A	N	1	<	00	00	---	V2D	---	---		N<	B	G<
07	005		LA	014.930	D F H D 04 04 UO H - N	3 08-18-98	2136	959015535	4	A D A H	D D 02	A	N	1	<	00	00	V2E	16B	44D	---		N<	M	G<
												D	N	1	<	00	01	V1E	---	---	---		N<	B	A<
07	005		LA	014.930	D F H D 04 04 UO H - N	3 05-19-98	0835	953508246	4	A A A H	D B 02	A	N	1	<	00	00	V2F	---	---	---		G<	P	A<
												D	N	1	<	00	00	V1F	---	---	---		G<	B	A<
07	005		LA	014.940	D F H D 04 04 UO H - N	7 07-14-01	1400	959016351	5	A A A H	D C 02	A	N	1	C	00	00	V2E	---	---	---		N<	A	A<
												F	N	1	C	00	00	V1E	---	---	---		N<	B	A<
07	005		LA	014.940	D F H D 04 04 UO H - N	6 11-10-00	1300	959016137	5	A A A H	D C 02	A	N	1	<	00	00	V2E	---	---	---		N<	A	A<
												D	N	1	<	00	00	V1E	---	---	---		N<	B	A<
07	005		LA	014.940	D F H D 04 04 UO H - N	7 03-04-00	1415	959015825	5	B A A H	D C 02	A	N	1	<	00	00	V2E	---	---	---		N<	A	A<
												A	N	1	<	00	00	V1E	---	---	---		N<	B	A<
07	005		LA	014.940	D F H D 04 04 UO H - N	1 07-26-98	1615	959015480	5	A A A H	D C 02	A	N	1	<	00	00	V2E	---	---	---		N<	B	A<
												A	N	1	<	00	02	V1E	---	---	---		N<	B	A<
07	005		LA	014.940	D F H D 04 04 UO H - N	2 06-29-98	0740	959015518	5	A A A H	D C 03	I	N	1	<	00	01	---	V2E	---	---		N<	A	A<
												A	N	1	<	00	01	V3E	V1E	---	---		N<	A	A<
												A	N	1	<	00	01	V2E	---	---	---		N<	B	A<
07	005		LA	014.950	D F H D 04 04 UO H - N	6 06-22-01	0640	959016499	5	A A A H	D C 02	G	N	1	D	00	00	V2E	---	---	---		N<	B	A<
												A	N	1	D	00	00	V1E	---	---	---		N<	B	A<
07	005		LA	014.950	D F H D 04 04 UO H - N	4 03-14-01	0845	959016189	6	A A A H	D B 02	E	N	1	<	00	00	V2E	---	---	---		N<	J	A<
												G	N	1	<	00	00	V1D	---	---	---		N<	J	G<
07	005		LA	014.950	D F H D 04 04 UO H - N	4 02-21-01	1815	959015184	5	A C A H	D C 02	A	N	1	<	00	00	V2F	---	---	---		N<	H	A<
												A	N	1	<	00	00	V1F	---	---	---		N<	B	A<
07	005		LA	014.950	D F H D 04 04 UO H - N	6 12-29-00	0930	959016225	5	A A A H	D C 03	A	N	1	<	00	00	V2D	V3D	---	---		N<	A	A<
												A	N	1	<	00	00	V1D	---	---	---		N<	B	A<
												A	N	1	<	00	00	---	V1D	---	---		N<	A	G<
07	005		LA	014.950	D F H D 04 04 UO H - N	2 10-02-00	1805	959014997	5	A A A H	D E 02	A	N	1	<	00	00	---	V2F	---	---		N<	B	A<
												A	N	1	<	00	00	17H	V1F	---	---		N<	B	A<
												-	-	-	<	00	00	---	---	---	---		<<	-	<<
07	005		LA	014.950	D F H D 04 04 UO H - N	2 07-31-00	1355	959015762	5	A A A H	D C 03	A	N	1	<	00	00	---	V2F	---	---		N<	A	<<
												A	N	1	<	00	00	V3F	V1F	---	---		N<	A	<<
												D	N	1	<	00	00	V2F	---	---	---		N<	B	<<
07	005		LA	014.950	D F H D 04 04 UO H - N	4 07-12-00	1445	959015184	5	A A A H	D B 02	A	N	1	<	00	00	V2F	15H	---	---		N<	B	A<
												F	N	1	<	00	00	V1F	---	---	---		N<	B	A<

DIST	RTES NO	U F	CO	P LOC R POST E MILE	<-----HIGHWAY-----> H G	A C	M T	B A	LANES LT	RT	RI UO	F T	I R L	S O H	D A Y	ACCIDENT DATE MO	DA	YR	TIME HHMM	COMMON ACCIDENT NUMBER	P C F	ENVIR COND W	L	S	R C	R W	T O C	NO MTR VEH	P T R	D I I	V H I	S I	PERSN K	O I	L S P	O S C	L O O	O S C	L O O	O S C	L O C	OA F 12	M O V	SD P 12
07	005		LA	014.950	D	F	H	D	04	04	UO	H	-	N	1	12	12	99	1805	959015783	5	A	C	A	H	D	C	06	M	N	1	<	00	00	V2E	---	---	---	---	N<	B	A<
																													D	N	1	<	00	00	V1E	V3E	---	---	---	N<	B	A<
																													A	N	1	<	00	00	---	V2D	V5D	---	---	N<	B	A<
																													A	N	1	<	00	00	---	V5D	---	---	---	5<	B	A<
																													A	N	1	<	00	00	---	V4D	V3D	V6D	---	N<	B	A<
																													A	N	1	<	00	00	---	V5E	---	---	---	N<	A	A<
07	005		LA	014.950	D	F	H	D	04	04	UO	H	-	N	6	11	05	99	1010	959015907	6	B	A	A	H	D	B	02	A	N	1	<	00	00	V2E	---	---	---	---	N<	B	A<
																													G	N	1	<	00	00	V1E	---	---	---	---	N<	J	A<
07	005		LA	014.950	D	F	H	D	04	04	UO	H	-	N	1	06	20	99	1430	959015522	5	A	A	A	H	D	C	02	A	N	1	<	00	00	V2E	---	---	---	---	N<	A	A<
																													A	N	1	<	00	00	V1E	---	---	---	---	N<	B	A<
07	005		LA	014.950	D	F	H	D	04	04	UO	H	-	N	7	02	21	98	0145	959015448	5	B	C	A	H	D	C	03	A	N	1	<	00	00	V3D	V2D	---	---	---	N<	H	A<
																													A	N	1	<	00	05	---	V1E	16B	---	---	N<	B	A<
																													A	N	1	<	00	00	V1D	---	---	---	---	N<	H	G<
07	005		LA	014.960	D	F	H	D	04	04	UI	H	-	N	4	11	21	01	1345	959016312	5	A	A	A	H	D	C	02	J	N	1	D	00	00	V2E	---	---	---	---	N<	A	A<
																													A	N	1	D	00	00	V1E	---	---	---	---	N<	H	A<
07	005		LA	014.960	D	F	H	D	04	04	UI	H	-	N	5	07	05	01	1310	959016361	5	C	A	B	H	D	C	02	A	N	1	D	00	00	V2D	---	---	---	---	N<	H	A<
																													D	N	1	D	00	00	V1D	---	---	---	---	N<	B	A<
07	005		LA	014.960	D	F	H	D	04	04	UI	H	-	N	4	04	18	01	0815	959016240	5	A	A	A	H	D	C	02	A	N	1	C	00	00	V2D	---	---	---	---	N<	H	A<
																													A	N	1	C	00	00	V1D	---	---	---	---	N<	B	A<
07	005		LA	014.960	D	F	H	D	04	04	UI	H	-	N	6	12	01	00	1700	959015761		<	A	<	<	<	C	02	A	<	1	<	00	00	V2E	---	---	---	---	G<	B	<<
																													A	N	1	<	00	00	V1E	---	---	---	---	G<	B	<<
07	005		LA	014.960	D	F	H	D	04	04	UI	H	-	N	4	11	15	00	0635	959015982	5	A	A	A	H	D	C	02	D	N	1	<	00	00	V2D	---	---	---	---	N<	A	A<
																													A	N	1	<	00	00	V1D	---	---	---	---	N<	B	A<
07	005		LA	014.960	D	F	H	D	04	04	UI	H	-	N	6	11	10	00	0650	959016137	5	A	A	A	H	D	B	02	E	N	1	<	00	00	V2F	---	---	---	---	N<	J	A<
																													M	N	1	<	00	00	V1E	---	---	---	---	N<	B	A<
07	005		LA	014.960	D	F	H	D	04	04	UI	H	-	N	4	08	09	00	0815	959015182	5	A	A	A	H	D	C	02	D	N	1	<	00	00	V2F	---	---	---	---	N<	A	A<
																													D	N	1	<	00	00	V1F	---	---	---	---	N<	H	A<
07	005		LA	014.960	D	F	H	D	04	04	UI	H	-	N	1	05	07	00	0754	959015801	5	A	A	A	H	D	C	02	I	N	1	<	00	00	V2E	---	---	---	---	N<	B	A<
																													A	N	1	<	00	00	V1E	---	---	---	---	N<	H	A<
07	005		LA	014.960	D	F	H	D	04	04	UI	H	-	N	1	03	26	00	1515	959015824	4	A	A	A	H	D	E	01	A	N	1	<	00	00	16B	---	---	---	---	N<	B	A<
07	005		LA	014.960	D	F	H	D	04	04	UI	H	-	N	3	12	08	98	0755	959015273	5	A	A	A	H	D	C	02	F	N	1	<	00	00	V2E	---	---	---	---	N<	B	A<
																													D	N	1	<	00	00	V1E	---	---	---	---	N<	J	A<
07	005		LA	014.960	D	F	H	D	04	04	UI	H	-	N	7	09	19	98	1830	959015480	5	A	A	A	H	D	C	02	F	N	1	<	00	00	V2F	---	---	---	---	N<	B	G<
																													A	N	1	<	00	01	V1F	30H	---	---	---	N<	B	A<
07	005		LA	014.960	D	F	H	D	04	04	UI	H	-	N	6	06	19	98	1250	959015413	5	A	A	A	H	D	C	03	D	N	1	<	00	00	V2D	---	---	---	---	N<	B	A<
																													A	N	1	<	00	01	V1D	V3D	---	---	---	N<	A	A<
																													A	N	1	<	00	00	---	V2D	---	---	---	N<	B	G<
07	005		LA	014.970	D	F	H	D	04	04	UI	H	-	N	6	11	30	01	0740	959016689	5	A	A	A	H	D	C	04	A	N	1	D	00	00	---	V2E	---	---	---	N<	A	A<
																													A	N	1	C	00	00	---	V3E	V1E	---	---	N<	A	A<
																													A	N	1	C	00	00	V4E	V2E	---	---	---	N<	A	A<
																													A	N	1	D	00	00	V3E	---	---	---	---	N<	H	G<
07	005		LA	014.970	D	F	H	D	04	04	UI	H	-	N	2	07	30	01	1515	959015522	5	A	A	A	H	D	C	02	A	N	1	C	00	00	V2D	---	---	---	---	N<	H	A<
																													D	N	1	C	00	00	V1D	---	---	---	---	N<	B	A<
07	005		LA	014.970	D	F	H	D	04	04	UI	H	-	N	1	04	29	01	1345	959015948	5	A	A	A	H	D	C	02	A	N	1	C	00	00	V2E	---	---	---	---	G<	A	A<
																													A	N	1	C	00	00	V1E	---	---	---	---	G<	B	A<
07	005		LA	014.970	D	F	H	D	04	04	UI	H	-	N	2	10	30	00	0730	959015919	D	A	A	A	H	D	B	02	A	N	1	<	00	00	V2F	---	---	---	---	N<	B	A<
																													G	N	1	<	00	00	V1E	---	---	---	---	N<	B	A<

DIST	RTES NO	U F	CO	P LOC R POST E MILE	<-----HIGHWAY-----> H G	A C	M T	B A	LANES LT	RT	UO	I T	S L	D R H	O Y	A MO	ACCIDENT DATE DA	YR	TIME HHMM	COMMON ACCIDENT NUMBER	P C F	ENVIR COND W	L	S	R C	R W C	T O C	NO MTR VEH	P T R	D I I	V H I	S I	PERSN K	O I P	L O C	O S O	L O S	O S O	L O C	O S O	L O C	OA F 12	M O V	SD P 12
07	005		LA	014.970	D	F	H	D	04	04	UI	H	-	N	2	09	11	00	1630	959016125	C	A	A	A	H	D	H	01	A	N	1	<	00	00	99F	---	---	---	---	---	---	N<	B	A<
07	005		LA	014.970	D	F	H	D	04	04	UI	H	-	N	5	07	06	00	1130	959014867	4	A	A	A	H	D	B	02	A	N	1	<	00	00	V2E	---	---	---	---	---	---	N<	B	A<
																													G	N	1	<	00	00	V1E	---	---	---	---	---	---	N<	J	A<
07	005		LA	014.970	D	F	H	D	04	04	UI	H	-	N	1	05	07	00	0800	959015820	5	A	A	A	H	D	C	02	D	N	1	<	00	00	V2D	---	---	---	---	---	---	N<	A	A<
																													A	N	1	<	00	00	V1D	---	---	---	---	---	---	N<	B	A<
07	005		LA	014.970	D	F	H	D	04	04	UI	H	-	N	5	04	13	00	1020	959015808	5	A	A	A	H	D	C	03	A	N	1	<	00	00	---	V2E	---	---	---	---	---	N<	A	A<
																													A	N	1	<	00	00	V3E	V1E	---	---	---	---	---	N<	A	A<
																													A	N	1	<	00	00	V2E	---	---	---	---	---	---	N<	B	G<
07	005		LA	014.970	D	F	H	D	04	04	UI	H	-	N	6	01	07	00	0840	959013179	5	A	A	A	H	D	C	02	A	N	1	<	00	00	V2E	---	---	---	---	---	---	G<	H	A<
																													A	N	1	<	00	00	V1E	---	---	---	---	---	---	N<	H	A<
07	005		LA	014.970	D	F	H	D	04	04	UI	H	-	N	3	11	23	99	1920	959015919	5	A	C	A	H	A	C	02	A	N	1	<	00	00	V2E	---	---	---	---	---	---	N<	B	A<
																													A	N	1	<	00	00	V1E	---	---	---	---	---	---	N<	H	A<
07	005		LA	014.970	D	F	H	D	04	04	UI	H	-	N	6	10	15	99	0525	959015754	6	B	C	A	H	D	E	02	D	N	1	<	00	00	---	---	---	---	---	---	N<	J	G<
																													G	N	1	<	00	00	15H	---	---	---	---	---	---	N<	B	A<
07	005		LA	014.970	D	F	H	D	04	04	UI	H	-	N	6	09	10	99	1815	959015544	5	A	A	A	H	D	C	02	A	N	1	<	00	00	V2D	---	---	---	---	---	---	N<	B	A<
																													A	N	1	<	00	00	V1D	---	---	---	---	---	---	N<	B	A<
07	005		LA	014.970	D	F	H	D	04	04	UI	H	-	N	1	08	15	99	0955	959014928	5	A	A	A	H	D	C	02	A	N	1	<	00	00	V2D	---	---	---	---	---	---	N<	H	A<
																													A	N	1	<	00	00	V1D	---	---	---	---	---	---	N<	B	G<
07	005		LA	014.970	D	F	H	D	04	04	UI	H	-	N	7	07	17	99	1014	959014928	5	A	A	A	H	D	C	04	A	N	1	<	00	00	V2E	---	---	---	---	---	---	N<	B	G<
																													D	N	1	<	00	00	V1E	V3E	---	---	---	---	---	N<	H	A<
																													A	N	1	<	00	00	---	V2E	V4E	---	---	---	---	N<	B	A<
																													A	N	1	<	00	00	---	V3E	---	---	---	---	---	N<	B	A<
07	005		LA	014.970	D	F	H	D	04	04	UI	H	-	N	3	04	27	99	1300	959015442	6	A	A	A	H	D	B	04	G	N	1	<	00	00	---	V3E	V2D	---	---	---	---	N<	B	A<
																													A	N	1	<	00	00	---	V1D	16B	---	---	---	---	N<	B	A<
																													A	N	1	<	00	00	V4E	V1E	---	---	---	---	---	N<	B	A<
																													F	N	1	<	00	00	V3E	---	---	---	---	---	---	N<	J	A<
07	005		LA	014.970	D	F	H	D	04	04	UI	H	-	N	4	03	17	99	1450	959015567	5	B	A	A	H	D	C	02	A	N	1	<	00	00	V2E	---	---	---	---	---	---	N<	B	A<
																													A	N	1	<	00	01	V1E	---	---	---	---	---	---	N<	A	A<
07	005		LA	014.970	D	F	H	D	04	04	UI	H	-	N	3	10	06	98	0630	959015222	5	A	A	A	H	D	C	02	D	N	1	<	00	00	V2E	---	---	---	---	---	---	N<	A	A<
																													A	N	1	<	00	00	V1E	---	---	---	---	---	---	N<	B	A<
07	005		LA	014.970	D	F	H	D	04	04	UI	H	-	N	2	09	14	98	1540	959015493	5	A	A	A	H	D	C	03	D	N	1	<	00	00	---	V2F	---	---	---	---	---	N<	A	G<
																													A	N	1	<	00	01	V3F	V1F	---	---	---	---	---	N<	A	A<
																													A	N	1	<	00	00	V2F	---	---	---	---	---	---	N<	H	A<
07	005		LA	014.970	D	F	H	D	04	04	UI	H	-	N	4	08	19	98	1721	959015493	5	A	A	A	H	D	C	02	A	N	1	<	00	00	V2F	---	---	---	---	---	---	N<	B	A<
																													A	N	1	<	00	00	V1F	---	---	---	---	---	---	N<	H	A<
07	005		LA	014.970	D	F	H	D	04	04	UI	H	-	N	4	07	01	98	0900	959015441	5	A	A	A	H	D	C	02	A	N	1	<	00	00	V2D	---	---	---	---	---	---	G<	H	A<
																													D	N	1	<	00	00	V1D	---	---	---	---	---	---	G<	A	A<
07	005		LA	014.970	D	F	H	D	04	04	UI	H	-	N	6	05	22	98	1045	959015493	6	A	A	A	H	D	B	02	A	N	1	<	00	00	V2F	---	---	---	---	---	---	N<	B	A<
																													F	N	1	<	00	00	V1E	---	---	---	---	---	---	N<	J	A<
07	005		LA	014.970	D	F	H	D	04	04	UI	H	-	N	4	04	29	98	1020	959015518	6	A	A	A	H	D	B	02	A	N	1	<	00	00	V2E	---	---	---	---	---	---	N<	B	A<
																													2	N	1	<	00	00	V1E	---	---	---	---	---	---	N<	J	G<
07	005		LA	014.970	D	F	H	D	04	04	UI	H	-	N	7	04	11	98	1820	959015365	5	C	A	B	H	D	C	02	A	N	1	<	00	00	V2E	---	---	---	---	---	---	N<	A	A<
																													A	N	1	<	00	00	V1E	---	---	---	---	---	---	N<	B	A<
07	005		LA	014.980	D	F	H	D	04	04	UI	H	-	N	3	04	24	01	1730	959016257	5	A	A	A	H	D	C	02	D	N	1	<	00	00	V2E	---	---	---	---	---	---	N<	A	A<
																													A	N	1	<	00	00	V1E	---	---	---	---	---	---	N<	B	A<
07	005		LA	014.980	D	F	H	D	04	04	UI	H	-	N	3	09	26	00	0915	959015773	6	A	A	A	H	D	B	02	A	N	1	<	00	00	V2D	---	---	---	---	---	---	N<	J	G<
																													A	N	1	<	00	00	V1F	---	---	---	---	---	---	N<	B	A<

DIST	RTES NO	U F	CO	P LOC R POST E MILE	<-----HIGHWAY-----> H G	A C	M T	B A	LANES LT	RT	RI UO	F T	I L	R O H	S D A Y	ACCIDENT DATE MO	DA	YR	TIME HHMM	COMMON ACCIDENT NUMBER	P C F	ENVIR COND W	L	S	R C	R W C	T O C	NO MTR VEH	P T R	D I	V H I	S I	PERSN K	O I	L O S P	O S O C	L O S O C	O L O C	O S O	L O S O C	OA F O C 12	M O F V	SD P 12
07	005		LA	014.980	D	F	H	D	04	04	UI	H	-	N	1	03	05	00	0120	953515606	2	C	D	B	C	D	C	02	A	N	1	<	00	00	V2D	---	---	---	---	N<	B	A<
																													D	N	1	<	00	00	V1D	---	---	---	---	N<	H	A<
07	005		LA	014.980	D	F	H	D	04	04	UI	H	-	N	7	01	15	00	0825	959015910	6	A	A	A	H	D	B	02	D	N	1	<	00	00	V2E	---	---	---	---	N<	B	A<
																													A	N	1	<	00	00	V1E	16B	---	---	---	N<	B	G<
07	005		LA	014.980	D	F	H	D	04	04	UI	H	-	N	7	07	17	99	1200	959014928	5	A	A	A	H	D	C	02	A	N	1	<	00	00	V2D	---	---	---	---	N<	H	A<
																													A	N	1	<	00	00	V1D	---	---	---	---	N<	B	A<
07	005		LA	014.980	D	F	H	D	04	04	UI	H	-	N	4	02	03	99	1855	959015346	5	A	C	A	H	D	C	02	A	N	1	<	00	00	V2E	---	---	---	---	N<	A	A<
																													A	N	1	<	00	00	V1E	---	---	---	---	N<	B	A<
07	005		LA	014.980	D	F	H	D	04	04	UI	H	-	N	7	10	10	98	1500	959015510	5	A	A	A	H	D	C	03	D	N	1	<	00	00	---	V2F	---	---	---	N<	A	A<
																													A	N	1	<	00	00	V3F	V1F	---	---	---	N<	H	A<
																													A	N	1	<	00	00	V2F	---	---	---	---	N<	B	A<
07	005		LA	014.980	D	F	H	D	04	04	UI	H	-	N	3	09	01	98	1500	959015465	6	A	A	A	H	D	B	02	G	N	1	<	00	00	V2E	---	---	---	---	N<	J	G<
																													G	N	1	<	00	00	V1E	---	---	---	---	N<	B	A<
07	005		LA	014.980	D	F	H	D	04	04	UI	H	-	N	7	04	11	98	1730	959015365	5	C	A	B	H	D	C	02	A	N	1	<	00	00	V2E	---	---	---	---	N<	B	A<
																													A	N	1	<	00	00	V1E	---	---	---	---	N<	B	A<
07	005		LA	014.980	D	F	H	D	04	04	UI	H	-	N	6	04	10	98	1230	959014997	5	A	A	A	H	D	C	03	A	N	1	<	00	00	V2E	---	---	---	---	N<	A	<<
																													D	N	1	<	00	00	V1E	V3E	---	---	---	N<	B	<<
																													D	N	1	<	00	00	---	V2E	---	---	---	5<	B	<<
07	005		LA	014.980	D	F	H	D	04	04	UI	H	-	N	7	02	14	98	1610	959015346	5	C	A	B	H	D	C	02	A	N	1	<	00	00	V2D	---	---	---	---	N<	H	A<
																													A	N	1	<	00	00	V1D	---	---	---	---	N<	B	A<
07	005		LA	014.990	D	F	H	D	04	04	UI	H	-	N	6	06	29	01	1010	959013481	5	A	A	A	H	D	C	02	A	N	1	C	00	01	V2D	---	---	---	---	N<	B	A<
																													D	N	1	D	00	00	V1D	---	---	---	---	N<	B	G<
07	005		LA	014.990	D	F	H	D	04	04	UI	H	-	N	6	01	26	01	1300	959016196	4	B	A	B	H	D	E	02	G	N	1	<	00	00	16B	V2E	---	---	---	N<	B	A<
																													A	N	1	<	00	00	---	V1E	---	---	---	N<	R	A<
07	005		LA	014.990	D	F	H	D	04	04	UI	H	-	N	6	03	19	99	2110	959015346	5	A	C	A	H	D	C	03	A	N	1	<	00	00	V3D	16B	V2D	---	---	N<	B	A<
																													A	N	1	<	00	00	---	V1E	---	---	---	N<	B	A<
																													M	N	1	<	00	00	V1D	---	---	---	---	N<	B	G<
07	005		LA	015.000	D	F	H	D	04	04	UI	H	-	N	6	12	14	01	2015	959016196	5	A	C	A	H	D	D	04	A	N	1	D	00	01	V2E	V3D	---	---	---	N<	B	A<
																													D	N	1	D	00	00	V1E	---	---	---	---	N<	A	A<
																													A	N	1	D	00	00	---	V1D	V4D	---	---	N<	B	A<
																													A	N	1	D	00	00	---	V3D	---	---	---	5<	B	A<
07	005		LA	015.000	D	F	H	D	04	04	UI	H	-	N	7	06	23	01	1510	959015182		<	A	<	<	<	H	02	A	N	1	<	00	00	V3F	---	---	---	---	<<	B	<<
																													F	N	1	<	00	00	---	---	---	---	---	<<	B	<<
																													O	<	1	<	00	00	V1F	---	---	---	---	<<	R	<<
07	005		LA	015.000	D	F	H	D	04	04	UI	H	-	N	1	04	15	01	1800	959016257		<	<	<	<	B	02	A	N	1	<	00	00	V2E	---	---	---	---	<<	J	<<
																													A	N	1	<	00	00	V1D	---	---	---	---	<<	B	<<
07	005		LA	015.000	D	F	H	D	04	04	UI	H	-	N	5	04	13	00	1830	959015394		A	A	A	<	D	C	02	A	N	1	<	00	00	V2F	---	---	---	---	N<	A	G<
																													A	N	1	<	00	00	V1F	---	---	---	---	N<	B	G<
07	005		LA	015.000	D	F	H	D	04	04	UI	H	-	N	1	03	05	00	1132	959015358	5	B	A	B	H	D	C	03	A	N	1	<	00	01	V2E	---	---	---	---	I<	B	A<
																													D	N	1	<	00	00	V1E	V3E	---	---	---	I<	A	A<
																													G	N	1	<	00	00	---	V2E	---	---	---	I<	A	A<
07	005		LA	015.000	D	F	H	D	04	04	UI	H	-	N	6	05	15	98	1905	959015480	5	A	A	A	H	A	C	02	A	N	1	<	00	00	V2D	---	---	---	---	N<	H	A<
																													A	N	1	<	00	00	V1D	---	---	---	---	N<	H	A<
07	005		LA	015.000	D	F	H	D	04	04	UI	H	-	N	2	02	09	98	1740	959013991	5	A	B	A	H	D	C	02	D	N	1	<	00	00	V2D	---	---	---	---	G<	B	G<
																													A	N	1	<	00	00	V1D	---	---	---	---	G<	A	A<
07	005		LA	015.010	D	F	H	D	04	04	UI	H	-	N	5	06	29	00	1345	959015184	6	A	A	A	H	D	B	02	G	N	1	<	00	00	V2E	---	---	---	---	N<	J	A<
																													J	N	1	<	00	00	V1E	---	---	---	---	N<	B	A<

DIST	RTES NO	U R F	CO	P LOC E MILE	<-----HIGHWAY-----> H G	A C	M T	B A	LANES LT	RT	RI UO	F T	R L	O H	A Y	I S D MO	ACCIDENT DATE DA	YR	TIME HHMM	COMMON ACCIDENT NUMBER	P C F	ENVIR COND W	L	S	R C	R W	T O C	NO MTR VEH	P T	D I R	V H I	S I	PERSN K	O S P	L O S C	O S O C	L O S O	O S O C	L O S O	L O C C	OA F 12	M O V	SD P 12
07	005		LA	015.020	D	F	H	D	04	04	UI	H	-	N	3	01	23	01	0545	959014928	5	A	C	A	H	D	C	03	A	N	1	<	00	01	V2D	---	---	---	N<	A	A<
																													D	N	1	<	00	00	V1D	V3D	---	---	N<	B	G<
																													A	N	1	<	00	00	---	V2D	---	---	5<	B	A<
07	005		LA	015.020	D	F	H	D	04	04	UI	H	-	N	3	06	27	00	0940	959016054	5	A	A	A	H	D	C	03	A	N	1	<	00	00	---	V2D	---	---	N<	A	A<
																													A	N	1	<	00	00	V3D	V1D	---	---	N<	A	A<
																													A	N	1	<	00	00	V2D	---	---	---	N<	B	A<
07	005		LA	015.020	D	F	H	D	04	04	UI	H	-	N	2	03	02	98	1545	959015365	5	A	A	A	H	D	C	02	A	N	1	<	00	00	V2D	---	---	---	N<	B	A<
																													A	N	1	<	00	00	V1D	---	---	---	N<	B	A<
07	005		LA	015.030	D	F	H	D	04	04	UI	H	-	N	5	12	31	98	1245	959015565	5	B	A	A	H	D	C	03	D	N	1	<	00	00	---	V2E	---	---	N<	H	A<
																													D	N	1	<	00	00	V3E	V1E	---	---	N<	H	A<
																													A	N	1	<	00	00	V2E	---	---	---	N<	B	A<
07	005		LA	015.040	D	F	H	D	04	04	UI	H	-	N	2	05	04	98	1730	959014628	5	B	A	A	H	D	C	02	A	N	1	<	00	01	V2E	---	---	---	N<	B	A<
																													A	N	1	<	00	00	V1E	---	---	---	N<	B	A<
07	005		LA	015.050	D	F	H	D	04	04	UI	H	-	N	5	09	27	01	2300	959016658	D	A	C	A	H	D	B	02	A	N	1	D	00	01	V2D	16B	---	---	N<	J	A<
																													A	N	1	D	00	00	V1E	---	---	---	N<	B	A<
07	005		LA	015.050	D	F	H	D	04	04	UI	H	-	N	2	06	12	00	1230	959015808	6	A	A	A	H	D	B	02	E	N	1	<	00	00	V2E	---	---	---	N<	B	A<
																													A	N	1	<	00	00	V1E	---	---	---	N<	J	A<
07	005		LA	015.050	D	F	H	D	04	04	UI	H	-	N	1	05	07	00	0755	959015842	5	A	A	A	H	D	C	03	A	N	1	<	00	00	V3E	---	---	---	I<	A	A<
																													A	N	1	<	00	00	---	V3D	---	---	I<	A	A<
																													D	N	1	<	00	00	V1E	V2D	---	---	I<	B	A<
07	005		LA	015.050	D	F	H	D	04	04	UI	H	-	N	4	09	08	99	1730	959015346	5	A	A	A	H	D	C	03	D	N	1	<	00	00	---	V2F	---	---	G<	A	A<
																													A	N	1	<	00	00	V3F	V1F	---	---	G<	A	A<
																													A	N	1	<	00	00	V2F	---	---	---	G<	B	A<
07	005		LA	015.060	D	F	H	D	04	04	UI	H	-	N	5	12	07	00	0600	959016271	D	B	A	A	H	D	B	02	A	N	1	<	00	00	V2E	---	---	---	N<	R	A<
																													F	N	1	<	00	00	V1E	---	---	---	N<	R	A<
07	005		LA	015.060	D	F	H	D	04	04	UI	H	-	N	6	05	14	99	1910	959015773	6	A	A	A	H	D	C	02	A	N	1	<	00	00	V2E	---	---	---	N<	J	A<
																													A	N	1	<	00	00	V1E	---	---	---	N<	B	A<
07	005		LA	015.080	D	F	H	D	04	04	UI	H	-	N	3	12	01	98	1815	959015522	6	B	C	B	H	D	C	02	A	N	1	<	00	00	V2D	---	---	---	N<	A	A<
																													F	N	1	<	00	00	V1D	---	---	---	N<	A	A<
07	005		LA	015.080	D	F	H	D	04	04	UI	H	-	N	1	10	11	98	2110	959015567	5	A	C	A	H	D	C	02	A	N	1	<	00	00	V2E	---	---	---	<<	A	A<
																													A	N	1	<	00	00	V1E	---	---	---	<<	B	A<
07	005		LA	015.100	D	F	H	D	04	04	UI	H	-	N	5	12	21	00	0850	959016096	5	A	A	A	H	D	C	02	A	N	1	<	00	00	V2F	---	---	---	N<	A	A<
																													A	N	1	<	00	00	V1F	---	---	---	N<	B	A<
07	005		LA	015.100	D	F	H	D	04	04	UI	H	-	N	4	12	22	99	1310	959014867	5	A	A	A	H	D	C	03	A	N	1	<	00	00	---	V2D	---	---	N<	A	A<
																													D	N	1	<	00	00	V3D	V1D	---	---	N<	H	A<
																													D	N	1	<	00	00	V2D	---	---	---	N<	B	G<
07	005		LA	015.100	D	F	H	D	04	04	UI	H	-	N	3	10	12	99	1945	959015773	C	A	C	A	H	D	E	01	A	N	1	<	00	00	42E	---	---	---	N<	B	A<
07	005		LA	015.110	D	F	H	D	04	04	UI	H	-	N	2	09	25	00	1330	959015888	C	A	A	A	H	D	E	02	A	N	1	<	00	02	42E	44E	---	---	N<	B	A<
																													D	N	1	<	00	00	---	---	---	---	6<	B	G<
07	005		LA	015.110	D	F	H	D	04	04	UI	H	-	N	5	06	24	99	1630	959015754	5	A	A	A	H	D	C	02	A	N	1	<	00	03	V2E	---	---	---	N<	H	A<
																													A	N	1	<	00	00	V1E	---	---	---	N<	B	A<
07	005		LA	015.120	D	F	H	D	04	04	UI	H	-	N	6	01	07	00	1950	959015365	5	A	A	A	H	D	E	02	A	N	1	<	00	00	---	V2D	---	---	N<	H	A<
																													A	N	1	<	00	00	16B	V1D	---	---	N<	H	A<
07	005		LA	015.120	D	F	H	D	04	04	UI	H	-	N	6	09	03	99	1615	959015773	5	A	A	A	H	D	C	02	F	N	1	<	00	00	V2E	---	---	---	G<	B	A<
																													D	N	1	<	00	00	V1E	---	---	---	G<	B	A<
07	005		LA	015.120	D	F	H	D	04	04	UI	H	-	N	5	11	12	98	1800	959015365	5	A	A	A	H	D	C	02	A	N	1	<	00	00	V2E	---	---	---	N<	A	A<
																													A	N	1	<	00	00	V1E	---	---	---	N<	B	A<

DIST	RTES NO	U F	CO	P LOC R POST E MILE	<-----HIGHWAY-----> H A M B LANES RI G C T A LT RT UO	I S D F R O A T L H Y	ACCIDENT DATE MO DA YR	TIME HHMM	COMMON ACCIDENT NUMBER	P C F	ENVIR COND W L S	R R T C W O C C	NO MTR VEH	P T R	D I I	V H I	S I	PERSN K	O I P	L O S C	O S O C	L O S O	O S O C	L O S O	L O C	OA F 12	M O V	SD P 12
07	005		LA	015.120	D F H D 04 04 UI	H - N 4	08-19-98	1800	959015522	5	A A A	H D C	02	A	N	1	<	00	00	V2F	---	---	---	N<	B	A<
														A	N	1	<	00	00	V1F	---	---	---	H<	J	G<
07	005		LA	015.120	D F H D 04 04 UI	H - N 2	04-13-98	0640	959015457	5	A A A	H D C	02	G	N	1	<	00	00	V2E	---	---	---	K<	H	A<
														D	N	1	<	00	00	V1E	---	---	---	N<	B	A<
07	005		LA	015.120	D F H D 04 04 UI	H - N 7	02-14-98	0840	959015323	5	B A B	H D C	02	A	N	1	<	00	00	V2D	---	---	---	N<	H	A<
														A	N	1	<	00	00	V1D	---	---	---	N<	B	A<
07	005		LA	015.130	D F H D 04 04 UI	H - N 3	05-05-98	1100	959013179	5	C A B	H D E	01	F	N	1	<	00	00	16B	---	---	---	N<	B	A<
07	005		LA	015.130	D F H D 04 04 UI	H - N 1	04-19-98	1650	959015407	5	A A A	H D C	03	D	N	1	<	00	00	---	V2E	---	---	N<	A	A<
														D	N	1	<	00	00	V3E	V1E	---	---	N<	A	A<
														A	N	1	<	00	00	V2E	---	---	---	N<	H	A<
07	005		LA	015.130	D F H D 04 04 UI	H - N 7	04-18-98	0950	959015423	4	A A A	H D D	02	A	N	1	<	00	00	V2F	---	---	---	N<	R	A<
														A	N	1	<	00	00	V1F	---	---	---	N<	B	A<
07	005		LA	015.130	D F H D 04 04 UI	H - N 3	03-31-98	1420	959015365	6	C A B	H D C	02	A	N	1	<	00	00	V2E	---	---	---	N<	J	A<
														F	N	1	<	00	00	V1E	---	---	---	N<	B	A<
07	005		LA	015.130	D F H D 04 04 UI	H - N 5	02-26-98	1900	959014572	6	A C A	H D B	02	G	N	1	<	00	00	V2E	---	---	---	N<	B	A<
														A	N	1	<	00	00	V1E	---	---	---	N<	J	A<
07	005		LA	015.140	D F H D 04 04 UI	H - N 6	07-14-00	2325	959015664	4	A C A	H D E	01	A	N	1	<	00	00	18H	---	---	---	N<	R	A<
07	005		LA	015.140	D F H D 04 04 UI	H - N 3	04-06-99	1625	959015536	6	B A A	H D B	02	A	N	1	<	00	00	V2E	---	---	---	N<	A	A<
														G	N	1	<	00	00	V1E	---	---	---	N<	J	A<
07	005		LA	015.140	D F H D 04 04 UI	H - N 1	03-14-99	0300	959015120	1	A C A	H D E	01	A	N	1	<	00	01	19J	18H	24H	28H	4<	R	B<
07	005		LA	015.150	D F H D 04 04 UI	H - N 6	07-14-00	1720	959015825	5	A A A	H D C	03	A	N	1	<	00	00	---	V2F	---	---	N<	A	A<
														A	N	1	<	00	00	V3F	V1F	---	---	N<	A	A<
														A	N	1	<	00	00	V2F	---	---	---	N<	B	A<
07	005		LA	015.150	D F H D 04 04 UI	H - N 4	05-10-00	0800	959015182	5	B A A	H D C	02	A	N	1	<	00	00	V2F	---	---	---	N<	B	G<
														A	N	1	<	00	00	V1F	---	---	---	N<	B	A<
07	005		LA	015.150	D F H D 04 04 UI	H - N 6	02-25-00	1545	959015825	5	B A A	H D C	02	D	N	1	<	00	01	V2D	---	---	---	N<	A	A<
														D	N	1	<	00	00	V1D	---	---	---	N<	B	A<
07	005		LA	015.150	D F H D 04 04 UI	H - N 2	02-07-00	1145	959015807	5	A A A	H D C	02	A	N	1	<	00	00	V2E	---	---	---	N<	H	A<
														A	N	1	<	00	00	V1E	---	---	---	N<	B	A<
07	005		LA	015.150	D F H D 04 04 UI	H - N 3	10-12-99	2255	959015563		< C <	< < C	02	G	N	1	<	00	00	V2F	---	---	---	<<	B	<<
														G	N	1	<	00	00	V1F	---	---	---	<<	B	<<
07	005		LA	015.150	D F H D 04 04 UI	H - N 5	09-09-99	1240	959015756	6	A A A	H D B	03	A	N	1	<	00	00	---	V2E	---	---	5<	B	A<
														A	N	1	<	00	00	V3E	V1E	---	---	N<	B	A<
														A	N	1	<	00	00	V2E	---	---	---	N<	J	G<
07	005		LA	015.150	D F H D 04 04 UI	H - N 4	05-26-99	2130	959015514	5	A C A	H D C	02	A	N	1	<	00	00	V2F	---	---	---	N<	B	A<
														A	N	1	<	00	00	V1F	---	---	---	N<	B	A<
07	005		LA	015.150	D F H D 04 04 UI	H - N 1	01-25-98	1220	959015308	5	A A A	H D C	02	D	N	1	<	00	00	V2E	---	---	---	N<	H	A<
														D	N	1	<	00	00	V1E	---	---	---	N<	B	A<
07	005		LA	015.160	D F H D 04 04 UI	H - N 4	07-25-01	0715	959016059	5	B A A	H D C	03	A	N	1	D	00	00	V2F	---	---	---	N<	B	A<
														A	N	1	D	00	00	V1F	V3F	---	---	N<	B	A<
														A	N	1	C	00	00	---	V2F	---	---	N<	B	A<
07	005		LA	015.160	D F H D 04 04 UI	H - N 7	11-18-00	1730	959016130	5	A E A	H D C	02	A	N	1	<	00	00	V2E	---	---	---	N<	A	A<
														A	N	1	<	00	00	V1E	---	---	---	N<	B	A<
07	005		LA	015.160	D F H D 04 04 UI	H - N 3	10-31-00	0655	959013774	5	A A A	H D C	03	A	N	1	<	00	00	V2E	---	---	---	G<	B	G<
														A	N	1	<	00	00	V1E	V3E	---	---	G<	A	A<
														A	N	1	<	00	00	---	V2E	---	---	G<	A	A<

DIST	RTES NO	U F	CO	P LOC R POST E MILE	H G	A C	M T	B A	LANES LT	RT	RI UO	F T	I L	S R H	O Y	D A MO	ACCIDENT DATE DA	YR	TIME HHMM	COMMON ACCIDENT NUMBER	P C F	ENVIR COND W	L S	R C	R W C	T O C	NO MTR VEH	P T	D I R	V H I	S I	PERSN K	O I S P	L O S C	O S O	L O S C	O S O	L O S C	O O C	L O C	OA F 12	M O V	SD P 12
07	005		LA	015.160	D	F	H	D	04	04	UI	H	-	N	5	12	02	99	1530	959015833	6	A	A	A	H	D	B	02	A	N	1	<	00	00	V2F	---	---	---	N<	A	A<
																													G	N	1	<	00	00	V1E	---	---	---	N<	J	G<
07	005		LA	015.160	D	F	H	D	04	04	UI	H	-	N	2	09	13	99	1741	959015783	5	A	A	A	H	D	C	02	A	N	1	<	00	01	V2F	18H	28H	23H	N<	A	A<
																													G	N	1	<	00	00	V1F	---	---	---	N<	B	A<
07	005		LA	015.160	D	F	H	D	04	04	UI	H	-	N	6	12	11	98	0845	959012772	5	A	A	A	H	D	C	02	A	N	1	<	00	01	V2E	---	---	---	G<	B	A<
																													D	N	1	<	00	01	V1E	---	---	---	G<	A	A<
07	005		LA	015.160	D	F	H	D	04	04	UI	H	-	N	5	03	12	98	1740	959014506	5	A	A	A	H	D	C	02	D	N	1	<	00	00	V2F	---	---	---	N<	B	A<
																													A	N	1	<	00	01	V1F	---	---	---	N<	A	A<
07	005		LA	015.170	D	F	H	D	04	04	UI	H	-	N	3	05	22	01	0745	959009813	5	A	A	A	H	D	C	02	A	N	1	C	00	00	V2E	---	---	---	G<	B	A<
																													A	N	1	C	00	00	V1E	---	---	---	N<	A	A<
07	005		LA	015.180	D	F	H	D	04	04	UI	H	-	N	6	04	13	01	1750	959016136	6	A	A	A	H	D	B	02	F	N	1	D	00	00	V2E	---	---	---	N<	B	A<
																													A	N	1	D	00	00	V1E	---	---	---	N<	J	A<

- - - ACCIDENT SUMMARY - - -

TOTAL ACCIDENTS	FATAL	INJURY	PDO	PERSONS KILLED	PERSONS INJURED
310	0	65	245	0	92
WITHOUT DETAIL 0					

MOTOR VEHICLES INVOLVED NUMBER	PCT	CODE
20	6.4	1
201	64.8	2
71	22.9	3
18	5.8	> 3

LINES CODED NUMBER	PCT	CODE
20	6.4	1
199	64.1	2
73	23.5	3
14	4.5	4
3	0.9	5
1	0.3	6
0	0.0	7
0	0.0	8
0	0.0	9

<--------HOUR OF DAY-------->

NUMBER	PCT	CODE
2	0.6	00- 12 MID.
3	0.9	01- 1 A.M.
0	0.0	02- 2 A.M.
2	0.6	03- 3 A.M.
8	2.5	04- 4 A.M.
8	2.5	05- 5 A.M.
13	4.1	06- 6 A.M.
17	5.4	07- 7 A.M.
22	7.0	08- 8 A.M.
21	6.7	09- 9 A.M.
15	4.8	10- 10 A.M.
12	3.8	11- 11 A.M.
13	4.1	12- 12 NOON
15	4.8	13- 1 P.M.
18	5.8	14- 2 P.M.
28	9.0	15- 3 P.M.
18	5.8	16- 4 P.M.
28	9.0	17- 5 P.M.
22	7.0	18- 6 P.M.
15	4.8	19- 7 P.M.
8	2.5	20- 8 P.M.
9	2.9	21- 9 P.M.
6	1.9	22- 10 P.M.
7	2.2	23- 11 P.M.
0	0.0	25- UNKNOWN

<-------ACCESS CONTROL---------->

NUMBER	PCT	CODE
0	0.0	C-CONVENTIONAL
0	0.0	E-EXPRESSWAY
310	100.0	F-FREEWAY
0	0.0	S-1-WAY CITY ST
0	0.0	--INVALID DATA
0	0.0	+-NO DATA

<-------SIDE OF HIGHWAY------>

NUMBER	PCT	CODE
310	100.0	N-NORTHBOUND
0	0.0	S-SOUTHBOUND
0	0.0	E-EASTBOUND
0	0.0	W-WESTBOUND

<----------YEAR------->

NUMBER	PCT	CODE
0	0.0	1992
0	0.0	1993
0	0.0	1994
0	0.0	1995
0	0.0	1996
0	0.0	1997
93	30.0	1998
61	19.6	1999
81	26.1	2000
75	24.1	2001
0	0.0	2002

<----------MONTH---------->

NUMBER	PCT	CODE
20	6.4	01-JANUARY
33	10.6	02-FEBRUARY
31	10.0	03-MARCH
25	8.0	04-APRIL
28	9.0	05-MAY
27	8.7	06-JUNE
26	8.3	07-JULY
29	9.3	08-AUGUST
19	6.1	09-SEPTEMBER
25	8.0	10-OCTOBER
23	7.4	11-NOVEMBER
24	7.7	12-DECEMBER

<---------DAY OF WEEK-------->

NUMBER	PCT	CODE
51	16.4	1-SUNDAY
38	12.2	2-MONDAY
38	12.2	3-TUESDAY
45	14.5	4-WEDNESDAY
35	11.2	5-THURSDAY
66	21.2	6-FRIDAY
37	11.9	7-SATURDAY

- - - ACCIDENT SUMMARY - - -

<-----PRIMARY COLLISION FACTOR--------> <---------TYPE OF COLLISION---------> <----------ROADWAY CONDITION----------->

NUMBER	PCT	CODE	NUMBER	PCT	CODE	NUMBER	PCT	CODE
3	0.9	1-INFLUENCE ALCOHOL	0	0.0	A-HEAD-ON	0	0.0	A-HOLES, RUTS
38	12.2	2-FOLLOW TOO CLOSE	65	20.9	B-SIDESWIPE	0	0.0	B-LOOSE MATERIAL
0	0.0	3-FAILURE TO YIELD	207	66.7	C-REAR END	3	0.9	C-OBSTRUCTION ON ROAD
17	5.4	4-IMPROPER TURN	6	1.9	D-BROADSIDE	4	1.2	D-CONSTRUCT-REPAIR-ZONE
184	59.3	5-SPEEDING	27	8.7	E-HIT OBJECT	0	0.0	E-REDUCED ROAD WIDTH
55	17.7	6-OTHER VIOLATIONS	0	0.0	F-OVERTURN	0	0.0	F-FLOODED
0	0.0	B-IMPROPER DRIVING	0	0.0	G-AUTO-PEDESTRIAN	0	0.0	G-OTHER
3	0.9	C-OTHER THAN DRIVER	5	1.6	H-OTHER	297	95.8	H-NO UNUSUAL CONDITION
3	0.9	D-UNKNOWN	0	0.0	<-NOT STATED	6	1.9	<-NOT STATED
0	0.0	E-FELL ASLEEP	0	0.0	-INVALID CODES			
0	0.0	<-NOT STATED						
7	2.2	-INVALID CODES						

<----------WEATHER----------> <----------LIGHTING----------> <-------ROAD SURFACE--------->

NUMBER	PCT	CODE	NUMBER	PCT	CODE	NUMBER	PCT	CODE
226	72.9	A-CLEAR	229	73.8	A-DAYLIGHT	258	83.2	A-DRY
53	17.0	B-CLOUDY	1	0.3	B-DUSK/DAWN	47	15.1	B-WET
26	8.3	C-RAINING	59	19.0	C-DARK-STREET LIGHT	0	0.0	C-SNOWY, ICY
0	0.0	D-SNOWING	19	6.1	D-DARK-NO STREET LIGHT	0	0.0	D-SLIPPERY
0	0.0	E-FOG	1	0.3	E-DARK-INOPR STREET LIGHT	5	1.6	<-NOT STATED
0	0.0	F-OTHER	0	0.0	F-DARK-NOT STATED	0	0.0	-INVALID CODES
0	0.0	G-WIND	1	0.3	<-NOT STATED			
5	1.6	<-NOT STATED	0	0.0	-INVALID CODES			

<---------RIGHT OF WAY CONTROL----------> <---------HIGHWAY GROUP----------> <---INTERSECTION OR RAMP ACCIDENT LOCATION----->

NUMBER	PCT	CODE	NUMBER	PCT	CODE	NUMBER	PCT	CODE
3	0.9	A-CONTROL FUNCTIONING	0	0.0	R-IND. ALIGN-RIGHT	0	0.0	1-RAMP INTERSECTION (EXIT)
0	0.0	B-CONTROL NOT FUNCTIONING	0	0.0	L-IND. ALIGN-LEFT	0	0.0	2-RAMP
0	0.0	C-CONTROLS OBSCURED	310	100.0	D-DIVIDED	0	0.0	3-RAMP ENTRY
301	97.0	D-NO CONTROLS PRESENT	0	0.0	U-UNDIVIDED	0	0.0	4-RAMP AREA, INTERSECT STREET
6	1.9	<-NOT STATED				0	0.0	5-IN INTERSECTION
						0	0.0	6-OUTSIDE INTRSCT-NONSTATE RTE
						310	100.0	--DOES NOT APPLY

- - - PARTY SUMMARY - - -

<----------PARTY TYPE----------> <---MOVEMENT PRECEDING COLLISION---> <----------OTHER ASSOCIATED FACTOR---------->

NUMBER	PCT	CODE	NUMBER	PCT	CODE	# 1	PCT	# 2	PCT	CODE
280	90.3	A-PASNGR CAR/STA WAGON	140	45.1	A-STOPPED	0	0.0	0	0.0	1-INFLUENCE ALCOHOL
0	0.0	B-PASNGR CAR W/TRALR	276	89.0	B-PROCEDED STRAIGHT	6	1.9	0	0.0	2-FOLLOW TOO CLOSE
2	0.6	C-MOTORCYCLE	0	0.0	C-RAN OFF ROAD	0	0.0	0	0.0	3-FAILURE TO YIELD
115	37.0	D-PICKUP/PANEL TRUCK	0	0.0	D-MAKING RIGHT TURN	4	1.2	0	0.0	4-IMPROPER TURN
3	0.9	E-PICKUP/PANEL W/TRALR	0	0.0	E-MAKING LEFT TURN	7	2.2	0	0.0	5-SPEEDING
29	9.3	F-TRUCK/TRUCK TRACTOR	0	0.0	F-MAKING U TURN	11	3.5	0	0.0	6-OTHER VIOLATIONS
41	13.2	G-TRK/TRACTOR & 1 TRALR	2	0.6	G-BACKING	0	0.0	0	0.0	A-CELL PHONE* (INATTN)
1	0.3	2-TRK/TRACTOR & 2 TRALR	68	21.9	H-SLOWING, STOPPING	0	0.0	0	0.0	B-ELECTRONIC EQUIP* (INATTN)
0	0.0	3-TRK/TRACTOR & 3 TRALR	0	0.0	I-PASS OTHER VEHICLE	0	0.0	0	0.0	C-RADIO/CD/HEADPHN* (INATTN)
0	0.0	4-SINGLE UNIT TANKER	57	18.3	J-CHANGING LANES	0	0.0	0	0.0	D-SMOKING* (INATTN)
0	0.0	5-TRK/TRA & 1 TANK TRLR	0	0.0	K-PARKING	1	0.3	0	0.0	E-VISION OBSCUREMENT
0	0.0	6-TRK/TRA & 2 TANK TRLR	0	0.0	L-ENTER FROM SHLDR	1	0.3	0	0.0	F-INATTENTION - OTHER
0	0.0	H-SCHOOL BUS	1	0.3	M-OTHER UNSAFE TURN	114	36.7	6	1.9	G-STOP & GO TRAFFIC
3	0.9	I-OTHER BUS	0	0.0	N-CROSS INTO OPP LN	3	0.9	2	0.6	H-ENTER/LEAVE RAMP
5	1.6	J-EMERGENCY VEHICLE	1	0.3	O-PARKED	11	3.5	0	0.0	I-PREVIOUS COLLISION
0	0.0	K-HIGHWAY CONST EQUIP	6	1.9	P-MERGING	0	0.0	0	0.0	J-UNFAMILIAR WITH ROAD
0	0.0	L-BICYCLE	0	0.0	Q-TRVL WRONG WAY	2	0.6	0	0.0	K-DEFECT VEHICLE EQUIP
8	2.5	M-OTHER-MOTOR VEH	13	4.1	R-OTHER	1	0.3	0	0.0	L-UNINVOLVED VEHICLE
0	0.0	N-OTHER-NON-MOTOR VEH	1	0.3	<-NOT STATED	2	0.6	0	0.0	M-OTHER
1	0.3	O-SPILLED LOADS				177	57.0	0	0.0	N-NONE APPARENT
0	0.0	P-DISENGAGED TOW			PEDESTRIAN	0	0.0	0	0.0	P-WIND
0	0.0	Q-UNINVOLVED VEHICLE	0	0.0	2-XING XWALK-INTRST	0	0.0	0	0.0	R-RAMP ACCIDENT
0	0.0	R-MOPED	0	0.0	3-XING XWALK-NOT INTR	0	0.0	0	0.0	S-RUNAWAY VEHICLE
0	0.0	T-TRAIN	0	0.0	4-XING NOT XWALK	0	0.0	0	0.0	T-EATING* (INATTN)
0	0.0	U-PEDESTRIAN	1	0.3	5-ROADWAY-INCL SHLDR	0	0.0	0	0.0	U-CHILDREN* (INATTN)
1	0.3	V-DISMOUNT PEDESTRIAN	0	0.0	6-NOT IN ROADWAY	0	0.0	0	0.0	V-ANIMALS* (INATTN)
0	0.0	W-ANIMAL - LIVESTOCK	0	0.0	7-APRH-LEAVE SCHL BUS	0	0.0	0	0.0	W-PERSONAL HYGIENE* (INATTN)
0	0.0	X-ANIMAL - DEER	1	0.3	-INVALID CODES	0	0.0	0	0.0	X-READING* (INATTN)
0	0.0	Z-ANIMAL - OTHER				8	2.5	310	100.0	<-NOT STATED
						0	0.0	0	0.0	--DOES NOT APPLY .

*INATTENTION CODES EFF. 01-01-01

<-----DIRECTION OF TRAVEL------> <----------SPECIAL INFORMATION---------->

NUMBER	PCT	CODE	NUMBER	PCT	CODE
310	100.0	N-N, NE, NW BOUND	0	0.0	A-HAZARDOUS MATERIALS
0	0.0	S-S, SE, SW BOUND	0	0.0	B-CELL PHONE IN USE*
0	0.0	E-EASTBOUND	24	7.7	C-CELL PHONE NOT IN USE*
0	0.0	W-WESTBOUND	25	8.0	D-CELL PHONE NONE/UNKNOWN*
3	0.9	<-NOT STATED	268	86.4	<-NOT STATED
1	0.3	--DOES NOT APPLY	0	0.0	--DOES NOT APPLY
			0	0.0	-INVALID CODES

*SPECIAL INFORMATION CODES EFF. 04-01-01

- - - PARTY SUMMARY - - -

<----------OBJECT STRUCK----------> <----------LOCATION OF COLLISION----------

PRIMARY NUMBER	PRIMARY PCT	OTHERS NUMBER	OTHERS PCT		PRIMARY NUMBER	PRIMARY PCT	OTHERS NUMBER	OTHERS PCT	CODE
0	0.0	0	0.0	01-SIDE OF BRIDGE RAILING	0	0.0	0	0.0	A-BEYOND MEDIAN OR STRIPE-LFT
0	0.0	0	0.0	02-END OF BRIDGE RAILING	13	4.1	17	5.4	B-BEYOND SHLDER DRIVERS LEFT
0	0.0	0	0.0	03-PIER,COLUMN,ABUTMENT	0	0.0	0	0.0	C-LEFT SHOULDER AREA
0	0.0	0	0.0	04-BOTTOM OF STRUCTURE	88	28.3	39	12.5	D-LEFT LANE
0	0.0	0	0.0	05 BRIDGE END POST IN GORE	169	54.5	48	15.4	E-INTERIOR LANES
0	0.0	0	0.0	06-END OF GUARD RAIL	61	19.6	15	4.8	F-RIGHT LANE
0	0.0	0	0.0	07-BRIDGE APPROACH GRD RAIL	1	0.3	1	0.3	G-RIGHT SHOULDER AREA
0	0.0	0	0.0	10-LIGHT OR SIGNAL POLE	9	2.9	14	4.5	H-BEYOND SHLDER DRIVERS RIGHT
0	0.0	0	0.0	11-UTILITY POLE	0	0.0	0	0.0	I-GORE AREA
0	0.0	0	0.0	12-POLE (TYPE NOT STATED)	4	1.2	0	0.0	J-OTHER
0	0.0	1	0.3	13-TRAFFIC SIGN/SIGN POST	0	0.0	0	0.0	V-HOV LANE(S)
0	0.0	0	0.0	14-OTHER SIGNS NOT TRAFFIC	0	0.0	0	0.0	W-HOV LANE BUFFER AREA
3	0.9	6	1.9	15-GUARDRAIL	0	0.0	0	0.0	<-NOT STATED
13	4.1	17	5.4	16-MEDIAN BARRIER	97	31.2	309	99.6	--DOES NOT APPLY
1	0.3	1	0.3	17-WALL(EXCEPT SOUND WALL)	0	0.0	0	0.0	-INVALID CODES
3	0.9	2	0.6	18-DIKE OR CURB					
1	0.3	0	0.0	19-TRAFFIC ISLAND					
0	0.0	0	0.0	20-RAISED BARS					
0	0.0	0	0.0	21-CONCRETE OBJ(HDWL,D.I.)					
0	0.0	0	0.0	22-GUIDEPOST,CULVERT,PM					
0	0.0	1	0.3	23-CUT SLOPE OR EMBANKMENT					
0	0.0	1	0.3	24-OVER EMBANKMENT					
0	0.0	0	0.0	25-IN WATER					
0	0.0	0	0.0	26-DRAINAGE DITCH					
0	0.0	0	0.0	27-FENCE					
0	0.0	2	0.6	28-TREES					
0	0.0	1	0.3	29-PLANTS					
2	0.6	4	1.2	30-SOUND WALL					
0	0.0	0	0.0	40-NATURAL MATRL ON ROAD					
0	0.0	0	0.0	41-TEMP BARRICADES, CONES					
4	1.2	0	0.0	42-OTHER OBJECT ON ROAD					
0	0.0	0	0.0	43-OTHER OBJECT OFF ROAD					
0	0.0	2	0.6	44-OVERTURNED					
0	0.0	0	0.0	45-CRASH CUSHION(SAND)					
0	0.0	0	0.0	46-CRASH CUSHION(OTHER)					
0	0.0	0	0.0	51-CALL BOX					
0	0.0	0	0.0	98-UNKNOWN OBJECT STRUCK					
1	0.3	0	0.0	99-NO OBJECT INVOLVED					
282	90.9	92	29.6	V1 THRU V9-VEHICLE 1 TO 9					
0	0.0	0	0.0	<<-NOT STATED					
97	31.2	309	99.6	---DOES NOT APPLY					
0	0.0	0	0.0	-INVALID CODES					

<-----SOBRIETY----------DRUG/PHYSICAL----------

SOBRIETY NUMBER	SOBRIETY PCT	DRUG/PHYSICAL NUMBER	DRUG/PHYSICAL PCT	CODE
297	95.8	0	0.0	A-HAD NOT BEEN DRINKING
3	0.9	0	0.0	B-HBD - UNDER INFLUENCE
3	0.9	0	0.0	C-HBD - NOT UNDER INFLUENCE
1	0.3	0	0.0	D-HBD - IMPAIRMENT UNKNOWN
0	0.0	0	0.0	E-UNDER DRUG INFLUENCE
0	0.0	0	0.0	F-OTHER PHYSICAL IMPAIRMENT
60	19.3	0	0.0	G-IMPAIRMENT NOT KNOWN
0	0.0	0	0.0	H-NOT APPLICABLE
0	0.0	0	0.0	I-FATIGUE
14	4.5	310	100.0	<-NOT STATED
0	0.0	0	0.0	--DOES NOT APPLY
		0	0.0	-INVALID CODES

SUBMITTORS DISTRICT 72 - MESSAGES -

SUBMITTORS NAME YUEH-S

ACCIDENTS SELECTED 175

LOCATION CRITERIA -

DISTRICT	07	POSTMILE	FROM	014.600	TO	015.200		DATE RANGE	FROM	01-01-98	TO	12-31-01
ROUTE	005	OR	FROM		TO		AND	OR	FROM		TO	
COUNTY	LA	OR	FROM		TO			OR	FROM		TO	

ACCIDENT AND HIGHWAY CRITERIA -

11	AN	508	ACC FILE TYPE	EQ	H
12	AN	514	ACC SIDE OF HIGHWAY	EQ	S

RTES DIST	U NO	R F	CO	P LOC E MILE	H G	A C	M T	B A	LANES LT	RT	UO	<-----HIGHWAY-----> I T	S L	D R	O H	A Y	ACCIDENT DATE MO	DA	YR	TIME HHMM	COMMON ACCIDENT NUMBER	P C F	ENVIR COND W	L	S	R C	R W	T O C	NO MTR VEH	P T	D I R	V H I	S I	PERSN K	O I P	L O C	O S O	L O S	O S O	L O C	OA 12	M F V	SD P 12
07	005		LA	014.600	D	F	H	D	04	04	UO	H	-	S	7	07	07	01	1820	953515941	5	A	A	A	H	D	C	02	A	S	1	D	00	00	V2E	---	---	---		G<	B	G<
																													A	S	1	D	00	01	V1E	---	---	---		G<	A	A<
07	005		LA	014.600	D	F	H	D	04	04	UO	H	-	S	3	08	15	00	1650	953515994	5	A	A	A	H	D	C	02	A	S	1	<	00	00	V2E	---	---	---		G<	B	A<
																													D	S	1	<	00	00	V1E	---	---	---		G<	H	A<
07	005		LA	014.600	D	F	H	D	04	04	UO	H	-	S	3	12	14	99	1400	953512125	2	A	A	A	H	D	C	03	A	S	1	<	00	00	V2D	---	---	---		G<	B	A<
																													A	S	1	<	00	00	V1D	V3D	---	---		G<	H	A<
																													A	S	1	<	00	01	---	V2D	---	---		G<	A	A<
07	005		LA	014.600	D	F	H	D	04	04	UO	H	-	S	2	03	15	99	1015	953513427	5	B	A	B	H	D	B	02	A	S	1	<	00	00	V2D	---	---	---		N<	B	A<
																													A	S	1	<	00	00	V1E	---	---	---		N<	B	A<
07	005		LA	014.600	D	F	H	D	04	04	UO	H	-	S	2	12	28	98	1845	953514558	2	A	D	A	H	D	C	03	A	S	1	<	00	00	V2E	---	---	---		N<	B	A<
																													A	S	1	<	00	00	V1E	V3E	---	---		N<	H	A<
																													A	S	1	<	00	00	---	V2E	---	---		N<	A	A<
07	005		LA	014.610	D	F	H	D	04	04	UO	H	-	S	7	07	29	00	1715	953515532	5	A	A	A	H	D	C	04	A	S	1	<	00	01	V2E	V3E	---	---		N<	B	A<
																													A	S	1	<	00	00	V1E	---	---	---		N<	B	A<
																													A	S	1	<	00	02	---	V1E	V4F	30H		N<	B	A<
																													A	S	1	<	00	00	---	V3F	---	---		N<	B	A<
07	005		LA	014.610	D	F	H	D	04	04	UO	H	-	S	3	01	25	00	0440	953514310	5	B	C	B	H	D	E	01	A	S	1	<	00	00	15H	---	---	---		N<	B	A<
07	005		LA	014.610	D	F	H	D	04	04	UO	H	-	S	1	01	04	98	1325	953514473	5	C	A	B	H	D	E	01	A	S	1	<	00	00	15H	---	---	---		N<	B	A<
07	005		LA	014.620	D	F	H	D	04	04	UO	H	-	S	1	04	22	01	1720	953515532	4	A	A	A	H	D	E	01	A	S	1	<	00	02	16B	---	---	---		N<	R	A<
07	005		LA	014.630	D	F	H	D	04	04	UO	H	-	S	1	10	03	99	1555	953515606	6	A	A	A	H	D	B	02	A	S	1	<	00	00	V2E	30H	---	---		N<	J	G<
																													D	S	1	<	00	00	V1E	---	---	---		N<	B	A<
07	005		LA	014.640	D	F	H	D	04	04	UO	H	-	S	4	06	14	00	1730	953514558	5	A	A	A	H	D	C	03	A	S	1	<	00	00	V2D	---	---	---		G<	B	A<
																													D	S	1	<	00	00	V1D	V3D	---	---		G<	B	A<
																													D	S	1	<	00	00	---	V2D	---	---		G<	B	A<
07	005		LA	014.660	D	F	H	D	04	04	UO	H	-	S	7	04	25	98	0355	953513748	5	A	C	A	D	D	C	02	D	S	1	<	00	01	V2E	---	---	---		G<	B	C<
																													A	S	1	<	00	03	V1E	---	---	---		G<	A	A<
07	005		LA	014.670	D	F	H	D	04	04	UO	H	-	S	5	11	08	01	1045	953516285	6	A	A	A	H	D	B	03	G	S	1	D	00	00	V2E	---	---	---		N<	J	G<
																													A	S	1	C	00	00	V1E	V3D	16B	---		N<	B	A<
																													A	S	1	D	00	01	---	V2D	16B	---		N<	B	A<
07	005		LA	014.690	D	F	H	D	04	04	UO	H	-	S	3	07	21	98	1435	953509688	6	A	A	A	H	D	B	03	F	S	1	<	00	00	V2F	---	---	---		N<	J	G<
																													A	S	1	<	00	00	V1E	V3E	---	---		N<	B	A<
																													A	S	1	<	00	00	---	V2E	---	---		N<	B	A<
07	005		LA	014.700	D	F	H	D	04	04	UO	H	-	S	7	02	07	98	2150	953515462	5	B	D	B	H	D	C	03	A	S	1	<	00	00	---	V2E	---	---		N<	A	G<
																													A	S	1	<	00	01	V3E	V1E	---	---		N<	H	A<
																													M	S	1	<	00	00	V2E	---	---	---		N<	B	G<
07	005		LA	014.700	D	F	H	D	04	04	UO	H	-	S	4	01	21	98	0528	953514976	4	A	D	A	H	D	E	01	A	S	1	<	00	00	16B	---	---	---		N<	R	A<
07	005		LA	014.740	D	F	H	D	04	04	UO	H	-	S	3	05	05	98	0208	953514976	5	B	D	B	H	D	E	01	A	S	1	<	00	01	17H	---	---	---		N<	B	A<
07	005		LA	014.750	D	F	H	D	04	04	UO	H	-	S	6	10	27	00	0550	953508246	5	B	D	B	H	D	E	01	A	S	1	<	00	00	17H	---	---	---		N<	B	A<
07	005		LA	014.750	D	F	H	D	04	04	UO	H	-	S	6	04	03	98	1335	953513772	5	B	A	A	H	D	C	02	A	S	1	<	00	00	V2D	---	---	---		G<	B	A<
																													D	S	1	<	00	00	V1D	---	---	---		G<	H	A<
07	005		LA	014.750	D	F	H	D	04	04	UO	H	-	S	4	03	25	98	1505	953514735	2	B	A	B	H	D	C	02	F	S	1	<	00	00	V2E	---	---	---		G<	B	A<
																													A	S	1	<	00	00	V1E	---	---	---		G<	A	A<
07	005		LA	014.770	D	F	H	D	04	04	UO	H	-	S	6	01	08	99	1155	953508246	6	A	A	A	H	D	B	03	A	S	1	<	00	00	---	---	---	---		N<	J	G<
																													E	S	1	<	00	00	V3E	---	---	---		N<	B	A<
																													A	S	1	<	00	00	V2E	16B	---	---		N<	B	A<
07	005		LA	014.780	D	F	H	D	04	04	UO	H	-	S	2	07	02	01	1720	953512125	5	A	A	A	H	D	C	03	A	S	1	D	00	00	V2E	---	---	---		G<	B	<I
																													D	S	1	D	00	00	V1E	V3E	---	---		G<	B	A<
																													A	S	1	D	00	00	---	V2E	---	---		G<	B	A<

DIST	RTES NO	U F	CO	P LOC R POST E MILE	<-----HIGHWAY-----> H A M B LANES RI G C T A LT RT UO	I S D F R O A T L H Y	ACCIDENT DATE MO DA YR	TIME HHMM	COMMON ACCIDENT NUMBER	P C F	ENVIR COND W L S	R W C	R O C	T NO MTR VEH	P T R	D I I	V H I	S I	PERSN K	O S P	L O C	O S O	L O S	O S O	L O C	OA F 12	M O V	SD P 12
07	005		LA	014.790	D F H D 04 04 UO	H - S 1	03-05-00	1400	953515767	2	B A B	H	D	C 02	G	S	1	<	00 00	V2E	---	---	---	G<	B	A<
															A	S	1	<	00 00	V1E	---	---	---	G<	A	A<
07	005		LA	014.790	D F H D 04 04 UO	H - S 2	06-22-98	0920	953512066	5	A A A	H	D	C 03	F	S	1	<	00 00	V2E	---	---	---	N<	B	A<
															A	S	1	<	00 01	V1E	V3E	---	---	N<	B	A<
															D	S	1	<	00 00	---	V2E	---	---	N<	B	G<
07	005		LA	014.790	D F H D 04 04 UO	H - S 1	05-03-98	0915	953513750	5	B A B	H	D	C 02	A	S	1	<	00 01	V2E	---	---	---	G<	B	A<
															F	S	1	<	00 02	V1E	---	---	---	G<	A	A<
07	005		LA	014.800	D F H D 04 04 UO	H - S 4	02-16-00	1315	953508119	5	C A B	H	D	C 04	D	S	1	<	00 00	V2F	V4F	---	---	N<	B	A<
															A	S	1	<	00 00	V1F	V3F	---	---	N<	A	A<
															A	S	1	<	00 00	---	V2F	---	---	N<	A	A<
															A	S	1	<	00 00	---	V1F	---	---	5<	B	A<
07	005		LA	014.800	D F H D 04 04 UO	H - S 4	01-28-98	0820	953513427	4	A A A	D	D	E 01	A	S	1	<	00 00	41H	13H	---	---	N<	R	A<
07	005		LA	014.810	D F H D 04 04 UO	H - S 6	11-05-99	1115	953510909	2	A A A	H	D	C 02	F	S	1	<	00 00	V2E	---	---	---	N<	B	A<
															D	S	1	<	00 00	V1E	---	---	---	N<	H	A<
07	005		LA	014.820	D F H D 04 04 UO	H - S 7	10-03-98	1635	953507348	4	A A A	H	D	E 02	A	S	1	<	00 00	---	16B	---	---	N<	B	A<
															G	S	1	<	00 00	42G	---	---	---	N<	B	A<
07	005		LA	014.830	D F H D 04 04 UO	H - S 6	11-23-01	0145	953516187	1	A C A	H	D	E 01	A	S	1	D	00 00	15H	---	---	---	4<	R	B<
07	005		LA	014.830	D F H D 04 04 UO	H - S 2	02-12-01	2025	953514245	5	C C B	H	D	E 01	A	S	1	<	00 00	16B	---	---	---	N<	B	A<
07	005		LA	014.830	D F H D 04 04 UO	H - S 2	06-05-00	1430	953514245	6	A A A	H	D	B 02	D	S	1	<	00 00	V2E	---	---	---	G<	J	A<
															G	S	1	<	00 00	V1E	---	---	---	G<	B	A<
07	005		LA	014.840	D F H D 04 04 UO	H - S 5	05-03-01	1610	953516328	5	A A A	H	D	C 03	A	S	1	<	00 00	V2D	---	---	---	G<	J	A<
															A	S	1	<	00 00	V1D	V3D	---	---	G<	H	A<
															A	S	1	<	00 00	---	V2D	---	---	G<	H	A<
07	005		LA	014.840	D F H D 04 04 UO	H - S 2	09-20-99	1710	953515720	6	A A A	H	D	C 02	A	S	1	<	00 00	V2E	---	---	---	G<	B	A<
															D	S	1	<	00 00	V1E	---	---	---	G<	A	A<
07	005		LA	014.850	D F H D 04 04 UO	H - S 6	08-24-01	2030	953516338	6	A C A	H	D	B 02	A	S	1	D	00 00	V2F	---	---	---	N<	J	A<
															A	S	1	D	00 00	V1E	---	---	---	N<	B	A<
07	005		LA	014.850	D F H D 04 04 UO	H - S 3	02-13-01	0530	953516022	5	B C B	H	D	E 02	A	S	1	<	00 00	16B	V2E	---	---	N<	B	A<
															F	S	1	<	00 00	---	V1E	---	---	N<	B	A<
07	005		LA	014.850	D F H D 04 04 UO	H - S 4	02-23-00	2107	953515994	5	B C B	H	D	E 01	A	S	1	<	00 00	16B	---	---	---	N<	B	C<
07	005		LA	014.850	D F H D 04 04 UO	H - S 3	07-28-98	1815	953512125	6	A A A	H	D	B 02	A	S	1	<	00 00	V2E	---	---	---	N<	J	A<
															A	S	1	<	00 00	V1D	---	---	---	N<	R	A<
07	005		LA	014.850	D F H D 04 04 UO	H - S 4	04-29-98	1645	953512125	6	A A A	H	D	B 02	F	S	1	<	00 00	V2E	---	---	---	N<	R	A<
															G	S	1	<	00 00	V1E	---	---	---	N<	B	A<
07	005		LA	014.860	D F H D 04 04 UO	H - S 7	12-22-01	1645	953516474	6	A A A	H	D	C 02	A	S	1	C	00 00	V2E	---	---	---	G<	A	A<
															G	S	1	C	00 00	V1E	---	---	---	G<	B	A<
07	005		LA	014.860	D F H D 04 04 UO	H - S 2	12-18-00	1535	953514245	6	A A A	H	D	C 02	G	S	1	<	00 00	V2E	---	---	---	G<	B	A<
															A	S	1	<	00 00	V1E	---	---	---	G<	J	A<
07	005		LA	014.860	D F H D 04 04 UO	H - S 7	05-06-00	1830	953515653	4	A A A	H	D	E 01	D	S	1	<	00 00	16B	---	---	---	N<	R	G<
07	005		LA	014.870	D F H D 04 04 UO	H - S 1	02-18-01	1640	953515941	5	B A A	C	D	C 02	A	S	1	<	00 00	V2F	---	---	---	N<	B	A<
															A	S	1	<	00 01	V1F	---	---	---	N<	A	A<
07	005		LA	014.870	D F H D 04 04 UO	H - S 1	03-12-00	0201	953514863	4	A C A	H	D	E 01	A	S	1	<	00 00	30H	---	---	---	N<	B	A<
07	005		LA	014.870	D F H D 04 04 UO	H - S 6	04-10-98	1750	953514438	5	A A A	H	D	B 03	D	S	1	<	00 00	V2E	V3E	---	---	G<	B	A<
															A	S	1	<	00 00	V1E	---	---	---	G<	B	A<
															D	S	1	<	00 00	---	V1E	---	---	G<	B	A<
07	005		LA	014.870	D F H D 04 04 UO	H - S 1	03-29-98	1110	953515462	4	A A A	H	D	E 01	A	S	1	<	00 00	16B	---	---	---	N<	R	A<

DIST	RTES NO	U F	CO	P LOC R POST E MILE	H	A	M	B	<-----HIGHWAY-----> LANES	RI	F	R	O	A	I	S	D	ACCIDENT DATE MO	DA	YR	TIME HHMM	COMMON ACCIDENT NUMBER	P C F	ENVIR COND W	R L	R S	C	T W C	O V	NO MTR VEH	P T R	D I	V H I	S I	PERSN K	O I S P	L O S C	O L S O	O L S O	O L S O	O L S O	L O C	OA F 12	M O V	SD P 12
07	005		LA	014.880	D	F	H	D	04	04	UO	H	-	S	1	12	09	01	2040	953516474	5	C	C	B	H	D	E	01	A	S	1	C	00	00	16B	---	---	---	---	---	---	N<	B	A<
07	005		LA	014.880	D	F	H	D	04	04	UO	H	-	S	6	12	08	00	1604	953516252	6	B	A	A	H	D	B	02	A	S	1	<	00	00	V2E	---	---	---	---	---	---	G<	J	A<
																													A	S	1	<	00	00	V1E	---	---	---	---	---	---	GL	B	A<
07	005		LA	014.880	D	F	H	D	04	04	UO	H	-	S	5	04	27	00	1505	953514811	2	A	A	A	H	D	C	02	A	S	1	<	00	00	V2D	---	---	---	---	---	---	G<	B	A<
																													A	S	1	<	00	00	V1D	---	---	---	---	---	---	G<	A	A<
07	005		LA	014.880	D	F	H	D	04	04	UO	H	-	S	4	03	08	00	0046	953514863	5	C	D	B	H	D	E	02	F	S	1	<	00	02	16B	V2E	---	---	---	---	---	N<	B	A<
																													G	S	1	<	00	00	---	V1E	---	---	---	---	---	N<	B	A<
07	005		LA	014.880	D	F	H	D	04	04	UO	H	-	S	2	11	22	99	1030	953515710	C	A	A	A	H	D	C	03	G	S	1	<	00	00	---	---	---	---	---	---	---	N<	B	A<
																													A	S	1	<	00	00	V3D	---	---	---	---	---	---	N<	B	A<
																													D	S	1	<	00	00	V2D	---	---	---	---	---	---	N<	B	A<
07	005		LA	014.880	D	F	H	D	04	04	UO	H	-	S	1	04	04	99	1235	953515641	6	A	A	A	H	D	B	02	D	S	1	<	00	00	V2E	---	---	---	---	---	---	N<	J	A<
																													A	S	1	<	00	00	V1D	---	---	---	---	---	---	N<	B	A<
07	005		LA	014.880	D	F	H	D	04	04	UO	H	-	S	2	11	23	98	0147	953515653	1	A	C	A	H	D	E	01	A	S	1	<	00	00	15H	44F	---	---	---	---	---	4<	B	BI
07	005		LA	014.880	D	F	H	D	04	04	UO	H	-	S	5	02	26	98	1720	953509688	6	A	B	A	H	D	B	02	A	S	1	<	00	00	V2F	---	---	---	---	---	---	G<	J	A<
																													G	S	1	<	00	00	V1E	---	---	---	---	---	---	G<	B	A<
07	005		LA	014.900	D	F	H	D	04	04	UO	H	-	S	6	09	28	01	1610	953514245	5	A	A	A	H	D	C	02	A	S	1	D	00	00	V2D	---	---	---	---	---	---	G<	A	A<
																													A	S	1	C	00	00	V1D	---	---	---	---	---	---	G<	B	A<
07	005		LA	014.900	D	F	H	D	04	04	UO	H	-	S	6	08	24	01	1800	953516374	5	A	A	A	H	D	C	02	A	S	1	D	00	00	V2E	---	---	---	---	---	---	FG	B	A<
																													A	S	1	D	00	00	V1E	---	---	---	---	---	---	G<	H	A<
07	005		LA	014.900	D	F	H	D	04	04	UO	H	-	S	7	05	05	01	1800	953515532	2	A	A	A	H	D	C	02	A	S	1	C	00	00	V2E	---	---	---	---	---	---	2G	B	A<
																													A	S	1	C	00	00	V1E	---	---	---	---	---	---	6G	A	A<
07	005		LA	014.900	D	F	H	D	04	04	UO	H	-	S	2	09	04	00	1700	953514735	5	A	A	A	H	D	B	03	A	S	1	<	00	01	V2E	V3E	---	---	---	---	---	G<	B	A<
																													A	S	1	<	00	00	V1E	---	---	---	---	---	---	G<	H	A<
																													G	S	1	<	00	00	---	V1E	---	---	---	---	---	G<	A	A<
07	005		LA	014.900	D	F	H	D	04	04	UO	H	-	S	4	08	09	00	2120	953515869	5	A	D	A	H	D	C	02	A	S	1	<	00	00	V2E	---	---	---	---	---	---	G<	B	G<
																													A	S	1	<	00	00	V1E	---	---	---	---	---	---	G<	A	A<
07	005		LA	014.900	D	F	H	D	04	04	UO	H	-	S	4	02	03	99	1050	953515570	6	A	A	A	H	D	B	02	A	S	1	<	00	00	V2E	---	---	---	---	---	---	N<	J	A<
																													A	S	1	<	00	00	V1D	16B	---	---	---	---	---	N<	B	A<
07	005		LA	014.900	D	F	H	D	04	04	UO	H	-	S	7	03	28	98	0215	953514545	5	B	C	B	H	D	B	02	A	S	1	<	00	00	V2E	---	---	---	---	---	---	G<	B	A<
																													A	S	1	<	00	00	V1E	---	---	---	---	---	---	L<	A	A<
07	005		LA	014.900	D	F	H	D	04	04	UO	H	-	S	1	01	04	98	1500	953515429	5	B	A	B	H	D	C	02	D	S	1	<	00	00	V2E	---	---	---	---	---	---	G<	B	G<
																													A	S	1	<	00	00	V1E	---	---	---	---	---	---	G<	B	A<
07	005		LA	014.910	D	F	H	D	04	04	UO	H	-	S	1	03	11	01	1700	953516292	6	B	B	A	H	D	B	02	A	S	1	<	00	00	V2F	---	---	---	---	---	---	N<	J	G<
																													A	S	1	<	00	00	V1D	---	---	---	---	---	---	N<	B	A<
07	005		LA	014.910	D	F	H	D	04	04	UO	H	-	S	1	03	15	98	0655	953515177	5	B	A	A	D	D	E	01	A	S	1	<	00	00	16B	---	---	---	---	---	---	N<	B	A<
07	005		LA	014.920	D	F	H	D	04	04	UO	H	-	S	7	10	13	01	1315	953516100	4	A	A	A	H	D	E	01	A	S	1	C	00	00	16B	---	---	---	---	---	---	N<	R	A<
07	005		LA	014.920	D	F	H	D	04	04	UO	H	-	S	3	06	19	01	0500	953516531	4	A	B	A	H	D	B	02	A	S	1	D	00	01	V2E	---	---	---	---	---	---	N<	R	A<
																													A	S	1	D	00	00	V1D	---	---	---	---	---	---	N<	B	A<
07	005		LA	014.920	D	F	H	D	04	04	UO	H	-	S	7	04	14	01	1505	953516276	4	A	A	A	H	D	E	01	A	S	1	<	00	00	16B	---	---	---	---	---	---	G<	H	A<
07	005		LA	014.920	D	F	H	D	04	04	UO	H	-	S	6	03	16	01	2230	953514987	1	A	C	A	H	D	B	02	D	S	1	<	00	00	V2E	---	---	---	---	---	---	6<	J	B<
																													G	S	1	<	00	00	V1E	---	---	---	---	---	---	N<	B	A<
07	005		LA	014.920	D	F	H	D	04	04	UO	H	-	S	1	02	25	01	1133	953516252	5	C	A	B	H	D	E	03	A	S	1	<	00	00	16B	V2E	V3E	---	---	---	---	N<	B	A<
																													A	S	1	<	00	02	---	V1E	---	---	---	---	---	N<	B	A<
																													A	S	1	<	00	00	---	V1E	---	---	---	---	---	N<	B	A<
07	005		LA	014.920	D	F	H	D	04	04	UO	H	-	S	7	02	17	01	1110	953516252	6	B	A	A	H	D	B	02	A	S	1	<	00	00	V2E	---	---	---	---	---	---	G<	J	A<
																													F	S	1	<	00	00	V1E	---	---	---	---	---	---	G<	B	A<

DIST	RTES NO	U F	CO	P LOC R POST E MILE	<-----HIGHWAY-----> H A M B LANES RI G C T A LT RT UO	I S D R O A T L H Y	ACCIDENT DATE MO DA YR	TIME HHMM	COMMON ACCIDENT NUMBER	P C F	ENVIR COND W L S	R R T C W O C C	NO MTR VEH	P T	D I R	V H I	S I	PERSN K	O I S P	L O S C	O L O C	L O S O	O L S C	O L O C	L O S C	OA F 12	M O V	SD P 12
07	005		LA	014.920	D F H D 04 04 UO	H - S 6	10-27-00	0205	953515844	6	C C B	H D C	02	A	S	1	<	00	01	V2E	---	---	---	---	N<	J	A<
														A	S	1	<	00	00	V1E	16B	---	---	---	N<	B	A<
07	005		LA	014.920	D F H D 04 04 UO	H - S 6	10-13-00	1520	953514987	6	A A A	H D B	02	G	S	1	<	00	00	V2E	---	---	---	---	G<	J	A<
														A	S	1	<	00	00	V1E	---	---	---	---	G<	B	A<
07	005		LA	014.920	D F H D 04 04 UO	H - S 7	09-16-00	1540	953514335	2	A A A	H D C	02	A	S	1	<	00	00	V2E	---	---	---	---	G<	B	A<
														A	S	1	<	00	00	V1E	---	---	---	---	G<	H	A<
07	005		LA	014.920	D F H D 04 04 UO	H - S 3	08-24-99	1850	953515701	2	A A A	H D C	02	D	S	1	<	00	00	V2E	---	---	---	---	G<	A	A<
														A	S	1	<	00	00	V1E	---	---	---	---	G<	B	G<
07	005		LA	014.920	D F H D 04 04 UO	H - S 6	04-16-99	0110	953514926	6	A D A	H D B	02	D	S	1	<	00	00	V2E	---	---	---	---	N<	B	A<
														D	S	1	<	00	00	V1E	---	---	---	---	N<	J	G<
07	005		LA	014.920	D F H D 04 04 UO	H - S 7	05-16-98	0310	953514987	6	A C A	H D B	02	G	S	1	<	00	00	V2F	---	---	---	---	6<	B	A<
														A	S	1	<	00	00	V1F	---	---	---	---	6<	B	A<
07	005		LA	014.920	D F H D 04 04 UO	H - S 1	01-04-98	1340	953515177	5	C A B	H D E	01	A	S	1	<	00	00	30H	---	---	---	---	N<	B	A<
07	005		LA	014.930	D F H D 04 04 UO	H - S 3	07-10-01	1600	953514245	5	A A A	H D C	02	A	S	1	D	00	00	V2D	---	---	---	---	G<	A	A<
														A	S	1	D	00	00	V1D	---	---	---	---	G<	B	A<
07	005		LA	014.930	D F H D 04 04 UO	H - S 3	02-20-01	1300	953513427	6	B A A	H D B	02	G	S	1	<	00	00	V2E	---	---	---	---	N<	J	A<
														A	S	1	<	00	00	V1E	17H	---	---	---	N<	B	A<
07	005		LA	014.930	D F H D 04 04 UO	H - S 5	11-02-00	1555	953514310	5	A A A	H D C	02	A	S	1	<	00	00	V2D	---	---	---	---	G<	B	A<
														A	S	1	<	00	00	V1D	---	---	---	---	G<	A	A<
07	005		LA	014.930	D F H D 04 04 UO	H - S 7	10-07-00	0215	953515941	5	B D A	H D C	02	A	S	1	<	00	00	V2E	---	---	---	---	N<	J	G<
														A	S	1	<	00	00	V1E	---	---	---	---	N<	B	A<
07	005		LA	014.930	D F H D 04 04 UO	H - S 7	09-23-00	0200	953515914	5	C C B	H D C	02	A	S	1	<	00	00	V2F	---	---	---	---	N<	B	A<
														A	S	1	<	00	00	V1F	---	---	---	---	6<	A	G<
07	005		LA	014.930	D F H D 04 04 UO	H - S 7	09-23-00	0201	953515914	5	A C A	H D C	02	A	S	1	<	00	00	V2F	---	---	---	---	I<	B	A<
														A	S	1	<	00	00	V1F	---	---	---	---	I<	A	A<
07	005		LA	014.930	D F H D 04 04 UO	H - S 4	06-28-00	1800	953514245	5	A A A	H D C	02	A	S	1	<	00	00	V2E	---	---	---	---	G<	A	A<
														A	S	1	<	00	00	V1E	---	---	---	---	G<	B	A<
07	005		LA	014.930	D F H D 04 04 UO	H - S 3	11-30-99	1145	953513427	C	A A A	H D E	01	A	S	1	<	00	00	42D	---	---	---	---	N<	B	A<
07	005		LA	014.930	D F H D 04 04 UO	H - S 7	11-13-99	1220	953515705	6	A A A	H D B	05	G	S	1	<	00	00	V2E	---	---	---	---	N<	J	A<
														D	S	1	<	00	02	V1E	V3E	44D	---	---	N<	B	A<
														D	S	1	<	00	00	---	V2E	---	---	---	N<	B	A<
														A	S	1	<	00	00	---	V5D	---	---	---	N<	H	A<
														D	S	1	<	00	00	---	V4D	---	---	---	2<	B	A<
07	005		LA	014.930	D F H D 04 04 UO	H - S 6	07-30-99	0545	953513427	6	A B A	H D B	03	D	S	1	<	00	00	V2E	---	---	---	---	N<	J	G<
														A	S	1	<	00	00	V1E	V3E	---	---	---	N<	B	A<
														A	S	1	<	00	00	---	V2D	---	---	---	N<	B	A<
07	005		LA	014.930	D F H D 04 04 UO	H - S 4	07-07-99	0840	953513427	4	A A A	H D E	01	D	S	1	<	00	01	16B	---	---	---	---	N<	<	A<
07	005		LA	014.930	D F H D 04 04 UO	H - S 5	07-01-99	1634	953514609	5	A A A	H D C	02	A	S	1	<	00	00	V2E	---	---	---	---	F<	B	A<
														D	S	1	<	00	00	V1E	---	---	---	---	G<	A	A<
07	005		LA	014.930	D F H D 04 04 UO	H - S 5	07-01-99	1839	953514609	5	A A A	H D C	02	A	S	1	<	00	00	V2E	---	---	---	---	F<	B	A<
														A	S	1	<	00	00	V1E	---	---	---	---	G<	A	A<
07	005		LA	014.930	D F H D 04 04 UO	H - S 3	12-15-98	1600	959015565	5	A A A	H D C	04	D	S	1	<	00	02	V2D	---	---	---	---	N<	B	A<
														D	S	1	<	00	01	V1D	V3D	V4D	---	---	N<	A	A<
														A	S	1	<	00	00	---	V2D	---	---	---	N<	A	A<
														A	S	1	<	00	00	---	V2D	---	---	---	N<	A	A<
07	005		LA	014.930	D F H D 04 04 UO	H - S 3	10-27-98	1815	953511990	6	A D A	H D B	02	D	S	1	<	00	00	V2E	---	---	---	---	N<	J	A<
														D	S	1	<	00	00	V1F	---	---	---	---	N<	B	A<

DIST	RTES NO	U F	CO	P LOC R POST E MILE	<-----HIGHWAY-----> H A M B G C T A	LANES LT RT	I S D R O A UO T L H Y	ACCIDENT DATE MO DA YR	TIME HHMM	COMMON ACCIDENT NUMBER	P C F	ENVIR COND W L S	R R T C W O	NO MTR VEH	P T	D I R	V H I	S I	PERSN K	O I S P	L O S C	O L O C	O S O C	O L O C	L O C	OA F 12	M O V	SD P 12
07	005		LA	014.930	D F H D	04 04	UO H - S 6	07-10-98	1255	953508119	5	A A A	H D C	02	A	S	1	<	00 00	V2E	---	---	---	G<	B	A<
															D	S	1	<	00 00	V1E	---	---	---	G<	A	A<
07	005		LA	014.930	D F H D	04 04	UO H - S 1	04-12-98	0645	953515429	1	A A A	H D E	01	A	S	1	<	00 01	16B	---	---	---	4<	R	B<
07	005		LA	014.930	D F H D	04 04	UO H - S 7	03-14-98	0048	953514987	5	B D B	H D C	03	A	S	1	<	00 01	V2D	---	---	---	I<	B	A<
															A	S	1	<	00 02	V1D	V3D	44D	---	I<	A	A<
															A	S	1	<	00 00	---	V2D	---	---	I<	A	A<
07	005		LA	014.930	D F H D	04 04	UO H - S 7	03-14-98	0250	953514987	5	B D B	H D E	03	A	S	1	<	00 00	16B	V2E	---	---	N<	B	C<
															D	S	1	<	00 00	---	V1E	V3E	---	N<	B	A<
															A	S	1	<	00 00	---	V2E	15H	---	N<	B	A<
07	005		LA	014.940	D F H D	04 04	UO H - S 5	07-19-01	0630	959016434	5	A A A	H D C	02	A	S	1	D	00 00	V2E	---	---	---	N<	H	G<
															A	S	1	D	00 01	V1E	---	---	---	N<	B	A<
07	005		LA	014.940	D F H D	04 04	UO H - S 7	05-27-00	0815	953513427	6	A A A	H D H	02	G	S	1	<	00 00	---	---	---	---	N<	B	A<
															A	S	1	<	00 00	V3E	---	---	---	N<	B	A<
															O	<	1	<	00 00	V2E	---	---	---	<<	R	<<
07	005		LA	014.950	D F H D	04 04	UO H - S 3	02-27-01	0625	959014928	5	B A B	H D C	02	A	S	1	<	00 00	V2D	---	---	---	N<	A	A<
															A	S	1	<	00 00	V1D	---	---	---	N<	B	A<
07	005		LA	014.950	D F H D	04 04	UO H - S 4	02-09-00	2247	953513665	1	B C A	H D B	02	A	S	1	<	00 02	V2E	---	---	---	6<	J	B<
															G	S	1	<	00 00	V1E	---	---	---	N<	B	A<
07	005		LA	014.950	D F H D	04 04	UO H - S 7	05-16-98	0240	959014509	6	A C A	H A B	02	D	S	1	<	00 00	V2F	---	---	---	N<	J	A<
															A	S	1	<	00 00	V1E	---	---	---	N<	B	C<
07	005		LA	014.950	D F H D	04 04	UO H - S 7	03-14-98	0046	953514976	4	C D B	H D E	01	A	S	1	<	00 00	15H	---	---	---	N<	R	A<
07	005		LA	014.960	D F H D	04 04	UI H - S 2	07-02-01	1545	959016457	5	A A A	H D C	02	D	S	1	D	00 00	V2E	---	---	---	N<	H	A<
															D	S	1	D	00 00	V1E	---	---	---	N<	B	A<
07	005		LA	014.960	D F H D	04 04	UI H - S 5	06-15-00	1800	959015447	6	A A A	H D B	02	I	S	1	<	00 00	V2F	---	---	---	N<	B	A<
															A	S	1	<	00 00	V1F	---	---	---	N<	I	A<
07	005		LA	014.960	D F H D	04 04	UI H - S 3	12-07-99	1640	959015777	5	A B A	H D C	03	A	S	1	<	00 00	V2D	---	---	---	N<	B	G<
															A	S	1	<	00 00	V1D	V3D	---	---	N<	A	A<
															D	S	1	<	00 00	---	V2D	---	---	N<	A	A<
07	005		LA	014.960	D F H D	04 04	UI H - S 2	09-14-98	1800	959013598	4	A A A	H D E	02	J	S	1	<	00 00	---	V2E	---	---	N<	B	A<
															D	S	1	<	00 00	17H	V1E	---	---	H<	C	A<
07	005		LA	014.970	D F H D	04 04	UI H - S 2	09-10-01	1800	959016457	5	A A A	H D C	02	D	S	1	D	00 00	V2D	---	---	---	N<	A	A<
															A	S	1	D	00 00	V1D	---	---	---	N<	B	A<
07	005		LA	014.970	D F H D	04 04	UI H - S 1	02-25-01	1648	959016257	5	C A B	F D E	02	A	S	1	<	00 00	---	V2E	---	---	N<	B	A<
															A	S	1	<	00 00	16B	V1E	---	---	N<	B	A<
07	005		LA	014.970	D F H D	04 04	UI H - S 2	02-12-01	1600	959016225	5	B E B	H D C	04	A	S	1	<	00 00	V2D	---	---	---	N<	H	A<
															A	S	1	<	00 00	V1D	V3D	---	---	N<	B	A<
															A	S	1	<	00 00	---	V2D	V4D	---	N<	B	A<
															A	S	1	<	00 00	---	V3D	---	---	N<	B	A<
07	005		LA	014.970	D F H D	04 04	UI H - S 3	01-02-01	1115	959016019	6	A A A	H D B	02	M	S	1	<	00 00	V2E	---	---	---	N<	J	A<
															A	S	1	<	00 00	V1E	16B	---	---	N<	B	A<
07	005		LA	014.970	D F H D	04 04	UI H - S 7	12-30-00	0650	959016264	1	A B A	H D E	01	A	S	1	<	00 00	15H	---	---	---	4<	R	B<
07	005		LA	014.970	D F H D	04 04	UI H - S 2	12-11-00	1920	959015182	5	B D A	H D C	02	A	S	1	<	00 01	V2F	---	---	---	N<	H	A<
															A	S	1	<	00 00	V1F	---	---	---	N<	B	A<
07	005		LA	014.970	D F H D	04 04	UI H - S 3	08-29-00	0222	959015868	1	C D B	H D C	03	A	S	1	<	00 00	V2E	V3E	---	---	5<	B	B<
															A	S	1	<	00 00	V1E	16B	---	---	N<	B	A<
															G	S	1	<	00 00	---	V1E	---	---	N<	B	A<

DIST	RTES NO	U F	CO	P LOC R POST E MILE	<-----HIGHWAY-----> H A M B LANES RI F R O A G C T A LT RT UO T L H Y	I S D ACCIDENT DATE MO DA YR	TIME HHMM	COMMON ACCIDENT NUMBER	P C F	ENVIR COND W L S	R R T NO C W O MTR C C VEH	P D V S PERSN O L O L O L O L OA M SD T I H I K I S O S O S O S O F O P T R I P C O C O C O C O C 12 V 12
07	005		LA	014.970	D F H D 04 04 UI H - S 4	08-23-00	0431	959015868	4	A D A H	D E 01	A S 1 < 00 00 16B --- --- --- I< R A<
07	005		LA	014.970	D F H D 04 04 UI H - S 2	11-08-99	0735	959015820	4	C A B H	D D 02	A S 1 < 00 00 V2E --- --- --- N< B A<
												A S 1 < 00 00 V1E 16B --- --- N< R A<
07	005		LA	014.970	D F H D 04 04 UI H - S 3	06-29-99	1450	959015561	5	A A A H	D C 02	D S 1 < 00 00 V2E --- --- --- N< A A<
												A S 1 < 00 00 V1E --- --- --- N< H A<
07	005		LA	014.970	D F H D 04 04 UI H - S 4	05-05-99	0700	959015184	6	A A A H	D B 02	A S 1 < 00 00 V2F --- --- --- N< B A<
												G S 1 < 00 00 V1E --- --- --- N< J A<
07	005		LA	014.970	D F H D 04 04 UI H - S 3	07-14-98	0615	959015222	5	B A A H	D D 02	D S 1 < 00 00 V2D --- --- --- N< B A<
												A S 1 < 00 00 V1D --- --- --- N< B A<
07	005		LA	014.970	D F H D 04 04 UI H - S 6	07-03-98	2108	959015120	4	A C A H	D E 01	A S 1 < 00 02 15H --- --- --- K< R A<
07	005		LA	014.970	D F H D 04 04 UI H - S 4	05-06-98	0625	959015273	5	B A A H	D C 02	F S 1 < 00 00 V2E --- --- --- N< H A<
												F S 1 < 00 00 V1E --- --- --- N< H A<
07	005		LA	014.980	D F H D 04 04 UI H - S 4	07-25-01	0715	959016136		< A <	< < B 02	M S 1 < 00 00 V2E --- --- --- << J <<
												A S 1 < 00 00 V1E --- --- --- << B <<
07	005		LA	014.980	D F H D 04 04 UI H - S 7	07-21-01	1200	959016361	5	A A A H	D C 02	A S 1 D 00 00 V2E --- --- --- N< B A<
												A S 1 D 00 01 V1E --- --- --- N< B A<
07	005		LA	014.980	D F H D 04 04 UI H - S 3	05-15-01	1425	959016257	5	A A A H	D C 02	A S 1 D 00 00 V2E --- --- --- N< A A<
												A S 1 D 00 00 V1E --- --- --- N< B A<
07	005		LA	014.980	D F H D 04 04 UI H - S 2	12-11-00	2000	959015182	5	B D <	H D C 02	A S 1 < 00 00 V2F --- --- --- N< H A<
												D S 1 < 00 00 V1F --- --- --- N< B G<
07	005		LA	014.980	D F H D 04 04 UI H - S 7	11-25-00	1930	959016141	5	A C A H	D C 03	A S 1 < 00 00 --- V2E --- --- N< A A<
												A S 1 < 00 00 V3E V1E --- --- N< H A<
												A S 1 < 00 00 V2E --- --- --- N< H G<
07	005		LA	014.980	D F H D 04 04 UI H - S 3	09-05-00	1830	959015184	5	A B A H	D C 02	A S 1 < 00 00 V2D --- --- --- N< B A<
												A S 1 < 00 00 V1D --- --- --- N< H A<
07	005		LA	014.980	D F H D 04 04 UI H - S 6	07-07-00	1825	959015754		A A A H	D B 02	A S 1 < 00 00 V2F --- --- --- << J G<
												A S 1 < 00 00 V1E --- --- --- << A A<
07	005		LA	014.980	D F H D 04 04 UI H - S 1	07-25-99	0001	959015687	5	A C A H	D C 02	A S 1 < 00 01 V2D --- --- --- I< B A<
												A S 1 < 00 00 V1D --- --- --- << A <<
07	005		LA	014.980	D F H D 04 04 UI H - S 7	07-24-99	2350	959015704	5	A C A H	D C 02	A S 1 < 00 00 V2D --- --- --- N< H A<
												A S 1 < 00 00 V1D --- --- --- N< B A<
07	005		LA	014.980	D F H D 04 04 UI H - S 1	05-16-99	2231	959014845	5	A C A H	D C 02	D S 1 < 00 00 V2E --- --- --- N< B A<
												A S 1 < 00 00 V1E --- --- --- N< H A<
07	005		LA	014.980	D F H D 04 04 UI H - S 1	05-24-98	0006	959015514	6	A C A H	D B 02	A S 1 < 00 00 V2E 16B --- --- N< B A<
												I S 1 < 00 00 V1E --- --- --- N< J G<
07	005		LA	014.980	D F H D 04 04 UI H - S 7	02-28-98	0710	959015273	6	A A A D	A H 02	F S 1 < 00 00 V2E --- --- --- N< G A<
												A S 1 < 00 00 V1E --- --- --- N< A A<
07	005		LA	014.980	D F H D 04 04 UI H - S 5	02-12-98	2240	959014888	5	B C A H	D C 02	A S 1 < 00 00 V2E --- --- --- N< B A<
												A S 1 < 00 00 V1E --- --- --- N< B A<
07	005		LA	014.980	D F H D 04 04 UI H - S 2	01-19-98	1545	959015346	5	A A A H	D C 03	D S 1 < 00 00 --- V2F --- --- G< R A<
												D S 1 < 00 00 V3F V1F --- --- G< A A<
												D S 1 < 00 00 V2F --- --- --- G< B A<
07	005		LA	014.990	D F H D 04 04 UI H - S 4	09-08-99	1910	959013503	6	A B A H	D C 02	A S 1 < 00 00 V2E --- --- --- N< J A<
												A S 1 < 00 00 V1E --- --- --- N< B A<
07	005		LA	014.990	D F H D 04 04 UI H - S 2	04-12-99	1655	959015514	1	B A A H	D C 02	A S 1 < 00 00 V2F --- --- --- 5< B B<
												A S 1 < 00 00 V1F --- --- --- G< A A<

RTES DIST	U NO	F	CO	P LOC R POST E MILE	<-----HIGHWAY-----> H G	A C	M T	B A	LANES LT	RT	UO	I T	F L	R H	O Y	A	ACCIDENT DATE MO	DA	YR	TIME HHMM	COMMON ACCIDENT NUMBER	P C F	ENVIR COND W	L	S	R C	R W	T O C	NO MTR VEH	P T R	D I	V H I	S I	PERSN K	O I S P	L O S C	O S O C	L O S O	O S O C	L O S O.C	OA F 12	M O V	SD P 12
07	005		LA	014.990	D	F	H	D	04	04	UI	H	-	S	5	03	25	99	1320	959015544	5	C	A	B	H	D	C	02	A	S	1	<	00	00	V2D	---	---	---	N<	B	A<
																													A	S	1	<	00	00	V1D	---	---	---	N<	H	A<
07	005		LA	014.990	D	F	H	D	04	04	UI	H	-	S	3	12	22	98	2000	959015518	5	A	C	A	H	D	C	03	D	S	1	<	00	00	---	V2E	---	---	N<	H	A<
																													A	S	1	<	00	00	V3E	V1E	---	---	N<	H	A<
																													D	S	1	<	00	00	V2E	---	---	---	N<	B	C<
07	005		LA	014.990	D	F	H	D	04	04	UI	H	-	S	5	08	06	98	1845	959015504	5	A	A	A	H	D	C	03	A	S	1	<	00	00	V2D	---	---	---	N<	B	A<
																													A	S	1	<	00	00	V1D	V3D	---	---	N<	H	A<
																													D	S	1	<	00	00	---	V2D	---	---	N<	H	A<
07	005		LA	014.990	D	F	H	D	04	04	UI	H	-	S	1	05	03	98	0905	959015273	5	B	A	B	H	D	B	03	2	S	1	<	00	00	V2E	---	---	---	N<	H	A<
																													A	S	1	<	00	00	V1E	---	---	---	N<	H	A<
																													G	S	1	<	00	00	---	---	---	---	N<	B	G<
07	005		LA	015.000	D	F	H	D	04	04	UI	H	-	S	1	03	18	01	1940	959016122	5	A	C	A	H	D	C	03	A	S	1	<	00	00	---	V2E	---	---	N<	H	A<
																													A	S	1	<	00	00	V3E	V1E	---	---	N<	H	A<
																													D	S	1	<	00	00	V2E	---	---	---	N<	B	A<
07	005		LA	015.000	D	F	H	D	04	04	UI	H	-	S	1	04	11	99	2200	959015423	5	B	C	B	H	D	E	01	D	S	1	<	00	00	16B	---	---	---	4<	B	A<
07	005		LA	015.000	D	F	H	D	04	04	UI	H	-	S	2	03	15	99	0940	959015452	5	C	A	B	H	D	C	02	A	S	1	<	00	00	V2D	---	---	---	N<	B	A<
																													A	S	1	<	00	00	V1D	---	---	---	N<	B	A<
07	005		LA	015.000	D	F	H	D	04	04	UI	H	-	S	4	09	30	98	0110	959014628	4	A	C	A	H	D	E	01	D	S	1	<	00	00	30H	---	---	---	N<	R	A<
07	005		LA	015.000	D	F	H	D	04	04	UI	H	-	S	6	03	27	98	1605	959015423	5	A	A	A	H	D	C	02	D	S	1	<	00	00	V2E	---	---	---	N<	A	A<
																													D	S	1	<	00	00	V1E	---	---	---	N<	B	A<
07	005		LA	015.000	D	F	H	D	04	04	UI	H	-	S	3	02	03	98	1425	959015365	5	C	A	B	H	D	C	02	A	S	1	<	00	00	V2D	---	---	---	N<	H	A<
																													D	S	1	<	00	00	V1D	---	---	---	N<	B	A<
07	005		LA	015.010	D	F	H	D	04	04	UI	H	-	S	1	03	05	00	0720	959015888	5	C	<	A	B	D	C	02	A	S	1	<	00	01	V2E	---	---	---	N<	B	A<
																													F	S	1	<	00	01	V1E	16B	44E	---	N<	H	A<
07	005		LA	015.010	D	F	H	D	04	04	UI	H	-	S	1	03	05	00	0722	959015888	5	C	A	B	H	D	C	04	D	S	1	<	00	00	---	V2E	---	---	N<	A	A<
																													A	S	1	<	00	00	V3E	V1E	---	---	N<	A	A<
																													A	S	1	<	00	01	V2E	V4E	---	---	N<	H	A<
																													A	S	1	<	00	00	---	V3E	---	---	5<	H	A<
07	005		LA	015.010	D	F	H	D	04	04	UI	H	-	S	3	09	08	98	0635	959015452	5	B	C	A	H	D	C	06	D	S	1	<	00	00	---	V2E	---	---	N<	B	A<
																													D	S	1	<	00	01	---	V5E	V1E	---	5<	B	A<
																													A	S	1	<	00	00	---	V4D	---	---	N<	B	A<
																													A	S	1	<	00	00	---	V5E	V3D	16B	N<	B	A<
																													A	S	1	<	00	02	V6E	V2E	V4E	---	N<	B	A<
																													A	S	1	<	00	01	V5E	15H	44H	---	N<	H	A<
07	005		LA	015.010	D	F	H	D	04	04	UI	H	-	S	7	05	16	98	0600	959015510	5	A	A	A	H	D	E	02	D	S	1	<	00	00	16B	V2D	---	---	N<	R	A<
																													A	S	1	<	00	00	---	V1E	---	---	N<	B	A<
07	005		LA	015.010	D	F	H	D	04	04	UI	H	-	S	7	04	11	98	1805	959015407	5	C	A	B	H	D	D	02	A	S	1	<	00	00	V2E	---	---	---	N<	H	A<
																													A	S	1	<	00	00	V1E	---	---	---	N<	B	A<
07	005		LA	015.010	D	F	H	D	04	04	UI	H	-	S	7	02	07	98	1755	959015365	5	C	D	B	H	D	C	02	D	S	1	<	00	00	V2E	18H	---	---	N<	B	A<
																													M	S	1	<	00	00	V1E	---	---	---	N<	B	G<
07	005		LA	015.020	D	F	H	D	04	04	UI	H	-	S	6	06	29	01	0550	959013481	6	A	A	A	H	D	B	02	A	S	1	D	00	00	V2E	---	---	---	L<	J	A<
																													A	S	1	D	00	00	V1E	---	---	---	N<	B	A<
07	005		LA	015.020	D	F	H	D	04	04	UI	H	-	S	1	03	05	00	0723	959015888	5	C	A	B	H	D	C	02	A	S	1	<	00	01	V2F	---	---	---	I<	A	A<
																													A	<	1	<	00	00	V1F	---	---	---	N<	B	G<
07	005		LA	015.020	D	F	H	D	04	04	UI	H	-	S	7	10	10	98	1830	959015480	5	A	B	A	H	D	C	04	A	S	1	<	00	01	V2E	V4E	---	---	N<	B	A<
																													A	S	1	<	00	00	V1E	V3E	---	---	N<	H	A<
																													A	S	1	<	00	00	---	V2E	---	---	N<	H	G<
																													A	S	1	<	00	03	---	V1E	---	---	5<	B	A<

DIST	RTES NO	U F	CO	P LOC R POST E MILE	<-----HIGHWAY-----> H G	A C	M T	B A	LANES LT	RT	RI UO	I F T	S R L	D O H	A Y	ACCIDENT DATE MO	DA	YR	TIME HHMM	COMMON ACCIDENT NUMBER	P C F	ENVIR COND W	L S	R C	R W C	T O C	NO MTR VEH	P T	D I R	V H I	S I	PERSN K	O I P	L O C	O S O	L O C	O S O	L O C	O S O	L O C	OA F 12	M O V	SD P 12
07	005		LA	015.020	D	F	H	D	04	04	UI	H	-	S	6	06	19	98	2210	959013541	D	A	C	A	E	A	C	02	A	S	1	<	00	00	V2E	---	---	---	---	L<	H	A<
																													A	S	1	<	00	00	V1E	---	---	---	---	N<	B	A<
07	005		LA	015.020	D	F	H	D	04	04	UI	H	-	S	2	06	08	98	1530	959015407	5	A	A	A	H	D	C	02	D	S	1	<	00	00	V2E	---	---	---	---	N<	H	A<
																													D	S	1	<	00	00	V1E	---	---	---	---	N<	A	A<
07	005		LA	015.020	D	F	H	D	04	04	UI	H	-	S	1	02	22	98	0015	959014551	5	C	C	B	H	D	B	02	A	S	1	<	00	00	V2E	23H	---	---	---	N<	B	A<
																													A	S	1	<	00	00	V1D	---	---	---	---	N<	B	A<
07	005		LA	015.030	D	F	H	D	04	04	UI	H	-	S	6	08	06	99	1010	959013598	4	A	A	A	H	D	E	01	A	S	1	<	00	00	16B	---	---	---	---	N<	R	A<
07	005		LA	015.030	D	F	H	D	04	04	UI	H	-	S	4	12	23	98	1750	959015518	5	A	C	A	H	D	C	02	A	S	1	<	00	00	V2F	---	---	---	---	N<	B	A<
																													D	S	1	<	00	00	V1F	---	---	---	---	N<	H	A<
07	005		LA	015.030	D	F	H	D	04	04	UI	H	-	S	2	03	30	98	1430	959015365	D	A	A	A	H	D	C	04	F	S	1	<	00	00	V2E	---	---	---	---	N<	B	A<
																													A	S	1	<	00	00	V1E	V3E	V4D	---	---	N<	J	A<
																													A	S	1	<	00	00	---	V2E	---	---	---	N<	B	A<
																													A	S	1	<	00	00	---	V2D	---	---	---	N<	B	A<
07	005		LA	015.040	D	F	H	D	04	04	UI	H	-	S	7	11	28	98	0803	953514704	5	C	A	B	H	D	C	02	A	S	1	<	00	00	V2E	---	---	---	---	I<	A	A<
																													D	S	1	<	00	00	V1E	---	---	---	---	I<	B	A<
07	005		LA	015.050	D	F	H	D	04	04	UI	H	-	S	5	07	19	01	0640	959015684	5	A	A	A	H	D	C	02	A	S	1	D	00	00	V2E	---	---	---	---	N<	B	A<
																													F	S	1	D	00	00	V1E	---	---	---	---	N<	A	A<
07	005		LA	015.050	D	F	H	D	04	04	UI	H	-	S	6	01	26	01	0715	959016164	5	C	A	B	H	D	C	02	A	S	1	<	00	00	V2E	---	---	---	---	N<	B	A<
																													A	S	1	<	00	00	V1E	---	---	---	---	N<	B	A<
07	005		LA	015.050	D	F	H	D	04	04	UI	H	-	S	1	12	10	00	1730	959016130	5	A	C	A	H	D	C	02	A	S	1	<	00	00	V2E	---	---	---	---	N<	H	A<
																													A	S	1	<	00	00	V1E	---	---	---	---	N<	B	G<
07	005		LA	015.050	D	F	H	D	04	04	UI	H	-	S	6	12	01	00	0040	959016271	5	A	C	A	H	D	C	02	F	S	1	<	00	01	V2E	---	---	---	---	N<	A	A<
																													D	S	1	<	00	01	V1E	---	---	---	---	N<	B	A<
07	005		LA	015.050	D	F	H	D	04	04	UI	H	-	S	7	10	23	99	0800	959015820	6	A	A	A	H	D	C	02	D	S	1	<	00	00	V2F	---	---	---	---	N<	B	A<
																													A	S	1	<	00	01	V1F	---	---	---	---	H<	J	A<
07	005		LA	015.060	D	F	H	D	04	04	UI	H	-	S	6	08	03	01	1630	959015346	5	A	A	A	H	D	C	04	A	S	1	D	00	00	---	V2F	---	---	---	G<	A	A<
																													A	S	1	C	00	00	---	V3F	V1F	---	---	G<	A	A<
																													A	S	1	C	00	00	V4F	V2F	---	---	---	G<	A	A<
																													A	S	1	D	00	00	V3F	---	---	---	---	N<	B	G<
07	005		LA	015.060	D	F	H	D	04	04	UI	H	-	S	6	03	30	01	1220	959016189	5	A	A	A	H	D	C	02	A	S	1	<	00	01	V2E	---	---	---	---	N<	A	A<
																													A	S	1	<	00	00	V1E	---	---	---	---	N<	B	A<
07	005		LA	015.100	D	F	H	D	04	04	UI	H	-	S	7	05	19	01	1920	959016280	1	A	C	A	H	D	C	02	A	S	1	D	00	00	V2F	---	---	---	---	5<	B	B<
																													A	S	1	D	00	01	V1F	---	---	---	---	N<	B	A<
07	005		LA	015.100	D	F	H	D	04	04	UI	H	-	S	7	03	11	00	2320	959015585	6	A	C	A	H	D	B	02	A	S	1	<	00	00	V2F	---	---	---	---	N<	J	G<
																													D	S	1	<	00	00	V1F	---	---	---	---	N<	B	A<
07	005		LA	015.110	D	F	H	D	04	04	UI	H	-	S	4	06	20	01	1500	959016462	5	A	A	A	H	D	C	02	A	S	1	D	00	00	V2F	---	---	---	---	N<	H	A<
																													G	S	1	D	00	00	V1F	---	---	---	---	N<	B	A<
07	005		LA	015.130	D	F	H	D	04	04	UI	H	-	S	4	10	27	99	1825	959015773	5	A	D	A	H	D	C	03	A	S	1	<	00	00	V2E	---	---	---	---	N<	B	A<
																													A	S	1	<	00	00	V1E	V3E	---	---	---	N<	B	A<
																													A	S	1	<	00	00	---	V2E	---	---	---	N<	A	A<
07	005		LA	015.160	D	F	H	D	04	04	UI	H	-	S	3	06	16	98	1900	959014628	5	B	A	A	H	D	C	02	A	S	1	<	00	00	V2F	---	---	---	---	N<	B	A<
																													D	S	1	<	00	00	V1F	---	---	---	---	F<	J	A<
07	005		LA	015.160	D	F	H	D	04	04	UI	H	-	S	7	01	03	98	0930	959015273	6	C	A	B	H	D	B	05	A	S	1	<	00	00	V2D	V3D	V4F	V1F	---	N<	J	A<
																													D	S	1	<	00	00	V1E	---	---	---	---	N<	B	A<
																													A	S	1	<	00	00	---	V1D	---	---	---	N<	B	A<
																													A	S	1	<	00	00	---	V1F	---	---	---	N<	A	A<
																													A	S	2	<	00	00	---	V1F	---	---	---	N<	A	A<

- - - ACCIDENT SUMMARY - - -

TOTAL ACCIDENTS	FATAL	INJURY	PDO	PERSONS KILLED	PERSONS INJURED	MOTOR VEHICLES INVOLVED NUMBER	PCT	CODE	LINES CODED NUMBER	PCT	CODE
175	0	36	139	0	61	29	16.5	1	29	16.5	1
						109	62.2	2	108	61.7	2
WITHOUT DETAIL						26	14.8	3	27	15.4	3
0						11	6.2	> 3	8	4.5	4
									2	1.1	5
									1	0.5	6
									0	0.0	7
									0	0.0	8
									0	0.0	9

<--------HOUR OF DAY-------->

NUMBER	PCT	CODE
7	4.0	00- 12 MID.
4	2.2	01- 1 A.M.
10	5.7	02- 2 A.M.
2	1.1	03- 3 A.M.
2	1.1	04- 4 A.M.
6	3.4	05- 5 A.M.
10	5.7	06- 6 A.M.
8	4.5	07- 7 A.M.
5	2.8	08- 8 A.M.
5	2.8	09- 9 A.M.
5	2.8	10- 10 A.M.
7	4.0	11- 11 A.M.
5	2.8	12- 12 NOON
7	4.0	13- 1 P.M.
8	4.5	14- 2 P.M.
13	7.4	15- 3 P.M.
17	9.7	16- 4 P.M.
12	6.8	17- 5 P.M.
19	10.8	18- 6 P.M.
6	3.4	19- 7 P.M.
5	2.8	20- 8 P.M.
4	2.2	21- 9 P.M.
6	3.4	22- 10 P.M.
2	1.1	23- 11 P.M.
0	0.0	25- UNKNOWN

<-------ACCESS CONTROL---------->

NUMBER	PCT	CODE
0	0.0	C-CONVENTIONAL
0	0.0	E-EXPRESSWAY
175	100.0	F-FREEWAY
0	0.0	S-1-WAY CITY ST
0	0.0	--INVALID DATA
0	0.0	+-NO DATA

<-------SIDE OF HIGHWAY------>

NUMBER	PCT	CODE
0	0.0	N-NORTHBOUND
175	100.0	S-SOUTHBOUND
0	0.0	E-EASTBOUND
0	0.0	W-WESTBOUND

<----------YEAR------->

NUMBER	PCT	CODE
0	0.0	1992
0	0.0	1993
0	0.0	1994
0	0.0	1995
0	0.0	1996
0	0.0	1997
59	33.7	1998
32	18.2	1999
42	24.0	2000
42	24.0	2001
0	0.0	2002

<----------MONTH----------->

NUMBER	PCT	CODE
11	6.2	01-JANUARY
20	11.4	02-FEBRUARY
23	13.1	03-MARCH
13	7.4	04-APRIL
16	9.1	05-MAY
12	6.8	06-JUNE
21	12.0	07-JULY
10	5.7	08-AUGUST
12	6.8	09-SEPTEMBER
11	6.2	10-OCTOBER
11	6.2	11-NOVEMBER
15	8.5	12-DECEMBER

<---------DAY OF WEEK-------->

NUMBER	PCT	CODE
28	16.0	1-SUNDAY
23	13.1	2-MONDAY
26	14.8	3-TUESDAY
22	12.5	4-WEDNESDAY
13	7.4	5-THURSDAY
26	14.8	6-FRIDAY
37	21.1	7-SATURDAY

- - - ACCIDENT SUMMARY - - -

<-----PRIMARY COLLISION FACTOR--------->

NUMBER	PCT	CODE
9	5.1	1-INFLUENCE ALCOHOL
9	5.1	2-FOLLOW TOO CLOSE
0	0.0	3-FAILURE TO YIELD
18	10.2	4-IMPROPER TURN
96	54.8	5-SPEEDING
37	21.1	6-OTHER VIOLATIONS
0	0.0	B-IMPROPER DRIVING
2	1.1	C-OTHER THAN DRIVER
2	1.1	D-UNKNOWN
0	0.0	E-FELL ASLEEP
0	0.0	<-NOT STATED
2	1.1	-INVALID CODES

<---------TYPE OF COLLISION--------->

NUMBER	PCT	CODE
0	0.0	A-HEAD-ON
40	22.8	B-SIDESWIPE
93	53.1	C-REAR END
3	1.7	D-BROADSIDE
37	21.1	E-HIT OBJECT
0	0.0	F-OVERTURN
0	0.0	G-AUTO-PEDESTRIAN
2	1.1	H-OTHER
0	0.0	<-NOT STATED
0	0.0	-INVALID CODES

<----------ROADWAY CONDITION---------->

NUMBER	PCT	CODE
0	0.0	A-HOLES, RUTS
1	0.5	B-LOOSE MATERIAL
1	0.5	C-OBSTRUCTION ON ROAD
4	2.2	D-CONSTRUCT-REPAIR-ZONE
1	0.5	E-REDUCED ROAD WIDTH
1	0.5	F-FLOODED
0	0.0	G-OTHER
166	94.8	H-NO UNUSUAL CONDITION
1	0.5	<-NOT STATED

<----------WEATHER---------->

NUMBER	PCT	CODE
114	65.1	A-CLEAR
35	20.0	B-CLOUDY
25	14.2	C-RAINING
0	0.0	D-SNOWING
0	0.0	E-FOG
0	0.0	F-OTHER
0	0.0	G-WIND
1	0.5	<-NOT STATED

<----------LIGHTING---------->

NUMBER	PCT	CODE
108	61.7	A-DAYLIGHT
9	5.1	B-DUSK/DAWN
37	21.1	C-DARK-STREET LIGHT
19	10.8	D-DARK-NO STREET LIGHT
1	0.5	E-DARK-INOPR STREET LIGHT
0	0.0	F-DARK-NOT STATED
1	0.5	<-NOT STATED
0	0.0	-INVALID CODES

<-------ROAD SURFACE--------->

NUMBER	PCT	CODE
131	74.8	A-DRY
42	24.0	B-WET
0	0.0	C-SNOWY, ICY
0	0.0	D-SLIPPERY
2	1.1	<-NOT STATED
0	0.0	-INVALID CODES

<---------RIGHT OF WAY CONTROL---------->

NUMBER	PCT	CODE
3	1.7	A-CONTROL FUNCTIONING
0	0.0	B-CONTROL NOT FUNCTIONING
0	0.0	C-CONTROLS OBSCURED
171	97.7	D-NO CONTROLS PRESENT
1	0.5	<-NOT STATED

<---------HIGHWAY GROUP---------->

NUMBER	PCT	CODE
0	0.0	R-IND. ALIGN-RIGHT
0	0.0	L-IND. ALIGN-LEFT
175	100.0	D-DIVIDED
0	0.0	U-UNDIVIDED

<---INTERSECTION OR RAMP ACCIDENT LOCATION----->

NUMBER	PCT	CODE
0	0.0	1-RAMP INTERSECTION (EXIT)
0	0.0	2-RAMP
0	0.0	3-RAMP ENTRY
0	0.0	4-RAMP AREA, INTERSECT STREET
0	0.0	5-IN INTERSECTION
0	0.0	6-OUTSIDE INTRSCT-NONSTATE RTE
175	100.0	--DOES NOT APPLY

- - - PARTY SUMMARY - - -

PARTY TYPE NUMBER	PCT	CODE	MOVEMENT PRECEDING COLLISION NUMBER	PCT	CODE	OTHER ASSOCIATED FACTOR # 1	PCT	# 2	PCT	CODE
156	89.1	A-PASNGR CAR/STA WAGON	51	29.1	A-STOPPED	0	0.0	0	0.0	1-INFLUENCE ALCOHOL
0	0.0	B-PASNGR CAR W/TRALR	150	85.7	B-PROCEDED STRAIGHT	2	1.1	0	0.0	2-FOLLOW TOO CLOSE
0	0.0	C-MOTORCYCLE	1	0.5	C-RAN OFF ROAD	0	0.0	0	0.0	3-FAILURE TO YIELD
56	32.0	D-PICKUP/PANEL TRUCK	0	0.0	D-MAKING RIGHT TURN	5	2.8	0	0.0	4-IMPROPER TURN
1	0.5	E-PICKUP/PANEL W/TRALR	0	0.0	E-MAKING LEFT TURN	7	4.0	0	0.0	5-SPEEDING
15	8.5	F-TRUCK/TRUCK TRACTOR	0	0.0	F-MAKING U TURN	5	2.8	0	0.0	6-OTHER VIOLATIONS
22	12.5	G-TRK/TRACTOR & 1 TRALR	1	0.5	G-BACKING	0	0.0	0	0.0	A-CELL PHONE* (INATTN)
1	0.5	2-TRK/TRACTOR & 2 TRALR	39	22.2	H-SLOWING, STOPPING	0	0.0	0	0.0	B-ELECTRONIC EQUIP* (INATTN)
0	0.0	3-TRK/TRACTOR & 3 TRALR	1	0.5	I-PASS OTHER VEHICLE	0	0.0	0	0.0	C-RADIO/CD/HEADPHN* (INATTN)
0	0.0	4-SINGLE UNIT TANKER	38	21.7	J-CHANGING LANES	0	0.0	0	0.0	D-SMOKING* (INATTN)
0	0.0	5-TRK/TRA & 1 TANK TRLR	0	0.0	K-PARKING	0	0.0	0	0.0	E-VISION OBSCUREMENT
0	0.0	6-TRK/TRA & 2 TANK TRLR	0	0.0	L-ENTER FROM SHLDR	4	2.2	0	0.0	F-INATTENTION - OTHER
0	0.0	H-SCHOOL BUS	0	0.0	M-OTHER UNSAFE TURN	39	22.2	2	1.1	G-STOP & GO TRAFFIC
2	1.1	I-OTHER BUS	0	0.0	N-CROSS INTO OPP LN	2	1.1	0	0.0	H-ENTER/LEAVE RAMP
1	0.5	J-EMERGENCY VEHICLE	0	0.0	O-PARKED	6	3.4	0	0.0	I-PREVIOUS COLLISION
0	0.0	K-HIGHWAY CONST EQUIP	0	0.0	P-MERGING	0	0.0	0	0.0	J-UNFAMILIAR WITH ROAD
0	0.0	L-BICYCLE	0	0.0	Q-TRVL WRONG WAY	1	0.5	0	0.0	K-DEFECT VEHICLE EQUIP
4	2.2	M-OTHER-MOTOR VEH	21	12.0	R-OTHER	3	1.7	1	0.5	L-UNINVOLVED VEHICLE
0	0.0	N-OTHER-NON-MOTOR VEH	1	0.5	<-NOT STATED	0	0.0	0	0.0	M-OTHER
1	0.5	O-SPILLED LOADS				122	69.7	0	0.0	N-NONE APPARENT
0	0.0	P-DISENGAGED TOW			PEDESTRIAN	0	0.0	0	0.0	P-WIND
0	0.0	Q-UNINVOLVED VEHICLE	0	0.0	2-XING XWALK-INTRST	0	0.0	0	0.0	R-RAMP ACCIDENT
0	0.0	R-MOPED	0	0.0	3-XING XWALK-NOT INTR	0	0.0	0	0.0	S-RUNAWAY VEHICLE
0	0.0	T-TRAIN	0	0.0	4-XING NOT XWALK	0	0.0	0	0.0	T-EATING* (INATTN)
0	0.0	U-PEDESTRIAN	0	0.0	5-ROADWAY-INCL SHLDR	0	0.0	0	0.0	U-CHILDREN* (INATTN)
0	0.0	V-DISMOUNT PEDESTRIAN	0	0.0	6-NOT IN ROADWAY	0	0.0	0	0.0	V-ANIMALS* (INATTN)
0	0.0	W-ANIMAL - LIVESTOCK	0	0.0	7-APRH-LEAVE SCHL BUS	0	0.0	0	0.0	W-PERSONAL HYGIENE* (INATTN)
0	0.0	X-ANIMAL - DEER	0	0.0	-INVALID CODES	0	0.0	0	0.0	X-READING* (INATTN)
0	0.0	Z-ANIMAL - OTHER				4	2.2	174	99.4	<-NOT STATED
						0	0.0	0	0.0	--DOES NOT APPLY

*INATTENTION CODES EFF. 01-01-01

DIRECTION OF TRAVEL NUMBER	PCT	CODE
0	0.0	N-N, NE, NW BOUND
175	100.0	S-S, SE, SW BOUND
0	0.0	E-EASTBOUND
0	0.0	W-WESTBOUND
2	1.1	<-NOT STATED
0	0.0	--DOES NOT APPLY

SPECIAL INFORMATION NUMBER	PCT	CODE
0	0.0	A-HAZARDOUS MATERIALS
0	0.0	B-CELL PHONE IN USE*
7	4.0	C-CELL PHONE NOT IN USE*
19	10.8	D-CELL PHONE NONE/UNKNOWN*
152	86.8	<-NOT STATED
0	0.0	--DOES NOT APPLY
0	0.0	-INVALID CODES

*SPECIAL INFORMATION CODES EFF. 04-01-01

- - - PARTY SUMMARY - - -

OBJECT STRUCK					LOCATION OF COLLISION				
PRIMARY		OTHERS			PRIMARY		OTHERS		
NUMBER	PCT	NUMBER	PCT		NUMBER	PCT	NUMBER	PCT	CODE
0	0.0	0	0.0	01-SIDE OF BRIDGE RAILING	0	0.0	0	0.0	A-BEYOND MEDIAN OR STRIPE-LFT
0	0.0	0	0.0	02-END OF BRIDGE RAILING	21	12.0	11	6.2	B-BEYOND SHLDER DRIVERS LEFT
0	0.0	0	0.0	03-PIER,COLUMN,ABUTMENT	0	0.0	0	0.0	C-LEFT SHOULDER AREA
0	0.0	0	0.0	04-BOTTOM OF STRUCTURE	32	18.2	15	8.5	D-LEFT LANE
0	0.0	0	0.0	05 BRIDGE END POST IN GORE	96	54.8	27	15.4	E-INTERIOR LANES
0	0.0	0	0.0	06-END OF GUARD RAIL	26	14.8	6	3.4	F-RIGHT LANE
0	0.0	0	0.0	07-BRIDGE APPROACH GRD RAIL	1	0.5	0	0.0	G-RIGHT SHOULDER AREA
0	0.0	0	0.0	10-LIGHT OR SIGNAL POLE	14	8.0	8	4.5	H-BEYOND SHLDER DRIVERS RIGHT
0	0.0	0	0.0	11-UTILITY POLE	0	0.0	0	0.0	I-GORE AREA
0	0.0	0	0.0	12-POLE (TYPE NOT STATED)	0	0.0	0	0.0	J-OTHER
0	0.0	1	0.5	13-TRAFFIC SIGN/SIGN POST	0	0.0	0	0.0	V-HOV LANE(S)
0	0.0	0	0.0	14-OTHER SIGNS NOT TRAFFIC	0	0.0	0	0.0	W-HOV LANE BUFFER AREA
7	4.0	2	1.1	15-GUARDRAIL	0	0.0	0	0.0	<-NOT STATED
21	12.0	11	6.2	16-MEDIAN BARRIER	44	25.1	175	100.0	--DOES NOT APPLY
3	1.7	1	0.5	17-WALL(EXCEPT SOUND WALL)	0	0.0	0	0.0	-INVALID CODES
0	0.0	1	0.5	18-DIKE OR CURB					
0	0.0	0	0.0	19-TRAFFIC ISLAND					
0	0.0	0	0.0	20-RAISED BARS					
0	0.0	0	0.0	21-CONCRETE OBJ(HDWL,D.I.)					
0	0.0	0	0.0	22-GUIDEPOST,CULVERT,PM					
0	0.0	1	0.5	23-CUT SLOPE OR EMBANKMENT					
0	0.0	0	0.0	24-OVER EMBANKMENT					
0	0.0	0	0.0	25-IN WATER					
0	0.0	0	0.0	26-DRAINAGE DITCH					
0	0.0	0	0.0	27-FENCE					
0	0.0	0	0.0	28-TREES					
0	0.0	0	0.0	29-PLANTS					
3	1.7	2	1.1	30-SOUND WALL					
0	0.0	0	0.0	40-NATURAL MATRL ON ROAD					
1	0.5	0	0.0	41-TEMP BARRICADES, CONES					
2	1.1	0	0.0	42-OTHER OBJECT ON ROAD					
0	0.0	0	0.0	43-OTHER OBJECT OFF ROAD					
0	0.0	5	2.8	44-OVERTURNED					
0	0.0	0	0.0	45-CRASH CUSHION(SAND)					
0	0.0	0	0.0	46-CRASH CUSHION(OTHER)					
0	0.0	0	0.0	51-CALL BOX					
0	0.0	0	0.0	98-UNKNOWN OBJECT STRUCK					
0	0.0	0	0.0	99-NO OBJECT INVOLVED					
138	78.8	39	22.2	V1 THRU V9-VEHICLE 1 TO 9					
0	0.0	0	0.0	<<-NOT STATED					
44	25.1	175	100.0	---DOES NOT APPLY					
0	0.0	0	0.0	-INVALID CODES					

SOBRIETY		DRUG/PHYSICAL		
NUMBER	PCT	NUMBER	PCT	CODE
168	96.0	0	0.0	A-HAD NOT BEEN DRINKING
9	5.1	0	0.0	B-HBD - UNDER INFLUENCE
5	2.8	0	0.0	C-HBD - NOT UNDER INFLUENCE
0	0.0	0	0.0	D-HBD - IMPAIRMENT UNKNOWN
0	0.0	0	0.0	E-UNDER DRUG INFLUENCE
0	0.0	0	0.0	F-OTHER PHYSICAL IMPAIRMENT
29	16.5	0	0.0	G-IMPAIRMENT NOT KNOWN
0	0.0	0	0.0	H-NOT APPLICABLE
0	0.0	2	1.1	I-FATIGUE
4	2.2	174	99.4	<-NOT STATED
0	0.0	0	0.0	--DOES NOT APPLY
		0	0.0	-INVALID CODES

TASAS TABLE C POTENTIAL INVESTIGATION LOCATIONS .2 MILE
DISTRICT 07 DATA FOR 98-07-01 THRU 01-06-30
ALL ACCIDENTS
CONFIDENCE LEVEL 99.5 PERCENT

LOCATION DESCRIPTION	SCL RMP LNS	R U S	RATE GRP	TOTAL ACCIDENTS 36 MO ACCS	24 MO ACCS	12 MO ACCS	6 MO ACCS	3 MO ACCS	AVE ADT 1000 MAIN	VEH X-ST	12 MOS RATE ACCS/MV-MVH ACTUAL F+I	ACTUAL TOT	AVERAGE F+I	AVERAGE TOT	INV REQ
005 LA 12.600 TO 12.800 SOUTH	04D	U	H65	41 N	31 N	22 Y	15 Y	8 Y	115.0	-	0.36	2.64	0.38	1.21	REQ
005 LA 12.640 TO 12.840 NORTH	04D	U	H65	60 Y	37 Y	20 Y	9 N	3 N	115.2	-	0.84	2.39	0.38	1.21	REQ
005 LA 12.800 TO 13.000 SOUTH	04D	U	H65	111 Y	78 Y	41 Y	23 Y	6 N	116.0	-	1.31	4.87	0.38	1.21	REQ
005 LA 12.944 NBOFF SB ATLANTIC/TRGGS	F	H	U R26	12 N	12 Y	8 Y	3 N	2 N	4.8	-	0.00	4.59	0.39	1.15 +	REQ
005 LA 13.069 SB OFF TO TRIGGS ST	F	H	U R26	7 Y	5 Y	4 Y	0 N	0 N	1.2	-	2.30	9.18	0.39	1.15 +	REQ
005 LA 13.680 TO 13.880 NORTH	03D	U	H64	65 Y	50 Y	21 N	12 N	10 N	122.7	-	0.78	2.35	0.54	1.75	
005 LA 13.680 TO 13.880 SOUTH	03D	U	H64	58 N	45 N	23 N	19 Y	7 N	122.7	-	0.45	2.58	0.54	1.75	REQ
005 LA 14.020 TO 14.220 SOUTH	04D	S	H62	67 Y	51 Y	34 Y	20 Y	10 Y	130.0	-	0.42	3.60	0.38	1.16	REQ
005 LA 14.040 TO 14.240 NORTH	04D	S	H62	113 Y	70 Y	33 Y	14 Y	5 N	130.0	-	0.85	3.50	0.38	1.16	REQ
005 LA 14.240 TO 14.440 NORTH	04D	S	H62	86 Y	57 Y	23 Y	9 N	3 N	132.4	-	0.42	2.39	0.39	1.18	REQ
005 LA 14.740 TO 14.940 NORTH	04D	S	H62	109 Y	73 Y	42 Y	27 Y	10 Y	131.1	-	1.26	4.41	0.38	1.17	REQ
005 LA 14.740 TO 14.940 SOUTH	04D	S	H62	53 Y	43 Y	24 Y	12 N	4 N	131.1	-	0.53	2.52	0.38	1.17	REQ
005 LA 14.960 TO 15.160 NORTH	04D	U	H65	71 Y	49 Y	20 N	7 N	5 N	131.5	-	0.31	2.09	0.42	1.32	
005 LA 15.118 NB OFF INDIANA/CALZONA	F	H	U R26	9 Y	6 Y	2 N	2 N	1 N	0.7	-	0.00	7.64	0.39	1.15 +	
005 LA 15.165 SB OFF INDIANA/CALZONA	F	J	U R30	18 Y	16 Y	7 Y	1 N	1 N	4.1	-	0.67	4.71	0.31	0.90 +	REQ
005 LA 15.180 TO 15.380 SOUTH	04D	U	H65	67 Y	43 Y	19 N	10 N	6 N	131.5	-	0.31	1.99	0.42	1.32	
005 LA 15.200 TO 15.400 NORTH	04D	U	H65	71 Y	52 Y	24 Y	13 N	5 N	131.5	-	0.52	2.51	0.42	1.32	REQ
005 LA 15.520 TO 15.720 SOUTH	04D	U	H65	68 Y	47 Y	25 Y	15 Y	11 Y	131.5	-	0.84	2.62	0.42	1.32	REQ
005 LA 15.560 TO 15.760 NORTH	04D	U	H65	109 Y	75 Y	46 Y	15 Y	10 Y	131.5	-	0.63	4.82	0.42	1.32	REQ
005 LA 15.840 TO 16.040 NORTH	04D	U	H65	59 Y	48 Y	17 N	7 N	3 N	131.5	-	0.31	1.78	0.42	1.32	
005 LA 15.840 TO 16.040 SOUTH	04D	U	H65	61 Y	40 Y	15 N	6 N	5 N	131.5	-	0.42	1.57	0.42	1.32	
005 LA 16.026 SBON EB 60/SB 5/8TH/7TH	O	K	U R36	43 Y	25 N	11 N	4 N	3 N	91.4	-	0.03	0.33	0.08	0.25 +	
005 LA 16.485 SB ON FR EIGHTH ST	O	D	U R12	10 Y	7 N	1 N	0 N	0 N	3.7	-	0.74	0.74	0.32	0.80 +	
005 LA 16.840 TO 17.040 SOUTH	02D	U	H64	79 Y	60 Y	31 Y	14 N	5 N	120.0	-	0.46	3.56	0.53	1.72	REQ

REQ=INVESTIGATION REQUIRED (4 OR MORE ACCS. & SIGNIFICANT IN 12,6 OR 3 MONTHS)

+ DENOTES MV USED IN RATES

LOCATION DESCRIPTION	SCL RMP LNS	R U S	GRP	RATE* 36 MO ACCS	TOTAL ACCIDENTS 24 MO ACCS	12 MO ACCS	6 MO ACCS	3 MO ACCS	AVE 1000 MAIN	ADT-* VEH X-ST	12 MOS RATE ACCS/MV-MVM-* ACTUAL F+I	ACTUAL TOT	AVERAGE F+I	AVERAGE TOT	INV REQ
005 LA 12.944 NBOFF SB ATLANTIC/TRGGS	F	H U	R26	12 N	10 N	7 Y	4 N	1 N	4.8	-	0.57	4.02	0.39	1.15 +	REQ
005 LA 13.069 SB OFF TO TRIGGS ST	F	H U	R26	7 Y	6 Y	4 Y	2 N	0 N	1.2	-	2.30	9.18	0.39	1.15 +	REQ
005 LA 13.680 TO 13.880 SOUTH	03D	U	H64	53 N	42 N	21 N	12 N	11 Y	122.7	-	0.45	2.35	0.54	1.75	REQ
005 LA 13.720 TO 13.920 NORTH	03D	U	H64	69 Y	54 Y	26 N	12 N	5 N	125.5	-	0.88	2.85	0.55	1.78	
005 LA 14.000 TO 14.200 SOUTH	03D	S	H62	64 Y	41 Y	23 Y	13 Y	10 Y	130.0	-	0.42	2.44	0.38	1.16	REQ
005 LA 14.040 TO 14.240 NORTH	04D	S	H62	123 Y	75 Y	37 Y	21 Y	9 Y	130.0	-	0.53	3.92	0.38	1.16	REQ
005 LA 14.240 TO 14.440 NORTH	04D	S	H62	88 Y	59 Y	28 Y	11 N	6 N	132.4	-	0.52	2.91	0.39	1.18	REQ
005 LA 14.700 TO 14.900 NORTH	04D	S	H62	66 Y	39 Y	16 N	13 Y	11 Y	131.5	-	0.52	1.68	0.38	1.17	REQ
005 LA 14.740 TO 14.940 SOUTH	04D	S	H62	57 Y	41 Y	24 Y	15 Y	8 N	131.1	-	0.42	2.52	0.38	1.17	REQ
005 LA 14.960 TO 15.160 NORTH	04D	U	H65	78 Y	49 Y	24 Y	8 N	2 N	131.5	-	0.21	2.51	0.42	1.32	REQ
005 LA 15.118 NB OFF INDIANA/CALZONA	F	H U	R26	8 Y	6 Y	3 N	1 N	1 N	0.7	-	3.82	11.46	0.39	1.15 +	
005 LA 15.165 SB OFF INDIANA/CALZONA	F	J U	R30	20 Y	16 Y	7 Y	4 N	0 N	4.1	-	1.34	4.71	0.31	0.90 +	REQ
005 LA 15.180 TO 15.380 NORTH	04D	U	H65	65 Y	50 Y	24 Y	12 N	8 N	131.5	-	0.31	2.51	0.42	1.32	REQ
005 LA 15.180 TO 15.380 SOUTH	04D	U	H65	69 Y	44 Y	20 N	9 N	4 N	131.5	-	0.31	2.09	0.42	1.32	
005 LA 15.480 TO 15.680 NORTH	04D	U	H65	71 Y	52 Y	29 Y	15 Y	3 N	131.5	-	0.42	3.04	0.42	1.32	REQ
005 LA 15.520 TO 15.720 SOUTH	04D	U	H65	68 Y	44 Y	18 N	9 N	4 N	131.5	-	0.52	1.89	0.42	1.32	
005 LA 15.840 TO 16.040 SOUTH	04D	U	H65	59 Y	40 Y	13 N	6 N	1 N	131.5	-	0.42	1.36	0.42	1.32	
005 LA 15.840 TO 16.040 NORTH	04D	U	H65	62 Y	48 Y	18 N	10 N	4 N	131.5	-	0.42	1.89	0.42	1.32	
005 LA 16.026 SBON EB 60/SB 5/8TH/7TH	O	K U	R36	44 Y	24 N	12 N	5 N	1 N	91.4	-	0.09	0.36	0.08	0.25 +	
005 LA 16.485 SB ON FR EIGHTH ST	O	D U	R12	11 Y	8 Y	2 N	1 N	0 N	3.7	-	1.49	1.49	0.32	0.80 +	
005 LA 16.840 TO 17.040 SOUTH	02D	U	H64	79 Y	64 Y	34 Y	19 Y	9 N	120.0	-	0.69	3.90	0.53	1.72	REQ
005 LA 17.080 TO 17.280 SOUTH	04D	U	H66	193 Y	133 Y	72 Y	40 Y	22 Y	120.0	-	1.95	8.27	0.33	1.07	REQ
005 LA 17.080 TO 17.280 NORTH	05D	U	H66	34 N	24 N	15 N	10 N	9 Y	120.0	-	0.34	1.72	0.33	1.07	REQ
005 LA 17.360 TO 17.560 NORTH	05D	U	H66	62 Y	46 Y	26 Y	14 Y	9 Y	120.0	-	0.69	2.98	0.33	1.07	REQ

REQ=INVESTIGATION REQUIRED (4 OR MORE ACCS. & SIGNIFICANT IN 12,6 OR 3 MONTHS)

+ DENOTES MV USED IN RATES

TASAS TABLE C POTENTIAL INVESTIGATION LOCATIONS .2 MILE
DISTRICT 07 DATA FOR 98-01-01 THRU 00-12-31
ALL ACCIDENTS
CONFIDENCE LEVEL 99.5 PERCENT

LOCATION DESCRIPTION	SCL RMP LNS	R U S	RATE GRP	TOTAL ACCIDENTS 36 MO ACCS	24 MO ACCS	12 MO ACCS	6 MO ACCS	3 MO ACCS	AVE 1000 MAIN	ADT-VEH X-ST	12 MOS RATE ACCS/MV-MVM ACTUAL F+I	ACTUAL TOT	AVERAGE F+I	AVERAGE TOT	INV REQ
005 LA 11.520 TO 11.720 SOUTH	04D	U	H65	56 Y	33 Y	19 N	10 N	8 Y	114.2	-	0.36	2.28	0.38	1.20	REQ
005 LA 12.700 TO 12.900 NORTH	04D	U	H65	63 Y	42 Y	20 Y	13 Y	9 Y	115.5	-	0.83	2.37	0.38	1.21	REQ
005 LA 12.740 TO 12.940 SOUTH	04D	U	H65	81 Y	59 Y	33 Y	18 Y	15 Y	115.7	-	0.71	3.91	0.38	1.21	REQ
005 LA 12.944 NBOFF SB ATLANTIC/TRGGS	F	H U	R26	13 N	9 N	6 N	5 Y	3 N	4.8	-	0.57	3.42	0.39	1.15 +	REQ
005 LA 13.069 SB OFF TO TRIGGS ST	F	H U	R26	7 Y	7 Y	4 Y	4 Y	2 N	1.2	-	2.28	9.13	0.39	1.15 +	REQ
005 LA 13.720 TO 13.920 NORTH	03D	U	H64	70 Y	51 Y	24 N	12 N	7 N	125.5	-	0.76	2.61	0.55	1.78	
005 LA 13.760 TO 13.960 SOUTH	03D	U	H64	83 Y	58 Y	29 Y	11 N	4 N	128.3	-	0.75	3.09	0.56	1.81	REQ
005 LA 14.020 TO 14.220 SOUTH	04D	S	H62	63 Y	35 N	24 Y	14 Y	4 N	130.0	-	0.11	2.53	0.38	1.16	REQ
005 LA 14.040 TO 14.240 NORTH	04D	S	H62	123 Y	72 Y	38 Y	19 Y	12 Y	130.0	-	0.42	4.00	0.38	1.16	REQ
005 LA 14.240 TO 14.440 NORTH	04D	S	H62	85 Y	61 Y	34 Y	14 Y	5 N	132.4	-	0.41	3.52	0.39	1.18	REQ
005 LA 14.740 TO 14.940 NORTH	04D	S	H62	104 Y	59 Y	33 Y	15 Y	6 N	131.1	-	0.63	3.45	0.38	1.17	REQ
005 LA 14.740 TO 14.940 SOUTH	04D	S	H62	59 Y	35 N	21 N	12 N	7 N	131.1	-	0.31	2.19	0.38	1.17	
005 LA 14.811 SB OFF TO DITMAN AVE	F	H S	R26	8 Y	5 N	3 N	0 N	0 N	1.5	-	1.83	5.48	0.39	1.15 +	
005 LA 14.960 TO 15.160 NORTH	04D	U	H65	83 Y	51 Y	30 Y	13 N	6 N	131.5	-	0.31	3.13	0.42	1.32	REQ
005 LA 14.960 TO 15.160 SOUTH	04D	U	H65	55 Y	30 N	15 N	10 N	6 N	131.5	-	0.52	1.56	0.42	1.32	
005 LA 15.118 NB OFF INDIANA/CALZONA	F	H U	R26	7 Y	6 Y	3 N	0 N	0 N	0.7	-	3.81	11.42	0.39	1.15 +	
005 LA 15.165 SB OFF INDIANA/CALZONA	F	J U	R30	25 Y	16 Y	9 Y	6 Y	4 Y	4.[illegible]	-	1.34	6.01	0.31	0.90 +	REQ
005 LA 15.160 TO 15.360 NORTH	04D	U	H65	59 Y	42 Y	24 Y	9 N	4 N	131.5	-	0.31	2.50	0.42	1.32	REQ
005 LA 15.220 TO 15.420 SOUTH	04D	U	H65	87 Y	48 Y	25 Y	11 N	5 N	131.5	-	0.52	2.60	0.42	1.32	REQ
005 LA 15.480 TO 15.680 NORTH	04D	U	H65	75 Y	57 Y	33 Y	20 Y	12 Y	131.5	-	0.52	3.44	0.42	1.32	REQ
005 LA 15.520 TO 15.720 SOUTH	04D	U	H65	73 Y	43 Y	20 N	10 N	5 N	131.5	-	0.63	2.08	0.42	1.32	
005 LA 15.840 TO 16.040 SOUTH	04D	U	H65	63 Y	43 Y	16 N	9 N	5 N	131.5	-	0.52	1.67	0.42	1.32	
005 LA 15.840 TO 16.040 NORTH	04D	U	H65	68 Y	47 Y	23 N	10 N	6 N	131.5	-	0.52	2.40	0.42	1.32	
005 LA 16.026 SBON EB 607SB 578TH/7TH	O	K U	R36	44 Y	28 N	16 N	7 N	4 N	91.4	-	0.06	0.48	0.08	0.25 +	

REQ=INVESTIGATION REQUIRED (4 OR MORE ACCS. & SIGNIFICANT IN 12,6 OR 3 MONTHS)

+ DENOTES MV USED IN RATES

TASAS TABLE C POTENTIAL INVESTIGATION LOCATIONS .2 MILE
DISTRICT 07 DATA FOR 97-10-01 THRU 00-09-30
ALL ACCIDENTS
CONFIDENCE LEVEL 99.5 PERCENT

LOCATION DESCRIPTION	SCL RMP LNS	R U S	RATE GRP	TOTAL ACCIDENTS 36 MO ACCS	24 MO ACCS	12 MO ACCS	6 MO ACCS	3 MO ACCS	AVE ADT 1000 MAIN	VEH X-ST	12 MOS RATE ACCS/MV-MVM ACTUAL F+I	ACTUAL TOT	AVERAGE F+I	AVERAGE TOT	INV REQ
005 LA 11.420 TO 11.620 NORTH	04D	U	H65	80 Y	68 Y	29 Y	12 Y	4 N	107.7	-	0.76	3.69	0.36	1.15	REQ
005 LA 11.460 TO 11.660 SOUTH	04D	U	H65	48 Y	32 Y	15 N	5 N	2 N	108.7	-	0.25	1.89	0.37	1.16	
005 LA 11.500 SB ON WASHINGTON BLVD	0 D	U	R12	17 Y	12 N	9 Y	5 N	2 N	9.1	-	0.60	2.71	0.32	0.80 +	REQ
005 LA 11.620 TO 11.820 NORTH	04D	U	H65	67 Y	51 Y	17 N	9 N	3 N	111.0	-	0.12	2.10	0.37	1.18	
005 LA 11.660 TO 11.860 SOUTH	04D	U	H65	44 Y	29 N	9 N	6 N	2 N	111.0	-	0.12	1.11	0.37	1.18	
005 LA 12.600 TO 12.800 NORTH	04D	U	H65	42 N	32 Y	11 N	5 N	3 N	111.0	-	0.49	1.36	0.37	1.18	
005 LA 12.640 TO 12.840 SOUTH	04D	U	H65	48 Y	35 Y	18 N	8 N	1 N	111.0	-	0.12	2.22	0.37	1.18	
005 LA 12.800 TO 13.000 NORTH	04D	U	H65	50 Y	31 N	17 N	12 Y	3 N	111.0	-	0.25	2.10	0.37	1.18	REQ
005 LA 12.840 TO 13.040 SOUTH	04D	U	H65	83 Y	63 Y	28 Y	13 Y	8 Y	111.0	-	1.11	3.45	0.37	1.18	REQ
005 LA 13.069 SB OFF TO TRIGGS ST	F	H	U R26	6 N	5 Y	3 N	2 N	2 N	1.2	-	4.56	6.85	0.39	1.15 +	
005 LA 13.720 TO 13.920 NORTH	03D	U	H64	76 Y	45 N	23 N	14 N	5 N	123.2	-	0.55	2.55	0.54	1.76	
005 LA 13.760 TO 13.960 SOUTH	03D	U	H64	88 Y	61 Y	29 Y	13 N	6 N	126.3	-	0.65	3.13	0.56	1.80	REQ
005 LA 14.000 TO 14.200 SOUTH	03D	S	H62	71 Y	39 Y	23 Y	10 N	9 Y	129.0	-	0.53	2.44	0.38	1.15	REQ
005 LA 14.080 TO 14.280 NORTH	04D	S	H62	158 Y	110 Y	43 Y	24 Y	9 Y	129.4	-	0.42	4.55	0.38	1.16	REQ
005 LA 14.740 TO 14.940 NORTH	04D	S	H62	110 Y	63 Y	38 Y	13 Y	9 Y	130.5	-	0.52	3.99	0.38	1.16	REQ
005 LA 14.740 TO 14.940 SOUTH	04D	S	H62	52 Y	32 N	18 N	9 N	5 N	130.5	-	0.31	1.89	0.38	1.16	
005 LA 14.811 SB OFF TO DITMAN AVE	F	H	S R26	9 Y	6 Y	5 Y	1 N	0 N	1.5	-	5.48	9.13	0.39	1.15 +	REQ
005 LA 14.960 TO 15.160 NORTH	04D	U	H65	82 Y	52 Y	29 Y	16 Y	7 N	130.5	-	0.31	3.04	0.41	1.31	REQ
005 LA 15.118 NB OFF INDIANA/CALZONA	F	H	U R26	9 Y	6 Y	4 Y	2 N	0 N	0.7	-	3.81	15.23	0.39	1.15 +	REQ
005 LA 15.165 SB OFF INDIANA/CALZONA	F	J	U R30	24 Y	13 Y	10 Y	3 N	2 N	4.1	-	1.34	6.68	0.31	0.90 +	REQ
005 LA 15.160 TO 15.360 NORTH	04D	U	H65	59 Y	41 Y	27 Y	9 N	5 N	130.5	-	0.52	2.83	0.41	1.31	REQ
005 LA 15.180 TO 15.380 SOUTH	04D	U	H65	78 Y	46 Y	23 Y	11 N	4 N	130.5	-	0.52	2.41	0.41	1.31	REQ
005 LA 15.500 TO 15.700 NORTH	04D	U	H65	77 Y	60 Y	29 Y	18 Y	11 Y	130.5	-	0.63	3.04	0.41	1.31	REQ
005 LA 15.540 TO 15.740 SOUTH	04D	U	H65	88 Y	50 Y	25 Y	10 N	5 N	130.5	-	0.94	2.62	0.41	1.31	REQ

REQ=INVESTIGATION REQUIRED (4 OR MOPE ACCS. & SIGNIFICANT IN 12,6 OR 3 MONTHS)

+ DENOTES MV USED IN RATES

TASAS TABLE C POTENTIAL INVESTIGATION LOCATIONS .2 MILE
DISTRICT 07 DATA FOR 97-07-01 THRU 00-06-30
ALL ACCIDENTS
CONFIDENCE LEVEL 99.5 PERCENT

LOCATION DESCRIPTION	SCL RMP	R U S	GRP	RATE* 36 MO ACCS	TOTAL ACCIDENTS 24 MO ACCS	12 MO ACCS	6 MO ACCS	3 MO ACCS	AVE ADT 1000 MAIN	VEH X-ST	12 MOS RATE ACCS/MV-MVH ACTUAL F+I	ACTUAL TOT	AVERAGE F+I	AVERAGE TOT	INV REQ
005 LA 11.620 TO 11.820 NORTH	04D	U	H65	72 Y	55 Y	21 Y	9 N	6 N	111.0	-	0.49	2.59	0.37	1.18	REQ
005 LA 11.640 TO 11.840 SOUTH	04D	U	H65	52 Y	33 Y	11 N	6 N	4 N	111.0	-	0.00	1.36	0.37	1.18	
005 LA 12.660 TO 12.860 SOUTH	04D	U	H65	57 Y	40 Y	25 Y	11 N	8 Y	111.0	-	0.37	3.08	0.37	1.18	REQ
005 LA 12.740 TO 12.940 NORTH	04D	U	H65	68 Y	43 Y	22 Y	9 N	8 Y	111.0	-	0.25	2.71	0.37	1.18	REQ
005 LA 13.680 TO 13.880 NORTH	03D	U	H64	62 N	44 N	29 Y	10 N	7 N	119.6	-	0.46	3.31	0.53	1.72	REQ
005 LA 13.760 TO 13.960 SOUTH	03D	U	H64	91 Y	61 Y	30 Y	18 Y	7 N	126.8	-	0.54	3.23	0.56	1.80	REQ
005 LA 14.020 TO 14.220 NORTH	04D	S	H62	108 Y	70 Y	32 Y	19 Y	9 Y	129.0	-	0.21	3.40	0.38	1.15	REQ
005 LA 14.080 TO 14.280 SOUTH	04D	S	H62	82 Y	44 Y	23 Y	14 Y	3 N	129.4	-	0.53	2.44	0.38	1.16	REQ
005 LA 14.220 TO 14.420 NORTH	04D	S	H62	101 Y	75 Y	40 Y	21 Y	9 Y	131.1	-	0.52	4.18	0.38	1.17	REQ
005 LA 14.720 TO 14.920 NORTH	04D	S	H62	89 Y	58 Y	27 Y	15 Y	3 N	130.6	-	0.42	2.83	0.38	1.16	REQ
005 LA 14.811 SB OFF TO DITMAN AVE	F	H	S R26	11 Y	6 Y	5 Y	3 N	1 N	1.5	-	5.48	9.13	0.39	1.15 +	REQ
005 LA 14.960 TO 15.160 NORTH	04D	U	H65	77 Y	50 Y	28 Y	16 Y	8 N	130.5	-	0.21	2.94	0.41	1.31	REQ
005 LA 15.118 NB OFF INDIANA/CALZONA	F	H	U R26	9 Y	7 Y	4 Y	3 Y	2 N	0.7	-	3.81	15.23	0.39	1.15 +	REQ
005 LA 15.165 SB OFF INDIANA/CALZONA	F	J	U R30	23 Y	11 Y	9 Y	3 N	1 N	4.1	-	2.00	6.01	0.31	0.90 +	REQ
005 LA 15.160 TO 15.360 NORTH	04D	U	H65	62 Y	40 Y	25 Y	15 Y	4 N	130.5	-	0.84	2.62	0.41	1.31	REQ
005 LA 15.220 TO 15.420 SOUTH	04D	U	H65	89 Y	52 Y	26 Y	14 Y	8 N	130.5	-	0.42	2.73	0.41	1.31	REQ
005 LA 15.540 TO 15.740 SOUTH	04D	U	H65	93 Y	49 Y	25 Y	12 N	5 N	130.5	-	0.94	2.62	0.41	1.31	REQ
005 LA 15.540 TO 15.740 NORTH	04D	U	H65	80 Y	59 Y	27 Y	16 Y	9 Y	130.5	-	0.63	2.83	0.41	1.31	REQ
005 LA 15.840 TO 16.040 NORTH	04D	U	H65	64 Y	41 Y	30 Y	12 N	4 N	130.5	-	0.52	3.15	0.41	1.31	REQ
005 LA 15.840 TO 16.040 SOUTH	04D	U	H65	71 Y	46 Y	25 Y	7 N	3 N	130.5	-	0.73	2.62	0.41	1.31	REQ
005 LA 16.026 SBON EB 60/SB 5/8TH/7TH	O	K	U R36	47 Y	32 Y	14 N	9 N	4 N	91.2	-	0.09	0.42	0.08	0.25 +	
005 LA 16.485 SB ON FR EIGHTH ST	O	D	U R12	11 Y	9 Y	6 Y	2 N	1 N	3.7	-	2.22	4.44	0.32	0.80 +	REQ
005 LA 16.780 TO 16.980 SOUTH	02D	U	H64	58 N	45 N	26 N	17 Y	9 N	120.0	-	0.23	2.97	0.53	1.72	REQ
005 LA 17.080 TO 17.280 SOUTH	04D	U	H66	151 Y	119 Y	62 Y	27 Y	12 Y	120.0	-	1.14	7.08	0.33	1.07	REQ

REQ=INVESTIGATION REQUIRED (4 OR MORE ACCS. & SIGNIFICANT IN 12,6 OR 3 MONTHS)

+ DENOTES MV USED IN RATES

TASAS TABLE C POTENTIAL INVESTIGATION LOCATIONS .2 MILE
DISTRICT 07 DATA FOR 97-04-01 THRU 00-03-31
ALL ACCIDENTS
CONFIDENCE LEVEL 99.5 PERCENT

LOCATION DESCRIPTION				SCL RMP LNS	R U S	RATE GRP	TOTAL ACCIDENTS 36 MO ACCS	24 MO ACCS	12 MO ACCS	6 MO ACCS	3 MO ACCS	AVE ADT 1000 MAIN	VEH X-ST	12 MOS RATE ACCS/MV-MVM ACTUAL F+I	ACTUAL TOT	AVERAGE F+I	AVERAGE TOT	INV REQ
005 LA	6.765	SB ON FR SB RTE 605		0 C	U	R08	42 Y	25 Y	4 N	4 N	2 N	19.8	-	0.14	0.55	0.19	0.55 +	
005 LA	6.860	TO	7.060 SOUTH	03D	U	H64	56 N	33 N	21 N	16 Y	4 N	111.0	-	0.37	2.59	0.50	1.62	REQ
005 LA	6.914	NBON FR NB 605/STUDEBKR		0 C	U	R08	63 Y	45 Y	23 Y	17 Y	13 Y	32.7	-	0.34	1.93	0.19	0.55 +	REQ
005 LA	8.080	TO	8.280 SOUTH	04D	U	H65	46 Y	27 N	17 N	6 N	4 N	111.0	-	0.37	2.10	0.37	1.18	
005 LA	8.160	TO	8.360 NORTH	04D	U	H65	44 Y	29 N	11 N	6 N	3 N	110.[illegible]	-	0.49	1.36	0.37	1.18	
005 LA	8.401	NB ON LAKEWOOD/ROSEMEAD		0 F	U	R64	6 Y	2 N	1 N	1 N	1 N	3.4	-	0.00	0.81	0.13	0.40 +	
005 LA	9.540	TO	9.740 SOUTH	04D	U	H65	36 N	23 N	16 N	12 Y	7 N	109.3	-	0.25	2.00	0.37	1.17	REQ
005 LA	10.666	NB OFF TELEGRAPH/GARFIE		F H	U	R26	24 Y	18 Y	7 N	2 N	0 N	9.4	-	0.58	2.04	0.39	1.15 +	
005 LA	10.720	TO	10.920 NORTH	04D	U	H65	83 Y	60 Y	35 Y	20 Y	9 Y	106.4	-	0.90	4.51	0.36	1.15	REQ
005 LA	10.740	TO	10.940 SOUTH	04D	U	H65	44 Y	24 N	13 N	7 N	2 N	106.3	-	0.26	1.67	0.36	1.14	
005 LA	10.920	TO	11.120 NORTH	04D	U	H65	97 Y	73 Y	32 Y	20 Y	14 Y	106.0	-	0.78	4.13	0.36	1.14	REQ
005 LA	11.340	TO	11.540 NORTH	04D	U	H65	43 Y	33 Y	24 Y	13 Y	3 N	106.0	-	0.39	3.10	0.36	1.14	REQ
005 LA	11.440	TO	11.640 SOUTH	04D	U	H65	44 Y	33 Y	13 N	8 N	7 N	108.2	-	0.13	1.65	0.36	1.16	
005 LA	11.600	TO	11.800 NORTH	04D	U	H65	91 Y	71 Y	30 Y	12 Y	4 N	111.0	-	0.86	3.70	0.37	1.18	REQ
005 LA	11.640	TO	11.840 SOUTH	04D	U	H65	50 Y	33 Y	11 N	5 N	2 N	111.0	-	0.12	1.36	0.37	1.18	
005 LA	12.640	TO	12.840 SOUTH	04D	U	H65	46 Y	32 Y	20 Y	10 N	3 N	111.0	-	0.25	2.47	0.37	1.18	REQ
005 LA	12.740	TO	12.940 NORTH	04D	U	H65	73 Y	41 Y	19 Y	6 N	1 N	111.0	-	0.49	2.34	0.37	1.18	REQ
005 LA	12.840	TO	13.040 SOUTH	04D	U	H65	76 Y	60 Y	33 Y	15 Y	8 Y	111.0	-	1.36	4.07	0.37	1.18	REQ
005 LA	13.720	TO	13.920 SOUTH	03D	U	H64	85 Y	52 Y	29 Y	12 N	8 N	123.2	-	1.00	3.21	0.54	1.76	REQ
005 LA	13.720	TO	13.920 NORTH	03D	U	H64	70 Y	43 N	28 Y	9 N	3 N	123.2	-	0.22	3.10	0.54	1.76	REQ
005 LA	14.000	TO	14.200 NORTH	04D	S	H62	92 Y	63 Y	26 Y	12 N	9 Y	129.0	-	0.42	2.76	0.38	1.15	REQ
005 LA	14.000	TO	14.200 SOUTH	03D	S	H62	67 Y	41 Y	18 N	13 Y	9 Y	129.0	-	0.53	1.91	0.38	1.15	REQ
005 LA	14.200	TO	14.400 NORTH	04D	S	H62	112 Y	84 Y	43 Y	19 Y	13 Y	130.9	-	0.52	4.50	0.38	1.17	REQ
005 LA	14.720	TO	14.920 NORTH	04D	S	H62	91 Y	64 Y	30 Y	22 Y	12 Y	130.6	-	0.42	3.15	0.38	1.16	REQ

+ DENOTES MV USED IN RATES

REQ=INVESTIGATION REQUIRED (4 OR MORE ACCS. & SIGNIFICANT IN 12,6 OR 3 MONTHS)

TASA^ TABLE C POTENTIAL INVESTIGATION LOCATIONS .2 MILE
DISTRICT 07 DATA FOR 97-04-01 THRU 00-03-31
ALL ACCIDENTS
CONFIDENCE LEVEL 99.5 PERCENT

LOCATION DESCRIPTION	SCL RMP LNS	R U S	RATE GRP	TOTAL ACCIDENTS 36 MO ACCS	24 MO ACCS	12 MO ACCS	6 MO ACCS	3 MO ACCS	AVE ADT 1000 MAIN	VEH X-ST	12 MOS RATE ACCS/MV-MVM ACTUAL F+I	ACTUAL TOT	AVERAGE F+I	AVERAGE TOT	INV REQ
005 LA 14.740 TO 14.940 SOUTH	04D	S	H62	52 Y	33 N	17 N	9 N	5 N	130.5	-	0.31	1.78	0.38	1.16	
005 LA 14.811 SB OFF TO DITMAN AVE	F	H S	R26	10 Y	5 N	4 N	4 Y	2 N	1.5	-	5.48	7.30	0.39	1.15 +	REQ
005 LA 14.960 TO 15.160 NORTH	04D	U	H65	75 Y	54 Y	25 Y	13 N	8 N	130.5	-	0.31	2.62	0.41	1.31	REQ
005 LA 14.960 TO 15.160 SOUTH	04D	U	H65	56 Y	36 N	17 N	8 N	4 N	130.5	-	0.52	1.78	0.41	1.31	
005 LA 15.118 NB OFF INDIANA/CALZONA	F	H U	R26	8 Y	5 Y	3 N	2 N	1 N	0.7	-	0.00	11.42	0.39	1.15 +	
005 LA 15.165 SB OFF INDIANA/CALZONA	F	J U	R30	24 Y	13 Y	9 Y	7 Y	2 N	4.1	-	1.34	6.01	0.31	0.90 +	REQ
005 LA 15.160 TO 15.360 NORTH	04D	U	H65	69 Y	38 N	25 Y	18 Y	11 Y	130.5	-	1.15	2.62	0.41	1.31	REQ
005 LA 15.180 TO 15.380 SOUTH	04D	U	H65	76 Y	49 Y	24 Y	12 N	6 N	130.5	-	0.52	2.52	0.41	1.31	REQ
005 LA 15.540 TO 15.740 SOUTH	04D	U	H65	100 Y	56 Y	28 Y	15 Y	7 N	130.5	-	1.26	2.94	0.41	1.31	REQ
005 LA 15.560 TO 15.760 NORTH	04D	U	H65	80 Y	57 Y	30 Y	15 Y	8 N	130.5	-	1.05	3.15	0.41	1.31	REQ
005 LA 15.840 TO 16.040 NORTH	04D	U	H65	64 Y	43 Y	29 Y	15 Y	8 N	130.5	-	0.42	3.04	0.41	1.31	REQ
005 LA 15.840 TO 16.040 SOUTH	04D	U	H65	71 Y	46 Y	27 Y	15 Y	4 N	130.5	-	0.73	2.83	0.41	1.31	REQ
005 LA 16.026 SBON EB 60/SB 5/8TH/7TH	O	K U	R36	47 Y	31 Y	11 N	7 N	4 N	91.4	-	0.03	0.33	0.08	0.25 +	
005 LA 16.485 SB ON FR EIGHTH ST	O	D U	R12	12 Y	9 Y	6 Y	4 Y	1 N	3.7	-	1.48	4.44	0.32	0.80 +	REQ
005 LA 16.840 TO 17.040 SOUTH	02D	U	H64	65 Y	45 N	30 Y	17 Y	10 N	120.0	-	0.57	3.42	0.53	1.72	REQ
005 LA 17.080 TO 17.280 SOUTH	04D	U	H66	148 Y	121 Y	61 Y	31 Y	15 Y	120.0	-	1.03	6.97	0.33	1.07	REQ
005 LA 17.380 TO 17.580 SOUTH	05D	U	H66	126 Y	80 Y	39 Y	24 Y	8 Y	120.3	-	1.03	4.44	0.33	1.07	REQ
005 LA 17.420 TO 17.620 NORTH	05D	U	H66	87 Y	58 Y	29 Y	14 Y	8 Y	121.0	-	0.68	3.28	0.34	1.08	REQ
005 LA 17.580 TO 17.780 SOUTH	05D	U	H66	60 Y	44 Y	26 Y	18 Y	11 Y	123.5	-	0.44	2.88	0.34	1.09	REQ
005 LA 17.860 TO 18.060 SOUTH	05D	U	H66	38 N	27 N	16 N	12 Y	8 Y	123.5	-	0.44	1.77	0.34	1.09	REQ
005 LA 17.920 TO 18.120 NORTH	05D	U	H66	51 Y	32 Y	17 N	12 Y	5 N	120.8	-	0.45	1.93	0.33	1.08	REQ
005 LA 18.220 TO 18.420 SOUTH	04D	U	H65	99 Y	76 Y	38 Y	24 Y	14 Y	110.0	-	0.60	4.57	0.38	1.20	REQ
005 LA 18.260 SB ON FR WB RTE 10	O	C U	R08	85 Y	58 Y	28 Y	13 Y	7 Y	30.4	-	0.99	2.52	0.19	0.55 +	REQ
005 LA 18.272 NB OFF TO EB 10/SOTO	F	F U	R62	33 Y	18 N	8 N	4 N	3 N	30.5	-	0.08	0.60	0.15	0.45 +	

REQ=INVESTIGATION REQUIRED (4 OR MORE ACCS. & SIGNIFICANT IN 12,6 OR 3 MONTHS)

+ DENOTES MV USED IN RATES

TASAS TABLE C POTENTIAL INVESTIGATION LOCATIONS .2 MILE
DISTRICT 07 DATA FOR 97-01-01 THRU 99-12-31
ALL ACCIDENTS
CONFIDENCE LEVEL 99.5 PERCENT

LOCATION DESCRIPTION	SCL RMP LNS	R U S	RATE GRP	TOTAL ACCIDENTS 36 MO ACCS	24 MO ACCS	12 MO ACCS	6 MO ACCS	3 MO ACCS	AVE ADT 1000 MAIN	VEH X-ST	12 MOS RATE ACCS/MV-MVH ACTUAL F+I	ACTUAL TOT	AVERAGE F+I	AVERAGE TOT	INV REQ
005 LA 8.160 TO 8.360 NORTH	04D	U	H65	46 Y	31 Y	11 N	3 N	3 N	110.7	-	0.50	1.36	0.41	1.18	
005 LA 8.401 NB ON LAKEWOOD/ROSEMEAD	0 F	U	R64	6 Y	2 N	0 N	0 N	0 N	3.4	-	0.00	0.00	0.16	0.40 +	
005 LA 10.600 TO 10.800 NORTH	04D	U	H65	45 Y	31 Y	17 N	12 Y	8 Y	106.5	-	0.64	2.19	0.40	1.15	REQ
005 LA 10.666 NB OFF T EGRAPH/GARFIE	F H	U	R26	25 Y	20 Y	10 N	6 N	2 N	9.4	-	0.88	2.92	0.41	1.20 +	
005 LA 10.740 TO 10.940 SOUTH	04D	U	H65	45 Y	26 N	11 N	7 N	5 N	106.3	-	0.26	1.42	0.40	1.14	
005 LA 10.800 TO 11.000 NORTH	04D	U	H65	98 Y	75 Y	35 Y	20 Y	13 Y	106.2	-	0.5	4.53	0.40	1.14	REQ
005 LA 11.000 TO 11.200 NORTH	04D	U	H65	54 Y	35 Y	19 Y	8 N	3 N	106.0	-	0.65	2.46	0.40	1.14	REQ
005 LA 11.340 TO 11.540 NORTH	04D	U	H65	46 Y	31 Y	26 Y	15 Y	10 Y	106.0	-	0.78	3.37	0.40	1.14	REQ
005 LA 11.460 TO 11.660 SOUTH	04D	U	H65	43 Y	32 Y	13 N	4 N	3 N	108.7	-	0.13	1.64	0.40	1.16	
005 LA 11.540 TO 11.740 NORTH	04D	U	H65	102 Y	79 Y	39 Y	19 Y	8 Y	110.7	-	1.12	4.84	0.41	1.18	REQ
005 LA 11.660 TO 11.860 SOUTH	04D	U	H65	51 Y	33 Y	9 N	3 N	1 N	111.0	-	0.12	1.11	0.41	1.18	
005 LA 12.660 TO 12.860 SOUTH	04D	U	H65	58 Y	34 Y	21 Y	14 Y	9 Y	111.0	-	0.25	2.60	0.41	1.18	REQ
005 LA 12.740 TO 12.940 NORTH	04D	U	H65	80 Y	45 Y	24 Y	13 Y	5 N	111.0	-	0.62	2.97	0.41	1.18	REQ
005 LA 13.680 TO 13.880 NORTH	03D	U	H64	61 N	39 N	27 Y	19 Y	7 N	119.6	-	0.34	3.09	0.59	1.72	REQ
005 LA 13.740 TO 13.940 SOUTH	03D	U	H64	85 Y	55 Y	28 Y	11 N	4 N	125.0	-	0.88	3.07	0.61	1.78	REQ
005 LA 14.000 TO 14.200 SOUTH	03D	S	H62	63 Y	38 Y	12 N	7 N	4 N	129.0	-	0.53	1.28	0.39	1.10	
005 LA 14.020 TO 14.220 NORTH	04D	S	H62	102 Y	72 Y	25 Y	13 Y	3 N	129.0	-	0.52	2.66	0.39	1.10	REQ
005 LA 14.220 TO 14.420 NORTH	04D	S	H62	93 Y	65 Y	36 Y	19 Y	6 N	131.1	-	0.63	3.77	0.39	1.12	REQ
005 LA 14.720 TO 14.920 NORTH	04D	S	H62	84 Y	58 Y	22 Y	11 N	9 Y	130.6	-	0.21	2.31	0.39	1.11	REQ
005 LA 14.740 TO 14.94 SOUTH	04D	S	H62	54 Y	38 Y	14 N	10 N	4 N	130.5	-	0.21	1.47	0.39	1.11	
005 LA 14.811 SB OFF TO DITMAN AVE	F H	S	R26	8 Y	5 N	2 N	2 N	2 N	1.5	-	3.66	3.63	0.41	1.20 +	
005 LA 14.960 TO 15.160 NORTH	04D	U	H65	68 Y	52 Y	20 N	11 N	4 N	130.5	-	0.32	2.11	0.46	1.31	
005 LA 14.960 TO 15.160 SOUTH	04D	U	H65	63 Y	40 Y	15 N	8 N	4 N	130.5	-	0.21	1.58	0.46	1.31	
005 LA 15.118 NB OFF INDIAN4/CALZONA	F H	U	R26	7 Y	4 N	3 N	1 N	1 N	0.7	-	0.00	.46	0.41	1.20 +	

REQ=INVESTIGATION REQUIRED (4 OR MORE ACCS. & SIGNIFICANT IN 12,6 OR 3 MONTHS)

+ DENOTES MV USED IN RATES

TASAS TABLE C POTENTIAL INVESTIGATION LOCATIONS .2 MILE
DISTRICT 07 DATA FOR 97-01-01 THRU 99-12-31
ALL ACCIDENTS
CONFIDENCE LEVEL 99.5 PERCENT

LOCATION DESCRIPTION	SCL RMP LNS	R U S	RATE GRP	TOTAL ACCIDENTS 36 MO ACCS	24 MO ACCS	12 MO ACCS	6 MO ACCS	3 MO ACCS	AVE ADT 1000 MAIN	VEH X-ST	12 MOS RATE ACTUAL F+I	ACTUAL TOT	AVERAGE F+I	AVERAGE TOT	INV REQ
005 LA 15.165 SB OFF INDIANA/CALZONA	F	J U	R30	23 Y	16 Y	7 Y	6 Y	5 Y	4.1	-	1.34	4.69	0.34	0.90 +	REQ
005 LA 15.200 TO 15.400 NORTH	04D	U	H65	63 Y	40 Y	21 N	10 N	6 N	130.5	-	0.74	2.21	0.46	1.31	
005 LA 15.200 TO 15.400 SOUTH	04D	U	H65	96 Y	63 Y	25 Y	13 N	7 N	130.5	-	0.53	2.63	0.46	1.31	REQ
005 LA 15.480 TO 15.680 NORTH	04D	U	H65	53 N	42 Y	24 Y	7 N	4 N	130.5	-	0.95	2.53	0.46	1.31	REQ
005 LA 15.520 TO 15.720 SOUTH	04D	U	H65	94 Y	53 Y	23 Y	12 N	7 N	130.5	-	1.05	2.42	0.46	1.31	REQ
005 LA 15.840 TO 16.040 SOUTH	04D	U	H65	71 Y	47 Y	27 Y	18 Y	11 Y	130.5	-	0.74	2.84	0.46	1.31	REQ
005 LA 15.840 TO 16.040 NORTH	04D	U	H65	63 Y	45 Y	24 Y	18 Y	7 N	130.5	-	0.32	2.53	0.46	1.31	REQ
005 LA 16.026 SBON EB 60/SB 5/8TH/7TH	O	K U	R36	47 Y	28 N	12 N	5 N	3 N	91.4	-	0.06	0.36	0.08	0.25 +	
005 LA 16.485 SB ON FR EIGHTH ST	O	D U	R12	11 Y	9 Y	5 N	4 Y	3 Y	3.7	-	0.74	3.71	0.32	0.80 +	REQ
005 LA 17.080 TO 17.280 SOUTH	04D	U	H66	145 Y	107 Y	57 Y	35 Y	16 Y	120.0	-	1.26	6.53	0.32	0.94	REQ
005 LA 17.320 TO 17.520 SOUTH	05D	U	H66	44 Y	29 Y	16 N	13 Y	8 Y	120.0	-	0.34	1.83	0.32	0.94	REQ
005 LA 17.380 TO 17.580 NORTH	05D	U	H66	57 Y	35 Y	21 Y	11 Y	4 N	120.3	-	0.80	2.40	0.32	0.94	REQ
005 LA 17.520 TO 17.720 SOUTH	05D	U	H66	136 Y	94 Y	42 Y	22 Y	14 Y	122.8	-	1.12	4.70	0.32	0.96	REQ
005 LA 17.580 TO 17.780 NORTH	05D	U	H66	46 Y	34 Y	14 N	5 N	2 N	123.5	-	0.33	1.56	0.32	0.96	
005 LA 17.920 TO 18.120 NORTH	05D	U	H66	49 Y	29 Y	13 N	8 N	7 N	120.8	-	0.45	1.48	0.32	0.95	
005 LA 17.940 TO 18.140 SOUTH	05D	U	H66	75 Y	52 Y	22 Y	14 Y	8 Y	119.8	-	0.69	2.52	0.32	0.94	REQ
005 LA 18.220 TO 18.420 SOUTH	04D	U	H65	88 Y	67 Y	35 Y	19 Y	10 Y	119.0	-	0.96	4.22	0.42	1.20	REQ
005 LA 18.260 SB ON FR WB RTE 10	O	C U	R08	85 Y	60 Y	24 Y	11 Y	6 Y	30.4	-	0.90	2.17	0.16	0.50 +	REQ
005 LA 18.272 NB OFF TO EB 10/SOTO	F	F U	R62	32 Y	13 N	7 N	3 N	1 N	36.5	-	0.08	0.53	0.16	0.40 +	
005 LA 18.680 TO 18.880 NORTH	04D	U	H65	56 Y	40 Y	21 Y	8 N	4 N	119.0	-	0.35	2.42	0.43	1.23	REQ
005 LA 18.720 TO 18.920 SOUTH	04D	U	H65	51 Y	34 N	17 N	10 N	5 N	119.0	-	0.46	1.96	0.43	1.23	
005 LA 19.620 TO 19.820 SOUTH	04D	U	H65	45 Y	29 N	10 N	7 N	3 N	113.2	-	0.36	1.21	0.41	1.19	
005 LA 19.660 TO 19.860 NORTH	04D	U	H65	54 Y	34 Y	11 N	2 N	0 N	112.0	-	0.12	1.35	0.41	1.18	
005 LA 20.060 TO 20.260 NORTH	04D	U	H65	44 Y	32 Y	13 N	11 N	2 N	110.0	-	0.50	1.62	0.41	1.17	

REQ=INVESTIGATION REQUIRED (4 OR MORE ACCS. & SIGNIFICANT IN 12,6 OR 3 MONTHS)

+ DENOTES MV USED IN RATES

TASAS TABLE C POTENTIAL INVESTIGATION LOCATIONS .2 MILE
DISTRICT 07 DATA FOR 96-10-01 THRU 99-09-30
ALL ACCIDENTS
CONFIDENCE LEVEL 99.5 PERCENT

LOCATION DESCRIPTION	SCL RMP LNS	R U S	RATE GRP	TOTAL ACCIDENTS 36 MO ACCS	24 MO ACCS	12 MO ACCS	6 MO ACCS	3 MO ACCS	AVE ADT 1000 MAIN.	VEH X-ST	12 MOS RATE ACCS/MV-MVM ACTUAL F+I	ACTUAL TOT	AVERAGE F+I	AVERAGE TOT	INV REQ
005 LA 11.620 TO 11.820 NORTH	04D	U	H65	77 Y	50 Y	34 Y	14 Y	7 N	111.0	-	1.11	4.21	0.41	1.18	REQ
005 LA 12.740 TO 12.940 NORTH	04D	U	H65	78 Y	47 Y	25 Y	13 Y	8 Y	111.0	-	0.62	3.09	0.41	1.18	REQ
005 LA 12.760 TO 12.960 SOUTH	04D	U	H65	71 Y	55 Y	32 Y	17 Y	8 Y	111.0	-	0.74	3.96	0.41	1.18	REQ
005 LA 13.360 TO 13.560 NORTH	05D	U	H66	32 N	25 N	17 Y	8 N	4 N	111.0	-	0.49	2.10	0.30	0.89	REQ
005 LA 13.680 TO 13.880 NORTH	03D	U	H64	59 N	42 N	22 N	16 Y	12 Y	119.4	-	0.46	2.52	0.58	1.71	REQ
005 LA 13.720 TO 13.920 SOUTH	03D	U	H64	86 Y	58 Y	30 Y	17 Y	8 N	122.3	-	1.00	3.34	0.60	1.75	REQ
005 LA 14.020 TO 14.220 NORTH	04D	S	H62	103 Y	79 Y	40 Y	17 Y	10 Y	128.5	-	0.32	4.28	0.39	1.10	REQ
005 LA 14.080 TO 14.280 SOUTH	04D	S	H62	85 Y	58 Y	21 Y	11 N	5 N	128.3	-	0.53	2.24	0.39	1.10	REQ
005 LA 14.220 TO 14.420 NORTH	04D	S	H62	93 Y	67 Y	43 Y	21 Y	13 Y	130.6	-	0.63	4.52	0.39	1.11	REQ
005 LA 14.480 TO 14.680 NORTH	04D	S	H62	55 Y	33 N	15 N	7 N	3 N	131.0	-	0.31	1.57	0.39	1.12	
005 LA 14.700 TO 14.900 NORTH	04D	S	H62	71 Y	49 Y	22 Y	9 N	2 N	130.0	-	0.63	2.32	0.39	1.11	REQ
005 LA 14.740 TO 14.940 SOUTH	04D	S	H62	53 Y	34 N	14 N	8 N	6 N	129.6	-	0.21	1.48	0.39	1.11	
005 LA 14.960 TO 15.160 SOUTH	04D	U	H65	65 Y	37 N	15 N	9 N	4 N	129.5	-	0.21	1.59	0.45	1.31	
005 LA 14.960 TO 15.160 NORTH	04D	U	H65	70 Y	53 Y	23 Y	12 N	7 N	129.5	-	0.32	2.44	0.45	1.31	REQ
005 LA 15.118 NB OFF INDIANA/CALZONA	F	H	U R26	7 Y	5 Y	2 N	1 N	0 N	0.7	-	0.00	7.64	0.41	1.20 +	
005 LA 15.165 SB OFF INDIANA/CALZONA	F	J	U R30	20 Y	14 Y	3 N	2 N	1 N	4.1	-	0.67	2.01	0.34	0.90 +	
005 LA 15.160 TO 15.360 NORTH	04D	U	H65	63 Y	32 N	14 N	7 N	3 N	129.5	-	0.74	1.49	0.45	1.31	
005 LA 15.180 TO 15.380 SOUTH	04D	U	H65	91 Y	55 Y	23 Y	12 N	5 N	129.5	-	0.42	2.44	0.45	1.31	REQ
005 LA 15.500 TO 15.700 NORTH	04D	U	H65	64 Y	48 Y	31 Y	14 Y	5 N	129.5	-	1.06	3.29	0.45	1.31	REQ
005 LA 15.560 TO 15.760 SOUTH	04D	U	H65	120 Y	69 Y	30 Y	16 Y	6 N	129.5	-	1.38	3.18	0.45	1.31	REQ
005 LA 15.820 TO 16.020 NORTH	04D	U	H65	46 N	36 N	17 N	12 N	9 Y	129.5	-	0.42	1.80	0.45	1.31	REQ
005 LA 15.840 TO 16.040 SOUTH	04D	U	H65	69 Y	43 Y	22 N	11 N	7 N	129.5	-	0.74	2.33	0.45	1.31	
005 LA 16.026 SBON EB 60/SB 5/8TH/7TH	O	K	U R36	51 Y	29 Y	15 N	4 N	2 N	91.4	-	0.09	0.45	0.08	0.25 +	
005 LA 16.615 SB ON SEG SB RTE 5	Z	B	U R04	35 Y	21 N	9 N	7 N	2 N	48.7	-	0.17	0.51	0.12	0.40 +	

+ DENOTES MV USED IN RATES

REQ=INVESTIGATION REQUIRED (4 OR MORE ACCS. & SIGNIFICANT IN 12,6 OR 3 MONTHS)

TASAS TABLE C POTENTIAL INVESTIGATION LOCATIONS 2 MILE
DISTRICT 07 DATA FOR 96-07-01 THRU 99-06-30
ALL ACCIDENTS
CONFIDENCE LEVEL 99.5 PERCENT

LOCATION DESCRIPTION	SCL RMP LNS	R U S	RATE GRP	TOTAL ACCIDENTS 36 MO ACCS	24 MO ACCS	12 MO ACCS	6 MO ACCS	3 MO ACCS	AVE 1000 MAIN	ADT-VEH X-ST	12 MOS RATE ACCS/MV-MVM ACTUAL F+I	ACTUAL TOT	AVERAGE F+I	AVERAGE TOT	INV REQ
05 LA 11.600 TO 11.800 NORTH	04D	U	H65	92 Y	65 Y	44 Y	17 Y	8 Y	111.0	-	1.36	5.45	0.41	1.18	REQ
05 LA 11.660 TO 11.860 SOUTH	04D	U	H65	61 Y	39 Y	21 Y	6 N	4 N	111.0	-	0.25	2.60	0.41	1.18	REQ
05 LA 12.720 TO 12.920 SOUTH	04D	U	H65	70 Y	43 Y	22 Y	10 N	8 Y	111.0	-	0.25	2.72	0.41	1.18	REQ
05 LA 12.760 TO 12.960 NORTH	04D	U	H65	83 Y	49 Y	23 Y	13 Y	6 N	111.0	-	0.62	2.85	0.41	1.18	REQ
05 LA 13.740 TO 13.940 SOUTH	03D	U	H64	85 Y	63 Y	30 Y	15 N	7 N	124.7	-	0.55	3.30	0.60	1.77	REQ
05 LA 14.040 TO 14.240 NORTH	04D	S	H62	115 Y	85 Y	43 Y	16 Y	10 Y	128.5	-	0.75	4.60	0.39	1.10	REQ
05 LA 14.080 TO 14.280 SOUTH	04D	S	H62	82 Y	59 Y	21 Y	10 N	6 N	128.9	-	0.64	2.24	0.39	1.10	REQ
05 LA 14.240 TO 14.440 NORTH	04D	S	H62	70 Y	51 Y	29 Y	13 Y	5 N	130.9	-	0.42	3.04	0.39	1.12	REQ
05 LA 14.660 TO 14.860 NORTH	04D	S	H62	56 Y	39 Y	22 Y	9 N	6 N	130.4	-	0.63	2.32	0.39	1.11	REQ
05 LA 14.740 TO 14.940 SOUTH	04D	S	H62	49 Y	30 N	10 N	4 N	2 N	129.6	-	0.11	1.06	0.39	1.11	
05 LA 14.811 SB OFF TO DITMAN AVE	F	H	S R26	7 Y	6 Y	1 N	0 N	0 N	1.5	-	0.00	1.83	0.41	1.20 +	
05 LA 14.960 TO 15.160 SOUTH	04D	U	H65	64 Y	40 Y	16 N	6 N	4 N	129.5	-	0.32	1.70	0.45	1.31	
05 LA 14.960 TO 15.160 NORTH	04D	U	H65	68 Y	49 Y	22 N	9 N	5 N	129.5	-	0.53	2.33	0.45	1.31	
05 LA 15.118 NB OFF INDIANA/CALZONA	F	H	U R26	7 Y	4 N	2 N	1 N	0 N	0.7	-	3.82	7.64	0.41	1.20 +	
05 LA 15.165 SB OFF INDIANA/CALZONA	F	J	U R30	19 Y	14 Y	2 N	1 N	1 N	4.1	-	0.00	1.34	0.34	0.90 +	
05 LA 15.180 TO 15.380 SOUTH	04D	U	H65	89 Y	55 Y	24 Y	11 N	7 N	129.5	-	0.53	2.5[illegible]	0.45	1.31	REQ
05 LA 15.200 TO 15.400 NORTH	04D	U	H65	68 Y	40 Y	19 N	11 N	5 N	129.5	-	0.32	2.02	0.4[illegible]	1.31	
05 LA 15.480 TO 15.680 NORTH	04D	U	H65	57 Y	42 Y	27 Y	17 Y	9 Y	129.5	-	0.85	2.86	0.45	1.31	REQ
05 LA 15.560 TO 15.760 SOUTH	04D	U	H65	121 Y	74 Y	28 Y	14 Y	10 Y	129.5	-	1.17	2.97	0.45	1.31	REQ
05 LA 15.840 TO 16.040 SOUTH	04D	U	H65	70 Y	45 Y	20 N	8 N	4 [illegible]	129.5	-	0.42	2.12	0.45	1.31	
05 LA 16.026 SBON EB 60/SB 5/8TH/7TH	O	K	U R36	52 Y	33 Y	18 Y	7 N	2 N	91.4	-	0.12	0.54	0.08	0.25 +	REQ
05 LA 16.606 SB ON SEG SB RTE 5	Z	B	U R04	36 Y	21 N	8 N	7 N	5 N	48.7	-	0.17	0.45	0.12	0.40 +	
05 LA 17.031 NB ON FR NB 5/WB 60/7TH	O	F	U R64	48 N	36 N	23 Y	14 Y	9 Y	85.1	-	0.03	0.74	0.16	0.40 +	REQ
05 LA 17.080 TO 17.280 SOUTH	04D	U	H66	131 Y	89 Y	57 Y	22 Y	11 Y	118.5	-	1.62	6.61	0.31	0.93	REQ

REQ=INVESTIGATION REQUIRED (4 OR MORE ACCS. & SIGNIFICANT IN 12,6 OR 3 MONTHS) + DENOTES MV USED IN RATES

TASAS TABLE C POTENTIAL INVESTIGATION LOCATIONS .2 MILE
DISTRICT 07 DATA FOR 96-04-01 THRU 99-03-31
ALL ACCIDENTS
CONFIDENCE LEVEL 99.5 PERCENT

LOCATION DESCRIPTION	SCL RMP LNS	R U S	RATE GRP	TOTAL ACCIDENTS 36 MO ACCS	24 MO ACCS	12 MO ACCS	6 MO ACCS	3 MO ACCS	AVE ADT 1000 MAIN	VEH X-ST	12 MOS RATE ACCS/MV-MVM ACTUAL F+I	ACTUAL TOT	AVERAGE F+I	AVERAGE TOT	INV REQ
005 LA 8.060 TO 8.260 SOUTH	04D	U	H65	49 Y	26 N	8 N	3 N	0 N	107.0	-	0.26	1.03	0.40	1.15	
005 LA 8.180 TO 8.380 NORTH	04D	U	H65	57 Y	39 Y	19 Y	12 Y	3 N	107.7	-	0.51	2.42	0.40	1.15	REQ
005 LA 8.401 NB ON LAKEWOOD/ROSEMEAD	O	F U	R64	6 Y	5 Y	1 N	0 N	0 N	3.4	-	0.00	0.81	0.16	0.40 +	
005 LA 10.666 NB OFF TELEGRAPH/GARFIE	F	H U	R26	22 N	17 Y	11 Y	5 N	3 N	9.4	-	0.29	3.21	0.41	1.20 +	REQ
005 LA 10.740 TO 10.940 SOUTH	04D	U	H65	47 Y	31 Y	11 N	6 N	0 N	105.3	-	0.39	1.43	0.39	1.14	
005 LA 10.760 TO 10.960 NORTH	04D	U	H65	77 Y	61 Y	36 Y	20 Y	8 Y	105.3	-	1.04	4.69	0.39	1.14	REQ
005 LA 10.960 TO 11.160 NORTH	04D	U	H65	75 Y	45 Y	25 Y	16 Y	5 N	105.0	-	0.92	3.27	0.39	1.14	REQ
005 LA 11.420 TO 11.620 NORTH	04D	U	H65	67 Y	40 Y	25 Y	20 Y	11 Y	107.0	-	1.03	3.21	0.40	1.15	REQ
005 LA 11.440 TO 11.640 SOUTH	04D	U	H65	41 N	31 Y	20 Y	12 Y	6 N	107.6	-	0.26	2.55	0.40	1.15	REQ
005 LA 11.620 TO 11.820 NORTH	04D	U	H65	71 Y	49 Y	31 Y	20 Y	4 N	111.0	-	1.11	3.84	0.41	1.18	REQ
005 LA 11.640 TO 11.840 SOUTH	04D	U	H65	64 Y	39 Y	22 Y	14 Y	2 N	111.0	-	0.12	2.72	0.41	1.18	REQ
005 LA 12.580 TO 12.780 NORTH	04D	U	H65	39 N	29 N	15 N	12 Y	6 N	111.0	-	0.12	1.86	0.41	1.18	REQ
005 LA 12.740 TO 12.940 SOUTH	04D	U	H65	64 Y	43 Y	22 Y	12 Y	2 N	111.0	-	0.37	2.72	0.41	1.18	REQ
005 LA 12.780 TO 12.980 NORTH	04D	U	H65	71 Y	46 Y	19 Y	9 N	5 N	111.0	-	0.37	2.35	0.41	1.18	REQ
005 LA 13.720 TO 13.920 SOUTH	03D	U	H64	79 Y	56 Y	23 N	13 N	6 N	122.9	-	0.11	2.56	0.60	1.75	
005 LA 14.000 TO 14.200 SOUTH	03D	S	H62	66 Y	49 Y	23 Y	11 N	3 N	123.5	-	0.64	2.46	0.39	1.10	REQ
005 LA 14.080 TO 14.280 NORTH	04D	S	H62	138 Y	100 Y	63 Y	34 Y	10 Y	123.9	-	1.17	6.71	0.39	1.10	REQ
005 LA 14.460 TO 14.660 NORTH	04D	S	H62	50 Y	28 N	18 N	8 N	3 N	131.0	-	0.63	1.89	0.39	1.12	
005 LA 14.700 TO 14.900 NORTH	04D	S	H62	71 Y	48 Y	27 Y	13 Y	6 N	130.0	-	1.06	2.85	0.39	1.11	REQ
005 LA 14.740 TO 14.940 SOUTH	04D	S	H62	51 Y	35 Y	16 N	6 N	2 N	129.6	-	0.53	1.70	0.39	1.11	
005 LA 14.811 SB OFF TO DITMAN AVE	F	H S	R26	7 Y	6 Y	1 N	1 N	0 N	1.5	-	0.00	1.83	0.41	1.20 +	
005 LA 14.960 TO 15.160 NORTH	04D	U	H65	68 Y	50 Y	29 Y	11 N	4 N	129.5	-	0.64	3.08	0.45	1.31	REQ
005 LA 14.960 TO 15.160 SOUTH	04D	U	H65	67 Y	39 N	19 N	6 N	2 N	129.5	-	0.32	2.02	0.45	1.31	
005 LA 15.118 NB OFF INDIANA/CALZONA	F	H U	R26	8 Y	5 Y	2 N	1 N	1 N	0.7	-	3.82	7.64	0.41	1.20 +	

REQ=INVESTIGATION REQUIRED (4 OR MORE ACCS. & SIGNIFICANT IN 12,6 OR 3 MONTHS)

+ DENOTES MV USED IN RATES

TASAS TABLE C POTENTIAL INVESTIGATION LOCATIONS .2 MILE
DISTRICT 07 DATA FOR 96-04-01 THRU 99-03-31
ALL ACCIDENTS
CONFIDENCE LEVEL 99.5 PERCENT

LOCATION DESCRIPTION	SCL RMP LNS	R U S	RATE GRP	TOTAL ACCIDENTS 36 MO ACCS	24 MO ACCS	12 MO ACCS	6 MO ACCS	3 MO ACCS	AVE ADT 1000 MAIN	VEH X-ST	12 MOS RATE ACCS/MV-MVM ACTUAL F+I	ACTUAL TOT	AVERAGE F+I	AVERAGE TOT	INV REQ
005 LA 15.165 SB OFF INDIANA/CALZONA	F J	U	R30	19 Y	15 Y	4 N	1 N	0 N	4.1	-	0.67	2.68	0.34	0.90 +	
005 LA 15.160 TO 15.360 NORTH	04D	U	H65	69 Y	44 Y	13 N	7 N	4 N	129.5	-	0.11	1.38	0.45	1.31	
005 LA 15.220 TO 15.420 SOUTH	04D	U	H65	99 Y	62 Y	28 Y	14 Y	5 N	129.5	-	0.21	2.97	0.45	1.31	REQ
005 LA 15.480 TO 15.680 NORTH	04D	U	H65	52 N	35 N	19 N	14 Y	8 N	129.5	-	0.32	2.02	0.45	1.31	REQ
005 LA 15.560 TO 15.760 SOUTH	04D	U	H65	118 Y	76 Y	30 Y	14 Y	4 N	129.5	-	0.74	3.18	0.45	1.31	REQ
005 LA 15.840 TO 16.040 SOUTH	04D	U	H65	67 Y	44 Y	19 N	11 N	4 N	129.5	-	0.32	2.02	0.45	1.31	
005 LA 16.026 SBON EB 60/SB 5/8TH/7TH	O K	U	R36	55 Y	35 Y	19 Y	10 N	4 N	91.4	-	0.12	0.57	0.08	0.25 +	REQ
005 LA 17.080 TO 17.280 NORTH	05D	U	H66	46 Y	21 N	10 N	8 N	5 N	118.5	-	0.12	1.16	0.31	0.93	
005 LA 17.080 TO 17.280 SOUTH	04D	U	H66	130 Y	87 Y	60 Y	36 Y	11 Y	118.5	-	1.62	6.96	0.31	0.93	REQ
005 LA 17.400 TO 17.600 SOUTH	05D	U	H66	134 Y	90 Y	42 Y	21 Y	7 Y	118.3	-	0.81	4.85	0.31	0.93	REQ
005 LA 17.400 TO 17.600 NORTH	05D	U	H66	70 Y	47 Y	26 Y	18 Y	9 Y	118.3	-	1.27	3.00	0.31	0.93	REQ
005 LA 17.600 TO 17.800 SOUTH	05D	U	H66	45 Y	30 Y	16 N	7 N	4 N	120.5	-	0.34	1.82	0.32	0.94	
005 LA 17.900 TO 18.100 NORTH	05D	U	H66	45 Y	30 Y	12 N	6 N	1 N	119.2	-	0.23	1.38	0.31	0.94	
005 LA 17.920 TO 18.120 SOUTH	05D	U	H66	75 Y	44 Y	23 Y	11 Y	3 N	118.5	-	0.12	2.67	0.31	0.93	REQ
005 LA 18.220 TO 18.420 SOUTH	04D	U	H65	85 Y	61 Y	38 Y	21 Y	11 Y	113.5	-	1.82	4.60	0.41	1.20	REQ
005 LA 18.260 SB ON FR WB RTE 10	O C	U	R08	79 Y	57 Y	30 Y	14 Y	3 N	30.4	-	0.72	2.71	0.16	0.50 +	REQ
005 LA 18.272 NB OFF TO EB 10/SOTO	F F	U	R62	35 Y	25 Y	10 N	6 N	2 N	36.5	-	0.15	0.75	0.16	0.40 +	
005 LA 18.660 TO 18.860 NORTH	04D	U	H65	54 Y	37 Y	17 N	8 N	5 N	116.5	-	0.24	2.01	0.42	1.22	
005 LA 18.740 TO 18.940 SOUTH	04D	U	H65	50 Y	35 Y	18 N	6 N	3 N	116.5	-	0.83	2.12	0.42	1.22	
005 LA 19.080 TO 19.280 NORTH	05D	U	H66	32 N	24 N	11 N	8 N	7 Y	115.7	-	0.24	1.31	0.31	0.91	REQ
005 LA 19.660 TO 19.860 NORTH	04D	U	H65	54 Y	44 Y	23 Y	12 Y	4 N	110.1	-	0.37	2.87	0.41	1.17	REQ
005 LA 19.660 TO 19.860 SOUTH	04D	U	H65	39 N	30 N	20 Y	6 N	2 N	110.1	-	0.25	2.49	0.41	1.17	REQ
005 LA 20.237 SEG SB FR SB 110/AVE 26	O K	U	R36	15 Y	13 Y	9 Y	4 N	3 N	17.6	-	0.16	1.40	0.08	0.25 +	REQ
005 LA 20.802 SEG SB FR DUVALL TO 110	O E	U	R60	8 Y	8 Y	5 Y	5 Y	2 Y	2.5	-	1.09	5.47	0.04	0.15 +	REQ

REQ=INVESTIGATION REQUIRED (4 OR MORE ACCS. & SIGNIFICANT IN 12,6 OR 3 MONTHS)

+ DENOTES MV USED IN RATES

TASAS TABLE C POTENTIAL INVESTIGATION LOCATIONS .2 MILE
DISTRICT 07 DATA FOR 96-01-01 THRU 98-12-31
ALL ACCIEENTS
CONFIDENCE LEVEL 99.5 PERCENT

LOCATION DESCRIPTION	SCL RMP LNS	R U S	RATE GRP	TOTAL ACCIDENTS 36 MO ACCS	24 MO ACCS	12 MO ACCS	6 MO ACCS	3 MO ACCS	AVE 100 MAIN	ADT-* VEH X-ST	12 MOS RATE ACCS/MV-MVM-* ACTUAL F+I	ACTUAL TOT	AVERAGE F+I	AVERAGE TOT	INV REQ
005 LA 8.840 TO 9.040 NORTH	04D	U	H65	35 N	22 N	14 N	12 Y	5 N	109.0	-	0.76	1.76	0.40	1.16	REQ
005 LA 10.740 TO 10.940 NORTH	04D	U	H65	70 Y	54 Y	32 Y	20 Y	10 Y	105.3	-	0.91	4.17	0.39	1.14	REQ
005 LA 10.800 TO 11.000 SOUTH	04D	U	H65	62 Y	39 Y	18 Y	9 N	6 N	105.2	-	0.65	2.35	0.39	1.14	REQ
005 LA 10.940 TO 11.140 NORTH	04D	U	H65	82 Y	51 Y	27 Y	21 Y	13 Y	105.0	-	0.92	3.53	0.39	1.14	REQ
005 LA 11.420 TO 11.620 NORTH	04D	U	H65	61 Y	36 Y	16 N	11 N	9 Y	107.0	-	0.39	2.05	0.40	1.15	REQ
005 LA 11.480 TO 11.680 SOUTH	04D	U	H65	47 Y	34 Y	19 Y	11 N	8 Y	108.8	-	0.25	2.40	0.40	1.16	REQ
005 LA 11.620 TO 11.820 NORTH	04D	U	H65	68 Y	54 Y	31 Y	23 Y	16 Y	111.0	-	1.11	3.84	0.41	1.18	REQ
005 LA 11.680 TO 11.880 SOUTH	04D	U	H65	57 Y	40 Y	24 Y	13 Y	10 Y	111.0	-	0.25	2.97	0.41	1.18	REQ
005 LA 12.640 TO 12.840 NORTH	04D	U	H65	75 Y	53 Y	22 Y	13 Y	9 Y	111.0	-	0.25	2.72	0.41	1.18	REQ
005 LA 12.680 TO 12.880 SOUTH	04D	U	H65	58 Y	41 Y	16 N	10 N	8 Y	111.0	-	0.25	1.98	0.41	1.18	REQ
005 LA 13.720 TO 13.920 SOUTH	03D	U	H64	79 Y	55 Y	24 N	13 N	7 N	122.9	-	0.11	2.67	0.60	1.75	
005 LA 14.000 TO 14.200 SOUTH	03D	S	H62	69 Y	51 Y	26 Y	12 N	8 N	128.5	-	0.86	2.78	0.39	1.10	REQ
005 LA 14.000 TO 14.200 NORTH	04D	S	H62	98 Y	70 Y	41 Y	22 Y	16 Y	128.5	-	0.86	4.38	0.39	1.10	REQ
005 LA 14.200 TO 14.400 NORTH	04D	S	H62	89 Y	64 Y	35 Y	22 Y	15 Y	130.4	-	0.21	3.69	0.39	1.11	REQ
005 LA 14.440 TO 14.640 NORTH	04D	S	H62	53 Y	28 N	14 N	10 N	3 N	131.0	-	0.31	1.47	0.39	1.12	
005 LA 14.720 TO 14.920 NORTH	04D	S	H62	92 Y	62 Y	36 Y	20 Y	9 Y	129.8	-	1.38	3.01	0.39	1.11	REQ
005 LA 14.740 TO 14.940 SOUTH	04D	S	H62	53 Y	40 Y	24 Y	6 N	4 N	129.6	-	0.64	2.54	0.39	1.11	REQ
005 LA 14.811 SB OFF TO DITMAN AVE	F	H	S R26	8 Y	6 Y	3 N	1 N	1 N	1.5	-	0.00	5.50	0.41	1.20 +	
005 LA 14.960 TO 15.160 NORTH	04D	U	H65	68 Y	48 Y	32 Y	13 N	7 N	129.5	-	0.42	3.39	0.45	1.31	REQ
005 LA 14.960 TO 15.160 SOUTH	04D	U	H65	75 Y	48 Y	25 Y	10 N	4 N	129.5	-	0.32	2.65	0.45	1.31	REQ
005 LA 15.118 NB OFF INDIANA/CALZONA	F	H	U R26	7 Y	4 N	1 N	1 N	0 N	0.7	-	3.82	3.82	0.41	1.20 +	
005 LA 15.165 SB OFF INDIANA/CALZONA	F	J	U R30	20 Y	16 Y	9 Y	1 N	1 N	4.1	-	0.67	6.03	0.34	0.90 +	REQ
005 LA 15.160 TO 15.360 NORTH	04D	U	H65	73 Y	47 Y	17 N	7 N	3 N	129.5	-	0.21	1.80	0.45	1.31	
005 LA 15.220 TO 15.420 SOUTH	04D	U	H65	104 Y	72 Y	39 Y	15 Y	9 Y	129.5	-	0.74	4.14	0.45	1.31	REQ

REQ=INVESTIGATION REQUIRED (4 OR MORE ACCS. & SIGNIFICANT IN 12,6 OR 3 MONTHS) + DENOTES MV USED IN RATES

TASAS TALLE C POTENTIAL INVESTIGATION LOCATIONS .2 MILE
DISTRICT 07 DATA FOR 96-01-01 THRU 98-12-31
ALL ACCIDENTS
CONFIDENCE LEVEL 99.5 PERCENT

LOCATION DESCRIPTION	SCL RMP LNS	R U S	RATE GRP	TOTAL ACCIDENTS 36 MO ACCS	24 MO ACCS	12 MO ACCS	6 MO ACCS	3 MO ACCS	AVE ADT 1000 MAIN	VEH X-ST	12 MOS RATE ACCS/MV-MVM ACTUAL F+I	ACTUAL TOT	AVERAGE F+I	AVERAGE TOT	INV REQ
005 LA 15.500 TO 55.700 NORTH	04D	U	H65	57 Y	37 N	25 Y	14 Y	9 Y	129.5	-	0.21	2.65	0.45	1.31	REQ
005 LA 15.540 TO 15.740 SOUTH	04D	U	H65	112 Y	82 Y	34 Y	13 N	9 Y	129.5	-	0.95	3.61	0.45	1.31	REQ
005 LA 15.840 TO 16.040 SOUTH	04D	U	H65	68 Y	44 Y	20 N	12 N	7 N	129.5	-	0.42	2.12	0.45	1.31	
005 LA 16.026 SBON EB 60/SB 5/8TH/7TH	0 K	U	R36	56 Y	35 Y	16 N	11 Y	6 N	91.4	-	0.09	0.48	0.08	0.25 +	REQ
005 LA 16.606 SB ON SEG SB RTE 5	2 B	U	R04	35 Y	20 N	5 N	1 N	0 N	48.7	-	0.11	0.28	0.12	0.40 +	
005 LA 17.080 TO 17.280 NORTH	05D	U	H66	45 Y	19 N	7 N	3 N	3 N	118.5	-	0.12	0.81	0.31	0.93	
005 LA 17.080 TO 17.280 SOUTH	04D	U	H66	129 Y	87 Y	50 Y	35 Y	25 Y	118.5	-	1.39	5.80	0.31	0.93	REQ
005 LA 17.340 TO 17.540 SOUTH	05D	U	H66	67 Y	47 Y	21 Y	13 Y	8 Y	118.5	-	0.70	2.43	0.31	0.93	REQ
005 LA 17.360 TO 17.560 NORTH	05D	U	H66	48 Y	33 Y	14 N	9 N	8 Y	118.5	-	0.46	1.62	0.31	0.93	REQ
005 LA 17.540 TO 17.740 SOUTH	05D	U	H66	111 Y	75 Y	44 Y	20 Y	10 Y	120.3	-	0.80	5.03	0.32	0.94	REQ
005 LA 17.560 TO 17.760 NORTH	05D	U	H66	48 Y	36 Y	21 Y	12 Y	6 N	120.5	-	0.68	2.40	0.32	0.94	REQ
005 LA 17.920 TO 18.120 SOUTH	05D	U	H66	75 Y	47 Y	26 Y	13 Y	8 Y	118.5	-	0.23	3.01	0.31	0.93	REQ
005 LA 17.980 TO 18.180 NORTH	05D	U	H66	58 Y	36 Y	17 Y	6 N	4 N	116.4	-	0.71	2.00	0.31	0.92	REQ
005 LA 18.220 TO 18.420 SOUTH	04D	U	H65	80 Y	53 Y	32 Y	18 Y	10 Y	113.5	-	1.70	3.87	0.41	1.20	REQ
005 LA 18.260 SB ON FR WB RTE 10	0 C	U	R08	80 Y	61 Y	36 Y	14 Y	11 Y	30.4	-	0.63	3.25	0.16	0.50 +	REQ
005 LA 18.272 NB OFF TO EB 10/SOTO	F F	U	R62	39 Y	25 Y	12 N	5 N	4 N	36.5	-	0.23	0.90	0.16	0.40 +	
005 LA 18.720 TO 18.920 NORTH	04D	U	H65	55 Y	37 Y	21 Y	12 N	5 N	116.5	-	0.24	2.48	0.42	1.22	REQ
005 LA 18.740 TO 18.940 SOUTH	04D	U	H65	54 Y	35 Y	18 N	9 N	3 N	116.5	-	0.71	2.12	0.42	1.22	
005 LA 19.660 TO 19.860 NORTH	04D	U	H65	53 Y	43 Y	23 Y	13 Y	8 Y	110.1	-	0.37	2.87	0.41	1.17	REQ
005 LA 19.680 TO 19.880 SOUTH	04D	U	H65	43 N	33 Y	21 Y	12 Y	4 N	109.5	-	0.25	2.63	0.40	1.17	REQ
005 LA 20.060 TO 20.260 NORTH	04D	U	H65	44 Y	31 N	19 Y	8 N	4 N	108.0	-	0.38	2.42	0.40	1.16	REQ
005 LA 20.237 SEG SB FR SB 110/AVE 26	0 K	U	R36	12 Y	11 Y	8 Y	3 N	1 N	17.6	-	0.00	1.25	0.08	0.25 +	REQ
005 LA 20.247 SEG NBOFF TO NB RTE 110	F F	U	R62	8 N	8 N	7 Y	2 N	1 N	11.4	-	0.72	1.69	0.16	0.40 +	REQ
005 CA 20.802 SEG SB FR DUVALL TO 110	0 E	U	R60	6 Y	6 Y	3 Y	3 Y	3 Y	2.5	-	1.09	3.28	0.04	0.15 +	

REQ=INVESTIGATION REQUIRED (4 OR MORE ACCS. & SIGNIFICANT IN 12,6 OR 3 MONTHS)

+ DENOTES MV USED IN RATES

TASAS TABLE C POTENTIAL INVESTIGATION LOCATIONS .2 MILE

DISTRICT 07 DATA FOR 95-10-01 THRU 98-09-30

ALL ACCIDENTS

CONFIDENCE LEVEL 99.5 PERCENT

LOCATION DESCRIPTION	SCL RMP LNS	R U S	GRP	RATE* 36 MO ACCS	TOTAL ACCIDENTS 24 MO ACCS	12 MO ACCS	6 MO ACCS	3 MO ACCS	AVE ADT-* 1000 MAIN	VEH X-ST	12 MOS RATE ACCS/MV-MVM-* ACTUAL F+I	ACTUAL TOT	AVERAGE F+I	AVERAGE TOT	INV REQ
005 LA 14.060 TO 14.260 NORTH	04D	S	H62	109 Y	71 Y	42 Y	26 Y	9 Y	133.6	-	0.82	4.32	0.40	1.14	REQ
005 LA 14.260 TO 14.460 NORTH	04D	S	H62	53 Y	36 N	17 N	7 N	4 N	136.0	-	0.40	1.72	0.41	1.15	
005 LA 14.480 TO 14.680 NORTH	04D	S	H62	63 Y	40 Y	18 N	10 N	7 N	136.0	-	0.40	1.82	0.41	1.15	
005 LA 14.720 TO 14.920 NORTH	04D	S	H62	89 Y	65 Y	35 Y	20 Y	11 Y	134.8	-	1.12	3.57	0.40	1.14	REQ
005 LA 14.740 TO 14.940 SOUTH	04D	S	H62	53 Y	39 Y	20 N	10 N	2 N	134.6	-	0.51	2.04	0.40	1.14	
005 LA 14.811 SB OFF TO DITMAN AVE	F	H	S R26	7 Y	5 N	3 N	0 N	0 N	1.5	-	1.83	5.50	0.41	1.20 +	
005 LA 14.960 TO 15.160 SOUTH	04D	U	H65	75 Y	50 Y	22 N	13 N	6 N	135.0	-	0.20	2.24	0.47	1.35	
005 LA 14.960 TO 15.160 NORTH	04D	U	H65	69 Y	47 Y	30 Y	18 Y	6 N	135.0	-	0.41	3.05	0.47	1.35	REQ
005 LA 15.118 NB OFF INDIANA/CALZONA	F	H	U R26	7 Y	5 Y	3 N	1 N	1 N	0.7	-	3.82	11.46	0.41	1.20 +	
005 LA 15.165 SB OFF INDIANA/CALZONA	F	J	U R30	22 Y	17 Y	11 Y	3 N	0 N	4.1	-	0.67	7.37	0.34	0.90 +	REQ
005 LA 15.160 TO 15.360 NORTH	04D	U	H65	73 Y	49 Y	18 N	6 N	4 N	135.0	-	0.20	1.83	0.47	1.35	
005 LA 15.160 TO 15.360 SOUTH	04D	U	H65	92 Y	71 Y	32 Y	15 Y	6 N	135.0	-	0.51	3.26	0.47	1.35	REQ
005 LA 15.520 TO 15.720 SOUTH	04D	U	H65	100 Y	78 Y	37 Y	15 Y	4 N	135.0	-	0.92	3.76	0.47	1.35	REQ
005 LA 15.580 TO 15.780 NORTH	04D	U	H65	66 Y	43 Y	23 N	10 N	6 N	135.0	-	0.10	2.34	0.47	1.35	
005 LA 15.840 TO 16.040 NORTH	04D	U	H65	47 N	39 N	24 Y	9 N	3 N	135.0	-	0.31	2.44	0.47	1.35	REQ
005 LA 15.840 TO 16.040 SOUTH	04D	U	H65	64 Y	47 Y	21 N	8 N	5 N	135.0	-	0.20	2.14	0.47	1.35	
005 LA 16.026 SBON EB 60/SB 5/8TH4/7TH	O	K	U R36	54 Y	36 Y	14 N	9 N	5 N	91.4	-	0.06	0.42	0.08	0.25 +	
005 LA 16.606 SB ON SEG SB RTE 5	2	B	U R04	36 Y	26 Y	12 N	5 N	1 N	43.7	-	0.17	0.68	0.12	0.40 +	
005 LA 17.080 TO 17.280 NORTH	05D	U	H66	46 Y	21 N	6 N	2 N	0 N	121.5	-	0.00	0.68	0.32	0.95	
005 LA 17.080 TO 17.280 SOUTH	04D	U	H66	108 Y	75 Y	34 Y	24 Y	10 Y	121.5	-	0.90	3.84	0.32	0.95	REQ
005 LA 17.380 TO 17.580 SOUTH	05D	U	H66	121 Y	87 Y	55 Y	21 Y	9 Y	121.7	-	1.02	6.21	0.32	0.95	REQ
005 LA 17.440 TO 17.640 NORTH	05D	U	H65	87 Y	54 Y	26 Y	11 Y	6 N	122.3	-	0.90	2.92	0.32	0.95	REQ
005 LA 17.580 TO 17.780 SOUTH	05D	U	H66	52 Y	34 Y	20 Y	10 N	5 N	123.5	-	0.33	2.22	0.32	0.96	REQ
005 LA 17.900 TO 18.100 SOUTH	05D	U	H66	61 Y	42 Y	17 N	11 Y	5 N	122.4	-	0.11	1.91	0.32	0.95	REQ

+ DENOTES MV USED IN RATES

REQ=INVESTIGATION REQUIRED (4 OR MORE ACCS. & SIGNIFICANT IN 12,6 OR 3 MONTHS)

TASAS TABLE C POTENTIAL INVESTIGATION LOCATIONS .2 MILE
DISTRICT 07 DATA FOR 95-07-01 THRU 98-06-30
ALL ACCIDENTS
CONFIDENCE LEVEL 99.5 PERCENT

LOCATION DESCRIPTION	SCL RMP LNS	R U S	RATE GRP	TOTAL ACCIDENTS 36 MO ACCS	24 MO ACCS	12 MO ACCS	6 MO ACCS	3 MO ACCS	AVE 1000 MAIN	ADT VEH X-ST	12 MOS RATE ACCS/MV-MVM ACTUAL F+I	ACTUAL TOT	AVERAGE F+I	AVERAGE TOT	INV REQ
005 LA 8.401 NB ON LAKEWOOD/ROSEMEAD	0 F	U	R64	5 N	5 Y	2 N	1 N	0 N	3.4	-	0.81	1.62	0.16	0.40 +	
005 LA 9.960 TO 10.160 NORTH	04D	U	H65	43 Y	30 N	10 N	4 N	3 N	108.0	-	0.38	1.27	0.40	1.16	
005 LA 10.666 NB OFF TELEGRAPH/GARFIE	F H	U	R26	19 N	15 N	10 N	7 N	5 Y	9.2	-	0.00	2.92	0.41	1.20 +	REQ
005 LA 10.760 TO 10.960 SOUTH	04D	U	H65	57 Y	40 Y	19 Y	8 N	4 N	107.6	-	0.51	2.43	0.40	1.15	REQ
005 LA 10.800 TO 11.000 NORTH	04D	U	H65	72 Y	49 Y	29 Y	15 Y	8 Y	107.4	-	0.64	3.71	0.40	1.15	REQ
005 LA 11.000 TO 11.200 NORTH	04D	U	H65	59 Y	33 Y	13 N	3 N	2 N	107.0	-	0.39	1.67	0.40	1.15	
005 LA 11.500 TO 11.700 SOUTH	04D	U	H65	55 Y	36 Y	22 Y	12 Y	5 N	109.9	-	0.12	2.75	0.40	1.17	REQ
005 LA 11.520 TO 11.720 NORTH	04D	U	H65	68 Y	55 Y	25 Y	12 Y	7 N	110.3	-	0.75	3.11	0.41	1.17	REQ
005 LA 11.700 TO 11.900 SOUTH	04D	U	H65	43 N	33 Y	14 N	7 N	4 N	111.0	-	0.00	1.73	0.41	1.18	
005 LA 12.700 TO 12.900 SOUTH	04D	U	H65	60 Y	46 Y	20 Y	7 N	5 N	111.5	-	0.49	2.47	0.41	1.18	REQ
005 LA 12.760 TO 12.960 NORTH	04D	U	H65	75 Y	60 Y	26 Y	13 Y	7 N	111.8	-	0.74	3.20	0.41	1.18	REQ
005 LA 12.944 NBOFF SB ATLANTIC/TRGGS	F H	U	R26	17 Y	10 N	6 N	4 N	2 N	4.8	-	0.57	3.43	0.41	1.20 +	
005 LA 13.720 TO 13.920 SOUTH	03D	U	H64	76 Y	55 Y	32 Y	11 N	4 N	126.6	-	0.54	3.45	0.61	1.79	REQ
005 LA 14.000 TO 14.200 NORTH	04D	S	H62	90 Y	63 Y	36 Y	19 Y	11 Y	133.5	-	0.82	3.70	0.40	1.14	REQ
005 LA 14.040 TO 14.240 SOUTH	04D	S	H62	81 Y	58 Y	39 Y	19 Y	9 Y	133.5	-	0.93	4.01	0.40	1.14	REQ
005 LA 14.200 TO 14.400 NORTH	04D	S	H62	82 Y	52 Y	28 Y	13 N	9 Y	135.4	-	0.71	2.84	0.40	1.15	REQ
005 LA 14.480 TO 14.680 NORTH	04D	S	H62	58 Y	37 Y	14 N	6 N	3 N	136.0	-	0.30	1.41	0.41	1.15	
005 LA 14.720 TO 14.920 NORTH	04D	S	H62	85 Y	58 Y	31 Y	16 Y	9 Y	134.8	-	0.71	3.16	0.40	1.14	REQ
005 LA 14.720 TO 14.920 SOUTH	04D	S	H62	39 N	30 N	15 N	13 Y	6 N	134.8	-	0.31	1.53	0.40	1.14	REQ
005 LA 14.811 SB OFF TO DITMAN AVE	F H	S	R26	7 N	6 Y	5 Y	2 N	0 N	1.5	-	3.66	9.16	0.41	1.20 +	REQ
005 LA 14.960 TO 15.160 SOUTH	04D	U	H65	74 Y	48 Y	24 Y	15 Y	7 N	135.0	-	0.10	2.44	0.47	1.35	REQ
005 LA 14.960 TO 15.160 NORTH	04D	U	H65	68 Y	46 Y	27 Y	19 Y	12 Y	135.0	-	0.20	2.75	0.47	1.35	REQ
005 LA 15.118 NB OFF INDIANA/CALZONA	F H	U	R26	8 Y	5 Y	2 N	0 N	0 N	0.7	-	0.00	7.64	0.41	1.20 +	
005 LA 15.165 SB OFF INDIANA/CALZONA	F J	U	R30	24 Y	17 Y	12 Y	8 Y	3 N	4.1	-	1.34	8.04	0.34	0.90 +	REQ

REQ=INVESTIGATION REQUIRED (4 OR MORE ACCS. & SIGNIFICANT IN 12,6 OR 3 MONTHS) + DENOTES MV USED IN RATES

TASAS TABLE C POTENTIAL INVESTIGATION LOCATIONS .2 MILE
DISTRICT 07 DATA FOR 95-07-01 THRU 98-06-30
ALL ACCIDENTS
CONFIDENCE LEVEL 99.5 PERCENT

LOCATION DESCRIPTION	SCL RMP LNS	R U S	RATE GRP	TOTAL ACCIDENTS 36 MO ACCS	24 MO ACCS	12 MO ACCS	6 MO ACCS	3 MO ACCS	AVE 1000 MAIN	ADT-VEH X-ST	12 MOS RATE ACCS/MV-MVH ACTUAL F+I	ACTUAL TOT	AVERAGE F+I	AVERAGE TOT	INV REQ
005 LA 15.160 TO 15.360 NORTH	04D	U	H65	71 Y	52 Y	22 N	10 N	2 N	135.0	-	0.31	2.24	0.47	1.35	
005 LA 15.160 TO 15.360 SOUTH	04D	U	H65	90 Y	69 Y	32 Y	22 Y	9 N	135.0	-	0.41	3.26	0.47	1.35	REQ
005 LA 15.500 TO 15.700 SOUTH	04D	U	H65	94 Y	68 Y	34 Y	18 Y	10 Y	135.0	-	0.81	3.46	0.47	1.35	REQ
005 LA 15.560 TO 15.760 NORTH	04D	U	H65	62 Y	42 Y	22 N	15 Y	3 N	135.0	-	0.00	2.24	0.47	1.35	REQ
005 LA 15.840 TO 16.040 NORTH	04D	U	H65	49 N	38 N	23 N	16 Y	6 N	135.0	-	0.31	2.34	0.47	1.35	REQ
005 LA 15.840 TO 16.040 SOUTH	04D	U	H65	60 Y	50 Y	25 Y	8 N	3 N	135.0	-	0.31	2.54	0.47	1.35	REQ
005 LA 16.026 SBON EB 60/SB 5/8TH/7TH	O K	U	R36	56 Y	34 Y	15 N	5 N	4 N	91.4	-	0.06	0.45	0.08	0.25 +	
005 LA 16.606 SB ON SEG SB RTE 5	Z B	U	R04	36 Y	28 Y	13 N	4 N	4 N	48.7	-	0.17	0.73	0.12	0.40 +	
005 LA 17.080 TO 17.280 SOUTH	04D	U	H66	109 Y	73 Y	32 Y	15 Y	14 Y	121.5	-	0.57	3.62	0.32	0.95	REQ
005 LA 17.080 TO 17.280 NORTH	05D	U	H66	50 Y	31 Y	9 N	4 N	2 N	121.5	-	0.00	1.02	0.32	0.95	
005 LA 17.360 TO 17.560 SOUTH	05D	U	H66	104 Y	76 Y	49 Y	19 Y	11 Y	121.5	-	1.02	5.54	0.32	0.95	REQ
005 LA 17.440 TO 17.640 NORTH	05D	U	H66	85 Y	55 Y	30 Y	13 Y	5 N	122.3	-	0.90	3.37	0.32	0.95	REQ
005 LA 17.560 TO 17.760 SOUTH	05D	U	H66	69 Y	43 Y	23 Y	14 Y	6 N	123.5	-	0.45	2.56	0.32	0.96	REQ
005 LA 17.980 TO 18.180 SOUTH	05D	U	H66	81 Y	57 Y	24 Y	15 Y	8 Y	120.0	-	0.57	2.75	0.32	0.94	REQ
005 LA 17.980 TO 18.180 NORTH	05D	U	H66	56 Y	42 Y	22 Y	11 Y	8 Y	120.0	-	0.69	2.52	0.32	0.94	REQ
005 LA 18.220 TO 18.420 SOUTH	04D	U	H65	73 Y	50 Y	28 Y	14 Y	9 Y	117.5	-	0.82	3.27	0.42	1.22	REQ
005 LA 18.260 SB ON FR WB RTE 10	O C	U	R08	75 Y	61 Y	35 Y	22 Y	13 Y	30.4	-	0.72	3.16	0.16	0.50 +	REQ
005 LA 18.272 NB OFF TO EB 10/SOTO	F F	U	R62	35 Y	26 Y	13 Y	7 N	3 N	36.5	-	0.30	0.98	0.16	0.40 +	REQ
005 LA 18.660 TO 18.860 NORTH	04D	U	H65	48 Y	30 N	17 N	9 N	2 N	120.0	-	0.57	1.95	0.43	1.24	
005 LA 18.720 TO 18.920 SOUTH	04D	U	H65	53 Y	32 N	20 N	9 N	6 N	120.0	-	0.46	2.29	0.43	1.24	
005 LA 19.660 TO 19.860 SOUTH	04D	U	H65	42 N	25 N	15 N	10 N	8 Y	113.3	-	0.24	1.82	0.41	1.19	REQ
005 LA 19.680 TO 19.880 NORTH	04D	U	H65	48 Y	36 Y	27 Y	12 Y	6 N	112.6	-	0.12	3.29	0.41	1.19	REQ
005 LA 19.740 SEG NBFR BRDWY TO PSDNA	Z Z	U	R52	14 Y	10 N	6 N	1 N	1 N	5.6	-	2.45	2.94	0.55	1.00 +	
005 LA 19.857 NB OFF TO 110/FIGUEROA	F K	U	R34	12 Y	5 N	1 N	0 N	0 N	17.0	-	0.16	0.16	0.09	0.25 +	

REQ=INVESTIGATION REQUIRED (4 OR MORE ACCS. & SIGNIFICANT IN 12,6 OR 3 MONTHS)

+ DENOTES MV USED IN RATES

TASAS TABLE C POTENTIAL INVESTIGATION LOCATIONS .2 MILE
DISTRICT 07 DATA FOR 95-04-01 THRU 98-03-31
ALL ACCIDENTS
CONFIDENCE LEVEL 99.5 PERCENT

LOCATION DESCRIPTION	SCL RMP LNS	R U S	RATE GRP	TOTAL ACCIDENTS 36 MO ACCS	24 MO ACCS	12 MO ACCS	6 MO ACCS	3 MO ACCS	AVE ADT 1000 MAIN	VEH X-ST	12 MOS RATE ACCS/MV-MVM ACTUAL F+I	ACTUAL TOT	AVERAGE F+I	AVERAGE TOT	INV REQ
005 LA 13.700 TO 13.900 NORTH	03D	U	H64	63 N	40 N	24 N	17 Y	5 N	124.5	-	0.44	2.63	0.60	1.77	REQ
005 LA 13.720 TO 13.920 SOUTH	03D	U	H64	76 Y	54 Y	31 Y	16 N	5 N	126.6	-	0.65	3.35	0.61	1.79	REQ
005 LA 14.020 TO 14.220 NORTH	04D	S	H62	94 Y	64 Y	31 Y	19 Y	9 Y	133.5	-	0.93	3.19	0.40	1.14	REQ
005 LA 14.080 TO 14.280 SOUTH	04D	S	H62	88 Y	58 Y	33 Y	22 Y	9 Y	133.9	-	0.62	3.38	0.40	1.14	REQ
005 LA 14.220 TO 14.420 NORTH	04D	S	H62	69 Y	45 Y	26 Y	11 N	3 N	135.6	-	0.71	2.63	0.40	1.15	REQ
005 LA 14.480 TO 14.680 NORTH	04D	S	H62	62 Y	38 Y	13 N	8 N	3 N	136.6	-	0.20	1.31	0.41	1.15	
005 LA 14.740 TO 14.940 NORTH	04D	S	H62	101 Y	72 Y	38 Y	21 Y	9 Y	134.6	-	0.71	3.88	0.40	1.14	REQ
005 LA 14.740 TO 14.940 SOUTH	04D	S	H62	46 N	35 N	19 N	10 N	10 Y	134.6	-	0.10	1.94	0.40	1.14	REQ
005 LA 14.811 SB OFF TO DITMAN AVE	F	H	S R26	8 Y	6 Y	5 Y	3 N	2 N	1.5	-	3.66	9.16	0.41	1.20 +	REQ
005 LA 15.118 NB OFF INDIANA/CALZONA	F	H	U R26	9 Y	6 Y	3 N	2 N	0 N	0.7	-	3.82	11.46	0.41	1.20 +	
005 LA 15.120 TO 15.320 NORTH	04D	U	H65	70 Y	56 Y	31 Y	14 N	10 Y	135.0	-	0.51	3.15	0.47	1.35	REQ
005 LA 15.140 TO 15.340 SOUTH	04D	U	H65	79 Y	60 Y	26 Y	17 Y	13 Y	135.0	-	0.51	2.65	0.47	1.35	REQ
005 LA 15.165 SB OFF INDIANA/CALZONA	F	J	U F30	21 Y	15 Y	11 Y	8 Y	5 Y	4.1	-	0.67	7.37	0.34	0.90 +	REQ
005 LA 15.340 TO 15.540 SOUTH	04D	U	H65	57 Y	32 N	16 N	10 N	5 N	135.0	-	0.61	1.63	0.47	1.35	
005 LA 15.560 TO 15.760 NORTH	04D	U	H65	61 Y	42 Y	21 N	11 N	10 Y	135.0	-	0.00	2.14	0.47	1.35	REQ
005 LA 15.580 TO 15.780 SOUTH	04D	U	H65	113 Y	87 Y	45 Y	23 Y	11 Y	133.0	-	1.83	4.58	0.47	1.35	REQ
005 LA 15.840 TO 16.040 SOUTH	04D	U	H65	62 Y	48 Y	25 Y	13 N	5 N	135.0	-	0.31	2.54	0.47	1.35	REQ
005 LA 15.840 TO 16.040 NORTH	04D	U	H65	46 N	37 N	21 N	15 Y	10 Y	135.0	-	0.41	2.14	0.47	1.35	REQ
005 LA 16.026 SBON EB 60/SB 5/8TH/7TH	O	K	U R36	56 Y	36 Y	16 N	5 N	1 N	91.4	-	0.09	0.48	0.08	0.25 +	
005 LA 17.080 TO 17.280 NORTH	05D	U	H66	49 Y	36 Y	11 N	4 N	2 N	121.5	-	0.11	1.24	0.32	0.95	
005 LA 17.080 TO 17.280 SOUTH	04D	U	H66	99 Y	69 Y	26 Y	10 N	1 N	121.5	-	0.45	2.94	0.32	0.95	REQ
005 LA 17.360 TO 17.560 SOUTH	05D	U	H66	97 Y	74 Y	39 Y	29 Y	8 Y	121.5	-	0.60	4.41	0.32	0.95	REQ
005 LA 17.420 TO 17.620 NORTH	05D	U	H66	79 Y	51 Y	28 Y	12 Y	5 N	122.1	-	1.01	3.15	0.32	0.95	REQ
005 LA 17.560 TO 17.760 SOUTH	05D	U	H66	70 Y	46 Y	23 Y	15 Y	8 Y	123.5	-	0.67	2.56	0.32	0.96	REQ

REQ=INVESTIGATION REQUIRED (4 OR MORE ACCS. & SIGNIFICANT IN 12,6 OR 3 MONTHS)

+ DENOTES MV USED IN RATES

TRSAS TABLE C POTENTIAL INVESTIGATION LOCATIONS .2 MILE
DISTRICT 07 DATA FOR 98-07-01 THRU 01-06-30
WET ACCIDENTS
CONFIDENCE LEVEL 99.5 PERCENT

LOCATION DESCRIPTION	SCL RMP LNS	R U S	RATE* GRP	TOTAL WET ACCIDENTS 36 MO ACCS	24 MO ACCS	12 MO ACCS	6 MO ACCS	3 MO ACCS	AVE 1000 MAIN	ADT-* VEH X-ST	*36 MOS NO OF F+I	AVERAGE ACC TOT	ACC & RATES* RATE/MVM-MV F+I	TOT	HT-65 REQ
005 LA 10.560 TO 10.660 SOUTH	04D	U	H65	6 N	6 Y	2 N	1 N	0 N	108.6	-	0.57	1.82	1.21	3.84	REQ
005 LA 10.740 TO 10.940 NORTH	04D	U	H65	7 Y	3 N	1 N	1 N	0 N	108.4	-	0.57	1.82	1.21	3.83	
005 LA 10.860 TO 11.060 SOUTH	04D	U	H65	8 Y	2 N	1 N	1 N	0 N	108.1	-	0.57	1.81	1.21	3.83	
005 LA 11.440 TO 11.640 SOUTH	04D	U	H65	7 Y	6 Y	2 N	1 N	0 N	110.2	-	0.59	1.87	1.22	3.87	REQ
005 LA 11.440 TO 11.640 NORTH	04D	U	H65	7 Y	2 N	0 N	0 N	0 N	110.2	-	0.59	1.87	1.22	3.87	
005 LA 12.600 TO 12.800 NORTH	04D	U	H65	7 Y	6 Y	5 Y	3 N	0 N	113.0	-	0.61	1.94	1.24	3.93	REQ
005 LA 12.720 TO 12.920 SOUTH	04D	U	H65	12 Y	7 Y	7 Y	7 Y	0 N	113.3	-	0.61	1.95	1.24	3.94	REQ
005 LA 13.360 TO 13.560 NORTH	05D	U	H66	5 N	5 N	4 Y	1 N	0 N	113.5	-	0.53	1.71	1.07	3.44	REQ
005 LA 14.060 TO 14.260 NORTH	04D	S	H62	11 Y	6 Y	4 N	3 N	0 N	129.5	-	0.71	2.17	1.25	3.83	REQ
005 LA 14.080 TO 14.280 SOUTH	04D	S	H62	16 Y	11 Y	5 Y	5 Y	1 N	129.8	-	0.71	2.18	1.25	3.83	REQ
005 LA 14.680 TO 14.880 NORTH	04D	S	H62	13 Y	10 Y	5 Y	5 Y	0 N	131.2	-	0.73	2.22	1.26	3.86	REQ
005 LA 14.740 TO 14.940 SOUTH	04D	S	H62	10 Y	10 Y	6 Y	3 N	0 N	130.6	-	0.72	2.21	1.26	3.85	REQ
005 LA 14.960 TO 15.160 SOUTH	04D	U	H65	11 Y	7 Y	4 N	3 N	0 N	130.8	-	0.78	2.47	1.36	4.32	REQ
005 LA 15.118 NB OFF INDIANA/CALZONA	F	H	U R26	2 N	2 Y	1 N	1 N	0 N	0.7	-	0.02	0.06	1.29	3.81 +	
005 LA 15.165 SB OFF INDIANA/CALZONA	F	J	U R30	3 Y	2 N	0 N	0 N	0 N	4.1	-	0.10	0.27	1.06	3.04 +	
005 LA 15.180 TO 15.380 SOUTH	04D	U	H65	17 Y	7 Y	4 N	1 N	0 N	130.8	-	0.78	2.47	1.36	4.32	REQ
005 LA 15.180 TO 15.380 NORTH	04D	U	H65	17 Y	13 Y	4 N	4 Y	1 N	130.8	-	0.78	2.47	1.36	4.32	REQ
005 LA 16.605 SB ON FR SEVENTH ST	0	F	U R20	3 Y	2 N	0 N	0 N	0 N	3.7	-	0.06	0.17	0.76	2.12 +	
005 LA 16.995 SB OFF TO EB 60/SB 5	F	C	U R06	12 Y	6 N	3 N	3 N	0 N	77.9	-	1.25	3.62	0.74	2.12 +	REQ
005 LA 17.080 TO 17.260 SOUTH	04D	U	H66	10 Y	7 Y	3 N	3 N	0 N	119.7	-	0.58	1.86	1.11	3.56	REQ
005 LA 17.900 TO 18.100 SOUTH	05D	U	H66	9 Y	8 Y	6 Y	5 Y	0 N	121.1	-	0.59	1.90	1.11	3.58	REQ
005 LA 18.220 TO 18.420 SOUTH	04D	U	H65	22 Y	15 Y	6 Y	5 Y	0 N	113.7	-	0.62	1.96	1.24	3.95	REQ
005 LA 18.260 SB ON FR WB RTE 10	0	C	U R08	42 Y	27 Y	13 Y	7 Y	0 N	30.4	-	0.45	1.31	0.68	1.97 +	REQ
005 LA 18.272 NB OFF TO EB 10/SOTO	F	F	U R62	16 Y	16 Y	6 Y	4 Y	0 N	6.5	-	0.43	1.33	0.54	1.66 +	REQ

REQ=INVESTIGATION REQUIRED (9,6 OR 3 OR MORE ACCS. & SIGNIFICENT IN 36,24 OR 12 MONTHS, RESP.) + DENOTES MV USED IN RATES

TASAS TABLE C POTENTIAL INVESTIGATION LOCATIONS .2 MILE
DISTRICT 07 DATA FOR 97-07-01 THRU 00-06-30
WET ACCIDENTS
CONFIDENCE LEVEL 99.5 PERCENT

LOCATION DESCRIPTION	SCL RMP LNS	R U S	RATE GRP	TOTAL WET ACCIDENTS 36 MO ACCS	24 MO ACCS	12 MO ACCS	6 MO ACCS	3 MO ACCS	AVE ADT 1000 MAIN	VEH X-ST	36 MOS AVERAGE NO OF ACC F+I	TOT	ACC & RATES RATE/MVM-MV F+I	TOT	HT-65 REQ
005 LA 6.765 SB ON FR SB RTE 605	0 C	U	R08	12 Y	6 Y	3 Y	2 N	0 N	19.7	-	0.29	0.85	0.68	1.97 +	REQ
005 LA 6.914 NBON FR NB 605/STUDEBKR	0 C	U	R08	49 Y	27 Y	14 Y	12 Y	0 N	32.5	-	0.49	1.40	0.68	1.97 +	REQ
005 LA 8.140 TO 8.340 NORTH	04D	U	H65	9 Y	4 N	1 N	1 N	0 N	110.2	-	0.59	1.87	1.22	3.87	REQ
005 LA 8.274 NB ON FR NB RTE 19	0 L	U	R72	2 N	2 N	2 N	2 Y	0 N	4.0	-	0.06	0.23	0.74	2.58 +	
005 LA 9.620 TO 9.820 NORTH	04D	U	H65	7 Y	1 N	1 N	1 N	0 N	108.0	-	0.57	1.81	1.21	3.83	
005 LA 9.880 TO 10.080 NORTH	04D	U	H65	7 Y	5 N	4 Y	4 Y	0 N	106.4	-	0.56	1.77	1.19	3.79	REQ
005 LA 10.660 TO 10.860 SOUTH	04D	U	H65	8 Y	4 N	4 Y	4 Y	0 N	106.4	-	0.56	1.77	1.19	3.79	REQ
005 LA 10.740 TO 10.940 NORTH	04D	U	H65	9 Y	6 Y	2 N	2 N	1 N	106.2	-	0.56	1.76	1.19	3.79	REQ
005 LA 10.744 SB ON BANDINI/GARFIELD	0 H	U	R28	4 Y	2 N	2 N	1 N	1 N	9.5	-	0.15	0.45	0.72	2.12 +	
005 LA 10.860 TO 11.060 SOUTH	04D	U	H65	14 Y	7 Y	1 N	1 N	0 N	105.9	-	0.55	1.75	1.19	3.78	REQ
005 LA 11.440 TO 11.640 SOUTH	04D	U	H65	7 Y	5 N	4 Y	4 Y	0 N	108.1	-	0.57	1.81	1.21	3.83	REQ
005 LA 11.440 TO 11.640 NORTH	04D	U	H65	9 Y	7 Y	2 N	2 N	0 N	108.1	-	0.57	1.81	1.21	3.83	REQ
005 LA 12.820 TO 13.020 SOUTH	04D	U	H65	14 Y	13 Y	4 N	4 Y	0 N	111.2	-	0.60	1.90	1.23	3.89	REQ
005 LA 13.680 TO 13.880 SOUTH	03D	U	H64	10 Y	2 N	1 N	1 N	0 N	120.0	-	0.91	2.93	1.72	5.55	REQ
005 LA 14.000 TO 14.200 SOUTH	03D	S	H62	18 Y	9 Y	4 N	4 Y	0 N	129.5	-	0.71	2.17	1.25	3.83	REQ
005 LA 14.160 TO 14.360 NORTH	04D	S	H62	20 Y	12 Y	6 Y	5 Y	1 N	131.0	-	0.72	2.21	1.26	3.86	REQ
005 LA 14.200 TO 14.400 SOUTH	04D	S	H62	12 Y	7 Y	4 N	4 Y	0 N	131.5	-	0.73	2.23	1.27	3.87	REQ
005 LA 14.440 TO 14.640 SOUTH	04D	S	H62	8 Y	3 N	2 N	2 N	0 N	132.1	-	0.74	2.25	1.27	3.88	
005 LA 14.560 TO 14.760 NORTH	04D	S	H62	13 Y	8 Y	5 Y	5 Y	0 N	132.1	-	0.74	2.25	1.27	3.88	REQ
005 LA 14.700 TO 14.900 SOUTH	04D	S	H62	8 Y	4 N	4 N	4 Y	0 N	131.2	-	0.73	2.22	1.26	3.86	
005 LA 14.960 TO 15.160 SOUTH	04D	U	H65	13 Y	7 Y	3 N	2 N	0 N	130.9	-	0.78	2.47	1.36	4.32	REQ
005 LA 14.960 TO 15.160 NORTH	04D	U	H65	10 Y	3 N	2 N	2 N	0 N	130.9	-	0.78	2.47	1.36	4.32	REQ
005 LA 15.160 TO 15.360 NORTH	04D	U	H65	16 Y	11 Y	8 Y	8 Y	1 N	130.9	-	0.78	2.47	1.36	4.32	REQ
005 LA 15.165 SB OFF INDIANA/CALZONA	F J	U	R30	8 Y	3 Y	2 N	2 Y	0 N	4.1	-	0.10	0.27	1.06	3.04 +	

REQ=INVESTIGATION REQUIRED (9,6 OR 3 OR MORE ACCS. & SIGNIFICENT IN 36,24 OR 12 MONTHS, RESP.) + DENOTES MV USED IN RATES

TASAS TABLE C POTENTIAL INVESTIGATION LOCATIONS .2 MILE
DISTRICT 07 DATA FOR 97-07-01 THRU 00-06-30
WET ACCIDENTS
CONFIDENCE LEVEL 99.5 PERCENT

LOCATION DESCRIPTION	SCL RMP LNS	R U S	RATE GRP	TOTAL WET ACCIDENTS 36 MO ACCS	24 MO ACCS	12 MO ACCS	6 MO ACCS	3 MO ACCS	AVE ADT 1000 MAIN	VEH X-ST	36 MOS AVERAGE NO OF ACC F+I	TOT	ACC & RATES RATE/MVM F+I	MV TOT	HT-65 REQ
005 LA 15.160 TO 15.360 SOUTH	04D	U	H65	26 Y	11 Y	3 N	3 N	0 N	130.9	-	0.78	2.47	1.36	4.32	REQ
005 LA 15.360 TO 15.560 SOUTH	04D	U	H65	8 Y	2 N	0 N	0 N	0 N	130.9	-	0.78	2.47	1.36	4.32	
005 LA 15.560 TO 15.760 SOUTH	04D	U	H65	11 Y	5 N	2 N	2 N	0 N	130.9	-	0.78	2.47	1.36	4.32	REQ
005 LA 15.560 TO 15.760 NORTH	04D	U	H65	8 Y	4 N	2 N	2 N	0 N	130.9	-	0.78	2.47	1.36	4.32	
005 LA 15.840 TO 16.040 SOUTH	04D	U	H65	9 Y	3 N	3 N	2 N	0 N	130.9	-	0.78	2.47	1.36	4.32	REQ
005 LA 16.605 SB ON FR SEVENTH ST	0 F	U	R20	3 Y	3 Y	2 N	2 Y	0 N	3.7	-	0.06	0.17	0.76	2.12 +	
005 LA 16.700 SEG SB OFF TO SOTO ST	F F	U	R18	4 Y	2 N	1 N	0 N	0 N	8.2	-	0.20	0.55	1.10	3.04 +	
005 LA 16.995 SB OFF TO EB 60/SB 5	F C	U	R06	14 Y	9 Y	3 N	2 N	0 N	77.9	-	1.26	3.62	0.74	2.12 +	REQ
005 LA 17.080 TO 17.280 SOUTH	04D	U	H66	8 Y	7 Y	4 Y	3 N	0 N	119.8	-	0.58	1.87	1.11	3.56	REQ
005 LA 17.460 TO 17.660 SOUTH	05D	U	H66	7 Y	4 N	3 N	3 N	0 N	121.[illegible]	-	0.59	1.90	1.11	3.58	
005 LA 17.940 TO 18.140 SOUTH	05D	U	H66	7 Y	4 N	2 N	1 N	0 N	119.4	-	0.58	1.86	1.10	3.55	
005 LA 18.220 TO 18.420 SOUTH	04D	U	H65	23 Y	16 Y	9 Y	7 Y	2 N	114.4	-	0.63	1.99	1.25	3.96	REQ
005 LA 18.260 SB ON FR WB RTE 10	0 C	U	R08	54 Y	29 Y	14 Y	10 Y	2 N	30.4	-	0.45	1.31	0.68	1.97 +	REQ
005 LA 18.272 NB OFF TO EB 10/SOTO	F F	U	R62	12 Y	10 Y	10 Y	9 Y	6 Y	36.5	-	0.43	1.33	0.54	1.66 +	REQ
005 LA 19.660 TO 19.860 NORTH	04D	U	H65	7 Y	3 N	0 N	[illegible]	0 N	111.5	-	0.60	1.91	1.23	3.90	
005 LA 20.180 TO 20.380 NORTH	04D	U	H65	10 Y	7 Y	3 N	3 N	0 N	109.5	-	0.58	1.85	1.22	3.86	REQ
005 LA 20.237 SEG SB FR SB 110/AVE 26	0 K	U	R36	11 Y	6 Y	3 Y	3 Y	0 N	17.6	-	0.13	0.40	0.34	1.05 +	REQ
005 LA 20.780 TO 20.980 SOUTH	04D	U	H65	9 Y	2 N	1 N	1 N	0 N	138.3	-	0.86	2.73	1.41	4.49	REQ
005 LA 21.064 SEG SBOFF TO SB RTE 110	F F	U	R62	11 Y	9 Y	6 Y	6 Y	0 N	37.7	-	0.44	1.37	0.54	1.66 +	REQ
005 LA 21.680 TO 21.880 SOUTH	05D	U	H66	8 Y	4 N	1 N	1 N	0 N	138.5	-	0.74	2.37	1.21	3.90	
005 LA 22.860 TO 23.060 SOUTH	05D	U	H66	7 Y	2 N	1 N	1 N	0 N	123.3	-	0.61	1.97	1.13	3.63	
005 LA 25.580 TO 25.780 NORTH	05D	U	H66	9 Y	5 N	4 N	4 Y	0 N	127.7	-	0.64	2.07	1.15	3.70	REQ
005 LA 25.632 ON SEG FR COL.EXT. TO 5	Z B	U	R04	7 Y	5 Y	3 Y	3 Y	0 N	26.6	-	0.23	0.79	0.39	1.35 +	REQ
005 LA 25.852 SBON FR WB COLO. EXT.	0 L	U	R72	6 Y	4 Y	0 N	0 N	0 N	10.7	-	0.17	0.61	0.74	2.58 +	

REQ=INVESTIGATION REQUIRED (9,6 OR 3 OR MORE ACCS. & SIGNIFICENT IN 36,24 OR 12 MONTHS, RESP.) + DENOTES MV USED IN RATES

TASAS TABLE C POTENTIAL INVESTIGATION LOCATIONS .2 MILE
DISTRICT 07 DATA FOR 96-07-01 THRU 99-06-30
WET ACCIDENTS
CONFIDENCE LEVEL 99.5 PERCENT

LOCATION DESCRIPTION	SCL RMP LNS	R U S	RATE GRP	TOTAL WET ACCIDENTS 36 MO ACCS	24 MO ACCS	12 MO ACCS	6 MO ACCS	3 MO ACCS	AVE ADT-* 1000 VEH MAIN	X-ST	*36 MOS AVERAGE NO OF ACC F+I	TOT	ACC & RATES* RATE/MVM-MV F+I	TOT	HT-65 REQ
005 LA 14.440 TO 14.640 SOUTH	04D	S	H62	13 Y	6 Y	1 N	1 N	0 N	133.5	-	0.77	2.20	1.32	3.76	REQ
005 LA 14.500 TO 14.700 NORTH	04D	S	H62	13 Y	6 Y	3 N	1 N	1 N	133.5	-	0.77	2.20	1.32	3.76	REQ
005 LA 14.700 TO 14.900 NORTH	04D	S	H62	15 Y	10 Y	4 N	3 N	1 N	132.5	-	0.76	2.17	1.32	3.74	REQ
005 LA 14.740 TO 14.940 SOUTH	04D	S	H62	15 Y	8 Y	0 N	0 N	0 N	132.	-	0.76	2.16	1.31	3.73	REQ
005 LA 14.960 TO 15.160 NORTH	04D	U	H65	8 Y	8 Y	1 N	0 N	0 N	132.3	-	0.87	2.51	1.50	4.35	REQ
005 LA 15.040 TO 15.240 SOUTH	04D	U	H65	10 Y	5 N	4 N	3 N	3 Y	132.3	-	0.87	2.51	1.50	4.35	REQ
005 LA 15.165 SB OFF INDIANA/CALZONA	F	J	U	R30	7 Y	Y	1 N	0 N	0 N	4.1	-	0.10	0.27	1.14	3.04 + REQ
005 LA 15.180 TO 15.380 NORTH	04D	U	H65	10 Y	9 Y	4 N	4 Y	1 N	132.3	-	0.87	2.51	1.50	4.35	REQ
005 LA 15.240 TO 15.440 SOUTH	04D	U	H65	37 Y	27 Y	7 Y	5 Y	4 Y	132.3	-	0.87	2.51	1.50	4.35	REQ
005 LA 15.560 TO 15.760 SOUTH	04D	U	H65	19 Y	9 Y	3 N	2 N	2 N	132.3	-	0.87	2.51	1.50	4.35	REQ
005 LA 15.640 TO 15.840 NORTH	04D	U	H65	8 Y	6 N	2 N	2 N	2 N	132.3	-	0.87	2.51	1.50	4.35	
005 LA 15.840 TO 16.040 SOUTH	04D	U	H65	11 Y	6 N	0 N	0 N	0 N	132.3	-	0.87	2.51	1.50	4.35	REQ
005 LA 16.700 SEG SB OFF TO SOTO ST	F	F	U	R18	4 Y	3 N	1 N	1 N	0 N	8.2	-	0.22	0.55	1.21	3.04 +
005 LA 16.995 SB OFF TO EB 60/SB 5	F	C	U	R06	11 Y	11 Y	6 Y	4 Y	2 N	77.9	-	1.17	3.61	0.69	2.12 + REQ
005 LA 17.080 TO 17.280 SOUTH	04D	U	H66	7 Y	4 N	3 N	2 N	2 N	120.0	-	0.56	1.66	1.06	3.16	
005 LA 18.000 TO 18.200 SOUTH	05D	U	H66	6 N	6 Y	2 N	2 N	0 N	117.6	-	0.54	1.61	1.05	3.12	REQ
005 LA 18.000 TO 18.200 NORTH	05D	U	H66	8 Y	6 Y	1 N	0 N	0 N	117.6	-	0.54	1.61	1.05	3.12	REQ
005 LA 18.220 TO 18.420 SOUTH	04D	U	H65	18 Y	14 Y	7 Y	7 Y	2 N	115.5	-	0.70	2.01	1.38	3.99	REQ
005 LA 18.260 SB ON FR WB RTE 10	0	C	U	R08	50 Y	40 Y	15 Y	6 Y	6 Y	30.4	-	0.39	1.21	0.59	1.81 + REQ
005 LA 18.272 NB OFF TO EB 10/SOTO	F	F	U	R62	6 Y	2 N	0 N	0 N	0 N	36.5	-	0.48	1.20	0.61	1.51 +
005 LA 19.520 TO 19.720 NORTH	04D	U	H65	6 N	6 Y	2 N	2 N	0 N	115.3	-	0.70	2.01	1.38	3.98	REQ
005 LA 20.160 TO 20.360 NORTH	04D	U	H65	6 N	5 N	4 Y	4 Y	1 N	108.6	-	0.63	1.82	1.33	3.84	REQ
005 LA 20.237 SEG SB FR SB 110/AVE 26	0	K	U	R36	8 Y	8 Y	3 Y	3 Y	1 N	17.6	-	0.13	0.40	0.35	1.05 + REQ
005 LA 20.780 TO 20.980 SOUTH	04D	U	H65	10 Y	8 Y	1 N	0 N	0 N	138.9	-	0.94	2.73	1.55	4.49	REQ

REQ=INVESTIGATION REQUIRED (9,6 OR 3 OR MORE ACCS. & SIGNIFICENT IN 36,24 OR 12 MONTHS, RESP.) DENOTES MV USED IN RATES

TASAS TABLE C POTENTIAL INVESTIGATION LOCATIONS .2 MILE
DISTRICT 07 DATA FOR 95-07-01 THRU 98-06-30
WET ACCIDENTS
CONFIDENCE LEVEL 99.5 PERCENT

LOCATION DESCRIPTION	SCL RMP LNS	R U S	RATE GRP	TOTAL WET ACCIDENTS 36 MO ACCS	24 MO ACCS	12 MO ACCS	6 MO ACCS	3 MO ACCS	AVE ADT 1000 MAIN	VEH X-ST	36 MOS AVERAGE NO OF ACC F+I	TOT	ACC & RATES RATE/MVM-MV F+I	TOT	HT-65 REQ
005 LA 14.000 TO 14.200 SOUTH	03D	S	H62	13 Y	12 Y	9 Y	7 Y	3 Y	133.0	-	0.77	2.18	1.32	3.75	REQ
005 LA 14.020 TO 14.220 NORTH	04D	S	H62	14 Y	11 Y	6 Y	5 Y	3 Y	133.0	-	0.77	2.18	1.32	3.75	REQ
005 LA 14.200 TO 14.400 SOUTH	04D	S	H62	10 Y	8 Y	5 Y	4 Y	2 N	135.0	-	0.79	2.24	1.33	3.79	REQ
005 LA 14.220 TO 14.420 NORTH	04D	S	H62	8 Y	5 N	4 N	1 N	0 N	135.3	-	0.79	2.25	1.34	3.80	
005 LA 14.440 TO 14.640 NORTH	04D	S	H62	14 Y	8 Y	1 N	1 N	0 N	135.7	-	0.80	2.26	1.34	3.81	REQ
005 LA 14.520 TO 14.720 SOUTH	04D	S	H62	20 Y	13 Y	6 Y	4 Y	1 N	135.7	-	0.80	2.26	1.34	3.81	REQ
005 LA 14.720 TO 14.[illegible]20 SOUTH	04D	S	H62	11 Y	11 Y	5 Y	5 Y	2 N	134.5	-	0.78	2.22	1.33	3.78	REQ
005 LA 14.740 TO 14.940 NORTH	04D	S	H62	21 Y	14 Y	9 Y	5 Y	0 N	134.3	-	0.78	2.22	1.33	3.78	REQ
005 LA 14.960 TO 15.160 NORTH	04D	U	H65	8 N	7 Y	7 Y	6 Y	3 Y	134.6	-	0.90	2.59	1.52	4.40	REQ
005 LA 14.960 TO 15.160 SOUTH	04D	U	H65	11 Y	10 Y	6 Y	5 Y	2 N	134.6	-	0.90	2.59	1.52	4.40	REQ
005 LA 15.160 TO 15.360 SOUTH	04D	U	H65	28 Y	26 Y	15 Y	13 Y	1 N	134.6	-	0.90	2.59	1.52	4.40	REQ
005 LA 15.160 TO 15.360 NORTH	04D	U	H65	11 Y	6 N	5 Y	4 Y	0 N	134.6	-	0.90	2.59	1.52	4.40	REQ
005 LA 15.165 SB OFF INDIANA/CALZONA	F	J	U R30	6 Y	6 Y	5 Y	4 Y	2 Y	4.[illegible]	-	0.10	0.26	1.14	3.04 +	REQ
005 LA 15.360 TO 15.560 SOUTH	04D	U	H65	8 N	8 Y	6 Y	5 Y	1 N	134.6	-	0.90	2.59	1.52	4.40	REQ
005 LA 15.560 TO 15.760 SOUTH	04D	U	H65	18 Y	16 Y	6 Y	4 Y	1 N	134.6	-	0.90	2.59	1.52	4.40	REQ
005 LA 15.800 TO 16.000 SOUTH	04D	U	H65	7 N	7 Y	4 N	4 Y	1 N	134.6	-	0.90	2.59	1.52	4.40	REQ
005 LA 16.700 SEG SB OFF TO SOTO ST	F	F	U R18	3 N	3 [illegible]	2 N	2 N	2 Y	8.1	-	0.22	0.54	1.21	3.04 +	
005 LA 17.440 TO 17.640 NORTH	05D	U	H66	7 Y	4 N	2 N	2 N	1 N	126.6	-	0.61	1.82	1.10	3.29	
005 LA 17.460 TO 17.660 SOUTH	05D	U	H66	9 Y	5 N	3 N	3 Y	1 N	126.9	-	0.61	1.83	1.11	3.29	REQ
005 LA 17.920 TO 18.120 NORTH	05D	U	H66	8 Y	7 Y	5 Y	3 Y	2 N	126.2	-	0.61	1.81	1.10	3.28	REQ
005 LA 17.940 TO 18.140 SOUTH	05D	U	H66	3 N	3 N	3 N	3 Y	2 N	125.5	-	0.60	1.79	1.10	3.26	
005 LA 18.220 TO 18.420 SOUTH	04D	U	H65	15 Y	11 Y	7 Y	4 Y	1 N	121.7	-	0.76	2.19	1.43	4.12	REQ
005 LA 18.260 SB ON FR WB RTE 10	0	C	U R08	42 Y	35 Y	25 Y	17 Y	8 Y	31.[illegible]	-	0.40	1.25	0.59	1.81 +	REQ
005 LA 18.272 WB OFF TO EB 10/SOTO	F	F	U R62	12 Y	6 Y	2 N	2 N	1 N	37.3	-	0.50	1.24	0.61	1.51 +	REQ

REQ=INVESTIGATION REQUIRED (9,6 OR 3 OR MORE ACCS. & SIGNIFICENT IN 36,24 OR 12 MONTHS, RESP.) + DENOTES MV USED IN RATES

Rev ST-3/99

Division of Operations – Office of Traffic Investigations

Traffic Accident Surveillance and Analysis System (TASAS)

ACCIDENT DATA REQUEST FORM

(REQUESTS FOR LEGAL OR CLAIMS ARE PROCESSED BY THE LEGAL UNIT)

Purpose of Request PREPARE PSR

Log Number 169

NO NUMBER–NO DATA

From:
(SQUAD) KEN HATAI Requested by TAM NGUYEN Location 29 Phone 7-8336

County LA Route 5 **P.M.**. From 14.763 to

(VERIFY POSTMILES IN P.M. BOOK. IS THERE A POSTMILE PREFIX?)

Accident Location: ALL ___ HWY ___ INT ___ RAMP ✓

Time Period: (DATE) from 1-1-98 to 12-31-01 (Inclusive)

Microfiche *(CHECK WITH TASAS UNIT BEFORE ORDERING)*

___ TABLE A – Cumulative Number of Accidents by Postmile
✓ TABLE C - ALL — High Accident Concentration Locations
✓ TABLE C - WET — High Accident Concentration Locations

✓ **TABLE B Accident Rates**

Years ✓ Combined? ___ Separate?
Direction ✓ Combined? ___ Separate?
___ Data to Calculate a Safety Index ___ Include Ramps ___ Exclude Ramps
___ Data for a Speed Zone Survey - (B)

✓ **TASAS Selective Accident Retrieval**

✓ With Detail Listing of Accidents ___ Summary Only
Years ✓ Combined? ___ Separate? (ONLY HIGHWAY WILL BE SEPARATE)
Direction ✓ Combined? ___ Separate? ___ Exclude Ramps?

WHAT TYPES OF SELECTED ACCIDENTS OR LOCATIONS ARE YOU REQUESTING?

SB 5 ON FROM DITMAN AVE

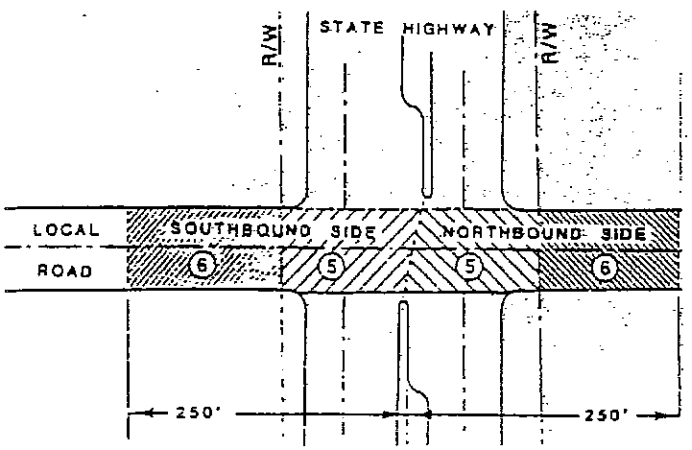

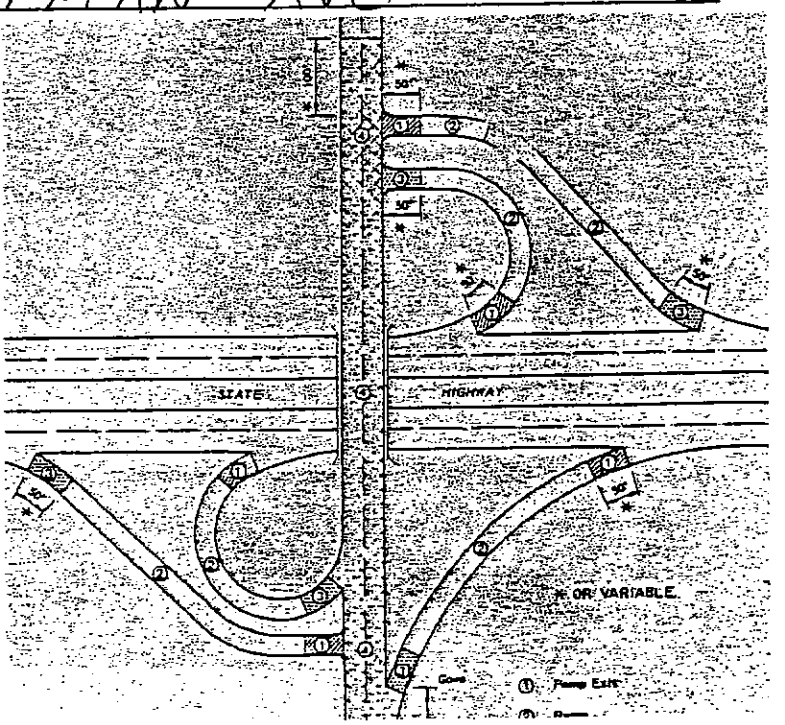

TASAS TABLE B DISTRICT 07
SELECTIVE ACCIDENT RATE CALCULATION
ROUTE SEQUENCE

LOCATION DESCRIPTION	RA GRP (RUS)	*-NUMBER OF ACCIDENTS/SIGNIFICANCE* TOT	FAT	INJ	F+I	MULTI VEH	WET	DARK	PER KLD INJ	*ADT * MAIN X-ST	TOTAL MV+ OR MVM	*-ACCIDENT RATE ACCS/MV+ OR MVM-* ACTUAL FAT	F+I	TOT	AVERAGE FAT	F+I	TOT
005 LA 14.763 SB ON FROM DITMAN AVE	R28	3	0	0	0	1	0	0	0	2.7	3.94+	.000	.00	.76	.002	.20	.60
07-0001 98-01-01 01-12-31 48 MO	(S)								0								

+ DENOTES MV USED IN RATES

SUBMITTORS DISTRICT 72 - MESSAGES -

SUBMITTORS NAME YUEH-S

ACCIDENTS SELECTED 3

LOCATION CRITERIA -

DISTRICT	07	POSTMILE	FROM	014.763	TO	014.764		DATE RANGE	FROM	01-01-98	TO	12-31-01
ROUTE	005		OR FROM		TO		AND		OR FROM		TO	
COUNTY	LA		OR FROM		TO				OR FROM		TO	

ACCIDENT AND HIGHWAY CRITERIA -
11 AN 508 ACC FILE TYPE EQ R

DIST	RTES NO	U F	CO	P LOC R POST E MILE	<-----HIGHWAY-----> H G	A C	M T	B A	LANES LT	RT	UO	I T	S R L	D O H	A Y	ACCIDENT DATE MO	DA	YR	TIME HHMM	COMMON ACCIDENT NUMBER	P C F	ENVIR COND W	L	S	R C	R W C	T O C	NO MTR VEH	P T R	D I R	V H I	S I	PERSN K	O I P	L O S C	O S O	L O C	O S O	L O C	O S O	L O C	OA F 12	M O V	SD P 12
07	005		LA	014.763	D	F	H	D	04	04	UO	R	2	S	1	08	15	99	1445	953515532	4	A	A	A	H	D	E	01	G	S	1	<	00	00	15H	---	---	---	---	---	---	H<	R	A<
07	005		LA	014.763	D	F	H	D	04	04	UO	R	4	S	6	06	04	99	1300	194231214	2	A	A	A	H	A	C	02	B	E	1	<	00	00	V2F	---	---	---	---	---	---	<<	B	G<
																													D	E	1	<	00	00	V1F	---	---	---	---	---	---	N<	B	A<
07	005		LA	014.763	D	F	H	D	04	04	UO	R	2	S	3	02	15	99	0650	953508119	4	A	A	A	H	A	E	01	G	S	1	<	00	00	15H	---	---	---	---	---	---	H<	R	A<

- - - ACCIDENT SUMMARY - - -

TOTAL ACCIDENTS	FATAL	INJURY	PDO	PERSONS KILLED	PERSONS INJURED
3	0	0	3	0	0

WITHOUT DETAIL
0

MOTOR VEHICLES INVOLVED

NUMBER	PCT	CODE
2	66.6	1
1	33.3	2
0	0.0	3
0	0.0	> 3

LINES CODED

NUMBER	PCT	CODE
2	66.6	1
1	33.3	2
0	0.0	3
0	0.0	4
0	0.0	5
0	0.0	6
0	0.0	7
0	0.0	8
0	0.0	9

HOUR OF DAY

NUMBER	PCT	CODE
0	0.0	00- 12 MID.
0	0.0	01- 1 A.M.
0	0.0	02- 2 A.M.
0	0.0	03- 3 A.M.
0	0.0	04- 4 A.M.
0	0.0	05- 5 A.M.
1	33.3	06- 6 A.M.
0	0.0	07- 7 A.M.
0	0.0	08- 8 A.M.
0	0.0	09- 9 A.M.
0	0.0	10- 10 A.M.
0	0.0	11- 11 A.M.
0	0.0	12- 12 NOON
1	33.3	13- 1 P.M.
1	33.3	14- 2 P.M.
0	0.0	15- 3 P.M.
0	0.0	16- 4 P.M.
0	0.0	17- 5 P.M.
0	0.0	18- 6 P.M.
0	0.0	19- 7 P.M.
0	0.0	20- 8 P.M.
0	0.0	21- 9 P.M.
0	0.0	22- 10 P.M.
0	0.0	23- 11 P.M.
0	0.0	25- UNKNOWN

ACCESS CONTROL

NUMBER	PCT	CODE
0	0.0	C-CONVENTIONAL
0	0.0	E-EXPRESSWAY
3	100.0	F-FREEWAY
0	0.0	S-1-WAY CITY ST
0	0.0	--INVALID DATA
0	0.0	+-NO DATA

SIDE OF HIGHWAY

NUMBER	PCT	CODE
0	0.0	N-NORTHBOUND
3	100.0	S-SOUTHBOUND
0	0.0	E-EASTBOUND
0	0.0	W-WESTBOUND

YEAR

NUMBER	PCT	CODE
0	0.0	1992
0	0.0	1993
0	0.0	1994
0	0.0	1995
0	0.0	1996
0	0.0	1997
0	0.0	1998
3	100.0	1999
0	0.0	2000
0	0.0	2001
0	0.0	2002

MONTH

NUMBER	PCT	CODE
0	0.0	01-JANUARY
1	33.3	02-FEBRUARY
0	0.0	03-MARCH
0	0.0	04-APRIL
0	0.0	05-MAY
1	33.3	06-JUNE
0	0.0	07-JULY
1	33.3	08-AUGUST
0	0.0	09-SEPTEMBER
0	0.0	10-OCTOBER
0	0.0	11-NOVEMBER
0	0.0	12-DECEMBER

DAY OF WEEK

NUMBER	PCT	CODE
1	33.3	1-SUNDAY
0	0.0	2-MONDAY
1	33.3	3-TUESDAY
0	0.0	4-WEDNESDAY
0	0.0	5-THURSDAY
1	33.3	6-FRIDAY
0	0.0	7-SATURDAY

- - - ACCIDENT SUMMARY - - -

PRIMARY COLLISION FACTOR NUMBER	PCT	CODE	TYPE OF COLLISION NUMBER	PCT	CODE	ROADWAY CONDITION NUMBER	PCT	CODE
0	0.0	1-INFLUENCE ALCOHOL	0	0.0	A-HEAD-ON	0	0.0	A-HOLES, RUTS
1	33.3	2-FOLLOW TOO CLOSE	0	0.0	B-SIDESWIPE	0	0.0	B-LOOSE MATERIAL
0	0.0	3-FAILURE TO YIELD	1	33.3	C-REAR END	0	0.0	C-OBSTRUCTION ON ROAD
2	66.6	4-IMPROPER TURN	0	0.0	D-BROADSIDE	0	0.0	D-CONSTRUCT-REPAIR-ZONE
0	0.0	5-SPEEDING	2	66.6	E-HIT OBJECT	0	0.0	E-REDUCED ROAD WIDTH
0	0.0	6-OTHER VIOLATIONS	0	0.0	F-OVERTURN	0	0.0	F-FLOODED
0	0.0	B-IMPROPER DRIVING	0	0.0	G-AUTO-PEDESTRIAN	0	0.0	G-OTHER
0	0.0	C-OTHER THAN DRIVER	0	0.0	H-OTHER	3	100.0	H-NO UNUSUAL CONDITION
0	0.0	D-UNKNOWN	0	0.0	<-NOT STATED	0	0.0	<-NOT STATED
0	0.0	E-FELL ASLEEP	0	0.0	-INVALID CODES			
0	0.0	<-NOT STATED						
0	0.0	-INVALID CODES						

WEATHER NUMBER	PCT	CODE	LIGHTING NUMBER	PCT	CODE	ROAD SURFACE NUMBER	PCT	CODE
3	100.0	A-CLEAR	3	100.0	A-DAYLIGHT	3	100.0	A-DRY
0	0.0	B-CLOUDY	0	0.0	B-DUSK/DAWN	0	0.0	B-WET
0	0.0	C-RAINING	0	0.0	C-DARK-STREET LIGHT	0	0.0	C-SNOWY, ICY
0	0.0	D-SNOWING	0	0.0	D-DARK-NO STREET LIGHT	0	0.0	D-SLIPPERY
0	0.0	E-FOG	0	0.0	E-DARK-INOPR STREET LIGHT	0	0.0	<-NOT STATED
0	0.0	F-OTHER	0	0.0	F-DARK-NOT STATED	0	0.0	-INVALID CODES
0	0.0	G-WIND	0	0.0	<-NOT STATED			
0	0.0	<-NOT STATED	0	0.0	-INVALID CODES			

RIGHT OF WAY CONTROL NUMBER	PCT	CODE	HIGHWAY GROUP NUMBER	PCT	CODE	INTERSECTION OR RAMP ACCIDENT LOCATION NUMBER	PCT	CODE
2	66.6	A-CONTROL FUNCTIONING	0	0.0	R-IND. ALIGN-RIGHT	0	0.0	1-RAMP INTERSECTION (EXIT)
0	0.0	B-CONTROL NOT FUNCTIONING	0	0.0	L-IND. ALIGN-LEFT	2	66.6	2-RAMP
0	0.0	C-CONTROLS OBSCURED	3	100.0	D-DIVIDED	0	0.0	3-RAMP ENTRY
1	33.3	D-NO CONTROLS PRESENT	0	0.0	U-UNDIVIDED	1	33.3	4-RAMP AREA, INTERSECT STREET
0	0.0	<-NOT STATED				0	0.0	5-IN INTERSECTION
						0	0.0	6-OUTSIDE INTRSCT-NONSTATE RTE
						0	0.0	--DOES NOT APPLY

- - - PARTY SUMMARY - - -

<----------PARTY TYPE----------> <---MOVEMENT PRECEDING COLLISION---> <----------OTHER ASSOCIATED FACTOR---------->

NUMBER	PCT	CODE	NUMBER	PCT	CODE	# 1	PCT	# 2	PCT	CODE
0	0.0	A-PASNGR CAR/STA WAGON	0	0.0	A-STOPPED	0	0.0	0	0.0	1-INFLUENCE ALCOHOL
1	33.3	B-PASNGR CAR W/TRALR	1	33.3	B-PROCEDED STRAIGHT	0	0.0	0	0.0	2-FOLLOW TOO CLOSE
0	0.0	C-MOTORCYCLE	0	0.0	C-RAN OFF ROAD	0	0.0	0	0.0	3-FAILURE TO YIELD
1	33.3	D-PICKUP/PANEL TRUCK	0	0.0	D-MAKING RIGHT TURN	0	0.0	0	0.0	4-IMPROPER TURN
0	0.0	E-PICKUP/PANEL W/TRALR	0	0.0	E-MAKING LEFT TURN	0	0.0	0	0.0	5-SPEEDING
0	0.0	F-TRUCK/TRUCK TRACTOR	0	0.0	F-MAKING U TURN	0	0.0	0	0.0	6-OTHER VIOLATIONS
2	66.6	G-TRK/TRACTOR & 1 TRALR	0	0.0	G-BACKING	0	0.0	0	0.0	A-CELL PHONE* (INATTN)
0	0.0	2-TRK/TRACTOR & 2 TRALR	0	0.0	H-SLOWING, STOPPING	0	0.0	0	0.0	B-ELECTRONIC EQUIP* (INATTN)
0	0.0	3-TRK/TRACTOR & 3 TRALR	0	0.0	I-PASS OTHER VEHICLE	0	0.0	0	0.0	C-RADIO/CD/HEADPHN* (INATTN)
0	0.0	4-SINGLE UNIT TANKER	0	0.0	J-CHANGING LANES	0	0.0	0	0.0	D-SMOKING* (INATTN)
0	0.0	5-TRK/TRA & 1 TANK TRLR	0	0.0	K-PARKING	0	0.0	0	0.0	E-VISION OBSCUREMENT
0	0.0	6-TRK/TRA & 2 TANK TRLR	0	0.0	L-ENTER FROM SHLDR	0	0.0	0	0.0	F-INATTENTION - OTHER
0	0.0	H-SCHOOL BUS	0	0.0	M-OTHER UNSAFE TURN	0	0.0	0	0.0	G-STOP & GO TRAFFIC
0	0.0	I-OTHER BUS	0	0.0	N-CROSS INTO OPP LN	2	66.6	0	0.0	H-ENTER/LEAVE RAMP
0	0.0	J-EMERGENCY VEHICLE	0	0.0	O-PARKED	0	0.0	0	0.0	I-PREVIOUS COLLISION
0	0.0	K-HIGHWAY CONST EQUIP	0	0.0	P-MERGING	0	0.0	0	0.0	J-UNFAMILIAR WITH ROAD
0	0.0	L-BICYCLE	0	0.0	Q-TRVL WRONG WAY	0	0.0	0	0.0	K-DEFECT VEHICLE EQUIP
0	0.0	M-OTHER-MOTOR VEH	2	66.6	R-OTHER	0	0.0	0	0.0	L-UNINVOLVED VEHICLE
0	0.0	N-OTHER-NON-MOTOR VEH	0	0.0	<-NOT STATED	0	0.0	0	0.0	M-OTHER
0	0.0	O-SPILLED LOADS				1	33.3	0	0.0	N-NONE APPARENT
0	0.0	P-DISENGAGED TOW			PEDESTRIAN	0	0.0	0	0.0	P-WIND
0	0.0	Q-UNINVOLVED VEHICLE	0	0.0	2-XING XWALK-INTRST	0	0.0	0	0.0	R-RAMP ACCIDENT
0	0.0	R-MOPED	0	0.0	3-XING XWALK-NOT INTR	0	0.0	0	0.0	S-RUNAWAY VEHICLE
0	0.0	T-TRAIN	0	0.0	4-XING NOT XWALK	0	0.0	0	0.0	T-EATING* (INATTN)
0	0.0	U-PEDESTRIAN	0	0.0	5-ROADWAY-INCL SHLDR	0	0.0	0	0.0	U-CHILDREN* (INATTN)
0	0.0	V-DISMOUNT PEDESTRIAN	0	0.0	6-NOT IN ROADWAY	0	0.0	0	0.0	V-ANIMALS* (INATTN)
0	0.0	W-ANIMAL - LIVESTOCK	0	0.0	7-APRH-LEAVE SCHL BUS	0	0.0	0	0.0	W-PERSONAL HYGIENE* (INATTN)
0	0.0	X-ANIMAL - DEER	0	0.0	-INVALID CODES	0	0.0	0	0.0	X-READING* (INATTN)
0	0.0	Z-ANIMAL - OTHER				1	33.3	3	100.0	<-NOT STATED
						0	0.0	0	0.0	--DOES NOT APPLY

*INATTENTION CODES EFF. 01-01-01

<-----DIRECTION OF TRAVEL------> <----------SPECIAL INFORMATION---------->

NUMBER	PCT	CODE	NUMBER	PCT	CODE
0	0.0	N-N, NE, NW BOUND	0	0.0	A-HAZARDOUS MATERIALS
2	66.6	S-S, SE, SW BOUND	0	0.0	B-CELL PHONE IN USE*
1	33.3	E-EASTBOUND	0	0.0	C-CELL PHONE NOT IN USE*
0	0.0	W-WESTBOUND	0	0.0	D-CELL PHONE NONE/UNKNOWN*
0	0.0	<-NOT STATED	3	100.0	<-NOT STATED
0	0.0	--DOES NOT APPLY	0	0.0	--DOES NOT APPLY
			0	0.0	-INVALID CODES

*SPECIAL INFORMATION CODES EFF. 04-01-01

- - - PARTY SUMMARY - - -

<----------OBJECT STRUCK----------> <----------LOCATION OF COLLISION----------

PRIMARY NUMBER	PRIMARY PCT	OTHERS NUMBER	OTHERS PCT		PRIMARY NUMBER	PRIMARY PCT	OTHERS NUMBER	OTHERS PCT	CODE
0	0.0	0	0.0	01-SIDE OF BRIDGE RAILING	0	0.0	0	0.0	A-BEYOND MEDIAN OR STRIPE-LFT
0	0.0	0	0.0	02-END OF BRIDGE RAILING	0	0.0	0	0.0	B-BEYOND SHLDER DRIVERS LEFT
0	0.0	0	0.0	03-PIER,COLUMN,ABUTMENT	0	0.0	0	0.0	C-LEFT SHOULDER AREA
0	0.0	0	0.0	04-BOTTOM OF STRUCTURE	0	0.0	0	0.0	D-LEFT LANE
0	0.0	0	0.0	05 BRIDGE END POST IN GORE	0	0.0	0	0.0	E-INTERIOR LANES
0	0.0	0	0.0	06-END OF GUARD RAIL	1	33.3	0	0.0	F-RIGHT LANE
0	0.0	0	0.0	07-BRIDGE APPROACH GRD RAIL	0	0.0	0	0.0	G-RIGHT SHOULDER AREA
0	0.0	0	0.0	10-LIGHT OR SIGNAL POLE	2	66.6	0	0.0	H-BEYOND SHLDER DRIVERS RIGHT
0	0.0	0	0.0	11-UTILITY POLE	0	0.0	0	0.0	I-GORE AREA
0	0.0	0	0.0	12-POLE (TYPE NOT STATED)	0	0.0	0	0.0	J-OTHER
0	0.0	0	0.0	13-TRAFFIC SIGN/SIGN POST	0	0.0	0	0.0	V-HOV LANE(S)
0	0.0	0	0.0	14-OTHER SIGNS NOT TRAFFIC	0	0.0	0	0.0	W-HOV LANE BUFFER AREA
2	66.6	0	0.0	15-GUARDRAIL	0	0.0	0	0.0	<-NOT STATED
0	0.0	0	0.0	16-MEDIAN BARRIER	0	0.0	3	100.0	--DOES NOT APPLY
0	0.0	0	0.0	17-WALL(EXCEPT SOUND WALL)	0	0.0	0	0.0	-INVALID CODES
0	0.0	0	0.0	18-DIKE OR CURB					
0	0.0	0	0.0	19-TRAFFIC ISLAND					
0	0.0	0	0.0	20-RAISED BARS					
0	0.0	0	0.0	21-CONCRETE OBJ(HDWL,D.I.)					
0	0.0	0	0.0	22-GUIDEPOST,CULVERT,PM					
0	0.0	0	0.0	23-CUT SLOPE OR EMBANKMENT					
0	0.0	0	0.0	24-OVER EMBANKMENT					
0	0.0	0	0.0	25-IN WATER					
0	0.0	0	0.0	26-DRAINAGE DITCH					
0	0.0	0	0.0	27-FENCE					
0	0.0	0	0.0	28-TREES					
0	0.0	0	0.0	29-PLANTS					
0	0.0	0	0.0	30-SOUND WALL					
0	0.0	0	0.0	40-NATURAL MATRL ON ROAD					
0	0.0	0	0.0	41-TEMP BARRICADES, CONES					
0	0.0	0	0.0	42-OTHER OBJECT ON ROAD					
0	0.0	0	0.0	43-OTHER OBJECT OFF ROAD					
0	0.0	0	0.0	44-OVERTURNED					
0	0.0	0	0.0	45-CRASH CUSHION(SAND)					
0	0.0	0	0.0	46-CRASH CUSHION(OTHER)					
0	0.0	0	0.0	51-CALL BOX					
0	0.0	0	0.0	98-UNKNOWN OBJECT STRUCK					
0	0.0	0	0.0	99-NO OBJECT INVOLVED					
1	33.3	0	0.0	V1 THRU V9-VEHICLE 1 TO 9					
0	0.0	0	0.0	<<-NOT STATED					
0	0.0	3	100.0	---DOES NOT APPLY					
0	0.0	0	0.0	-INVALID CODES					

<-----SOBRIETY----------DRUG/PHYSICAL----------

SOBRIETY NUMBER	SOBRIETY PCT	DRUG/PHYSICAL NUMBER	DRUG/PHYSICAL PCT	CODE
3	100.0	0	0.0	A-HAD NOT BEEN DRINKING
0	0.0	0	0.0	B-HBD - UNDER INFLUENCE
0	0.0	0	0.0	C-HBD - NOT UNDER INFLUENCE
0	0.0	0	0.0	D-HBD - IMPAIRMENT UNKNOWN
0	0.0	0	0.0	E-UNDER DRUG INFLUENCE
0	0.0	0	0.0	F-OTHER PHYSICAL IMPAIRMENT
1	33.3	0	0.0	G-IMPAIRMENT NOT KNOWN
0	0.0	0	0.0	H-NOT APPLICABLE
0	0.0	0	0.0	I-FATIGUE
0	0.0	3	100.0	<-NOT STATED
0	0.0	0	0.0	--DOES NOT APPLY
		0	0.0	-INVALID CODES

Rev ST-3/99

Division of Operations – Office of Traffic Investigations

Traffic Accident Surveillance and Analysis System (TASAS)

ACCIDENT DATA REQUEST FORM

(REQUESTS FOR LEGAL OR CLAIMS ARE PROCESSED BY THE LEGAL UNIT)

Purpose of Request PREPARE PSR

Log Number 168

NO NUMBER–NO DATA

From:
(SQUAD) KEN HATAI Requested by TAM NGUYEN Location 29 Phone 7-8336

County LA Route 5 **P.M.**. From 15.111 to

(VERIFY POSTMILES IN P.M. BOOK. IS THERE A POSTMILE PREFIX?)

Accident Location: ALL ___ HWY ___ INT ___ RAMP ✓

Time Period: (DATE) from 1-1-98 to 12-31-01 (Inclusive)

Microfiche *(CHECK WITH TASAS UNIT BEFORE ORDERING)*

___ TABLE A – Cumulative Number of Accidents by Postmile
✓ TABLE C - ALL — High Accident Concentration Locations
✓ TABLE C - WET — High Accident Concentration Locations

✓ **TABLE B Accident Rates**

Years ✓ Combined? ___ Separate?
Direction ✓ Combined? ___ Separate?
___ Data to Calculate a Safety Index ___ Include Ramps ✓ Exclude Ramps
___ Data for a Speed Zone Survey - (B)

✓ **TASAS Selective Accident Retrieval**

✓ With Detail Listing of Accidents ___ Summary Only
Years ✓ Combined? ___ Separate? (ONLY HIGHWAY WILL BE SEPARATE)
Direction ✓ Combined? ___ Separate? ___ Exclude Ramps?

WHAT TYPES OF SELECTED ACCIDENTS OR LOCATIONS ARE YOU REQUESTING?

SB 5 ON FROM CALZONA ST

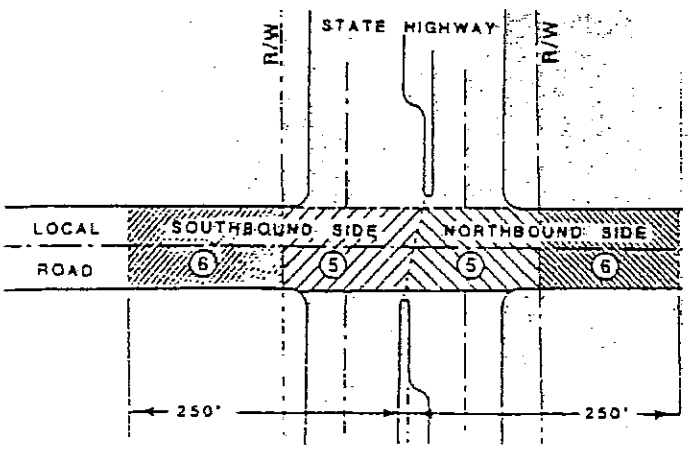

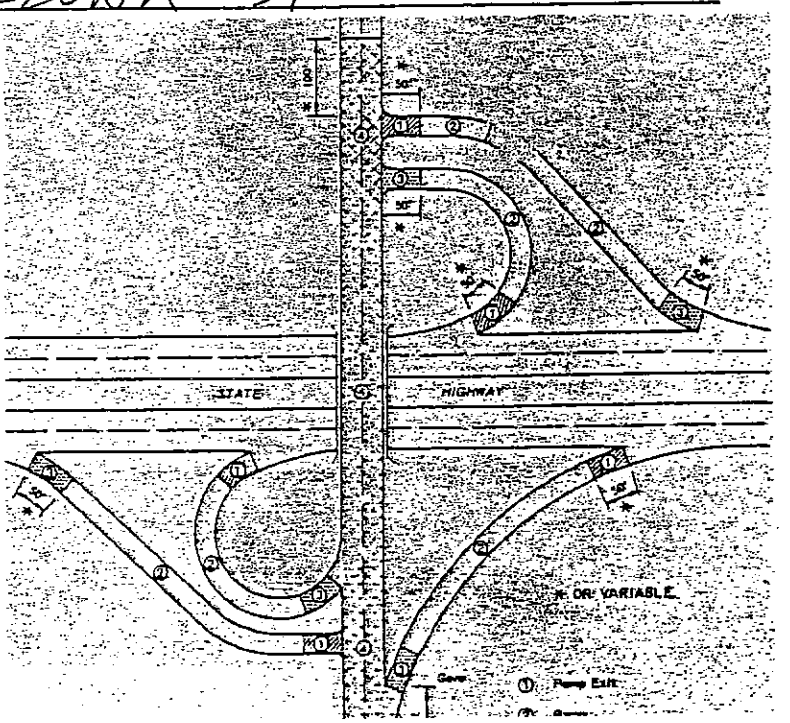

TASAS TABLE B DISTRICT 07
SELECTIVE ACCIDENT RATE CALCULATION
ROUTE SEQUENCE

LOCATION DESCRIPTION	RA GRP (RUS)	*-NUMBER OF ACCIDENTS/SIGNIFICANCE* TOT	FAT	INJ	F+I	MULTI VEH	WET	DARK	PER KLD INJ	*ADT * MAIN X-ST	TOTAL MV+ OR MVM	*-ACCIDENT RATE ACCS/MV+ OR MVM-* ACTUAL FAT	F+I	TOT	AVERAGE FAT	F+I	TOT
005 LA 15.111 SB ON INDIANA & CALZONA 07-0001 98-01-01 01-12-31 48 MO	R32 (U)	2	0	0	0	2	0	0	0 0	3.1	4.53+	.000	.00	.44	.002	.19	.55

+ DENOTES MV USED IN RATES

SUBMITTORS DISTRICT 72 - MESSAGES -

SUBMITTORS NAME YUEH-S

ACCIDENTS SELECTED 2

LOCATION CRITERIA -

DISTRICT	07	POSTMILE	FROM	015.111	TO	015.112		DATE RANGE	FROM	01-01-98	TO	12-31-01
ROUTE	005		OR FROM		TO		AND		OR FROM		TO	
COUNTY	LA		OR FROM		TO				OR FROM		TO	

ACCIDENT AND HIGHWAY CRITERIA -
11 AN 508 ACC FILE TYPE EQ R

RTES U DIST	NO	F	CO	P LOC R POST E MILE	<-----HIGHWAY-----> H G	A C	M T	B A	LANES LT	RT	RI UO	F T	R L	O H	I A Y	S MO	D DA	ACCIDENT DATE YR	TIME HHMM	COMMON ACCIDENT NUMBER	P C F	ENVIR COND W	R L	R S	T C	W C	O C	NO MTR VEH	P T	D I R	V H I	S I	PERSN K	O I	L S P	O S C	L O O	O S C	L O O	O S C	L O C	OA F 12	M O V	SD P 12
07	005		LA	015.111	D	F	H	D	04	04	UI	R	4	S	4	09	19	01	1155	959016551	6	A	A	A	H	D	B	02	G	N	1	C	00	00	V2F	---	---	---	---	---	---	N<	D	A<
																													A	N	1	C	00	00	V1F	---	---	---	---	---	---	N<	D	A<
07	005		LA	015.111	D	F	H	D	04	04	UI	R	4	S	5	02	05	98	1510	194215372	6	B	A	A	H	A	D	02	F	E	2	<	00	00	V2F	---	---	---	---	---	---	N<	B	A<
																													A	N	2	<	00	00	V1F	---	---	---	---	---	---	N<	H	G<

- - - ACCIDENT SUMMARY - - -

TOTAL ACCIDENTS	FATAL	INJURY	PDO	PERSONS KILLED	PERSONS INJURED
2	0	0	2	0	0

WITHOUT DETAIL
0

MOTOR VEHICLES INVOLVED

NUMBER	PCT	CODE
0	0.0	1
2	100.0	2
0	0.0	3
0	0.0	> 3

LINES CODED

NUMBER	PCT	CODE
0	0.0	1
2	100.0	2
0	0.0	3
0	0.0	4
0	0.0	5
0	0.0	6
0	0.0	7
0	0.0	8
0	0.0	9

<--------HOUR OF DAY-------->

NUMBER	PCT	CODE
0	0.0	00- 12 MID.
0	0.0	01- 1 A.M.
0	0.0	02- 2 A.M.
0	0.0	03- 3 A.M.
0	0.0	04- 4 A.M.
0	0.0	05- 5 A.M.
0	0.0	06- 6 A.M.
0	0.0	07- 7 A.M.
0	0.0	08- 8 A.M.
0	0.0	09- 9 A.M.
0	0.0	10- 10 A.M.
1	50.0	11- 11 A.M.
0	0.0	12- 12 NOON
0	0.0	13- 1 P.M.
0	0.0	14- 2 P.M.
1	50.0	15- 3 P.M.
0	0.0	16- 4 P.M.
0	0.0	17- 5 P.M.
0	0.0	18- 6 P.M.
0	0.0	19- 7 P.M.
0	0.0	20- 8 P.M.
0	0.0	21- 9 P.M.
0	0.0	22- 10 P.M.
0	0.0	23- 11 P.M.
0	0.0	25- UNKNOWN

<-------ACCESS CONTROL---------->

NUMBER	PCT	CODE
0	0.0	C-CONVENTIONAL
0	0.0	E-EXPRESSWAY
2	100.0	F-FREEWAY
0	0.0	S-1-WAY CITY ST
0	0.0	--INVALID DATA
0	0.0	+-NO DATA

<-------SIDE OF HIGHWAY------>

NUMBER	PCT	CODE
0	0.0	N-NORTHBOUND
2	100.0	S-SOUTHBOUND
0	0.0	E-EASTBOUND
0	0.0	W-WESTBOUND

<----------YEAR------->

NUMBER	PCT	CODE
0	0.0	1992
0	0.0	1993
0	0.0	1994
0	0.0	1995
0	0.0	1996
0	0.0	1997
1	50.0	1998
0	0.0	1999
0	0.0	2000
1	50.0	2001
0	0.0	2002

<-------------MONTH----------->

NUMBER	PCT	CODE
0	0.0	01-JANUARY
1	50.0	02-FEBRUARY
0	0.0	03-MARCH
0	0.0	04-APRIL
0	0.0	05-MAY
0	0.0	06-JUNE
0	0.0	07-JULY
0	0.0	08-AUGUST
1	50.0	09-SEPTEMBER
0	0.0	10-OCTOBER
0	0.0	11-NOVEMBER
0	0.0	12-DECEMBER

<---------DAY OF WEEK--------->

NUMBER	PCT	CODE
0	0.0	1-SUNDAY
0	0.0	2-MONDAY
0	0.0	3-TUESDAY
1	50.0	4-WEDNESDAY
1	50.0	5-THURSDAY
0	0.0	6-FRIDAY
0	0.0	7-SATURDAY

- - - ACCIDENT SUMMARY - - -

<-----PRIMARY COLLISION FACTOR--------> <---------TYPE OF COLLISION---------> <----------ROADWAY CONDITION----------->

NUMBER	PCT	CODE	NUMBER	PCT	CODE	NUMBER	PCT	CODE
0	0.0	1-INFLUENCE ALCOHOL	0	0.0	A-HEAD-ON	0	0.0	A-HOLES, RUTS
0	0.0	2-FOLLOW TOO CLOSE	1	50.0	B-SIDESWIPE	0	0.0	B-LOOSE MATERIAL
0	0.0	3-FAILURE TO YIELD	0	0.0	C-REAR END	0	0.0	C-OBSTRUCTION ON ROAD
0	0.0	4-IMPROPER TURN	1	50.0	D-BROADSIDE	0	0.0	D-CONSTRUCT-REPAIR-ZONE
0	0.0	5-SPEEDING	0	0.0	E-HIT OBJECT	0	0.0	E-REDUCED ROAD WIDTH
2	100.0	6-OTHER VIOLATIONS	0	0.0	F-OVERTURN	0	0.0	F-FLOODED
0	0.0	B-IMPROPER DRIVING	0	0.0	G-AUTO-PEDESTRIAN	0	0.0	G-OTHER
0	0.0	C-OTHER THAN DRIVER	0	0.0	H-OTHER	2	100.0	H-NO UNUSUAL CONDITION
0	0.0	D-UNKNOWN	0	0.0	<-NOT STATED	0	0.0	<-NOT STATED
0	0.0	E-FELL ASLEEP	0	0.0	-INVALID CODES			
0	0.0	<-NOT STATED						
0	0.0	-INVALID CODES						

<----------WEATHER----------> <------------LIGHTING--------------------> <-------ROAD SURFACE--------->

NUMBER	PCT	CODE	NUMBER	PCT	CODE	NUMBER	PCT	CODE
1	50.0	A-CLEAR	2	100.0	A-DAYLIGHT	2	100.0	A-DRY
1	50.0	B-CLOUDY	0	0.0	B-DUSK/DAWN	0	0.0	B-WET
0	0.0	C-RAINING	0	0.0	C-DARK-STREET LIGHT	0	0.0	C-SNOWY, ICY
0	0.0	D-SNOWING	0	0.0	D-DARK-NO STREET LIGHT	0	0.0	D-SLIPPERY
0	0.0	E-FOG	0	0.0	E-DARK-INOPR STREET LIGHT	0	0.0	<-NOT STATED
0	0.0	F-OTHER	0	0.0	F-DARK-NOT STATED	0	0.0	-INVALID CODES
0	0.0	G-WIND	0	0.0	<-NOT STATED			
0	0.0	<-NOT STATED	0	0.0	-INVALID CODES			

<---------RIGHT OF WAY CONTROL------------> <---------HIGHWAY GROUP------------> <---INTERSECTION OR RAMP ACCIDENT LOCATION----->

NUMBER	PCT	CODE	NUMBER	PCT	CODE	NUMBER	PCT	CODE
1	50.0	A-CONTROL FUNCTIONING	0	0.0	R-IND. ALIGN-RIGHT	0	0.0	1-RAMP INTERSECTION (EXIT)
0	0.0	B-CONTROL NOT FUNCTIONING	0	0.0	L-IND. ALIGN-LEFT	0	0.0	2-RAMP
0	0.0	C-CONTROLS OBSCURED	2	100.0	D-DIVIDED	0	0.0	3-RAMP ENTRY
1	50.0	D-NO CONTROLS PRESENT	0	0.0	U-UNDIVIDED	2	100.0	4-RAMP AREA, INTERSECT STREET
0	0.0	<-NOT STATED				0	0.0	5-IN INTERSECTION
						0	0.0	6-OUTSIDE INTRSCT-NONSTATE RTE
						0	0.0	--DOES NOT APPLY

- - - PARTY SUMMARY - - -

PARTY TYPE NUMBER	PCT	CODE	MOVEMENT PRECEDING COLLISION NUMBER	PCT	CODE	OTHER ASSOCIATED FACTOR # 1	PCT	# 2	PCT	CODE
2	100.0	A-PASNGR CAR/STA WAGON	0	0.0	A-STOPPED	0	0.0	0	0.0	1-INFLUENCE ALCOHOL
0	0.0	B-PASNGR CAR W/TRALR	1	50.0	B-PROCEDED STRAIGHT	0	0.0	0	0.0	2-FOLLOW TOO CLOSE
0	0.0	C-MOTORCYCLE	0	0.0	C-RAN OFF ROAD	0	0.0	0	0.0	3-FAILURE TO YIELD
0	0.0	D-PICKUP/PANEL TRUCK	1	50.0	D-MAKING RIGHT TURN	0	0.0	0	0.0	4-IMPROPER TURN
0	0.0	E-PICKUP/PANEL W/TRALR	0	0.0	E-MAKING LEFT TURN	0	0.0	0	0.0	5-SPEEDING
1	50.0	F-TRUCK/TRUCK TRACTOR	0	0.0	F-MAKING U TURN	0	0.0	0	0.0	6-OTHER VIOLATIONS
1	50.0	G-TRK/TRACTOR & 1 TRALR	0	0.0	G-BACKING	0	0.0	0	0.0	A-CELL PHONE* (INATTN)
0	0.0	2-TRK/TRACTOR & 2 TRALR	1	50.0	H-SLOWING, STOPPING	0	0.0	0	0.0	B-ELECTRONIC EQUIP* (INATTN)
0	0.0	3-TRK/TRACTOR & 3 TRALR	0	0.0	I-PASS OTHER VEHICLE	0	0.0	0	0.0	C-RADIO/CD/HEADPHN* (INATTN)
0	0.0	4-SINGLE UNIT TANKER	0	0.0	J-CHANGING LANES	0	0.0	0	0.0	D-SMOKING* (INATTN)
0	0.0	5-TRK/TRA & 1 TANK TRLR	0	0.0	K-PARKING	0	0.0	0	0.0	E-VISION OBSCUREMENT
0	0.0	6-TRK/TRA & 2 TANK TRLR	0	0.0	L-ENTER FROM SHLDR	0	0.0	0	0.0	F-INATTENTION - OTHER
0	0.0	H-SCHOOL BUS	0	0.0	M-OTHER UNSAFE TURN	0	0.0	0	0.0	G-STOP & GO TRAFFIC
0	0.0	I-OTHER BUS	0	0.0	N-CROSS INTO OPP LN	0	0.0	0	0.0	H-ENTER/LEAVE RAMP
0	0.0	J-EMERGENCY VEHICLE	0	0.0	O-PARKED	0	0.0	0	0.0	I-PREVIOUS COLLISION
0	0.0	K-HIGHWAY CONST EQUIP	0	0.0	P-MERGING	0	0.0	0	0.0	J-UNFAMILIAR WITH ROAD
0	0.0	L-BICYCLE	0	0.0	Q-TRVL WRONG WAY	0	0.0	0	0.0	K-DEFECT VEHICLE EQUIP
0	0.0	M-OTHER-MOTOR VEH	0	0.0	R-OTHER	0	0.0	0	0.0	L-UNINVOLVED VEHICLE
0	0.0	N-OTHER-NON-MOTOR VEH	0	0.0	<-NOT STATED	0	0.0	0	0.0	M-OTHER
0	0.0	O-SPILLED LOADS				2	100.0	0	0.0	N-NONE APPARENT
0	0.0	P-DISENGAGED TOW			PEDESTRIAN	0	0.0	0	0.0	P-WIND
0	0.0	Q-UNINVOLVED VEHICLE	0	0.0	2-XING XWALK-INTRST	0	0.0	0	0.0	R-RAMP ACCIDENT
0	0.0	R-MOPED	0	0.0	3-XING XWALK-NOT INTR	0	0.0	0	0.0	S-RUNAWAY VEHICLE
0	0.0	T-TRAIN	0	0.0	4-XING NOT XWALK	0	0.0	0	0.0	T-EATING* (INATTN)
0	0.0	U-PEDESTRIAN	0	0.0	5-ROADWAY-INCL SHLDR	0	0.0	0	0.0	U-CHILDREN* (INATTN)
0	0.0	V-DISMOUNT PEDESTRIAN	0	0.0	6-NOT IN ROADWAY	0	0.0	0	0.0	V-ANIMALS* (INATTN)
0	0.0	W-ANIMAL - LIVESTOCK	0	0.0	7-APRH-LEAVE SCHL BUS	0	0.0	0	0.0	W-PERSONAL HYGIENE* (INATTN)
0	0.0	X-ANIMAL - DEER	0	0.0	-INVALID CODES	0	0.0	0	0.0	X-READING* (INATTN)
0	0.0	Z-ANIMAL - OTHER				0	0.0	2	100.0	<-NOT STATED
						0	0.0	0	0.0	--DOES NOT APPLY

*INATTENTION CODES EFF. 01-01-01

DIRECTION OF TRAVEL NUMBER	PCT	CODE
2	100.0	N-N, NE, NW BOUND
0	0.0	S-S, SE, SW BOUND
1	50.0	E-EASTBOUND
0	0.0	W-WESTBOUND
0	0.0	<-NOT STATED
0	0.0	--DOES NOT APPLY

SPECIAL INFORMATION NUMBER	PCT	CODE
0	0.0	A-HAZARDOUS MATERIALS
0	0.0	B-CELL PHONE IN USE*
1	50.0	C-CELL PHONE NOT IN USE*
0	0.0	D-CELL PHONE NONE/UNKNOWN*
1	50.0	<-NOT STATED
0	0.0	--DOES NOT APPLY
0	0.0	-INVALID CODES

*SPECIAL INFORMATION CODES EFF. 04-01-01

- - - PARTY SUMMARY - - -

OBJECT STRUCK					LOCATION OF COLLISION				
PRIMARY		OTHERS			PRIMARY		OTHERS		
NUMBER	PCT	NUMBER	PCT		NUMBER	PCT	NUMBER	PCT	CODE
0	0.0	0	0.0	01-SIDE OF BRIDGE RAILING	0	0.0	0	0.0	A-BEYOND MEDIAN OR STRIPE-LFT
0	0.0	0	0.0	02-END OF BRIDGE RAILING	0	0.0	0	0.0	B-BEYOND SHLDER DRIVERS LEFT
0	0.0	0	0.0	03-PIER,COLUMN,ABUTMENT	0	0.0	0	0.0	C-LEFT SHOULDER AREA
0	0.0	0	0.0	04-BOTTOM OF STRUCTURE	0	0.0	0	0.0	D-LEFT LANE
0	0.0	0	0.0	05 BRIDGE END POST IN GORE	0	0.0	0	0.0	E-INTERIOR LANES
0	0.0	0	0.0	06-END OF GUARD RAIL	2	100.0	0	0.0	F-RIGHT LANE
0	0.0	0	0.0	07-BRIDGE APPROACH GRD RAIL	0	0.0	0	0.0	G-RIGHT SHOULDER AREA
0	0.0	0	0.0	10-LIGHT OR SIGNAL POLE	0	0.0	0	0.0	H-BEYOND SHLDER DRIVERS RIGHT
0	0.0	0	0.0	11-UTILITY POLE	0	0.0	0	0.0	I-GORE AREA
0	0.0	0	0.0	12-POLE (TYPE NOT STATED)	0	0.0	0	0.0	J-OTHER
0	0.0	0	0.0	13-TRAFFIC SIGN/SIGN POST	0	0.0	0	0.0	V-HOV LANE(S)
0	0.0	0	0.0	14-OTHER SIGNS NOT TRAFFIC	0	0.0	0	0.0	W-HOV LANE BUFFER AREA
0	0.0	0	0.0	15-GUARDRAIL	0	0.0	0	0.0	<-NOT STATED
0	0.0	0	0.0	16-MEDIAN BARRIER	0	0.0	2	100.0	--DOES NOT APPLY
0	0.0	0	0.0	17-WALL(EXCEPT SOUND WALL)	0	0.0	0	0.0	-INVALID CODES
0	0.0	0	0.0	18-DIKE OR CURB					
0	0.0	0	0.0	19-TRAFFIC ISLAND					
0	0.0	0	0.0	20-RAISED BARS					
0	0.0	0	0.0	21-CONCRETE OBJ(HDWL,D.I.)					
0	0.0	0	0.0	22-GUIDEPOST,CULVERT,PM					
0	0.0	0	0.0	23-CUT SLOPE OR EMBANKMENT					
0	0.0	0	0.0	24-OVER EMBANKMENT					
0	0.0	0	0.0	25-IN WATER					
0	0.0	0	0.0	26-DRAINAGE DITCH					
0	0.0	0	0.0	27-FENCE					
0	0.0	0	0.0	28-TREES					
0	0.0	0	0.0	29-PLANTS					
0	0.0	0	0.0	30-SOUND WALL					
0	0.0	0	0.0	40-NATURAL MATRL ON ROAD					
0	0.0	0	0.0	41-TEMP BARRICADES, CONES					
0	0.0	0	0.0	42-OTHER OBJECT ON ROAD					
0	0.0	0	0.0	43-OTHER OBJECT OFF ROAD					
0	0.0	0	0.0	44-OVERTURNED					
0	0.0	0	0.0	45-CRASH CUSHION(SAND)					
0	0.0	0	0.0	46-CRASH CUSHION(OTHER)					
0	0.0	0	0.0	51-CALL BOX					
0	0.0	0	0.0	98-UNKNOWN OBJECT STRUCK					
0	0.0	0	0.0	99-NO OBJECT INVOLVED					
2	100.0	0	0.0	V1 THRU V9-VEHICLE 1 TO 9					
0	0.0	0	0.0	<<-NOT STATED					
0	0.0	2	100.0	---DOES NOT APPLY					
0	0.0	0	0.0	-INVALID CODES					

SOBRIETY		DRUG/PHYSICAL		
NUMBER	PCT	NUMBER	PCT	CODE
2	100.0	0	0.0	A-HAD NOT BEEN DRINKING
0	0.0	0	0.0	B-HBD - UNDER INFLUENCE
0	0.0	0	0.0	C-HBD - NOT UNDER INFLUENCE
0	0.0	0	0.0	D-HBD - IMPAIRMENT UNKNOWN
0	0.0	0	0.0	E-UNDER DRUG INFLUENCE
0	0.0	0	0.0	F-OTHER PHYSICAL IMPAIRMENT
1	50.0	0	0.0	G-IMPAIRMENT NOT KNOWN
0	0.0	0	0.0	H-NOT APPLICABLE
0	0.0	0	0.0	I-FATIGUE
0	0.0	2	100.0	<-NOT STATED
0	0.0	0	0.0	--DOES NOT APPLY
		0	0.0	-INVALID CODES

Rev ST-3/99

Division of Operations – Office of Traffic Investigations

Traffic Accident Surveillance and Analysis System (TASAS)

ACCIDENT DATA REQUEST FORM

(REQUESTS FOR LEGAL OR CLAIMS ARE PROCESSED BY THE LEGAL UNIT)

Purpose of Request PREPARE PSR

Log Number 167

NO NUMBER–NO DATA

From:
(SQUAD) KEN HATAI Requested by TAM NGUYEN Location 29 Phone 7-8336

County LA Route 5 **P.M.**. From 14.811 to

(VERIFY POSTMILES IN P.M. BOOK. IS THERE A POSTMILE PREFIX?)

Accident Location: ALL ___ HWY ___ INT ___ RAMP ✓

Time Period: (DATE) from 1-1-98 to 12-31-01 (Inclusive)

Microfiche *(CHECK WITH TASAS UNIT BEFORE ORDERING)*

___ TABLE A – Cumulative Number of Accidents by Postmile
✓ TABLE C - ALL — High Accident Concentration Locations
✓ TABLE C - WET — High Accident Concentration Locations

✓ **TABLE B Accident Rates**

Years ✓ Combined? ___ Separate?
Direction ✓ Combined? ___ Separate?
___ Data to Calculate a Safety Index ___ Include Ramps ___ Exclude Ramps
___ Data for a Speed Zone Survey - (B)

✓ **TASAS Selective Accident Retrieval**

✓ With Detail Listing of Accidents ___ Summary Only
Years ✓ Combined? ___ Separate? (ONLY HIGHWAY WILL BE SEPARATE)
Direction ✓ Combined? ___ Separate? ___ Exclude Ramps?

WHAT TYPES OF SELECTED ACCIDENTS OR LOCATIONS ARE YOU REQUESTING?

SB 5 OFF TO DITMAN AVE.

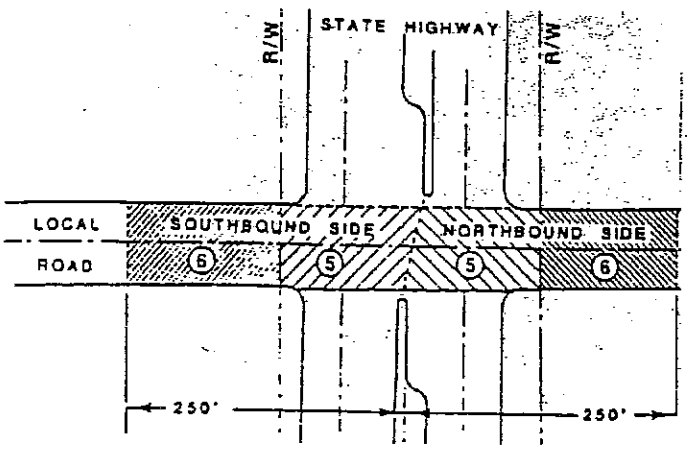

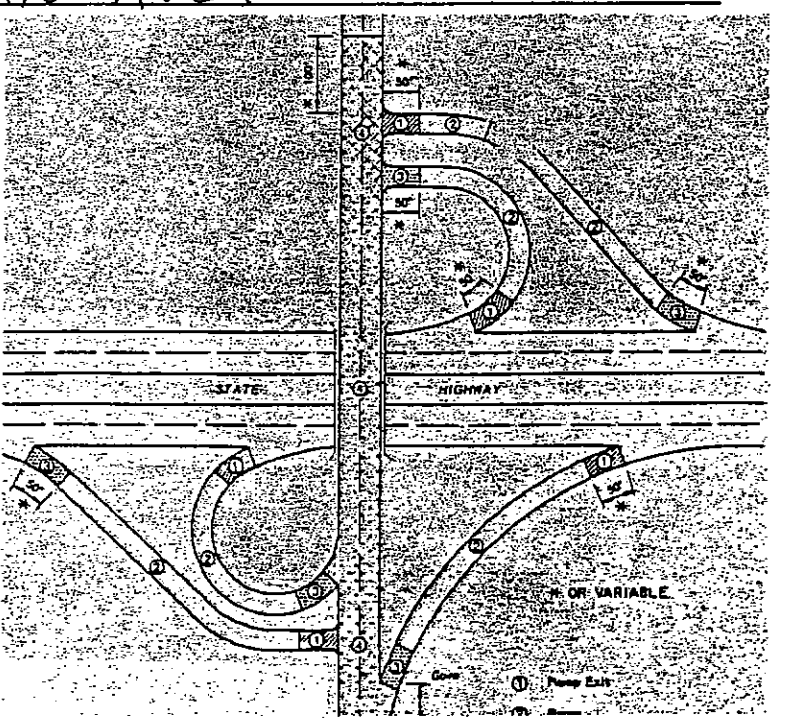

TASAS TABLE B DISTRICT 07
SELECTIVE ACCIDENT RATE CALCULATION
ROUTE SEQUENCE

LOCATION DESCRIPTION	RA GRP (RUS)	*-NUMBER OF ACCIDENTS/SIGNIFICANCE* TOT	FAT	INJ	F+I	MULTI VEH	WET	DARK	PER KLD INJ	*ADT * MAIN X-ST	TOTAL MV+ OR MVM	*-ACCIDENT RATE ACCS/MV+ OR MVM-* ACTUAL FAT	F+I	TOT	AVERAGE FAT	F+I	TOT
005 LA 14.811 SB OFF TO DITMAN AVE	R26	8	0	3	3	2	1	2	0	1.5	2.19+	.000	1.37	3.65	.005	.39	1.15
07-0001 98-01-01 01-12-31 48 MO	(S)	H99		H92	H92				5								

+ DENOTES MV USED IN RATES

SUBMITTORS DISTRICT 72 - MESSAGES -

SUBMITTORS NAME YUEH-S

ACCIDENTS SELECTED 8

LOCATION CRITERIA -

```
DISTRICT 07      POSTMILE   FROM   014.811  TO   014.812                DATE RANGE  FROM  01-01-98  TO  12-31-01
ROUTE    005             OR FROM            TO                    AND            OR FROM            TO
COUNTY   LA              OR FROM            TO                                   OR FROM            TO
```

ACCIDENT AND HIGHWAY CRITERIA -

```
 11  AN  508  ACC FILE TYPE                    EQ    R
```

DIST	RTES NO	U F	CO	P R E	LOC POST MILE	<-----HIGHWAY-----> H G	A C	M T	B A	LANES LT	RT	UO	I F T	R L	S O H	D A Y	ACCIDENT DATE MO DA YR	TIME HHMM	COMMON ACCIDENT NUMBER	P C F	ENVIR COND W	L S	A	R C	R W	T O C	NO MTR VEH	P T	D I R	V H I	S I	PERSN K	O I P	L O S C	O S O	L O C	O S O	L O C	O S O	L O C	OA F 12	M O V	SD P 12
07	005		LA		014.811	D	F	H	D	04	04	UO	R	2	S	6	06-30-00	1440	953516009	5	A	A	A	H	D	D	02	A	S	2	<	00	00	V2B	---	---	---	H<	B	<<
																												A	N	2	<	00	00	V1G	18H	11H	---	N<	O	<<
07	005		LA		014.811	D	F	H	D	04	04	UO	R	2	S	1	02-13-00	1130	953513259	5	B	A	B	H	D	E	01	D	S	1	<	00	00	15B	---	---	---	H<	B	A<
07	005		LA		014.811	D	F	H	D	04	04	UO	R	2	S	4	01-12-00	0550	953509650	5	B	B	A	H	A	E	01	F	S	1	<	00	01	15J	18H	11H	27H	H<	B	A<
07	005		LA		014.811	D	F	H	D	04	04	UO	R	2	S	6	10-22-99	0900	953509650	5	A	A	A	H	D	F	01	C	S	1	<	00	01	44H	18H	15H	---	H<	B	A<
07	005		LA		014.811	D	F	H	D	04	04	UO	R	3	S	1	10-03-99	0130	953515698	1	B	C	A	H	D	E	01	A	S	1	<	00	03	15B	19J	15B	---	5<	B	B<
07	005		LA		014.811	D	F	H	D	04	04	UO	R	4	S	3	11-10-98	1130	953510909	5	A	A	A	H	D	E	01	F	S	1	<	00	00	18B	43B	27B	---	4<	B	A<
07	005		LA		014.811	D	F	H	D	04	04	UO	R	1	S	1	02-08-98	0940	953514438	5	A	A	A	H	D	E	01	A	S	1	<	00	00	15B	---	---	---	H<	B	A<
07	005		LA		014.811	D	F	H	D	04	04	UO	R	1	S	1	02-08-98	0941	953514438	5	A	A	A	H	D	C	02	D	S	1	<	00	00	V2F	---	---	---	H<	B	A<
																												A	S	1	<	00	00	V1F	---	---	---	H<	A	A<

- - - ACCIDENT SUMMARY - - -

TOTAL ACCIDENTS	FATAL	INJURY	PDO	PERSONS KILLED	PERSONS INJURED	MOTOR VEHICLES INVOLVED NUMBER	PCT	CODE	LINES CODED NUMBER	PCT	CODE
8	0	3	5	0	5	6	75.0	1	6	75.0	1
						2	25.0	2	2	25.0	2
WITHOUT						0	0.0	3	0	0.0	3
DETAIL						0	0.0	> 3	0	0.0	4
0									0	0.0	5
									0	0.0	6
									0	0.0	7
									0	0.0	8
									0	0.0	9

<--------HOUR OF DAY-------->

NUMBER	PCT	CODE
0	0.0	00- 12 MID.
1	12.5	01- 1 A.M.
0	0.0	02- 2 A.M.
0	0.0	03- 3 A.M.
0	0.0	04- 4 A.M.
1	12.5	05- 5 A.M.
0	0.0	06- 6 A.M.
0	0.0	07- 7 A.M.
0	0.0	08- 8 A.M.
3	37.5	09- 9 A.M.
0	0.0	10- 10 A.M.
2	25.0	11- 11 A.M.
0	0.0	12- 12 NOON
0	0.0	13- 1 P.M.
1	12.5	14- 2 P.M.
0	0.0	15- 3 P.M.
0	0.0	16- 4 P.M.
0	0.0	17- 5 P.M.
0	0.0	18- 6 P.M.
0	0.0	19- 7 P.M.
0	0.0	20- 8 P.M.
0	0.0	21- 9 P.M.
0	0.0	22- 10 P.M.
0	0.0	23- 11 P.M.
0	0.0	25- UNKNOWN

<-------ACCESS CONTROL---------->

NUMBER	PCT	CODE
0	0.0	C-CONVENTIONAL
0	0.0	E-EXPRESSWAY
8	100.0	F-FREEWAY
0	0.0	S-1-WAY CITY ST
0	0.0	--INVALID DATA
0	0.0	+-NO DATA

<-------SIDE OF HIGHWAY------>

NUMBER	PCT	CODE
0	0.0	N-NORTHBOUND
8	100.0	S-SOUTHBOUND
0	0.0	E-EASTBOUND
0	0.0	W-WESTBOUND

<----------YEAR------->

NUMBER	PCT	CODE
0	0.0	1992
0	0.0	1993
0	0.0	1994
0	0.0	1995
0	0.0	1996
0	0.0	1997
3	37.5	1998
2	25.0	1999
3	37.5	2000
0	0.0	2001
0	0.0	2002

<-----------MONTH----------->

NUMBER	PCT	CODE
1	12.5	01-JANUARY
3	37.5	02-FEBRUARY
0	0.0	03-MARCH
0	0.0	04-APRIL
0	0.0	05-MAY
1	12.5	06-JUNE
0	0.0	07-JULY
0	0.0	08-AUGUST
0	0.0	09-SEPTEMBER
2	25.0	10-OCTOBER
1	12.5	11-NOVEMBER
0	0.0	12-DECEMBER

<---------DAY OF WEEK-------->

NUMBER	PCT	CODE
4	50.0	1-SUNDAY
0	0.0	2-MONDAY
1	12.5	3-TUESDAY
1	12.5	4-WEDNESDAY
0	0.0	5-THURSDAY
2	25.0	6-FRIDAY
0	0.0	7-SATURDAY

- - - ACCIDENT SUMMARY - - -

<-----PRIMARY COLLISION FACTOR--------> <---------TYPE OF COLLISION---------> <----------ROADWAY CONDITION----------->

NUMBER	PCT	CODE	NUMBER	PCT	CODE	NUMBER	PCT	CODE
1	12.5	1-INFLUENCE ALCOHOL	0	0.0	A-HEAD-ON	0	0.0	A-HOLES, RUTS
0	0.0	2-FOLLOW TOO CLOSE	0	0.0	B-SIDESWIPE	0	0.0	B-LOOSE MATERIAL
0	0.0	3-FAILURE TO YIELD	1	12.5	C-REAR END	0	0.0	C-OBSTRUCTION ON ROAD
0	0.0	4-IMPROPER TURN	1	12.5	D-BROADSIDE	0	0.0	D-CONSTRUCT-REPAIR-ZONE
7	87.5	5-SPEEDING	5	62.5	E-HIT OBJECT	0	0.0	E-REDUCED ROAD WIDTH
0	0.0	6-OTHER VIOLATIONS	1	12.5	F-OVERTURN	0	0.0	F-FLOODED
0	0.0	B-IMPROPER DRIVING	0	0.0	G-AUTO-PEDESTRIAN	0	0.0	G-OTHER
0	0.0	C-OTHER THAN DRIVER	0	0.0	H-OTHER	8	100.0	H-NO UNUSUAL CONDITION
0	0.0	D-UNKNOWN	0	0.0	<-NOT STATED	0	0.0	<-NOT STATED
0	0.0	E-FELL ASLEEP	0	0.0	-INVALID CODES			
0	0.0	<-NOT STATED						
0	0.0	-INVALID CODES						

<----------WEATHER----------> <----------LIGHTING----------> <-------ROAD SURFACE--------->

NUMBER	PCT	CODE	NUMBER	PCT	CODE	NUMBER	PCT	CODE
5	62.5	A-CLEAR	6	75.0	A-DAYLIGHT	7	87.5	A-DRY
3	37.5	B-CLOUDY	1	12.5	B-DUSK/DAWN	1	12.5	B-WET
0	0.0	C-RAINING	1	12.5	C-DARK-STREET LIGHT	0	0.0	C-SNOWY, ICY
0	0.0	D-SNOWING	0	0.0	D-DARK-NO STREET LIGHT	0	0.0	D-SLIPPERY
0	0.0	E-FOG	0	0.0	E-DARK-INOPR STREET LIGHT	0	0.0	<-NOT STATED
0	0.0	F-OTHER	0	0.0	F-DARK-NOT STATED	0	0.0	-INVALID CODES
0	0.0	G-WIND	0	0.0	<-NOT STATED			
0	0.0	<-NOT STATED	0	0.0	-INVALID CODES			

<---------RIGHT OF WAY CONTROL----------> <---------HIGHWAY GROUP----------> <---INTERSECTION OR RAMP ACCIDENT LOCATION----->

NUMBER	PCT	CODE	NUMBER	PCT	CODE	NUMBER	PCT	CODE
1	12.5	A-CONTROL FUNCTIONING	0	0.0	R-IND. ALIGN-RIGHT	2	25.0	1-RAMP INTERSECTION (EXIT)
0	0.0	B-CONTROL NOT FUNCTIONING	0	0.0	L-IND. ALIGN-LEFT	4	50.0	2-RAMP
0	0.0	C-CONTROLS OBSCURED	8	100.0	D-DIVIDED	1	12.5	3-RAMP ENTRY
7	87.5	D-NO CONTROLS PRESENT	0	0.0	U-UNDIVIDED	1	12.5	4-RAMP AREA, INTERSECT STREET
0	0.0	<-NOT STATED				0	0.0	5-IN INTERSECTION
						0	0.0	6-OUTSIDE INTRSCT-NONSTATE RTE
						0	0.0	--DOES NOT APPLY

- - - PARTY SUMMARY - - -

<----------PARTY TYPE----------> <---MOVEMENT PRECEDING COLLISION---> <----------OTHER ASSOCIATED FACTOR---------->

NUMBER	PCT	CODE	NUMBER	PCT	CODE	# 1	PCT	# 2	PCT	CODE
4	50.0	A-PASNGR CAR/STA WAGON	1	12.5	A-STOPPED	0	0.0	0	0.0	1-INFLUENCE ALCOHOL
0	0.0	B-PASNGR CAR W/TRALR	8	100.0	B-PROCEDED STRAIGHT	0	0.0	0	0.0	2-FOLLOW TOO CLOSE
1	12.5	C-MOTORCYCLE	0	0.0	C-RAN OFF ROAD	0	0.0	0	0.0	3-FAILURE TO YIELD
2	25.0	D-PICKUP/PANEL TRUCK	0	0.0	D-MAKING RIGHT TURN	1	12.5	0	0.0	4-IMPROPER TURN
0	0.0	E-PICKUP/PANEL W/TRALR	0	0.0	E-MAKING LEFT TURN	1	12.5	0	0.0	5-SPEEDING
2	25.0	F-TRUCK/TRUCK TRACTOR	0	0.0	F-MAKING U TURN	0	0.0	0	0.0	6-OTHER VIOLATIONS
0	0.0	G-TRK/TRACTOR & 1 TRALR	0	0.0	G-BACKING	0	0.0	0	0.0	A-CELL PHONE* (INATTN)
0	0.0	2-TRK/TRACTOR & 2 TRALR	0	0.0	H-SLOWING, STOPPING	0	0.0	0	0.0	B-ELECTRONIC EQUIP* (INATTN)
0	0.0	3-TRK/TRACTOR & 3 TRALR	0	0.0	I-PASS OTHER VEHICLE	0	0.0	0	0.0	C-RADIO/CD/HEADPHN* (INATTN)
0	0.0	4-SINGLE UNIT TANKER	0	0.0	J-CHANGING LANES	0	0.0	0	0.0	D-SMOKING* (INATTN)
0	0.0	5-TRK/TRA & 1 TANK TRLR	0	0.0	K-PARKING	0	0.0	0	0.0	E-VISION OBSCUREMENT
0	0.0	6-TRK/TRA & 2 TANK TRLR	0	0.0	L-ENTER FROM SHLDR	0	0.0	0	0.0	F-INATTENTION - OTHER
0	0.0	H-SCHOOL BUS	0	0.0	M-OTHER UNSAFE TURN	0	0.0	0	0.0	G-STOP & GO TRAFFIC
0	0.0	I-OTHER BUS	0	0.0	N-CROSS INTO OPP LN	6	75.0	0	0.0	H-ENTER/LEAVE RAMP
0	0.0	J-EMERGENCY VEHICLE	1	12.5	O-PARKED	0	0.0	0	0.0	I-PREVIOUS COLLISION
0	0.0	K-HIGHWAY CONST EQUIP	0	0.0	P-MERGING	0	0.0	0	0.0	J-UNFAMILIAR WITH ROAD
0	0.0	L-BICYCLE	0	0.0	Q-TRVL WRONG WAY	0	0.0	0	0.0	K-DEFECT VEHICLE EQUIP
0	0.0	M-OTHER-MOTOR VEH	0	0.0	R-OTHER	0	0.0	0	0.0	L-UNINVOLVED VEHICLE
0	0.0	N-OTHER-NON-MOTOR VEH	0	0.0	<-NOT STATED	0	0.0	0	0.0	M-OTHER
0	0.0	O-SPILLED LOADS				1	12.5	0	0.0	N-NONE APPARENT
0	0.0	P-DISENGAGED TOW			PEDESTRIAN	0	0.0	0	0.0	P-WIND
0	0.0	Q-UNINVOLVED VEHICLE	0	0.0	2-XING XWALK-INTRST	0	0.0	0	0.0	R-RAMP ACCIDENT
0	0.0	R-MOPED	0	0.0	3-XING XWALK-NOT INTR	0	0.0	0	0.0	S-RUNAWAY VEHICLE
0	0.0	T-TRAIN	0	0.0	4-XING NOT XWALK	0	0.0	0	0.0	T-EATING* (INATTN)
0	0.0	U-PEDESTRIAN	0	0.0	5-ROADWAY-INCL SHLDR	0	0.0	0	0.0	U-CHILDREN* (INATTN)
0	0.0	V-DISMOUNT PEDESTRIAN	0	0.0	6-NOT IN ROADWAY	0	0.0	0	0.0	V-ANIMALS* (INATTN)
0	0.0	W-ANIMAL - LIVESTOCK	0	0.0	7-APRH-LEAVE SCHL BUS	0	0.0	0	0.0	W-PERSONAL HYGIENE* (INATTN)
0	0.0	X-ANIMAL - DEER	0	0.0	-INVALID CODES	0	0.0	0	0.0	X-READING* (INATTN)
0	0.0	Z-ANIMAL - OTHER				0	0.0	8	100.0	<-NOT STATED
						0	0.0	0	0.0	--DOES NOT APPLY

<-----DIRECTION OF TRAVEL------> <----------SPECIAL INFORMATION---------->

NUMBER	PCT	CODE	NUMBER	PCT	CODE
1	12.5	N-N, NE, NW BOUND	0	0.0	A-HAZARDOUS MATERIALS
8	100.0	S-S, SE, SW BOUND	0	0.0	B-CELL PHONE IN USE*
0	0.0	E-EASTBOUND	0	0.0	C-CELL PHONE NOT IN USE*
0	0.0	W-WESTBOUND	0	0.0	D-CELL PHONE NONE/UNKNOWN*
0	0.0	<-NOT STATED	8	100.0	<-NOT STATED
0	0.0	--DOES NOT APPLY	0	0.0	--DOES NOT APPLY
			0	0.0	-INVALID CODES

*INATTENTION CODES EFF. 01-01-01

*SPECIAL INFORMATION CODES EFF. 04-01-01

- - - PARTY SUMMARY - - -

OBJECT STRUCK					LOCATION OF COLLISION				
PRIMARY		OTHERS			PRIMARY		OTHERS		
NUMBER	PCT	NUMBER	PCT		NUMBER	PCT	NUMBER	PCT	CODE
0	0.0	0	0.0	01-SIDE OF BRIDGE RAILING	0	0.0	0	0.0	A-BEYOND MEDIAN OR STRIPE-LFT
0	0.0	0	0.0	02-END OF BRIDGE RAILING	5	62.5	2	25.0	B-BEYOND SHLDER DRIVERS LEFT
0	0.0	0	0.0	03-PIER,COLUMN,ABUTMENT	0	0.0	0	0.0	C-LEFT SHOULDER AREA
0	0.0	0	0.0	04-BOTTOM OF STRUCTURE	0	0.0	0	0.0	D-LEFT LANE
0	0.0	0	0.0	05 BRIDGE END POST IN GORE	0	0.0	0	0.0	E-INTERIOR LANES
0	0.0	0	0.0	06-END OF GUARD RAIL	1	12.5	0	0.0	F-RIGHT LANE
0	0.0	0	0.0	07-BRIDGE APPROACH GRD RAIL	1	12.5	0	0.0	G-RIGHT SHOULDER AREA
0	0.0	0	0.0	10-LIGHT OR SIGNAL POLE	1	12.5	3	37.5	H-BEYOND SHLDER DRIVERS RIGHT
0	0.0	2	25.0	11-UTILITY POLE	0	0.0	0	0.0	I-GORE AREA
0	0.0	0	0.0	12-POLE (TYPE NOT STATED)	1	12.5	1	12.5	J-OTHER
0	0.0	0	0.0	13-TRAFFIC SIGN/SIGN POST	0	0.0	0	0.0	V-HOV LANE(S)
0	0.0	0	0.0	14-OTHER SIGNS NOT TRAFFIC	0	0.0	0	0.0	W-HOV LANE BUFFER AREA
4	50.0	2	25.0	15-GUARDRAIL	0	0.0	0	0.0	<-NOT STATED
0	0.0	0	0.0	16-MEDIAN BARRIER	0	0.0	7	87.5	--DOES NOT APPLY
0	0.0	0	0.0	17-WALL(EXCEPT SOUND WALL)	0	0.0	0	0.0	-INVALID CODES
1	12.5	3	37.5	18-DIKE OR CURB					
0	0.0	1	12.5	19-TRAFFIC ISLAND					
0	0.0	0	0.0	20-RAISED BARS					
0	0.0	0	0.0	21-CONCRETE OBJ(HDWL,D.I.)					
0	0.0	0	0.0	22-GUIDEPOST,CULVERT,PM					
0	0.0	0	0.0	23-CUT SLOPE OR EMBANKMENT					
0	0.0	0	0.0	24-OVER EMBANKMENT					
0	0.0	0	0.0	25-IN WATER					
0	0.0	0	0.0	26-DRAINAGE DITCH					
0	0.0	2	25.0	27-FENCE					
0	0.0	0	0.0	28-TREES					
0	0.0	0	0.0	29-PLANTS					
0	0.0	0	0.0	30-SOUND WALL					
0	0.0	0	0.0	40-NATURAL MATRL ON ROAD					
0	0.0	0	0.0	41-TEMP BARRICADES, CONES					
0	0.0	0	0.0	42-OTHER OBJECT ON ROAD					
0	0.0	1	12.5	43-OTHER OBJECT OFF ROAD					
1	12.5	0	0.0	44-OVERTURNED					
0	0.0	0	0.0	45-CRASH CUSHION(SAND)					
0	0.0	0	0.0	46-CRASH CUSHION(OTHER)					
0	0.0	0	0.0	51-CALL BOX					
0	0.0	0	0.0	98-UNKNOWN OBJECT STRUCK					
0	0.0	0	0.0	99-NO OBJECT INVOLVED					
2	25.0	0	0.0	V1 THRU V9-VEHICLE 1 TO 9					
0	0.0	0	0.0	<<-NOT STATED					
0	0.0	7	87.5	---DOES NOT APPLY					
0	0.0	0	0.0	-INVALID CODES					

SOBRIETY		DRUG/PHYSICAL		
NUMBER	PCT	NUMBER	PCT	CODE
6	75.0	0	0.0	A-HAD NOT BEEN DRINKING
1	12.5	0	0.0	B-HBD - UNDER INFLUENCE
0	0.0	0	0.0	C-HBD - NOT UNDER INFLUENCE
0	0.0	0	0.0	D-HBD - IMPAIRMENT UNKNOWN
0	0.0	0	0.0	E-UNDER DRUG INFLUENCE
0	0.0	0	0.0	F-OTHER PHYSICAL IMPAIRMENT
0	0.0	0	0.0	G-IMPAIRMENT NOT KNOWN
0	0.0	0	0.0	H-NOT APPLICABLE
0	0.0	0	0.0	I-FATIGUE
1	12.5	8	100.0	<-NOT STATED
0	0.0	0	0.0	--DOES NOT APPLY
		0	0.0	-INVALID CODES

ATTACHMENT 16

FIGURE 2 - Flowchart for Determining FHWA Involvement and Oversight on a Project

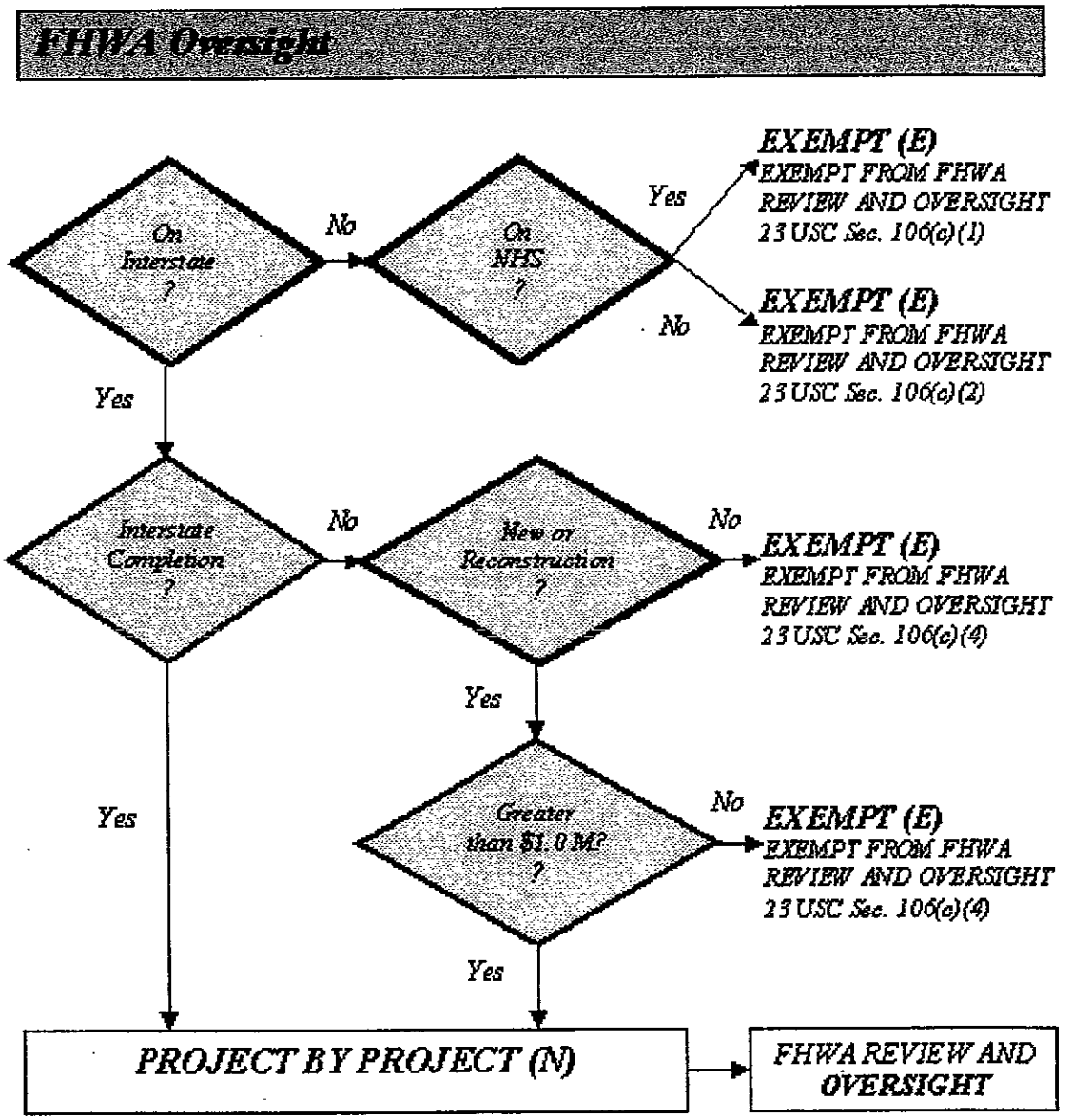

FIGURE 4 - FHWA Involvement in Federally Funded Projects

Action, Activity or Task	Exempt	Project by Project
Project Initiation Document	*	X
Special Project Features	X	X
Interstate Access Control Change	X	X
42 000 km Priority Network (vertical clearance)	X	X
Exceptions to Mandatory Design Standards		X
Mandatory Material or Disposal Site [See HDM Topic 111]		X
NEPA Document (CE, EA/FONSI, EIS/ROD)	X	X
Project Approval Document	*	X
Experimental Work Plan [See *Construction Manual*, Section 2-04]	X	X
Proprietary Items [See HDM Index 602.1(6)]		X
Buy America Provision [See *Construction Manual*, Section 2-06]	X	X
Federal Requirements Relating to Materials (State-Furnished Material, Guaranty/Warranty, etc.) [See 23 CFR 635, Subpart D]		X
PS&E and Transmittal Letter		X
Railroad Agreements		X
Right of Way and Utility Certification		X
Federal Fund Request [FNM-76 Form]	X	X
Addendum to PS&E		X
Concurrence in Award		X
Construction Inspections		X
Contract Change Orders and Time Extensions		X
Claims or Granting Non-working Days (Director Days)		X
Final Acceptance		X

X = FHWA Involvement

* Copies of the draft and/or final version of the project initiation document and/or project approval document should be furnished upon request to the FHWA Transportation Engineer. The FHWA Transportation Engineer should be consulted as early in the project development process as possible for all non-Title 23 USC activities (i.e.: NEPA, right of way, civil rights, etc.)

ATTACHMENT 17

STATE OF CALIFORNIA - DEPARTMENT OF TRANSPORTATION - DIVISION OF STRUCTURES

DIST.	COUNTY	ROUTE	KILOMETER POST TOTAL PROJECT
07	LA	5	

Caltrans Metric

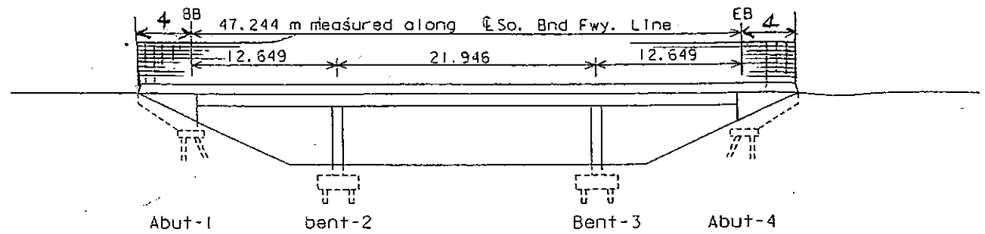

ELEVATION

No Scale

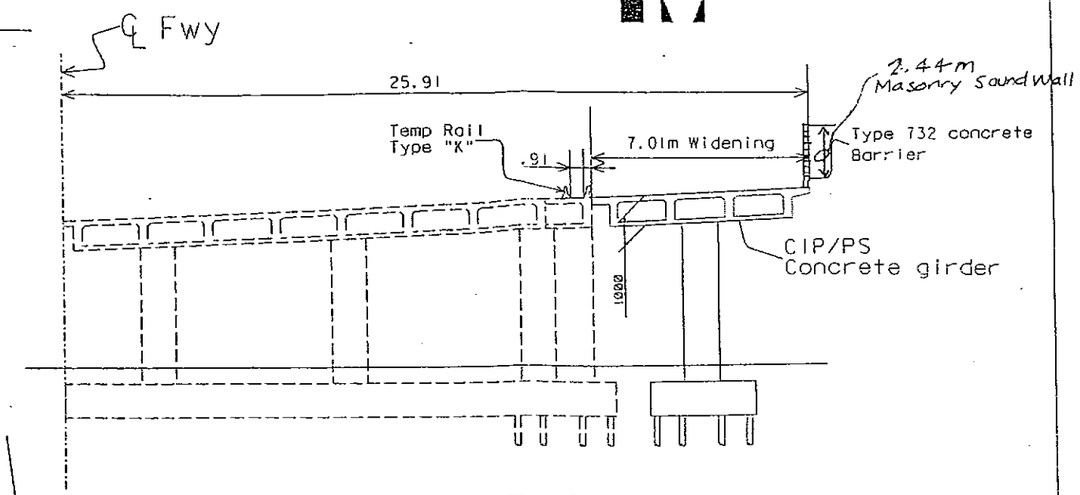

TYPICAL SECTION

No Scale

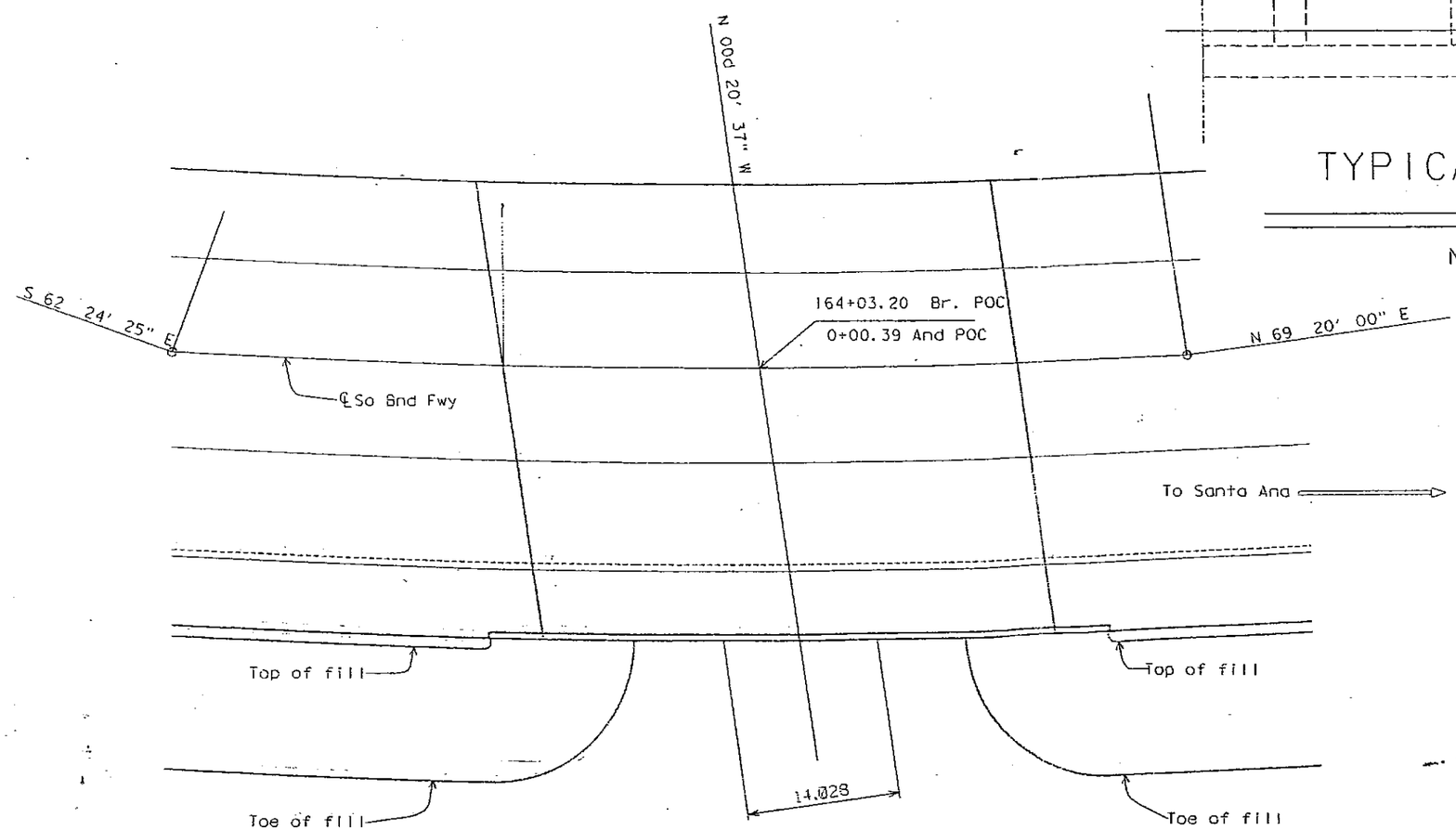

PLAN

No Scale

Date of Estamate	~~7-26-01~~ 8/23/02
Structure Depth	1.00 m
Length	47.244 m
Width	7.01 m
Area	331.2 m²
Cost/SM including 10% Mobilization & 25% Contongencies	$1880
Total Cost (Bridge)	$622,800
Total Soundwall Cost	$ 27,200
Total Cost	$ 650,000

ALL DIMENSIONS ARE IN METERS UNLESS OTHERWISE SHOWN

DESIGNED BY	GARY HIGHT	DATE Jul-2001	STRUCTURE DESIGN SECTION
DRAWN BY	GARY HIGHT	DATE Jul-2001	
CHECKED BY		DATE	
APPROVED		DATE	

PLANNING STUDY

INDIANA ST UNDERCROSSING

BRIDGE NO.	53-0604	CU	07
SCALE:	No Scale	EA	22400K

TIME PLOTTED => $TIME

DATE PLOTTED => $DATE

USERNAME => $USER

STRUCTURES DESIGN ADVANCE PLANNING STUDY SHEET (METRIC) (REV. 9/2/98)

FILE => $REQUEST

ATTACHMENT 18

PRIORITY INDEX NUMBER CALCULATION WORK SHEET

LOCATION /PROJECT DESCRIPTION: On SB Route 5 Between Calzona On-ramp and Ditman Off-ramp
Construct an Aux lane; widen UC structure; remove/reconstruct sound wall; increase off-ramp lane width; acquire additional r/w

INSTRUCTIONS: FILL IN AREAS THAT ARE MARKED IN BLUE OR WITH AN ASTERISK.

INPUT

INPUT		
"L1" BEFORE MILES	*	0.30
"L2" AFTER MILES	*	0.30
"S1" BEFORE MPH	*	55
"S2" AFTER MPH	*	60
PRESENT AADT	*	263000
FUTURE AADT	*	401746
AVERAGE AADT		332373
% TRAFFIC BENEFITED	*	100
AVE. AADT BENEFITED		332373
% TRUCKS	*	9.1

COUNTY-RTE :	*	LA-005
P.M. LIMITS :	*	14.711/15.111
EA :	*	22400K
R/W+CONST $:	*	$ 4,100,000
CALC. BY :	*	E. DELOS REYES
DATE:	*	11/12/2002
PHONE NO. :	*	213.897.4784

CALCULATIONS

WEIGHTED AVERAGE COST PER VEHICLE MINUTE (TRUCKS & AUTOS)

% TRUCKS	X	TRUCK TIME VALUE ($ PER VEH. MIN.)	/	CONVERT TO DECIMAL	+	% AUTOS	X	AUTO TIME VALUE ($ PER VEH. MIN.)	/	CONVERT TO DECIMAL	=	COST PER VEH. MIN. ($ PER VEH. MIN.) A
9.1		0.4		100		90.9		0.15		100	=	0.173

DAILY DELAY SAVINGS (VEHICLE MINUTES PER DAY)

BEFORE CONDITIONS LENGTH (MILES) L_1	/	SPEED (MPH) S_1	-	AFTER CONDITIONS LENGTH (MILES) L_2	/	SPEED (MPH) S_2	X	CONVERSION FACTOR (MIN. PER HOUR) 60	X	(VEH. PER DAY) AVERAGE AADT BENEFITED	=	DAILY DELAY SAVINGS (VEH. MINS. PER DAY) B
0.30		55		0.30		60		60		332373	=	9065

DELAY INDEX

DAILY DELAY SAVINGS (VEH-MIN. PER DAY) B	X	COST PER VEH MIN ($ PER VEH. MIN.) A	X	DAYS PER YEAR APPLIED (DAYS PER YEAR) D	X	PRESENT WORTH FACTOR P_L	X	CONVERSION FACTOR 100	/	TOTAL PROJECT COST[1] ($) C	=	DELAY INDEX D.I.
9065		0.173		365		12.6		100		4100000	=	176

NOTES:
1. For "Total Project Cost", use current Construction Cost + R/W Cost

DISCOUNTED SAFETY INDEX

SAFETY INDEX[1] S.I.	X	PRESENT WORTH FACTOR P_L	/	PROJECT LIFE (YEARS) L	=	DISCOUNTED SAFETY INDEX $S.I._{DIS}$
0		12.6		20	=	0

NOTES:
1. For Safety Index Calculation, see District Traffic Safety Personnel

PRIORITY INDEX NUMBER CALCULATION WORK SHEET

PRIORITY INDEX NUMBER (PIN)

DELAY INDEX D.I	+	DISCOUNTED SAFETY INDEX $S.I._{psq}$	=	PIN
176		0	=	**176**

PERFORMANCE MEASURE

DAILY DELAY SAVINGS (VEH. MINS. PER DAY)		DAYS PER YEAR APPLIED (DAYS PER YEAR)		CONVERSION FACTOR (MIN. PER HOUR)		PERFORMANCE MEASURE (VEH. HOURS PER YEAR)
B	X	D	/	60		
9065		365		60	=	55144

Spot Improvement

Option Utility Improvement

Calculated by	E. Delos Reyes	Safety Evaluation (Spot Improvement)	
Checked by			
Date	November 13, 2002	Unit-EA 22400k	For Official Use Only Caltrans

PROJECT DATA

	DIST	CO	RTE	PM to PM		LENGTH MILES	Rate Group from Table 2 EXISTING	PROPOSED	PROPOSED IMPROVEMENT			
EXIST. RDWY	07	LA	5	14.7	15.1	0.4	R 14	R 14	LIFE	COST ($1000)		
PROJECT LOC.	Om Ditman Off-Ramp between Calzona and Ditman									CONST.	R.W.	TOTAL
PROP. IMPR.	Curve Improvement								20	4150	258	4408

ACCIDENT SUMMARY

B. MO	B. YR	E. MO	E. YR	TOTAL	FAT.	INJ.	F + I	PDO	SV	MV	LT	DK	WET	DRY
01	1998	12	2001	175	0	36	36	139	156	19	108	67	25	150
NO. YRS	4.00	Average (-)	➡	175.0	0.9	66.3	67.2	107.8	⬅ Total x% Severity					
		Difference	➡	0.0	-0.9	-30.3	-31.2	31.2	⬅ Total - Average					
		% Severity	➡	100	0.5	37.9	38.4	61.6	⬅ Refer to Table 2					
		Significant	➡		No	Yes(-)	Yes(-)		⬅ Refer to Figure 2, either Yes(+), Yes(-), or No					

Reset Adjust OK

Spot Improvement

Option Utility

TRAFFIC DATA RURAL ○ URBAN ◉ SUBURBAN ○

1	2	3	4	5	6	7	8	9	10	11	12
ADT (1000)				VCF	TOTAL NO. OF		ACC/YR	TOTAL TRAVEL		ACCIDENTS	
					YEARS	ACC.		MV/YR	MVM/YR	/MV	/MVM
PRESENT	FUTURE	AVERAGE	CROSS STREET	(3 / 1)	(From Above)		(7 / 6)	0.365 x (1 / 4)	(9 x Mi)	(8 / 9)	(8 / 10)
263	401	332.00	0	1.25	4.00	175	43.75	96.00		0.46	

REDUCTION FACTOR

1	2		3	4	5	6	7	8	9	10	11	12
METH.	ACC/MV(M)		R. F.	AMOUNT OF RED.	REDUCED ACC RATE	BASE RATE	Statewide ACC/MVM	Average ACC/MVM	DIFFERENTIAL RATE (MV)	(MV)	(MVM)	CALC. RF or IF
	From Above		TABLE 1	(2 x 3)	(2 - 4)	TABLE 2	TABLE 2		(5 - 6)	(2 - 6)		
I	0.46	MV										
II	0.46	MV				0.45				0.01		0.02
III		MV(M)		FOR LENGTH ≥ 0.5 MILE								

Reset Adjust OK

Spot Improvement

SAFETY INDEX CALCULATION

1	2		3	4	5
SIGNIFICANT	ACCIDENTS		BEFORE ACCIDENT COST in $1000		COST/ ACC
	(From			TOTALS	
	Type	NUMBER	TABLE 2	(2 x 3)	(4 / 2)
	F				
	I				
	F+I	36	25.2	907	
	PDO	139	3.7	514	
YES (+)					
YES (-)		175	12	1421	8.12
NO					

NOTES:

(A) Existing ACC/MVM x (1.00 - RF), based on analysis of accidents
(B) If (+) use RF, If (-) calculate RF by METHOD II
(C) (2) - (larger of 7 or 8)
(D) (10) / (2) or show calculations on backside of sheet
(E) (11) / (2) for RF based on analysis of accidents

6	7			8	9	10	11
ACC/YR	VCF	LIFE		1.00 - RF or 1.00 + IF	TOTAL ACC. COST ($1000) BEFORE		AFTER
(From					(5x6x7)	(3x6x7)	(3x6x7x8)
43.75	1.26	20		0.98	8952		12965

TRAFFIC SAFETY INDEX = [100 x [(9 - 11) or (10 - 11)]] / Total Cost = 0

OK

ATTACHMENT 19

Caltrans Metric

07-LA-5, KP 23.7/24.3 (PM 14.7/15.1)
07-385 EA 22400K
SHOPP CODE 310
Preferred Project Alternative C – $4,300,000

Fact Sheet Exceptions to Mandatory Design Standards

REGISTERED PROFESSIONAL ENGINEER
YU-YING CHU
No. C057185
Exp. 12/31/05
CIVIL
STATE OF CALIFORNIA

Prepared by:

Yu-Ying Chu, Registered Civil Engineer

Submitted by _____ 1/29/03 213-897-6091
Yu-Ying Chu, Senior Transportation Engineer — Date — Telephone

Recommended for Approval _____ 1/29/03 213-897-0528
Diaa A. Yassin, Project Manager — Date — Telephone

Concurrence by _____ 1/29/03 213-897-4644
Lan Saadatnejadi, Chief Design A — Date — Telephone

Approved by _____ 1/29/03
Jim De Luca
Project Development Coordinator
For HQ Division of Design — Date

1. PROPOSED PROJECT

A. Project Description

The preferred project Alternative (Alternative C) proposes to improve the safety on a segment of southbound Route 5 in Los Angeles County between Calzona Street on-ramp (KP 24.333, PM 15.120 [on-ramp]) and Ditman Avenue off-ramp (KP 23.690, PM 14.720 [off-ramp]). Both alternatives consist of the following elements, except where noted: widening a bridge structure (Indiana Street undercrossing [UC] KP 24.050, PM 14.944); replacing the structural section in the shoulder and the off-ramp traveled lane; adding a 3.6 meter (m) auxiliary lane; removing and re-constructing portions of sound walls; re-striping traffic lanes; installing a Reusable Energy Absorbing Crash Terminal (REACT) crash cushion at the beginning and end of the off-ramp; constructing a Type 60 concrete barrier on the left shoulder of the off-ramp; removing existing metal beam guard rail (MBGR); increasing width of the off-ramp traveled lane; increasing the radius of curvature at the off-ramp lane.

B. Existing Highway

This segment of Route 5 is referred to as the Santa Ana Freeway and is used for interstate, interregional, and intraregional travel and shipping. The Route 5 within the project study area is situated in a flat terrain and is in an urban area. This segment of Route 5 is part of the Federal Aid Interstate (FAI) system, which is a subset of the National Highway System, and is categorized as an urban principal arterial. This segment of Route 5 is also included as part of Surface Transportation Assistance Act (STAA), Strategic Highway Corridor Network (STRAHNET), Interregional Road System (IRRS), Intermodal Corridors of Economic Significance (ICES), and Lifeline system. However, this segment of Route 5 is not included as part of the Rural and Single Interstate Routes.

Within the project area, Route 5 is a ten-lane freeway that generally traverses in the north-south direction. The southbound Route 5 consists of a total of five mixed flow lanes that are 3.35 m width each. The median shoulder within the study area is approximately 1.82 m wide. Near the on-ramp, width of the outside shoulder is approximately 1.8 m (L=30 m). The width of shoulder is expanded to and kept at approximately 7 m (L=186 m) within the merging area before the UC structure. The width is, then, reduced to 0.5 m on the UC structure (L=47 m). The width of shoulder is again expanded back to and kept constant at 7 m (L=190 m) before it is reduced back to 0.3 m throughout the off-ramp. A Type 60 concrete median barrier separates northbound and southbound traffic.

The UC bridge structure is approximately 47 m in length and 18.2 m wide. The outside shoulder on the structure does not currently meet the approach shoulder width. The structure currently has a Type 25 concrete barrier installed on its outer edge.

The on-ramp consists of one SOV and one HOV lane. The off-ramp consists of two lanes, has an existing curve radius of approximately 15.5 m and a width of 4.6 m, and a MBGR that is approximately 13 m in length . There are no objects off the pavement that currently restrict the sight distance on the horizontal curve at the off-ramp.

C. Safety Improvements

The following safety improvement applies to the proposed Alternative:

- Construction of a Type 60 concrete barrier – A Type 60 concrete barrier will be installed at the left shoulder of the off-ramp and will replace existing MBGR. The replacement of the MBGR will eliminate the need for frequent repair and, therefore, will minimize the exposure of the California Department of Transportation (Department) maintenance crews to traffic.
- Installation of crash cushions – Crash cushions will be installed at the beginning and end of the proposed concrete barrier at the off-ramp. The installation of crash cushions will prevent vehicles exiting the off-ramp, as well as those entering Ditman Avenue on-ramp, from impacting the concrete barrier. REACT is proposed at both locations for its cost-effectiveness and ease of installation.
- Removal and replacement of MBGR – Existing MBGR near the UC structure will be removed. When the UC structure is widened to match the approach shoulder width, a concrete barrier will be constructed as part of sound walls reconstruction.
- Increase in the radius of curvature at the off-ramp – Existing radius of curvature at the off-ramp will be increased from approximately 15.5 m to 45 m to enhance mobility and to minimize abrupt deceleration of the exiting vehicles due to the sharp turn. The improvement on the radius of curvature will increase the design speed at the off-ramp to 30 kilometers per hour (km/h) according to Index 203.2 of HDM and will provide for more comfortable turning movement.
- Increase in the width of the off-ramp traveled lane – Existing width of the off-ramp traveled lane is 4.6 m. The width will be increased to 4.9 m to accommodate large truck wheel paths. This improvement was necessary to comply with the standards set forth in Index 504.3(1)(b) of Highway Design Manual (HDM) and to provide for considerable usage of the lane by commercial trucks at the off-ramp with a relatively small radius (between 40 m and 44 m).
- Increase in deceleration length – Existing deceleration length at the off-ramp is approximately 48 m. This deceleration length will be increased to 128.9 m after the improvement. The improvement is necessary to help minimize potential damage to the existing and future facilities due to inadequate deceleration of the vehicles exiting the freeway at the off-ramp.

- Increase in stopping sight distance – Existing off-ramp geometric configuration has been enhanced to accommodate longer horizontal stopping sight distance.
- Increase in curve radius – Existing curve radius at the off-ramp is approximately 15 m. This radius will be increased to 45 m to provide consistent comfortable design speed while optimizing the deceleration distance and horizontal stopping sight distance.

D. Total Project Cost

The total cost is $4,300,000 in 2001 dollars for Alternative C. This includes acquisition of approximately 1,075 square meters of additional right-of-way (R/W), Indiana Street UC structure widening, construction of an auxiliary lane, and mitigation of hazardous wastes including lead containing yellow striping and aerially deposited lead contaminated soil. The proposed project will improve the safety on a segment of southbound Route 5 from Calzona Street on-ramp (KP 24.333, PM 15.120) to Ditman Avenue off-ramp (KP 23.690, PM 14.720).

2. FEATURES REQUIRING AN EXCEPTION

The preferred project Alternative C proposes the following non-standard features that are confined to the right shoulder of the ML and the off-ramp. As concurred with by Jim DeLuca, Project Development Coordinator on 1/23/03, existing non-standard features on the rest of the ML portion will be maintained, but will not be listed below since the proposed scope of work is restricted to the right shoulder of the ML and the off-ramp and the remaining mainline features are beyond the scope of this project.

A. Deceleration Length

Non-standard Feature:
The deceleration length of 128.9 m is proposed for the preferred Alternative C. This is an improvement over the existing deceleration length of approximately 55 m.

Standard for which exception is requested:
According to Index 504.2(2) of HDM, the required deceleration length for a curve less than the radius of 90 m shall be 180 m.

Reason for requesting exception:
Several options have been explored during the preliminary design phase to maximize the deceleration length. The required standard deceleration length, however, could not be obtained without the evacuation and relocation of adjacent residents and costly acquisition of additional R/W. The proposed deceleration length at the off-ramp has been maximized with the reduction in the divergence angle from the required 4° 52' 45" to the proposed 2° 3' 21". No project is currently planned within or near the project area that will bring the feature to current standards. In addition, this project will add an auxiliary lane that traps

into the exit ramp. This will allow vehicles to slow down outside the through traffic on ML.

Added cost to make standard:
To standardize the deceleration length to 180 m at the off-ramp, additional R/W, TMP, structural pavement cost, and environmental mitigation cost would be required. This additional cost is estimated to be $3,800,000 in 2001 dollars.

B. Stopping Sight Distance

Non-standard Feature:
The minimum stopping sight distance of approximately 58 m is proposed along the off-ramp for the preferred Alternative C. This stopping sight distance corresponds to a design speed of approximately 45 km/h. The differences in the minimum horizontal stopping sight distances for the proposed and existing are illustrated below. The standard horizontal stopping sight distance is also listed for reference.

Proposed	Existing	Standard
58 m	49 m	85 m (for design speed of 60 km/h)

Standard for which exception is requested:
The design speed along a ramp varies from 80 km/h at the exit nose to 40 km/h at the local road connection. Based on a straight-line interpolation, the location along the ramp where the stopping sight distance restriction exists should have a theoretical design speed of 60 km/h.

Reason for requesting exception:
The preferred Alternative C proposes to remove 45 m of existing sound wall and reconstruct 66 m of new sound wall adjacent to the residential property line. The proposed removal and reconstruction is required to improve the existing stopping sight distance at the off-ramp. However, compliance with the HDM standard would require costly acquisition of residential properties nearby, result in evacuation and relocation of existing residents, and affect the local frontage roadways.

Added cost to make standard:
To standardize the stopping sight distance to 85 m at the off-ramp, additional R/W, TMP, structural pavement cost, and environmental mitigation cost will be required. This additional cost is estimated to be $2,300,000 in 2001 dollars.

C. Curve Radius

Non-standard Feature:
The curve radius of 45 m at the off-ramp is proposed for the preferred Alternative C.

Standard for which exception is requested:
According to Index 203.2 and Table 203.2 of HDM, the required curve radius for a design speed of 60 km/h shall be 150 m.

Reason for requesting exception:
The proposed curve radius is an improvement over the existing radius of approximately 15 m. The radius has been selected to provide a consistent comfortable design speed while optimizing the deceleration distance and horizontal stopping sight distance. The proposed radius should slow drivers enough so that the comfortable design speed does not exceed the proposed stopping sight distance.

Added cost to make standard:
To standardize the curve radius to 260 m at the off-ramp, additional R/W, TMP, structural pavement cost, and environmental mitigation cost will be required. This additional cost is estimated to be $4,500,000 in 2001 dollars.

3. TRAFFIC DATA

According to the Traffic Monitoring Unit of the Office of Freeway Operations, Route 5 in the project study area currently has an Annual Average Daily Traffic (AADT) of 263,000 (including both directions) with the current truck volume of approximately 9.1 percent. According to the TCR dated November 1998, AM peak hour volume is 10,000 vehicles per hour (vph) and PM peak volume is 9,100 vph in the northbound direction. The AM peak volume is 8,350 vph and PM peak volume is 9,000 vph in the southbound direction.

The off-ramp has an Average Daily Traffic (ADT) of 1,500 with AM peak volume of 100 vph and PM peak volume of 148 vph. The Traffic Monitoring Unit reports that the current truck volume at the off-ramp and on-ramp is estimated at approximately 5 percent each.

The Office of Transportation Planning and LARTS (Los Angeles Regional Transportation Study) has prepared volume projections to year 2025 as follows:

Year 2025 Volume Projection	AADT / ADT	AM Peak (vph)	PM Peak (vph)
Southbound Route 5 ML	181,750	10,300	10,850
Southbound Calzona On-ramp	4,600	280	410
Southbound Ditman Off-ramp	2,350	150	220

4. ACCIDENT ANALYSIS

The following table summarizes rates of accidents per million-vehicle kilometers according to TASAS Table B prepared by the Office of Traffic Investigations for the three-year period between January 1, 1998 to December 31, 2001:

Southbound Route 5 ML
(KP 23.496/24.460, PM 14.60/15.199)

	Fatal	Fatal + Injury	Total
Actual	0.000	0.19	0.95
Average	0.004	0.25	0.76

Southbound Off-ramp to Ditman Avenue
(KP 23.836, PM 14.811)

	Fatal	Fatal + Injury	Total
Actual	0.000	0.85	2.27
Average	0.003	0.24	0.71

Southbound On-ramp from Indiana Street and Calzona Street
(KP 24.319, PM 15.111)

	Fatal	Fatal + Injury	Total
Actual	0.000	0.00	0.27
Average	0.001	0.12	0.34

According to the TASAS records, over 50 percent of accidents on the ML are rear-end type of collisions and approximately 62 percent of accidents at the off-ramp are hit-object type of collisions. Relatively high percentages of hit-object type collisions at the off-ramp are due to abrupt deceleration of exiting vehicles making sharp turning movements at this location. This project has been initiated to improve the safety at the off-ramp location by re-aligning the geometry, increasing the curve radius of the off-ramp, and increasing its deceleration length.

During the three-year period, the features requiring exceptions have been maintained in the facility, and therefore, will not significantly cause or increase adverse effect on the safety at the project location.

5. INCREMENTAL IMPROVEMENTS

Incremental improvement projects for the features requiring exceptions may result in costly acquisition of additional R/W, for hazardous or contaminated materials mitigation measures, and lengthy processes to obtain the necessary permits and clearances to perform construction work. The incremental improvement projects will also result in potential evacuation and relocation of adjacent residence and potential dewatering of groundwater sources, if any.

6. FUTURE CONSTRUCTION

The TCR describes the UTC alternative consisting of six MF lanes, one truck lane, and two HOV lanes in each direction.

Other projects within the vicinity of the project area that are currently underway or in the planning phase include the following:

- EA 2N540, HB71, New curb ramps on Route 5 (PM 0.0/15.7);
- EA 44431, HB5, Freeway transit to be shelved on Route 5 (PM 0.0/16.9); and
- EA 4F910, HB4N, Lengthen deceleration lane and widen SB Calzona off-ramp (PM 15.165).

7. PROJECT REVIEWS, CONCURRENCE

The project was reviewed and concurred by Paul Engstrom, Headquarters Geometric Reviewer on October 23, 2002, and by other functional units within Caltrans. This project is considered exempt from FHWA oversight; however, FHWA will still be involved during the environmental process for review and approval.

8. ATTACHMENTS

Attachment 1. Location Map
Attachment 2. Existing & Proposed Layouts and Cross Sections for preferred project alternative (Alternative C)
Attachment 3. Typical Existing and Proposed Cross Sections for Bridge
Attachment 4. TASAS Table B Summary

ATTACHMENT 1

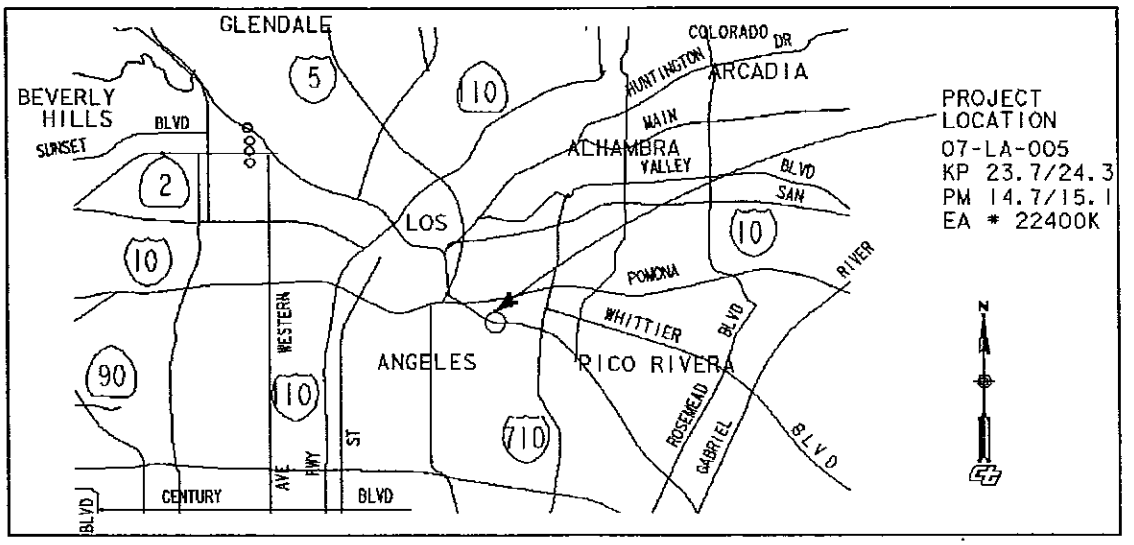

VICINITY MAP/LOCATION MAP

ATTACHMENT 2

DIST	COUNTY	ROUTE	KILOMETER POST TOTAL PROJECT	SHEET No	TOTAL SHEETS

REGISTERED CIVIL ENGINEER

PLANS APPROVAL DATE

REGISTERED PROFESSIONAL ENGINEER No. Exp. CIVIL STATE OF CALIFORNIA

The State of California or its officers or agents shall not be responsible for the accuracy or completeness of electronic copies of this plan sheet.

Caltrans now has a web site! To get to the web site, go to: http://www.dot.ca.gov

Metric

CURVE DATA

NO	R	Δ	T	L
1	42.55	87°30'57"	40.74	64.99
2	917.40	9°33'41"	76.72	153.09
3	914.40	11°21'41"	90.96	181.32

* SUBJECT TO VERIFY

** SUBJECT TO FURTHER STUDY

NEW PROPOSED SECTION

(2) 570 mm FULL DEPTH AC, TYPE B
105 mm AB, CLASS 3

(3) 260 mm PCC
150 mm LCB
105 mm AB, CLASS 3

(4) 360 mm FULL DEPTH AC, TYPE A
105 mm AB, CLASS 3

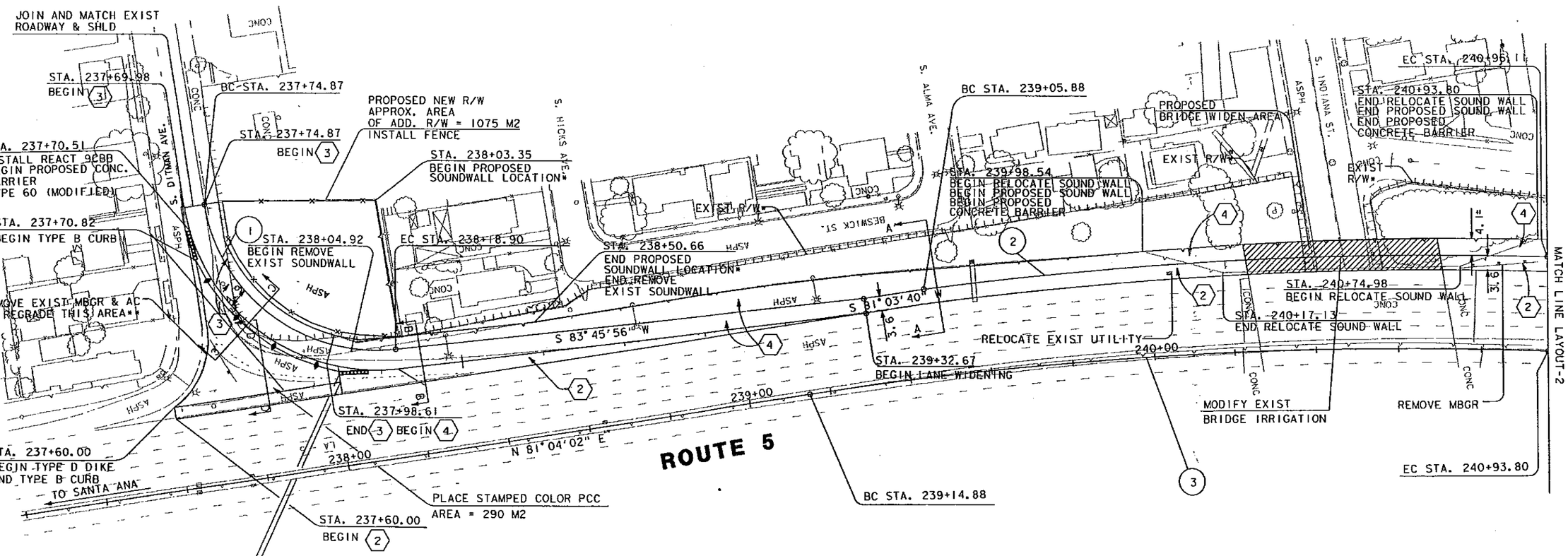

ALL DIMENSIONS ARE IN METERS UNLESS OTHERWISE SHOWN

ALTERNATIVE C PROPOSED LAYOUT

SCALE 1:1000

L-1

STATE OF CALIFORNIA - DEPARTMENT OF TRANSPORTATION

PROJECT ENGINEER

CALCULATED/DESIGNED BY

CHECKED BY

REVISED BY

DATE REVISED

DATE

Caltrans

FOR REDUCED PLANS ORIGINAL SCALE IS IN MILLIMETERS 0 20 40 60 80

USERNAME => ayoon
DGN FILE => c:\documents and settings\ayoon\my documents\projects\ed 22400k\alt_c_l_07_03.dgn

CU 07385

EA 22400K

LAST REVISION 12-11-02

DATE PLOTTED => 07 FEB 2003
TIME PLOTTED => 10:40:44

DIST	COUNTY	ROUTE	KILOMETER POST TOTAL PROJECT	SHEET No	TOTAL SHEETS

REGISTERED CIVIL ENGINEER

PLANS APPROVAL DATE

REGISTERED PROFESSIONAL ENGINEER No. Exp. CIVIL STATE OF CALIFORNIA

The State of California or its officers or agents shall not be responsible for the accuracy or completeness of electronic copies of this plan sheet.

Caltrans now has a web site! To get to the web site, go to: http://www.dot.ca.gov

Caltrans Metric

CURVE DATA

NO	R	Δ	T	L
4	925.32	11°24'14"	92.39	184.17
5	914.40	00°14'17"	1.90	3.80
6	914.40	16°09'38"	129.82	257.91

* SUBJECT TO VERIFY

** SUBJECT TO FURTHER STUDY

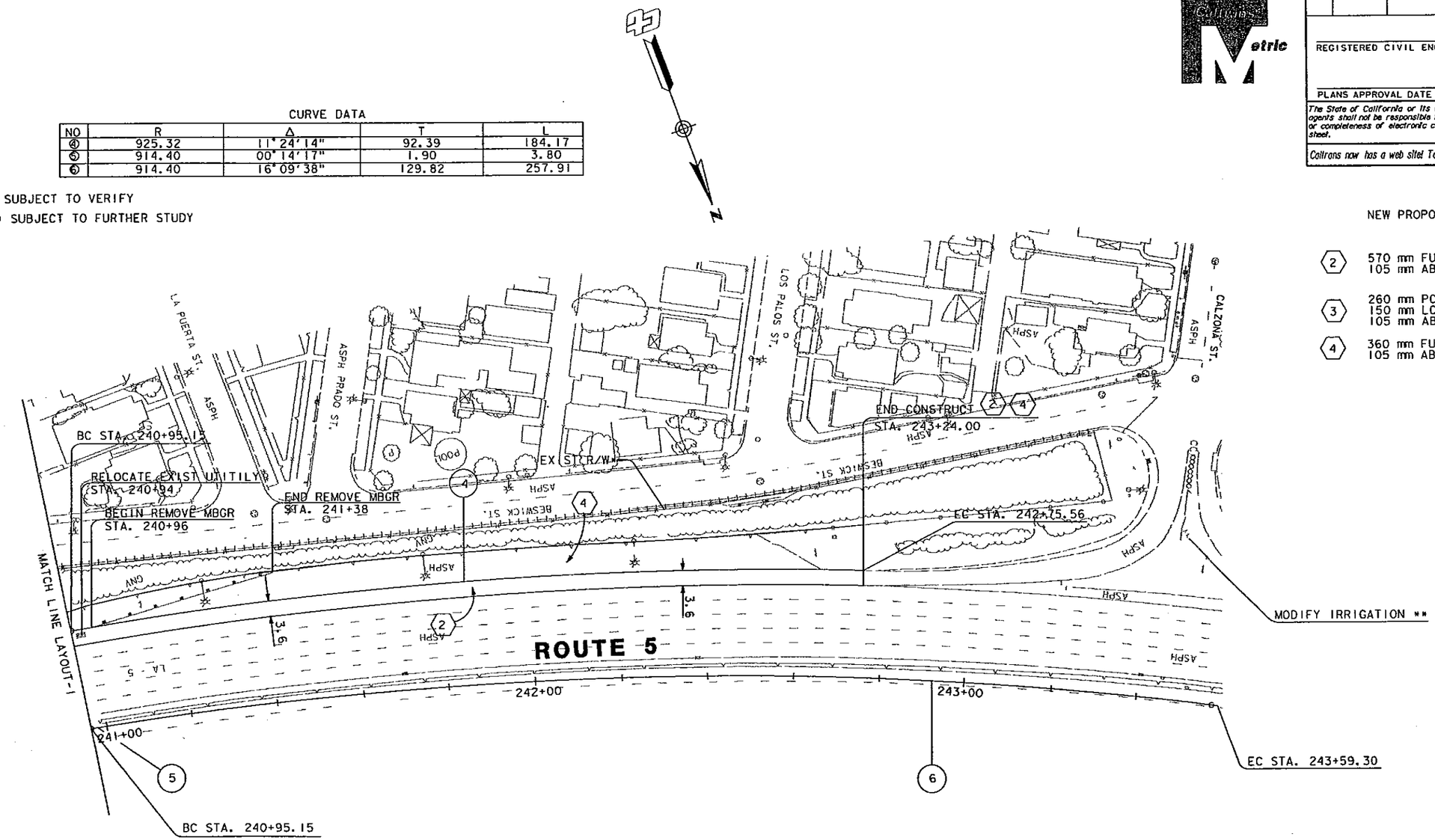

NEW PROPOSED SECTION

(2) 570 mm FULL DEPTH AC, TYPE B
105 mm AB, CLASS 3

(3) 260 mm PCC
150 mm LCB
105 mm AB, CLASS 3

(4) 360 mm FULL DEPTH AC, TYPE A
105 mm AB, CLASS 3

ALTERNATIVE C
PROPOSED LAYOUT

SCALE 1:1000

L-2

ALL DIMENSIONS ARE IN METERS UNLESS OTHERWISE SHOWN

DATE	REVISED BY	DATE REVISED

CALCULATED/DESIGNED BY

CHECKED BY

PROJECT ENGINEER

STATE OF CALIFORNIA - DEPARTMENT OF TRANSPORTATION

Caltrans

FOR REDUCED PLANS ORIGINAL SCALE IS IN MILLIMETERS 0 20 40 60 80

USERNAME => ayoon
DGN FILE => c:\documents and settings\ayoon\my documents\projects\ea 22400k\alt_c_l_07_03.dgn

CU 07385

EA 22400K

LAST REVISION 12-11-02

DATE PLOTTED => 29 JAN 2003
TIME PLOTTED => 07:35:15

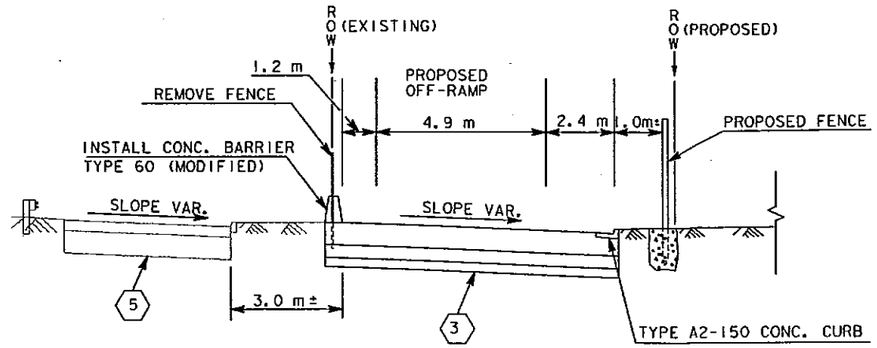

EXISTING AND PROPOSED STRUCTURAL CROSS SECTION C-C

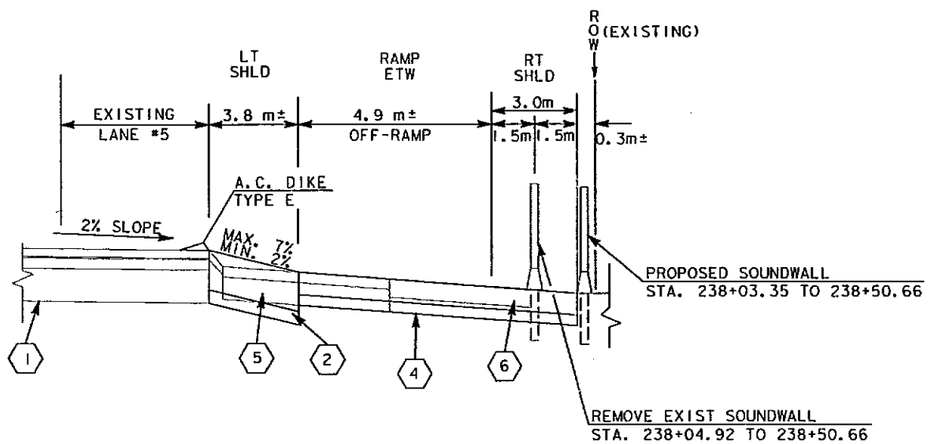

EXISTING ANDPROPOSED STRUCTURAL CROSS SECTION B-B
e_{max}= 12%

NOTES

1. 100 mm AC WITH PRF
   120 mm AC
   380 mm LCB (EXISTING)
2. 570 mm FULL DEPTH AC, TYPE B
   105 mm AB, CLASS 3 (PROPOSED)
3. 260 mm PCC
   150 mm LCB
   105 mm AB, CLASS 3 (PROPOSED)
4. 360 mm FULL DEPTH AC, TYPE A
   105 mm AB, CLASS 3 (PROPOSED)
5. 120 mm AC, TYPE B
   260 mm LCB (EXISTING)
6. MIN. 210 mm AC (EXISTING)
7. 100 m AC WITH PRF
   200 m PCC
   100 m CTB
   100 m AB
   VAR. AS (EXISTING)

AC	ASPHALT CONCRETE
LCB	LEAN CONCRETE BASE
PRF	PAVEMENT REINFORCING FABRIC
PCC	PORTLAND CEMENT CONCRETE
CTB	CEMENT TREATED BASE
AB	AGGREGATE BASE
AS	AGGREGATE SUBBASE

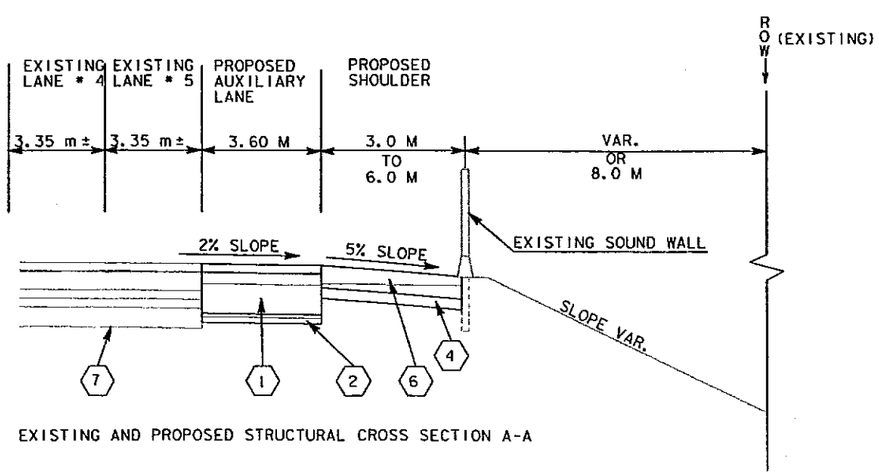

EXISTING AND PROPOSED STRUCTURAL CROSS SECTION A-A

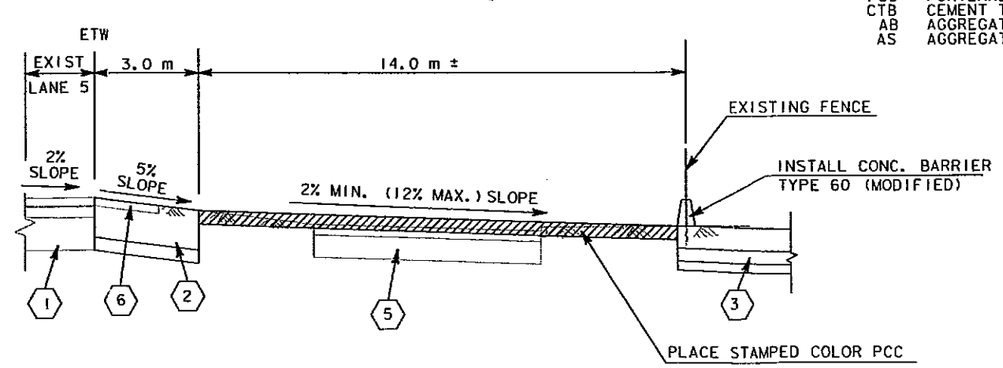

EXISTING AND PROPOSED STRUCTURAL CROSS SECTION D-D

EXISTING AND PROPOSED STRUCTURAL CROSS SECTIONS FOR ALTERNATIVE C

NOT TO SCALE

ALL DIMENSIONS ARE IN METERS UNLESS OTHERWISE SHOWN

ALTERNATIVE C
PROPOSED CROSS SECTIONS
X-1

DIST	COUNTY	ROUTE	KILOMETER POST TOTAL PROJECT	SHEET No	TOTAL SHEETS

REGISTERED CIVIL ENGINEER

PLANS APPROVAL DATE

REGISTERED PROFESSIONAL ENGINEER No. Exp. CIVIL STATE OF CALIFORNIA

The State of California or its officers or agents shall not be responsible for the accuracy or completeness of electronic copies of this plan sheet.

Caltrans now has a web site! To get to the web site, go to: http://www.dot.ca.gov

DATE	REVISED BY	DATE REVISED

CALCULATED/DESIGNED BY

CHECKED BY

PROJECT ENGINEER

STATE OF CALIFORNIA - DEPARTMENT OF TRANSPORTATION

Caltrans

LAST REVISION 12-11-02 | DATE PLOTTED => 29 JAN 2003 | TIME PLOTTED => 07:35:32

FOR REDUCED PLANS ORIGINAL SCALE IS IN MILLIMETERS 0 2 4 6 8

USERNAME => ayoon
DGN FILE => c:\documents and settings\ayoon\my documents\projects\ed 22400k\alt_c_1_07_03.dgn

CU 07385 | EA 22400K

ATTACHMENT 3

ATTACHMENT 4

TASAS TABLE B DISTRICT 07
SELECTIVE ACCIDENT RATE CALCULATION
ROUTE SEQUENCE

LOCATION DESCRIPTION	RA GRP (RUS)	*-NUMBER OF ACCIDENTS/SIGNIFICANCE* TOT	FAT	INJ	F+I	MULTI VEH	WET	DARK	PER KLD INJ	*ADT * MAIN X-ST	TOTAL MV+ OR MVM	*-ACCIDENT RATE ACCS/MV+ OR MVM-* ACTUAL FAT	F+I	TOT	AVERAGE FAT	F+I	TOT
005 LA 14.600 THRU LA 015.199 NORTH	H	310	0	65	65	290	47	80	0	130.8	114.61	.000	.57	2.70	.007	.40	1.23
07-0001 0.600M 98-01-01 01-12-31 48 MO	NA	H99		H99	H99		H99	H99	92								
005 LA 14.600 THRU LA 015.199 SOUTH	H	175	0	36	36	146	42	66	0	130.8	114.61	.000	.31	1.53	.007	.40	1.23
07-0001 0.600M 98-01-01 01-12-31 48 MO	NA	H99					H99	H92	61								

TASAS TABLE B DISTRICT 07
SELECTIVE ACCIDENT RATE CALCULATION
ROUTE SEQUENCE

LOCATION DESCRIPTION	RA GRP (RUS)	*-NUMBER OF ACCIDENTS/SIGNIFICANCE* TOT	FAT	INJ	F+I	MULTI VEH	WET	DARK	PER KLD INJ	*ADT * MAIN X-ST	TOTAL MV+ OR MVM	*-ACCIDENT RATE ACCS/MV+ OR MVM-* ACTUAL FAT	F+I	TOT	AVERAGE FAT	F+I	TOT
005 LA 14.763 SB ON FROM DITMAN AVE	R28	3	0	0	0	1	0	0	0	2.7	3.94+	.000	.00	.76	.002	.20	.60
07-0001 98-01-01 01-12-31 48 MO	(S)								0								

+ DENOTES MV USED IN RATES

TASAS TABLE B DISTRICT 07
SELECTIVE ACCIDENT RATE CALCULATION
ROUTE SEQUENCE

LOCATION DESCRIPTION	RA GRP (RUS)	*-NUMBER OF ACCIDENTS/SIGNIFICANCE* TOT	FAT	INJ	F+I	MULTI VEH	WET	DARK	PER KLD INJ	*ADT * MAIN X-ST	TOTAL MV+ OR MVM	*-ACCIDENT RATE ACCS/MV+ OR MVM-* ACTUAL FAT	F+I	TOT	AVERAGE FAT	F+I	TOT
005 LA 15.111 SB ON INDIANA & CALZONA	R32	2	0	0	0	2	0	0	0	3.1	4.53+	.000	.00	.44	.002	.19	.55
07-0001 98-01-01 01-12-31 48 MO	(U)								0								

+ DENOTES MV USED IN RATES

TASAS TABLE B DISTRICT 07
SELECTIVE ACCIDENT RATE CALCULATION
ROUTE SEQUENCE

LOCATION	DESCRIPTION	RA GRP (RUS)	*-NUMBER OF ACCIDENTS/SIGNIFICANCE* TOT	FAT	INJ	MULTI F+I	VEH	WET	DARK	PER KLD INJ	*ADT * MAIN X-ST	TOTAL MV+ OR MVM	*-ACCIDENT RATE ACCS/MV+ OR MVM-* ACTUAL FAT	F+I	TOT	AVERAGE FAT	F+I	TOT
005 LA 14.811	SB OFF TO DITMAN AVE	R26	8	0	3	3	2	1	2	0	1.5	2.19+	.000	1.37	3.65	.005	.39	1.15
07-0001	98-01-01 01-12-31 48 MO	(S)	H99		H92	H92				5								

+ DENOTES MV USED IN RATES

ATTACHMENT 20

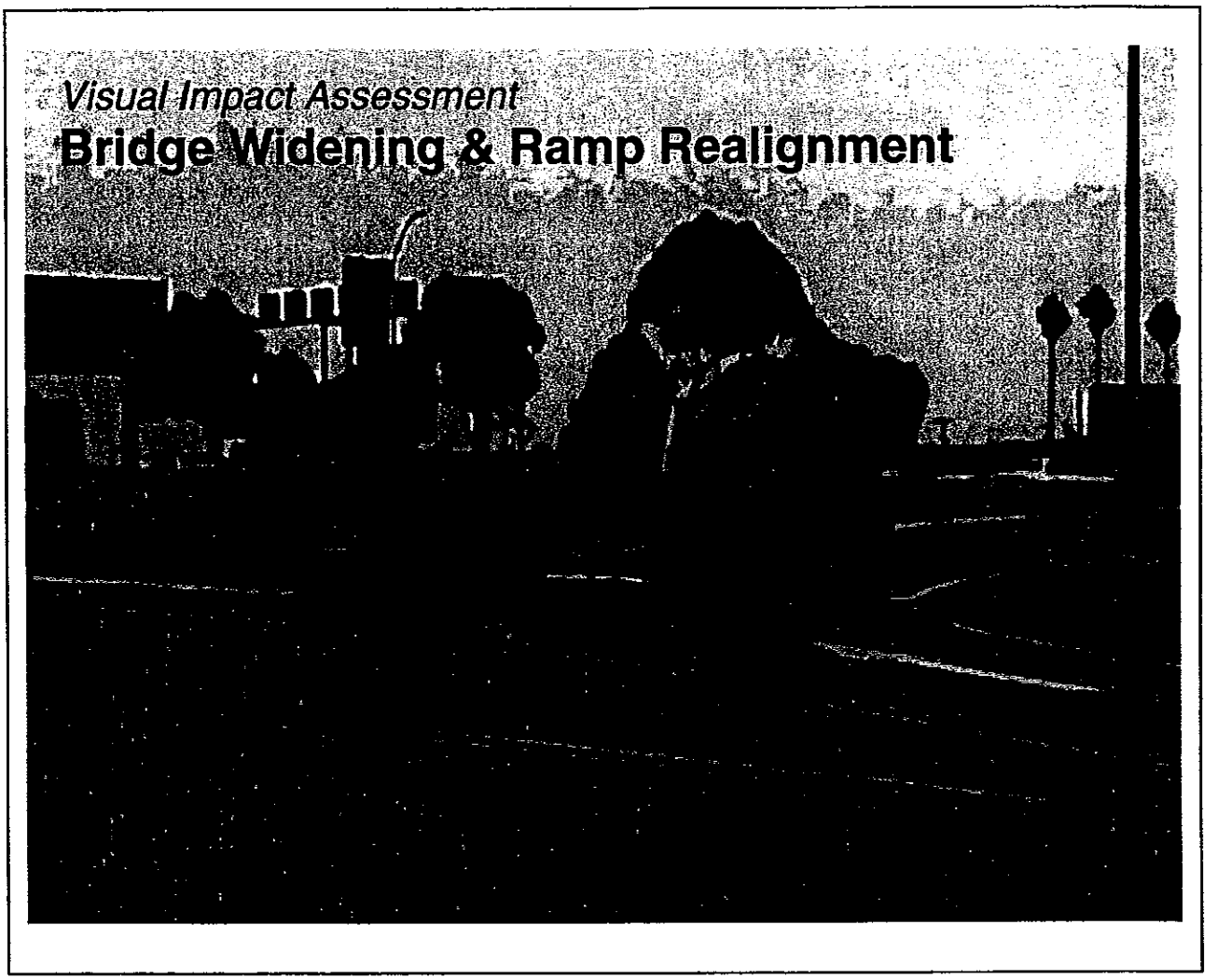

Caltrans

District 7 Landscape Architecture

Introduction and Regional Context

Route 5, the Golden State Freeway, is a prominent and heavily traveled interstate route that stretches from California's southern border with Mexico northward through Oregon and Washington to its terminus at Washington's border with Canada. It serves as a significant shipping and industrial transfer route along its length and as it passes through Los Angeles County, resulting in heavy truck traffic, congestion, and noise. Property use along Route 5 through the Los Angeles metropolitan area is primarily industrial and commercial. Pocket areas of residential use are concealed by the presence of concrete block soundwalls.

Ditman Avenue is located at the eastern edge of Los Angeles along Route 5 just north and west of Route 710. The area's character is urban in moderate decay and includes the Union Pacific Railroad Yard less than one-half mile to the south. The southbound interchange at Ditman Avenue consists of tightly configured hook ramps. Frequent truck traffic at the interchange serves nearby rail shippers. The ramps, guard rail, pavement, curbs and fences bear scars from frequent hits and over-runs by trucks as operators misjudge the proximity or radius of the off ramp.

A small modest tract of houses resides within the bounds of the Indiana St. Undercrossing and Ditman Ave. and between the freeway and busy Olympic Blvd. Soundwalls provide some shelter from the sights and sounds of the imposing freeway traffic, but the right-of-way slopes below the walls lie starkly naked of landscaping.

The proposed construction will widen and add a soundwall to the Indiana St. Undercrossing, construct a continuous auxiliary lane to allow trucks a greater distance to slow prior to exiting, and alternatively widen or realign and widen the off ramp.

Viewer groups include motorists along Route 5 and residents adjacent to the freeway. Views from the freeway, built on fill through this area, are expansive but featureless. Sight into the neighborhood is restricted by block soundwalls at the shoulders and intermittent narrow strips of dense shrubbery at the right of way. The skyline is interrupted by several tall illuminated billboards and commercial signs. Neighborhood views include block and concrete soundwalls and barren slopes.

Visual Quality Analysis

A Visual Quality Analysis (VQA) of the project site was performed according to criteria outlined in The Visual Impact Assessment for Highway Projects (USDOT, FHA c. 1981). Viewpoints were established and the visual qualities of the existing site and that resulting from the proposed construction alternatives were compared and analyzed.

Viewpoints selected included **V1** from the southbound freeway lanes and **V2** from Indiana Street south of the undercrossing.

VP1- Southbound Route 5 approaching Ditman Avenue Off Ramp

Existing

- The visual quality of this viewpoint is evaluated as average. The top of the soundwall establishes a false horizon, concealing the terrain and neighborhood below. The interchange is cluttered with signs of varying sizes and heights, guardrail, ramp meters and fencing. The brief glimpse available into the neighborhood reveals declining and vacant commercial properties and undesirable residential properties.

Proposed Alternative B

- The visual quality is slightly improved. The gap between soundwalls at Indiana St. Undercrossing will be eliminated resulting in a more uniform effect. The widening and repaving of the ramp, replacement of guardrail with concrete barrier and concrete median paving of the triangle area will lend unity to the appearance of the interchange. The introduction of crash devices will advertise a warning to approaching drivers.

Proposed Alternative C

- The visual quality is slightly improved as in Alternative B. The effects of the added soundwall and unified materials will be similar. The increased curve radius and widening of the ramp will lessen the frequency of hits along the barrier, and reduce maintenance requirements. The proposed additional right of way and section of soundwall provide a backdrop and opportunity for new landscaping.

VP2- South of Indiana St. Undercrossing

Existing

- The visual quality of this viewpoint is slightly below average. Vegetation to the north of the bridge along Route 5 is dense and mature, while the slopes to the south of the bridge are bare, except for a palm and 2-3 Chinese Elm trees.

Proposed Alternative B & C

- The visual quality is improved moderately by closing the gap between soundwalls. Installing new planting and irrigation to the bare slopes will greatly improve the visual quality from this viewpoint. Vines could be considered for installation against the walls to inhibit graffiti and to eventually creep to the freeway side of the walls.

Summary and Recommendations

- Visual quality from the freeway (V1) will be slightly improved with either Alternative B or C. The additional right of way outlined in Alternative C provides a landscape area at the interchange.
- Visual quality from Indiana St. (V2) will be moderately improved if the project landscapes the slopes, and only slightly improved without landscaping.
- Stormwater quality concerns must be addressed during the design phase of the project.
- Vines planted along the retaining/soundwalls will improve the visual appeal of the right of way and be easy to maintain.
- Paving the triangle area median at the interchange will provide an attractive and low maintenance element. The paving materials, color and texture should be approved by traffic safety review, compatible with the soundwall aesthetics and any nearby gore paving treatments.

VISUAL QUALITY ANALYSIS

Southbound LA 5 at Ditman Avenue EA 24200K

EVALUATION SCALE 1-7
1= V LOW, 7= V. HIGH

VIEWPOINT	VIVIDNESS		INTACTNESS		UNITY	
VP-1 SB LA 5 At Ditman Avenue Interchange **Existing condition**	MANMADE DEV.	2	ABSENCE OF ENCROACHMENT	2	MAN-MADE/ NATURAL	1
	VEGETATION	1	OVERALL INTACTNESS	2	OVERALL UNITY	1
	WATER	N/A	AVERAGE I	2	AVERAGE U	1
	LANDFORM	1	VIEW RANKING (1-3) IN ORDER OF IMPORTANCE			1
	AVERAGE V	1.3	VISUAL QUALITY= (V+I+U) ÷ 3			1.4
VP-1 SB LA 5 At Ditman Avenue Interchange **Proposed Alternative B**	MANMADE DEV.	3	ABSENCE OF ENCROACHMENT	2	MAN-MADE/ NATURAL	2
	VEGETATION	1	OVERALL INTACTNESS	2	OVERALL UNITY	2
	WATER	N/A	AVERAGE I	2	AVERAGE U	2
	LANDFORM	1	VIEW RANKING (1-3) IN ORDER OF IMPORTANCE			1
	AVERAGE V	1.6	VISUAL QUALITY= (V+I+U) ÷ 3			1.9
VP-1 SB LA 5 At Ditman Avenue Interchange **Proposed Alternative C**	MANMADE DEV.	3	ABSENCE OF ENCROACHMENT	2	MAN-MADE/ NATURAL	2
	VEGETATION	4	OVERALL INTACTNESS	2	OVERALL UNITY	2
	WATER	N/A	AVERAGE I	2	AVERAGE U	2
	LANDFORM	1	VIEW RANKING (1-3) IN ORDER OF IMPORTANCE			1
	AVERAGE V	2.6	VISUAL QUALITY= (V+I+U) ÷ 3			2.2

EVALUATOR

Cathy L. Johnson
Department of Landscape Architecture

DATE
10/28/02

VISUAL QUALITY ANALYSIS

Southbound LA 5 at Ditman Avenue EA 24200K

EVALUATION SCALE 1-7
1= V LOW, 7= V. HIGH

VIEWPOINT	VIVIDNESS		INTACTNESS		UNITY	
VP-2 Indiana Avenue Undercrossing **Existing condition**	MANMADE DEV.	3	ABSENCE OF ENCROACHMENT	2	MAN-MADE/ NATURAL	2
	VEGETATION	2	OVERALL INTACTNESS	2	OVERALL UNITY	2
	WATER	N/A	AVERAGE I	2	AVERAGE U	2
	LANDFORM	1	VIEW RANKING (1-3) IN ORDER OF IMPORTANCE			2
	AVERAGE V	2	VISUAL QUALITY= (V+I+U) ÷ 3			2
VP-2 Indiana Avenue Undercrossing **Proposed Alternatives B & C**	MANMADE DEV.	4	ABSENCE OF ENCROACHMENT	2	MAN-MADE/ NATURAL	2
	VEGETATION	4	OVERALL INTACTNESS	2	OVERALL UNITY	2
	WATER	N/A	AVERAGE I	2	AVERAGE U	2
	LANDFORM	1	VIEW RANKING (1-3) IN ORDER OF IMPORTANCE			2
	AVERAGE V	3	VISUAL QUALITY= (V+I+U) ÷ 3			2.3

EVALUATOR

Cathy L. Johnson
Department of Landscape Architecture

DATE
10/28/02

ATTACHMENT 21

EA 22400K

Funding and Scheduling

11/27/2002

Project Cost Distribution (in $1,000's)

Support Cost	FY2003	FY 2004	FY 2005	FY 2006	FY2007	TOTAL
Project Management	$5,513	$9,038	$9,003	$9,003	$7,642	
Project Development			$282,371			
Structure Design			$118,896			
Construction				$182,964	$207,952	
Right of Way				$30,400		
TOTAL	$5,513	$9,038	$410,270	$222,367	$215,594	$862,782

Milestone	Date
PID	2/07/2003
PA & ED	6/02/2003
PS&E Completion	5/30/2005
Ready to List	7/26/2005
Job Completion	2/13/2007

ATTACHMENT 22

State of California

Business, Transportation and Housing Agency

Memorandum

To: Elpidio Delos Reyes Jr.
Project Engineer

Date: December 30, 2002

From: Gary Iverson
Senior Environmental Planner
Division of Environmental Planning

File: 07-LA-5
Ditman Avenue

EA 22400K

Subject: Preliminary Environmental Assessment Report

Per your request of October 39, 2002 a Preliminary Environmental Assessment Report (PEAR) was prepared for the above referenced project. Enclosed is a copy of the PEAR for your records.

The project proposes to add an auxiliary lane for a segment of southbound Route 5 between the Ditman Avenue off-ramp and Calzona Avenue on-ramp in Los Angeles County. This project also proposes to improve the curve radius for Ditman Avenue and Calzona Avenue. This project will require additional right-of-way, as determined by the information you provided our office with.

Thank you for the opportunity to review this project for environmental concerns at an early stage in the planning process. If you have any further comments or questions, please feel free to call me at (213) 897-3818 or Dawn Kukla at (213) 897-3643.

Preliminary Environmental Assessment Report

for a Proposed Project to

Improve freeway operations on southbound Route 5 from Ditman Avenue to Calzona Avenue in the City of Los Angeles

07-LA-5
Ramp Improvements
EA 22400K

December 2002

Initiation of Environmental Process

Caltrans will act as the State lead agency for NEPA and CEQA compliance of this project. To initiate the environmental compliance process, please submit a written request to the Office of Environmental Planning. The request should include:

- A project Development contact person and phone number.
- A project description addressing all aspects of the project (including such things as turnouts, haul roads, temporary access routes, and borrow/disposal sites).
- A mosaic or topographic base map that has delineated on it the existing development in relation to the proposed alternative, existing and maximum anticipated right-of-way lines, and the location of proposed construction and limits of grading/vegetation removal (100' or 50' scale mapping preferred).
- A clear project location map and vicinity map, which shows all alternative alignments.
- Profiles, typical sections, and, if available, cross sections a t critical locations.
- Mapping that clearly delineates any temporary construction routes.
- Proposed mitigation measures that are part of the project (including landscaping revegetation, construction, etc.).

If all of the above information is not available when studies are requested, a meeting should be arranged between Project Development and Environmental Planning to determine when the information will be available, and which parts of the environmental study can begin with the partial information. Failure to provide this information may result in a delaying of the environmental document, and may significantly delay project delivery.

SUMMARY

If the proposed project has the potential to impact sensitive environmental resources careful design work, construction staging, and the way in which the work will occur will determine the appropriate environmental document. If the work is carefully planned out to avoid any adverse impacts, the appropriate document is anticipated to be a Negative Declaration/Finding of No Significant Impact (ND/FONSI).

It is strongly advised that Project Management/Project Design work closely with the Office of Environmental Planning, at the earliest opportunity, to plan a project that will avoid the detrimental impacts to the environment that could add unnecessary time, person years, and financial resources to the project.

Disclaimer - The PEAR is not an environmental document and that the PEAR represents a preliminary and cursory analysis of potential issues and effects for project scoping and programming purposes only. Any changes in the project scope or environmental laws, processes, or permit requirements after the completion of the PEAR will require additional evaluation later in the project development process.

Environmental Scoping Checklist

Project Information

District 07 **County** LA **Route** 5 **Kilometer Post** KP 23.70/24.30 **EA** 22400K

Project Description

The California Department of Transportation (Caltrans), District 7, is proposing to add an auxiliary lane for a segment of Route 5 between Ditman Street off-ramp and Calzona Avenue on-ramp in Los Angeles County. The project also proposes to improve the curve radius at the Calzona and Ditman on/off ramps. This project will require additional right-of-way.

Project Manager	Mamunur Rahman	Phone #	213-897-8346
Transportation Engineer	Elpidio Delos Reyes Jr.	Phone #	213-897-4784
Environmental Planner	Dawn Kukla	Phone #	213-897-3643

Environmental Checklist and Analysis

The attached environmental checklist was used to focus on the environmental impacts most likely to occur with project implementation. A "No" answer in the first checklist column documents a finding of no effect. A "Yes" answer on the checklist documents the potential for effect. An asterisk is shown on the checklist indicates where a narrative discussion is provided to further clarify the determination made.

Anticipated Environmental Approval

CEQA	NEPA
☒ Categorical/Statutory Exemption	☒ Categorical Exclusion
☐ Negative Declaration	☐ Finding of No Significant Impact
☐ Environmental Impact Report	☐ Environmental Impact Statement

WHY?

Based on the results of technical studies available, no significant impacts will occur as a result of the proposed project.

Project Screening

Attach the project location map to this checklist to show location of all known and/or potential hazardous waste, cultural (not archaeological) and biological sites identified. (Include any work with drainage and/or waterways).

NA

1. Project Features: New R/W? YES **Excavation?** YES **Railroad Involvement*?** NO

*If project involves work over railroad right-of-way then there will have to be coordination with the appropriate owners of the railroad.

Structure demolition/modification? YES **Subsurface utility relocation?** YES

2. Project Setting Route 5 freeway near the East LA Interchange in the City of Los Angeles, Los Angeles County.

Rural or Urban Urban Los Angeles County.

Current land uses Residential, freeway

Adjacent land uses Residential

Existing landscaping/planting Dirt, trees, some freeway landscaping.

Cultural Resources Screening

1. Check federal, state, and local environmental records and databases as necessary, to see if any known cultural resource site(s) is in or near the project area? **Initial studies conducted from material available indicates that no known cultural resources exist within the project study area. At this time it is recommended that a Negative Historical Property Survey Report be prepared.**
2. If a known site is identified, show its location on the attached map and attach additional sheets, as needed, to provide pertinent information for the proposed project. (DO NOT show location of archaeological sites on the map). **Not available.**
3. Date Field Inspection was Conducted. **N/A**

3. Other comments and/or observations:

If during project construction cultural materials appear, work will stop in the immediate area. The District 7 Archaeologist will be notified upon such discovery and appropriate measures will be performed to mitigate the impacts to the resource. Work only may resume with approval from the Caltrans Archaeologist.

Hazardous Waste Screening

Is the project on the HW Study Minimal-Risk List (HWI)? The Potential for contamination exists however; until an SI can be performed it is unknown which contaminants exist within the project area.

1, Check federal, State and local environmental and health regulatory agency records as necessary, to see if any known hazardous waste site is in or near the project area. If a known site is identified, show its location on the attached map and attach additional sheets, as needed, to provide pertinent information for the proposed project. **Map Not Available**

2. Conduct Field Inspection. Date **NA** Use the attached map to locate potential or known HW sites.

STORAGE STRUCTURES / PIPELINES:

Underground tanks	**Possible**	Surface tanks	
Sumps		Ponds	
Drums		Basins	
Transformers		Landfill	
Other			

CONTAMINATION: (spills, leaks, illegal dumping, etc.)

Surface staining		Oil Sheen	
Odors		Vegetation damage	
Aerial Lead	Potential	Other	

HAZARDOUS MATERIALS: (asbestos, lead, etc.)

Structures		Spray-on fireproofing	
Pipe wrap/Asbestos Cement Pipe		Friable tile	
Yellow thermoplastic paint		Serpentine	
Lead Paint	**Possible**	Other	

3. Additional record search, as necessary, of subsequent land uses that could have resulted in a hazardous waste site. If necessary attach a map to show the location of potential hazardous waste sites. **No map available at this time.**

4. Other comments and/or observations:
The site of the former service station is currently an unpaved vacant lot under the ownership of the Union Oil Company of California. There is very limited information available for review for this former service station site. It is recommended that this parcel (APN 5242-006-113) be included in the Site Investigation during PAED or PS&E phases. Information obtained will help to determine the soil handling procedures as well as preparing the remediation cost estimate for proper right-of-way appraisal.

Determination: Does the project have potential hazardous waste involvement? **Possible**. If there is known or potential hazardous waste involvement, is additional ISA work needed before task orders can be prepared for the Preliminary Site Investigation? **YES**. If "YES", then give an estimate of additional requirements:

An Site Investigation (SI) will be required to assess the potential for hazardous waste contamination at the project site and to determine the level of contaminants.

Biological Resources Screening

1. Check federal, State and local environmental records as necessary, to see if any known sensitive biological habitat or wetlands site is in or near the project area. If a known site is identified, its location will be shown on an attached map if available and attach additional sheets, as needed, to provide pertinent information for the proposed project.

2. Conduct Field Inspection. Date **11/20/02** Use the attached map to locate potential or known endanger species, natural resource or wetland sites. **Map not available**

3. Other comments and/or observations:

According to early project plans it appears that the proposed project will not impact any receiving waters (i.e. drainages, streams, rivers, channels, creeks, etc). Regardless, the Division of Environmental Planning (DEP) will as always, request that Best Management Practices (BMP) be implemented to the maximum extent practicable before and during project construction to avoid any water quality impacts.
If at any time during work debris or staging of equipment shall occur inside any channel, drainage, stream, river, or creek beds, the DEP must be notified immediately since Army Corp 404 , Regional Water 401, and California Department of Fish and Game section 1601 permits must be obtained prior. Please be advised this process takes 6-12 months to complete.

Environmental Technical Reports or Studies Required Anticipated

	Study/ Report	Document Text Only	Not Anticipated
Community Impact Study	☐	☐	☒
Farmland	☐	☐	☒
Visual Resources	☐	☐	☒
Water Quality	☒	☐	☐
Floodplain Evaluation	☐	☐	☒
Noise Study	☒	☐	☐
Air Quality Study	☒	☐	☐
Other	☐	☐	☐
Traffic Management Plan	☒	☐	☐
Cultural			
ASR	☒	☐	☐
HSR	☒	☐	☐
HASR	☒	☐	☐
HPSR	☒	☐	☐
Section 106/SHPO	☒	☐	☐
Section 4(f) Evaluation	☐	☐	☒
Other	☐	☐	☐
Hazardous Waste			
	Study/ Report	**Document Text Only**	**Not Anticipated**
ISA (Additional	☒	☐	☐
PSA	☐	☐	☐
Other	☐	☐	☐
Site Investigation Report	☒	☐	☐
	☐	☐	☐
Biological			
Endangered Species (Federal)	☐	☐	☒
Endangered Species (State)	☐	☐	☒
Biological Opinion/USFWA	☐	☐	☒
Wetlands	☐	☐	☒
401 Permit Coordination	☐	☐	☒
404 Permit Coordination	☐	☐	☒
1601 Permit Coordination	☐	☐	☒
NPDES Coordination	☒	☐	☐
Natural Environment Study Report	☒	☐	☐
Biological Assessment	☐	☐	☒
NEPA 404 Coordination	☐	☐	☒
Other	☐	☐	☐

Anticipated Project Mitigation

Discuss any known likely mitigation requirements and coordination based on similar projects and experience with resource agencies within the project vicinity. **Not available at this time.**

Hazardous Waste Scoping by	Yu-Ying Chu	**Date**	9/30/02
Biological Scoping by	Ed Aguilar	**Date**	12/03/02
Cultural Scoping By	Gary Iverson	**Date**	11/01/02
Env Generalist Scoping by	Dawn Kukla	**Date**	12/10/02
Reviewed by	Gary Iverson	**Date**	12/10/02

ENVIRONMENTAL SIGNIFICANCE CHECKLIST
(07-LA-5-Ditman Aveune)

This checklist was used to identify physical, biological, social and economic factors, which might be impacted by the proposed project. In many cases, the background studies performed in connection with this project clearly indicate the project will not affect a particular item. A "NO" answer in the first column documents this determination. A "UNK" answer in the first column indicates the impact is unknown and additional analysis will be undertaken in the ND/FONSI in order to make a determination of impact. Where there is a need for clarifying discussion, an asterisk ("*" in the second column) is shown next to the answer. The discussion is in the section following the checklist.

PHYSICAL. Will the proposal (either directly or indirectly):		YES or NO	If YES, is it significant? YES or NO
1.	Appreciably change the topography or ground surface relief features?	NO	
2.	Destroy, cover, or modify any unique geologic or physical features?	NO	
3.	Result in the loss of availability of a known mineral resource or locally important mineral resource recovery site, that would be of value to the region and the residents of the state?	NO	
4.	Result in unstable earth surfaces or increase the exposure of people or property to geologic or seismic hazards?	YES	NO*
5.	Result in or be affected by soil erosion or siltation (whether by water or wind)?	NO	
6.	Result in the increased use of fuel or energy in large amounts or in a wasteful manner?	NO	
7.	Result in an increase in the rate of use of any natural resource?	NO	
8.	Result in the substantial depletion of any nonrenewable resource?	NO	
9.	Violate any published Federal, State, or local standards pertaining to hazardous waste, solid waste or litter control?	NO	NO*
10.	Modify the channel of a river or stream or the bed of the ocean or any bay, inlet or lake?	NO	NO*
11.	Encroach upon a floodplain or result in or be affected by floodwaters or tidal waves?	NO	
12.	Adversely affect the quantity or quality of surface water, groundwater, or public water supply?	NO	NO*
13.	Result in the use of water in large amounts or in a wasteful manner?	NO	
14.	Affect wetlands or riparian vegetation?	NO	
15.	Violate or be inconsistent with Federal, State or local water quality standards?	NO	
16.	Result in changes in air movement, moisture, or temperature, or any climatic conditions?	NO	
17.	Result in an increase in air pollutant emissions, adverse effects on or deterioration of ambient air quality?	NO	NO*
18.	Results in the creation of objectionable odors?	NO	
19.	Violate or be inconsistent with Federal, State, or local air standards or control plans?	NO	NO*
20.	Result in an increase in noise levels or vibration for adjoining areas?	YES	NO*
21.	Result in any Federal, State, or local noise criteria being equal or exceeded?	YES	NO*
22.	Produce new light, glare, or shadows?	NO	

BIOLOGICAL. Will the proposal (either directly or indirectly):	YES or NO	If YES, is it significant? YES or NO
23. Change in the diversity of species or number of any species of (including trees, shrubs, grass, microflora, and aquatic plants)?	NO.	
24. Reduction of the numbers of or encroachment upon the critical habitat or any unique, threatened or endangered species of plants?	NO.	
25. Introduction of new species of plants into an area, or result in a barrier to the normal replenishment of existing species?	NO.	
26. Reduction in acreage of any agricultural crop or commercial timber stands, or affects prime, unique, or other farmland of State or local importance?	NO.	
27. Removal or deterioration of existing fish or wildlife habitat?	NO.	
28. Change in the diversity of species or numbers of any species of animals (birds, land animals including reptiles, fish and shellfish, benthic organisms, insects or microfauna)?	NO.	
29. Reduction of the numbers of or encroachment upon the critical habitat of any unique, threatened or endangered species of animals?	NO.	
30. Conflict with any applicable habitat conservation plan, natural community conservation plan or other approved local, regional or state habitat plan?	NO.	
31. Introduction of new species of animals into an area, or result in a barrier to the migration of movement of animals?	NO.	
SOCIAL AND ECONOMIC. Will the proposal (directly or indirectly):		
32. Cause disruption of orderly planned development?	NO	
33. Be inconsistent with any elements of adopted community plans, policies or goals?	NO	
34. Be inconsistent with a Coastal Zone Management Plan?	NO	
35. Affect the location, distribution, density, or growth rate of the human population of an area?	NO	
36. Affect life-styles, or neighborhood character or stability?	NO	
37. Affect minority, elderly, handicapped, transit-dependent, or other specific interest groups?	NO	
38. Divide or disrupt an established community?	NO	
39. Affect existing housing, require the acquisition of residential improvements or the displacement of people or create a demand for additional housing?	YES	NO*
40. Affect employment, industry or commerce, or require the displacement of businesses or farms?	NO	
41. Affect property values or the local tax base?	NO	
42. Affect any community facilities (including medical, educational, scientific, recreational, or religious institutions, ceremonial sites or sacred shrines)?	NO	
43. Affect public utilities, or police, fire, emergency or other public services?	YES	NO*
44. Have substantial impact on existing transportation systems or alter present patterns of circulation or movement of people and/or goods?	NO	
45. Generate additional traffic?	NO	
46. Affect or be affected by existing parking facilities or result in demand of new parking?	NO	
47. Expose people or structures to a significant risk of loss, injury or death involving wildland fires, including where wildlands are adjacent to urbanized areas or where residences are intermixed with wildlands?	NO	
48. Involve a substantial risk of an explosion or the release of hazardous substances in the event of an accident or otherwise adversely affect overall public safety?	NO	NO*

SOCIAL AND ECONOMIC continued. Will the proposal (either directly or indirectly):	YES or NO	If YES, is it significant? YES or NO
49. Result in alterations to waterborne, rail or air traffic?	NO	
50. Support large commercial or residential development?	NO	
51. Affect a significant archaeological or historic site, structure object, or building?	YES	NO*
52. Affect wild or scenic rivers or natural landmarks?	NO	
53. Affect any scenic resources or result in the obstruction of any scenic vista or view open to the public, or creation of an aesthetically offensive site open to public view?	NO	
54. Result in substantial impacts associated with construction activities (e.g., noise, dust, temporary drainage, traffic detours and temporary access, etc.)?	YES	NO*
55. Result in the use of any publicly owned land from a park, recreation area, or wildlife and waterfowl refuge?	NO	
MANDATORY FINDINGS OF SIGNIFICANCE		
56. Does the project have the potential to substantially degrade the quality of the environment, substantially reduce the habitat of a fish or wildlife species, cause fish or wildlife population to drop below self-sustaining levels, threaten to eliminate a plant or animal community, reduce the number of, restrict the range of a rare or endangered plant or animal or eliminate important examples of the major periods of California history or prehistory?	NO	
57. Does the project have the potential to achieve short-term, to the disadvantage of long-term, environmental goals? (A short-term impact on the environment is one which occurs in a relatively brief, definitive period of time while long-term impacts will endure well into the future.)	NO	
58. Does the project have environmental effects, which are individually limited, but cumulatively considerable? Cumulatively considerable means that the incremental effects of an individual project are considerable when viewed in connection with the effects of past projects, the effects of other current projects, and the effects probable future projects. It includes the effects of other projects which interact with this project and, together, are considerable.	NO	
59. Does the project have environmental effects that will cause substantial adverse effects on human beings, either directly or indirectly?	NO	

Environmental Checklist Discussion

The following discussion is a preliminary evaluation of environmental resources in the project corridor. This discussion takes into consideration all alternatives with the exception of the "No Action" alternative. All items on the checklist will be evaluated in further detail in the appropriate environmental document. Some of these findings have the potential to change during analysis.

Seismic Hazards (#4,)

Any proposed structure shall be designed in accordance with guidelines set forth in the current Caltrans Bridge Design Specifications. The application of these design standards would reduce the risks associated with structures to acceptable levels.

Hazardous Materials (#9, #48)

A Site Assessment (SI) will need to be prepared to identify any potential for hazardous materials. Additionally, a Site Investigation (SI) shall be required to identify the presence/absence and intensity of hazardous substances that may be present. Bridges widened by the project would have to be evaluated as having the potential for asbestos-containing materials (ACM) and /or lead based paint. If the above listed studies identify the presence of hazardous substances, mitigation measures will need to be formulated to address the situation.

Biological Resources (#10)

Permits from the State Dept of Fish and Game (1601), U.S. Army Corps of Engineers (404 permit), and the Regional Water Quality Control Board (401) may be required if the proposed project will impact any receiving waters (i.e. drainages, streams, rivers, channels, creeks etc). This includes areas used to stage equipment.

Water Quality (#12)

All appropriate Caltrans Best Management Practices (BMPs) should be adhered to so that state and federal water quality standards are maintained.

Air quality? (#17, #19, #54)

The project area is located in the South Coast Air Basin (SCAB). It is considered non-attainment for carbon monoxide, PM10, and ozone. The proposed alternatives are intended to relieve peak hour congestion, thereby minimizing the amount of cars sitting idle along Route 5. The proposed project will need to be included in the RTIP or some other approved transportation plan or program.

Other air quality issues should only take place during the construction of the project. As such, these impacts are temporary in nature and measures will be taken to insure they are not significant.

Noise (#20, #21, #54)

The project corridor is bordered on the north and south sides by sensitive receptors (residential units, churches, and schools). It is expected that soundwalls would be replaced as part of this project. Soundwall locations will be identified in the Noise Study Report using Caltrans criteria for noise abatement measures. Vibration levels will also need to be evaluated.

Increased noise levels or vibration issues would take place during the construction of the project. As such these impacts are temporary in nature and measures will be taken to insure they are not significant.

Relocations (#39)

The alternatives presented require the partial acquisition of one parcel of property, which was formerly a service station and now is a vacant piece of land. A Relocation Impact Report may need to be prepared if additional properties are required. Please keep our division informed as the projects progresses.

Affect public utilities, or services. Generate additional traffic. (#43)

The alternatives presented would create temporary access impacts, which may result from construction activities, but will be mitigated with the implementation of a Traffic Management Plan (TMP).

Archeological and/or Historic Resources. (#51)

An archaeological survey report (ASR) will be required for the project. The Area of Potential Affect (APE) must include all access roads, work areas and staging areas beyond the existing paved highway. A historic survey of resources related to residential units and bridges will also be required. Any subsequent changes in project scope may require additional archaeological and/or historic review. These reports may contain mitigation measures that will have to be included in the final project design, and included as part of the PS&E.

Construction impacts. (#54)

Each of the project alternatives would result in construction impacts. There would be short-term noise and air quality impacts in addition to detours and access changes. The contractor would be required to comply with local ordinances as well as the State Standard Specification provisions, which mitigate such construction impacts to the extent feasible.

Dust palliative measures will be employed to ensure no significant impacts from dust during construction occurs, measures will be taken to make certain no siltation enters any waterways, and construction will be staged to insure that no significant impact occurs to traffic flow in the area.

ATTACHMENT 23

PSR Performance Measures
For EA: 22400K

SCOPE

Yes No

☒ ☐ • Is the "Need and Purpose" clearly defined and written in accordance with applicable permitting agency requirements?

☒ ☐ • Do the alternatives stay within scope or solve problem identified in "Need and Purpose"?

☒ ☐ • Does the scope incorporate required allied projects such as Traffic Management System (TMS) elements, replacement planting, environmental mitigation, maintenance needs, and relinquishment requirements.

☒ ☐ • Have non-standard features, if any, been approved using established guidelines?

☒ ☐ • Is scope consistent and coordinated with local, regional and state system plans?

Scope Confidence Rating: 5
1 low to 5 high

COST

Yes No

☒ ☐ • Is the estimate realistic and in accordance with established guidelines? Does it include a sum for contingencies consistent with risk?

☒ ☐ • Does the cost incorporate required allied projects such as TMS elements, replacement planting, environmental mitigation, relinquishment requirements.

☒ ☐ • Is the right of way cost developed in accordance with established guidelines and consistent with anticipated needs?

☒ ☐ • Were benefit/cost ratios and/or the data to calculate them provided?

☒ ☐ • Were funding sources and commitments identified? Is proposed funding program consistent with project type?

☐ ☒ • Were support costs identified in a manner consistent with SB 45 and CTC Guidelines and supported by a complete project work plan?

Cost Confidence Rating: 4
1 low to 5 high

SCHEDULE

Yes No

☒ ☐ • Is time allowed for environmental evaluation and construction commensurate with anticipated studies and work windows (e.g., hazardous waste, endangered or season-specific species)?

☒ ☐ • Does the schedule incorporate required allied projects such as TMS elements, replacement planting, environmental mitigation, relinquishment requirements.

☒ ☐ • Is Right of Way time provided consistent with anticipated needs, including railroad and utilities?

Schedule Continued:

☒ ☐ • Is the schedule consistent with district resource capacity and based on an approved project work plan?

☒ ☐ • Do local stakeholders agree with the schedule?

☐ ☒ • Is schedule consistent and coordinated with local, regional and state plans?

Schedule Confidence Rating: 4
1 low to 5 high

QUALITY

Yes No

☒ ☐ • Was the range of alternatives identified and evaluated consistent with the need and purpose of the project?

☒ ☐ • Was the preliminary design, right-of-way, traffic and environmental effort adequate to confidently establish scope, schedule and estimate?

☒ ☐ • Were the studies adequate to identify all project stakeholders such as permitting agencies and community groups, and their anticipated levels of involvement?

☒ ☐ • Were there adequate peer reviews such as district functional units, safety, maintenance and constructability reviews, value analysis, and OPPD so to alleviate any undue risk?

Quality Confidence Rating: 5
1 low to 5 high

Overall PSR Confidence Score **Total: 18 x 5 = 90**

Note: Add above individual section confidence ratings and multiply by 5 to obtain overall confidence score. A score of less than 70 indicates "High Risk".

OTHER:

Explain any "No" responses as appropriate:

Cost: 5.Format provided on page 9 is not according to current CTC guidelines.

Note: Any "No" boxes checked indicate a high risk and potential future problems

PSR development support costs: $139,000

Prepared By:

Diaa Yassin
Project Manager

3/25/03
Date

I have read and approve this evaluation:

for Doug Failing
District Director

3/28/03
Date