Section 7
Installation

Photo 7-1.1 Some unassembled pieces of a bridge mounted sign.

The Standard Specifications requires overhead sign structures to be fabricated into the largest practical sections; hence field assembly will tend to be minimal.[1] Nearly all field assembly will be performed using bolted connections; however, it is possible that minimal field welding may need to be done (usually only on an existing structure with new overhead formed panels). For a typical one-post sign structure, only two assemblies need to be attached in the field: the post and the superstructure. For a two-post structure, three members are usually the minimum number of assemblies to be attached with the majority of structures being delivered

[1] Standard Specifications Section 56-1.03 "All sign structures shall be fabricated into the largest practical sections prior to galvanizing."

with four assemblies to be attached: two posts and two segments of the superstructure to be spliced together. Bridge mounted sign structures may be transported to the field in several pieces since they tend to be designed with numerous bolted connections.

7-1 Post

Posts are transported to the construction site with the base plate already welded to them, as well as any other member needed to attach the superstructure to the post (including, but not limited to, post plates, flange plates, and post angles). Posts are typically orientated such that a handhole (or lower handhole for a CMS sign structure) is located away from the traveled way, or away from oncoming traffic, an aluminum identification plate is adjacent to the traveled way, and all superstructure mounting elements are located as necessary to ensure proper orientation of the superstructure. When a sign structure is oriented such that traffic is on both sides of the structure, sound engineering judgment should be used when determining the location of the handhole and identification plate, unless the specific location is specified in the plans. In addition to the items listed above, the Standard Plans detail specific locations for couplings relative to the direction of traffic. These couplings are specified in their specific location to coordinate the sign's electrical and structural details.

Once the post is erected, the anchor bolts should be tightened sufficient to stabilize the sign structure. Final tightening of these bolts is not to be done until all necessary adjustments are completed. For a two-post structure, the posts may need to be slightly adjusted to allow for proper alignment of the bolts that attach the superstructure to the post. This problem does not exist for a one-post sign structure, however, the bottom of the sign frame is positioned level for these structures. Rather than causing any distortion at the superstructures connection to the post, this operation should be done by raking the post slightly out of plumb with the use of the anchor bolts' leveling nuts.[2] After this has been done and the post is at its final position, all top and bottom nuts are to be tightened against the base plate as described in Section 7-3, "Anchor Bolts."

[2] Standard Plans Sheet S2, Note 7 "On single post sign structures, the post shall be raked out of plumb, with the use of leveling nuts to make the bottom of the sign frame level."

7-2 Superstructure

Photo 7-2.1 The lower juncture plate is partially visible at the right hand side of this photo of a CMS sign structure

The superstructure for most overhead sign structures is typically delivered to the field with all members necessary for attaching it to the post and all walkway brackets, when applicable, attached to it. For a one-post truss sign structure, a steel plate with a cut out hole in the center (lower juncture plate) is welded onto the soffit of the truss. *Refer to Photo 7-2.1*. The superstructure should be lowered such that the post is inserted through the opening in the lower juncture plate and the lower juncture plate sits on top of the post plate. The top of the truss' superstructure contains a collar that is designed as a slip fit connection over the top of the post. Bolts are used to connect both the lower juncture plate to the post plate and the collar to the post. High-strength bolts are used in both these locations, but the specific tensioning requirements vary for different types of sign structures. The plans should be referenced to determine the torque requirement for these bolts or if the torque requirement has been waived.

Two-post truss type sign structures are attached in a similar manner. The top of the superstructure has a collar welded to it, similar to the one-post type. At the bottom of the superstructure, instead of one plate, two steel angles are welded to the truss on either side of the post. Two plates cut to the contour of the post rest on top of these angles.

Photo 7-2.2 The lower juncture of a two post truss

Photo 7-2.3 Connection of arm to post at a Lightweight Type B.

These plates are bolted to the steel angles through slotted holes so that the plates can be spread away from the post during erection. Once the top of the post is secured in its collar, these plates are then tightened against the post such that there is zero clearance between the plates and the post. *Refer to Photo 7-2.2.*

The connection between a lightweight sign structure's superstructure and post is designed as a bolted connection. For these structures, pre-drilled angles or plates that are welded to both the post and superstructure are to be bolted together. Care during the fabrication process is essential to ensure that all members fit together in the field as designed. Any misalignment could cause the sign panel to be skewed or rotated around its own axis.

Photo 7-2.4 Connection of arm to post at a Lightweight Type C.

Superstructures for all types of overhead sign structures are to have either a hot-dipped galvanized or painted surface finish after fabrication. Often, transportation or weight factors impose limitations on the size of the assembly to be fabricated. Likewise, when galvanization is specified, it is common that the size of the hot-dip galvanization bath could limit the assembly's size. For these reasons, it is not uncommon for the superstructures of a two-post overhead sign structure to consist of bolted splices. Furthermore, tubular overhead sign structures, whether one-post or two-post type, are designed as a continuous member where the connection of the post to the cross beam or mast arm is a bolted field splice. *Refer to Figure 7-2.4.* In addition to these bolted splices, a detail

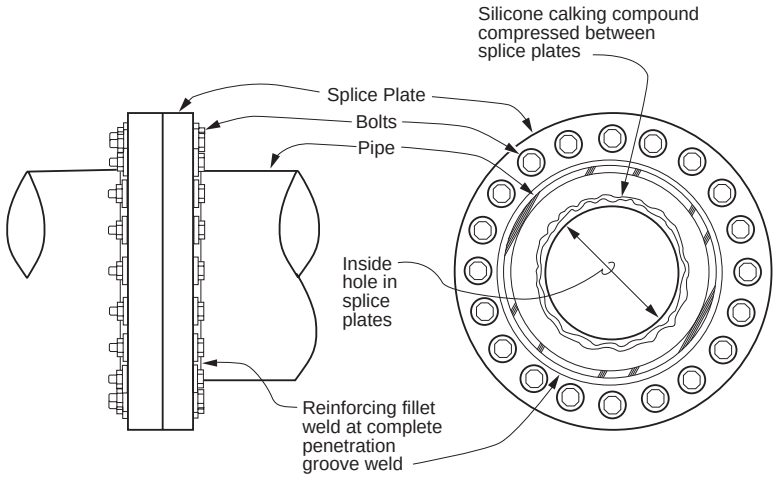

Figure 7-2.1 Bolted Chord Splice at Tubular Sign Structure

exists in the Standard Plans to allow overhead sign structure fabricators to perform a welded splice in their shop on structural steel angles or pipe members. Whether a bolted splice is performed in the field or a welded splice is prepared in the shop, it is the Contractor's responsibility to obtain approval for all splice locations.[3] Locations of splices shall be as outlined in the Standard Plans.

When inspecting high-strength bolts, in addition to the Standard Specifications and special provisions, the field inspector needs to have a copy of the "Specifications for Structural Joints Using ASTM A 325 or A 490 Bolts" (RCSC Specifications) and be familiar with their requirements to properly inspect these assemblies.[4] This manual is available for download on the Offices of Structure Construction's (OSC) Web Site at http://oscnet.dot.ca.gov/oscnet. Included for reference in Appendix D are Bridge Construction Memos 170-1.0, 170-2.0, and 170-3.0, that detail Structure Construction's procedures for inspecting high-strength bolted connections as well as a memorandum which discusses the installation of high-strength bolts at various locations where the torque requirements have been waived.

---

[3] Standard Specifications Section 56-1.03 "Splice locations shall be submitted to the Engineer for approval, and the Contractor shall not commence fabrication until the splice locations are approved."

[4] Standard Specifications Section 55-3.14 "Bolted connections using fastener assemblies shall conform to the requirements in "Specification for Structural Joints Using ASTM A 325 or A 490 Bolts" (RCSC Specifications) approved by the Research Council on Structural Connections of the Engineering Foundation and [the Standard] [S]pecifications.

Photo 7-2.5 Bolted chord splice on a two post truss

The special provisions and Standard Specifications require all high-strength bolted connections to include a direct tension indicator (DTI) for tension verification. DTI's should be installed per the procedure outlined in Section 55-3.14B, "Bolted Connections, Installation," of the Standard Specifications except that, at locations where the torque requirement for high-strength bolts has been waived, no DTI's should be installed. Testing of all bolts and bolt components shall be performed per the specifications in the special provisions, Standard Specifications, and the appropriate ASTM specifications. Tapered feeler gages are required to properly inspect all high-strength bolts installed with DTI's.

An alternating snugging and tensioning pattern should be used when installing high-strength bolts. Typical snugging and tensioning patterns proceed from the most rigid part of the connection to the most flexible. In the case of splicing two-angles together (such as chord angles for a truss type structure), the most rigid part would be located away from the ends of the angles or plates. The pattern should then proceed towards the end of the angles and plates to increase the contact surface. *Refer to Figure 5-1.2.* In the case of splicing two members together in a circular pattern (such as a bolted splice for in a tubular type sign structure), the snugging and tensioning pattern should proceed in a criss-cross tightening sequence to minimize the amount of preload lost in the connection.

During installation, the field inspector shall insure that all bolts are properly installed and that all necessary surface preparation has been performed. Each bolt, unless otherwise specified in the plans, shall be tensioned as a slip critical connection.[5] However, unless the joint is actually specified as slip critical, the special surface preparations at faying surfaces of slip critical connections would not be required.

[5] Standard Specifications Section 55-3.14 "All connections made with fastener assemblies shall be tensioned as a slip critical connection, whether classified as a slip critical or bearing type connection, unless otherwise designated on the plans."

In addition, further requirements for high-strength bolted connections may exist. On many contracts, the Contractor may need to perform rotational capacity tests prior to installation and verify that the minimum tension was achieved for those high-strength bolts installed. These conditions may require the Contractor to furnish additional high-strength bolts to satisfy their contractual obligations. Sections 56-1, "Overhead Sign Structures," and 55-3.14, "Bolted Connections," of the Standard Specifications should be referenced for these requirements as well as the special provisions for any requirements added to these sections.

7-3 Anchor Bolts

The special provisions specify that an alternating snugging and tensioning pattern shall be used for the anchor bolt connection of overhead sign structures. Furthermore, the special provisions require this pattern to be submitted as part of the working drawings. The Contractor shall follow the snugging and tensioning pattern specified in the project plans, where applicable. When no pattern is given in the project plans, the Contractor shall use an alternating snugging and tensioning pattern per industry standards. A typical snugging and tensioning pattern for the connection of the base plate to the pedestal is similar to that described in Section 7-2, "Superstructure," for bolted splices in tubular type overhead sign structures. Here, a circular pattern shall be used and the tightening should proceed in a criss-cross sequence to minimize the amount of preload lost in the connection.

7-4 Final Records

The installation of an overhead sign structure is not complete until the as-built condition has been recorded for future use by other entities within Caltrans. The as-built condition of a sign structure is just as important as any other portion of the work. The Engineer is responsible for recording any as-built changes to the location or design of the structure depicted on the contract plans including the horizontal distance of the structure relative to the travelled way. Additionally, the actual measured vertical clearance of the overhead sign structure relative to the roadway shall be recorded. The as-built plans once completed shall be processed in accordance with Section 5-104D, "As-Built Plans," of the Caltrans Construction Manual.

The horizontal distance and vertical clearance mentioned previously are necessary to determine any restrictions to limit the size of vehicles that can travel on a particular roadway. Often, the appropriate time to take and record these measurements is immediately after the sign has been installed while the Contractor has all their equipment and necessary lane closures in place. At this time, if needed, the Contractor's equipment and lane closures may be used by the Engineer to obtain this information.[6] The Engineer should make use of any lane closures at this time as they are difficult to get and can be costly if they are only for measuring an as-built condition. Once obtained, the horizontal distance and vertical clearance should be recorded and submitted in accordance with Section 3-705B, "Clearance and Bridge Permit Rating Changes (Permanent)," of the Caltrans Construction Manual.

[6] Standard Specifications Section 5-1.08 "The Engineer shall, at all times, …be furnished with every reasonable facility for ascertaining that the materials and the workmanship are in accordance with the requirements and intentions of [the Standard] [S]pecifications, the special provisions, and the plans.