Section 5
Working Drawings

The special provisions require the Contractor to submit working drawings for overhead sign structures. The working drawings must include both shop details and erection plans. The special provisions also specify that the Contractor supplement these working drawings with a written quality control program. The working drawings and written quality control program are to be prepared by the Contractor to adequately control his work. In addition, Section 5-1.02, "Plans and Working Drawings," of the Standard Specifications[1] outlines other items that the Contractor is required to include in these submittals. Appendix A and B contain checklists to assist in reviewing both the working drawings and the written quality control program.

Working drawing review and approval for overhead sign structures is the responsibility of the Resident Engineer and is to be performed by field personnel. However, to assist in the review of overhead sign structure working drawings, it is Structure Construction's practice to perform the working drawing review when requested by the Resident Engineer. If issues arise that cannot be resolved in the field, a

[1] Standard Specifications Section 5-1.02 "Working drawings for any part of the permanent work shall include, but not be limited to stress sheets, anchor bolt layouts, shop details, erection plans, equipment lists and any other information specifically required elsewhere in the specifications.

sign structure specialist from the Office of Design and Technical Services may be consulted for assistance. The time allowed for review of a sign structure submittal is specified in the special provisions.

When reviewing working drawings, it is important to remember the precedence of the contract documents as defined in Section 5-1.04 "Coordination and Interpretation of Plans, Standard Specifications, and Special Provisions" of the Standard Specifications. The project plans govern over the Standard Plans, Standard Plans and project plans govern over the Standard Specification and the special provisions govern over the Standard Specification, Standard Plans and project plans. With this in mind, one should begin their review by ensuring that the requirements in the governing document are satisfied. Once this is completed, the reviewer should repeat this process until all aspects of the contract have been verified. Reviewing working drawings solely by observing a detail or note in the Contractor's submittal and then searching the contract documents for a corresponding detail or note is a poor practice that should be avoided. This process will not detect if any required information has not been included in the Contractor's submittal. The reviewer shall review the working drawings by verifying that all required details are included in the working drawings using the contract documents, not vice-versa.

5-1 Shop Details

The primary items to be included in the working drawings are member sizes and overall dimensions. Typically, this information is found in the project plans and Standard Plans. For each sign structure, the sign panel length, span length, and post height need to be specified in the working drawings in accordance with the contract documents. The cross-section of each member is specified in the working drawings in accordance with the Standard Plans. For sign structures that contain truss elements, details must specify the overlap dimension of members at bolted and welded connections. It is not necessary for a Contractor to specify each member's length, provided sufficient information is detailed such that the Engineer is satisfied that the Contractor can fabricate all components of the sign structure from the working drawings.[2] Some member dimensions, such as plate dimensions, must be specified in the working drawings, when they cannot be ascertained through any other detail.

[2] Standard Specifications Section 5-1.01 "The Engineer shall decide … all questions as to the acceptable fulfillment of the contract on the part of the Contractor…"

All connections, need to be detailed in the Contractor's working drawings. In the case of welded connections, the working drawings need to indicate the weld type and size. Notes should also be included as necessary to perform the work (such as the necessity of a backing bar or additional surface preparation). *Refer to Figure 5-1.1.* Welding information, other than weld type and size included in the working drawings, should be submitted and approved as part of the Welding Quality Control Plan.

In the case of bolted connections, the working drawings need to indicate the size of each bolt and bolt hole. The majority of bolt hole sizes are not specified on the project plans or Standard Plans. For slotted holes or oversized holes the plans will specify the bolt hole size. When the bolt hole diameters is not specified in the plans, the special provisions and Standard Specifications define the maximum size for all bolt hole diameters to be 0.80 mm (1/32 inch) larger than the bolt diameter for bolts with a diameter less than 10 mm (3/8 inch). For bolts with a diameter greater than or equal to 10 mm (3/8 inch), the diameter of the bolt hole shall not be larger than 1.6 mm (1/16 inch) larger than the nominal bolt diameter. Except for anchor bolts, a correctly installed bolt will have the threaded end at least flush with, but not projecting more than 6 mm (1/4 inch) beyond, the outer face of the nut. In the case of anchor bolts, the threaded end will at least be flush, but not projecting more than 25 mm (1 inch) beyond, the outher surface of the nut [3.]

In addition to bolt and bolt hole sizes, each bolt component needs to be specified in the working drawings. *Refer to Figure 5-1.2.* All high-strength bolted assemblies shall consist of a high-strength bolt, nut, hardened washer, and direct tension indicator unless otherwise noted. Refer to the memo from the Office of Design and Technical Services located at the end of Appendix D for additional information on when a direct tension indicator is not required. General bolt (ASTM grade A 307) components shall be as specified in the plans. If the plans specify that a plate washer be used at all slotted bolt holes, these washers shall be in addition to all other components required. When this requirement is stated and both members being connected together at a bolted connection have slotted holes, two plate washers shall be used and installed such that one is on each side of the connection and placed between the member being connected and all other bolt components.

In the case of chord angles in truss and box beam closed truss overhead sign structures, cross beams in lightweight overhead sign structures, and pipe members in tubular overhead sign structures, the

[3] Standard Specifications Section 55-1.01 "For all bolts, the... thread stick out...shall be at least flush with, but not more than 6 mm (1/4 inch) beyond the outer face of the nut... The thread stick out of... anchor bolts shall be... not more than 25 mm (1 inch) beyond the outer face the nut..."

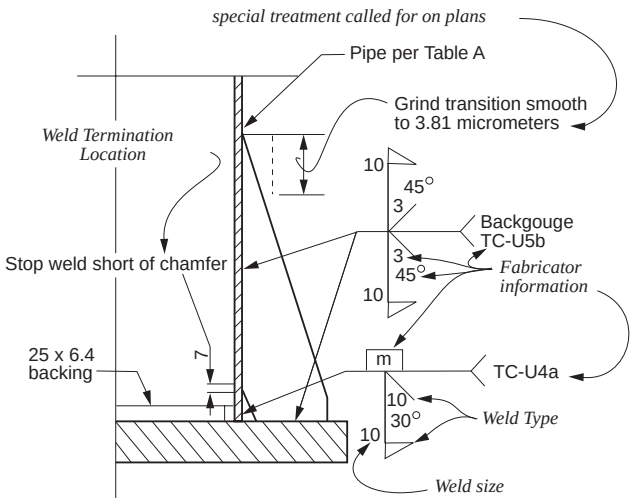

WELD DETAIL

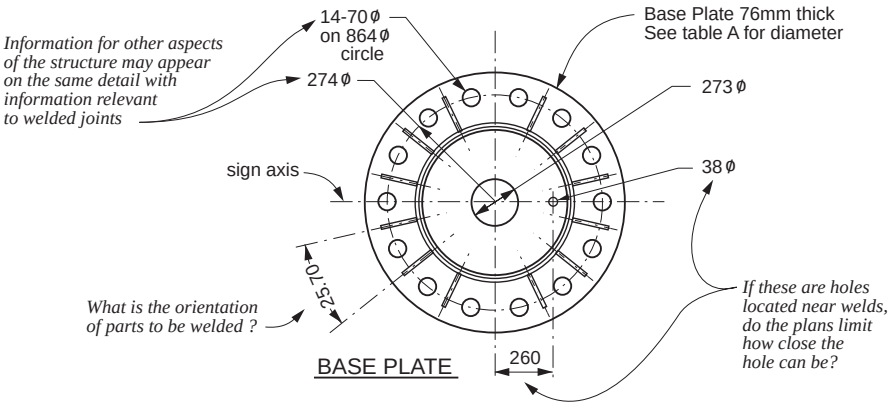

BASE PLATE

TABLE A			
SIGN NO	PIPE DIA (OUTSIDE)	PIPE THICKNESS	BASE PLATE DIAMETER
A	610	12.7	1016
B	660	12.7	1067
PIPES ARE ASTM A53 GRB			

Plates are ASTM A36

What type of
materials are
being used?

Figure 5-1.1 Typical weld details on fabricator's working drawings.

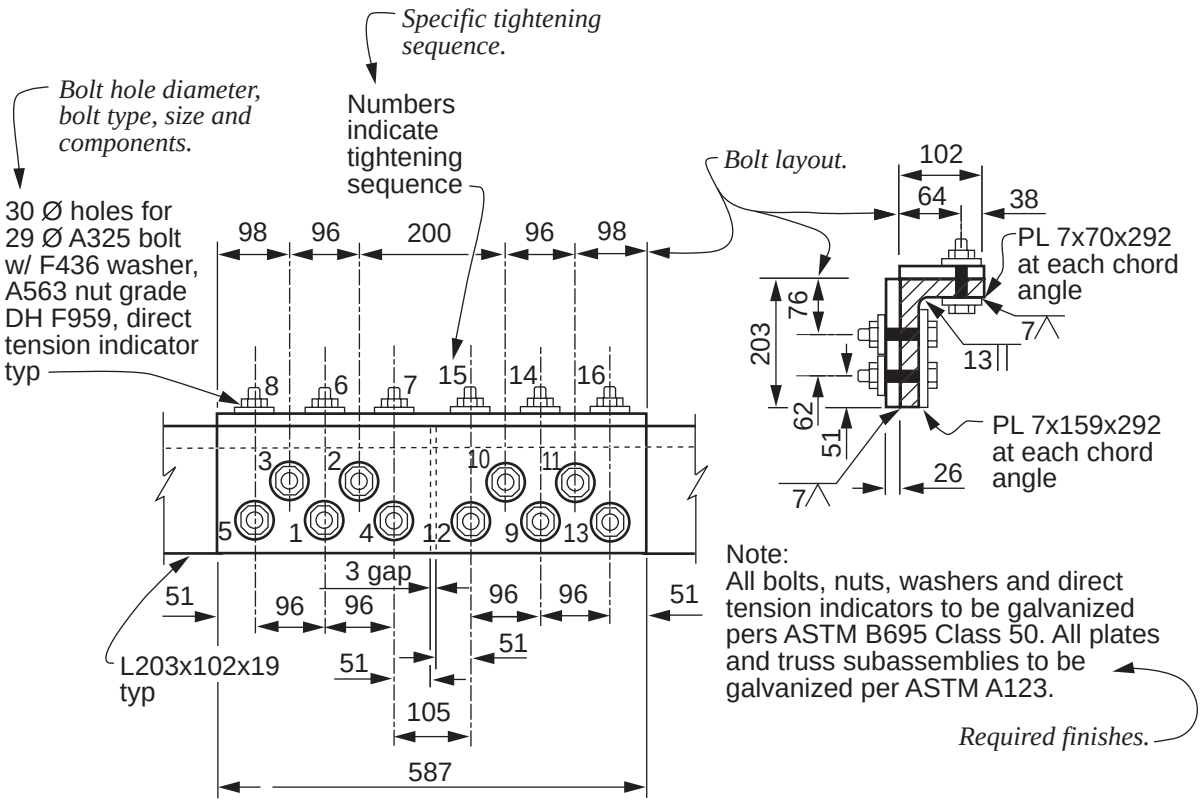

BOLTED CHORD SPLICE DETAIL

Figure 5-1.2 Typical bolt detail on Fabricator's working drawing.

Contractor may propose to splice these items by either a bolted or welded connection. This is usually done for transportation or galvanization purposes. If the Contractor opts to make a spliced connection, they are required to submit the location of each splice for approval prior to commencing the work. The contractor assumes all risk and cost associated with the use of a proposed splice connection. Typically, bolted splices are performed in the field and welded splices are done in the fabricator's shop. However, welded splices may be performed in the field as long as the procedure is approved in the Contractor's Welding Quality Control Plan. The splice shall be placed such that it does not inter-

fere with any other member. Interference may occur at the connection of the walkway bracket or removable sign panel clips to a truss chord angle. In the case of truss and box beam closed truss sign structures, all chord splices performed in the field will result in the connection of the diagonal angle and wind bracing to the chord angles near the splice to be connected in the field. The Standard Plans for trusses specify a bolted connection and details all bolts and bolt components to be used in this instance.

Working drawings shall include material and surface finish specifications as well as grades for each member to ensure that each member conforms to the requirements of the specifications. Attention should be directed to the special provisions to determine which items are state-furnished and if the contract is subject to any "Buy America" requirements. Unless amended by the special provisions, all material specifications are stated in Section 56-1.02, "Overhead Sign Structures; Materials," of the Standard Specifications. Material specifications for bolts, nuts, and washers, can be found in Section 55-2, "Steel Structures; Materials," of the Standard Specifications, as referenced by Section 56-1.02. In the "Structural Steel Materials" table found in Section 55-2 of the Standard Specifications, general bolts and bolt components are listed under "Steel fastener components for general application" while high-strength bolts and bolt components are listed under "Components of high-strength steel fastener assemblies for use in structural steel joints." Section 75-1.03, "Miscellaneous Bridge Metal," of the Standard Specifications is also referenced for bridge mounted sign structure's anchorages.

The surface finish for overhead sign structures shall conform to the requirements as specified in the special provisions, as well as Section 56-1.05, "Surface Finish," and either Section 75-1.05, "Galvanizing," or Section 59-5, "Painting Sign Structures," of the Standard Specifications. All galvanization to be performed on shapes, plates, and bars in sign structures shall be done in accordance with ASTM designation A 123. Galvanization work to be done on standard pipe shall comply with ASTM designation A 53. However, ASTM designation A 53 was not intended for pipe with additional members welded to it, as is often the case with overhead sign structures. ASTM designation A 123 is the appropriate specification for galvanizing these standard pipe assemblies.

The special provisions specify that all bolts and bolt components are to be galvanized by the mechanical deposition process. The hot-dip process tends to create thick, non-uniform zinc coatings on the bolt threads. The zinc coating applied to each component by the mechanical deposition process is more smooth and uniform compared to the hot-dip process. For this reason, nuts for use with bolts galvanized by the hot-dip process may be tapped oversize by a greater amount than nuts for use with bolts galvanized by the mechanical deposition process to account for the excess zinc. Therefore, the

mechanical galvanization process results in an increased amount of engagement between the threads of the bolt and nut. Additionally, more stripping strength is achieved under the mechanical deposition process from this additional engagement. The ASTM designation for the mechanical deposition process is B 695, Class 50.

Because of their size and length, anchor bolts must be hot-dip galvanized. However, the entire length of an anchor bolt does not need to be galvanized. The lower portion of an anchor bolt does not need to be galvanized to prevent deterioration as it is completely encased in concrete. The Standard Plans specify exactly how much of an anchor bolts top portion is required to be galvanized.

When reviewing a submittal for a truss structure that is to have laminated Type A panels installed on it, carefully verify the member spacing. Often, if the fabricator attempts to uniformly space the vertical and diagonal angles, interference develops between these members and the sign panel mounting bracket which prevents the attachment of the bracket at that location. For a laminated Type A sign panel on a truss overhead sign structure, the panel is attached to the superstructure by means of an assembly that secures the panel mounting beam to the upper and lower chord angles (chord angle clamp). The specific location for each chord angle clamp is detailed on Sheet S8C of the Standard Plans based on the length of the sign panel. The location of the sign panels should be considered when the fabricator specifies the spacing of the vertical and diagonal angles and should be verified by the Engineer when performing the working drawing review.

The size of the sign panel to be installed is significant when reviewing working drawings as it dictates the dimentions of other members. In many locations of the Standard Plans, member dimensions are specified as a function of the sign panel size that is found in the project plans (such as the frame depth for a truss type overhead sign structure). Some references used by Caltrans designers for sign panels list specific panels by a nominal size rather than its actual size. Instead of using a factor of 25.4 for converting a sign panels depth or length from inches to millimeters, these references use a factor of 25. The factor of 25.4 would give you the sign panels actual size while the factor of 25 only gives you its nominal size.

Since sign panels are typically State-furnished items, it is possible that the panel delivered to the project will not fit the sign structure if the Contractor fabricated the structure based on the sign panels nominal size. If these structures are built using the dimensions in the plans, the State may be required to pay for them as well as a new support structure to be built in accordance to the actual dimensions of

the sign panel. When the sign panel sizes shown in the project plans do not match any of the sign panel sizes given in tables within the Standard Plans, the Engineer should try a factor of 1.016 (25.4 / 25) to convert these nominal sizes to actual sizes. If this conversion is performed and the sign panel size still does not match any on the tables, the Designer should be contacted to determine the actual size of the sign panel. If the size required by the Designer does not match those given in tables within the Standard Plans, additional sheets should be included in the project plans to instruct the Contractor how to construct the sign structure. The Designer should be notified if any questions arise regarding this issue, or to verify that the dimensions in the plans are nominal dimensions.

5-2 Erection Plans

The erection plans shall provide sufficient details to demonstrate the Contractor's methods, procedures, and equipment to be used when transporting and installing overhead sign structures. Sufficient detail should be shown in these plans to enable the Contractor to assemble the structure in the field per the contract documents. Furthermore, as part of the erection plans, devices to secure the sign during shipping, and for lifting and moving during erection as necessary to prevent damage to the structure's surface finish (such as clips, eyes, or removable brackets) shall be submitted for approval.[4]

An anchorage layout shall be provided in the erection plans to ensure that the anchor bolts cast into the foundation will align with the bolt holes in the base plate. Along with the anchorage layout, the Contractor shall submit a snugging and tensioning pattern to be used at the connection of the anchor bolts to the base plate. This pattern should detail the tightening progressing in an alternating pattern. Section 7-3, "Anchor Bolts," further describes this snugging and tensioning pattern at the anchor bolt connection.

When bolted splices are to be used on a sign structure, the Contractor shall specify his method for attaching the two members together such that proper alignment is achieved and no damage is done to the structure. Typically, all structural members of the superstructure assemblies are spliced together on the ground and hoisted into place as a single assembly. Very much like anchor bolts, a snugging and tensioning pattern should be included for all bolted splice connections. At these locations, the tighten-

[4] Standard Specifications Section 56-1.03 "Details of the devices shall be shown on the erection plans to be submitted…"

ing should progress from the most rigid part of the joint to the free ends or in an alternating pattern, as appropriate.[5] Section 7-2, "Superstructure," discusses the snugging and tensioning pattern at bolted splice locations.

5-3 Quality Control Program

The Contractor is required to prepare a quality control program that specifies the fabrication, welding, surface finishing, transportation, and installation of overhead sign structures. This document shall include all methods, equipment, and personnel necessary to satisfy the requirements of Section 56-1, "Overhead Sign Structures," of the Standard Specifications and the special provisions.

Included in Appendix B is a checklist of items that should be included in the Contractor's quality control program. The checklist may contain items that are not relevant to every contract. Likewise, it is possible that a specific contract may have unique site conditions that should be addressed in the quality control program that are not included in the checklist. The Engineer shall have final decision over what information needs to be included in the Contractor's quality control program. Furthermore, the Engineer shall ensure that the quality control program covers the Contractor's responsibility with regard to the convenience and safety of traffic and the public in accordance with Sections 7-1.08, "Public Convenience," and 7-1.09, "Public Safety," of the Standard Specifications, as appropriate.

5 Standard Specifications Section 56-1.03 "After snugging up all bolts of the joint, tightening shall progress from the most rigid part of the joint to the free edges."