Section 4
Welding Requirements

All overhead sign structures to be fabricated and installed in accordance with the Standard Plans will have welded connections. Most welding work on sign structures will be performed in the fabricator's shop; however, there are occasions in which field welding will need to be performed by the Contractor to satisfy the requirements of the contract. The contract documents need to be reviewed to determine the scope of the welding work to be performed. Each welded connection is called out in either the Standard Plans or project plans. The Standard Specifications and special provisions stipulate the requirements to be observed when performing this work. It is the responsibility of the Contractor to ensure that all aspects of the contract regarding welding are adhered to and, as the quality assurance inspector, it is the Engineer's responsibility to confirm that the Contractor is diligently adhering to the quality control requirements.

4-1 Welding Quality Control Plan

Section 8-3.02, "Welding Quality Control," of the special provisions may require the Contractor to submit for approval a Welding Quality Control Plan (WQCP) for all welding to be performed in conformance with the provisions in Section 56-1, "Overhead Sign Structures," of the Standard Speci-

fications. No welding shall be performed until the WQCP is approved in writing by the Engineer. This section of the contract specifies the Contractor's quality control requirements as well as the quality assurance program to be followed by the Engineer. The Resident Engineer needs to ensure that "Welding Quality Control" have been incorporated into the special provisions for all contracts with an overhead sign structure with welded connections. If this section of the special provisions is not included as part of the contract, the Resident Engineer should take the appropriate steps to verify if it is necessary to add these requirements using a contract change order.

Prior to submitting the WQCP, the special provisions may state that a pre-welding meeting shall be held to discuss the requirements for the WQCP. The Engineer, Contractor, any subcontractors whose work includes welding (including the overhead sign structure fabricator), and any entities to be used in the work (such as welding inspection personnel or nondestructive testing firms) should be included in this meeting. At this time, the Engineer must be familiar with the work to be performed to complete all items of work for overhead sign structures. All situations that are unique for the specific contract should be discussed to ensure that the WQCP is complete when submitted. Personnel from the Division of Materials Engineering and Testing Services, Office of Structural Materials (OSM) are available for assistance and guidance in welding related matters and, upon request, can be available to either conduct or be present at the pre-welding meeting. OSM is also available for any other meeting that may arise regarding welding related issues.

For contracts

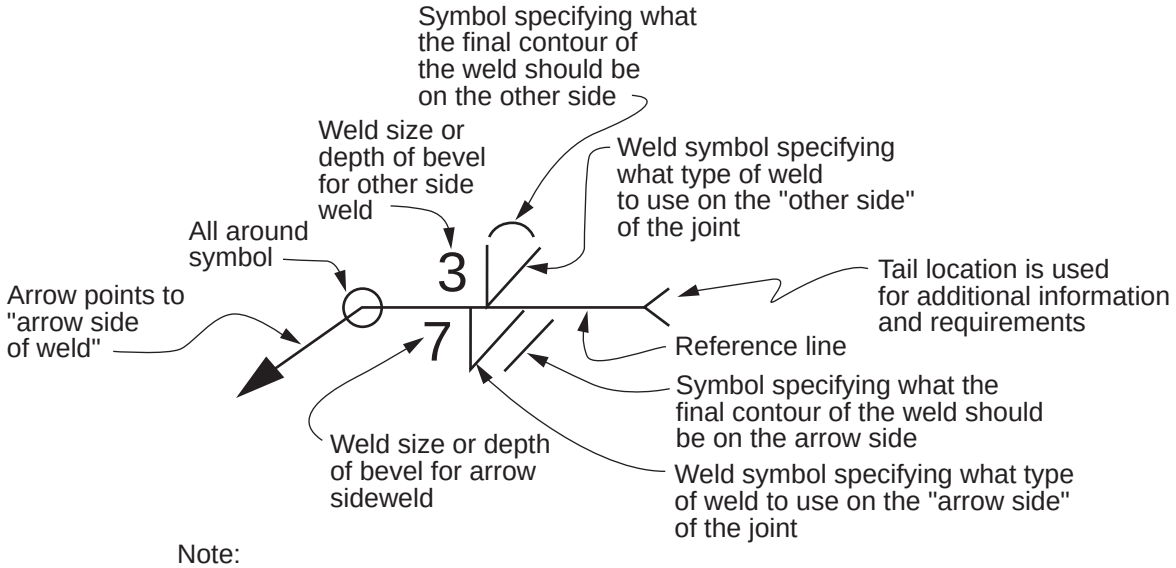

Note:
The fabricator may need to add information in order to fully specify the weld for the shop. The fabricators quality control is responsible for ensuring that the extra information conforms with AWS D1.1

Figure 4-2.1 Common Elements of Weld Symbols

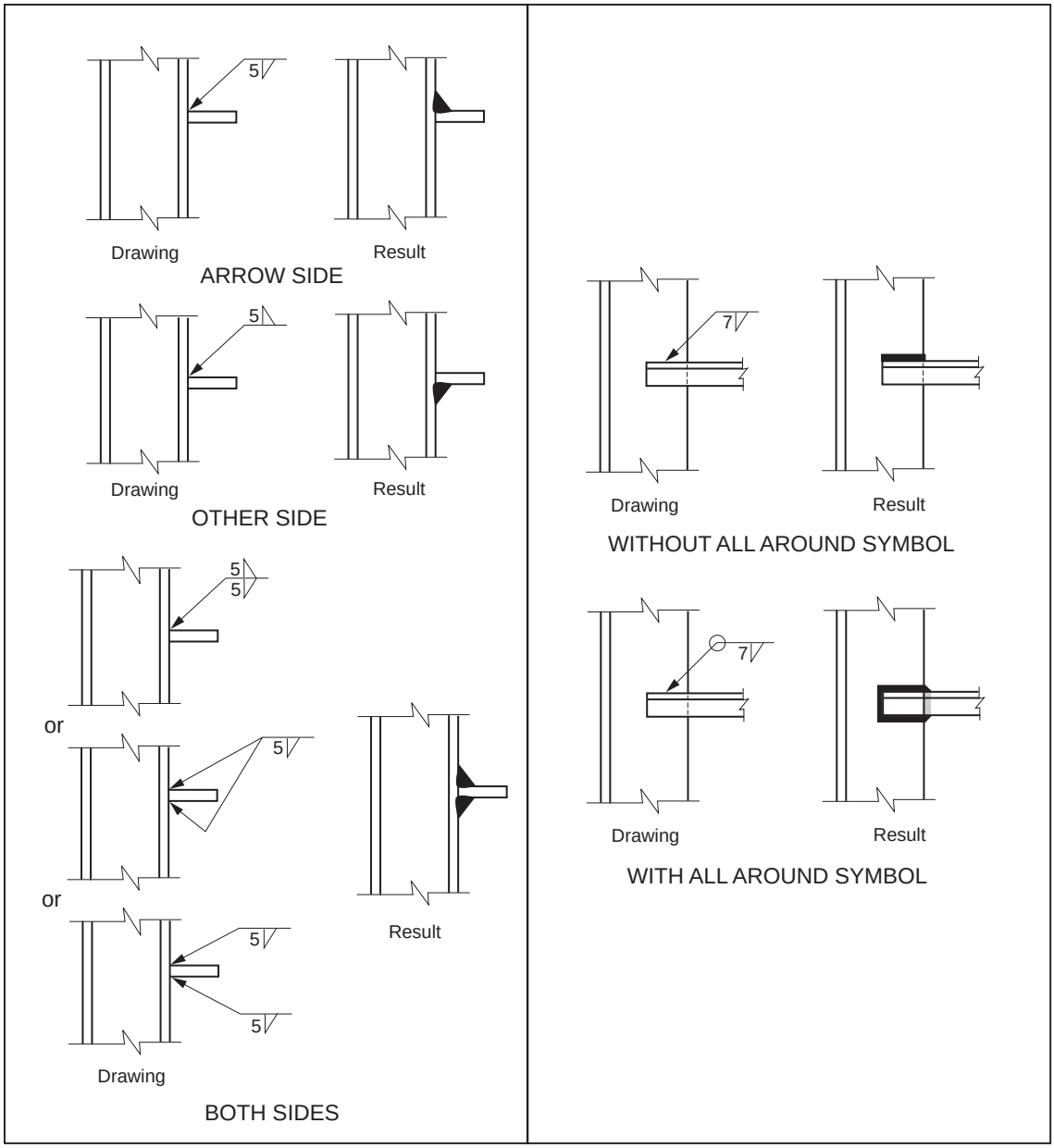

Arrow Side vs. Other Side vs. Both Sides **Meaning of Weld All-around symbol**

Figure 4-2.2

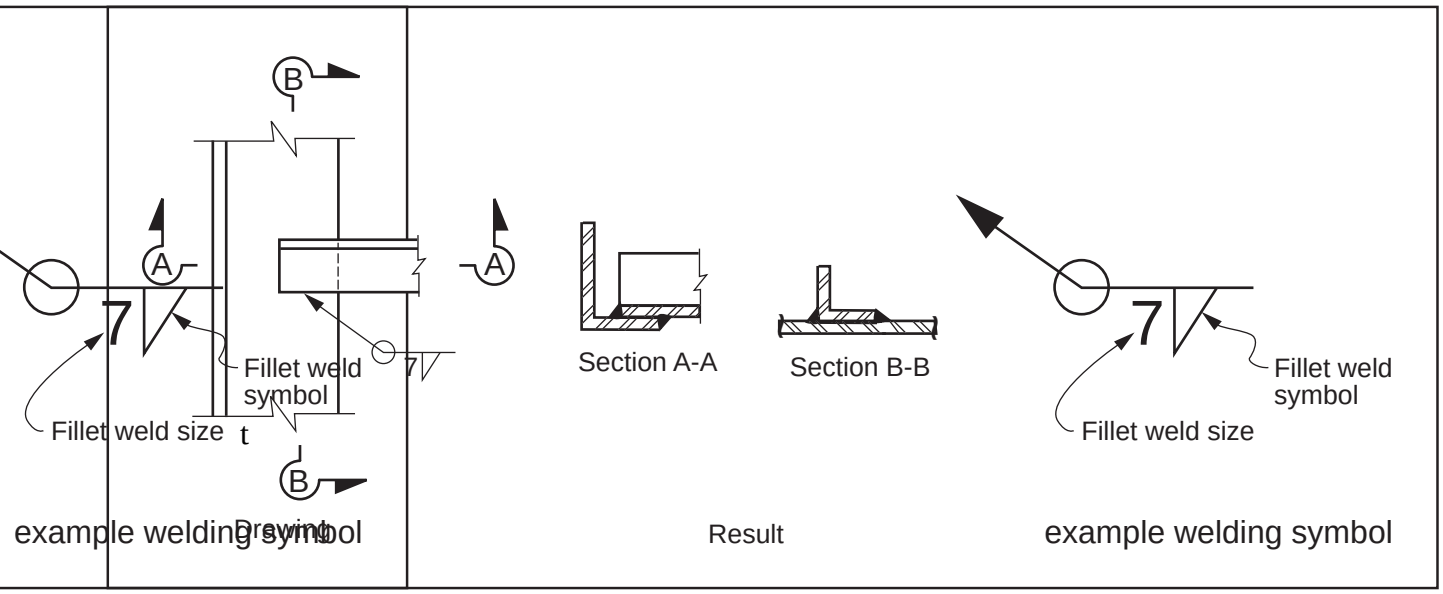

FILLET WELDS

require a WQCP, the Contractor is required to submit three copies of the WQCP to the Engineer. Upon receipt of the submittal, the Engineer should perform a review to check that the WQCP as submitted is complete. After the Engineer is satisfied that the submittal is complete, two copies should be forwarded to OSM for review. The third copy should remain with the Engineer to be referenced when needed and included in the project files under Category 9 “Welding”. When OSM has completed their review, they will contact the Engineer both by phone and with a memorandum to inform the Engineer of their findings and recommendation for approval. When the Engineer is satisfied that the submitted WQCP adheres to the requirements of the contract, a letter should be issued to the Contractor approving the submittal and requesting seven copies of the approved documents.

Included for reference in Appendix C is Bridge Construction Memo 180-2.1 that discusses welding quality control. Checklists are attached to this memo which are to be used by the Engineer, OSM, and distributed to the Contractor. Although the checklists provided are extensive, a review of the appropriate contract documents needs to be performed by the Engineer to verify that the checklist addresses all the requirements of the contract.

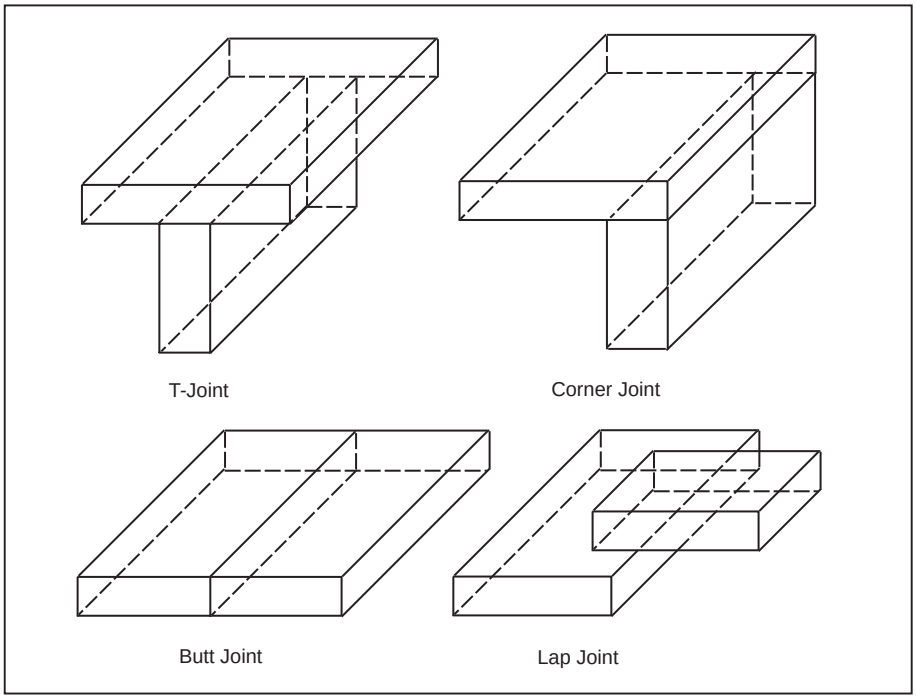

Figure 4-2.3 Main Types of Welded Joint Configurations

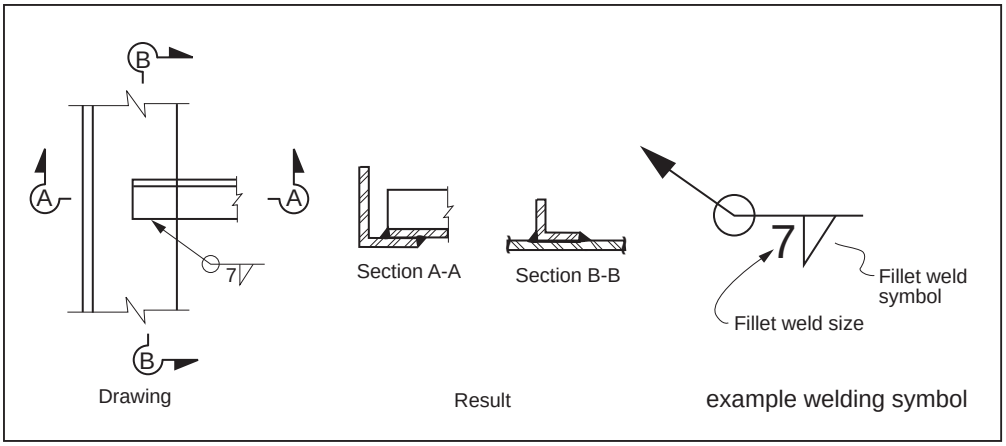

Figure 4-2.4 Fillet Welds

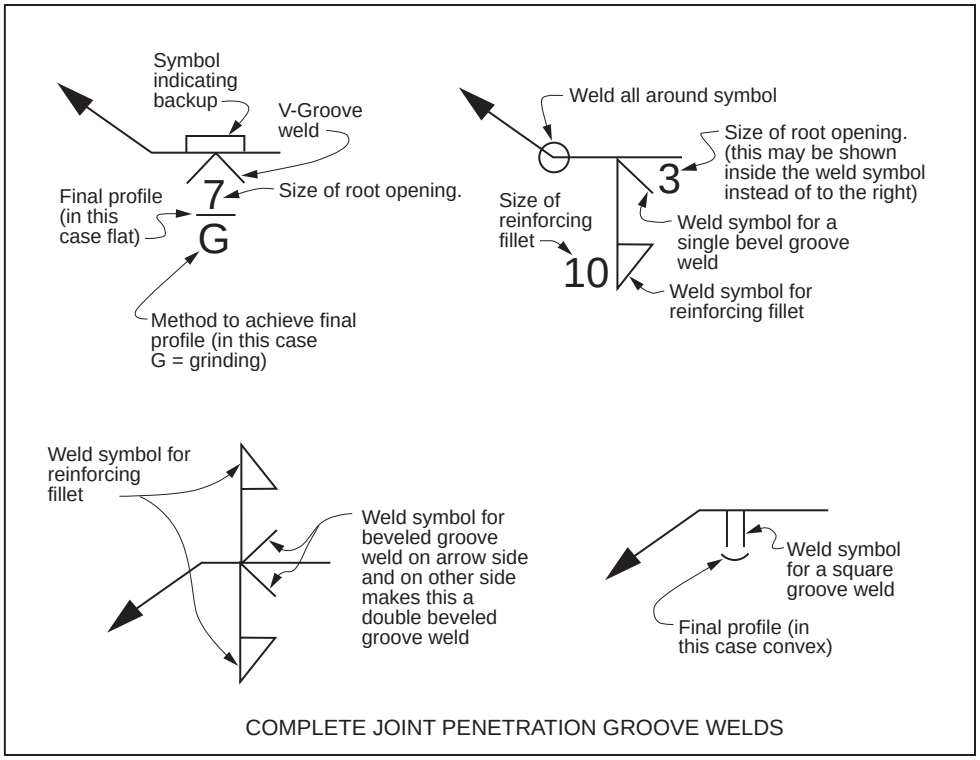

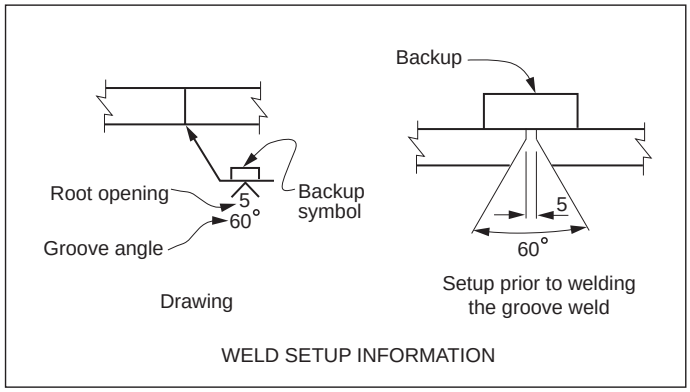

Figure 4-2.5 Complete Penetration Groove Welds

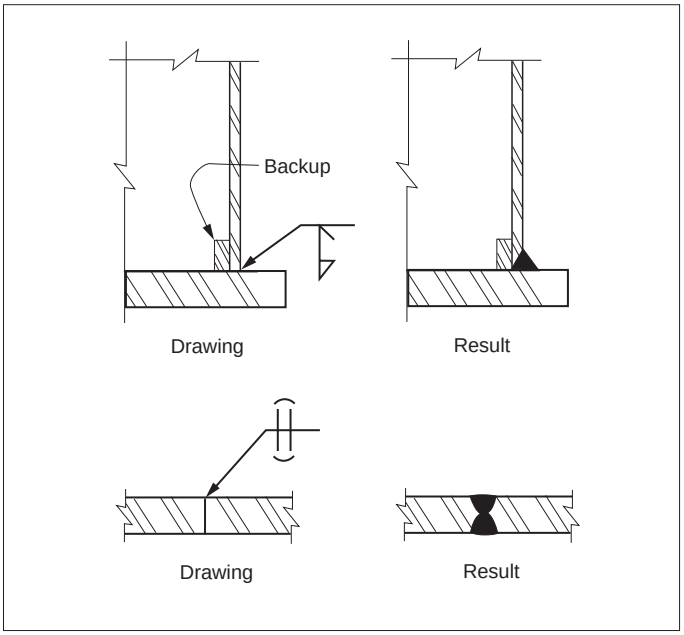

Figure 4-2.5 (cont.) Complete Joint Penetration Groove Welds

4-2 Weld Types and Symbols

A typical welding symbol will have an arrow pointing to the specific joint that is to be connected. The arrow will be connected to a horizontal line called the reference line. The reference line is used to show the specific welds to be performed at a joint by means of weld symbols. A weld symbol below the reference line indicates that the weld is to be performed on the side of the joint that the arrow is pointing to whereas a weld to be performed on the other (opposite) side of the joint will be specified above the reference line. *Refer to Figure 4-2.2*. Unless indicated otherwise, all welds are to be continuous from one end of the joint to the other. Commonly, a weld will be specified as an all-around weld on the welding symbol by including a circle at the point where the arrow meets the reference line.

When a weld is specified as all-around, the weld is to follow the contour of the member being connected so that the welding material completes a solid loop by ending at the same location it began. *Refer to Figure 4-2.2*. Welds along the circumference of a pipe are assumed to be all-around unless otherwise noted and do not require the all-around notation on the welding symbol.

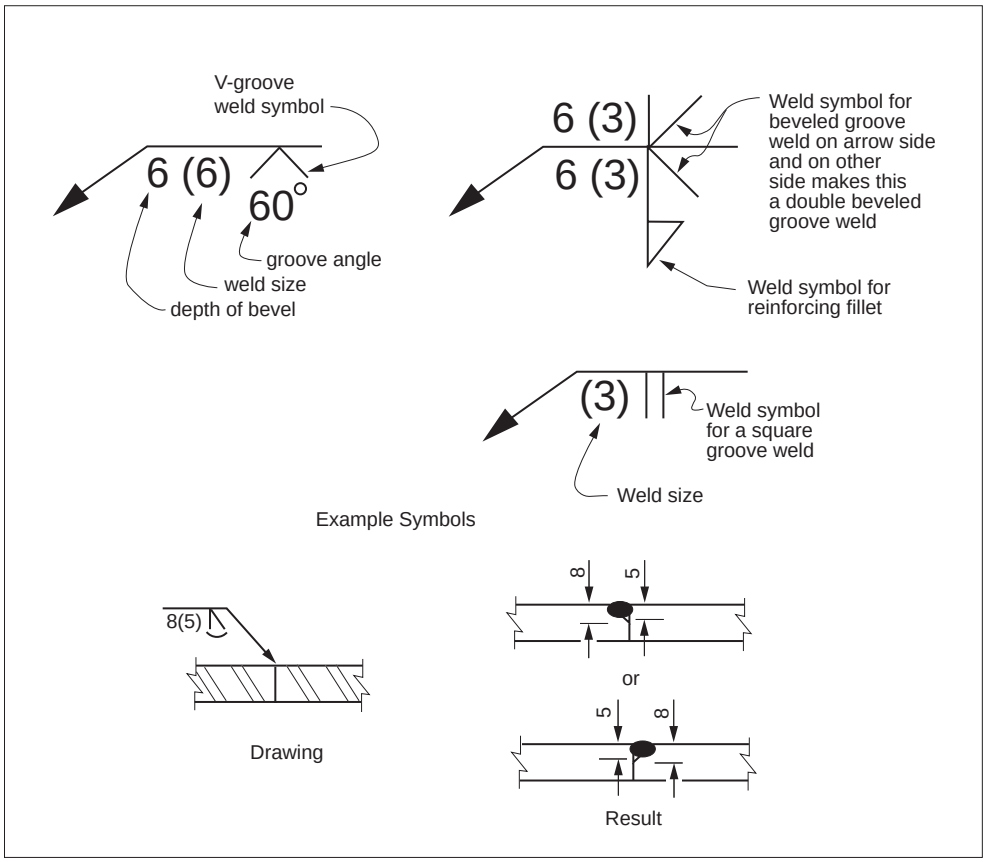

Figure 4-2.6 Partial Joint Penetration Groove Welds

The majority of welds found on overhead sign structures are fillet welds. Fillet welds attach two members together that share a 90-degree angle such as at a corner joint, T-joint, or lap joint. This weld forms a right triangle with the two normal legs being the edge of the members being attached. *Refer to Figures 4-2.3 and 4-2.4.* Occasionally, fillet welds may be specified where the angle is less than or greater than 90-degrees. Fillet welds are called out on a welding symbol by means of a triangle. The size of the fillet weld (length of the normal legs) is called out on the welding symbol adjacent to the leg of the triangle. When no size is specified on the welding symbol, the fillet weld shall not be smaller than the minimum size as specified in AWS D1.1.

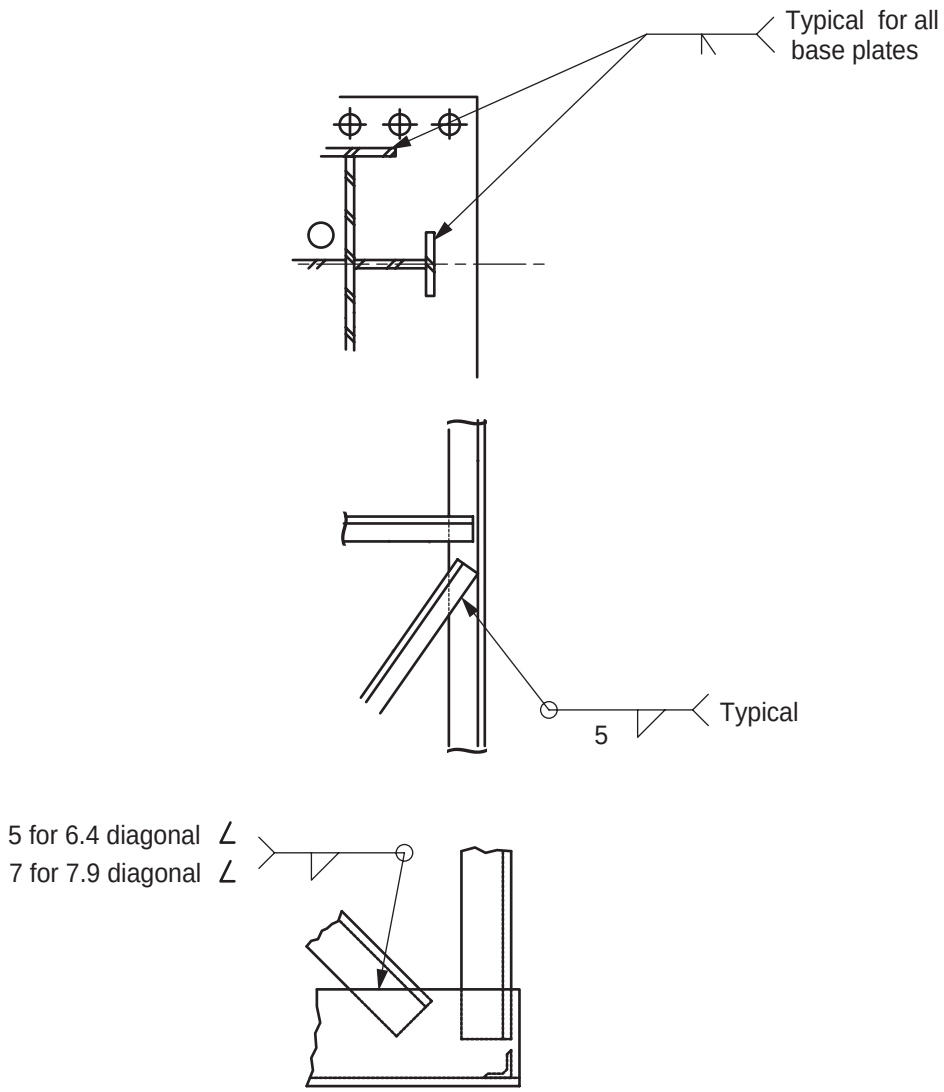

Figure 4-2.7 Examples of use of tails on welding symbols in the 1999 Standard Plans

Though other types of welds exist, nearly all other welds to be performed on sign structures (as specified in the Standard Plans) are groove welds. Groove welds are performed in a gap between the two members being joined together. Groove welds are typically performed on a butt joint, T-joint, or corner joint. All groove welds can fit into one of two categories, complete joint penetration (CJP) or partial joint penetration (PJP). A CJP groove weld consists of a connection where the welding material penetrates the entire depth of the joint. The welding material for a PJP groove weld, whether performed from one side or both sides of the joint, does not penetrate the entire depth of the joint.

The three primary types of groove welds found in the Standard Plans are V-, bevel-, and square-groove welds.

- A V-groove weld, called out by means of a "V" on a welding symbol, requires both members to have prepared (or beveled) edges.
- A bevel-groove weld is similar to a V-groove weld except that only one member at the joint requires a prepared edge. Bevel-groove welds are referenced on a welding symbol with a vertical line on the left and a line on the right that intersects the vertical line and reference line to form a "V" with one vertical leg.
- A square-groove weld does not require any beveling and is called out on the reference line as two parallel vertical lines.

A fillet weld is sometimes used to reinforce a groove weld. One such example is the connection of the post to the base plate for a truss type overhead sign structures where a bevel-groove weld with a reinforcing fillet is specified. This weld, which can be found only at corner or T-joints, consists of a prepared edge on one of the members being joined, a groove weld, and a fillet weld at the interior corner. This weld is shown on the reference line in a similar fashion as a bevel-groove weld except that the vertical part of the symbol is elongated to allow for a triangle (fillet weld symbol) to be affixed at the end of the vertical line. *Refer to Figure 4-2.5.*

For groove welds, the depth of any beveling and the weld size, if indicated, will be shown on the left of the weld symbol with the weld size in parenthesis. If neither the depth of any beveling or weld size is

[1] Standard Specifications Section 56-1.04 "Welding, nondestructive testing of welds, and acceptance and repair criteria for nondestructive testing of welds on steel overhead sign structure members shall conform to the requirements of AWS D1.1 and the special provisions."

indicated, the weld shall be a CJP weld. If the depth or size is indicated, the weld may be either a CJP or PJP weld depending on the dimensions specified and the dimensions of the members being connected.

Another groove weld that may occasionally be encountered on sign structures is the flair-bevel groove weld. The weld symbol for a flair-bevel groove weld is similar to that for the square groove weld, however, the non-vertical leg of the symbol curves away from the vertical leg.

Often, contour symbols are included on top of a weld symbol when specific finishes are required. A straight line above the weld symbol will be used when the exposed surface of the weld needs to be flat or flush with the member being joined. A curved line may also be used for either a convex or concave surface finish. Though it is not typically specified in the Standard Plans, a capital letter may be placed above the contour line to denote the method of finishing the weld. When no method is indicated, the Contractor may achieve the finish required by any means permitted by the contract documents. The only finishing method specified in the Standard Plans is grinding and is shown by placing a "G" above the contour line. Chipping (C), hammering (H), machining (M), and rolling (R) are also standard symbols used by the American Welding Society (AWS).

An additional tool used for adding specifications, processes, or other requirements to a welding symbol is a tail. *Refer to Figure 4-2.7.* A tail is only added to the welding symbol when information is to be provided. Examples of information stated using a tail as found in the Standard Plans are "optional joint" and "seal weld." Occasionally, a groove weld may be specified as a CJP or PJP weld by means of a tail. Another symbol that is commonly used by Fabricator's in their working drawings though it is not found in the Standard Plans is the supplementary symbol for backing. This symbol, applicable only to CJP groove welds, is a rectangle placed opposite of the weld symbol on the reference line. In the Standard Plans, backing is typically spelled out rather than called out by means of this symbol. In working drawings a backing symbol may include a letter designating the type of backing to be used.

4-3 Fabrication Inspection

The Standard Specifications state that all work associated with welding and nondestructive testing (NDT) of welds on overhead sign structures shall conform to the requirements of the American Welding Society (AWS), Structural Welding Code for Steel, AWS D1.1 and the special provisions.[1] This Code states that the Contractor is responsible for all aspects of quality control, including but not limited

to fabrication inspection and testing. Furthermore, AWS D1.1 requires the Contractor to perform visual inspections and observations prior to assembly, during assembly, during welding, and after welding to ensure that the materials and workmanship meet the requirements of the contract documents.

The special provisions also have further requirements in Section 8-3, "Welding," and Section 10-1, "Construction Details; General" under the section that discusses sign structures. These sections stipulate that the Contractor must perform various NDT to detect welding related defects within the weld metal, base metal, and the heat effect zone of the base metal adjacent to the weld. This may include ultrasonic testing (UT), radiographic testing (RT), or magnetic particle testing (MT). Both the visual inspection and NDT results must be documented by the Contractor and submitted to the Engineer prior to shipment from the fabrication facility.

As part of the State of California's quality assurance program, personnel from the Division of Materials Engineering and Testing Services, Office of Structural Materials (OSM) must perform random inspections and NDT prior to releasing the completed structure from the fabrication facility. These structures are inspected and tested for compliance with the contract documents and approved working drawings during fabrication and prior to shipment from the fabrication facility. Furthermore, OSM personnel perform random visual inspections of the material and workmanship during fabrication to confirm that the Fabricator's personnel are diligently performing their quality control requirements as specified in the contract.

When OSM personnel observe workmanship or material that does not meet the requirements of the contract documents, a Non-Conformance Report (NCR) is generated to document the findings and discrepancies. The NCR is a document used to relay information from OSM to the Resident Engineer and/or Structure Representative. Only structures that conform to the contract documents will be released for use by OSM.

Once the fabricated overhead sign structure is complete and OSM personnel have confirmed though visual inspections and NDT that the fabrication meets the requirements of the contract documents, the structure is released for shipment. Once the structure is released, OSM personnel will tag the completed fabricated material with an orange tag, seal the associated documentation in a plastic envelope that accompanies the structure to the site, and transmit a completed Form TL-29, "Report of Inspection of Materials," to the Resident Engineer. The Resident Engineer shall verify that the information on the orange tag attached to the structure matches the information on the Form TL-29 prior to installation.

[2] Standard Specifications Section 75-1.05 "Galvanized surfaces that are abraded and damaged …shall be painted with two applications of unthinned zinc-rich primer (organic vehicle type)…"

[3] Standard Specifications Section 59-1.05 "All painted surfaces that are marred or damaged … shall be repaired … to a condition equal to that of the coating specified herein."

[4] Standard Specifications Section 56-1.10 "The contract price paid per kilogram for install sign structure … shall include full compensation for …any welding, painting, or galvanizing required during installation…"

4-4 Field Inspection

Although nearly all welding on overhead sign structures will occur in a fabrication facility, circumstances will arise that require field welding to be performed to satisfy the requirements of the contract. The most common occurrence is when the contract specifies that a new overhead formed sign panel is to be installed onto an existing truss structure to replace an older sign panel. These panels are attached to the structure using removable sign panel frames (RSPF) and clip angles as described in Section 2-1, "Overhead Formed Panels." The layout of the clip angles welded to the truss used for installing the original sign panel typically will not be adequate for installing a larger sign panel. Another situation