DIST.	COUNTY	ROUTE	KILOMETER POST TOTAL PROJECT	SHEET NO.	TOTAL SHEETS

REGISTERED ENGINEER - CIVIL

PLANS APPROVAL DATE

REGISTERED PROFESSIONAL ENGINEER No. Exp. CIVIL STATE OF CALIFORNIA

The State of California or its officers or agents shall not be responsible for the accuracy or completeness of electronic copies of this plan sheet.

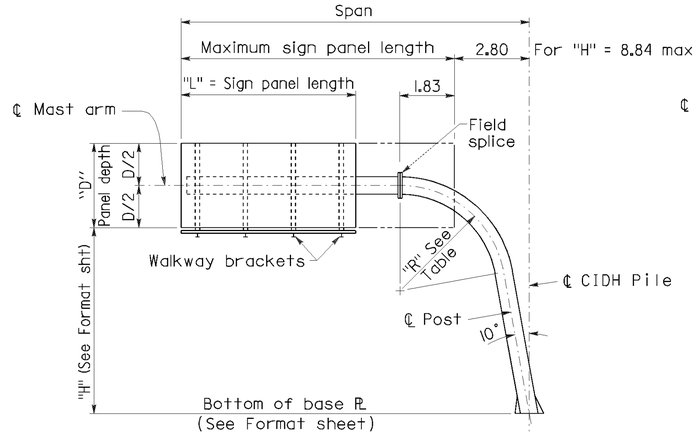

SLANTED POST CANTILEVER

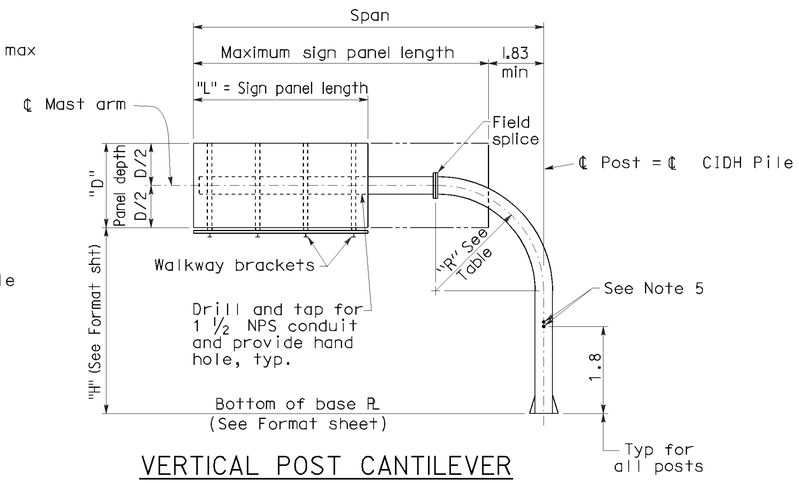

VERTICAL POST CANTILEVER

EXAMPLE 1:

Column selection for vertical pipe & pipe beam (include the selection of the inclined pipe post @ 10 degrees), definition of the span length is from support to end of sign. Area of coverage of sign is 1.83 m beyond field splice to the right and measure to the end of sign at the left x panel depth. (See above drawing)

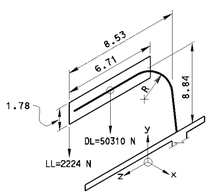

Moment(N-m) = Mx + Mz + DL x Eccentricity + (LL x arm length)
Distributed load of structure (include sign, pipe, walkway, handrails,mouting bracket, assembles bolt & nuts, plates, steel rods...)
= 5898 N/m
DL = Dead Load = 5898 N/m x 8.53 = 50310 N
Length of span = 8.53 m
Length of sign = 6.71 m
Depth of panel = 1.78 m
Wind pressure = 1930 Pa
Ht. of column = 8.84 m
Radius of elbow = 3.66 m
Longitudinal + transverse direction forces factor = 1.2

Moment at base of column (with 20% include for lateral effects)
= Mx + Mz, (Due to wind)
= L of sign x depth of panel x wind pressure x Ht of sign x 1.2
= 6.71 x 1.78 x 1930 x 8.84 x 1.2 = 244531 N-m
DL x ecc = 50310 x 5.18 = 260605 N-m
LL x arm length = 2224 x 8.53 = 18971 N-m
TOTAL MOMENT = 529622 N-m

The post type # is	Column shape	Radius, m
III	pipe NPS 24 x 15.9 tk, no split	3.66

EXAMPLE 2:

Column selection for vertical pipe & pipe beam (include the selection of the inclined pipe post @ 10 degrees), definition of the span length is from support to the end of sign. Area of coverage of sign is 1.83 m from ℄ of pile to end of sign x panel depth. (See above drawing)

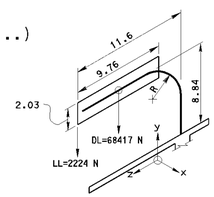

Moment(N-m) = Mx + Mz + DL x Eccentricity + (LL x arm length)
Distributed load of structure
= 5898 N/m
DL = Dead load = 5898 N/m x 11.6 = 68417 N
Length of span = 11.6 m
Length of sign = 9.76 m
Depth of panel = 2.03 m
Wind pressure = 1930 Pa
Ht. of column = 8.84 m
Radius of elbow = 3.66 m
Longitudinal + transverse direction forces factor = 1.2

Moment at base of column (with 20% include for lateral effects)
= Mx + Mz, (Due to wind)
= L of sign x depth of panel x wind pressure x Ht of sign x 1.2
= 9.76 x 2.03 x 1930 x 8.84 x 1.2 = 405636 N-m
DL x ecc = 68417 x 6.72 = 459762 N-m
LL x arm length = 2224 x 11.6 = 25798 N-m
TOTAL MOMENT = 891196 N-m

The post type # is	Column shape	Radius, m
V	pipe NPS 30 x 15.9 tk, no split	3.66

Reactions are approx as below after pipe size is known:
(Neglecting wind effect on the exposed portion of pipe)

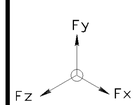

Fx = 6.71 x 1.78 x 1930 = 23052 N

Fy = Wt of pipe (See vertical post quantities) + Beam portion + (Wt of sign + walkway + HR)
= {24937 N + [(8.53 - 3.66) x 1381]} + {(5898 - 1381) x 6.71}
= 61972 N

Fz = 6.71 x 1.78 x 1930 x 0.2 = 4610 N

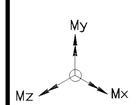

Mx = Wind (20%) +DL x Eccentricity + LL x Arm length
= (6.71 x 1.78 x 1930 x 8.84 x 0.2) + 50310 x 5.18 + 2224 x 8.53
= 40755 + 260606 + 18971 = 320332 N-m

My = (8.53 - 6.71/2) x 6.71 x 1.78 x 1930 = 119292 N-m

Mz = 6.71 x 1.78 x 1930 x 8.84 = 203776 N-m

Notes:

1. The maximum sign panel overlap onto the post elbow shall be 1.83 m max from the field splice.
2. When several sign panels are to be installed with a space between the panels, the space shall be as small as possible and 610 mm maximum.
3. During sign erection the post shall be raked as necessary with the use of the leveling nuts to make the sign panel level.
4. At final position of post all top and bottom anchor bolt nuts shall be wrench tightened against base plate.
5. Drill and tap for 1½NPS chase nipples and plug with recessed pipe plus. Place perpendicular to sign panel axis and away from approaching traffic. See Std Plan ES-15C.
6. NPS - Nominal Pipe Size.
7. Use of distributed dead load of 5898 N/m (worst load) on span is for post sizing only and not for quantity take off. This distributed dead load is assumed to act at the center line of the sign. Distributed dead load can varies from 3910 N/m to 5898 N/m for different post size of pipe NPS 20 to pipe NPS 30 diameter.
8. Post type # in Roman or Numerical implies the same specification of pipe post.

Post type #	Specification of pipe post	radius mm	kg/m	N/m
I	pipe NPS 20 x 12.7 tk	3658	155	1519
II	pipe NPS 24 x 12.7 tk	3658	187	1831
III	pipe NPS 24 x 15.9 tk	3658	232	2276
IV	pipe NPS 30 x 12.7 tk	3658	235	2299
V	pipe NPS 30 x 15.9 tk	3658	292	2860
VI	pipe NPS 30 x 19.05 tk	3658	348	3414

PIPE CANTILEVER, 11.6 m MAX

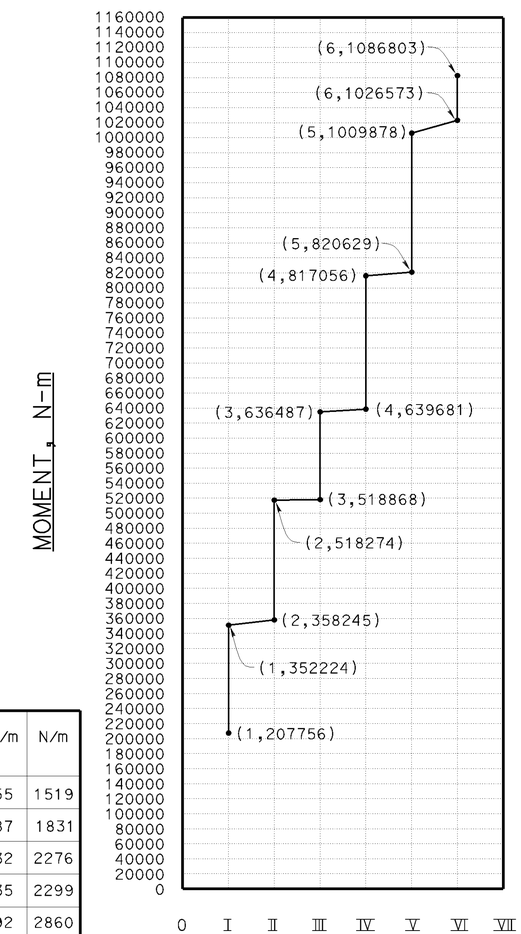

NO SCALE

ALL DIMENSIONS ARE IN METER UNLESS OTHERWISE SHOWN

THIS SHEET NOT A PART OF CONTRACT PLANS

OVERHEAD SIGNS - TUBULAR SINGLE POST TYPE

LAYOUT AND PIPE SELECTION | **14**