Dist	COUNTY	ROUTE	POST MILES TOTAL PROJECT	SHEET No.	TOTAL SHEETS

REGISTERED CIVIL ENGINEER

October 30, 2015

PLANS APPROVAL DATE

REGISTERED PROFESSIONAL ENGINEER Bruce D. Swanger No. C61257 Exp. 6-30-17 CIVIL STATE OF CALIFORNIA

THE STATE OF CALIFORNIA OR ITS OFFICERS OR AGENTS SHALL NOT BE RESPONSIBLE FOR THE ACCURACY OR COMPLETENESS OF SCANNED COPIES OF THIS PLAN SHEET.

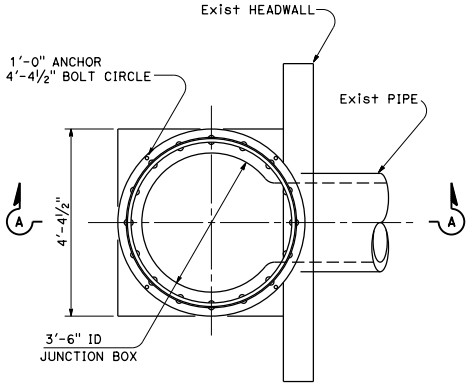

PLAN

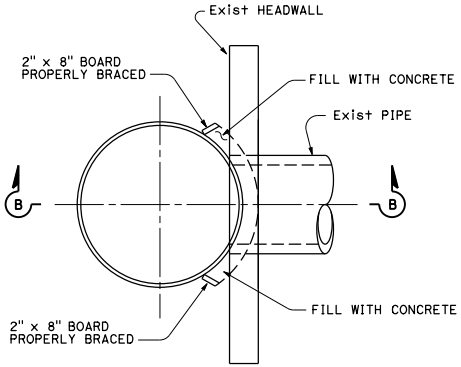

PLAN

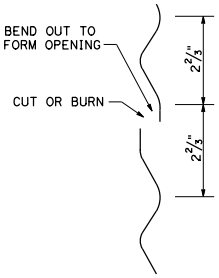

DETAIL "A"

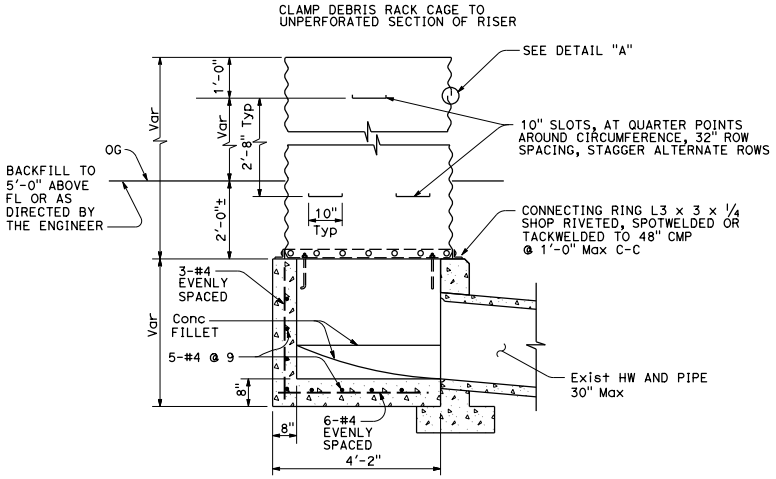

SECTION A-A

CMP RISER

AND JUNCTION BOX

TYPE A

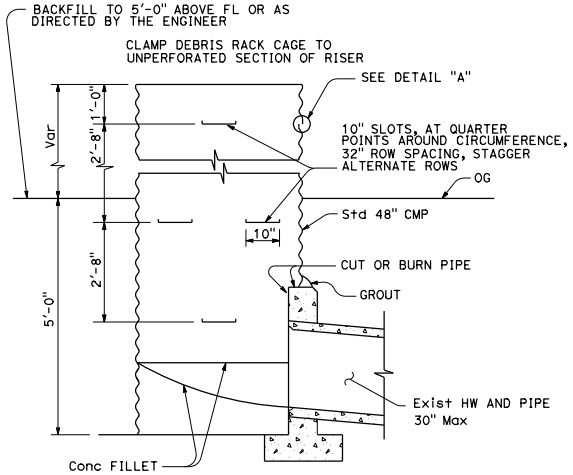

SECTION B-B

CMP RISER

TYPE B

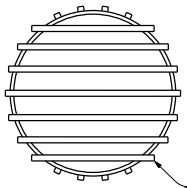

TOP VIEW

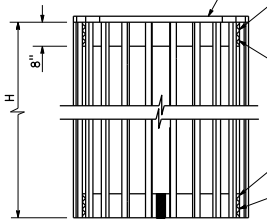

FRONT VIEW

H = 22 Posts- 6'-0" or 8'-0" lengths use 2" pipe or L2 x 2 x 3/16 (Galvanized steel or aluminum)

DEBRIS RACK CAGE

STATE OF CALIFORNIA
DEPARTMENT OF TRANSPORTATION

PIPE RISER WITH DEBRIS RACK CAGE

NO SCALE

D93C

9-22-15

2015 STANDARD PLAN D93C