© 2016 California Department of Transportation
All Rights Reserved

Dist	COUNTY	ROUTE	POST MILES TOTAL PROJECT	SHEET No.	TOTAL SHEETS

REGISTERED CIVIL ENGINEER

July 15, 2016
PLANS APPROVAL DATE

REGISTERED PROFESSIONAL ENGINEER
Stanley P. Johnson
No. C57793
Exp. 3-31-18
CIVIL
STATE OF CALIFORNIA

THE STATE OF CALIFORNIA OR ITS OFFICERS OR AGENTS SHALL NOT BE RESPONSIBLE FOR THE ACCURACY OR COMPLETENESS OF SCANNED COPIES OF THIS PLAN SHEET.

TO ACCOMPANY PLANS DATED _____

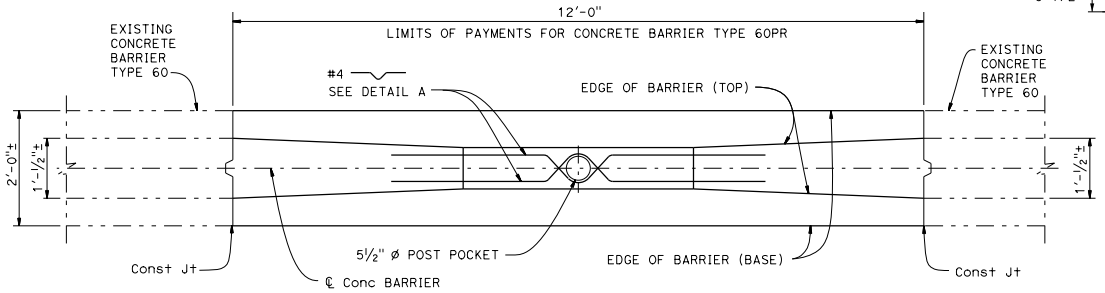

PLAN

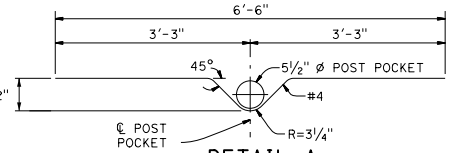

DETAIL A

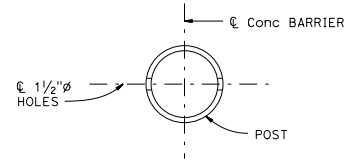

DETAIL B

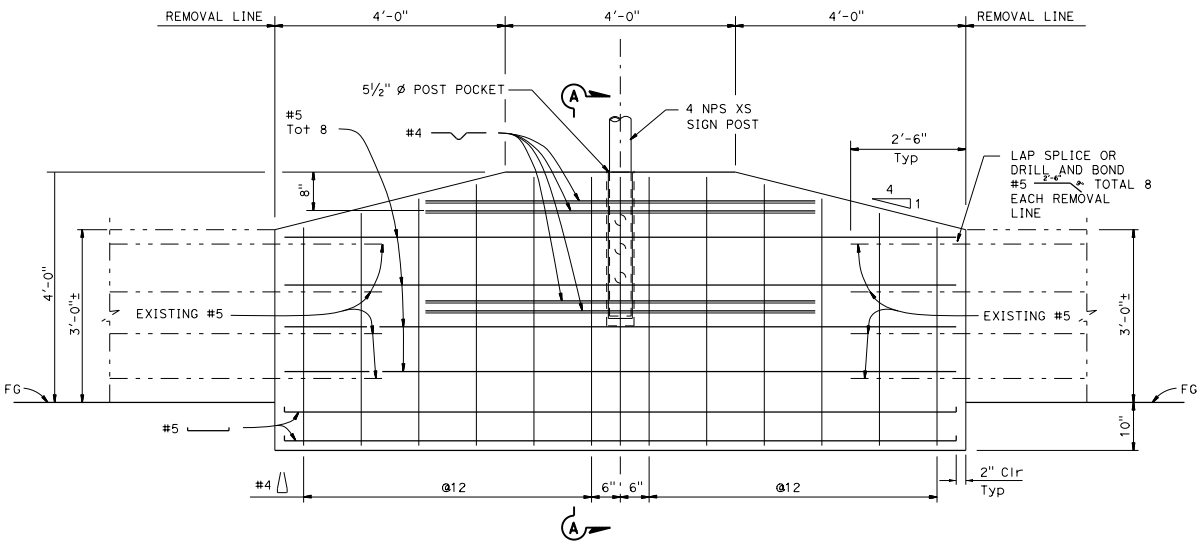

ELEVATION

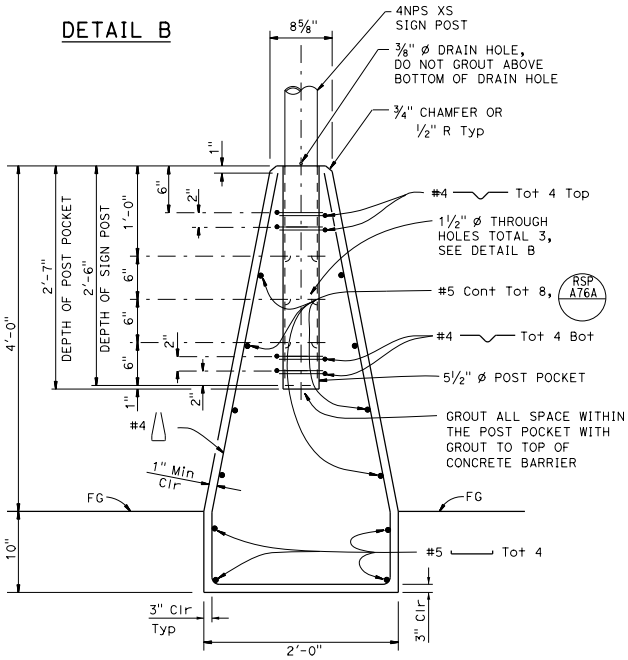

SECTION A-A

STATE OF CALIFORNIA
DEPARTMENT OF TRANSPORTATION

CONCRETE BARRIER TYPE 60PR

NO SCALE

RSP A76BB DATED JULY 15, 2016 SUPPLEMENTS THE STANDARD PLANS BOOK DATED 2010.

NOTE:

THE CONTRACTOR MUST VERIFY ALL CONTROLLING FIELD DIMENSIONS BEFORE ORDERING OR FABRICATING ANY MATERIAL.

REVISED STANDARD PLAN RSP A76BB

2010 REVISED STANDARD PLAN RSP A76BB

6-29-16