Dist	COUNTY	ROUTE	POST MILES TOTAL PROJECT	SHEET No.	TOTAL SHEETS
12	Ora	39	2.1, 3.1, 6.1	1	34

HSSTPHG-P039(026)E

STATE OF CALIFORNIA
DEPARTMENT OF TRANSPORTATION

PROJECT PLANS FOR CONSTRUCTION ON
STATE HIGHWAY
IN ORANGE COUNTY
IN HUNTINGTON BEACH AND WESTMINSTER
AT YORKTOWN AVENUE, MAIN/ELLIS STREET, AND MCFADDEN AVENUE

TO BE SUPPLEMENTED BY STANDARD PLANS DATED 2010

INDEX OF PLANS

SHEET No.	DESCRIPTION
1	TITLE AND LOCATION MAP
2-4	LAYOUTS
5-7	CONSTRUCTION DETAILS
8-10	UTILITY PLANS
11	CONSTRUCTION AREA SIGNS
12-13	TRAFFIC HANDLING PLANS
14-17	PAVEMENT DELINEATION PLANS, DETAILS AND QUANTITIES
19	SUMMARY OF QUANTITIES
20-25	ELECTRICAL PLANS
26-27	TRAFFIC CONTROL SHEETS
28-34	REVISED AND NEW STANDARD PLANS

THE STANDARD PLANS LIST APPLICABLE TO THIS CONTRACT IS INCLUDED IN THE NOTICE TO BIDDERS AND SPECIAL PROVISIONS BOOK.

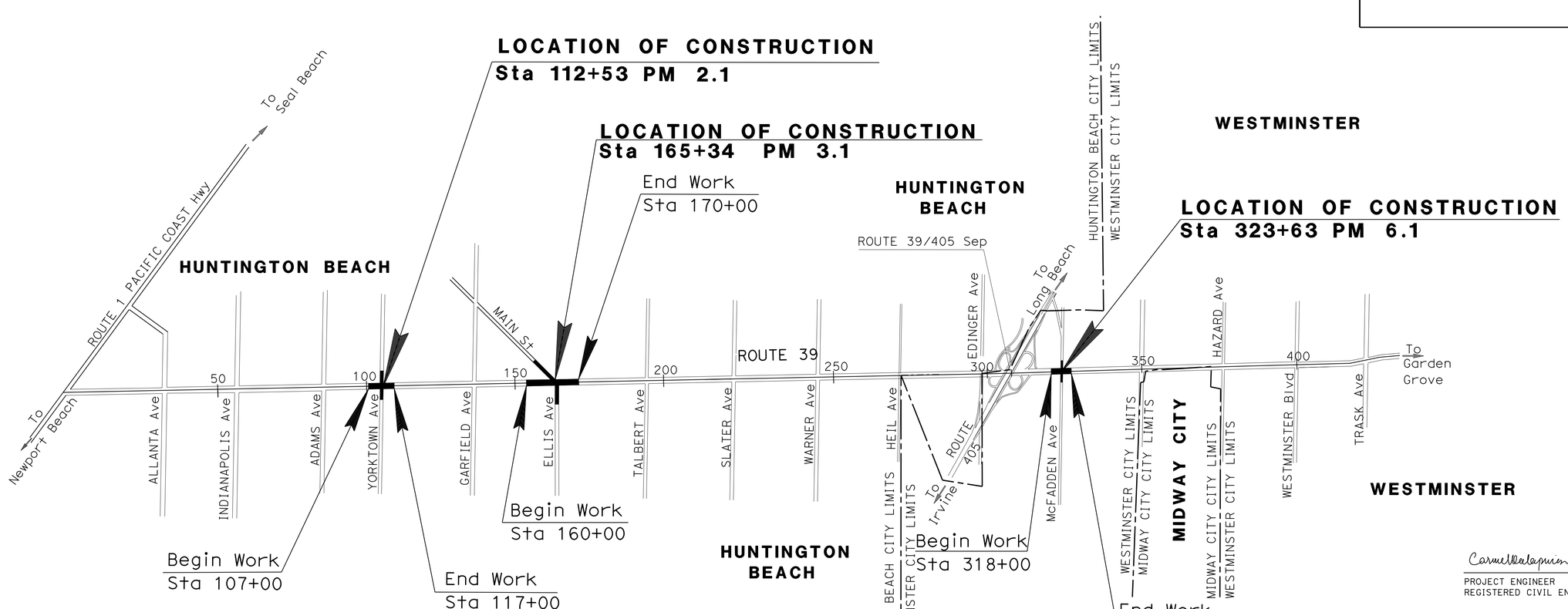

THE CONTRACTOR SHALL POSSESS THE CLASS (OR CLASSES) OF LICENSE AS SPECIFIED IN THE "NOTICE TO BIDDERS."

NO SCALE

PROJECT MANAGER: AHMAD HINDIYEH

DESIGN ENGINEER: CARMEL KALAPURAYIL

Carmel Kalapurayil 01-29-13
PROJECT ENGINEER REGISTERED CIVIL ENGINEER — DATE

REGISTERED PROFESSIONAL ENGINEER — CARMEL KALAPURAYIL — No. C 56654 — Exp. 6-30-13 — CIVIL — STATE OF CALIFORNIA

April 15, 2013
PLANS APPROVAL DATE

THE STATE OF CALIFORNIA OR ITS OFFICERS OR AGENTS SHALL NOT BE RESPONSIBLE FOR THE ACCURACY OR COMPLETENESS OF SCANNED COPIES OF THIS PLAN SHEET.

CONTRACT No.	12-0L9704
PROJECT ID	1200020262

LAST REVISION 00-00-00 — DATE PLOTTED => 25-JUL-2013 — TIME PLOTTED => 05:44

Dist	COUNTY	ROUTE	POST MILES TOTAL PROJECT	SHEET No.	TOTAL SHEETS
12	Ora	39	2.1, 3.1, 6.1	2	34

REGISTERED CIVIL ENGINEER 01-29-13 DATE

4-15-13
PLANS APPROVAL DATE

REGISTERED PROFESSIONAL ENGINEER CARMEL KALAPURAYIL No. C 56654 Exp. 6-30-13 CIVIL STATE OF CALIFORNIA

THE STATE OF CALIFORNIA OR ITS OFFICERS OR AGENTS SHALL NOT BE RESPONSIBLE FOR THE ACCURACY OR COMPLETENESS OF SCANNED COPIES OF THIS PLAN SHEET.

NOTES: (FOR SHEETS L-1 TO L-3)

1. FOR ACCURATE RIGHT OF WAY DATA, CONTACT RIGHT OF WAY ENGINEERING AT THE DISTRICT OFFICE.
2. FOR EACH CURB RAMPS, SAWCUT AND REMOVE EXISTING CURB RAMPS SIDEWALK, CURB AND GUTTER.
3. 4' LANDING SHALL BE WITHIN THE CROSSWALK.
4. FOR CASE A (Mod) DETAILS, SEE SHEET C-1.
5. FOR CASE B (Mod) DETAILS, SEE SHEET C-1.
6. FOR CASE C (Mod) DETAILS, SEE SHEET C-1.

LEGENDS:

- LOCATION NUMBER
- CURB RAMP DETECTABLE WARNING SURFACE
- RESET MEDIAN NOSE 4' BEHIND CROSSWALK
- PULL BOX
- TRAFFIC SIGNAL
- SERVICE EQUIPMENT ENCLOSURE

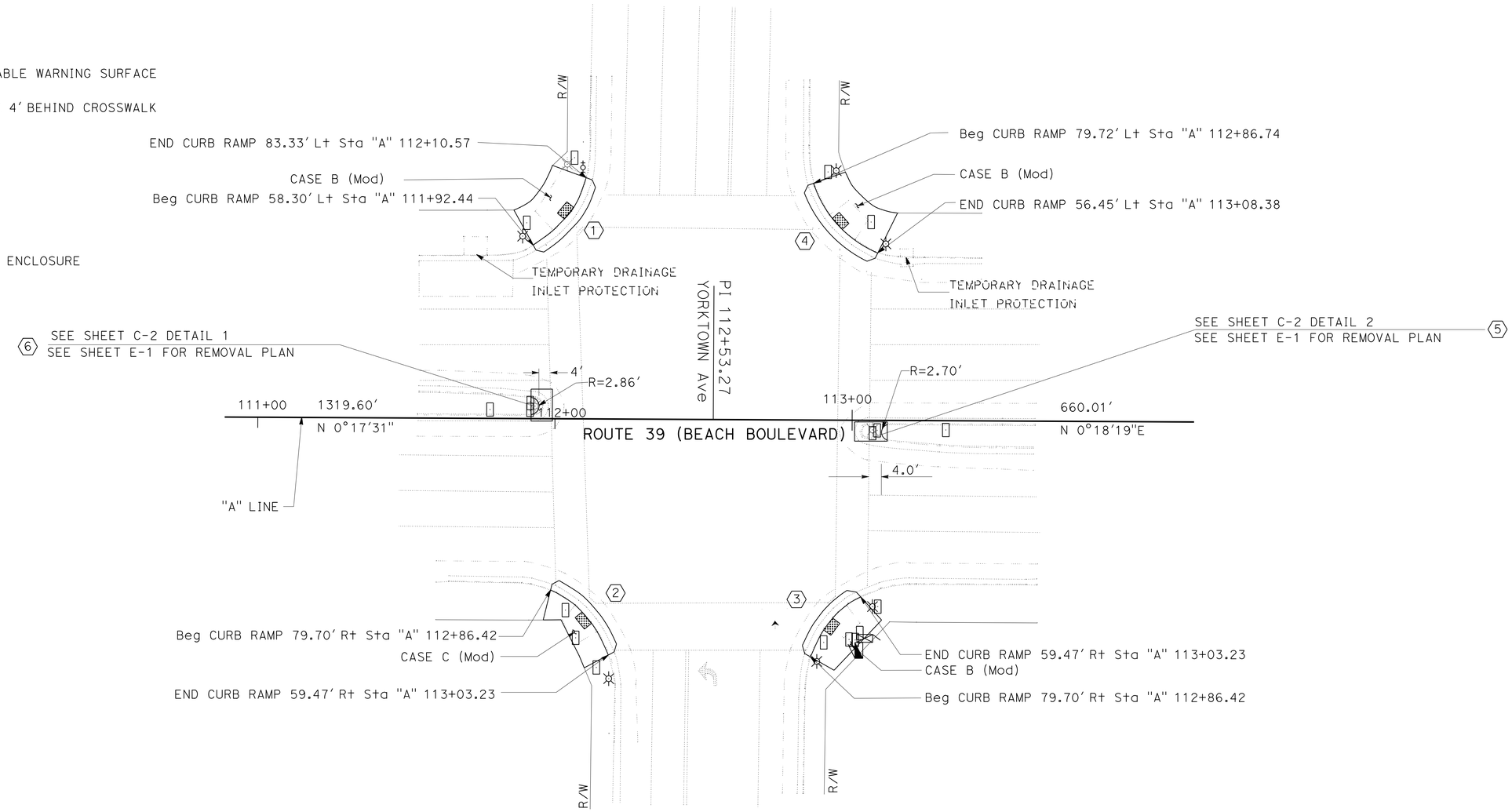

LAYOUT

SCALE: 1" = 20'

L-1

STATE OF CALIFORNIA - DEPARTMENT OF TRANSPORTATION
Caltrans® DESIGN DIVISION

FUNCTIONAL SUPERVISOR: ANDREW OSHRIN
CALCULATED-DESIGNED BY: CARMEL KALAPURAYIL
CHECKED BY: RAJU VORA
REVISED BY
DATE REVISED

LAST REVISION 00-00-00 | DATE PLOTTED => 17-APR-2013 | TIME PLOTTED => 12:36

Dist	COUNTY	ROUTE	POST MILES TOTAL PROJECT	SHEET No.	TOTAL SHEETS
12	Ora	39	2.1,3.1,6.1	3	34

REGISTERED CIVIL ENGINEER 01-29-13 DATE

4-15-13
PLANS APPROVAL DATE

REGISTERED PROFESSIONAL ENGINEER CARMEL KALAPURAYIL No. C 56654 Exp. 6-30-13 CIVIL STATE OF CALIFORNIA

THE STATE OF CALIFORNIA OR ITS OFFICERS OR AGENTS SHALL NOT BE RESPONSIBLE FOR THE ACCURACY OR COMPLETENESS OF SCANNED COPIES OF THIS PLAN SHEET.

NOTE:

FOR ACCURATE RIGHT OF WAY DATA, CONTACT RIGHT OF WAY ENGINEERING AT THE DISTRICT OFFICE.

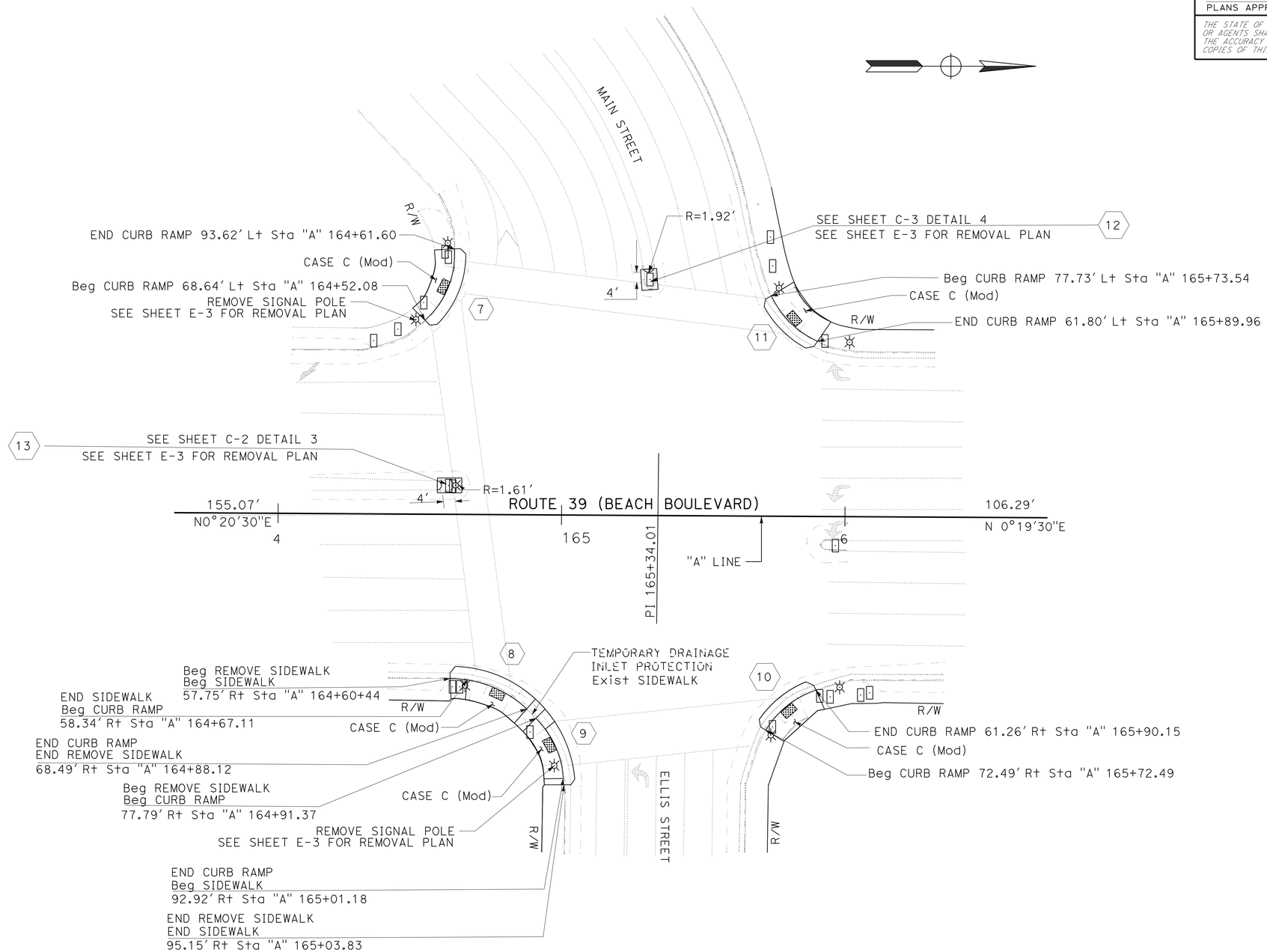

LAYOUT

SCALE: 1" = 20'

L-2

STATE OF CALIFORNIA - DEPARTMENT OF TRANSPORTATION
Caltrans®
DESIGN DIVISION

FUNCTIONAL SUPERVISOR: ANDREW OSHRIN
CALCULATED-DESIGNED BY: CARMEL KALAPURAYIL
CHECKED BY: RAJU VORA
REVISED BY
DATE REVISED

LAST REVISION 00-00-00
DATE PLOTTED => 17-APR-2013
TIME PLOTTED => 12:36

Dist	COUNTY	ROUTE	POST MILES TOTAL PROJECT	SHEET No.	TOTAL SHEETS
12	Ora	39	2.1,3.1,6.1	4	34

REGISTERED CIVIL ENGINEER 01-29-13 DATE

4-15-13
PLANS APPROVAL DATE

REGISTERED PROFESSIONAL ENGINEER CARMEL KALAPURAYIL No. C 56654 Exp. 6-30-13 CIVIL STATE OF CALIFORNIA

THE STATE OF CALIFORNIA OR ITS OFFICERS OR AGENTS SHALL NOT BE RESPONSIBLE FOR THE ACCURACY OR COMPLETENESS OF SCANNED COPIES OF THIS PLAN SHEET.

NOTE:

FOR ACCURATE RIGHT OF WAY DATA, CONTACT RIGHT OF WAY ENGINEERING AT THE DISTRICT OFFICE.

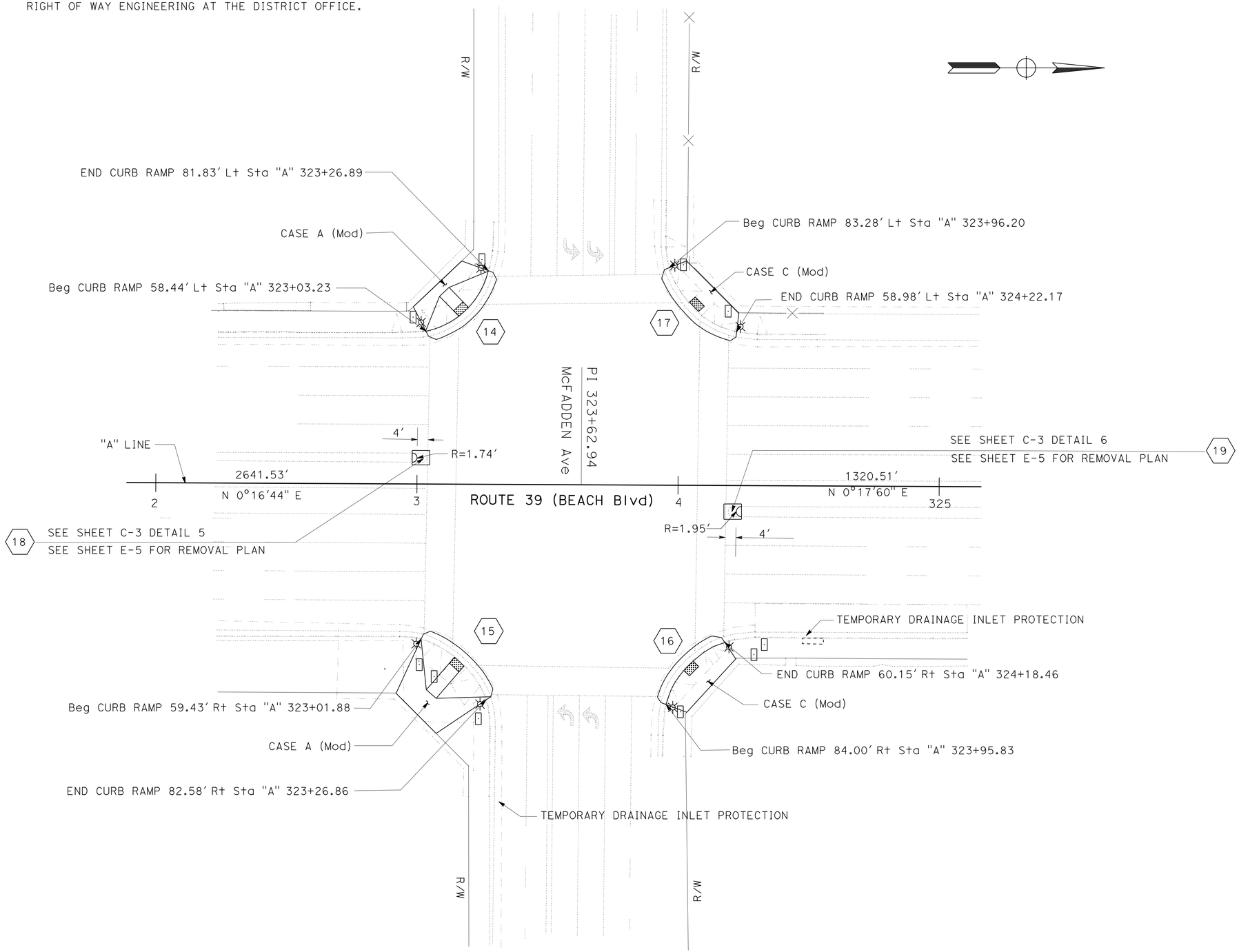

LAYOUT

SCALE: 1" = 20′

L-3

STATE OF CALIFORNIA - DEPARTMENT OF TRANSPORTATION
Caltrans
DESIGN DIVISION

FUNCTIONAL SUPERVISOR: ANDREW OSHRIN
CALCULATED-DESIGNED BY: CARMEL KALAPURAYIL
CHECKED BY: RAJU VORA
REVISED BY
DATE REVISED

LAST REVISION 00-00-00
DATE PLOTTED => 17-APR-2013
TIME PLOTTED => 12:36

Dist	COUNTY	ROUTE	POST MILES TOTAL PROJECT	SHEET No.	TOTAL SHEETS
12	Ora	39	2.1,3.1,6.1	5	34

REGISTERED CIVIL ENGINEER 01-29-13 DATE

4-15-13
PLANS APPROVAL DATE

REGISTERED PROFESSIONAL ENGINEER CARMEL KALAPURAYIL No. C 56654 Exp. 6-30-13 CIVIL STATE OF CALIFORNIA

THE STATE OF CALIFORNIA OR ITS OFFICERS OR AGENTS SHALL NOT BE RESPONSIBLE FOR THE ACCURACY OR COMPLETENESS OF SCANNED COPIES OF THIS PLAN SHEET.

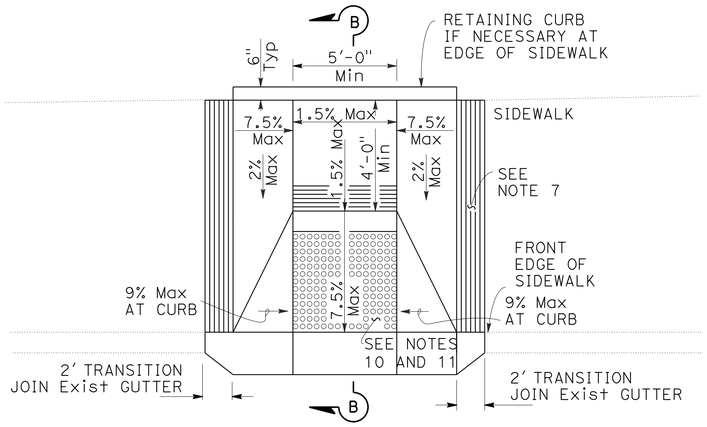

CASE B (Mod)

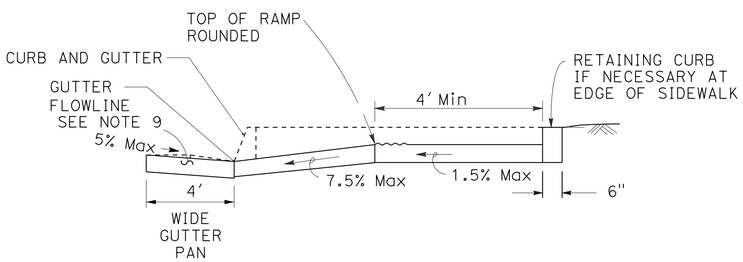

SECTION B-B

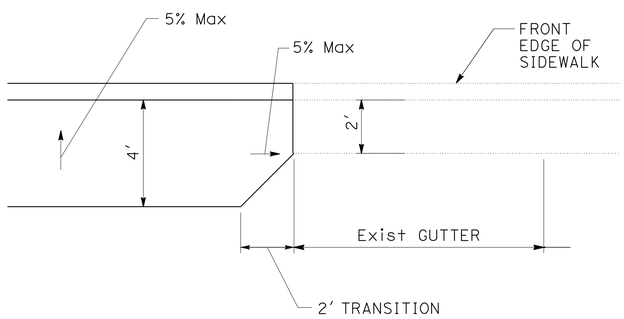

GUTTER TRANSITION

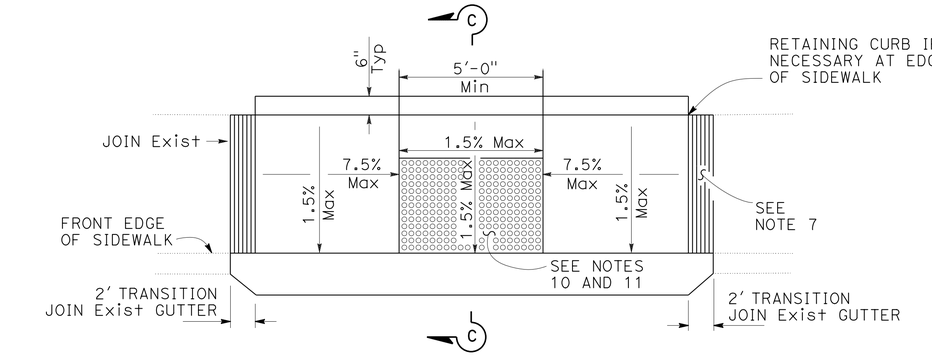

CASE C (Mod)

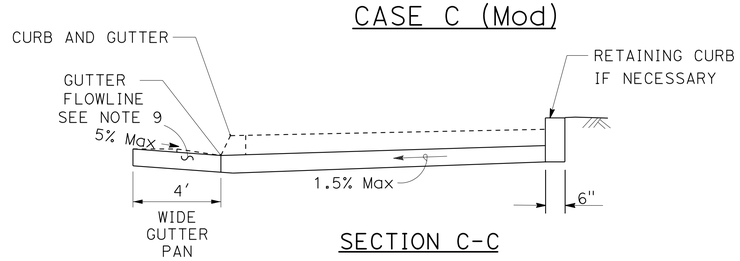

SECTION C-C

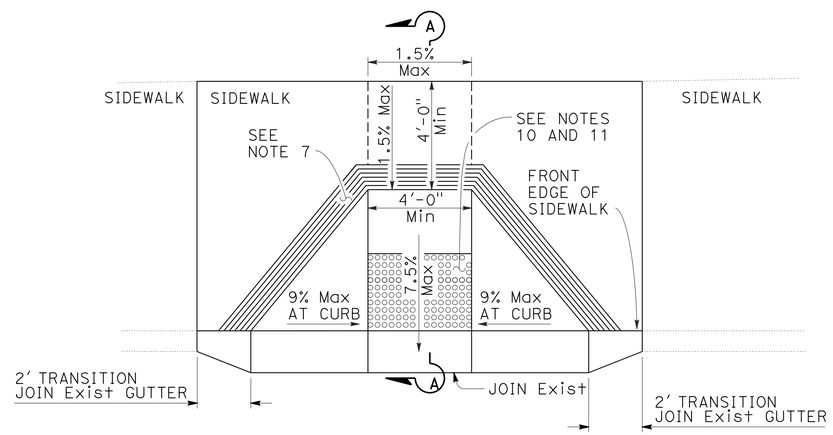

CASE A (Mod)

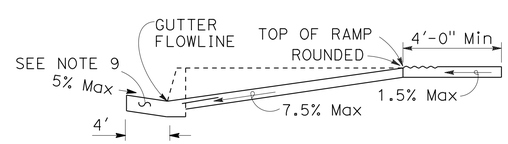

SECTION A-A

NOTES:

1. AS SITE CONDITIONS DICTATE, CASE A THROUGH CASE G CURB RAMPS MAY BE USED FOR CORNER INSTALLATIONS SIMILAR TO THOSE SHOWN IN DETAIL A AND DETAIL B. THE CASE OF CURB RAMPS USED IN DETAIL A DO NOT HAVE TO BE THE SAME. CASE A THROUGH CASE G CURB RAMPS ALSO MAY BE USED AT MID BLOCK LOCATIONS, AS SITE CONDITIONS DICTATE.
2. IF DISTANCE FROM CURB TO BACK OF SIDEWALK IS TOO SHORT TO ACCOMMODATE RAMP AND 4'-0" PLATFORM (LANDING) AS SHOWN IN CASE A, THE SIDEWALK MAY BE DEPRESSED LONGITUDINALLY AS IN CASE B, OR C OR MAY BE WIDENED AS IN CASE D.
3. WHEN RAMP IS LOCATED IN CENTER OF CURB RETURN, CROSSWALK CONFIGURATION MUST BE SIMILAR TO THAT SHOWN FOR DETAIL B OF Std PLAN A88A.
4. AS SITE CONDITIONS DICTATE, THE RETAINING CURB SIDE AND THE FLARED SIDE OF THE CASE G RAMP SHALL BE CONSTRUCTED IN REVERSED POSITION.
5. IF LOCATED ON A CURVE, THE SIDES OF THE RAMP NEED NOT BE PARALLEL, BUT THE MINIMUM WIDTH OF THE RAMP SHALL BE 4'-0".
6. SIDE SLOPE OF RAMP FLARES VARY UNIFORMLY FROM A MAXIMUM OF 9% AT CURB TO CONFORM WITH LONGITUDINAL SIDEWALK SLOPE ADJACENT TO TOP OF THE RAMP, EXCEPT IN CASE C AND CASE F.
7. THE CURB RAMP SHALL BE OUTLINED, AS SHOWN, WITH A 1'-0" WIDE BORDER WITH 1/4" GROOVES APPROXIMATELY 3/4" ON CENTER. SEE GROOVING DETAIL.
8. TRANSITIONS FROM RAMPS AND LANDING TO WALKS, GUTTERS OR STREETS SHALL BE FLUSH AND FREE OF ABRUPT CHANGES.
9. MAXIMUM SLOPES OF ADJOINING GUTTERS, THE ROAD SURFACE IMMEDIATELY ADJACENT TO THE CURB RAMP OR ACCESSIBLE ROUTE SHALL NOT EXCEED 5 PERCENT WITHIN 4'-0" OF THE TOP AND BOTTOM OF THE CURB RAMP.
10. CURB RAMPS SHALL HAVE A DETECTABLE WARNING SURFACE THAT EXTENDS THE FULL WIDTH AND 3'-0" DEPTH OF THE RAMP. DETECTABLE WARNING SURFACES SHALL CONFORM TO THE DETAILS ON THIS PLAN AND THE REQUIREMENTS IN THE SPECIAL PROVISIONS.
11. THE EDGE OF THE DETECTABLE WARNING SURFACE NEAREST THE STREET SHALL BE BETWEEN 6" AND 8" FROM THE GUTTER FLOWLINE.
12. SIDEWALK AND RAMP THICKNESS, "T", SHALL BE 3 1/2" MINIMUM.
13. UTILITY PULL BOXES, MANHOLES, VAULTS AND ALL OTHER UTILITY FACILITIES WITHIN THE BOUNDARIES OF THE CURB RAMP WILL BE RELOCATED OR ADJUSTED TO GRADE BY THE OWNER PRIOR TO, OR IN CONJUNCTION WITH, CURB RAMP CONSTRUCTION.
14. FOR RETROFIT CONDITIONS, REMOVAL AND REPLACEMENT OF CURB APRON WILL BE AT THE CONTRACTOR'S OPTION, UNLESS OTHERWISE SHOWN ON PROJECT PLANS.
15. STATION CALL OUT LOCATION IS APPROXIMATE.

CONSTRUCTION DETAILS

NO SCALE

C-1

STATE OF CALIFORNIA - DEPARTMENT OF TRANSPORTATION
Caltrans
DESIGN DIVISION
FUNCTIONAL SUPERVISOR: ANDREW OSHRIN
CALCULATED-DESIGNED BY: CARMEL KALAPURAYIL
CHECKED BY: RAJU VORA
REVISED BY
DATE REVISED

LAST REVISION 00-00-00
DATE PLOTTED => 17-APR-2013
TIME PLOTTED => 12:36

Dist	COUNTY	ROUTE	POST MILES TOTAL PROJECT	SHEET No.	TOTAL SHEETS
12	Ora	39	2.1,3.1,6.1	6	34

REGISTERED CIVIL ENGINEER 01-29-13 DATE

4-15-13
PLANS APPROVAL DATE

REGISTERED PROFESSIONAL ENGINEER CARMEL KALAPURAYIL No. C 56654 Exp. 6-30-13 CIVIL STATE OF CALIFORNIA

THE STATE OF CALIFORNIA OR ITS OFFICERS OR AGENTS SHALL NOT BE RESPONSIBLE FOR THE ACCURACY OR COMPLETENESS OF SCANNED COPIES OF THIS PLAN SHEET.

LEGENDS:

EXCAVATE 2.15′ ROADWAY IN MEDIAN AREA
RECONSTRUCT WITH 0.5′ CLASS 2 AGRREGATE SUB BASE, 1.65′ HOT MIX ASPHALT

RECONSTRUCT Conc MEDIAN NOSE 4" BEHIND CROSSWALK

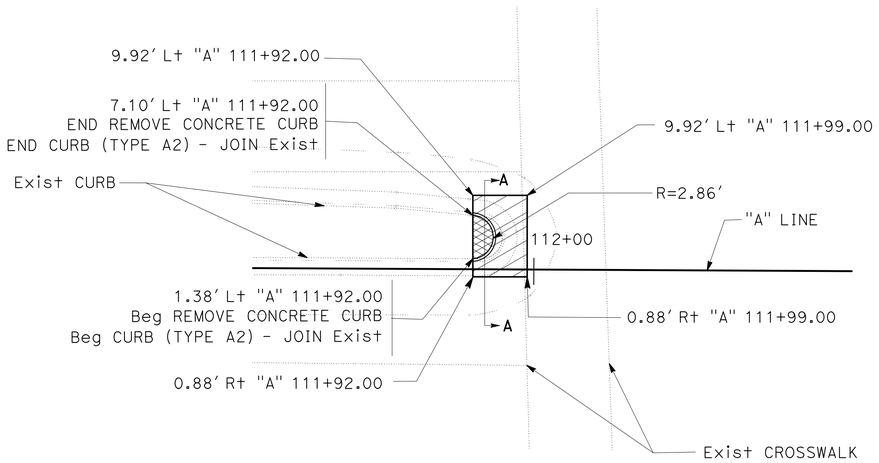

DETAIL 1

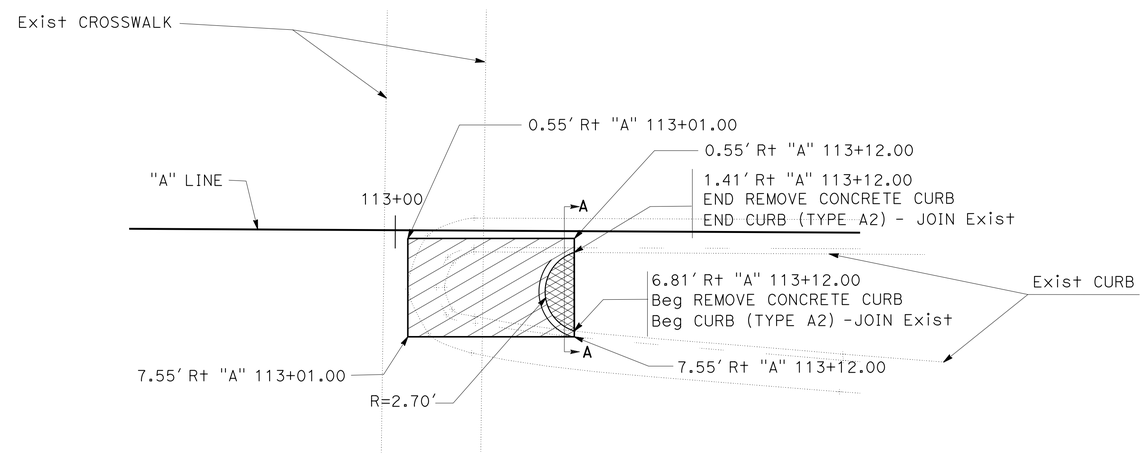

DETAIL 2

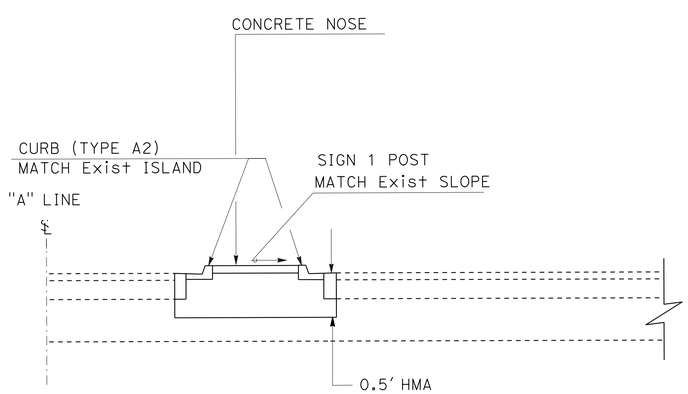

SECTION A-A

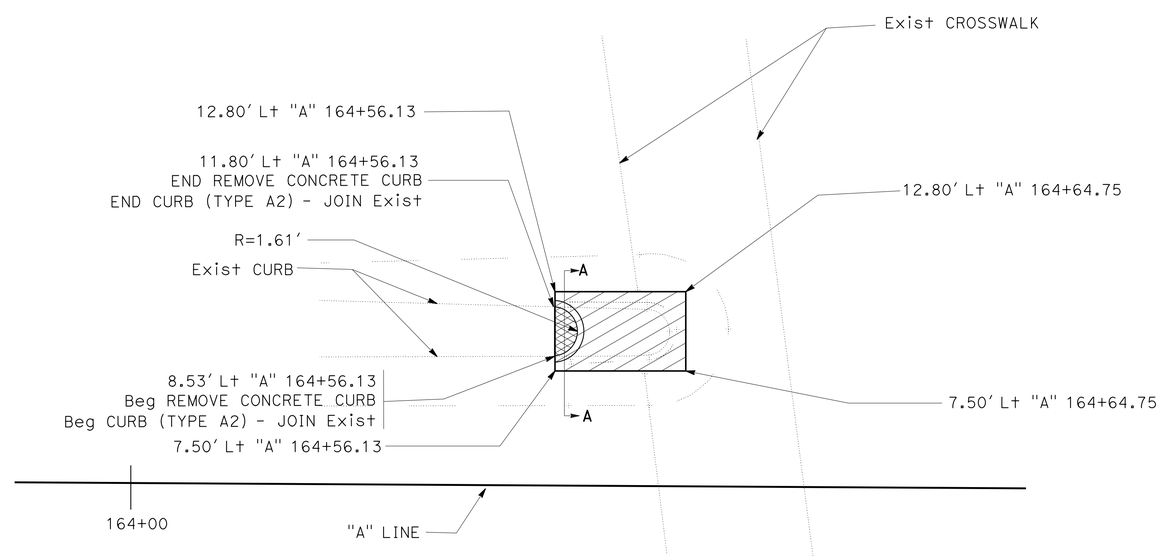

DETAIL 3

CONSTRUCTION DETAILS

NO SCALE

C-2

STATE OF CALIFORNIA - DEPARTMENT OF TRANSPORTATION
Caltrans DESIGN DIVISION

FUNCTIONAL SUPERVISOR: ANDREW OSHRIN
CALCULATED-DESIGNED BY: CARMEL KALAPURAYIL
CHECKED BY: RAJU VORA
REVISED BY
DATE REVISED

LAST REVISION 00-00-00
DATE PLOTTED => 17-APR-2013
TIME PLOTTED => 12:36

Dist	COUNTY	ROUTE	POST MILES TOTAL PROJECT	SHEET No.	TOTAL SHEETS
12	Ora	39	2.1,3.1,6.1	7	34

REGISTERED CIVIL ENGINEER 01-29-13 DATE

4-15-13
PLANS APPROVAL DATE

REGISTERED PROFESSIONAL ENGINEER CARMEL KALAPURAYIL No. C 56654 Exp. 6-30-13 CIVIL STATE OF CALIFORNIA

THE STATE OF CALIFORNIA OR ITS OFFICERS OR AGENTS SHALL NOT BE RESPONSIBLE FOR THE ACCURACY OR COMPLETENESS OF SCANNED COPIES OF THIS PLAN SHEET.

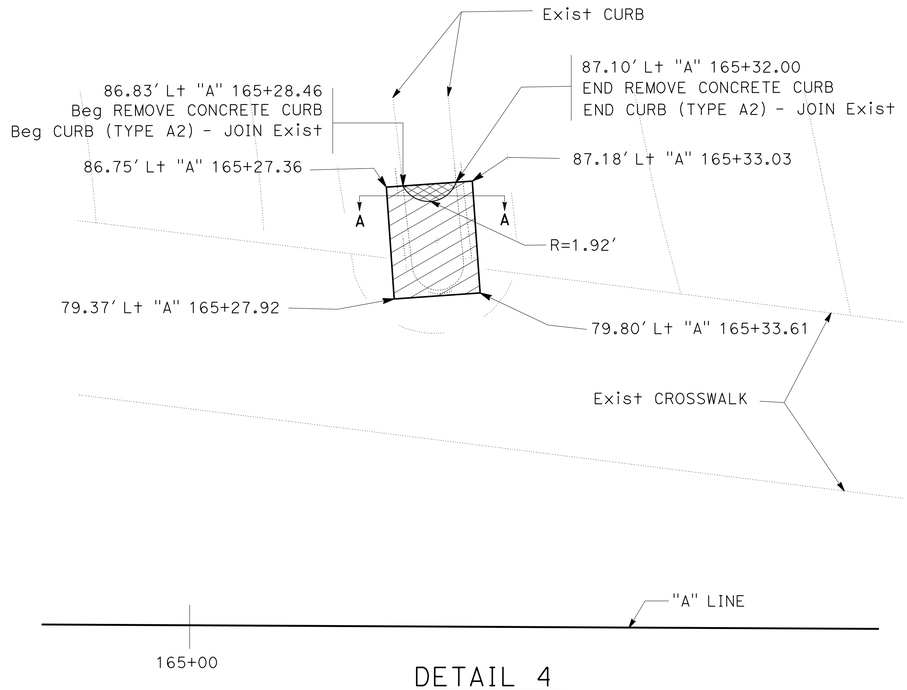

DETAIL 4

SEE SECTION A-A SHEET C-2

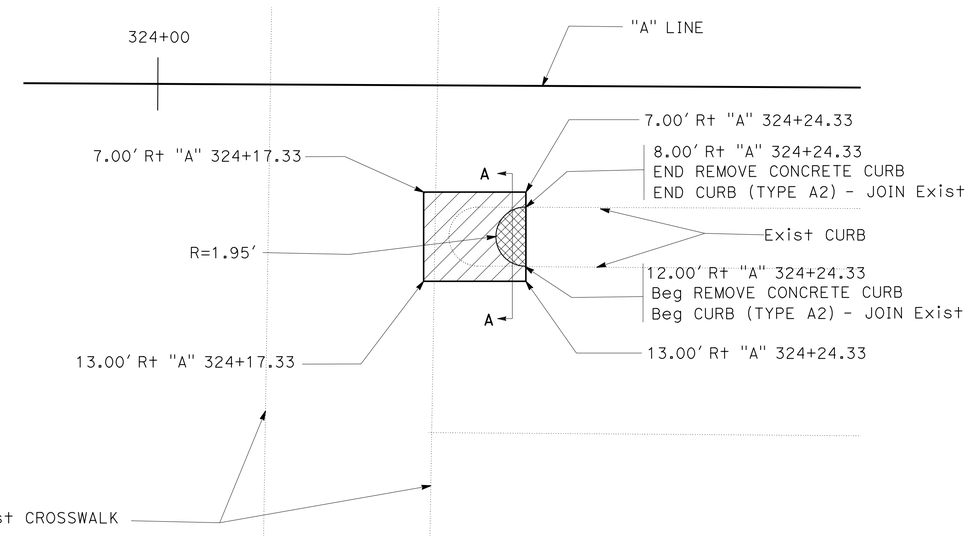

DETAIL 6

SEE SECTION A-A SHEET C-2

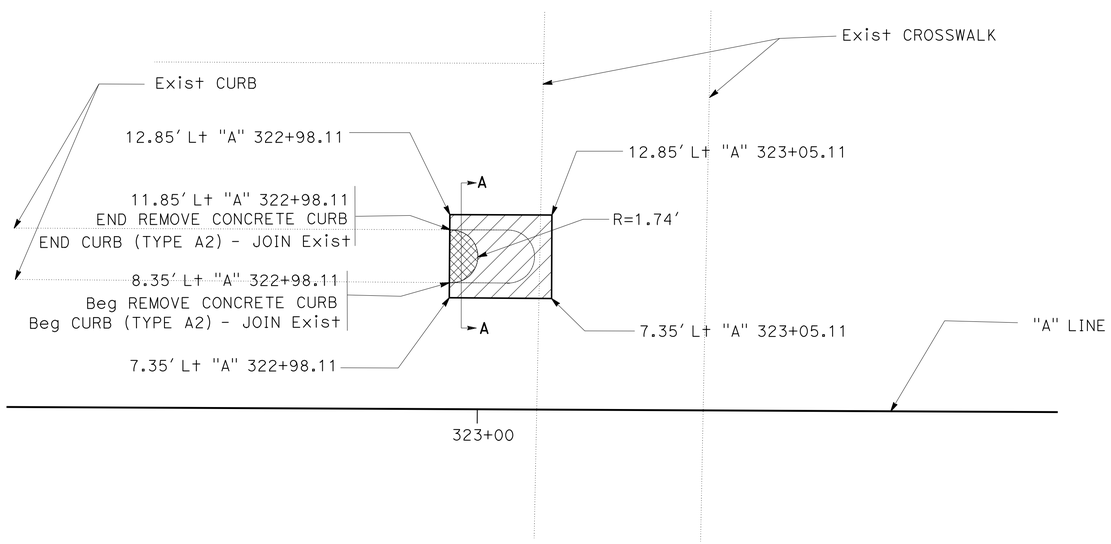

DETAIL 5

SEE SECTION A-A SHEET C-2

CONSTRUCTION DETAILS

NO SCALE

C-3

STATE OF CALIFORNIA - DEPARTMENT OF TRANSPORTATION
Caltrans® DESIGN DIVISION

FUNCTIONAL SUPERVISOR: ANDREW OSHRIN

CALCULATED-DESIGNED BY: CARMEL KALAPURAYIL
CHECKED BY: RAJU VORA

REVISED BY | DATE REVISED

LAST REVISION 00-00-00 | DATE PLOTTED => 17-APR-2013 | TIME PLOTTED => 12:36

Dist	COUNTY	ROUTE	POST MILES TOTAL PROJECT	SHEET No.	TOTAL SHEETS
12	Ora	39	2.1,3.1,6.1	8	34

Brandon Tran 01-29-13
REGISTERED CIVIL ENGINEER DATE

4-15-13
PLANS APPROVAL DATE

REGISTERED PROFESSIONAL ENGINEER
BRANDON TRAN
No. C58283
Exp. 6-30-14
CIVIL
STATE OF CALIFORNIA

THE STATE OF CALIFORNIA OR ITS OFFICERS OR AGENTS SHALL NOT BE RESPONSIBLE FOR THE ACCURACY OR COMPLETENESS OF SCANNED COPIES OF THIS PLAN SHEET.

NOTES:

1. FOR ACCURATE RIGHT OF WAY DATA, CONTACT RIGHT OF WAY ENGINEERING AT THE DISTRICT OFFICE.
2. LOCATIONS OF UTILITY FACILITIES SHOWN ON THESE PLANS ARE APPROXIMATE AND SHALL BE VERIFIED BY THE CONTRACTOR PRIOR TO CONSTRUCTION.
3. UTILITY OWNERSHIPS:
   SCG - SOUTHERN CALIFORNIA GAS
   SCE - SOUTHERN CALIFORNIA EDISON
   OCSD - ORANGE COUNTY SANITATION DISTRICT
   HB - CITY OF HUNTINGTON BEACH

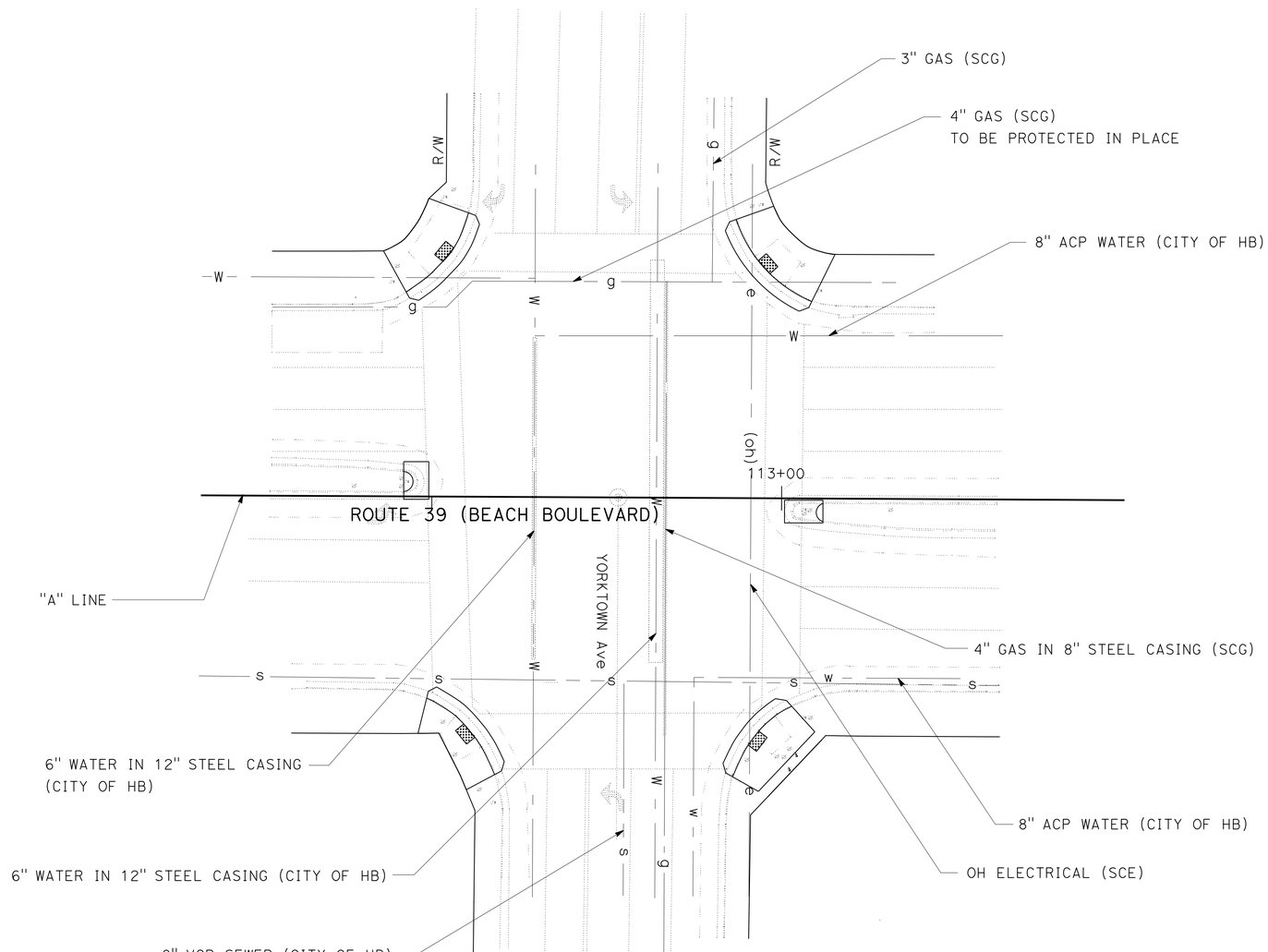

UTILITY PLAN

SCALE: 1" = 20'

U-1

STATE OF CALIFORNIA - DEPARTMENT OF TRANSPORTATION
Caltrans
DESIGN DIVISION

FUNCTIONAL SUPERVISOR: CHRISTOPHER H. LE
CALCULATED-DESIGNED BY: BRANDON TRAN
CHECKED BY: CHRISTOPHER H. LE
REVISED BY
DATE REVISED

LAST REVISION 00-00-00
DATE PLOTTED => 17-APR-2013
TIME PLOTTED => 12:36

Dist	COUNTY	ROUTE	POST MILES TOTAL PROJECT	SHEET No.	TOTAL SHEETS
12	Ora	39	2.1,3.1,6.1	9	34

Brandon Tran 01-29-13
REGISTERED CIVIL ENGINEER DATE

4-15-13
PLANS APPROVAL DATE

REGISTERED PROFESSIONAL ENGINEER
BRANDON TRAN
No. C58283
Exp. 6-30-14
CIVIL
STATE OF CALIFORNIA

THE STATE OF CALIFORNIA OR ITS OFFICERS OR AGENTS SHALL NOT BE RESPONSIBLE FOR THE ACCURACY OR COMPLETENESS OF SCANNED COPIES OF THIS PLAN SHEET.

NOTE:

FOR ACCURATE RIGHT OF WAY DATA, CONTACT
RIGHT OF WAY ENGINEERING AT THE DISTRICT OFFICE.

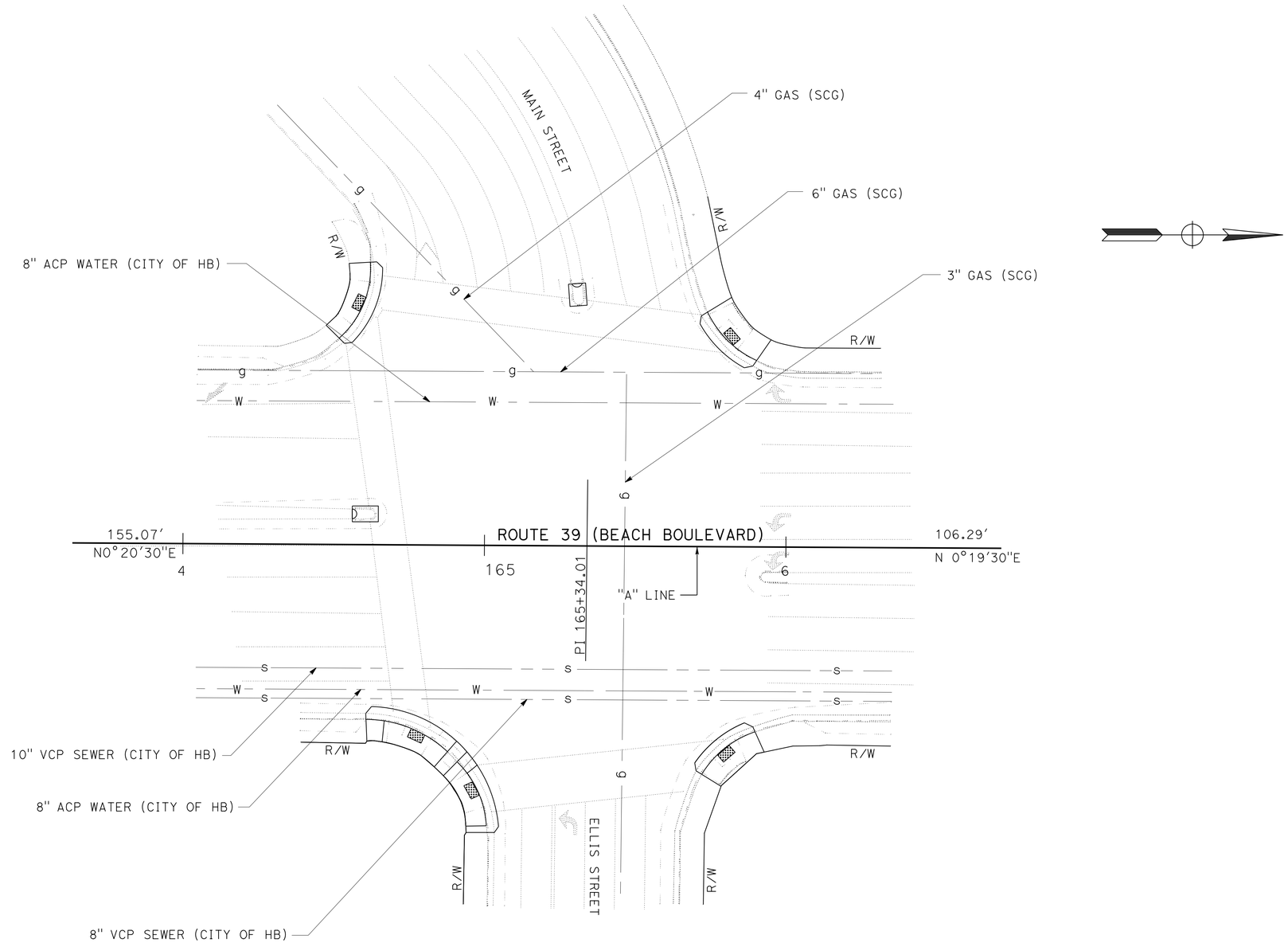

UTILITY PLAN

SCALE: 1" = 20'

U-2

STATE OF CALIFORNIA - DEPARTMENT OF TRANSPORTATION
Caltrans® DESIGN DIVISION

FUNCTIONAL SUPERVISOR: CHRISTOPHER H. LE
CALCULATED-DESIGNED BY: BRANDON TRAN
CHECKED BY: CHRISTOPHER H. LE
REVISED BY
DATE REVISED

LAST REVISION 00-00-00
DATE PLOTTED => 17-APR-2013
TIME PLOTTED => 12:36

Dist	COUNTY	ROUTE	POST MILES TOTAL PROJECT	SHEET No.	TOTAL SHEETS
12	Ora	39	2.1,3.1,6.1	10	34

Brandon Tran 01-29-13
REGISTERED CIVIL ENGINEER DATE

4-15-13
PLANS APPROVAL DATE

REGISTERED PROFESSIONAL ENGINEER
BRANDON TRAN
No. C58283
Exp. 6-30-14
CIVIL
STATE OF CALIFORNIA

THE STATE OF CALIFORNIA OR ITS OFFICERS OR AGENTS SHALL NOT BE RESPONSIBLE FOR THE ACCURACY OR COMPLETENESS OF SCANNED COPIES OF THIS PLAN SHEET.

NOTE:

FOR ACCURATE RIGHT OF WAY DATA, CONTACT
RIGHT OF WAY ENGINEERING AT THE DISTRICT OFFICE.

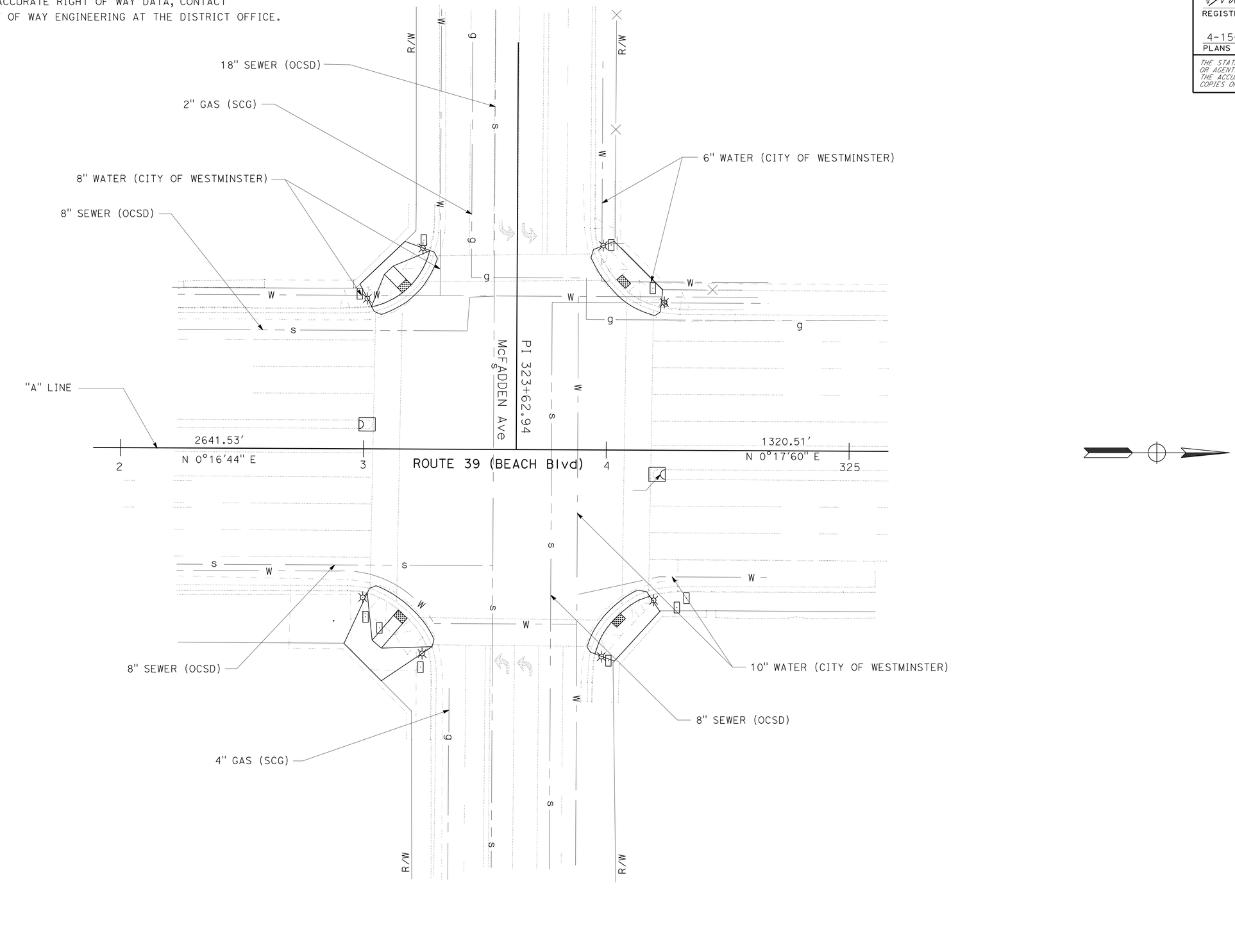

UTILITY PLAN

SCALE: 1" = 20'

U-3

STATE OF CALIFORNIA - DEPARTMENT OF TRANSPORTATION
Caltrans
DESIGN DIVISION

FUNCTIONAL SUPERVISOR: CHRISTOPHER H. LE
CALCULATED-DESIGNED BY: BRANDON TRAN
CHECKED BY: CHRISTOPHER H. LE
REVISED BY
DATE REVISED

LAST REVISION 00-00-00
DATE PLOTTED => 17-APR-2013
TIME PLOTTED => 12:36

Dist	COUNTY	ROUTE	POST MILES TOTAL PROJECT	SHEET No.	TOTAL SHEETS
12	Ora	39	2.1,3.1,6.1	11	34

Carmel Kalapurayil 01-29-13
REGISTERED CIVIL ENGINEER DATE

4-15-13
PLANS APPROVAL DATE

REGISTERED PROFESSIONAL ENGINEER CARMEL KALAPURAYIL No. C 56654 Exp. 6-30-13 CIVIL STATE OF CALIFORNIA

THE STATE OF CALIFORNIA OR ITS OFFICERS OR AGENTS SHALL NOT BE RESPONSIBLE FOR THE ACCURACY OR COMPLETENESS OF SCANNED COPIES OF THIS PLAN SHEET.

NOTES:

1. SIGN LOCATIONS ARE APPROXIMATE, EXACT SIGN LOCATIONS SHALL BE DETERMINED BY THE ENGINEER.
2. 48" MINIMUM AMERICANS WITH DISABILITIES ACT (ADA) CLEARANCE SHALL BE MAINTAINED WHEN SIGNS ARE PLACED ON SIDEWALK.

	FRAME	SIGN MESSAGE
PCMS	1st FRAME	RIGHT LANE CLOSED AT .....(STREET NAME)
	2nd FRAME	USE ALTERNATE ROUTES

LEGEND:

(X) CONSTRUCTION AREA SIGN

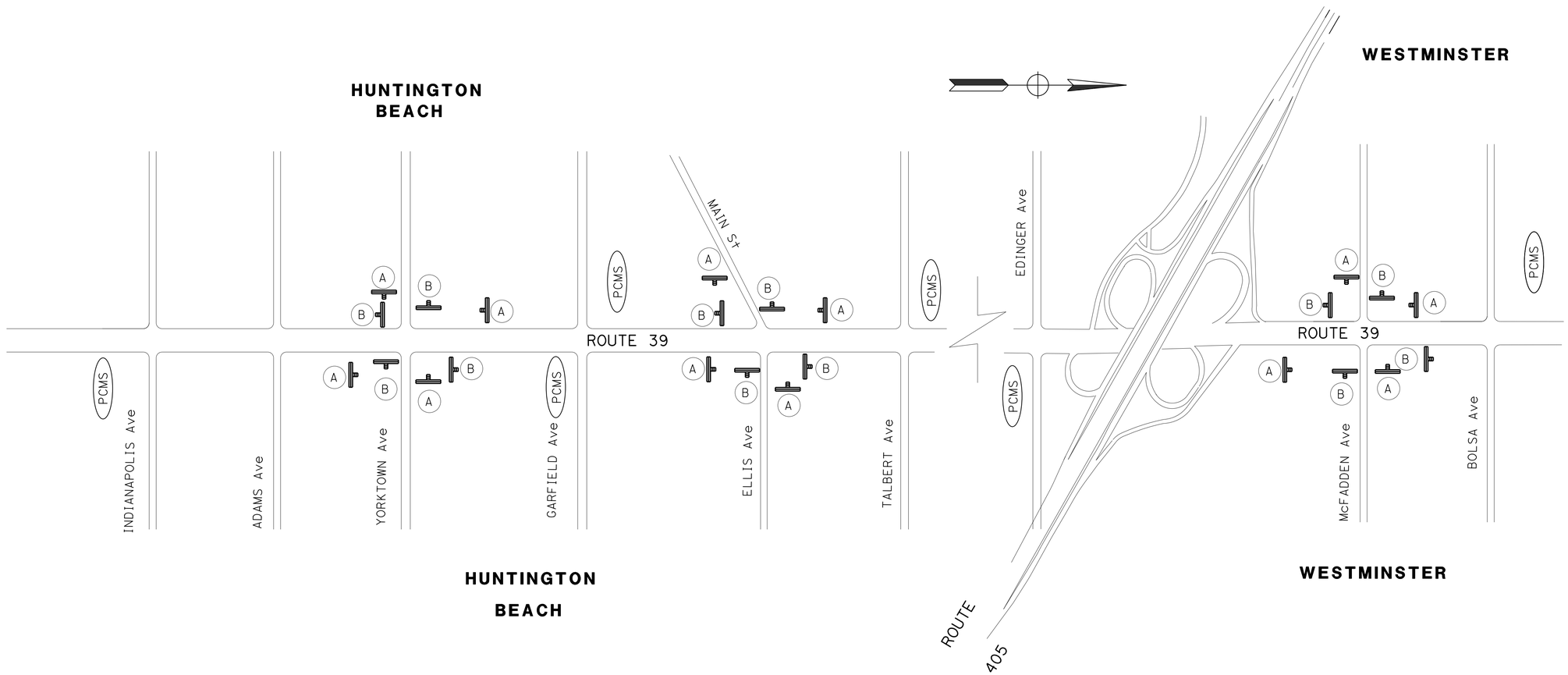

CONSTRUCTION AREA SIGNS

SIGN No.	SIGN CODE	PANEL SIZE	SIGN MESSAGE	No. OF POSTS AND SIZE	No. OF SIGNS
(A)	W20-1	36" x 36"	ROAD WORK AHEAD	1- 4" x 4" (S)	12
(B)	G20-2	36" x 18"	END ROAD WORK	1- 4" x 4" (S)	12

(S) STATIONARY SIGN

APPROVED FOR CONSTRUCTION AREA SIGN WORK ONLY

CONSTRUCTION AREA SIGNS

NO SCALE

CS-1

STATE OF CALIFORNIA - DEPARTMENT OF TRANSPORTATION
Caltrans
DESIGN DIVISION

FUNCTIONAL SUPERVISOR: ANDREW OSHRIN
CALCULATED-DESIGNED BY: CARMEL KALAPURAYIL
CHECKED BY: RAJU VORA
REVISED BY
DATE REVISED

LAST REVISION 00-00-00
DATE PLOTTED => 17-APR-2013
TIME PLOTTED => 12:36

Dist	COUNTY	ROUTE	POST MILES TOTAL PROJECT	SHEET No.	TOTAL SHEETS
12	Ora	39	2.1,3.1,6.1	12	34

REGISTERED CIVIL ENGINEER 04-12-13 DATE

4-15-13
PLANS APPROVAL DATE

REGISTERED PROFESSIONAL ENGINEER CARMEL KALAPURAYIL No. C 56654 Exp. 6-30-13 CIVIL STATE OF CALIFORNIA

THE STATE OF CALIFORNIA OR ITS OFFICERS OR AGENTS SHALL NOT BE RESPONSIBLE FOR THE ACCURACY OR COMPLETENESS OF SCANNED COPIES OF THIS PLAN SHEET.

NOTES:

1. SIGN LOCATIONS ARE APPROXIMATE, EXACT SIGN LOCATIONS SHALL BE DETERMINED BY THE ENGINEER
2. 48" MINIMUM AMERICANS WITH DISABILITIES ACT (ADA) CLEARANCE SHALL BE MAINTAINED WHEN SIGNS ARE PLACED ON SIDEWALK
3. THE CONTRACTOR SHALL PROVIDE AMERICANS WITH DISABILITIES ACT (ADA) SIDEWALK PATH ON ONE SIDE WHILE WORKING ON OTHER SIDE OF THE ROAD
4. THE CONTRACTOR SHALL OBTAIN APPLICABLE PERMITS FROM THE CITIES PRIOR TO ANY WORK OR PLACEMENT OF TRAFFIC CONTROL DEVICES WITHIN THE CITIES RIGHT OF WAY

LEGEND:

CONSTRUCTION AREA SIGN, ON TYPE II BARRICADE

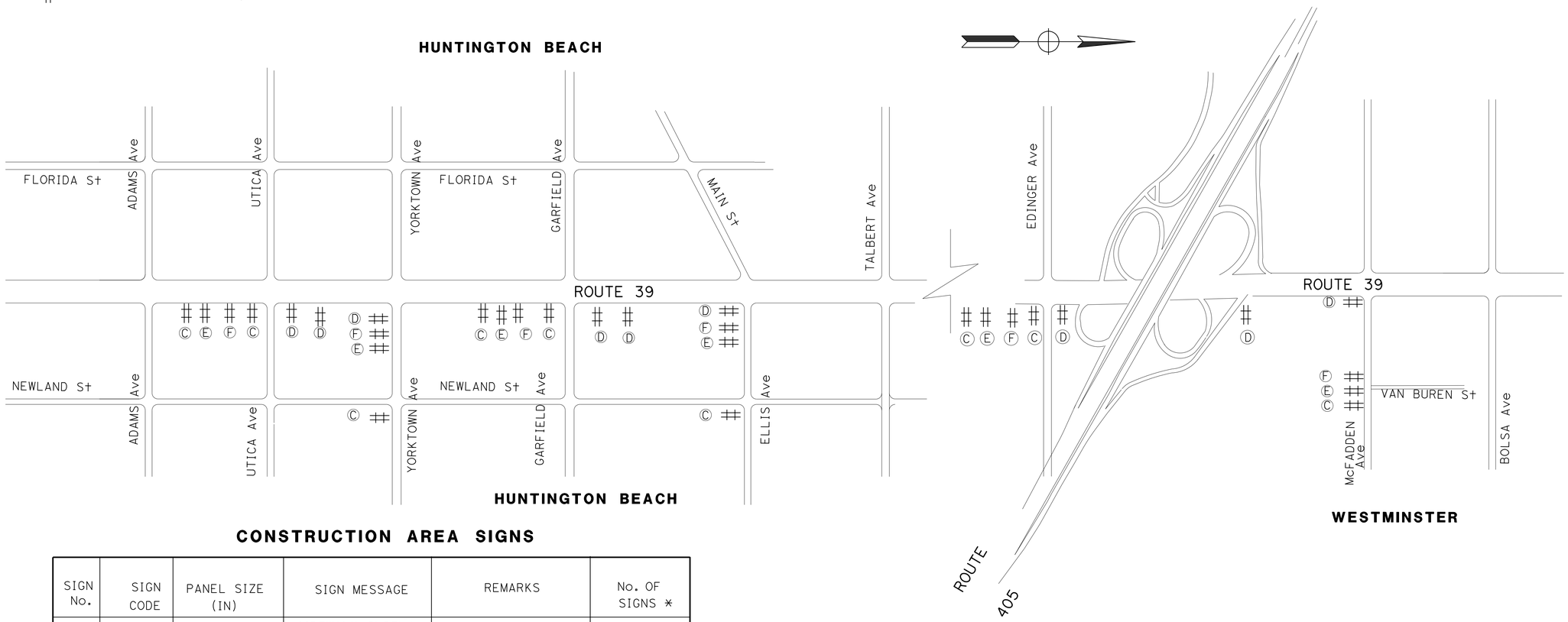

CONSTRUCTION AREA SIGNS

SIGN No.	SIGN CODE	PANEL SIZE (IN)	SIGN MESSAGE	REMARKS	No. OF SIGNS *
C	T-19 **	36x24	SIDEWALK CLOSED USE OTHERSIDE (BLACK ON WHITE)	ON TYPE II BARRICADE	18
D	T-20 **	36x18	SIDEWALK CLOSED (BLACK ON WHITE)	ON TYPE II BARRICADE	18
E	W11-1	36x24	BICYCLE SYMBOL	ON TYPE II BARRICADE	12
F	W16-1	36x24	SHARE THE ROAD	ON TYPE II BARRICADE	12

* SEE SHEET CS-1 FOR ADDITIONAL CONSTRUCTION AREA SIGNS

* * SPECIAL SIGN

SIDEWALK CLOSED USE OTHERSIDE

T-19

SIDEWALK CLOSED

T-20

TRAFFIC HANDLING PLAN
(PEDESTRIANS AND BICYCLES)
STAGE 1

NO SCALE

APPROVED FOR CONSTRUCTION AREA SIGN WORK ONLY

TH-1

STATE OF CALIFORNIA - DEPARTMENT OF TRANSPORTATION
Caltrans
DESIGN DIVISION

FUNCTIONAL SUPERVISOR: ANDREW OSHRIN
CALCULATED-DESIGNED BY: CARMEL KALAPURAYIL
CHECKED BY: RAJU VORA
REVISED BY
DATE REVISED

LAST REVISION 00-00-00
DATE PLOTTED => 17-APR-2013
TIME PLOTTED => 12:36

Dist	COUNTY	ROUTE	POST MILES TOTAL PROJECT	SHEET No.	TOTAL SHEETS
12	Ora	39	2.1,3.1,6.1	13	34

Carmel Kalapurayil 04-12-13
REGISTERED CIVIL ENGINEER DATE

4-15-13
PLANS APPROVAL DATE

REGISTERED PROFESSIONAL ENGINEER
CARMEL KALAPURAYIL
No. C 56654
Exp. 6-30-13
CIVIL
STATE OF CALIFORNIA

THE STATE OF CALIFORNIA OR ITS OFFICERS OR AGENTS SHALL NOT BE RESPONSIBLE FOR THE ACCURACY OR COMPLETENESS OF SCANNED COPIES OF THIS PLAN SHEET.

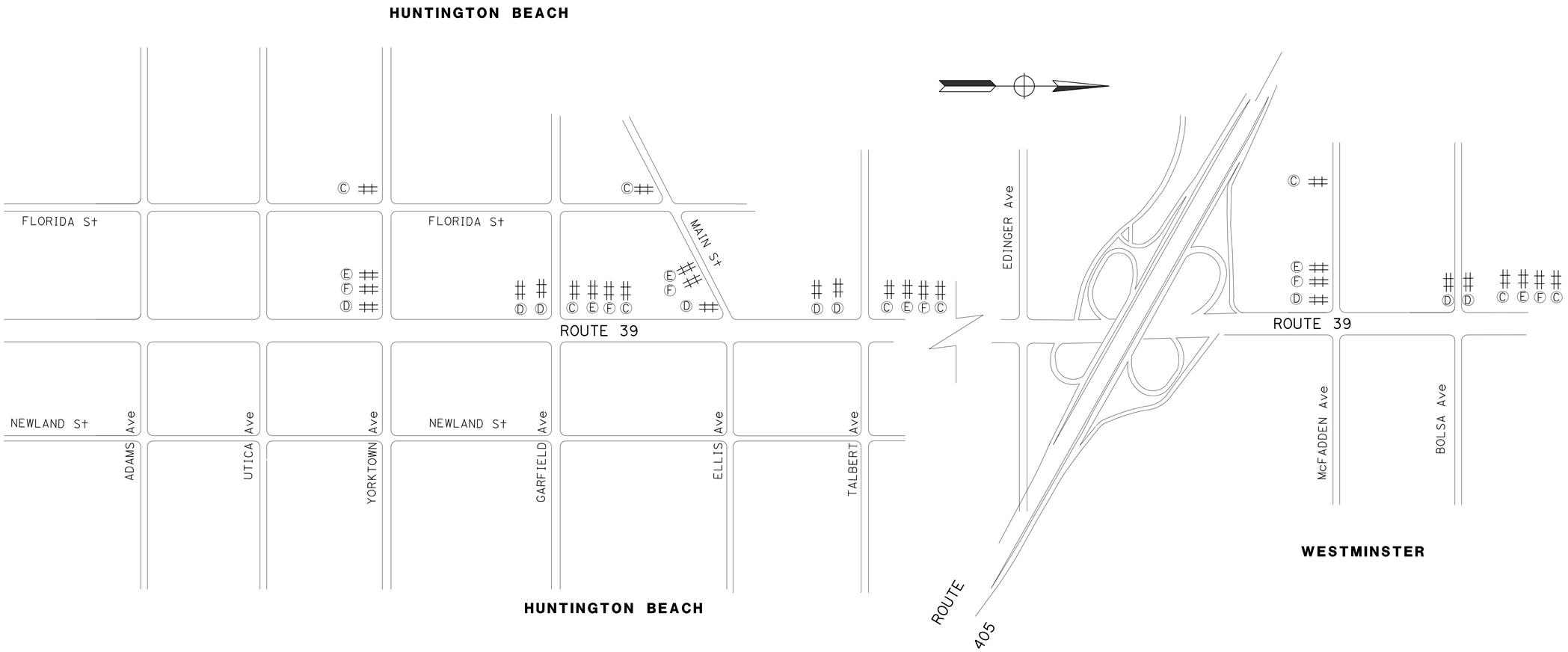

TRAFFIC HANDLING PLAN
(PEDESTRIANS AND BICYCLES)
STAGE 2

NO SCALE

TH-2

APPROVED FOR CONSTRUCTION AREA SIGN WORK ONLY

STATE OF CALIFORNIA - DEPARTMENT OF TRANSPORTATION
Caltrans
DESIGN DIVISION

FUNCTIONAL SUPERVISOR: ANDREW OSHRIN
CALCULATED-DESIGNED BY: CARMEL KALAPURAYIL
CHECKED BY: RAJU VORA
REVISED BY
DATE REVISED

LAST REVISION 00-00-00
DATE PLOTTED => 17-APR-2013
TIME PLOTTED => 12:36

Dist	COUNTY	ROUTE	POST MILES TOTAL PROJECT	SHEET No.	TOTAL SHEETS
12	Ora	39	2.1,3.1,6.1	14	34

REGISTERED CIVIL ENGINEER 01-29-13 DATE

4-15-13
PLANS APPROVAL DATE

REGISTERED PROFESSIONAL ENGINEER CARMEL KALAPURAYIL No. C 56654 Exp. 6-30-13 CIVIL STATE OF CALIFORNIA

THE STATE OF CALIFORNIA OR ITS OFFICERS OR AGENTS SHALL NOT BE RESPONSIBLE FOR THE ACCURACY OR COMPLETENESS OF SCANNED COPIES OF THIS PLAN SHEET.

LEGEND:

- (X) PAVEMENT DELINEATION DETAIL
- CHANGE IN PAVEMENT DELINEATION
- (X) SIGN NUMBER
- ■ BLUE MARKER AT FIRE HYDRANT (TYPICAL)

ABBREVIATION:

B	BIKE
L	LANE
F	FWY
O	ONLY

NOTES:

1. ALL CONFLICTING TRAFFIC STRIPES AND PAVEMENT MARKINGS SHALL BE REMOVED.
2. WHEN RAMP IS LOCATED IN CENTER OF CURB RETURN, CROSSWALK CONFIGURATION MUST BE SIMILAR TO THAT SHOWN FOR DETAIL B OF Std PLAN A88A.
3. ALL TRAFFIC STRIPES AND PAVEMENT MARKINGS SHALL BE THERMOPLASTIC UNLESS OTHERWISE NOTED.
4. PAVEMENT DELINEATION IS TO REPLACE EXISTING STRIPING.
5. FOR DETAIL 29, SEE MEDIAN NOSE DETAIL.

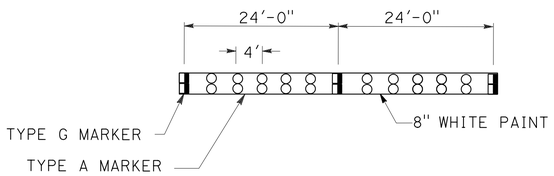

DETAIL 38C Mod

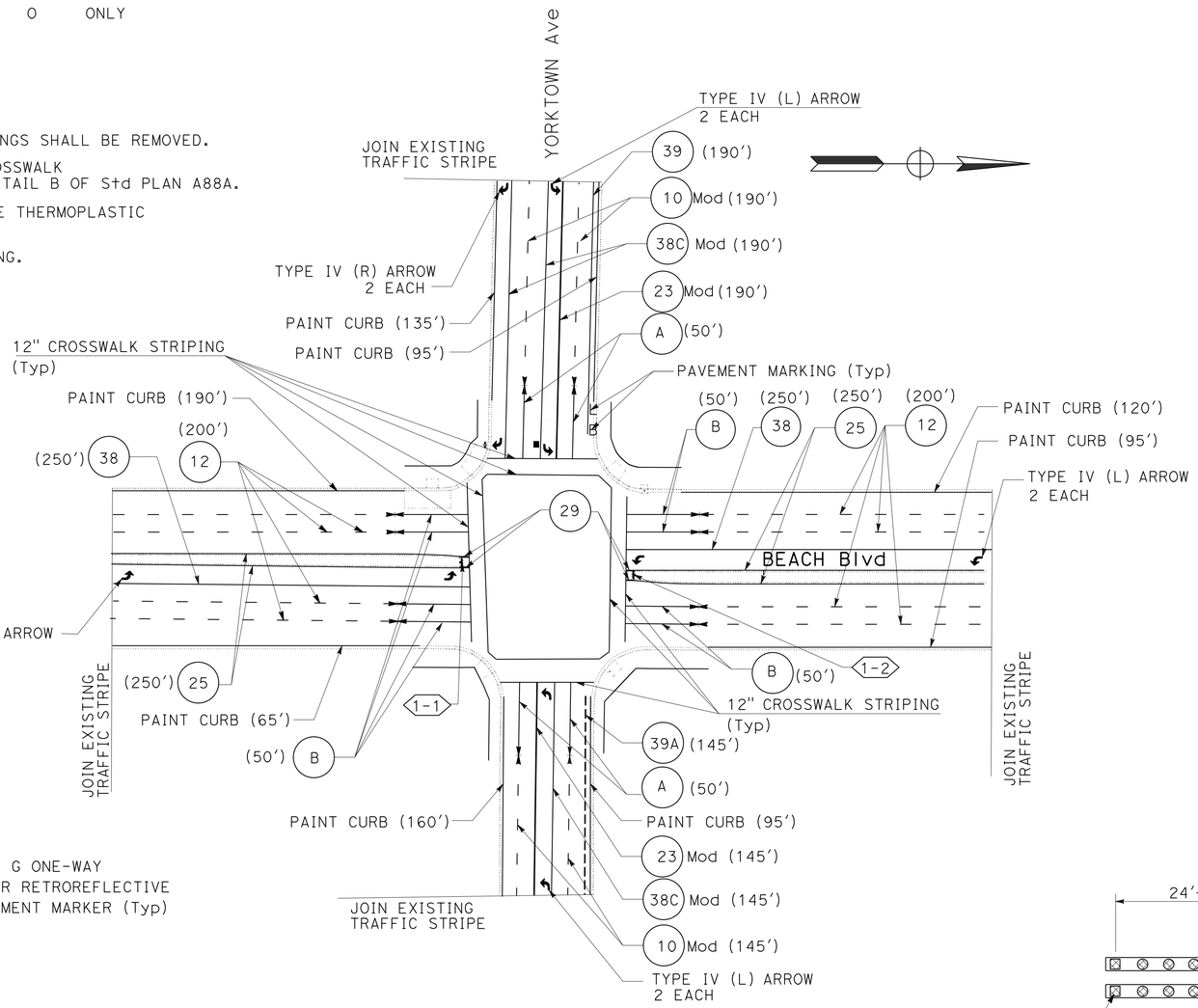

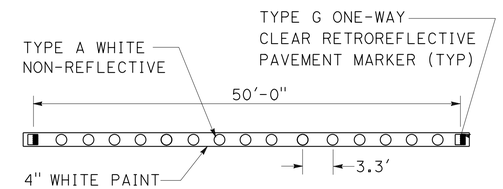

DETAIL A

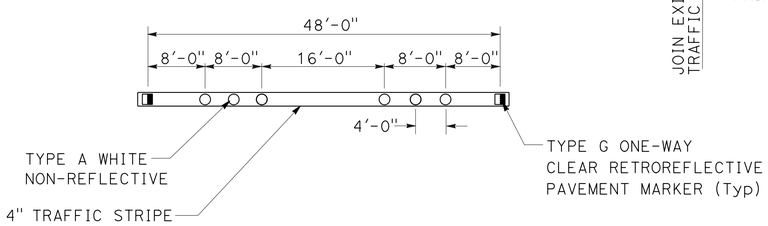

DETAIL 10 MOD

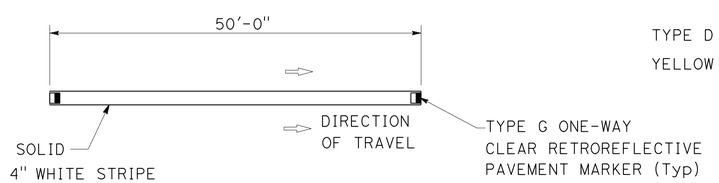

DETAIL B

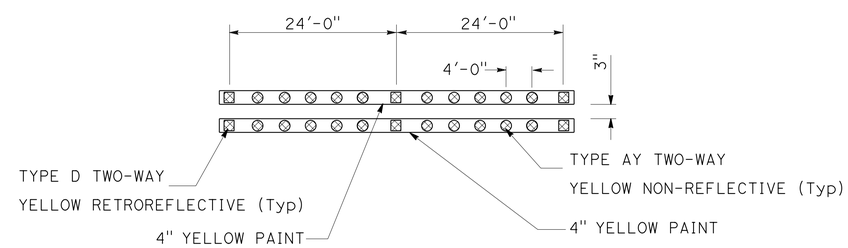

DETAIL 23 MOD

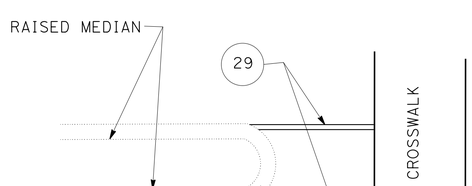

MEDIAN NOSE DETAIL

PAVEMENT DELINEATION PLAN

SCALE: 1" = 50'

PD-1

APPROVED FOR PAVEMENT DELINEATION AND SIGN WORK ONLY

STATE OF CALIFORNIA - DEPARTMENT OF TRANSPORTATION
Caltrans® DESIGN DIVISION

FUNCTIONAL SUPERVISOR: ANDREW OSHRIN
CALCULATED-DESIGNED BY: CARMEL KALAPURAYIL
CHECKED BY: RAJU VORA
REVISED BY / DATE REVISED

LAST REVISION 00-00-00
DATE PLOTTED => 17-APR-2013
TIME PLOTTED => 12:36

Dist	COUNTY	ROUTE	POST MILES TOTAL PROJECT	SHEET No.	TOTAL SHEETS
12	Ora	39	2.1, 3.1, 6.1	15	34

REGISTERED CIVIL ENGINEER 01-29-13 DATE

4-15-13
PLANS APPROVAL DATE

REGISTERED PROFESSIONAL ENGINEER CARMEL KALAPURAYIL No. C 56654 Exp. 6-30-13 CIVIL STATE OF CALIFORNIA

THE STATE OF CALIFORNIA OR ITS OFFICERS OR AGENTS SHALL NOT BE RESPONSIBLE FOR THE ACCURACY OR COMPLETENESS OF SCANNED COPIES OF THIS PLAN SHEET.

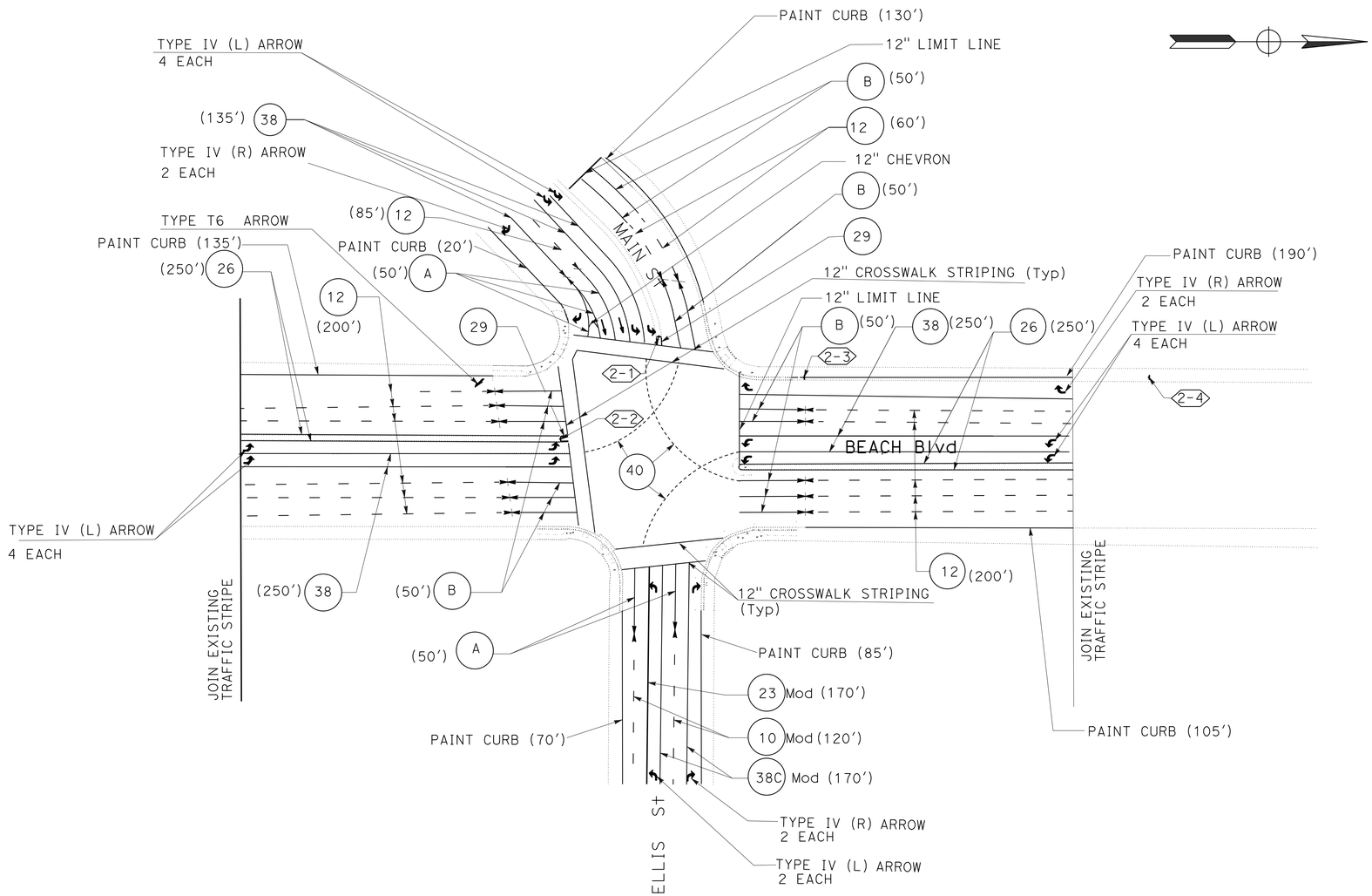

PAVEMENT DELINEATION PLAN

SCALE: 1" = 50'

APPROVED FOR PAVEMENT DELINEATION AND SIGN WORK ONLY

PD-2

STATE OF CALIFORNIA - DEPARTMENT OF TRANSPORTATION
Caltrans
DESIGN DIVISION

FUNCTIONAL SUPERVISOR: ANDREW OSHRIN
CALCULATED-DESIGNED BY: CARMEL KALAPURAYIL
CHECKED BY: RAJU VORA
REVISED BY
DATE REVISED

LAST REVISION 00-00-00
DATE PLOTTED => 17-APR-2013
TIME PLOTTED => 12:36

Dist	COUNTY	ROUTE	POST MILES TOTAL PROJECT	SHEET No.	TOTAL SHEETS
12	Ora	39	2.1,3.1,6.1	16	34

REGISTERED CIVIL ENGINEER 01-29-13 DATE

4-15-13
PLANS APPROVAL DATE

REGISTERED PROFESSIONAL ENGINEER CARMEL KALAPURAYIL No. C 56654 Exp. 6-30-13 CIVIL STATE OF CALIFORNIA

THE STATE OF CALIFORNIA OR ITS OFFICERS OR AGENTS SHALL NOT BE RESPONSIBLE FOR THE ACCURACY OR COMPLETENESS OF SCANNED COPIES OF THIS PLAN SHEET.

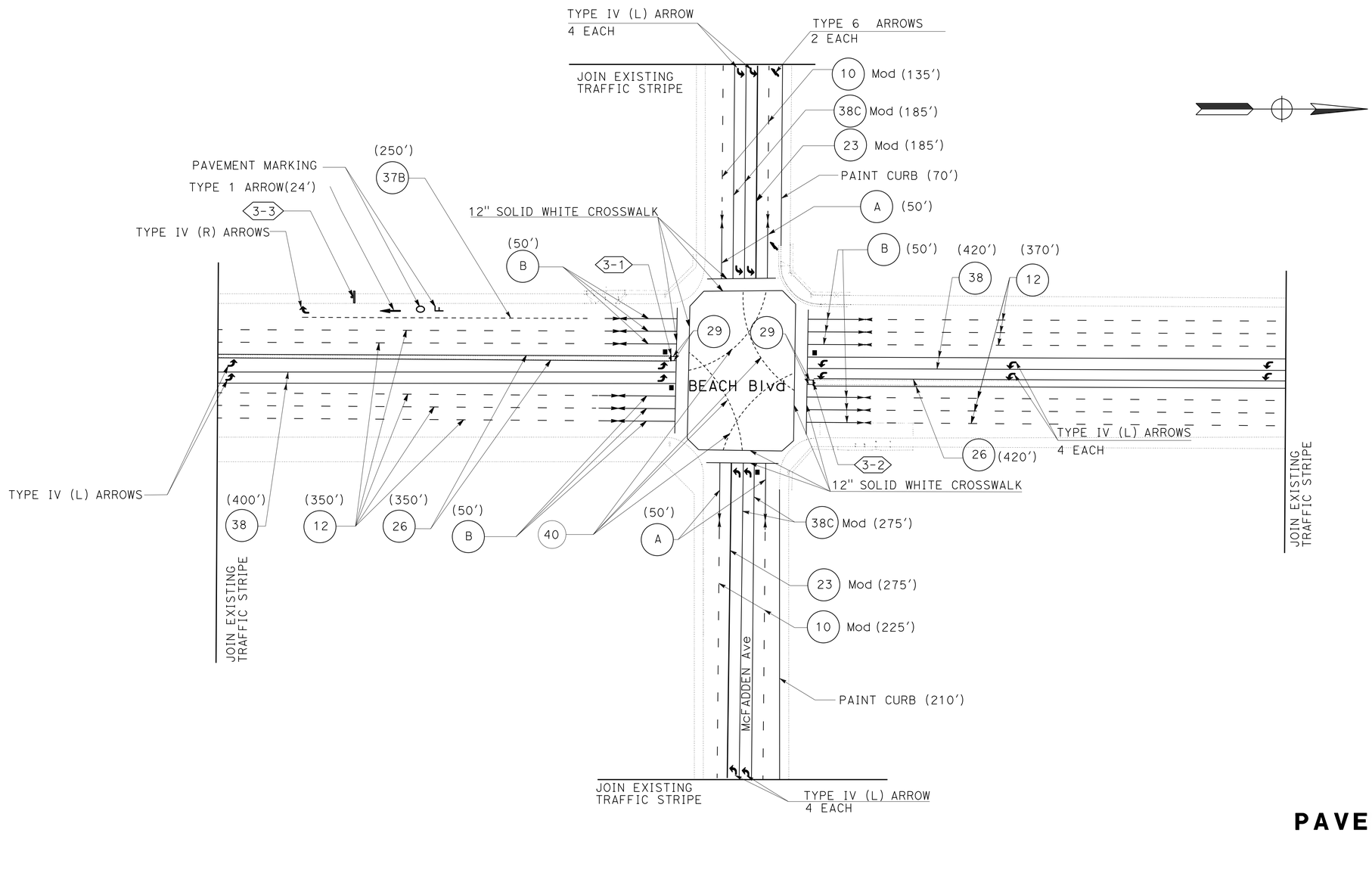

PAVEMENT DELINEATION PLAN

SCALE: 1"=50'

APPROVED FOR PAVEMENT DELINEATION AND SIGN WORK ONLY

PD-3

STATE OF CALIFORNIA - DEPARTMENT OF TRANSPORTATION
Caltrans
DESIGN DIVISION

FUNCTIONAL SUPERVISOR: ANDREW OSHRIN
CALCULATED-DESIGNED BY: CARMEL KALAPURAYIL
CHECKED BY: RAJU VORA
REVISED BY
DATE REVISED

LAST REVISION 00-00-00
DATE PLOTTED => 17-APR-2013
TIME PLOTTED => 12:36

BORDER LAST REVISED 7/2/2010
USERNAME => s121614
DGN FILE => 1200020262na003.dgn
RELATIVE BORDER SCALE IS IN INCHES 0 1 2 3
UNIT 2995
PROJECT NUMBER & PHASE 12000202621

Dist	COUNTY	ROUTE	POST MILES TOTAL PROJECT	SHEET No.	TOTAL SHEETS
12	Ora	39	2.1,3.1,6.1	17	34

Carmel Kalapurayil 01-29-13
REGISTERED CIVIL ENGINEER DATE

4-15-13
PLANS APPROVAL DATE

REGISTERED PROFESSIONAL ENGINEER CARMEL KALAPURAYIL No. C 56654 Exp. 6-30-13 CIVIL STATE OF CALIFORNIA

THE STATE OF CALIFORNIA OR ITS OFFICERS OR AGENTS SHALL NOT BE RESPONSIBLE FOR THE ACCURACY OR COMPLETENESS OF SCANNED COPIES OF THIS PLAN SHEET.

PAVEMENT DELINEATION QUANTITIES

SHEET No.	LOCATION	DETAIL 26 (N)	THERMOPLASTIC TRAFFIC STRIPE													THERMOPLASTIC PAVEMENT MARKING				PAVEMENT MARKER						REMOVE				
			DETAIL 29 4" DOUBLE SOLID YELLOW	DETAIL A 4" SOLID WHITE	DETAIL B 4" SOLID WHITE	DETAIL 10 Mod 4" WHITE BROKEN (16-8)	DETAIL 12 4" WHITE BROKEN (18-12)	DETAIL 23 Mod 4" SOLID YELLOW	DETAIL 40 4" WHITE BROKEN (6-6)	DETAIL 25 4" SOLID YELLOW	DETAIL 39 6" SOLID WHITE	DETAIL 39A 6" WHITE BROKEN (8-4)	DETAIL 38 8" SOLID WHITE	DETAIL 38C Mod 8" SOLID WHITE	DETAIL 37B 8" WHITE BROKEN	SYMBOLS (ARROW)	SYMBOLS (WORD)	12" SOLID WHITE CROSSWALK & LIMIT LINE	12" CHEVRON	NON-REFLECTIVE		RETROREFLECTIVE				YELLOW THERMOPLASTIC TRAFFIC STRIPE (HAZARDOUS WASTE)	THERMOPLASTIC TRAFFIC STRIPE (WHITE)	PAVEMENT MARKER	TERMOPLASTIC PAVEMENT MARKING	PAINT CURB (2 COAT)
																				TYPE A	TYPE AY YELLOW	TYPE D	TYPE G	TYPE H	BLUE MARKER (N)					
		LF	LF								LF		LF			SQFT				EA		EA			EA	LF	LF	EA	SQFT	LF
PD-1	YORKTOWN AVENUE	-	-	200	-	670	-	335	-	-	190	145	-	525	-	90	-	310		364	144	20	38	-	1	335	1730	566	400	485
	BEACH Blvd	-	16	-	400		1600		-	1000	-	-	500	-	-	60	-	455		-	-	8	74	45	-	1000	2500	127	515	470
PD-2	MAIN STREET	-	8	150	200	-	205	-	130	-	-	-	405	-	-	60	10	260	14	45	-	8	41	-	-	-	1090	94	308	150
	ELLIS STREET	-	-	100	-	240	-	170	-	-	-	-	-	340	-	60	-	145		140	80	16	32	-	-	170	680	268	205	155
	BEACH Blvd	1000	8	-	550	-	2200	-	215	-	-	-	1000	-	-	165	-	257		-	-	8	122	28	-	-	3765	158	422	430
PD-3	MCFADDEN AVENUE	-	-	200	-	720	-	460	205	-	-	-	-	920	-	150	38	290		392	202	44	70		-	460	2045	708	478	280
	BEACH Blvd	1540	16	-	600	-	3970	-	200	-	-	-	1640	-	250	166	-	475		-	-	16	152	36	2	-	6240	204	641	-
SUB-TOTAL		2540	48	650	1750	1630	7975	965	750	1000	-	-	3545	1785	250	751	48	2192	14	941	426	120	529	109	3	1965	18050	2125	2969	1970
TOTAL		2540	14768								335		5580			3005				1367		758			3	1965	18050	2125	2969	1970

(N) - NOT A SEPARATE PAY ITEM, FOR INFORMATION ONLY.

STATE OF CALIFORNIA - DEPARTMENT OF TRANSPORTATION
Caltrans® DESIGN DIVISION

FUNCTIONAL SUPERVISOR: ANDREW OSHRIN
CALCULATED-DESIGNED BY: CARMEL KALAPURAYIL
CHECKED BY: RAJU VORA
REVISED BY
DATE REVISED

PAVEMENT DELINEATION QUANTITIES

PDQ-1

LAST REVISION 00-00-00
DATE PLOTTED => 17-APR-2013
TIME PLOTTED => 12:36

Dist	COUNTY	ROUTE	POST MILES TOTAL PROJECT	SHEET No.	TOTAL SHEETS
12	Ora	39	2.1,3.1,6.1	18	34

REGISTERED CIVIL ENGINEER 01-29-13 DATE

4-15-13
PLANS APPROVAL DATE

REGISTERED PROFESSIONAL ENGINEER CARMEL KALAPURAYIL No. C 56654 Exp. 6-30-13 CIVIL STATE OF CALIFORNIA

THE STATE OF CALIFORNIA OR ITS OFFICERS OR AGENTS SHALL NOT BE RESPONSIBLE FOR THE ACCURACY OR COMPLETENESS OF SCANNED COPIES OF THIS PLAN SHEET.

SIGN QUANTITIES

SIGN No.	SHEET No.	SIGN CODE	PANEL SIZE (INCH x INCH)	SIGN AREA (SQFT)	POST SIZE LENGTH (LF)	ROADSIDE SIGN (EA)	SINGLE FACED	BACKGROUND SHEETING COLOR	LEGEND RETRO-REFLECTIVE	LEGEND SHEETING COLOR	GRAFFITI FILM STANDARD	FURNISH SINGLE SHEET ALUMINUM SIGN (0.063"-UNFRAMED) (SQFT)
1-1	PD-1	R4-7	24 x 30	5.0	10	1	X	WHITE	III	BLACK	X	5.0
		OM1-3	18 X 18	2.3			X	YELLOW	III	BLACK	X	2.3
		R6-1	36 X 12	3.0			X	WHITE	III	BLACK	X	3.0
1-2	PD-1	R4-7	24 x 30	5.0	10	1	X	WHITE	III	BLACK	X	5.0
		OM1-3	18 X 18	2.3			X	YELLOW	III	BLACK	X	2.3
		R6-1	36 X 12	3.0			X	WHITE	III	BLACK	X	3.0
2-1	PD-2	R4-7	24 x 30	5.0	10	1	X	WHITE	III	BLACK	X	5.0
		OM1-3	18 X 18	2.3			X	YELLOW	III	BLACK	X	2.3
		R6-1	36 X 12	3.0			X	WHITE	III	BLACK	X	3.0
		R3-4	24 X 24	4.0			X	WHITE	III	BLACK	X	4.0
2-2	PD-2	R4-7	24 x 30	5.0	10	1	X	WHITE	III	BLACK	X	5.0
		OM1-3	18 X 18	2.3			X	YELLOW	III	BLACK	X	2.3
		R6-1	36 X 12	3.0			X	WHITE	III	BLACK	X	3.0
2-3	PD-2	R3-7	36 X 36	9.0	ON Exist POST	-	X	WHITE	III	BLACK	X	9.0
2-4	PD-2	R3-7	36 X 36	9.0	ON Exist POST	-	X	WHITE	III	BLACK	X	9.0
3-1	PD-3	R4-7	24 x 30	5.0	10	1	X	WHITE	III	BLACK	X	5.0
		OM1-3	18 X 18	2.3			X	YELLOW	III	BLACK	X	2.3
		R6-1	36 X 12	3.0			X	WHITE	III	BLACK	X	3.0
3-2	PD-3	R4-7	24 x 30	5.0	10	1	X	WHITE	III	BLACK	X	5.0
		OM1-3	18 X 18	2.3			X	YELLOW	III	BLACK	X	2.3
		R6-1	36 X 12	3.0			X	WHITE	III	BLACK	X	3.0
3-3	PD-3	R3-7	36 X 36	9.0	10	1	X	WHITE	III	BLACK	X	9.0
4	E-3	R9-3	(18X 18) X 2	2.3	ON Ped BARRICADE	-	X	WHITE	III	BLACK	X	4.6
		R49	(42 X 18) X 2	5.3	ON Ped BARRICADE	-	X	WHITE	III	BLACK	X	10.6
TOTAL						7						108.0

NOTE:

1. EXACT LOCATIONS OF ROADSIDE SIGNS WILL BE DETERMINED BY THE ENGINEER.
2. PROTECT ALL SIGNS IN PLACE UNLESS OTHERWISE NOTED.

SIGN QUANTITIES

SQ-1

REVISED BY | DATE REVISED
CARMEL KALAPURAYIL | RAJU VORA
CALCULATED-DESIGNED BY | CHECKED BY
FUNCTIONAL SUPERVISOR: ANDREW OSHRIN
STATE OF CALIFORNIA - DEPARTMENT OF TRANSPORTATION
Caltrans® DESIGN DIVISION

LAST REVISION 00-00-00 | DATE PLOTTED => 17-APR-2013 | TIME PLOTTED => 12:36

Dist	COUNTY	ROUTE	POST MILES TOTAL PROJECT	SHEET No.	TOTAL SHEETS
12	Ora	39	2.1,3.1,6.1	19	34

Carmel Kalapurayil 01-29-13
REGISTERED CIVIL ENGINEER DATE

4-15-13
PLANS APPROVAL DATE

REGISTERED PROFESSIONAL ENGINEER CARMEL KALAPURAYIL No. C 56654 Exp. 6-30-13 CIVIL STATE OF CALIFORNIA

THE STATE OF CALIFORNIA OR ITS OFFICERS OR AGENTS SHALL NOT BE RESPONSIBLE FOR THE ACCURACY OR COMPLETENESS OF SCANNED COPIES OF THIS PLAN SHEET.

ROADWAY QUANTITIES

SHEET No.	LOCATION*	REMOVE CONCRETE		REMOVE ASPHALT CONCRETE PAVEMENT (0.5' Max)	MINOR CONCRETE (MISCELLANEOUS CONSTRUCTION)		HOT MIX ASPHALT (TYPE A)	ROADWAY EXCAVATION	DETECTABLE WARNING SURFACE	CLASS 2 AGGREGATE SUBBASE
		CURB RAMP AND SIDEWALK	MEDIAN NOSE		CURB RAMP	MEDIAN NOSE	MEDIAN	MEDIAN	CURB RAMP	
		(CY)	(CY)	(CY)	(CY)	(CY)	(TON)	(CY)	SQFT	(CY)
L-1	1	8.15		1.11	9.26				15	
	2	6.48		1.11	7.59				15	
	3	8.41		1.07	9.48				15	
	4	8.35		1.22	9.57				15	
	5		0.94			0.58	9.41	6.13		1.42
	6		0.47			0.76	9.23	6.02		1.43
L-2	7	4.49		1.04	5.53				15	
	8	4.89		1.11	6.00				15	
	9	5.13		1.19	6.32				15	
	10	4.52		0.89	5.41				15	
	11	4.94		0.93	5.87				15	
	12		0.94			0.35	5.11	3.33		0.78
	13		0.94			0.35	5.59	3.64		0.85
L-3	14	11.11		1.33	12.44				24	
	15	15.65		1.41	16.65				24	
	16	9.11		1.33	10.44				24	
	17	8.91		1.41	10.32				24	
	18		0.45			0.35	4.71	3.07		0.71
	19		0.45			0.35	5.13	3.34		0.78
SUB-TOTAL		100.14	4.19	15.15	114.88	2.74	39.18	25.53	231.00	5.97
TOTAL		105		16	120		40	26	231	6

* SEE DRAINAGE PLANS FOR LOCATIONS

TEMPORARY WATER POLLUTION CONTROL QUANTITES

SHEET No.	LOCATION*	TEMPORARY DRAINAGE INLET PROTECTION
		EA
L-1	1	1
	4	1
L-2	8 & 9	1
L-3	15	1
	16	1
TOTAL		5

SUMMARY OF QUANTITIES

Q-1

STATE OF CALIFORNIA - DEPARTMENT OF TRANSPORTATION
Caltrans® DESIGN DIVISION

FUNCTIONAL SUPERVISOR: ANDREW OSHRIN
CALCULATED-DESIGNED BY: CARMEL KALAPURAYIL
CHECKED BY: RAJU VORA
REVISED BY
DATE REVISED

LAST REVISION 00-00-00
DATE PLOTTED => 17-APR-2013
TIME PLOTTED => 12:36

Dist	COUNTY	ROUTE	POST MILES TOTAL PROJECT	SHEET No.	TOTAL SHEETS
12	Ora	39	2.1,3.1,6.1	20	34

Mina Zolfaghari 01-29-13
REGISTERED ELECTRICAL ENGINEER DATE

4-15-13
PLANS APPROVAL DATE

REGISTERED PROFESSIONAL ENGINEER MINA ZOLFAGHARI No. E 16816 Exp. 12/31/14 ELECT STATE OF CALIFORNIA

THE STATE OF CALIFORNIA OR ITS OFFICERS OR AGENTS SHALL NOT BE RESPONSIBLE FOR THE ACCURACY OR COMPLETENESS OF SCANNED COPIES OF THIS PLAN SHEET.

NOTES:

1. FOR ACCURATE RIGHT OF WAY DATA, CONTACT RIGHT OF WAY ENGINEERING AT THE DISTRICT OFFICE.
2. FOR ADDITIONAL NOTES AND SCHEDULES, SEE SHEET E-2.

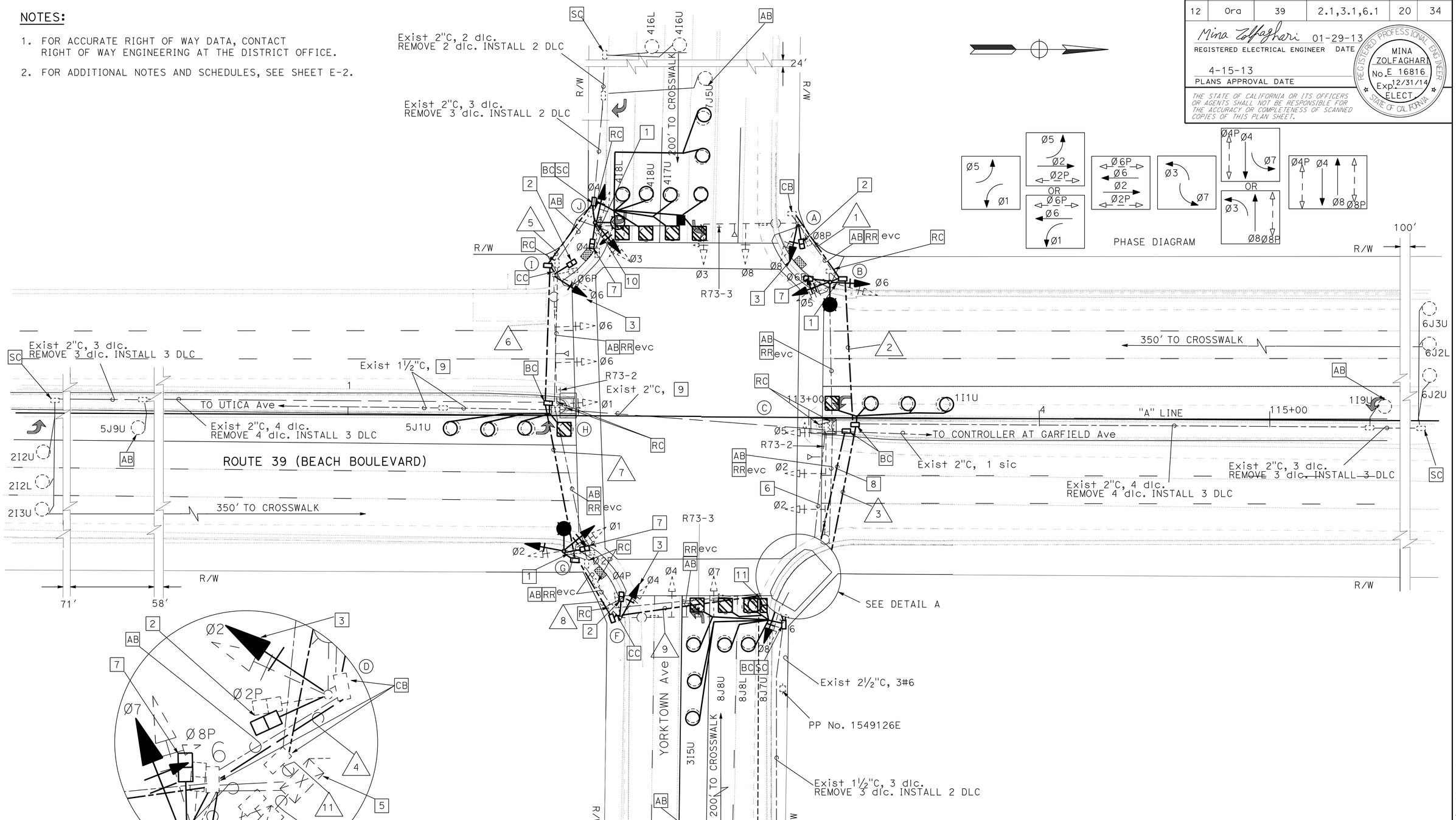

DETAIL A
NTS

MODIFY SIGNAL AND LIGHTING (LOCATION 1)

SCALE: 1" = 20'

E-1

APPROVED FOR ELECTRICAL WORK ONLY

STATE OF CALIFORNIA - DEPARTMENT OF TRANSPORTATION
Caltrans
ELECTRICAL DESIGN

FUNCTIONAL SUPERVISOR: SHAHRAM SHAHRIARI
CALCULATED-DESIGNED BY: MINA ZOLFAGHARI
CHECKED BY: VANESSA TRUONG
REVISED BY / DATE REVISED

LAST REVISION 03-21-12
DATE PLOTTED => 22-APR-2013
TIME PLOTTED => 9:36

Dist	COUNTY	ROUTE	POST MILES TOTAL PROJECT	SHEET No.	TOTAL SHEETS
12	Ora	39	2.1, 3.1, 6.1	21	34

Mina Zolfaghari 01-29-13
REGISTERED ELECTRICAL ENGINEER DATE

4-15-13
PLANS APPROVAL DATE

REGISTERED PROFESSIONAL ENGINEER
MINA ZOLFAGHARI
No. E 16816
Exp. 12/31/14
ELECT.
STATE OF CALIFORNIA

THE STATE OF CALIFORNIA OR ITS OFFICERS OR AGENTS SHALL NOT BE RESPONSIBLE FOR THE ACCURACY OR COMPLETENESS OF SCANNED COPIES OF THIS PLAN SHEET.

EXISTING STANDARD AND EQUIPMENT SCHEDULE

STANDARD				VEH SIG MTG				PED SIGNAL		PPB		LUMINAIRE	IISNS
⊗	TYPE	SMA	LMA	Ø	MAST ARM	Ø	POLE	Ø	MTG	Ø	ARROW		
A	26-4-70	40′	15′	8 3	MAS MAT	8	SV-1-T(N)	8P	SP-1-T (N)	6 (*)	← (*)	235 W LED ***	Beach Blvd
B	21TS (N)	-	15′ (N)	-	-	5,6	SV-2-TA(N)	6P	SP-1-T (N)	8 **	→ **	235 W LED (N)	-
C	PPB POST (R)	-	-	-	-	-	-	-	-	8 (R)	⇄ (R)	-	-
D	29A-5-70	55′	15′	2 5	2-MAS MAT	2	SV-1-T (N)	2P	SP-1-T (N)	8 (*)	← (*)	235 W LED ***	Yorktown Ave
E	15TS (N)	-	15′ (N)	-	-	7,8	SV-2-TA(N)	8P	SP-1-T (N)	2 **	→ **	165 W LED (N)	-
F	26A-4-70	40′	15′	4 7	MAS MAT	4	SV-1-T (N)	4P	SP-1-T (N)	2(*)	← (*)	235 W LED ***	Beach Blvd
G	21TS (N)	-	15′ (N)	-	-	1,2	SV-2-TA(N)	2P	SP-1-T (N)	4 **	→ **	235 W LED (N)	-
H	PPB POST (R)	-	-	-	-	-	-	-	-	4 (R)	⇄ (R)	-	-
I	29-5-70	55′	15′	6 1	2-MAS MAT	6	SV-1-T(N)	6P	SP-1-T (N)	4 (*)	← (*)	235 W LED ***	Yorktown Ave
J	15TS (N)	-	15′ (N)	-	-	3,4	SV-2-TA(N)	4P	SP-1-T (N)	6 **	→ **	165 W LED (N)	-

(*) = RC EXISTING PPB AND INSTALL ACCESSIBLE PEDESTRIAN SIGNAL (APS) AT 40" HEIGHT.

** = NEW ACCESSIBLE PEDESTRIAN SIGNAL (APS) AT 40" HEIGHT.

*** = RC EXISTING HPS LUMINAIRE AND INSTALL NEW LED LUMINAIRE.

(R) = RC

(N) = NEW

NOTES (SHEET E-1 AND E-2):

1. POLES SHALL BE INSTALLED AT A MINIMUM OF 18" CLEARANCE BEYOND THE FACE OF THE CURBS AND A MINIMUM OF 36" ALONG THE CURB RETURNS OF INTERSECTIONS AND NEAR THE EDGES OF DRIVEWAYS.
2. AB EXISTING LOOP DETECTORS, WHERE NEW LOOPS ARE CUT.

CONDUCTOR AND CONDUIT SCHEDULE

CONDUCTOR DESIGNATION			RUN NUMBER										
CABLE TYPE	Std ⊗	PHASE	NUMBER OF CONDUCTORS										
			1	2	3	4	5	6	7	8	9	10 *	11 *
VEH-PED 12CSC	A	8,3,8P 6	1 1	1 1	1 1	1 1						1 1	
	B	5,6,6P 8		1 1	1 1	1 1						1 1	
	C												
	D	2,5,2P 8				1 1						1 1	
	E	7,8,8P 2										1 1	
PPB 3CSC	F	4,7,4P 2									1 1	1 1	
	G	1,2,2P 4								1 2	1 2	1 2	
	H												
	I	1,6,6P 4						1 1	1 1	1 1	1 1	1 1	
	J	3,4,4P 6					1 1	1 1	1 1	1 1	1 1	1 1	
TOTAL CABLES 12/3 CONDUCTORS			1 1	2 2	2 2	3 3	1 1	2 2	2 2	3 4	4 5	8 9	
9#20	APS		2			2	2			2			
#10	STREET LIGHTING		2	2	2	2	2	2	2	2	2	2	
#12	IISNS		2	2	2	2		2	2	2	2	2	
TYPE C DLC	Ø1				1	1						1	
	Ø2								3	3	3	3	
	Ø3											1	
	Ø4						5	5	5	5	5	5	
	Ø5								1	1	1	1	
	Ø6				3	3						3	
	Ø7						1	1	1	1	1	1	
	Ø8											5	
TOTAL DLCs	PER RUN				4	4	6	6	10	10	10	19	
EVC			1 RU	1 RU	1 RU	2 RU		1 RU	1 RU	1 RU	2 RU	4 RU	
12 PAIRS #19	SIC												1 1 RU
CONDUIT SIZE			2½"	3½"	3½"	4"	3"	3½"	3½"	4"	2-3"	2-3" (E)	2" (E)

* = RC EXISTING CONDUCTORS AND INSTALL NEW CONDUCTORS, UNLESS OTHERWISE NOTED.

(E) = EXISTING

RU = REUSED

LEGEND (SHEET E-1):

1. RC EXISTING TYPE 1-A STANDARD AND SIGNAL EQUIPMENT COMPLETE.
2. RC EXISTING PEDESTRIAN SIGNAL HEAD AND INSTALL LED COUNTDOWN PEDESTRIAN SIGNAL.
3. RC EXISTING 8" SIGNAL HEAD AND INSTALL NEW 12" SIGNAL HEAD.
4. EXISTING 120/240 V METERED TYPE III-BF SERVICE EQUIPMENT ENCLOSURE.
   40 A-1P- 120 V CB FOR SIGNAL (METERED)
   15 A-1P-120 V CB FOR IISNS (METERED)
   30 A-1P-120 V CB FOR SAFETY LIGHTING (UNMETERED)
5. EXISTING MODEL 2070 CONTROLLER IN MODEL 332 CABINET.
6. AB CONDUIT. RR 1 sic FROM GARFIELD AVENUE, RC sic FROM UTICA Ave.
7. INSTALL LED COUNTDOWN PEDESTRIAN SIGNAL.
8. INSTALL 2"C, 1 SIC APPROXIMATELY 1600′ TO THE CONTROLLER AT UTICA Ave. REPULL 1 sic TO THE NEW CONDUIT FROM GARFIELD.
9. REMOVE 1 sic AND INSTALL 1 SIC TO THE CONTROLLER AT UTICA Ave APPROXIMATELY 1600 FEET.
10. RR BEACH/YORKTOWN CITY STREET SIGN.
11. INSTALL 3′x6′ TYPE D LOOP DETECTOR.

MODIFY SIGNAL AND LIGHTING (LOCATION 1)

SCALE: 1" = 20′

E-2

APPROVED FOR ELECTRICAL WORK ONLY

STATE OF CALIFORNIA - DEPARTMENT OF TRANSPORTATION
Caltrans® ELECTRICAL DESIGN

FUNCTIONAL SUPERVISOR: SHAHRAM SHAHRIARI
CALCULATED-DESIGNED BY: MINA ZOLFAGHARI
CHECKED BY: VANESSA TRUONG
REVISED BY / DATE REVISED

LAST REVISION 03-21-12 | DATE PLOTTED => 17-APR-2013 | TIME PLOTTED => 12:36

Dist	COUNTY	ROUTE	POST MILES TOTAL PROJECT	SHEET No.	TOTAL SHEETS
12	Ora	39	2.1, 3.1, 6.1	22	34

Mina Zolfaghari 01-29-13
REGISTERED ELECTRICAL ENGINEER DATE

4-15-13
PLANS APPROVAL DATE

REGISTERED PROFESSIONAL ENGINEER MINA ZOLFAGHARI No. E 16816 Exp. 12/31/14 ELECT. STATE OF CALIFORNIA

THE STATE OF CALIFORNIA OR ITS OFFICERS OR AGENTS SHALL NOT BE RESPONSIBLE FOR THE ACCURACY OR COMPLETENESS OF SCANNED COPIES OF THIS PLAN SHEET.

NOTES:

1. FOR ACCURATE RIGHT OF WAY DATA, CONTACT RIGHT OF WAY ENGINEERING AT THE DISTRICT OFFICE.
2. FOR ADDITIONAL NOTES AND SCHEDULES, SEE SHEET E-4.

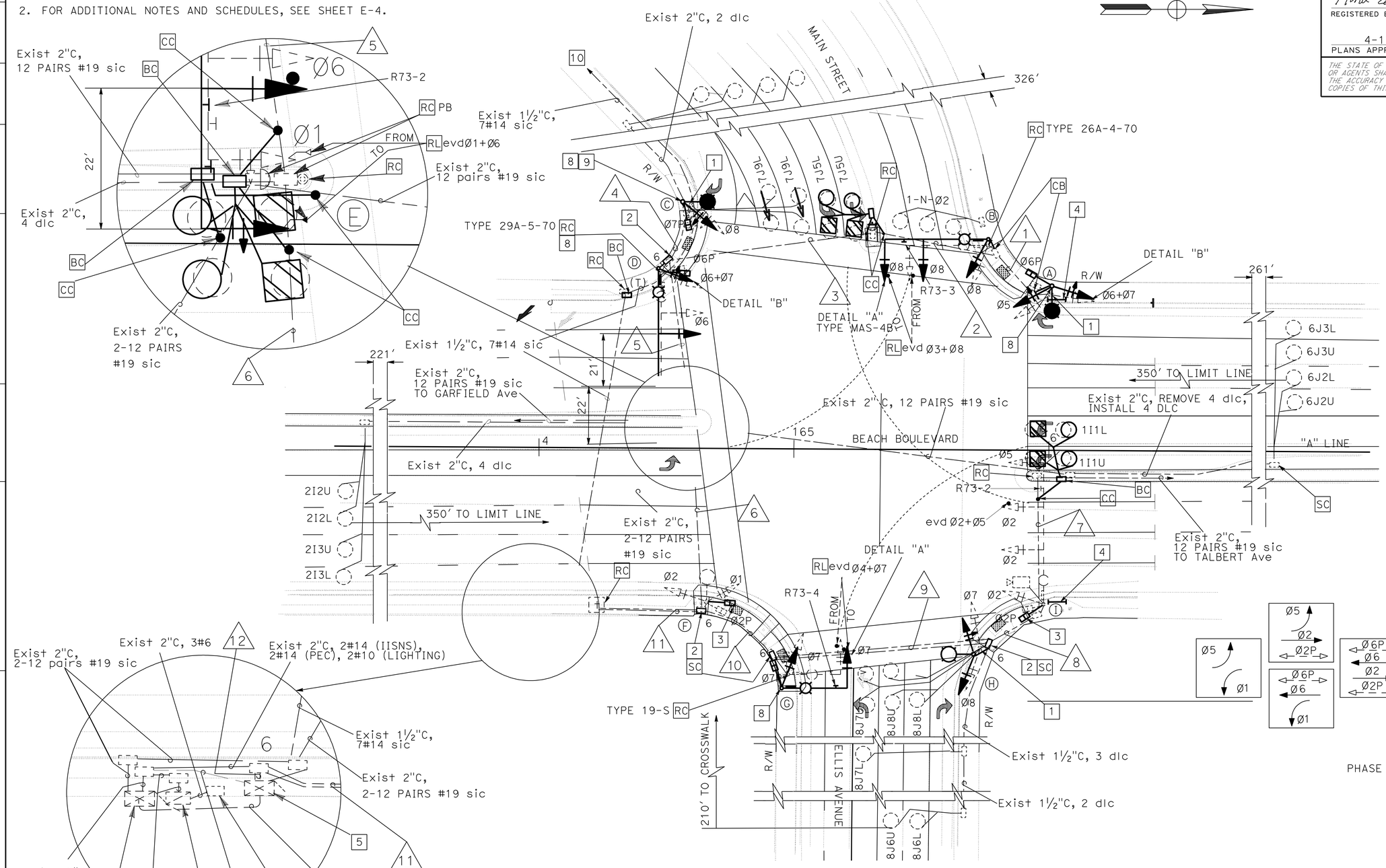

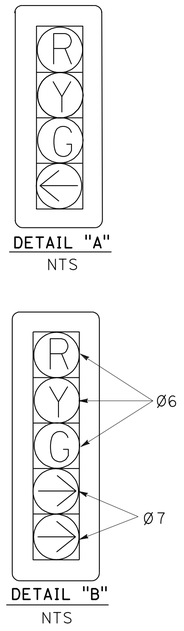

DETAIL "A"
NTS

DETAIL "B"
NTS

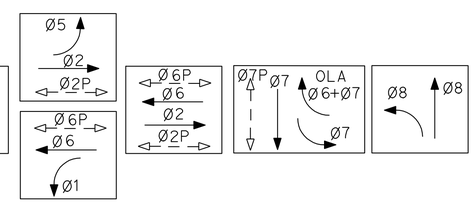

PHASE DIAGRAM

MODIFY SIGNAL AND LIGHTING (LOCATION 2)

SCALE: 1" = 20'

E-3

APPROVED FOR ELECTRICAL WORK ONLY

STATE OF CALIFORNIA - DEPARTMENT OF TRANSPORTATION
Caltrans® ELECTRICAL DESIGN

FUNCTIONAL SUPERVISOR: SHAHRAM SHAHRIARI
CALCULATED-DESIGNED BY: MINA ZOLFAGHARI
CHECKED BY: VANESSA TRUONG
REVISED BY / DATE REVISED

LAST REVISION 03-21-12
DATE PLOTTED => 18-APR-2013
TIME PLOTTED => 07:16

Dist	COUNTY	ROUTE	POST MILES TOTAL PROJECT	SHEET No.	TOTAL SHEETS
12	Ora	39	2.1, 3.1, 6.1	23	34

Mina Zolfaghari 01-29-13
REGISTERED ELECTRICAL ENGINEER DATE

4-15-13
PLANS APPROVAL DATE

REGISTERED PROFESSIONAL ENGINEER MINA ZOLFAGHARI No. E 16816 Exp. 12/31/14 ELECT. STATE OF CALIFORNIA

THE STATE OF CALIFORNIA OR ITS OFFICERS OR AGENTS SHALL NOT BE RESPONSIBLE FOR THE ACCURACY OR COMPLETENESS OF SCANNED COPIES OF THIS PLAN SHEET.

EXISTING STANDARD AND EQUIPMENT SCHEDULE

STANDARD				VEH SIG MTG				PED SIGNAL		PPB		LUMINAIRE	IISNS
⊗	TYPE	SMA	LMA	Ø	MAST ARM	Ø	POLE	Ø	MTG	Ø	ARROW		
A	21TS (N)	-	15′ (N)	-	-	5,6+7	SV-2-TA (N)	6P	SP-1-T (N)	-	-	235 W LED (N)	-
B	29A-5-100 (N)	40(N)	15′ (N)	8	2-MAS (N)	8	SV-1-T(N)	-	-	6 **	← **	235 W LED (N)	Beach Blvd (N)
C	21TS (N)	-	15′(N)	-	-	8	SV-1-T (N)	7P	SP-1-T (N)	6 **	→ **	235 W LED (N)	-
D	61A-5-100 (N)	65′(N)	15′(N)	1,6	3-MAS (N)	6+7	SV-1-T (N)	6P	SP-1-T (N)	7**	← **	235 W LED (N)	Main St → (N) ← Ellis Ave
E	PPB POST (R)	-	-	-	-	-	-	-	-	7(R)	← → (R)	-	-
F	15	-	15′	-		1,2	SV-2-TA	2P	SP-1-T (N)	7(*)	→ (*)	165 W LED ●	-
G	19-3-100 (N)	35′(N)	12′(N)	7	MAS(N)	7	SV-1-T(N)	7P	SP-1-T (N)	2**	← **	165 W LED (N)	Beach Blvd (N)
H	15TS (N)	-	15′(N)	-	-	7,8	SV-2-TA (N)	-	-	2 **	→ **	165 W LED (N)	-
I	29A-5-70	55′	15′	2,5	3-MAS	2	SV-1-T	2P	SP-1-T (N)	-	-	235 W LED ●	Ellis Ave →

(*) = RC EXISTING PPB AND INSTALL ACCESSIBLE PEDESTRIAN SIGNAL (APS) AT 40" HEIGHT.

** = NEW ACCESSIBLE PEDESTRIAN SIGNAL (APS) AT 40" HEIGHT.

(R) = RC

(N) = NEW

● = RC EXISTING HPS LUMINAIRE AND INSTALL NEW LED LUMINAIRE.

LEGEND (SHEET E-3):

1 RC EXISTING TYPE 1-A STANDARD AND SIGNAL EQUIPMENT COMPLETE.

2 RC EXISTING PULL BOX. INSTALL NEW PULL BOX.

3 RC EXISTING PEDESTRIAN SIGNAL HEAD AND INSTALL LED COUNTDOWN PEDESTRIAN SIGNAL.

4 INSTALL TYPE I PEDESTRIAN BARRICADE WITH TWO SIGNS OF R9-3 AND R49 BACK TO BACK.

5 EXISTING MODEL 2070 CONTROLLER IN MODEL 332 CABINET.

6 EXISTING 120/240 V METERED TYPE III-BF SERVICE EQUIPMENT ENCLOSURE
- 100 A, 240 V, 2P (MAIN)
- 40 A, 120 V, 1P (SIGNAL)
- 30 A, 120 V, 1P (LIGHTING)
- 15 A, 120 V, 1P (CCTV)
- 40 A, 120 V, 1P (MASTER)
- 15 A, 120 V, 1P (IISNS)

INSTALL TYPE V PHOTOELECTRIC UNIT, ADD 15 A, 120 V, 1P, CB FOR PEC.

7 EXISTING MODEL 170 MASTER CONTROLLER IN MODEL 332 CABINET FOR BEACH BOULEVARD INTERCONNECT SYSTEM.

8 INSTALL LED COUNTDOWN PEDESTRIAN SIGNAL.

9 RR BEACH/MAIN CITY STREET SIGN.

10 A PAIR OF WIRE FOR SYNC PULSE AND ANOTHER PAIR FOR DETECTOR INPUT ARE BEING CONNECTED BETWEEN STATE AND CITY CONTROLLER CABINET WHICH IS LOCATED AT MAIN STREET AND ELLIS AVENUE.

NOTES (SHEETS E-3 AND E-4):

1. AB EXISTING LOOP DETECTORS WHERE NEW LOOP DETECTORS ARE CUT.
2. POLES SHALL BE INSTALLED AT A MINIMUM OF 18" CLEARANCE BEYOND THE FACE OF THE CURBS AND A MINIMUM OF 36" ALONG THE CURB RETURNS OF INTERSECTIONS AND NEAR THE EDGES OF DRIVEWAYS.

EXISTING CONDUCTOR AND CONDUIT SCHEDULE

CONDUCTOR DESIGNATION			RUN NUMBER											
			NUMBER OF CONDUCTORS											
CABLE TYPE	Std (X)	PHASE	1	2	3	4	5	6	7	8	9	10	11	12
VEH-PED 12CSC	A	5,6+7,6P	1*	1*	1*		1*	1*					1*	1*
	B	8 / 6		1* / 1*	1* / 1*		1* / 1*	1* / 1*					1* / 1*	1* / 1*
	C	8,7P / 6				1* / 1*	1* / 1*	1* / 1*					1* / 1*	1* / 1*
	D	1,6,6+7,6P / 7					2* / 1*	2* / 1*					2* / 1*	2* / 1*
	E	7						1(R)					1(R)	1(R)
	F	1, 2, 2P / 7											1 / 1	1 / 1
	G	7, 7P / 2										1 / 1	1 / 1	1 / 1
PPB 3CSC	H	7, 8 / 2									1 / 1	1 / 1	1 / 1	1 / 1
	I	2, 5, 2P								1	1	1	1	1
TOTAL CABLES 12/3 CONDUCTORS			1	2 / 1	2 / 1	1 / 1	5 / 3	5 / 3		1	2 / 1	3 / 2	9 / 6	9 / 6
9#20		APS	1 (N)			2 (N)				1 (N)		2 (N)		
#10		STREET LIGHTING	2 (N)	2 *	2 *	2 (N)	2 *	2 *		2	2	2	4 *	
#14		IISNS		2 *	2 *		2 *	2 *		2	2	2	2	
TYPE C DLC		Ø1							2 *	2 *	2 *	2 *	2 *	2 *
		Ø2						4					4	4
		Ø5						2					2	2
		Ø6							4 *	4 *	4 *	4 *	4 *	4 *
		Ø7			2 *	4	2 * / 4	2 * / 4					2 * / 4	2 * / 4
		Ø8									6	6	6	6
TOTAL DLCs PER RUN					2 *	4	2 * / 4	2 * / 10	6 *	6 *	6 * / 6	6 * / 6	8 * / 16	8 * / 16
EVC				1	1		2	2		1	1	2	4	4
CCTV COAXIAL CABLE										1	1	1	1	1
CCTV CONTROL/POWER CABLE										1	1	1	1	1
CONDUIT SIZE			2"	3"	3"	3½"	3½"	3½"	2½"	2½"	2-2½"	3"	2-4"	2-4"

* = REMOVE CONDUCTORS AND INSTALL NEW CONDUCTORS
APS = ACCESSIBLE PEDESTRIAN SIGNAL
(N) = NEW
(R) = RC

MODIFY SIGNAL AND LIGHTING (LOCATION 2)

SCALE: 1" = 20′

E-4

APPROVED FOR ELECTRICAL WORK ONLY

STATE OF CALIFORNIA - DEPARTMENT OF TRANSPORTATION
Caltrans ELECTRICAL DESIGN

FUNCTIONAL SUPERVISOR: SHAHRAM SHAHRIARI
CALCULATED-DESIGNED BY: MINA ZOLFAGHARI
CHECKED BY: VANESSA TRUONG
REVISED BY / DATE REVISED

LAST REVISION 03-21-12 | DATE PLOTTED => 17-APR-2013 | TIME PLOTTED => 14:51

Dist	COUNTY	ROUTE	POST MILES TOTAL PROJECT	SHEET No.	TOTAL SHEETS
12	Ora	39	2.1,3.1,6.1	24	34

Mina Zolfaghari 01-29-13
REGISTERED ELECTRICAL ENGINEER DATE

4-15-13
PLANS APPROVAL DATE

REGISTERED PROFESSIONAL ENGINEER MINA ZOLFAGHARI No. E 16816 Exp. 12/31/14 ELECT. STATE OF CALIFORNIA

THE STATE OF CALIFORNIA OR ITS OFFICERS OR AGENTS SHALL NOT BE RESPONSIBLE FOR THE ACCURACY OR COMPLETENESS OF SCANNED COPIES OF THIS PLAN SHEET.

NOTE:

1. FOR ACCURATE RIGHT OF WAY DATA, CONTACT RIGHT OF WAY ENGINEERING AT THE DISTRICT OFFICE.
2. POLES SHALL BE INSTALLED AT A MINIMUM OF 18" CLEARANCE BEYOND THE FACE OF THE CURBS AND A MINIMUM OF 36" ALONG THE CURB RETURNS OF INTERSECTIONS AND NEAR THE EDGES OF DRIVEWAYS.

EXISTING STANDARD AND EQUIPMENT SCHEDULE

STANDARD				VEH SIG MTG				PED SIGNAL		PPB		LUMINAIRE	IISNS
⊗	TYPE	SMA	LMA	Ø	MAST ARM	Ø	POLE	Ø	MTG	Ø	ARROW		
A	29-5-70	55′	15′	2 5	2-MAS MAT	2	SV-1-T	2P	SP-1-T (N)	8 **	← **	165 W LED ●	McFadden Ave (N)
B	21TS (N)	-	15′(N)	-	-	7,8	SV-2-TA (N)	8P	SP-1-T (N)	2 *	→ *	235 W LED (N)	-
C	26-4-70	40′	15′	4 7	MAS MAT	4	SV-1-T	4P	SP-1-T (N)	2 **	← **	165 W LED ●	Beach Blvd (N)
D	15TS (N)	-	12′ (N)	-	-	1,2	SV-2-TA (N)	2P	SP-1-T (N)	4 *	→ *	165 W LED (N)	-
E	PPB POST (R)	-	-	-	-	-	-	-	-	4 (R)	←→ (R)	-	-
F	29-5-70	55′	15′	6 1	2-MAS MAT	6	SV-1-T	6P	SP-1-T (N)	4 **	← **	165 W LED ●	McFadden Ave (N)
G	21TS (N)	-	15′(N)	-	-	3,4	SV-2-TA (N)	4P	SP-1-T (N)	6 *	→ *	235 W LED (N)	-
H	26-4-70	40′	15′	8 3	MAS MAT	8	SV-1-T	8P	SP-1-T (N)	6 **	← **	165 W LED ●	Beach Blvd (N)
I	21TS (N)	-	15′ (N)	4 7	-	5,6	SV-2-TA (N)	6P	SP-1-T (N)	8 *	→ *	235 W LED (N)	-
J	PPB POST (R)	-	-	-	-	-	-	-	-	8 (R)	←→ (R)	-	-

** = RC EXISTING PPB AND INSTALL NEW ACCESSIBLE PEDESTRIAN SIGNAL (APS) AT 40" HEIGHT.

* = NEW ACCESSIBLE PEDESTRIAN SIGNAL (APS) AT 40" HEIGHT.

● = RC EXISTING HPS LUMINAIRE AND INSTALL NEW LED LUMINAIRE.

(R) = RC

(N) = NEW

EXISTING CONDUCTOR AND CONDUIT SCHEDULE

CONDUCTOR DESIGNATION				RUN NUMBER										
CABLE TYPE	Std ⊗	PHASE		NUMBER OF CONDUCTORS										
				1	2	3	4	5	6	7	8	9	10	11
VEH-PED 12CSC / PPB 3CSC	A	2,5,2P	8		1 * 1 *		1 * 1 *	1 * 1 *					1 * 1 *	
	B	8,7,8P	2	1 * 1 *	1 * 1 *		1 * 1 *	1 * 1 *					1 * 1 *	
	C	4,7,4P	2			1 * 1 *	1 * 1 *	1 * 1 *					1 * 1 *	
	D	1,2,2P	4				1 * 1 *	1 * 1 *					1 * 1 *	
	E		4					1(R)					1(R)	
	F	1,6,6P	4										1 1	
	G	3,4,4P	6									1 1	1 1	
	H	3,8,8P	6							1 1	1 1		1 1	
	I	5,6,6P	8								1 1		1 1	
	J		8						1(R)		1(R)		1 1(R)	
TOTAL CABLES 12/3 CONDUCTORS				1 * 1 *	2 * 2 *	1 * 1 *	4 * 4 *	4 * 4 *		1 1	2 2	1 1	9 8	
9#20	APS			2 (N)		2 (N)				2 (N)		2 (N)		
#10	STREET LIGHTING			2 (N)	2 *	2 *	2 *	2 *		2	2	2 (N)		
#14	IISNS				2 *	2 *	2 *	2 *		2	2			
#6	CONTROLLER POWER									2	2		2	
TYPE B DLC	Ø1								2 *		2 *		2 *	
	Ø2							4 *					4 *	
	Ø3			2 *	2 *		2 *	2 *					2 *	
	Ø4											4	4	
	Ø5							2 *					2 *	
	Ø6								4 *		4 *		4 *	
	Ø7											2	2	
	Ø8			4 *	4 *		4 *	4 *					4 *	
TOTAL DLCs PER RUN				6 *	6 *		6 *	12 *	6		6	6	24	
SIC													2	1
CONDUIT SIZE				2"	3"	3"	3"	3"	2½"	2"	3"	3"	2-3"	1½"

* = REMOVE CONDUCTORS AND INSTALL NEW CONDUCTORS

APS = ACCESSIBLE PEDESTRIAN SIGNAL

(N) = NEW

(R) = RC

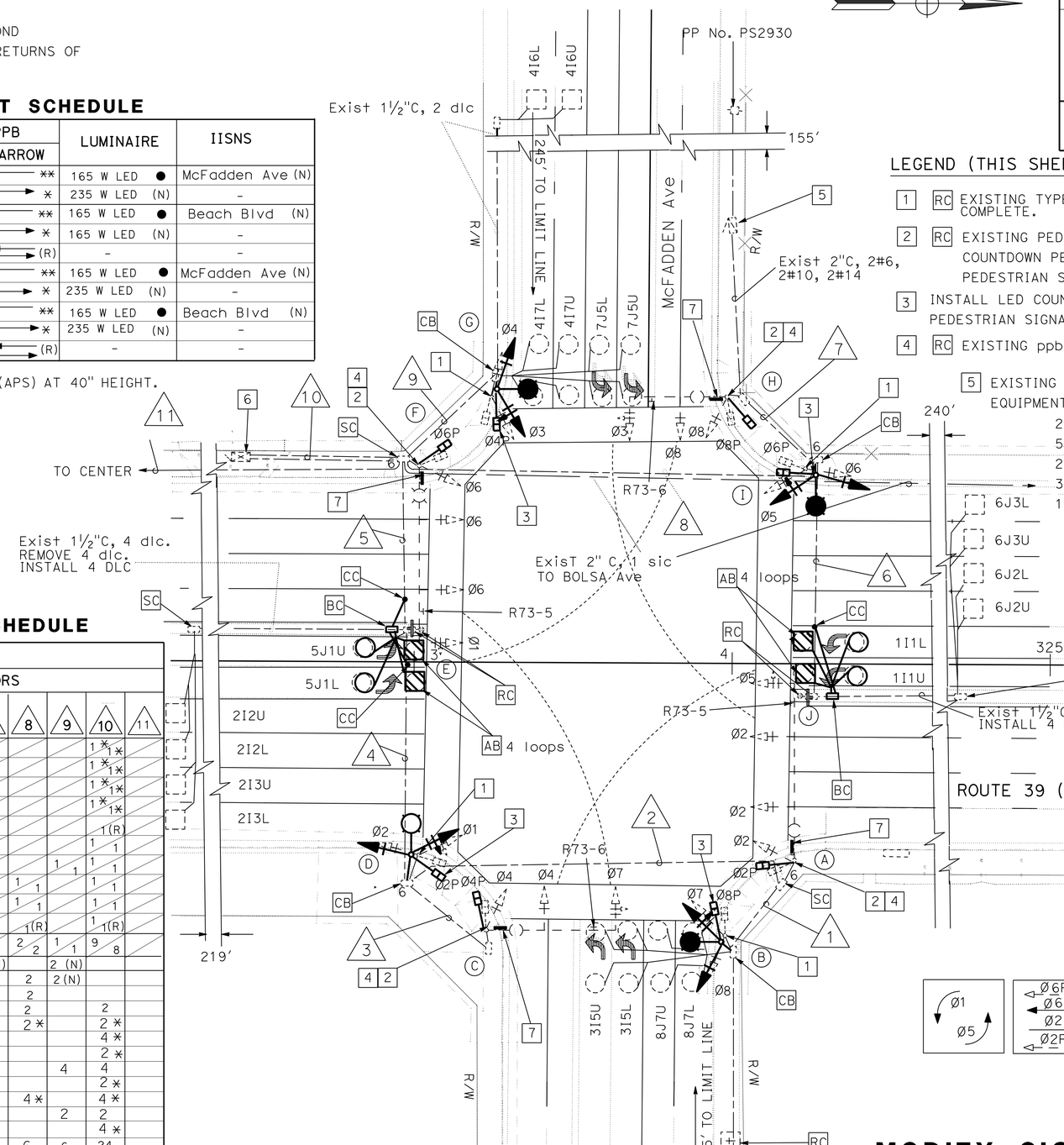

LEGEND (THIS SHEET):

1. RC EXISTING TYPE 1-A STANDARD AND SIGNAL EQUIPMENT COMPLETE.
2. RC EXISTING PEDESTRIAN SIGNAL HEAD AND INSTALL LED COUNTDOWN PEDESTRIAN SIGNAL AND ACCESSIBLE PEDESTRIAN SIGNAL (APS).
3. INSTALL LED COUNTDOWN PEDESTRIAN SIGNAL AND ACCESSIBLE PEDESTRIAN SIGNAL.
4. RC EXISTING ppb.
5. EXISTING 120/240 V METERED TYPE III-BF SERVICE EQUIPMENT ENCLOSURE WITH:
   - 2-100 A, 240 V, 2P MAIN
   - 50 A, 120 V, 1P, CB FOR SIGNAL
   - 20 A, 120 V, 1P, CB FOR IISNS (UNMETERED)
   - 30 A, 120 V, 1P, CB FOR LIGHTING (UNMETERED)
   - 15 A, 120 V, 1B, CB FOR PEC
6. EXISTING MODEL 2070 CONTROLLER IN MODEL 332 CABINET.
7. RC EXISTING IISNS AND INSTALL NEW IISNS.

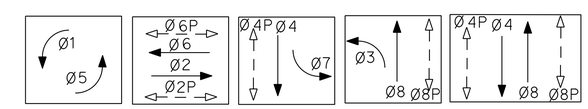

PHASE DIAGRAM

MODIFY SIGNAL AND LIGHTING (LOCATION 3)

SCALE: 1" = 20′

E-5

APPROVED FOR ELECTRICAL WORK ONLY

STATE OF CALIFORNIA - DEPARTMENT OF TRANSPORTATION
Caltrans® ELECTRICAL DESIGN

FUNCTIONAL SUPERVISOR: SHAHRAM SHAHRIARI
CALCULATED-DESIGNED BY: MINA ZOLFAGHARI
CHECKED BY: VANESSA TRUONG
REVISED BY / DATE REVISED

LAST REVISION 03-21-12 | DATE PLOTTED => 17-APR-2013 | TIME PLOTTED => 12:36

Dist	COUNTY	ROUTE	POST MILES TOTAL PROJECT	SHEET No.	TOTAL SHEETS
12	Ora	39	2.1,3.1,6.1	25	34

Mina Zolfaghari 01-29-13
REGISTERED ELECTRICAL ENGINEER DATE

4-15-13
PLANS APPROVAL DATE

REGISTERED PROFESSIONAL ENGINEER MINA ZOLFAGHARI No. E 16816 Exp. 12/31/14 ELECT. STATE OF CALIFORNIA

THE STATE OF CALIFORNIA OR ITS OFFICERS OR AGENTS SHALL NOT BE RESPONSIBLE FOR THE ACCURACY OR COMPLETENESS OF SCANNED COPIES OF THIS PLAN SHEET.

MODIFY SIGNAL AND LIGHTING (LOCATION 1)

SHEET No.	CONDUIT				CONDUCTORS			PULL BOX	LOOP DETECTOR		DLC	12 PAIRS #19 SIC	12CSC CABLE	3CSC CABLE	12" 3-SECTION SIGNAL HEAD	PEC
	2½"	3"	3½"	4"	#10	#12	9#20		TYPE D	TYPE E						
E-1, E-2	LF	LF	LF	LF	LF	LF	LF	EA	EA	EA	LF	LF	LF	LF	EA	EA
	35	170	260	60	900	830	115	9	10	17	3300	1300	1100	1100	12	1

SHEET No.	APS PPB	LED COUNTDOWN PEDESTRIAN SIGNAL HEAD	TYPE 15TS POLE CIDH PILE	TYPE 15TS POLE WITH 15′ LMA	TYPE 21TS POLE CIDH PILE	TYPE 21TS POLE WITH 15′ LMA	VEH SIG MTG SV-1-T	VEH SIG MTG SV-2-TA	PED SIG MTG SP-1-T	LED LUMINAIRE 165 W	LED LUMINAIRE 235 W	CB	BC	CC	PPB ARROW SIGN
E-1, E-2	EA	EA	EA	EA	EA	EA	EA	EA	EA	EA	EA	EA	EA	EA	EA
	8	8	2	2	2	2	4	4	8	2	6	8	5	2	10

NOTE:

1. ELECTRICAL QUANTITIES ARE SHOWN FOR INFORMATION ONLY, NOT A SEPARATE PAY ITEM.

MODIFY SIGNAL AND LIGHTING (LOCATION 2)

SHEET No.	CONDUCTORS			PULL BOX	LOOP DETECTOR		DLC	12 PAIRS #19 SIC	12CSC CABLE	3CSC CABLE	TYPE 19-3-100 POLE WITH 35′ SMA	TYPE 19-3-100 POLE CIDH PILE	TYPE 29A-5-100 POLE WITH 40′ SMA	TYPE 29A-5-100 POLE CIDH PILE	IISNS
	#10	#14	9#20		TYPE D	TYPE E									
E-3, E-4	LF	LF	LF	EA	EA	EA	LF	LF	LF	LF	EA	EA	EA	EA	EA
	820	540	92	5	6	6	1790	810	1080	750	1	1	1	1	3

SHEET No.	TYPE 61A-5-100 POLE WITH 65′ SMA	TYPE 61A-5-100 POLE CIDH PILE	TYPE 15TS POLE CIDH PILE	TYPE 15TS POLE WITH 15′ LMA	TYPE 21TS POLE CIDH PILE	TYPE 21TS POLE WITH 15′ LMA	VEH SIG MTG SV-1-T	VEH SIG MTG SV-2-TA	PED SIG MTG SP-1-T	LED LUMINAIRE 165 W	LED LUMINAIRE 235 W
E-3, E-4	EA	EA	EA	EA	EA	EA	EA	EA	EA	EA	EA
	1	1	1	1	2	2	4	2	6	3	5

SHEET No.	PEDESTRIAN BARRICADE	CC	BC	CB	APS PPB	LED COUNTDOWN PEDESTRIAN SIGNAL HEAD	12" 3-SECTION SIGNAL HEAD	12" 4-SECTION SIGNAL HEAD	12" 5-SECTION SIGNAL HEAD	PPB ARROW SIGN
E-3, E-4	EA	EA	EA	EA	EA	EA	EA	EA	EA	EA
	2	5	8	4	6	6	12	4	2	6

MODIFY SIGNAL AND LIGHTING (LOCATION 3)

SHEET No.	CONDUCTORS			TYPE 21TS POLE CIDH PILE	TYPE 21TS POLE WITH 15′ LMA	TYPE 15TS POLE CIDH PILE	TYPE 15TS POLE WITH 12′ LMA	VEH SIG MTG SV-2-TA	PED SIG MTG SP-1-T	LED LUMINAIRE 165 W	LED LUMINAIRE 235 W	IISNS	APS PPB	LED COUNTDOWN PEDESTRIAN SIGNAL HEAD	LOOP DETECTOR		12" 3-SECTION SIGNAL HEAD	PPB ARROW SIGN	CC	BC	CB
	#10	#14	9#20												TYPE D	TYPE E						
E-5	LF	LF	LF	EA	EA	EA	EA	EA	EA	EA	EA	EA	EA	EA	EA	EA	EA	EA	EA	EA	EA
	755	595	116	3	3	1	1	4	8	5	3	4	8	8	4	4	8	8	3	2	4

SHEET No.	12CSC CABLE	3CSC CABLE
E-5	LF	LF
	1060	1060

APPROVED FOR ELECTRICAL WORK ONLY

ELECTRICAL QUANTITIES

NO SCALE

E-6

STATE OF CALIFORNIA - DEPARTMENT OF TRANSPORTATION
Caltrans® ELECTRICAL DESIGN

FUNCTIONAL SUPERVISOR: SHAHRAM SHAHRIARI
CALCULATED-DESIGNED BY: MINA ZOLFAGHARI
CHECKED BY: VANESSA TRUONG
REVISED BY
DATE REVISED

LAST REVISION 03-21-12
DATE PLOTTED => 17-APR-2013
TIME PLOTTED => 12:36

Dist	COUNTY	ROUTE	POST MILES TOTAL PROJECT	SHEET No.	TOTAL SHEETS
12	Ora	39	2.1, 3.1, 6.1	26	34

REGISTERED CIVIL ENGINEER 12-7-12 DATE

4-15-13
PLANS APPROVAL DATE

REGISTERED PROFESSIONAL ENGINEER Gurinderpal Bhullar No. C48815 Exp. 9-30-14 CIVIL STATE OF CALIFORNIA

THE STATE OF CALIFORNIA OR ITS OFFICERS OR AGENTS SHALL NOT BE RESPONSIBLE FOR THE ACCURACY OR COMPLETENESS OF SCANNED COPIES OF THIS PLAN SHEET.

NOTES:

Unless otherwise specified in the special provisions, all temporary warning signs shall have black legend on orange background.

California code are designated by (CA). Otherwise, Federal (MUTCD) codes are shown.

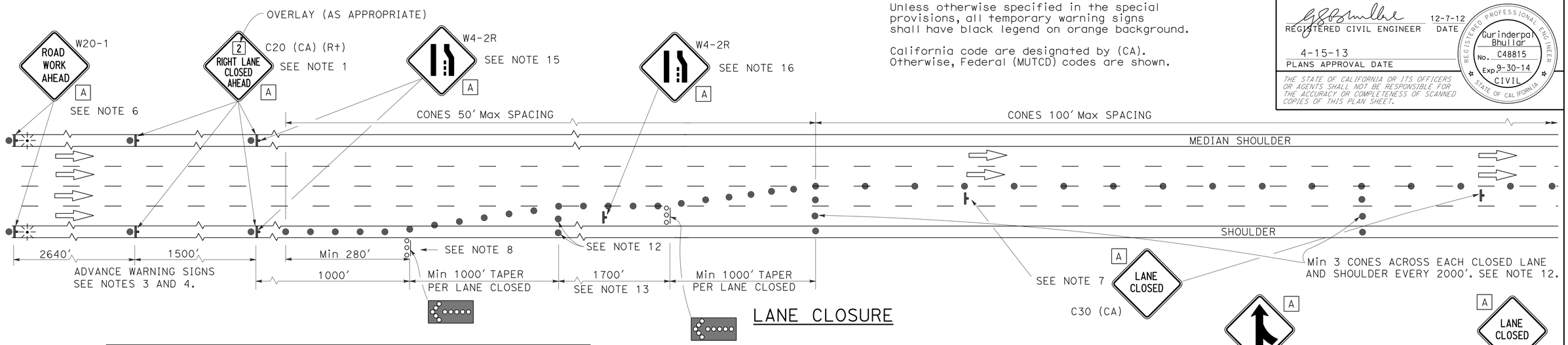

LANE CLOSURE

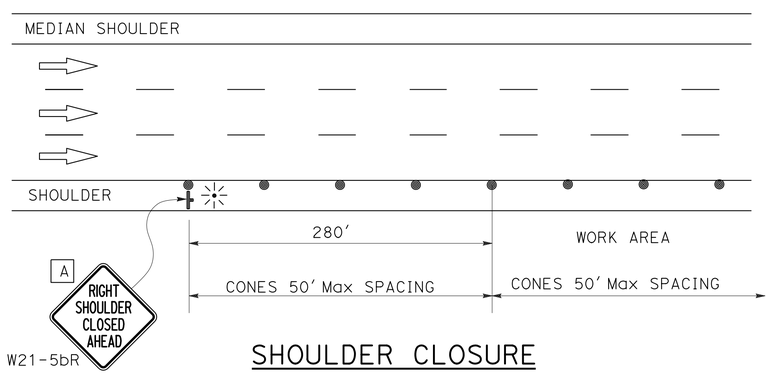

SHOULDER CLOSURE

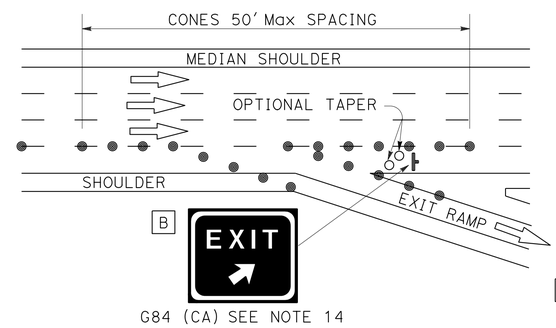

LANE CLOSURE AT EXIT RAMP

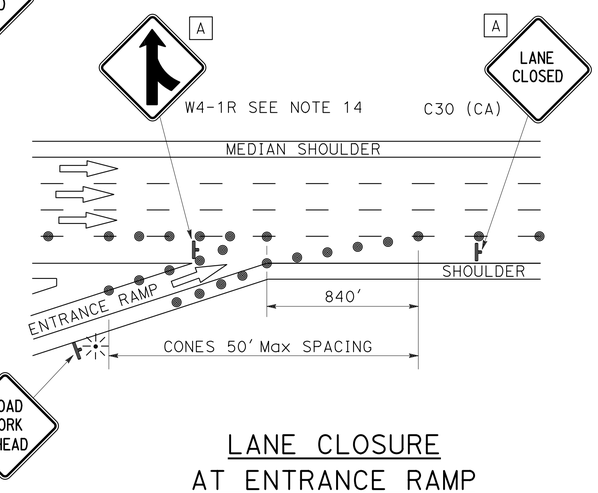

LANE CLOSURE AT ENTRANCE RAMP

NOTES:

1. Median lane closures shall conform to the details for outside lane closures except that C20 (CA) (Lt) signs shall be used.
2. At least one person shall be assigned to provide full time maintenance of traffic control devices for lane closures.
3. Duplicate sign installations are not required:
   a) On opposite shoulder if at least one-half of the available lanes remain open to traffic.
   b) In the median if the width of the median shoulder is less than 8' and the outside lanes are to be closed.
4. Each advance warning sign on each side of the roadway shall be equipped with at least two flags for daytime closure. Each flag shall be at least 16" x 16" in size and shall be orange or fluorescent red-orange in color. Flashing beacons shall be placed at the locations indicated for lane closure during hours of darkness.
5. A C14 (CA) "END ROAD WORK" sign, as appropriate, shall be placed at the end of the lane closure unless the end of work area is obvious or ends within a larger project's limits.
6. If the W20-1 sign would follow within 2000' of a stationary W20-1 or C11 (CA) "ROAD WORK NEXT _____ MILES", use a C20 (CA) sign for the first advance warning sign.
7. Place a C30 (CA) sign every 2000' throughout length of lane closure.
8. One flashing arrow sign for each lane closed. The first flashing arrow sign shall be Type I. All others may be either Type I or Type II.
9. A minimum 1500' of sight distance shall be provided where possible for vehicles approaching the first flashing arrow sign. Lane closures shall not begin at top of crest vertical curve or on a horizontal curve.
10. All cones used for lane closures during the hours of darkness shall be fitted with retroreflective bands (or sleeves) as specified in the specifications.
11. Portable delineators, placed at one-half the spacing indicated for traffic cones may be used instead of cones for daytime closures only.
12. Unless otherwise specified in the special provisions, a minimum of 3 cones shall be placed transversely across each closed lane and shoulder at each location where a taper across a traffic lane ends and every 2000' as shown on the "Lane Closure" detail. Two Type II barricades may be used instead of the 3 cones. The transverse alignment of the cones or barricades on the closed shoulder may be shifted from the transverse alignment to provide access to the work.
13. Unless otherwise specified in the special provisions, the 1700' tangent shown along lane lines shall be used between the 1000' tapers required for each closed traffic lane.
14. Unless otherwise specified in the special provisions, the G84 (CA) and W4-1 signs shall be used as shown.
15. When specified in the special provisions, a W4-2 "LANE ENDS" symbol sign is to be used in place of the C20 (CA) "RIGHT LANE CLOSED AHEAD" sign.
16. The W4-2 "LANE ENDS" symbol sign shown at this location is to be used where the W4-2 sign is used as advance warning as described in Note 15.

SIGN PANEL SIZE (Min)

A	48" x 48"
B	54" x 48"

LEGEND

- TRAFFIC CONE
- TRAFFIC CONE (OPTIONAL TAPER)
- TEMPORARY SIGN
- FLASHING ARROW SIGN (FAS)
- FAS SUPPORT OR TRAILER
- PORTABLE FLASHING BEACON

STATE OF CALIFORNIA
DEPARTMENT OF TRANSPORTATION

TRAFFIC CONTROL SYSTEM FOR LANE CLOSURE ON FREEWAYS AND EXPRESSWAYS

NO SCALE

TCS-1

REVISED BY | DATE REVISED | CALCULATED-DESIGNED BY | CHECKED BY | FUNCTIONAL SUPERVISOR

STATE OF CALIFORNIA - DEPARTMENT OF TRANSPORTATION
Caltrans

LAST REVISION 00-00-00 | DATE PLOTTED => 17-APR-2013 | TIME PLOTTED => 10:29

Dist	COUNTY	ROUTE	POST MILES TOTAL PROJECT	SHEET No.	TOTAL SHEETS
12	Ora	39	2.1, 3.1, 6.1	27	34

REGISTERED CIVIL ENGINEER 12-7-12 DATE

4-15-13
PLANS APPROVAL DATE

REGISTERED PROFESSIONAL ENGINEER Gurinderpal Bhullar No. C48815 Exp. 9-30-14 CIVIL STATE OF CALIFORNIA

THE STATE OF CALIFORNIA OR ITS OFFICERS OR AGENTS SHALL NOT BE RESPONSIBLE FOR THE ACCURACY OR COMPLETENESS OF SCANNED COPIES OF THIS PLAN SHEET.

TYPICAL LANE CLOSURE

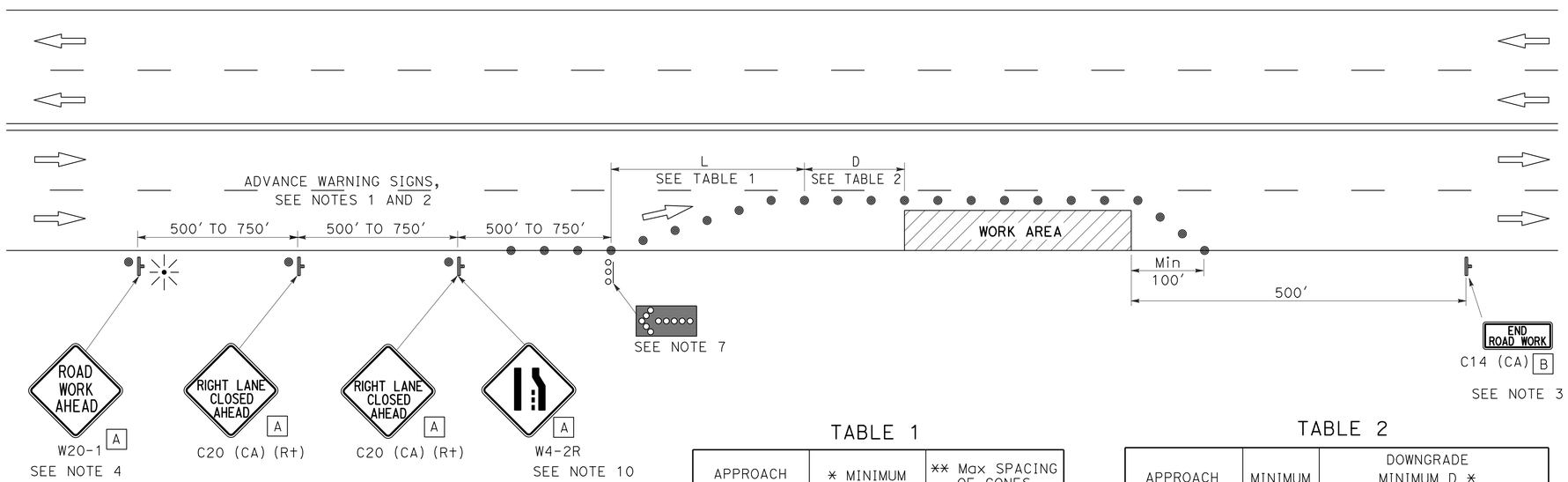

NOTES:

Unless otherwise specified in the special provisions, all temporary warning signs shall have black legend on orange background.

California code are designated by (CA). Otherwise, Federal (MUTCD) codes are shown.

LEGEND

- TRAFFIC CONE
- TEMPORARY SIGN
- FLASHING ARROW SIGN (FAS)
- FAS SUPPORT OR TRAILER
- PORTABLE FLASHING BEACON

SIGN PANEL SIZE (Min)

A 36" x 36"

B 36" x 18"

TABLE 1

APPROACH SPEED	* MINIMUM L	** Max SPACING OF CONES ALONG TAPER
mph	ft	ft
20 AND BELOW	80	20
25	125	25
30	180	30
35	245	35
40	320	40
45	540	45
50	600	50
Over 50	SEE NOTE 9	

* USE L FOR LANE WIDTHS LESS THAN OR EQUAL TO 12'.
** SEE NOTE 8.

TABLE 2

APPROACH SPEED	MINIMUM D	DOWNGRADE MINIMUM D *		
		-3%	-6%	-9%
mph	ft	ft	ft	ft
25 AND BELOW	155	158	165	173
30	200	205	215	227
35	250	257	271	287
40	305	315	333	354
45	360	378	400	427
50	425	446	474	507
OVER 50	SEE NOTE 9			

* USE ON SUSTAINED DOWNGRADE STEEPER THAN -3 PERCENT AND LONGER THAN 1 MILE.

NOTES:

1. Where approach speeds are low, advance warning signs may be placed at 300' spacing and placed closer in urban areas.
2. Each advance warning sign shall be equipped with at least two flags for daytime closure. Each flag shall be at least 16" x 16" in size and shall be orange or fluorescent red-orange in color. Flashing beacons shall be placed at the locations indicated for lane closure during hours of darkness.
3. A C14 (CA) "END ROAD WORK" sign, as appropriate, shall be placed at the end of the lane closure unless the end of work area is obvious, or ends within a larger project's limits.
4. If the W20-1 sign would follow within 2000' of a stationary W20-1 or C11 (CA) "ROAD WORK NEXT _____ MILES", use a C20 (CA) sign for the first advance warning sign.
5. All cones used for lane closures during the hours of darkness shall be fitted with retroreflective bands (or sleeves) as specified in the specifications.
6. Portable delineators, placed at one-half the spacing indicated for traffic cones, may be used instead of cones for daytime closures only.
7. Flashing arrow sign shall be either Type I or Type II.
8. The maximum spacing between cones along a tangent shall be 50' and along a taper shall be approximately as shown in Table 1.
9. For approach speeds over 50 mph, use the "Traffic Control System for Lane Closure On Freeways And Expressways" plan for lane closure details and requirements.
10. When specified in the special provisions, a W4-2 "LANE ENDS" symbol sign is to be used in place of the C20 (CA) "RIGHT LANE CLOSED AHEAD" sign.

STATE OF CALIFORNIA
DEPARTMENT OF TRANSPORTATION

TRAFFIC CONTROL SYSTEM FOR LANE CLOSURE ON MULTILANE CONVENTIONAL HIGHWAYS

NO SCALE

TCS-2

STATE OF CALIFORNIA - DEPARTMENT OF TRANSPORTATION
Caltrans

FUNCTIONAL SUPERVISOR | CALCULATED-DESIGNED BY | CHECKED BY | REVISED BY | DATE REVISED

LAST REVISION 00-00-00 | DATE PLOTTED => 17-APR-2013 | TIME PLOTTED => 10:29

Dist	COUNTY	ROUTE	POST MILES TOTAL PROJECT	SHEET No.	TOTAL SHEETS
12	Ora	39	2.1, 3.1, 6.1	28	34

REGISTERED CIVIL ENGINEER

April 20, 2012
PLANS APPROVAL DATE

REGISTERED PROFESSIONAL ENGINEER
Roberta L. McLaughlin
No. C40375
Exp. 3-31-13
CIVIL
STATE OF CALIFORNIA

THE STATE OF CALIFORNIA OR ITS OFFICERS OR AGENTS SHALL NOT BE RESPONSIBLE FOR THE ACCURACY OR COMPLETENESS OF SCANNED COPIES OF THIS PLAN SHEET.

TO ACCOMPANY PLANS DATED 4-15-13

2010 REVISED STANDARD PLAN RSP A24A

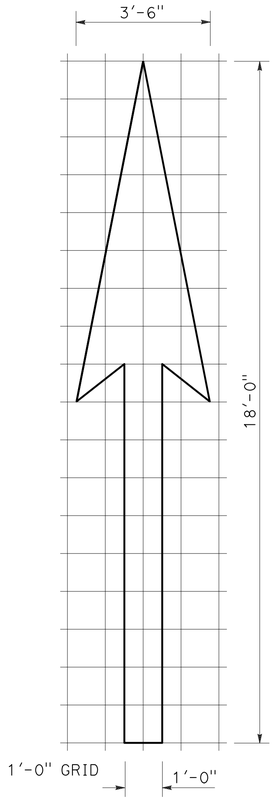

A=25 ft^2

TYPE I 18'-0" ARROW

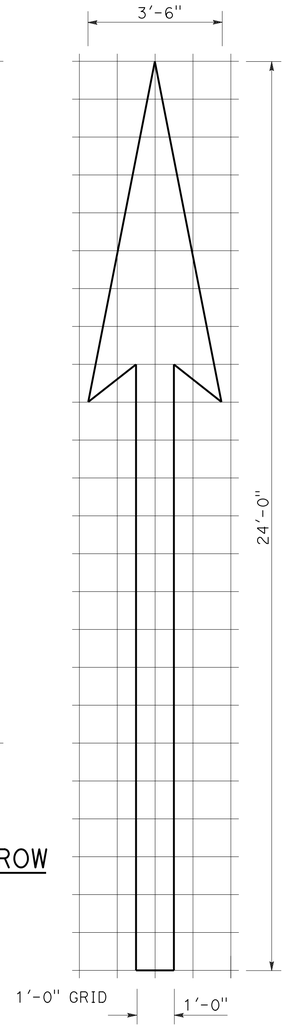

A=31 ft^2

TYPE I 24'-0" ARROW

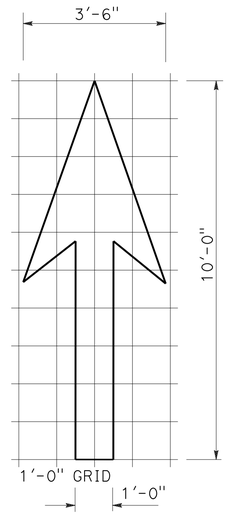

A=14 ft^2

TYPE I 10'-0" ARROW

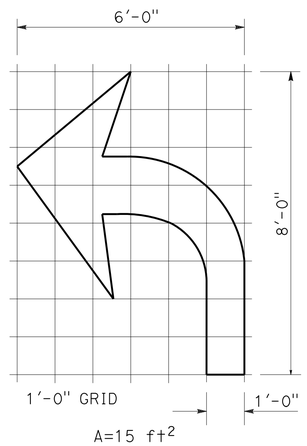

A=15 ft^2

TYPE IV (L) ARROW

(For Type IV (R) arrow, use mirror image)

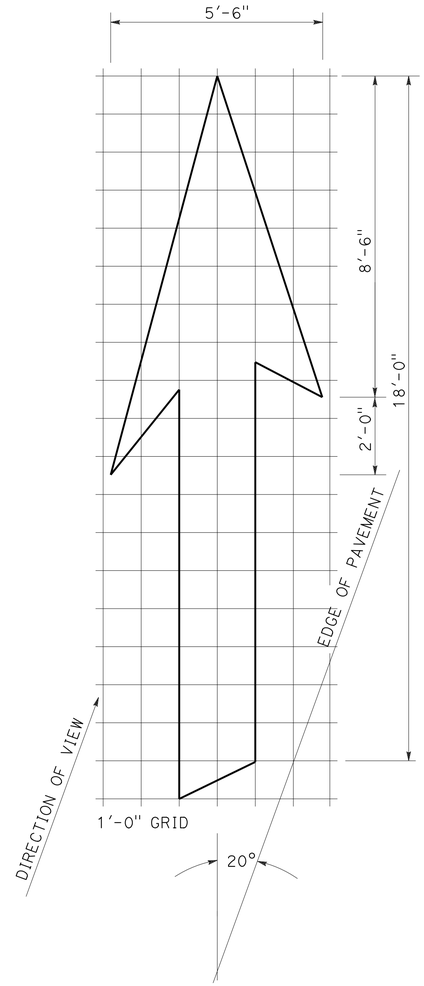

A=42 ft^2

TYPE VI ARROW

Right lane drop arrow
(For left lane, use mirror image)

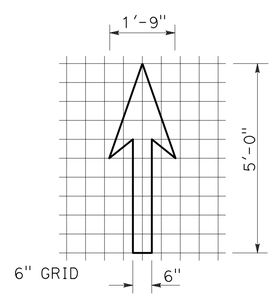

A=3.5 ft^2

BIKE LANE ARROW

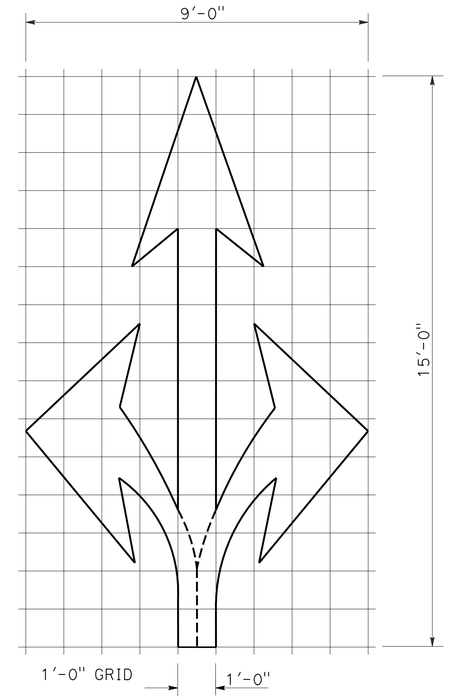

A=36 ft^2

TYPE VIII ARROW

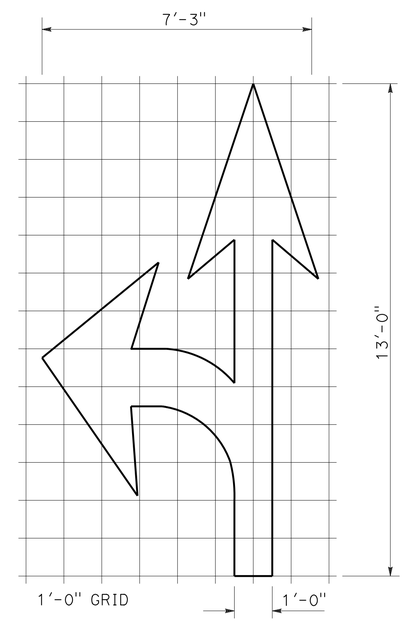

A=27 ft^2

TYPE VII (L) ARROW

(For Type VII (R) arrow, use mirror image)

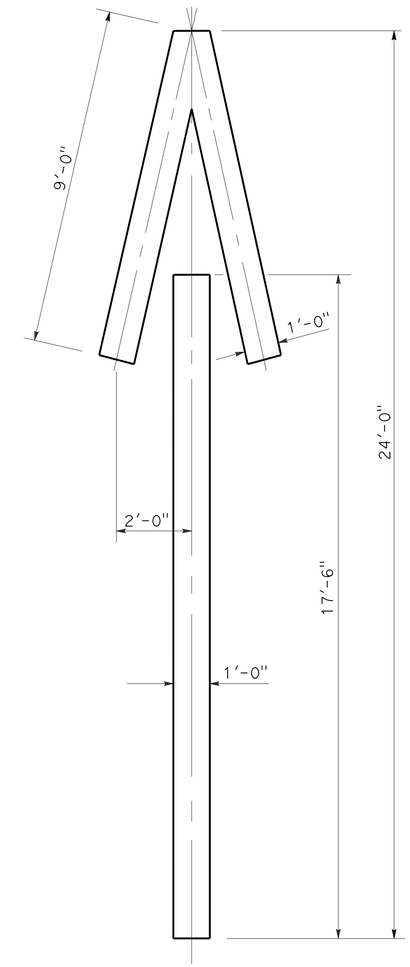

A=33 ft^2

TYPE V ARROW

NOTE:
Minor variations in dimensions may be accepted by the Engineer.

STATE OF CALIFORNIA
DEPARTMENT OF TRANSPORTATION

PAVEMENT MARKINGS ARROWS

NO SCALE

RSP A24A DATED APRIL 20, 2012 SUPERSEDES STANDARD PLAN A24A DATED MAY 20, 2011 - PAGE 13 OF THE STANDARD PLANS BOOK DATED 2010.

REVISED STANDARD PLAN RSP A24A

3-14-12

Dist	COUNTY	ROUTE	POST MILES TOTAL PROJECT	SHEET No.	TOTAL SHEETS
12	Ora	39	2.1, 3.1, 6.1	29	34

REGISTERED CIVIL ENGINEER

October 19, 2012
PLANS APPROVAL DATE

REGISTERED PROFESSIONAL ENGINEER
Roberta L. McLaughlin
No. C40375
Exp. 3-31-13
CIVIL
STATE OF CALIFORNIA

THE STATE OF CALIFORNIA OR ITS OFFICERS OR AGENTS SHALL NOT BE RESPONSIBLE FOR THE ACCURACY OR COMPLETENESS OF SCANNED COPIES OF THIS PLAN SHEET.

NOTE: TO ACCOMPANY PLANS DATED 4-15-13

Minor variations in dimensions may be accepted by the Engineer.

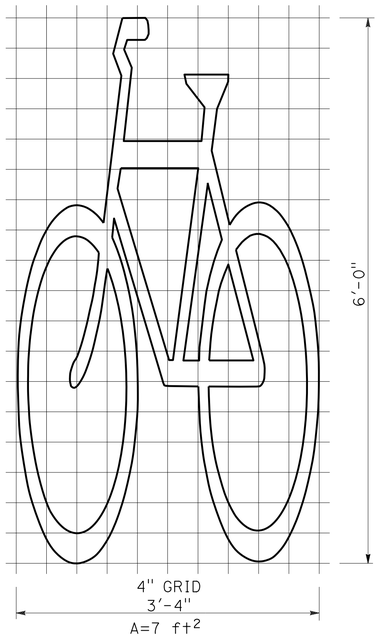

BIKE LANE SYMBOL WITHOUT PERSON

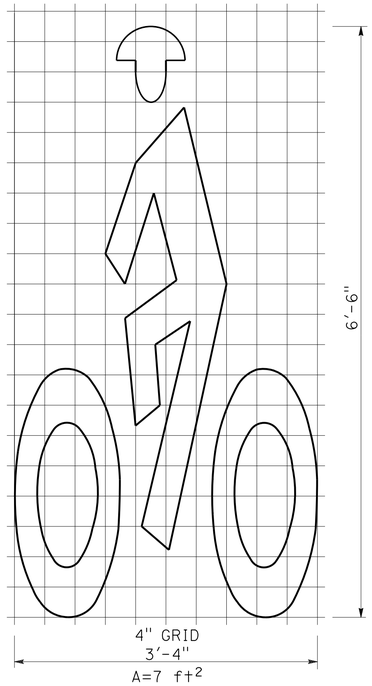

BIKE LANE SYMBOL WITH PERSON

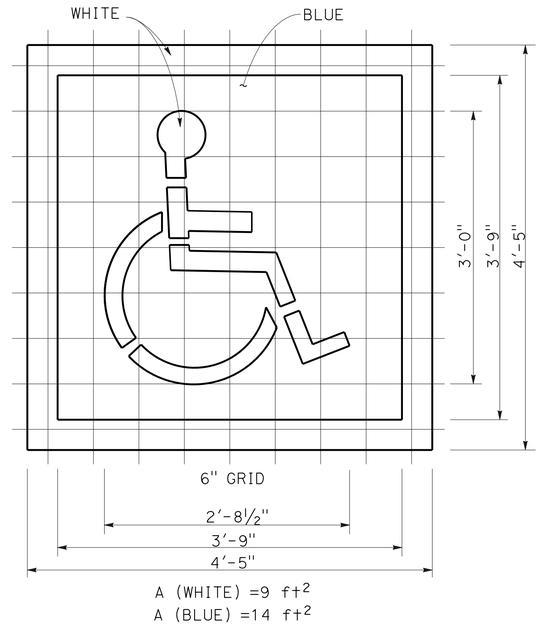

INTERNATIONAL SYMBOL OF ACCESSIBILITY (ISA) MARKING

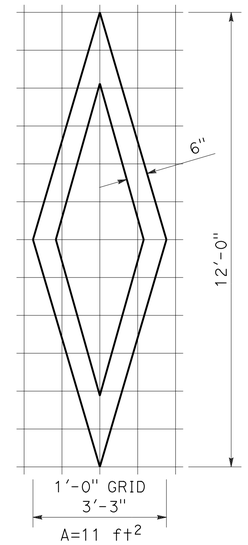

DIAMOND SYMBOL

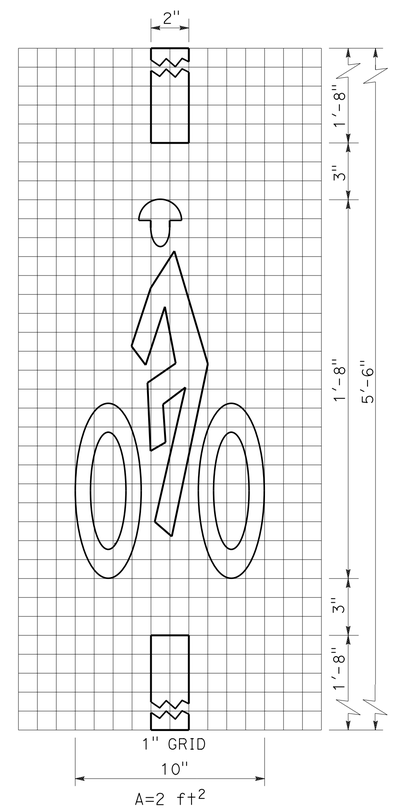

BICYCLE LOOP DETECTOR SYMBOL

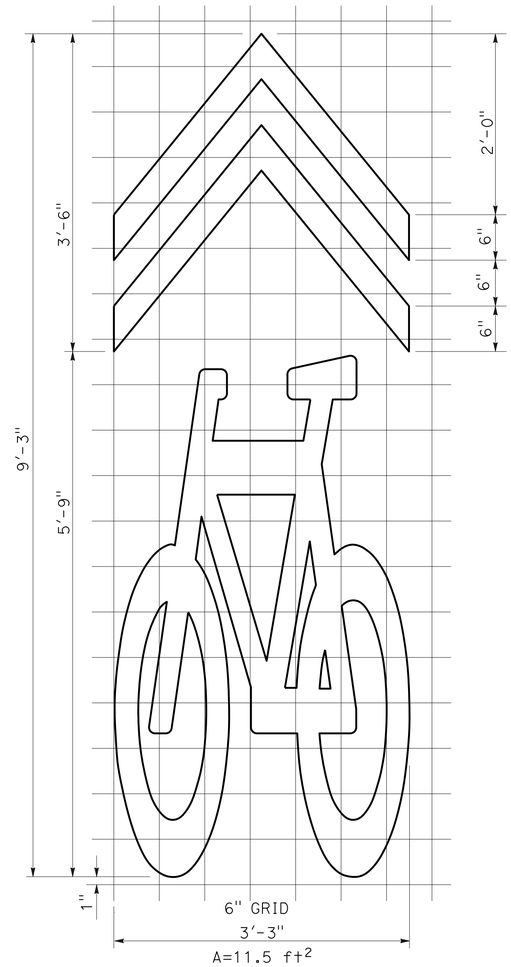

SHARED ROADWAY BICYCLE MARKING

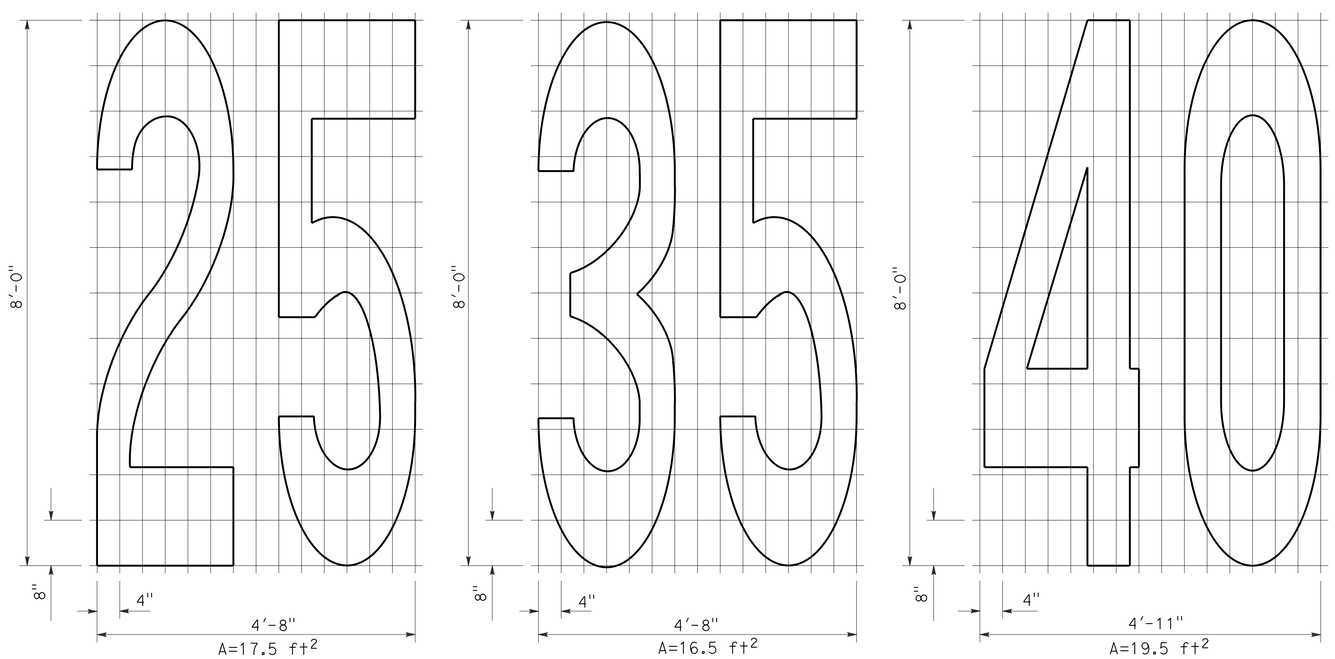

NUMERALS

STATE OF CALIFORNIA
DEPARTMENT OF TRANSPORTATION

PAVEMENT MARKINGS SYMBOLS AND NUMERALS

NO SCALE

RSP A24C DATED OCTOBER 19, 2012 SUPERSEDES STANDARD PLAN A24C DATED MAY 20, 2011 - PAGE 15 OF THE STANDARD PLANS BOOK DATED 2010.

REVISED STANDARD PLAN RSP A24C

2010 REVISED STANDARD PLAN RSP A24C

6-28-12

Dist	COUNTY	ROUTE	POST MILES TOTAL PROJECT	SHEET No.	TOTAL SHEETS
12	Ora	39	2.1, 3.1, 6.1	30	34

REGISTERED CIVIL ENGINEER

July 20, 2012
PLANS APPROVAL DATE

REGISTERED PROFESSIONAL ENGINEER
Roberta L. McLaughlin
No. C40375
Exp. 3-31-13
CIVIL
STATE OF CALIFORNIA

THE STATE OF CALIFORNIA OR ITS OFFICERS OR AGENTS SHALL NOT BE RESPONSIBLE FOR THE ACCURACY OR COMPLETENESS OF SCANNED COPIES OF THIS PLAN SHEET.

TO ACCOMPANY PLANS DATED 4-15-13

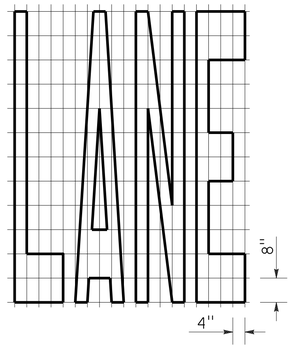

A=24 ft²

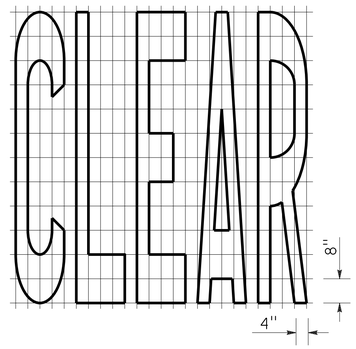

A=27 ft²

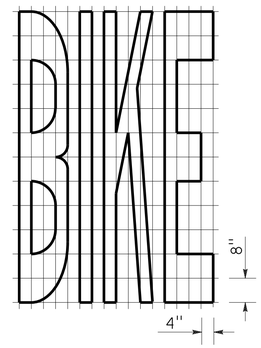

A=21 ft²

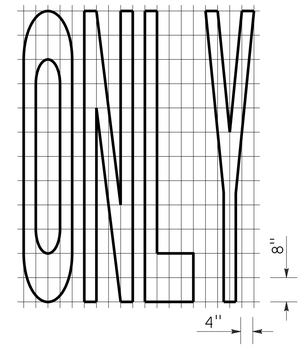

A=22 ft²

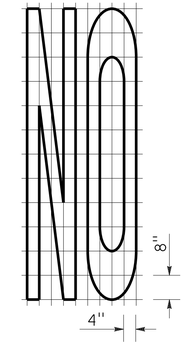

A=14 ft²

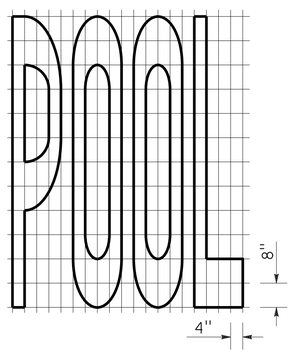

A=23 ft²

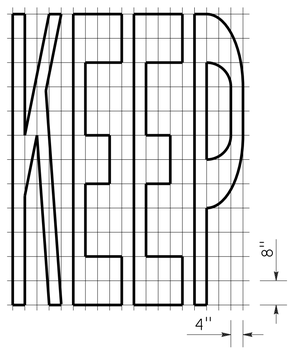

A=24 ft²

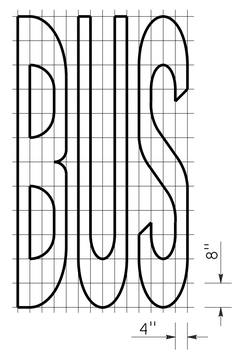

A=20 ft²

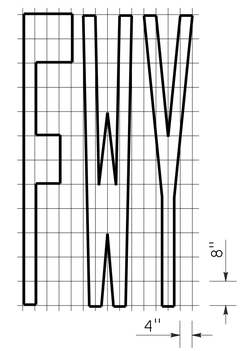

A=16 ft²

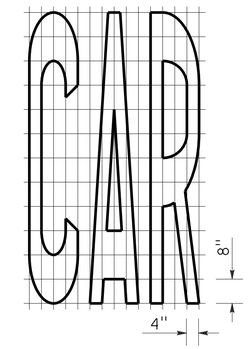

A=17 ft²

WORD MARKINGS			
ITEM	ft²	ITEM	ft²
LANE	24	NO	14
POOL	23	BIKE	21
CAR	17	BUS	20
CLEAR	27	ONLY	22
KEEP	24	FWY	16

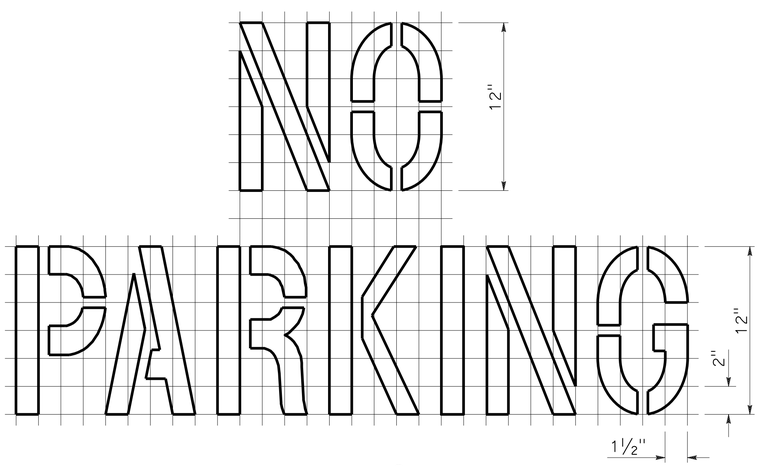

A=2 ft²

See Notes 6 and 7

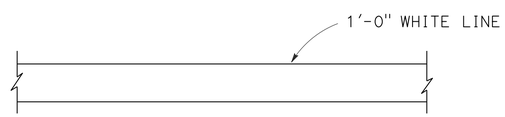

LIMIT LINE (STOP LINE)

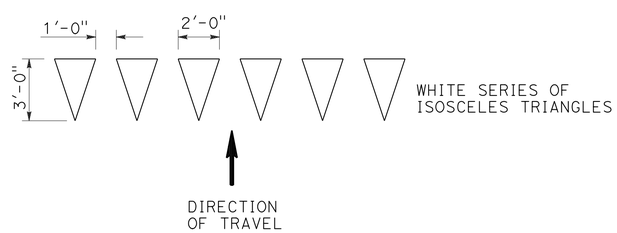

YIELD LINE

NOTES:

1. If a message consists of more than one word, it should read "UP", i.e., the first word should be nearest the driver.
2. The space between words should be at least four times the height of the characters for low speed roads, but not more than ten times the height of the characters. The space may be reduced appropriately where there is limited space because of local conditions.
3. Minor variations in dimensions may be accepted by the Engineer.
4. Portions of a letter, number or symbol may be separated by connecting segments not to exceed 2" in width.
5. The words "NO PARKING" pavement marking is to be used for parking facilities. For typical locations of markings, see Standard Plans A90A and A90B.
6. The words "NO PARKING", shall be painted in white letters no less than 1'-0" high on a contrasting background and located so that it is visible to traffic enforcement officials.

STATE OF CALIFORNIA
DEPARTMENT OF TRANSPORTATION

PAVEMENT MARKINGS WORDS, LIMIT AND YIELD LINES

NO SCALE

RSP A24E DATED JULY 20, 2012 SUPERSEDES STANDARD PLAN A24E
DATED MAY 20, 2011 - PAGE 17 OF THE STANDARD PLANS BOOK DATED 2010.

REVISED STANDARD PLAN RSP A24E

2010 REVISED STANDARD PLAN RSP A24E

6-12-12

Dist	COUNTY	ROUTE	POST MILES TOTAL PROJECT	SHEET No.	TOTAL SHEETS
12	Ora	39	2.1, 3.1, 6.1	31	34

REGISTERED CIVIL ENGINEER

July 20, 2012
PLANS APPROVAL DATE

REGISTERED PROFESSIONAL ENGINEER
Roberta L. McLaughlin
No. C40375
Exp. 3-31-13
CIVIL
STATE OF CALIFORNIA

THE STATE OF CALIFORNIA OR ITS OFFICERS OR AGENTS SHALL NOT BE RESPONSIBLE FOR THE ACCURACY OR COMPLETENESS OF SCANNED COPIES OF THIS PLAN SHEET.

TO ACCOMPANY PLANS DATED 4-15-13

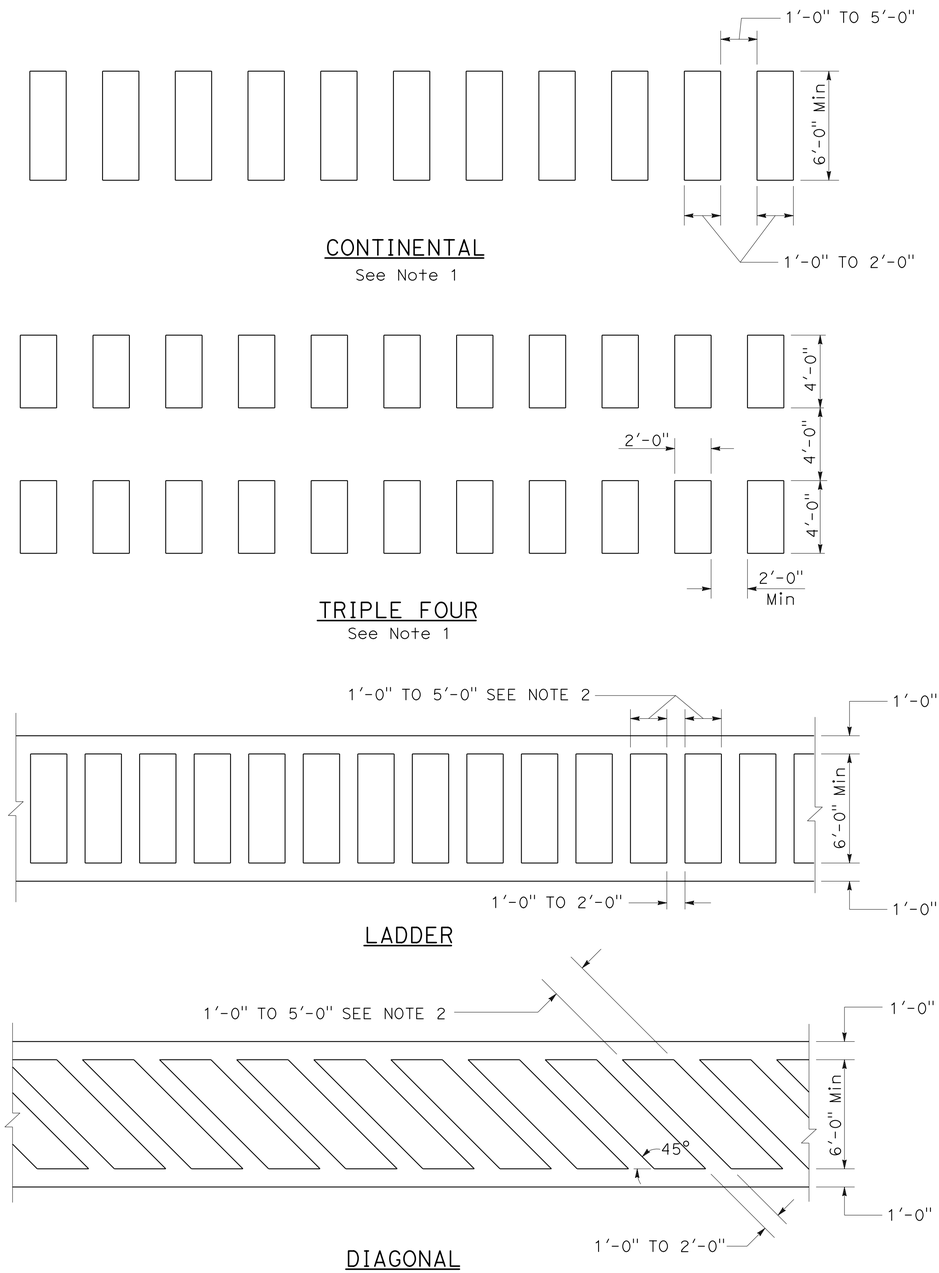

HIGHER VISIBILITY CROSSWALKS

NOTES:

1. Spaces between markings should be placed in wheel tracks of each lane.
2. Spacings not to exceed 2.5 times width of longitudinal line.
3. All crosswalk markings must be white except for those near schools must be yellow.

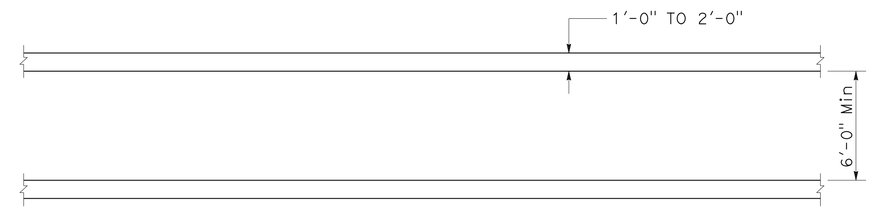

BASIC

STATE OF CALIFORNIA
DEPARTMENT OF TRANSPORTATION

PAVEMENT MARKINGS CROSSWALKS

NO SCALE

RSP A24F DATED JULY 20, 2012 SUPPLEMENTS THE STANDARD PLANS BOOK DATED 2010.

REVISED STANDARD PLAN RSP A24F

2010 REVISED STANDARD PLAN RSP A24F

6-28-12

DIST	COUNTY	ROUTE	POST MILES TOTAL PROJECT	SHEET NO.	TOTAL SHEETS
12	Ora	39	2.1, 3.1, 6.1	32	34

REGISTERED ELECTRICAL ENGINEER

January 20, 2012
PLANS APPROVAL DATE

REGISTERED PROFESSIONAL ENGINEER
Jeffery G. McRae
No. E14512
Exp. 6-30-12
ELECTRICAL
STATE OF CALIFORNIA

THE STATE OF CALIFORNIA OR ITS OFFICERS OR AGENTS SHALL NOT BE RESPONSIBLE FOR THE ACCURACY OR COMPLETENESS OF SCANNED COPIES OF THIS PLAN SHEET.

TO ACCOMPANY PLANS DATED 4-15-13

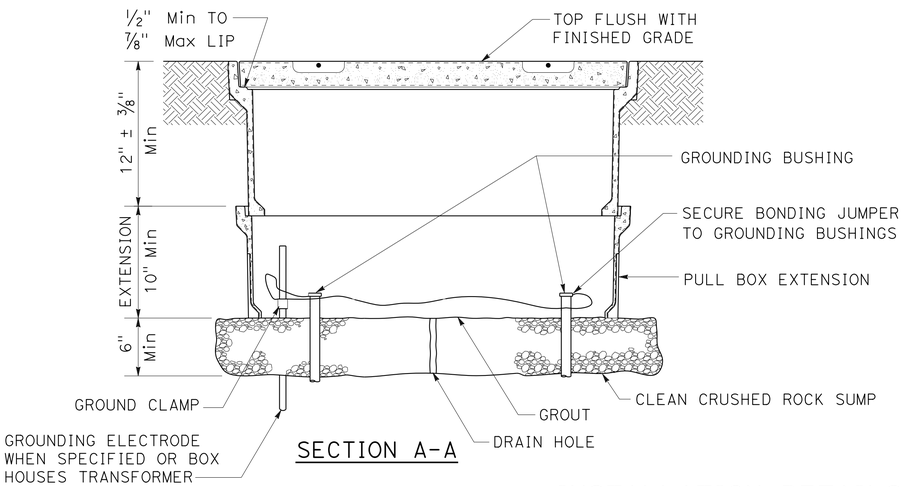

SECTION A-A

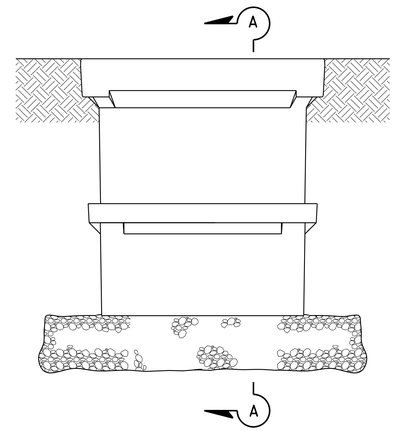

SIDE VIEW

INSTALLATION DETAILS

DETAIL A

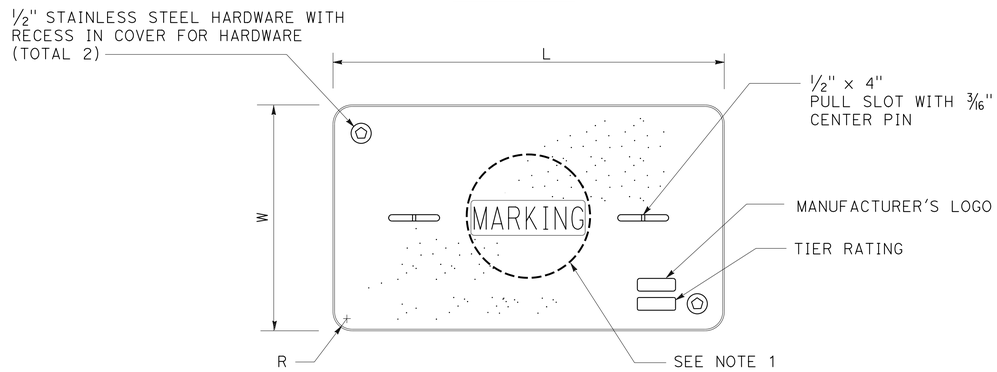

COVER TOP VIEW

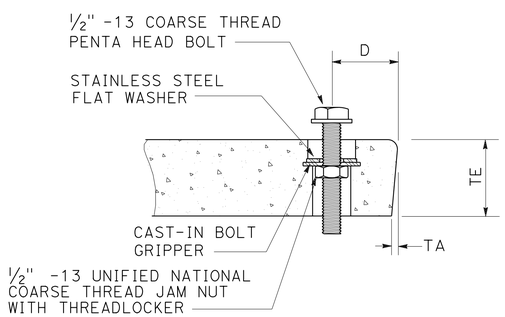

TYPICAL COVER CAPTIVE BOLT

OR SIMILAR

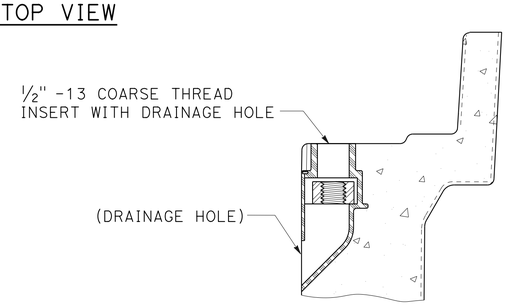

TYPICAL THREADED INSERT

OR SIMILAR

DIMENSION TABLE										
PULL BOX	PULL BOX			COVER						
	MINIMUM DEPTH BOX	MINIMUM DEPTH EXTENSION	MAXIMUM WEIGHT	L	W	R	TE	TA	D	MAXIMUM WEIGHT
No. 3½	12"	N/A	40 lb	1' - 3⅜"	10⅛"	1⅜"	2"	⅛"	1¾"	30 lb
No. 5	12"	10"	55 lb	1' - 11¼"	1' - 1¾"	1⅜"	2"	⅛"	1¾"	60 lb
No. 6	12"	10"	70 lb	2' - 6½"	1' - 5½"	1⅜"	2"	⅛"	2"	85 lb

NOTES ON PULL BOXES:

1. Pull box covers must be marked as follows: "SERVICE" Service circuits between service point and service disconnect; "SPRINKLER-CONTROL" sprinkler control circuits, 50 V or less; "CALTRANS" on all pull boxes, except pull boxes marked "SPRINKLER-CONTROL"; and "TELEPHONE" Telephone service;

   A) No. 3½ pull box.
      1) "SIGNAL" - Traffic signal circuits with or without street or sign lighting circuits.
      2) "ST LIGHTING" - Street or sign lighting circuits where voltage is under 600 V.

   B) No. 5, 6, 9 or 9A pull box.
      1) "TRAFFIC SIGNAL" - Traffic signal circuits with or without street or sign lighting circuits.
      2) "STREET LIGHTING" - Street or sign lighting circuits where voltage is under 600 V.
      3) "STREET LIGHTING-HIGH VOLTAGE" - Street or sign lighting circuits where voltage is above 600 V.
      4) "IRRIGATION" - Circuits to irrigation controller 120 V or more.
      5) "RAMP METER" - Ramp meter circuits.
      6) "COUNT STATION" - Count or speed monitor circuits.
      7) "COMMUNICATIONS" - Communication circuits.
      8) "TOS COMMUNICATIONS" - TOS communication line.
      9) "TOS POWER" - TOS power.
      10) "TDC POWER" - Telephone demarcation cabinet power.
      11) "CCTV" - Closed circuit television circuits.
      12) "TMS" - Traffic monitoring station circuits.
      13) "CMS" - Changeable message sign circuits.
      14) "HAR" - Highway advisory radio circuits.

2. The nominal dimensions of the opening in which the cover sets must be the same as the cover dimensions (L and W) plus ⅛" or greater.

3. Covers and boxes must be interchangeable with California Standard. When interchanged with a standard, the top surfaces must be flush within ⅛". Top outside radius of covers and pull boxes must have a ⅛" radius.

4. Pull box extension may be another pull box as long as the bottom edge of the pull box can fit into the cover opening.

STATE OF CALIFORNIA
DEPARTMENT OF TRANSPORTATION

ELECTRICAL SYSTEMS (PULL BOX)

NO SCALE

RSP ES-8A DATED JANUARY 20, 2012 SUPPLEMENTS THE STANDARD PLANS BOOK DATED 2010.

REVISED STANDARD PLAN RSP ES-8A

2010 REVISED STANDARD PLAN RSP ES-8A

01-09-12

DIST	COUNTY	ROUTE	POST MILES TOTAL PROJECT	SHEET NO.	TOTAL SHEETS
12	Ora	39	2.1, 3.1, 6.1	33	34

REGISTERED ELECTRICAL ENGINEER

January 20, 2012
PLANS APPROVAL DATE

REGISTERED PROFESSIONAL ENGINEER
Jeffery G. McRae
No. E14512
Exp. 6-30-12
ELECTRICAL
STATE OF CALIFORNIA

THE STATE OF CALIFORNIA OR ITS OFFICERS OR AGENTS SHALL NOT BE RESPONSIBLE FOR THE ACCURACY OR COMPLETENESS OF SCANNED COPIES OF THIS PLAN SHEET.

TO ACCOMPANY PLANS DATED 4-15-13

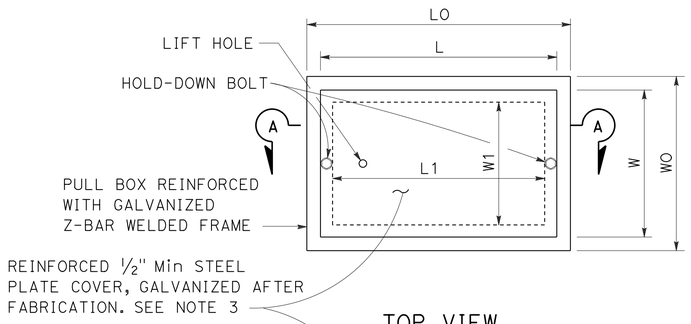

TOP VIEW

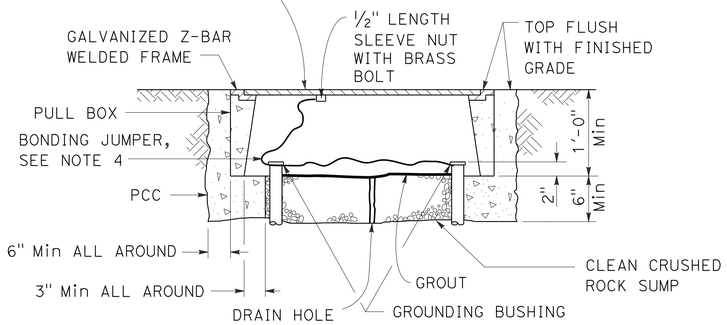

SECTION A-A

No. 3½(T), No. 5(T) AND No. 6(T) TRAFFIC PULL BOX

NOTES ON PULL BOXES:

1. Traffic pull box shall be provided with steel cover and special concrete footing. Steel cover shall have embossed non-skid pattern.
2. Steel reinforcing shall be as regularly used in the standard products of the respective manufacturer.
3. Pull box covers must be marked as follows: "SERVICE" Service circuits between service point and service disconnect; "SPRINKLER-CONTROL" Sprinkler control circuits, 50 V or less; "CALTRANS" On all pull boxes, except pull boxes marked "SPRINKLER-CONTROL"; and "TELEPHONE" Telephone service.
   A) No. 3½(T) pull box.
      1) "SIGNAL" - Traffic signal circuits with or without street or sign lighting circuits.
      2) "ST LIGHTING" - Street or sign lighting circuits where voltage is under 600 V.
   B) No. 5(T) or 6(T) pull box.
      1) "TRAFFIC SIGNAL" - Traffic signal circuits with or without street or sign lighting circuits.
      2) "STREET LIGHTING" - Street or sign lighting circuits where voltage is under 600 V.
      3) "STREET LIGHTING-HIGH VOLTAGE" - Street or sign lighting circuits where voltage is above 600 V.
      4) "IRRIGATION" - Circuits to irrigation controller 120 V or more.
      5) "RAMP METER" - Ramp meter circuits.
      6) "COUNT STATION" - Count or speed monitor circuits.
      7) "COMMUNICATION" - Communication circuits.
      8) "TOS COMMUNICATIONS" - TOS communications line.
      9) "TOS POWER" - TOS power.
      10) "TDC POWER" - Telephone demarcation cabinet power.
      11) "CCTV" - Closed circuit television circuits.
      12) "TMS" - Traffic monitoring station circuits.
      13) "CMS" - Changeable message sign circuits.
      14) "HAR" - Highway advisory radio circuits.
4. Bonding jumper for metal covers shall be 3' long, minimum.
5. The nominal dimensions of the opening in which the cover sets must be the same as the cover dimensions except the length and width dimensions shall be ⅛" greater.
6. Covers and boxes must be interchangeable with California standard male and female gages. When interchanged with a standard male or female gage, the top surfaces must be flush within ⅛".

DIMENSION TABLE

PULL BOX	BOX						COVER				
	MINIMUM * THICKNESS	MINIMUM DEPTH BOX AND EXTENSION	WO	LO	L1	W1	L **	W **	R	EDGE THICKNESS	EDGE TAPER
No. 3½(T)	1½"	1'-0"	1'-5"± 1"	1'-8⅞"±	1'-2½"±	10⅝"± 1"	1'-8"±	1'-1¾"±	0"	½"	NONE
No. 5(T)	1¾"	1'-0"	1'-11½"± 1"	2'-5½"±	1'-7"±	1'-1"± 1"	2'-3"±	1'-4"±	0"	½"	NONE
No. 6(T)	2"	1'-0"	2'-6"± 1"	2'-11½"±	1'-11½"±	1'-5"± 1"	2'-9"±	1'-8"±	0"	½"	NONE

* EXCLUDING CONDUIT WEB ** TOP DIMENSION

STATE OF CALIFORNIA
DEPARTMENT OF TRANSPORTATION

ELECTRICAL SYSTEMS (TRAFFIC RATED PULL BOX)

NO SCALE

RSP ES-8B DATED JANUARY 20, 2012 SUPPLEMENTS THE STANDARD PLANS BOOK DATED 2010.

REVISED STANDARD PLAN RSP ES-8B

2010 REVISED STANDARD PLAN RSP ES-8B

Dist	COUNTY	ROUTE	POST MILES TOTAL PROJECT	SHEET No.	TOTAL SHEETS
12	Ora	39	2.1, 3.1, 6.1	34	34

REGISTERED ELECTRICAL ENGINEER

July 20, 2012
PLANS APPROVAL DATE

REGISTERED PROFESSIONAL ENGINEER
Jeffery G. McRae
No. E14512
Exp. 6-30-14
ELECTRICAL
STATE OF CALIFORNIA

THE STATE OF CALIFORNIA OR ITS OFFICERS OR AGENTS SHALL NOT BE RESPONSIBLE FOR THE ACCURACY OR COMPLETENESS OF SCANNED COPIES OF THIS PLAN SHEET.

TO ACCOMPANY PLANS DATED 4-15-13

ISOFOOTCANDLE CURVE - MINIMUM

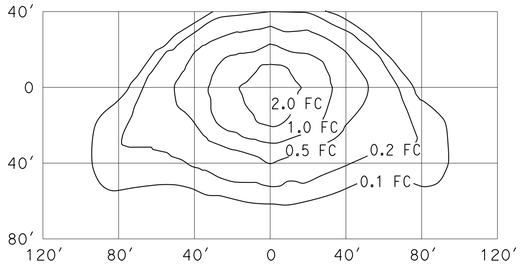

TYPE III MEDIUM CUTOFF

Cutoff Luminaire
34′ Mounting Height
Lamp operated at 22,000 lm
200-W high pressure sodium lamp
ANSI Designation S66

ISOFOOTCANDLE CURVE - MINIMUM

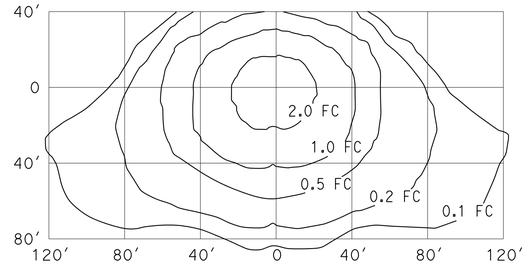

TYPE III MEDIUM CUTOFF

Cutoff Luminaire
40′ Mounting Height
Lamp operated at 37,000 lm
310-W high pressure sodium lamp
ANSI Designation S67

ISOFOOTCANDLE CURVE - MINIMUM

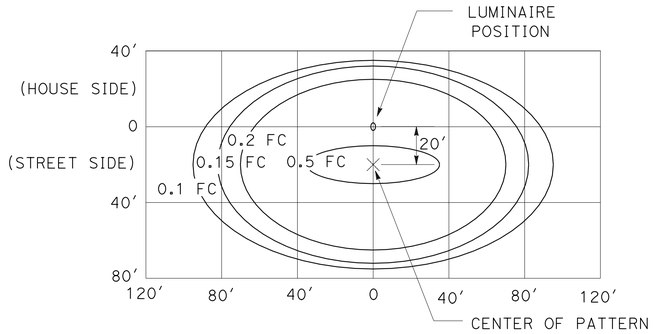

LED LUMINAIRE ROADWAY 1

200-W HPS Equivalent at 34′ Mounting Height

ISOFOOTCANDLE CURVE - MINIMUM

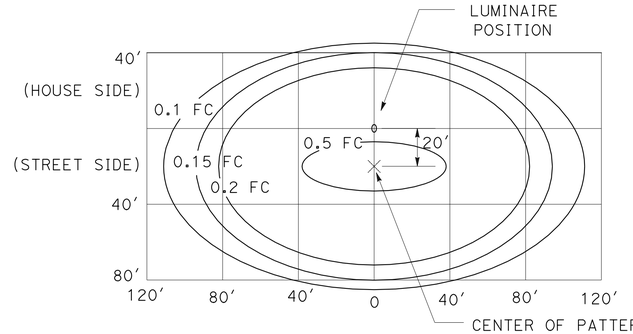

LED LUMINAIRE ROADWAY 2

310-W HPS Equivalent at 40′ Mounting Height

ISOFOOTCANDLE CURVE - MINIMUM

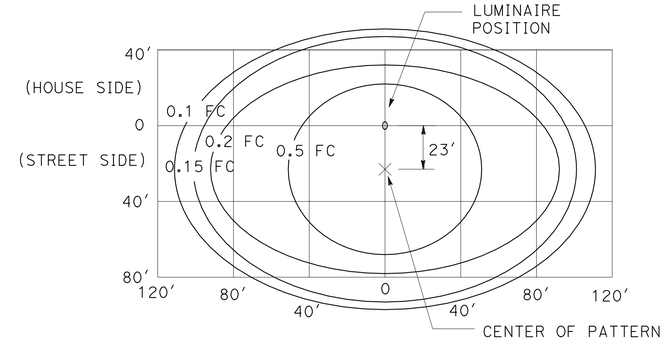

LED LUMINAIRE ROADWAY 4

400-W HPS Equivalent at 40′ Mounting Height

ISOFOOTCANDLE CURVE - MINIMUM

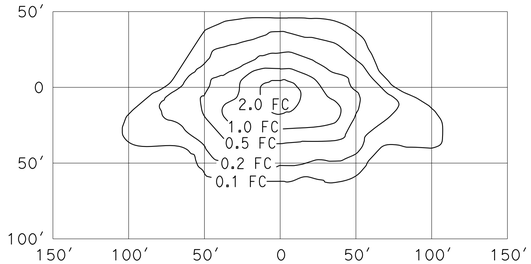

TYPE III MEDIUM CUTOFF

Cutoff Luminaire
30′ Mounting Height
Lamp operated at 16,000 lm
150-W high pressure sodium lamp
ANSI Designation S55

ISOFOOTCANDLE CURVE - MINIMUM

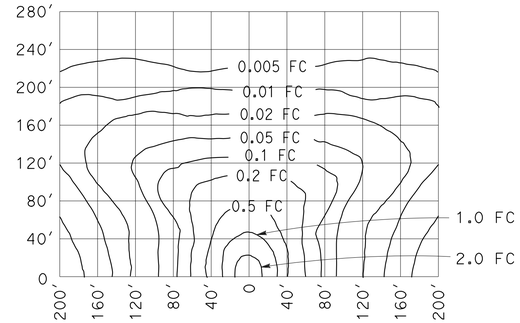

LOW PRESSURE SODIUM LUMINAIRE

40′ Mounting Height
Lamp operated at 33,000 lm
180-W low pressure sodium lamp

STATE OF CALIFORNIA
DEPARTMENT OF TRANSPORTATION

ELECTRICAL SYSTEMS (ISOFOOTCANDLE DIAGRAMS)

NO SCALE

RSP ES-10A DATED JULY 20, 2012 SUPPLEMENTS THE STANDARD PLANS BOOK DATED 2010.

REVISED STANDARD PLAN RSP ES-10A

2010 REVISED STANDARD PLAN RSP ES-10A