DIST	COUNTY	ROUTE	POST MILES TOTAL PROJECT	SHEET No	TOTAL SHEETS
12	Ora	5	6.2/8.7	501	595

REGISTERED CIVIL ENGINEER — DATE: 1-7-13

PLANS APPROVAL DATE: 4-29-13

REGISTERED PROFESSIONAL ENGINEER — CAMERON J. PINKERTON — No. 73288 — Exp. 12-31-14 — CIVIL — STATE OF CALIFORNIA

The State of California or its officers or agents shall not be responsible for the accuracy or completeness of electronic copies of this plan sheet.

TRC
123 TECHNOLOGY DRIVE
IRVINE, CA 92618

ORANGE COUNTY
TRANSPORTATION AUTHORITY
550 S. MAIN STREET
ORANGE, CA 92863-1584

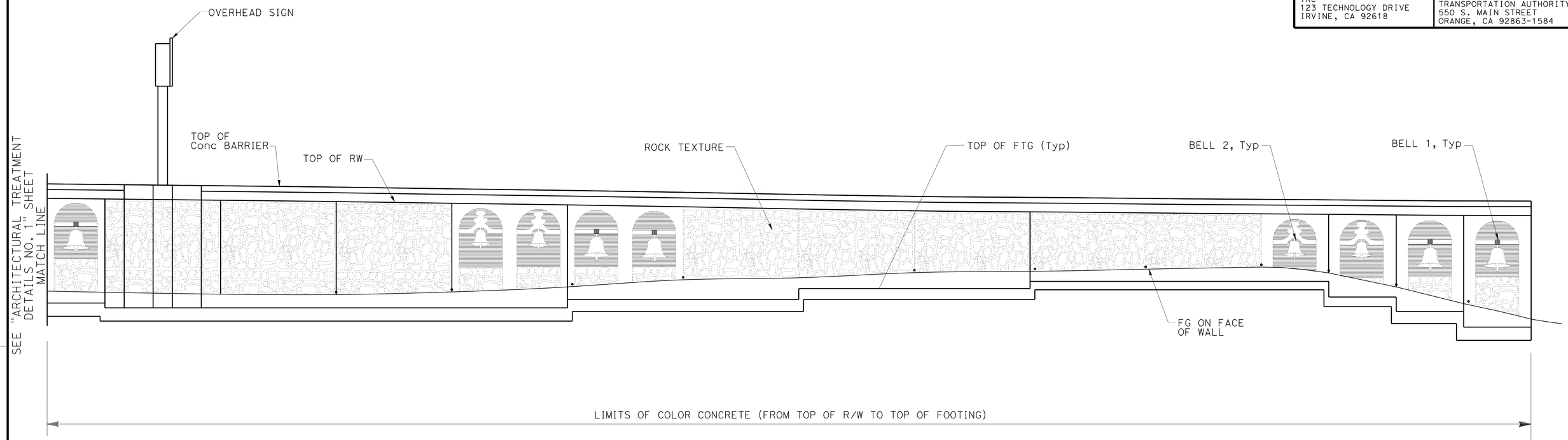

DEVELOPED MIRROR ELEVATION

NO SCALE

NOTE:
THE CONTRACTOR SHALL VERIFY ALL CONTROLLING FIELD DIMENSIONS BEFORE ORDERING OR FABRICATING ANY MATERIAL.

DESIGN OVERSIGHT: Luqi Yang — 1-16-13 — SIGN OFF DATE

	BY	CHECKED
DESIGN	C. Pinkerton	E. Dickson
DETAILS	I. Karkoutli	E. Dickson
QUANTITIES	C. Pinkerton	A. Cardoza

PREPARED FOR THE STATE OF CALIFORNIA DEPARTMENT OF TRANSPORTATION

Ayman Salama — PROJECT ENGINEER

BRIDGE NO. 55E0135 — POST MILES 7.2

RETAINING WALL NO. 387
ARCHITECTURAL TREATMENT DETAILS NO. 2

DESIGN DETAIL SHEET (ENGLISH) (REV.7/16/10)

ORIGINAL SCALE IN INCHES FOR REDUCED PLANS: 0 1 2 3

UNIT: 2998
PROJECT NUMBER & PHASE: 12000202791
CONTRACT NO.: 12-0F96E4

DISREGARD PRINTS BEARING EARLIER REVISION DATES — REVISION DATES: 11/20/12 12/20/12

SHEET 14 OF 20

FILE => 55-227-gi-rw_at2.dgn

USERNAME => s124936 DATE PLOTTED => 29-APR-2013 TIME PLOTTED => 12:17

DIST	COUNTY	ROUTE	POST MILES TOTAL PROJECT	SHEET No	TOTAL SHEETS
12	Ora	5	6.2/8.7	502	595

REGISTERED CIVIL ENGINEER — DATE: 1-7-13

4-29-13
PLANS APPROVAL DATE

REGISTERED PROFESSIONAL ENGINEER — CAMERON J. PINKERTON — No. 73288 — Exp. 12-31-14 — CIVIL — STATE OF CALIFORNIA

The State of California or its officers or agents shall not be responsible for the accuracy or completeness of electronic copies of this plan sheet.

TRC
123 TECHNOLOGY DRIVE
IRVINE, CA 92618

ORANGE COUNTY
TRANSPORTATION AUTHORITY
550 S. MAIN STREET
ORANGE, CA 92863-1584

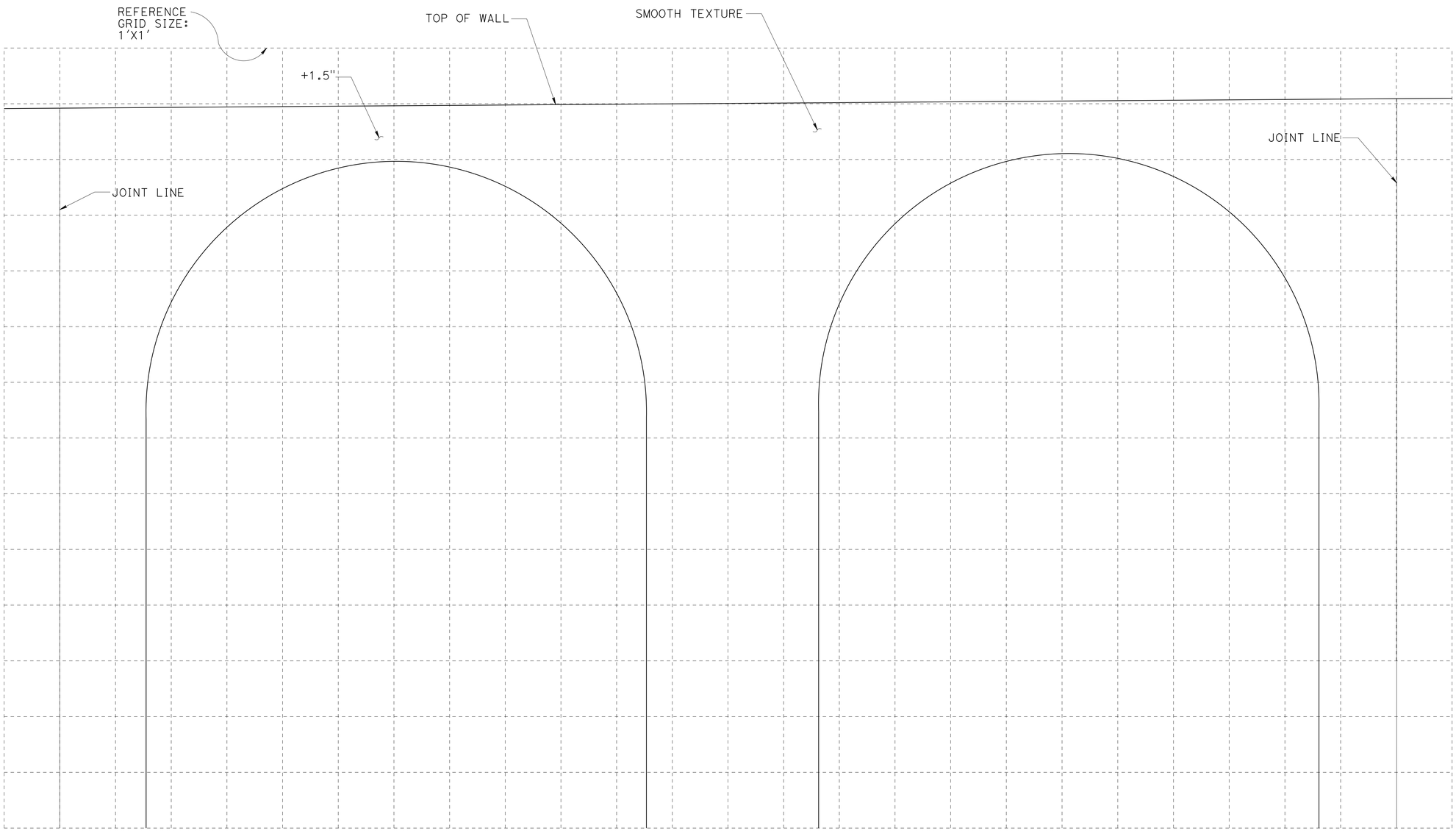

ARCH DETAIL
1" = 0'-6"

NOTE:
THE CONTRACTOR SHALL VERIFY ALL CONTROLLING FIELD DIMENSIONS BEFORE ORDERING OR FABRICATING ANY MATERIAL.

Luqi Yang
DESIGN OVERSIGHT — Luqi Yang
1-16-13
SIGN OFF DATE

	BY	CHECKED
DESIGN	C. Pinkerton	E. Dickson
DETAILS	I. Karkoutli	E. Dickson
QUANTITIES	C. Pinkerton	A. Cardoza

PREPARED FOR THE STATE OF CALIFORNIA DEPARTMENT OF TRANSPORTATION

Ayman Salama
PROJECT ENGINEER

BRIDGE NO. 55E0135
POST MILES 7.2

RETAINING WALL NO. 387
ARCHITECTURAL TREATMENT DETAILS NO. 3

DESIGN DETAIL SHEET (ENGLISH) (REV.7/16/10)

ORIGINAL SCALE IN INCHES FOR REDUCED PLANS 0 1 2 3

UNIT: 2998
PROJECT NUMBER & PHASE: 12000202791
CONTRACT NO.: 12-0F96E4

DISREGARD PRINTS BEARING EARLIER REVISION DATES

REVISION DATES: 11/20/12 12/20/12

SHEET 15 OF 20

FILE => 55-227-gi-rw_at3.dgn

USERNAME => s124936 DATE PLOTTED => 29-APR-2013 TIME PLOTTED => 12:17

DIST	COUNTY	ROUTE	POST MILES TOTAL PROJECT	SHEET No	TOTAL SHEETS
12	Ora	5	6.2/8.7	503	595

REGISTERED CIVIL ENGINEER — DATE: 1-7-13

PLANS APPROVAL DATE: 4-29-13

REGISTERED PROFESSIONAL ENGINEER — CAMERON J. PINKERTON — No. 73288 — Exp. 12-31-14 — CIVIL — STATE OF CALIFORNIA

The State of California or its officers or agents shall not be responsible for the accuracy or completeness of electronic copies of this plan sheet.

TRC
123 TECHNOLOGY DRIVE
IRVINE, CA 92618

ORANGE COUNTY
TRANSPORTATION AUTHORITY
550 S. MAIN STREET
ORANGE, CA 92863-1584

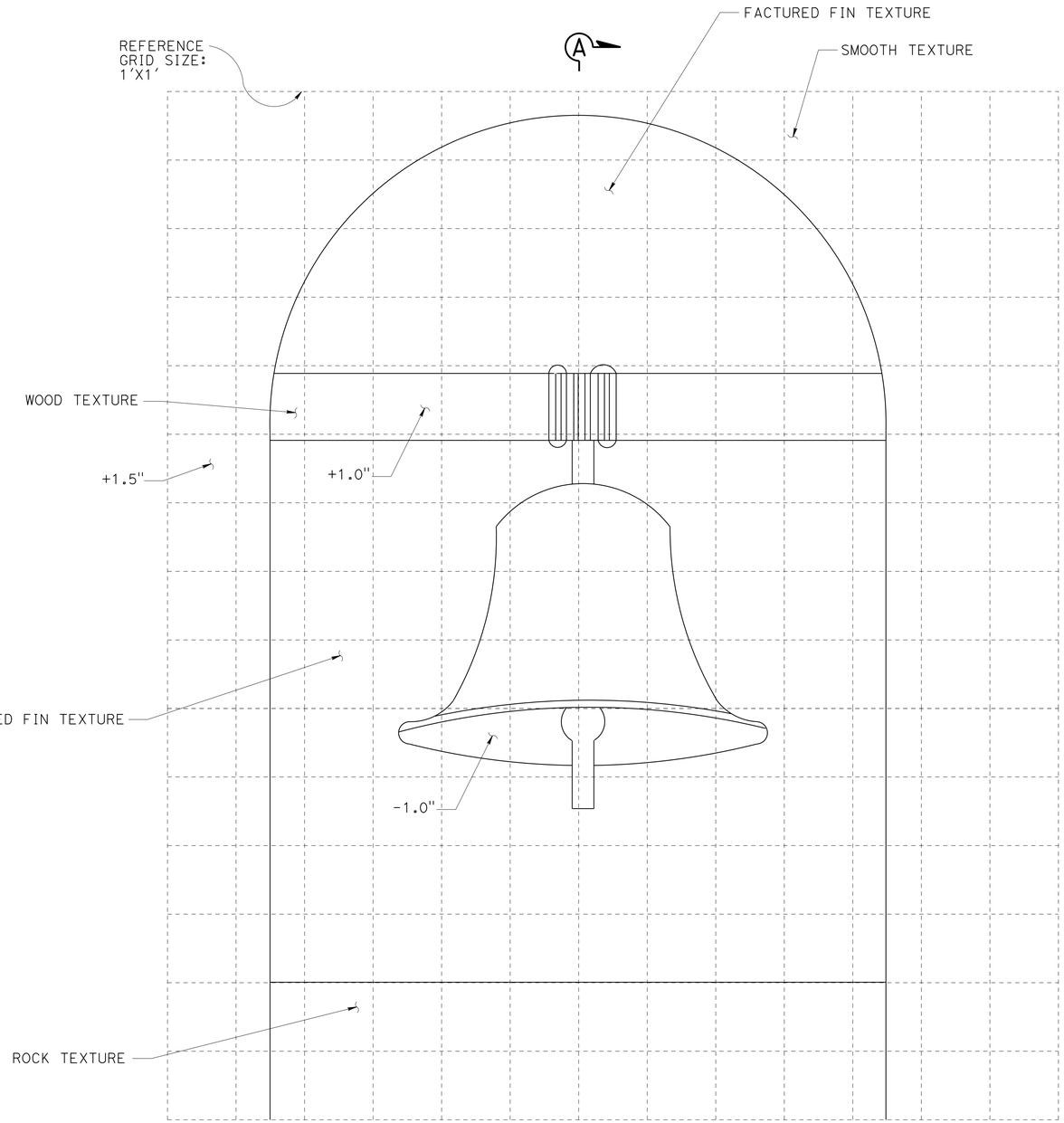

BELL 1 DETAIL

1" = 0'-6"

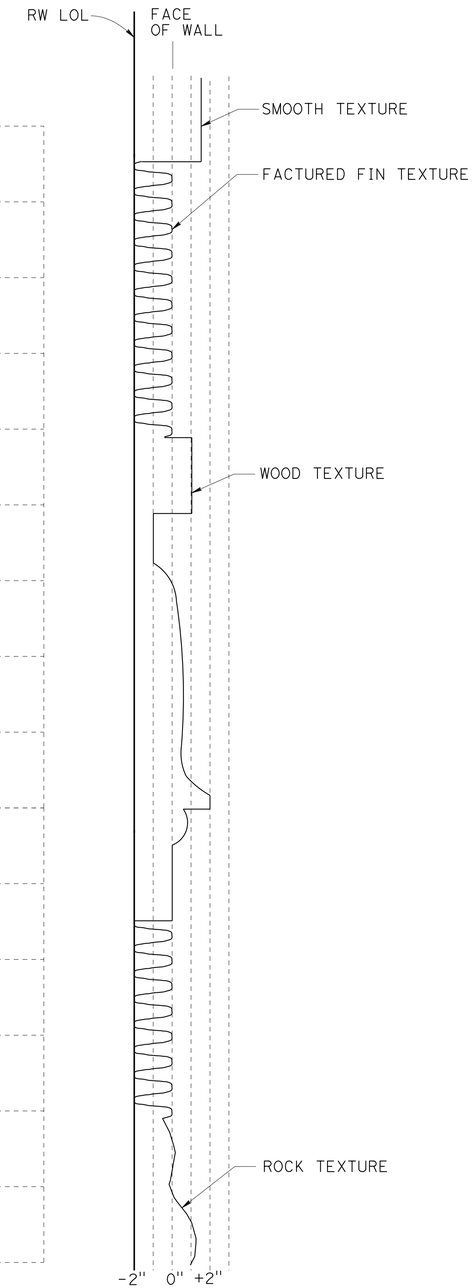

SECTION A-A

H - 1/4"=0'-1"
V - 1"=0'-6"

NOTE:
THE CONTRACTOR SHALL VERIFY ALL CONTROLLING FIELD DIMENSIONS BEFORE ORDERING OR FABRICATING ANY MATERIAL.

DESIGN OVERSIGHT: Luqi Yang — 1-16-13 — SIGN OFF DATE

	BY	CHECKED
DESIGN	C. Pinkerton	E. Dickson
DETAILS	I. Karkoutli	E. Dickson
QUANTITIES	C. Pinkerton	A. Cardoza

PREPARED FOR THE STATE OF CALIFORNIA DEPARTMENT OF TRANSPORTATION

Ayman Salama — PROJECT ENGINEER

BRIDGE NO. 55E0135 — POST MILES 7.2

RETAINING WALL NO. 387
ARCHITECTURAL TREATMENT DETAILS NO. 4

DESIGN DETAIL SHEET (ENGLISH) (REV.7/16/10)

ORIGINAL SCALE IN INCHES FOR REDUCED PLANS: 0 1 2 3

UNIT: 2998
PROJECT NUMBER & PHASE: 12000202791 — CONTRACT NO.: 12-0F96E4

DISREGARD PRINTS BEARING EARLIER REVISION DATES — REVISION DATES: 11/20/12 12/20/12 — SHEET 16 OF 20

FILE => 55-227-gi-rw_at4.dgn

USERNAME => s124296 DATE PLOTTED => 29-APR-2013 TIME PLOTTED => 12:17

DIST	COUNTY	ROUTE	POST MILES TOTAL PROJECT	SHEET No	TOTAL SHEETS
12	Ora	5	6.2/8.7	504	595

REGISTERED CIVIL ENGINEER — DATE: 1-7-13

PLANS APPROVAL DATE: 4-29-13

REGISTERED PROFESSIONAL ENGINEER — CAMERON J. PINKERTON — No. 73288 — Exp. 12-31-14 — CIVIL — STATE OF CALIFORNIA

The State of California or its officers or agents shall not be responsible for the accuracy or completeness of electronic copies of this plan sheet.

TRC
123 TECHNOLOGY DRIVE
IRVINE, CA 92618

ORANGE COUNTY
TRANSPORTATION AUTHORITY
550 S. MAIN STREET
ORANGE, CA 92863-1584

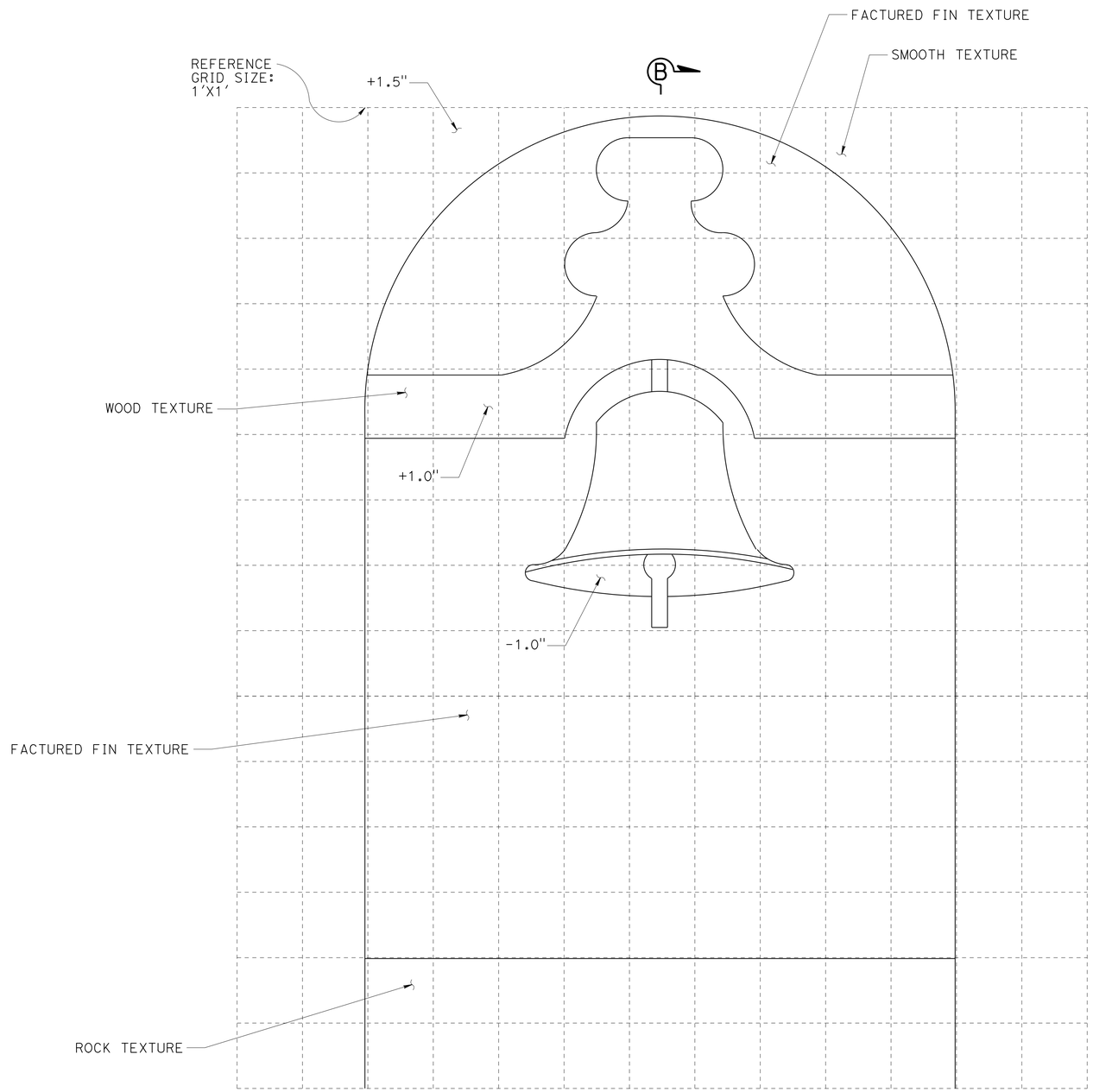

BELL 2 DETAIL

1" = 0'-6"

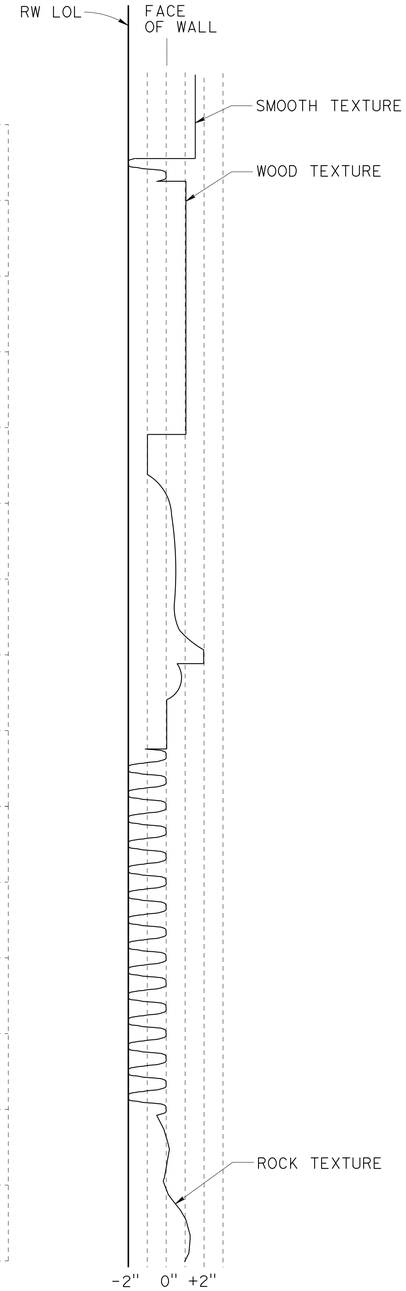

SECTION B-B

H - 1/4"=0'-1"
V - 1"=0'-6"

NOTE:
THE CONTRACTOR SHALL VERIFY ALL CONTROLLING FIELD DIMENSIONS BEFORE ORDERING OR FABRICATING ANY MATERIAL.

DESIGN OVERSIGHT: Luqi Yang — 1-16-13 — SIGN OFF DATE

	BY	CHECKED
DESIGN	C. Pinkerton	E. Dickson
DETAILS	I. Karkoutli	E. Dickson
QUANTITIES	C. Pinkerton	A. Cardoza

PREPARED FOR THE STATE OF CALIFORNIA DEPARTMENT OF TRANSPORTATION

Ayman Salama — PROJECT ENGINEER

BRIDGE NO. 55E0135 — POST MILES 7.2

RETAINING WALL NO. 387
ARCHITECTURAL TREATMENT DETAILS NO. 5

DESIGN DETAIL SHEET (ENGLISH) (REV.7/16/10)

ORIGINAL SCALE IN INCHES FOR REDUCED PLANS: 0 1 2 3

UNIT: 2998
PROJECT NUMBER & PHASE: 12000202791 — CONTRACT NO.: 12-0F96E4

DISREGARD PRINTS BEARING EARLIER REVISION DATES → REVISION DATES: 11/20/12 12/20/12

SHEET 17 OF 20

FILE => 55-227-gi-rw_at5.dgn

USERNAME => s124496 DATE PLOTTED => 29-APR-2013 TIME PLOTTED => 12:17

DIST	COUNTY	ROUTE	POST MILES TOTAL PROJECT	SHEET No	TOTAL SHEETS
12	Ora	5	6.2/8.7	505	595

REGISTERED CIVIL ENGINEER 1-7-13 DATE

4-29-13
PLANS APPROVAL DATE

REGISTERED PROFESSIONAL ENGINEER
CAMERON J. PINKERTON
No. 73288
Exp. 12-31-14
CIVIL
STATE OF CALIFORNIA

The State of California or its officers or agents shall not be responsible for the accuracy or completeness of electronic copies of this plan sheet.

TRC
123 TECHNOLOGY DRIVE
IRVINE, CA 92618

ORANGE COUNTY
TRANSPORTATION AUTHORITY
550 S. MAIN STREET
ORANGE, CA 92863-1584

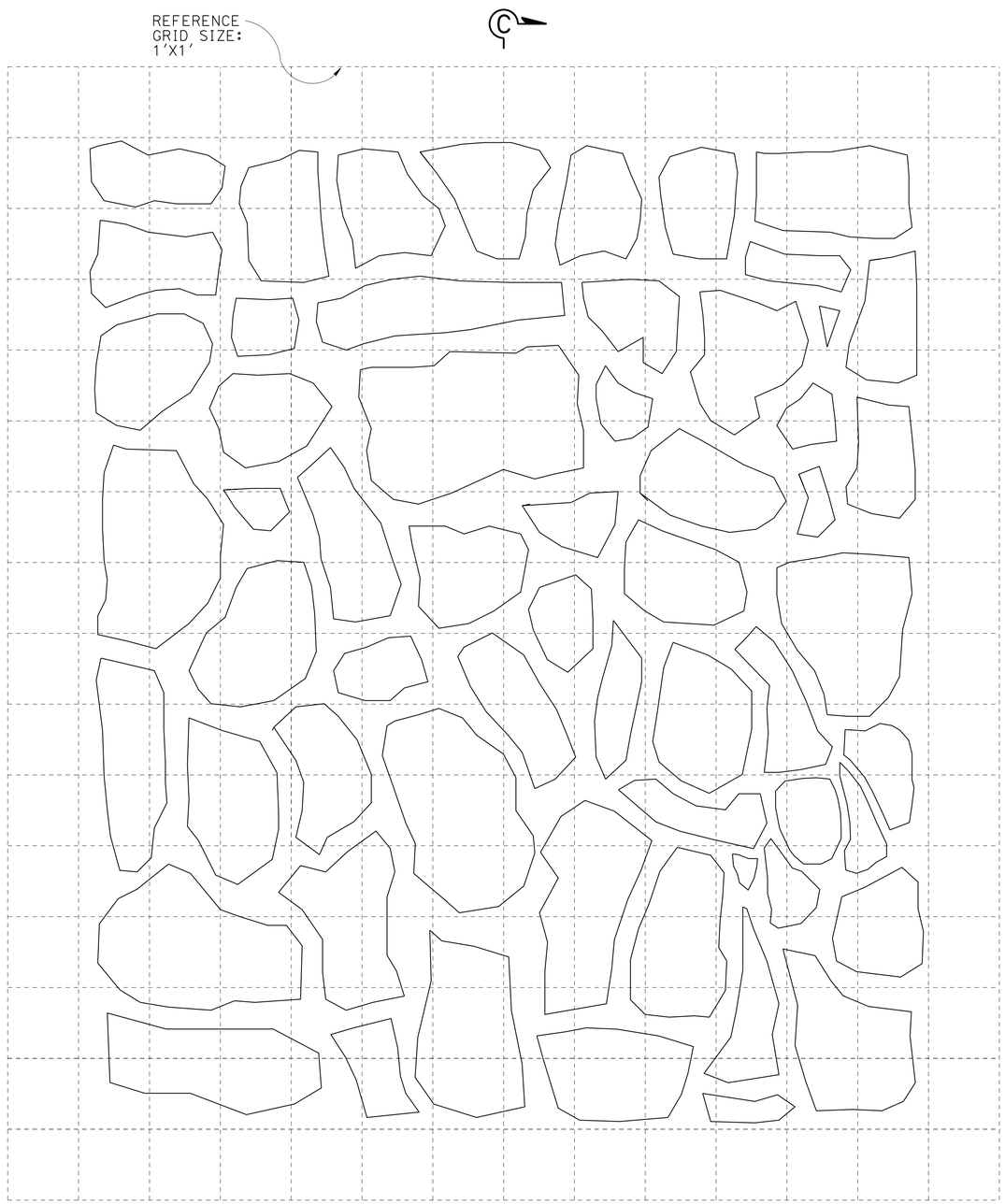

ROCK DETAIL
1" = 0'-6"

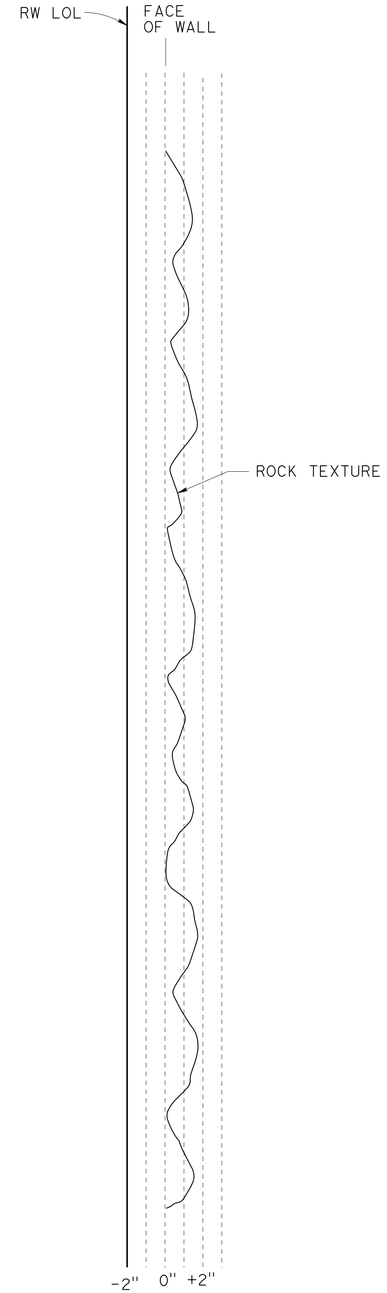

SECTION C-C
H - 1/4"=0'-1"
V - 1"=0'-6"

NOTE:
THE CONTRACTOR SHALL VERIFY ALL CONTROLLING FIELD DIMENSIONS BEFORE ORDERING OR FABRICATING ANY MATERIAL.

Luqi Yang
DESIGN OVERSIGHT Luqi Yang
1-16-13
SIGN OFF DATE

	BY	CHECKED
DESIGN	C. Pinkerton	E. Dickson
DETAILS	I. Karkoutli	E. Dickson
QUANTITIES	C. Pinkerton	A. Cardoza

PREPARED FOR THE
STATE OF CALIFORNIA
DEPARTMENT OF TRANSPORTATION

Ayman Salama
PROJECT ENGINEER

BRIDGE NO. 55E0135
POST MILES 7.2

RETAINING WALL NO. 387
ARCHITECTURAL TREATMENT DETAILS NO. 6

DESIGN DETAIL SHEET (ENGLISH) (REV.7/16/10)

ORIGINAL SCALE IN INCHES FOR REDUCED PLANS 0 1 2 3

UNIT: 2998
PROJECT NUMBER & PHASE: 12000202791 CONTRACT NO.: 12-0F96E4

DISREGARD PRINTS BEARING EARLIER REVISION DATES
REVISION DATES 11/20/12 12/20/12

SHEET 18 OF 20

FILE => 55-227-gi-rw_at6.dgn

USERNAME => s124396 DATE PLOTTED => 29-APR-2013 TIME PLOTTED => 12:17

BENCH MARK

Designation: F-785 Elev = 75.717 feet (NAVD 88); 73.413 feet (NGVD29) Described by OCS 2003 - Found 3¾" US Coast and Geodectic Survey Bronzed Disk Stamped "F 785 1946", Set in the Top of a Concrete Bridge Abutment. Monument is Located in the Southwesterly Corner of the Atchinso\Topeka and Santa Fe Railway Overcrossing of San Mateo Creek, 69 ft. Northerly Along the Railway from the Centerline of the Interstate 5 Freeway Southbound Onramp at Camino Capistrano Prolonged to the West and 150± Westerly from the Centerline of Camino Capistrano. Monument is Set 2.0 ft. below the Tracks.

NOTES:

(1) This LOTB sheet was prepared in accordance with the Caltrans Soil and Rock Logging, Classification and Presentation Manual (June 2010).

(2) 2.4" samples were taken using a California Modified Sampler.

(3) An automatic trip hammer system consisting of a hammer weight of 140 lbs falling a distance of 30" was used to to advance the drive sampler.

(4) Conversion factor from 2.4" Modified California Ring Sampler blowcounts to Standard Penetration Test (SPT) blowcounts is 0.5.

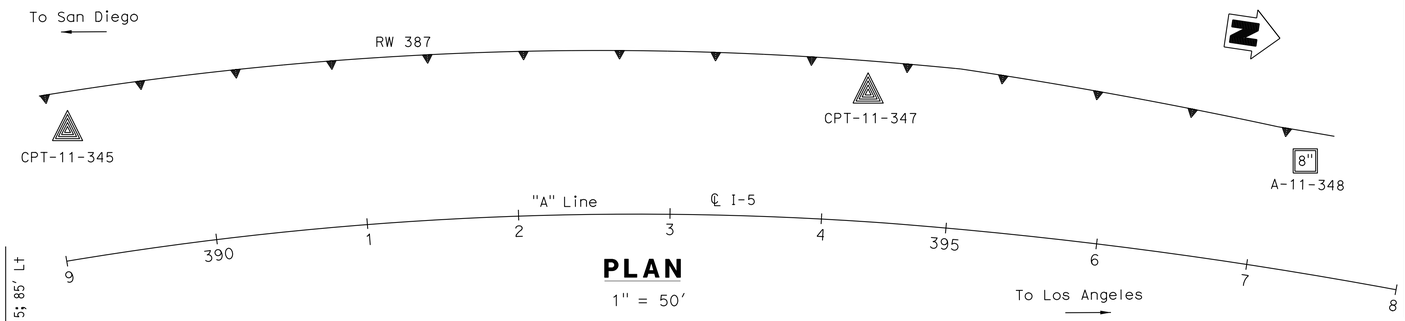

PLAN

1" = 50'

DIST	COUNTY	ROUTE	POST MILES TOTAL PROJECT	SHEET No	TOTAL SHEETS
12	Ora	5	6.2/8.7	506	595

GEOTECHNICAL PROFESSIONAL 11/12/12 DATE

4-29-13
PLANS APPROVAL DATE

REGISTERED PROFESSIONAL ENGINEER S. PIRATHIVIRAJ NO. GE 2963 EXP. 12-31-13 GEOTECHNICAL STATE OF CALIFORNIA

The State of California or its officers or agents shall not be responsible for the accuracy or completeness of electronic copies of this plan sheet.

ORANGE COUNTY TRANSPORTATION AUTHORITY
550 S. MAIN STREET
ORANGE, CA 92863-1584

EARTH MECHANICS, INC.
17800 NEWHOPE STREET, SUITE B
FOUNTAIN VALLEY, CA 92708

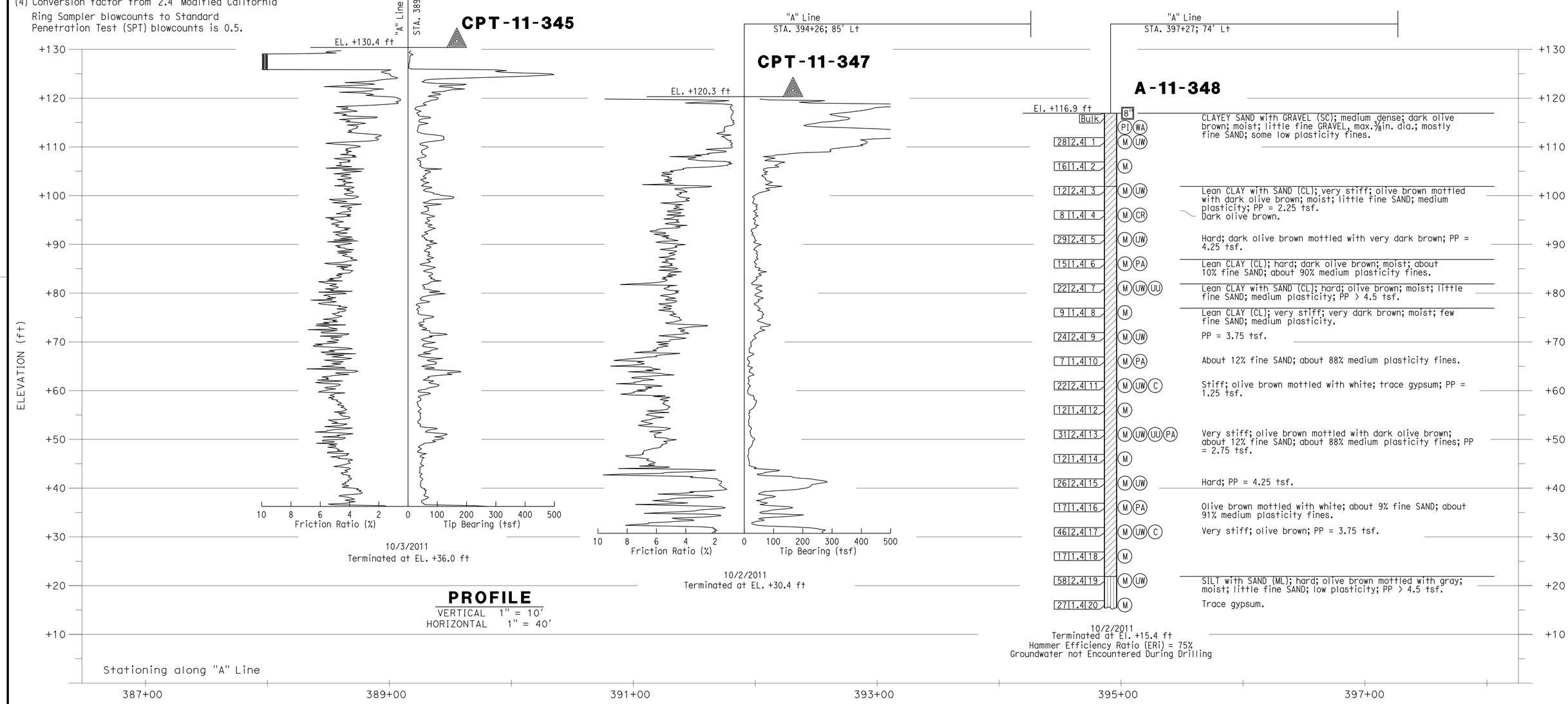

PROFILE

VERTICAL 1" = 10'
HORIZONTAL 1" = 40'

Luqi Yang DESIGN OVERSIGHT Luqi Yang 1-16-13 SIGN OFF DATE	DRAWN BY J. Fang	R. Jie FIELD INVESTIGATION BY:	PREPARED FOR THE STATE OF CALIFORNIA DEPARTMENT OF TRANSPORTATION
	CHECKED BY S. PIRATHIVIRAJ	DATE: 9/2011, 10/2011	S. PIRATHIVIRAJ PROJECT ENGINEER

BRIDGE NO. -
POST MILES 7.2

RETAINING WALL 387

LOG OF TEST BORINGS 1 OF 2

GS GEOTECHNICAL LOG OF TEST BORINGS SHEET (ENGLISH) (REV. 7/16/10)

ORIGINAL SCALE IN INCHES FOR REDUCED PLANS 0 1 2 3

UNIT: 2998
PROJECT NUMBER & PHASE: 12000202791

DISREGARD PRINTS BEARING EARLIER REVISION DATES

REVISION DATES

SHEET 19 OF 20

FILE => 55-227-z-lotb1.dgn

CONTRACT NO.:12-0F96E4 PROJECT ID:

USERNAME => s124496 DATE PLOTTED => 29-APR-2013 TIME PLOTTED => 12:18

DIST	COUNTY	ROUTE	POST MILES TOTAL PROJECT	SHEET No	TOTAL SHEETS
12	Ora	5	6.2/8.7	507	595

GEOTECHNICAL PROFESSIONAL — DATE 11/12/12

PLANS APPROVAL DATE 4-29-13

REGISTERED PROFESSIONAL ENGINEER — S. PIRATHIVIRAJ — NO. GE 2963 — EXP. 12-31-13 — GEOTECHNICAL — STATE OF CALIFORNIA

The State of California or its officers or agents shall not be responsible for the accuracy or completeness of electronic copies of this plan sheet.

ORANGE COUNTY TRANSPORTATION AUTHORITY
550 S. MAIN STREET
ORANGE, CA 92863-1584

EARTH MECHANICS, INC.
17800 NEWHOPE STREET, SUITE B
FOUNTAIN VALLEY, CA 92708

BENCH MARK

Designation: F-785 Elev = 75.717 feet (NAVD 88); 73.413 feet (NGVD29) Described by OCS 2003 - Found 3¾" US Coast and Geodectic Survey Bronzed Disk Stamped "F 785 1946", Set in the Top of a Concrete Bridge Abutment. Monument is Located in the Southwesterly Corner of the Atchinso\Topeka and Santa Fe Railway Overcrossing of San Mateo Creek, 69 ft. Northerly Along the Railway from the Centerline of the Interstate 5 Freeway Southbound Onramp at Camino Capistrano Prolonged to the West and 150± Westerly from the Centerline of Camino Capistrano. Monument is Set 2.0 ft. below the Tracks.

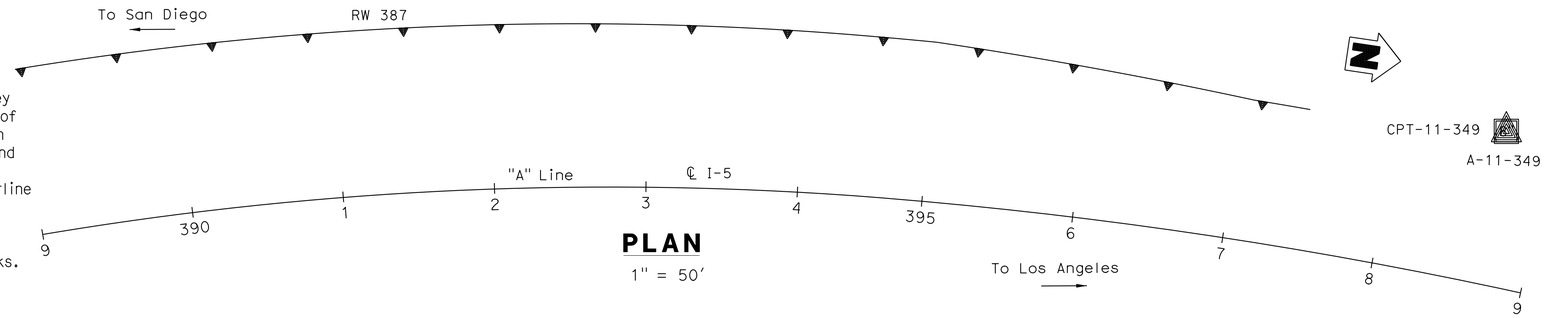

PLAN
1" = 50'

NOTES:

(1) This LOTB sheet was prepared in accordance with the Caltrans Soil and Rock Logging, Classification and Presentation Manual (June 2010).

(2) 2.4" samples were taken using a California Modified Sampler.

(3) An automatic trip hammer system consisting of a hammer weight of 140 lbs falling a distance of 30" was used to advance the drive sampler.

(4) Conversion factor from 2.4" Modified California Ring Sampler blowcounts to Standard Penetration Test (SPT) blowcounts is 0.5.

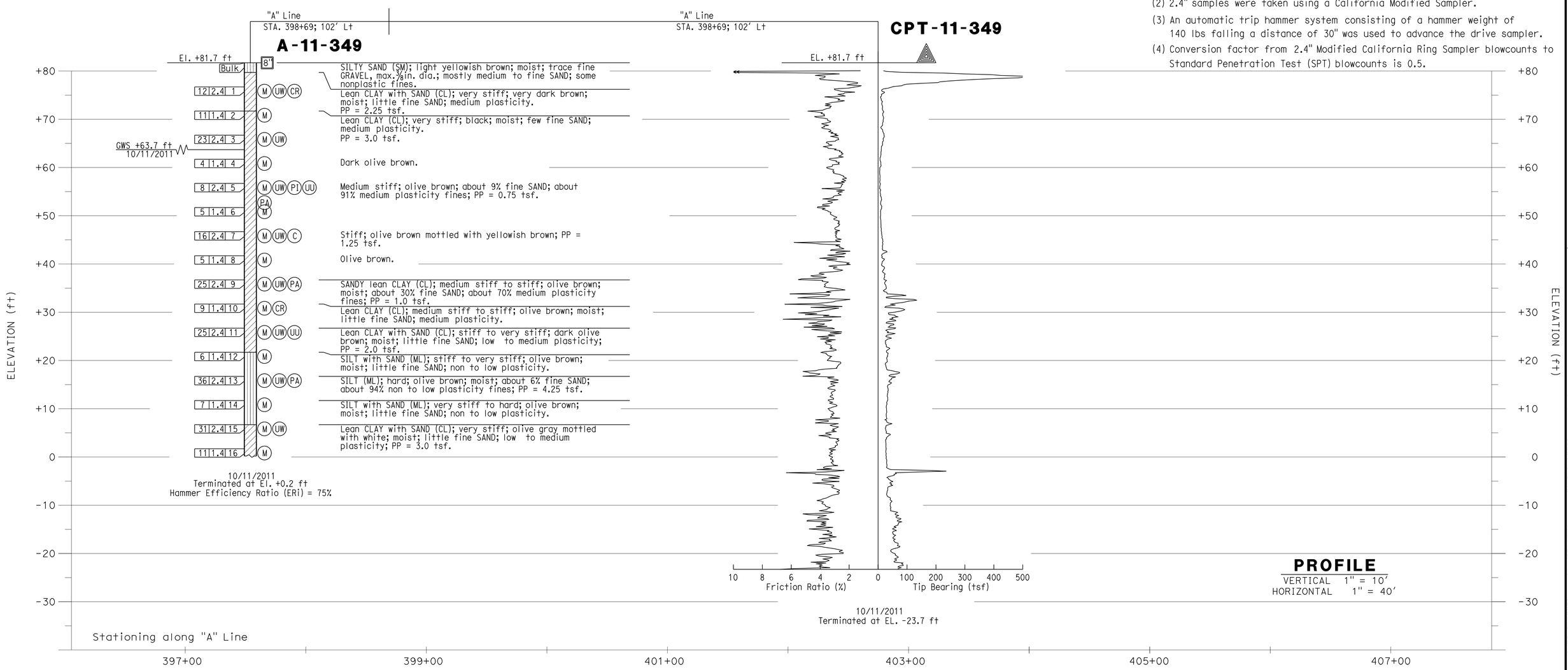

PROFILE
VERTICAL 1" = 10'
HORIZONTAL 1" = 40'

DESIGN OVERSIGHT: Luqi Yang — 1-16-13 — SIGN OFF DATE	DRAWN BY: J. Fang	R. Jie — FIELD INVESTIGATION BY:	PREPARED FOR THE STATE OF CALIFORNIA DEPARTMENT OF TRANSPORTATION
	CHECKED BY: S. PIRATHIVIRAJ	DATE: 9/2011, 10/2011	S. PIRATHIVIRAJ — PROJECT ENGINEER

BRIDGE NO. –
POST MILES 7.2

RETAINING WALL 387
LOG OF TEST BORINGS 2 OF 2

GS GEOTECHNICAL LOG OF TEST BORINGS SHEET (ENGLISH) (REV. 7/16/10)

ORIGINAL SCALE IN INCHES FOR REDUCED PLANS 0 1 2 3

UNIT: 2998
PROJECT NUMBER & PHASE: 12000202791

DISREGARD PRINTS BEARING EARLIER REVISION DATES

REVISION DATES

SHEET 20 OF 20

CONTRACT NO.: 12-0F96E4 PROJECT ID:

FILE => 55-227-z-lotb2.dgn

USERNAME => s124496 DATE PLOTTED => 29-APR-2013 TIME PLOTTED => 12:18

DIST	COUNTY	ROUTE	POST MILES TOTAL PROJECT	SHEET No	TOTAL SHEETS
12	Ora	5	6.2/8.7	508	595

Khaled Allam 11/12/12
REGISTERED CIVIL ENGINEER DATE

4-29-13
PLANS APPROVAL DATE

REGISTERED PROFESSIONAL ENGINEER Khaled Allam No. 67110 Exp. 09/30/14 CIVIL STATE OF CALIFORNIA

The State of California or its officers or agents shall not be responsible for the accuracy or completeness of electronic copies of this plan sheet.

JACOBS
3161 MICHELSON, STE 500
IRVINE, CA 92612

ORANGE COUNTY TRANSPORTATION AUTHORITY
550 S. MAIN STREET
ORANGE, CA 92863-1584

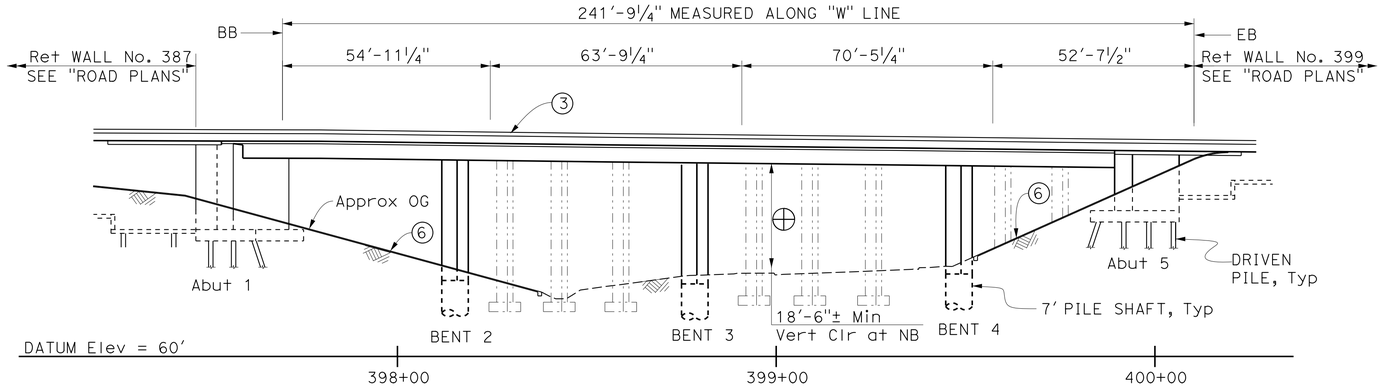

MIRRORED ELEVATION

1" = 20'

LEGEND:

1. Paint "BRIDGE No. 55-0227".
2. Paint "CAMINO CAPISTRANO UC"
3. Conc Barrier Type 736 (Mod)
4. Structure Approach, Type N(30S)
5. Structure Approach, Type R(30S)
6. Slope Paving (Full Slope)
7. Exist Structure Approach, Type N(30S)
8. Exist Structure Approach, Type N(30D)
9. Exist Structure Approach, Type N(45D)
10. Temporary Railing Type K, See "ROAD PLANS"
11. Exist median barrier
12. New fiber optic lines, see "ROAD PLANS"

⊕ Point of minimum vertical clearance at NB (Exist)

Closure pour

Exist Structure

New Structure

CURVE DATA:

CURVE NO.	R	Δ	T	L
1	3200.00'±	40°37'32"±	1184.53'±	2268.96'±
2	3271.00'	10°13'36"	292.70'	583.84'
3	168.00'	53°19'24"	84.35'	156.35'
4	658.00'	29°52'08"	175.50'	343.02'

NOTES:

1. For "GENERAL NOTES" see "INDEX TO PLANS" sheet.
2. For "PILE DATA TABLE" see "FOUNDATION PLAN" sheet.

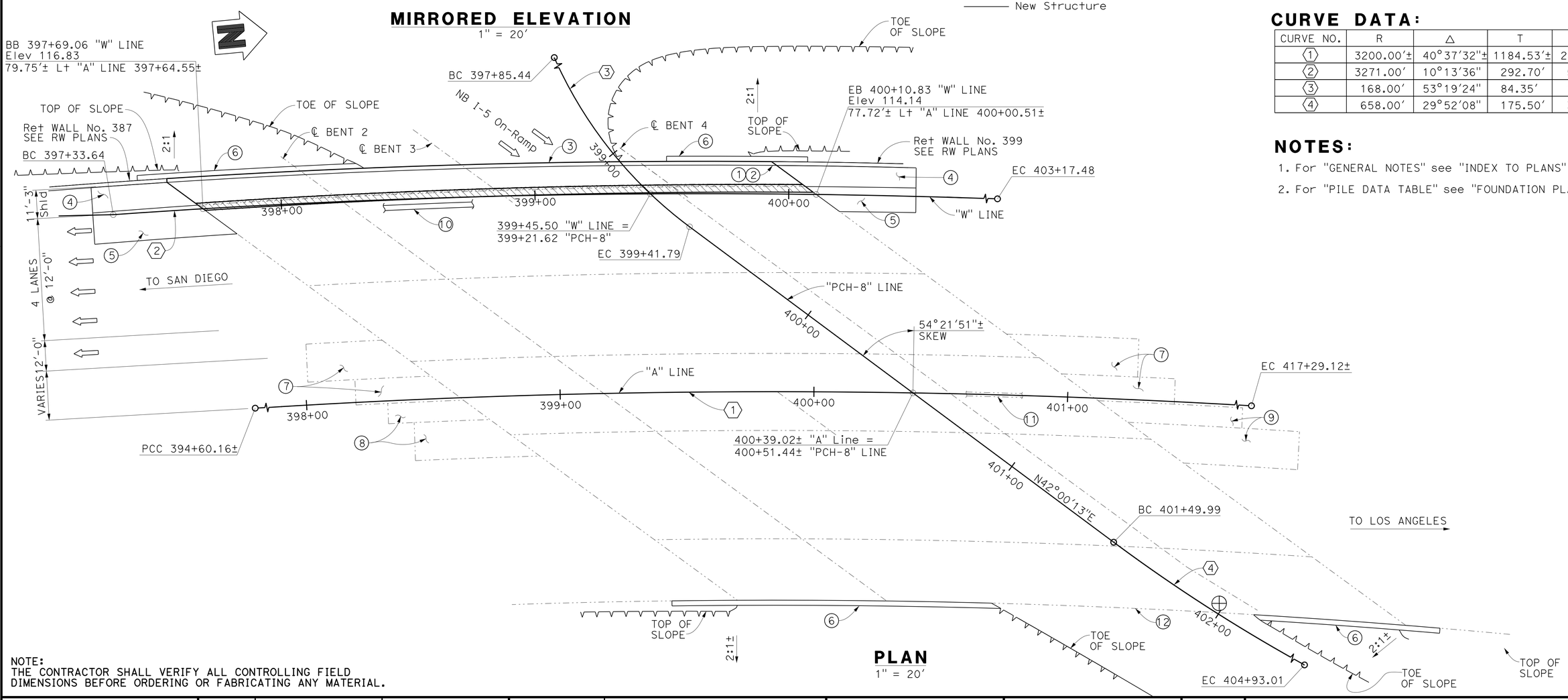

PLAN

1" = 20'

NOTE:
THE CONTRACTOR SHALL VERIFY ALL CONTROLLING FIELD DIMENSIONS BEFORE ORDERING OR FABRICATING ANY MATERIAL.

Luqi Yang DESIGN OVERSIGHT Luqi Yang 1-16-13 SIGN OFF DATE	DESIGN	BY k. Allam	CHECKED A. Kalidindi	LOAD & RESISTANCE FACTOR DESIGN	LIVE LOADING: HL93 W/"LOW-BOY"; PERMIT DESIGN VEHICLE
	DETAILS	BY I. Karkoutli	CHECKED A. Kalidindi	LAYOUT: BY I. Karkoutli	CHECKED A. Moubayed
	QUANTITIES	BY M. Metcalf	CHECKED A. Cardoza	SPECIFICATIONS: BY S. Xie	PLANS AND SPECS COMPARED S. Xie

PREPARED FOR THE STATE OF CALIFORNIA DEPARTMENT OF TRANSPORTATION

Alaedin Moubayed
PROJECT ENGINEER

BRIDGE NO. 55-0227
POST MILES 7.40

CAMINO CAPISTRANO UC (WIDEN)

GENERAL PLAN No. 1

DESIGN GENERAL PLAN SHEET (ENGLISH) (REV.7/16/10)

ORIGINAL SCALE IN INCHES FOR REDUCED PLANS 0 1 2 3

UNIT: 2998
PROJECT NUMBER & PHASE: 12000202791
CONTRACT NO.: 12-0F96E4

DISREGARD PRINTS BEARING EARLIER REVISION DATES

REVISION DATES 4/23/12 8/13/12 11/12/12

SHEET 1 OF 33

FILE => 55-0227l-a-gp01.dgn

USERNAME => s124496 DATE PLOTTED => 29-APR-2013 TIME PLOTTED => 12:45

DIST	COUNTY	ROUTE	POST MILES TOTAL PROJECT	SHEET No	TOTAL SHEETS
12	Ora	5	6.2/8.7	509	595

Khaled Allam 11/12/12
REGISTERED CIVIL ENGINEER DATE

4-29-13
PLANS APPROVAL DATE

REGISTERED PROFESSIONAL ENGINEER Khaled Allam No. 67110 Exp. 09/30/14 CIVIL STATE OF CALIFORNIA

The State of California or its officers or agents shall not be responsible for the accuracy or completeness of electronic copies of this plan sheet.

JACOBS
3161 MICHELSON, STE 500
IRVINE, CA 92612

ORANGE COUNTY
TRANSPORTATION AUTHORITY
550 S. MAIN STREET
ORANGE, CA 92863-1584

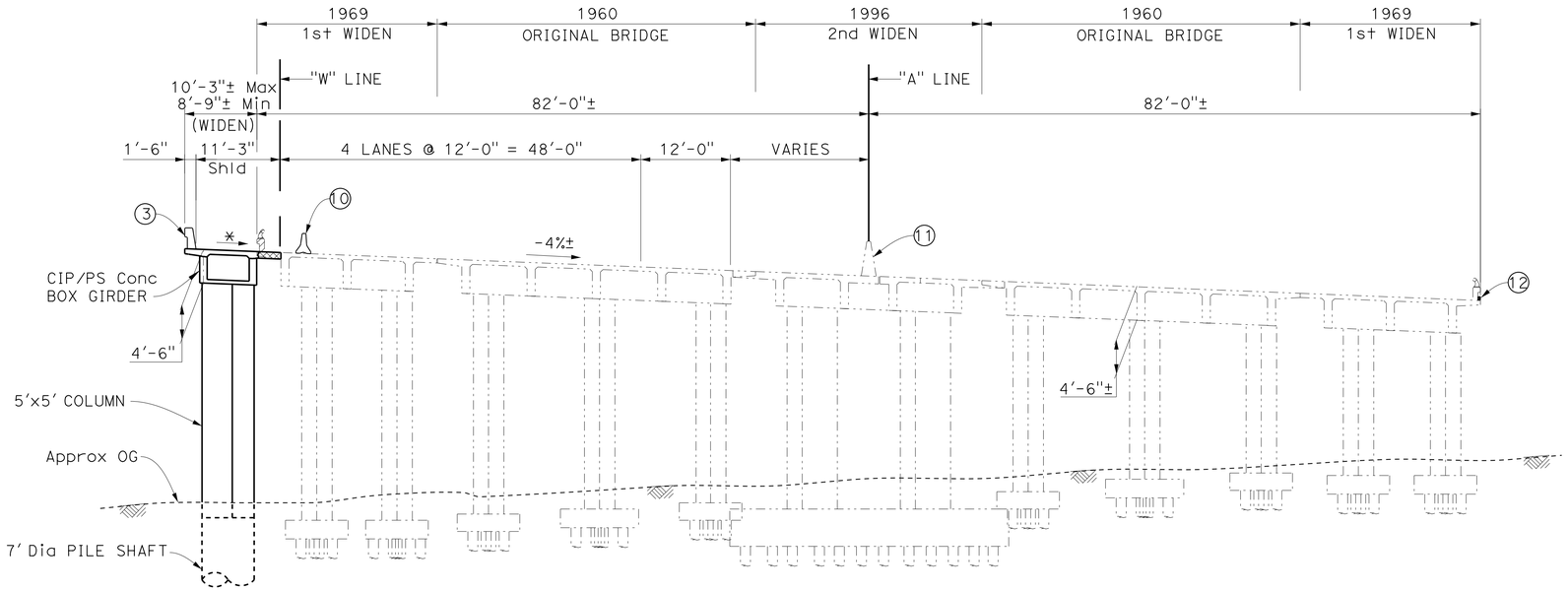

LEGEND:

- (3) Conc Barrier Type 736 (Mod)
- (10) Temporary Railing Type K, See "ROAD PLANS"
- (11) Exist median barrier
- (12) New fiber optic lines, see "ROAD PLANS"
- Closure pour
- Bridge removal (Portion).
- Existing Structure
- New Structure
- * Match exist deck cross slope and grade

TYPICAL SECTION

1" = 10'

CAMINO CAPISTRANO UC (WIDEN) BRIDGE NO 55-0227

QUANTITIES

REMOVE RETAINING WALL (LS)	LUMP	SUM
BRIDGE REMOVAL (PORTION), LOCATION C	LUMP	SUM
STRUCTURE EXCAVATION (BRIDGE)	407	CY
STRUCTURE BACKFILL (BRIDGE)	603	CY
84" CAST-IN-DRILLED-HOLE CONCRETE PILING	202	LF
FURNISH PILING (CLASS 200)	1,360	LF
DRIVE PILE (CLASS 200)	24	EA
PRESTRESSING CAST-IN-PLACE CONCRETE	LUMP	SUM
STRUCTURAL CONCRETE, BRIDGE FOOTING	49	CY
STRUCTURAL CONCRETE, BRIDGE	420	CY
STRUCTURAL CONCRETE, APPROACH SLAB(TYPE N)	28	CY
STRUCTURAL CONCRETE, APPROACH SLAB(TYPE R)	32	CY
DRILL AND BOND DOWEL	33	LF
JOINT SEAL (MR 2")	42	LF
BAR REINFORCING STEEL (BRIDGE)	224,287	LB
SLOPE PAVING (CONCRETE)	433	CY
CONCRETE BARRIER (TYPE 736A MODIFIED)	26	LF
CONCRETE BARRIER (TYPE 736 MODIFIED)	242	LF

NOTE:
THE CONTRACTOR SHALL VERIFY ALL CONTROLLING FIELD DIMENSIONS BEFORE ORDERING OR FABRICATING ANY MATERIAL.

Luqi Yang
DESIGN OVERSIGHT Luqi Yang
1-16-13
SIGN OFF DATE

	BY	CHECKED
DESIGN	k. Allam	A. Kalidindi
DETAILS	I. Karkoutli	A. Kalidindi
QUANTITIES	M. Metcalf	A. Cardoza

LOAD & RESISTANCE FACTOR DESIGN — LIVE LOADING: HL93 W/"LOW-BOY"; PERMIT DESIGN VEHICLE

	BY	CHECKED
LAYOUT	I. Karkoutli	A. Moubayed
SPECIFICATIONS	S. Xie	PLANS AND SPECS COMPARED S. Xie

PREPARED FOR THE STATE OF CALIFORNIA DEPARTMENT OF TRANSPORTATION

Alaedin Moubayed
PROJECT ENGINEER

BRIDGE NO. 55-0227
POST MILES 7.40

CAMINO CAPISTRANO UC (WIDEN)
GENERAL PLAN No. 2

DESIGN GENERAL PLAN SHEET (ENGLISH) (REV.7/16/10)

ORIGINAL SCALE IN INCHES FOR REDUCED PLANS 0 1 2 3

UNIT: 2998
PROJECT NUMBER & PHASE: 12000202791 CONTRACT NO.: 12-0F96E4

DISREGARD PRINTS BEARING EARLIER REVISION DATES

REVISION DATES 4/23/12 8/13/12 11/12/12

SHEET 2 OF 33

FILE => 55-0227I-a-gp02.dgn

USERNAME => s124496 DATE PLOTTED => 29-APR-2013 TIME PLOTTED => 12:45

DIST	COUNTY	ROUTE	POST MILES TOTAL PROJECT	SHEET No	TOTAL SHEETS
12	Ora	5	6.2/8.7	510	595

Khaled Allam 11/12/12
REGISTERED CIVIL ENGINEER DATE

4-29-13
PLANS APPROVAL DATE

REGISTERED PROFESSIONAL ENGINEER — Khaled Allam — No. 67110 — Exp. 09/30/14 — CIVIL — STATE OF CALIFORNIA

The State of California or its officers or agents shall not be responsible for the accuracy or completeness of electronic copies of this plan sheet.

JACOBS
3161 MICHELSON, STE 500
IRVINE, CA 92612

ORANGE COUNTY TRANSPORTATION AUTHORITY
550 S. MAIN STREET
ORANGE, CA 92863-1584

GENERAL NOTES
LOAD AND RESISTANCE FACTOR DESIGN

DESIGN:
AASHTO LRFD BRIDGE DESIGN SPECIFICATIONS, 4TH edition with California Amendments preface dated November 2011.

SEISMIC DESIGN:
CALTRANS SEISMIC DESIGN CRITERIA (SDC), version 1.6 dated November 2010

DEAD LOAD:
Includes 35 psf for future wearing surface.

LIVE LOAD:
HL-93 and permit design load

SEISMIC LOADING:
SOIL PROFILE: Shear Wave Velocity V_S30 = 804 to 938 feet/sec for the top 100 feet of soil
Moment Magnitude: Mmax = 7.5
Peak Ground Acceleration 0.4g

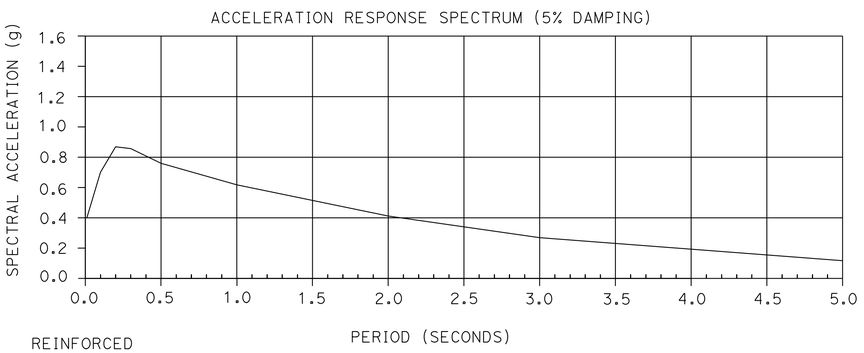

REINFORCED CONCRETE:
f_y = 60 Ksi
f'_c = See "CONCRETE STRENGTH AND TYPE LIMITS"

PRESTRESSED CONCRETE:
For "PRESTRESSING NOTES", see "GIRDER DETAILS" Sheet

Exist BRIDGE:

Original Structure and 1969 widening f_y = 40 ksi, f'_c = 3.0 ksi

1996 Widening f_y = 60 ksi, f'_c = 3.25 ksi

PLAN SYMBOLS

STANDARD PLAN SHEET No.
DETAIL No.
SECTION IDENTIFICATION

NOTE:
THE CONTRACTOR SHALL VERIFY ALL CONTROLLING FIELD DIMENSIONS BEFORE ORDERING OR FABRICATING ANY MATERIAL.

INDEX TO PLANS

SHEET NO.	TITLE
1	GENERAL PLAN No. 1
2	GENERAL PLAN No. 2
3	INDEX TO PLANS
4	BRIDGE REMOVAL PLAN No. 1
5	BRIDGE REMOVAL PLAN No. 2
6	FOUNDATION PLAN
7	ABUTMENT 1 LAYOUT
8	ABUTMENT 5 LAYOUT
9	ABUTMENT FOOTING AND PILE LAYOUT
10	ABUTMENT FOOTING REINFORCEMENT
11	ABUTMENT DETAILS No. 1
12	ABUTMENT DETAILS No. 2
13	ABUTMENT DETAILS No. 3
14	ABUTMENT DETAILS No. 4
15	BENT LAYOUT
16	BENT DETAILS No. 1
17	BENT DETAILS No. 2
18	TYPICAL SECTION
19	GIRDER LAYOUT No. 1
20	GIRDER LAYOUT No. 2
21	GIRDER DETAILS
22	DECK CORNER DETAILS
23	ADDITIONAL DECK REINFORCEMENT
24	ADDITIONAL SOFFIT REINFORCEMENT
25	STRUCTURE APPROACH TYPE N(30S)
26	STRUCTURE APPROACH TYPE R(30S)
27	STRUCTURE APPROACH DRAINAGE DETAILS
28	SLOPE PAVING
29	LOG OF TEST BORINGS 1 OF 5
30	LOG OF TEST BORINGS 2 OF 5
31	LOG OF TEST BORINGS 3 OF 5
32	LOG OF TEST BORINGS 4 OF 5
33	LOG OF TEST BORINGS 5 OF 5

STANDARD PLANS DATED 2010

A10A	ABBREVIATIONS (SHEET 1 OF 2)
A10B	ABBREVIATIONS (SHEET 2 OF 2)
A10C	LINES AND SYMBOLS (SHEET 1 OF 3)
A10D	LINES AND SYMBOLS (SHEET 2 OF 3)
A10E	LINS AND SYMBOLS (SHEET 3 OF 3)
A10F	LEGEND - SOIL (SHEET 1 OF 2)
A10G	LEGEND - SOIL (SHEET 2 OF 2)
A62B	LIMITS OF PAYMENT FOR EXCAVATION AND BACKFILL - BRIDGE SURCHARGE AND WALL
A62C	LIMITS OF PAYMENT FOR EXCAVATION AND BACKFILL - BRIDGE
T3A	TEMPORARY RAILING (TYPE K)
T3B	TEMPORARY RAILING (TYPE K)
B0-1	BRIDGE DETAILS
B0-5	BRIDGE DETAILS
B0-13	BRIDGE DETAILS
B2-8	PILE DETAILS CLASS 200
B6-21	JOINT SEALS (MAXIMUM MOVEMENT RATING = 2")
B7-1	BOX GIRDER DETAILS
B8-5	CAST-IN-PLACE PRESTRESSED GIRDER DETAILS
B11-56	CONCRETE BARRIER TYPE 736

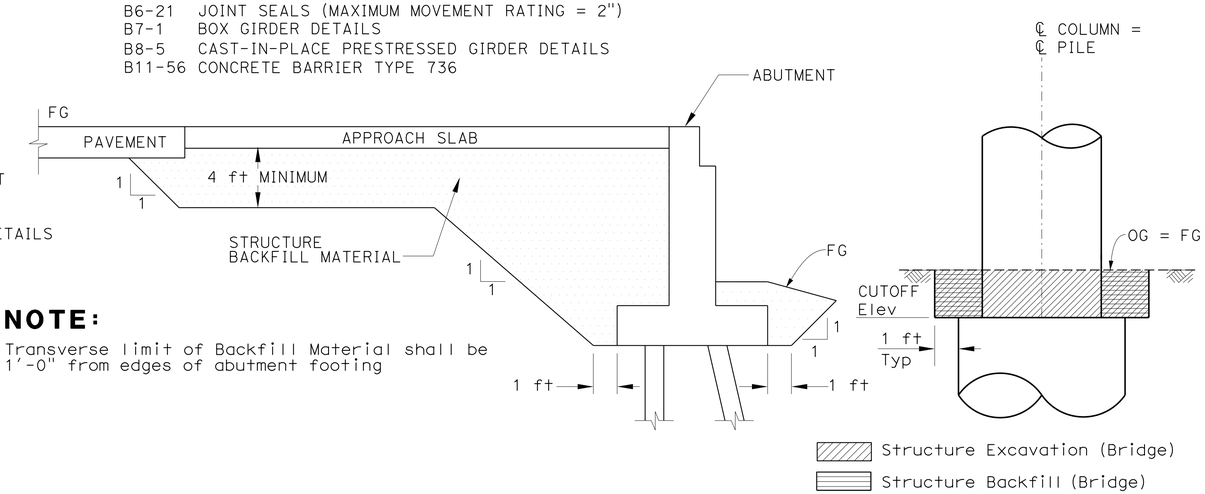

NOTE:
Transverse limit of Backfill Material shall be 1'-0" from edges of abutment footing

LIMITS OF PAYMENT FOR STRUCTURAL EXCAVATION AND BACKFILL IN BRIDGE EMBANKMENT
No Scale

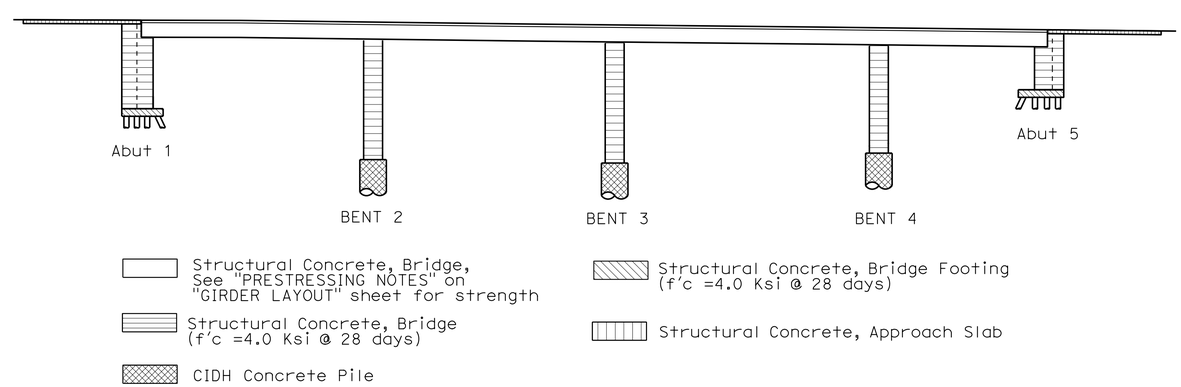

CONCRETE STRENGTH AND TYPE LIMITS
No Scale

Luqi Yang
DESIGN OVERSIGHT Luqi Yang
1-16-13
SIGN OFF DATE

	BY	CHECKED
DESIGN	K. Allam	A. Kalidindi
DETAILS	I. Karkoutli	A. Kalidindi
QUANTITIES	M. Metcalf	A. Cardoza

PREPARED FOR THE STATE OF CALIFORNIA DEPARTMENT OF TRANSPORTATION

Alaedin Moubayed
PROJECT ENGINEER

BRIDGE NO. 55-0227
POST MILES 7.40

CAMINO CAPISTRANO UC (WIDEN)
INDEX TO PLANS

DESIGN DETAIL SHEET (ENGLISH) (REV.7/16/10)

ORIGINAL SCALE IN INCHES FOR REDUCED PLANS 0 1 2 3

UNIT: 2998
PROJECT NUMBER & PHASE: 12000202791 CONTRACT NO.: 12-0F96E4

DISREGARD PRINTS BEARING EARLIER REVISION DATES
REVISION DATES 4/23/12 8/13/12 11/12/12
SHEET 3 OF 33

FILE => 55-0227I-a-itp.dgn

USERNAME => s124496 DATE PLOTTED => 29-APR-2013 TIME PLOTTED => 12:45

DIST	COUNTY	ROUTE	POST MILES TOTAL PROJECT	SHEET No	TOTAL SHEETS
12	Ora	5	6.2/8.7	511	595

Khaled Allam 11/12/12
REGISTERED CIVIL ENGINEER DATE

4-29-13
PLANS APPROVAL DATE

REGISTERED PROFESSIONAL ENGINEER Khaled Allam No. 67110 Exp. 09/30/14 CIVIL STATE OF CALIFORNIA

The State of California or its officers or agents shall not be responsible for the accuracy or completeness of electronic copies of this plan sheet.

JACOBS
3161 MICHELSON, STE 500
IRVINE, CA 92612

ORANGE COUNTY
TRANSPORTATION AUTHORITY
550 S. MAIN STREET
ORANGE, CA 92863-1584

LEGEND:

- Retaining wall removed
- Bridge removal (Portion)
- Existing Structure
- Existing pile

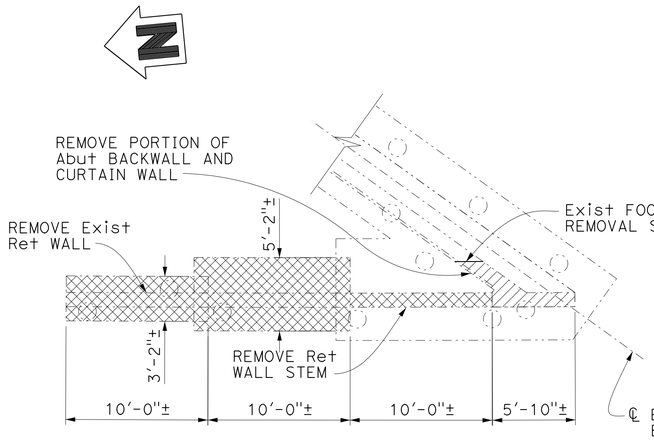

PLAN ABUT 5 (EXIST)

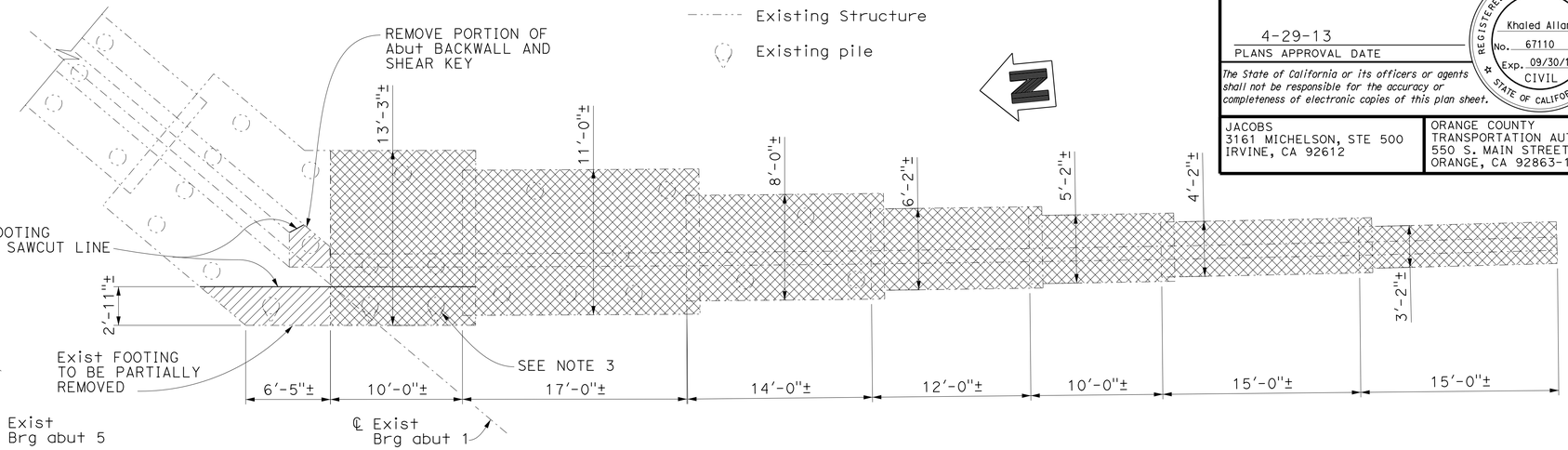

PLAN ABUT 1 (EXIST)

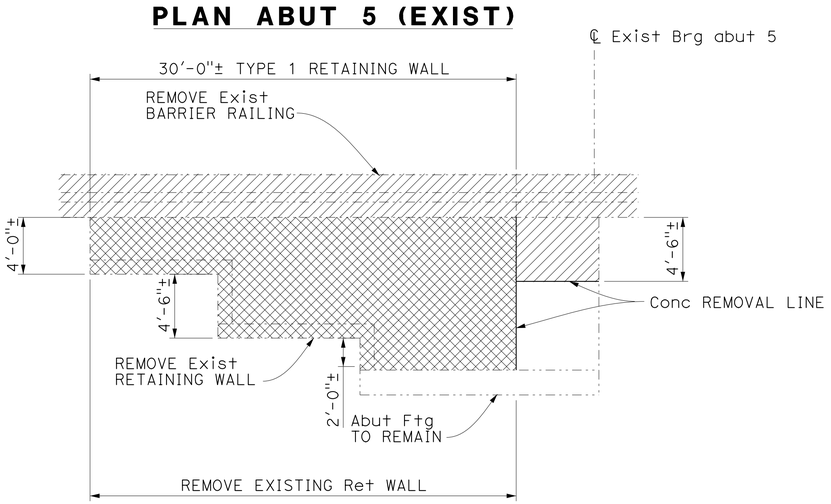

ELEVATION ABUT 5 (EXIST)

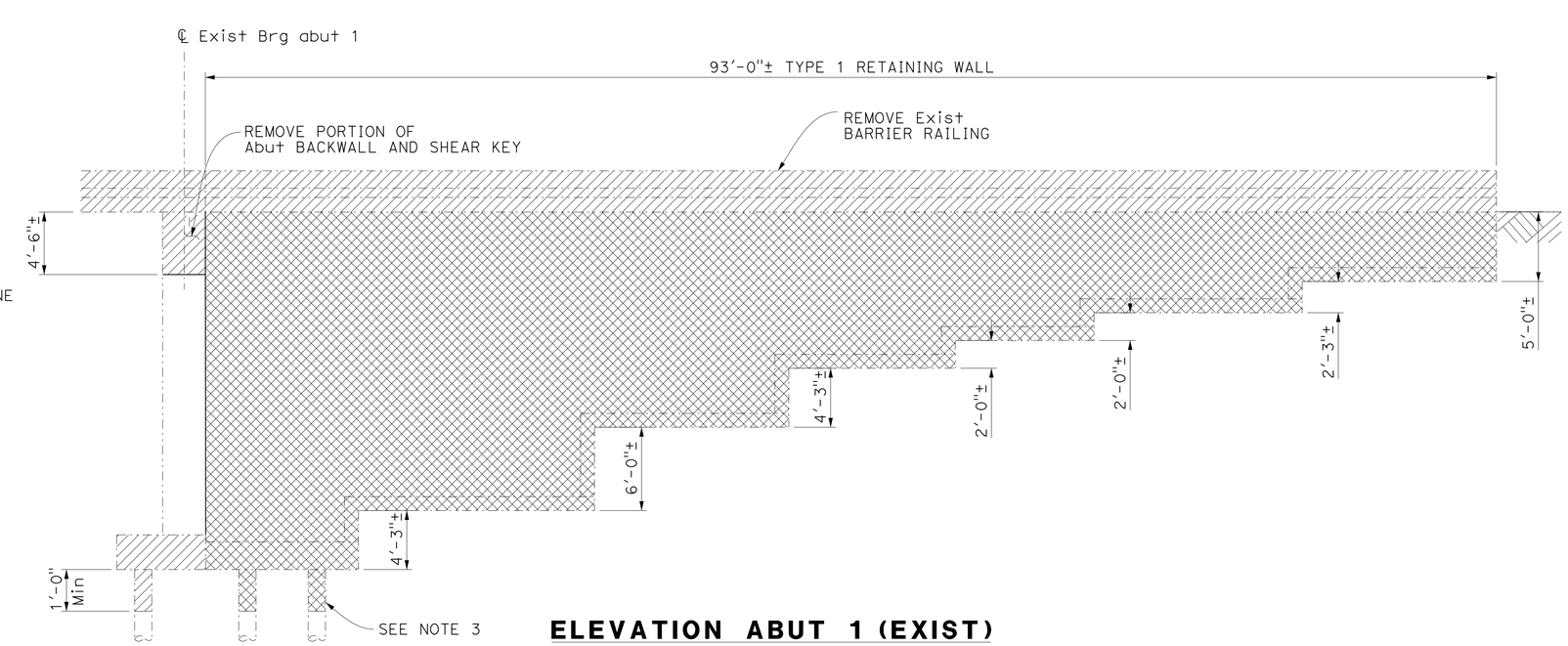

ELEVATION ABUT 1 (EXIST)

NOTES:

1. Limit of overhang removal is from BB to EB.
2. Limit of barrier removal is between ends of WW.
3. Cut exist pile 1' Min deep from bottom of exist footing and backfill resulting hole, Typ

ABUTMENT AND RETAINING WALL REMOVAL DETAILS

No Scale

NOTE:
THE CONTRACTOR SHALL VERIFY ALL CONTROLLING FIELD DIMENSIONS BEFORE ORDERING OR FABRICATING ANY MATERIAL.

Luqi Yang
DESIGN OVERSIGHT Luqi Yang
1-16-13
SIGN OFF DATE

	BY	CHECKED
DESIGN	K. Allam	A. Kalidindi
DETAILS	I. Karkoutli	A. Kalidindi
QUANTITIES	M. Metcalf	A. Cardoza

PREPARED FOR THE STATE OF CALIFORNIA DEPARTMENT OF TRANSPORTATION

Alaedin Moubayed
PROJECT ENGINEER

BRIDGE NO. 55-0227
POST MILES 7.40

CAMINO CAPISTRANO UC (WIDEN)
BRIDGE REMOVAL PLAN No. 1

DESIGN DETAIL SHEET (ENGLISH) (REV.7/16/10)

ORIGINAL SCALE IN INCHES FOR REDUCED PLANS 0 1 2 3

UNIT: 2998
PROJECT NUMBER & PHASE: 12000202791 CONTRACT NO.: 12-0F96E4

DISREGARD PRINTS BEARING EARLIER REVISION DATES 4/23/12 5/13/12 11/12/12

SHEET 4 OF 33

FILE => 55-0227I-c-BRP01.dgn

USERNAME => s124496 DATE PLOTTED => 29-APR-2013 TIME PLOTTED => 12:45

DIST	COUNTY	ROUTE	POST MILES TOTAL PROJECT	SHEET No	TOTAL SHEETS
12	Ora	5	6.2/8.7	512	595

Khaled Allam 11/12/12
REGISTERED CIVIL ENGINEER DATE

4-29-13
PLANS APPROVAL DATE

REGISTERED PROFESSIONAL ENGINEER
Khaled Allam
No. 67110
Exp. 09/30/14
CIVIL
STATE OF CALIFORNIA

The State of California or its officers or agents shall not be responsible for the accuracy or completeness of electronic copies of this plan sheet.

JACOBS
3161 MICHELSON, STE 500
IRVINE, CA 92612

ORANGE COUNTY
TRANSPORTATION AUTHORITY
550 S. MAIN STREET
ORANGE, CA 92863-1584

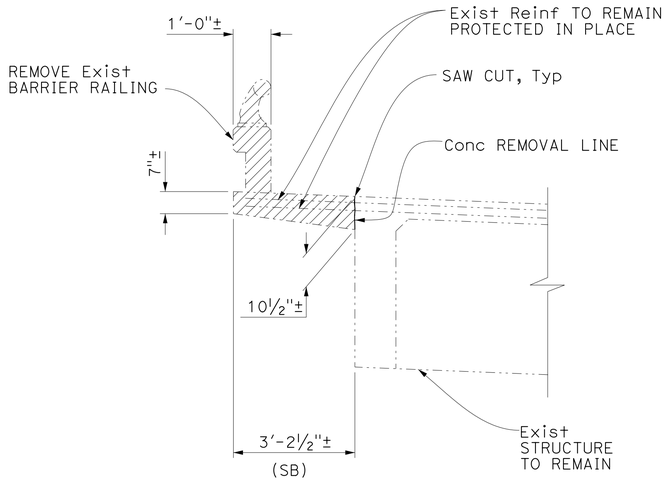

OVERHANG REMOVAL DETAILS

No Scale

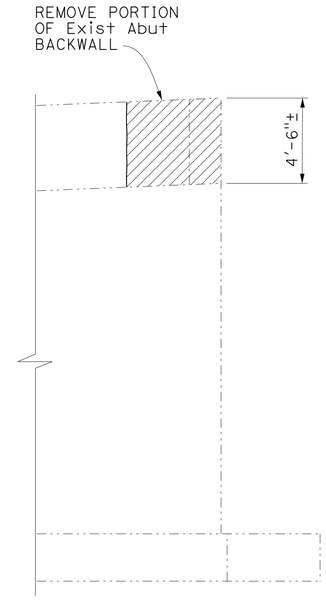

ABUTMENT CORNER REMOVAL DETAIL

No Scale

NOTES:

1. Limit of overhang removal is from BB to EB.
2. Limit of barrier removal is between ends of WW.

LEGEND:

Bridge removal (Portion)

Existing Structure

NOTE:
THE CONTRACTOR SHALL VERIFY ALL CONTROLLING FIELD DIMENSIONS BEFORE ORDERING OR FABRICATING ANY MATERIAL.

Luqi Yang
DESIGN OVERSIGHT Luqi Yang
1-16-13
SIGN OFF DATE

	BY	CHECKED
DESIGN	K. Allam	A. Kalidindi
DETAILS	I. Karkoutli	A. Kalidindi
QUANTITIES	M. Metcalf	A. Cardoza

PREPARED FOR THE
STATE OF CALIFORNIA
DEPARTMENT OF TRANSPORTATION

Alaedin Moubayed
PROJECT ENGINEER

BRIDGE NO. 55-0227
POST MILES 7.40

CAMINO CAPISTRANO UC (WIDEN)
BRIDGE REMOVAL PLAN No. 2

DESIGN DETAIL SHEET (ENGLISH) (REV.7/16/10)

ORIGINAL SCALE IN INCHES FOR REDUCED PLANS 0 1 2 3

UNIT: 2998
PROJECT NUMBER & PHASE: 12000202791 CONTRACT NO.: 12-0F96E4

DISREGARD PRINTS BEARING EARLIER REVISION DATES

REVISION DATES 4/23/12 8/13/12 11/12/12

SHEET 5 OF 33

FILE => 55-0227I-c-BRP02.dgn

USERNAME => s124496 DATE PLOTTED => 29-APR-2013 TIME PLOTTED => 12:45

DIST	COUNTY	ROUTE	POST MILES TOTAL PROJECT	SHEET No	TOTAL SHEETS
12	Ora	5	6.2/8.7	513	595

Khaled Allam 11/12/12
REGISTERED CIVIL ENGINEER DATE

4-29-13
PLANS APPROVAL DATE

REGISTERED PROFESSIONAL ENGINEER Khaled Allam No. 67110 Exp. 09/30/14 CIVIL STATE OF CALIFORNIA

The State of California or its officers or agents shall not be responsible for the accuracy or completeness of electronic copies of this plan sheet.

JACOBS
3161 MICHELSON, STE 500
IRVINE, CA 92612

ORANGE COUNTY TRANSPORTATION AUTHORITY
550 S. MAIN STREET
ORANGE, CA 92863-1584

PILE DATA TABLE

Location	Pile Type	Nominal Resistance		Design Tip Elevation (ft)	Specified Tip Elevation (ft)	Nominal Driving Resistance (kips)
		Compression (kips)	Tension (kips)			
Abut 1	CLASS 200 Alt. X	190	N/A	+34 (a) +65 (c) +59 (d)	+34	190
Bent 2	84" CIDH	1090	N/A	+18 (a) +56 (c) +28 (d)	+18	N/A
Bent 3	84" CIDH	1210	N/A	+10 (a) +52 (c) +24 (d)	+10	N/A
Bent 4	84" CIDH	1040	N/A	+17 (a) +55 (c) +27 (d)	+17	N/A
Abut 5	CLASS 200 Alt. X	140	N/A	+40 (a) +83 (c) +65 (d)	+40	140

Note: Design tip elevation is controlled by the following demands:
(a) Compression, (b) Tension, (c) Settlement, (d) Lateral Loads

BENCHMARK:

Description: 3¾" US Coast and Geodetic survey Bronzed Disk Stamped "F 785 1946", set in the top of a concrete bridge abutment. Monument is located in the Southwesterly corner of the Atchinso/Topeka and Santa Fe Railway overcrossing of San Mateo Creek.

Designation: F-785

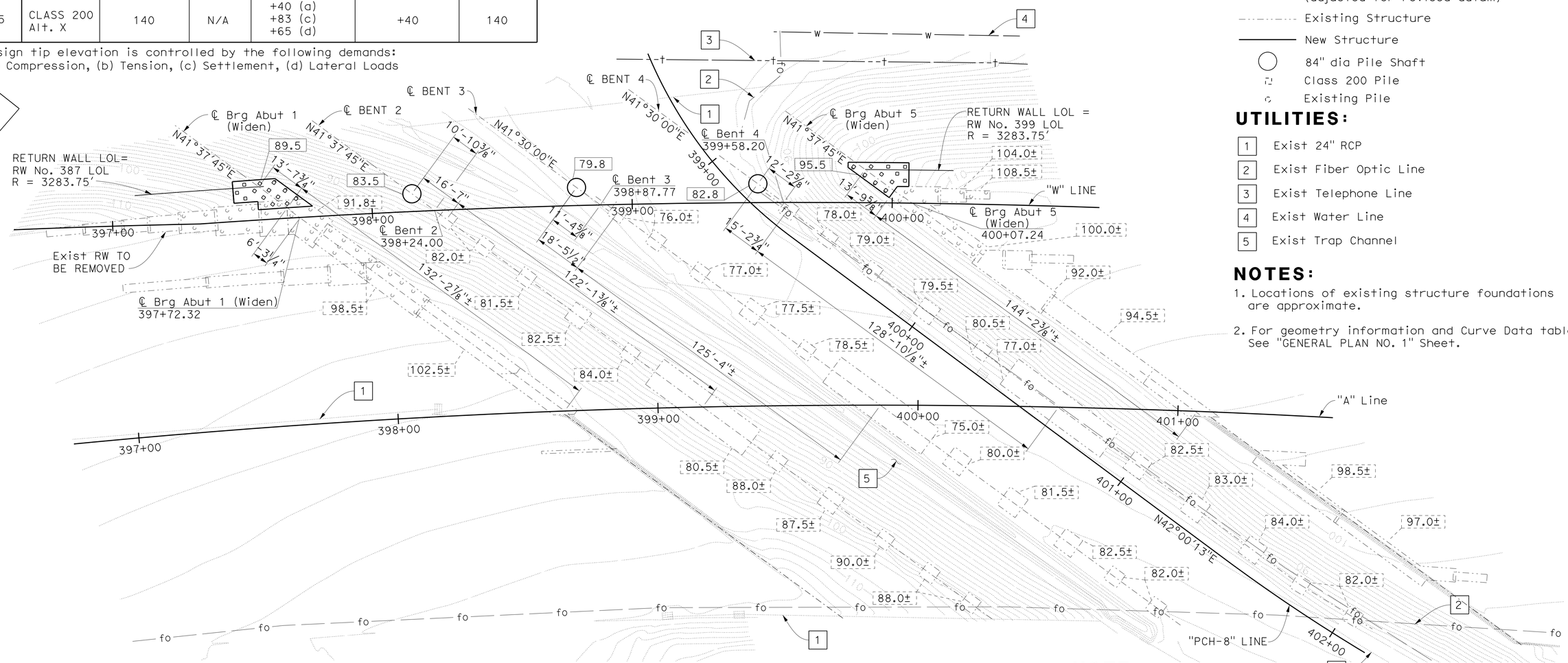

PLAN
1" = 20'

LEGEND:

- XX.X — Bottom of footing elevation or CIDH pile cut-off elevation
- XX.X± — Bottom of Exist footing elevation (adjusted for revised datum)
- Existing Structure
- New Structure
- 84" dia Pile Shaft
- Class 200 Pile
- Existing Pile

UTILITIES:

1. Exist 24" RCP
2. Exist Fiber Optic Line
3. Exist Telephone Line
4. Exist Water Line
5. Exist Trap Channel

NOTES:

1. Locations of existing structure foundations are approximate.
2. For geometry information and Curve Data table, See "GENERAL PLAN NO. 1" Sheet.

NOTE:

Bottom fo existing footing excavations do not match as-built. Difference between as-built elevation and elevation shown is 2.0'±.

NOTE:
THE CONTRACTOR SHALL VERIFY ALL CONTROLLING FIELD DIMENSIONS BEFORE ORDERING OR FABRICATING ANY MATERIAL.

L. Cheang 11/12/12
GEOTECHNICAL PROFESSIONAL APPROVAL DATE

Luqi Yang
DESIGN OVERSIGHT Luqi Yang
1-16-13
SIGN OFF DATE

SCALE: As Shown	VERT.DATUM		HORZ.DATUMNAVD88, O.C.S. 1995 Adj.		
PHOTOGRAMMETRY AS OF: Caltrans		ALIGNMENT TIES	W. Estepa		
SURVEYED	BY R. Gould	DRAFTED	BY I. Karkoutli		
FIELD CHECKED	BY K. Launen	CHECKED	BY S. Xie		

	BY	CHECKED
DESIGN	K. Allam	A. Kalidindi
DETAILS	I. Karkoutli	A. Kalidindi
QUANTITIES	M. Metcalf	A. Cardoza

PREPARED FOR THE STATE OF CALIFORNIA DEPARTMENT OF TRANSPORTATION

Alaedin Moubayed
PROJECT ENGINEER

BRIDGE NO. 55-0227
POST MILES 7.40

CAMINO CAPISTRANO UC (WIDEN)
FOUNDATION PLAN

FOUNDATION PLAN SHEET (ENGLISH) (REV.7/16/10)

ORIGINAL SCALE IN INCHES FOR REDUCED PLANS 0 1 2 3

UNIT: 2998
PROJECT NUMBER & PHASE: 12000202791 CONTRACT NO.: 12-0F96E4

DISREGARD PRINTS BEARING EARLIER REVISION DATES

REVISION DATES 4/23/12 8/13/12 11/12/12

SHEET 6 OF 33

FILE => 55-02271-e-fdp101.dgn

USERNAME => s124496 DATE PLOTTED => 29-APR-2013 TIME PLOTTED => 12:45

DIST	COUNTY	ROUTE	POST MILES TOTAL PROJECT	SHEET No	TOTAL SHEETS
12	Ora	5	6.2/8.7	514	595

Khaled Allam 11/12/12
REGISTERED CIVIL ENGINEER DATE

4-29-13
PLANS APPROVAL DATE

REGISTERED PROFESSIONAL ENGINEER Khaled Allam No. 67110 Exp. 09/30/14 CIVIL STATE OF CALIFORNIA

The State of California or its officers or agents shall not be responsible for the accuracy or completeness of electronic copies of this plan sheet.

JACOBS
3161 MICHELSON, STE 500
IRVINE, CA 92612

ORANGE COUNTY TRANSPORTATION AUTHORITY
550 S. MAIN STREET
ORANGE, CA 92863-1584

NOTES:

1. For footing and pile layouts, See "ABUTMENT FOOTING AND PILE LAYOUT" sheet.
2. For Section "B-B" & "C-C", see "ABUTMENT DETAILS No. 1" Sheet.
3. For footing reinforcement, see "ABUTMENT FOOTING REINFORCEMENT" Sheet.
4. All piles not shown for clarity.

LEGEND:

- (4) Structure Approach, Type N(30S)
- (5) Structure Approach, Type R(30S)
- Expanded Polystyrene
- Existing Structure
- New Structure

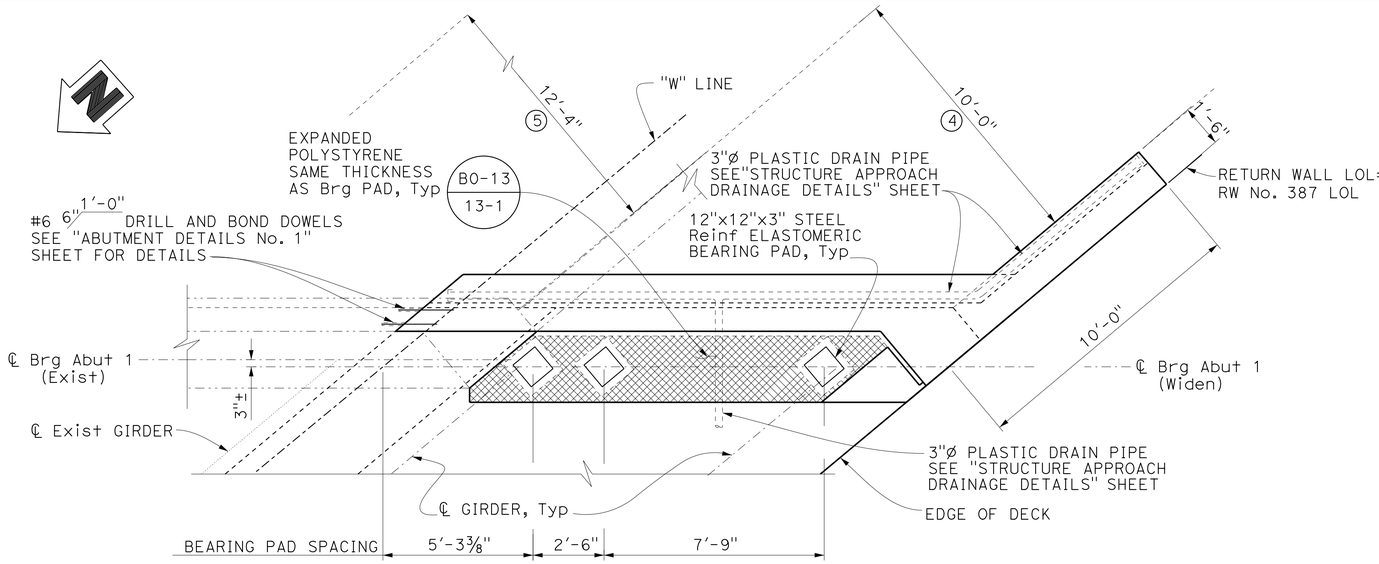

PLAN
⅜" = 1'-0"

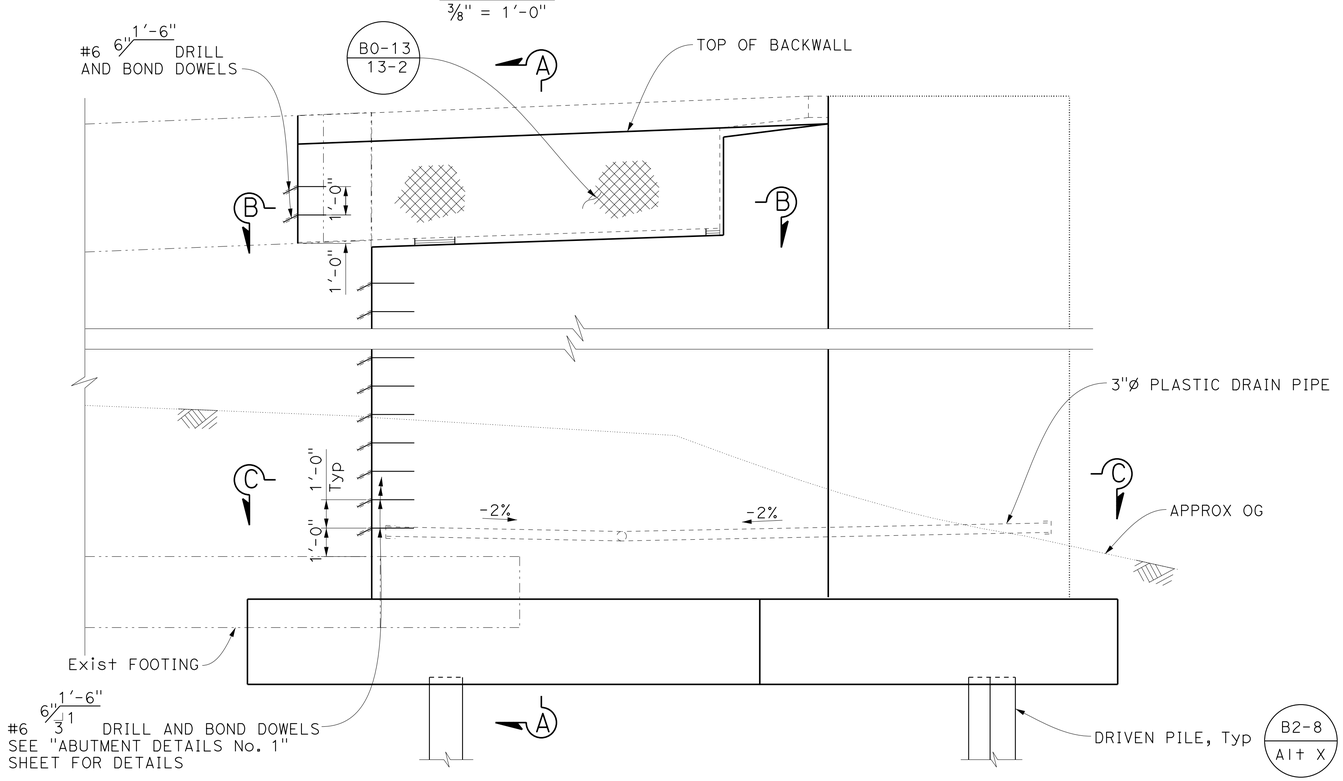

ELEVATION
⅜" = 1'-0"

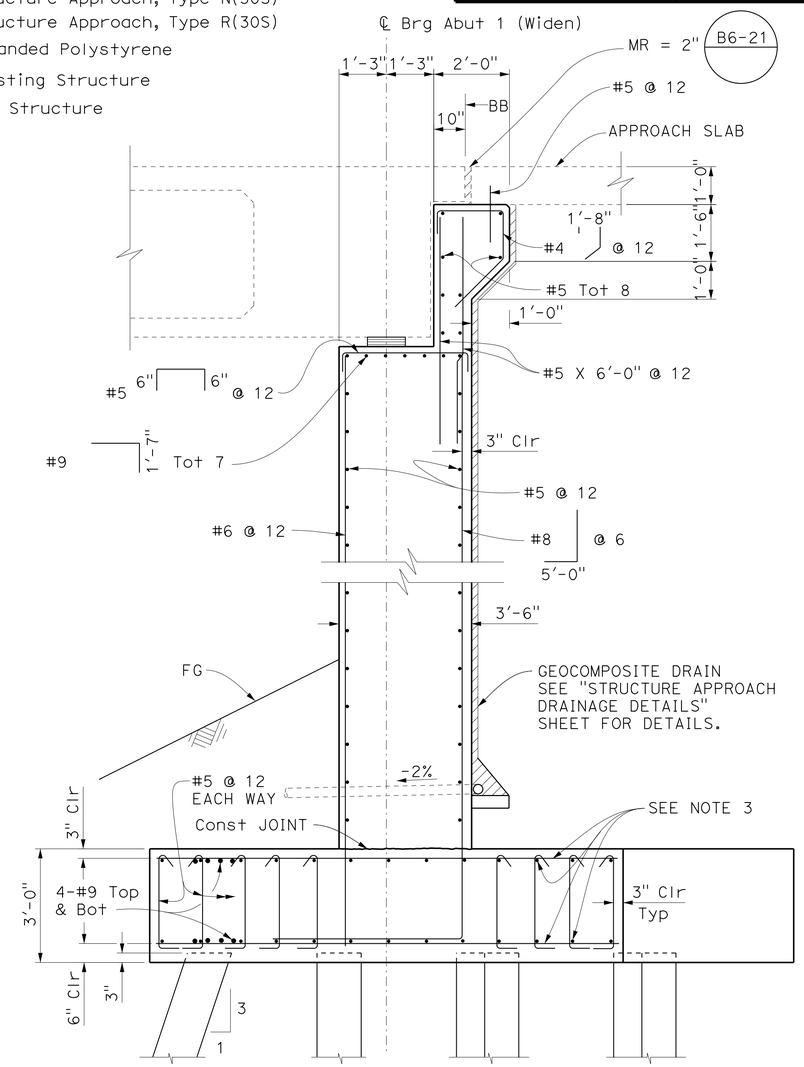

SECTION A-A
½" = 1'-0"

NOTE:
THE CONTRACTOR SHALL VERIFY ALL CONTROLLING FIELD DIMENSIONS BEFORE ORDERING OR FABRICATING ANY MATERIAL.

Luqi Yang
DESIGN OVERSIGHT Luqi Yang
1-16-13
SIGN OFF DATE

	BY	CHECKED
DESIGN	K. Allam	A. Kalidindi
DETAILS	I. Karkoutli	A. Kalidindi
QUANTITIES	M. Metcalf	A. Cardoza

PREPARED FOR THE STATE OF CALIFORNIA DEPARTMENT OF TRANSPORTATION

Alaedin Moubayed
PROJECT ENGINEER

BRIDGE NO. 55-0227
POST MILES 7.40

CAMINO CAPISTRANO UC (WIDEN)
ABUTMENT 1 LAYOUT

DESIGN DETAIL SHEET (ENGLISH) (REV.7/16/10)

ORIGINAL SCALE IN INCHES FOR REDUCED PLANS 0 1 2 3

UNIT: 2998
PROJECT NUMBER & PHASE: 12000202791 CONTRACT NO.: 12-0F96E4

DISREGARD PRINTS BEARING EARLIER REVISION DATES

REVISION DATES: 4/23/12 8/13/12 11/12/12

SHEET 7 OF 33

FILE => 55-0227I-f-a01_1o1.dgn

USERNAME => s124196 DATE PLOTTED => 29-APR-2013 TIME PLOTTED => 12:45

DIST	COUNTY	ROUTE	POST MILES TOTAL PROJECT	SHEET No	TOTAL SHEETS
12	Ora	5	6.2/8.7	515	595

Khaled Allam 11/12/12
REGISTERED CIVIL ENGINEER DATE

4-29-13
PLANS APPROVAL DATE

REGISTERED PROFESSIONAL ENGINEER Khaled Allam No. 67110 Exp. 09/30/14 CIVIL STATE OF CALIFORNIA

The State of California or its officers or agents shall not be responsible for the accuracy or completeness of electronic copies of this plan sheet.

JACOBS
3161 MICHELSON, STE 500
IRVINE, CA 92612

ORANGE COUNTY TRANSPORTATION AUTHORITY
550 S. MAIN STREET
ORANGE, CA 92863-1584

NOTES:

1. For footing and pile layouts, See "ABUTMENT FOOTING AND PILE LAYOUT" sheet.
2. For Section "D-D" & "E-E", see "ABUTMENT DETAILS No. 2" Sheet.
3. For footing reinforcement, See "ABUTMENT FOOTING REINFORCEMENT" Sheet.

LEGEND:

- (4) Structure Approach, Type N(30S)
- (5) Structure Approach, Type R(30S)
- Expanded Polystyrene
- Existing Structure
- New Structure

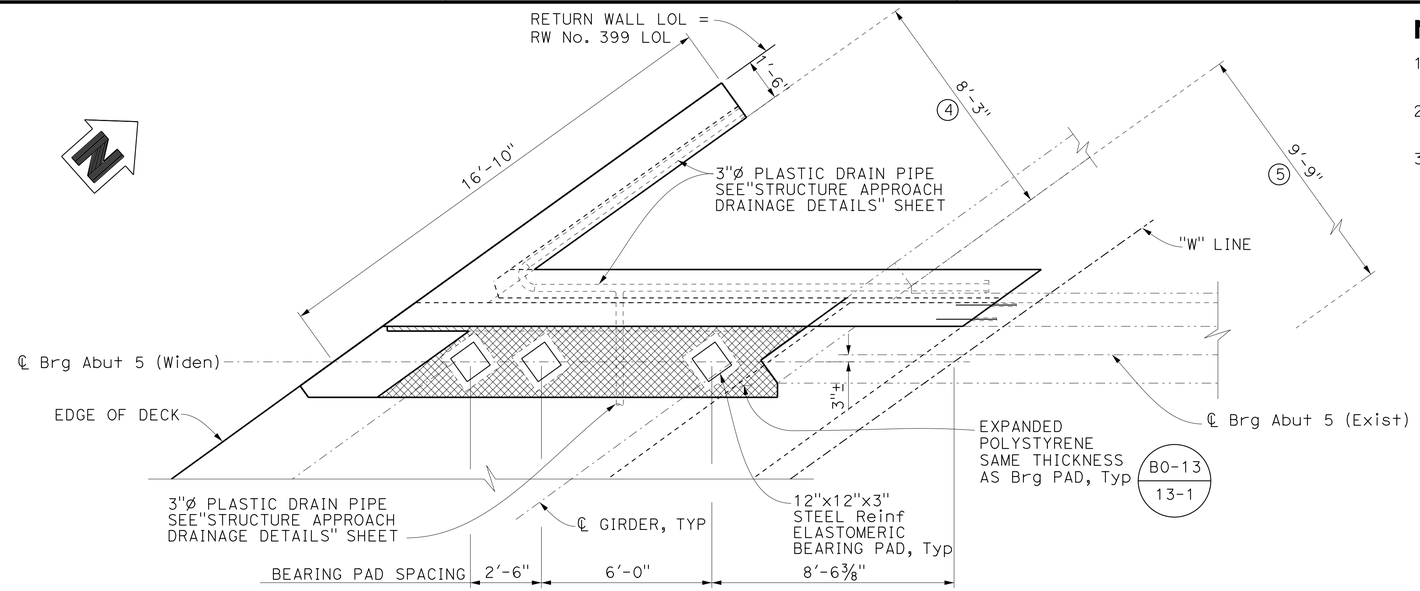

PLAN
⅜" = 1'-0"

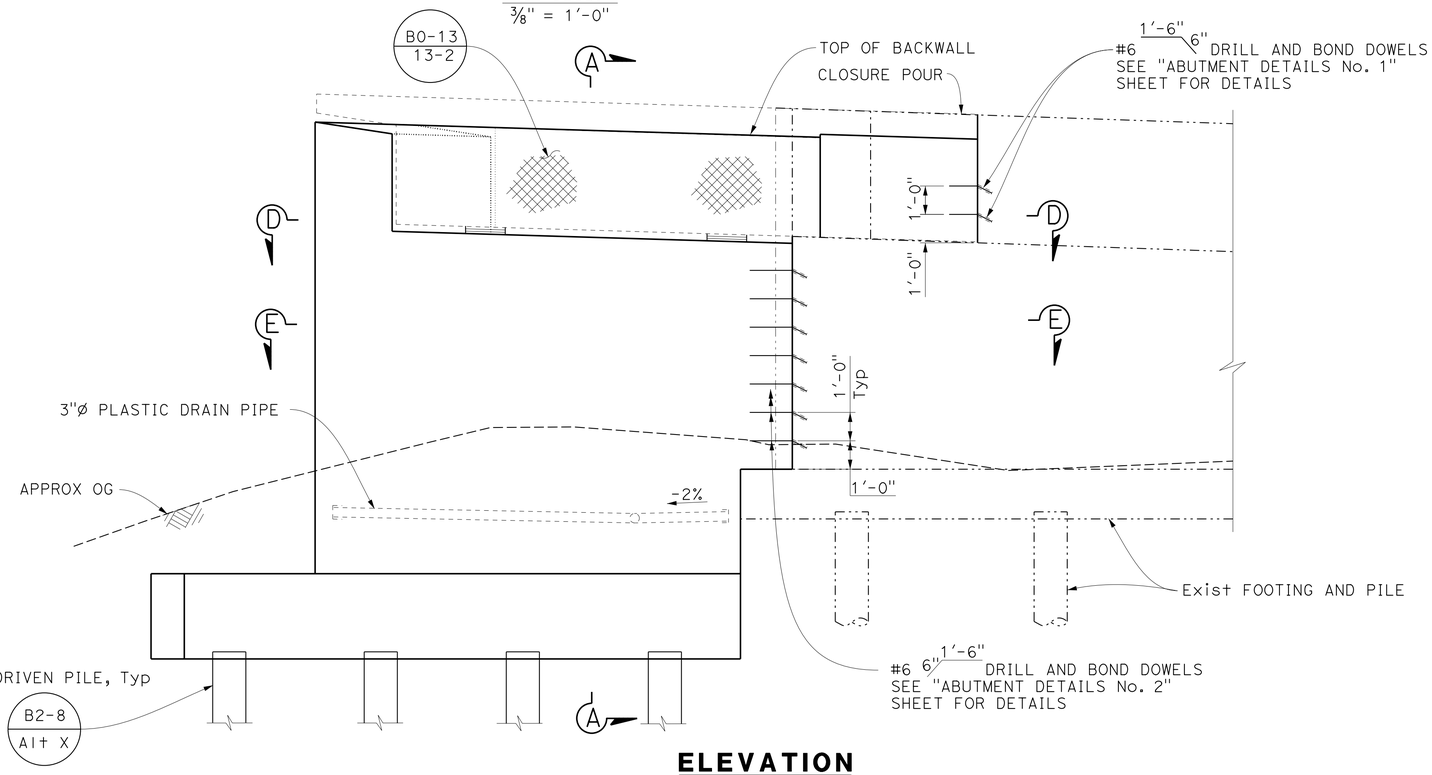

ELEVATION
⅜" = 1'-0"

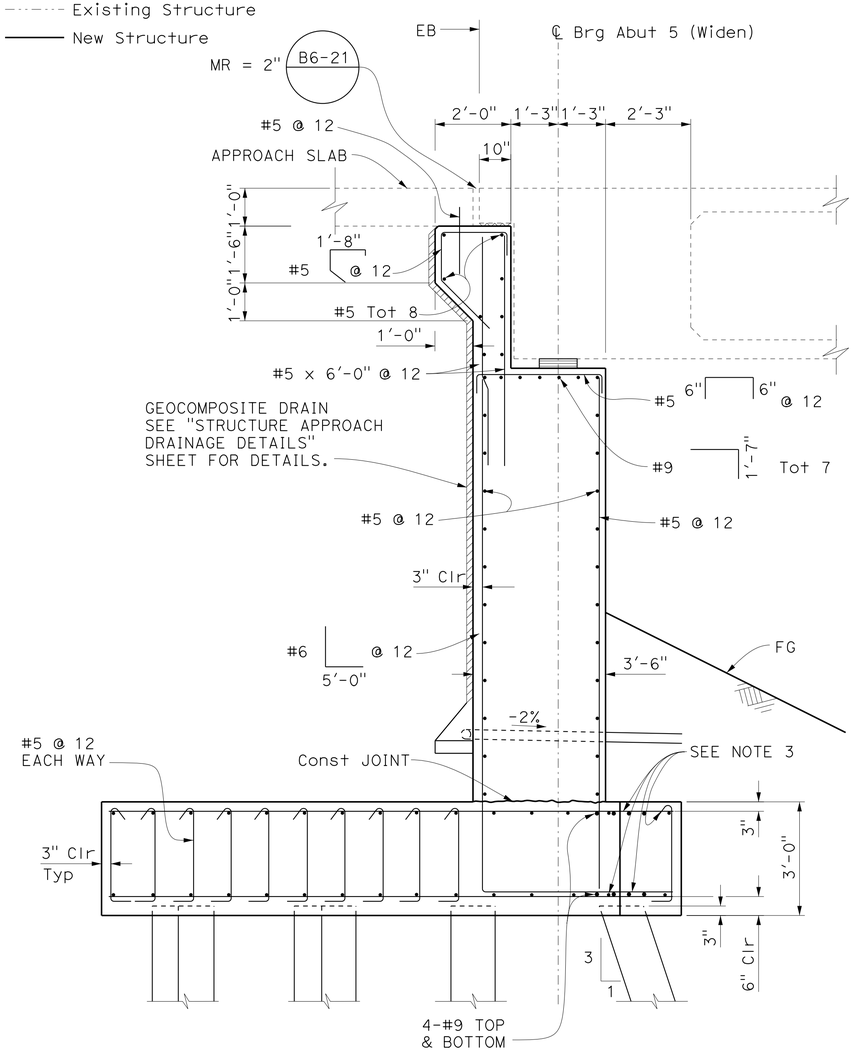

SECTION A-A
½" = 1'-0"

NOTE:
THE CONTRACTOR SHALL VERIFY ALL CONTROLLING FIELD DIMENSIONS BEFORE ORDERING OR FABRICATING ANY MATERIAL.

Luqi Yang
DESIGN OVERSIGHT Luqi Yang
1-16-13
SIGN OFF DATE

	BY	CHECKED
DESIGN	K. Allam	A. Kalidindi
DETAILS	I. Karkoutli	A. Kalidindi
QUANTITIES	M. Metcalf	A. Cardoza

PREPARED FOR THE STATE OF CALIFORNIA DEPARTMENT OF TRANSPORTATION

Alaedin Moubayed
PROJECT ENGINEER

BRIDGE NO. 55-0227
POST MILES 7.40

CAMINO CAPISTRANO UC (WIDEN)
ABUTMENT 5 LAYOUT

DESIGN DETAIL SHEET (ENGLISH) (REV.7/16/10)

ORIGINAL SCALE IN INCHES FOR REDUCED PLANS 0 1 2 3

UNIT: 2998
PROJECT NUMBER & PHASE: 12000202791
CONTRACT NO.: 12-0F96E4

DISREGARD PRINTS BEARING EARLIER REVISION DATES

REVISION DATES: 1/23/12 8/13/12 11/12/12

SHEET 8 OF 33

FILE => 55-0227I-f-a01_lo2.dgn

USERNAME => s124396 DATE PLOTTED => 29-APR-2013 TIME PLOTTED => 12:45

DIST	COUNTY	ROUTE	POST MILES TOTAL PROJECT	SHEET No	TOTAL SHEETS
12	Ora	5	6.2/8.7	516	595

Khaled Allam 11/12/12
REGISTERED CIVIL ENGINEER DATE

4-29-13
PLANS APPROVAL DATE

REGISTERED PROFESSIONAL ENGINEER
Khaled Allam
No. 67110
Exp. 09/30/14
CIVIL
STATE OF CALIFORNIA

The State of California or its officers or agents shall not be responsible for the accuracy or completeness of electronic copies of this plan sheet.

JACOBS
3161 MICHELSON, STE 500
IRVINE, CA 92612

ORANGE COUNTY
TRANSPORTATION AUTHORITY
550 S. MAIN STREET
ORANGE, CA 92863-1584

LEGEND:

- Existing Structure
- New Structure

NOTES:

1. For bridge removal, See "BRIDGE REMOVAL PLAN No. 1" sheet.
2. Min clearance of new pile to the exist pile to be cut is 6".

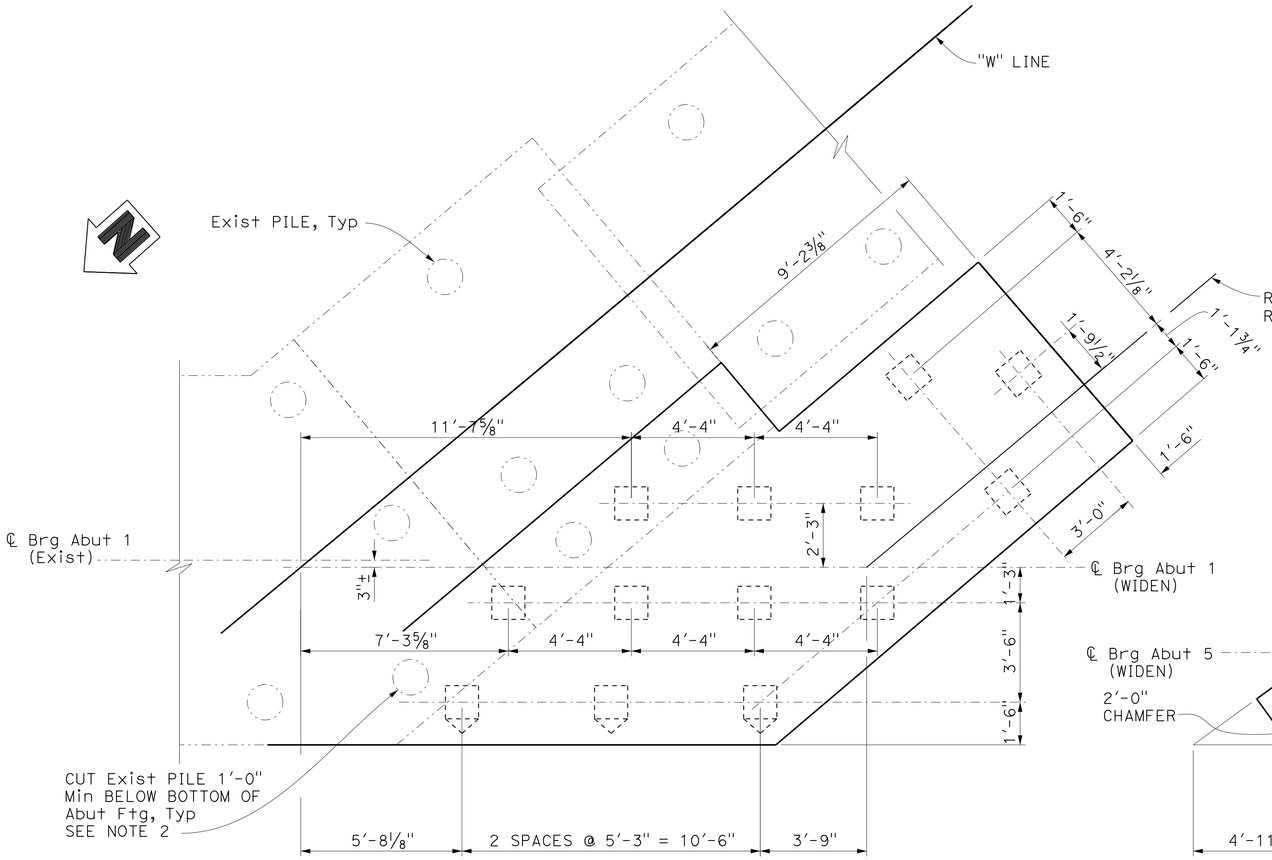

FOOTING PLAN - ABUTMENT 1

3/8" = 1'-0"

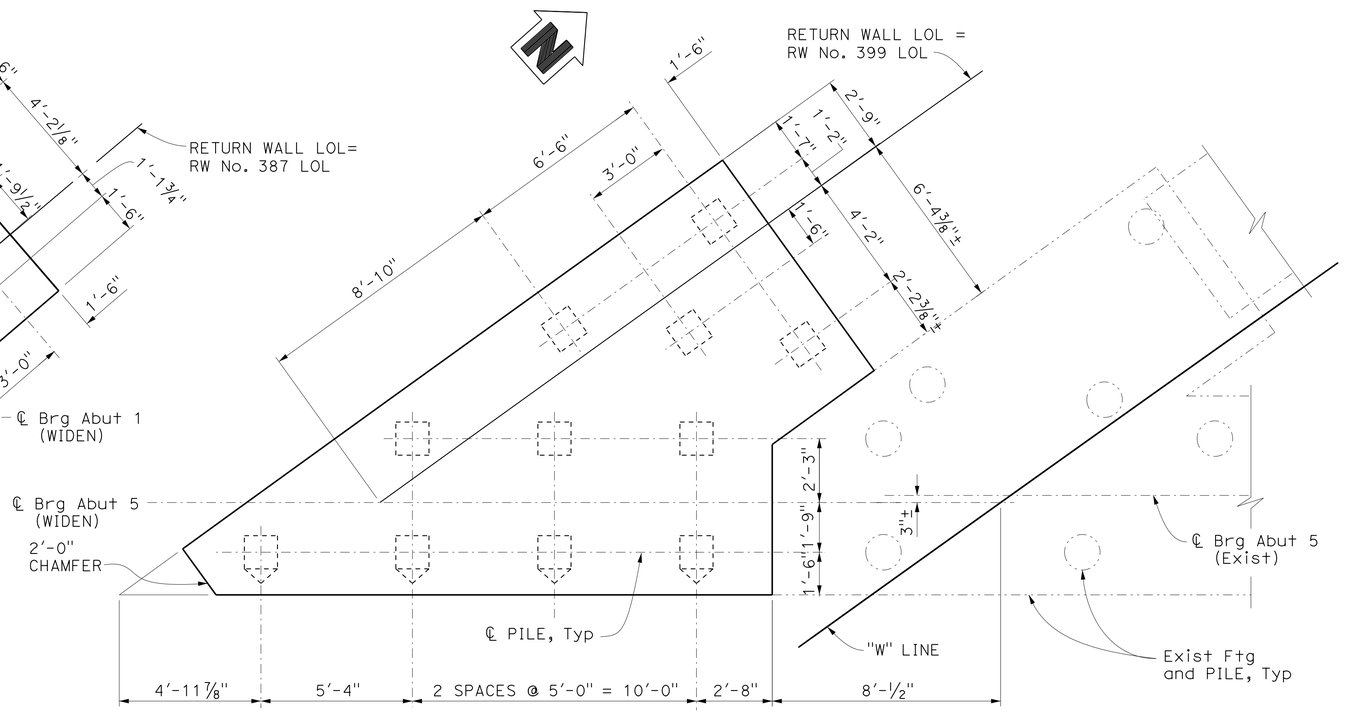

FOOTING PLAN - ABUTMENT 5

3/8" = 1'-0"

NOTE:
THE CONTRACTOR SHALL VERIFY ALL CONTROLLING FIELD DIMENSIONS BEFORE ORDERING OR FABRICATING ANY MATERIAL.

Luqi Yang
DESIGN OVERSIGHT Luqi Yang
1-16-13
SIGN OFF DATE

	BY	CHECKED
DESIGN	K. Allam	A. Kalidindi
DETAILS	I. Karkoutli	A. Kalidindi
QUANTITIES	M. Metcalf	A. Cardoza

PREPARED FOR THE
STATE OF CALIFORNIA
DEPARTMENT OF TRANSPORTATION

Alaedin Moubayed
PROJECT ENGINEER

BRIDGE NO. 55-0227
POST MILES 7.40

CAMINO CAPISTRANO UC (WIDEN)
ABUTMENT FOOTING AND PILE LAYOUT

DESIGN DETAIL SHEET (ENGLISH) (REV.7/16/10)

ORIGINAL SCALE IN INCHES FOR REDUCED PLANS 0 1 2 3

UNIT: 2998
PROJECT NUMBER & PHASE: 12000202791 CONTRACT NO.: 12-0F96E4

DISREGARD PRINTS BEARING EARLIER REVISION DATES
REVISION DATES 4/23/12 8/13/12 11/12/12
SHEET 9 OF 33

FILE => 55-0227l-f-a01_lo3.dgn

USERNAME => s124496 DATE PLOTTED => 29-APR-2013 TIME PLOTTED => 12:45

DIST	COUNTY	ROUTE	POST MILES TOTAL PROJECT	SHEET No	TOTAL SHEETS
12	Ora	5	6.2/8.7	517	595

Khaled Allam 11/12/12
REGISTERED CIVIL ENGINEER DATE

4-29-13
PLANS APPROVAL DATE

REGISTERED PROFESSIONAL ENGINEER
Khaled Allam
No. 67110
Exp. 09/30/14
CIVIL
STATE OF CALIFORNIA

The State of California or its officers or agents shall not be responsible for the accuracy or completeness of electronic copies of this plan sheet.

JACOBS
3161 MICHELSON, STE 500
IRVINE, CA 92612

ORANGE COUNTY
TRANSPORTATION AUTHORITY
550 S. MAIN STREET
ORANGE, CA 92863-1584

LEGEND:

Existing Structure

New Structure

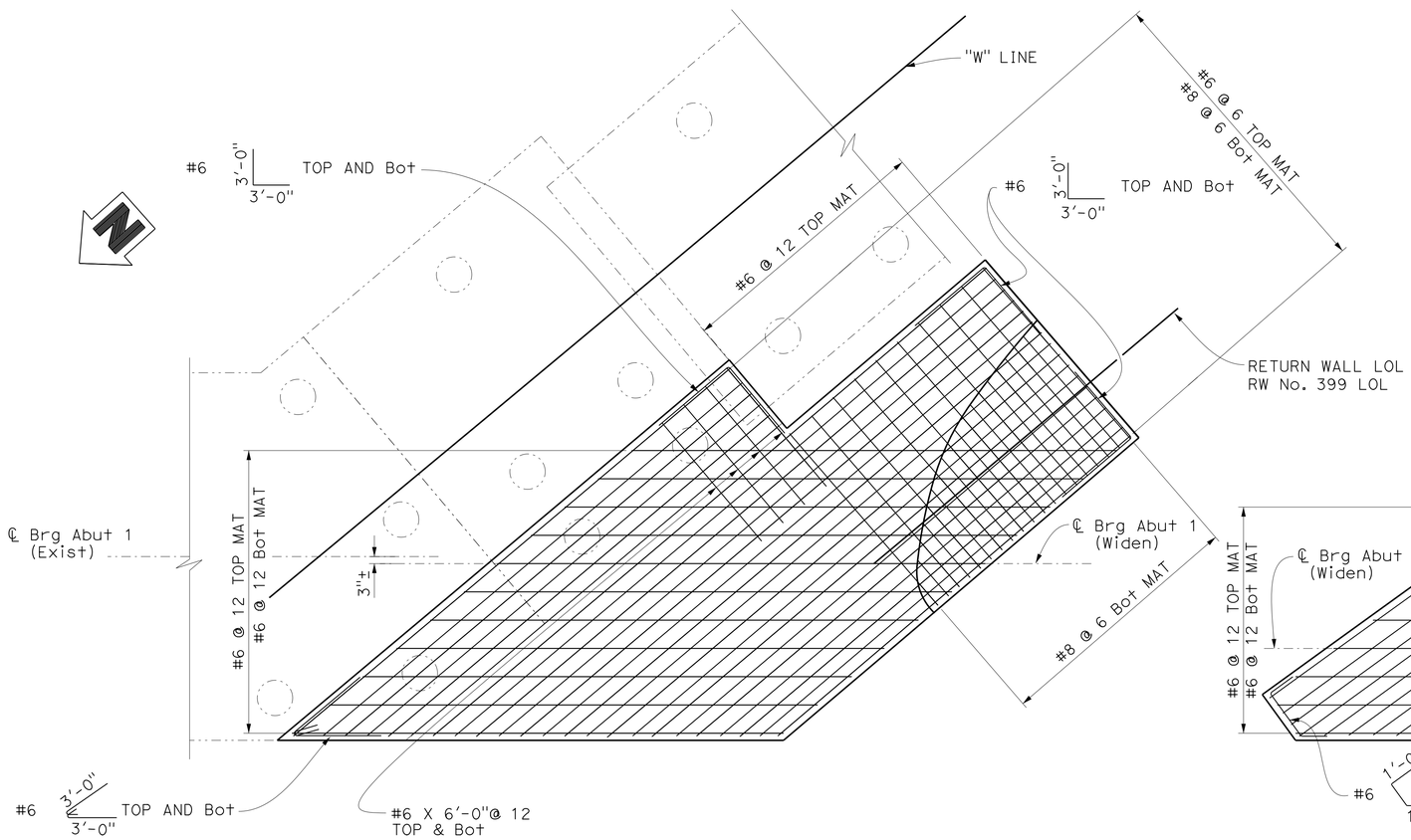

FOOTING LAYOUT - ABUTMENT 1

3/8" = 1'-0"

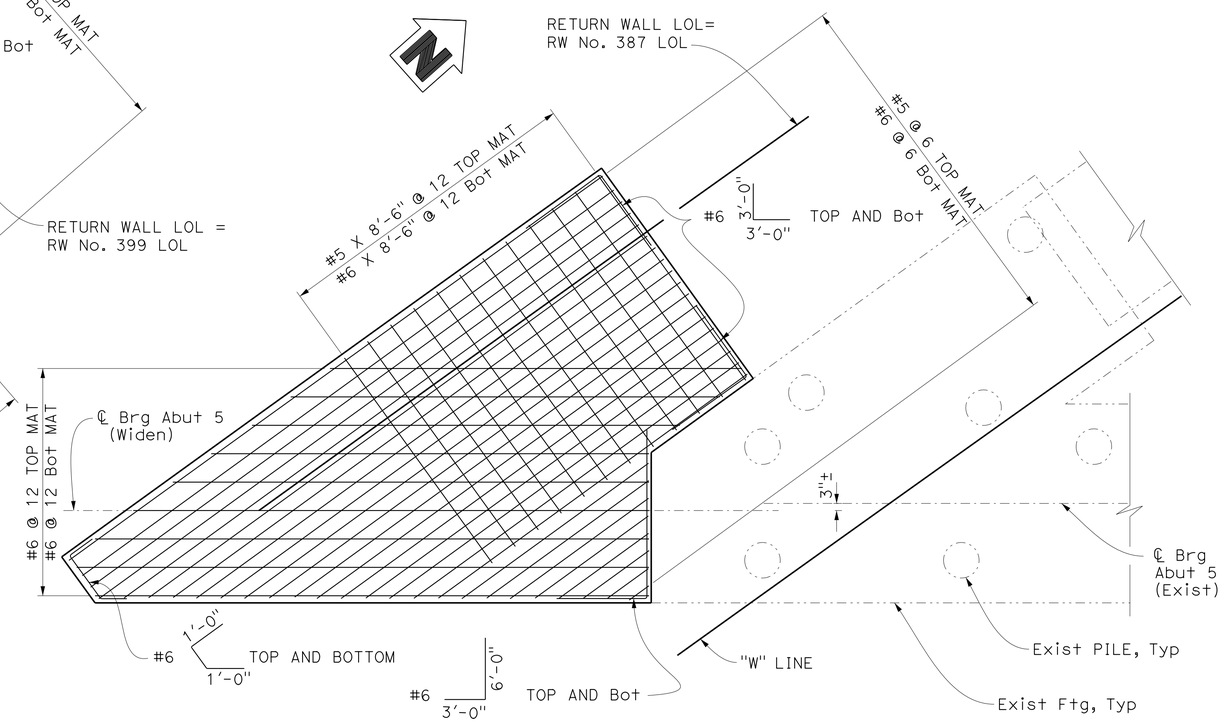

FOOTING LAYOUT - ABUTMENT 5

3/8" = 1'-0"

NOTE:
THE CONTRACTOR SHALL VERIFY ALL CONTROLLING FIELD DIMENSIONS BEFORE ORDERING OR FABRICATING ANY MATERIAL.

Luqi Yang
DESIGN OVERSIGHT Luqi Yang
1-16-13
SIGN OFF DATE

	BY	CHECKED
DESIGN	K. Allam	A. Kalidindi
DETAILS	I. Karkoutli	A. Kalidindi
QUANTITIES	M. Metcalf	A. Cardoza

PREPARED FOR THE
STATE OF CALIFORNIA
DEPARTMENT OF TRANSPORTATION

Alaedin Moubayed
PROJECT ENGINEER

BRIDGE NO. 55-0227
POST MILES 7.40

CAMINO CAPISTRANO UC (WIDEN)
ABUTMENT FOOTING REINFORCEMENT

DESIGN DETAIL SHEET (ENGLISH) (REV.7/16/10)

ORIGINAL SCALE IN INCHES FOR REDUCED PLANS 0 1 2 3

UNIT: 2998
PROJECT NUMBER & PHASE: 12000202791 CONTRACT NO.: 12-0F96E4

DISREGARD PRINTS BEARING EARLIER REVISION DATES
REVISION DATES 4/28/12 8/13/12 11/12/12
SHEET 10 OF 33

FILE => 55-02271-f-a01_lo4.dgn

USERNAME => s124496 DATE PLOTTED => 29-APR-2013 TIME PLOTTED => 12:45

DIST	COUNTY	ROUTE	POST MILES TOTAL PROJECT	SHEET No	TOTAL SHEETS
12	Ora	5	6.2/8.7	518	595

Khaled Allam 11/12/12
REGISTERED CIVIL ENGINEER DATE

4-29-13
PLANS APPROVAL DATE

REGISTERED PROFESSIONAL ENGINEER Khaled Allam No. 67110 Exp. 09/30/14 CIVIL STATE OF CALIFORNIA

The State of California or its officers or agents shall not be responsible for the accuracy or completeness of electronic copies of this plan sheet.

JACOBS
3161 MICHELSON, STE 500
IRVINE, CA 92612

ORANGE COUNTY TRANSPORTATION AUTHORITY
550 S. MAIN STREET
ORANGE, CA 92863-1584

LEGEND:

- Expanded polystyrene
- Existing Structure
- New Structure

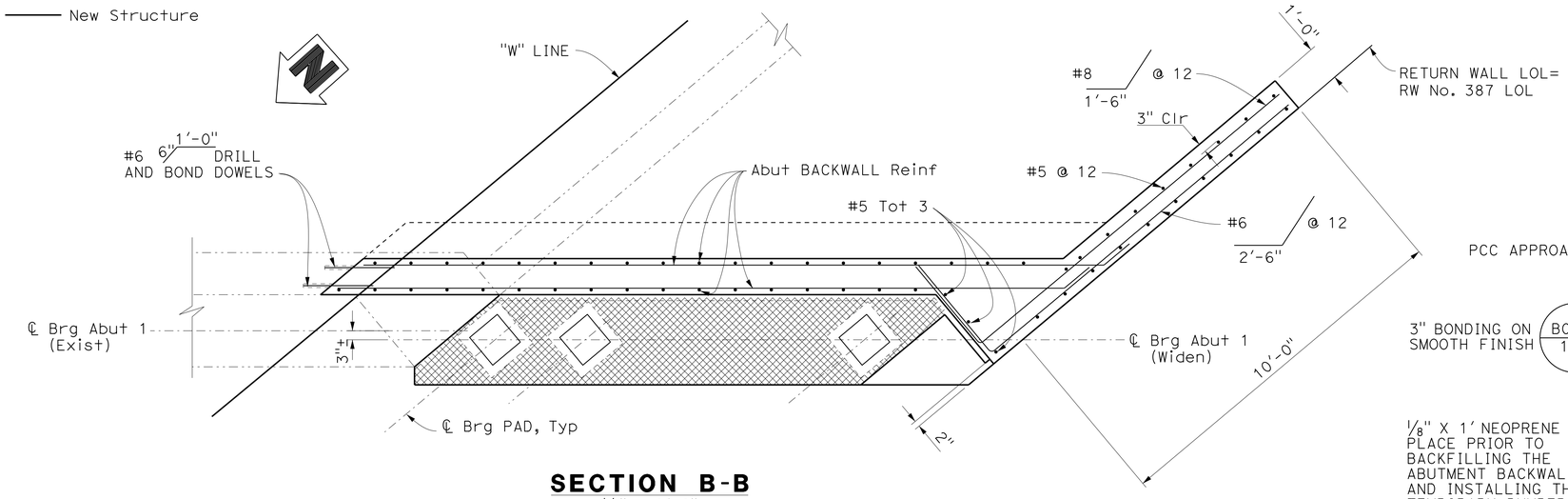

SECTION B-B
½" = 1'-0"

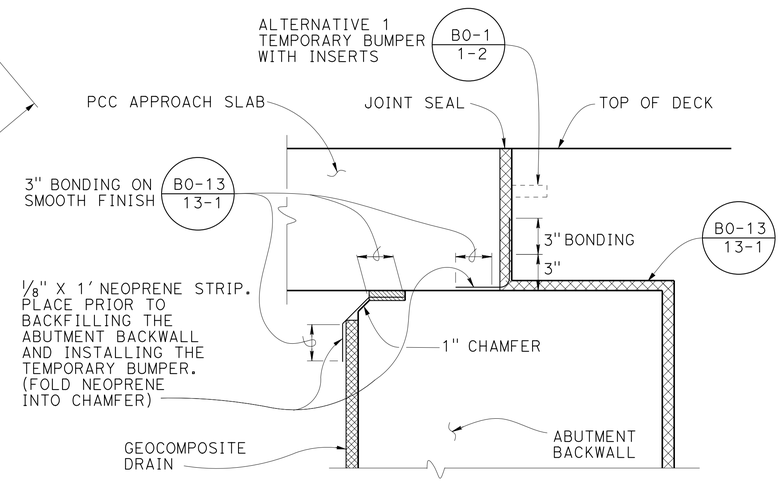

JOINT PROTECTION DETAIL
NO SCALE

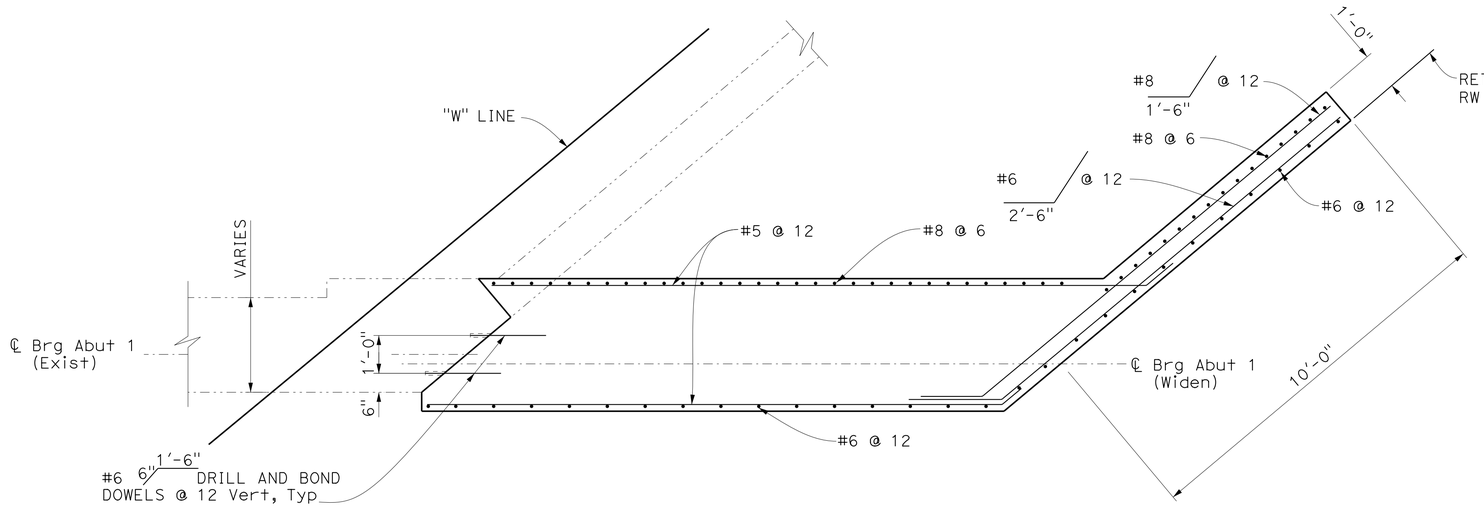

SECTION C-C
½" = 1'-0"

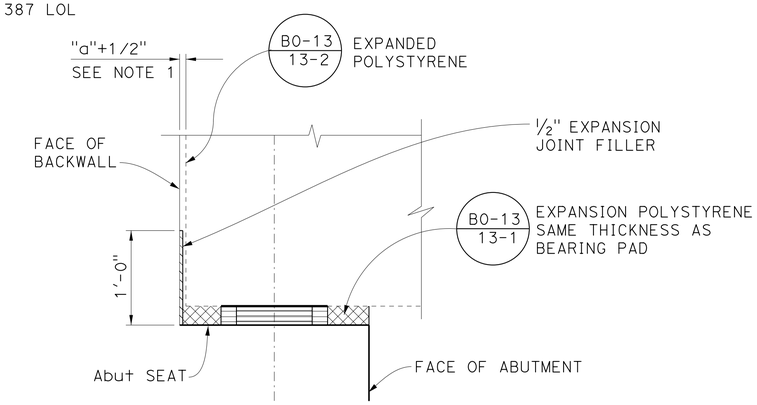

DETAIL 1
1" = 1'-0"

NOTE:
1. For dimension "a", see standard plan B6-21

NOTE:
THE CONTRACTOR SHALL VERIFY ALL CONTROLLING FIELD DIMENSIONS BEFORE ORDERING OR FABRICATING ANY MATERIAL.

Luqi Yang
DESIGN OVERSIGHT Luqi Yang
1-16-13
SIGN OFF DATE

	BY	CHECKED
DESIGN	K. Allam	A. Kalidindi
DETAILS	I. Karkoutli	A. Kalidindi
QUANTITIES	M. Metcalf	A. Cardoza

PREPARED FOR THE STATE OF CALIFORNIA DEPARTMENT OF TRANSPORTATION

Alaedin Moubayed
PROJECT ENGINEER

BRIDGE NO. 55-0227
POST MILES 7.40

CAMINO CAPISTRANO UC (WIDEN)
ABUTMENT DETAILS No. 1

DESIGN DETAIL SHEET (ENGLISH) (REV.7/16/10)

ORIGINAL SCALE IN INCHES FOR REDUCED PLANS 0 1 2 3

UNIT: 2998
PROJECT NUMBER & PHASE: 12000202791
CONTRACT NO.: 12-0F96E4

DISREGARD PRINTS BEARING EARLIER REVISION DATES
REVISION DATES 4/23/12 8/13/12 11/12/12

SHEET 11 OF 33

FILE => 55-0227I-f-a01dt01.dgn

USERNAME => s124936 DATE PLOTTED => 29-APR-2013 TIME PLOTTED => 12:45

DIST	COUNTY	ROUTE	POST MILES TOTAL PROJECT	SHEET No	TOTAL SHEETS
12	Ora	5	6.2/8.7	519	595

Khaled Allam 11/12/12
REGISTERED CIVIL ENGINEER DATE

4-29-13
PLANS APPROVAL DATE

REGISTERED PROFESSIONAL ENGINEER Khaled Allam No. 67110 Exp. 09/30/14 CIVIL STATE OF CALIFORNIA

The State of California or its officers or agents shall not be responsible for the accuracy or completeness of electronic copies of this plan sheet.

JACOBS
3161 MICHELSON, STE 500
IRVINE, CA 92612

ORANGE COUNTY TRANSPORTATION AUTHORITY
550 S. MAIN STREET
ORANGE, CA 92863-1584

LEGEND:

- Expanded polystyrene
- Existing Structure
- New Structure

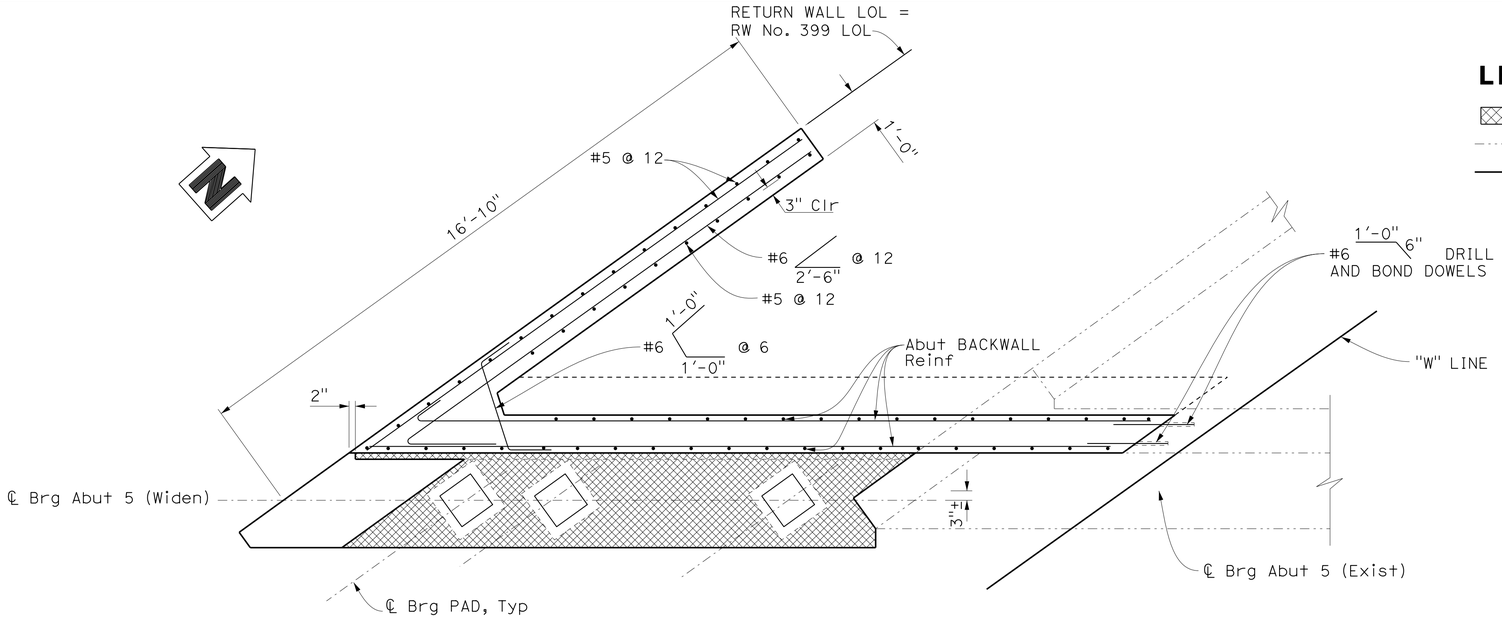

SECTION D-D

½" = 1'-0"

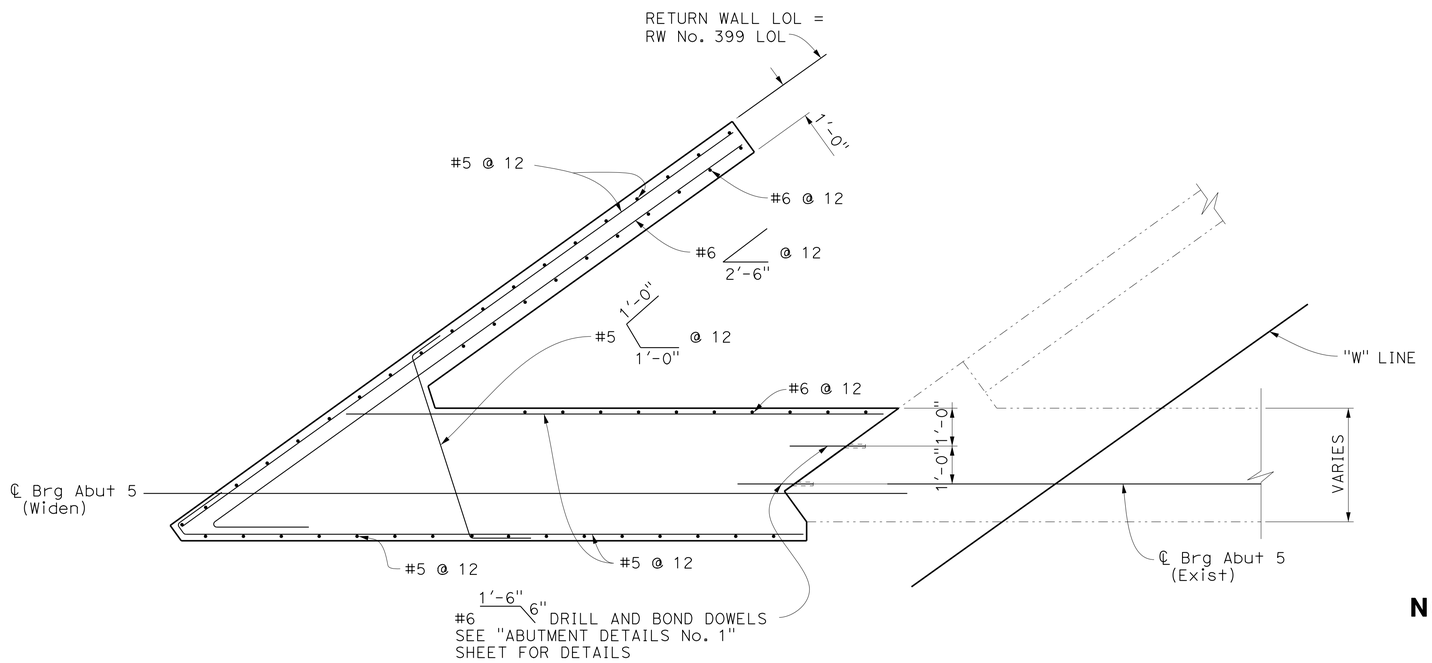

SECTION E-E

½" = 1'-0"

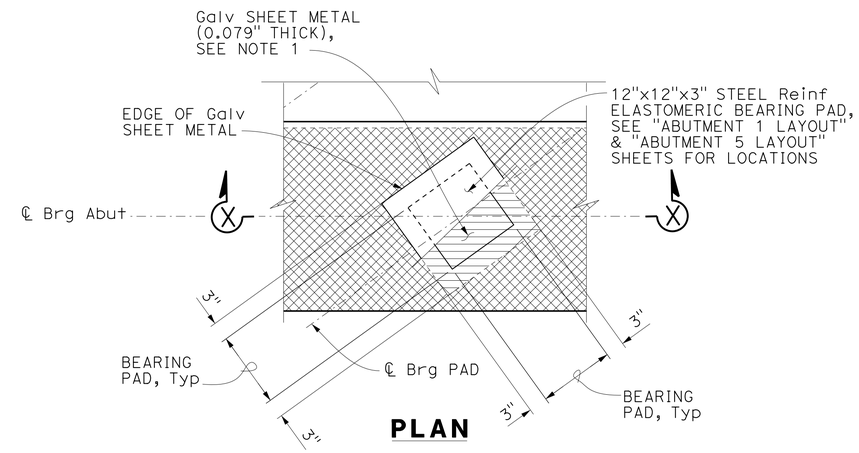

PLAN

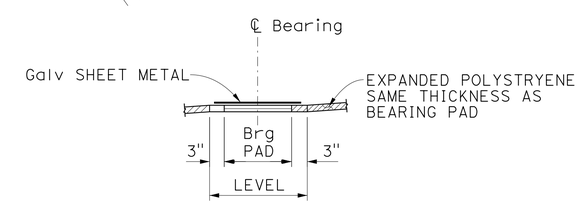

SECTION X-X

TYPICAL BEARING PAD DETAIL

NO SCALE

NOTES:

1. Coat top of pad with Silicone grease, epoxy bond pad to abutment, typ.
2. Extend galvanized sheet metal 2" beyond pad in all directions.

NOTE:
THE CONTRACTOR SHALL VERIFY ALL CONTROLLING FIELD DIMENSIONS BEFORE ORDERING OR FABRICATING ANY MATERIAL.

Luqi Yang
DESIGN OVERSIGHT Luqi Yang
1-16-13
SIGN OFF DATE

	BY	CHECKED
DESIGN	K. Allam	A. Kalidindi
DETAILS	I. Karkoutli	A. Kalidindi
QUANTITIES	M. Metcalf	A. Cardoza

PREPARED FOR THE STATE OF CALIFORNIA DEPARTMENT OF TRANSPORTATION

Alaedin Moubayed
PROJECT ENGINEER

BRIDGE NO. 55-0227
POST MILES 7.40

CAMINO CAPISTRANO UC (WIDEN)
ABUTMENT DETAILS No. 2

DESIGN DETAIL SHEET (ENGLISH) (REV.7/16/10)

ORIGINAL SCALE IN INCHES FOR REDUCED PLANS 0 1 2 3

UNIT: 2998
PROJECT NUMBER & PHASE: 12000202791
CONTRACT NO.: 12-0F96E4

DISREGARD PRINTS BEARING EARLIER REVISION DATES
REVISION DATES 4/23/12 8/13/12 11/12/12
SHEET 12 OF 33

FILE => 55-0227I-f-a01dt02.dgn

USERNAME => s124496 DATE PLOTTED => 29-APR-2013 TIME PLOTTED => 12:45

DIST	COUNTY	ROUTE	POST MILES TOTAL PROJECT	SHEET No	TOTAL SHEETS
12	Ora	5	6.2/8.7	520	595

Khaled Allam 11/12/12
REGISTERED CIVIL ENGINEER DATE

4-29-13
PLANS APPROVAL DATE

REGISTERED PROFESSIONAL ENGINEER
Khaled Allam
No. 67110
Exp. 09/30/14
CIVIL
STATE OF CALIFORNIA

The State of California or its officers or agents shall not be responsible for the accuracy or completeness of electronic copies of this plan sheet.

JACOBS
3161 MICHELSON, STE 500
IRVINE, CA 92612

ORANGE COUNTY
TRANSPORTATION AUTHORITY
550 S. MAIN STREET
ORANGE, CA 92863-1584

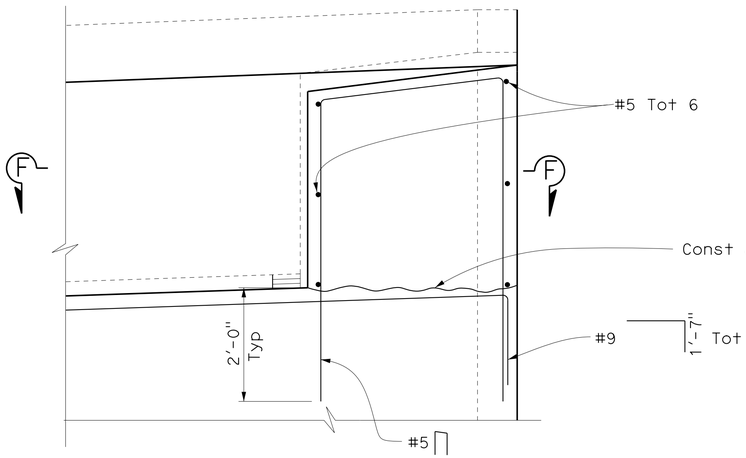

PARTIAL ELEVATION - ABUT 1
3/4" = 1'-0"

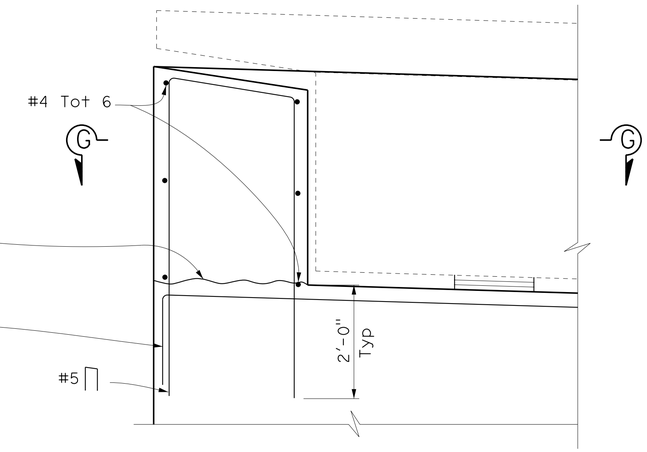

PARTIAL ELEVATION - ABUT 5
3/4" = 1'-0"

LEGEND:

- Expanded polystyrene
- Bearing pad

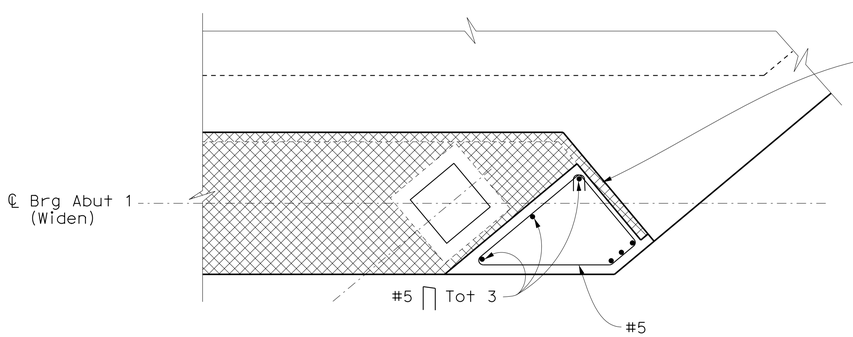

SECTION F-F
3/4" = 1'-0"

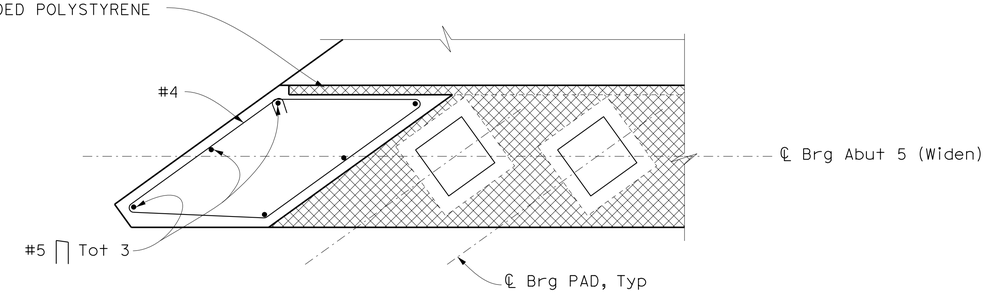

SECTION G-G
3/4" = 1'-0"

NOTE:
THE CONTRACTOR SHALL VERIFY ALL CONTROLLING FIELD DIMENSIONS BEFORE ORDERING OR FABRICATING ANY MATERIAL.

Luqi Yang
DESIGN OVERSIGHT Luqi Yang
1-16-13
SIGN OFF DATE

	BY	CHECKED
DESIGN	K. Allam	A. Kalidindi
DETAILS	I. Karkoutli	A. Kalidindi
QUANTITIES	M. Metcalf	A. Cardoza

PREPARED FOR THE
STATE OF CALIFORNIA
DEPARTMENT OF TRANSPORTATION

Alaedin Moubayed
PROJECT ENGINEER

BRIDGE NO. 55-0227
POST MILES 7.40

CAMINO CAPISTRANO UC (WIDEN)
ABUTMENT DETAILS No. 3

DESIGN DETAIL SHEET (ENGLISH) (REV.7/16/10)

ORIGINAL SCALE IN INCHES FOR REDUCED PLANS 0 1 2 3

UNIT: 2998
PROJECT NUMBER & PHASE: 12000202791
CONTRACT NO.: 12-0F96E4

DISREGARD PRINTS BEARING EARLIER REVISION DATES
REVISION DATES 4/23/12 8/13/12 11/12/12

SHEET 13 OF 33

FILE => 55-0227I-f-a01dt03.dgn

USERNAME => s124496 DATE PLOTTED => 29-APR-2013 TIME PLOTTED => 12:45

DIST	COUNTY	ROUTE	POST MILES TOTAL PROJECT	SHEET No	TOTAL SHEETS
12	Ora	5	6.2/8.7	521	595

Khaled Allam 11/12/12
REGISTERED CIVIL ENGINEER DATE

4-29-13
PLANS APPROVAL DATE

REGISTERED PROFESSIONAL ENGINEER Khaled Allam No. 67110 Exp. 09/30/14 CIVIL STATE OF CALIFORNIA

The State of California or its officers or agents shall not be responsible for the accuracy or completeness of electronic copies of this plan sheet.

JACOBS
3161 MICHELSON, STE 500
IRVINE, CA 92612

ORANGE COUNTY TRANSPORTATION AUTHORITY
550 S. MAIN STREET
ORANGE, CA 92863-1584

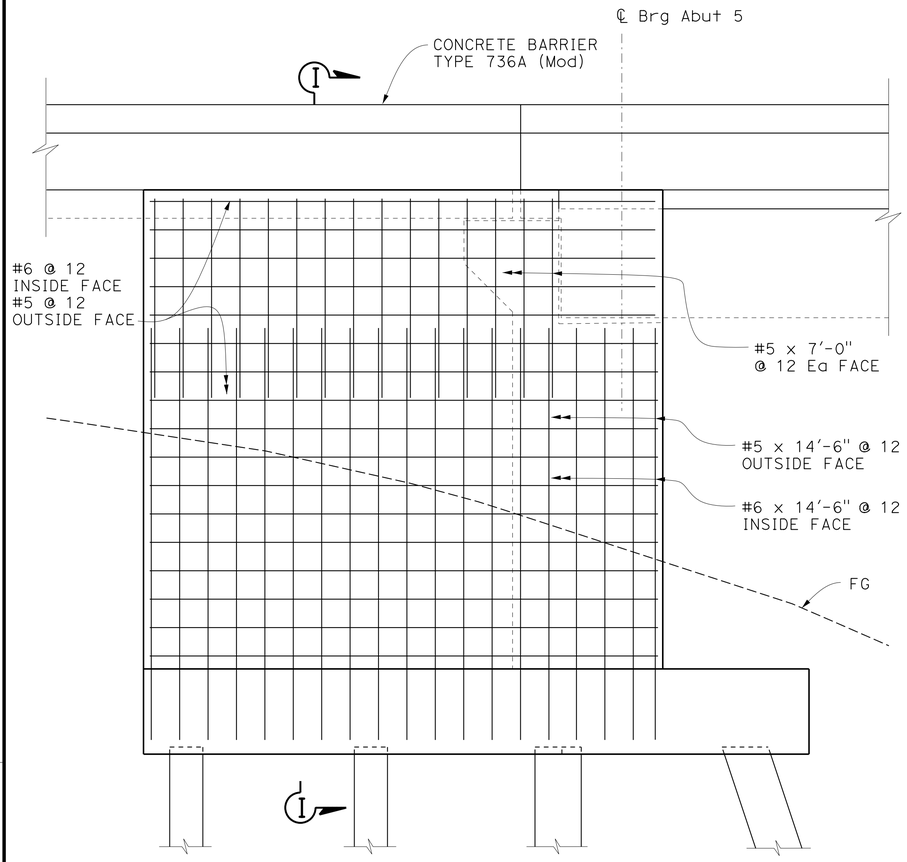

RETURN WALL ELEVATION - ABUT 5
3/8" = 1'-0"

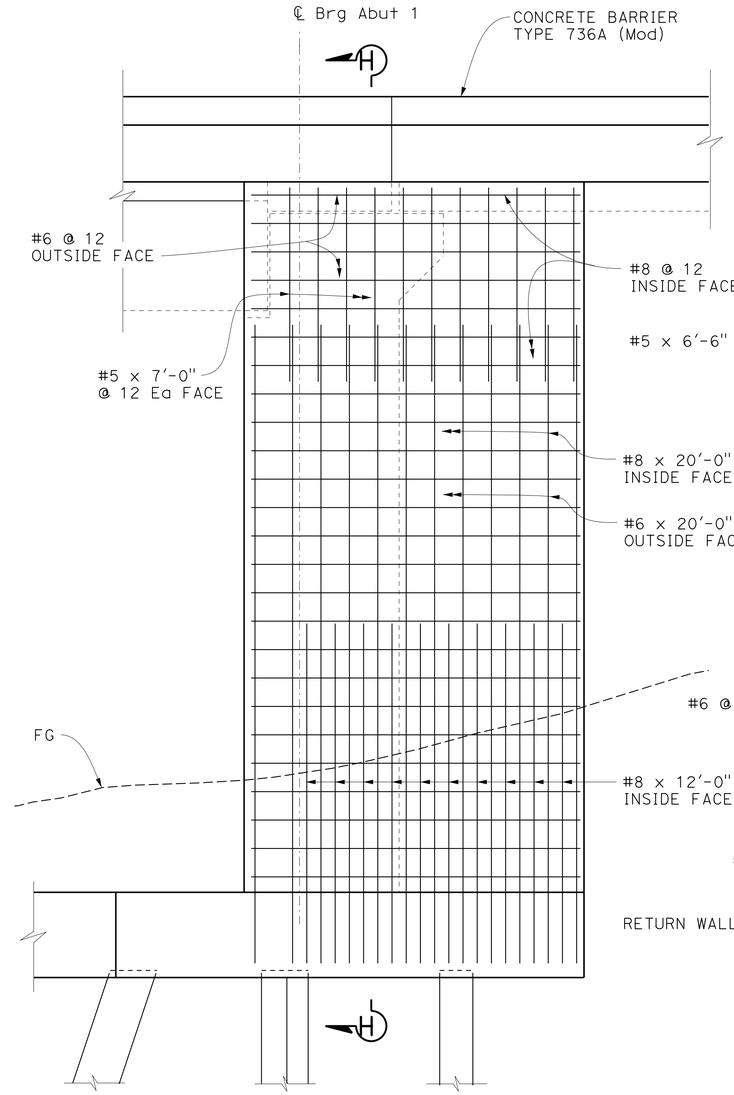

RETURN WALL ELEVATION - ABUT 1
3/8" = 1'-0"

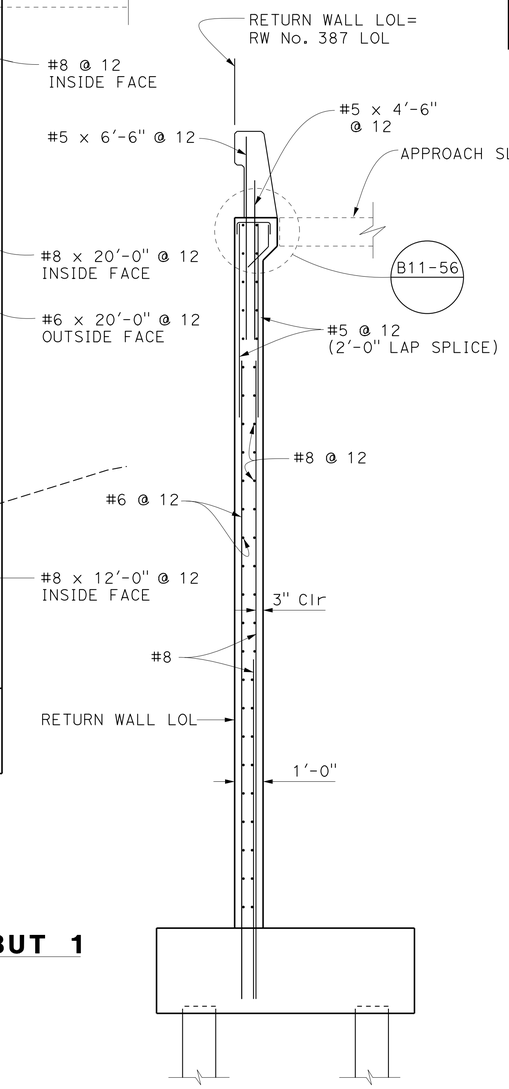

SECTION H-H
3/8" = 1'-0"

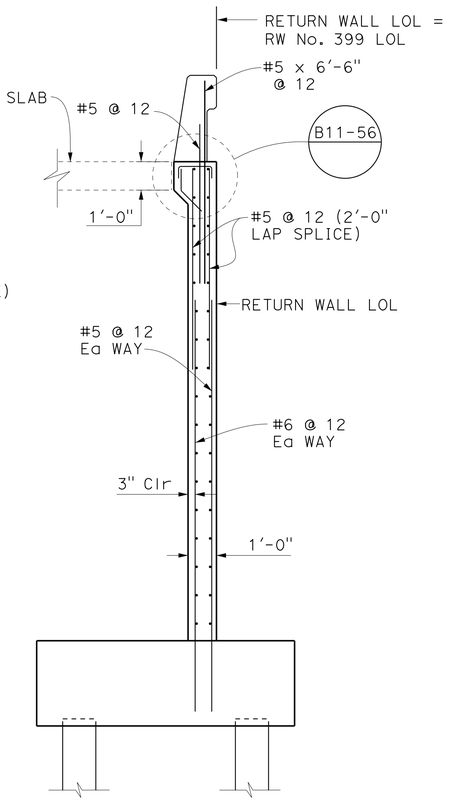

SECTION I-I
3/8" = 1'-0"

NOTE:
THE CONTRACTOR SHALL VERIFY ALL CONTROLLING FIELD DIMENSIONS BEFORE ORDERING OR FABRICATING ANY MATERIAL.

Luqi Yang
DESIGN OVERSIGHT Luqi Yang
1-16-13
SIGN OFF DATE

	BY	CHECKED
DESIGN	K. Allam	A. Kalidindi
DETAILS	I. Karkoutli	A. Kalidindi
QUANTITIES	M. Metcalf	A. Cardoza

PREPARED FOR THE STATE OF CALIFORNIA DEPARTMENT OF TRANSPORTATION

Alaedin Moubayed
PROJECT ENGINEER

BRIDGE NO. 55-0227
POST MILES 7.40

CAMINO CAPISTRANO UC (WIDEN)
ABUTMENT DETAILS No. 4

DESIGN DETAIL SHEET (ENGLISH) (REV.7/16/10)

ORIGINAL SCALE IN INCHES FOR REDUCED PLANS 0 1 2 3

UNIT: 2998
PROJECT NUMBER & PHASE: 12000202791 CONTRACT NO.: 12-0F96E4

DISREGARD PRINTS BEARING EARLIER REVISION DATES
REVISION DATES 4/23/12 8/13/12 11/12/12

SHEET 14 OF 33

FILE => 55-0227I-f-a01dt04.dgn

USERNAME => s124496 DATE PLOTTED => 29-APR-2013 TIME PLOTTED => 12:45

DIST	COUNTY	ROUTE	POST MILES TOTAL PROJECT	SHEET No	TOTAL SHEETS
12	Ora	5	6.2/8.7	522	595

Khaled Allam 11/12/12
REGISTERED CIVIL ENGINEER DATE

4-29-13
PLANS APPROVAL DATE

REGISTERED PROFESSIONAL ENGINEER Khaled Allam No. 67110 Exp. 09/30/14 CIVIL STATE OF CALIFORNIA

The State of California or its officers or agents shall not be responsible for the accuracy or completeness of electronic copies of this plan sheet.

JACOBS
3161 MICHELSON, STE 500
IRVINE, CA 92612

ORANGE COUNTY TRANSPORTATION AUTHORITY
550 S. MAIN STREET
ORANGE, CA 92863-1584

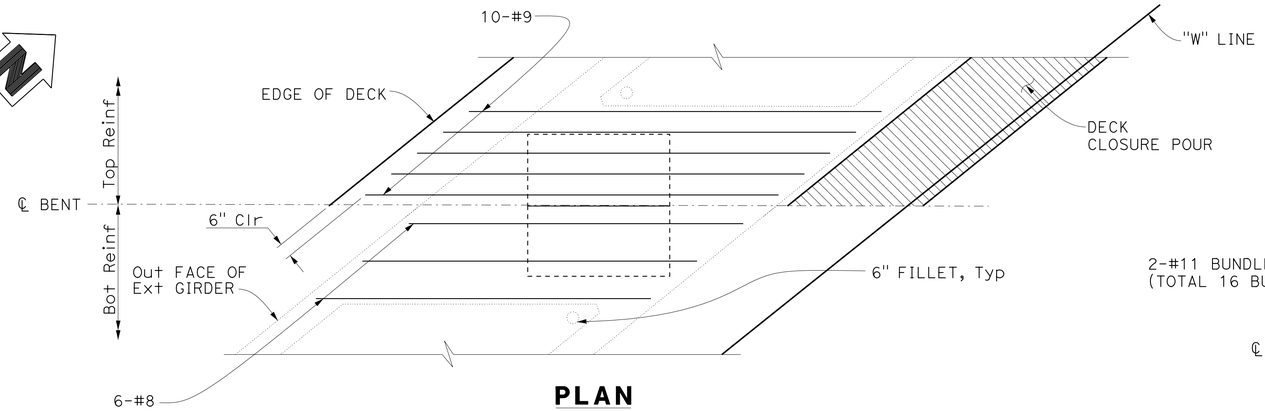

PLAN
3/8" = 1'-0"

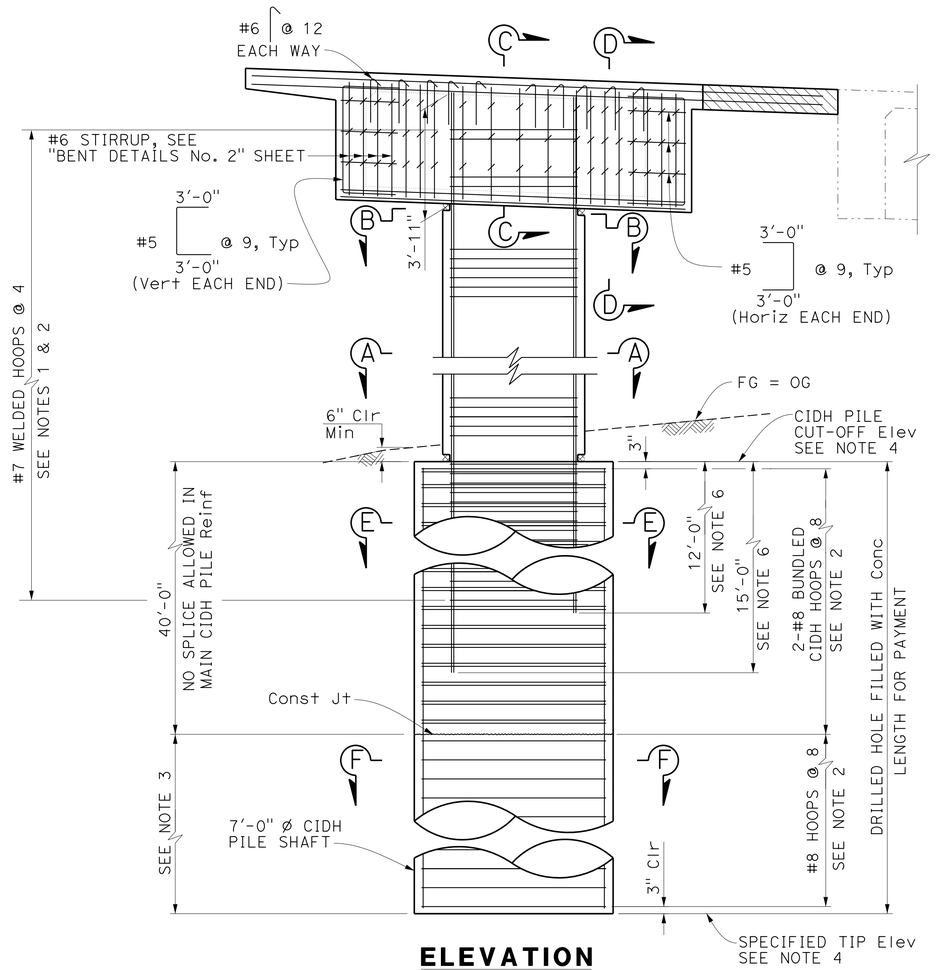

ELEVATION
3/8" = 1'-0"

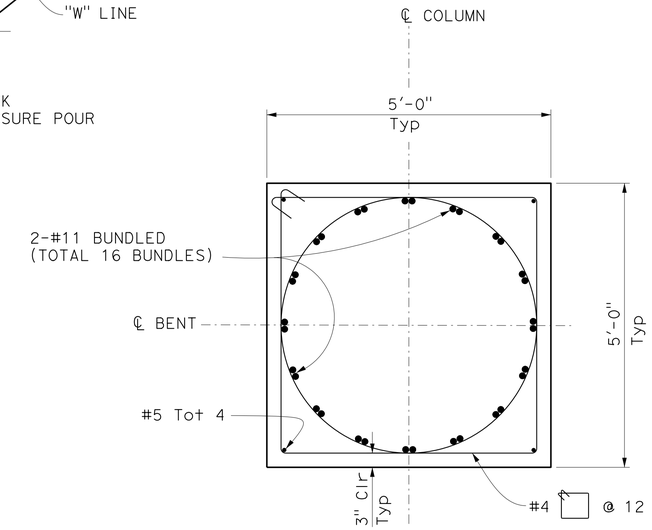

SECTION A-A
3/4" = 1'-0"

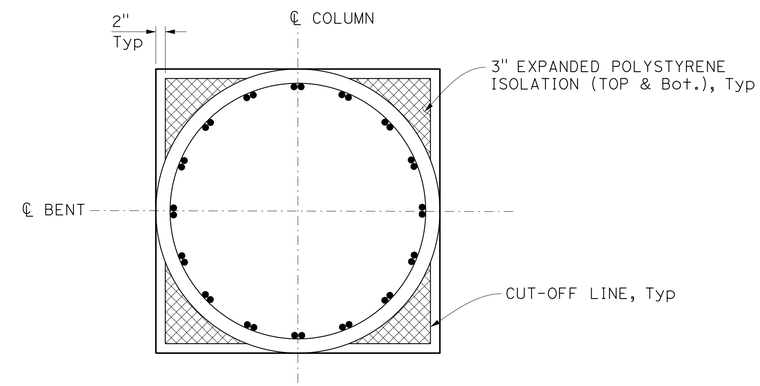

SECTION B-B
3/4" = 1'-0"

LEGEND:

- Closure pour
- Expanded polystyrene

NOTES:

1. No splice allowed in main longitudinal column reinf and main bent cap reinf.
2. All hoops shall be butt welded continuous and meet "Ultimate butt splice" requirements.
3. Only staggered "Ultimate butt splice" is allowed in main pile reinforcement in this zone.
4. For CIDH Pile cut-off and specified tip elevation, See "FOUNDATION PLAN" sheet.
5. For sections "C-C", "D-D", "E-E" & "F-F", See "BENT DETAILS" sheet.
6. Stagger termination of alternating bundles of column reinforcement.

NOTE:
THE CONTRACTOR SHALL VERIFY ALL CONTROLLING FIELD DIMENSIONS BEFORE ORDERING OR FABRICATING ANY MATERIAL.

Luqi Yang
DESIGN OVERSIGHT Luqi Yang
1-16-13
SIGN OFF DATE

	BY	CHECKED
DESIGN	K. Allam	A. Kalidindi
DETAILS	I. Karkoutli	A. Kalidindi
QUANTITIES	M. Metcalf	A. Cardoza

PREPARED FOR THE STATE OF CALIFORNIA DEPARTMENT OF TRANSPORTATION

Alaedin Moubayed
PROJECT ENGINEER

BRIDGE NO. 55-0227
POST MILES 7.40

CAMINO CAPISTRANO UC (WIDEN)
BENT LAYOUT

DESIGN DETAIL SHEET (ENGLISH) (REV.7/16/10)

ORIGINAL SCALE IN INCHES FOR REDUCED PLANS 0 1 2 3

UNIT: 2998
PROJECT NUMBER & PHASE: 12000202791
CONTRACT NO.: 12-0F96E4

DISREGARD PRINTS BEARING EARLIER REVISION DATES
REVISION DATES 4/23/12 8/13/12 11/12/12

SHEET 15 OF 33

FILE => 55-0227I-h-b01_lo01.dgn

USERNAME => s124496 DATE PLOTTED => 29-APR-2013 TIME PLOTTED => 12:45

DIST	COUNTY	ROUTE	POST MILES TOTAL PROJECT	SHEET No	TOTAL SHEETS
12	Ora	5	6.2/8.7	523	595

Khaled Allam 11/12/12
REGISTERED CIVIL ENGINEER DATE

4-29-13
PLANS APPROVAL DATE

REGISTERED PROFESSIONAL ENGINEER — Khaled Allam — No. 67110 — Exp. 09/30/14 — CIVIL — STATE OF CALIFORNIA

The State of California or its officers or agents shall not be responsible for the accuracy or completeness of electronic copies of this plan sheet.

JACOBS
3161 MICHELSON, STE 500
IRVINE, CA 92612

ORANGE COUNTY
TRANSPORTATION AUTHORITY
550 S. MAIN STREET
ORANGE, CA 92863-1584

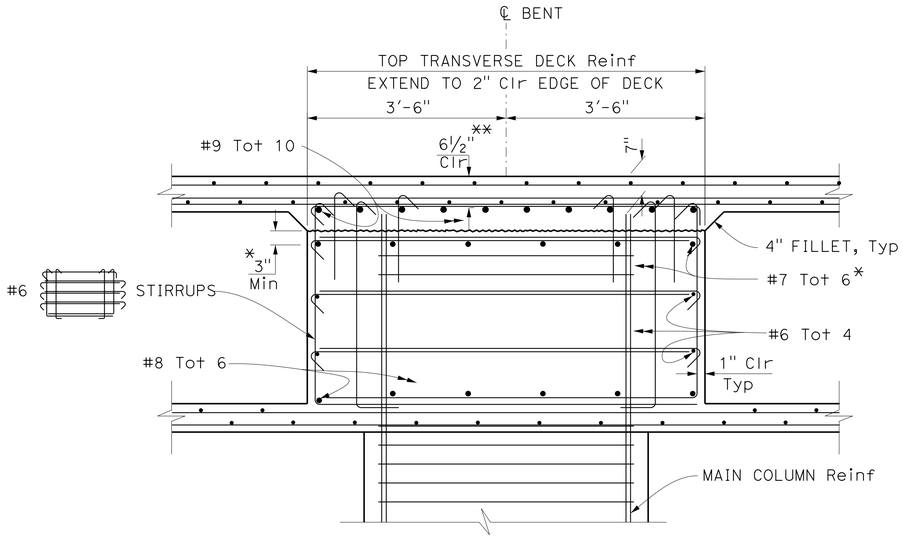

SECTION C-C
¾" = 1'-0"

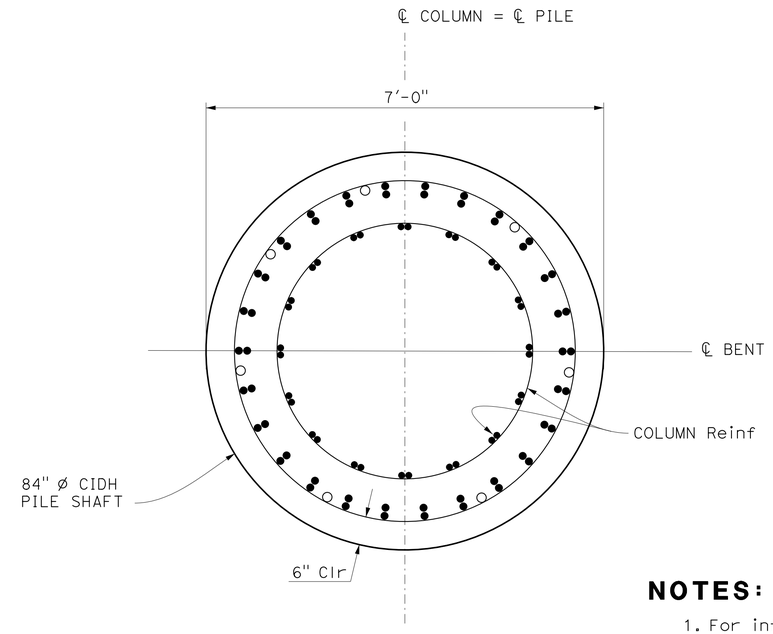

SECTION E-E
¾" = 1'-0"

LEGEND:

* Rinforcement may be lowered to clear prestressing ducts

** Clearance to main cap reinforcement.

NOTES:

1. For information not shown, See "Section B-B".
2. Inspection tubes shall be on the perimeter of the pile only and shall not be placed in the middle of the pile.

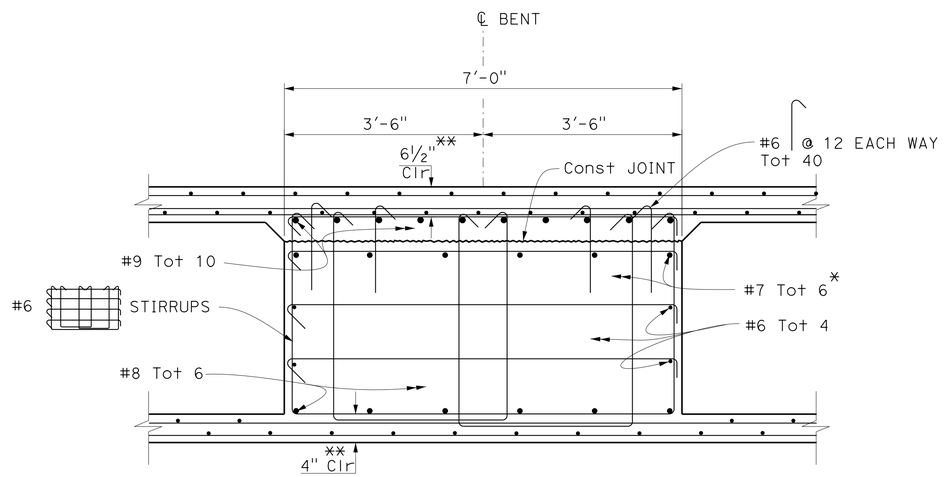

SECTION D-D
¾" = 1'-0"

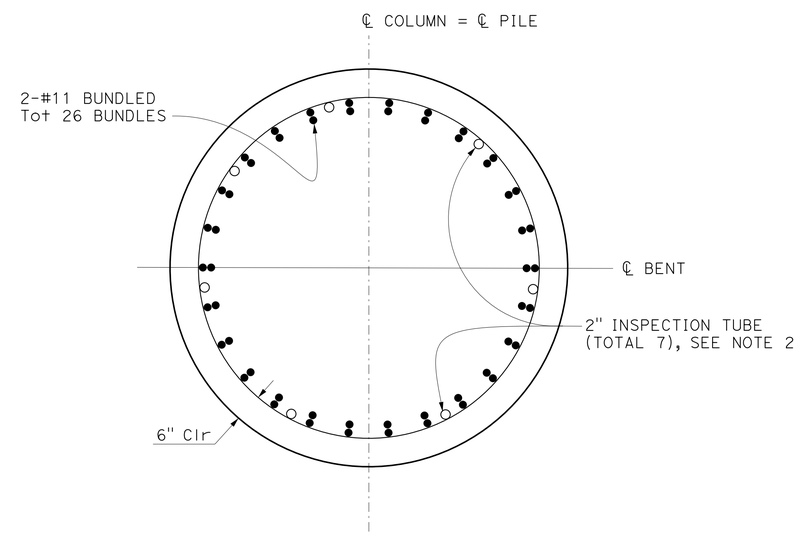

SECTION F-F
¾" = 1'-0"

NOTE:
THE CONTRACTOR SHALL VERIFY ALL CONTROLLING FIELD DIMENSIONS BEFORE ORDERING OR FABRICATING ANY MATERIAL.

Luqi Yang
DESIGN OVERSIGHT Luqi Yang
1-16-13
SIGN OFF DATE

	BY	CHECKED
DESIGN	K. Allam	A. Kalidindi
DETAILS	I. Karkoutli	A. Kalidindi
QUANTITIES	M. Metcalf	A. Cardoza

PREPARED FOR THE STATE OF CALIFORNIA DEPARTMENT OF TRANSPORTATION

Alaedin Moubayed
PROJECT ENGINEER

BRIDGE NO. 55-0227
POST MILES 7.40

CAMINO CAPISTRANO UC (WIDEN)
BENT DETAILS No. 1

DESIGN DETAIL SHEET (ENGLISH) (REV.7/16/10)

ORIGINAL SCALE IN INCHES FOR REDUCED PLANS 0 1 2 3

UNIT: 2998
PROJECT NUMBER & PHASE: 12000202791 CONTRACT NO.: 12-0F96E4

DISREGARD PRINTS BEARING EARLIER REVISION DATES → REVISION DATES 4/23/12 8/13/12 11/12/12

SHEET 16 OF 33

FILE => 55-0227I-h-b01dt01.dgn

USERNAME => s124496 DATE PLOTTED => 23-APR-2013 TIME PLOTTED => 12:45

DIST	COUNTY	ROUTE	POST MILES TOTAL PROJECT	SHEET No	TOTAL SHEETS
12	Ora	5	6.2/8.7	524	595

Khaled Allam 11/12/12
REGISTERED CIVIL ENGINEER DATE

4-29-13
PLANS APPROVAL DATE

REGISTERED PROFESSIONAL ENGINEER
Khaled Allam
No. 67110
Exp. 09/30/14
CIVIL
STATE OF CALIFORNIA

The State of California or its officers or agents shall not be responsible for the accuracy or completeness of electronic copies of this plan sheet.

JACOBS
3161 MICHELSON, STE 500
IRVINE, CA 92612

ORANGE COUNTY
TRANSPORTATION AUTHORITY
550 S. MAIN STREET
ORANGE, CA 92863-1584

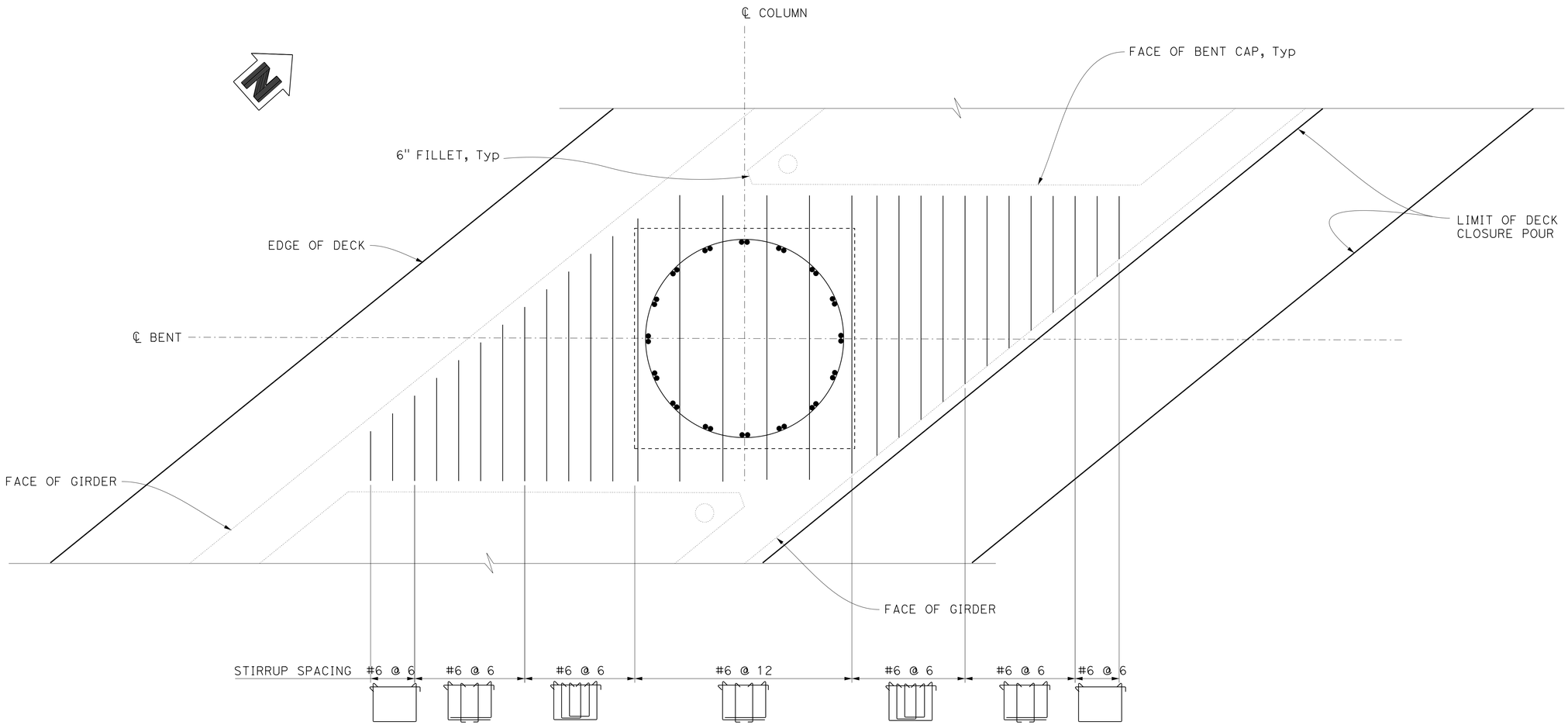

PARTIAL PLAN

3/4" = 1'-0"

NOTES:

1. For other details and reinf not shown, see "BENT LAYOUT" sheet.
2. Stirrup details shown are typical for all bents.

NOTE:
THE CONTRACTOR SHALL VERIFY ALL CONTROLLING FIELD DIMENSIONS BEFORE ORDERING OR FABRICATING ANY MATERIAL.

Luqi Yang
DESIGN OVERSIGHT Luqi Yang
1-16-13
SIGN OFF DATE

	BY	CHECKED
DESIGN	K. Allam	A. Kalidindi
DETAILS	I. Karkoutli	A. Kalidindi
QUANTITIES	M. Metcalf	A. Cardoza

PREPARED FOR THE
STATE OF CALIFORNIA
DEPARTMENT OF TRANSPORTATION

Alaedin Moubayed
PROJECT ENGINEER

BRIDGE NO. 55-0227
POST MILES 7.40

CAMINO CAPISTRANO UC (WIDEN)
BENT DETAILS No. 2

DESIGN DETAIL SHEET (ENGLISH) (REV.7/16/10)

ORIGINAL SCALE IN INCHES FOR REDUCED PLANS 0 1 2 3

UNIT: 2998
PROJECT NUMBER & PHASE: 12000202791 CONTRACT NO.: 12-0F96E4

DISREGARD PRINTS BEARING EARLIER REVISION DATES
REVISION DATES 4/29/12 8/13/12 11/12/12

SHEET 17 OF 33

FILE => 55-0227I-h-b01dt02.dgn

USERNAME => s124496 DATE PLOTTED => 23-APR-2013 TIME PLOTTED => 12:45

DIST	COUNTY	ROUTE	POST MILES TOTAL PROJECT	SHEET No	TOTAL SHEETS
12	Ora	5	6.2/8.7	525	595

Khaled Allam 11/12/12
REGISTERED CIVIL ENGINEER DATE

4-29-13
PLANS APPROVAL DATE

REGISTERED PROFESSIONAL ENGINEER — Khaled Allam No. 67110 Exp. 09/30/14 CIVIL — STATE OF CALIFORNIA

The State of California or its officers or agents shall not be responsible for the accuracy or completeness of electronic copies of this plan sheet.

JACOBS
3161 MICHELSON, STE 500
IRVINE, CA 92612

ORANGE COUNTY TRANSPORTATION AUTHORITY
550 S. MAIN STREET
ORANGE, CA 92863-1584

LEGEND:

- Closure pour
- Bridge removal (portion)
- Existing Structure
- New Structure
- o Additional longitudinal reinf
- ** Match exist deck cross slope & grade

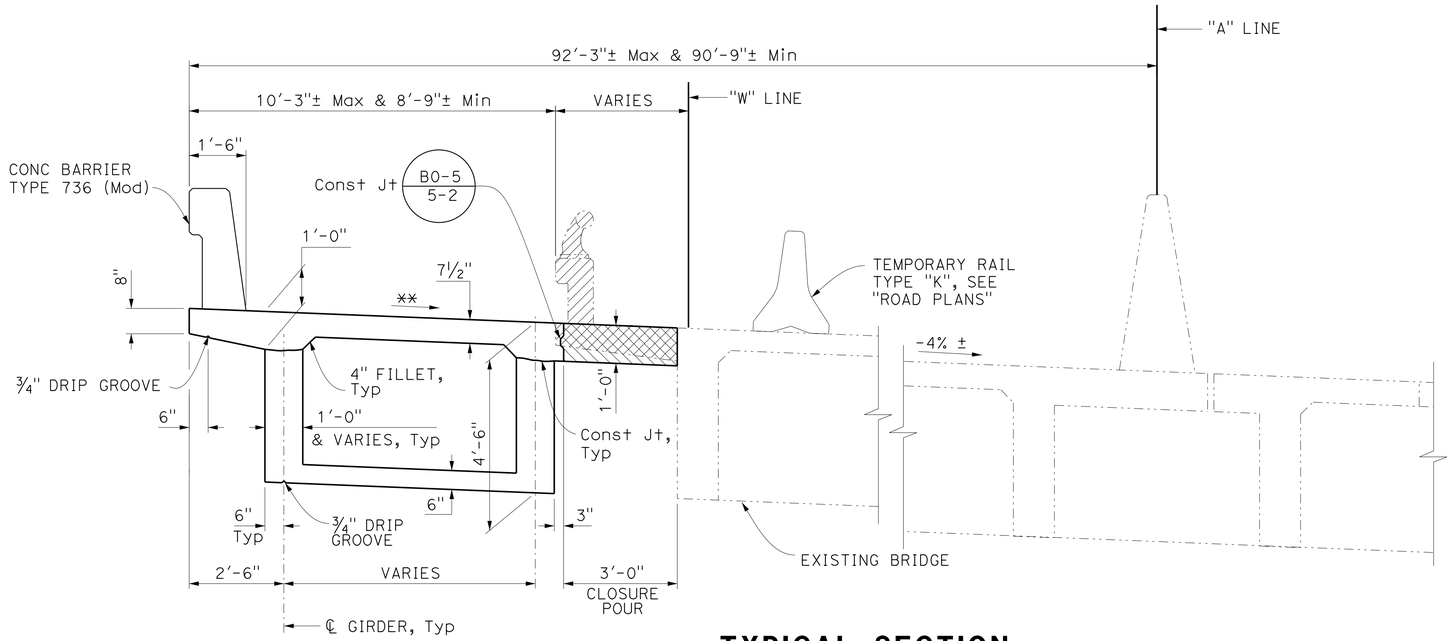

TYPICAL SECTION

½" = 1'-0"

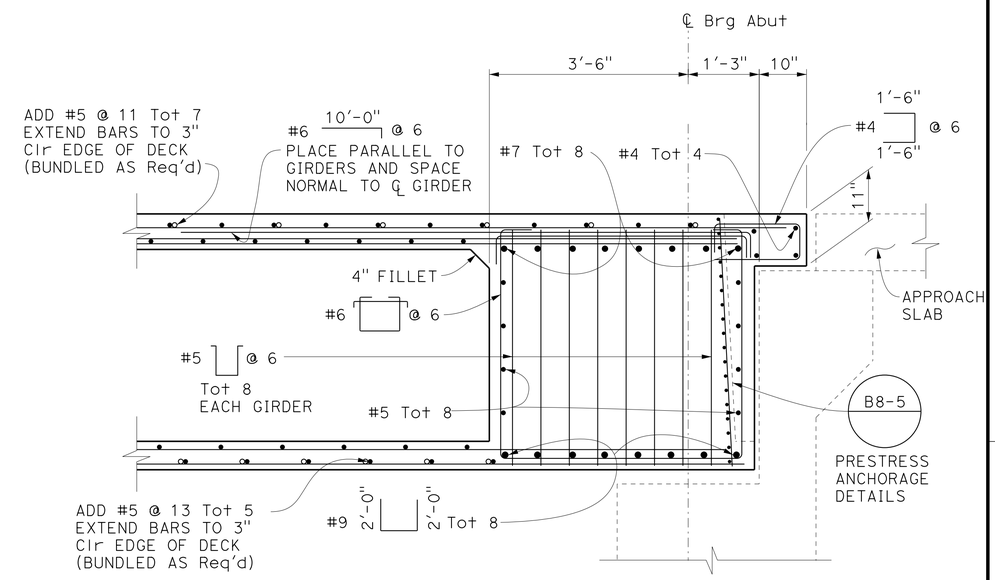

END DIAPHRAGM DETAIL

¾" = 1'-0"

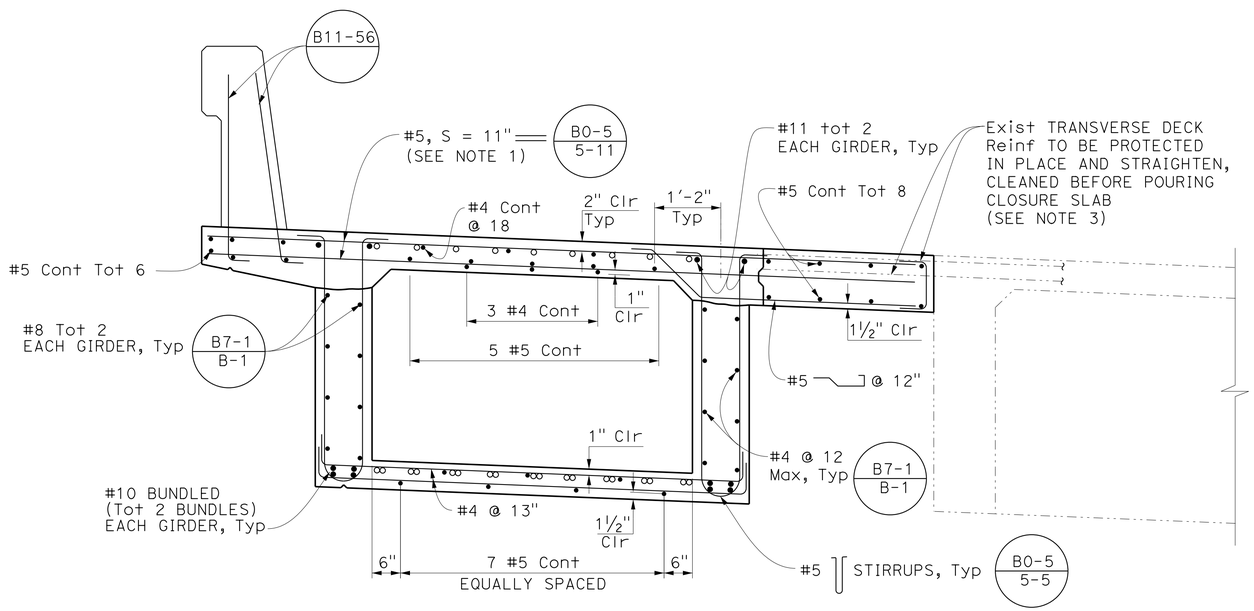

TYPICAL REINFORCEMENT SECTION

¾" = 1'-0"

B0-5 B7-1 B8-5 B11-56

NOTES:

1. Transverse deck reinf shall be placed normal to and spaced along ℄ girder.
2. For additional reinforcement, See "ADDITIONAL DECK REINFORCEMENT" and "ADDITIONAL SOFFIT REINFORCEMENT" sheets.
3. Field bend the existing deck reinf as necessary to provide 2" deck cover as required.
4. Only service splice are allowed in continuous long reinf.

NOTE:
THE CONTRACTOR SHALL VERIFY ALL CONTROLLING FIELD DIMENSIONS BEFORE ORDERING OR FABRICATING ANY MATERIAL.

Luqi Yang
DESIGN OVERSIGHT Luqi Yang
1-16-13
SIGN OFF DATE

	BY	CHECKED
DESIGN	K. Allam	A. Kalidindi
DETAILS	I. Karkoutli	A. Kalidindi
QUANTITIES	M. Metcalf	A. Cardoza

PREPARED FOR THE STATE OF CALIFORNIA DEPARTMENT OF TRANSPORTATION

Alaedin Moubayed
PROJECT ENGINEER

BRIDGE NO. 55-0227
POST MILES 7.40

CAMINO CAPISTRANO UC (WIDEN)
TYPICAL SECTION

DESIGN DETAIL SHEET (ENGLISH) (REV.7/16/10)

ORIGINAL SCALE IN INCHES FOR REDUCED PLANS 0 1 2 3

UNIT: 2998
PROJECT NUMBER & PHASE: 12000202791
CONTRACT NO.: 12-0F96E4

DISREGARD PRINTS BEARING EARLIER REVISION DATES
REVISION DATES 8/23/12 8/23/12 11/12/12

SHEET 18 OF 33

FILE => 55-0227I-k-ts01.dgn

USERNAME => s124936 DATE PLOTTED => 29-APR-2013 TIME PLOTTED => 12:45

DIST	COUNTY	ROUTE	POST MILES TOTAL PROJECT	SHEET No	TOTAL SHEETS
12	Ora	5	6.2/8.7	526	595

Khaled Allam 11/12/12
REGISTERED CIVIL ENGINEER DATE

4-29-13
PLANS APPROVAL DATE

REGISTERED PROFESSIONAL ENGINEER
Khaled Allam
No. 67110
Exp. 09/30/14
CIVIL
STATE OF CALIFORNIA

The State of California or its officers or agents shall not be responsible for the accuracy or completeness of electronic copies of this plan sheet.

JACOBS
3161 MICHELSON, STE 500
IRVINE, CA 92612

ORANGE COUNTY
TRANSPORTATION AUTHORITY
550 S. MAIN STREET
ORANGE, CA 92863-1584

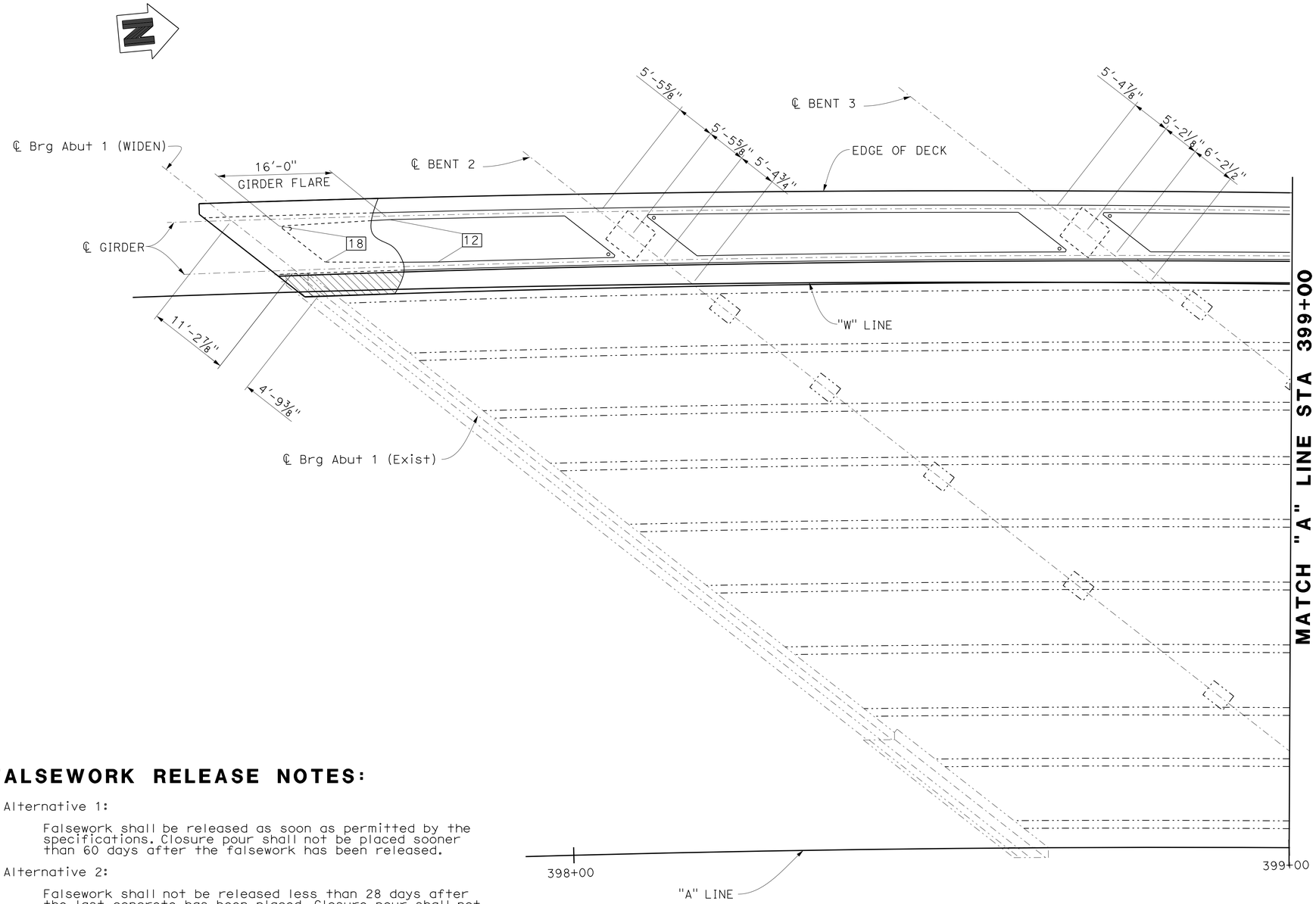

PLAN
⅛" = 1'-0"
B7-1

LEGEND:

- Closure pour
- Existing Structure
- New Structure
- Girder stem width in inches
- Soffit vent hole

NOTES:

1. See "GIRDER DETAILS" sheet for additional information and details
2. Girder flare is measured along ℄ of each girder.

FALSEWORK RELEASE NOTES:

Alternative 1:

Falsework shall be released as soon as permitted by the specifications. Closure pour shall not be placed sooner than 60 days after the falsework has been released.

Alternative 2:

Falsework shall not be released less than 28 days after the last concrete has been placed. Closure pour shall not be placed sooner than 14 days after the falsework has been released.
When falsework release alternative 2 is used, camber values are 0.75 times those shown.

NOTE:
THE CONTRACTOR SHALL VERIFY ALL CONTROLLING FIELD DIMENSIONS BEFORE ORDERING OR FABRICATING ANY MATERIAL.

Luqi Yang
DESIGN OVERSIGHT Luqi Yang
1-16-13
SIGN OFF DATE

	BY	CHECKED
DESIGN	K. Allam	A. Kalidindi
DETAILS	I. Karkoutli	A. Kalidindi
QUANTITIES	M. Metcalf	A. Cardoza

PREPARED FOR THE STATE OF CALIFORNIA DEPARTMENT OF TRANSPORTATION

Alaedin Moubayed
PROJECT ENGINEER

BRIDGE NO. 55-0227
POST MILES 7.40

CAMINO CAPISTRANO UC (WIDEN)
GIRDER LAYOUT No. 1

DESIGN DETAIL SHEET (ENGLISH) (REV.7/16/10)

ORIGINAL SCALE IN INCHES FOR REDUCED PLANS 0 1 2 3

UNIT: 2998
PROJECT NUMBER & PHASE: 12000202791 CONTRACT NO.: 12-0F96E4

DISREGARD PRINTS BEARING EARLIER REVISION DATES
REVISION DATES 4/23/12 8/13/12 11/12/12

SHEET 19 OF 33

FILE => 55-02271-1-g_lo01.dgn

USERNAME => s124496 DATE PLOTTED => 29-APR-2013 TIME PLOTTED => 12:45

DIST	COUNTY	ROUTE	POST MILES TOTAL PROJECT	SHEET No	TOTAL SHEETS
12	Ora	5	6.2/8.7	527	595

Khaled Allam 11/12/12
REGISTERED CIVIL ENGINEER DATE

4-29-13
PLANS APPROVAL DATE

REGISTERED PROFESSIONAL ENGINEER
Khaled Allam
No. 67110
Exp. 09/30/14
CIVIL
STATE OF CALIFORNIA

The State of California or its officers or agents shall not be responsible for the accuracy or completeness of electronic copies of this plan sheet.

JACOBS
3161 MICHELSON, STE 500
IRVINE, CA 92612

ORANGE COUNTY
TRANSPORTATION AUTHORITY
550 S. MAIN STREET
ORANGE, CA 92863-1584

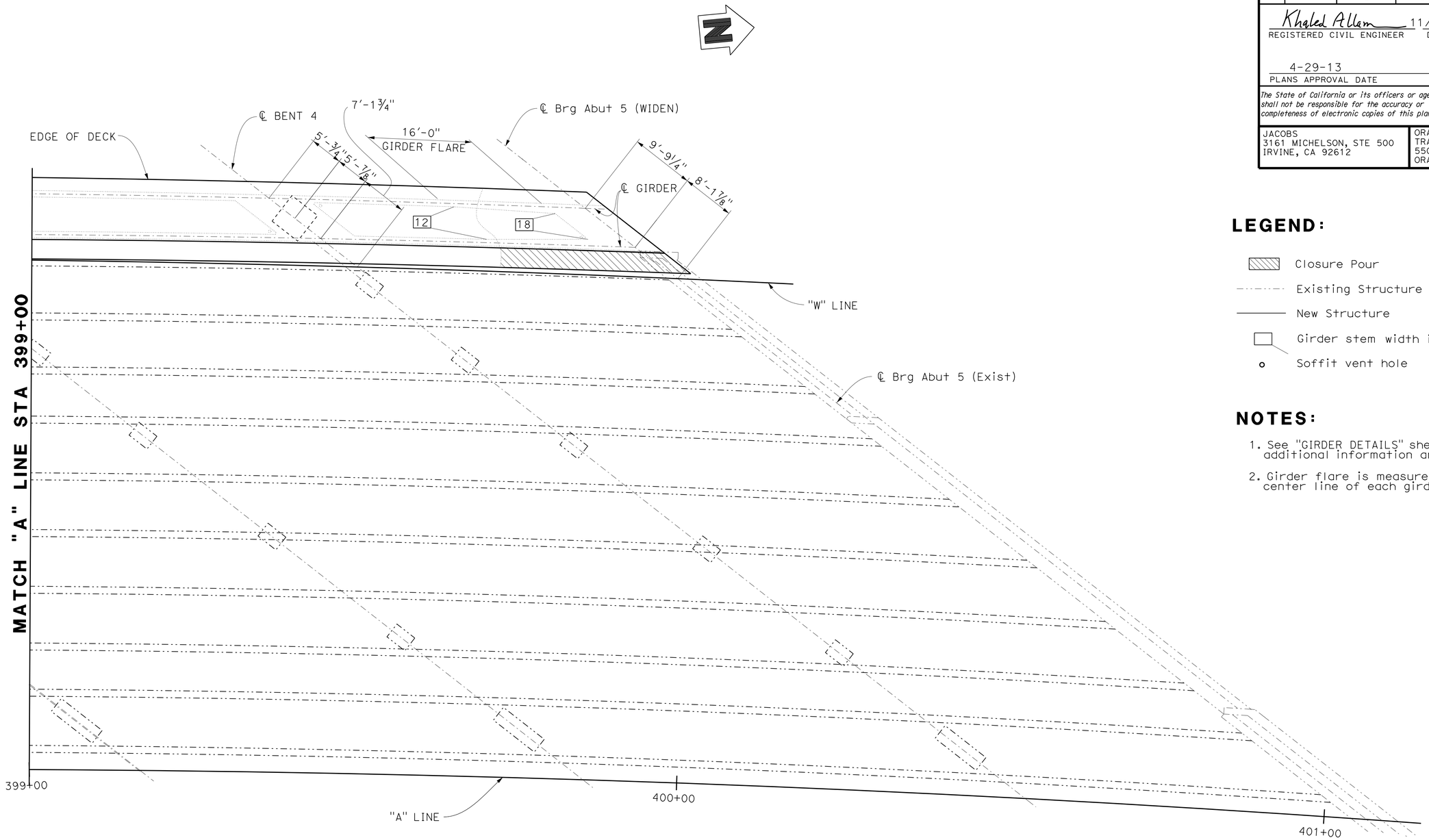

PLAN B7-1
⅛" = 1'-0"

LEGEND:

- Closure Pour
- Existing Structure
- New Structure
- Girder stem width in inches
- Soffit vent hole

NOTES:

1. See "GIRDER DETAILS" sheet for additional information and details
2. Girder flare is measured along center line of each girder.

NOTE:
THE CONTRACTOR SHALL VERIFY ALL CONTROLLING FIELD DIMENSIONS BEFORE ORDERING OR FABRICATING ANY MATERIAL.

Luqi Yang
DESIGN OVERSIGHT Luqi Yang
1-16-13
SIGN OFF DATE

	BY	CHECKED
DESIGN	K. Allam	A. Kalidindi
DETAILS	I. Karkoutli	A. Kalidindi
QUANTITIES	M. Metcalf	A. Cardoza

PREPARED FOR THE
STATE OF CALIFORNIA
DEPARTMENT OF TRANSPORTATION

Alaedin Moubayed
PROJECT ENGINEER

BRIDGE NO. 55-0227
POST MILES 7.40

CAMINO CAPISTRANO UC (WIDEN)
GIRDER LAYOUT No. 2

DESIGN DETAIL SHEET (ENGLISH) (REV.7/16/10)

ORIGINAL SCALE IN INCHES FOR REDUCED PLANS 0 1 2 3

UNIT: 2998
PROJECT NUMBER & PHASE: 12000202791 CONTRACT NO.: 12-0F96E4

DISREGARD PRINTS BEARING EARLIER REVISION DATES

REVISION DATES: 4/23/12 8/13/12 11/12/12

SHEET 20 OF 33

FILE => 55-0227I-1-g_lo02.dgn

USERNAME => s124496 DATE PLOTTED => 29-APR-2013 TIME PLOTTED => 12:45

DIST	COUNTY	ROUTE	POST MILES TOTAL PROJECT	SHEET No	TOTAL SHEETS
12	Ora	5	6.2/8.7	528	595

Khaled Allam 11/12/12
REGISTERED CIVIL ENGINEER DATE

4-29-13
PLANS APPROVAL DATE

REGISTERED PROFESSIONAL ENGINEER Khaled Allam No. 67110 Exp. 09/30/14 CIVIL STATE OF CALIFORNIA

The State of California or its officers or agents shall not be responsible for the accuracy or completeness of electronic copies of this plan sheet.

JACOBS
3161 MICHELSON, STE 500
IRVINE, CA 92612

ORANGE COUNTY TRANSPORTATION AUTHORITY
550 S. MAIN STREET
ORANGE, CA 92863-1584

PRESTRESSING NOTES:

270 Ksi low relaxation strand:

P_{jack} = 1,000 Kips

Anchor set = 3/8 in

Total number of girders = 2

Friction curvature coefficient $\mu = 15\times10^{-2}$ (1/rad)

Friction wobble coefficient $k = 2.0\times10^{-4}$ (1/ft)

Prestress force (Pjack) be evenly distributed between girders.

Maximum final force variation between girders shall not exceed 45 kips.

Concrete: f'_c = 4.0 Ksi @ 28 days

f'_{ci} = 3.5 Ksi @ time of stressing

Contractor shall submit elongation calculations based on initial stress at

⊠ = 0.7249 times jacking stress.

One end stressing shall be performed from the abut 1 end only.

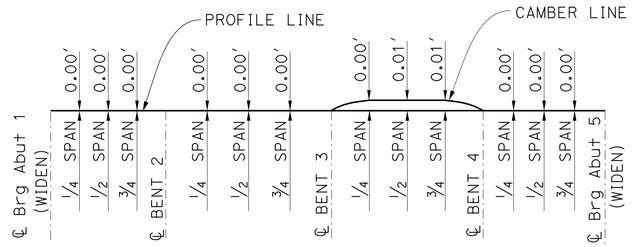

CAMBER DIAGRAM

NO SCALE

LEGEND:

⊠ Theoretical point of no movement

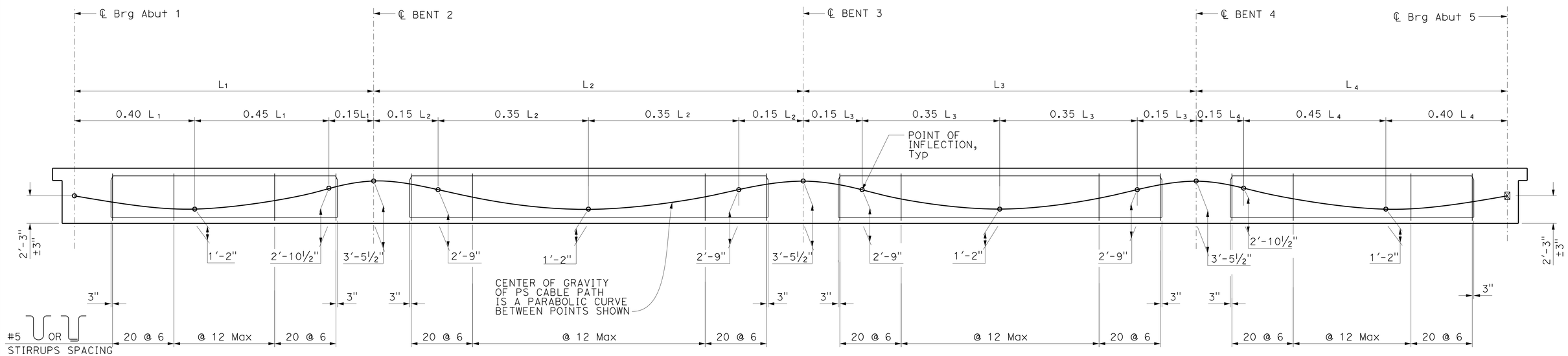

LONGITUDINAL SECTION

No scale

B0-5 / 5-5 B8-5

NOTE:
THE CONTRACTOR SHALL VERIFY ALL CONTROLLING FIELD DIMENSIONS BEFORE ORDERING OR FABRICATING ANY MATERIAL.

Luqi Yang
DESIGN OVERSIGHT Luqi Yang
1-16-13
SIGN OFF DATE

	BY	CHECKED
DESIGN	K. Allam	A. Kalidindi
DETAILS	I. Karkoutli	A. Kalidindi
QUANTITIES	M. Metcalf	A. Cardoza

PREPARED FOR THE STATE OF CALIFORNIA DEPARTMENT OF TRANSPORTATION

PROJECT ENGINEER

BRIDGE NO. 55-0227
POST MILES 7.40

CAMINO CAPISTRANO UC (WIDEN)
GIRDER DETAILS

DESIGN DETAIL SHEET (ENGLISH) (REV.7/16/10)

ORIGINAL SCALE IN INCHES FOR REDUCED PLANS 0 1 2 3

UNIT: 2998
PROJECT NUMBER & PHASE: 12000202791 CONTRACT NO.: 12-0F96E4

DISREGARD PRINTS BEARING EARLIER REVISION DATES

REVISION DATES 4/23/12 8/13/12 11/12/12

SHEET 21 OF 33

FILE => 55-0227I-I-gdt01.dgn

USERNAME => s124496 DATE PLOTTED => 29-APR-2013 TIME PLOTTED => 12:45

DIST	COUNTY	ROUTE	POST MILES TOTAL PROJECT	SHEET No	TOTAL SHEETS
12	Ora	5	6.2/8.7	529	595

Khaled Allam 11/12/12
REGISTERED CIVIL ENGINEER DATE

4-29-13
PLANS APPROVAL DATE

REGISTERED PROFESSIONAL ENGINEER
Khaled Allam
No. 67110
Exp. 09/30/14
CIVIL
STATE OF CALIFORNIA

The State of California or its officers or agents shall not be responsible for the accuracy or completeness of electronic copies of this plan sheet.

JACOBS
3161 MICHELSON, STE 500
IRVINE, CA 92612

ORANGE COUNTY
TRANSPORTATION AUTHORITY
550 S. MAIN STREET
ORANGE, CA 92863-1584

LEGEND:

Denotes bundled bars

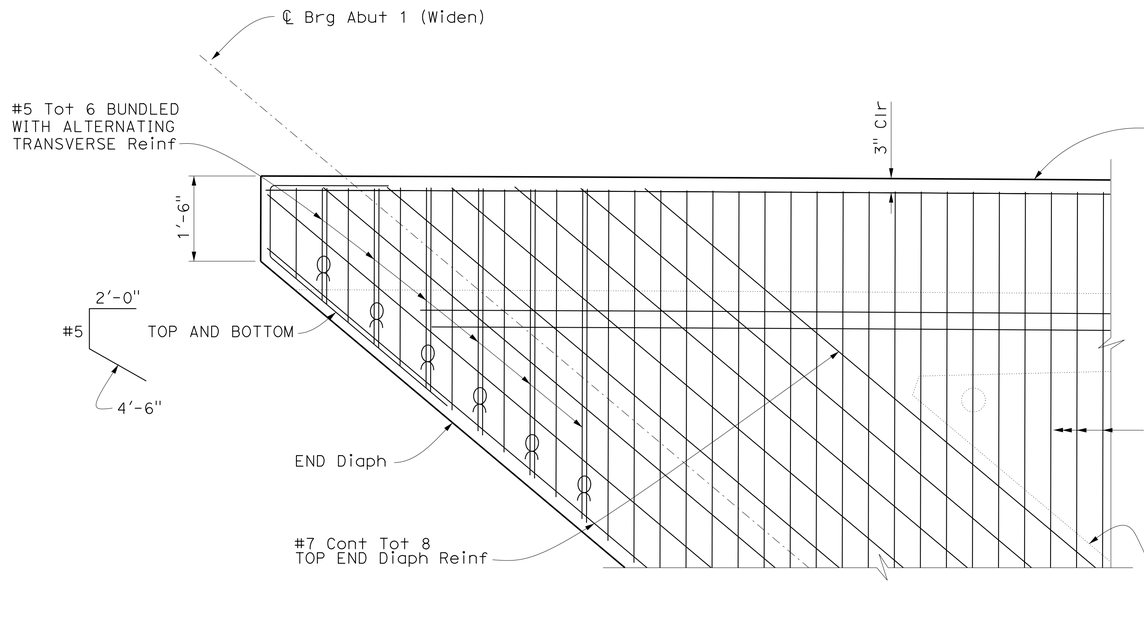

ACUTE CORNER

3/4" = 1'-0"

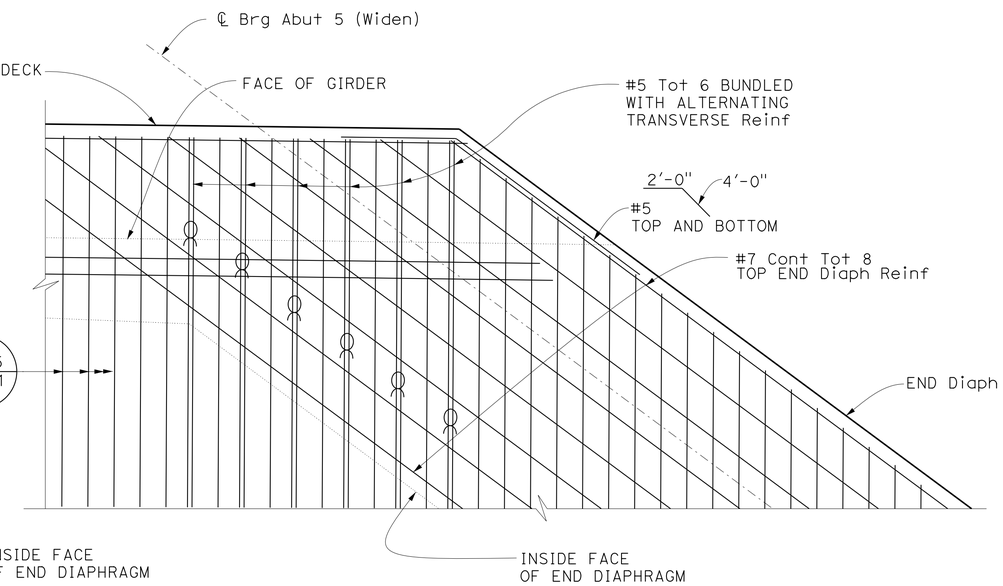

OBTUSE CORNER

3/4" = 1'-0"

NOTE:
THE CONTRACTOR SHALL VERIFY ALL CONTROLLING FIELD DIMENSIONS BEFORE ORDERING OR FABRICATING ANY MATERIAL.

Luqi Yang
DESIGN OVERSIGHT Luqi Yang
1-16-13
SIGN OFF DATE

	BY	CHECKED
DESIGN	K. Allam	A. Kalidindi
DETAILS	I. Karkoutli	A. Kalidindi
QUANTITIES	M. Metcalf	A. Cardoza

PREPARED FOR THE STATE OF CALIFORNIA DEPARTMENT OF TRANSPORTATION

Alaedin Moubayed
PROJECT ENGINEER

BRIDGE NO. 55-0227
POST MILES 7.40

CAMINO CAPISTRANO UC (WIDEN)
DECK CORNER DETAILS

DESIGN DETAIL SHEET (ENGLISH) (REV.7/16/10)

ORIGINAL SCALE IN INCHES FOR REDUCED PLANS 0 1 2 3

UNIT: 2998
PROJECT NUMBER & PHASE: 12000202791 CONTRACT NO.: 12-0F96E4

DISREGARD PRINTS BEARING EARLIER REVISION DATES

REVISION DATES: 4/23/12 8/13/12 11/12/12

SHEET 22 OF 33

FILE => 55-0227I-1-gdt02.dgn

USERNAME => s124496 DATE PLOTTED => 29-APR-2013 TIME PLOTTED => 12:45

DIST	COUNTY	ROUTE	POST MILES TOTAL PROJECT	SHEET No	TOTAL SHEETS
12	Ora	5	6.2/8.7	530	595

Khaled Allam 11/12/12
REGISTERED CIVIL ENGINEER DATE

4-29-13
PLANS APPROVAL DATE

REGISTERED PROFESSIONAL ENGINEER
Khaled Allam
No. 67110
Exp. 09/30/14
CIVIL
STATE OF CALIFORNIA

The State of California or its officers or agents shall not be responsible for the accuracy or completeness of electronic copies of this plan sheet.

JACOBS
3161 MICHELSON, STE 500
IRVINE, CA 92612

ORANGE COUNTY
TRANSPORTATION AUTHORITY
550 S. MAIN STREET
ORANGE, CA 92863-1584

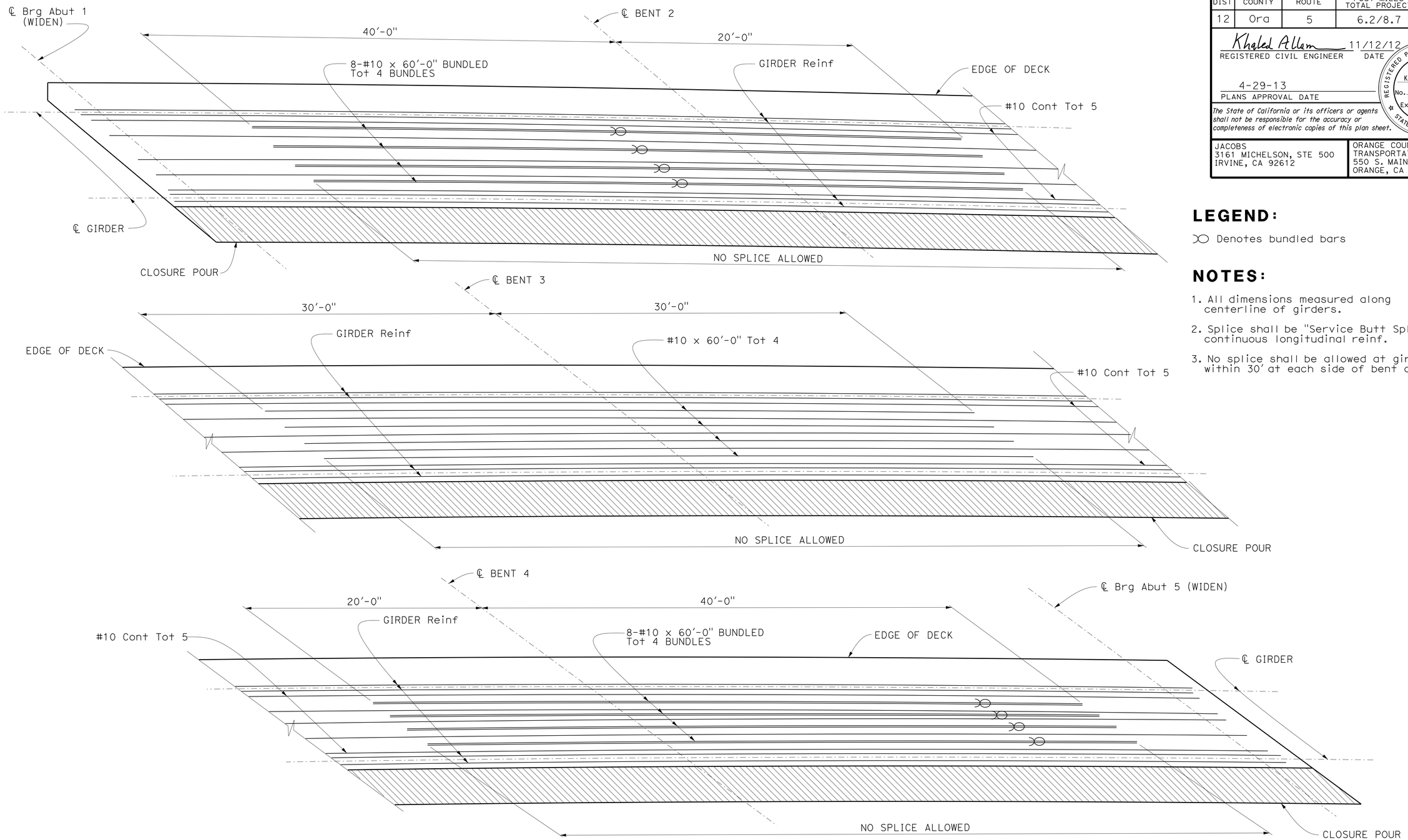

LEGEND:

Denotes bundled bars

NOTES:

1. All dimensions measured along centerline of girders.
2. Splice shall be "Service Butt Splice" in continuous longitudinal reinf.
3. No splice shall be allowed at girder Reinf within 30' at each side of bent centerline.

TOP LONGITUDINAL REINFORCEMENT

1/4" = 1'-0"

NOTE:
THE CONTRACTOR SHALL VERIFY ALL CONTROLLING FIELD DIMENSIONS BEFORE ORDERING OR FABRICATING ANY MATERIAL.

Luqi Yang
DESIGN OVERSIGHT Luqi Yang
1-16-13
SIGN OFF DATE

	BY	CHECKED
DESIGN	K. Allam	A. Kalidindi
DETAILS	I. Karkoutli	A. Kalidindi
QUANTITIES	M. Metcalf	A. Cardoza

PREPARED FOR THE
STATE OF CALIFORNIA
DEPARTMENT OF TRANSPORTATION

Alaedin Moubayed
PROJECT ENGINEER

BRIDGE NO. 55-0227
POST MILES 7.40

CAMINO CAPISTRANO UC (WIDEN)
ADDITIONAL DECK REINFORCEMENT

DESIGN DETAIL SHEET (ENGLISH) (REV.7/16/10)

ORIGINAL SCALE IN INCHES FOR REDUCED PLANS 0 1 2 3

UNIT: 2998
PROJECT NUMBER & PHASE: 12000202791 CONTRACT NO.: 12-0F96E4

DISREGARD PRINTS BEARING EARLIER REVISION DATES
REVISION DATES 4/23/12 8/13/12 11/12/12

SHEET 23 OF 33

FILE => 55-0227I-o-deck_rf01.dgn

USERNAME => s124496 DATE PLOTTED => 29-APR-2013 TIME PLOTTED => 12:45

DIST	COUNTY	ROUTE	POST MILES TOTAL PROJECT	SHEET No	TOTAL SHEETS
12	Ora	5	6.2/8.7	531	595

Khaled Allam 11/12/12
REGISTERED CIVIL ENGINEER DATE

4-29-13
PLANS APPROVAL DATE

REGISTERED PROFESSIONAL ENGINEER
Khaled Allam
No. 67110
Exp. 09/30/14
CIVIL
STATE OF CALIFORNIA

The State of California or its officers or agents shall not be responsible for the accuracy or completeness of electronic copies of this plan sheet.

JACOBS
3161 MICHELSON, STE 500
IRVINE, CA 92612

ORANGE COUNTY
TRANSPORTATION AUTHORITY
550 S. MAIN STREET
ORANGE, CA 92863-1584

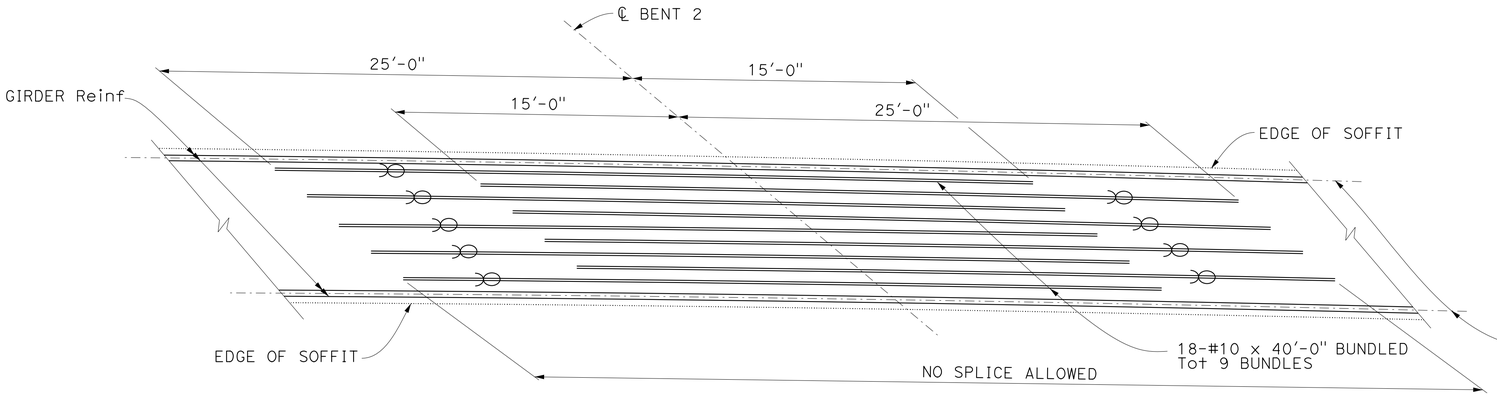

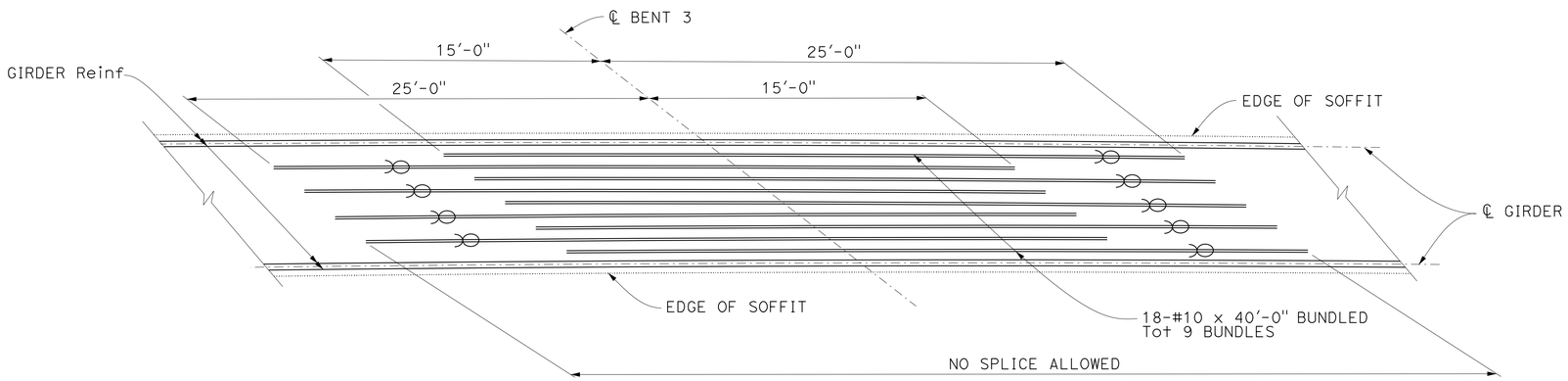

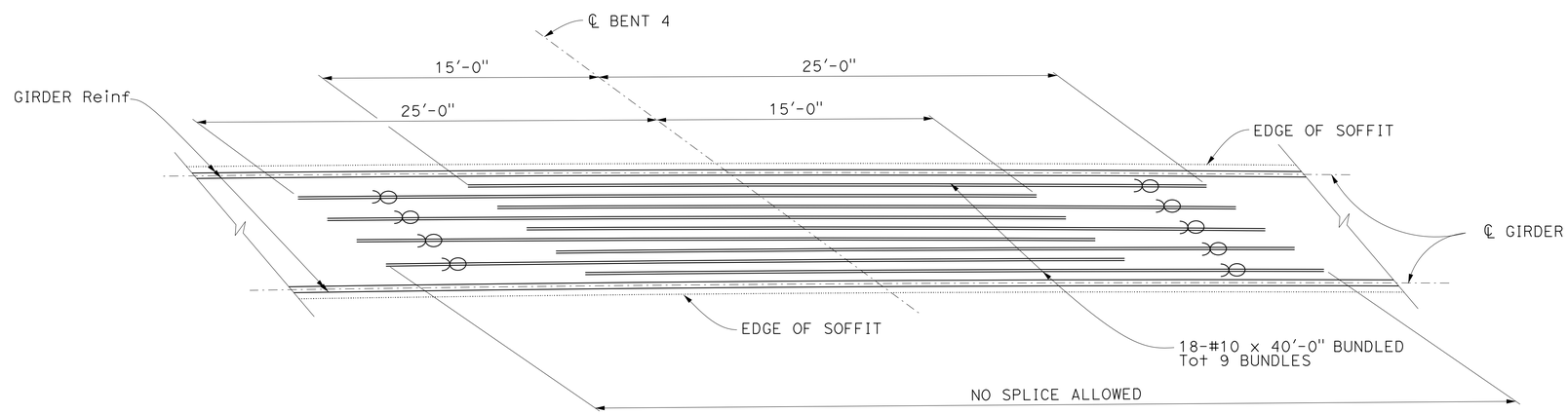

BOTTOM LONGITUDINAL REINFORCEMENT

1/4" = 1'-0"

LEGEND:

)(Denotes bundled bars

NOTES:

1. All dimensions measured along centerline of girders.
2. Splice shall be "Service Butt Splice" in continuous longitudinal reinf.
3. No splice shall be allowed at girder Reinf within 30' at each side of bent centerline.

NOTE:
THE CONTRACTOR SHALL VERIFY ALL CONTROLLING FIELD DIMENSIONS BEFORE ORDERING OR FABRICATING ANY MATERIAL.

Luqi Yang
DESIGN OVERSIGHT Luqi Yang
1-16-13
SIGN OFF DATE

	BY	CHECKED
DESIGN	K. Allam	A. Kalidindi
DETAILS	I. Karkoutli	A. Kalidindi
QUANTITIES	M. Metcalf	A. Cardoza

PREPARED FOR THE
STATE OF CALIFORNIA
DEPARTMENT OF TRANSPORTATION

Alaedin Moubayed
PROJECT ENGINEER

BRIDGE NO. 55-0227
POST MILES 7.40

CAMINO CAPISTRANO UC (WIDEN)
ADDITIONAL SOFFIT REINFORCEMENT

DESIGN DETAIL SHEET (ENGLISH) (REV.7/16/10)

ORIGINAL SCALE IN INCHES FOR REDUCED PLANS 0 1 2 3

UNIT: 2998
PROJECT NUMBER & PHASE: 12000202791 CONTRACT NO.: 12-0F96E4

DISREGARD PRINTS BEARING EARLIER REVISION DATES
REVISION DATES 4/23/12 8/23/12 11/12/12

SHEET 24 OF 33

FILE => 55-02271-o-soft_rf01.dgn

USERNAME => s124496 DATE PLOTTED => 23-APR-2013 TIME PLOTTED => 12:45

DIST	COUNTY	ROUTE	POST MILES TOTAL PROJECT	SHEET No.	TOTAL SHEETS
12	Ora	5	6.2/8.7	532	595

Khaled Allam 11/12/12
REGISTERED CIVIL ENGINEER DATE

4-29-13
PLANS APPROVAL DATE

REGISTERED PROFESSIONAL ENGINEER Khaled Allam No. 67110 Exp. 09/30/14 CIVIL STATE OF CALIFORNIA

The State of California or its officers or agents shall not be responsible for the accuracy or completeness of electronic copies of this plan sheet.

JACOBS
3161 MICHELSON, STE 500
IRVINE, CA 92612

ORANGE COUNTY TRANSPORTATION AUTHORITY
550 S. MAIN STREET
ORANGE, CA 92863-1584

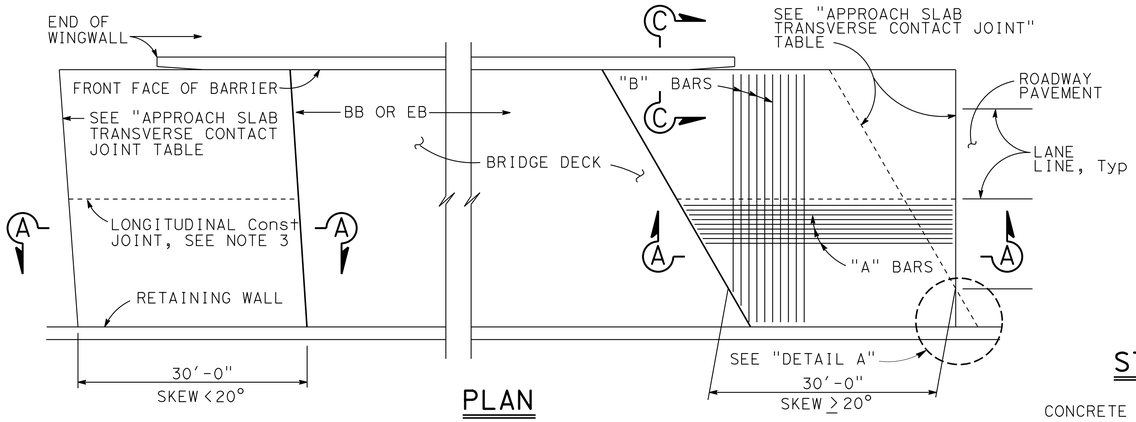

PLAN
1" = 10'

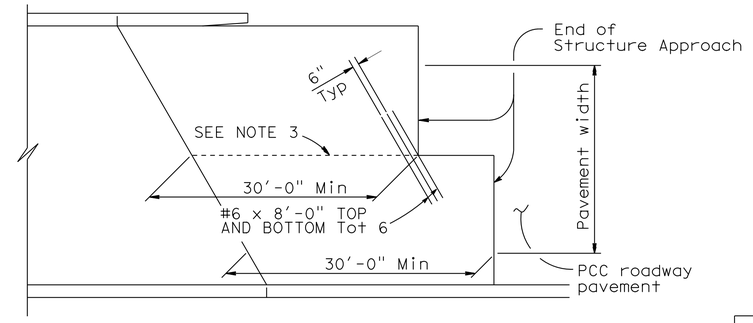

STRUCTURE APPROACH - END STAGGER DETAIL
No Scale

APPROACH SLAB TRANSVERSE CONTACT JOINT		
APPROACH SKEW	WITH AC ROADWAY PAVEMENT	WITH PCC ROADWAY PAVEMENT
< 20°	PARALLEL TO FACE OF PN	PARALLEL TO FACE OF PN
20° - 45°	PARALLEL TO FACE OF PN USE "DETAIL A"	STAGGER LINES 24' TO 36' APART
> 45°	PARALLEL TO FACE OF PN USE "DETAIL A"	STAGGER AT EACH LANE LINE

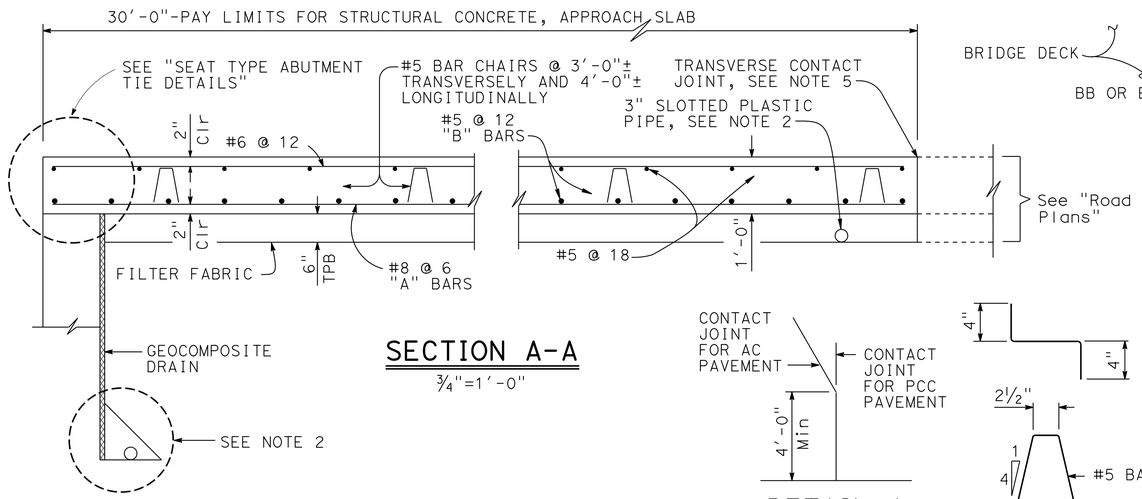

SECTION A-A
¾"=1'-0"

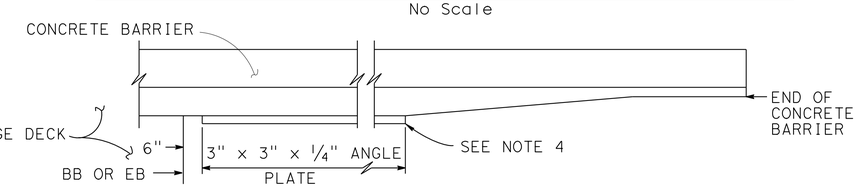

EDGE ANGLE DETAIL
½"=1'-0"

DETAIL A
No Scale

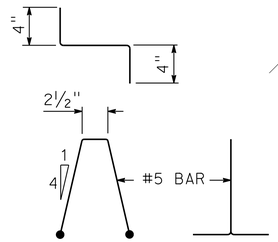

BAR CHAIR DETAIL
1½"=1'-0"

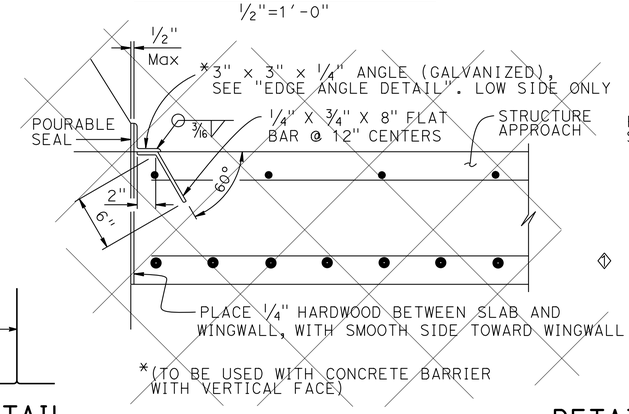

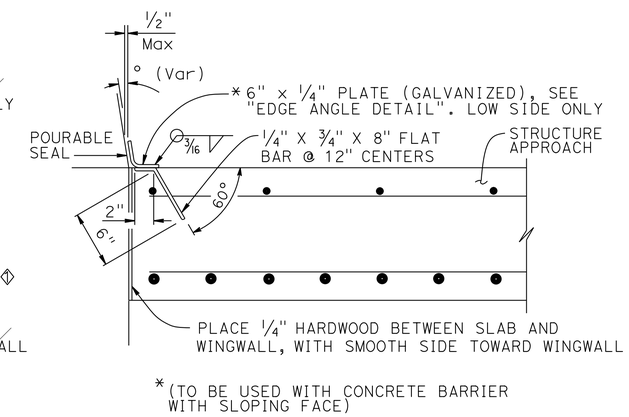

DETAIL B
1½" = 1'-0"

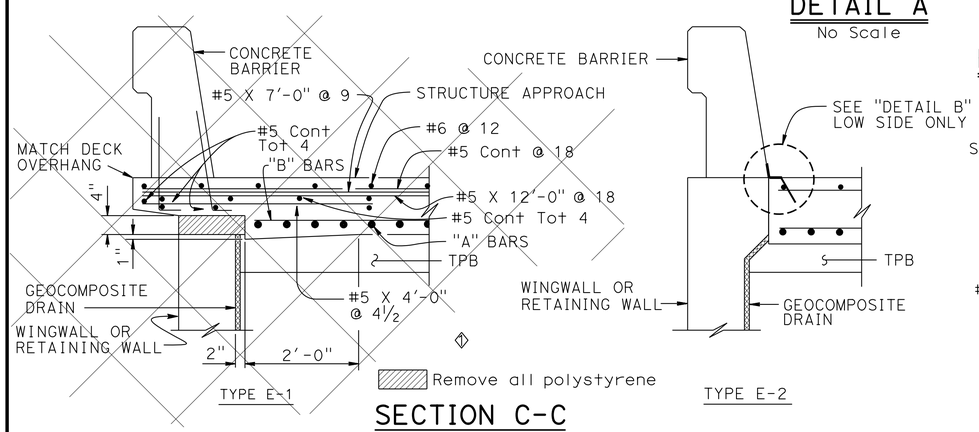

SECTION C-C
¾"=1'-0"
(Type E-1 to be used, unless otherwise shown on plans)

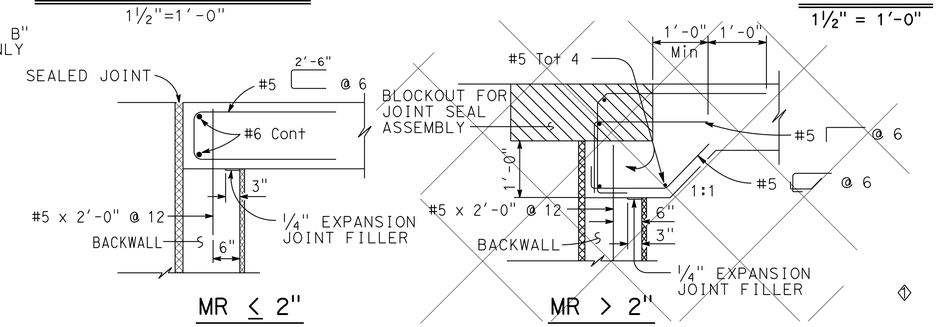

SEAT TYPE ABUTMENT TIE DETAILS (SEE NOTE 1)
¾"=1'-0"

NOTES:
1. For details not shown, see Structure Plans. For MR ≤ 2", adjust bar reinforcement to clear a sawcut for sealed joint, when required
2. For drainage details, see "STRUCTURE APPROACH DRAINAGE DETAILS" sheet
3. Longitudinal construction joints, when permitted by the Engineer, shall be located on lane lines
4. End angle or plate at beginning of barrier transition, end of wingwall or end of structure approach as applicable
5. For transverse contact joint with new PCC paving, refer to Standard Plan P10
6. At the Contractor's option, approach slab transverse reinforcement may be placed parallel to paving notch. Spacing of transverse reinforcement is measured along ℄ roadway

SPECIAL DETAILS

REVISED STANDARD DRAWING
FILE NO. xs3-120
APPROVAL DATE July 2011

◇ Does not apply

STATE OF CALIFORNIA
DEPARTMENT OF TRANSPORTATION

DIVISION OF ENGINEERING SERVICES

BRIDGE NO. 55-0227
POST MILE 7.40

CAMINO CAPISTRANO UC (WIDEN)
STRUCTURE APPROACH TYPE N(30S)

DS OSD 2147A (ENGLISH STANDARD DRAWING "XS" BORDER REV. (02-02-11)

ORIGINAL SCALE IN INCHES FOR REDUCED PLANS 0 1 2 3

UNIT: 2998
PROJECT NUMBER & PHASE: 12000202791
CONTRACT NO.: 12-0F96E4

DISREGARD PRINTS BEARING EARLIER REVISION DATES
REVISION DATES 4/23/12 8/23/12 11/12/12
SHEET 25 OF 33

FILE => 55-0227I-s-sap_n30s.dgn

USERNAME => s124496 DATE PLOTTED => 29-APR-2013 TIME PLOTTED => 12:46

DIST	COUNTY	ROUTE	POST MILES TOTAL PROJECT	SHEET No.	TOTAL SHEETS
12	Ora	5	6.2/8.7	533	595

Khaled Allam 11/12/12
REGISTERED CIVIL ENGINEER DATE

4-29-13
PLANS APPROVAL DATE

REGISTERED PROFESSIONAL ENGINEER Khaled Allam No. 67110 Exp. 09/30/14 CIVIL STATE OF CALIFORNIA

The State of California or its officers or agents shall not be responsible for the accuracy or completeness of electronic copies of this plan sheet.

JACOBS
3161 MICHELSON, STE 500
IRVINE, CA 92612

ORANGE COUNTY TRANSPORTATION AUTHORITY
550 S. MAIN STREET
ORANGE, CA 92863-1584

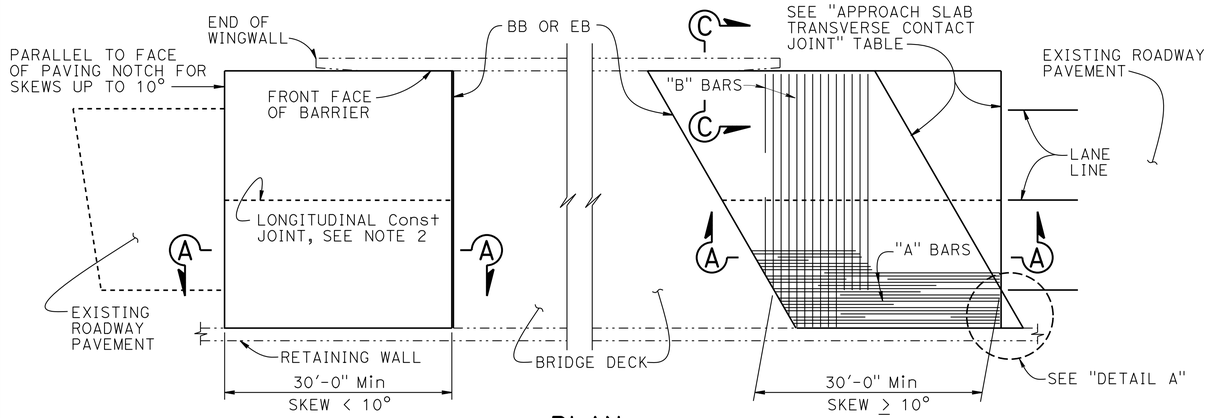

PLAN
1" = 10'

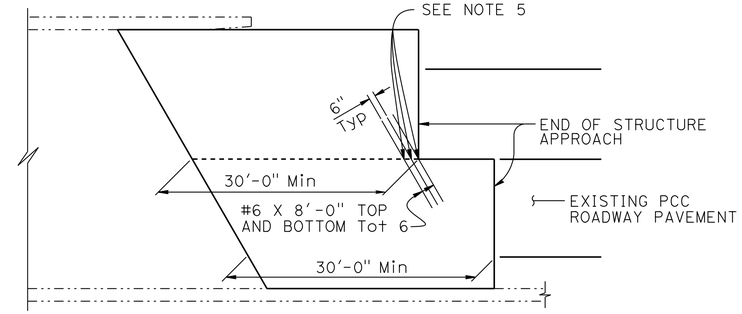

STRUCTURE APPROACH - END STAGGER DETAIL
NO SCALE

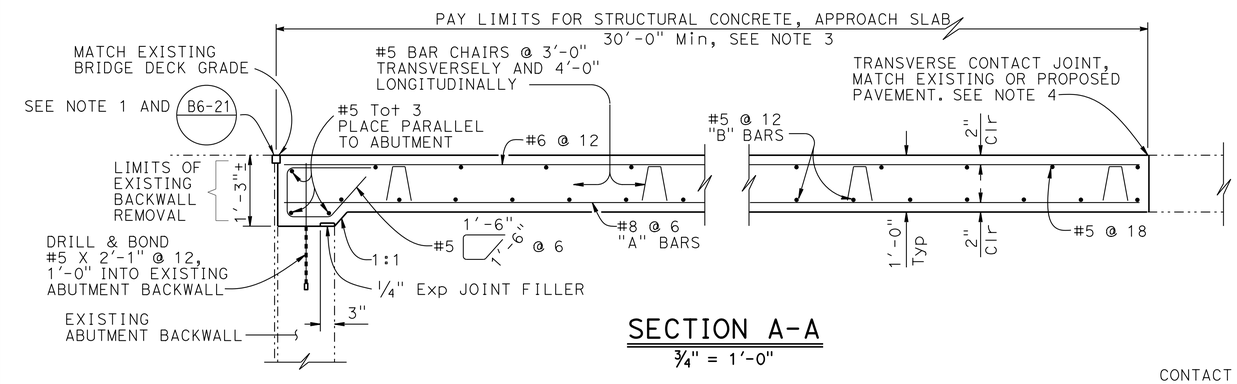

SECTION A-A
3/4" = 1'-0"

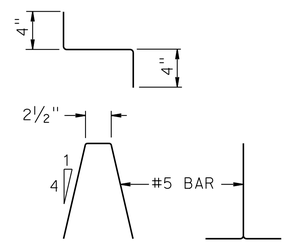

BAR CHAIR DETAIL
1 1/2" = 1'-0"

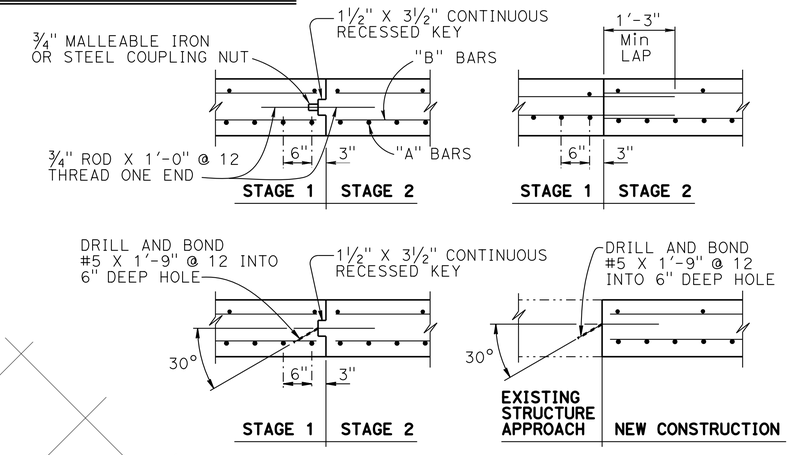

LONGITUDINAL CONSTRUCTION JOINT ALTERNATIVES
3/4" = 1'-0"

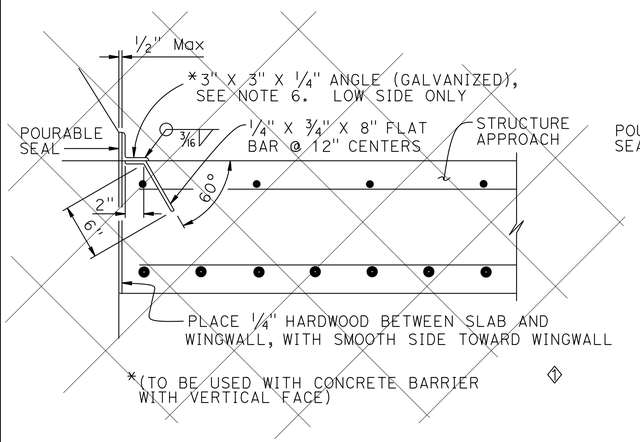

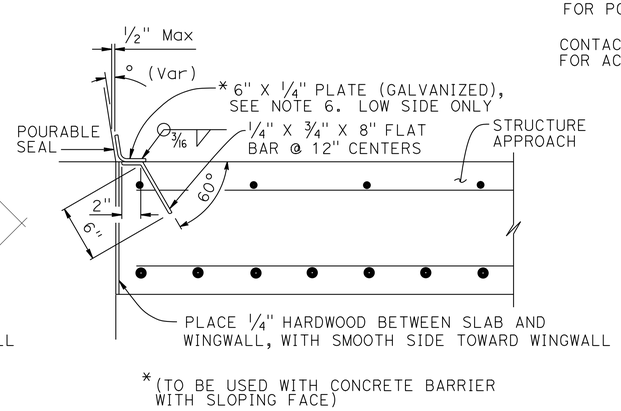

DETAIL B
1 1/2" = 1'-0"

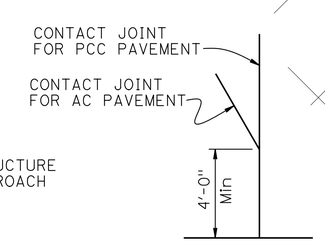

DETAIL A
No Scale

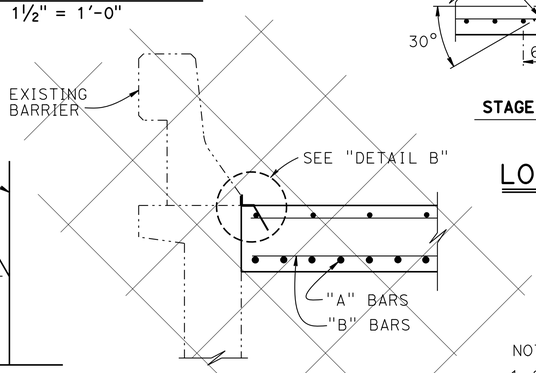

SECTION C-C
3/4" = 1'-0"

NOTES:
1. Sealed joint,for MR see Structure Plans. Adjust bar reinforcement to clear a sawcut for sealed joint, when required
2. Longitudinal construction joints, when permitted by Engineer, shall be located on lane lines
3. Transverse contact joint shall be a minimum of 5'-0" from an existing or constructed weakened plane joint
4. For transverse contact joint with new PCC paving, refer to Standard Plan P10
5. Couplers are required for stage construction
6. End angle or plate at beginning of barrier transition, end of wingwall or end of structure approach as applicable

APPROACH SLAB TRANSVERSE CONTACT JOINT

APPROACH SKEW	WITH AC ROADWAY PAVEMENT	WITH PCC ROADWAY PAVEMENT
< 10°	PARALLEL TO FACE OF PN	PARALLEL TO FACE OF PN
10° - 45°	PARALLEL TO FACE OF PN USE "DETAIL A"	STAGGER LINES 24' TO 36' APART
> 45°	PARALLEL TO FACE OF PN USE "DETAIL A"	STAGGER AT EACH LANE LINE

NOTE:
THE CONTRACTOR SHALL VERIFY ALL CONTROLLING FIELD DIMENSIONS BEFORE ORDERING OR FABRICATING ANY MATERIAL.

SPECIAL DETAILS

REVISED STANDARD DRAWING
FILE NO. xs3-130
APPROVAL DATE July 2011

① Does not apply

STATE OF CALIFORNIA
DEPARTMENT OF TRANSPORTATION

DIVISION OF ENGINEERING SERVICES

BRIDGE NO. 55-0227
POST MILE 7.40

CAMINO CAPISTRANO UC (WIDEN)
STRUCTURE APPROACH TYPE R(30S)

DS OSD 2147A (ENGLISH STANDARD DRAWING "XS" BORDER REV. (02-02-11)

ORIGINAL SCALE IN INCHES FOR REDUCED PLANS 0 1 2 3

UNIT: X 2998
PROJECT NUMBER & PHASE: 12000202791
CONTRACT NO.: 12-0F96E4

DISREGARD PRINTS BEARING EARLIER REVISION DATES
REVISION DATES 4/23/12 8/23/12 11/12/12
SHEET 26 OF 33

FILE => 55-0227I-s-sap_r30s.dgn

USERNAME => s124436 DATE PLOTTED => 23-APR-2013 TIME PLOTTED => 12:46

DIST	COUNTY	ROUTE	POST MILES TOTAL PROJECT	SHEET No.	TOTAL SHEETS
12	Ora	5	6.2/8.7	534	595

Khaled Allam 11/12/12
REGISTERED CIVIL ENGINEER DATE

4-29-13
PLANS APPROVAL DATE

REGISTERED PROFESSIONAL ENGINEER Khaled Allam No. 67110 Exp. 09/30/14 CIVIL STATE OF CALIFORNIA

The State of California or its officers or agents shall not be responsible for the accuracy or completeness of electronic copies of this plan sheet.

JACOBS
3161 MICHELSON, STE 500
IRVINE, CA 92612

ORANGE COUNTY
TRANSPORTATION AUTHORITY
550 S. MAIN STREET
ORANGE, CA 92863-1584

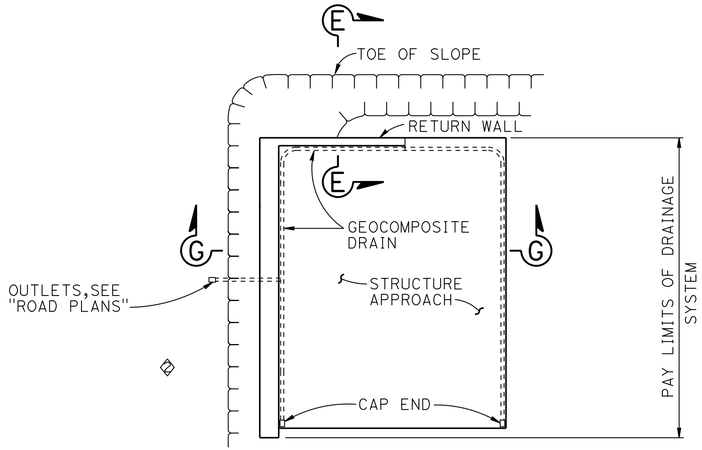

TYPICAL PLAN
1" = 10'

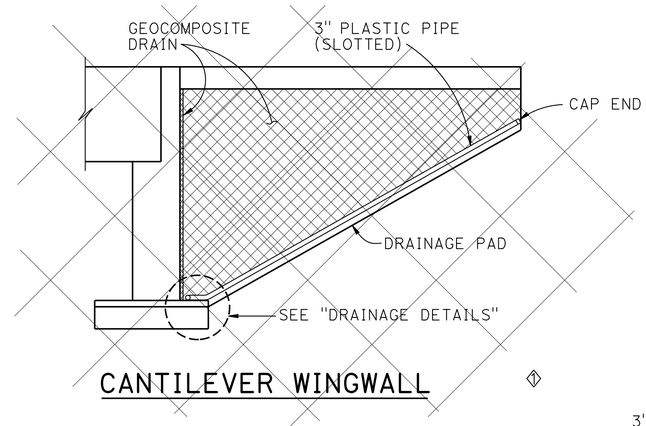

SECTION F-F
1/4" = 1'-0"

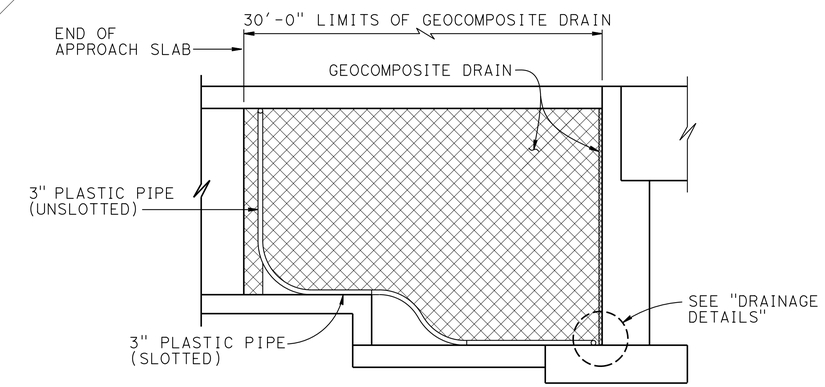

RETAINING WALL WINGWALL DRAINAGE DETAILS

SECTION G-G
1/4" = 1'-0"

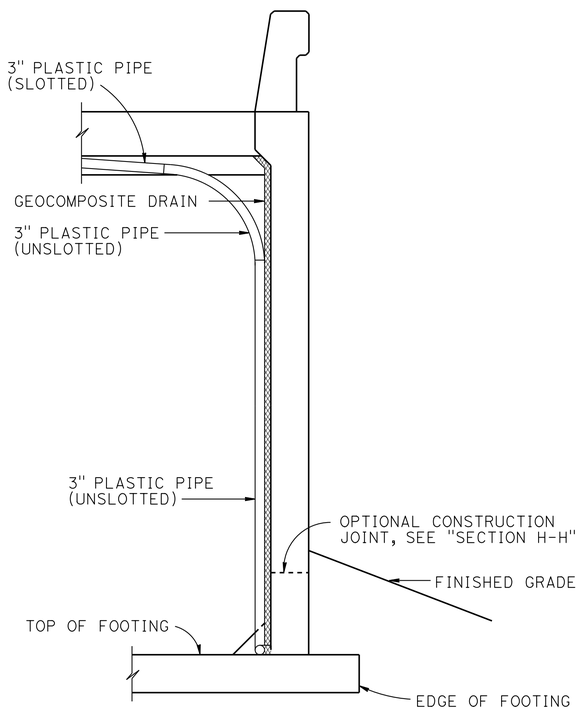

SECTION E-E
1/2" = 1'-0"

NOTE: Bends and junctions in 3" plastic pipe are 30" radius Min

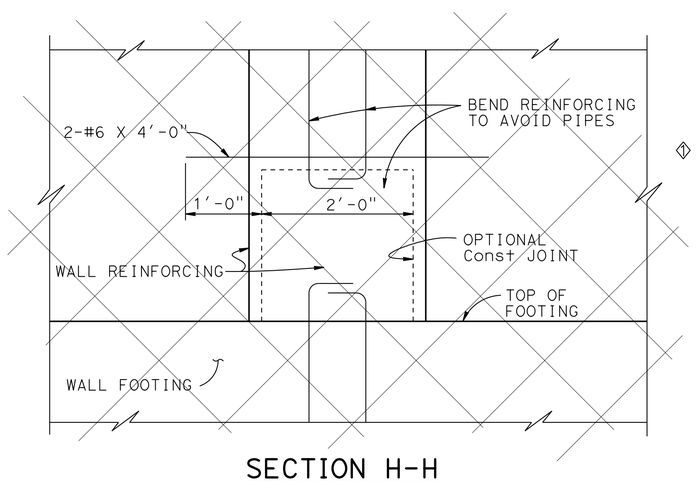

SECTION H-H
1" = 1'-0"

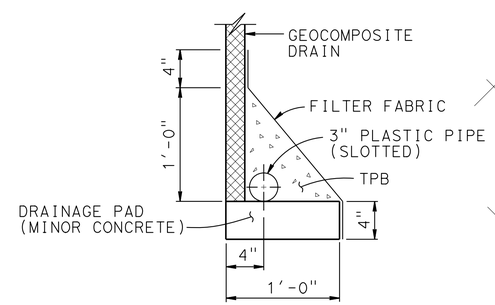

WITHOUT FOOTING

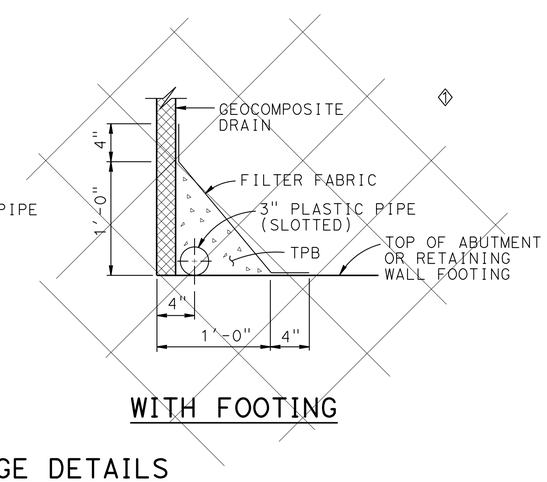

WITH FOOTING

DRAINAGE DETAILS
1 1/2" = 1'-0"

SPECIAL DETAILS

STANDARD DRAWING		
FILE NO. xs3-110	APPROVAL DATE July 2011	

◇ Does not apply
◇ Revised detail

STATE OF CALIFORNIA
DEPARTMENT OF TRANSPORTATION

DIVISION OF ENGINEERING SERVICES

BRIDGE NO. 55-0227
POST MILE 7.40

CAMINO CAPISTRANO UC (WIDEN)
STRUCTURE APPROACH DRAINAGE DETAILS

DS OSD 2147A (ENGLISH STANDARD DRAWING "XS" BORDER REV. (02-02-11)

ORIGINAL SCALE IN INCHES FOR REDUCED PLANS 0 1 2 3

UNIT: 2998
PROJECT NUMBER & PHASE: 12000202791
CONTRACT NO.: 12-0F96E4

DISREGARD PRINTS BEARING EARLIER REVISION DATES

REVISION DATES: 4/23/12 8/23/12 11/12/12

SHEET 27 OF 33

FILE => 55-02271-t-sadd.dgn

USERNAME => s124496 DATE PLOTTED => 29-APR-2013 TIME PLOTTED => 12:46

DIST	COUNTY	ROUTE	POST MILES TOTAL PROJECT	SHEET No.	TOTAL SHEETS
12	Ora	5	6.2/8.7	535	595

Khaled Allam 11/12/12
REGISTERED CIVIL ENGINEER DATE

4-29-13
PLANS APPROVAL DATE

REGISTERED PROFESSIONAL ENGINEER Khaled Allam No. 67110 Exp. 09/30/14 CIVIL STATE OF CALIFORNIA

The State of California or its officers or agents shall not be responsible for the accuracy or completeness of electronic copies of this plan sheet.

JACOBS
3161 MICHELSON, STE 500
IRVINE, CA 92612

ORANGE COUNTY
TRANSPORTATION AUTHORITY
550 S. MAIN STREET
ORANGE, CA 92863-1584

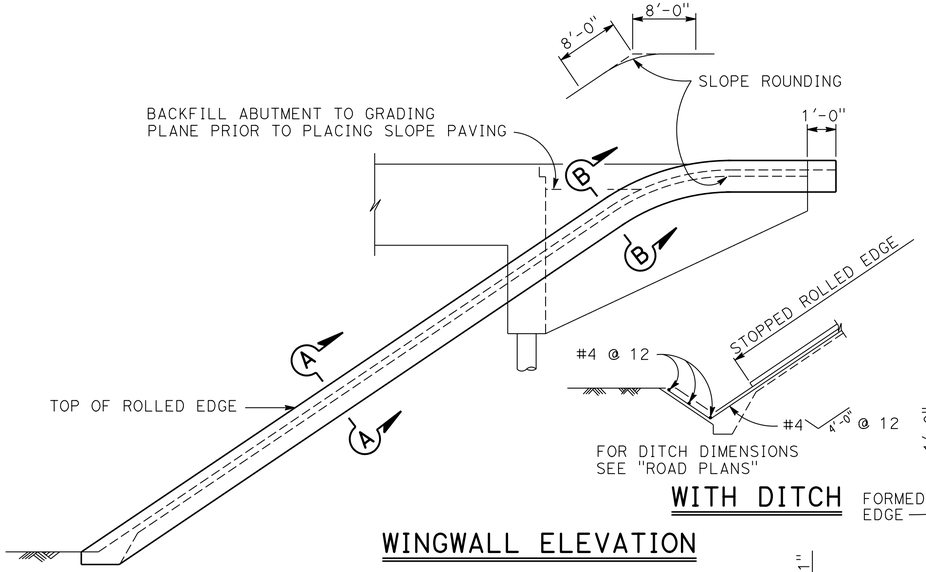

WITH DITCH

WINGWALL ELEVATION

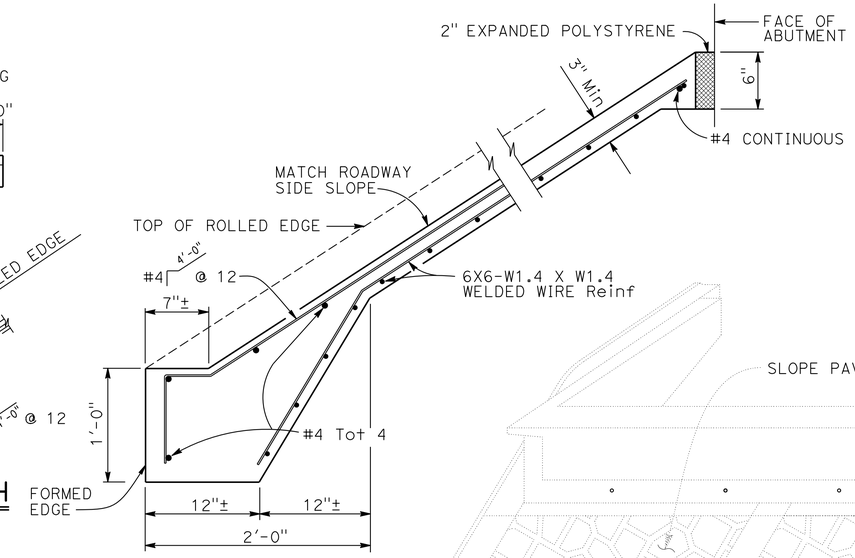

TYPICAL SECTION CONCRETE PAVING

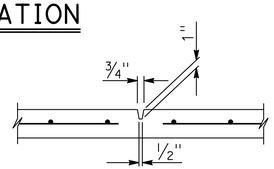

PREFORMED GROOVE

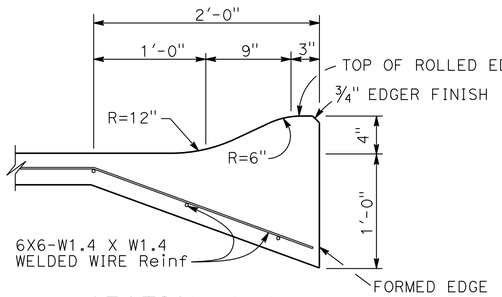

SECTION A-A

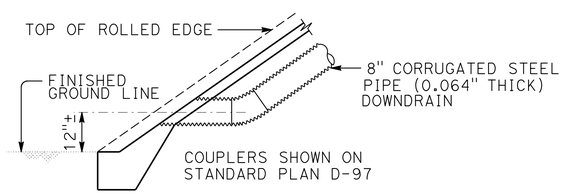

TYPICAL - NO CURB

TYPICAL - DRAIN CONNECTION

PICTORIAL VIEW OF TYPICAL INSTALLATION

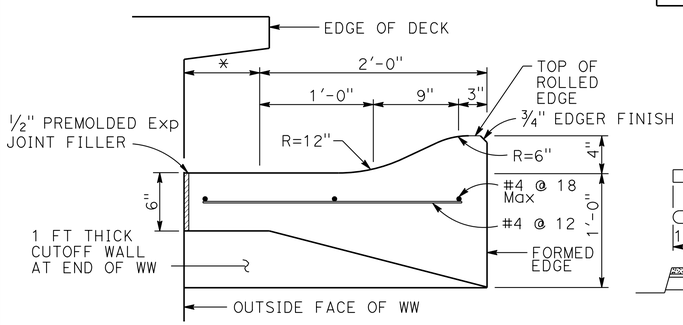

SECTION B-B

* THIS DIMENSION BECOMES ZERO WHEN EDGE OF DECK IS AT OUTSIDE FACE OF WW

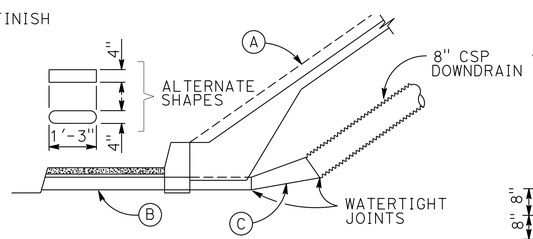

TYPICAL - WITH SIDEWALK

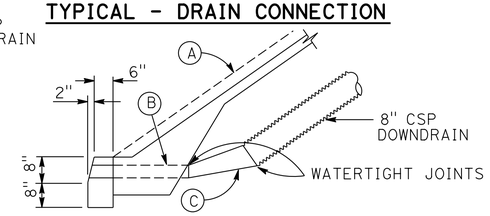

TYPICAL - WITH CURB

LIMITS OF SLOPE PAVING & DRAINAGE LAYOUT

(A) Top of rolled edge

(B) Conduit:
0.064" galv corrugated steel or 0.109" smooth galv steel

(C) Taper: { 0.064" galv corrugated steel or 0.109" smooth galv steel

(D) 8" perforated steel pipe (0.064" thick) underdrain behind abutment. Connect to downdrain as shown on limits of Slope Paving & Drainage layout.

DRAINAGE DETAILS

NOTE:
Drainage details are only applicable when is indicated on detail sheets.

BO-3
3-5

SPECIAL DETAILS

NO SCALE

STANDARD DRAWING

FILE NO. xs4-210

APPROVAL DATE July 2011

(1) Does not apply

STATE OF CALIFORNIA
DEPARTMENT OF TRANSPORTATION

DIVISION OF ENGINEERING SERVICES

BRIDGE NO. 55-0227
POST MILE 7.40

CAMINO CAPISTRANO UC (WIDEN)
SLOPE PAVING-FULL SLOPE

DS OSD 2147A (ENGLISH STANDARD DRAWING "XS" BORDER REV. (02-02-11)

ORIGINAL SCALE IN INCHES FOR REDUCED PLANS 0 1 2 3

UNIT: 2998
PROJECT NUMBER & PHASE: 12000202791
CONTRACT NO.: 12-0F96E4

DISREGARD PRINTS BEARING EARLIER REVISION DATES

REVISION DATES: 4/23/12 8/13/12 11/12/12

SHEET 28 OF 33

FILE => 55-0227I-w-slp.dgn

USERNAME => s124496 DATE PLOTTED => 29-APR-2013 TIME PLOTTED => 12:46

DIST	COUNTY	ROUTE	POST MILES TOTAL PROJECT	SHEET No	TOTAL SHEETS
12	Ora	5	6.2/8.7	536	595

GEOTECHNICAL PROFESSIONAL — DATE 11/12/12

4-29-13
PLANS APPROVAL DATE

REGISTERED PROFESSIONAL ENGINEER — S. PIRATHIVIRAJ — NO. GE 2963 — EXP.12-31-13 — GEOTECHNICAL — STATE OF CALIFORNIA

The State of California or its officers or agents shall not be responsible for the accuracy or completeness of electronic copies of this plan sheet.

ORANGE COUNTY TRANSPORTATION AUTHORITY
550 S. MAIN STREET
ORANGE, CA 92863-1584

EARTH MECHANICS, INC.
17800 NEWHOPE STREET, SUITE B
FOUNTAIN VALLEY, CA 92708

BENCH MARK

Designation: F-785 Elev = 75.717 feet (NAVD 88); 73.413 feet (NGVD29) Described by OCS 2003 - Found 3¾" US Coast and Geodectic Survey Bronzed Disk Stamped "F 785 1946", Set in the Top of a Concrete Bridge Abutment. Monument is Located in the Southwesterly Corner of the Atchinso\Topeka and Santa Fe Railway Overcrossing of San Mateo Creek, 69 ft. Northerly Along the Railway from the Centerline of the Interstate 5 Freeway Southbound Onramp at Camino Capistrano Prolonged to the West and 150± Westerly from the Centerline of Camino Capistrano. Monument is Set 2.0 ft. below the Tracks.

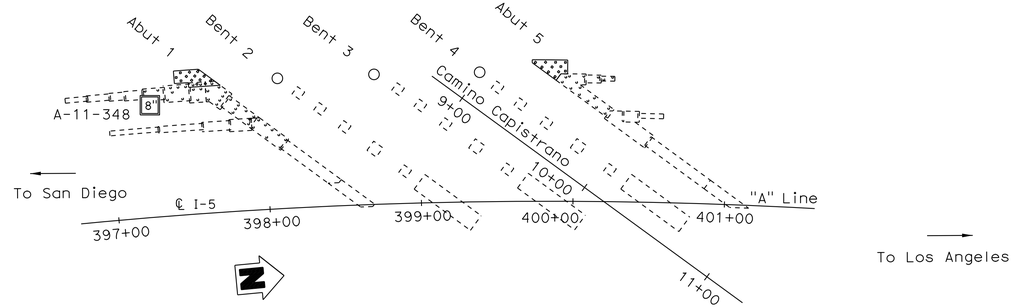

PLAN

1" = 50'

NOTES:

(1) This LOTB sheet was prepared in accordance with the Caltrans Soil and Rock Logging, Classification and Presentation Manual (June 2010)

(2) 2.4" samples were taken using a California Modified Sampler.

(3) An automatic trip hammer system consisting of a hammer weight of 140 lbs falling a distance of 30" was used to advance the drive sampler.

(4) Conversion factor from 2.4" Modified California Ring Sampler blowcounts to Standard Penetration Test (SPT) blowcounts is 0.5.

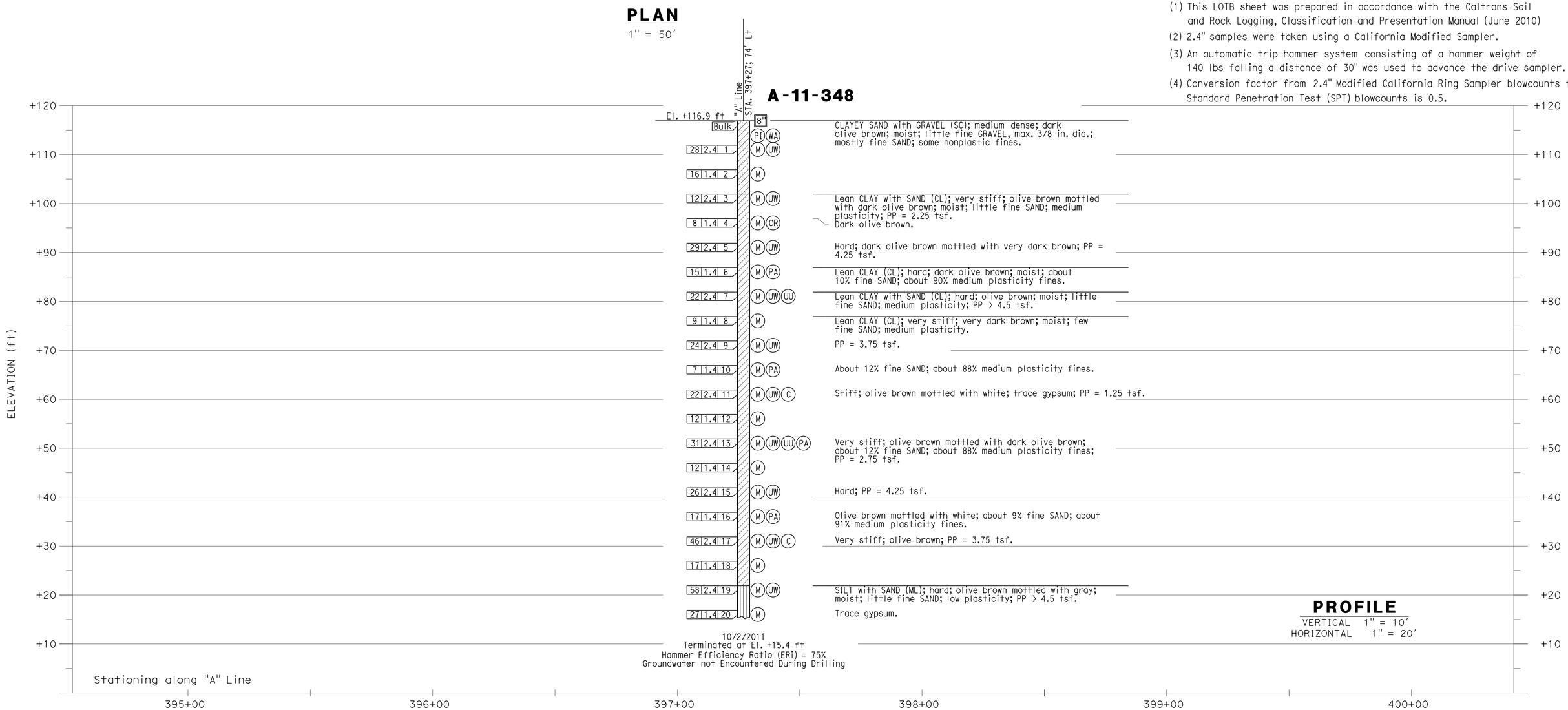

Luqi Yang — DESIGN OVERSIGHT: Luqi Yang; 1-16-13 — SIGN OFF DATE	DRAWN BY: J. Fang	R. Jie — FIELD INVESTIGATION BY:	PREPARED FOR THE STATE OF CALIFORNIA DEPARTMENT OF TRANSPORTATION	S. PIRATHIVIRAJ — PROJECT ENGINEER	BRIDGE NO. 55-0227L; POST MILES 7.40
	CHECKED BY: S. PIRATHIVIRAJ	DATE: 9/2011, 10/2011			

CAMINO CAPISTRANO UC (WIDEN)

LOG OF TEST BORINGS 1 OF 5

GS GEOTECHNICAL LOG OF TEST BORINGS SHEET (ENGLISH) (REV. 7/16/10)

ORIGINAL SCALE IN INCHES FOR REDUCED PLANS 0 1 2 3

UNIT: 2998
PROJECT NUMBER & PHASE: 12000202791

DISREGARD PRINTS BEARING EARLIER REVISION DATES

REVISION DATES

SHEET 29 OF 33

FILE => 55-0227-z-lotb1.dgn

CONTRACT NO.: 12-0F96E1 PROJECT ID:

USERNAME => s124496 DATE PLOTTED => 29-APR-2013 TIME PLOTTED => 12:46

BENCH MARK

Designation: F-785 Elev = 75.717 feet (NAVD 88); 73.413 feet (NGVD29) Described by OCS 2003 - Found 3¾" US Coast and Geodectic Survey Bronzed Disk Stamped "F 785 1946", Set in the Top of a Concrete Bridge Abutment. Monument is Located in the Southwesterly Corner of the Atchinso\Topeka and Santa Fe Railway Overcrossing of San Mateo Creek, 69 ft. Northerly Along the Railway from the Centerline of the Interstate 5 Freeway Southbound Onramp at Camino Capistrano Prolonged to the West and 150± Westerly from the Centerline of Camino Capistrano. Monument is Set 2.0 ft. below the Tracks.

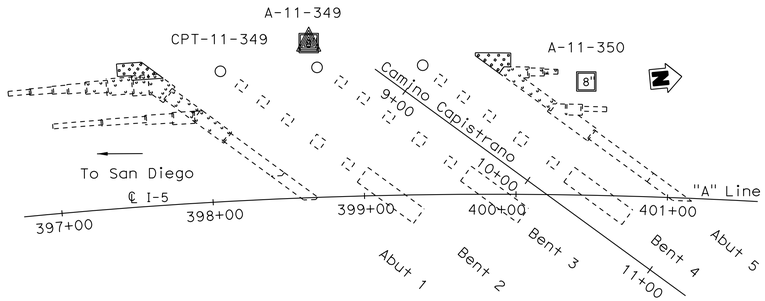

NOTES:

(1) This LOTB sheet was prepared in accordance with the Caltrans Soil and Rock Logging, Classification and Presentation Manual (June 2010)

(2) 2.4" samples were taken using a California Modified Sampler.

(3) An automatic trip hammer system consisting of a hammer weight of 140 lbs falling a distance of 30" was used to advance the drive sampler.

(4) Conversion factor from 2.4" Modified California Ring Sampler blowcounts to Standard Penetration Test (SPT) blowcounts is 0.5.

DIST	COUNTY	ROUTE	POST MILES TOTAL PROJECT	SHEET No	TOTAL SHEETS
12	Ora	5	6.2/8.7	537	595

GEOTECHNICAL PROFESSIONAL — DATE 11/12/12

4-29-13
PLANS APPROVAL DATE

REGISTERED PROFESSIONAL ENGINEER — S. PIRATHIVIRAJ NO. GE 2963 EXP. 12-31-13 GEOTECHNICAL STATE OF CALIFORNIA

The State of California or its officers or agents shall not be responsible for the accuracy or completeness of electronic copies of this plan sheet.

ORANGE COUNTY TRANSPORTATION AUTHORITY
550 S. MAIN STREET
ORANGE, CA 92863-1584

EARTH MECHANICS, INC.
17800 NEWHOPE STREET, SUITE B
FOUNTAIN VALLEY, CA 92708

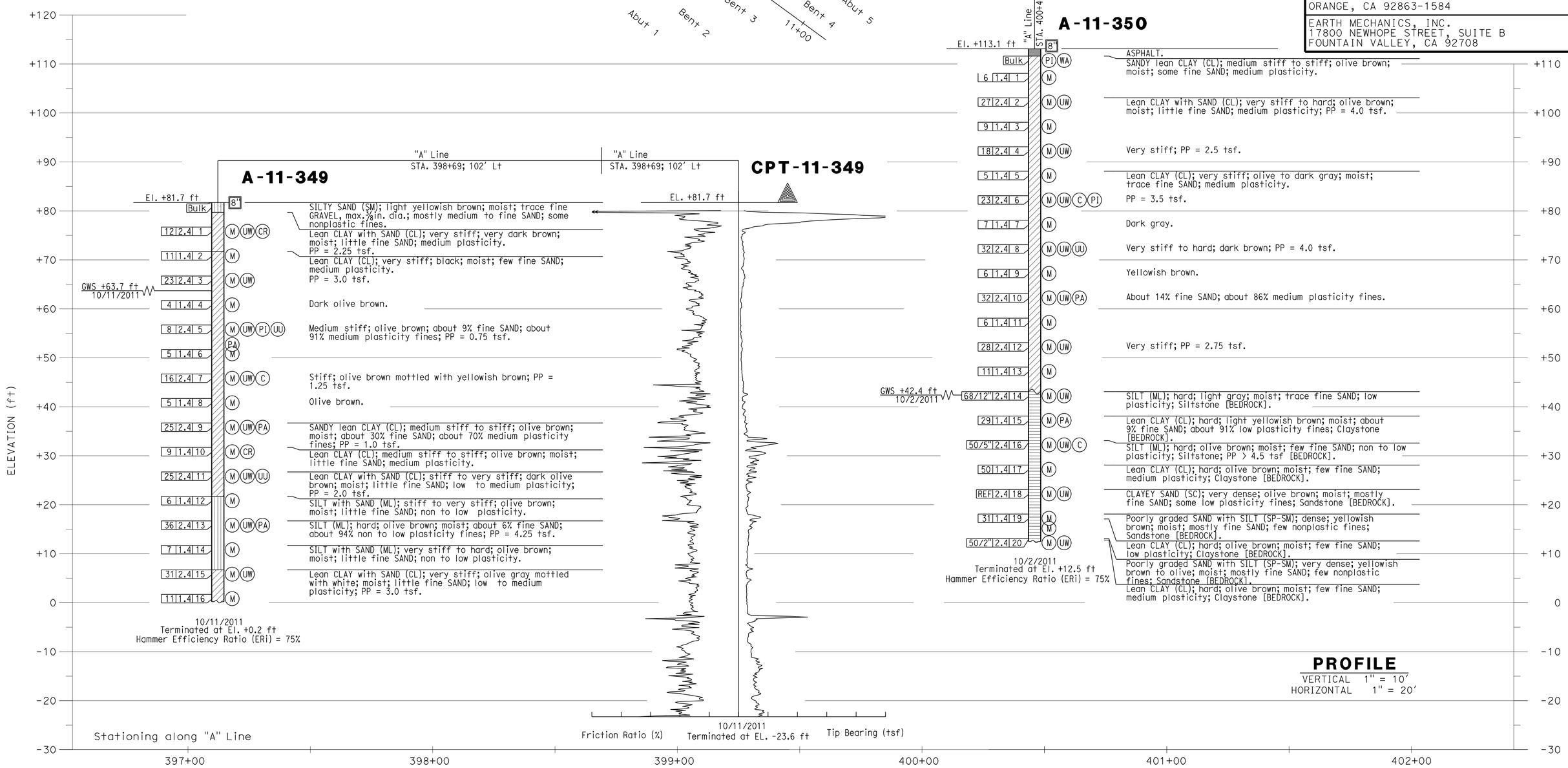

Luqi Yang — DESIGN OVERSIGHT Luqi Yang	DRAWN BY	J. Fang	R. Jie — FIELD INVESTIGATION BY:
1-16-13 — SIGN OFF DATE	CHECKED BY	S. PIRATHIVIRAJ	DATE: 9/2011, 10/2011

PREPARED FOR THE STATE OF CALIFORNIA DEPARTMENT OF TRANSPORTATION

S. PIRATHIVIRAJ — PROJECT ENGINEER

BRIDGE NO. 55-0227L — POST MILES 7.40

CAMINO CAPISTRANO UC (WIDEN)

LOG OF TEST BORINGS 2 OF 5

GS GEOTECHNICAL LOG OF TEST BORINGS SHEET (ENGLISH) (REV. 7/16/10)

ORIGINAL SCALE IN INCHES FOR REDUCED PLANS 0 1 2 3

UNIT: 2998
PROJECT NUMBER & PHASE: 12000202791

DISREGARD PRINTS BEARING EARLIER REVISION DATES

REVISION DATES

SHEET 30 OF 33

FILE => 55-0227-z-lotb2.dgn

CONTRACT NO.: 12-0F96E1 PROJECT ID:

USERNAME => s124496 DATE PLOTTED => 29-APR-2013 TIME PLOTTED => 12:46

I-081-2-(11) | 7 | CAL. | 309 | 311

DIST.	COUNTY	ROUTE	SECTION	SHEET NO.	TOTAL SHEETS
VII	Ora	5		14	16

DECEMBER 15 1958

TO ACCOMPANY PLANS DATED 4-29-13

DIVISION OF ENGINEERING SERVICES - GEOTECHNICAL SERVICES

As-Built Log of Test Borings sheet is considered an informational document only. As such, the State of California registration seal with signature, license number and registration certificate expiration date confirm that this is a true and accurate copy of the original document. This drawing is available and presented only for the convenience of any bidder, contractor or other interested party.

DIST.	COUNTY	ROUTE	POST MILES-TOTAL PROJECT	Sheet No.	Total Sheets
12	Ora	5	6.2/8.7	538	595

GEOTECHNICAL PROFESSIONAL — DATE 11/12/12

CAMINO CAPISTRANO UC (WIDEN)

LOG OF TEST BORINGS 3 OF 5

NOTE: A COPY OF THIS LOG OF TEST BORINGS IS AVAILABLE AT OFFICE OF STRUCTURE MAINTENANCE AND INVESTIGATIONS, SACRAMENTO, CALIFORNIA

UNIT: PROJECT NUMBER & PHASE: 12000202791

BRIDGE No.	Sheet	of
55-0227L	31	33

REGISTERED PROFESSIONAL ENGINEER — S. PIRATHIVIRAJ — NO. GE 2963 — EXP. 12-31-13 — GEOTECHNICAL — STATE OF CALIFORNIA

Revisions made to this Log of Test Borings from the original ___ Log of Test Borings are the addition of the following note and notes:

Boring	Station	Offset from C/L Rte 101
B-10	399+55	40'

AS BUILT PLANS
Contract No. 060-7VC2
Date Completed
Document No. 70002293

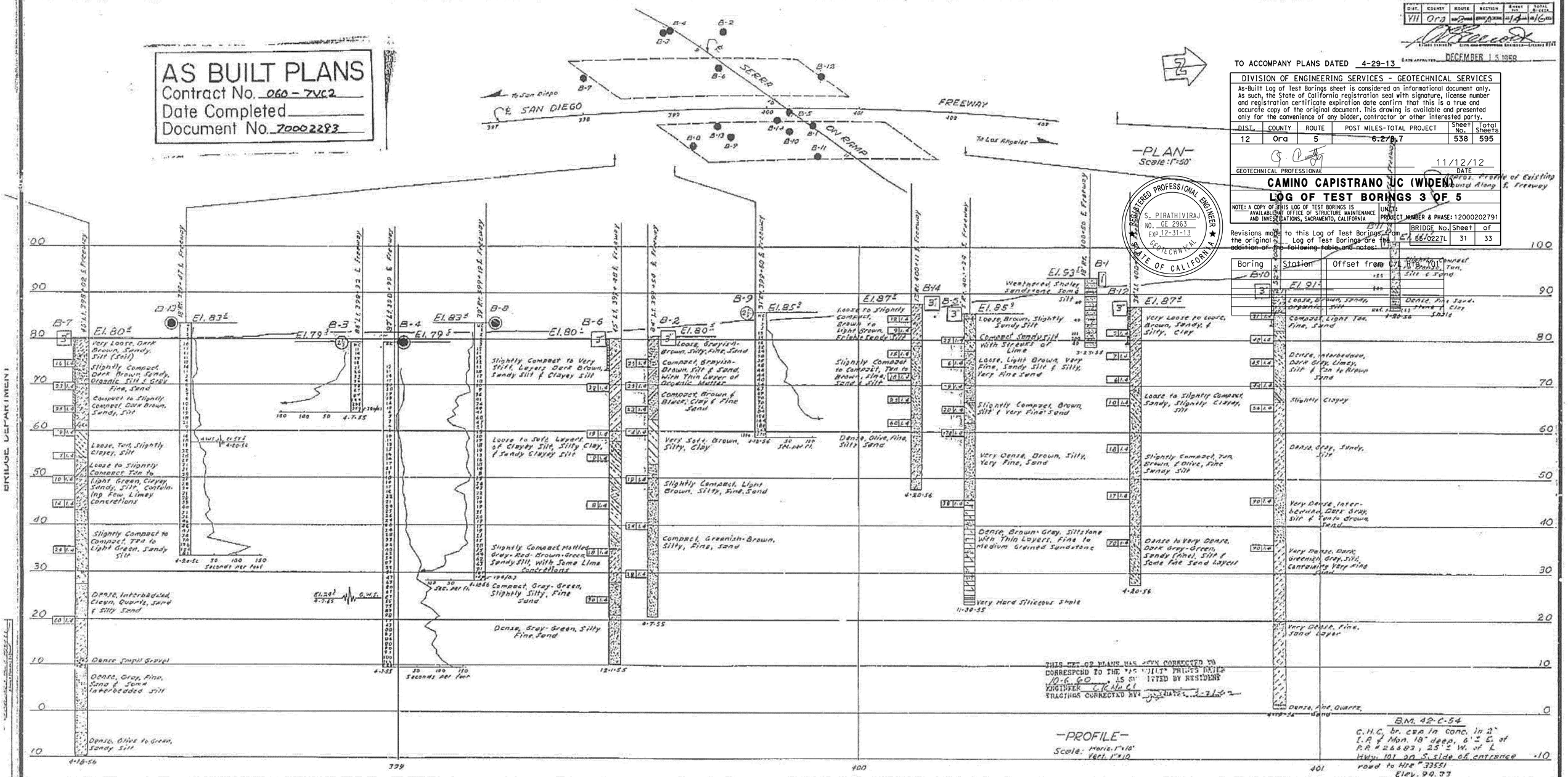

CLASSIFICATION OF MATERIAL BASED ON STANDARD GRADE SIZE LIMITS

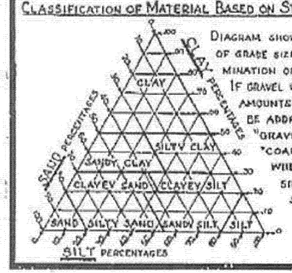

DIAGRAM SHOWING THE BASIS FOR ESTIMATES OF GRADE SIZE DISTRIBUTION USED IN DETERMINATION OF CLASS NAMES.

IF GRAVEL IS PRESENT IN APPRECIABLE AMOUNTS THE TERM "GRAVELLY" MAY BE ADDED TO THE CLASS NAME, VIZ. "GRAVELLY SAND." THE TERMS "COARSE," "MEDIUM" AND "FINE" WHEN USED TO DESCRIBE SAND, SILT AND GRAVEL REFER TO STANDARD GRADE SIZE LIMITS.

LEGEND OF EARTH MATERIALS

- GRAVEL
- SAND
- SILT
- CLAY
- SANDY CLAY OR CLAYEY SAND
- SANDY SILT OR SILTY SAND
- SILTY CLAY OR CLAYEY SILT
- PEAT AND/OR ORGANIC MATTER
- FILL MATERIAL
- IGNEOUS ROCK
- SEDIMENTARY ROCK
- METAMORPHIC ROCK

LEGEND OF BORING OPERATIONS

- PLAN OF ANY BORING
- PENETROMETER
- 2 1/4" CORE PENETROMETER
- SAMPLER BORING (DRY)
- ROTARY BORING (WET)
- AUGER BORING (DRY)
- JET BORING
- CORE BORING
- TEST PIT

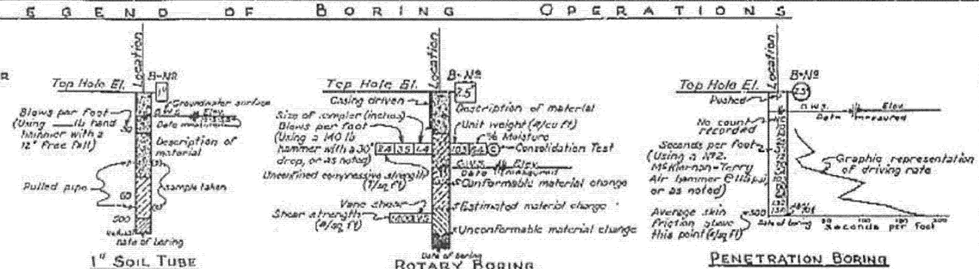

NOTES

The contractor's attention is directed to Section 2, Article (c) of the Standard Specifications and to the Special Provisions accompanying this set of plans.

Classification of earth material as shown on this sheet is based upon field inspection and is not to be construed to imply mechanical analysis.

STATE OF CALIFORNIA
DEPARTMENT OF PUBLIC WORKS
DIVISION OF HIGHWAYS

SERRA ON-RAMP U.C.

LOG OF TEST BORINGS

SCALE As Shown | BRIDGE 55-227 | FILE | DRAWING

FILENAME => 55-0227-z-lotb3.tif

TO ACCOMPANY PLANS DATED 4-29-13

DIST.	COUNTY	ROUTE	SECTION	TOTAL SHEETS
07	ORA	5	6.2/8.7	595

DIVISION OF ENGINEERING SERVICES - GEOTECHNICAL SERVICES

As-Built Log of Test Borings sheet is considered an informational document only. As such, the State of California registration seal with signature, license number, and registration certificate expiration date confirm that this is a true and accurate copy of the original document. This drawing is available and prescribed only for the convenience of any bidder, contractor or other interested party.

DIST.	COUNTY	ROUTE	POST MILES-TOTAL PROJECT	Sheet No.	Total Sheets
12	Ora	5	6.2/8.7	539	595

GEOTECHNICAL PROFESSIONAL — DATE 11/12/12

REGISTERED PROFESSIONAL ENGINEER S. PIRATHIVIRAJ NO. GE 2963 EXP. 12-31-13 GEOTECHNICAL STATE OF CALIFORNIA

CAMINO CAPISTRANO UC (WIDEN)

LOG OF TEST BORINGS 4 OF 5

NOTE: A COPY OF THIS LOG OF TEST BORINGS IS AVAILABLE AT OFFICE OF STRUCTURE MAINTENANCE AND INVESTIGATIONS, SACRAMENTO, CALIFORNIA

UNIT:
PROJECT NUMBER & PHASE: 12000202791

BRIDGE No.	Sheet	of
55-0227L	32	33

Revisions made to this Log of Test Borings from the original ___ Log of Test Borings are the addition of the following table and notes:

Boring	Station	Offset from C/L Rte. 101

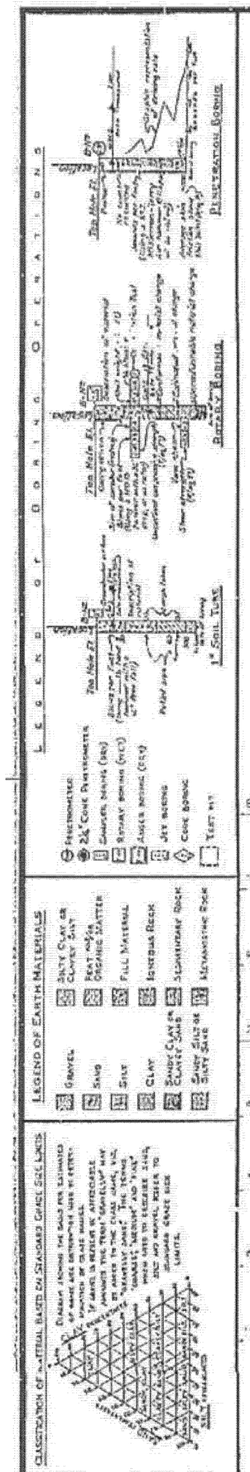

NOTE: Classification of earth material as shown on this sheet is based upon field inspection and is not to be construed to imply mechanical analysis.

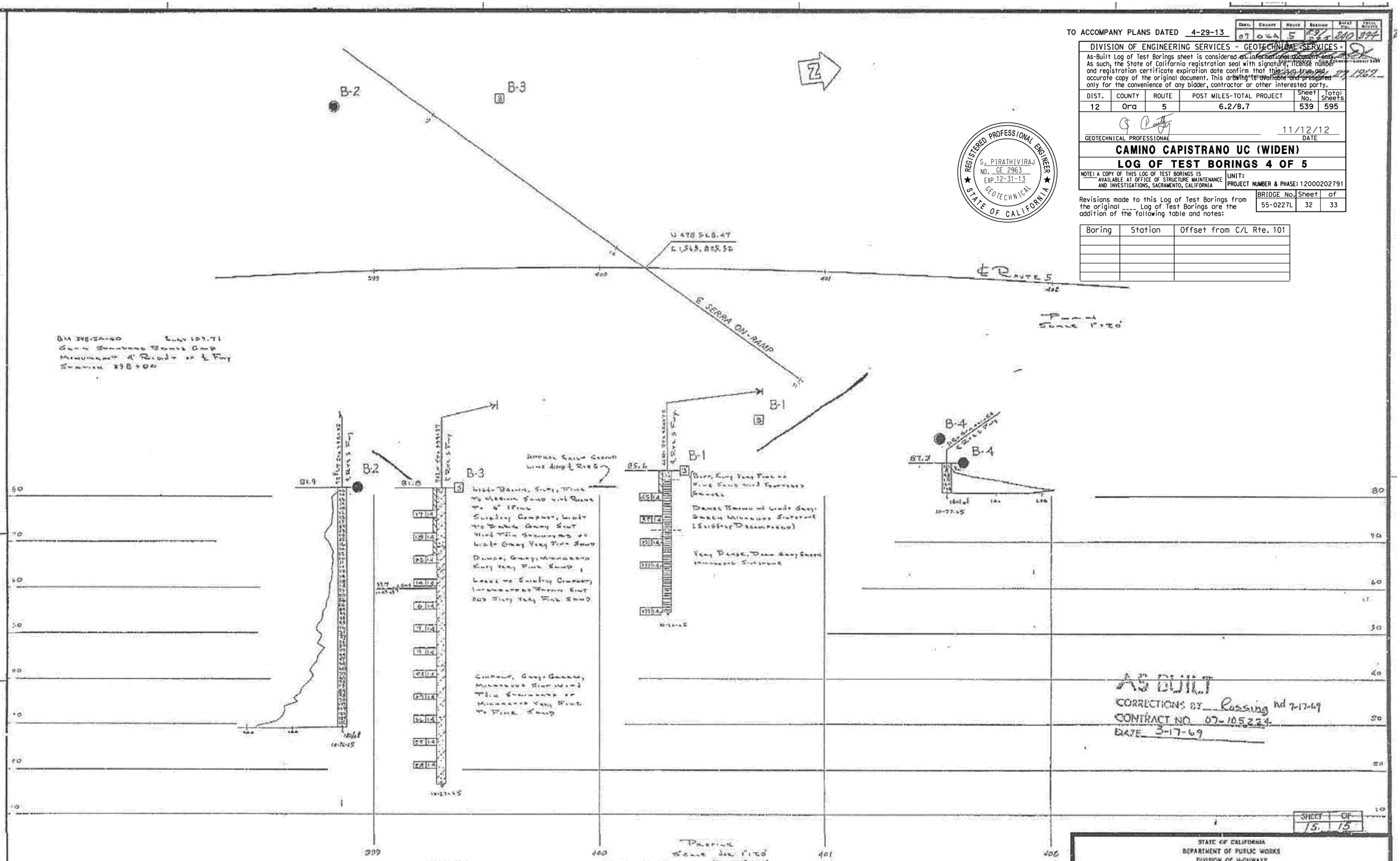

AS BUILT PLANS
Contract No. 07-105224
Date Completed
Document No. 70000730

SHEET 15 OF 15

STATE OF CALIFORNIA
DEPARTMENT OF PUBLIC WORKS
DIVISION OF HIGHWAYS

SERRA ON-RAMP
UNDERCROSSING (WIDENING)

LOG OF TEST BORINGS

SCALE As Noted | BRIDGE 55-227 R/L | FILE | DRAWING 55227-LO

FILENAME => 55-0227-z-lotb4.tif

DIST.	COUNTY	ROUTE	POST MILES	TOTAL SHEETS
12	Ora	5	6.7/9.5	187 235

TO ACCOMPANY PLANS DATED 4-29-13

DIVISION OF ENGINEERING SERVICES - GEOTECHNICAL SERVICES

As-Built Log of Test Borings sheet is considered an informational document only. As such, the State of California registration seal with signature, license number and registration certificate expiration date confirm that this is a true and accurate copy of the original document. This drawing is available and presented only for the convenience of any bidder, contractor or other interested party.

DIST.	COUNTY	ROUTE	POST MILES-TOTAL PROJECT	Sheet No.	Total Sheets
12	Ora	5	6.2/8.7	540	595

GEOTECHNICAL PROFESSIONAL — DATE 11/12/12

REGISTERED PROFESSIONAL ENGINEER S. PIRATHIVIRAJ NO. GE 2963 EXP. 12-31-13 GEOTECHNICAL STATE OF CALIFORNIA

CAMINO CAPISTRANO UC (WIDEN)

LOG OF TEST BORINGS 5 OF 5

NOTE: A COPY OF THIS LOG OF TEST BORINGS IS AVAILABLE AT OFFICE OF STRUCTURE MAINTENANCE AND INVESTIGATIONS, SACRAMENTO, CALIFORNIA

UNIT: PROJECT NUMBER & PHASE: 12000202791

BRIDGE No.	Sheet	of
55-0227L	33	33

Revisions made to this Log of Test Borings from the original ___ Log of Test Borings are the addition of the following table and notes:

Boring	Station	Offset from C/L Rte. 101

NO AS-BUILT CHANGES

AS BUILT

CORRECTIONS BY S.C. TRIPLAT

CONTRACT NO. 12-107224

DATE 10-17-96

NOTES:

1. THE BORING LOGS AND RELATED INFORMATION REPRESENT THE OPINION OF THE GEOTECHNICAL ENGINEER AS TO THE CHARACTER OF THE MATERIALS AT THE LOCATIONS SHOWN. SOIL AND GROUNDWATER CONDITIONS BETWEEN ADJACENT TEST HOLES AND AT OTHER LOCATIONS MAY DIFFER FROM THOSE SHOWN. GROUNDWATER CONDITIONS MAY CHANGE WITH PASSAGE OF TIME.
2. TEST BORING ELEVATIONS ARE APPROXIMATE AND ARE INTERPOLATED BASED ON TOPOGRAPHIC BASE SHEET MAPPING PREPARED FOR THIS PROJECT. SEE FOUNDATION PLAN FOR BENCHMARK INFORMATION.
3. TEST BORING LOCATIONS WERE DETERMINED IN THE FIELD BASED ON TAPING AND PACING FROM MAPPED SITE FEATURES. THE LOCATIONS OF THE EXPLORATIONS SHOULD BE CONSIDERED ACCURATE ONLY TO THE DEGREE IMPLIED BY THE MEASURING METHODS USED.

SOIL TEST DESIGNATIONS:

- (UU) UNCONSOLIDATED UNDRAINED TRIAXIAL AT 5% STRAIN
- (AL) ATTERBERG LIMITS
- (GS) SIEVE ANALYSIS

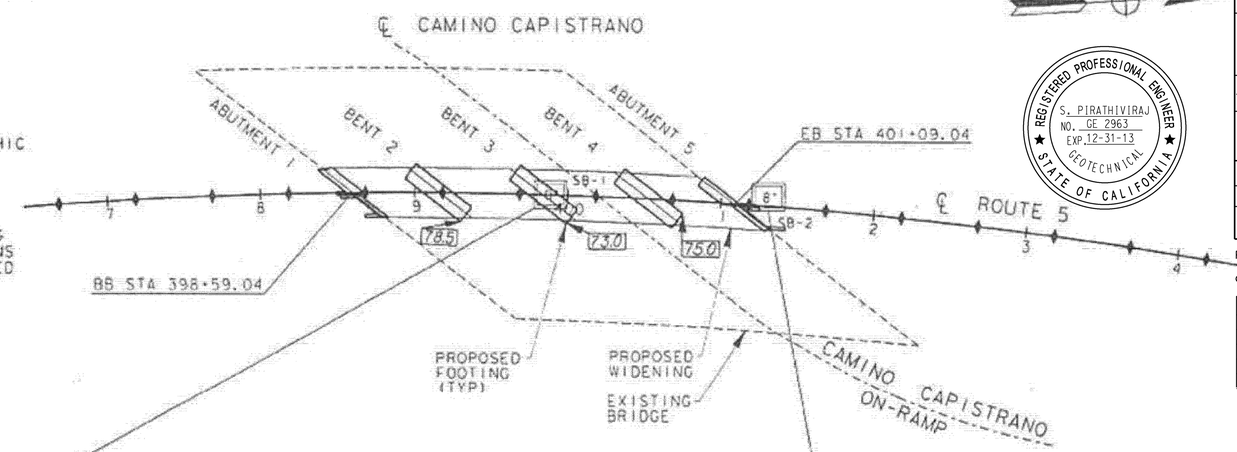

PLAN VIEW

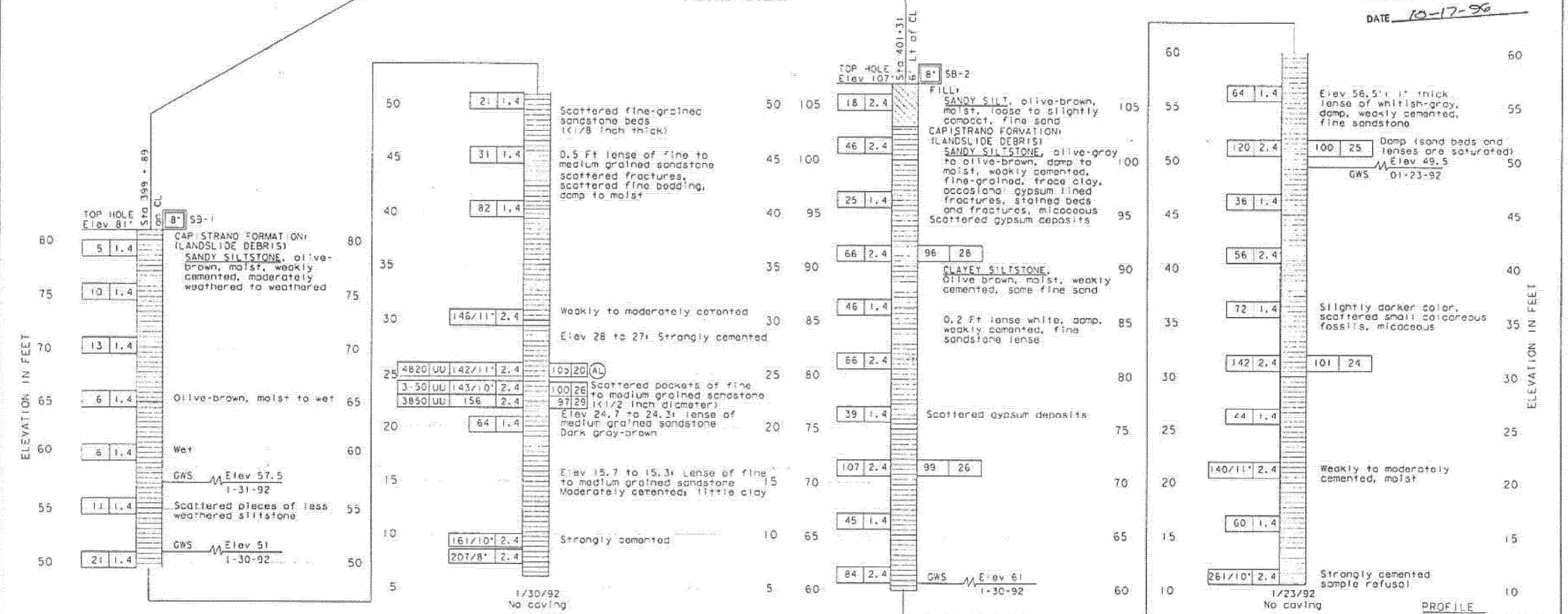

PROFILE
HORIZ: NO SCALE
VERT: 1"=5'

BE O. NGUYEN	DRAWN BY M.A. REICHERT	H. VAN DE VRUGT NINYO & MOORE 1/30/92	PREPARED FOR THE STATE OF CALIFORNIA DEPARTMENT OF TRANSPORTATION	C.E. JOSEPH 046680	55-227R/L 7.3	CAMINO CAPISTRANO ON-RAMP UC (WIDENING) LOG OF TEST BORINGS
	CHECKED BY C.P. POLITO			12104 107221		4-MAY-93 3-JUNE-93 16-JULY-93 21 23

FILENAME => 55-0227-z-lotb5.tif

DIST	COUNTY	ROUTE	POST MILES TOTAL PROJECT	SHEET No	TOTAL SHEETS
12	Ora	5	6.2/8.7	541	595

Khaled Allam 11/12/12
REGISTERED CIVIL ENGINEER DATE

4-29-13
PLANS APPROVAL DATE

REGISTERED PROFESSIONAL ENGINEER — Khaled Allam No. 67110 Exp. 09/30/14 CIVIL — STATE OF CALIFORNIA

The State of California or its officers or agents shall not be responsible for the accuracy or completeness of electronic copies of this plan sheet.

JACOBS
3161 MICHELSON, STE 500
IRVINE, CA 92612

ORANGE COUNTY
TRANSPORTATION AUTHORITY
550 S. MAIN STREET
ORANGE, CA 92863-1584

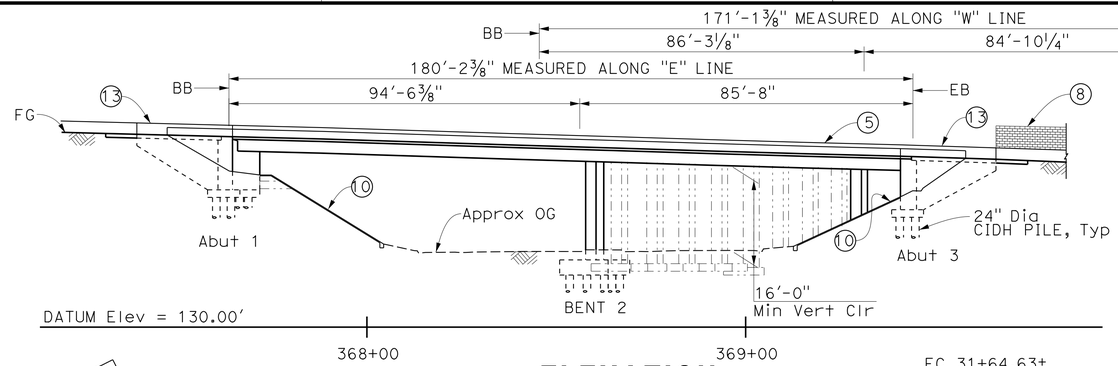

ELEVATION
1" = 20'

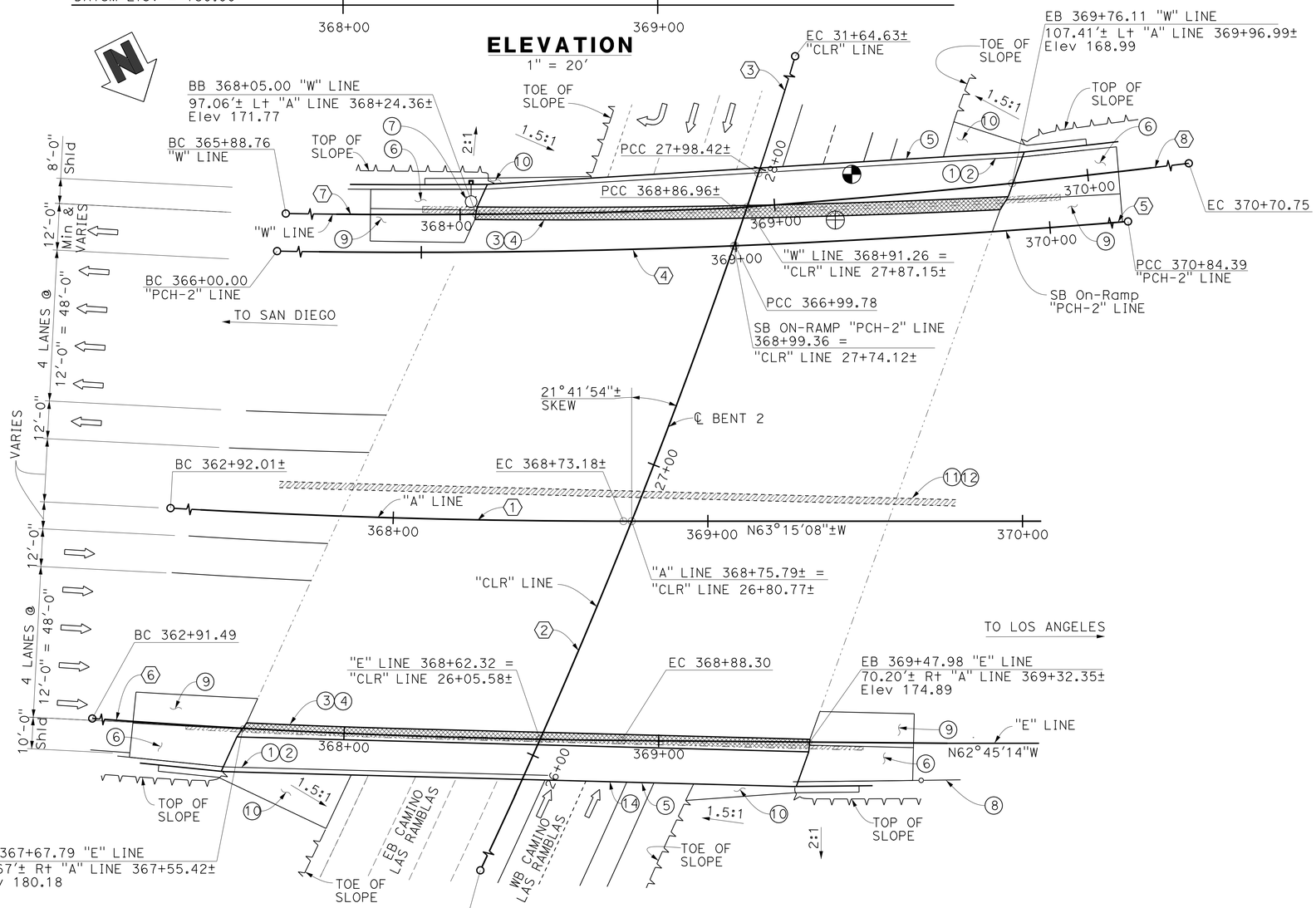

PLAN
1" = 20'

LEGEND:

1. Paint "Bridge No. 55-0510".
2. Paint "Route 5/1 Separation"
3. Closure pour
4. Remove exist barrier railing and overhang.
5. Conc Barrier Type 736 (Mod)
6. Structure Approach, Type N(30D)
7. Light pole, for location see "ROAD PLANS"
8. Sound wall (Masonry Block), see "ROAD PLANS"
9. Structure Approach, Type R(30D)
10. Slope paving
11. Remove Exist Median Barrier
12. Construct Median Barrier Type 60A
13. Conc Barrier Type 736A
14. New Fiber Optic Line, see "MODIFY COMMUNICATION SYSTEM PLANS"

Point of min vert clearance (16'-0" Widen)
Point of min vert clearance (15'-10"± Exist)
Closure pour
Bridge removal (Portion)
Existing Structure
New Structure

CURVE DATA:

CURVE NO.	R	Δ	T	L
1	2500.00'±	13°19'10"±	291.90'±	581.17'±
2	2000.00'±	33°54'07"±	609.59'±	1183.40'±
3	1300.00'±	16°08'25"±	184.33'±	366.21'±
4	2490.00'	06°53'53"	150.07'	299.78'
5	3000.00'	03°31'33"	92.33'	184.61'
6	2563.00'	13°20'30"	299.76'	596.81'
7	2478.00'	06°53'42"	149.28'	298.21'
8	2988.00'	03°31'27"	91.92'	183.79'

NOTE:
THE CONTRACTOR SHALL VERIFY ALL CONTROLLING FIELD DIMENSIONS BEFORE ORDERING OR FABRICATING ANY MATERIAL.

Luqi Yang DESIGN OVERSIGHT Luqi Yang 1-16-13 SIGN OFF DATE	DESIGN	BY K. Allam	CHECKED B. Holton	LOAD & RESISTANCE FACTOR DESIGN	LIVE LOADING: HL93 W/"LOW-BOY"; PERMIT DESIGN VEHICLE
	DETAILS	BY I. Karkoutli	CHECKED B. Holton	LAYOUT BY I. Karkoutli	CHECKED A. Moubayed
	QUANTITIES	BY M. Metcalf	CHECKED G. Armstrong	SPECIFICATIONS BY S. Xie	PLANS AND SPECS COMPARED S. Xie

PREPARED FOR THE STATE OF CALIFORNIA DEPARTMENT OF TRANSPORTATION

Alaedin_Moubayed
PROJECT ENGINEER

BRIDGE NO. 55-0510
POST MILES 6.76

ROUTE 5 / 1 SEPARATION (WIDEN)
GENERAL PLAN No. 1

DESIGN GENERAL PLAN SHEET (ENGLISH) (REV.7/16/10)

ORIGINAL SCALE IN INCHES FOR REDUCED PLANS 0 1 2 3

UNIT: 2998
PROJECT NUMBER & PHASE: 12000202791 CONTRACT NO.: 12-0F96E4

DISREGARD PRINTS BEARING EARLIER REVISION DATES

REVISION DATES 8/23/12 9/23/12 11/12/12

SHEET 1 OF 27

FILE => 55-0510-a-gp01.dgn

USERNAME => s124936 DATE PLOTTED => 23-APR-2013 TIME PLOTTED => 12:58

DIST	COUNTY	ROUTE	POST MILES TOTAL PROJECT	SHEET No	TOTAL SHEETS
12	Ora	5	6.2/8.7	542	595

Khaled Allam 11/12/12
REGISTERED CIVIL ENGINEER DATE

4-29-13
PLANS APPROVAL DATE

REGISTERED PROFESSIONAL ENGINEER — Khaled Allam No. 67110 Exp. 09/30/14 CIVIL — STATE OF CALIFORNIA

The State of California or its officers or agents shall not be responsible for the accuracy or completeness of electronic copies of this plan sheet.

JACOBS
3161 MICHELSON, STE 500
IRVINE, CA 92612

ORANGE COUNTY
TRANSPORTATION AUTHORITY
550 S. MAIN STREET
ORANGE, CA 92863-1584

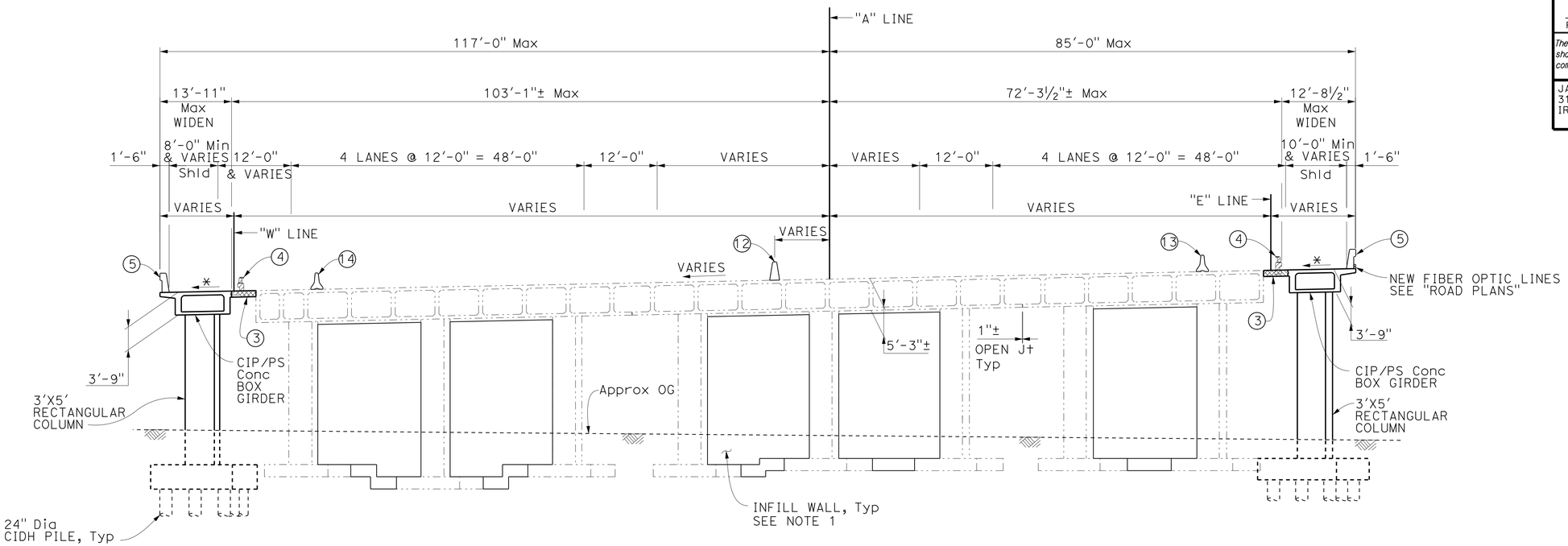

TYPICAL SECTION

1" = 10'

ROUTE 5/1 SEPARATION (WIDEN) BRIDGE NO 55-0510

QUANTITIES

BRIDGE REMOVAL (PORTION), LOCATION B	LUMP	SUM
STRUCTURE EXCAVATION (BRIDGE)	877	CY
STRUCTURE BACKFILL (BRIDGE)	570	CY
RUBBERIZED HOT MIX ASPHALT (OPEN GRADED)	35	TON
TACK COAT	0.1	TON
24" CAST-IN-DRILLED-HOLE CONCRETE PILING	1,510	LF
PRESTRESSING CAST-IN-PLACE CONCRETE	LUMP	SUM
STRUCTURAL CONCRETE, BRIDGE FOOTING	122	CY
STRUCTURAL CONCRETE, BRIDGE	565	CY
STRUCTURAL CONCRETE, APPROACH SLAB(TYPE N)	55	CY
STRUCTURAL CONCRETE, APPROACH SLAB(TYPE R)	54	CY
DRILL AND BOND DOWEL	432	LF
DRILL AND BOND DOWEL (CHEMICAL ADHESIVE)	20	EA
JOINT SEAL (MR 2")	64	LF
BAR REINFORCING STEEL (BRIDGE)	197,124	LB
HEADED BAR REINFORCEMENT	420	EA
SLOPE PAVING (CONCRETE)	39	CY
CONCRETE BARRIER (TYPE 60A MODIFIED)	173	LF
CONCRETE BARRIER (TYPE 736A MODIFIED)	80	LF
CONCRETE BARRIER (TYPE 736 MODIFIED)	352	LF

LEGEND:

- (3) Closure pour
- (4) Remove exist barrier railing and overhang.
- (5) Conc Barrier Type 736 (Mod)
- (12) Construct Median Barrier Type 60A (Mod)
- (14) Temporary Railing Type K, See "ROAD PLANS"
- Closure pour
- Bridge removal (Portion)
- Exist Structure
- New Structure
- * Match exist deck cross slope & grade

NOTE:

1. For exist bent retrofit not shown, see "INFILL WALL DETAILS" sheets.

NOTE:
THE CONTRACTOR SHALL VERIFY ALL CONTROLLING FIELD DIMENSIONS BEFORE ORDERING OR FABRICATING ANY MATERIAL.

Luqi Yang
DESIGN OVERSIGHT Luqi Yang
1-16-13
SIGN OFF DATE

	BY	CHECKED
DESIGN	K. Allam	B. Holton
DETAILS	I. Karkoutli	B. Holton
QUANTITIES	M. Metcalf	G. Armstrong

LOAD & RESISTANCE FACTOR DESIGN — LIVE LOADING: HL93 W/"LOW-BOY"; PERMIT DESIGN VEHICLE

	BY	CHECKED
LAYOUT	I. Karkoutli	A. Moubayed
SPECIFICATIONS	S. Xie	PLANS AND SPECS COMPARED S. Xie

PREPARED FOR THE STATE OF CALIFORNIA DEPARTMENT OF TRANSPORTATION

Alaedin_Moubayed
PROJECT ENGINEER

BRIDGE NO. 55-0510
POST MILES 6.76

ROUTE 5 / 1 SEPARATION (WIDEN)
GENERAL PLAN No. 2

DESIGN GENERAL PLAN SHEET (ENGLISH) (REV.7/16/10)

ORIGINAL SCALE IN INCHES FOR REDUCED PLANS 0 1 2 3

UNIT: 2998
PROJECT NUMBER & PHASE: 12000202791 CONTRACT NO.: 12-0F96E4

DISREGARD PRINTS BEARING EARLIER REVISION DATES — REVISION DATES 4/23/12 8/13/12 11/12/12

SHEET 2 OF 27

FILE => 55-0510-a-gp02.dgn

USERNAME => s1244396 DATE PLOTTED => 29-APR-2013 TIME PLOTTED => 12:58

DIST	COUNTY	ROUTE	POST MILES TOTAL PROJECT	SHEET No	TOTAL SHEETS
12	Ora	5	6.2/8.7	543	595

Khaled Allam 11/12/12
REGISTERED CIVIL ENGINEER DATE

4-29-13
PLANS APPROVAL DATE

REGISTERED PROFESSIONAL ENGINEER Khaled Allam No. 67110 Exp. 09/30/14 CIVIL STATE OF CALIFORNIA

The State of California or its officers or agents shall not be responsible for the accuracy or completeness of electronic copies of this plan sheet.

JACOBS
3161 MICHELSON, STE 500
IRVINE, CA 92612

ORANGE COUNTY TRANSPORTATION AUTHORITY
550 S. MAIN STREET
ORANGE, CA 92863-1584

GENERAL NOTES
LOAD AND RESISTANCE FACTOR DESIGN

DESIGN:

AASHTO LRFD Bridge Design Specifications, 4th Edition with California Amendments Preface Dated November 2011.

SEISMIC DESIGN:

Caltrans Seismic Design Criteria (SDC), Version 1.6 Dated November 2010

DEAD LOAD:

Includes 35 psf for future wearing surface, and 0.10 kips/ft for utilities.

LIVE LOAD:

HL-93 and Permit Design Load

SEISMIC LOADING:

Soil Profile: Shear Wave Velocity V 30 = 804 to 1324 ft/sec for the top 100 feet of soil
Moment Magnitude: Max=7.5
Peak Ground Acceleration 0.4g

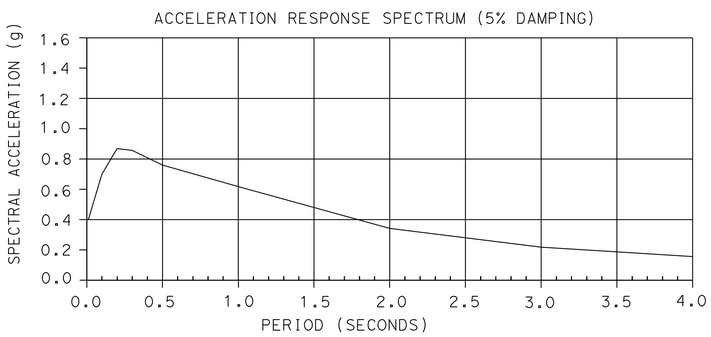

REINFORCED CONCRETE:

f_y = 60 ksi

f'_c = See "CONCRETE STRENGTH AND TYPE LIMITS"

EXISTING REINFORCED CONCRETE:

f_y = 40 Ksi fye = 44 Ksi (Assumed for seismic retrofit)

$f'c$ = 3.0 Ksi $f'ce$ = 5.0 Ksi (Assumed for seismic retrofit)

PRESTRESSED CONCRETE:

For "PRESTRESSING NOTES", see "GIRDER LAYOUT No 1" and "GIRDER LAYOUT No 2" sheets

PLAN SYMBOLS

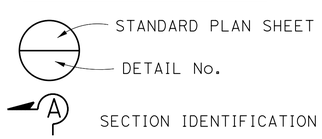

INDEX TO PLANS

SHEET NO.	TITLE
1	GENERAL PLAN No. 1
2	GENERAL PLAN No. 2
3	INDEX TO PLANS
4	BRIDGE REMOVAL DETAILS
5	FOUNDATION PLAN
6	ABUTMENT 1 LAYOUT
7	ABUTMENT 3 LAYOUT
8	ABUTMENT FOOTING PLANS
9	ABUTMENT DETAILS No. 1
10	ABUTMENT DETAILS No. 2
11	BENT LAYOUT
12	BENT DETAILS
13	INFILL WALL DETAILS No. 1
14	INFILL WALL DETAILS No. 2
15	TYPICAL SECTION No. 1
16	TYPICAL SECTION No. 2
17	GIRDER LAYOUT No. 1
18	GIRDER LAYOUT No. 2
19	ADDITIONAL REINFORCEMENT DETAIL No. 1
20	ADDITIONAL REINFORCEMENT DETAIL No. 2
21	STRUCTURE APPROACH TYPE N(30D)
22	STRUCTURE APPROACH TYPE R(30D)
23	STRUCTURE APPROACH DRAINAGE DETAILS
24	SLOPE PAVING-FULL SLOPE
25	LOG OF TEST BORINGS 1 OF 3
26	LOG OF TEST BORINGS 2 OF 3
27	LOG OF TEST BORINGS 3 OF 3

STANDARD PLANS DATED 2010

A10A	ABBREVIATIONS (SHEET 1 OF 2)
A10B	ABBREVIATIONS (SHEET 2 OF 2)
A10C	LINES AND SYMBOLS (SHEET 1 OF 3)
A10D	LINES AND SYMBOLS (SHEET 2 OF 3)
A10E	LINES AND SYMBOLS (SHEET 3 OF 3)
A10F	LEGEND - SOIL (SHEET 1 OF 2)
A10G	LEGEND - SOIL (SHEET 2 OF 2)
A62B	LIMITS OF PAYMENT FOR EXCAVATION AND BACKFILL - BRIDGE SURCHARGE AND WALL
A62C	LIMITS OF PAYMENT FOR EXCAVATION AND BACKFILL - BRIDGE
T3A	TEMPORARY RAILING (TYPE K)
T3B	TEMPORARY RAILING (TYPE K)
A76A	CONCRETE BARRIER TYPE 60
B0-1	BRIDGE DETAILS
B0-3	BRIDGE DETAILS
B0-5	BRIDGE DETAILS
B0-13	BRIDGE DETAILS
B2-3	16" AND 24" CAST-IN-DRILLED-HOLE CONCRETE PILE
RSP B3-5	RETAINING WALL DETAILS NO. 1
B7-1	BOX GIRDER DETAILS
B6-21	JOINT SEALS (MAXIMUM MOVEMENT RATING = 2")
B8-5	CAST-IN-PLACE PRESTRESSED GIRDER DETAILS
B11-56	CONCRETE BARRIER TYPE 736

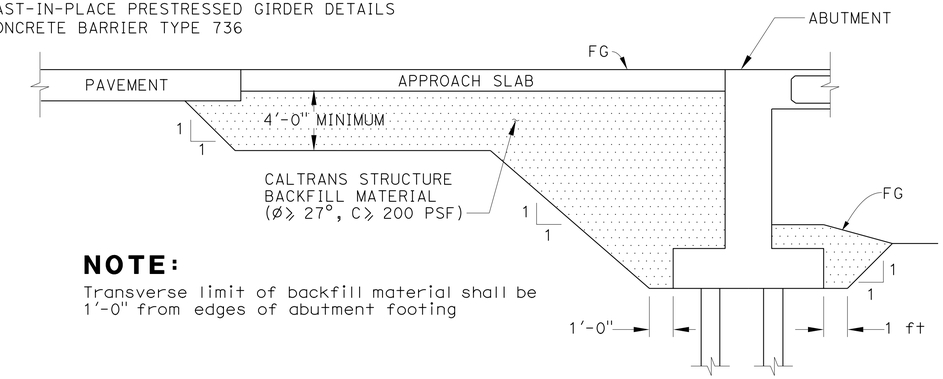

NOTE:
Transverse limit of backfill material shall be 1'-0" from edges of abutment footing

LIMITS OF PAYMENT FOR STRUCTURAL EXCAVATION AND BACKFILL IN BRIDGE EMBANKMENT

NO SCALE

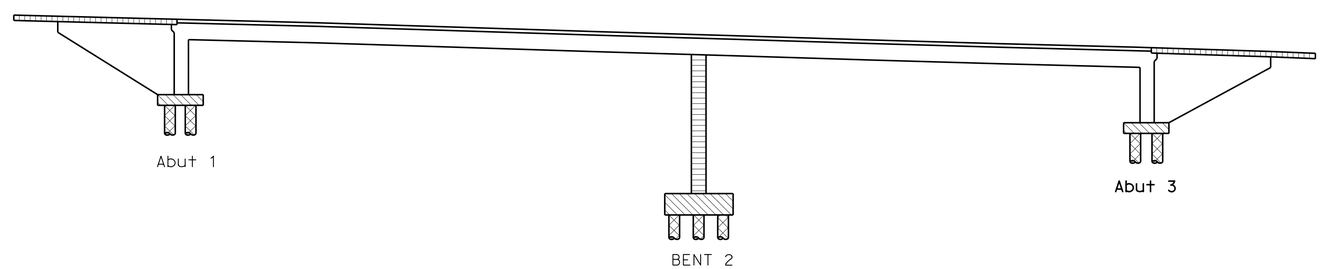

Structural Concrete, Bridge, (f'c =5.0 Ksi @ 28 days)

Structural Concrete, Bridge, Column (Including Infill Wall) (f'c =4.0 Ksi @ 28 days)

Structural Concrete, CIDH Concrete Piling

Structural Concrete, Bridge Footing (f'c =4.0 ksi @ 28 days)

Structural Concrete, Approach Slab

CONCRETE STRENGTH AND TYPE LIMITS

NO SCALE

NOTE:
THE CONTRACTOR SHALL VERIFY ALL CONTROLLING FIELD DIMENSIONS BEFORE ORDERING OR FABRICATING ANY MATERIAL.

Luqi Yang
DESIGN OVERSIGHT Luqi Yang
1-16-13
SIGN OFF DATE

	BY	CHECKED
DESIGN	K. Allam	B. Holton
DETAILS	I. Karkoutli	B. Holton
QUANTITIES	M. Metcalf	G. Armstrong

PREPARED FOR THE STATE OF CALIFORNIA DEPARTMENT OF TRANSPORTATION

Alaedin Moubayed
PROJECT ENGINEER

BRIDGE NO. 55-0510
POST MILES 6.76

ROUTE 5 / 1 SEPARATION (WIDEN)
INDEX TO PLANS

DESIGN DETAIL SHEET (ENGLISH) (REV.7/16/10)

ORIGINAL SCALE IN INCHES FOR REDUCED PLANS 0 1 2 3

UNIT: 2998
PROJECT NUMBER & PHASE: 12000202791
CONTRACT NO.: 12-0F96E4

DISREGARD PRINTS BEARING EARLIER REVISION DATES

REVISION DATES 8/23/12 9/13/12 11/12/12

SHEET 3 OF 27

FILE => 55-0510-a-itp.dgn

USERNAME => s124496 DATE PLOTTED => 29-APR-2013 TIME PLOTTED => 12:58

DIST	COUNTY	ROUTE	POST MILES TOTAL PROJECT	SHEET No	TOTAL SHEETS
12	Ora	5	6.2/8.7	544	595

Khaled Allam 11/12/12
REGISTERED CIVIL ENGINEER DATE

4-29-13
PLANS APPROVAL DATE

REGISTERED PROFESSIONAL ENGINEER
Khaled Allam
No. 67110
Exp. 09/30/14
CIVIL
STATE OF CALIFORNIA

The State of California or its officers or agents shall not be responsible for the accuracy or completeness of electronic copies of this plan sheet.

JACOBS
3161 MICHELSON, STE 500
IRVINE, CA 92612

ORANGE COUNTY
TRANSPORTATION AUTHORITY
550 S. MAIN STREET
ORANGE, CA 92863-1584

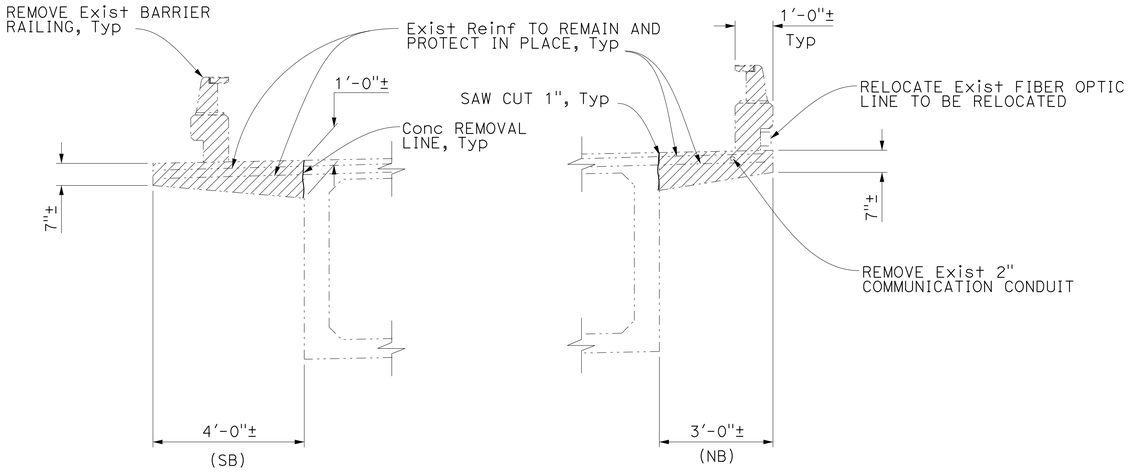

OVERHANG REMOVAL DETAILS
NO SCALE

NOTES:

1. Limit of overhang removal is from BB to EB.
2. Limit of barrier removal on bridge is between ends of WW.

LEGEND:

Bridge removal (Portion)

Existing Structure

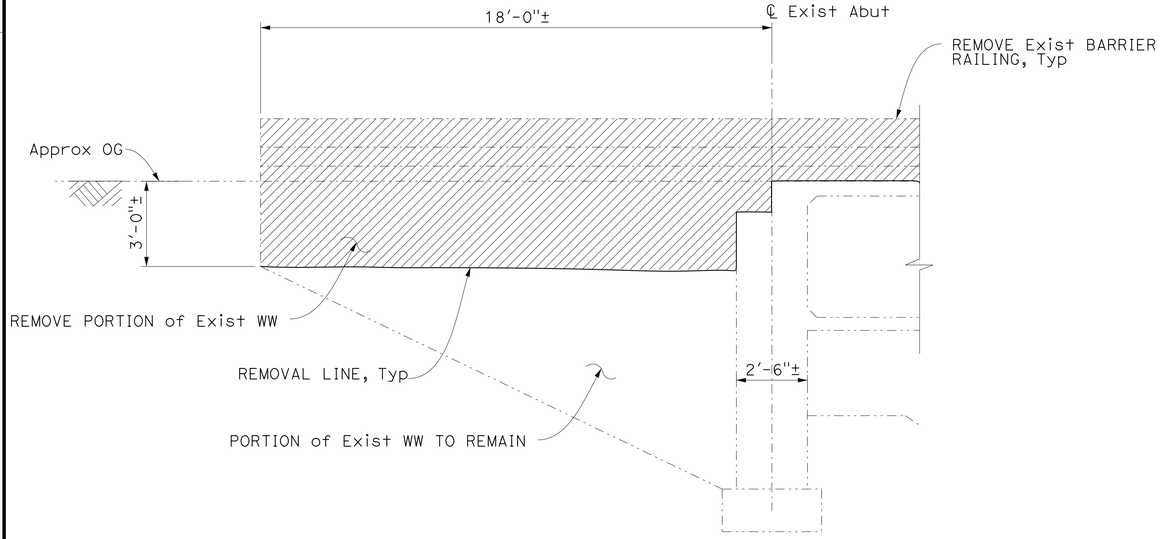

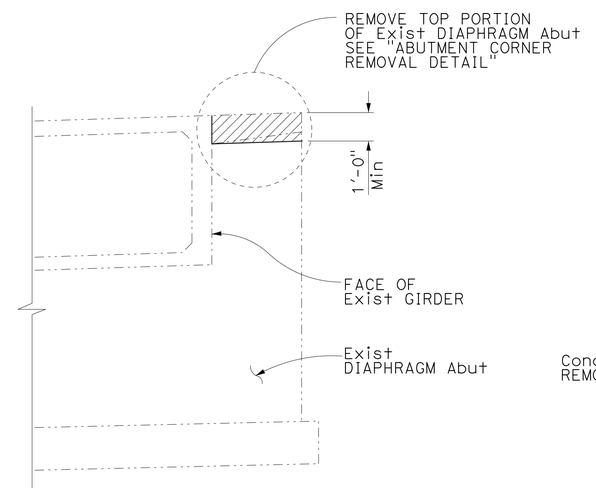

ABUTMENT AND WINGWALL REMOVAL DETAILS
NO SCALE

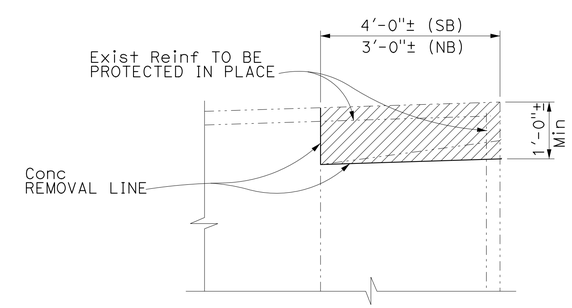

ABUTMENT CORNER REMOVAL DETAIL
NO SCALE

NOTE:
THE CONTRACTOR SHALL VERIFY ALL CONTROLLING FIELD DIMENSIONS BEFORE ORDERING OR FABRICATING ANY MATERIAL.

Luqi Yang
DESIGN OVERSIGHT Luqi Yang
1-16-13
SIGN OFF DATE

	BY	CHECKED
DESIGN	K. Allam	B. Holton
DETAILS	I. Karkoutli	B. Holton
QUANTITIES	M. Metcalf	G. Armstrong

PREPARED FOR THE STATE OF CALIFORNIA DEPARTMENT OF TRANSPORTATION

Alaedin Moubayed
PROJECT ENGINEER

BRIDGE NO. 55-0510
POST MILES 6.76

ROUTE 5 / 1 SEPARATION (WIDEN)
BRIDGE REMOVAL DETAILS

DESIGN DETAIL SHEET (ENGLISH) (REV.7/16/10)

ORIGINAL SCALE IN INCHES FOR REDUCED PLANS 0 1 2 3

UNIT: 2998
PROJECT NUMBER & PHASE: 12000202791 CONTRACT NO.: 12-0F96E4

DISREGARD PRINTS BEARING EARLIER REVISION DATES

REVISION DATES 4/23/12 8/13/12 11/12/12

SHEET 4 OF 27

FILE => 55-0510-c-brp.dgn

USERNAME => s124496 DATE PLOTTED => 29-APR-2013 TIME PLOTTED => 12:58

DIST	COUNTY	ROUTE	POST MILES TOTAL PROJECT	SHEET No	TOTAL SHEETS
12	Ora	5	6.2/8.7	545	595

Khaled Allam 11/12/12
REGISTERED CIVIL ENGINEER DATE

4-29-13
PLANS APPROVAL DATE

REGISTERED PROFESSIONAL ENGINEER — Khaled Allam No. 67110 Exp. 09/30/14 CIVIL — STATE OF CALIFORNIA

The State of California or its officers or agents shall not be responsible for the accuracy or completeness of electronic copies of this plan sheet.

JACOBS
3161 MICHELSON, STE 500
IRVINE, CA 92612

ORANGE COUNTY
TRANSPORTATION AUTHORITY
550 S. MAIN STREET
ORANGE, CA 92863-1584

BENCHMARKS:

Description: 3¾" US Coast and Geodetic survey Bronzed Disk Stamped "F 785 1946", set in the top of a concrete bridge abutment. Monument is located in the Southwesterly corner of the Atchinso/Topeka and Santa Fe Railway overcrossing of San Mateo Creek.

Designation: F-785

NOTES:

1. For alignment geometry information, See "GENERAL PLAN NO. 1" Sheet.
2. Locations of existing structure foundations are approximate.

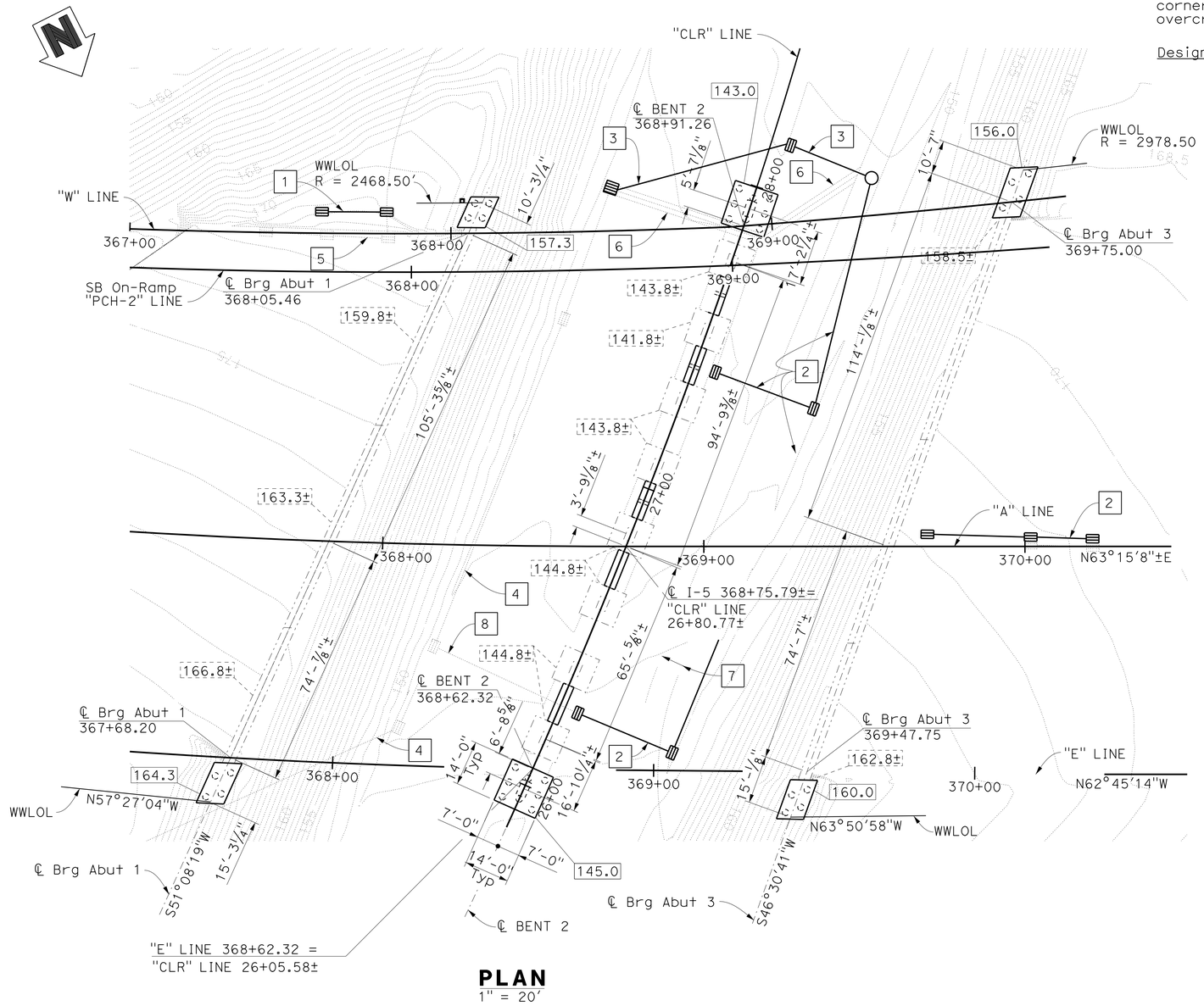

PLAN
1" = 20'

DRAINAGE NOTES:

1	18" RCP
2	24" RCP
3	36" RCP
4	Exist 24" RCP
5	Exist 18" RCP to be abandoned
6	Exist 36" RCP to be abandoned and removed as needed
7	Exist 84" RCP
8	Exist 24" RCP to be abandoned and removed as needed

LEGEND:

XXX.X	Bottom of footing elevation
XXX.X±	Bottom of Exist footing elevation adjusted for revised datum
	Existing Structure
	New Structure
	New 24" Dia CIDH Pile

PILE DATA TABLE:

Location	Pile Type	Nominal Resistance Compression (kips)	Nominal Resistance Tension (kips)	Design Tip Elevation (ft)	Specified Tip Elevation (ft)
RIGHT BRIDGE (I-5 NORTHBOUND)					
Abut 1	24" CIDH	290	0	+112 (a) +149 (c) +134 (d)	+112
Bent 2	24" CIDH	360	190	+100 (a) +112 (b) +123 (c) +113 (d)	+100
Abut 3	24" CIDH	280	0	+117 (a) +144 (c) +130 (d)	+117
LEFT BRIDGE (I-5 SOUTHBOUND)					
Abut 1	24" CIDH	250	0	+117 (a) +145 (c) +127 (d)	+117
Bent 2	24" CIDH	370	200	+91 (a) +99 (b) +124 (c) +114 (d)	+91
Abut 3	24" CIDH	270	0	+110 (a) +144 (c) +126 (d)	+110

Note: Design tip elevation is controlled by the following demands:
(a) Compression, (b) Tension, (c) Settlement, (d) Lateral Loads

NOTE:

Bottom of existing footing elevations do not correspond to as-built. Difference between as-built elevation and elevation shown is 1.75'±.

NOTE:
THE CONTRACTOR SHALL VERIFY ALL CONTROLLING FIELD DIMENSIONS BEFORE ORDERING OR FABRICATING ANY MATERIAL.

L. Cheang 11/12/12
GEOTECHNICAL PROFESSIONAL APPROVAL DATE

Luqi Yang
DESIGN OVERSIGHT Luqi Yang
1-16-13
SIGN OFF DATE

SCALE: As Shown	VERT.DATUM NAD83, 1991.35 Epoch	HORZ.DATUMNAVD88, O.C.S. 1995 Adj.	
PHOTOGRAMMETRY AS OF: Caltrans	ALIGNMENT TIES	W. Estepa	
SURVEYED	BY R. Gould	DRAFTED	BY I. Karkoutli
FIELD CHECKED	BY K. Launen	CHECKED	BY S. Xie

	BY	CHECKED
DESIGN	K. Allam	B. Holton
DETAILS	I. Karkoutli	B. Holton
QUANTITIES	M. Metcalf	G. Armstrong

PREPARED FOR THE STATE OF CALIFORNIA DEPARTMENT OF TRANSPORTATION

Alaedin Moubayed
PROJECT ENGINEER

BRIDGE NO. 55-0510
POST MILES 6.76

ROUTE 5 / 1 SEPARATION (WIDEN)
FOUNDATION PLAN

FOUNDATION PLAN SHEET (ENGLISH) (REV.7/16/10)

ORIGINAL SCALE IN INCHES FOR REDUCED PLANS 0 1 2 3

UNIT: 2998
PROJECT NUMBER & PHASE: 12000202791 CONTRACT NO.: 12-0F96E4

DISREGARD PRINTS BEARING EARLIER REVISION DATES

REVISION DATES 4/23/12 8/23/12 11/12/12

SHEET 5 OF 27

FILE => 55-0510-e-fdp101.dgn

USERNAME => s124496 DATE PLOTTED => 29-APR-2013 TIME PLOTTED => 12:58

DIST	COUNTY	ROUTE	POST MILES TOTAL PROJECT	SHEET No	TOTAL SHEETS
12	Ora	5	6.2/8.7	546	595

Khaled Allam 11/12/12
REGISTERED CIVIL ENGINEER DATE

4-29-13
PLANS APPROVAL DATE

REGISTERED PROFESSIONAL ENGINEER Khaled Allam No. 67110 Exp. 09/30/14 CIVIL STATE OF CALIFORNIA

The State of California or its officers or agents shall not be responsible for the accuracy or completeness of electronic copies of this plan sheet.

JACOBS
3161 MICHELSON, STE 500
IRVINE, CA 92612

ORANGE COUNTY TRANSPORTATION AUTHORITY
550 S. MAIN STREET
ORANGE, CA 92863-1584

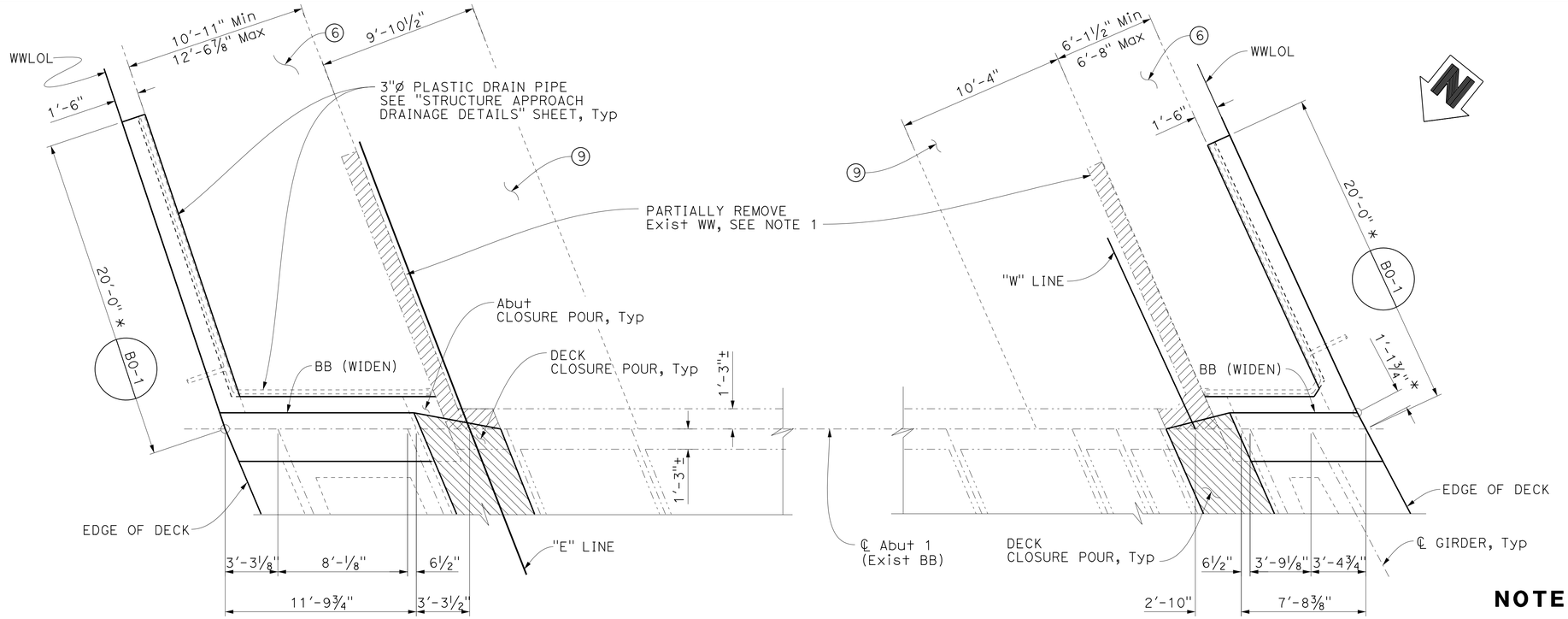

PLAN
¼" = 1'-0"

* DIMENSION MEASURED ALONG WWLOL

LEGEND:

- ⑥ Structure Approach, Type N(30D)
- ⑨ Structure Approach, Type R(30D)
- Closure pour
- Bridge removal (Portion)
- Existing Structure
- New Structure

NOTES:

1. For limits of removal, see "BRIDGE REMOVAL DETAILS" sheet.
2. For cut sections, see "ABUTMENT DETAILS" sheets.
3. For pile layout and footing dimensions, see "ABUTMENT FOOTING PLANS" sheet.
4. For shear key detail, see "ABUTMENT DETAILS No. 1" sheet.
5. See "STRUCTURE APPROACH DRAINAGE DETAILS" sheet.
6. For dowel spacing and details, see "SECTION B-B" on "ABUTMENT DETAILS No. 2" sheet.
7. Do not backfill until after prestressing operation and abutment closure pour are completed.

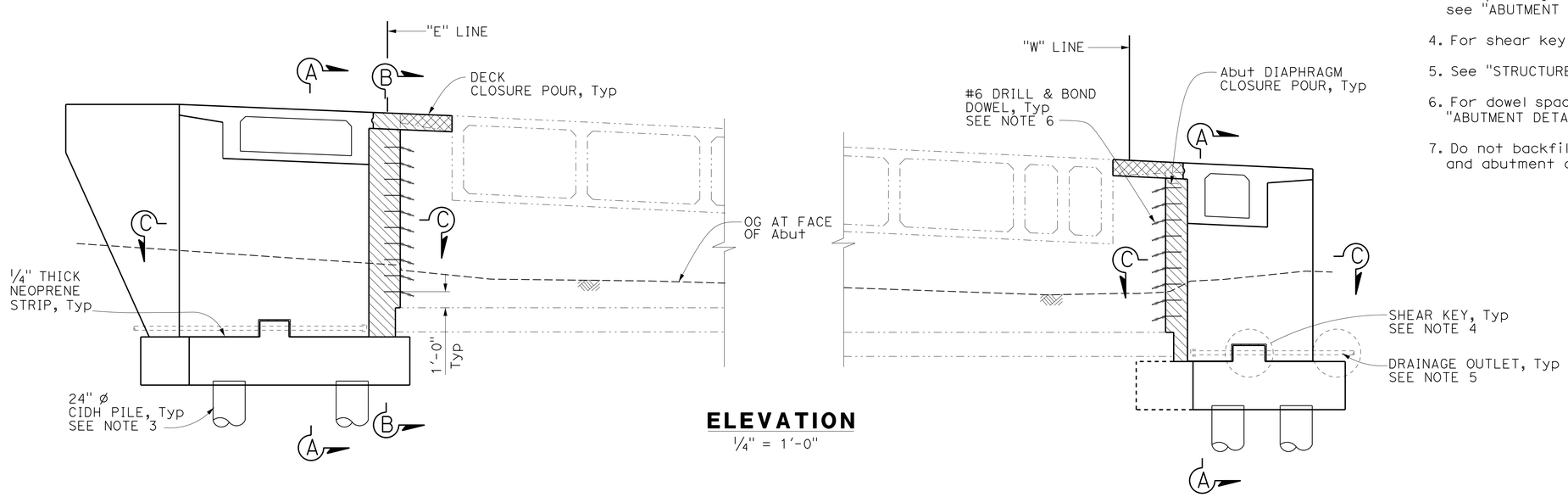

ELEVATION
¼" = 1'-0"

NOTE:
THE CONTRACTOR SHALL VERIFY ALL CONTROLLING FIELD DIMENSIONS BEFORE ORDERING OR FABRICATING ANY MATERIAL.

Luqi Yang
DESIGN OVERSIGHT Luqi Yang
1-16-13
SIGN OFF DATE

	BY	CHECKED
DESIGN	K. Allam	B. Holton
DETAILS	I. Karkoutli	B. Holton
QUANTITIES	M. Metcalf	G. Armstrong

PREPARED FOR THE STATE OF CALIFORNIA DEPARTMENT OF TRANSPORTATION

Alaedin Moubayed
PROJECT ENGINEER

BRIDGE NO. 55-0510
POST MILES 6.76

ROUTE 5 / 1 SEPARATION (WIDEN)
ABUTMENT 1 LAYOUT

DESIGN DETAIL SHEET (ENGLISH) (REV.7/16/10)

ORIGINAL SCALE IN INCHES FOR REDUCED PLANS 0 1 2 3

UNIT: 2998
PROJECT NUMBER & PHASE: 12000202791
CONTRACT NO.: 12-0F96E4

DISREGARD PRINTS BEARING EARLIER REVISION DATES
REVISION DATES 4/23/12 8/13/12 11/12/12

SHEET 6 OF 27

FILE => 55-0510-f-a01_1o1.dgn

USERNAME => s124496 DATE PLOTTED => 29-APR-2013 TIME PLOTTED => 12:58

DIST	COUNTY	ROUTE	POST MILES TOTAL PROJECT	SHEET No	TOTAL SHEETS
12	Ora	5	6.2/8.7	547	595

Khaled Allam 11/12/12
REGISTERED CIVIL ENGINEER DATE

4-29-13
PLANS APPROVAL DATE

REGISTERED PROFESSIONAL ENGINEER Khaled Allam No. 67110 Exp. 09/30/14 CIVIL STATE OF CALIFORNIA

The State of California or its officers or agents shall not be responsible for the accuracy or completeness of electronic copies of this plan sheet.

JACOBS
3161 MICHELSON, STE 500
IRVINE, CA 92612

ORANGE COUNTY TRANSPORTATION AUTHORITY
550 S. MAIN STREET
ORANGE, CA 92863-1584

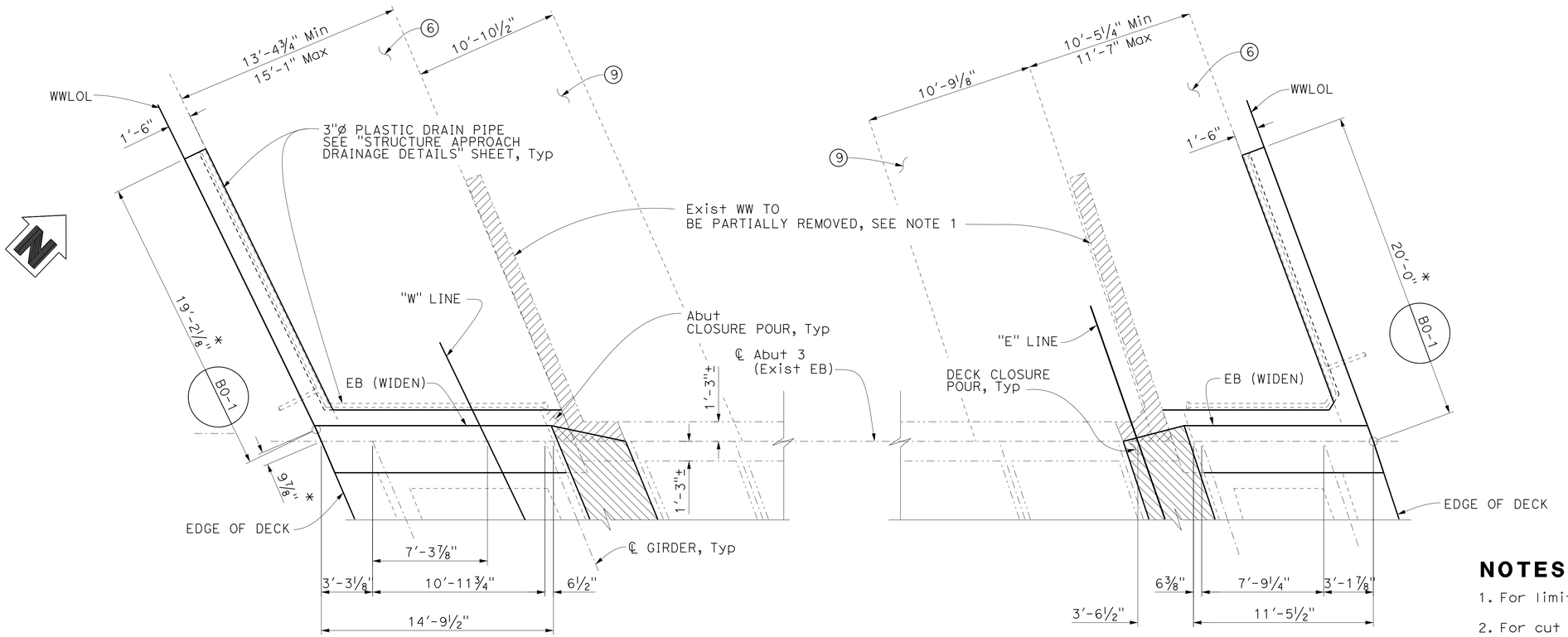

PLAN
¼" = 1'-0"

* DIMENSION MEASURED ALONG WWLOL

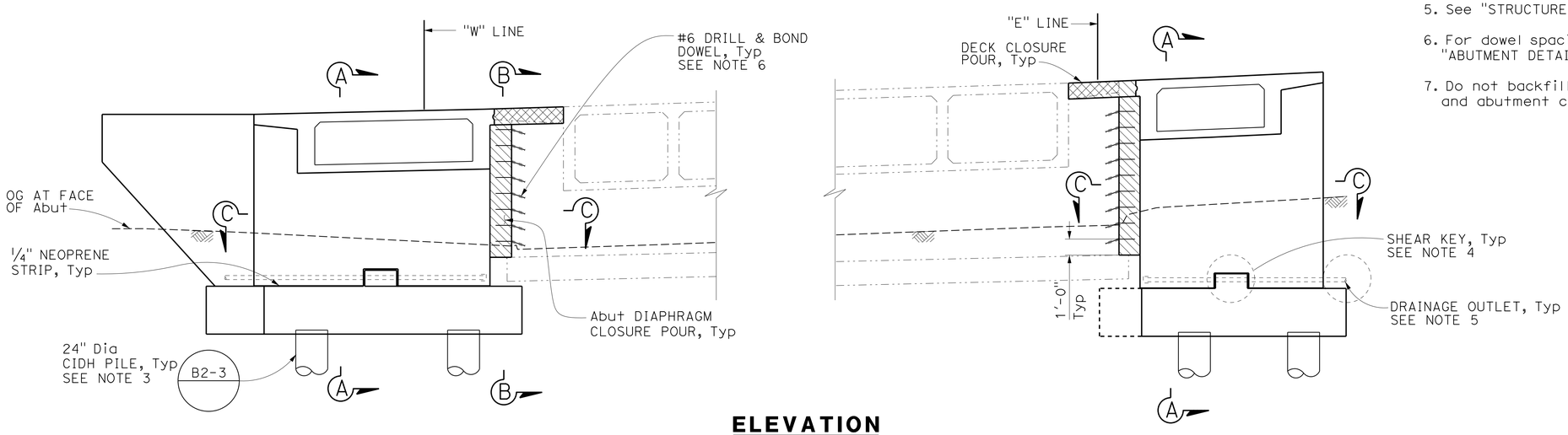

ELEVATION
¼" = 1'-0"

LEGEND:

- ⑥ Structure Approach, Type N(30D)
- ⑨ Structure Approach, Type R(30D)
- Closure pour
- Bridge removal (Portion)
- Existing Structure
- New Structure

NOTES:

1. For limits of removal, see "BRIDGE REMOVAL DETAILS" sheet.
2. For cut sections, see "ABUTMENT DETAILS" sheets.
3. For pile layout and footing dimensions, see "ABUTMENT FOOTING PLANS" sheet.
4. For shear key detail, see "ABUTMENT DETAILS No. 1" sheet.
5. See "STRUCTURE APPROACH DRAINAGE DETAILS" sheet.
6. For dowel spacing and details, see "SECTION B-B" on "ABUTMENT DETAILS No. 2" sheet.
7. Do not backfill until after prestressing operation and abutment closure pour are completed.

NOTE:
THE CONTRACTOR SHALL VERIFY ALL CONTROLLING FIELD DIMENSIONS BEFORE ORDERING OR FABRICATING ANY MATERIAL.

Luqi Yang
DESIGN OVERSIGHT Luqi Yang
1-16-13
SIGN OFF DATE

	BY	CHECKED
DESIGN	K. Allam	B. Holton
DETAILS	I. Karkoutli	B. Holton
QUANTITIES	M. Metcalf	G. Armstrong

PREPARED FOR THE STATE OF CALIFORNIA DEPARTMENT OF TRANSPORTATION

Alaedin Moubayed
PROJECT ENGINEER

BRIDGE NO. 55-0510
POST MILES 6.76

ROUTE 5 / 1 SEPARATION (WIDEN)
ABUTMENT 3 LAYOUT

DESIGN DETAIL SHEET (ENGLISH) (REV.7/16/10)

ORIGINAL SCALE IN INCHES FOR REDUCED PLANS 0 1 2 3

UNIT: 2998
PROJECT NUMBER & PHASE: 12000202791
CONTRACT NO.: 12-0F96E4

DISREGARD PRINTS BEARING EARLIER REVISION DATES

REVISION DATES: 4/23/12 8/13/12 11/12/12

SHEET 7 OF 27

FILE => 55-0510-f-a01_lo3.dgn

USERNAME => s124436 DATE PLOTTED => 29-APR-2013 TIME PLOTTED => 12:58

DIST	COUNTY	ROUTE	POST MILES TOTAL PROJECT	SHEET No	TOTAL SHEETS
12	Ora	5	6.2/8.7	548	595

Khaled Allam 11/12/12
REGISTERED CIVIL ENGINEER DATE

4-29-13
PLANS APPROVAL DATE

REGISTERED PROFESSIONAL ENGINEER Khaled Allam No. 67110 Exp. 09/30/14 CIVIL STATE OF CALIFORNIA

The State of California or its officers or agents shall not be responsible for the accuracy or completeness of electronic copies of this plan sheet.

JACOBS
3161 MICHELSON, STE 500
IRVINE, CA 92612

ORANGE COUNTY TRANSPORTATION AUTHORITY
550 S. MAIN STREET
ORANGE, CA 92863-1584

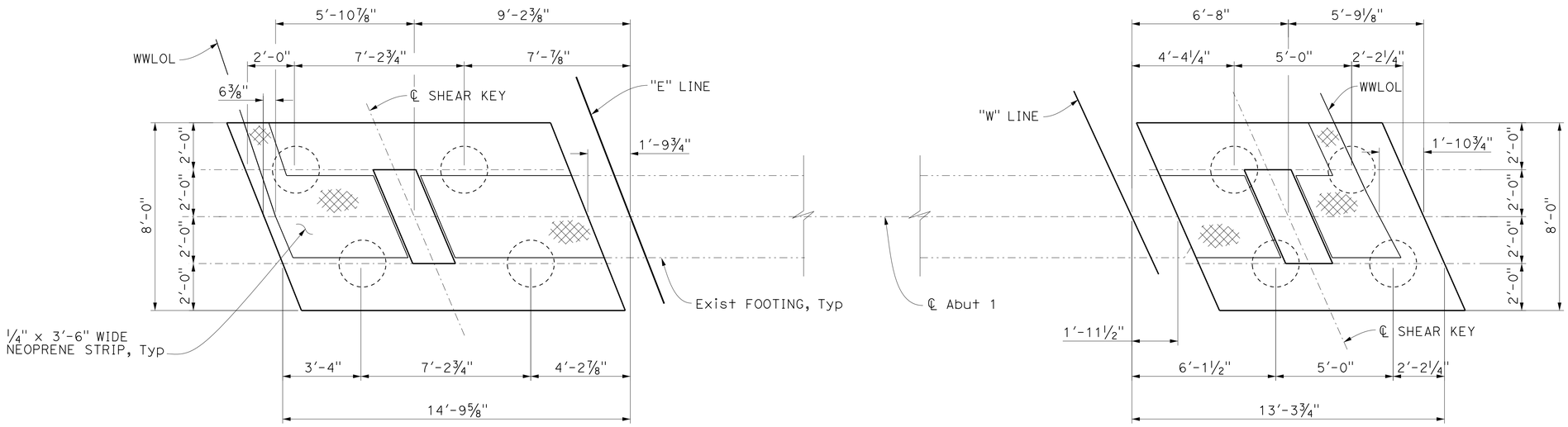

(NB) **(SB)**

FOOTING PLAN - ABUTMENT 1

⅜" = 1'-0"

LEGEND:

- Neoprene strip
- Existing Structure
- New Structure
- 24" Dia CIDH Pile

NOTES:

1. For abutment layout, see "ABUTMENT LAYOUT" sheets.
2. No two adjacent piles can be constructed concurrently.
3. For Shear Key details, see "ABUTMENT DETAILS No. 1" sheet.
4. Neoprene strip should also extend under portion of wingwall within footing.

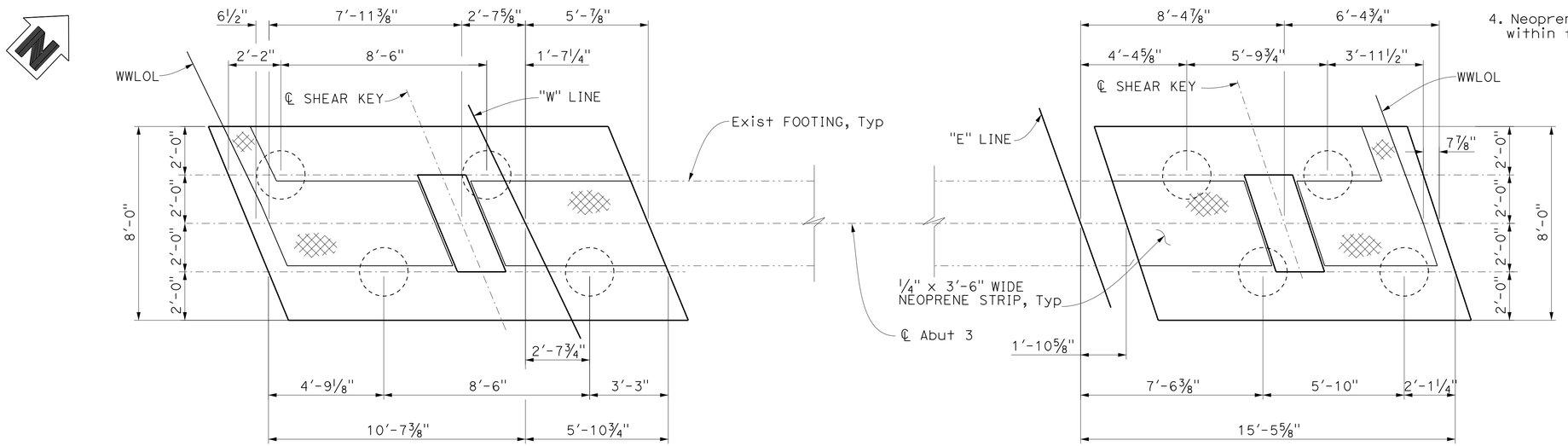

(SB) **(NB)**

FOOTING PLAN - ABUTMENT 3

⅜" = 1'-0"

NOTE:
THE CONTRACTOR SHALL VERIFY ALL CONTROLLING FIELD DIMENSIONS BEFORE ORDERING OR FABRICATING ANY MATERIAL.

Luqi Yang
DESIGN OVERSIGHT Luqi Yang
1-16-13
SIGN OFF DATE

	BY	CHECKED
DESIGN	K. Allam	B. Holton
DETAILS	I. Karkoutli	B. Holton
QUANTITIES	M. Metcalf	G. Armstrong

PREPARED FOR THE STATE OF CALIFORNIA DEPARTMENT OF TRANSPORTATION

Alaedin Moubayed
PROJECT ENGINEER

BRIDGE NO. 55-0510
POST MILES 6.76

ROUTE 5 / 1 SEPARATION (WIDEN)
ABUTMENT FOOTING PLANS

DESIGN DETAIL SHEET (ENGLISH) (REV.7/16/10)

ORIGINAL SCALE IN INCHES FOR REDUCED PLANS 0 1 2 3

UNIT: 2998
PROJECT NUMBER & PHASE: 12000202791 CONTRACT NO.: 12-0F96E4

DISREGARD PRINTS BEARING EARLIER REVISION DATES

REVISION DATES 4/23/12 8/13/12 11/12/12

SHEET 8 OF 27

FILE => 55-0510-f-a01dt00.dgn

USERNAME => s124496 DATE PLOTTED => 29-APR-2013 TIME PLOTTED => 12:58

DIST	COUNTY	ROUTE	POST MILES TOTAL PROJECT	SHEET No	TOTAL SHEETS
12	Ora	5	6.2/8.7	549	595

Khaled Allam 11/12/12
REGISTERED CIVIL ENGINEER DATE

4-29-13
PLANS APPROVAL DATE

REGISTERED PROFESSIONAL ENGINEER Khaled Allam No. 67110 Exp. 09/30/14 CIVIL STATE OF CALIFORNIA

The State of California or its officers or agents shall not be responsible for the accuracy or completeness of electronic copies of this plan sheet.

JACOBS
3161 MICHELSON, STE 500
IRVINE, CA 92612

ORANGE COUNTY TRANSPORTATION AUTHORITY
550 S. MAIN STREET
ORANGE, CA 92863-1584

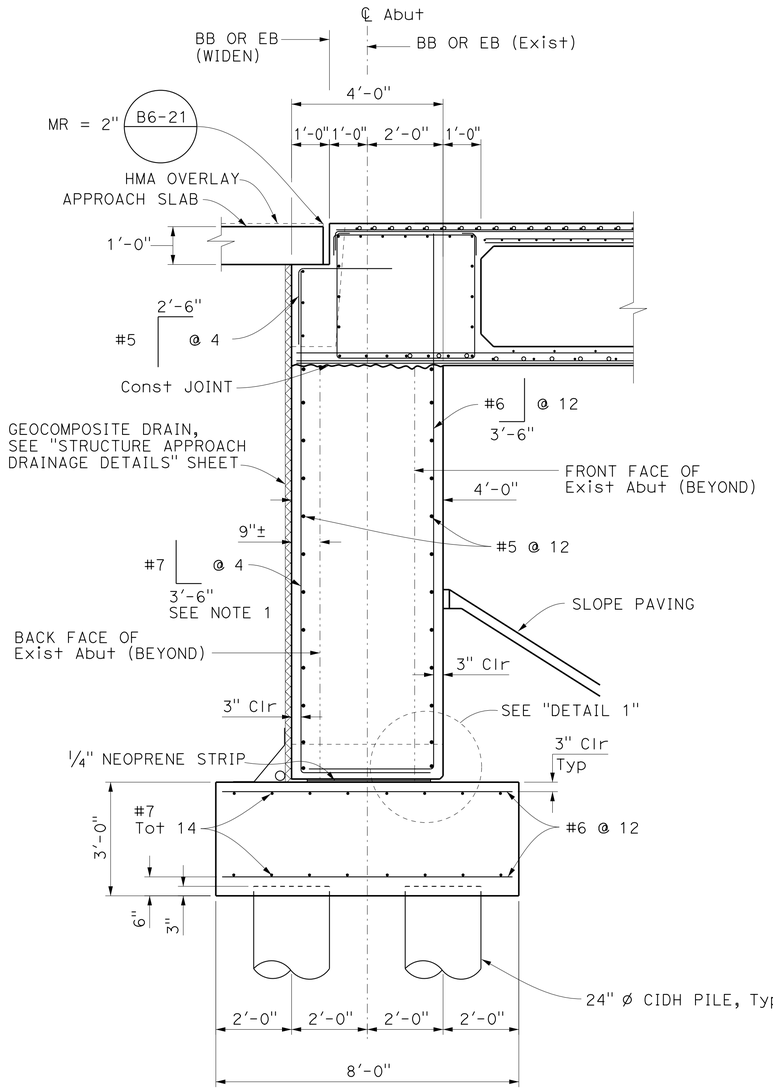

SECTION A-A
1/2" = 1'-0"

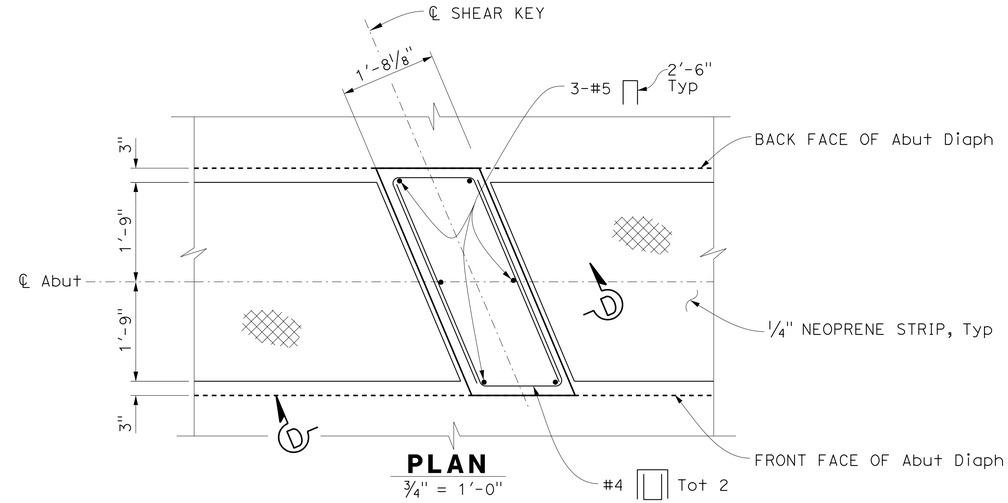

PLAN
3/4" = 1'-0"

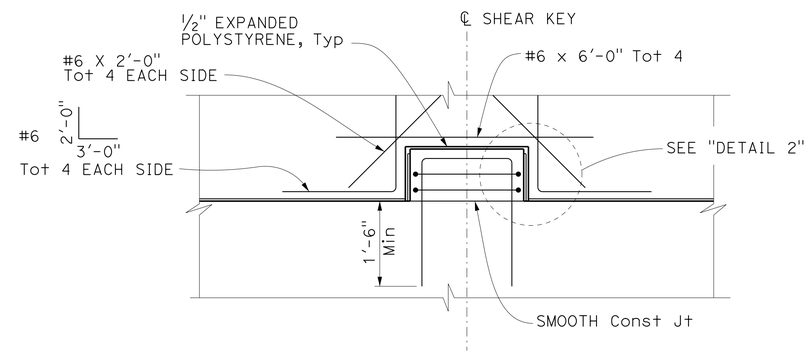

SECTION D-D

SHEAR KEY DETAILS
3/4" = 1'-0"

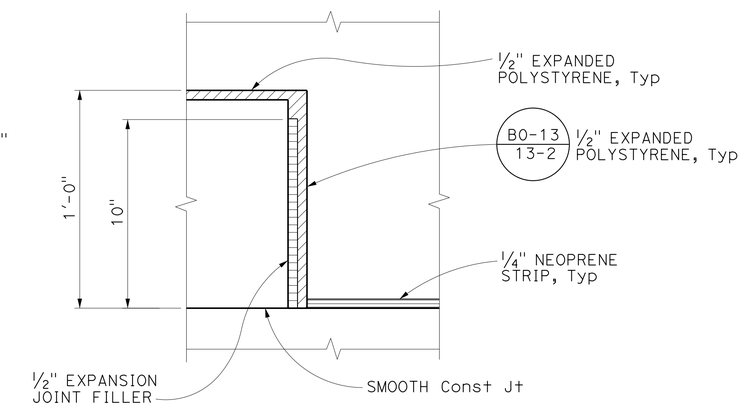

DETAIL 2
NO SCALE

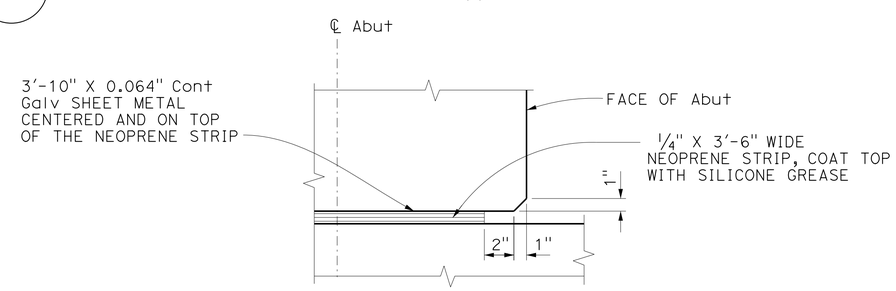

DETAIL 1
NO SCALE

LEGEND:

Neoprene Strip

NOTE:

1. Cut #7 bar within P/S anchorage blockout, weld splice bar back after P/S operation.

NOTE:
THE CONTRACTOR SHALL VERIFY ALL CONTROLLING FIELD DIMENSIONS BEFORE ORDERING OR FABRICATING ANY MATERIAL.

Luqi Yang
DESIGN OVERSIGHT Luqi Yang
1-16-13
SIGN OFF DATE

	BY	CHECKED
DESIGN	K. Allam	B. Holton
DETAILS	I. Karkoutli	B. Holton
QUANTITIES	M. Metcalf	G. Armstrong

PREPARED FOR THE STATE OF CALIFORNIA DEPARTMENT OF TRANSPORTATION

Alaedin Moubayed
PROJECT ENGINEER

BRIDGE NO. 55-0510
POST MILES 6.76

ROUTE 5 / 1 SEPARATION (WIDEN)
ABUTMENT DETAILS No. 1

DESIGN DETAIL SHEET (ENGLISH) (REV.7/16/10)

ORIGINAL SCALE IN INCHES FOR REDUCED PLANS 0 1 2 3

UNIT: 2998
PROJECT NUMBER & PHASE: 12000202791 CONTRACT NO.: 12-0F96E4

DISREGARD PRINTS BEARING EARLIER REVISION DATES

REVISION DATES 4/23/12 8/13/12 11/12/12

SHEET 9 OF 27

FILE => 55-0510-f-a01dt01.dgn

USERNAME => s124496 DATE PLOTTED => 29-APR-2013 TIME PLOTTED => 12:58

DIST	COUNTY	ROUTE	POST MILES TOTAL PROJECT	SHEET No	TOTAL SHEETS
12	Ora	5	6.2/8.7	550	595

Khaled Allam 11/12/12
REGISTERED CIVIL ENGINEER DATE

4-29-13
PLANS APPROVAL DATE

REGISTERED PROFESSIONAL ENGINEER — Khaled Allam — No. 67110 — Exp. 09/30/14 — CIVIL — STATE OF CALIFORNIA

The State of California or its officers or agents shall not be responsible for the accuracy or completeness of electronic copies of this plan sheet.

JACOBS
3161 MICHELSON, STE 500
IRVINE, CA 92612

ORANGE COUNTY TRANSPORTATION AUTHORITY
550 S. MAIN STREET
ORANGE, CA 92863-1584

NOTE:

1. For wingwall reinf detail and callout not shown, See B0-1

LEGEND:

- Closure pour
- Bridge removal (Portion)

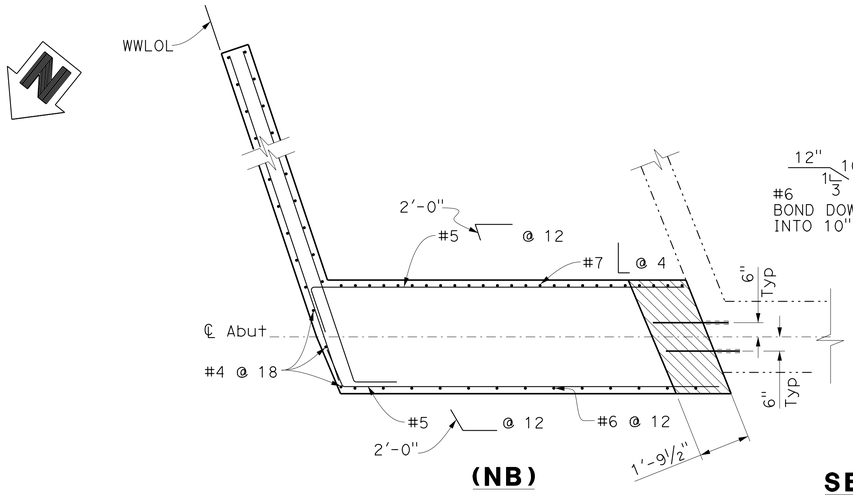

(NB)

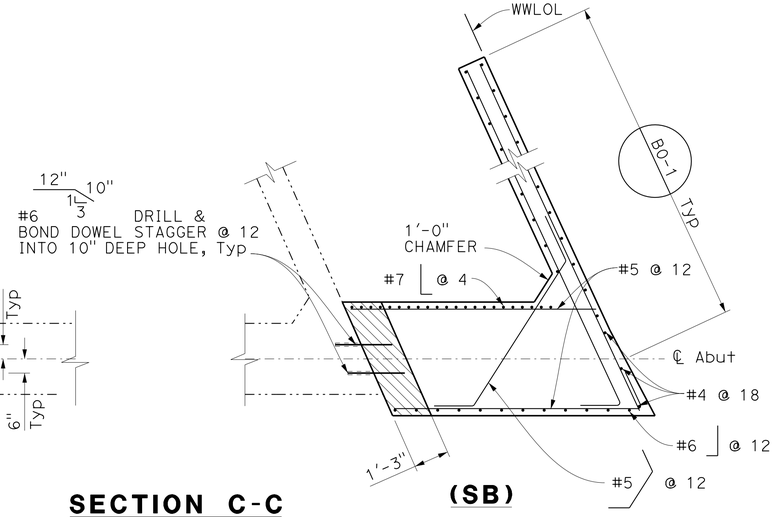

(SB)

SECTION C-C

½" = 1'-0"

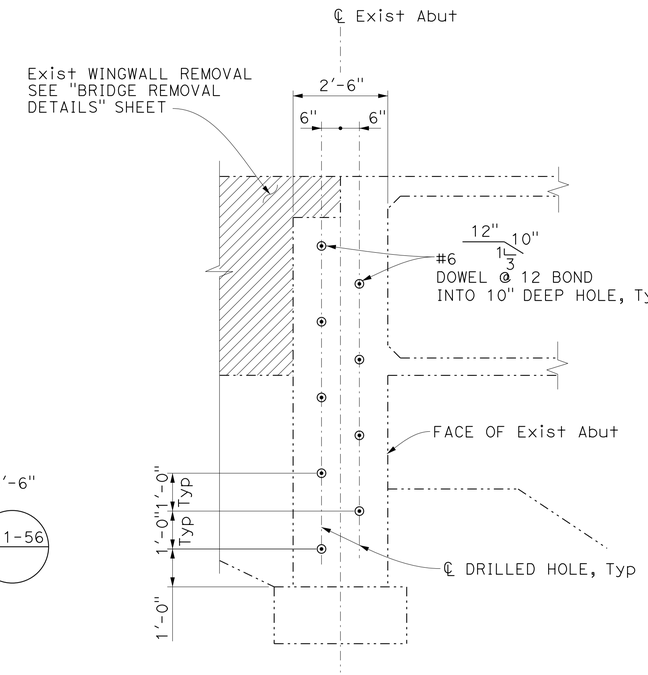

SECTION B-B

½" = 1'-0"

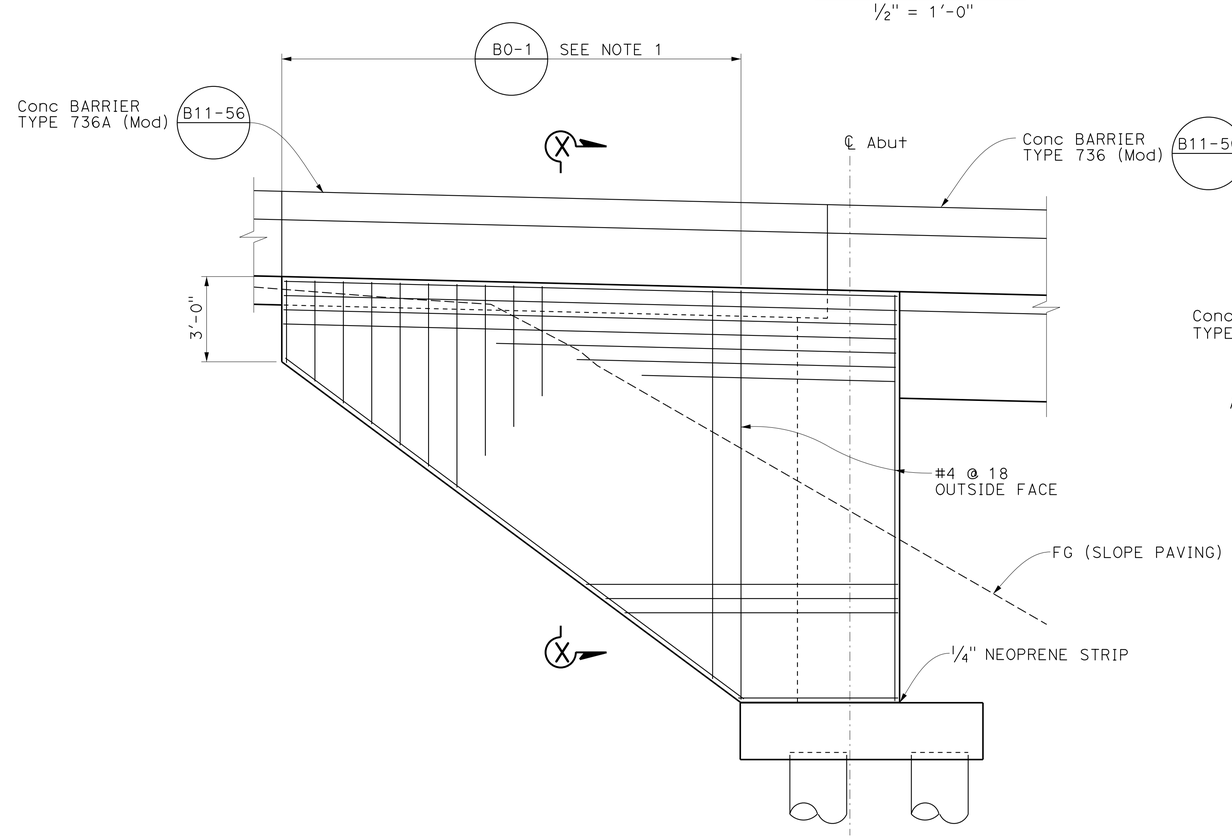

WINGWALL ELEVATION

½" = 1'-0"

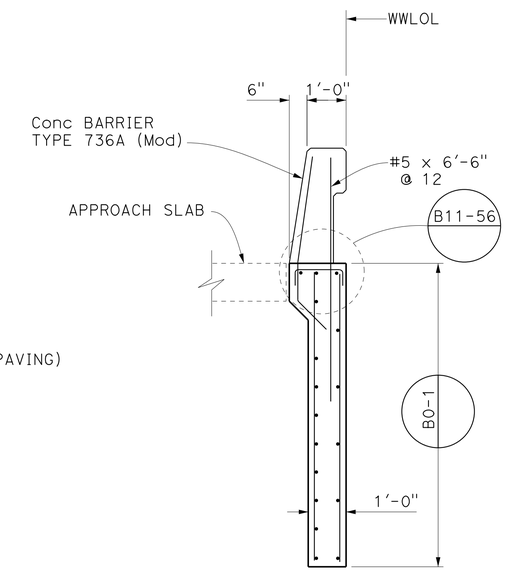

SECTION X-X

½" = 1'-0"

NOTE:
THE CONTRACTOR SHALL VERIFY ALL CONTROLLING FIELD DIMENSIONS BEFORE ORDERING OR FABRICATING ANY MATERIAL.

Luqi Yang
DESIGN OVERSIGHT Luqi Yang
1-16-13
SIGN OFF DATE

	BY	CHECKED
DESIGN	K. Allam	B. Holton
DETAILS	I. Karkoutli	B. Holton
QUANTITIES	M. Metcalf	G. Armstrong

PREPARED FOR THE STATE OF CALIFORNIA DEPARTMENT OF TRANSPORTATION

Alaedin Moubayed
PROJECT ENGINEER

BRIDGE NO. 55-0510
POST MILES 6.76

ROUTE 5 / 1 SEPARATION (WIDEN)
ABUTMENT DETAILS No. 2

DESIGN DETAIL SHEET (ENGLISH) (REV.7/16/10)

ORIGINAL SCALE IN INCHES FOR REDUCED PLANS 0 1 2 3

UNIT: 2998
PROJECT NUMBER & PHASE: 12000202791 CONTRACT NO.: 12-0F96E4

DISREGARD PRINTS BEARING EARLIER REVISION DATES → REVISION DATES 4/23/12 8/23/12 11/12/12

SHEET 10 OF 27

FILE => 55-0510-f-a01dt02.dgn

USERNAME => s124496 DATE PLOTTED => 29-APR-2013 TIME PLOTTED => 12:58

DIST	COUNTY	ROUTE	POST MILES TOTAL PROJECT	SHEET No	TOTAL SHEETS
12	Ora	5	6.2/8.7	551	595

Khaled Allam 11/12/12
REGISTERED CIVIL ENGINEER DATE

4-29-13
PLANS APPROVAL DATE

REGISTERED PROFESSIONAL ENGINEER — Khaled Allam — No. 67110 — Exp. 09/30/14 — CIVIL — STATE OF CALIFORNIA

The State of California or its officers or agents shall not be responsible for the accuracy or completeness of electronic copies of this plan sheet.

JACOBS
3161 MICHELSON, STE 500
IRVINE, CA 92612

ORANGE COUNTY TRANSPORTATION AUTHORITY
550 S. MAIN STREET
ORANGE, CA 92863-1584

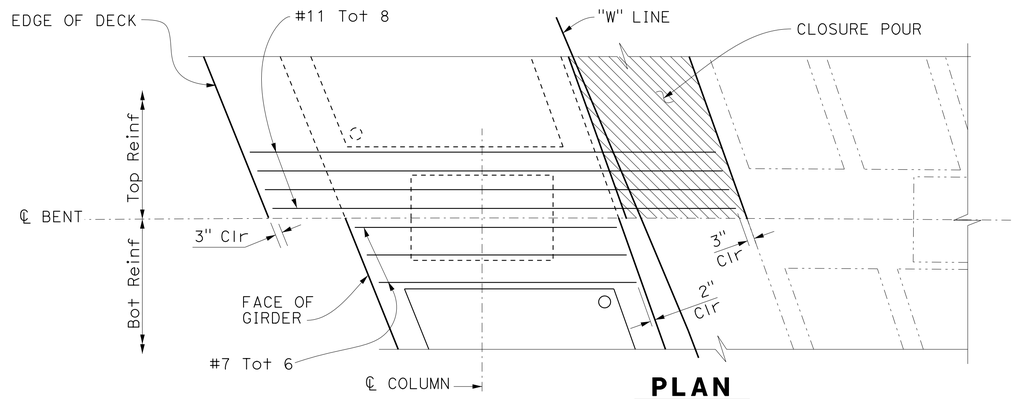

PLAN
3/8" = 1'-0"

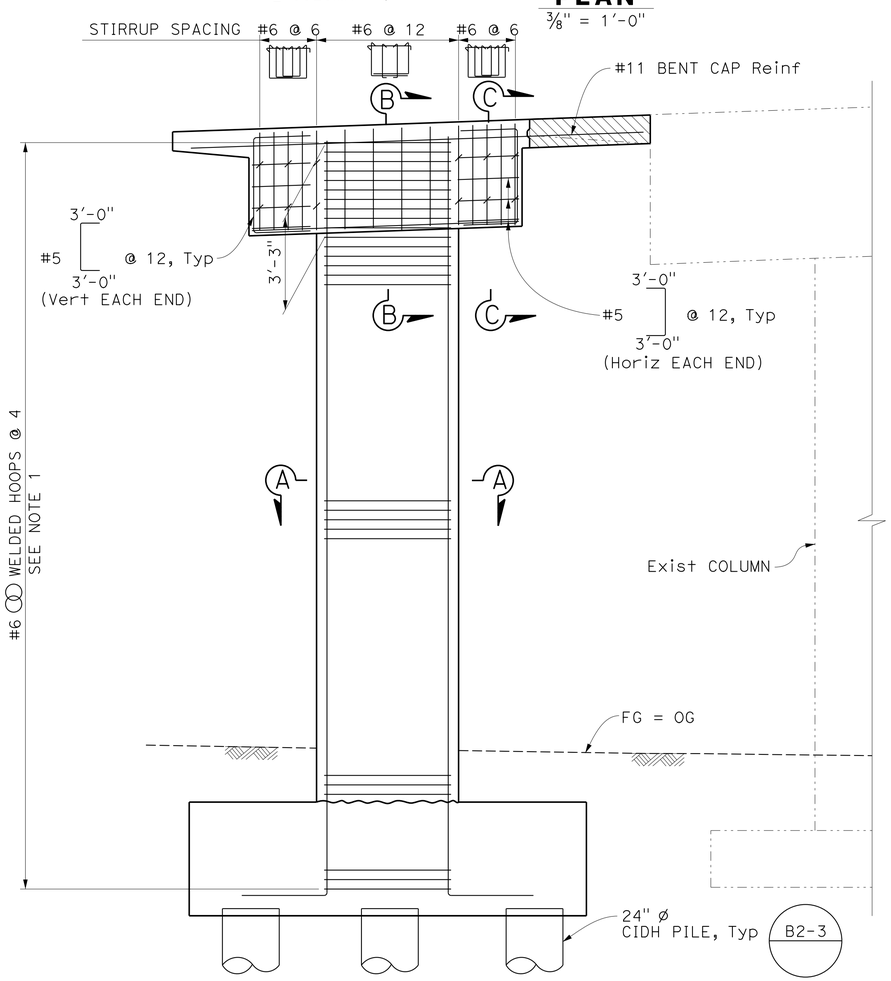

ELEVATION
3/8" = 1'-0"

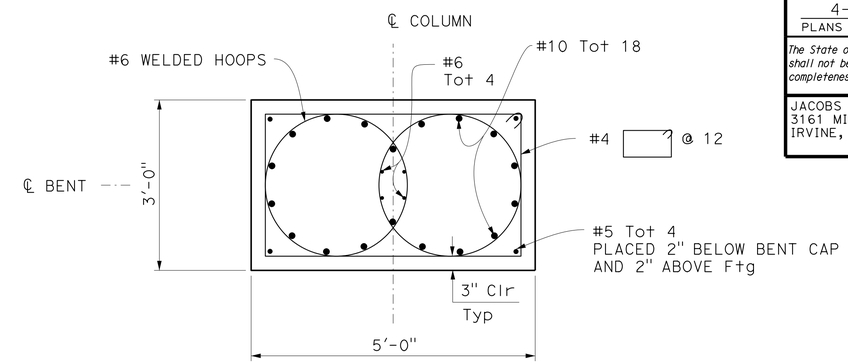

SECTION A-A
3/4" = 1'-0"

LEGEND:

- Closure Pour
- Headed Bar

NOTES:

1. No splice allowed in main longitudinal column reinf and main bent cap reinf.
2. All hoops shall be butt welded continuous and meet "Ultimate butt splice" requirements.

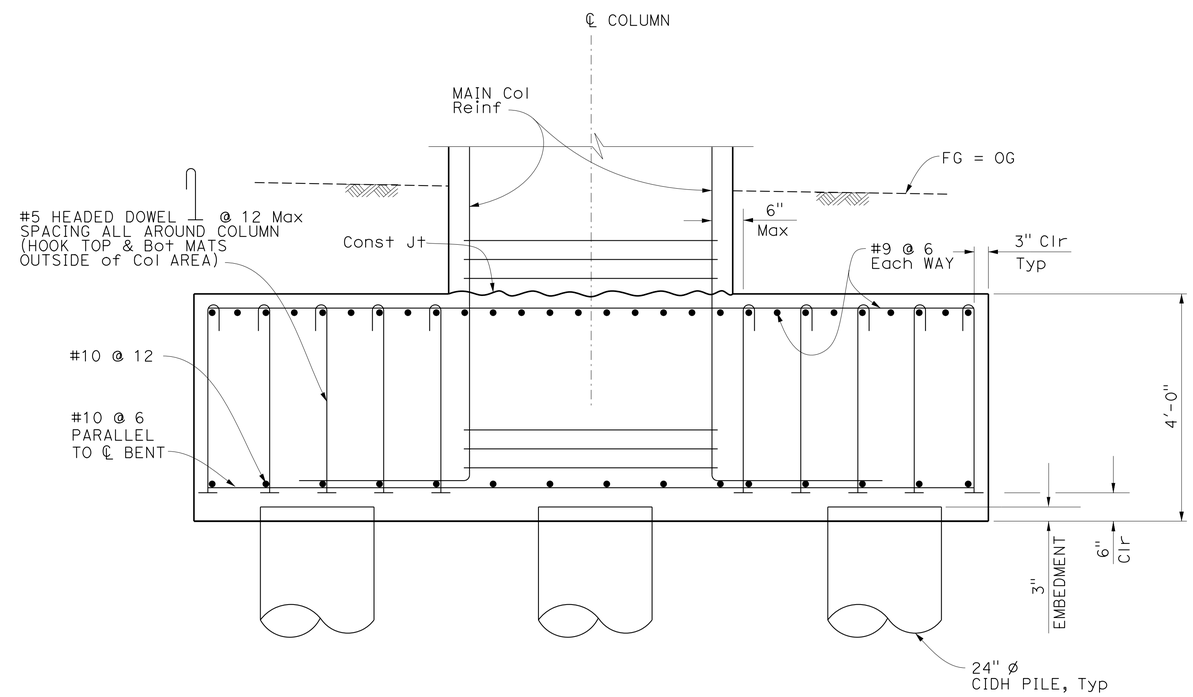

FOOTING ELEVATION
3/4" = 1'-0"

NOTE:
THE CONTRACTOR SHALL VERIFY ALL CONTROLLING FIELD DIMENSIONS BEFORE ORDERING OR FABRICATING ANY MATERIAL.

Luqi Yang
DESIGN OVERSIGHT Luqi Yang
1-16-13
SIGN OFF DATE

	BY	CHECKED
DESIGN	K. Allam	B. Holton
DETAILS	I. Karkoutli	B. Holton
QUANTITIES	M. Metcalf	G. Armstrong

PREPARED FOR THE STATE OF CALIFORNIA DEPARTMENT OF TRANSPORTATION

Alaedin Moubayed
PROJECT ENGINEER

BRIDGE NO. 55-0510
POST MILES 6.76

ROUTE 5 / 1 SEPARATION (WIDEN)
BENT LAYOUT

DESIGN DETAIL SHEET (ENGLISH) (REV.7/16/10)

ORIGINAL SCALE IN INCHES FOR REDUCED PLANS 0 1 2 3

UNIT: 2998
PROJECT NUMBER & PHASE: 12000202791 CONTRACT NO.: 12-0F96E4

DISREGARD PRINTS BEARING EARLIER REVISION DATES
REVISION DATES 4/23/12 8/13/12 11/12/12

SHEET 11 OF 27

FILE => 55-0510-h-b01_lo01.dgn

USERNAME => s124496 DATE PLOTTED => 29-APR-2013 TIME PLOTTED => 12:58

DIST	COUNTY	ROUTE	POST MILES TOTAL PROJECT	SHEET No	TOTAL SHEETS
12	Ora	5	6.2/8.7	552	595

Khaled Allam 11/12/12
REGISTERED CIVIL ENGINEER DATE

4-29-13
PLANS APPROVAL DATE

REGISTERED PROFESSIONAL ENGINEER Khaled Allam No. 67110 Exp. 09/30/14 CIVIL STATE OF CALIFORNIA

The State of California or its officers or agents shall not be responsible for the accuracy or completeness of electronic copies of this plan sheet.

JACOBS
3161 MICHELSON, STE 500
IRVINE, CA 92612

ORANGE COUNTY
TRANSPORTATION AUTHORITY
550 S. MAIN STREET
ORANGE, CA 92863-1584

LEGEND:

* Reinforcement may be lowered to clear prestressing ducts

** Clearance to main cap reinforcement.

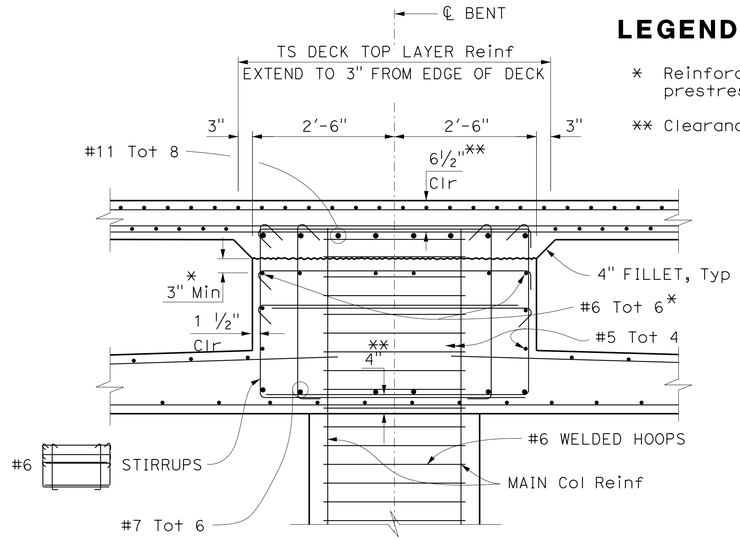

SECTION B-B

3/4" = 1'-0"

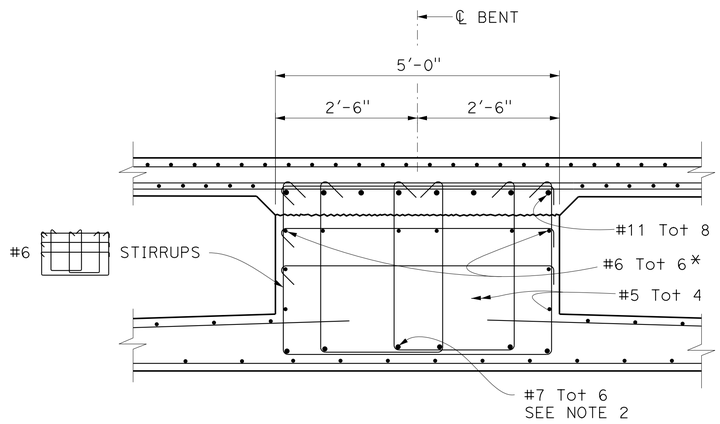

SECTION C-C

3/4" = 1'-0"

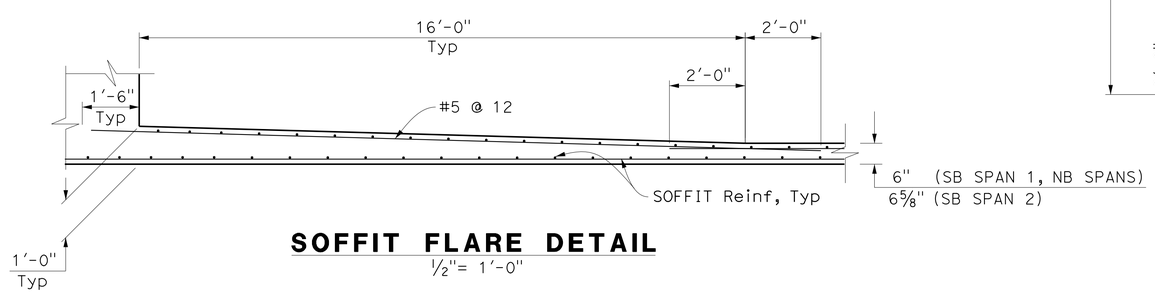

SOFFIT FLARE DETAIL

1/2" = 1'-0"

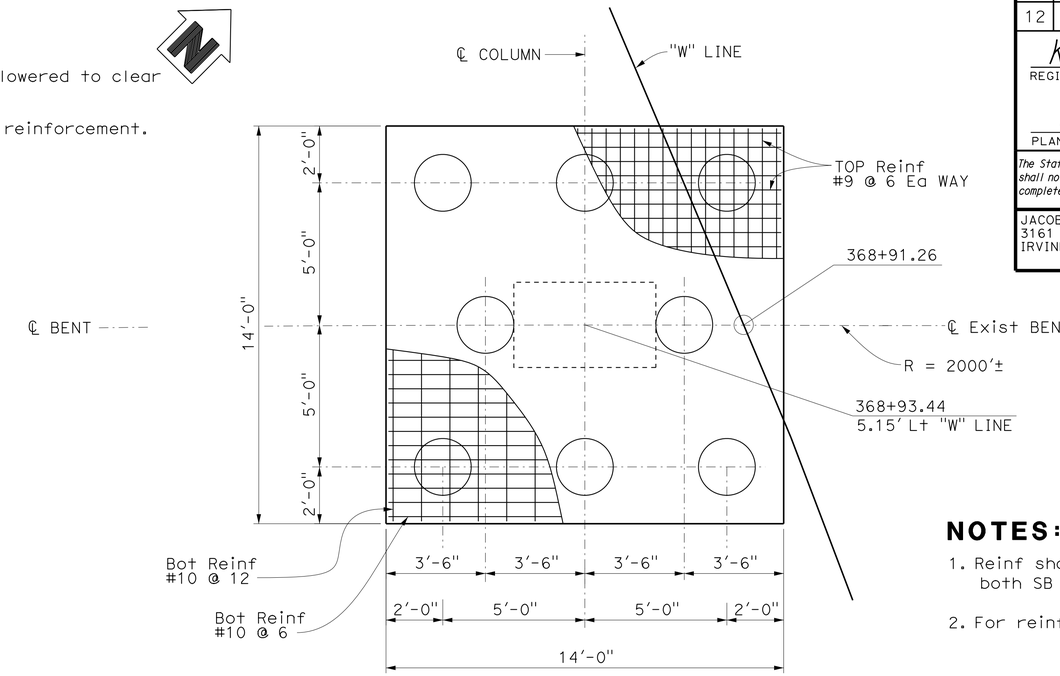

FOOTING PLAN - SB

3/8" = 1'-0"

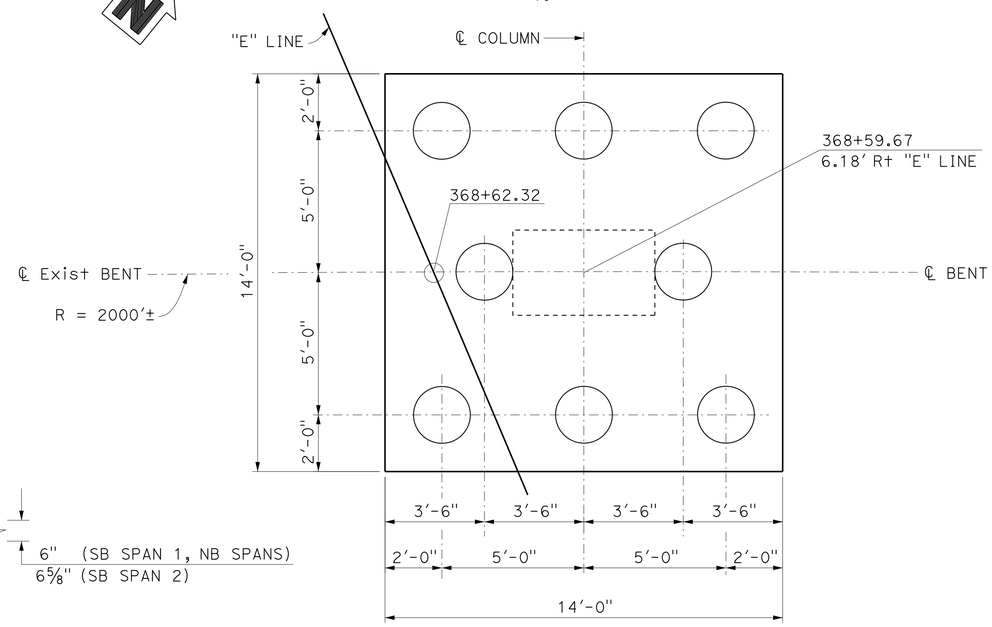

FOOTING PLAN - NB

3/8" = 1'-0"

NOTES:

1. Reinf shown is typical for both SB & NB bent cap and footing.
2. For reinf not called out, see Section B-B.

NOTE:
THE CONTRACTOR SHALL VERIFY ALL CONTROLLING FIELD DIMENSIONS BEFORE ORDERING OR FABRICATING ANY MATERIAL.

Luqi Yang
DESIGN OVERSIGHT Luqi Yang
1-16-13
SIGN OFF DATE

	BY	CHECKED
DESIGN	K. Allam	B. Holton
DETAILS	I. Karkoutli	B. Holton
QUANTITIES	M. Metcalf	G. Armstrong

PREPARED FOR THE STATE OF CALIFORNIA DEPARTMENT OF TRANSPORTATION

Alaedin Moubayed
PROJECT ENGINEER

BRIDGE NO. 55-0510
POST MILES 6.76

ROUTE 5 / 1 SEPARATION (WIDEN)
BENT DETAILS

DESIGN DETAIL SHEET (ENGLISH) (REV.7/16/10)

ORIGINAL SCALE IN INCHES FOR REDUCED PLANS 0 1 2 3

UNIT: 2998
PROJECT NUMBER & PHASE: 12000202791 CONTRACT NO.: 12-0F96E4

DISREGARD PRINTS BEARING EARLIER REVISION DATES

REVISION DATES 4/23/12 8/13/12 11/12/12

SHEET 12 OF 27

FILE => 55-0510-h-b01dt01.dgn

USERNAME => s124496 DATE PLOTTED => 29-APR-2013 TIME PLOTTED => 12:58

DIST	COUNTY	ROUTE	POST MILES TOTAL PROJECT	SHEET No	TOTAL SHEETS
12	Ora	5	6.2/8.7	553	595

Khaled Allam 11/12/12
REGISTERED CIVIL ENGINEER DATE

4-29-13
PLANS APPROVAL DATE

REGISTERED PROFESSIONAL ENGINEER — Khaled Allam No. 67110 Exp. 09/30/14 CIVIL — STATE OF CALIFORNIA

The State of California or its officers or agents shall not be responsible for the accuracy or completeness of electronic copies of this plan sheet.

JACOBS
3161 MICHELSON, STE 500
IRVINE, CA 92612

ORANGE COUNTY
TRANSPORTATION AUTHORITY
550 S. MAIN STREET
ORANGE, CA 92863-1584

LEGEND:

- Closure Pour
- Exist Structure
- New Structure

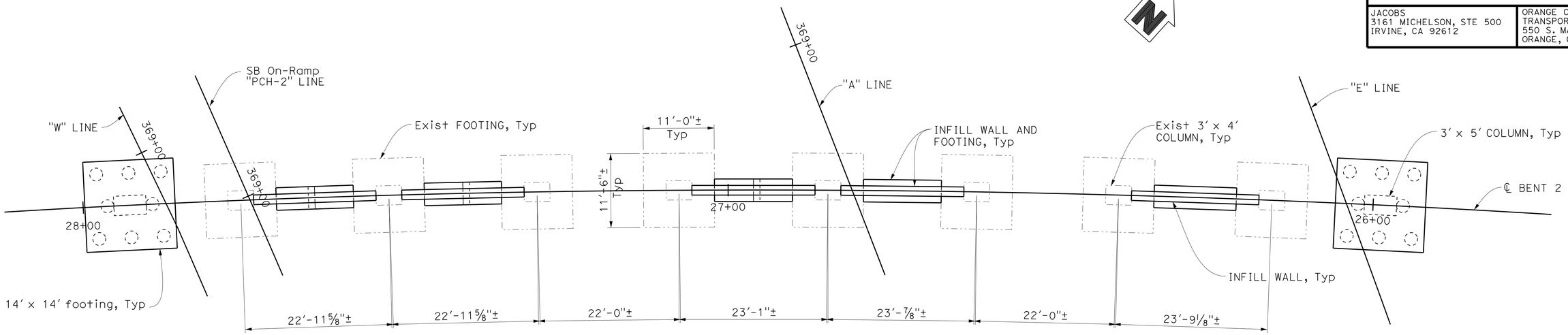

PLAN
¼"= 1'-0"

NOTES:

1. See "FOUNDATION PLAN" for bottom of exist ftg elev.
2. The contractor shall take field measurement and determine the Exist Col lengths.
3. Match bottom of infill wall footing with exist col footing.

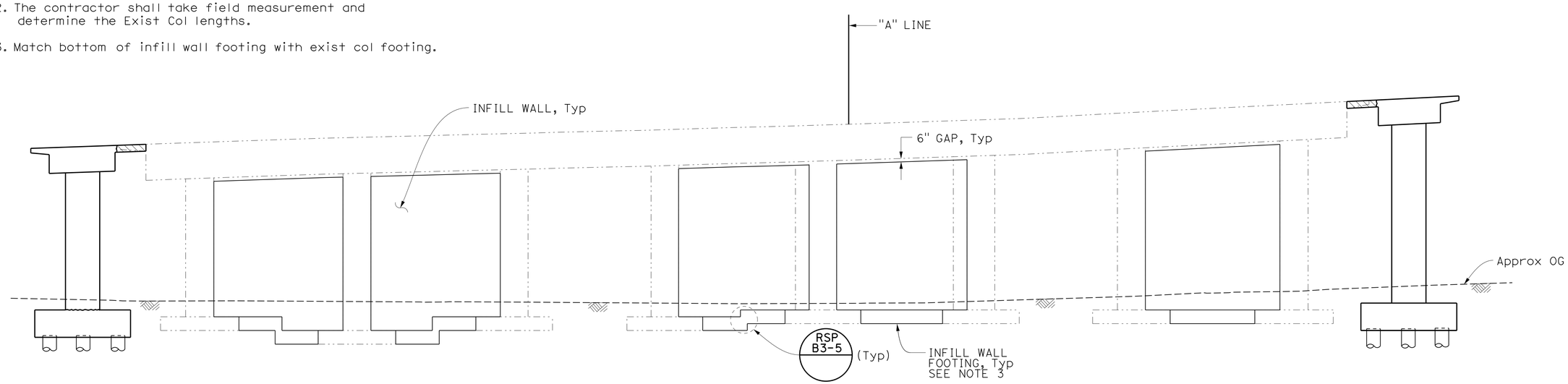

BENT ELEVATION
¼"= 1'-0"

NOTE:
THE CONTRACTOR SHALL VERIFY ALL CONTROLLING FIELD DIMENSIONS BEFORE ORDERING OR FABRICATING ANY MATERIAL.

Luqi Yang
DESIGN OVERSIGHT Luqi Yang
1-16-13
SIGN OFF DATE

	BY	CHECKED
DESIGN	K. Allam	B. Holton
DETAILS	I. Karkoutli	B. Holton
QUANTITIES	M. Metcalf	G. Armstrong

PREPARED FOR THE STATE OF CALIFORNIA DEPARTMENT OF TRANSPORTATION

Alaedin Moubayed
PROJECT ENGINEER

BRIDGE NO. 55-0510
POST MILES 6.76

ROUTE 5 / 1 SEPARATION (WIDEN)
INFILL WALL DETAILS No. 1

DESIGN DETAIL SHEET (ENGLISH) (REV.7/16/10)

ORIGINAL SCALE IN INCHES FOR REDUCED PLANS 0 1 2 3

UNIT: 2998
PROJECT NUMBER & PHASE: 12000202791 CONTRACT NO.: 12-0F96E4

DISREGARD PRINTS BEARING EARLIER REVISION DATES
REVISION DATES 4/23/12 8/13/12 11/12/12

SHEET 13 OF 27

FILE => 55-0510-h-b01dt02.dgn

USERNAME => s124496 DATE PLOTTED => 29-APR-2013 TIME PLOTTED => 12:58

DIST	COUNTY	ROUTE	POST MILES TOTAL PROJECT	SHEET No	TOTAL SHEETS
12	Ora	5	6.2/8.7	554	595

Khaled Allam 11/12/12
REGISTERED CIVIL ENGINEER DATE

4-29-13
PLANS APPROVAL DATE

REGISTERED PROFESSIONAL ENGINEER Khaled Allam No. 67110 Exp. 09/30/14 CIVIL STATE OF CALIFORNIA

The State of California or its officers or agents shall not be responsible for the accuracy or completeness of electronic copies of this plan sheet.

JACOBS
3161 MICHELSON, STE 500
IRVINE, CA 92612

ORANGE COUNTY TRANSPORTATION AUTHORITY
550 S. MAIN STREET
ORANGE, CA 92863-1584

NOTES:

1. For infill wall Ftg step reinforcing detail, see RSP B3-5
2. Adjust dowel location where encountering exist reinf during drilling operation.

LEGEND:

Exist Structure
New Structure

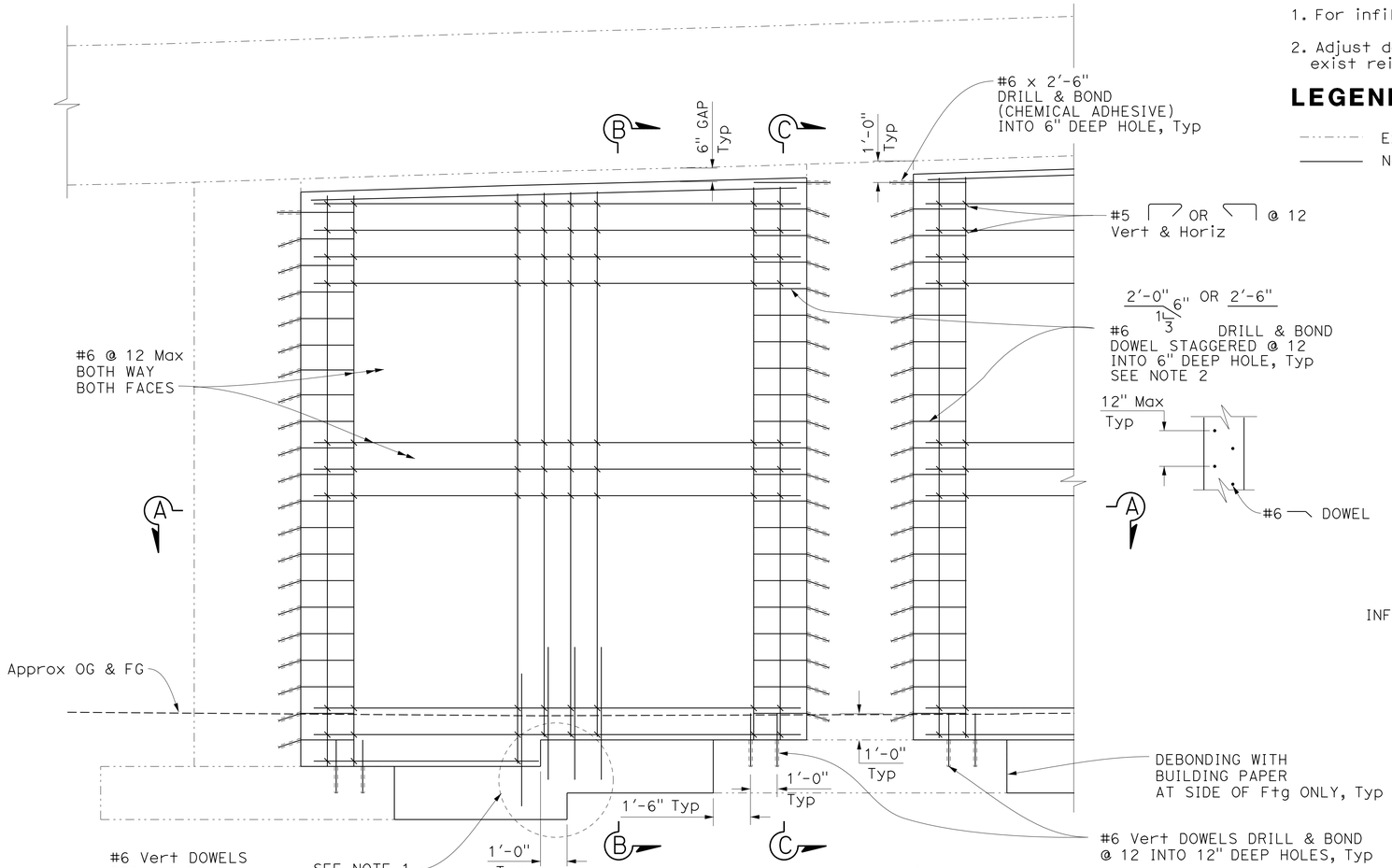

PARTIAL ELEVATION
3/8"= 1'-0"

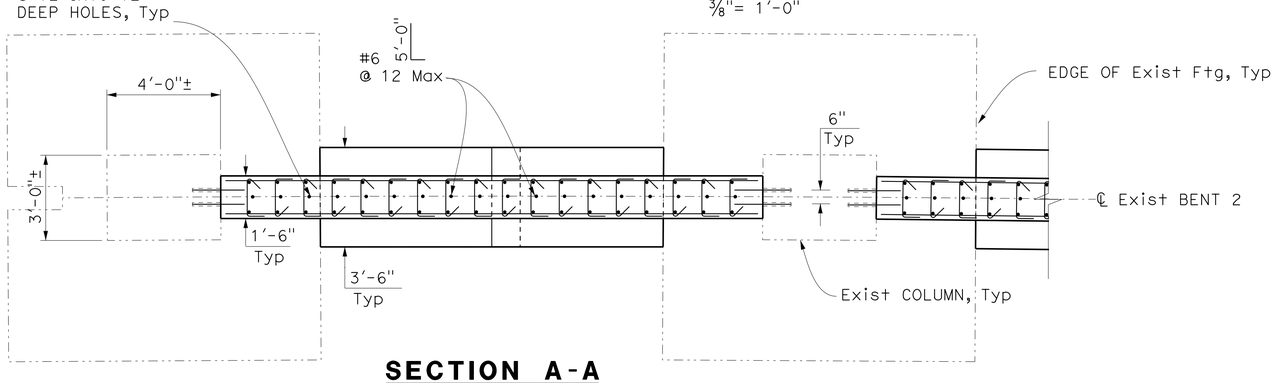

SECTION A-A
3/8"= 1'-0"

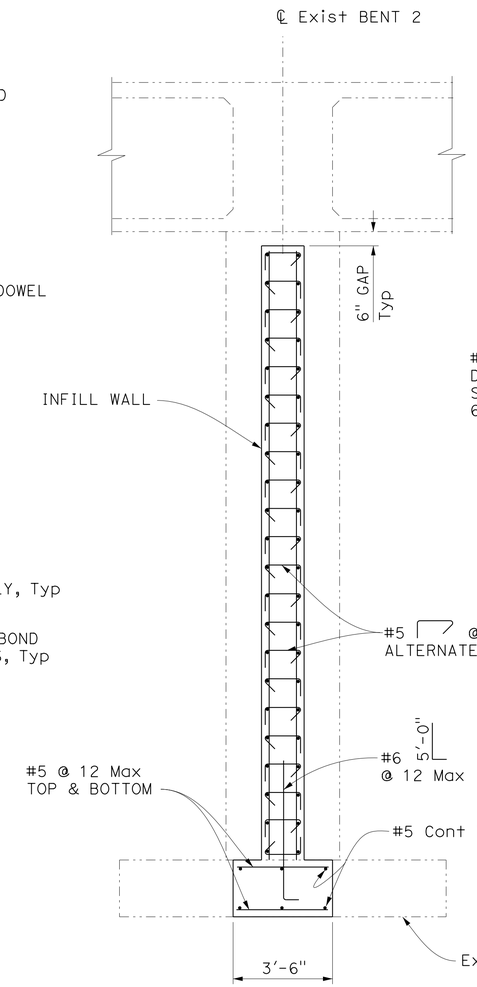

SECTION B-B
3/8"= 1'-0"

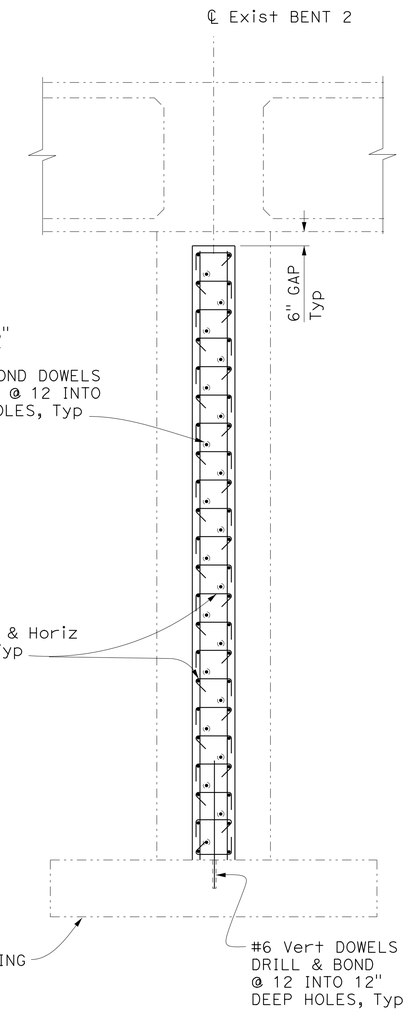

SECTION C-C
3/8"= 1'-0"

NOTE:
THE CONTRACTOR SHALL VERIFY ALL CONTROLLING FIELD DIMENSIONS BEFORE ORDERING OR FABRICATING ANY MATERIAL.

Luqi Yang
DESIGN OVERSIGHT Luqi Yang
1-16-13
SIGN OFF DATE

	BY	CHECKED
DESIGN	K. Allam	B. Holton
DETAILS	I. Karkoutli	B. Holton
QUANTITIES	M. Metcalf	G. Armstrong

PREPARED FOR THE STATE OF CALIFORNIA DEPARTMENT OF TRANSPORTATION

Alaedin Moubayed
PROJECT ENGINEER

BRIDGE NO. 55-0510
POST MILES 6.76

ROUTE 5 / 1 SEPARATION (WIDEN)
INFILL WALL DETAILS No. 2

DESIGN DETAIL SHEET (ENGLISH) (REV.7/16/10)

ORIGINAL SCALE IN INCHES FOR REDUCED PLANS 0 1 2 3

UNIT: 2998
PROJECT NUMBER & PHASE: 12000202791 CONTRACT NO.: 12-0F96E4

DISREGARD PRINTS BEARING EARLIER REVISION DATES
REVISION DATES 4/23/12 8/13/12 11/12/12

SHEET 14 OF 27

FILE => 55-0510-h-b01dt03.dgn

USERNAME => s124496 DATE PLOTTED => 29-APR-2013 TIME PLOTTED => 12:58

DIST	COUNTY	ROUTE	POST MILES TOTAL PROJECT	SHEET No	TOTAL SHEETS
12	Ora	5	6.2/8.7	555	595

Khaled Allam 11/12/12
REGISTERED CIVIL ENGINEER DATE

4-29-13
PLANS APPROVAL DATE

REGISTERED PROFESSIONAL ENGINEER — Khaled Allam No. 67110 Exp. 09/30/14 CIVIL — STATE OF CALIFORNIA

The State of California or its officers or agents shall not be responsible for the accuracy or completeness of electronic copies of this plan sheet.

JACOBS
3161 MICHELSON, STE 500
IRVINE, CA 92612

ORANGE COUNTY TRANSPORTATION AUTHORITY
550 S. MAIN STREET
ORANGE, CA 92863-1584

LEGEND:

- Closure pour
- Bridge removal (portion)
- Existing Structure
- New Structure
- ○ Additional longitudinal reinf
- ** Match exist deck cross slope & grade

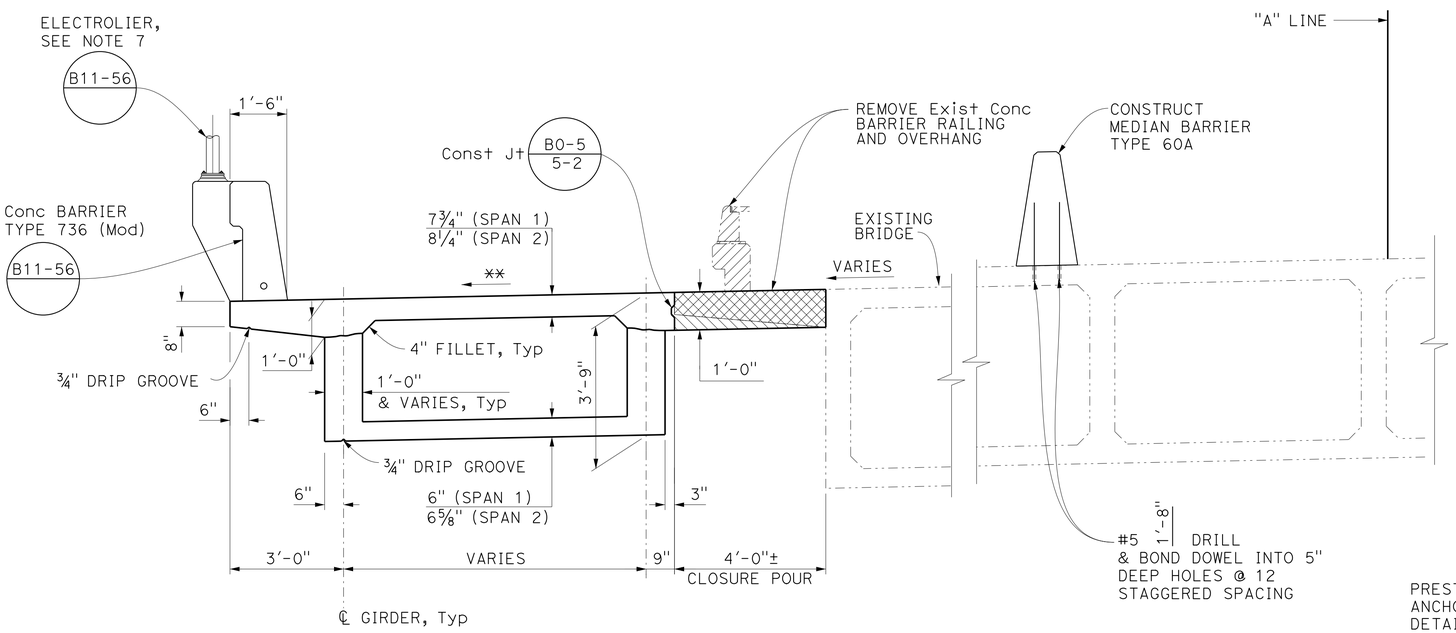

TYPICAL SECTION (SB WIDENING)

½" = 1'-0"

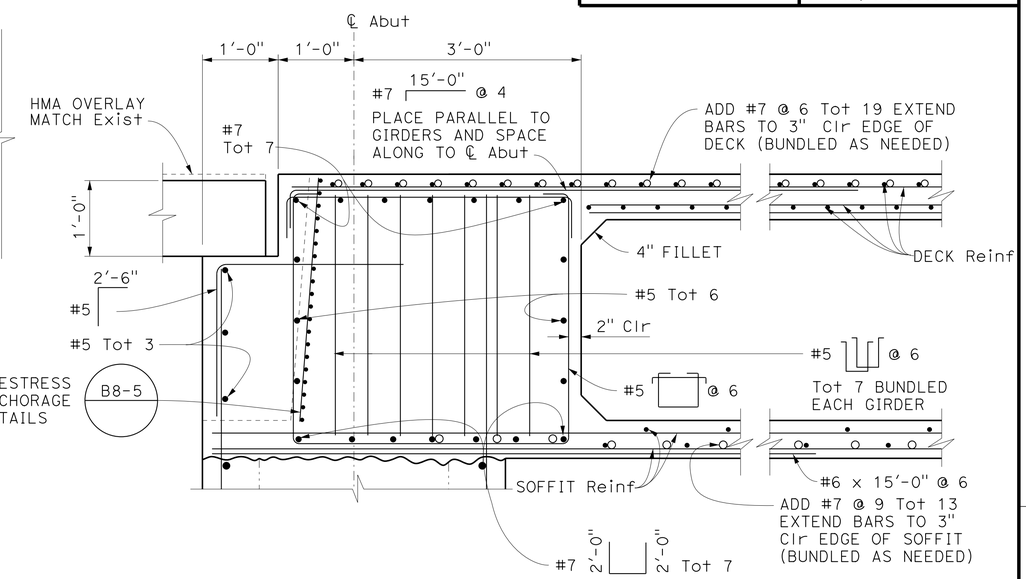

END DIAPHRAGM DETAIL

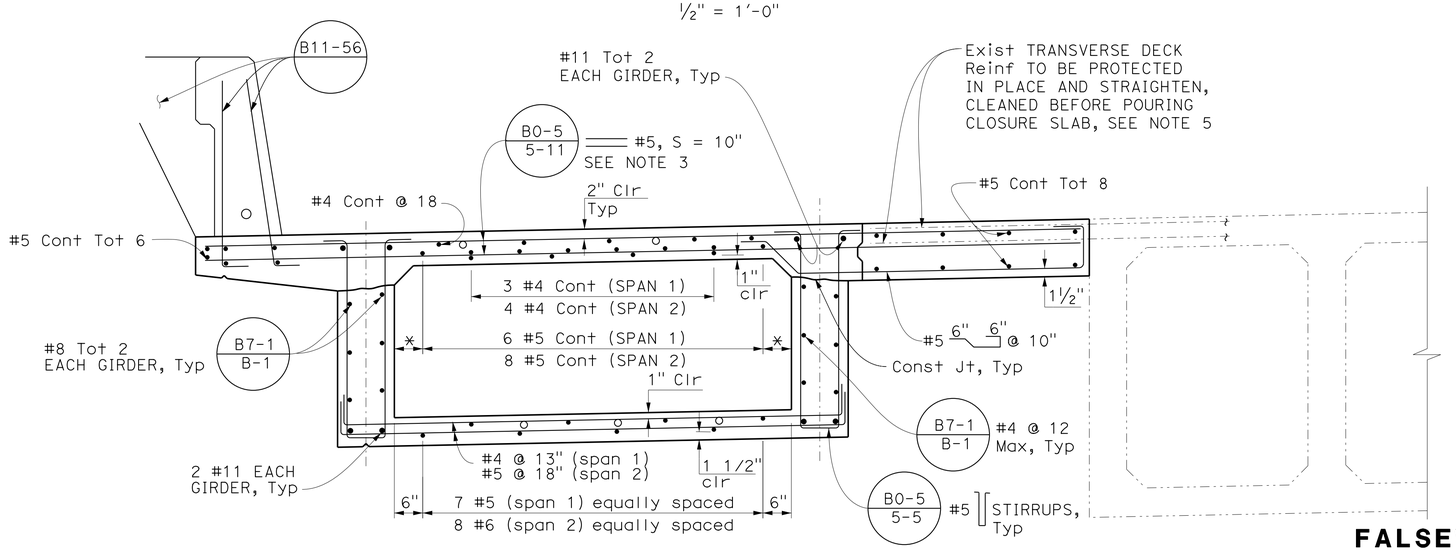

* 5" @ Abut 1 VARIES TO 1'-0" @ BENT 2 IN SPAN 1
1'-0" BENT 2 VARIES TO 1'-3" @ Abut 3 IN SPAN 2

TYPICAL REINFORCEMENT SECTION

¾" = 1'-0"

B0-5 B7-1 B8-5 B11-56

NOTES:

1. Special shallow falsework design is required for the SB widening box girder construction.
2. For girder top & bottom slab flares, See "GIRDER LAYOUT No. 1" Sheet
3. Transverse deck reinf shall be placed normal to and spaced along ℄ bridge.
4. For additional reinforcement, See "ADDITIONAL REINFORCEMENT DETAILS" sheets.
5. Field bend the existing deck reinf as necessary to provide 2" deck cover as required.
6. Bottom of blockout shall be located at or above the top surface of the bot slab.
7. For electrolier location, see "ROAD PLANS".

FALSEWORK RELEASE NOTES:

Alternative 1:
Falsework shall be released as soon as permitted by the specifications.
Closure pour shall not be placed sooner than 60 days after the falsework has been released.

Alternative 2:
Falsework shall not be released less than 28 days after the last concrete has been placed.
Closure pour shall not be placed sooner than 14 days after the falsework has been released.

When falsework released alternative 2 is used, camber values are 0.75 times those shown.

NOTE:
THE CONTRACTOR SHALL VERIFY ALL CONTROLLING FIELD DIMENSIONS BEFORE ORDERING OR FABRICATING ANY MATERIAL.

Luqi Yang
DESIGN OVERSIGHT Luqi Yang
1-16-13
SIGN OFF DATE

	BY	CHECKED
DESIGN	K. Allam	B. Holton
DETAILS	I. Karkoutli	B. Holton
QUANTITIES	M. Metcalf	G. Armstrong

PREPARED FOR THE STATE OF CALIFORNIA DEPARTMENT OF TRANSPORTATION

Alaedin Moubayed
PROJECT ENGINEER

BRIDGE NO. 55-0510
POST MILES 6.76

ROUTE 5 / 1 SEPARATION (WIDEN)
TYPICAL SECTION No. 1

DESIGN DETAIL SHEET (ENGLISH) (REV.7/16/10)

ORIGINAL SCALE IN INCHES FOR REDUCED PLANS 0 1 2 3

UNIT: 2998
PROJECT NUMBER & PHASE: 12000202791 CONTRACT NO.: 12-0F96E4

DISREGARD PRINTS BEARING EARLIER REVISION DATES 4/23/12 8/23/12 11/12/12

SHEET 15 OF 27

FILE => 55-0510-k-ts01.dgn

USERNAME => s124496 DATE PLOTTED => 29-APR-2013 TIME PLOTTED => 12:58

DIST	COUNTY	ROUTE	POST MILES TOTAL PROJECT	SHEET No	TOTAL SHEETS
12	Ora	5	6.2/8.7	556	595

Khaled Allam 11/12/12
REGISTERED CIVIL ENGINEER DATE

4-29-13
PLANS APPROVAL DATE

REGISTERED PROFESSIONAL ENGINEER Khaled Allam No. 67110 Exp. 09/30/14 CIVIL STATE OF CALIFORNIA

The State of California or its officers or agents shall not be responsible for the accuracy or completeness of electronic copies of this plan sheet.

JACOBS
3161 MICHELSON, STE 500
IRVINE, CA 92612

ORANGE COUNTY TRANSPORTATION AUTHORITY
550 S. MAIN STREET
ORANGE, CA 92863-1584

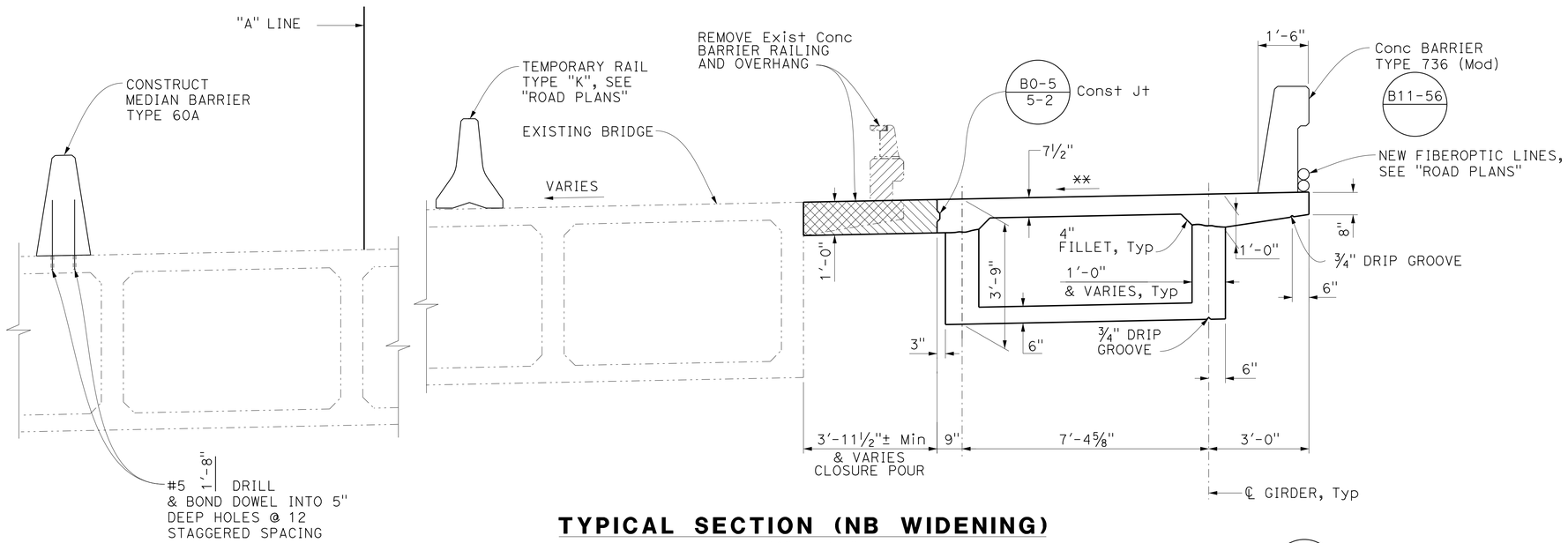

TYPICAL SECTION (NB WIDENING)

½" = 1'-0"

NOTES:

1. See "GIRDER LAYOUT No. 2" Sheet for girder web bottom slab flares.
2. Transverse deck reinf shall be placed normal to and spaced along ℄ bridge.
3. For additional reinforcement, see "ADDITIONAL REINFORCEMENT DETAILS" sheets.
4. Field bend the existing deck reinf as necessary to provide 2" deck cover as required.

LEGEND:

- Closure pour
- Bridge removal (Portion)
- Existing Structure
- New Structure
- o Additional longitudinal reinf
- ** Match exist deck cross slope & grade

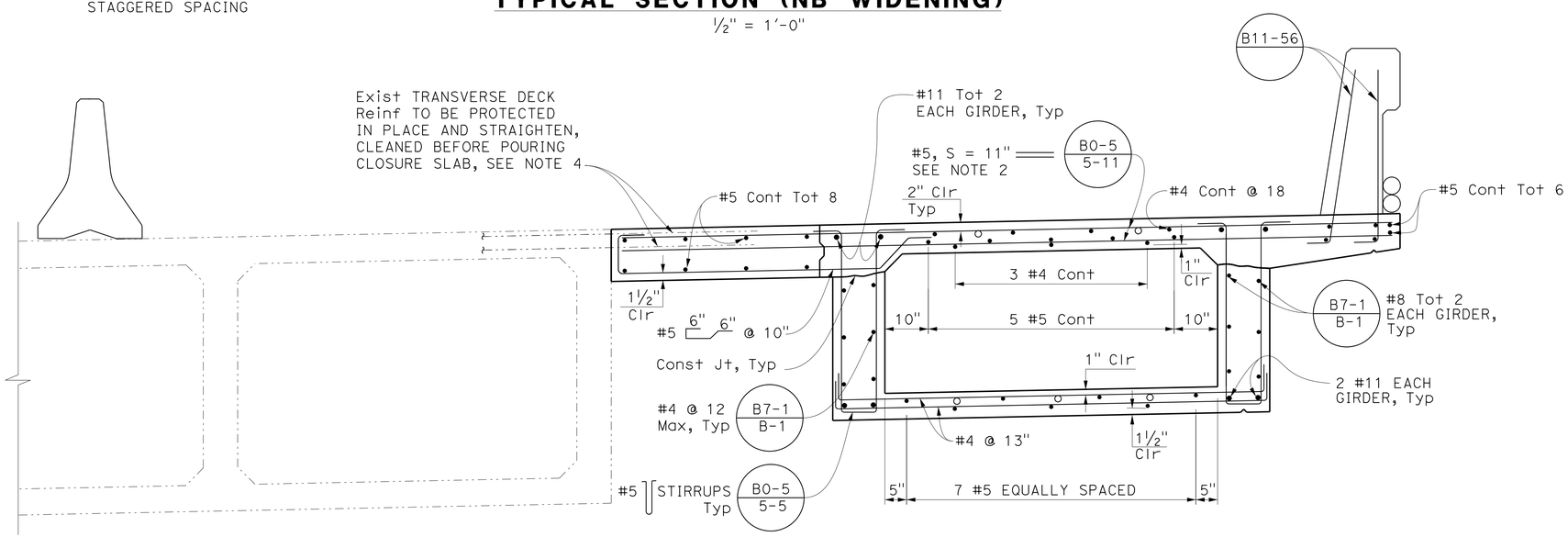

TYPICAL REINFORCEMENT SECTION

¾" = 1'-0"

B0-5 B7-1 B8-5 B11-56

FALSEWORK RELEASE NOTES:

Alternative 1:
Falsework shall be released as soon as permitted by the specifications.
Closure pour shall not be placed sooner than 60 days after the falsework has been released.

Alternative 2:
Falsework shall not be released less than 28 days after the last concrete has been placed.
Closure pour shall not be placed sooner than 14 days after the falsework has been released.

When falsework released alternative 2 is used, camber values are 0.75 times those shown.

NOTE:
THE CONTRACTOR SHALL VERIFY ALL CONTROLLING FIELD DIMENSIONS BEFORE ORDERING OR FABRICATING ANY MATERIAL.

Luqi Yang
DESIGN OVERSIGHT Luqi Yang
1-16-13
SIGN OFF DATE

	BY	CHECKED
DESIGN	K. Allam	B. Holton
DETAILS	I. Karkoutli	B. Holton
QUANTITIES	M. Metcalf	G. Armstrong

PREPARED FOR THE STATE OF CALIFORNIA DEPARTMENT OF TRANSPORTATION

Alaedin Moubayed
PROJECT ENGINEER

BRIDGE NO. 55-0510
POST MILES 6.76

ROUTE 5 / 1 SEPARATION (WIDEN)
TYPICAL SECTION No. 2

DESIGN DETAIL SHEET (ENGLISH) (REV.7/16/10)

ORIGINAL SCALE IN INCHES FOR REDUCED PLANS 0 1 2 3

UNIT: 2998
PROJECT NUMBER & PHASE: 12000202791 CONTRACT NO.: 12-0F96E4

DISREGARD PRINTS BEARING EARLIER REVISION DATES
REVISION DATES 4/23/12 8/23/12 11/12/12

SHEET 16 OF 27

FILE => 55-0510-k-ts02.dgn

USERNAME => s124496 DATE PLOTTED => 29-APR-2013 TIME PLOTTED => 12:58

DIST	COUNTY	ROUTE	POST MILES TOTAL PROJECT	SHEET No	TOTAL SHEETS
12	Ora	5	6.2/8.7	557	595

Khaled Allam 11/12/12
REGISTERED CIVIL ENGINEER DATE

4-29-13
PLANS APPROVAL DATE

REGISTERED PROFESSIONAL ENGINEER — Khaled Allam No. 67110 Exp. 09/30/14 CIVIL — STATE OF CALIFORNIA

The State of California or its officers or agents shall not be responsible for the accuracy or completeness of electronic copies of this plan sheet.

JACOBS
3161 MICHELSON, STE 500
IRVINE, CA 92612

ORANGE COUNTY TRANSPORTATION AUTHORITY
550 S. MAIN STREET
ORANGE, CA 92863-1584

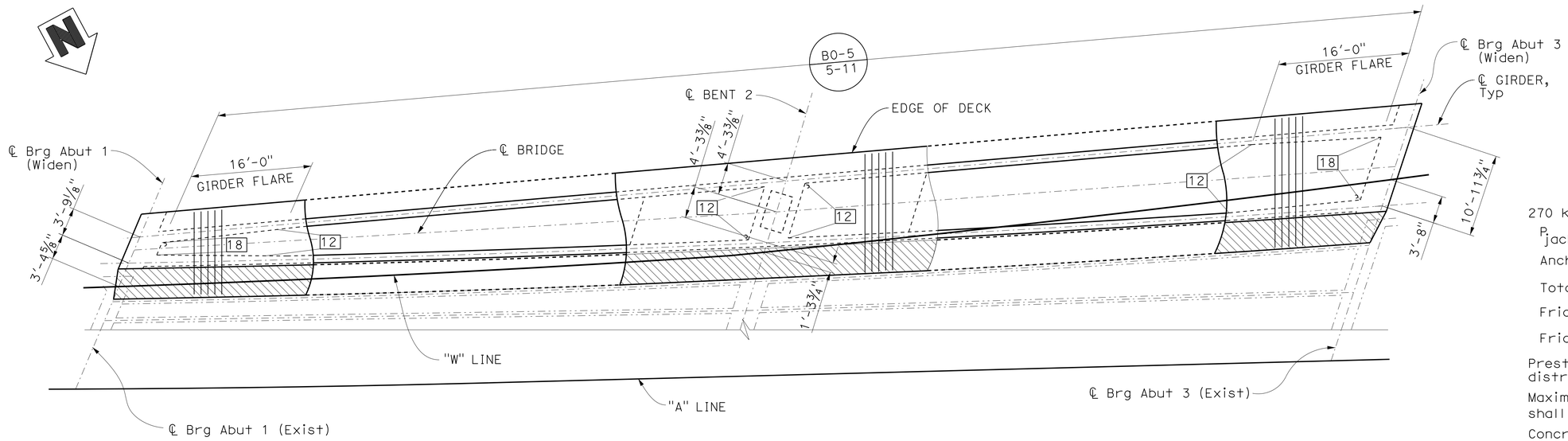

PLAN (SB WIDENING)

B7-1

1/8" = 1'-0"

PRESTRESSING NOTES:

270 ksi low relaxation strand:

P_{jack} = 3,000 kips

Anchor set = 3/8 in

Total number of girders = 2

Friction curvature coefficient μ = 15×10^{-2} (1/rad)

Friction wobble coefficient k = 2.0×10^{-4} (1/ft)

Prestress force (Pjack) be evenly distributed between girders.

Maximum final force variation between girders shall not exceed 45 kips.

Concrete: f'_c = 5.0 ksi @ 28 days

f'_{ci} = 4.0 ksi @ time of stressing

Contractor shall submit elongation calculations based on initial stress at

⊠ = 0.9175 times jacking stress.

One end stressing shall be performed from the abut 3 end only.

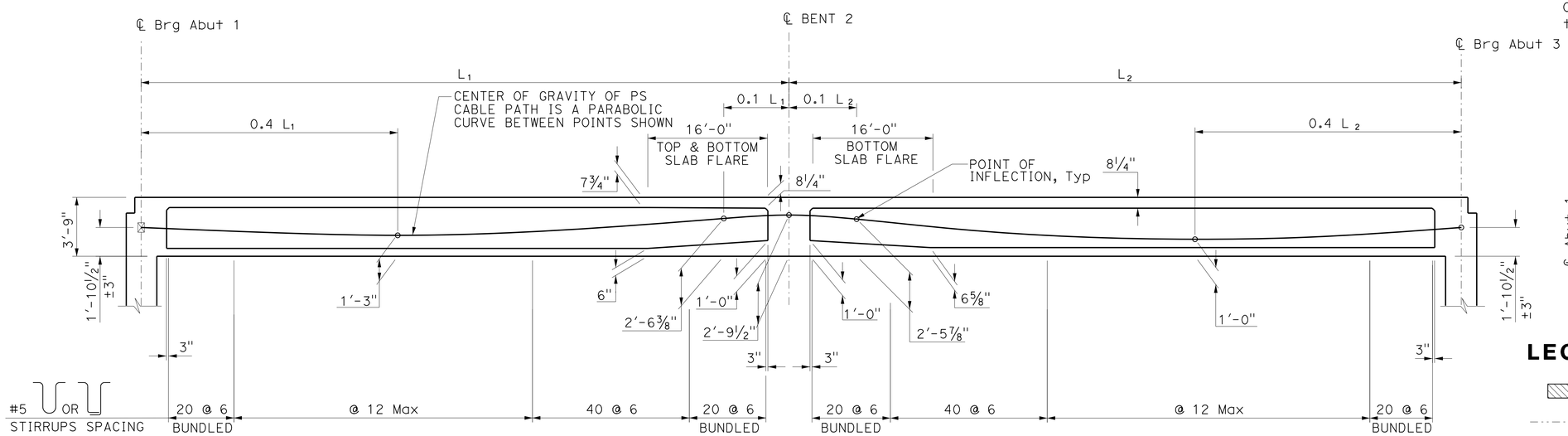

ELEVATION

NO SCALE

B0-5 / 5-5 | B8-5

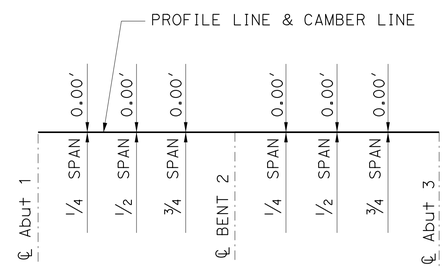

CAMBER DIAGRAM

NO SCALE

LEGEND:

- Closure pour
- Existing Structure
- New Structure
- ⊠ Point of no movement
- Girder stem width in inches
- o Soffit vent hole on plan view

NOTES:

1. Camber doesn't include allowance for falsework settlement.
2. Girder flare length is measured along ℄ of each girder.

NOTE:
THE CONTRACTOR SHALL VERIFY ALL CONTROLLING FIELD DIMENSIONS BEFORE ORDERING OR FABRICATING ANY MATERIAL.

Luqi Yang
DESIGN OVERSIGHT Luqi Yang
1-16-13
SIGN OFF DATE

	BY	CHECKED
DESIGN	K. Allam	B. Holton
DETAILS	I. Karkoutli	B. Holton
QUANTITIES	M. Metcalf	G. Armstrong

PREPARED FOR THE STATE OF CALIFORNIA DEPARTMENT OF TRANSPORTATION

Alaedin Moubayed
PROJECT ENGINEER

BRIDGE NO. 55-0510
POST MILES 6.76

ROUTE 5 / 1 SEPARATION (WIDENER)
GIRDER LAYOUT No. 1

DESIGN DETAIL SHEET (ENGLISH) (REV.7/16/10)

ORIGINAL SCALE IN INCHES FOR REDUCED PLANS 0 1 2 3

UNIT: 2998
PROJECT NUMBER & PHASE: 12000202791 CONTRACT NO.: 12-0F96E4

DISREGARD PRINTS BEARING EARLIER REVISION DATES
REVISION DATES 4/23/12 8/23/12 11/12/12

SHEET 17 OF 27

FILE => 55-0510-g_lo01.dgn

USERNAME => s124496 DATE PLOTTED => 29-APR-2013 TIME PLOTTED => 12:58

DIST	COUNTY	ROUTE	POST MILES TOTAL PROJECT	SHEET No	TOTAL SHEETS
12	Ora	5	6.2/8.7	558	595

Khaled Allam 11/12/12
REGISTERED CIVIL ENGINEER DATE

4-29-13
PLANS APPROVAL DATE

REGISTERED PROFESSIONAL ENGINEER — Khaled Allam No. 67110 Exp. 09/30/14 CIVIL — STATE OF CALIFORNIA

The State of California or its officers or agents shall not be responsible for the accuracy or completeness of electronic copies of this plan sheet.

JACOBS
3161 MICHELSON, STE 500
IRVINE, CA 92612

ORANGE COUNTY TRANSPORTATION AUTHORITY
550 S. MAIN STREET
ORANGE, CA 92863-1584

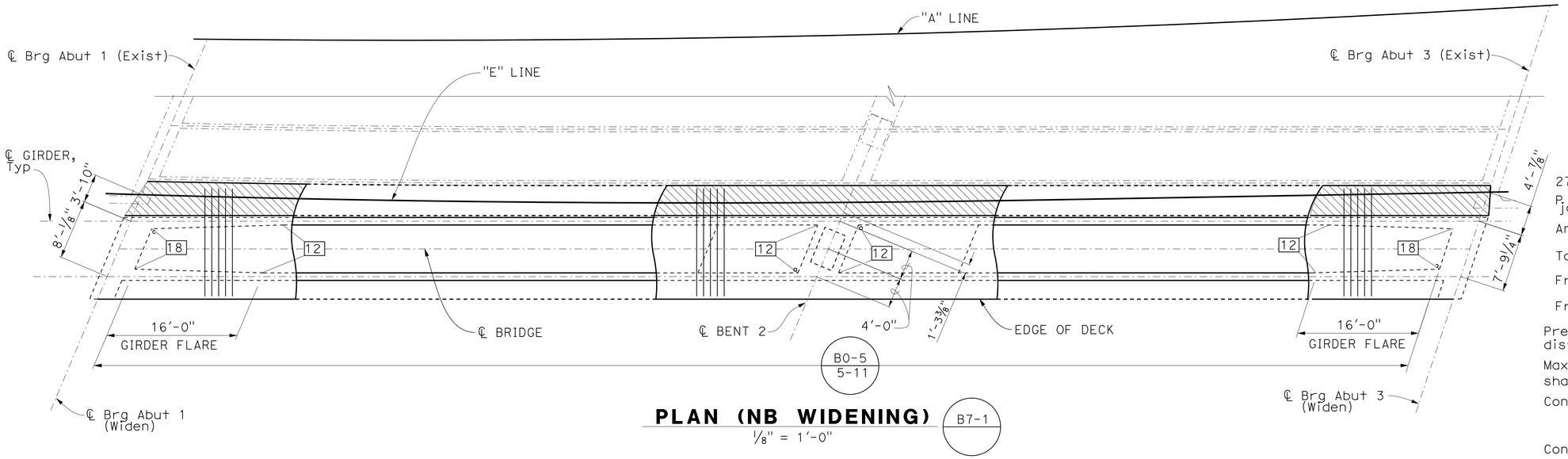

PLAN (NB WIDENING)

B7-1

1/8" = 1'-0"

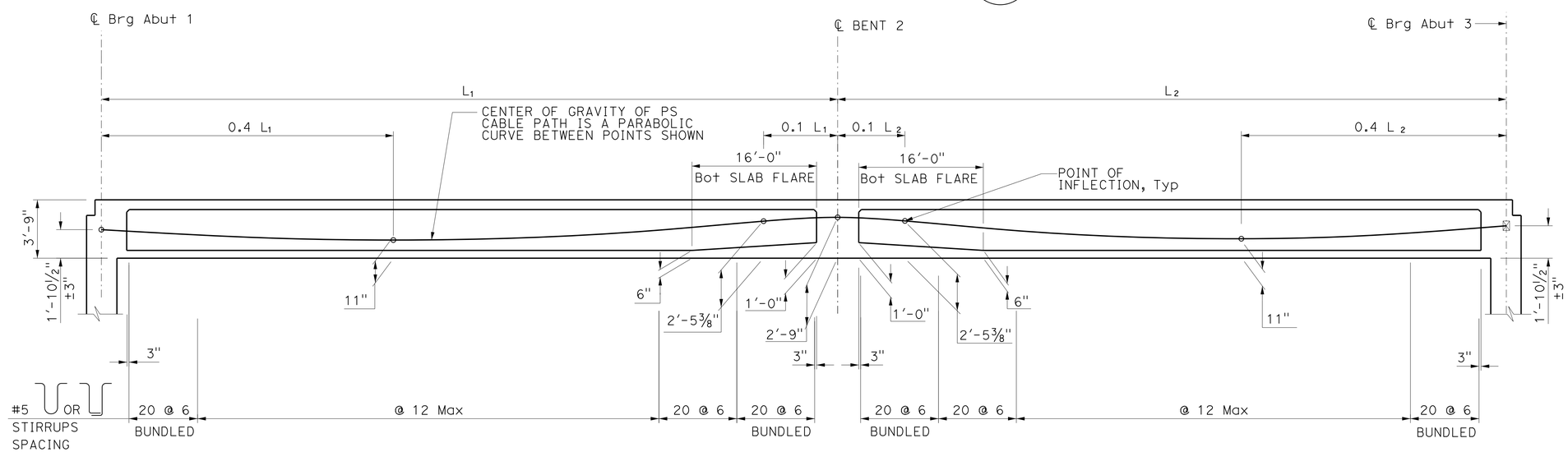

ELEVATION

NO SCALE

B0-5 / 5-5 | B8-5

PRESTRESSING NOTES:

270 ksi low relaxation strand:

P_{jack} = 3,400 kips

Anchor set = 3/8 in

Total number of girders = 2

Friction curvature coefficient $\mu = 15 \times 10^{-2}$ (1/rad)

Friction wobble coefficient $k = 2.0 \times 10^{-4}$ (1/ft)

Prestress force (Pjack) be evenly distributed between girders.

Maximum final force variation between girders shall not exceed 45 kips.

Concrete: f'_c = 5.0 ksi @ 28 days

f'_{ci} = 4.0 ksi @ time of stressing

Contractor shall submit elongation calculations based on initial stress at

⊠ = 0.9120 times jacking stress.

One end stressing shall be performed from the abut 1 end only.

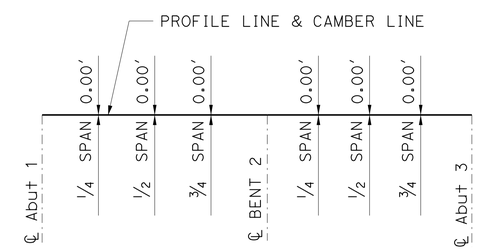

CAMBER DIAGRAM

NO SCALE

LEGEND:

- Closure pour
- Existing Structure
- New Structure
- ⊠ Point of no movement
- Girder stem width in inches
- o Soffit vent hole on plan view

NOTES:

1. Camber doesn't include allowance for falsework settlement
2. Girder flare length is measured along ℄ of each girder

NOTE:
THE CONTRACTOR SHALL VERIFY ALL CONTROLLING FIELD DIMENSIONS BEFORE ORDERING OR FABRICATING ANY MATERIAL.

Luqi Yang
DESIGN OVERSIGHT Luqi Yang
1-16-13
SIGN OFF DATE

	BY	CHECKED
DESIGN	K. Allam	B. Holton
DETAILS	I. Karkoutli	B. Holton
QUANTITIES	M. Metcalf	G. Armstrong

PREPARED FOR THE STATE OF CALIFORNIA DEPARTMENT OF TRANSPORTATION

Alaedin Moubayed
PROJECT ENGINEER

BRIDGE NO. 55-0510
POST MILES 6.76

ROUTE 5 / 1 SEPARATION (WIDEN)
GIRDER LAYOUT No. 2

DESIGN DETAIL SHEET (ENGLISH) (REV.7/16/10)

ORIGINAL SCALE IN INCHES FOR REDUCED PLANS 0 1 2 3

UNIT: 2998
PROJECT NUMBER & PHASE: 12000202791 CONTRACT NO.: 12-0F96E4

DISREGARD PRINTS BEARING EARLIER REVISION DATES → 4/23/12 8/13/12 11/12/12

SHEET 18 OF 27

FILE => 55-0510-g_lo02.dgn

USERNAME => s124496 DATE PLOTTED => 29-APR-2013 TIME PLOTTED => 12:58

DIST	COUNTY	ROUTE	POST MILES TOTAL PROJECT	SHEET No	TOTAL SHEETS
12	Ora	5	6.2/8.7	559	595

Khaled Allam 11/12/12
REGISTERED CIVIL ENGINEER DATE

4-29-13
PLANS APPROVAL DATE

REGISTERED PROFESSIONAL ENGINEER
Khaled Allam
No. 67110
Exp. 09/30/14
CIVIL
STATE OF CALIFORNIA

The State of California or its officers or agents shall not be responsible for the accuracy or completeness of electronic copies of this plan sheet.

JACOBS
3161 MICHELSON, STE 500
IRVINE, CA 92612

ORANGE COUNTY
TRANSPORTATION AUTHORITY
550 S. MAIN STREET
ORANGE, CA 92863-1584

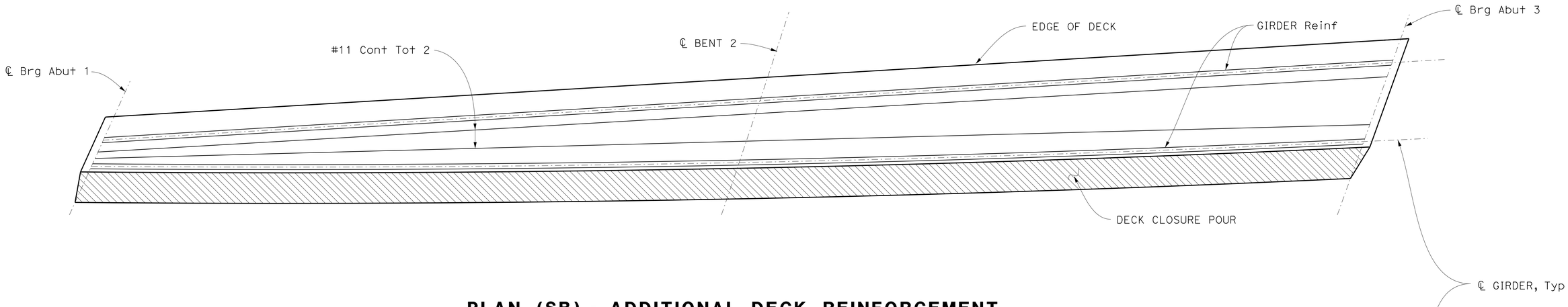

PLAN (SB) - ADDITIONAL DECK REINFORCEMENT

NO SCALE

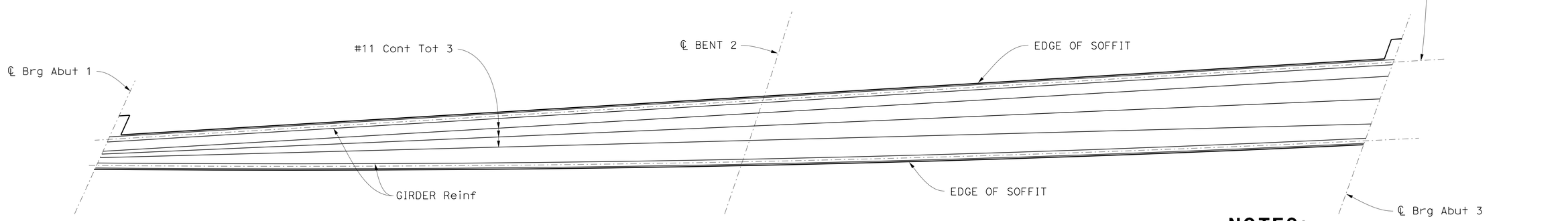

PLAN (SB) - ADDITIONAL SOFFIT REINFORCEMENT

NO SCALE

NOTES:

1. All dimensions measured along centerline of girders.
2. Splice shall be "Service Butt Splice".
3. No splice shall be allowed at top girder Reinf within 30' at each side of the bent.
4. No splice shall be allowed at bottom girder Reinf within 25' at each side of ℄ span.

NOTE:
THE CONTRACTOR SHALL VERIFY ALL CONTROLLING FIELD DIMENSIONS BEFORE ORDERING OR FABRICATING ANY MATERIAL.

Luqi Yang
DESIGN OVERSIGHT Luqi Yang
1-16-13
SIGN OFF DATE

	BY	CHECKED
DESIGN	K. Allam	B. Holton
DETAILS	I. Karkoutli	B. Holton
QUANTITIES	M. Metcalf	G. Armstrong

PREPARED FOR THE
STATE OF CALIFORNIA
DEPARTMENT OF TRANSPORTATION

Alaedin Moubayed
PROJECT ENGINEER

BRIDGE NO. 55-0510
POST MILES 6.76

ROUTE 5 / 1 SEPARATION (WIDEN)
ADDITIONAL REINFORCEMENT DETAILS No. 1

DESIGN DETAIL SHEET (ENGLISH) (REV.7/16/10)

ORIGINAL SCALE IN INCHES FOR REDUCED PLANS 0 1 2 3

UNIT: 2998
PROJECT NUMBER & PHASE: 12000202791 CONTRACT NO.: 12-0F96E4

DISREGARD PRINTS BEARING EARLIER REVISION DATES

REVISION DATES: 4/23/12 8/23/12 11/12/12

SHEET 19 OF 27

FILE => 55-0510-o-gir_rf01.dgn

USERNAME => s124496 DATE PLOTTED => 29-APR-2013 TIME PLOTTED => 12:58

DIST	COUNTY	ROUTE	POST MILES TOTAL PROJECT	SHEET No	TOTAL SHEETS
12	Ora	5	6.2/8.7	560	595

Khaled Allam 11/12/12
REGISTERED CIVIL ENGINEER DATE

4-29-13
PLANS APPROVAL DATE

REGISTERED PROFESSIONAL ENGINEER
Khaled Allam
No. 67110
Exp. 09/30/14
CIVIL
STATE OF CALIFORNIA

The State of California or its officers or agents shall not be responsible for the accuracy or completeness of electronic copies of this plan sheet.

JACOBS
3161 MICHELSON, STE 500
IRVINE, CA 92612

ORANGE COUNTY
TRANSPORTATION AUTHORITY
550 S. MAIN STREET
ORANGE, CA 92863-1584

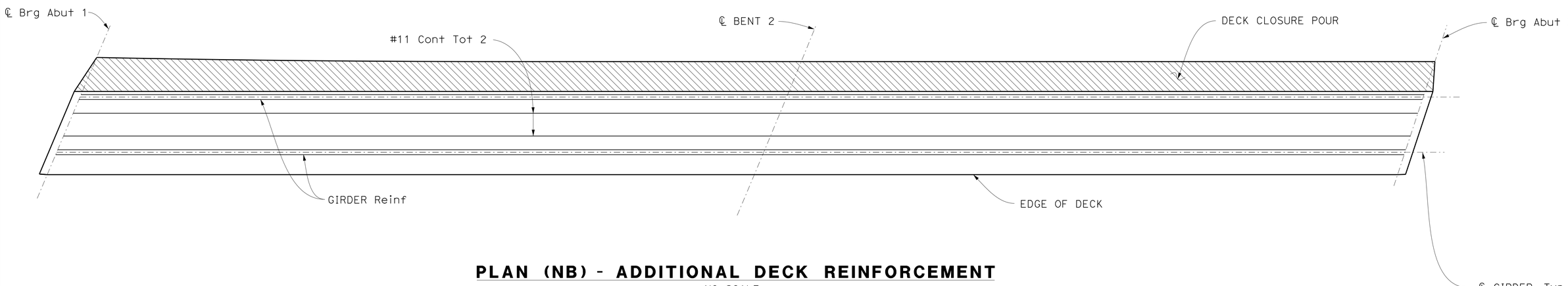

PLAN (NB) - ADDITIONAL DECK REINFORCEMENT

NO SCALE

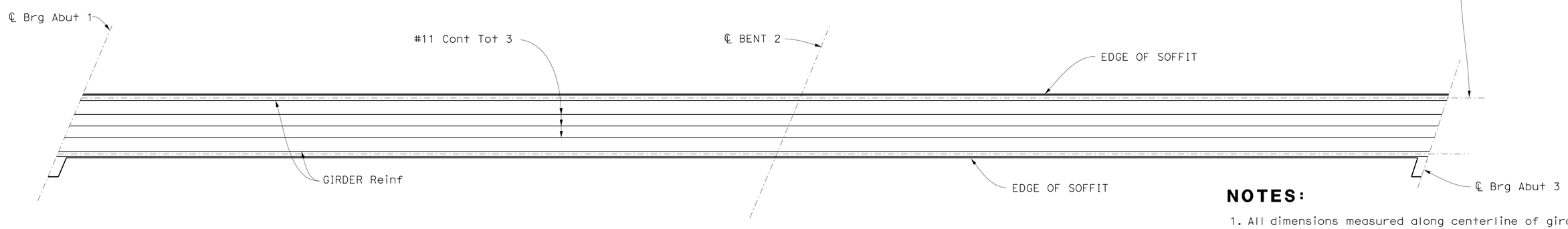

PLAN (NB) - ADDITIONAL SOFFIT REINFORCEMENT

NO SCALE

NOTES:

1. All dimensions measured along centerline of girders.
2. Splice shall be service butt splice.
3. No splice shall be allowed at top girder Reinf within 30' at each side of the bent.
4. No splice shall be allowed at bottom girder Reinf within 25' at each side of ℄ span.

NOTE:
THE CONTRACTOR SHALL VERIFY ALL CONTROLLING FIELD DIMENSIONS BEFORE ORDERING OR FABRICATING ANY MATERIAL.

Luqi Yang
DESIGN OVERSIGHT Luqi Yang
1-16-13
SIGN OFF DATE

	BY	CHECKED
DESIGN	K. Allam	B. Holton
DETAILS	I. Karkoutli	B. Holton
QUANTITIES	M. Metcalf	G. Armstrong

PREPARED FOR THE
STATE OF CALIFORNIA
DEPARTMENT OF TRANSPORTATION

Alaedin Moubayed
PROJECT ENGINEER

BRIDGE NO. 55-0510
POST MILES 6.76

ROUTE 5 / 1 SEPARATION (WIDEN)
ADDITIONAL REINFORCEMENT DETAILS No. 2

DESIGN DETAIL SHEET (ENGLISH) (REV.7/16/10)

ORIGINAL SCALE IN INCHES FOR REDUCED PLANS 0 1 2 3

UNIT: 2998
PROJECT NUMBER & PHASE: 12000202791
CONTRACT NO.: 12-0F96E4

DISREGARD PRINTS BEARING EARLIER REVISION DATES
REVISION DATES 4/23/12 8/13/12 11/12/12

SHEET 20 OF 27

FILE => 55-0510-o-gir_rf02.dgn

USERNAME => s124496 DATE PLOTTED => 29-APR-2013 TIME PLOTTED => 12:58

DIST	COUNTY	ROUTE	POST MILES TOTAL PROJECT	SHEET No.	TOTAL SHEETS
12	Ora	5	6.2/8.7	561	595

Khaled Allam 11/12/12
REGISTERED CIVIL ENGINEER DATE

4-29-13
PLANS APPROVAL DATE

REGISTERED PROFESSIONAL ENGINEER Khaled Allam No. 67110 Exp. 09/30/14 CIVIL STATE OF CALIFORNIA

The State of California or its officers or agents shall not be responsible for the accuracy or completeness of electronic copies of this plan sheet.

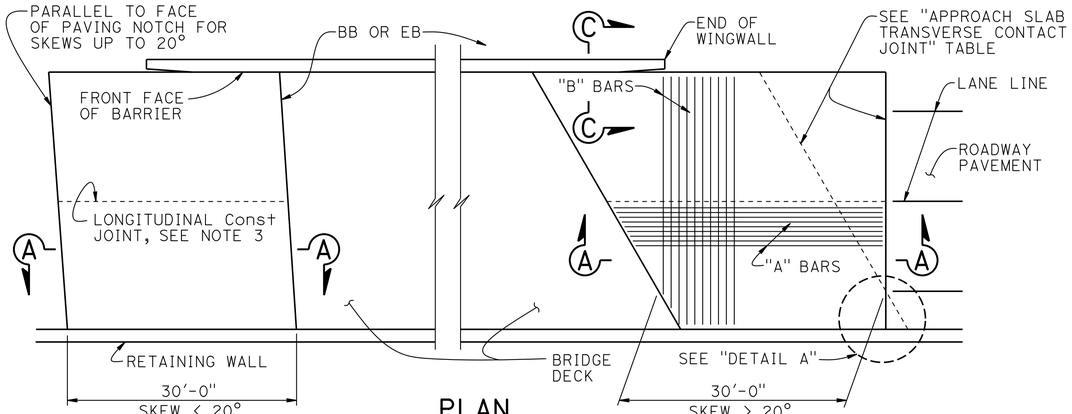

PLAN
1" = 10'

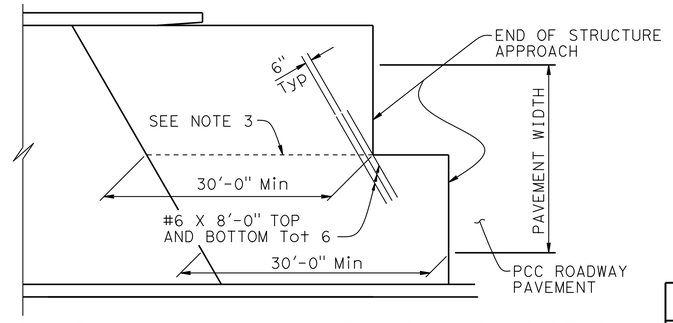

STRUCTURE APPROACH - END STAGGER DETAIL
NO SCALE

APPROACH SLAB TRANSVERSE CONTACT JOINT		
APPROACH SKEW	WITH AC ROADWAY PAVEMENT	WITH PCC ROADWAY PAVEMENT
< 20°	PARALLEL TO FACE OF PN	PARALLEL TO FACE OF PN
20° - 45°	PARALLEL TO FACE OF PN USE "DETAIL A"	STAGGER LINES 24' TO 36' APART
> 45°	PARALLEL TO FACE OF PN USE "DETAIL A"	STAGGER AT EACH LANE LINE

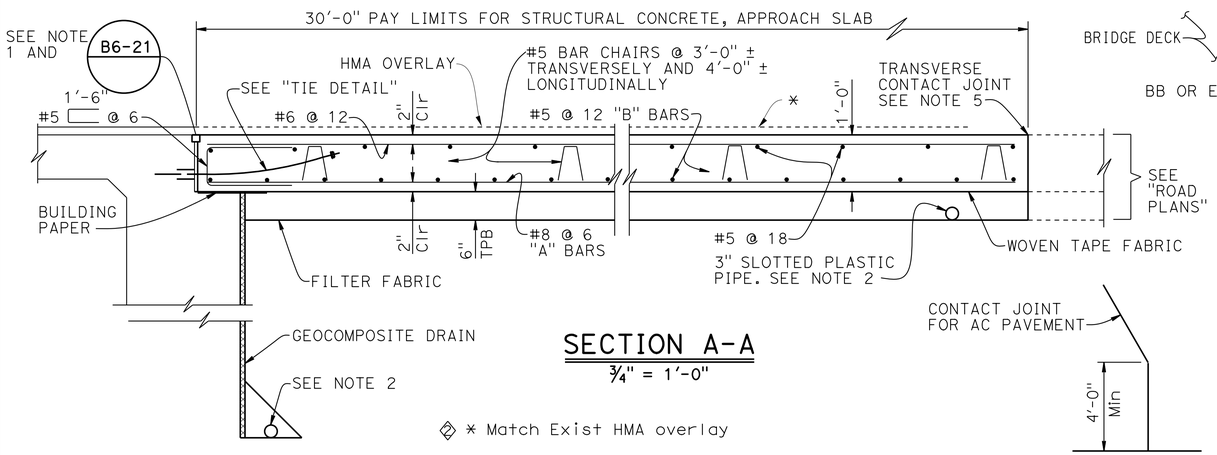

SECTION A-A
¾" = 1'-0"

◇ * Match Exist HMA overlay

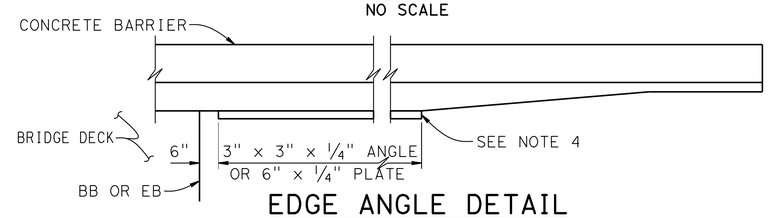

EDGE ANGLE DETAIL
½" = 1'-0"

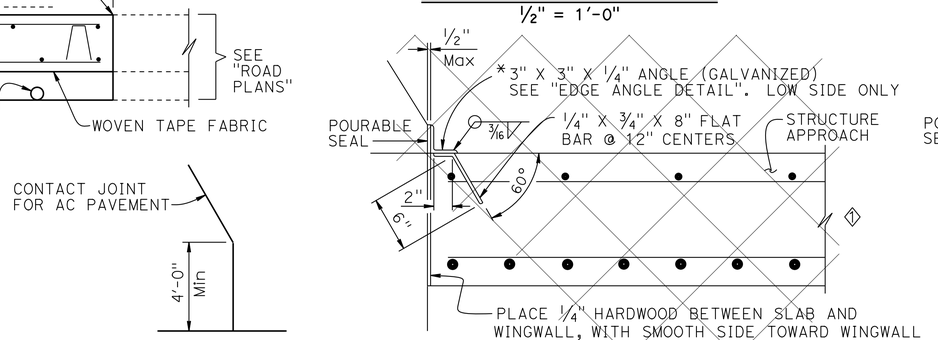

DETAIL A
NO SCALE

*(TO BE USED WITH CONCRETE BARRIER WITH VERTICAL FACE)

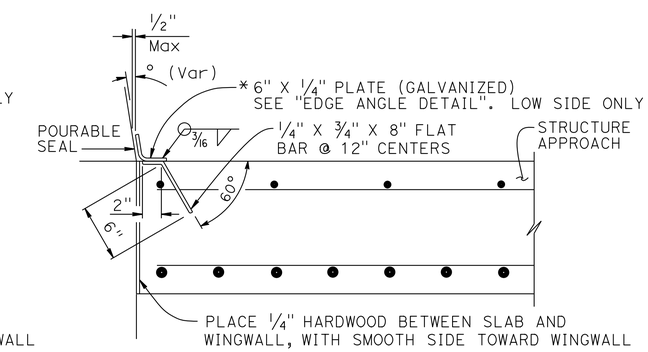

*(TO BE USED WITH CONCRETE BARRIER WITH SLOPING FACE)

DETAIL B
1½" = 1'-0"

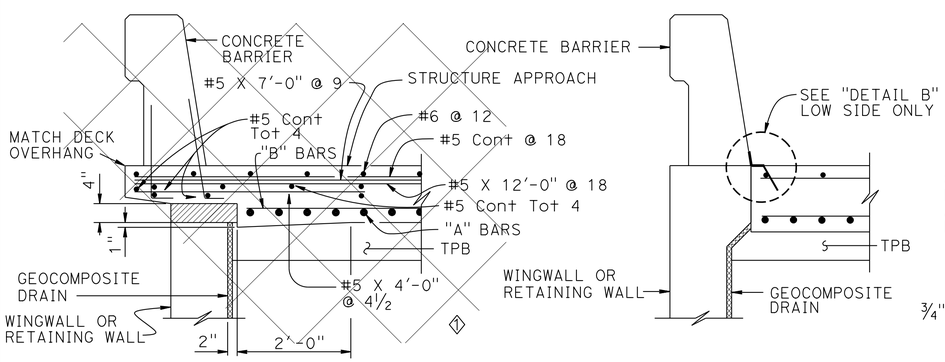

TYPE E-1 Polystyrene to be removed TYPE E-2

SECTION C-C
¾" = 1'-0"
(Type E-1 to be used, unless otherwise shown on plans)

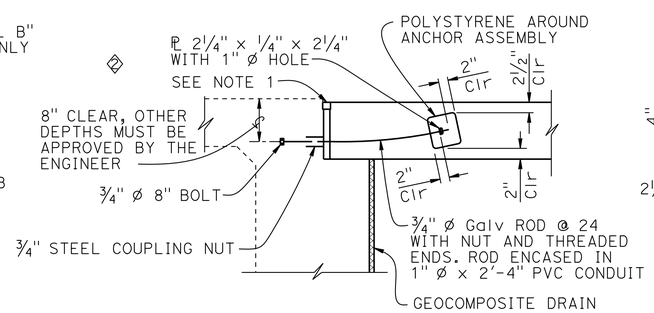

TIE DETAIL
¾" = 1'-0"

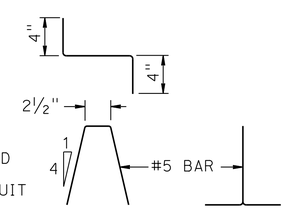

BAR CHAIR DETAIL
1½" = 1'-0"

NOTES:
1. For details not noted or shown, see Structure Plans
2. For drainage details, see "STRUCTURE APPROACH DRAINAGE DETAILS" sheet
3. Longitudinal construction joints, when permitted by the Engineer, shall be located on lane lines
4. End angle or plate at beginning of barrier transition, end of wingwall or end of structure approach, as applicable
5. For transverse contact joint with new PCC paving, refer to Standard Plan P10
6. At the contractor's option, approach slab transverse reinforcement may be placed parallel to paving notch. Spacing of transverse reinforcement is measured along ℄ roadway

SPECIAL DETAILS

REVISED STANDARD DRAWING
FILE NO. xs3-140
APPROVAL DATE July 2011

◇ Does not apply
◇ Revised detail

STATE OF CALIFORNIA
DEPARTMENT OF TRANSPORTATION

DIVISION OF ENGINEERING SERVICES

BRIDGE NO. 55-0510
POST MILE 6.76

ROUTE 5/1 SEPARATION
STRUCTURE APPROACH TYPE N(30D)

DS OSD 2147A (ENGLISH STANDARD DRAWING "XS" BORDER REV. (02-02-11)

ORIGINAL SCALE IN INCHES FOR REDUCED PLANS 0 1 2 3

UNIT: 2998
PROJECT NUMBER & PHASE: 12000202791
CONTRACT NO.: 12-0F96E4

DISREGARD PRINTS BEARING EARLIER REVISION DATES
REVISION DATES 8/23/12 8/23/12 11/12/12

SHEET 21 OF 27

FILE => 55-0510-s-sap_n30d.dgn

USERNAME => s124436 DATE PLOTTED => 29-APR-2013 TIME PLOTTED => 12:58

DIST	COUNTY	ROUTE	POST MILES TOTAL PROJECT	SHEET No.	TOTAL SHEETS
12	Ora	5	6.2/8.7	562	595

Khaled Allam 11/12/12
REGISTERED CIVIL ENGINEER DATE

4-29-13
PLANS APPROVAL DATE

REGISTERED PROFESSIONAL ENGINEER Khaled Allam No. 67110 Exp. 09/30/14 CIVIL STATE OF CALIFORNIA

The State of California or its officers or agents shall not be responsible for the accuracy or completeness of electronic copies of this plan sheet.

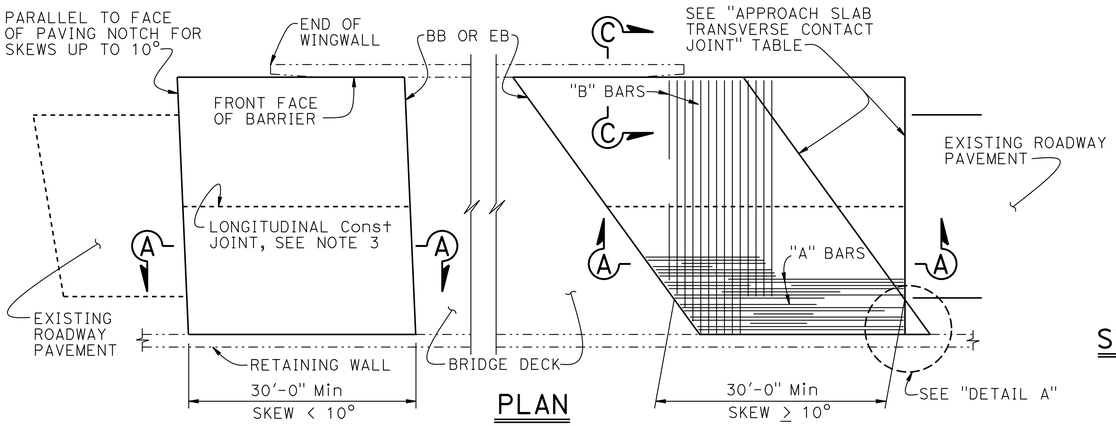

PLAN
1" = 10'

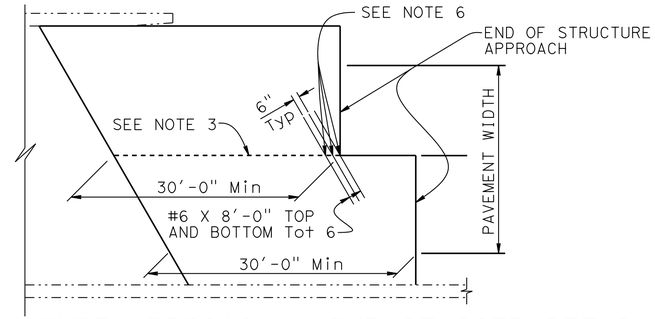

STRUCTURE APPROACH - END STAGGER DETAIL
NO SCALE

APPROACH SLAB TRANSVERSE CONTACT JOINT		
APPROACH SKEW	WITH AC ROADWAY PAVEMENT	WITH PCC ROADWAY PAVEMENT
< 10°	PARALLEL TO FACE OF PN	PARALLEL TO FACE OF PAVING NOTCH
10° - 45°	PARALLEL TO FACE OF PN USE "DETAIL A"	STAGGER LINES 24' TO 36' APART
> 45°	PARALLEL TO FACE OF PN USE "DETAIL A"	STAGGER AT EACH LANE LINE

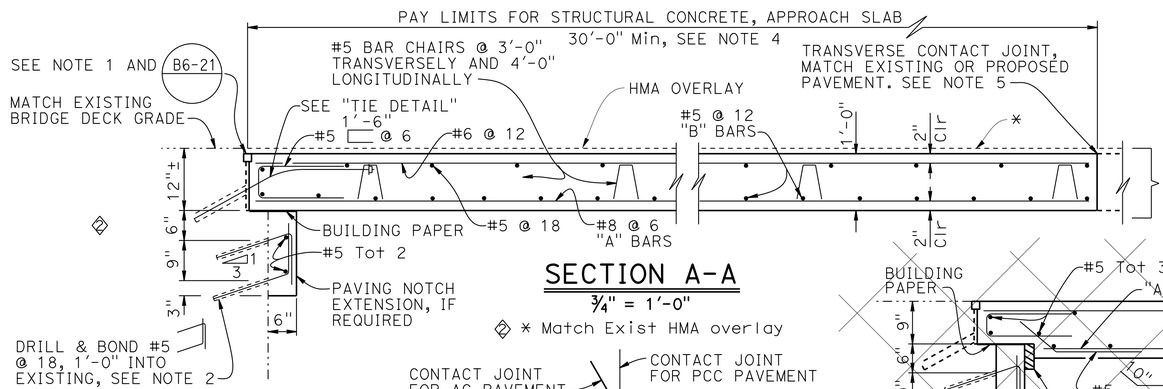

SECTION A-A
¾" = 1'-0"

* Match Exist HMA overlay

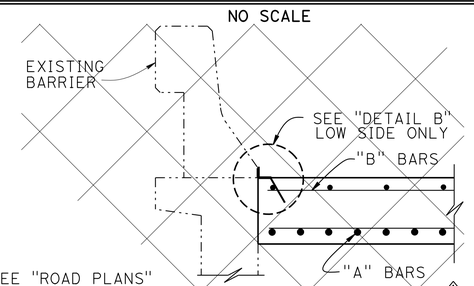

SECTION C-C
¾" = 1'-0"

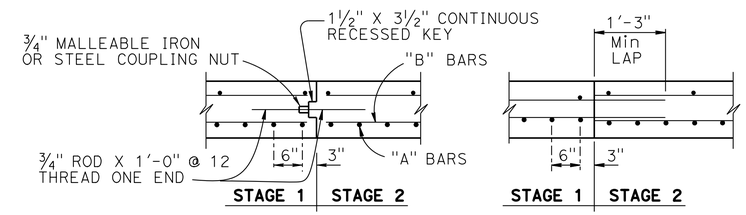

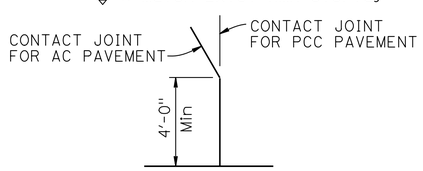

DETAIL A
No Scale

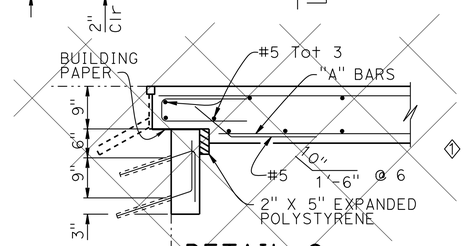

DETAIL C
¾" = 1'-0"

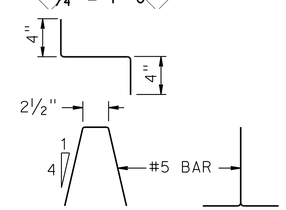

BAR CHAIR DETAIL
1½" = 1'-0"

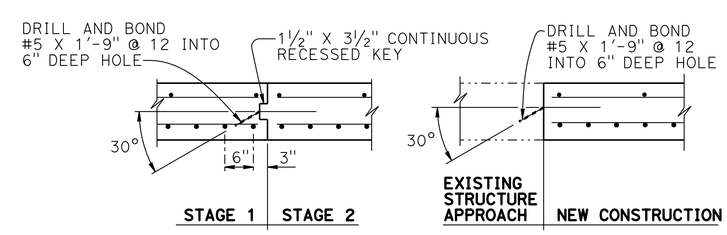

LONGITUDINAL CONSTRUCTION JOINT ALTERNATIVES
¾" = 1'-0"

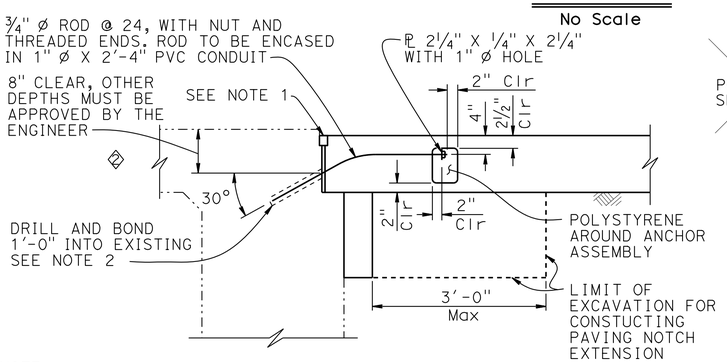

NOTE:
THE CONTRACTOR SHALL VERIFY ALL CONTROLLING FIELD DIMENSIONS BEFORE ORDERING OR FABRICATING ANY MATERIAL.

TIE DETAIL
¾" = 1'-0"

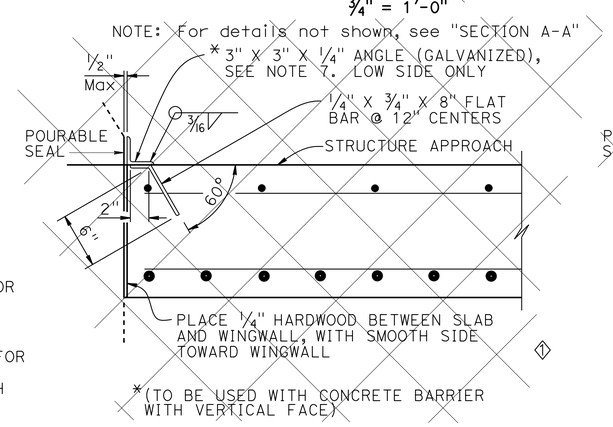

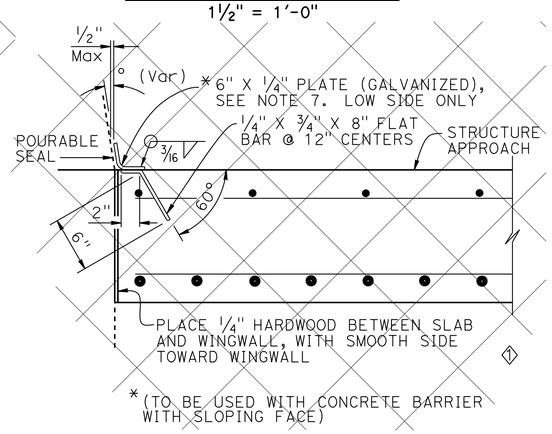

DETAIL B
1½" = 1'-0"

NOTES:
1. For details not shown or noted, see Structure Plans. Adjust bar reinforcement to clear a sawcut for sealed joint, when required
2. Space to avoid existing prestress anchorages and main reinforcement
3. Longitudinal construction joints, when permitted by the Engineer, shall be located on lane lines
4. Transverse contact joint shall be a minimum of 5'-0" from an existing or constructed weakened plane joint
5. For transverse contact joint with new PCC paving. refer to Standard Plan P10
6. Couplers are required for stage construction
7. End angle or plate at beginning of barrier transition, end of wingwall or end of structure approach as applicable

SPECIAL DETAILS

REVISED STANDARD DRAWING
FILE NO. xs3-150
APPROVAL DATE July 2011

◇1 Does not apply
◇2 Revised detail

STATE OF CALIFORNIA
DEPARTMENT OF TRANSPORTATION

DIVISION OF ENGINEERING SERVICES

BRIDGE NO. 55-0510
POST MILE 6.76

ROUTE 5 / 1 SEPARATION
STRUCTURE APPROACH TYPE R(30D)

DS OSD 2147A (ENGLISH STANDARD DRAWING "XS" BORDER REV. (02-02-11)

ORIGINAL SCALE IN INCHES FOR REDUCED PLANS 0 1 2 3

UNIT: 2998
PROJECT NUMBER & PHASE: 12000202791
CONTRACT NO.: 12-0F96E4

DISREGARD PRINTS BEARING EARLIER REVISION DATES
REVISION DATES 4/23/12 8/23/12 11/12/12
SHEET 22 OF 27

FILE => 55-0510-s-sap_r30d.dgn

USERNAME => s124436 DATE PLOTTED => 29-APR-2013 TIME PLOTTED => 12:58

DIST	COUNTY	ROUTE	POST MILES TOTAL PROJECT	SHEET No.	TOTAL SHEETS
12	Ora	5	6.2/8.7	563	595

Khaled Allam 11/12/12
REGISTERED CIVIL ENGINEER DATE

4-29-13
PLANS APPROVAL DATE

REGISTERED PROFESSIONAL ENGINEER Khaled Allam No. 67110 Exp. 09/30/14 CIVIL STATE OF CALIFORNIA

The State of California or its officers or agents shall not be responsible for the accuracy or completeness of electronic copies of this plan sheet.

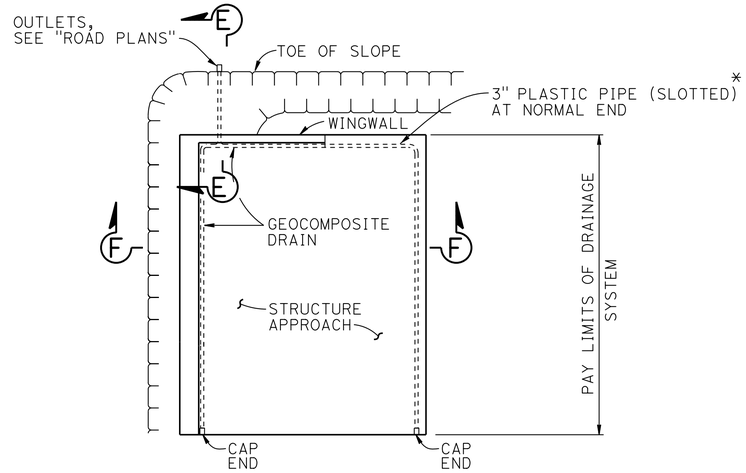

TYPICAL PLAN

1" = 10'

* FOR PIPE LAYOUT AT STAGGERED END, SEE "DETAIL B"

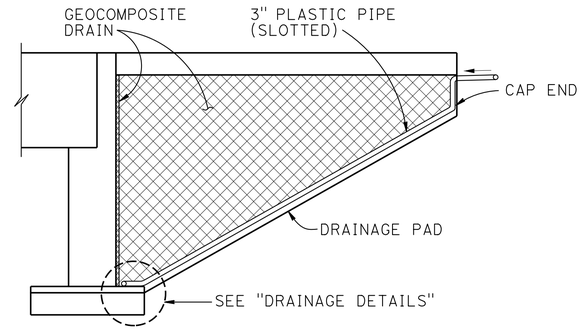

CANTILEVER WINGWALL

SECTION F-F

1/4" = 1'-0"

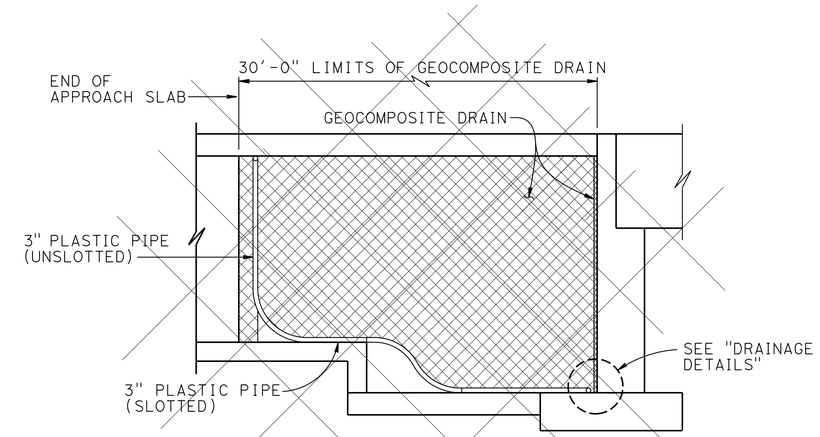

RETAINING WALL WINGWALL DRAINAGE DETAILS

1

SECTION G-G

1/4" = 1'-0"

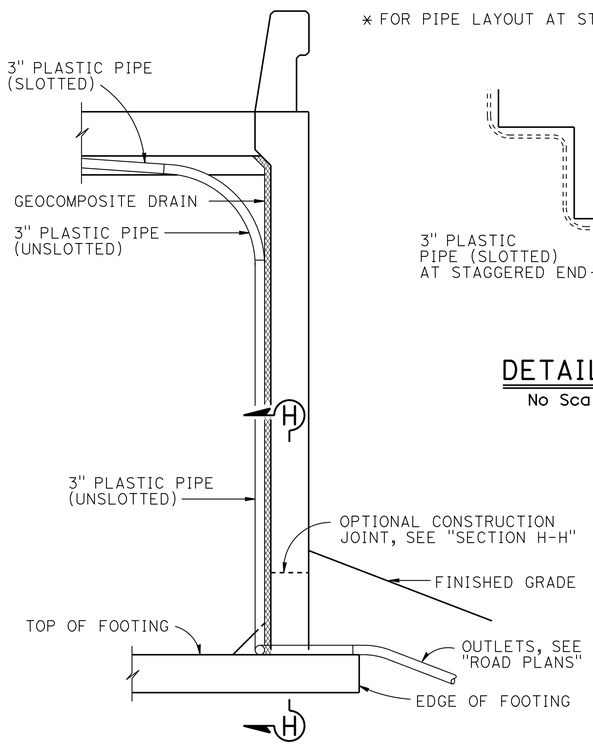

SECTION E-E

1/2" = 1'-0"

NOTE: Bends and junctions in 3" plastic pipe are 30" radius Min

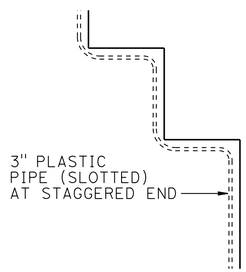

DETAIL B

No Scale

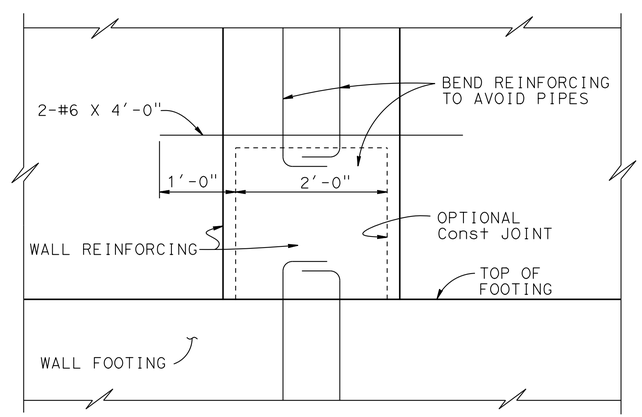

SECTION H-H

1" = 1'-0"

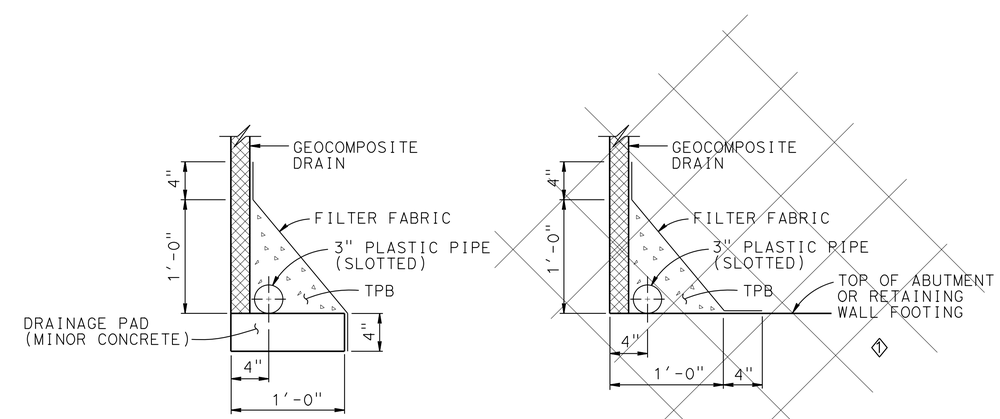

WITHOUT FOOTING

WITH FOOTING

DRAINAGE DETAILS

1 1/2" = 1'-0"

SPECIAL DETAILS

REVISED STANDARD DRAWING

FILE NO. xs3-110

APPROVAL DATE July 2011

1 Does not apply

STATE OF CALIFORNIA DEPARTMENT OF TRANSPORTATION

DIVISION OF ENGINEERING SERVICES

BRIDGE NO. 55-0510

POST MILE 6.76

ROUTE 5 / 1 SEPARATION

STRUCTURE APPROACH DRAINAGE DETAILS

DS OSD 2147A (ENGLISH STANDARD DRAWING "XS" BORDER REV. (02-02-11)

ORIGINAL SCALE IN INCHES FOR REDUCED PLANS 0 1 2 3

UNIT: 2998
PROJECT NUMBER & PHASE: 12000202791
CONTRACT NO.: 12-0F96E4

DISREGARD PRINTS BEARING EARLIER REVISION DATES

REVISION DATES 4/23/12 8/13/12 11/12/12

SHEET 23 OF 27

FILE => 55-0510-t-sadd.dgn

USERNAME => s124936 DATE PLOTTED => 29-APR-2013 TIME PLOTTED => 12:58

DIST	COUNTY	ROUTE	POST MILES TOTAL PROJECT	SHEET No.	TOTAL SHEETS
12	Ora	5	6.2/8.7	564	595

Khaled Allam 11/12/12
REGISTERED CIVIL ENGINEER DATE

4-29-13
PLANS APPROVAL DATE

REGISTERED PROFESSIONAL ENGINEER Khaled Allam No. 67110 Exp. 09/30/14 CIVIL STATE OF CALIFORNIA

The State of California or its officers or agents shall not be responsible for the accuracy or completeness of electronic copies of this plan sheet.

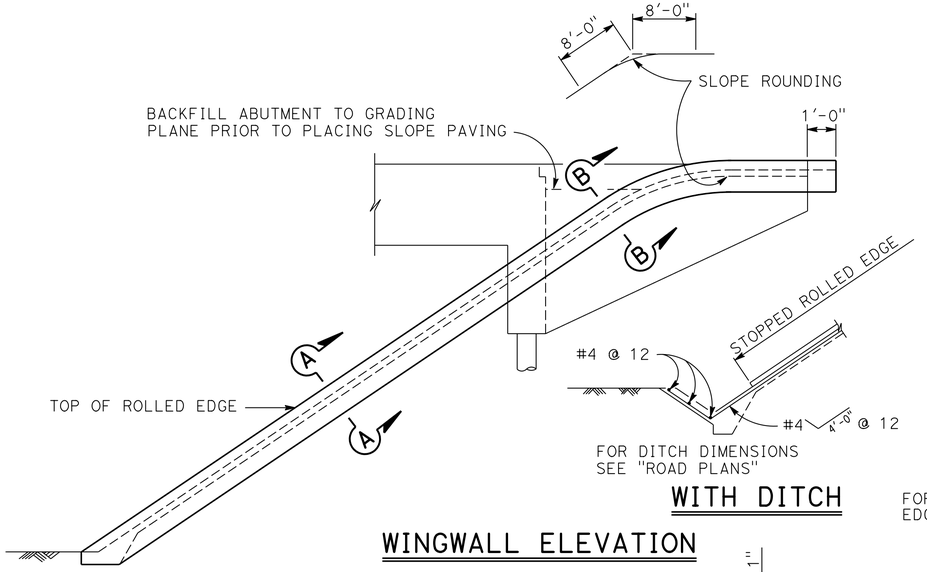

WITH DITCH

WINGWALL ELEVATION

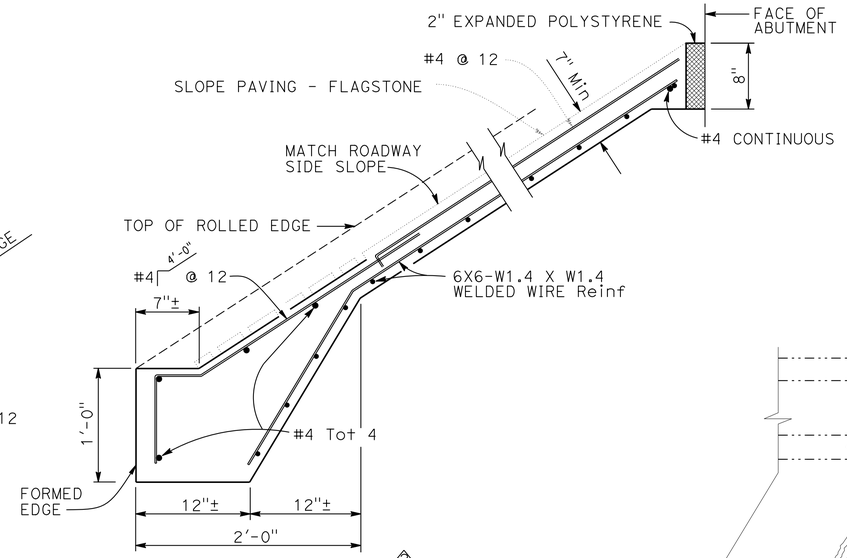

TYPICAL SECTION CONCRETE PAVING

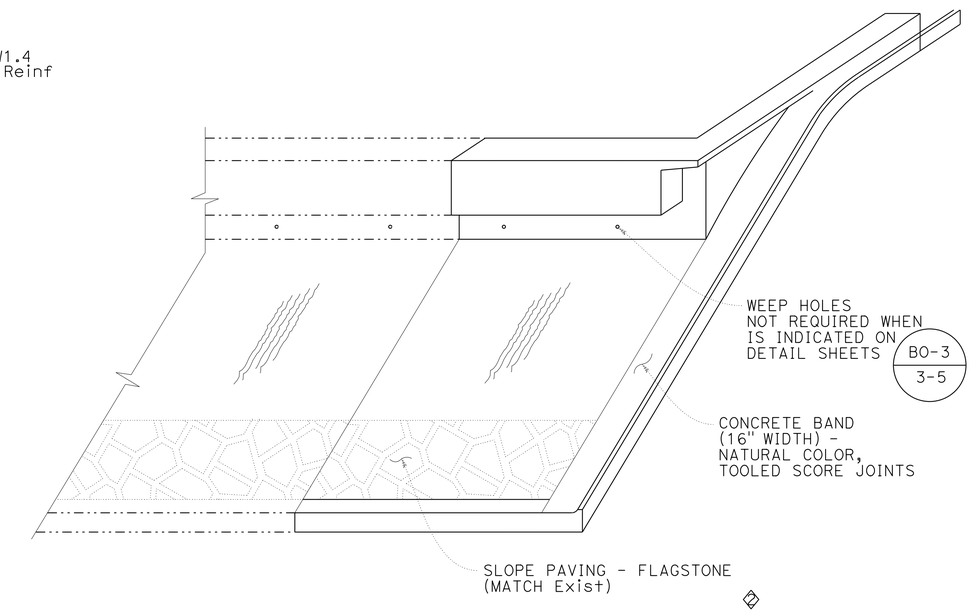

PICTORIAL VIEW OF TYPICAL INSTALLATION

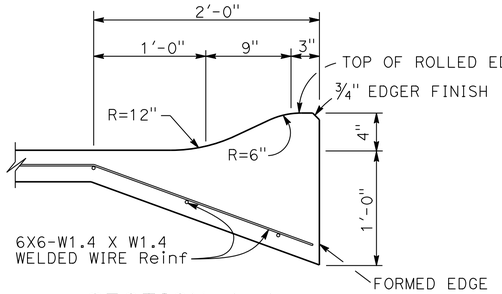

SECTION A-A

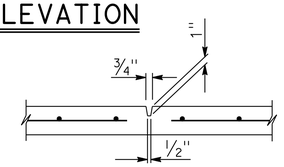

PREFORMED GROOVE

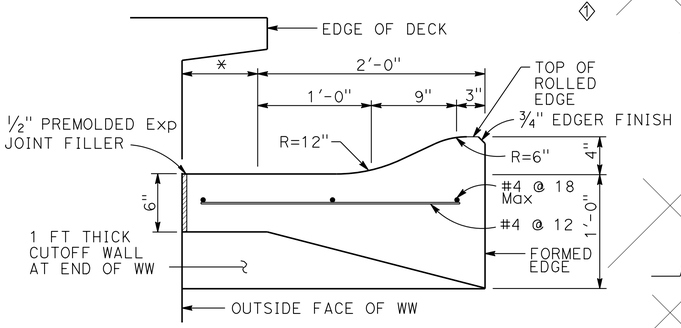

SECTION B-B

* THIS DIMENSION BECOMES ZERO WHEN EDGE OF DECK IS AT OUTSIDE FACE OF WW

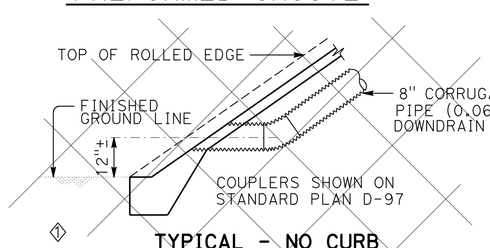

TYPICAL - NO CURB

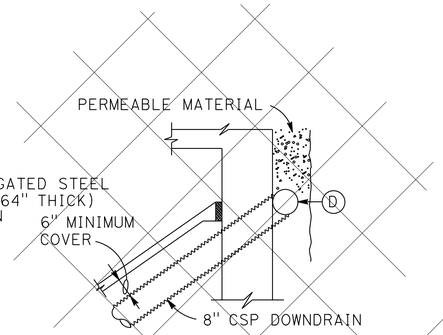

TYPICAL - DRAIN CONNECTION

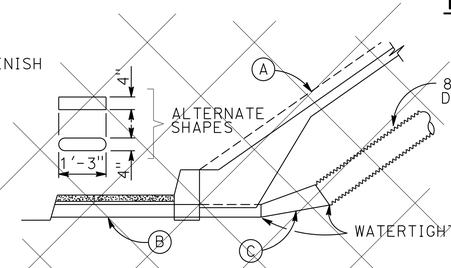

TYPICAL - WITH SIDEWALK

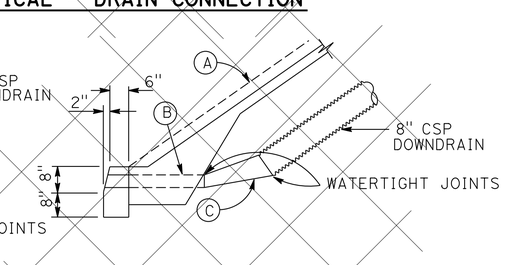

TYPICAL - WITH CURB

DRAINAGE DETAILS

NOTE:
Drainage details are only applicable when is indicated on detail sheets.

BO-3
3-5

LIMITS OF SLOPE PAVING & DRAINAGE LAYOUT

(A) Top of rolled edge

(B) Conduit:
0.064" galv corrugated steel or 0.109" smooth galv steel

(C) Taper: { 0.064" galv corrugated steel or 0.109" smooth galv steel

(D) 8" perforated steel pipe (0.064" thick) underdrain behind abutment. Connect to downdrain as shown on limits of Slope Paving & Drainage layout.

SPECIAL DETAILS

NO SCALE

STANDARD DRAWING

FILE NO. xs4-210

APPROVAL DATE July 2011

◇1 Does not apply
◇2 Revised detail

STATE OF CALIFORNIA
DEPARTMENT OF TRANSPORTATION

DIVISION OF ENGINEERING SERVICES

BRIDGE NO.	POST MILE
55-0510	6.76

ROUTE 5 / 1 SEPARATION

SLOPE PAVING-FULL SLOPE

DS OSD 2147A (ENGLISH STANDARD DRAWING "XS" BORDER REV. (02-02-11)

ORIGINAL SCALE IN INCHES FOR REDUCED PLANS 0 1 2 3

UNIT: 2998
PROJECT NUMBER & PHASE: 12000202791
CONTRACT NO.: 12-0F96E4

DISREGARD PRINTS BEARING EARLIER REVISION DATES

REVISION DATES 4/23/12 9/23/12 11/12/12

SHEET 24 OF 27

FILE => 55-0510-w-slp.dgn

USERNAME => s124496 DATE PLOTTED => 23-APR-2013 TIME PLOTTED => 12:58

DIST	COUNTY	ROUTE	POST MILES TOTAL PROJECT	SHEET No	TOTAL SHEETS
12	Ora	5	6.2/8.7	565	595

GEOTECHNICAL PROFESSIONAL — DATE 11/12/12

PLANS APPROVAL DATE 4-29-13

REGISTERED PROFESSIONAL ENGINEER — S. PIRATHIVIRAJ — NO. GE 2963 — EXP. 12-31-13 — GEOTECHNICAL — STATE OF CALIFORNIA

The State of California or its officers or agents shall not be responsible for the accuracy or completeness of electronic copies of this plan sheet.

ORANGE COUNTY TRANSPORTATION AUTHORITY
550 S. MAIN STREET
ORANGE, CA 92863-1584

EARTH MECHANICS, INC.
17800 NEWHOPE STREET, SUITE B
FOUNTAIN VALLEY, CA 92708

BENCH MARK

Designation: F-785 Elev = 75.717 feet (NAVD 88); 73.413 feet (NGVD29) Described by OCS 2003 - Found 3¾" US Coast and Geodectic Survey Bronzed Disk Stamped "F 785 1946", Set in the Top of a Concrete Bridge Abutment. Monument is Located in the Southwesterly Corner of the Atchinso\Topeka and Santa Fe Railway Overcrossing of San Mateo Creek, 69 ft. Northerly Along the Railway from the Centerline of the Interstate 5 Freeway Southbound Onramp at Camino Capistrano Prolonged to the West and 150± Westerly from the Centerline of Camino Capistrano. Monument is Set 2.0 ft. below the Tracks.

NOTES:

(1) This LOTB sheet was prepared in accordance with the Caltrans Soil and Rock Logging, Classification and Presentation Manual (June 2010)

(2) 2.4" samples were taken using a California Modified Sampler.

(3) An automatic trip hammer system consisting of a hammer weight of 140 lbs falling a distance of 30" was used to advance the drive sampler.

(4) Conversion factor from 2.4" Modified California Ring Sampler blowcounts to Standard Penetration Test (SPT) blowcounts is 0.5.

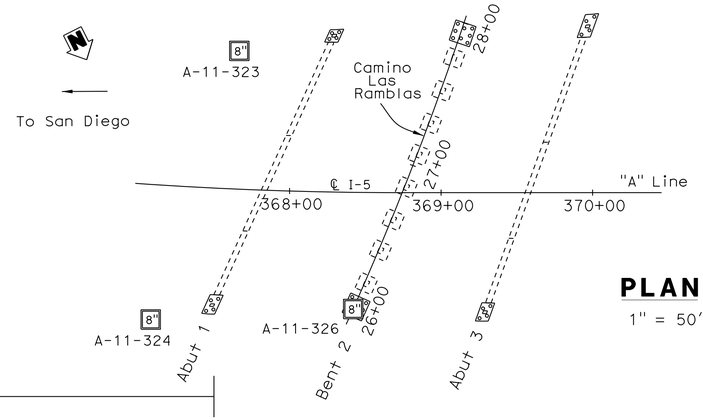

PLAN

1" = 50'

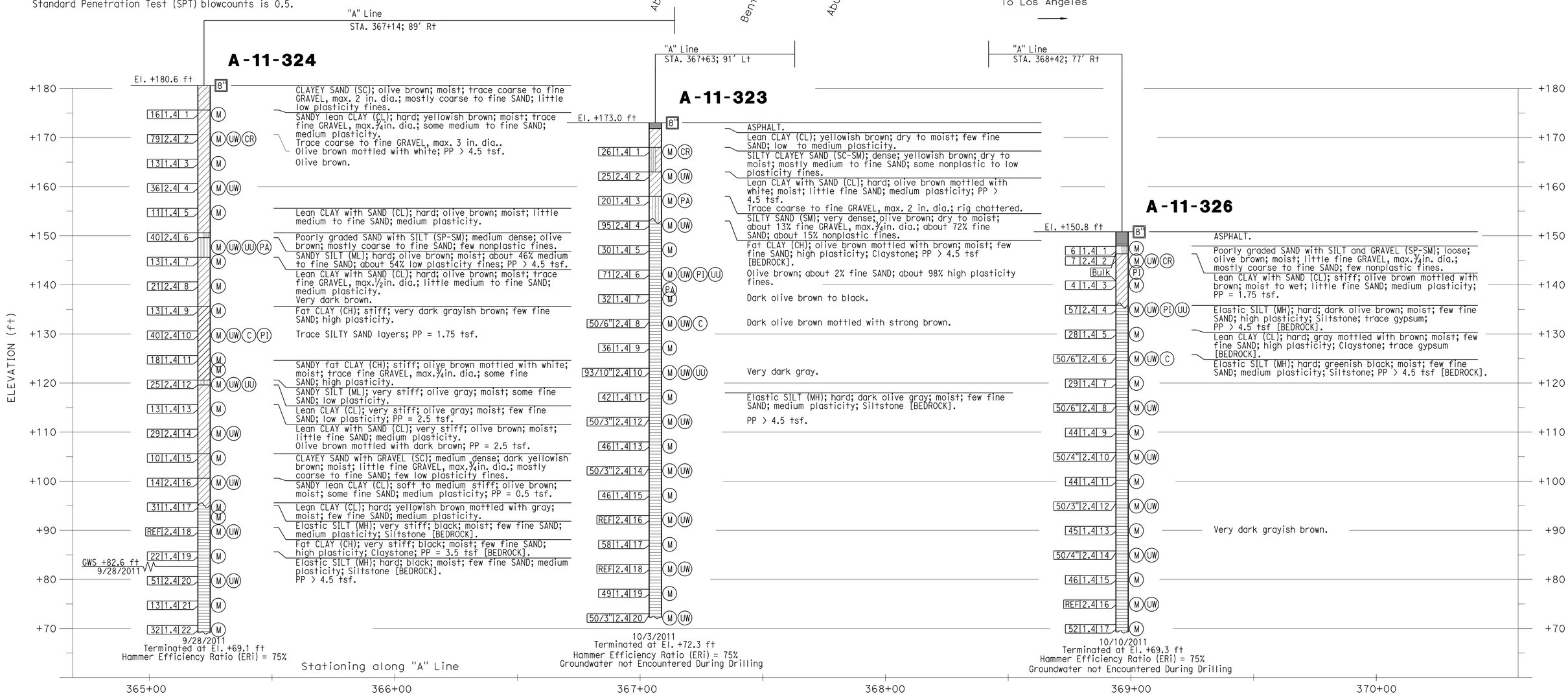

DESIGN OVERSIGHT: Luqi Yang — 1-16-13 SIGN OFF DATE	DRAWN BY: J. Fang	R. Jie — FIELD INVESTIGATION BY:	PREPARED FOR THE STATE OF CALIFORNIA DEPARTMENT OF TRANSPORTATION
	CHECKED BY: S. PIRATHIVIRAJ	DATE: 9/2011, 10/2011	S. PIRATHIVIRAJ — PROJECT ENGINEER

BRIDGE NO. 55-0510 — POST MILES 6.76

ROUTE 5/1 SEPARATION (WIDEN)

LOG OF TEST BORINGS 1 OF 3

GS GEOTECHNICAL LOG OF TEST BORINGS SHEET (ENGLISH) (REV. 7/16/10)

ORIGINAL SCALE IN INCHES FOR REDUCED PLANS 0 1 2 3

UNIT: 2998
PROJECT NUMBER & PHASE: 12000202791

DISREGARD PRINTS BEARING EARLIER REVISION DATES

REVISION DATES — SHEET 25 OF 27

FILE => 55-0510-z-lotb1.dgn

CONTRACT NO.: 12-0F96E4 PROJECT ID:

USERNAME => s124496 DATE PLOTTED => 29-APR-2013 TIME PLOTTED => 12:59

DIST	COUNTY	ROUTE	POST MILES TOTAL PROJECT	SHEET No	TOTAL SHEETS
12	Ora	5	6.2/8.7	566	595

GEOTECHNICAL PROFESSIONAL — DATE 11/12/12

4-29-13
PLANS APPROVAL DATE

REGISTERED PROFESSIONAL ENGINEER — S. PIRATHIVIRAJ — NO. GE 2963 — EXP. 12-31-13 — GEOTECHNICAL — STATE OF CALIFORNIA

The State of California or its officers or agents shall not be responsible for the accuracy or completeness of electronic copies of this plan sheet.

ORANGE COUNTY TRANSPORTATION AUTHORITY
550 S. MAIN STREET
ORANGE, CA 92863-1584

EARTH MECHANICS, INC.
17800 NEWHOPE STREET, SUITE B
FOUNTAIN VALLEY, CA 92708

BENCH MARK

Designation: F-785 Elev = 75.717 feet (NAVD 88); 73.413 feet (NGVD29) Described by OCS 2003 - Found 3¾" US Coast and Geodectic Survey Bronzed Disk Stamped "F 785 1946", Set in the Top of a Concrete Bridge Abutment. Monument is Located in the Southwesterly Corner of the Atchinso\Topeka and Santa Fe Railway Overcrossing of San Mateo Creek, 69 ft. Northerly Along the Railway from the Centerline of the Interstate 5 Freeway Southbound Onramp at Camino Capistrano Prolonged to the West and 150± Westerly from the Centerline of Camino Capistrano. Monument is Set 2.0 ft. below the Tracks.

NOTES:

(1) This LOTB sheet was prepared in accordance with the Caltrans Soil and Rock Logging, Classification and Presentation Manual (June 2010)

(2) 2.4" samples were taken using a California Modified Sampler.

(3) An automatic trip hammer system consisting of a hammer weight of 140 lbs falling a distance of 30" was used to advance the drive sampler.

(4) Conversion factor from 2.4" Modified California Ring Sampler blowcounts to Standard Penetration Test (SPT) blowcounts is 0.5.

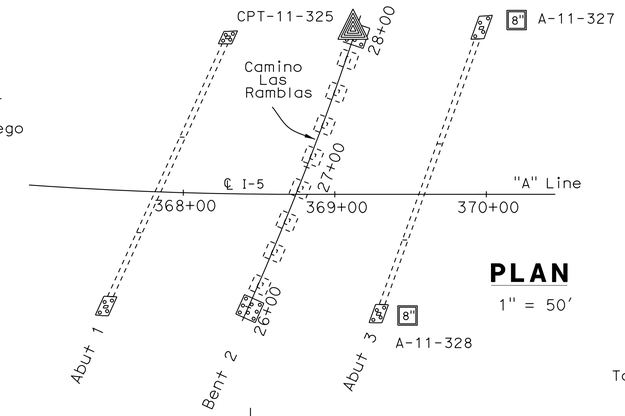

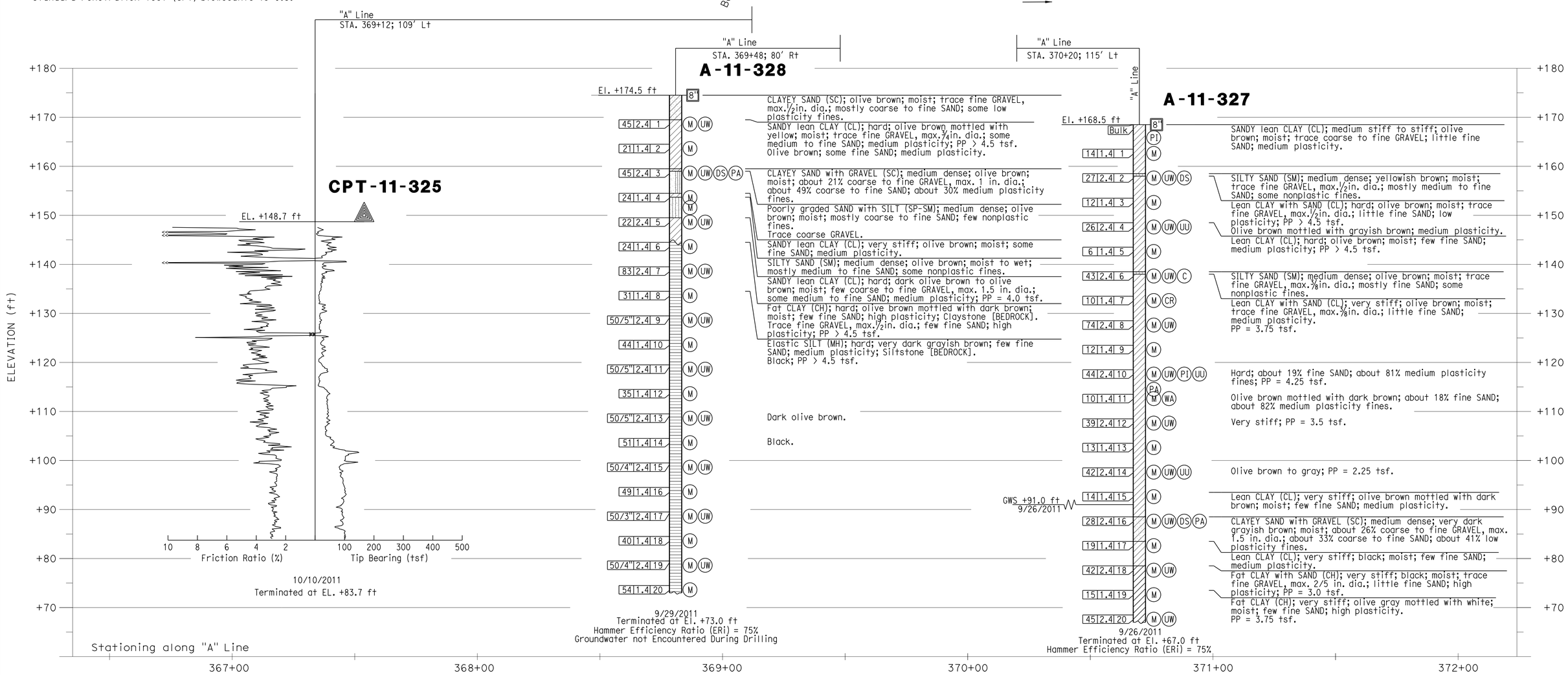

Luqi Yang — DESIGN OVERSIGHT: Luqi Yang — 1-16-13 — SIGN OFF DATE	DRAWN BY: J. Fang	R. Jie — FIELD INVESTIGATION BY:	PREPARED FOR THE STATE OF CALIFORNIA DEPARTMENT OF TRANSPORTATION
	CHECKED BY: S. PIRATHIVIRAJ	DATE: 9/2011, 10/2011	S. PIRATHIVIRAJ — PROJECT ENGINEER

BRIDGE NO. 55-0510 — POST MILES 6.76

ROUTE 5/1 SEPARATION (WIDEN)

LOG OF TEST BORINGS 2 OF 3

GS GEOTECHNICAL LOG OF TEST BORINGS SHEET (ENGLISH) (REV. 7/16/10)

ORIGINAL SCALE IN INCHES FOR REDUCED PLANS 0 1 2 3

UNIT: 2998
PROJECT NUMBER & PHASE: 12000202791

DISREGARD PRINTS BEARING EARLIER REVISION DATES

REVISION DATES

SHEET 26 OF 27

FILE => 55-0510-z-lotb2.dgn

CONTRACT NO.: 12-0F96E4 PROJECT ID:

USERNAME => s124436 DATE PLOTTED => 29-APR-2013 TIME PLOTTED => 12:59

DIST.	COUNTY	ROUTE	POSTMILE	SHEET NO.	TOTAL SHEETS
07	ORA	5.1	20.4	115	171

TO ACCOMPANY PLANS DATED 4-29-13

DIVISION OF ENGINEERING SERVICES - GEOTECHNICAL SERVICES

As-Built Log of Test Borings sheet is considered an informational document only. As such, the State of California registration seal with signature, license number and registration certificate expiration date confirm that this is a true and accurate copy of the original document. This drawing is available and presented only for the convenience of any bidder, contractor or other interested party.

DIST.	COUNTY	ROUTE	POST MILES-TOTAL PROJECT	Sheet No.	Total Sheets
12	Ora	5	6.2/8.7	567	595

GEOTECHNICAL PROFESSIONAL — DATE 11/12/12

ROUTE 5/1 SEPARATION (WIDEN)

LOG OF TEST BORINGS 3 OF 3

NOTE: A COPY OF THIS LOG OF TEST BORINGS IS AVAILABLE AT OFFICE OF STRUCTURE MAINTENANCE AND INVESTIGATIONS, SACRAMENTO, CALIFORNIA

UNIT:
PROJECT NUMBER & PHASE: 12000202791

BRIDGE No.	Sheet	of
55-0510	27	27

Revisions made to this Log of Test Borings from the original ___ Log of Test Borings are the addition of the following table and notes:

Boring	Station	Offset from C/L Rte. 101

REGISTERED PROFESSIONAL ENGINEER
S. PIRATHIVIRAJ
NO. GE 2963
EXP. 12-31-13
GEOTECHNICAL
STATE OF CALIFORNIA

PLAN

Scale: 1"=20'

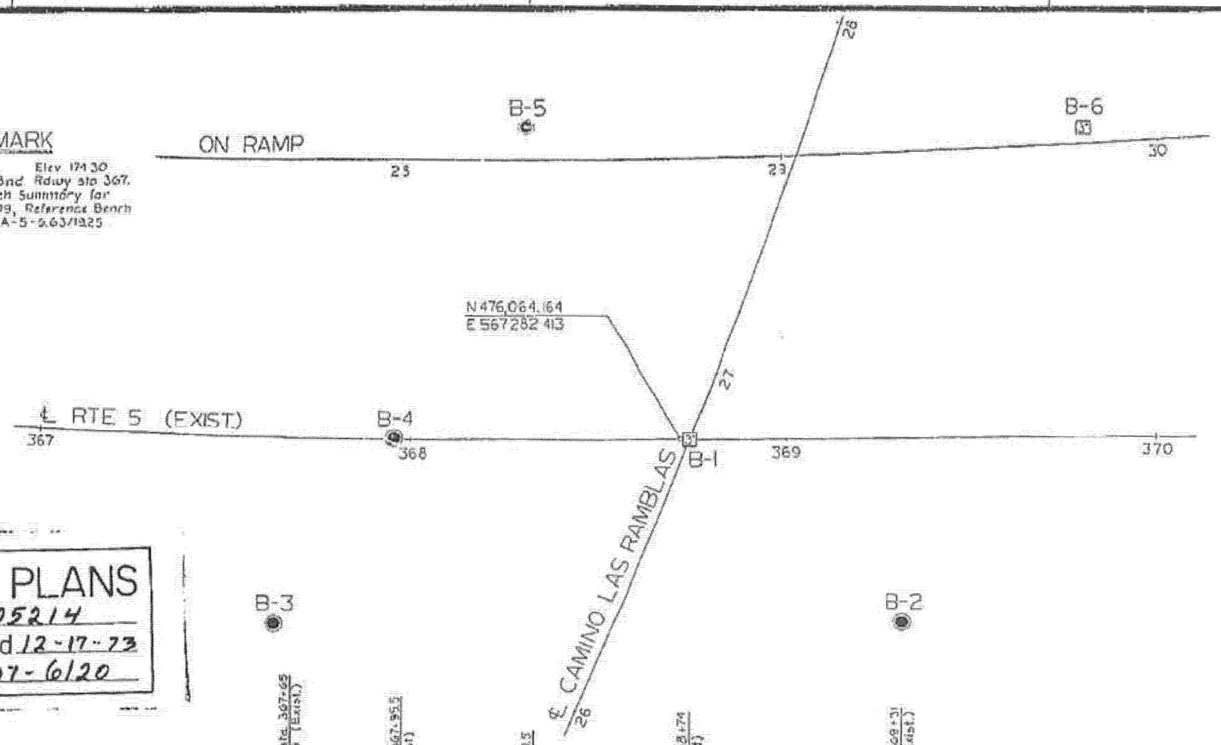

AS BUILT PLANS
Contract No. 07-105214
Date Completed 12-17-73
Document No. 07-6120

PROFILE

Scale: Vert. 1"=10'
Horiz. 1"=20'

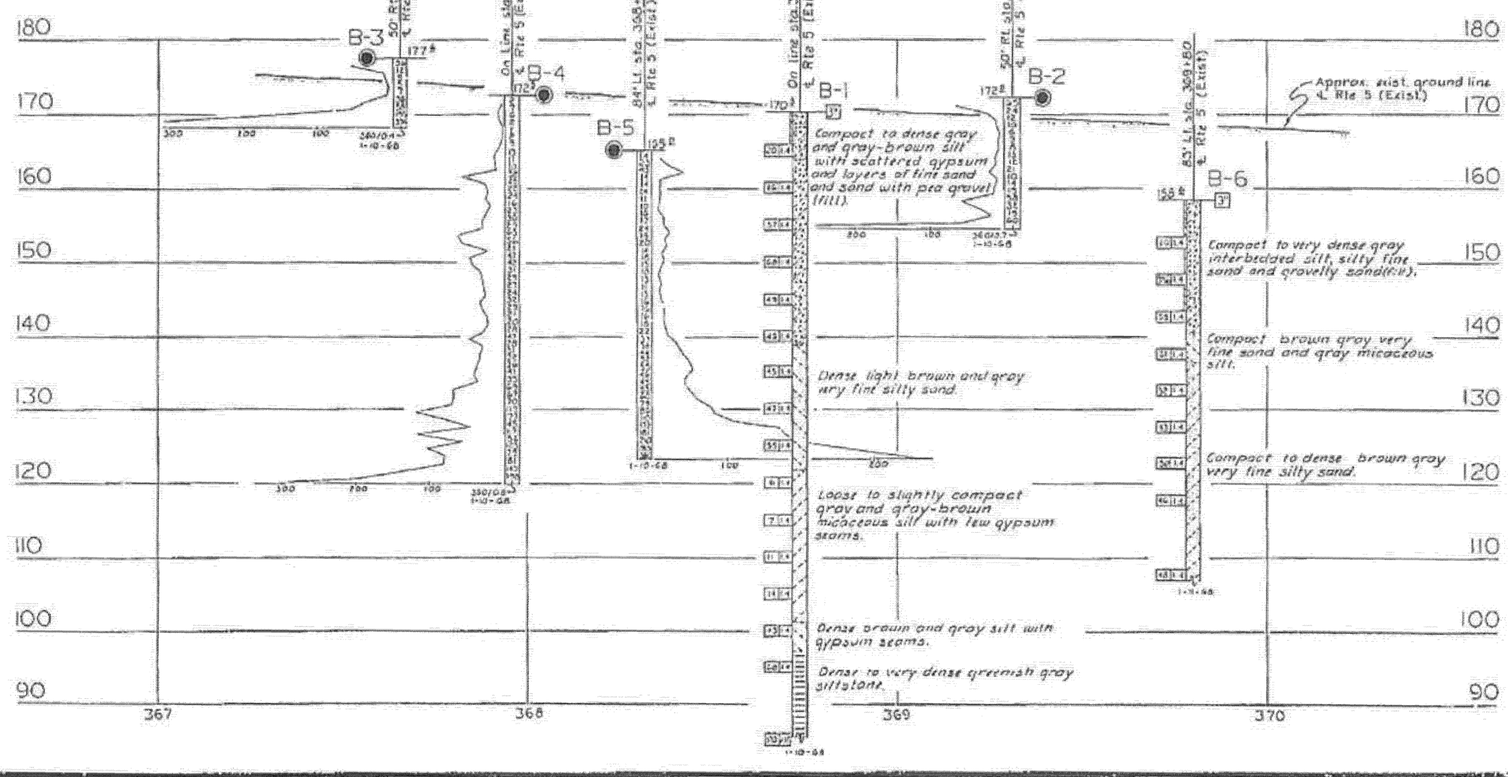

NO GROUND WATER ENCOUNTERED DURING THIS INVESTIGATION BY BRIDGE DEPT. GEOLOGY SECTION DATE JANUARY 1968.

INFORMATION ON ACTUAL FOUNDATION CONDITIONS ENCOUNTERED IS ON FILE IN BRIDGE GEOLOGY SECTION

LEGEND OF BORING OF EXPLORATIONS

Penetrometer; 2½" Cone Penetrometer; Sampler Boring (Dry); Rotary Boring (Wet); Auger Boring (Dry); Jet Boring; Core Boring; Test Pit; Rock Exploration Probe; Borehole Log; Soil Tube

LEGEND OF EARTH MATERIALS

Gravel; Sand; Silt; Clay; Silty Clay or Clayey Silt; Organic Matter; Fill Material; Igneous Rock; Sandy Clay or Clayey Sand; Sandy Silt or Silty Sand; Sedimentary Rock; Metamorphic Rock

CLASSIFICATION OF MATERIAL BASED ON STANDARD GRADE SIZE LIMITS

NOTE: Classification of earth material as shown on this sheet is based upon field inspection and is not to be construed to imply mechanical analysis.

ENGINEERING GEOLOGY SECTION

SHEET	OF
13	13

STATE OF CALIFORNIA
DEPARTMENT OF PUBLIC WORKS
DIVISION OF HIGHWAYS

CAMINO LAS RAMBLAS
RAMP UNDERCROSSING

LOG OF TEST BORINGS

SCALE: As Noted | BRIDGE 55-510 | FILE | DRAWING 55-510-16

Chg 07209
WA 105211

Disregard prints bearing later dates

PREL. DRAWING NO. PR-

FILENAME => 55-0510-z-lotb3.tif

DIST	COUNTY	ROUTE	POST MILES TOTAL PROJECT	SHEET No	TOTAL SHEETS
12	Ora	5	6.2/8.7	568	595

REGISTERED CIVIL ENGINEER 11/12/12 DATE

4-29-13
PLANS APPROVAL DATE

REGISTERED PROFESSIONAL ENGINEER Alaedin Moubayed No. 55268 Exp. 09/30/2014 CIVIL STATE OF CALIFORNIA

The State of California or its officers or agents shall not be responsible for the accuracy or completeness of electronic copies of this plan sheet.

JACOBS
3161 MICHELSON, STE 500
IRVINE, CA 92612

ORANGE COUNTY
TRANSPORTATION AUTHORITY
550 S. MAIN STREET
ORANGE, CA 92863-1584

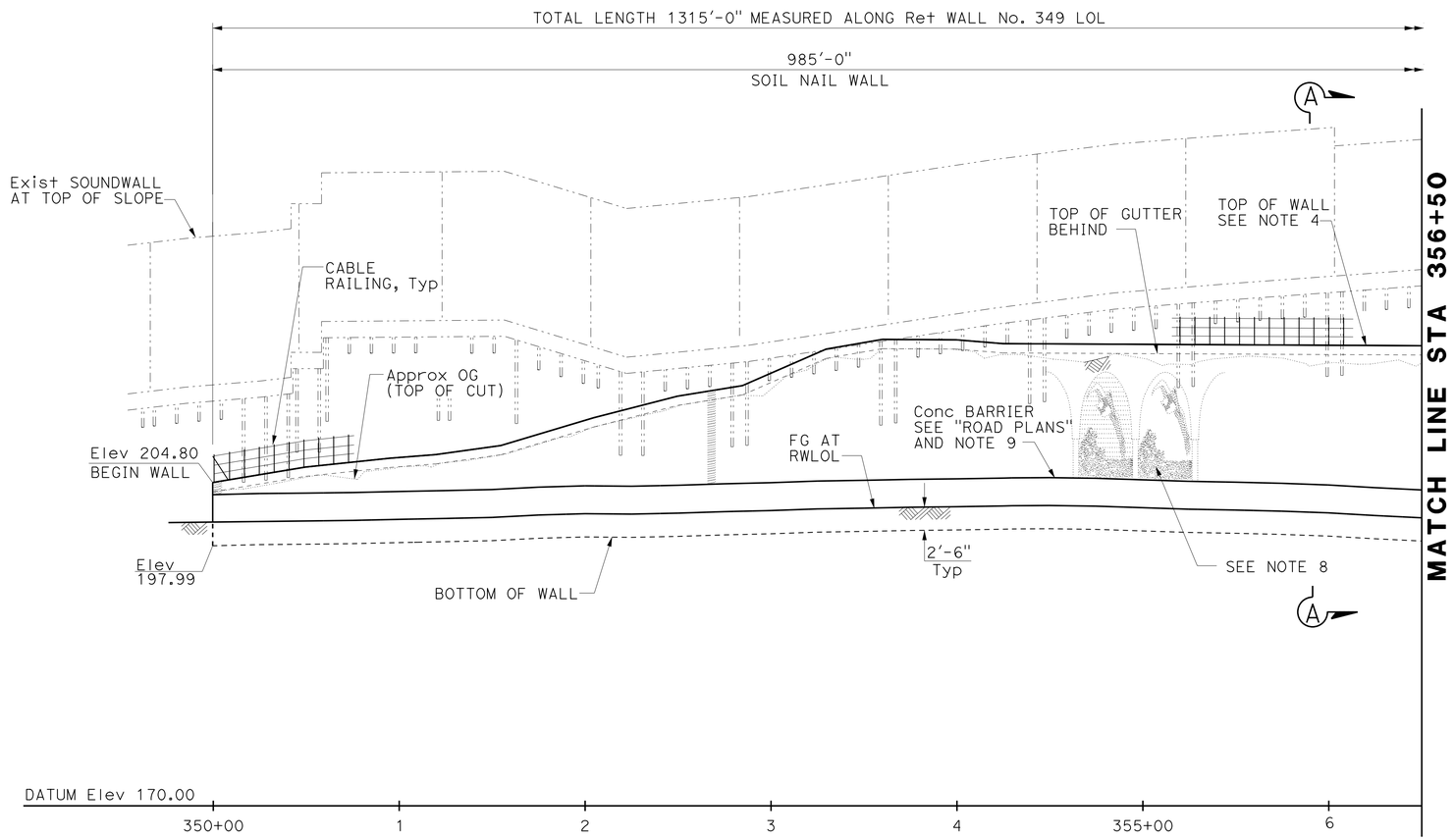

DEVELOPED ELEVATION

Horiz 1" = 40'
Vert 1" = 8'

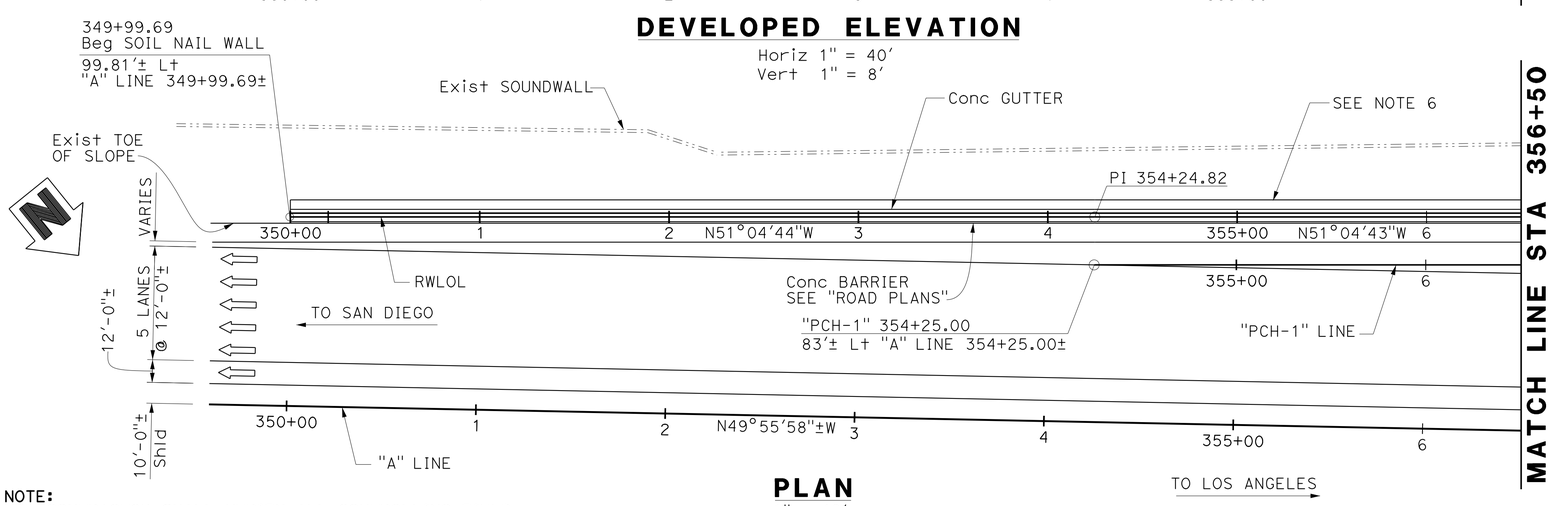

PLAN

1" = 40'

NOTE:
THE CONTRACTOR SHALL VERIFY ALL CONTROLLING FIELD DIMENSIONS BEFORE ORDERING OR FABRICATING ANY MATERIAL.

RETAINING WALL NO. 349 BRIDGE NO 55E0134

QUANTITIES

STRUCTURE EXCAVATION (SOIL NAIL WALL)	1,591	CY
STRUCTURE EXCAVATION (GROUND ANCHORWALL)	222	CY
STRUCTURE BACKFILL (GROUND ANCHOR WALL)	9	CY
STRUCTURE BACKFILL (SOIL NAIL WALL)	113	CY
GROUND ANCHOR (SUBHORIZONTAL)	95	EA
SOIL NAIL	25,262	LF
STRUCTURAL CONCRETE, RETAINING WALL	916	CY
ARCHITECTURAL TREATMENT (BIRD)	17,431	SQFT
BAR REINFORCING STEEL (RETAINING WALL)	183,477	LB
STRUCTURAL SHOTCRETE	447	CY
GEOCOMPOSITE DRAIN	2,935	SQFT
SLOPE PAVING (CONCRETE)	76	CY
MINOR CONCRETE (GUTTER) (LF)	1,315	LF
CABLE RAILING	1,314	LF

NOTES:

1. For "GENERAL NOTES (SOIL NAIL WALL)", see "TYPICAL SECTION No. 1" sheet.
2. For "GENERAL NOTES (GROUND ANCHOR WALL)", see "TYPICAL SECTION No. 2" sheet.
3. For top of wall elevations, see "WALL ELEVATION" sheets.
4. Top of wall shall be smooth and on short vertical curves. See "TOP OF WALL DETAILS" on "WALL SECTION No. 2" sheet for details.
5. For "Section A-A", see "TYPICAL SECTION No. 1" sheet.
6. For slope paving behind gutter, see "SLOPE PAVING AND GUTTER DETAIL" on "TYPICAL SECTION No. 1" sheet for details.
7. For limit of payment for Structure Excavation and Backfill details, see "STRUCTURE EXCAVATION AND BACKFILL" sheet.
8. For aesthetic details, see "ARCHITECTURAL TREATMENT DETAILS" sheet.
9. Electrolier not shown for clarity, see "ROAD PLANS" for locations and details.

Luqi Yang
DESIGN OVERSIGHT Luqi Yang
1-16-13
SIGN OFF DATE

	BY	CHECKED			
DESIGN	F. Jalaie	E. Tyk	LOAD & RESISTANCE FACTOR DESIGN		
DETAILS	I. Karkoutli	E. Tyk	LAYOUT	I. Karkoutli	S. Xie
QUANTITIES	F. Jalaie	A. Cardoza	SPECIFICATIONS	K. Allam	S. Xie

PREPARED FOR THE STATE OF CALIFORNIA DEPARTMENT OF TRANSPORTATION

Alaedin Moubayed
PROJECT ENGINEER

BRIDGE NO. 55E0134
POST MILES 6.4

RETAINING WALL No. 349
GENERAL PLAN No. 1

DESIGN GENERAL PLAN SHEET (ENGLISH) (REV.7/16/10)

ORIGINAL SCALE IN INCHES FOR REDUCED PLANS 0 1 2 3

UNIT: 2998
PROJECT NUMBER & PHASE: 12000202791 CONTRACT NO.: 12-0F96E4

DISREGARD PRINTS BEARING EARLIER REVISION DATES

REVISION DATES 4/23/12 8/13/12 9/13/12 11/12/12 SHEET 1 OF 28

FILE => 55E0134-a-gp01.dgn

USERNAME => s124496 DATE PLOTTED => 29-APR-2013 TIME PLOTTED => 13:08

DIST	COUNTY	ROUTE	POST MILES TOTAL PROJECT	SHEET No	TOTAL SHEETS
12	Ora	5	6.2/8.7	569	595

REGISTERED CIVIL ENGINEER 11/12/12 DATE

4-29-13
PLANS APPROVAL DATE

REGISTERED PROFESSIONAL ENGINEER Alaedin Moubayed No. 55268 Exp. 09/30/2014 CIVIL STATE OF CALIFORNIA

The State of California or its officers or agents shall not be responsible for the accuracy or completeness of electronic copies of this plan sheet.

JACOBS
3161 MICHELSON, STE 500
IRVINE, CA 92612

ORANGE COUNTY TRANSPORTATION AUTHORITY
550 S. MAIN STREET
ORANGE, CA 92863-1584

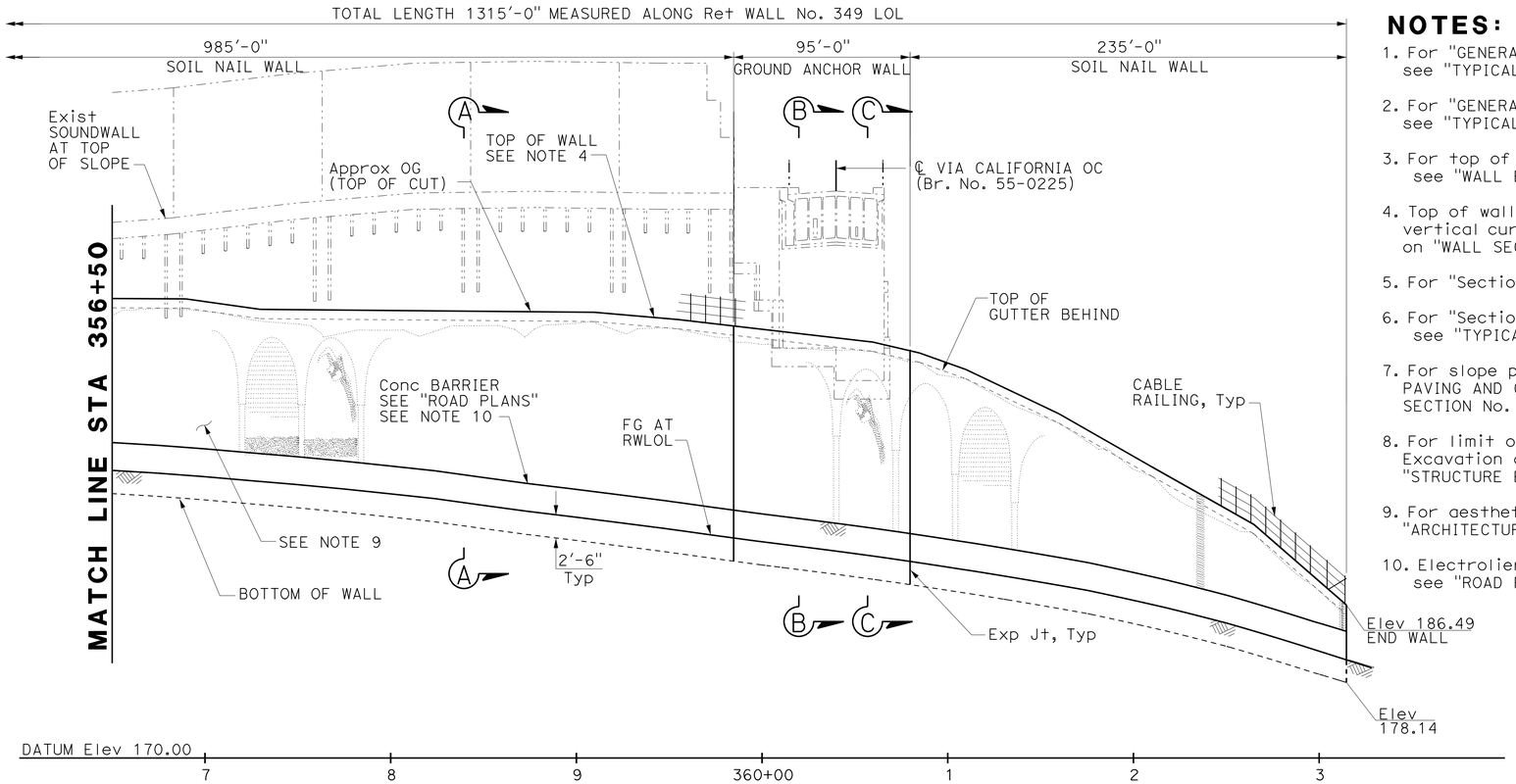

DEVELOPED ELEVATION

Horiz 1" = 40'
Vert 1" = 8'

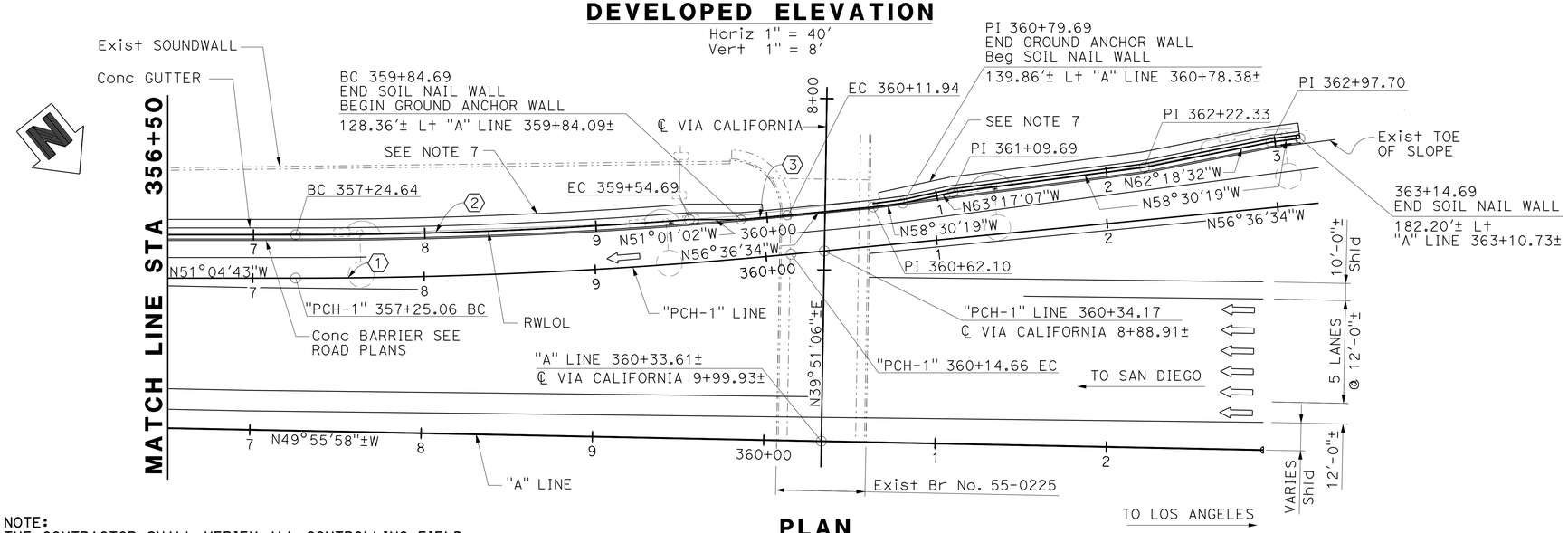

PLAN

1" = 40'

NOTE:
THE CONTRACTOR SHALL VERIFY ALL CONTROLLING FIELD DIMENSIONS BEFORE ORDERING OR FABRICATING ANY MATERIAL.

NOTES:

1. For "GENERAL NOTES (SOIL NAIL WALL)", see "TYPICAL SECTION No. 1" sheet.
2. For "GENERAL NOTES (GROUND ANCHOR WALL)", see "TYPICAL SECTION No. 2" sheet.
3. For top of wall elevations, see "WALL ELEVATION" sheets.
4. Top of wall shall be smooth and on short vertical curves. See "TOP OF WALL DETAILS" on "WALL SECTION No. 2" sheet for details.
5. For "Section A-A", see "TYPICAL SECTION No. 1" sheet.
6. For "Section B-B" and "Section C-C", see "TYPICAL SECTION No. 2" sheet.
7. For slope paving behind gutter, see "SLOPE PAVING AND GUTTER DETAIL" on "TYPICAL SECTION No. 1" sheet for details.
8. For limit of payment for Structure Excavation and Backfill" details, see "STRUCTURE EXCAVATION AND BACKFILL" sheet.
9. For aesthetic details, see "ARCHITECTURAL TREATMENT DETAILS" sheet.
10. Electrolier not shown for clarity, see "ROAD PLANS" for locations and details.

INDEX TO PLANS:

SHEET No.	TITLE
1	GENERAL PLAN No. 1
2	GENERAL PLAN No. 2
3	TYPICAL SECTION No. 1
4	TYPICAL SECTION No. 2
5	FOUNDATION PLAN
6	WALL ELEVATION No. 1
7	WALL ELEVATION No. 2
8	WALL ELEVATION No. 3
9	WALL ELEVATION No. 4
10	WALL ELEVATION No. 5
11	WALL SECTION No. 1
12	WALL SECTION No. 2
13	GROUND ANCHOR WALL DETAILS No. 1
14	GROUND ANCHOR WALL DETAILS No. 2
15	SOIL NAIL WALL DETAILS No. 1
16	SOIL NAIL WALL DETAILS No. 2
17	SOIL NAIL WALL DETAILS No. 3
18	WALL DRAINAGE DETAILS
19	STRUCTURE EXCAVATION AND BACKFILL
20	ARCHITECTURAL TREATMENT DETAILS No. 1
21	ARCHITECTURAL TREATMENT DETAILS No. 2
22	ARCHITECTURAL TREATMENT DETAILS No. 3
23	ARCHITECTURAL TREATMENT DETAILS No. 4
24	ARCHITECTURAL TREATMENT DETAILS No. 5
25	ARCHITECTURAL TREATMENT DETAILS No. 6
26	ARCHITECTURAL TREATMENT DETAILS No. 7
27	LOG OF TEST BORINGS 1 OF 2
28	LOG OF TEST BORINGS 2 OF 2

STANDARD PLANS DATED 2010

A10A	ABBREVIATIONS (SHEET 1 OF 2)
A10B	ABBREVIATIONS (SHEET 2 OF 2)
A10C	LINES AND SYMBOLS (SHEET 1 OF 3)
A10D	LINES AND SYMBOLS (SHEET 2 OF 3)
A10E	LINES AND SYMBOLS (SHEET 3 OF 3)
A10F	LEGEND - SOIL (SHEET 1 OF 2)
A10G	LEGEND - SOIL (SHEET 2 OF 2)
B0-3	BRIDGE DETAILS
B3-6	RETAINING WALL DETAILS No. 2
RSP B11-47	CABLE RAILING

STANDARD PLAN SHEET NO.

DETAIL NO.

SECTION IDENTIFICATION

CURVE DATA:

CURVE NO.	R	Δ	T	L
1	3000.00'	5°31'51"	144.91'	289.60'
2	2974.69'	4°25'52"	115.08'	230.05'
3	2977.19'	0°31'28"	13.62'	27.25'

Luqi Yang
DESIGN OVERSIGHT Luqi Yang
1-16-13
SIGN OFF DATE

DESIGN	BY F. Jalaie	CHECKED E. Tyk	LOAD & RESISTANCE FACTOR DESIGN		
DETAILS	BY I. Karkoutli	CHECKED E. Tyk	LAYOUT	BY I. Karkoutli	CHECKED S. Xie
QUANTITIES	BY F. Jalaie	CHECKED A. Cardoza	SPECIFICATIONS	BY K. Allam	PLANS AND SPECS COMPARED S. Xie

PREPARED FOR THE STATE OF CALIFORNIA DEPARTMENT OF TRANSPORTATION

Alaedin Moubayed
PROJECT ENGINEER

BRIDGE NO. 55E0134
POST MILES 6.4

RETAINING WALL No. 349
GENERAL PLAN No. 2

DESIGN GENERAL PLAN SHEET (ENGLISH) (REV.7/16/10)

ORIGINAL SCALE IN INCHES FOR REDUCED PLANS 0 1 2 3

UNIT: 2998
PROJECT NUMBER & PHASE: 12000202791 CONTRACT NO.: 12-0F96E4

DISREGARD PRINTS BEARING EARLIER REVISION DATES

REVISION DATES 4/23/12 8/13/12 9/17/12 11/12/12 SHEET 2 OF 28

FILE => 55E0134-a-gp02.dgn

USERNAME => s124496 DATE PLOTTED => 29-APR-2013 TIME PLOTTED => 13:08

DIST	COUNTY	ROUTE	POST MILES TOTAL PROJECT	SHEET No	TOTAL SHEETS
12	Ora	5	6.2/8.7	570	595

REGISTERED CIVIL ENGINEER 11/12/12 DATE

4-29-13
PLANS APPROVAL DATE

REGISTERED PROFESSIONAL ENGINEER Alaedin Moubayed No. 55268 Exp. 09/30/2014 CIVIL STATE OF CALIFORNIA

The State of California or its officers or agents shall not be responsible for the accuracy or completeness of electronic copies of this plan sheet.

JACOBS
3161 MICHELSON, STE 500
IRVINE, CA 92612

ORANGE COUNTY
TRANSPORTATION AUTHORITY
550 S. MAIN STREET
ORANGE, CA 92863-1584

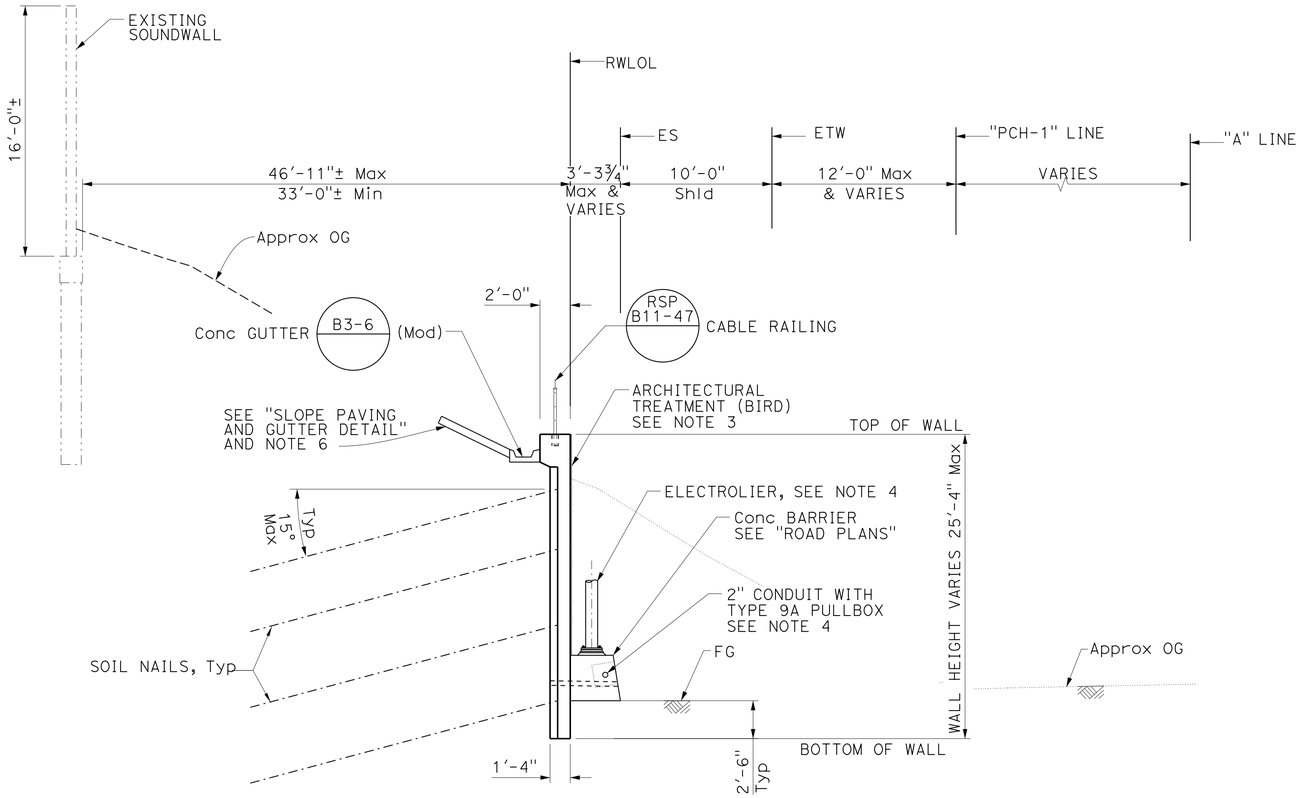

SECTION A-A

1" = 5'

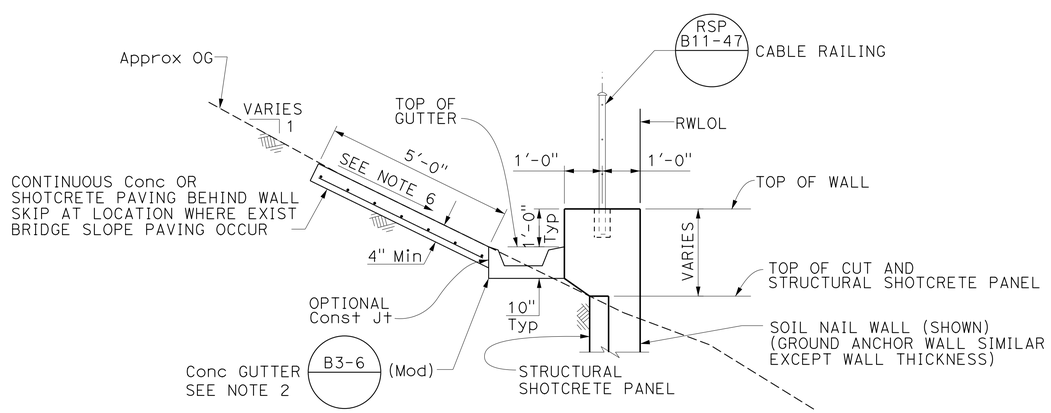

SLOPE PAVING AND GUTTER DETAIL

NO SCALE

GENERAL NOTES (SOIL NAIL WALL)

DESIGN: Caltrans BRIDGE DESIGN SPECIFICATIONS April 2000 Edition (1996 AASHTO with interims and revisions by Caltrans

GEOTECHNICAL ENGINEERING CIRCULAR No. 7 - SOIL NAIL WALL (FHW AO-IF-03-017)

REINFORCED CONCRETE: Reinforcing Steel: ASTM Designation A706, fy = 60 Ksi
Concrete: f'c = 4.0 Ksi @ 28 days

SHOTCRETE: f'c = 4.0 Ksi @ 28 days

GROUT: f'c = 3.0 Ksi @ 28 days

STRUCTURAL STEEL: ASTM Designation: A709, fy = 36 Ksi

SOIL NAILS: ASTM Designation: A706, fy = 60 Ksi
Soil nail bar size: #8

SOIL PARAMETERS: Unit weight: 115 pcf
Soil friction angle: 27°
Cohesion: 350 psf
Pullout resistance (Qd) = 1130 lb/ft per soil nail (Grout - Soil)

DESIGN LOADS: DL = Dead load
E = Lateral active earth pressure = 86 psf/ft
EQE = Seismic earth load = 0.21g
LL = Live load surcharge = 240 psf

SAFETY FACTORS: Minimum Factor of Safety:
Group I: DL + E + LL > 1.50
Group VII: DL + E + EQE > 1.10
Temporary condition > 1.20 (shotcrete facing)

NOTES

1. For soil nail wall typical section, see "SOIL NAIL WALL DETAILS No. 1" sheet.
2. For gutter details not shown, see B3-6
3. For aesthetic details, see "ARCHITECTURAL TREATMENT DETAILS" sheet.
4. See "ROAD PLANS" for details.
5. For weep holes and wall drainage not shown, see "WALL ELEVATION" sheets and "WALL DRAINAGE DETAILS" sheet for details.
6. Slope paving behind gutter shall be with a max 2:1 and min 5% slope.

NOTE:
THE CONTRACTOR SHALL VERIFY ALL CONTROLLING FIELD DIMENSIONS BEFORE ORDERING OR FABRICATING ANY MATERIAL.

DESIGN OVERSIGHT Luqi Yang 1-16-13 SIGN OFF DATE	DESIGN	BY F. Jalaie	CHECKED E. Tyk
	DETAILS	BY I. Karkoutli	CHECKED E. Tyk
	QUANTITIES	BY F. Jalaie	CHECKED A. Cardoza

PREPARED FOR THE STATE OF CALIFORNIA DEPARTMENT OF TRANSPORTATION

Alaedin Moubayed
PROJECT ENGINEER

BRIDGE NO. 55E0134
POST MILES 6.4

RETAINING WALL No. 349
TYPICAL SECTION No. 1

DESIGN DETAIL SHEET (ENGLISH) (REV.7/16/10)

ORIGINAL SCALE IN INCHES FOR REDUCED PLANS 0 1 2 3

UNIT: 2998
PROJECT NUMBER & PHASE: 12000202791 CONTRACT NO.: 12-0F96E4

DISREGARD PRINTS BEARING EARLIER REVISION DATES → REVISION DATES 8/13/12 9/13/12 11/12/12 12/12/12 SHEET 3 OF 28

FILE => 55E0134-a-gp03.dgn

USERNAME => s124936 DATE PLOTTED => 29-APR-2013 TIME PLOTTED => 13:08

DIST	COUNTY	ROUTE	POST MILES TOTAL PROJECT	SHEET No	TOTAL SHEETS
12	Ora	5	6.2/8.7	571	595

REGISTERED CIVIL ENGINEER 11/12/12 DATE

4-29-13
PLANS APPROVAL DATE

REGISTERED PROFESSIONAL ENGINEER Alaedin Moubayed No. 55268 Exp. 09/30/2014 CIVIL STATE OF CALIFORNIA

The State of California or its officers or agents shall not be responsible for the accuracy or completeness of electronic copies of this plan sheet.

JACOBS
3161 MICHELSON, STE 500
IRVINE, CA 92612

ORANGE COUNTY
TRANSPORTATION AUTHORITY
550 S. MAIN STREET
ORANGE, CA 92863-1584

GENERAL NOTES (GROUND ANCHOR WALL)

DESIGN:

AASHTO LRFD BRIDGE DESIGN SPECIFICATIONS, 4th edition with California amendments, preface dated November 2011.

PRESTRESSING STEEL:

Bars - ASTM Designation: A722 TYPE II (150 Ksi)

Strand Tendons-ASTM Designation: A416 (270 Ksi low relaxation steel)

FDL = Factored Design Load per anchor = 80 Kips

FTL = Factored Test Load per anchor = 80 Kips

LL = Lock-off Load = 0.67 FTL = 55 Kips

Fpu = Minimum Tensile Strength of Prestressing Steel

As = Minimum cross sectional area of prestressing steel in ground anchor (square inch)

$$As(Min) = \frac{1.0\ FTL}{0.75\ Fpu} \quad \text{(Strands)}$$

$$As(Min) = \frac{1.0\ FTL}{0.80\ Fpu} \quad \text{(Bars)}$$

REINFORCED CONCRETE (SHOTCRETE & CIP Conc)

fy = 60.0 Ksi

f'c = 4.0 Ksi, fci = 3.20 Ksi @ Stressing

NOTES:

1. For approx limits of optional temporary grading behind ground anchor wall, see "WALL ELEVATION No. 4" and "WALL ELEVATION No. 5" sheets.
2. Remove conc slope paving (optional) as necessary for wall construction. Re-construct slope paving to match the exist after wall construction.
3. The bonded length shall be determined by the Contractor, but not be less than 15'-0" min.
4. Contractor shall verify the bottom of footing elevations of the existing Via California OC bridge abutment behind the proposed ground anchor wall.
5. For weep hole and wall drainage not shown, see "WALL ELEVATION" sheets and "WALL DRAINAGE DETAILS" sheet for details.
6. For aesthetic details, see "ARCHITECTURAL TREATMENT DETAILS" sheet.
7. For ground anchor wall typical section, see "GROUND ANCHOR WALL DETAILS No. 1" sheet.
8. The exact lift heights shall be determined by the Contractor.
9. Top of wall shall be smooth and on short vertical curves. See "TOP OF WALL DETAILS" on "WALL SECTION No. 2" sheet for details.

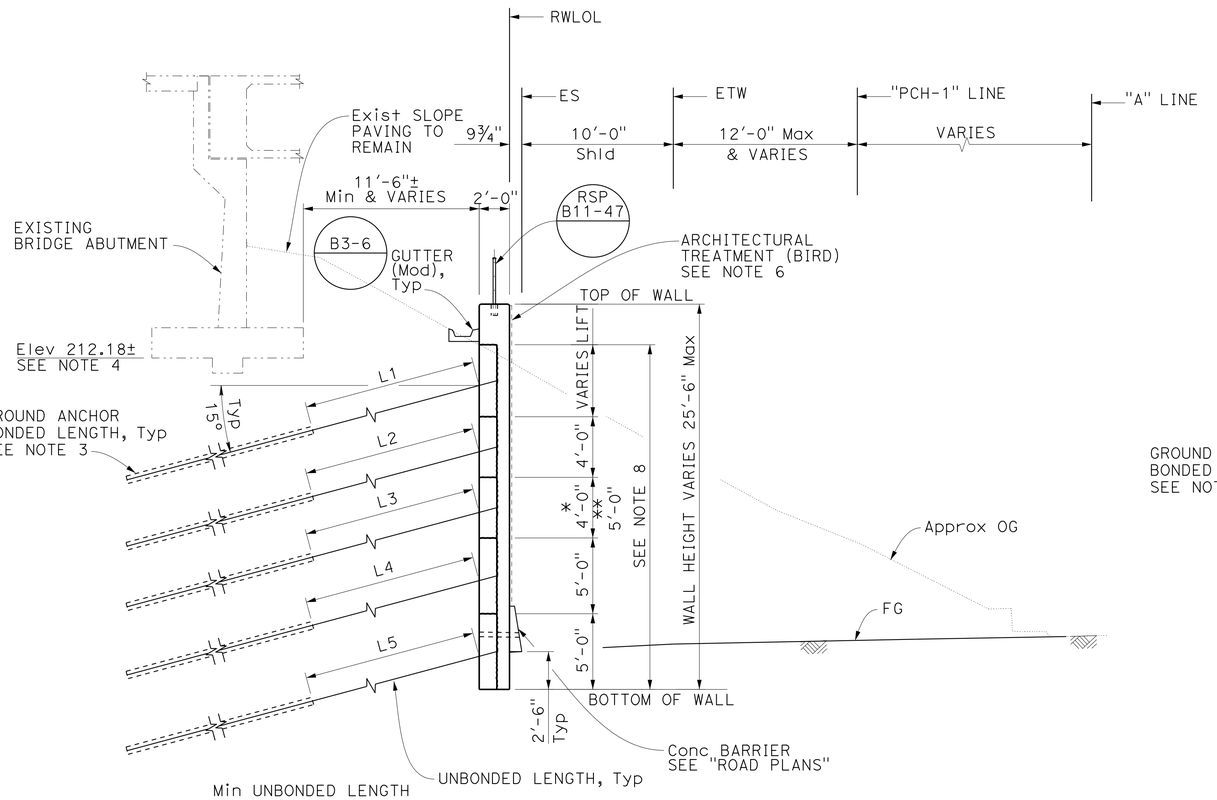

Min UNBONDED LENGTH
L1 = 24'-0"
L2 = 22'-0"
L3 = 20'-0"
L4 = 16'-0"
L5 = 16'-0"

SECTION B-B

1" = 5'

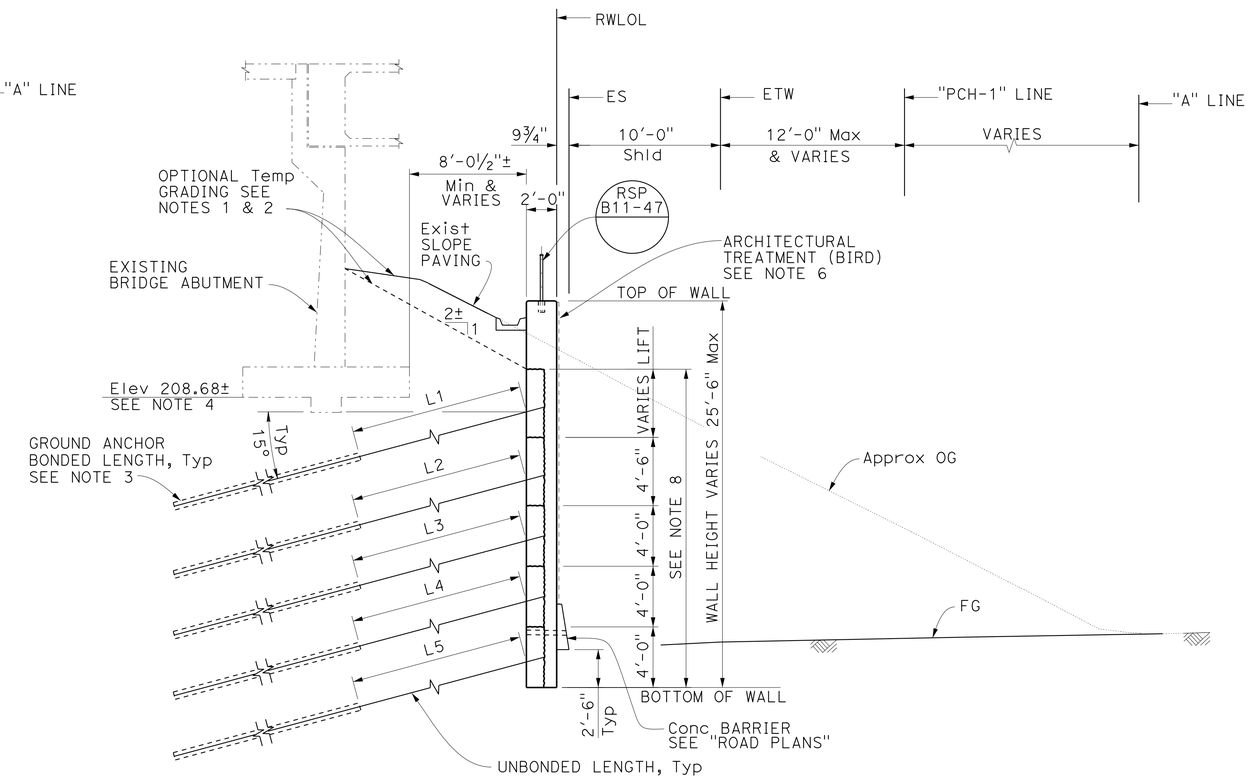

Min UNBONDED LENGTH
L1 = 24'-0"
L2 = 20'-0"
L3 = 18'-0"
L4 = 16'-0"
L5 = 16'-0"

SECTION C-C

1" = 5'

NOTE:
THE CONTRACTOR SHALL VERIFY ALL CONTROLLING FIELD DIMENSIONS BEFORE ORDERING OR FABRICATING ANY MATERIAL.

* From station 359+84.69 to 360+39.69

** From station 360+69.69 to 360+79.69

Luqi Yang
DESIGN OVERSIGHT Luqi Yang
1-16-13
SIGN OFF DATE

	BY	CHECKED
DESIGN	F. Jalaie	E. Tyk/C. Pinkerton
DETAILS	I. Karkoutli	E. Tyk/C. Pinkerton
QUANTITIES	F. Jalaie	A. Cardoza

PREPARED FOR THE STATE OF CALIFORNIA DEPARTMENT OF TRANSPORTATION

Alaedin Moubayed
PROJECT ENGINEER

BRIDGE NO. 55E0134
POST MILES 6.4

RETAINING WALL No. 349
TYPICAL SECTION No. 2

DESIGN DETAIL SHEET (ENGLISH) (REV.7/16/10)

ORIGINAL SCALE IN INCHES FOR REDUCED PLANS 0 1 2 3

UNIT: 2998
PROJECT NUMBER & PHASE: 12000202791 CONTRACT NO.: 12-0F96E4

DISREGARD PRINTS BEARING EARLIER REVISION DATES → 8/13/12 9/17/12 11/12/12 12/12/12

SHEET 4 OF 28

FILE => 55E0134-a-gp04.dgn

USERNAME => s124496 DATE PLOTTED => 29-APR-2013 TIME PLOTTED => 13:08

DIST	COUNTY	ROUTE	POST MILES TOTAL PROJECT	SHEET No	TOTAL SHEETS
12	Ora	5	6.2/8.7	572	595

REGISTERED CIVIL ENGINEER 11/12/12 DATE

4-29-13
PLANS APPROVAL DATE

REGISTERED PROFESSIONAL ENGINEER Alaedin Moubayed No. 55268 Exp. 09/30/2014 CIVIL STATE OF CALIFORNIA

The State of California or its officers or agents shall not be responsible for the accuracy or completeness of electronic copies of this plan sheet.

JACOBS
3161 MICHELSON, STE 500
IRVINE, CA 92612

ORANGE COUNTY TRANSPORTATION AUTHORITY
550 S. MAIN STREET
ORANGE, CA 92863-1584

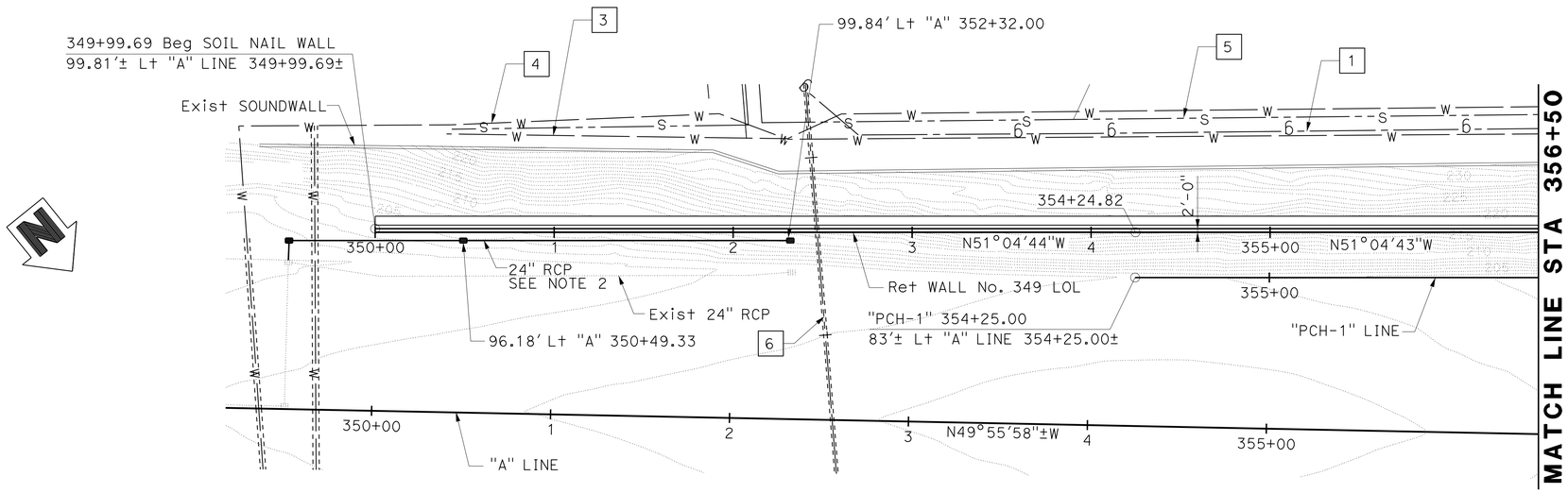

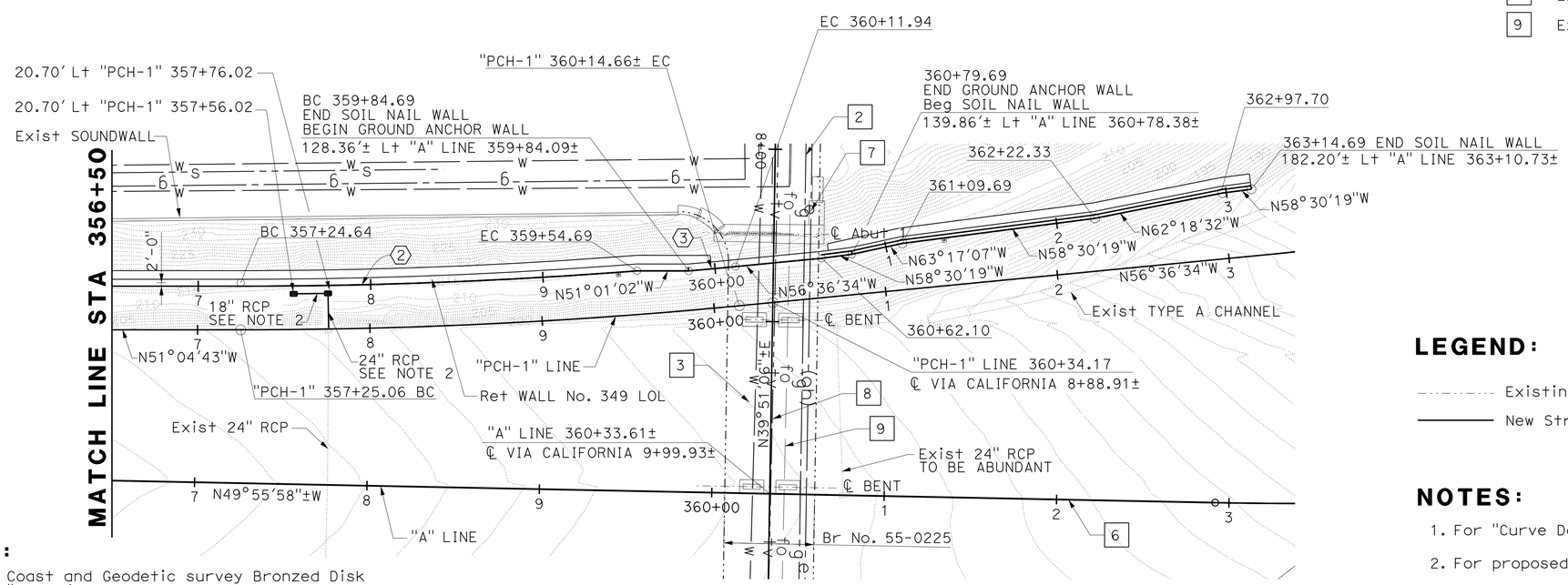

UTILITIES:

1. Exist 2" Gas (SCG)
2. Exist 4" Gas (SCG)
3. Exist 10" Water (SCWD)
4. Exist 30" Water (SCWD)
5. Exist 8" VCP Sewer (CODP)
6. Exist AT&T Telephone Cable
7. Exist Electrical Overhead (SDGE)
8. Exist Cox Communication TV Cable
9. Exist Cox Communication Fiber Optic Cable

LEGEND:

Existing Structure

New Structure

NOTES:

1. For "Curve Data", see "GENERAL PLAN No. 2" sheet.
2. For proposed 18" & 24" RCP info & details, see "ROAD PLANS".

BENCHMARK:

Description: 3¾" US Coast and Geodetic survey Bronzed Disk Stamped "F 785 1946", set in the top of a concrete bridge abutment. Monument is located in the Southwesterly corner of the Atchinso/Topeka and Santa Fe Railway overcrossing of San Mateo Creek.

Designation: F-785

PLAN

1" = 40'

NOTE:
THE CONTRACTOR SHALL VERIFY ALL CONTROLLING FIELD DIMENSIONS BEFORE ORDERING OR FABRICATING ANY MATERIAL.

L. Cheang
GEOTECHNICAL PROFESSIONAL
8/13/12
APPROVAL DATE

Luqi Yang
DESIGN OVERSIGHT Luqi Yang
1-16-13
SIGN OFF DATE

SCALE: As Shown	VERT.DATUM NAD83, 1991.35 Epoch	HORZ.DATUM NAVD88, O.C.S. 1995 Adj.	
PHOTOGRAMMETRY AS OF: Caltrans	ALIGNMENT TIES	W. Estepa	
SURVEYED	BY R. Gould	DRAFTED	BY I. Karkoutli
FIELD CHECKED	BY K. Launen	CHECKED	BY S. Xie

	BY	CHECKED
DESIGN	F. Jalaie	E. Tyk
DETAILS	I. Karkoutli	E. Tyk
QUANTITIES	F. Jalaie	A. Cardoza

PREPARED FOR THE STATE OF CALIFORNIA DEPARTMENT OF TRANSPORTATION

Alaedin Moubayed
PROJECT ENGINEER

BRIDGE NO. 55E0134
POST MILES 6.4

RETAINING WALL No. 349
FOUNDATION PLAN

FOUNDATION PLAN SHEET (ENGLISH) (REV.7/16/10)

ORIGINAL SCALE IN INCHES FOR REDUCED PLANS 0 1 2 3

UNIT: 2998
PROJECT NUMBER & PHASE: 12000202791 CONTRACT NO.: 12-0F96E4

DISREGARD PRINTS BEARING EARLIER REVISION DATES

REVISION DATES 4/23/12 8/13/12 9/13/12 11/12/12 SHEET 5 OF 28

FILE => 55E0134-e-fdp101.dgn

USERNAME => s124196 DATE PLOTTED => 29-APR-2013 TIME PLOTTED => 13:08

DIST	COUNTY	ROUTE	POST MILES TOTAL PROJECT	SHEET No	TOTAL SHEETS
12	Ora	5	6.2/8.7	573	595

REGISTERED CIVIL ENGINEER 11/12/12 DATE

4-29-13
PLANS APPROVAL DATE

REGISTERED PROFESSIONAL ENGINEER Alaedin Moubayed No. 55268 Exp. 09/30/2014 CIVIL STATE OF CALIFORNIA

The State of California or its officers or agents shall not be responsible for the accuracy or completeness of electronic copies of this plan sheet.

JACOBS
3161 MICHELSON, STE 500
IRVINE, CA 92612

ORANGE COUNTY TRANSPORTATION AUTHORITY
550 S. MAIN STREET
ORANGE, CA 92863-1584

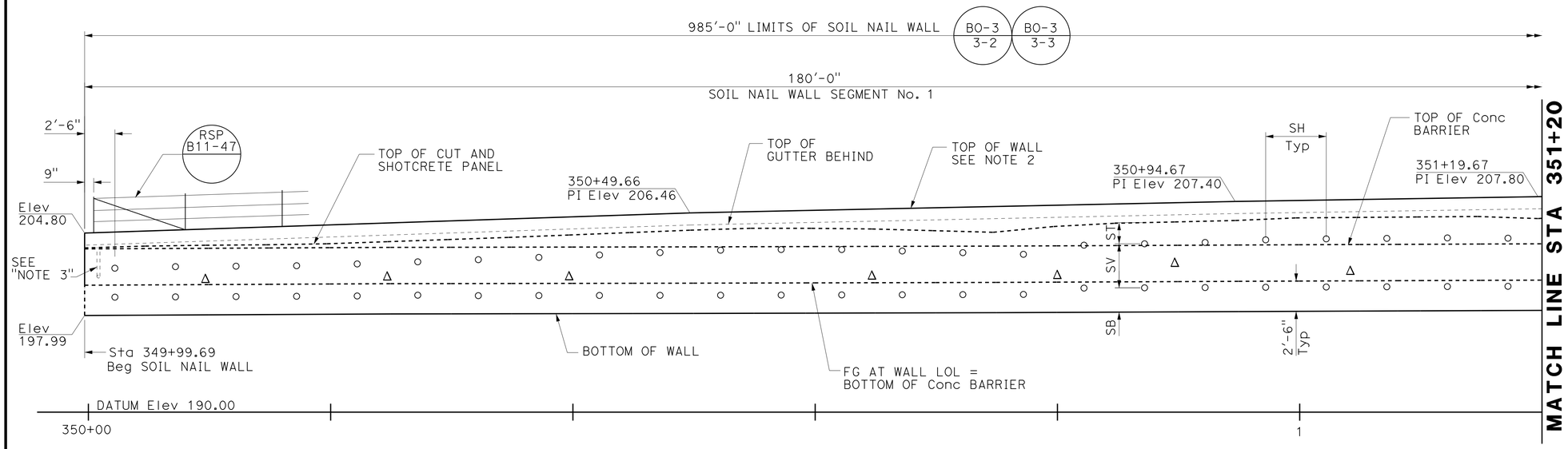

LEGEND:

- ○ Indicates production soil nail
- Δ Indicates proof test nail
  Test nail shall be placed between production nail. The exact location of test nails to be determined in the field by the Engineer.
- ST- Vertical distance from top of cut of face of wall elevation to first row of soil nail
  ST (min) = 1'-6", ST (max) = 3'-0"
- SB- Vertical distance from bottom of wall to bottom row of soil nail
  SB (min) = 2'-0" SB (max) = 3'-0"
- SV- Vertical spacing of soil nail
  SV (min) = 2'-0", SV (max) = 5'-0"
- SH- Horizontal spacing of soil nail
  SH (min) = 4'-6" SH (max) = 5'-0"
- ▨ Indicates geocomposite drain strip behind wall. Not all drain strips shown.

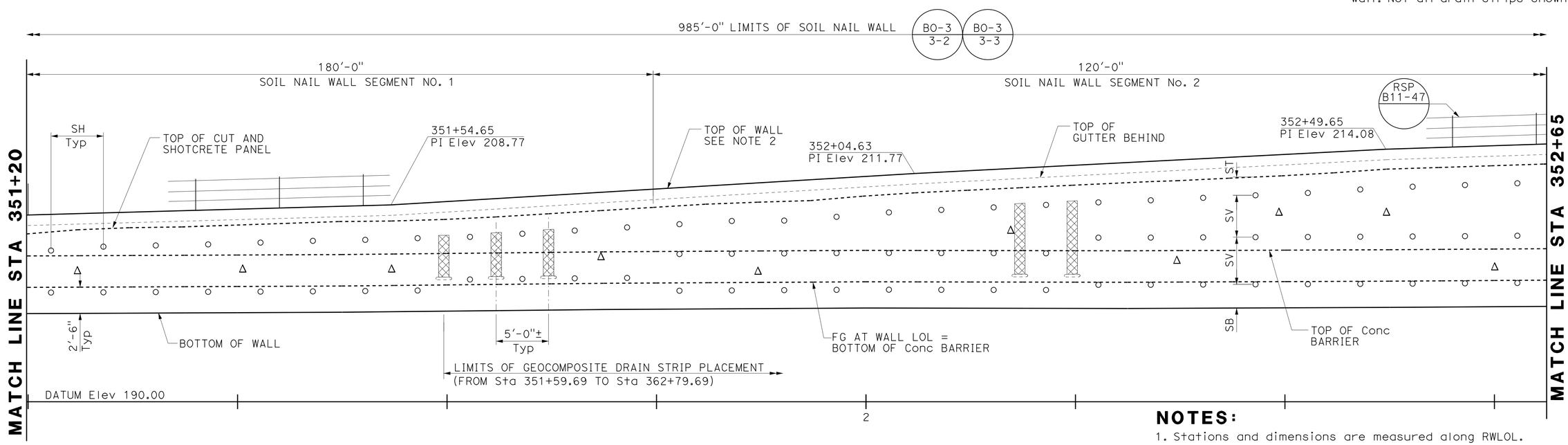

DEVELOPED ELEVATION

1" = 5'

NOTES:

1. Stations and dimensions are measured along RWLOL.
2. See "TOP OF WALL DETAILS" on "WALL SECTION No. 2" sheet.
3. For gutter drain outlet, see "Retaining Wall, Face of wall outlet" detail in B3-6

NOTE:
THE CONTRACTOR SHALL VERIFY ALL CONTROLLING FIELD DIMENSIONS BEFORE ORDERING OR FABRICATING ANY MATERIAL.

Luqi Yang
DESIGN OVERSIGHT Luqi Yang
1-16-13
SIGN OFF DATE

	BY	CHECKED
DESIGN	F. Jalaie	E. Tyk
DETAILS	I. Karkoutli	E. Tyk
QUANTITIES	F. Jalaie	A. Cardoza

PREPARED FOR THE STATE OF CALIFORNIA DEPARTMENT OF TRANSPORTATION

Alaedin Moubayed
PROJECT ENGINEER

BRIDGE NO. 55E0134
POST MILES 6.4

RETAINING WALL No. 349
WALL ELEVATION No. 1

DESIGN DETAIL SHEET (ENGLISH) (REV.7/16/10)

ORIGINAL SCALE IN INCHES FOR REDUCED PLANS 0 1 2 3

UNIT: 2998
PROJECT NUMBER & PHASE: 12000202791 CONTRACT NO.: 12-0F96E4

DISREGARD PRINTS BEARING EARLIER REVISION DATES

REVISION DATES 8/13/12 9/13/12 11/12/12 12/12/12

SHEET 6 OF 28

FILE => 55E0134-g-rw_lo01.dgn

USERNAME => s124496 DATE PLOTTED => 29-APR-2013 TIME PLOTTED => 13:08

DIST	COUNTY	ROUTE	POST MILES TOTAL PROJECT	SHEET No	TOTAL SHEETS
12	Ora	5	6.2/8.7	574	595

REGISTERED CIVIL ENGINEER 11/12/12 DATE

4-29-13
PLANS APPROVAL DATE

REGISTERED PROFESSIONAL ENGINEER Alaedin Moubayed No. 55268 Exp. 09/30/2014 CIVIL STATE OF CALIFORNIA

The State of California or its officers or agents shall not be responsible for the accuracy or completeness of electronic copies of this plan sheet.

JACOBS
3161 MICHELSON, STE 500
IRVINE, CA 92612

ORANGE COUNTY TRANSPORTATION AUTHORITY
550 S. MAIN STREET
ORANGE, CA 92863-1584

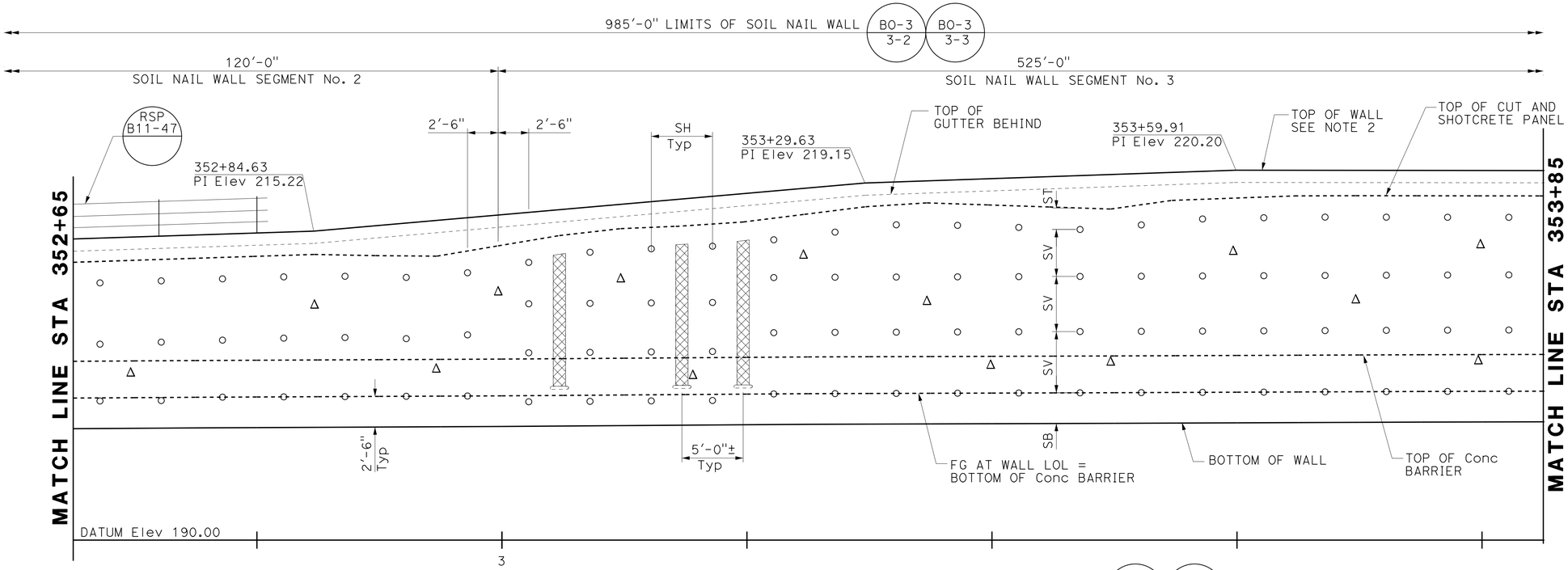

LEGEND:

- ○ Indicates production soil nail
- Δ Indicates proof test nail
  Test nail shall be placed between production nail. The exact location of test nails to be determined in the field by the Engineer.
- ST- Vertical distance from top of cut of face of wall elevation to first row of soil nail
  ST (min) = 1'-6", ST (max) = 3'-0"
- SB- Vertical distance from bottom of wall to bottom row of soil nail
  SB (min) = 2'-0" SB (max) = 3'-0"
- SV- Vertical spacing of soil nail
  SV (min) = 2'-0", SV (max) = 5'-0"
- SH- Horizontal spacing of soil nail
  SH (min) = 4'-6" SH (max) = 5'-0"
- ⊠ Indicates geocomposite drain strip behind wall. Not all drain strips shown.

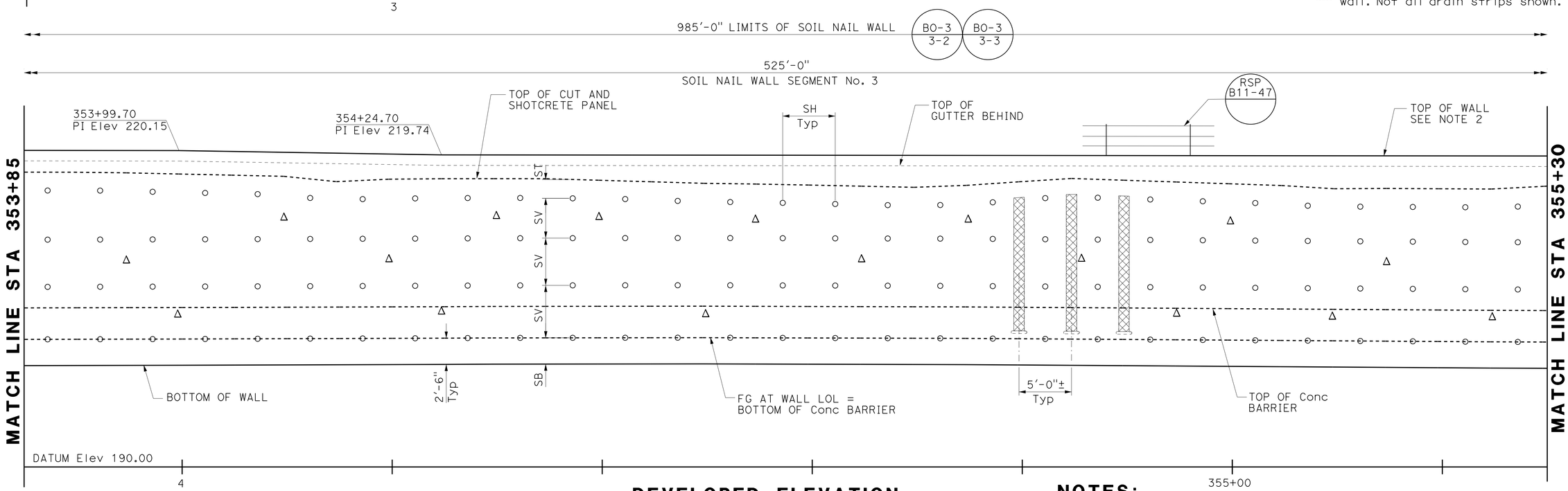

DEVELOPED ELEVATION

1" = 5'

NOTE:
THE CONTRACTOR SHALL VERIFY ALL CONTROLLING FIELD DIMENSIONS BEFORE ORDERING OR FABRICATING ANY MATERIAL.

NOTES:

1. Stations and dimensions are measured along RWLOL.
2. See "TOP OF WALL DETAILS" on "WALL SECTION No. 2" sheet.

Luqi Yang
DESIGN OVERSIGHT Luqi Yang
1-16-13
SIGN OFF DATE

	BY	CHECKED
DESIGN	F. Jalaie	E. Tyk
DETAILS	I. Karkoutli	E. Tyk
QUANTITIES	F. Jalaie	A. Cardoza

PREPARED FOR THE STATE OF CALIFORNIA DEPARTMENT OF TRANSPORTATION

Alaedin Moubayed
PROJECT ENGINEER

BRIDGE NO. 55E0134
POST MILES 6.4

RETAINING WALL No. 349
WALL ELEVATION No. 2

DESIGN DETAIL SHEET (ENGLISH) (REV.7/16/10)

ORIGINAL SCALE IN INCHES FOR REDUCED PLANS 0 1 2 3

UNIT: 2998
PROJECT NUMBER & PHASE: 12000202791 CONTRACT NO.: 12-0F96E4

DISREGARD PRINTS BEARING EARLIER REVISION DATES

REVISION DATES 8/13/12 9/17/12 11/12/12 12/12/12

SHEET 7 OF 28

FILE => 55E0134-g-rw_lo02.dgn

USERNAME => s124496 DATE PLOTTED => 29-APR-2013 TIME PLOTTED => 13:08

DIST	COUNTY	ROUTE	POST MILES TOTAL PROJECT	SHEET No	TOTAL SHEETS
12	Ora	5	6.2/8.7	575	595

REGISTERED CIVIL ENGINEER — DATE 11/12/12

PLANS APPROVAL DATE 4-29-13

REGISTERED PROFESSIONAL ENGINEER — Alaedin Moubayed — No. 55268 — Exp. 09/30/2014 — CIVIL — STATE OF CALIFORNIA

The State of California or its officers or agents shall not be responsible for the accuracy or completeness of electronic copies of this plan sheet.

JACOBS
3161 MICHELSON, STE 500
IRVINE, CA 92612

ORANGE COUNTY TRANSPORTATION AUTHORITY
550 S. MAIN STREET
ORANGE, CA 92863-1584

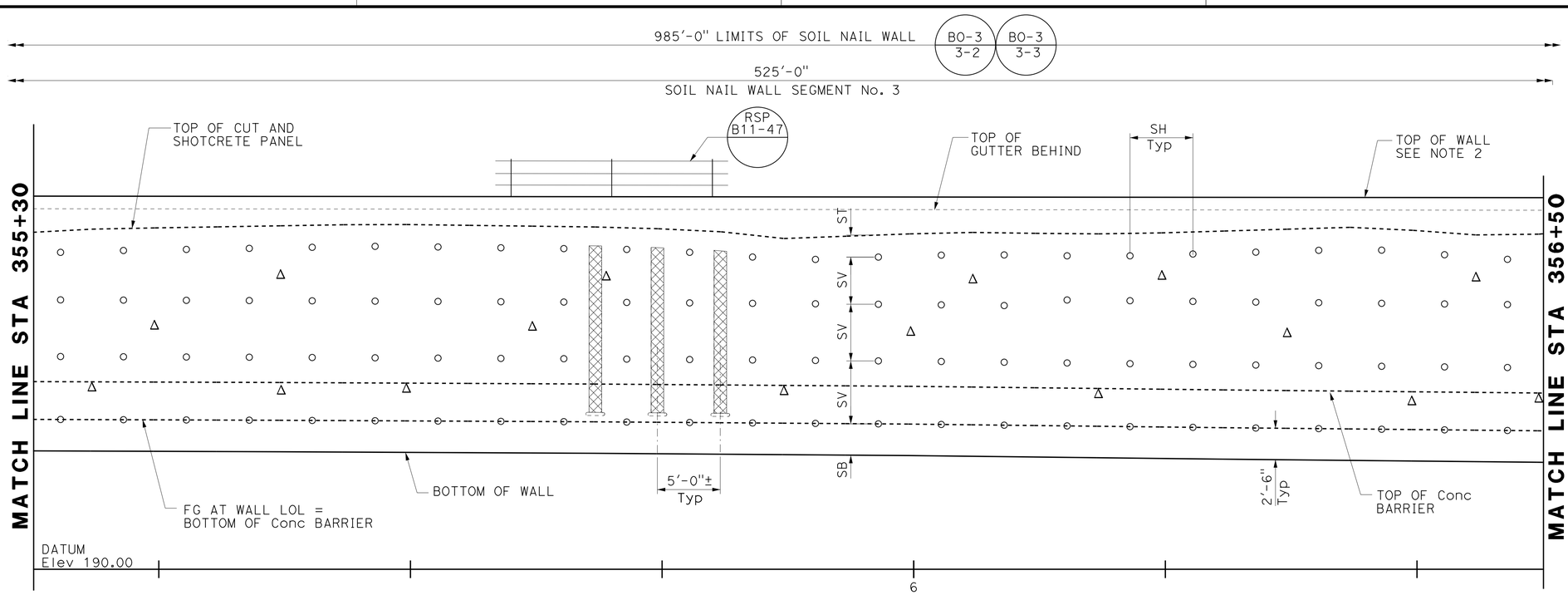

LEGEND:

- ○ Indicates production soil nail
- Δ Indicates proof test nail. Test nail shall be placed between production nail. The exact location of test nails to be determined in the field by the Engineer.
- ST- Vertical distance from top of cut of face of wall elevation to first row of soil nail ST (min) = 1'-6", ST (max) = 3'-0"
- SB- Vertical distance from bottom of wall to bottom row of soil nail SB (min) = 2'-0" SB (max) = 3'-0"
- SV- Vertical spacing of soil nail SV (min) = 2'-0", SV (max) = 5'-0"
- SH- Horizontal spacing of soil nail SH (min) = 4'-6" SH (max) = 5'-0"
- ▨ Indicates geocomposite drain strip behind wall. Not all drain strips shown.

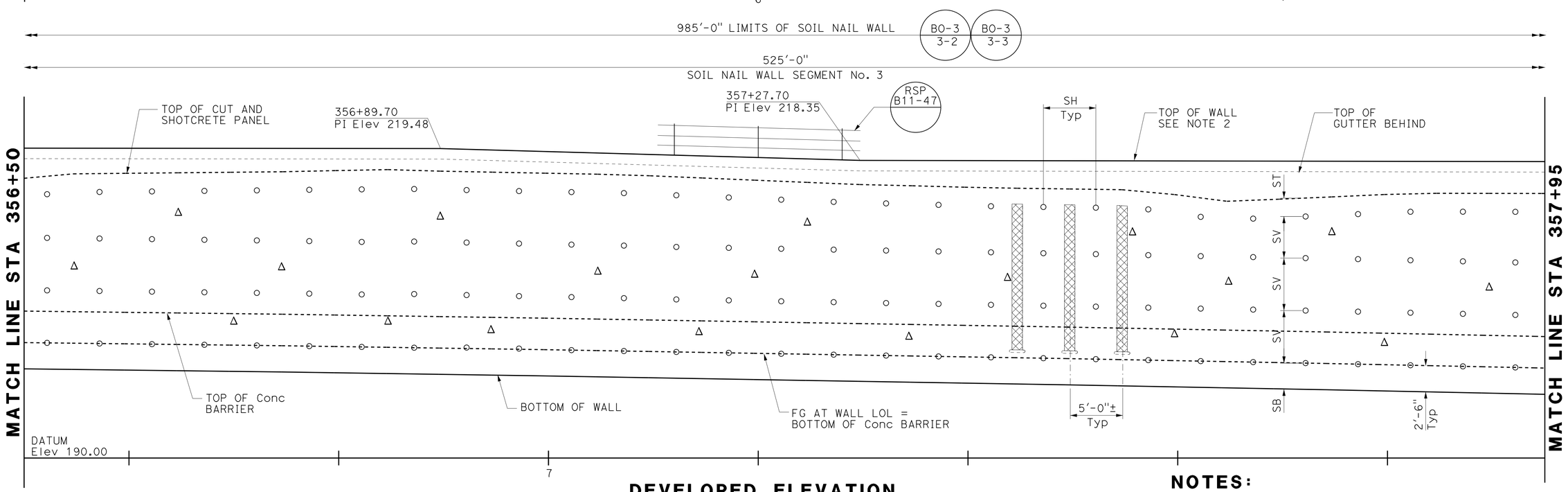

DEVELOPED ELEVATION

1" = 5'

NOTE:
THE CONTRACTOR SHALL VERIFY ALL CONTROLLING FIELD DIMENSIONS BEFORE ORDERING OR FABRICATING ANY MATERIAL.

NOTES:

1. Stations and dimensions are measured along RWLOL.
2. See "TOP OF WALL DETAILS" on "WALL SECTION No. 2" sheet.

DESIGN OVERSIGHT Luqi Yang — 1-16-13 — SIGN OFF DATE

	BY	CHECKED
DESIGN	F. Jalaie	E. Tyk
DETAILS	I. Karkoutli	E. Tyk
QUANTITIES	F. Jalaie	A. Cardoza

PREPARED FOR THE STATE OF CALIFORNIA DEPARTMENT OF TRANSPORTATION

Alaedin Moubayed — PROJECT ENGINEER

BRIDGE NO. 55E0134 — POST MILES 6.4

RETAINING WALL No. 349
WALL ELEVATION No. 3

DESIGN DETAIL SHEET (ENGLISH) (REV.7/16/10)

ORIGINAL SCALE IN INCHES FOR REDUCED PLANS 0 1 2 3

UNIT: 2998
PROJECT NUMBER & PHASE: 12000202791 CONTRACT NO.: 12-0F96E4

DISREGARD PRINTS BEARING EARLIER REVISION DATES — REVISION DATES 8/13/12 9/13/12 11/12/12 12/12/12

SHEET 8 OF 28

FILE => 55E0134-g-rw_1o03.dgn

USERNAME => s124496 DATE PLOTTED => 29-APR-2013 TIME PLOTTED => 13:08

DIST	COUNTY	ROUTE	POST MILES TOTAL PROJECT	SHEET No	TOTAL SHEETS
12	Ora	5	6.2/8.7	576	595

REGISTERED CIVIL ENGINEER 11/12/12 DATE

4-29-13
PLANS APPROVAL DATE

REGISTERED PROFESSIONAL ENGINEER Alaedin Moubayed No. 55268 Exp. 09/30/2014 CIVIL STATE OF CALIFORNIA

The State of California or its officers or agents shall not be responsible for the accuracy or completeness of electronic copies of this plan sheet.

JACOBS
3161 MICHELSON, STE 500
IRVINE, CA 92612

ORANGE COUNTY
TRANSPORTATION AUTHORITY
550 S. MAIN STREET
ORANGE, CA 92863-1584

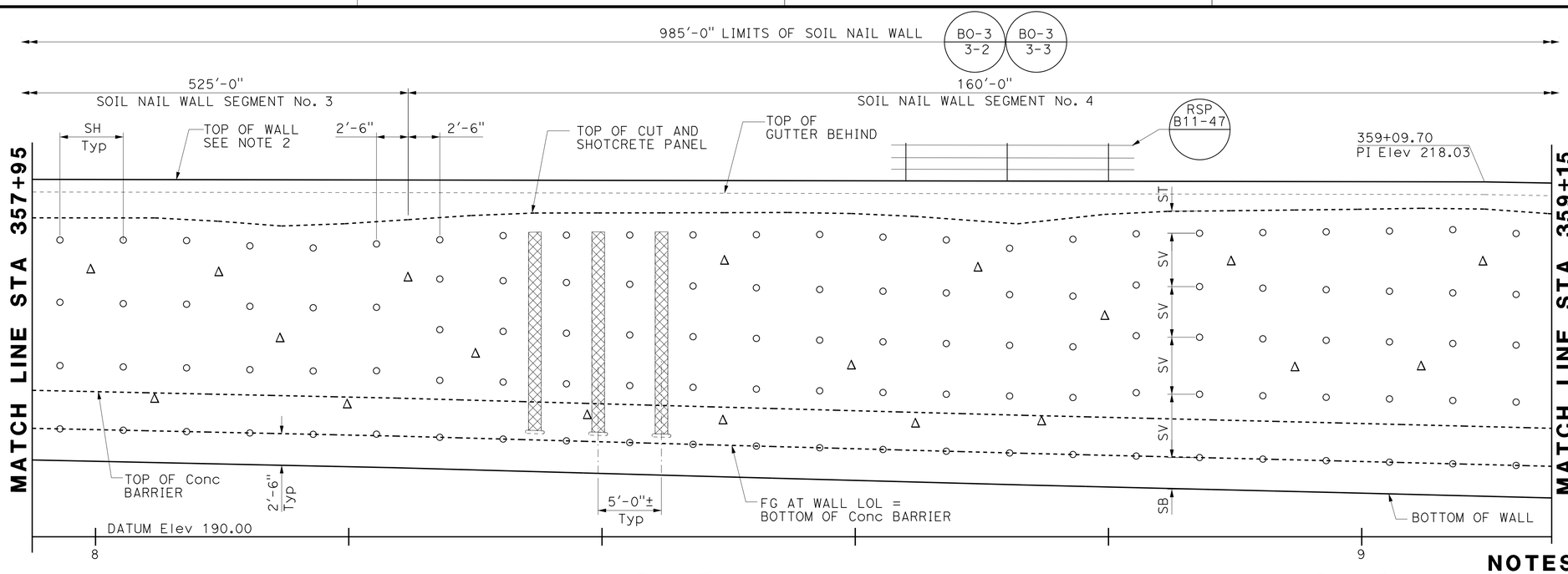

LEGEND:

- ○ Indicates production soil nail
- ⊡ Indicates GROUND ANCHOR
- Δ Indicates proof test nail
  Test nail shall be placed between production nail. The exact location of test nails to be determined in the field by the Engineer.
- ST- Vertical distance from top of cut of face of wall elevation to first row of soil nail
  ST (min) = 1'-6", ST (max) = 3'-0"
- SB- Vertical distance from bottom of wall to bottom row of soil nail
  SB (min) = 2'-0" SB (max) = 3'-0"
- SV- Vertical spacing of soil nail
  SV (min) = 2'-0", SV (max) = 5'-0"
- SH- Horizontal spacing of soil nail
  SH (min) = 4'-6" SH (max) = 5'-0"
- ⊠ Indicates geocomposite drain strip behind wall. Not all drain strips shown.

NOTES:

1. Stations and dimensions are measured along RWLOL.
2. See "TOP OF WALL DETAILS" on "WALL SECTION No. 2" sheet.
3. For sections, see "TYPICAL SECTION No. 2" sheet.

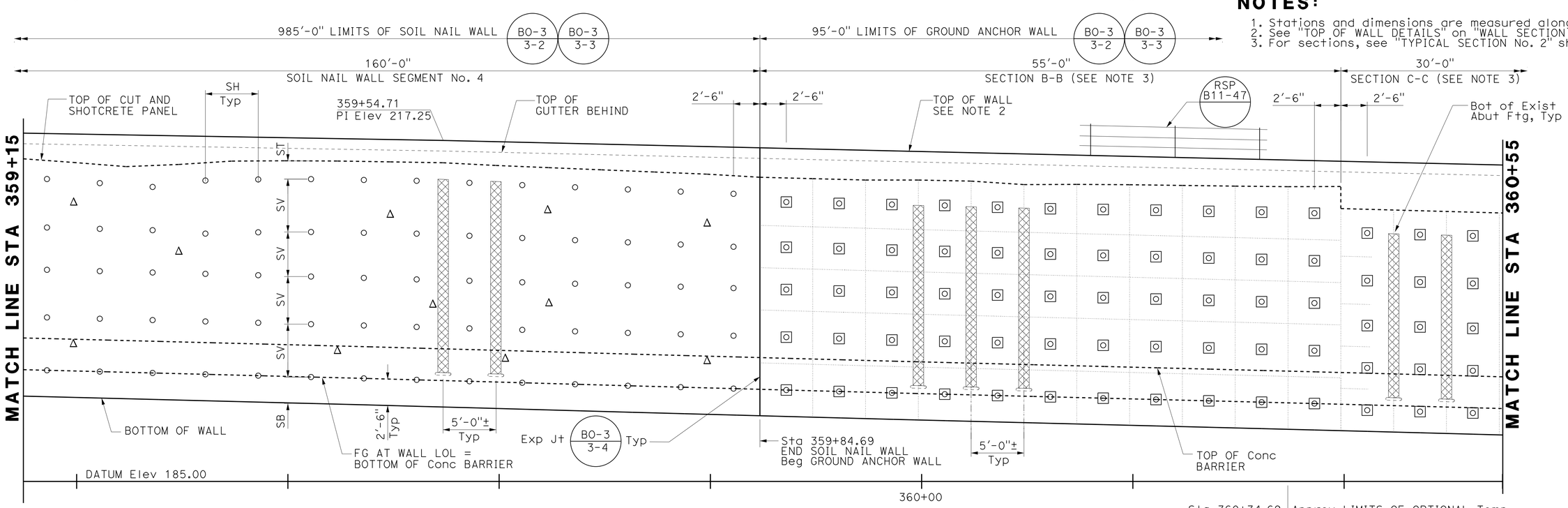

DEVELOPED ELEVATION

1" = 5'

NOTE:
THE CONTRACTOR SHALL VERIFY ALL CONTROLLING FIELD DIMENSIONS BEFORE ORDERING OR FABRICATING ANY MATERIAL.

Luqi Yang
DESIGN OVERSIGHT Luqi Yang
1-16-13
SIGN OFF DATE

	BY	CHECKED
DESIGN	F. Jalaie	E. Tyk
DETAILS	I. Karkoutli	E. Tyk
QUANTITIES	F. Jalaie	A. Cardoza

PREPARED FOR THE STATE OF CALIFORNIA DEPARTMENT OF TRANSPORTATION

Alaedin Moubayed
PROJECT ENGINEER

BRIDGE NO. 55E0134
POST MILES 6.4

RETAINING WALL No. 349
WALL ELEVATION No. 4

DESIGN DETAIL SHEET (ENGLISH) (REV.7/16/10)

ORIGINAL SCALE IN INCHES FOR REDUCED PLANS 0 1 2 3

UNIT: 2998
PROJECT NUMBER & PHASE: 12000202791
CONTRACT NO.: 12-0F96E4

DISREGARD PRINTS BEARING EARLIER REVISION DATES

REVISION DATES 8/13/12 9/17/12 11/07/12 12/12/12

SHEET 9 OF 28

FILE => 55E0134-g-rw_lo04.dgn

USERNAME => s124496 DATE PLOTTED => 29-APR-2013 TIME PLOTTED => 13:08

DIST	COUNTY	ROUTE	POST MILES TOTAL PROJECT	SHEET No	TOTAL SHEETS
12	Ora	5	6.2/8.7	577	595

REGISTERED CIVIL ENGINEER 11/12/12 DATE

4-29-13
PLANS APPROVAL DATE

REGISTERED PROFESSIONAL ENGINEER Alaedin Moubayed No. 55268 Exp. 09/30/2014 CIVIL STATE OF CALIFORNIA

The State of California or its officers or agents shall not be responsible for the accuracy or completeness of electronic copies of this plan sheet.

JACOBS
3161 MICHELSON, STE 500
IRVINE, CA 92612

ORANGE COUNTY
TRANSPORTATION AUTHORITY
550 S. MAIN STREET
ORANGE, CA 92863-1584

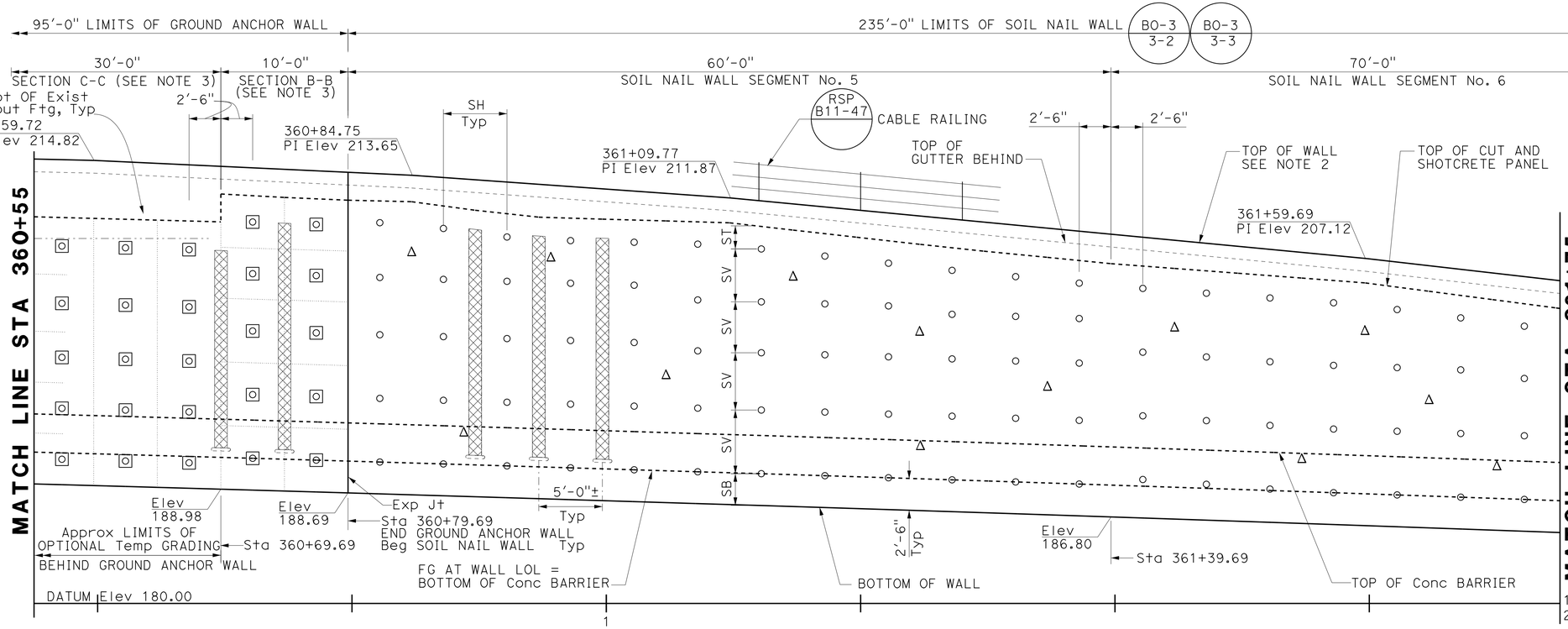

LEGEND:

- ○ Indicates production soil nail
- ⊡ Indicates ground anchor
- Δ Indicates proof test nail. Test nail shall be placed between production nail. The exact location of test nails to be determined in the field by the Engineer.
- ST- Vertical distance from top of cut of face of wall elevation to first row of soil nail ST (min) = 1'-6", ST (max) = 3'-0"
- SB- Vertical distance from bottom of wall to bottom row of soil nail SB (min) = 2'-0" SB (max) = 3'-0"
- SV- Vertical spacing of soil nail SV (min) = 2'-0", SV (max) = 5'-0"
- SH- Horizontal spacing of soil nail SH (min) = 4'-6" SH (max) = 5'-0"
- ▨ Indicates geocomposite drain strip behind wall. Not all drain strips shown.

NOTES:

1. Stations and dimensions are measured along RWLOL.
2. See "TOP OF WALL DETAILS" on "WALL SECTION No. 2" sheet.
3. For sections, see "TYPICAL SECTION No. 2" sheet.
4. For gutter drain outlet, see "Retaining Wall, Face of wall outlet" detail in B3-6

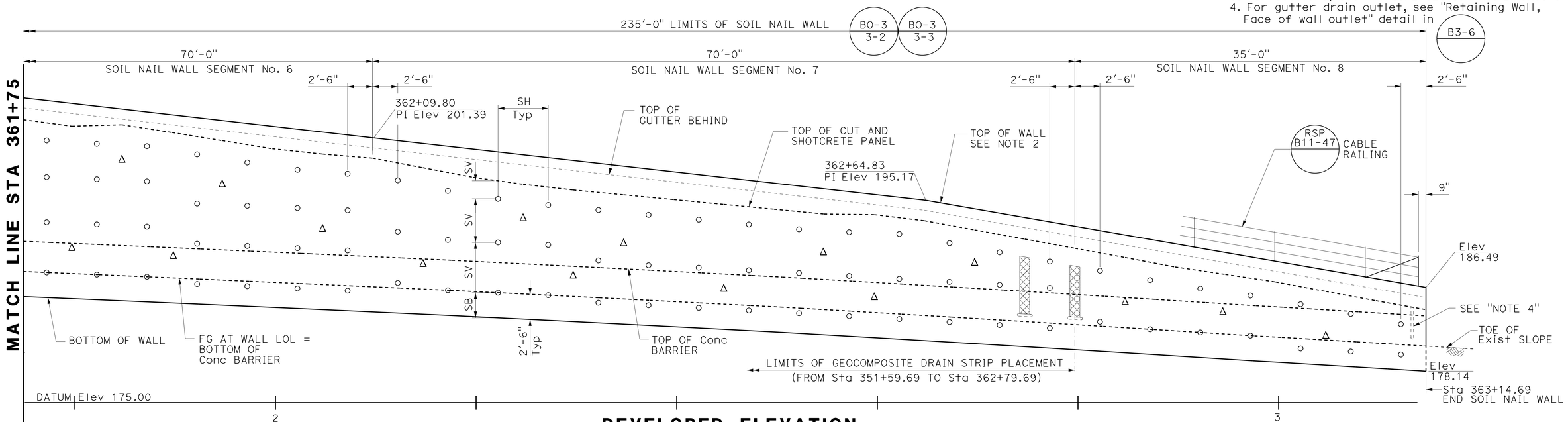

NOTE:
THE CONTRACTOR SHALL VERIFY ALL CONTROLLING FIELD DIMENSIONS BEFORE ORDERING OR FABRICATING ANY MATERIAL.

DEVELOPED ELEVATION

Horiz 1" = 5'

Luqi Yang
DESIGN OVERSIGHT Luqi Yang
1-16-13
SIGN OFF DATE

	BY	CHECKED
DESIGN	F. Jalaie	E. Tyk
DETAILS	I. Karkoutli	E. Tyk
QUANTITIES	F. Jalaie	A. Cardoza

PREPARED FOR THE STATE OF CALIFORNIA DEPARTMENT OF TRANSPORTATION

Alaedin Moubayed
PROJECT ENGINEER

BRIDGE NO. 55E0134
POST MILES 6.4

RETAINING WALL No. 349
WALL ELEVATION No. 5

DESIGN DETAIL SHEET (ENGLISH) (REV.7/16/10)

ORIGINAL SCALE IN INCHES FOR REDUCED PLANS 0 1 2 3

UNIT: 2998
PROJECT NUMBER & PHASE: 12000202791
CONTRACT NO.: 12-0F96E4

DISREGARD PRINTS BEARING EARLIER REVISION DATES

REVISION DATES 8/24/12 9/27/12 11/27/12 12/12/12

SHEET 10 OF 28

FILE => 55E0134-g-rw_lo05.dgn

USERNAME => s124496 DATE PLOTTED => 29-APR-2013 TIME PLOTTED => 13:08

DIST	COUNTY	ROUTE	POST MILES TOTAL PROJECT	SHEET No	TOTAL SHEETS
12	Ora	5	6.2/8.7	578	595

REGISTERED CIVIL ENGINEER 11/12/12 DATE

4-29-13
PLANS APPROVAL DATE

REGISTERED PROFESSIONAL ENGINEER Alaedin Moubayed No. 55268 Exp. 09/30/2014 CIVIL STATE OF CALIFORNIA

The State of California or its officers or agents shall not be responsible for the accuracy or completeness of electronic copies of this plan sheet.

JACOBS
3161 MICHELSON, STE 500
IRVINE, CA 92612

ORANGE COUNTY
TRANSPORTATION AUTHORITY
550 S. MAIN STREET
ORANGE, CA 92863-1584

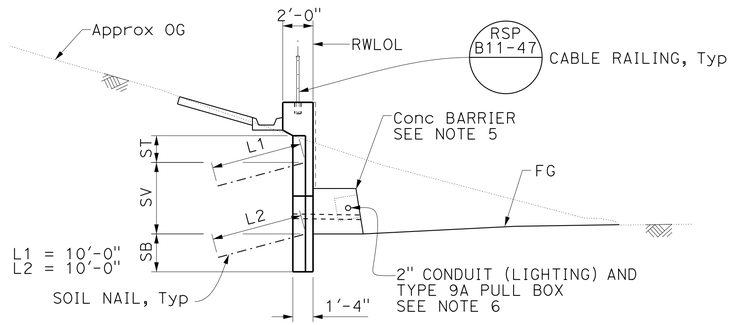

SOIL NAIL WALL SEGMENT No. 1

FROM RWLOL STA 349+99.69 TO STA 351+79.69

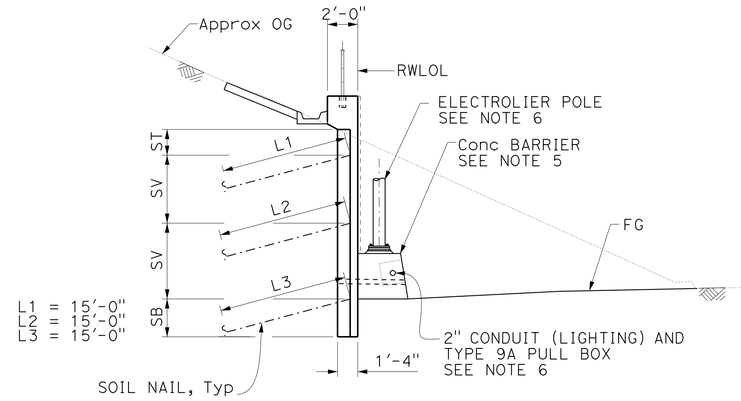

SOIL NAIL WALL SEGMENT No. 2

FROM RWLOL STA 351+79.69 TO STA 352+99.69

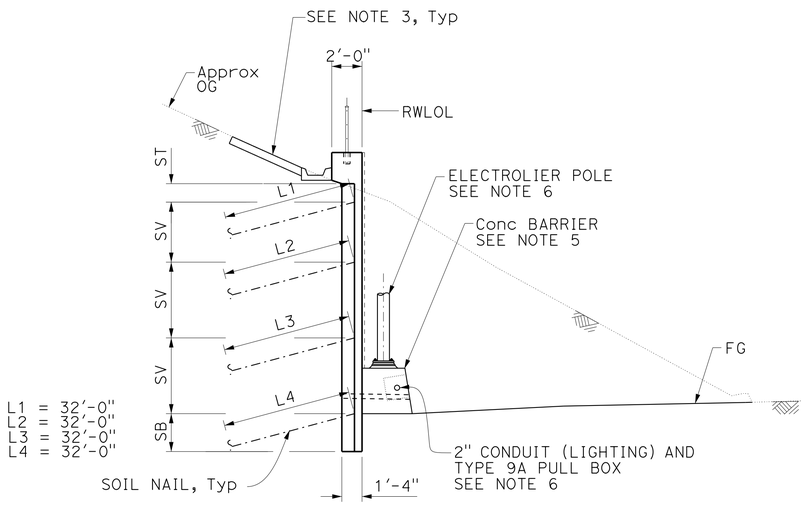

SOIL NAIL WALL SEGMENT No. 3

FROM RWLOL STA 352+99.69 TO STA 358+24.69

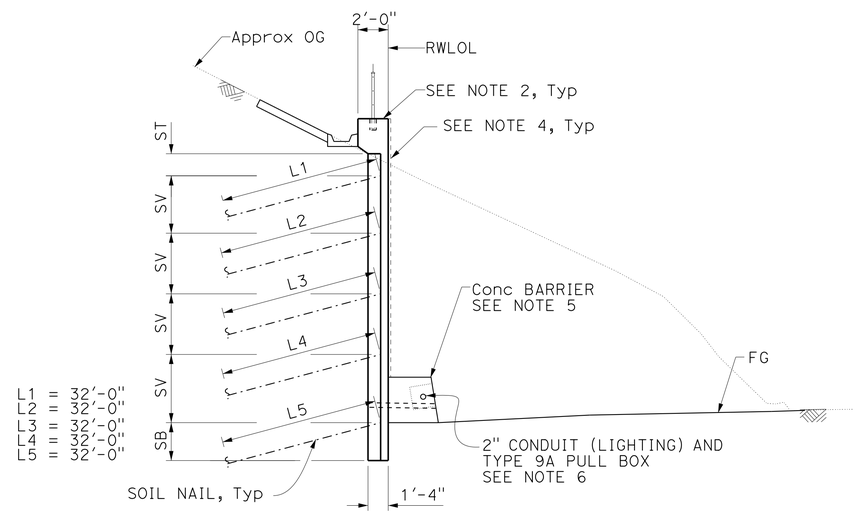

SOIL NAIL WALL SEGMENT No. 4

FROM RWLOL STA 358+24.69 TO STA 359+84.69

NOTES:

1. The exact lift heights shown on "WALL ELEVATION" sheets shall be determined by the Contractor.
2. Top of wall shall be smooth and on short vertical curves. See "TOP OF WALL DETAILS" on "WALL SECTION No. 2" sheet for details.
3. See "SLOPE PAVING AND GUTTER DETAILS" on "TYPICAL SECTION No. 1" sheet.
4. For aesthetic details, see "ARCHITECTURAL TREATMENT DETAILS" sheet.
5. For Conc Barrier details, see "ROAD PLANS".
6. For electrolier pole locations and details, See "ROAD PLANS".

NOTE:
THE CONTRACTOR SHALL VERIFY ALL CONTROLLING FIELD DIMENSIONS BEFORE ORDERING OR FABRICATING ANY MATERIAL.

Luqi Yang
DESIGN OVERSIGHT Luqi Yang
1-16-13
SIGN OFF DATE

	BY	CHECKED
DESIGN	F. Jalaie	E. Tyk
DETAILS	I. Karkoutli	E. Tyk
QUANTITIES	F. Jalaie	A. Cardoza

PREPARED FOR THE STATE OF CALIFORNIA DEPARTMENT OF TRANSPORTATION

Alaedin Moubayed
PROJECT ENGINEER

BRIDGE NO. 55E0134
POST MILES 6.4

RETAINING WALL No. 349
WALL SECTION No. 1

DESIGN DETAIL SHEET (ENGLISH) (REV.7/16/10)

ORIGINAL SCALE IN INCHES FOR REDUCED PLANS 0 1 2 3

UNIT: 2998
PROJECT NUMBER & PHASE: 12000202791 CONTRACT NO.: 12-0F96E4

DISREGARD PRINTS BEARING EARLIER REVISION DATES

REVISION DATES 8/13/12 9/17/12 11/09/12 12/12/12

SHEET 11 OF 28

FILE => 55E0134-k-ts01.dgn

USERNAME => s124496 DATE PLOTTED => 29-APR-2013 TIME PLOTTED => 13:08

DIST	COUNTY	ROUTE	POST MILES TOTAL PROJECT	SHEET No	TOTAL SHEETS
12	Ora	5	6.2/8.7	579	595

REGISTERED CIVIL ENGINEER 11/12/12 DATE

4-29-13
PLANS APPROVAL DATE

REGISTERED PROFESSIONAL ENGINEER Alaedin Moubayed No. 55268 Exp. 09/30/2014 CIVIL STATE OF CALIFORNIA

The State of California or its officers or agents shall not be responsible for the accuracy or completeness of electronic copies of this plan sheet.

JACOBS
3161 MICHELSON, STE 500
IRVINE, CA 92612

ORANGE COUNTY
TRANSPORTATION AUTHORITY
550 S. MAIN STREET
ORANGE, CA 92863-1584

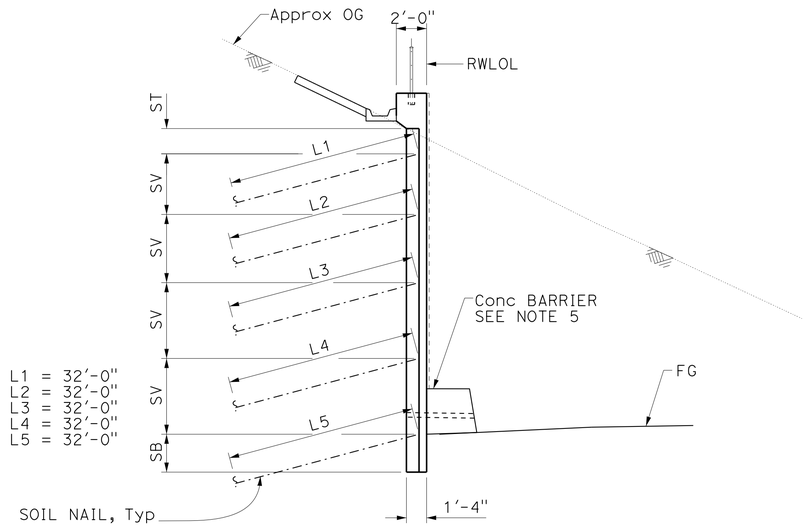

SOIL NAIL WALL SEGMENT No. 5

FROM RWLOL STA 360+79.69 TO STA 361+39.69

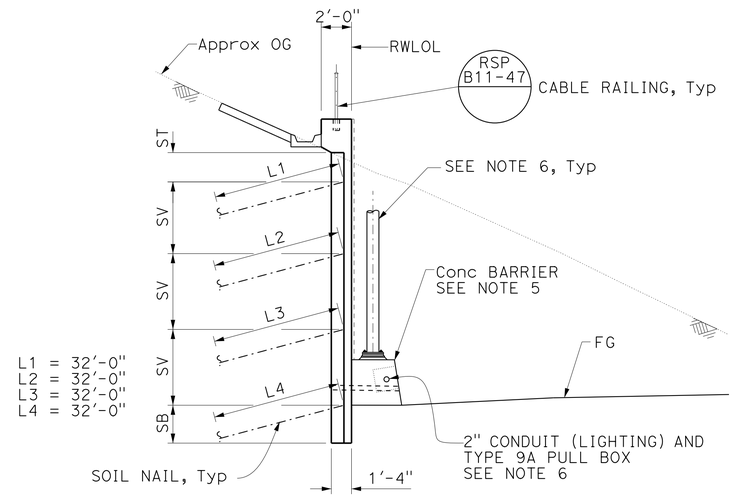

SOIL NAIL WALL SEGMENT No. 6

FROM RWLOL STA 361+39.69 TO STA 362+09.69

NOTES:

1. The exact lift heights shown on "WALL ELEVATION" sheets shall be determined by the Contractor.
2. Top of wall shall be smooth and on short vertical curves. See "TOP OF WALL DETAILS" for details.
3. See "SLOPE PAVING AND GUTTER DETAILS" on "TYPICAL SECTION No. 1" sheet.
4. For aesthetic details, see "ARCHITECTURAL TREATMENT DETAILS" sheet.
5. For Conc Barrier details, see "ROAD PLANS".
6. For electrolier pole locations and details, See "ROAD PLANS".

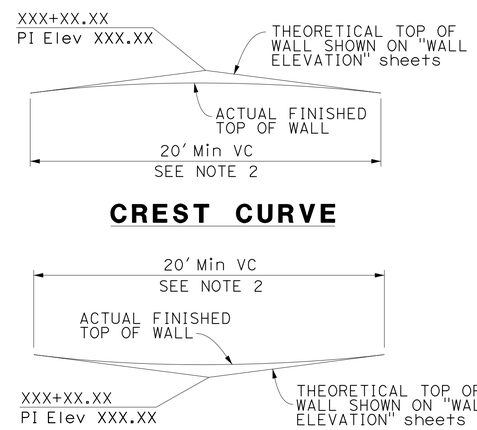

TOP OF WALL DETAILS

No Scale

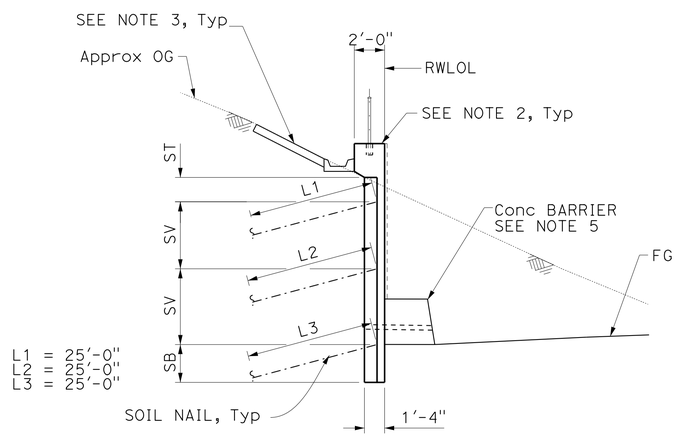

SOIL NAIL WALL SEGMENT No. 7

FROM RWLOL STA 362+09.69 TO STA 362+79.69

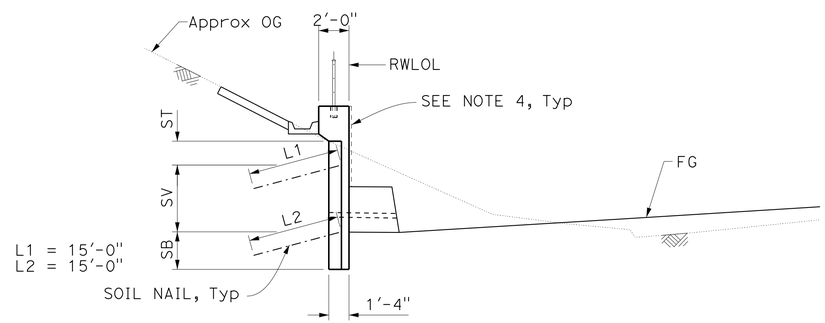

SOIL NAIL WALL SEGMENT No. 8

FROM RWLOL STA 362+79.69 TO STA 363+14.69

LEGEND

XXX+XX.XX Indicates wall station along RWLOL

XXX.XX Indicates top of wall elevation shown on "GENERAL PLAN" and "WALL ELEVATION" sheets

NOTE:
THE CONTRACTOR SHALL VERIFY ALL CONTROLLING FIELD DIMENSIONS BEFORE ORDERING OR FABRICATING ANY MATERIAL.

Luqi Yang
DESIGN OVERSIGHT Luqi Yang
1-16-13
SIGN OFF DATE

	BY	CHECKED
DESIGN	F. Jalaie	E. Tyk
DETAILS	I. Karkoutli	E. Tyk
QUANTITIES	F. Jalaie	A. Cardoza

PREPARED FOR THE STATE OF CALIFORNIA DEPARTMENT OF TRANSPORTATION

Alaedin Moubayed
PROJECT ENGINEER

BRIDGE NO. 55E0134
POST MILES 6.4

RETAINING WALL No. 349
WALL SECTION No. 2

DESIGN DETAIL SHEET (ENGLISH) (REV.7/16/10)

ORIGINAL SCALE IN INCHES FOR REDUCED PLANS 0 1 2 3

UNIT: 2998
PROJECT NUMBER & PHASE: 12000202791 CONTRACT NO.: 12-0F96E4

DISREGARD PRINTS BEARING EARLIER REVISION DATES → 8/13/12 9/13/12 11/12/12 12/12/12

SHEET 12 OF 28

FILE => 55E0134-k-ts02.dgn

USERNAME => s124496 DATE PLOTTED => 29-APR-2013 TIME PLOTTED => 13:08

DIST	COUNTY	ROUTE	POST MILES TOTAL PROJECT	SHEET No	TOTAL SHEETS
12	Ora	5	6.2/8.7	580	595

REGISTERED CIVIL ENGINEER 11/12/12 DATE

4-29-13
PLANS APPROVAL DATE

REGISTERED PROFESSIONAL ENGINEER Alaedin Moubayed No. 55268 Exp. 09/30/2014 CIVIL STATE OF CALIFORNIA

The State of California or its officers or agents shall not be responsible for the accuracy or completeness of electronic copies of this plan sheet.

JACOBS
3161 MICHELSON, STE 500
IRVINE, CA 92612

ORANGE COUNTY
TRANSPORTATION AUTHORITY
550 S. MAIN STREET
ORANGE, CA 92863-1584

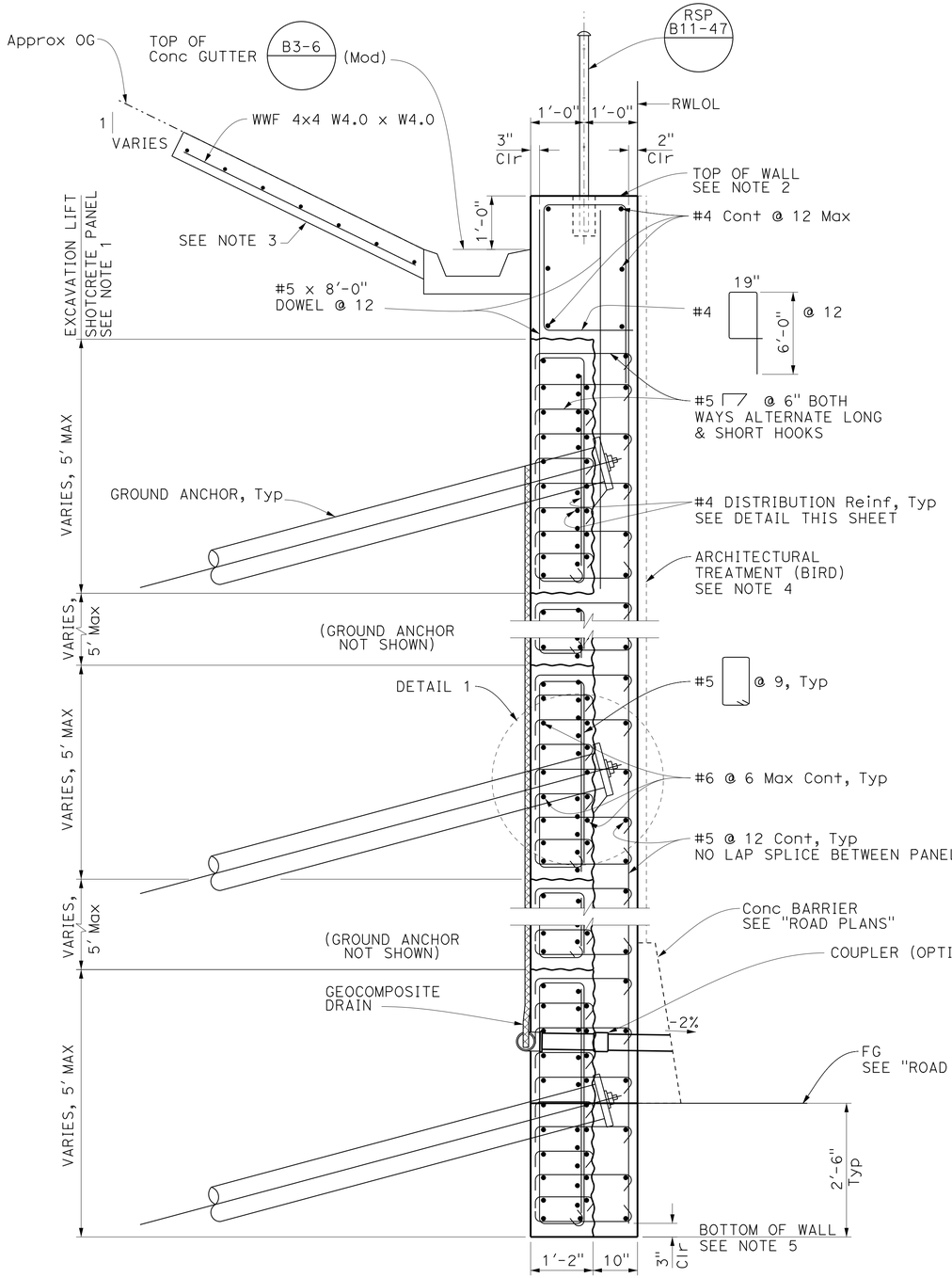

TYPICAL WALL SECTION (GROUND ANCHOR WALL)

3/4" = 1'-0"

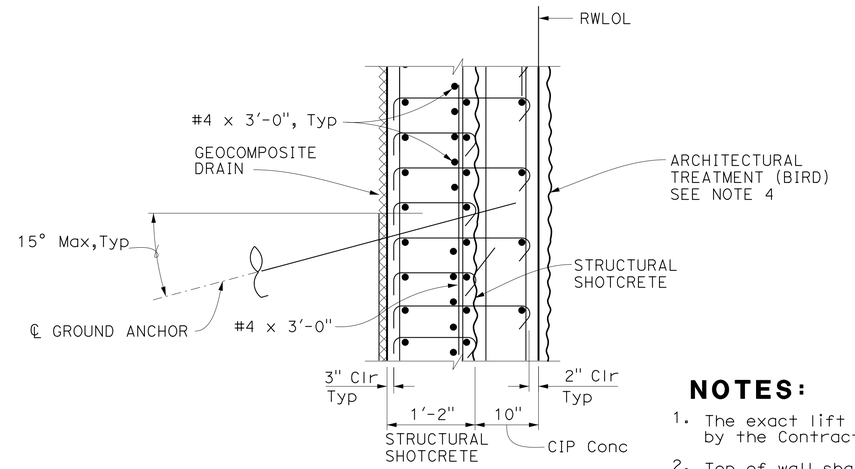

DETAIL 1

1" = 1'-0"

NOTES:

1. The exact lift heights shall be determined by the Contractor.
2. Top of wall shall be smooth and on short vertical curves. see "TOP OF WALL DETAILS" on "WALL SECTION No. 2" sheet for details.
3. See "SLOPE PAVING AND GUTTER DETAILS" on "TYPICAL SECTION No. 1" sheet.
4. For aesthetic details, see "ARCHITECTURAL TREATMENT DETAILS" sheet.
5. Bottom of wall to be placed against undistubed soil.
6. For ground anchor spacing, see "WALL ELEVATION" sheets.
7. For information not shown, see "TYPICAL SECTION No. 2" sheet.
8. For drainage details, see "WALL DRAINAGE DETAILS" sheet.

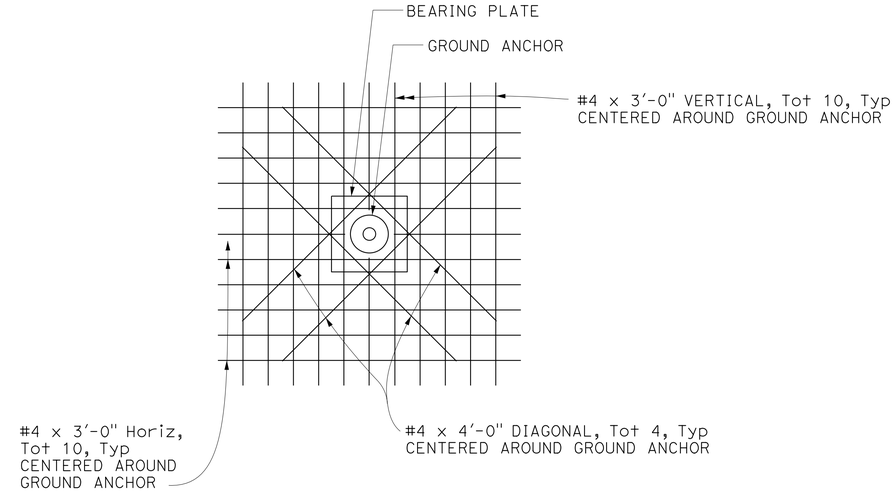

DISTRIBUTION STEEL DETAILS (TYPICAL AT ALL ANCHORS)

3/4" = 1'-0"

NOTE:
THE CONTRACTOR SHALL VERIFY ALL CONTROLLING FIELD DIMENSIONS BEFORE ORDERING OR FABRICATING ANY MATERIAL.

Luqi Yang
DESIGN OVERSIGHT Luqi Yang
1-16-13
SIGN OFF DATE

	BY	CHECKED
DESIGN	F. Jalaie	E. Tyk/C. Pinkerton
DETAILS	I. Karkoutli	E. Tyk/C. Pinkerton
QUANTITIES	F. Jalaie	A. Cardoza

PREPARED FOR THE STATE OF CALIFORNIA DEPARTMENT OF TRANSPORTATION

Alaedin Moubayed
PROJECT ENGINEER

BRIDGE NO. 55E0134
POST MILES 6.4

RETAINING WALL No. 349
GROUND ANCHOR WALL DETAILS No. 1

DESIGN DETAIL SHEET (ENGLISH) (REV.7/16/10)

ORIGINAL SCALE IN INCHES FOR REDUCED PLANS 0 1 2 3

UNIT: 2998
PROJECT NUMBER & PHASE: 12000202791 CONTRACT NO.: 12-0F96E4

DISREGARD PRINTS BEARING EARLIER REVISION DATES

REVISION DATES 8/13/12 9/17/12 11/07/12 12/12/12

SHEET 13 OF 28

FILE => 55E0134-1-rwdt01.dgn

USERNAME => s124196 DATE PLOTTED => 29-APR-2013 TIME PLOTTED => 13:08

DIST	COUNTY	ROUTE	POST MILES TOTAL PROJECT	SHEET No	TOTAL SHEETS
12	Ora	5	6.2/8.7	581	595

REGISTERED CIVIL ENGINEER 11/12/12 DATE

4-29-13
PLANS APPROVAL DATE

REGISTERED PROFESSIONAL ENGINEER Alaedin Moubayed No. 55268 Exp. 09/30/2014 CIVIL STATE OF CALIFORNIA

The State of California or its officers or agents shall not be responsible for the accuracy or completeness of electronic copies of this plan sheet.

JACOBS
3161 MICHELSON, STE 500
IRVINE, CA 92612

ORANGE COUNTY
TRANSPORTATION AUTHORITY
550 S. MAIN STREET
ORANGE, CA 92863-1584

NOTES:

(A) Level of initial grouting for drilled hole

(B) Level of secondary grouting

(C) Level of initial grouting inside corrugated sheathing

(D) Bonded length shall be determined by the Contractor

(E) For unbonded length, see "TYPICAL SECTION No. 2" sheet

(F) Face of Wall Excavation

1. Steel tube (Min thickness = 1/4") welded to bearing plate. Galvanize assembly after fabrication
2. Steel tube welded to bearing plate. Inside diameter of steel tube (Min thickness = 1/4") to be 1" greater than outside diameter of smooth sheathing.
3. Galvanize assembly after fabrication.
4. For wall details, see other plan sheets.

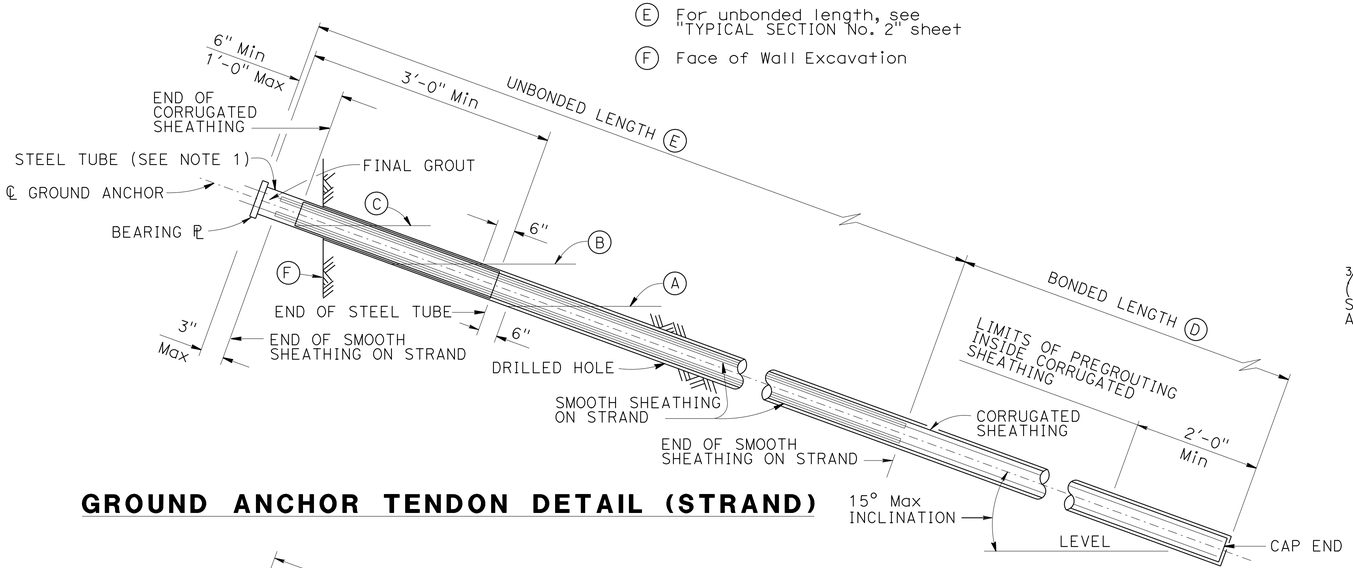

GROUND ANCHOR TENDON DETAIL (STRAND)

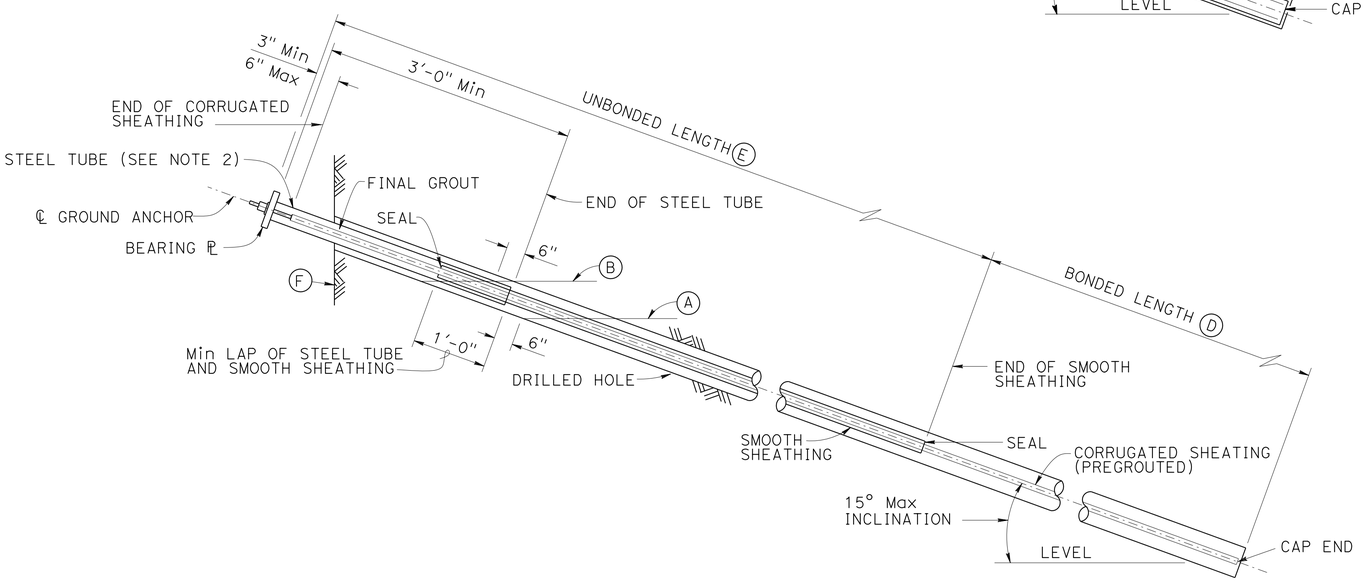

GROUND ANCHOR TENDON DETAIL (BAR)

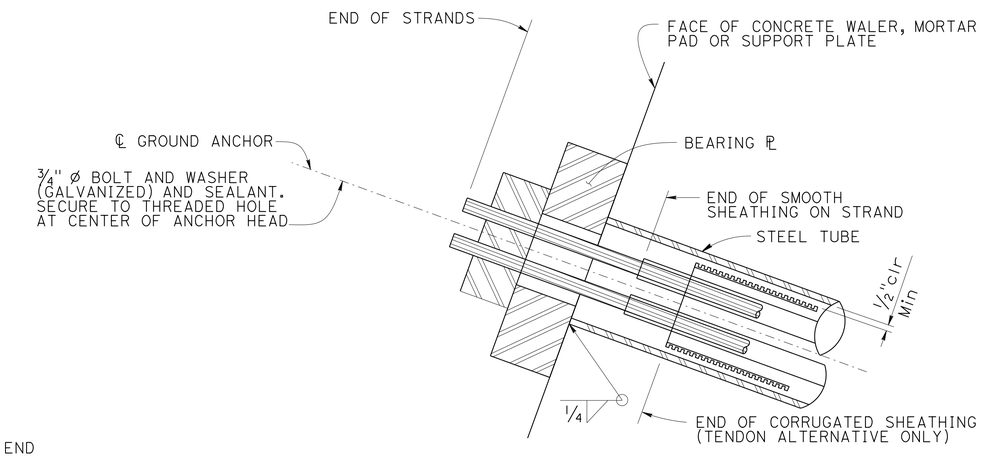

ALTERNATIVE X

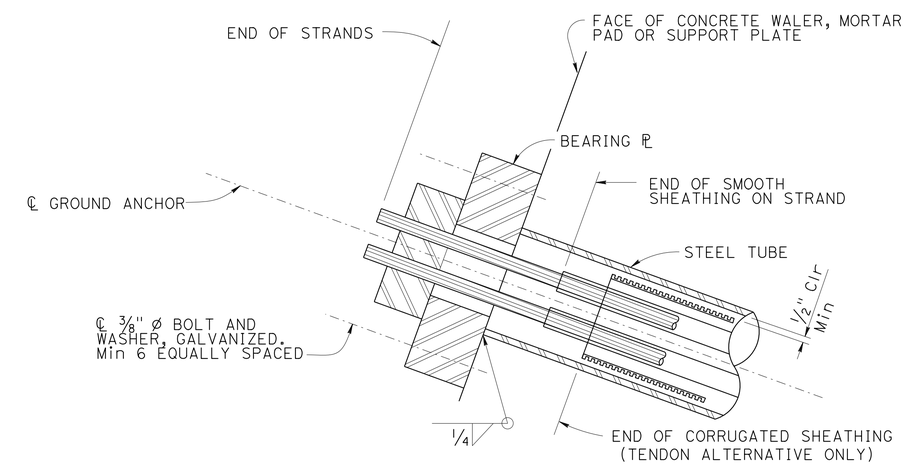

ALTERNATIVE Y

ANCHORAGE DETAILS

NOTE:
THE CONTRACTOR SHALL VERIFY ALL CONTROLLING FIELD DIMENSIONS BEFORE ORDERING OR FABRICATING ANY MATERIAL.

Luqi Yang
DESIGN OVERSIGHT Luqi Yang
1-16-13
SIGN OFF DATE

	BY	CHECKED
DESIGN	F. Jalaie	E. Tyk
DETAILS	I. Karkoutli	E. Tyk
QUANTITIES	F. Jalaie	A. Cardoza

PREPARED FOR THE STATE OF CALIFORNIA DEPARTMENT OF TRANSPORTATION

Alaedin Moubayed
PROJECT ENGINEER

BRIDGE NO. 55E0134
POST MILES 6.4

RETAINING WALL No. 349
GROUND ANCHOR WALL DETAILS No. 2

DESIGN DETAIL SHEET (ENGLISH) (REV.7/16/10)

ORIGINAL SCALE IN INCHES FOR REDUCED PLANS 0 1 2 3

UNIT: 2998
PROJECT NUMBER & PHASE: 12000202791 CONTRACT NO.: 12-0F96E4

DISREGARD PRINTS BEARING EARLIER REVISION DATES

REVISION DATES 4/23/12 8/13/12 9/13/12 11/12/12

SHEET 14 OF 28

FILE => 55E0134-1-rwdt02.dgn

USERNAME => s124936 DATE PLOTTED => 29-APR-2013 TIME PLOTTED => 13:08

DIST	COUNTY	ROUTE	POST MILES TOTAL PROJECT	SHEET No	TOTAL SHEETS
12	Ora	5	6.2/8.7	582	595

REGISTERED CIVIL ENGINEER 11/12/12 DATE

4-29-13
PLANS APPROVAL DATE

REGISTERED PROFESSIONAL ENGINEER Alaedin Moubayed No. 55268 Exp. 09/30/2014 CIVIL STATE OF CALIFORNIA

The State of California or its officers or agents shall not be responsible for the accuracy or completeness of electronic copies of this plan sheet.

JACOBS
3161 MICHELSON, STE 500
IRVINE, CA 92612

ORANGE COUNTY
TRANSPORTATION AUTHORITY
550 S. MAIN STREET
ORANGE, CA 92863-1584

NOTES:

1. For soil nail spacings, see "WALL ELEVATION" sheets.
2. For soil nail embedment length, see "WALL SECTION" sheets.
3. Bottom of wall to be placed against undisturbed soil.
4. For drainage details, see "WALL DRAINAGE DETAILS" sheet.
5. For aesthetic details, see "ARCHITECTURAL TREATMENT DETAILS" sheet.
6. For additional information, see "SOIL NAIL WALL DETAILS No. 2" sheet.
7. Size of drilled hole shall be determined by the Contractor.
8. For Section A-A, see "SOIL NAIL WALL DETAILS No. 2" sheet.
9. Top of wall shall be smooth and on short vertical curves. See "TOP OF WALL DETAILS" on "WALL SECTION No. 2" sheet for details.

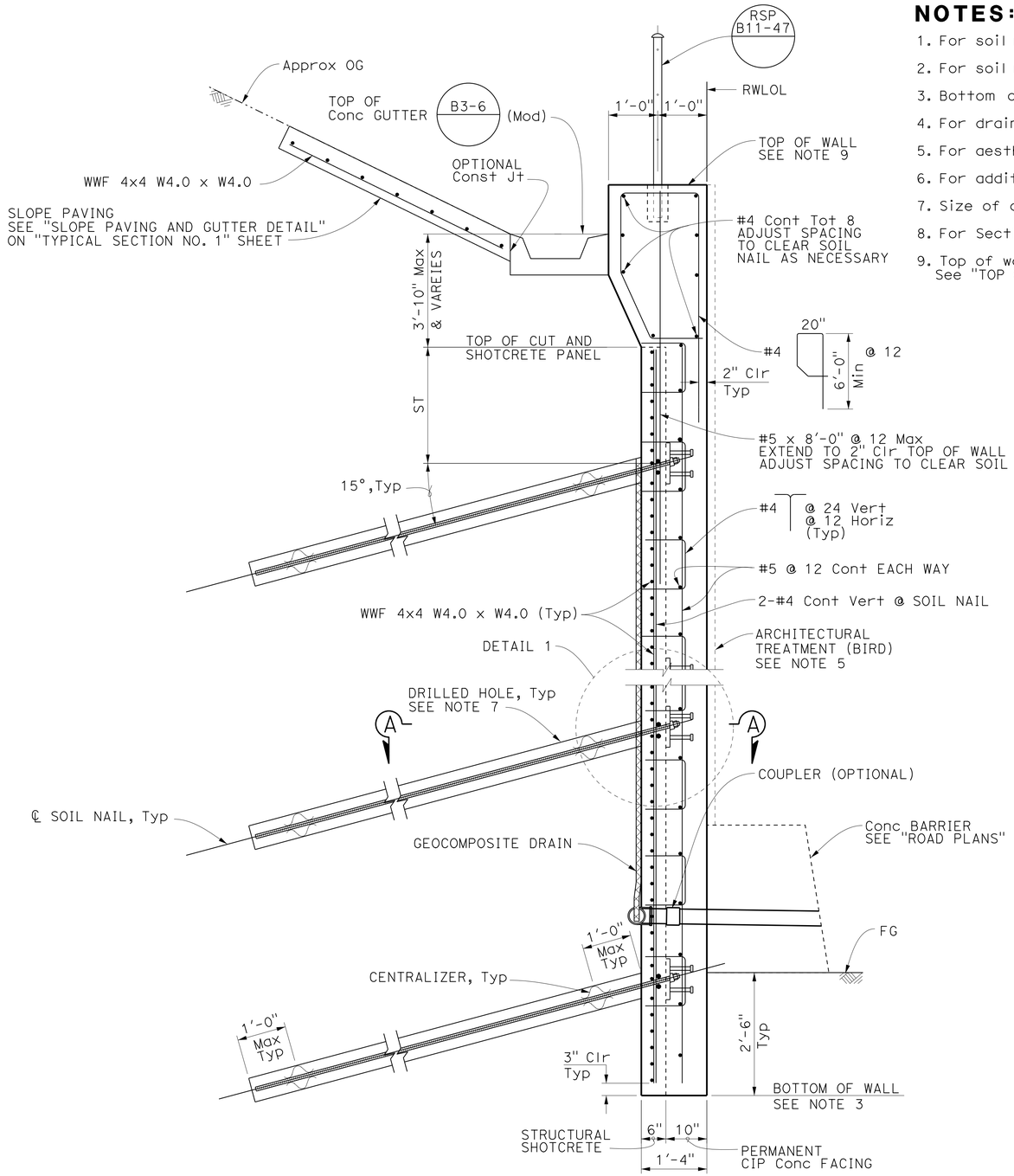

TYPICAL WALL SECTION (SOIL NAIL)

¾" = 1'-0"

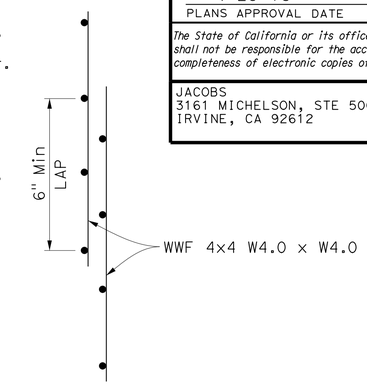

WIRE LAP SPLICE DETAIL

NO SCALE

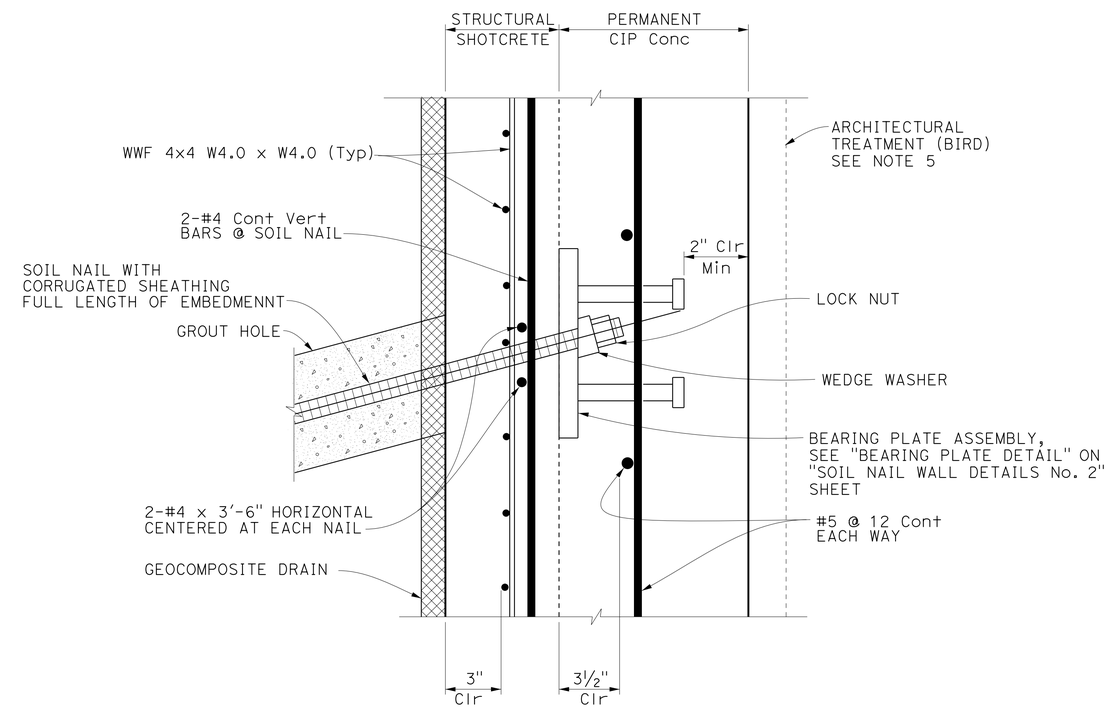

DETAIL 1

3" = 1'-0"

NOTE:
THE CONTRACTOR SHALL VERIFY ALL CONTROLLING FIELD DIMENSIONS BEFORE ORDERING OR FABRICATING ANY MATERIAL.

Luqi Yang
DESIGN OVERSIGHT Luqi Yang
1-16-13
SIGN OFF DATE

	BY	CHECKED
DESIGN	F. Jalaie	E. Tyk
DETAILS	I. Karkoutli	E. Tyk
QUANTITIES	F. Jalaie	A. Cardoza

PREPARED FOR THE STATE OF CALIFORNIA DEPARTMENT OF TRANSPORTATION

Alaedin Moubayed
PROJECT ENGINEER

BRIDGE NO. 55E0134
POST MILES 6.4

RETAINING WALL No. 349
SOIL NAIL WALL DETAILS No. 1

DESIGN DETAIL SHEET (ENGLISH) (REV.7/16/10)

ORIGINAL SCALE IN INCHES FOR REDUCED PLANS 0 1 2 3

UNIT: 2998
PROJECT NUMBER & PHASE: 12000202791 CONTRACT NO.: 12-0F96E4

DISREGARD PRINTS BEARING EARLIER REVISION DATES

REVISION DATES 8/13/12 9/13/12 11/12/12 12/12/12

SHEET 15 OF 28

FILE => 55E0134-1-rwdt03.dgn

USERNAME => s124936 DATE PLOTTED => 29-APR-2013 TIME PLOTTED => 13:08

DIST	COUNTY	ROUTE	POST MILES TOTAL PROJECT	SHEET No	TOTAL SHEETS
12	Ora	5	6.2/8.7	583	595

REGISTERED CIVIL ENGINEER 11/12/12 DATE

4-29-13
PLANS APPROVAL DATE

REGISTERED PROFESSIONAL ENGINEER Alaedin Moubayed No. 55268 Exp. 09/30/2014 CIVIL STATE OF CALIFORNIA

The State of California or its officers or agents shall not be responsible for the accuracy or completeness of electronic copies of this plan sheet.

JACOBS
3161 MICHELSON, STE 500
IRVINE, CA 92612

ORANGE COUNTY
TRANSPORTATION AUTHORITY
550 S. MAIN STREET
ORANGE, CA 92863-1584

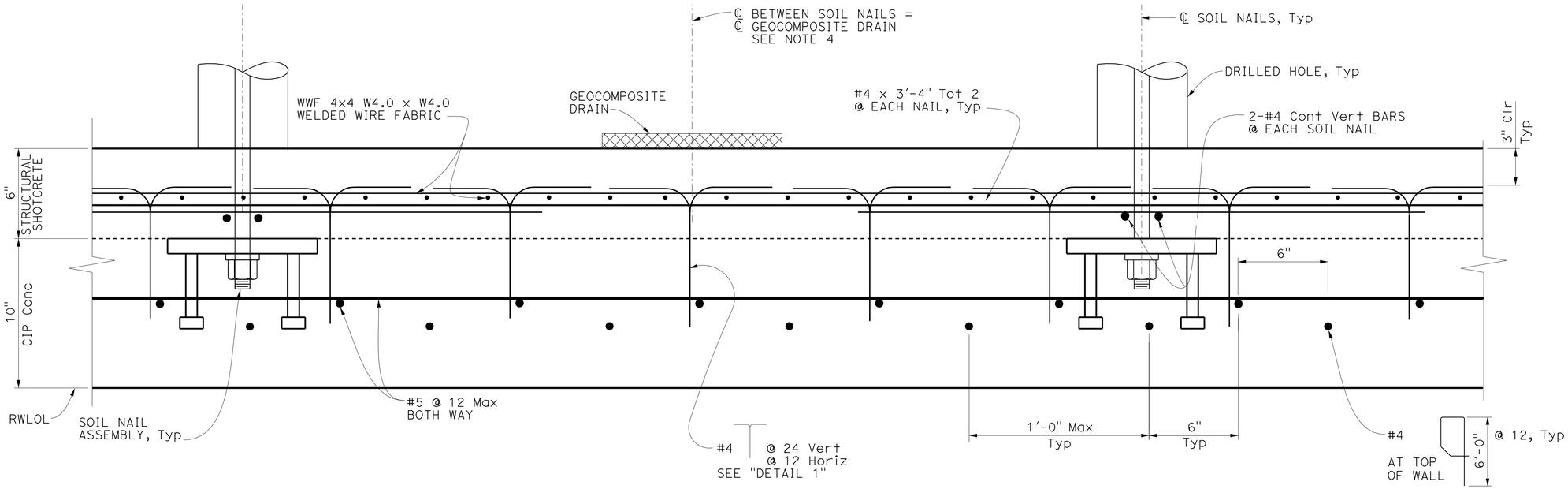

SECTION A-A

1" = 1'-0"

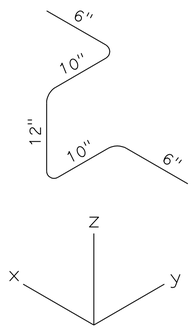

DETAIL 1

NO SCALE

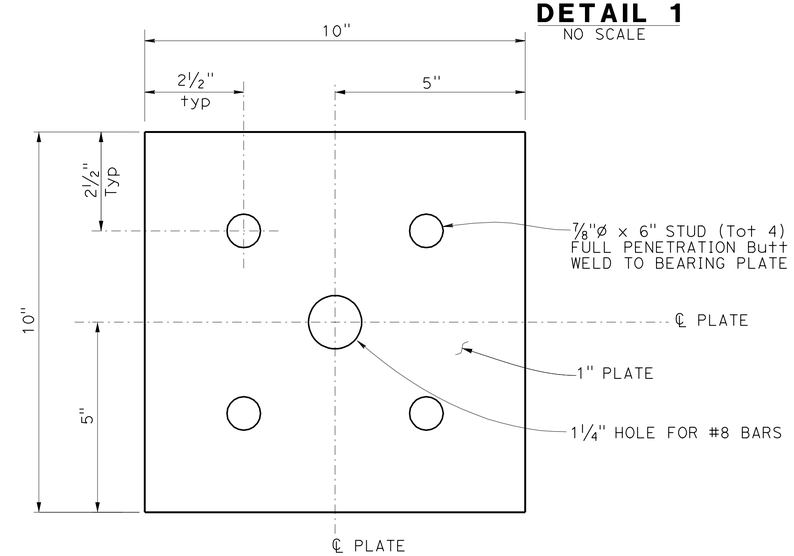

BEARING PLATE DETAIL

6" = 1'-0"

NOTES:

1. For horizontal and vertical soil nail spacing, see "WALL ELEVATION" sheets.
2. For details and dimensions not shown, see "Section A-A" on "TYPICAL SECTION No. 1" sheet.
3. Architectural treatment not shown for clarity.
4. See "WALL DRAINAGE DETAILS" sheet for wall drainage details.

NOTE:
THE CONTRACTOR SHALL VERIFY ALL CONTROLLING FIELD DIMENSIONS BEFORE ORDERING OR FABRICATING ANY MATERIAL.

Luqi Yang
DESIGN OVERSIGHT Luqi Yang
1-16-13
SIGN OFF DATE

	BY	CHECKED
DESIGN	F. Jalaie	E. Tyk
DETAILS	I. Karkoutli	E. Tyk
QUANTITIES	F. Jalaie	A. Cardoza

PREPARED FOR THE STATE OF CALIFORNIA DEPARTMENT OF TRANSPORTATION

Alaedin Moubayed
PROJECT ENGINEER

BRIDGE NO. 55E0134
POST MILES 6.4

RETAINING WALL No. 349
SOIL NAIL WALL DETAILS No. 2

DESIGN DETAIL SHEET (ENGLISH) (REV.7/16/10)

ORIGINAL SCALE IN INCHES FOR REDUCED PLANS 0 1 2 3

UNIT: 2998
PROJECT NUMBER & PHASE: 12000202791 CONTRACT NO.: 12-0F96E4

DISREGARD PRINTS BEARING EARLIER REVISION DATES

REVISION DATES 4/23/12 8/13/12 9/17/12 11/12/12

SHEET 16 OF 28

FILE => 55E0134-1-rwdt04.dgn

USERNAME => s124436 DATE PLOTTED => 29-APR-2013 TIME PLOTTED => 13:08

DIST	COUNTY	ROUTE	POST MILES TOTAL PROJECT	SHEET No	TOTAL SHEETS
12	Ora	5	6.2/8.7	584	595

REGISTERED CIVIL ENGINEER 11/12/12 DATE

4-29-13
PLANS APPROVAL DATE

REGISTERED PROFESSIONAL ENGINEER Alaedin Moubayed No. 55268 Exp. 09/30/2014 CIVIL STATE OF CALIFORNIA

The State of California or its officers or agents shall not be responsible for the accuracy or completeness of electronic copies of this plan sheet.

JACOBS
3161 MICHELSON, STE 500
IRVINE, CA 92612

ORANGE COUNTY
TRANSPORTATION AUTHORITY
550 S. MAIN STREET
ORANGE, CA 92863-1584

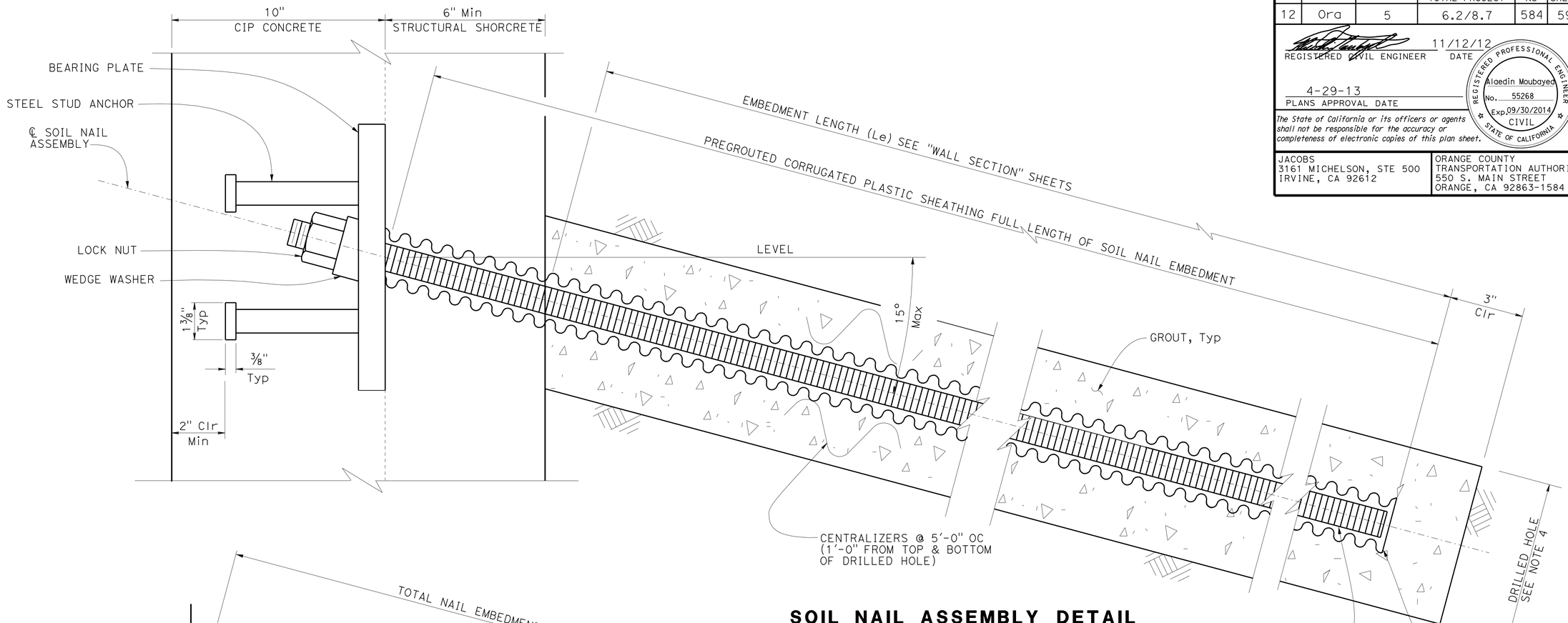

SOIL NAIL ASSEMBLY DETAIL

NO SCALE

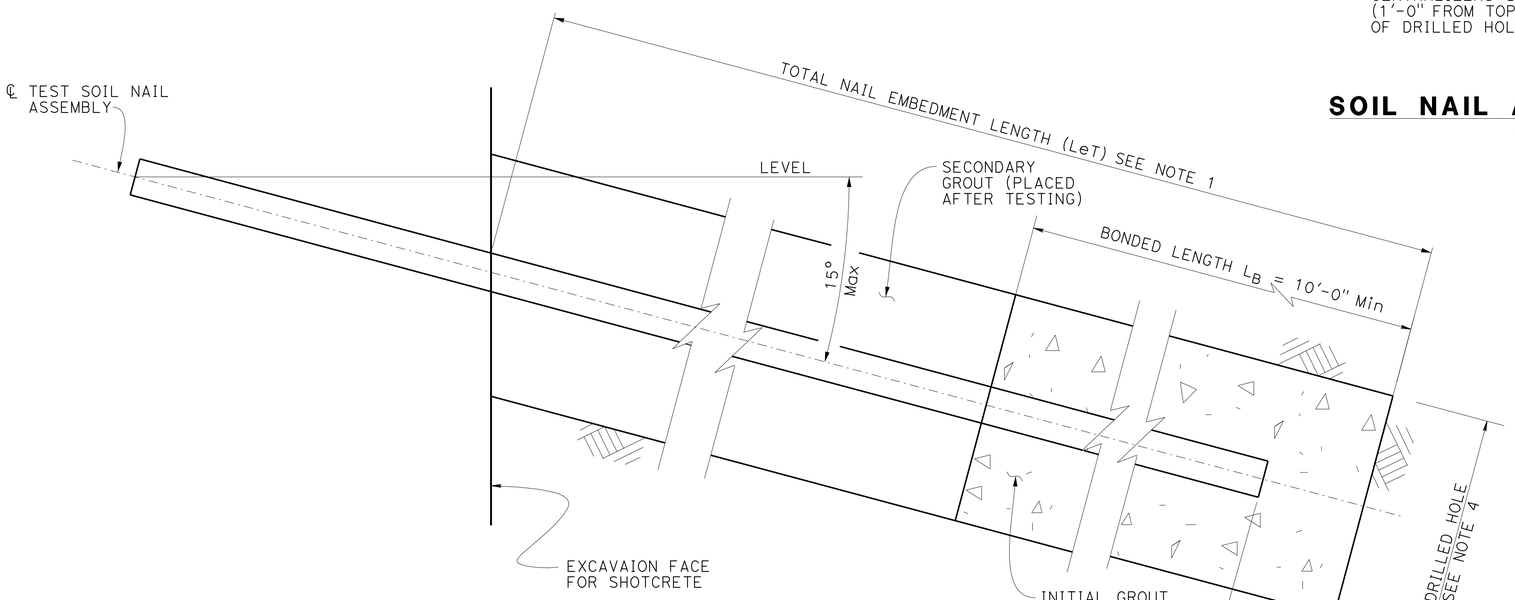

TEST SOIL NAIL ASSEMBLY DETAIL

NO SCALE

NOTES:

1. The test nail embedment length LeT, shall be equal to 2/3 of embedment length, Le, of adjacent production soil nail assemblies, but not less than 12'-0".
2. The total length of the test nail assembly equals the embedment length plus the length required for jacking equipment.
3. For location of proof test nail see "WALL ELEVATION" sheets. Additional proof test nails will be installed and tested per special provisions.
4. Contractor to determine drilled hole diameter.
5. Finished grout surface to be normal to the bar.

NOTE:
THE CONTRACTOR SHALL VERIFY ALL CONTROLLING FIELD DIMENSIONS BEFORE ORDERING OR FABRICATING ANY MATERIAL.

Luqi Yang
DESIGN OVERSIGHT Luqi Yang
1-16-13
SIGN OFF DATE

	BY	CHECKED
DESIGN	F. Jalaie	E. Tyk
DETAILS	I. Karkoutli	E. Tyk
QUANTITIES	F. Jalaie	A. Cardoza

PREPARED FOR THE STATE OF CALIFORNIA DEPARTMENT OF TRANSPORTATION

Alaedin Moubayed
PROJECT ENGINEER

BRIDGE NO. 55E0134
POST MILES 6.4

RETAINING WALL No. 349
SOIL NAIL WALL DETAILS No. 3

DESIGN DETAIL SHEET (ENGLISH) (REV.7/16/10)

ORIGINAL SCALE IN INCHES FOR REDUCED PLANS 0 1 2 3

UNIT: 2998
PROJECT NUMBER & PHASE: 12000202791 CONTRACT NO.: 12-0F96E4

DISREGARD PRINTS BEARING EARLIER REVISION DATES → 1/23/12 8/13/12 9/13/12 11/12/12

SHEET 17 OF 28

FILE => 55E0134-1-rwdt05.dgn

USERNAME => s124496 DATE PLOTTED => 29-APR-2013 TIME PLOTTED => 13:08

DIST	COUNTY	ROUTE	POST MILES TOTAL PROJECT	SHEET No	TOTAL SHEETS
12	Ora	5	6.2/8.7	585	595

REGISTERED CIVIL ENGINEER 11/12/12 DATE

4-29-13
PLANS APPROVAL DATE

REGISTERED PROFESSIONAL ENGINEER Alaedin Moubayed No. 55268 Exp. 09/30/2014 CIVIL STATE OF CALIFORNIA

The State of California or its officers or agents shall not be responsible for the accuracy or completeness of electronic copies of this plan sheet.

JACOBS
3161 MICHELSON, STE 500
IRVINE, CA 92612

ORANGE COUNTY
TRANSPORTATION AUTHORITY
550 S. MAIN STREET
ORANGE, CA 92863-1584

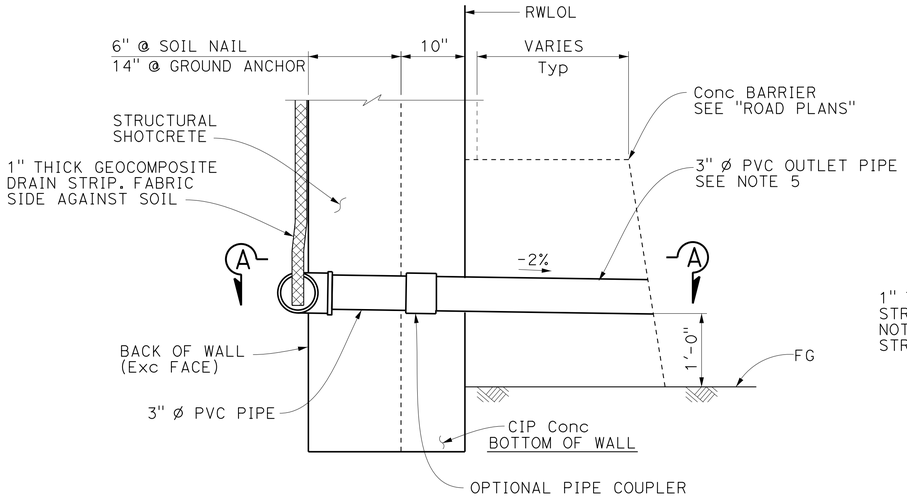

WALL DRAIN DETAIL-OPTION A

NO SCALE

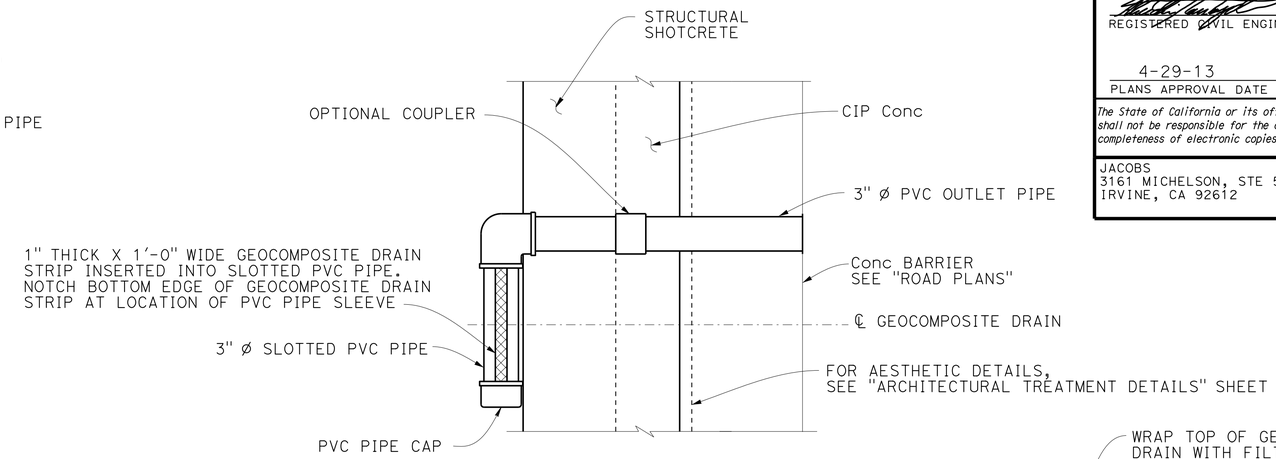

SECTION A-A

NO SCALE

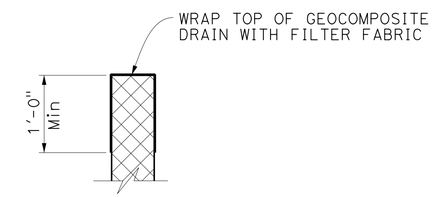

DETAIL 1

No scale

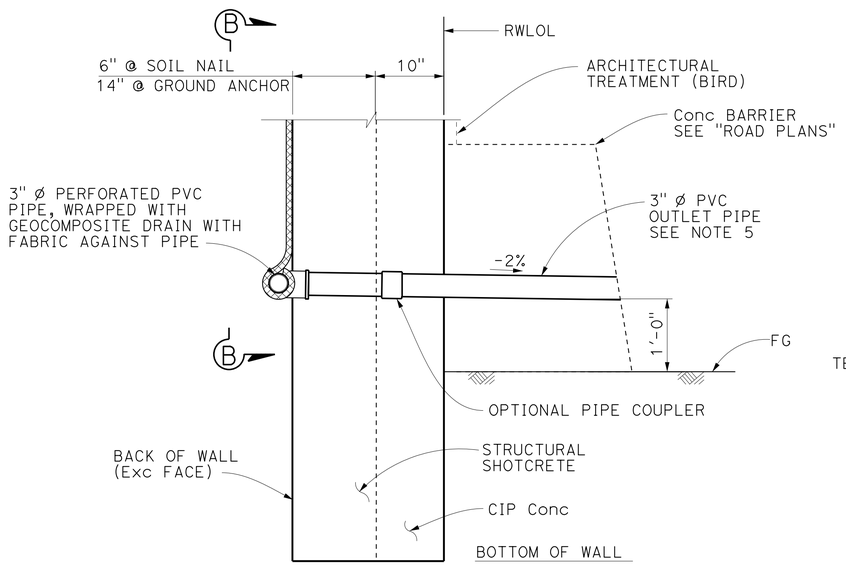

WALL DRAIN DETAIL-OPTION B

NO SCALE

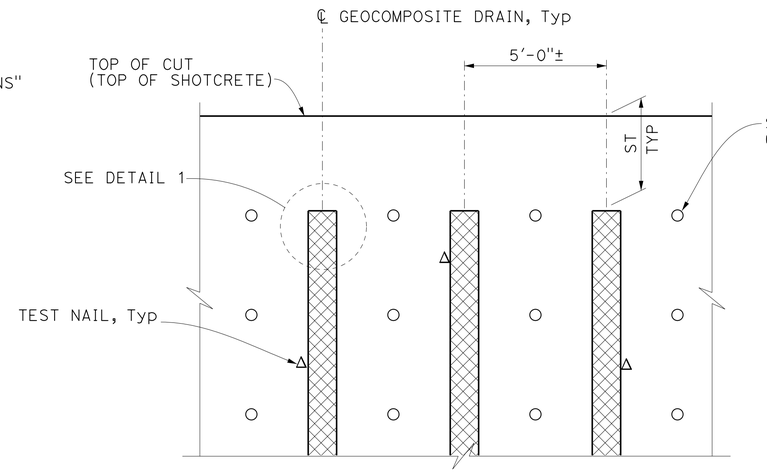

WALL PARTIAL ELEVATION

NO SCALE

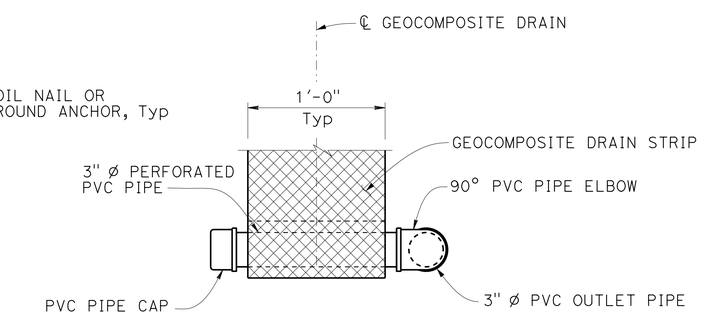

VIEW B-B

No scale

NOTES:

1. For limits of geocomposite drain strip placement, see "WALL ELEVATION" sheets.
2. Center geocomposite vertical drain strip between soil nails or ground anchor, adjust to clear test nail as necessary.
3. Place top of geocomposite drain at top row of soil nails or ground anchors.
4. For ST dimensions and gutter drain outlet locations, see "WALL ELEVATION" sheets.
5. Gutter drain outlet and ends of wall is similar. The contractor shall determine outlet pipe size.

LEGEND:

Δ Indicates test nail
Place geocomposite drain strip to clear test nail by 3" clear, see "WALL ELEVATION" sheets for locations of test nails.

NOTE:
THE CONTRACTOR SHALL VERIFY ALL CONTROLLING FIELD DIMENSIONS BEFORE ORDERING OR FABRICATING ANY MATERIAL.

Luqi Yang
DESIGN OVERSIGHT Luqi Yang
1-16-13
SIGN OFF DATE

	BY	CHECKED
DESIGN	F. Jalaie	E. Tyk
DETAILS	I. Karkoutli	E. Tyk
QUANTITIES	F. Jalaie	A. Cardoza

PREPARED FOR THE STATE OF CALIFORNIA DEPARTMENT OF TRANSPORTATION

Alaedin Moubayed
PROJECT ENGINEER

BRIDGE NO. 55E0134
POST MILES 6.4

RETAINING WALL No. 349
WALL DRAINAGE DETAILS

DESIGN DETAIL SHEET (ENGLISH) (REV.7/16/10)

ORIGINAL SCALE IN INCHES FOR REDUCED PLANS 0 1 2 3

UNIT: 2998
PROJECT NUMBER & PHASE: 12000202791 CONTRACT NO.: 12-0F96E4

DISREGARD PRINTS BEARING EARLIER REVISION DATES

REVISION DATES 1/28/12 3/23/12 9/27/12 11/12/12

SHEET 18 OF 28

FILE => 55E0134-1-rwdt06.dgn

USERNAME => s124496 DATE PLOTTED => 23-APR-2013 TIME PLOTTED => 13:08

DIST	COUNTY	ROUTE	POST MILES TOTAL PROJECT	SHEET No	TOTAL SHEETS
12	Ora	5	6.2/8.7	586	595

REGISTERED CIVIL ENGINEER 11/12/12 DATE

4-29-13
PLANS APPROVAL DATE

REGISTERED PROFESSIONAL ENGINEER
Alaedin Moubayed
No. 55268
Exp. 09/30/2014
CIVIL
STATE OF CALIFORNIA

The State of California or its officers or agents shall not be responsible for the accuracy or completeness of electronic copies of this plan sheet.

JACOBS
3161 MICHELSON, STE 500
IRVINE, CA 92612

ORANGE COUNTY
TRANSPORTATION AUTHORITY
550 S. MAIN STREET
ORANGE, CA 92863-1584

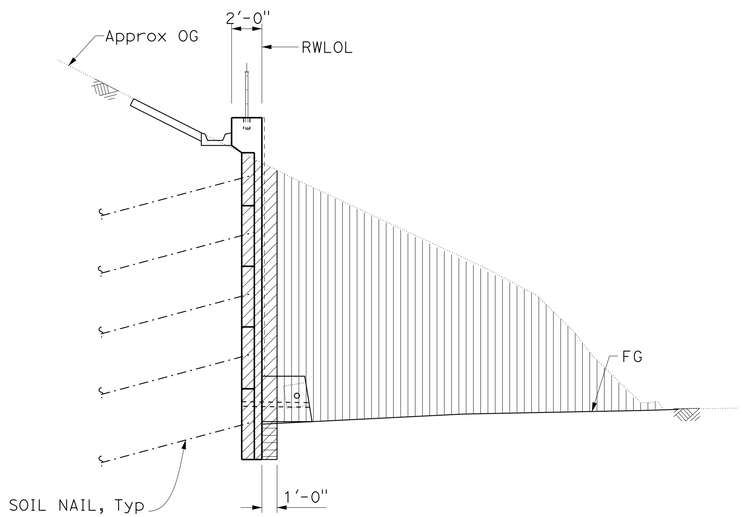

LIMITS OF PAYMENT FOR
STRUCTURE EXCAVATION AND BACKFILL (SOIL NAIL WALL)
NO SCALE

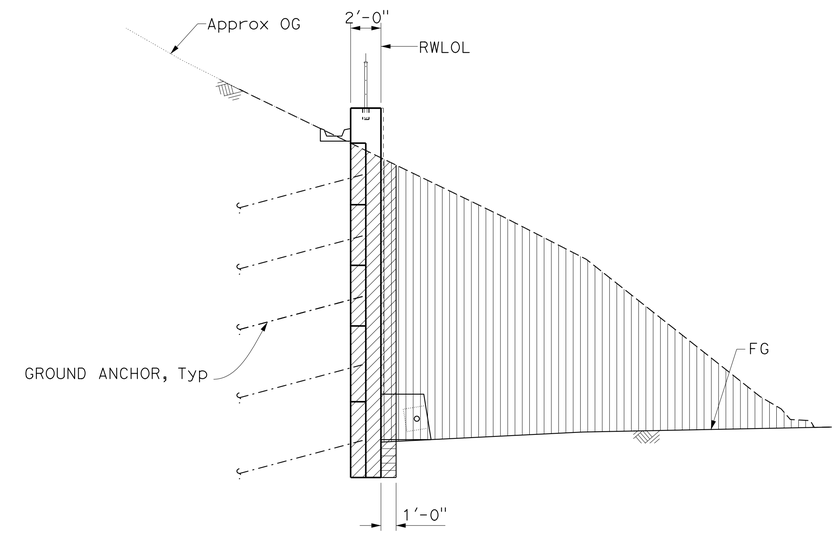

LIMITS OF PAYMENT FOR
STRUCTURE EXCAVATION AND BACKFILL (GROUND ANCHOR WALL)
NO SCALE

LEGEND

- Structure excavation
- Structure backfill
- Roadway excavation

NOTE:
THE CONTRACTOR SHALL VERIFY ALL CONTROLLING FIELD DIMENSIONS BEFORE ORDERING OR FABRICATING ANY MATERIAL.

Luqi Yang
DESIGN OVERSIGHT Luqi Yang
1-16-13
SIGN OFF DATE

	BY	CHECKED
DESIGN	F. Jalaie	E. Tyk
DETAILS	I. Karkoutli	E. Tyk
QUANTITIES	F. Jalaie	A. Cardoza

PREPARED FOR THE
STATE OF CALIFORNIA
DEPARTMENT OF TRANSPORTATION

Alaedin Moubayed
PROJECT ENGINEER

BRIDGE NO. 55E0134
POST MILES 6.4

RETAINING WALL No. 349
STRUCTURE EXCAVATION AND BACKFILL DETAILS

DESIGN DETAIL SHEET (ENGLISH) (REV.7/16/10)

ORIGINAL SCALE IN INCHES FOR REDUCED PLANS 0 1 2 3

UNIT: 2998
PROJECT NUMBER & PHASE: 12000202791 CONTRACT NO.: 12-0F96E4

DISREGARD PRINTS BEARING EARLIER REVISION DATES

REVISION DATES 1/28/12 3/23/12 9/23/12 11/12/12

SHEET 19 OF 28

FILE => 55E0134-1-rwdt07.dgn

USERNAME => s124496 DATE PLOTTED => 29-APR-2013 TIME PLOTTED => 13:08

DIST	COUNTY	ROUTE	POST MILES TOTAL PROJECT	SHEET No	TOTAL SHEETS
12	Ora	5	6.2/8.7	587	595

REGISTERED CIVIL ENGINEER 11/12/12 DATE

4-29-13
PLANS APPROVAL DATE

REGISTERED PROFESSIONAL ENGINEER Alaedin Moubayed No. 55268 Exp. 09/30/2014 CIVIL STATE OF CALIFORNIA

The State of California or its officers or agents shall not be responsible for the accuracy or completeness of electronic copies of this plan sheet.

JACOBS
3161 MICHELSON, STE 500
IRVINE, CA 92612

ORANGE COUNTY
TRANSPORTATION AUTHORITY
550 S. MAIN STREET
ORANGE, CA 92863-1584

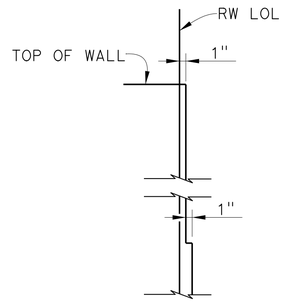

SECTION A-A
NO SCALE

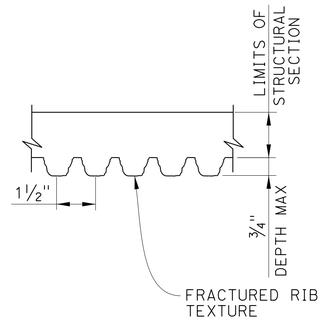

SECTION B-B
NO SCALE

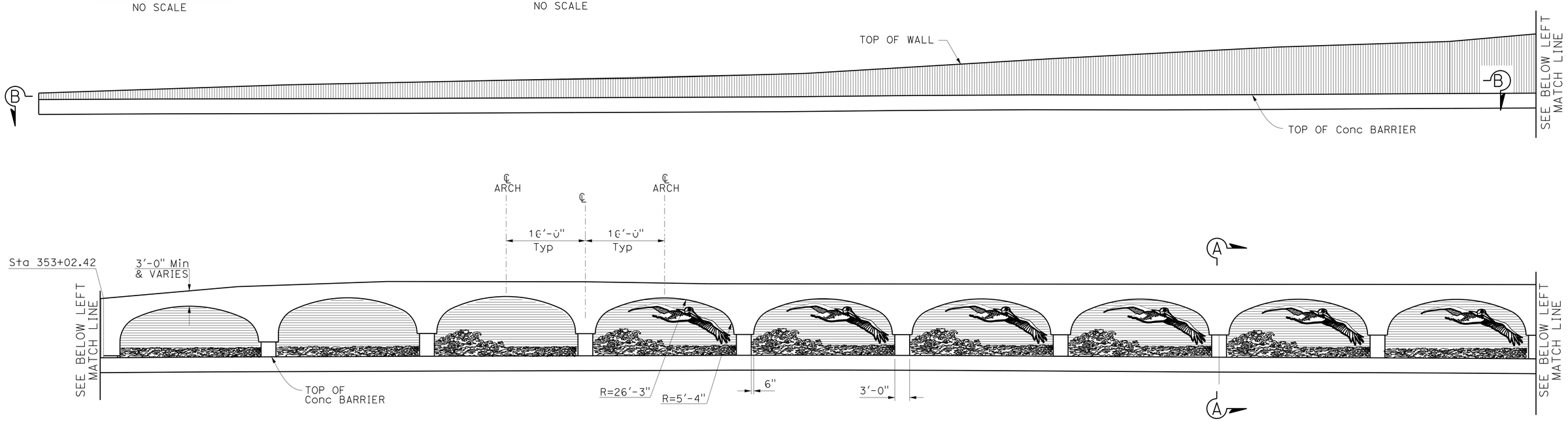

ELEVATION
NO SCALE

NOTE:
THE CONTRACTOR SHALL VERIFY ALL CONTROLLING FIELD DIMENSIONS BEFORE ORDERING OR FABRICATING ANY MATERIAL.

DESIGN OVERSIGHT Luqi Yang 1-16-13 SIGN OFF DATE	DESIGN	BY J. Roberts	CHECKED E. Dickson	PREPARED FOR THE STATE OF CALIFORNIA DEPARTMENT OF TRANSPORTATION
	DETAILS	BY I. Karkoutli	CHECKED E. Dickson	
	QUANTITIES	BY F. Jalaie	CHECKED A. Cardoza	

Alaedin Moubayed
PROJECT ENGINEER

BRIDGE NO. 55E0134
POST MILES 6.4

RETAINING WALL No. 349
ARCHITECTURAL TREATMENT DETAILS No. 1

DESIGN DETAIL SHEET (ENGLISH) (REV.7/16/10)

ORIGINAL SCALE IN INCHES FOR REDUCED PLANS 0 1 2 3

UNIT: 2998
PROJECT NUMBER & PHASE: 12000202791 CONTRACT NO.: 12-0F96E4

DISREGARD PRINTS BEARING EARLIER REVISION DATES

REVISION DATES 8/13/12 9/17/12 11/09/12 12/12/12

SHEET 20 OF 28

FILE => 55E0134-1-rwdt08.dgn

USERNAME => s124496 DATE PLOTTED => 29-APR-2013 TIME PLOTTED => 13:08

DIST	COUNTY	ROUTE	POST MILES TOTAL PROJECT	SHEET No	TOTAL SHEETS
12	Ora	5	6.2/8.7	588	595

REGISTERED CIVIL ENGINEER 11/12/12 DATE

4-29-13
PLANS APPROVAL DATE

REGISTERED PROFESSIONAL ENGINEER
Alaedin Moubayed
No. 55268
Exp. 09/30/2014
CIVIL
STATE OF CALIFORNIA

The State of California or its officers or agents shall not be responsible for the accuracy or completeness of electronic copies of this plan sheet.

JACOBS
3161 MICHELSON, STE 500
IRVINE, CA 92612

ORANGE COUNTY
TRANSPORTATION AUTHORITY
550 S. MAIN STREET
ORANGE, CA 92863-1584

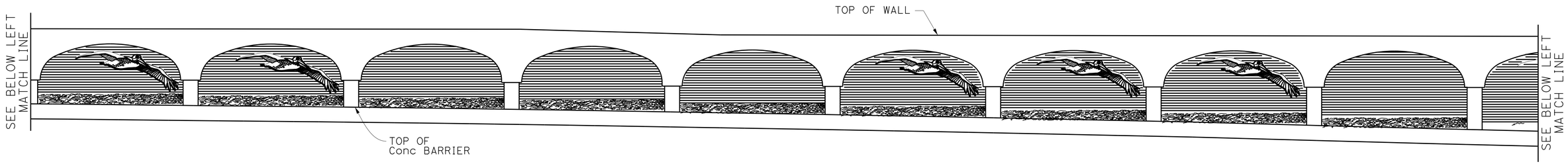

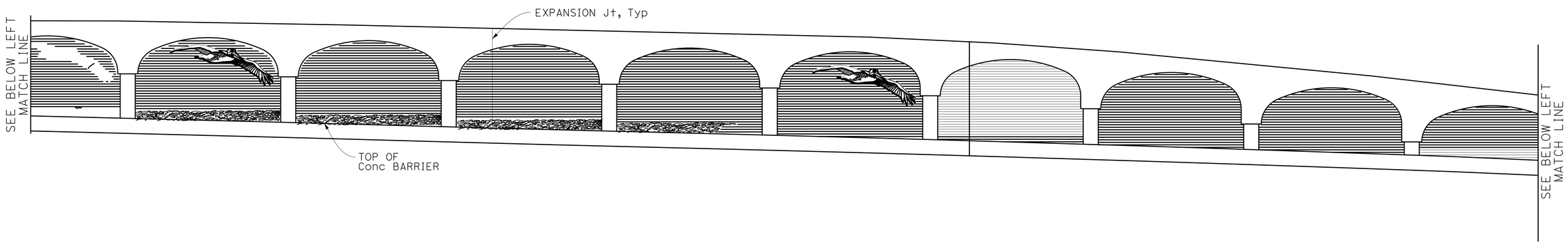

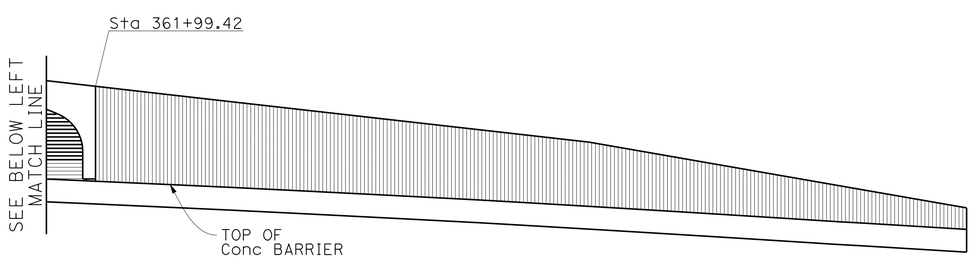

ELEVATION
NO SCALE

NOTE:
THE CONTRACTOR SHALL VERIFY ALL CONTROLLING FIELD DIMENSIONS BEFORE ORDERING OR FABRICATING ANY MATERIAL.

Luqi Yang
DESIGN OVERSIGHT Luqi Yang
1-16-13
SIGN OFF DATE

	BY	CHECKED
DESIGN	J. Roberts	E. Dickson
DETAILS	I. Karkoutli	E. Dickson
QUANTITIES	F. Jalaie	A. Cardoza

PREPARED FOR THE
STATE OF CALIFORNIA
DEPARTMENT OF TRANSPORTATION

Alaedin Moubayed
PROJECT ENGINEER

BRIDGE NO. 55E0134
POST MILES 6.4

RETAINING WALL No. 349
ARCHITECTURAL TREATMENT DETAILS No. 2

DESIGN DETAIL SHEET (ENGLISH) (REV.7/16/10)

ORIGINAL SCALE IN INCHES FOR REDUCED PLANS 0 1 2 3

UNIT: 2998
PROJECT NUMBER & PHASE: 12000202791 CONTRACT NO.: 12-0F96E4

DISREGARD PRINTS BEARING EARLIER REVISION DATES

REVISION DATES 8/31/12 9/27/12 11/27/12 12/12/12

SHEET 21 OF 28

FILE => 55E0134-1-rwdt09.dgn

USERNAME => s124496 DATE PLOTTED => 29-APR-2013 TIME PLOTTED => 13:08

DIST	COUNTY	ROUTE	POST MILES TOTAL PROJECT	SHEET No	TOTAL SHEETS
12	Ora	5	6.2/8.7	589	595

REGISTERED CIVIL ENGINEER 11/12/12 DATE

4-29-13
PLANS APPROVAL DATE

REGISTERED PROFESSIONAL ENGINEER
Alaedin Moubayed
No. 55268
Exp. 09/30/2014
CIVIL
STATE OF CALIFORNIA

The State of California or its officers or agents shall not be responsible for the accuracy or completeness of electronic copies of this plan sheet.

JACOBS
3161 MICHELSON, STE 500
IRVINE, CA 92612

ORANGE COUNTY
TRANSPORTATION AUTHORITY
550 S. MAIN STREET
ORANGE, CA 92863-1584

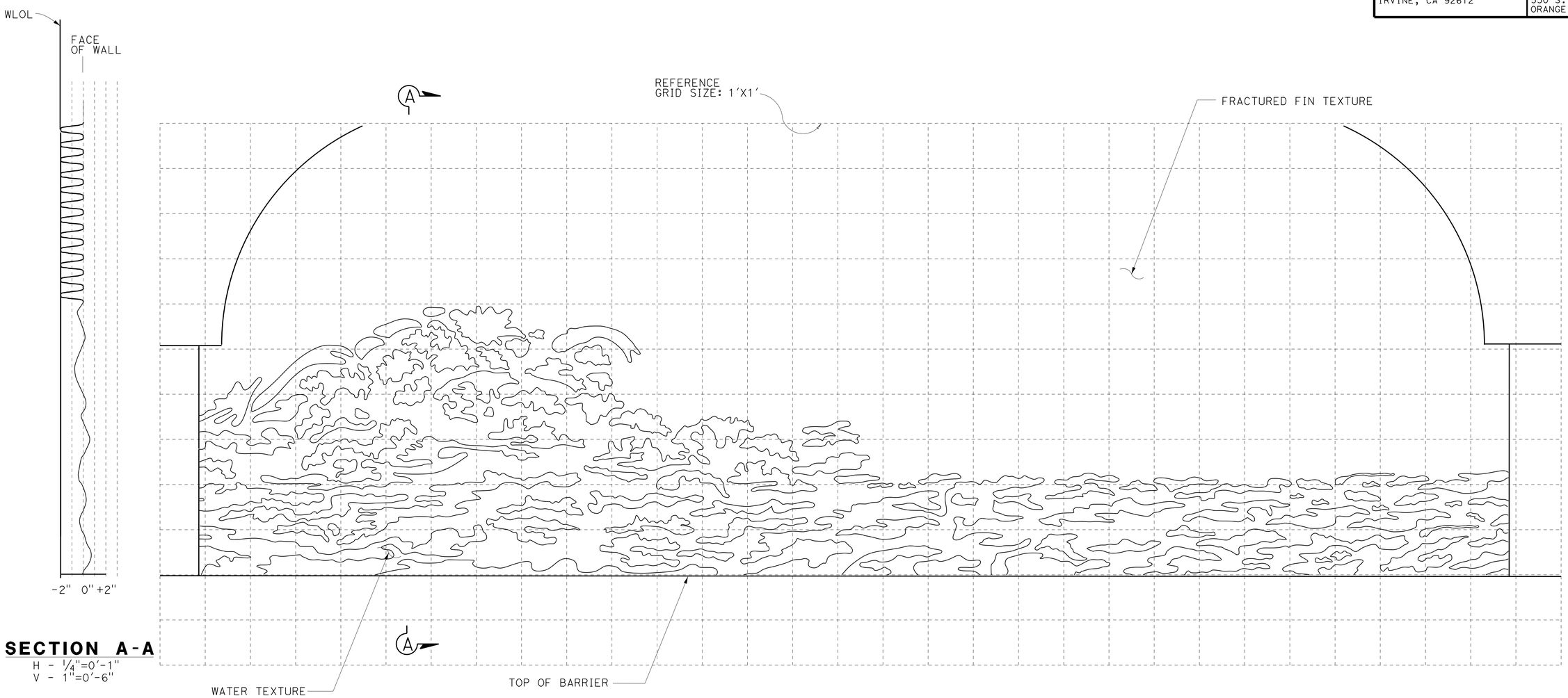

SECTION A-A
H - 1/4"=0'-1"
V - 1"=0'-6"

WATER PATTERN 1 DETAIL
1" = 0'-6"

NOTE:
THE CONTRACTOR SHALL VERIFY ALL CONTROLLING FIELD DIMENSIONS BEFORE ORDERING OR FABRICATING ANY MATERIAL.

Luqi Yang
DESIGN OVERSIGHT Luqi Yang
1-16-13
SIGN OFF DATE

	BY	CHECKED
DESIGN	J. Roberts	E. Dickson
DETAILS	I. Karkoutli	E. Dickson
QUANTITIES	F. Jalaie	A. Cardoza

PREPARED FOR THE
STATE OF CALIFORNIA
DEPARTMENT OF TRANSPORTATION

Alaedin Moubayed
PROJECT ENGINEER

BRIDGE NO. 55E0134
POST MILES 6.4

RETAINING WALL No. 349
ARCHITECTURAL TREATMENT DETAILS No. 3

DESIGN DETAIL SHEET (ENGLISH) (REV.7/16/10)

ORIGINAL SCALE IN INCHES FOR REDUCED PLANS 0 1 2 3

UNIT: 2998
PROJECT NUMBER & PHASE: 12000202791 CONTRACT NO.: 12-0F96E4

DISREGARD PRINTS BEARING EARLIER REVISION DATES

REVISION DATES 8/13/12 9/17/12 11/12/12 12/12/12

SHEET 22 OF 28

FILE => 55E0134-1-rwdt10.dgn

USERNAME => s124496 DATE PLOTTED => 29-APR-2013 TIME PLOTTED => 13:08

DIST	COUNTY	ROUTE	POST MILES TOTAL PROJECT	SHEET No	TOTAL SHEETS
12	Ora	5	6.2/8.7	590	595

REGISTERED CIVIL ENGINEER 11/12/12 DATE

4-29-13
PLANS APPROVAL DATE

REGISTERED PROFESSIONAL ENGINEER
Alaedin Moubayed
No. 55268
Exp. 09/30/2014
CIVIL
STATE OF CALIFORNIA

The State of California or its officers or agents shall not be responsible for the accuracy or completeness of electronic copies of this plan sheet.

JACOBS
3161 MICHELSON, STE 500
IRVINE, CA 92612

ORANGE COUNTY
TRANSPORTATION AUTHORITY
550 S. MAIN STREET
ORANGE, CA 92863-1584

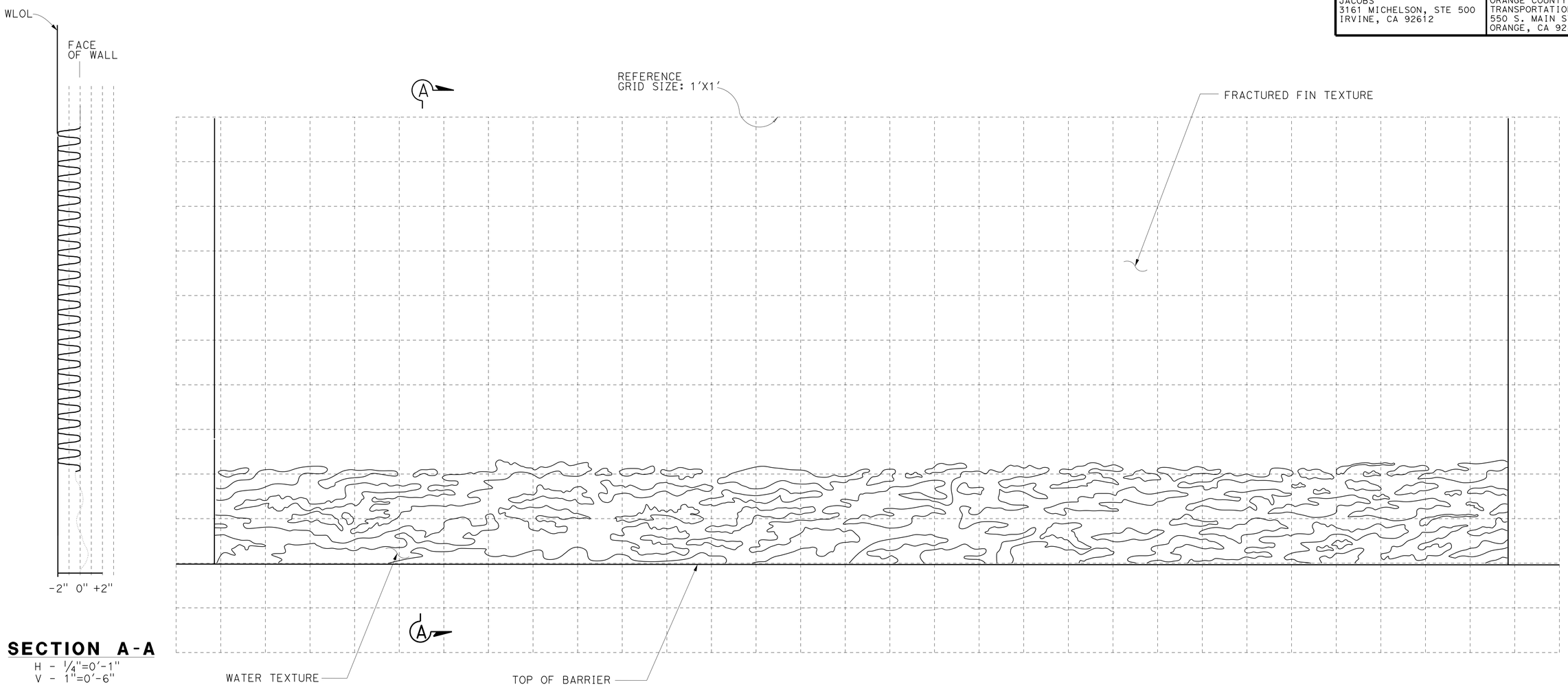

SECTION A-A
H - 1/4"=0'-1"
V - 1"=0'-6"

WATER PATTERN 2 DETAIL
1" = 0'-6"

NOTE:
THE CONTRACTOR SHALL VERIFY ALL CONTROLLING FIELD DIMENSIONS BEFORE ORDERING OR FABRICATING ANY MATERIAL.

Luqi Yang
DESIGN OVERSIGHT Luqi Yang
1-16-13
SIGN OFF DATE

	BY	CHECKED
DESIGN	J. Roberts	E. Dickson
DETAILS	I. Karkoutli	E. Dickson
QUANTITIES	F. Jalaie	A. Cardoza

PREPARED FOR THE STATE OF CALIFORNIA DEPARTMENT OF TRANSPORTATION

Alaedin Moubayed
PROJECT ENGINEER

BRIDGE NO. 55E0134
POST MILES 6.4

RETAINING WALL No. 349
ARCHITECTURAL TREATMENT DETAILS No. 4

DESIGN DETAIL SHEET (ENGLISH) (REV.7/16/10)

ORIGINAL SCALE IN INCHES FOR REDUCED PLANS 0 1 2 3

UNIT: 2998
PROJECT NUMBER & PHASE: 12000202791 CONTRACT NO.: 12-0F96E4

DISREGARD PRINTS BEARING EARLIER REVISION DATES

REVISION DATES 8/13/12 9/13/12 11/12/12 12/12/12

SHEET 23 OF 28

FILE => 55E0134-1-rwdt11.dgn

USERNAME => s124936 DATE PLOTTED => 29-APR-2013 TIME PLOTTED => 13:08

DIST	COUNTY	ROUTE	POST MILES TOTAL PROJECT	SHEET No	TOTAL SHEETS
12	Ora	5	6.2/8.7	591	595

REGISTERED CIVIL ENGINEER 11/12/12 DATE

4-29-13
PLANS APPROVAL DATE

REGISTERED PROFESSIONAL ENGINEER
Alaedin Moubayed
No. 55268
Exp. 09/30/2014
CIVIL
STATE OF CALIFORNIA

The State of California or its officers or agents shall not be responsible for the accuracy or completeness of electronic copies of this plan sheet.

JACOBS
3161 MICHELSON, STE 500
IRVINE, CA 92612

ORANGE COUNTY
TRANSPORTATION AUTHORITY
550 S. MAIN STREET
ORANGE, CA 92863-1584

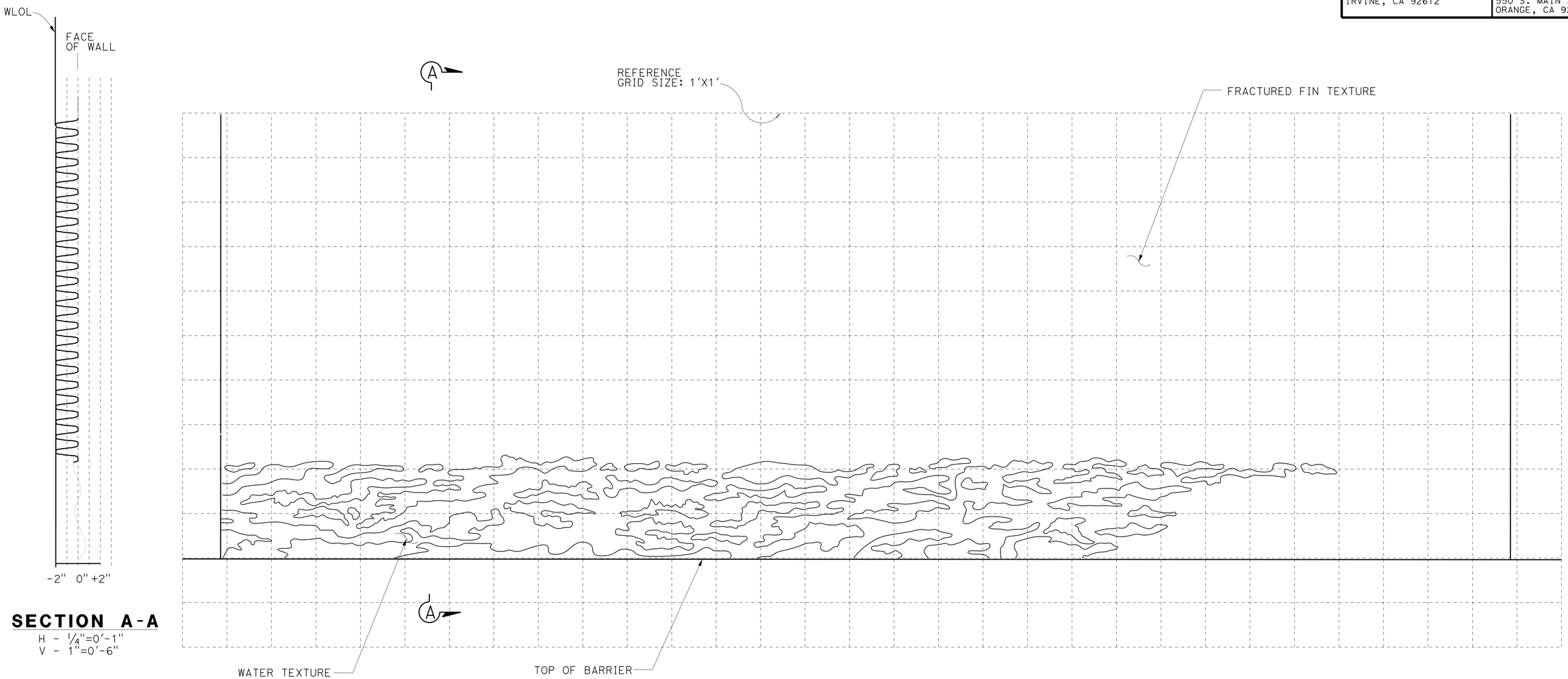

SECTION A-A
H - 1/4"=0'-1"
V - 1"=0'-6"

WATER PATTERN 3 DETAIL
1" = 0'-6"

NOTE:
THE CONTRACTOR SHALL VERIFY ALL CONTROLLING FIELD DIMENSIONS BEFORE ORDERING OR FABRICATING ANY MATERIAL.

Luqi Yang
DESIGN OVERSIGHT Luqi Yang
1-16-13
SIGN OFF DATE

	BY	CHECKED
DESIGN	J. Roberts	E. Dickson
DETAILS	I. Karkoutli	E. Dickson
QUANTITIES	F. Jalaie	A. Cardoza

PREPARED FOR THE STATE OF CALIFORNIA DEPARTMENT OF TRANSPORTATION

Alaedin Moubayed
PROJECT ENGINEER

BRIDGE NO. 55E0134
POST MILES 6.4

RETAINING WALL No. 349
ARCHITECTURAL TREATMENT DETAILS No. 5

DESIGN DETAIL SHEET (ENGLISH) (REV.7/16/10)

ORIGINAL SCALE IN INCHES FOR REDUCED PLANS 0 1 2 3

UNIT: 2998
PROJECT NUMBER & PHASE: 12000202791 CONTRACT NO.: 12-0F96E4

DISREGARD PRINTS BEARING EARLIER REVISION DATES

REVISION DATES 8/13/12 9/13/12 11/12/12 12/12/12

SHEET 24 OF 28

FILE => 55E0134-1-rwdt12.dgn

USERNAME => s124496 DATE PLOTTED => 29-APR-2013 TIME PLOTTED => 13:08

DIST	COUNTY	ROUTE	POST MILES TOTAL PROJECT	SHEET No	TOTAL SHEETS
12	Ora	5	6.2/8.7	592	595

REGISTERED CIVIL ENGINEER 11/12/12 DATE

4-29-13
PLANS APPROVAL DATE

REGISTERED PROFESSIONAL ENGINEER
Alaedin Moubayed
No. 55268
Exp. 09/30/2014
CIVIL
STATE OF CALIFORNIA

The State of California or its officers or agents shall not be responsible for the accuracy or completeness of electronic copies of this plan sheet.

JACOBS
3161 MICHELSON, STE 500
IRVINE, CA 92612

ORANGE COUNTY
TRANSPORTATION AUTHORITY
550 S. MAIN STREET
ORANGE, CA 92863-1584

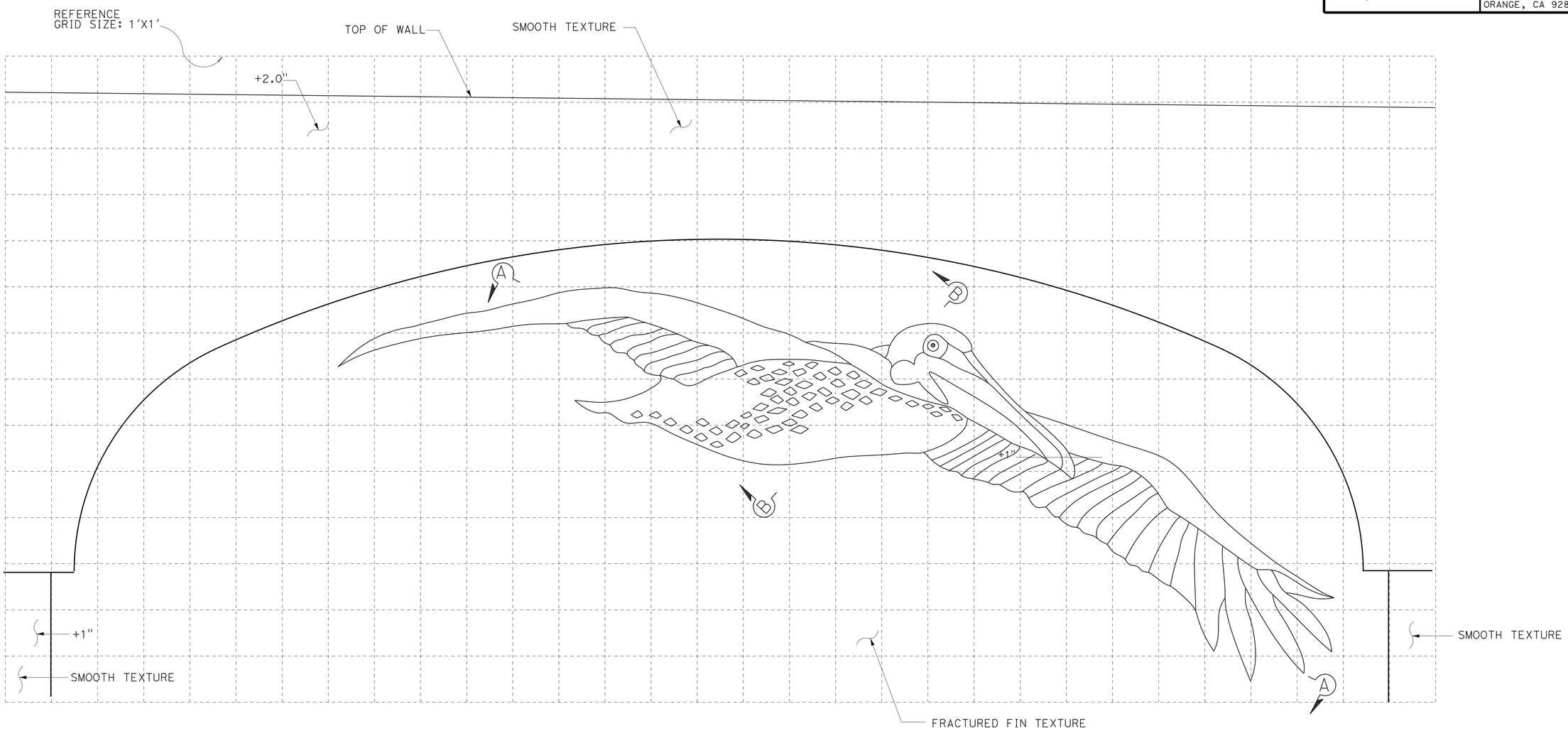

PELICAN DETAIL
1" = 0'-6"

NOTE:
1. For sections "A-A" & "B-B" see "ARCHITECTURAL TREATMENT DETAILS No. 7" sheet.

NOTE:
THE CONTRACTOR SHALL VERIFY ALL CONTROLLING FIELD DIMENSIONS BEFORE ORDERING OR FABRICATING ANY MATERIAL.

Luqi Yang
DESIGN OVERSIGHT Luqi Yang
1-16-13
SIGN OFF DATE

	BY	CHECKED
DESIGN	J. Roberts	E. Dickson
DETAILS	I. Karkoutli	E. Dickson
QUANTITIES	F. Jalaie	A. Cardoza

PREPARED FOR THE
STATE OF CALIFORNIA
DEPARTMENT OF TRANSPORTATION

Alaedin Moubayed
PROJECT ENGINEER

BRIDGE NO. 55E0134
POST MILES 6.4

RETAINING WALL No. 349
ARCHITECTURAL TREATMENT DETAILS No. 6

DESIGN DETAIL SHEET (ENGLISH) (REV.7/16/10)

ORIGINAL SCALE IN INCHES FOR REDUCED PLANS 0 1 2 3

UNIT: 2998
PROJECT NUMBER & PHASE: 12000202791 CONTRACT NO.: 12-0F96E4

DISREGARD PRINTS BEARING EARLIER REVISION DATES

REVISION DATES 8/13/12 9/13/12 11/12/12 12/12/12

SHEET 25 OF 28

FILE => 55E0134-1-rwdt13.dgn

USERNAME => s124496 DATE PLOTTED => 29-APR-2013 TIME PLOTTED => 13:08

DIST	COUNTY	ROUTE	POST MILES TOTAL PROJECT	SHEET No	TOTAL SHEETS
12	Ora	5	6.2/8.7	593	595

REGISTERED CIVIL ENGINEER 11/12/12 DATE

4-29-13
PLANS APPROVAL DATE

REGISTERED PROFESSIONAL ENGINEER
Alaedin Moubayed
No. 55268
Exp. 09/30/2014
CIVIL
STATE OF CALIFORNIA

The State of California or its officers or agents shall not be responsible for the accuracy or completeness of electronic copies of this plan sheet.

JACOBS
3161 MICHELSON, STE 500
IRVINE, CA 92612

ORANGE COUNTY
TRANSPORTATION AUTHORITY
550 S. MAIN STREET
ORANGE, CA 92863-1584

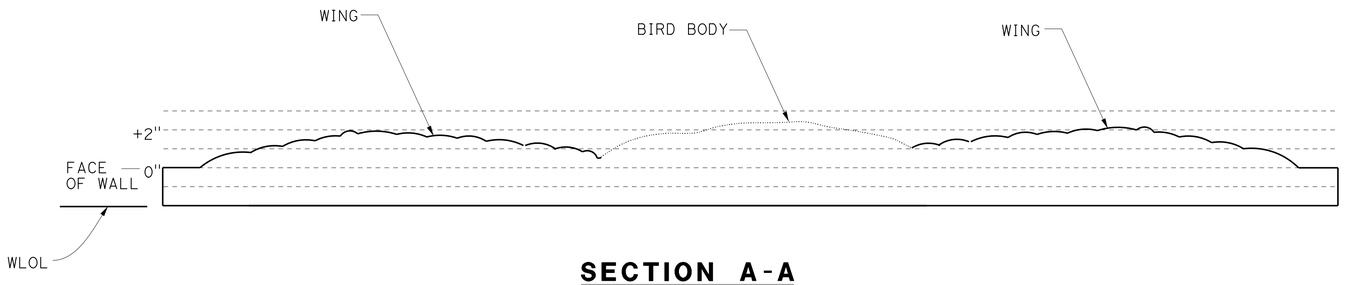

SECTION A-A

H - 1/4"=0'-1"
V - 1"=0'-6"

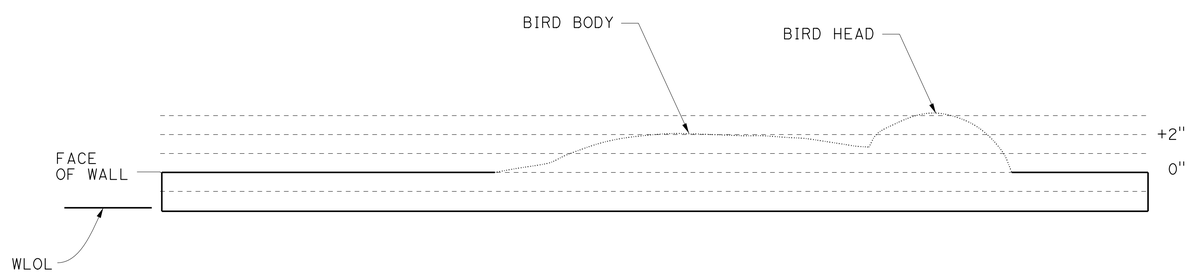

SECTION B-B

H - 1/4"=0'-1"
V - 1"=0'-6"

PELICAN CROSS SECTIONS

NOTE:
THE CONTRACTOR SHALL VERIFY ALL CONTROLLING FIELD DIMENSIONS BEFORE ORDERING OR FABRICATING ANY MATERIAL.

Luqi Yang
DESIGN OVERSIGHT Luqi Yang
1-16-13
SIGN OFF DATE

	BY	CHECKED
DESIGN	J. Roberts	E. Dickson
DETAILS	I. Karkoutli	E. Dickson
QUANTITIES	F. Jalaie	A. Cardoza

PREPARED FOR THE
STATE OF CALIFORNIA
DEPARTMENT OF TRANSPORTATION

Alaedin Moubayed
PROJECT ENGINEER

BRIDGE NO. 55E0134
POST MILES 6.4

RETAINING WALL No. 349
ARCHITECTURAL TREATMENT DETAILS No. 7

DESIGN DETAIL SHEET (ENGLISH) (REV.7/16/10)

ORIGINAL SCALE IN INCHES FOR REDUCED PLANS 0 1 2 3

UNIT: 2998
PROJECT NUMBER & PHASE: 12000202791
CONTRACT NO.: 12-0F96E4

DISREGARD PRINTS BEARING EARLIER REVISION DATES

REVISION DATES 8/13/12 9/13/12 11/12/12 12/12/12

SHEET 26 OF 28

FILE => 55E0134-1-rwdt14.dgn

USERNAME => s124496 DATE PLOTTED => 29-APR-2013 TIME PLOTTED => 13:08

DIST	COUNTY	ROUTE	POST MILES TOTAL PROJECT	SHEET No	TOTAL SHEETS
12	Ora	5	6.2/8.7	594	595

GEOTECHNICAL PROFESSIONAL 11/12/12 DATE

4-29-13
PLANS APPROVAL DATE

REGISTERED PROFESSIONAL ENGINEER S. PIRATHIVIRAJ NO. GE 2963 EXP. 12-31-13 GEOTECHNICAL STATE OF CALIFORNIA

The State of California or its officers or agents shall not be responsible for the accuracy or completeness of electronic copies of this plan sheet.

ORANGE COUNTY TRANSPORTATION AUTHORITY
550 S. MAIN STREET
ORANGE, CA 92863-1584

EARTH MECHANICS, INC.
17800 NEWHOPE STREET, SUITE B
FOUNTAIN VALLEY, CA 92708

BENCH MARK

Designation: F-785 Elev = 75.717 feet (NAVD 88); 73.413 feet (NGVD29) Described by OCS 2003 - Found 3¾" US Coast and Geodectic Survey Bronzed Disk Stamped "F 785 1946", Set in the Top of a Concrete Bridge Abutment. Monument is Located in the Southwesterly Corner of the Atchinso\Topeka and Santa Fe Railway Overcrossing of San Mateo Creek, 69 ft. Northerly Along the Railway from the Centerline of the Interstate 5 Freeway Southbound Onramp at Camino Capistrano Prolonged to the West and 150± Westerly from the Centerline of Camino Capistrano. Monument is Set 2.0 ft. below the Tracks.

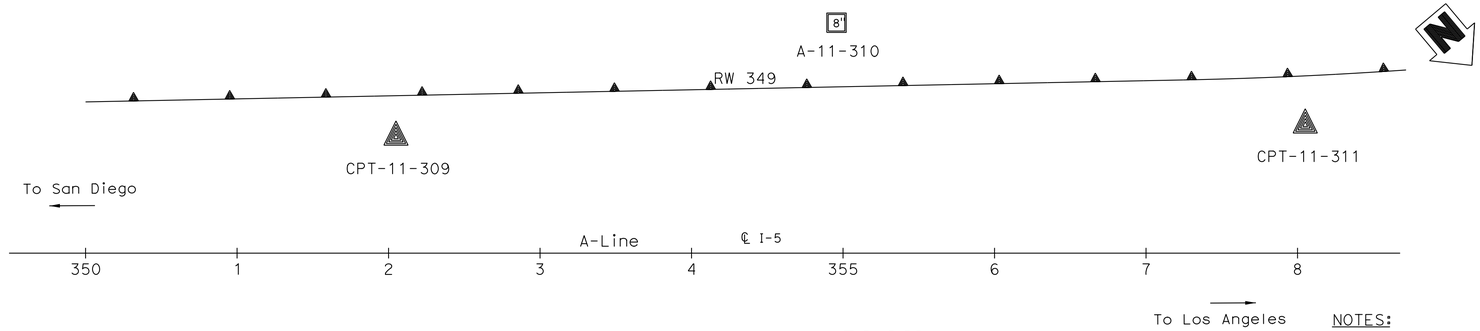

PLAN

1" = 50'

NOTES:

(1) This LOTB sheet was prepared in accordance with the Caltrans Soil and Rock Logging, Classification and Presentation Manual (June 2010)

(2) 2.4" samples were taken using a California Modified Sampler.

(3) An automatic trip hammer system consisting of a hammer weight of 140 lbs falling a distance of 30" was used to advance the drive sampler.

(4) Conversion factor from 2.4" Modified California Ring Sampler blowcounts to Standard Penetration Test (SPT) blowcounts is 0.5.

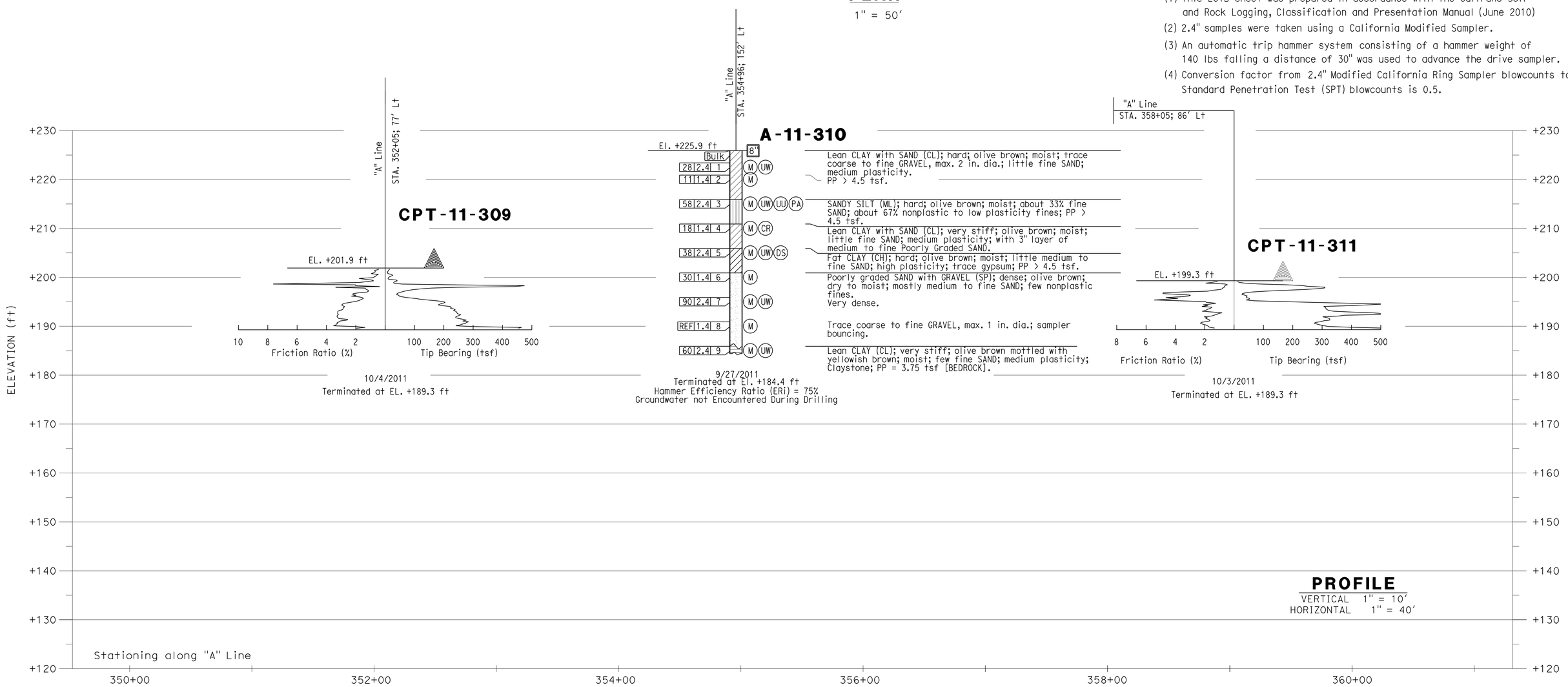

Luqi Yang DESIGN OVERSIGHT Luqi Yang 1-16-13 SIGN OFF DATE	DRAWN BY J. Fang CHECKED BY S. PIRATHIVIRAJ	R. Jie FIELD INVESTIGATION BY: DATE: 9/2011, 10/2011	PREPARED FOR THE STATE OF CALIFORNIA DEPARTMENT OF TRANSPORTATION

S. PIRATHIVIRAJ
PROJECT ENGINEER

BRIDGE NO. 55E0134
POST MILES 6.62

RETAINING WALL NO. 349

LOG OF TEST BORINGS 1 OF 2

GS GEOTECHNICAL LOG OF TEST BORINGS SHEET (ENGLISH) (REV. 7/16/10)

ORIGINAL SCALE IN INCHES FOR REDUCED PLANS 0 1 2 3

UNIT: 2998
PROJECT NUMBER & PHASE: 12000202791

DISREGARD PRINTS BEARING EARLIER REVISION DATES

REVISION DATES

SHEET 27 OF 28

CONTRACT NO.:12-0F96E4 PROJECT ID:

FILE => 55E0134-z-lotb1.dgn

USERNAME => s124496 DATE PLOTTED => 29-APR-2013 TIME PLOTTED => 13:09

DIST	COUNTY	ROUTE	POST MILES TOTAL PROJECT	SHEET No	TOTAL SHEETS
12	Ora	5	6.2/8.7	595	595

GEOTECHNICAL PROFESSIONAL — DATE 11/12/12

4-29-13
PLANS APPROVAL DATE

REGISTERED PROFESSIONAL ENGINEER — S. PIRATHIVIRAJ — NO. GE 2963 — EXP. 12-31-13 — GEOTECHNICAL — STATE OF CALIFORNIA

The State of California or its officers or agents shall not be responsible for the accuracy or completeness of electronic copies of this plan sheet.

ORANGE COUNTY TRANSPORTATION AUTHORITY
550 S. MAIN STREET
ORANGE, CA 92863-1584

EARTH MECHANICS, INC.
17800 NEWHOPE STREET, SUITE B
FOUNTAIN VALLEY, CA 92708

BENCH MARK

Designation: F-785 Elev = 75.717 feet (NAVD 88); 73.413 feet (NGVD29) Described by OCS 2003 - Found 3¾" US Coast and Geodectic Survey Bronzed Disk Stamped "F 785 1946", Set in the Top of a Concrete Bridge Abutment. Monument is Located in the Southwesterly Corner of the Atchinso\Topeka and Santa Fe Railway Overcrossing of San Mateo Creek, 69 ft. Northerly Along the Railway from the Centerline of the Interstate 5 Freeway Southbound Onramp at Camino Capistrano Prolonged to the West and 150± Westerly from the Centerline of Camino Capistrano. Monument is Set 2.0 ft. below the Tracks.

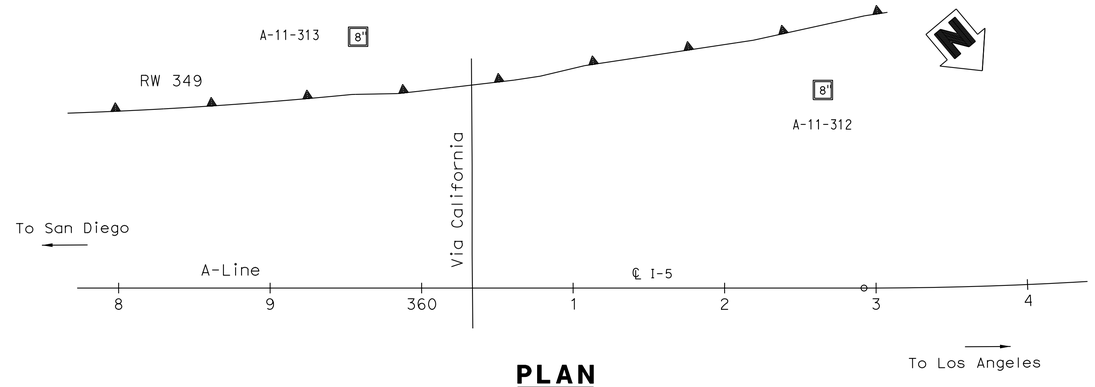

PLAN

1" = 50'

NOTES:

(1) This LOTB sheet was prepared in accordance with the Caltrans Soil and Rock Logging, Classification and Presentation Manual (June 2010)

(2) 2.4" samples were taken using a California Modified Sampler.

(3) An automatic trip hammer system consisting of a hammer weight of 140 lbs falling a distance of 30" was used to advance the drive sampler.

(4) Conversion factor from 2.4" Modified California Ring Sampler blowcounts to Standard Penetration Test (SPT) blowcounts is 0.5.

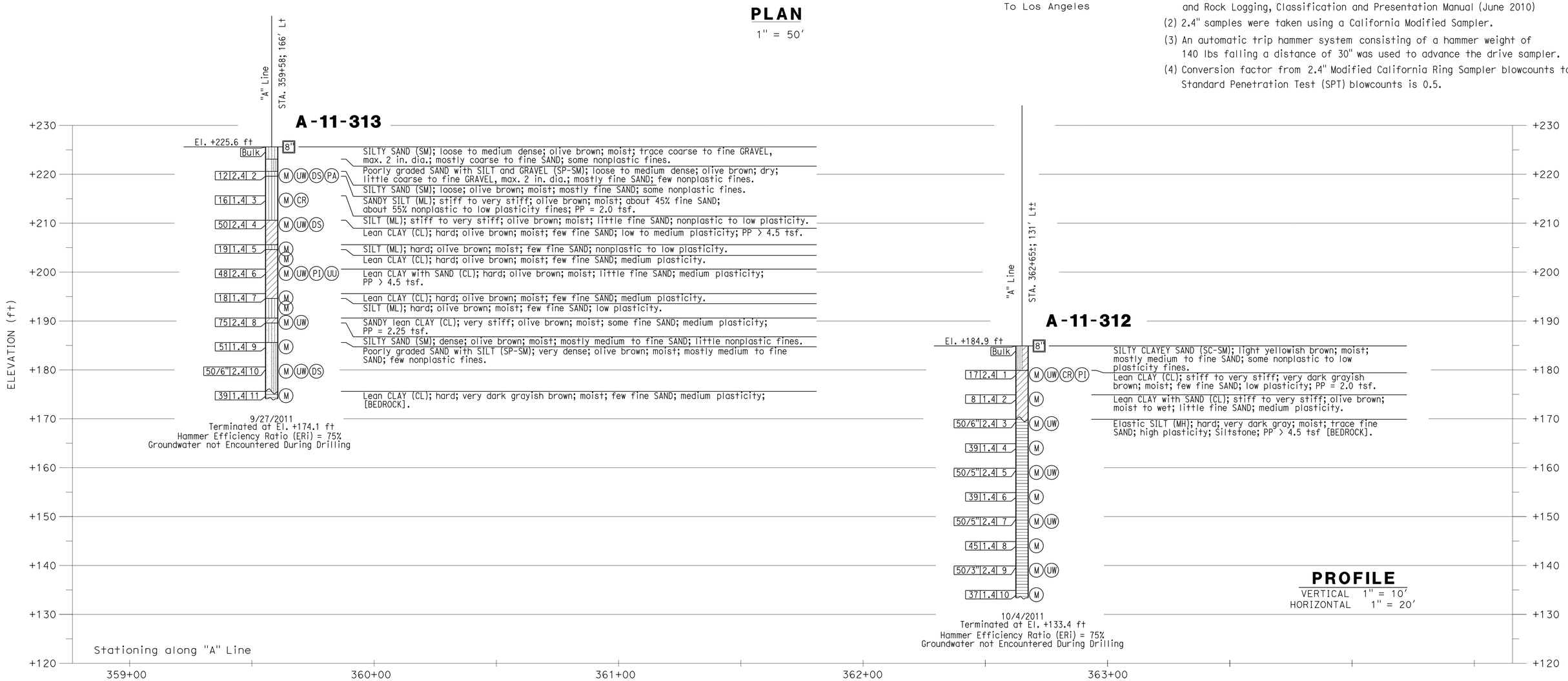

PROFILE

VERTICAL 1" = 10'
HORIZONTAL 1" = 20'

DESIGN OVERSIGHT Luqi Yang — SIGN OFF DATE 1-16-13	DRAWN BY J. Fang	R. Jie — FIELD INVESTIGATION BY:	PREPARED FOR THE STATE OF CALIFORNIA DEPARTMENT OF TRANSPORTATION	S. PIRATHIVIRAJ — PROJECT ENGINEER	BRIDGE NO. 55E0134 / POST MILES 6.62	RETAINING WALL NO. 349
	CHECKED BY S. PIRATHIVIRAJ	DATE: 9/2011, 10/2011				LOG OF TEST BORINGS 2 OF 2

GS GEOTECHNICAL LOG OF TEST BORINGS SHEET (ENGLISH) (REV. 7/16/10)

ORIGINAL SCALE IN INCHES FOR REDUCED PLANS 0 1 2 3

UNIT: 2998
PROJECT NUMBER & PHASE: 12000202791

DISREGARD PRINTS BEARING EARLIER REVISION DATES →

REVISION DATES

SHEET 28 OF 28

FILE => 55E0134-z-lotb2.dgn

CONTRACT NO.: 12-0F96E1 PROJECT ID:

USERNAME => s124496 DATE PLOTTED => 29-APR-2013 TIME PLOTTED => 13:09