DESIGN STUDY ONLY

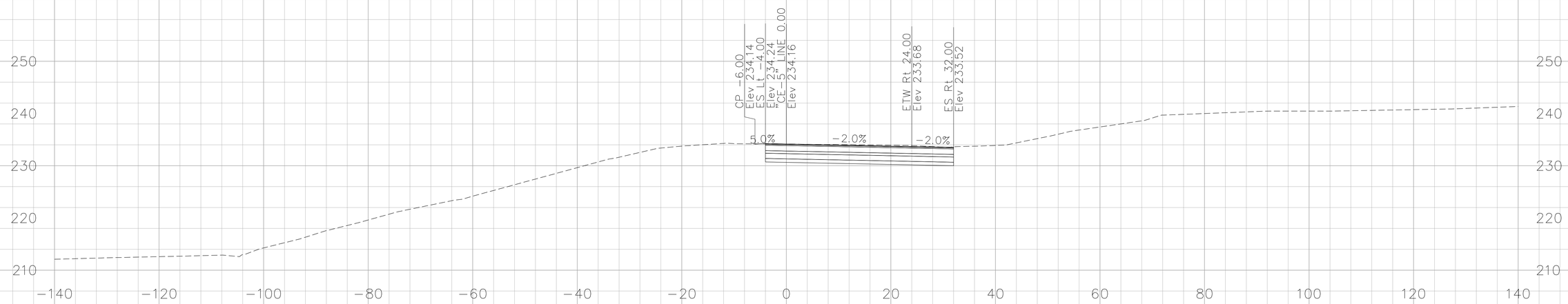

318+44.02

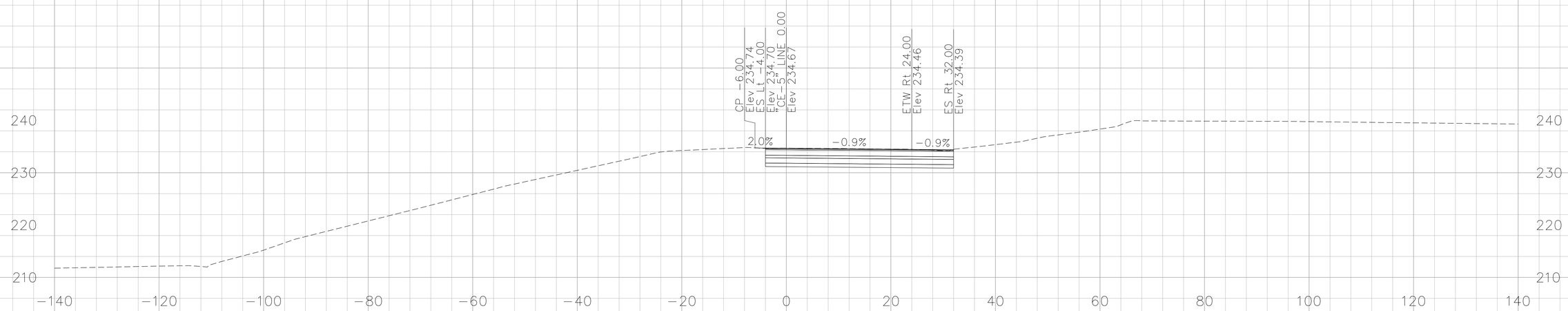

318+17.19

CROSS SECTIONS CREATED BY: DP
DATE: 10/17/2013
File: ...\CE-5 Line.dgn

PROJECT: I-5 SEGMENT 2
CONTRACT No: 12-0F96C4 12-Ora-5
PM: 3.7/6.2

Scale Ratio: 1:10' Horiz.
1:10' Vert.
ALL DIMENSIONS ARE US SURVEY FEET

"CE-5" LINE CROSS SECTIONS

SHEET 01 OF 16

DESIGN STUDY ONLY

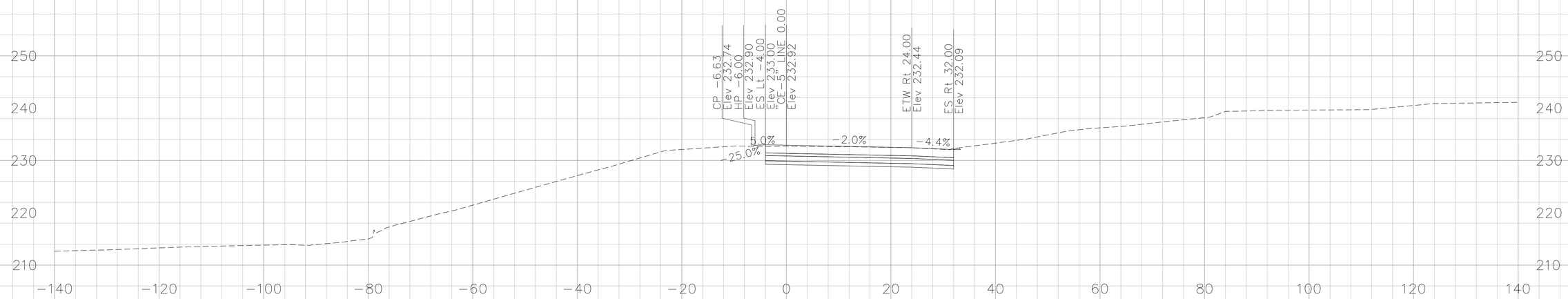

319+00.00

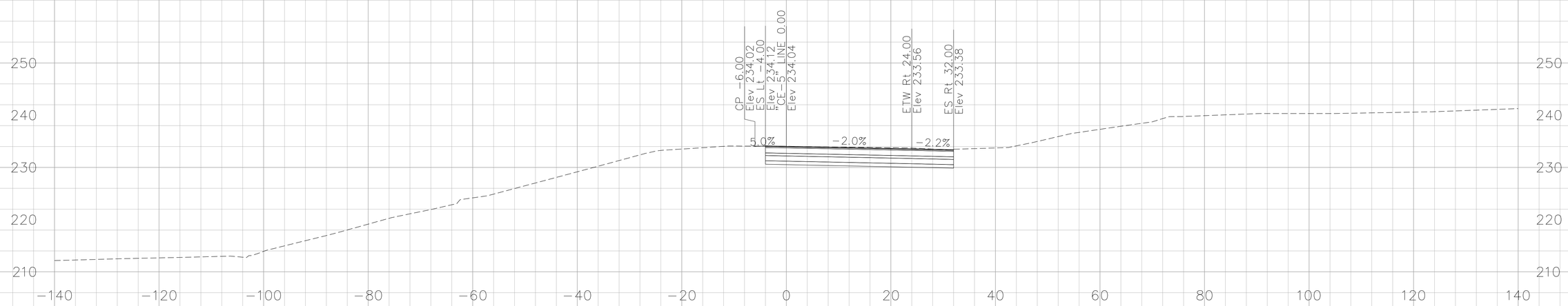

318+50.00

CROSS SECTIONS CREATED BY: DP
DATE: 10/17/2013
File: ...\CE-5 Line.dgn

PROJECT: I-5 SEGMENT 2
CONTRACT No: 12-0F96C4 12-Ora-5
PM: 3.7/6.2

Scale Ratio: 1:10' Horiz.
1:10' Vert.
ALL DIMENSIONS ARE US SURVEY FEET

"CE-5" LINE CROSS SECTIONS

SHEET 02 OF 16

DESIGN STUDY ONLY

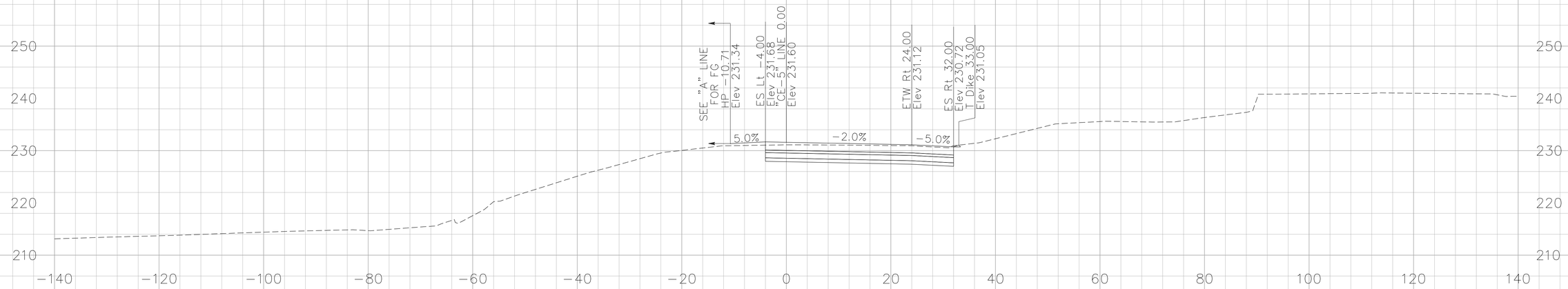

319+50.00

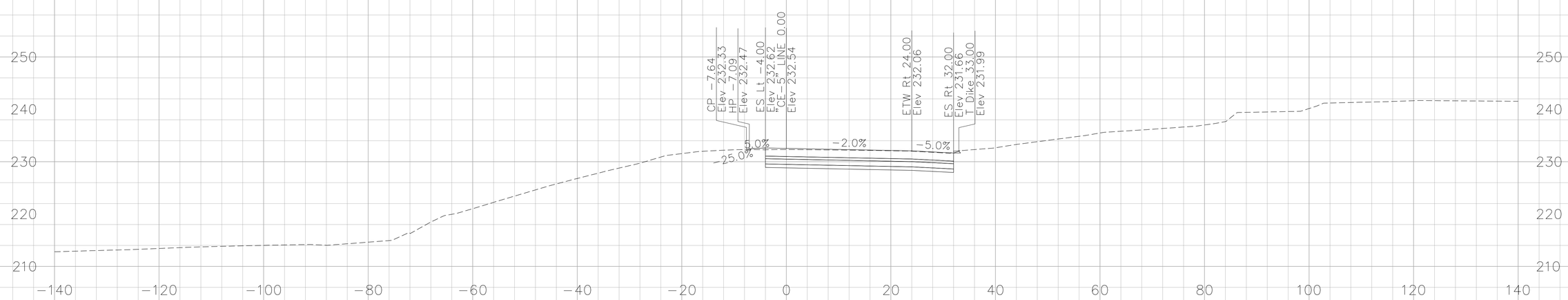

319+15.02

CROSS SECTIONS CREATED BY: DP
DATE: 10/17/2013
File: ...\CE-5 Line.dgn

PROJECT: I-5 SEGMENT 2
CONTRACT No: 12-0F96C4 12-Ora-5
PM: 3.7/6.2

Scale Ratio: 1:10' Horiz.
1:10' Vert.
ALL DIMENSIONS ARE US SURVEY FEET

"CE-5" LINE CROSS SECTIONS

SHEET 03 OF 16

DESIGN STUDY ONLY

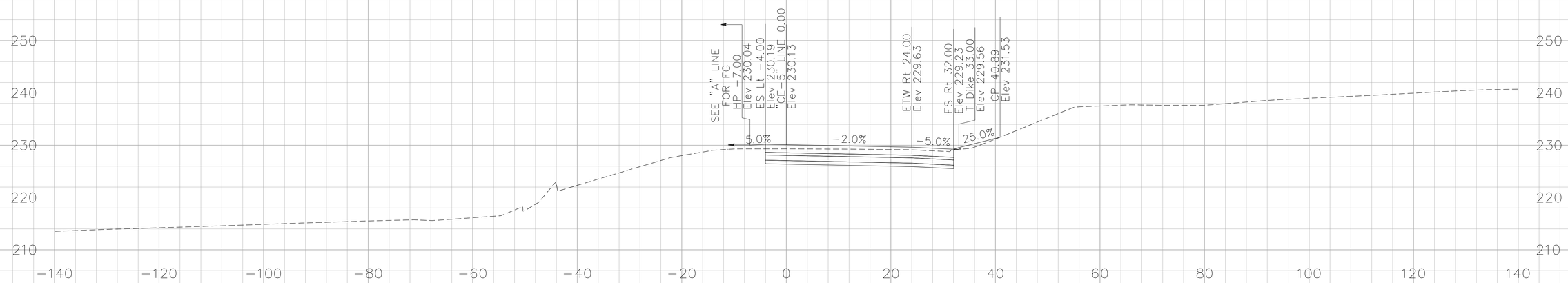

320+00.00

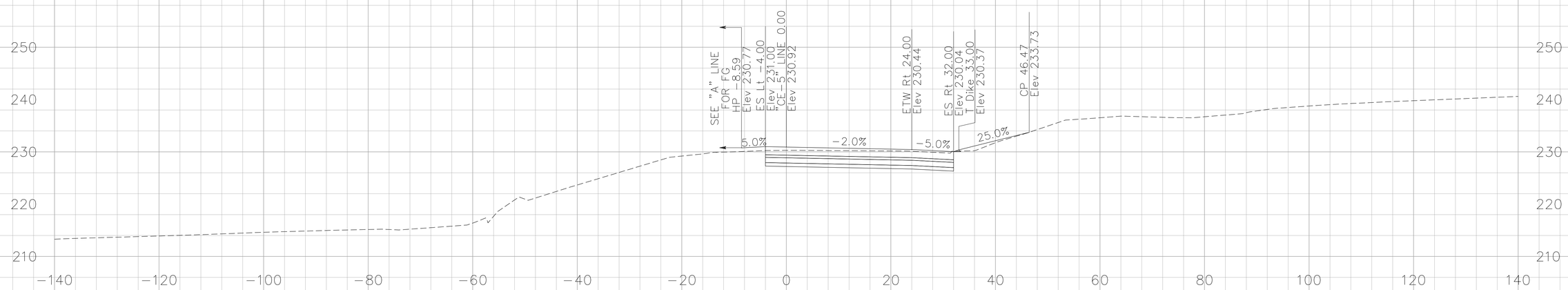

319+73.31

CROSS SECTIONS CREATED BY: DP
DATE: 10/17/2013
File: ...\CE-5 Line.dgn

PROJECT: I-5 SEGMENT 2
CONTRACT No: 12-0F96C4 12-Ora-5
PM: 3.7/6.2

Scale Ratio: 1:10' Horiz.
1:10' Vert.
ALL DIMENSIONS ARE US SURVEY FEET

"CE-5" LINE CROSS SECTIONS

SHEET 04 OF 16

DESIGN STUDY ONLY

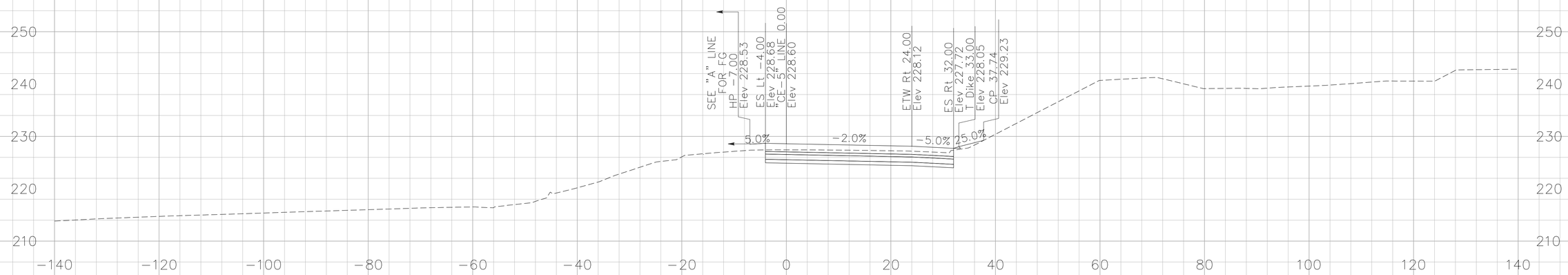

320+50.00

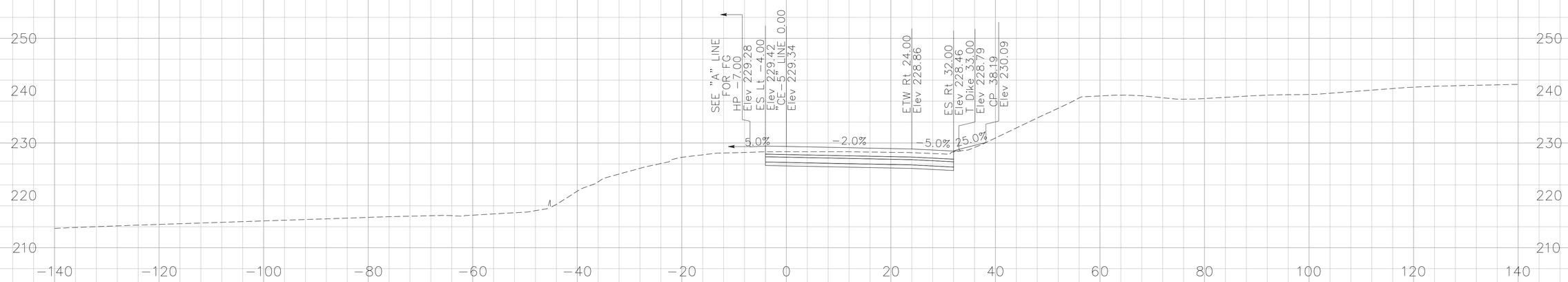

320+25.34

CROSS SECTIONS CREATED BY: DP
DATE: 10/17/2013
File: ...\CE-5 Line.dgn

PROJECT: I-5 SEGMENT 2
CONTRACT No: 12-0F96C4 12-Ora-5
PM: 3.7/6.2

Scale Ratio: 1:10' Horiz.
1:10' Vert.
ALL DIMENSIONS ARE US SURVEY FEET

"CE-5" LINE CROSS SECTIONS

SHEET 05 OF 16

DESIGN STUDY ONLY

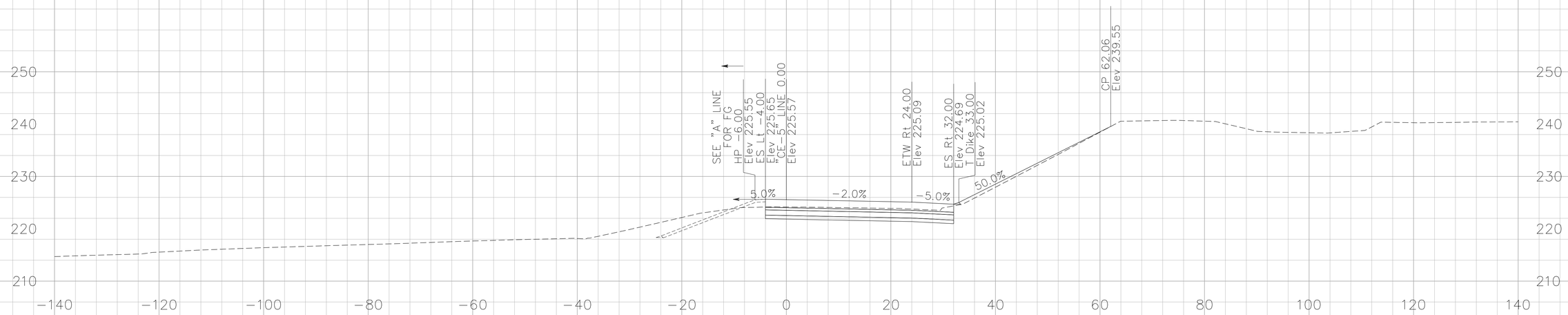

321+50.00

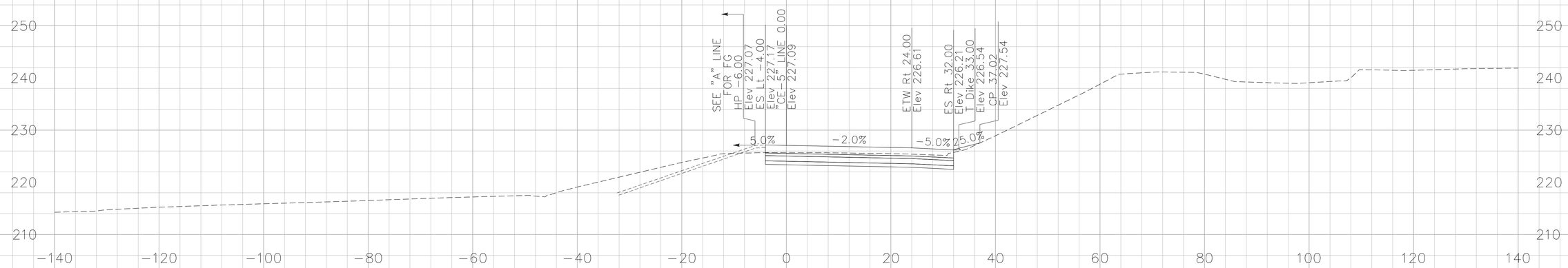

321+00.00

CROSS SECTIONS CREATED BY: DP
DATE: 10/17/2013
File: ...\CE-5 Line.dgn

PROJECT: I-5 SEGMENT 2
CONTRACT No: 12-0F96C4 12-Ora-5
PM: 3.7/6.2

Scale Ratio: 1:10' Horiz.
1:10' Vert.
ALL DIMENSIONS ARE US SURVEY FEET

"CE-5" LINE CROSS SECTIONS

SHEET 06 OF 16

DESIGN STUDY ONLY

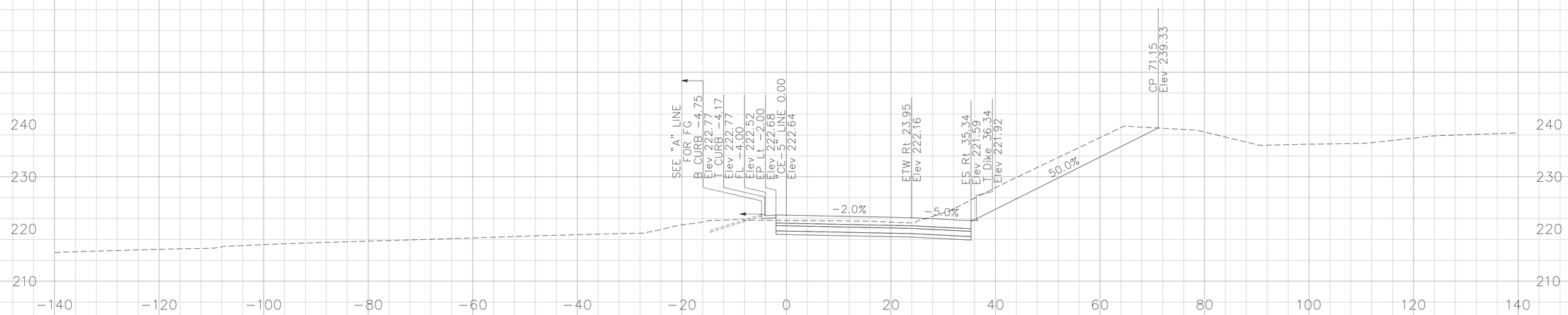

322+50.00

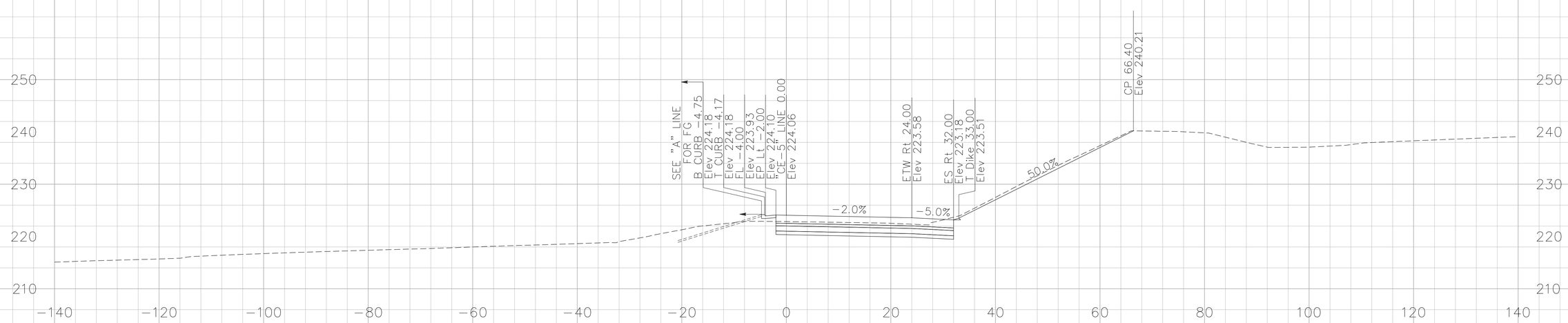

322+00.00

CROSS SECTIONS CREATED BY: DP
DATE: 10/17/2013
File: ...\CE-5 Line.dgn

PROJECT: I-5 SEGMENT 2
CONTRACT No: 12-0F96C4 12-Ora-5
PM: 3.7/6.2

Scale Ratio: 1:10' Horiz.
1:10' Vert.
ALL DIMENSIONS ARE US SURVEY FEET

"CE-5" LINE CROSS SECTIONS

DESIGN STUDY ONLY

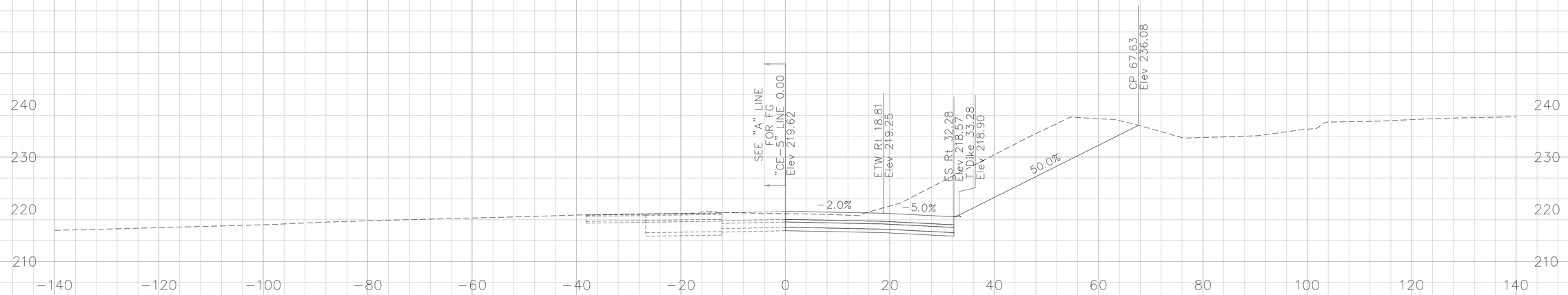

323+91.36

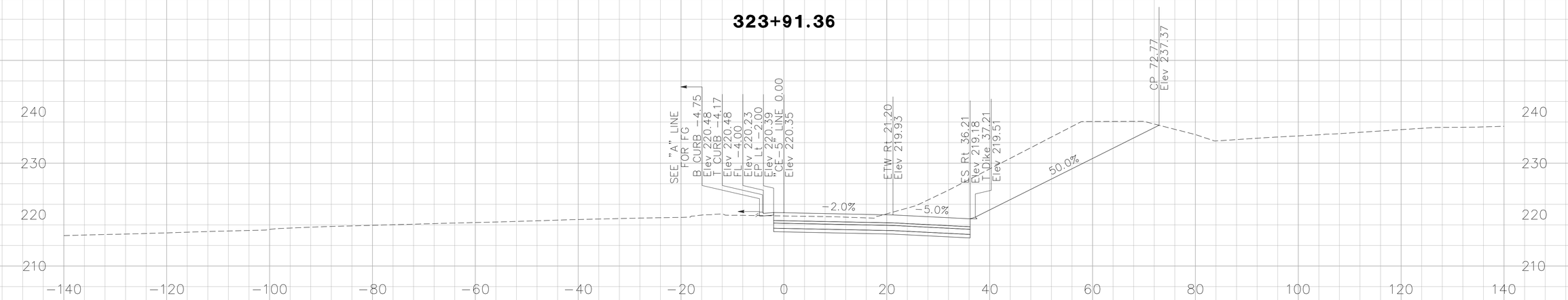

323+50.00

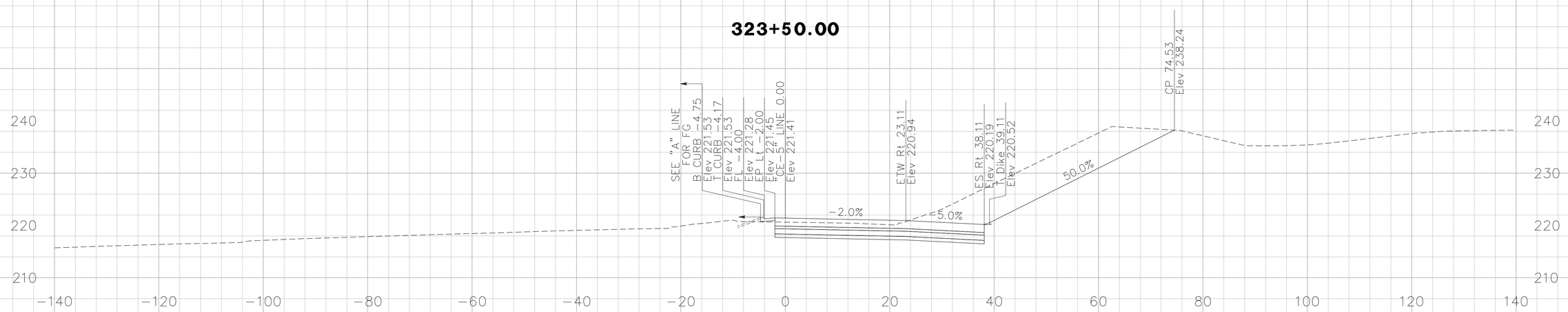

323+00.00

CROSS SECTIONS CREATED BY: DP
DATE: 10/17/2013
File: ...\CE-5 Line.dgn

PROJECT: I-5 SEGMENT 2
CONTRACT No: 12-0F96C4 12-Ora-5
PM: 3.7/6.2

Scale Ratio: 1:10' Horiz.
1:10' Vert.
ALL DIMENSIONS ARE US SURVEY FEET

"CE-5" LINE CROSS SECTIONS

DESIGN STUDY ONLY

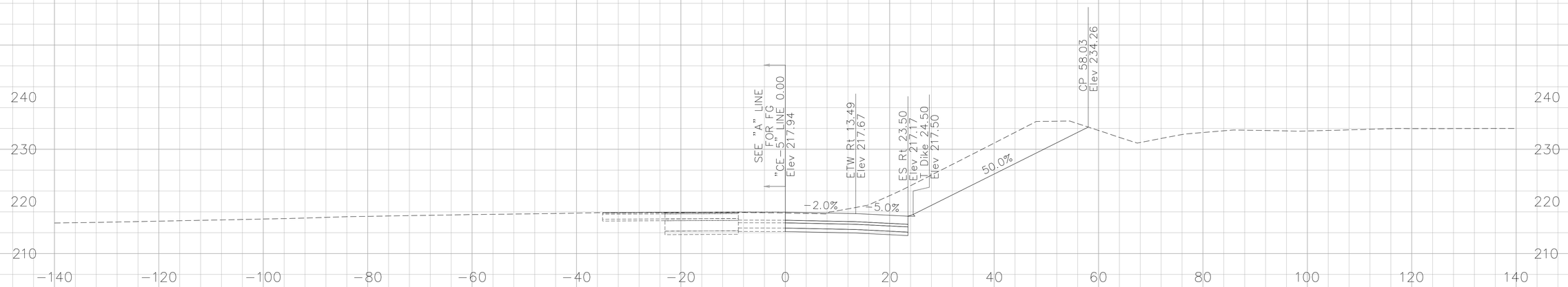

325+00.00

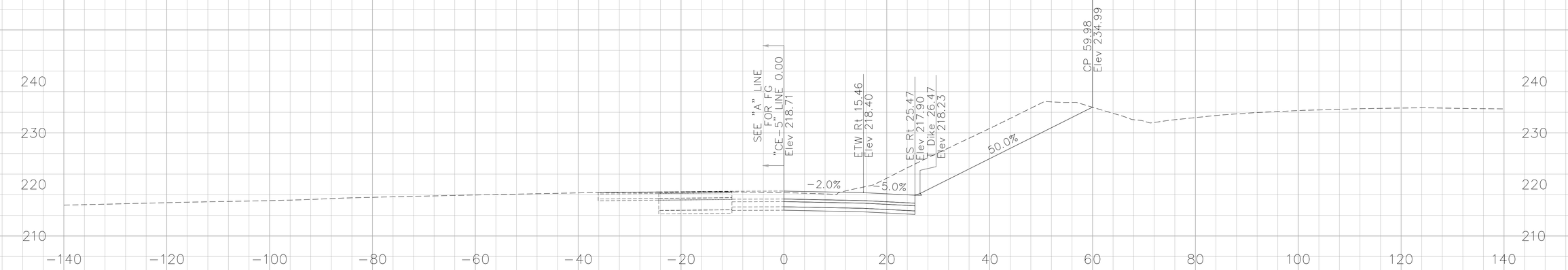

324+50.00

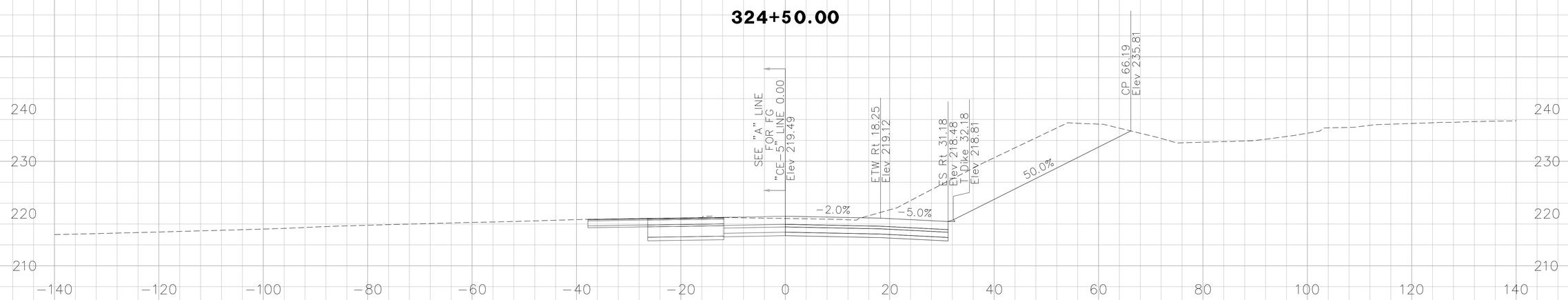

324+00.00

CROSS SECTIONS CREATED BY: DP
DATE: 10/17/2013
File: ...\CE-5 Line.dgn

PROJECT: I-5 SEGMENT 2
CONTRACT No: 12-0F96C4 12-Ora-5
PM: 3.7/6.2

Scale Ratio: 1:10' Horiz.
1:10' Vert.
ALL DIMENSIONS ARE US SURVEY FEET

"CE-5" LINE CROSS SECTIONS

SHEET 09 OF 16

DESIGN STUDY ONLY

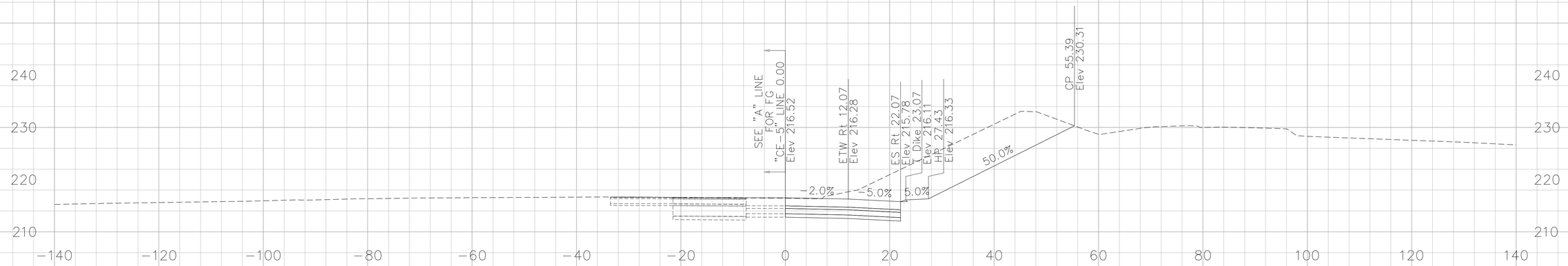

325+75.00

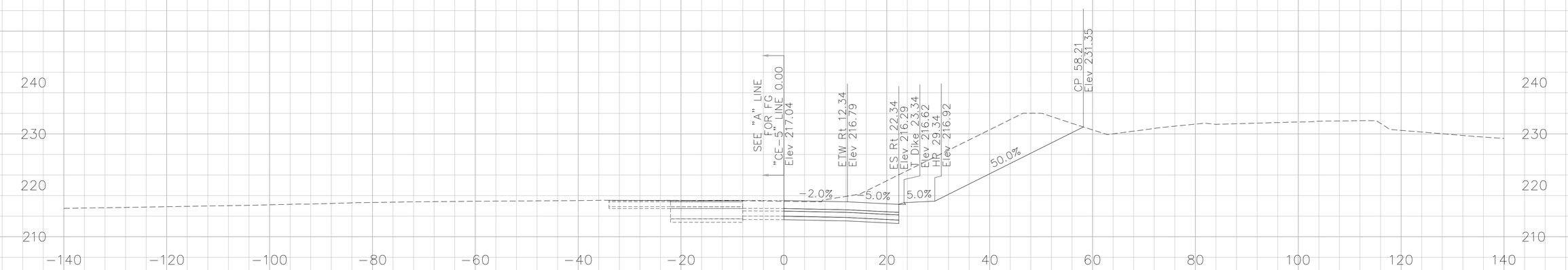

325+50.00

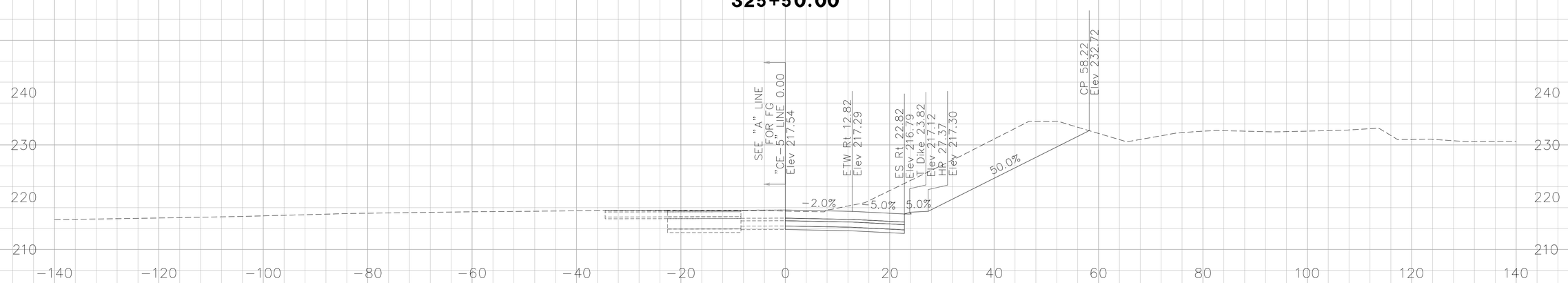

325+25.00

CROSS SECTIONS CREATED BY: DP
DATE: 10/17/2013
File: ...\CE-5 Line.dgn

PROJECT: I-5 SEGMENT 2
CONTRACT No: 12-0F96C4 12-Ora-5
PM: 3.7/6.2

Scale Ratio: 1:10' Horiz.
1:10' Vert.
ALL DIMENSIONS ARE US SURVEY FEET

"CE-5" LINE CROSS SECTIONS

DESIGN STUDY ONLY

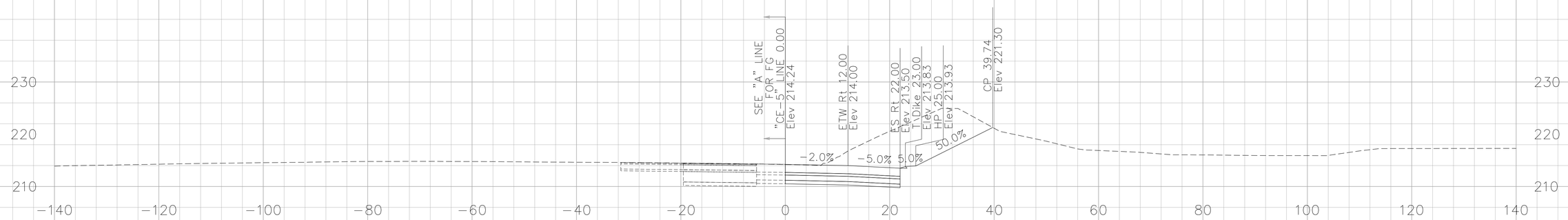

326+75.00

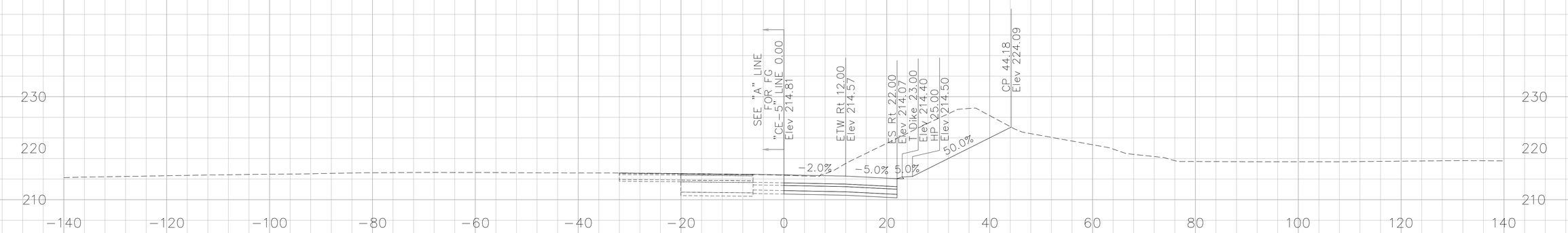

326+50.00

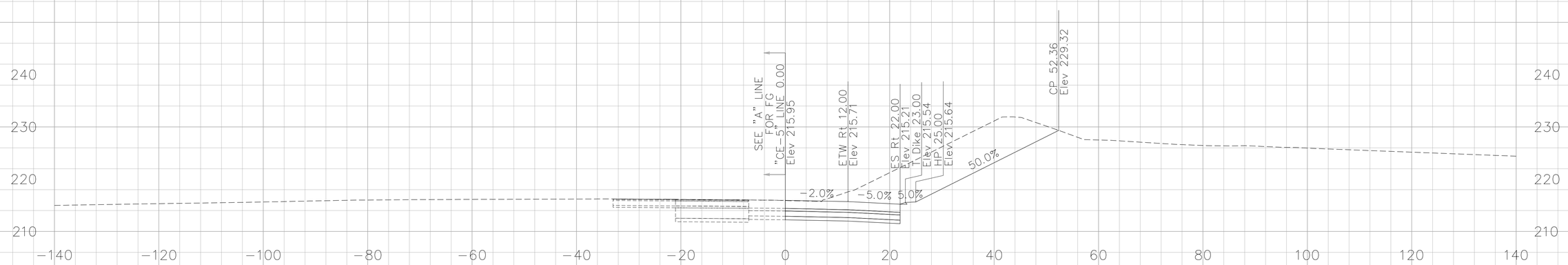

326+00.00

CROSS SECTIONS CREATED BY: DP
DATE: 10/17/2013
File: ...\CE-5 Line.dgn

PROJECT: I-5 SEGMENT 2
CONTRACT No: 12-0F96C4 12-Ora-5
PM: 3.7/6.2

Scale Ratio: 1:10' Horiz.
1:10' Vert.
ALL DIMENSIONS ARE US SURVEY FEET

"CE-5" LINE CROSS SECTIONS

DESIGN STUDY ONLY

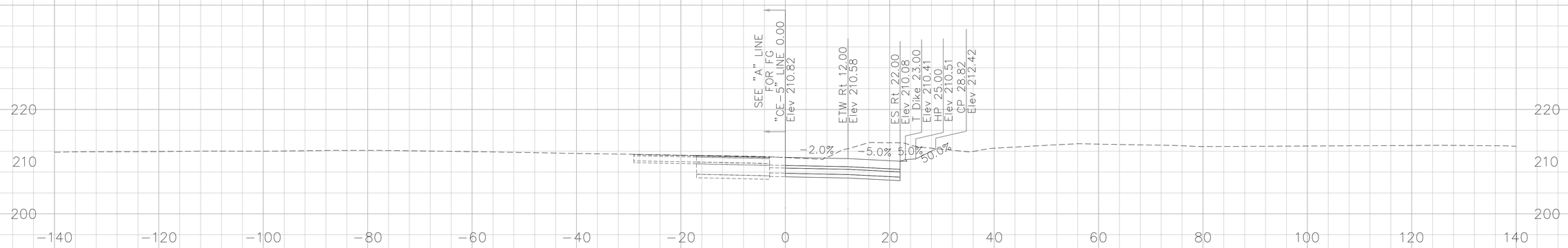

328+00.00

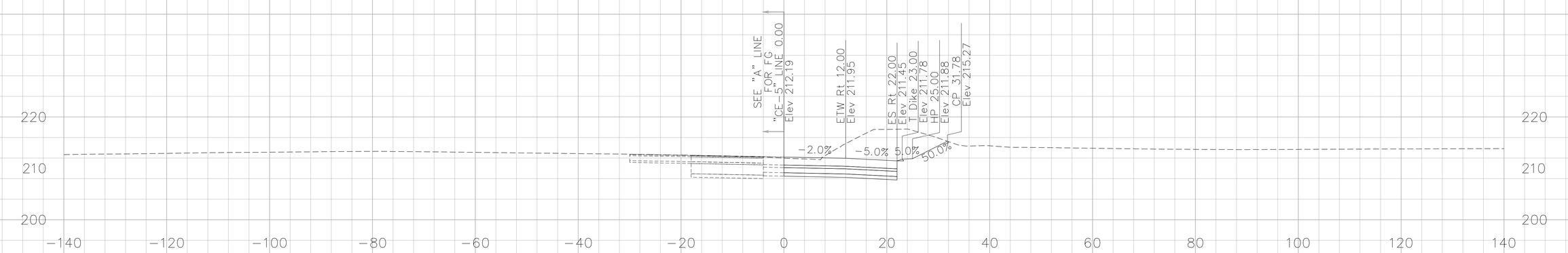

327+50.00

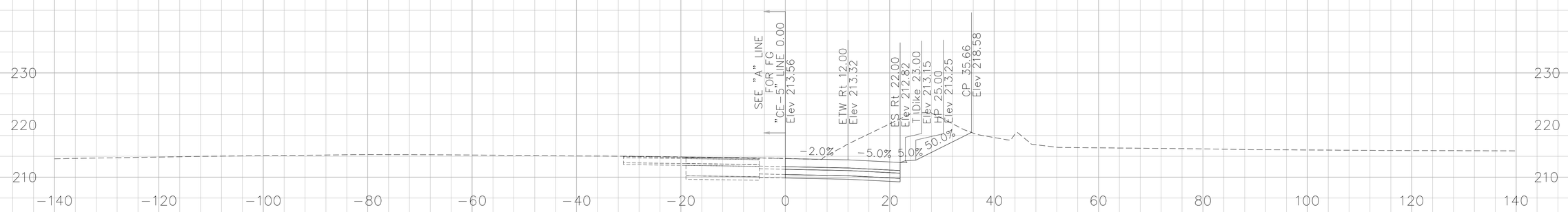

327+00.00

CROSS SECTIONS CREATED BY: DP
DATE: 10/17/2013
File: ...\CE-5 Line.dgn

PROJECT: I-5 SEGMENT 2
CONTRACT No: 12-0F96C4 12-Ora-5
PM: 3.7/6.2

Scale Ratio: 1:10' Horiz.
1:10' Vert.
ALL DIMENSIONS ARE US SURVEY FEET

"CE-5" LINE CROSS SECTIONS

DESIGN STUDY ONLY

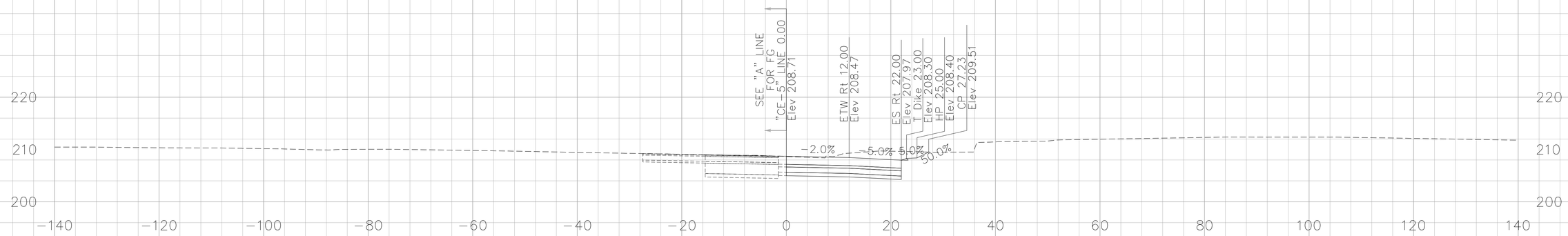

328+75.00

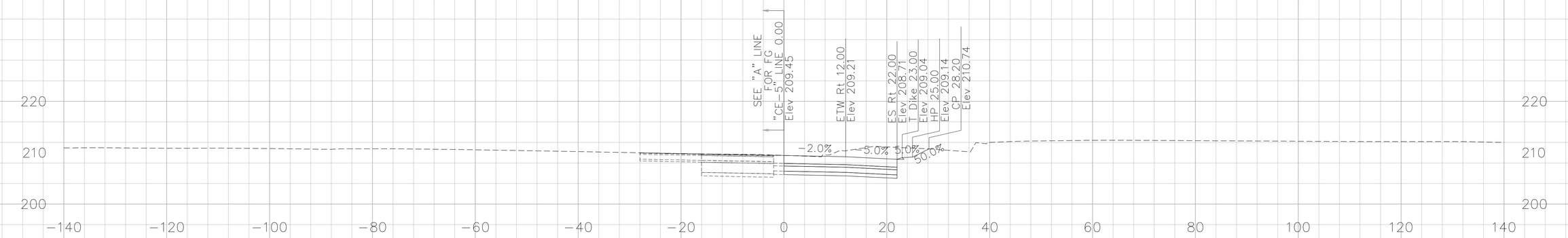

328+50.00

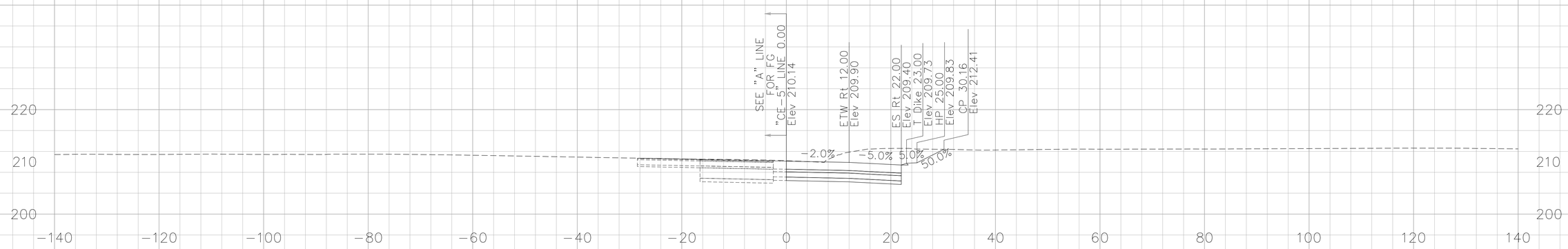

328+25.00

CROSS SECTIONS CREATED BY: DP
DATE: 10/17/2013
File: ...\CE-5 Line.dgn

PROJECT: I-5 SEGMENT 2
CONTRACT No: 12-OF96C4 12-Ora-5
PM: 3.7/6.2

Scale Ratio: 1:10' Horiz.
1:10' Vert.
ALL DIMENSIONS ARE US SURVEY FEET

"CE-5" LINE CROSS SECTIONS

DESIGN STUDY ONLY

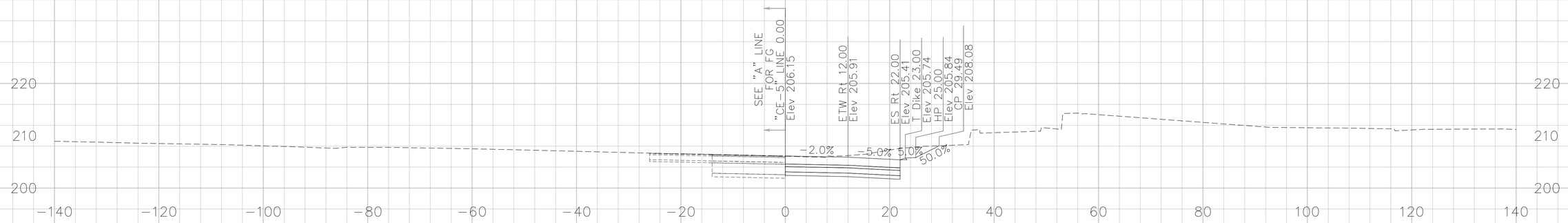

329+50.00

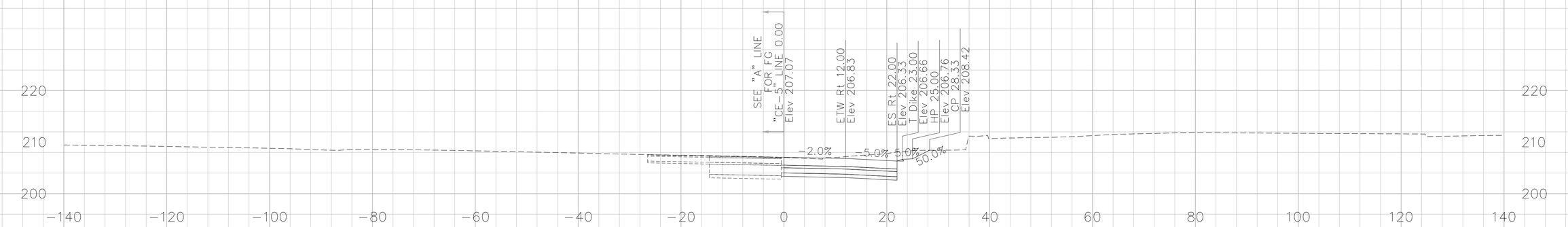

329+25.00

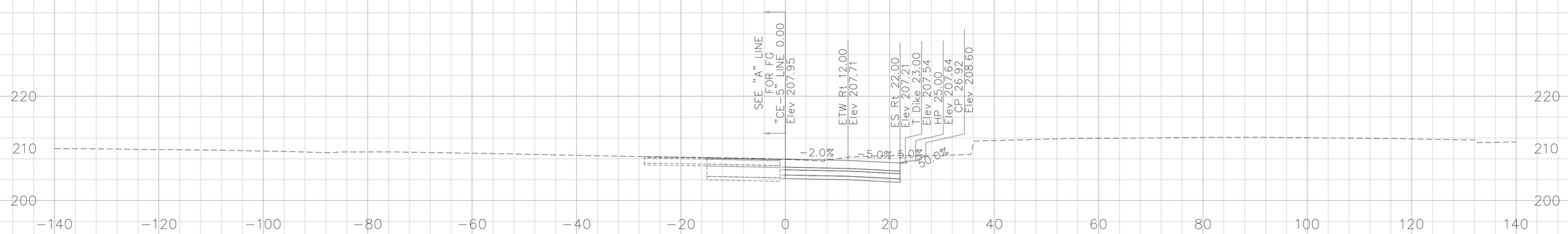

329+00.00

CROSS SECTIONS CREATED BY: DP
DATE: 10/17/2013
File: ...\CE-5 Line.dgn

PROJECT: I-5 SEGMENT 2
CONTRACT No: 12-0F96C4 12-Ora-5
PM: 3.7/6.2

Scale Ratio: 1:10' Horiz.
1:10' Vert.
ALL DIMENSIONS ARE US SURVEY FEET

"CE-5" LINE CROSS SECTIONS

DESIGN STUDY ONLY

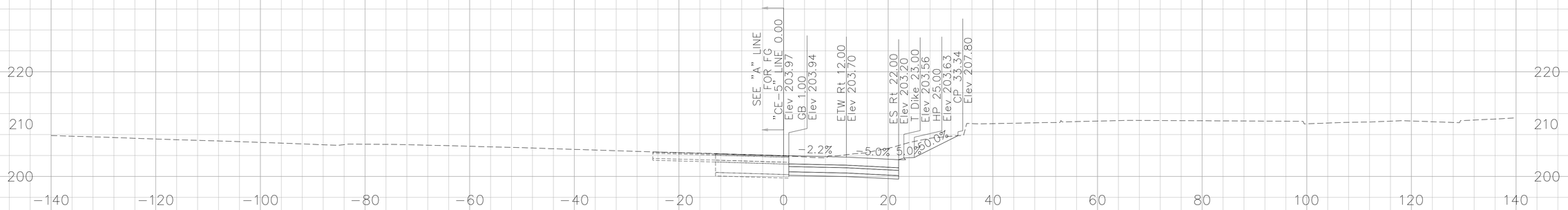

330+00.00

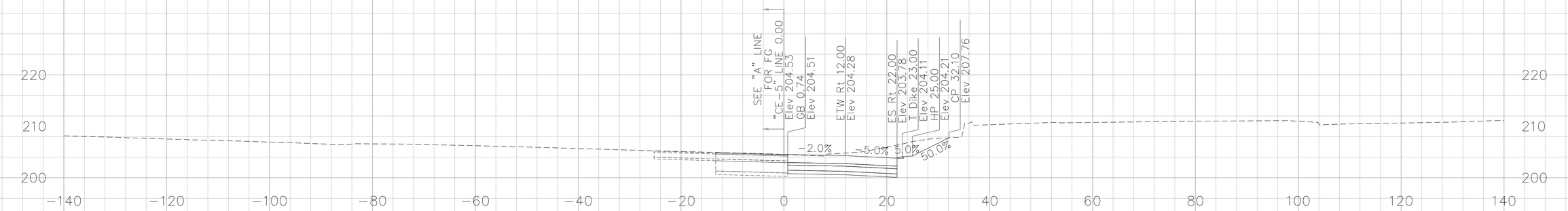

329+87.00

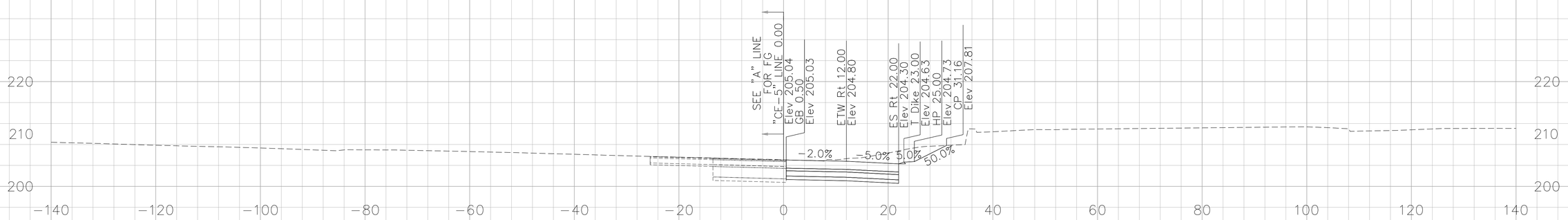

329+75.00

CROSS SECTIONS CREATED BY: DP
DATE: 10/17/2013
File: ...\CE-5 Line.dgn

PROJECT: I-5 SEGMENT 2
CONTRACT No: 12-0F96C4 12-Ora-5
PM: 3.7/6.2

Scale Ratio: 1:10' Horiz.
1:10' Vert.
ALL DIMENSIONS ARE US SURVEY FEET

"CE-5" LINE CROSS SECTIONS

DESIGN STUDY ONLY

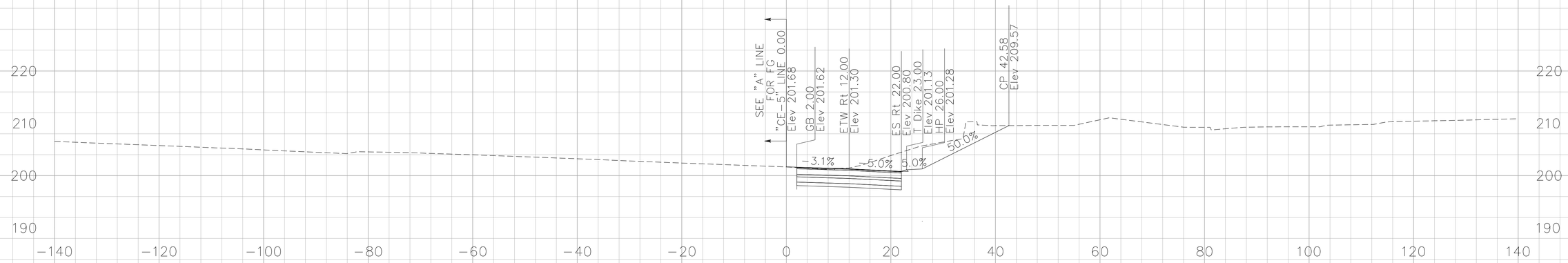

330+50.00

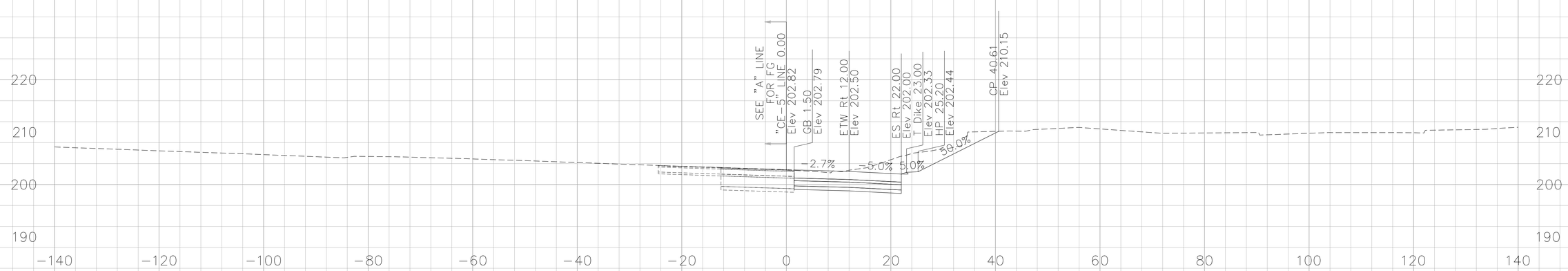

330+25.00

CROSS SECTIONS CREATED BY: DP
DATE: 10/17/2013
File: ...\CE-5 Line.dgn

PROJECT: I-5 SEGMENT 2
CONTRACT No: 12-0F96C4 12-Ora-5
PM: 3.7/6.2

Scale Ratio: 1:10' Horiz.
1:10' Vert.
ALL DIMENSIONS ARE US SURVEY FEET

"CE-5" LINE CROSS SECTIONS

SHEET 16 OF 16