DIST	COUNTY	ROUTE	POST MILES TOTAL PROJECT	SHEET No	TOTAL SHEETS
12	Ora	91	0.9/5.4	701	885

REGISTERED CIVIL ENGINEER 3-15-2012 DATE

8-13-12
PLANS APPROVAL DATE

REGISTERED PROFESSIONAL ENGINEER T. A. Kirilov No. C 67708 Exp. 06/30/13 CIVIL STATE OF CALIFORNIA

The State of California or its officers or agents shall not be responsible for the accuracy or completeness of scanned copies of this plan sheet.

OCTA
550 S MAIN STREET
ORANGE, CA. 92868

RBF CONSULTING
14725 ALTON PARKWAY
IRVINE, CA 92618

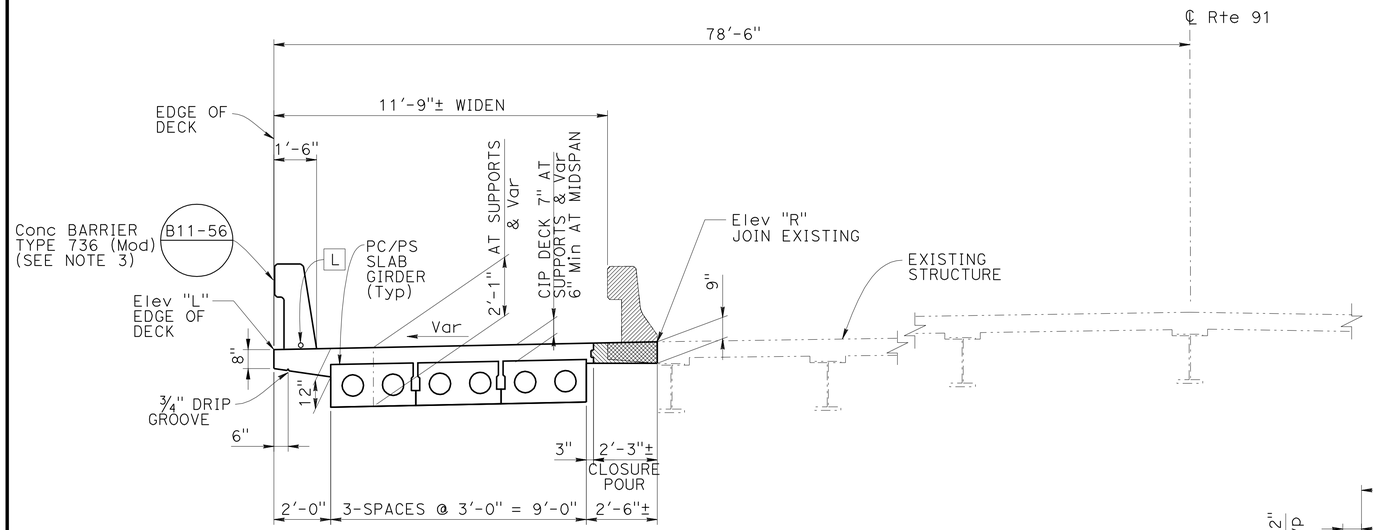

TYPICAL SECTION

3/8" = 1'-0"

DECK ELEVATIONS

℄ SR-91 Sta	Elev "L"	Elev "R"
BB 278+41.93	192.74±	193.01±
278+60.00	192.40±	192.60±
278+80.00	192.00±	192.30±
279+00.00	191.54±	191.83±
279+20.00	191.06±	191.24±
279+40.00	190.52±	190.72±
279+60.00	189.95±	190.14±
EB 279+77.35	189.43±	189.63±

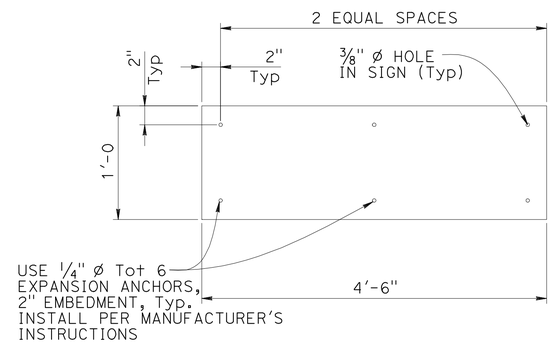

VERTICAL CLEARANCE SIGN

NO SCALE
SEE NOTE 4

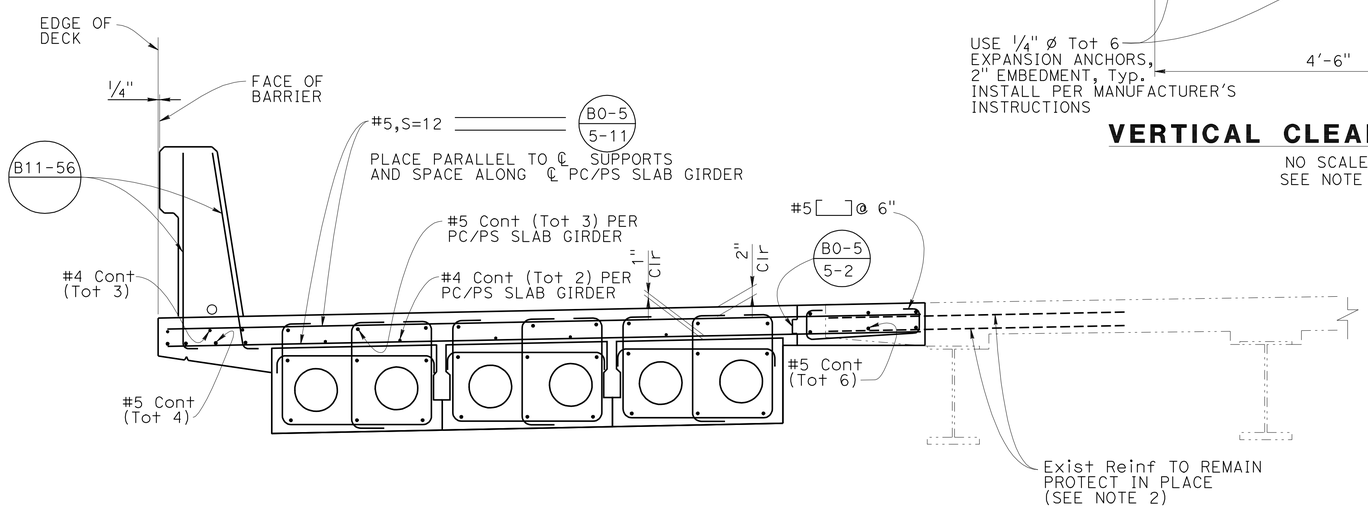

PART TYPICAL SECTION

3/4" = 1'-0"

NOTES:

1. Depth of superstructure is measured at abutments and bent supports.
2. Replace any damaged exist transverse deck reinf with an additional #5 $\frac{3\ 2'\text{-}0''}{1''}$ drill & bond dowel into 6" hole.
3. For Bridge Mounted Sign details, see "SIGN PLANS" and "BRIDGE MOUNTED SIGN DETAILS" sheet.
4. For location of Vertical Clearance Sign see "SIGN PLANS" and "GENERAL PLAN"

SUPERSTRUCTURE CIP CONCRETE NOTES:

3. The concrete barrier is placed at least 21 days after the cast-in-place deck has been placed and attained the specified concrete strength.
4. The closure pour shall not be placed sooner than 14 days after placement of the barrier.

LEGEND:

- Limits of Bridge Removal (portion), Location C
- Closure Pour
- Existing Structure
- New Construction
- [L] 2" Lighting and Sign Illumination Conduit, see "ELECTRICAL PLANS"

NOTE:
THE CONTRACTOR SHALL VERIFY ALL CONTROLLING FIELD DIMENSIONS BEFORE ORDERING OR FABRICATING ANY MATERIAL.

DESIGN OVERSIGHT Luqi Yang
3-29-12
SIGN OFF DATE

	BY	CHECKED
DESIGN	T. Kirilov	V. J. Mosquera
DETAILS	J. Saldana	V. J. Mosquera
QUANTITIES	C. Stelea	R. Kelcher

PREPARED FOR THE STATE OF CALIFORNIA DEPARTMENT OF TRANSPORTATION

V. Jessica Mosquera
PROJECT ENGINEER

BRIDGE NO. 55-0245
POST MILES 4.26

EAST St UC (WIDEN)
TYPICAL SECTION

DESIGN DETAIL SHEET (ENGLISH) (REV.7/16/10)

ORIGINAL SCALE IN INCHES FOR REDUCED PLANS 0 1 2 3

UNIT: 2295
PROJECT NUMBER & PHASE: 12000000791 CONTRACT NO.: 12-0C5701

DISREGARD PRINTS BEARING EARLIER REVISION DATES 08/30/10 09/16/11 12/20/11 03/15/12

SHEET 11 OF 22

FILE => 55-0245-k-ts01.dgn

USERNAME => s117606 DATE PLOTTED => 17-AUG-2012 TIME PLOTTED => 09:01

DIST	COUNTY	ROUTE	POST MILES TOTAL PROJECT	SHEET No	TOTAL SHEETS
12	Ora	91	0.9/5.4	702	885

REGISTERED CIVIL ENGINEER — DATE 3-15-2012

8-13-12
PLANS APPROVAL DATE

REGISTERED PROFESSIONAL ENGINEER — T. A. Kirilov — No. C 67708 — Exp. 06/30/13 — CIVIL — STATE OF CALIFORNIA

The State of California or its officers or agents shall not be responsible for the accuracy or completeness of scanned copies of this plan sheet.

OCTA
550 S MAIN STREET
ORANGE, CA. 92868

RBF CONSULTING
14725 ALTON PARKWAY
IRVINE, CA 92618

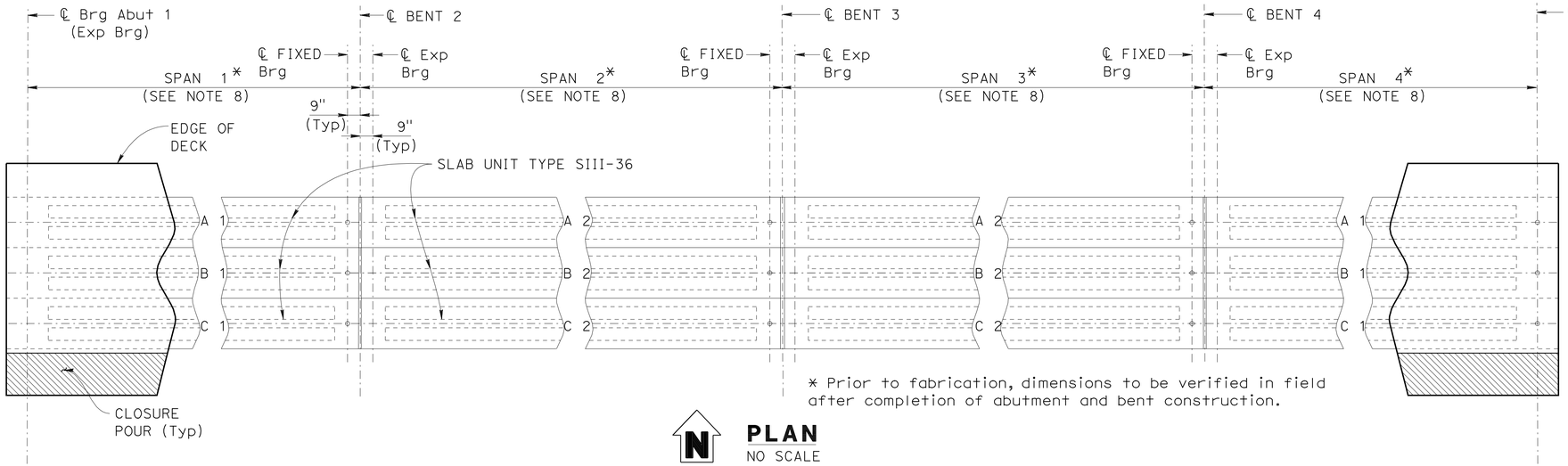

* Prior to fabrication, dimensions to be verified in field after completion of abutment and bent construction.

PLAN
NO SCALE

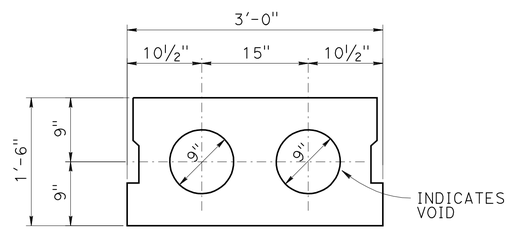

TYPICAL SECTION SIII-36
NO SCALE

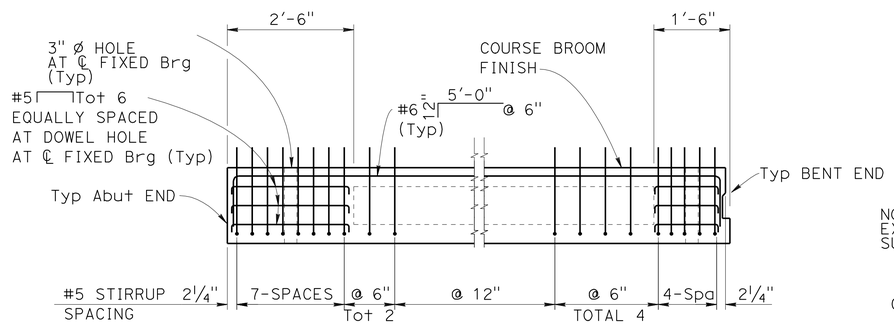

LONGITUDINAL SECTION
1½" = 1'-0"

GIRDER LOCATION	JACKING FORCE (P) IN kips	No. OF BOTTOM STRANDS **	No. OF TOP STRANDS	DEFLECTION COMPONENTS	
				DECK	RAILING
A 1 & C 1	396	7	2	0	0
B 1	352	6	2	0	0
A 2 & C 2	835	17	2	⅜"	0
B 2	660	12	3	¼"	0

** Bottom strands shall be placed starting with the bottom row of strands.

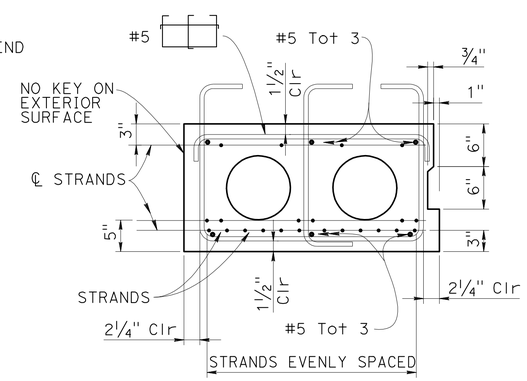

TYPICAL REINFORCEMENT
NO SCALE

GENERAL NOTES:

1. The Jacking Force (P) is the jacking force required at the point of control along the span. The jacking force does not include any fabrication specific losses.
2. The maximum tensile stress in the prestressing steel upon release shall not exceed 75% of the specified minimum ultimate tensile strength of the prestressing steel.
3. The maximum temporary tensile stress (Jacking stress) in the prestressing steel shall not exceed 80% of the specified minimum ultimate tensile strength of the prestressing steel.
4. Concrete strength:
   fci' = 5.2 ksi at time of stressing
   fc' = 6.1 ksi at 28 days
5. Keyways to be filled with grout.
6. See other sheets for railing requirements.
7. Design based on 270 ksi low relaxation 0.6" diameter strands.
8. Use the same girder design for Span 1 and Span 4, however, Span 1 length is 25'-11"± and Span 4 length is 26'-0"±.

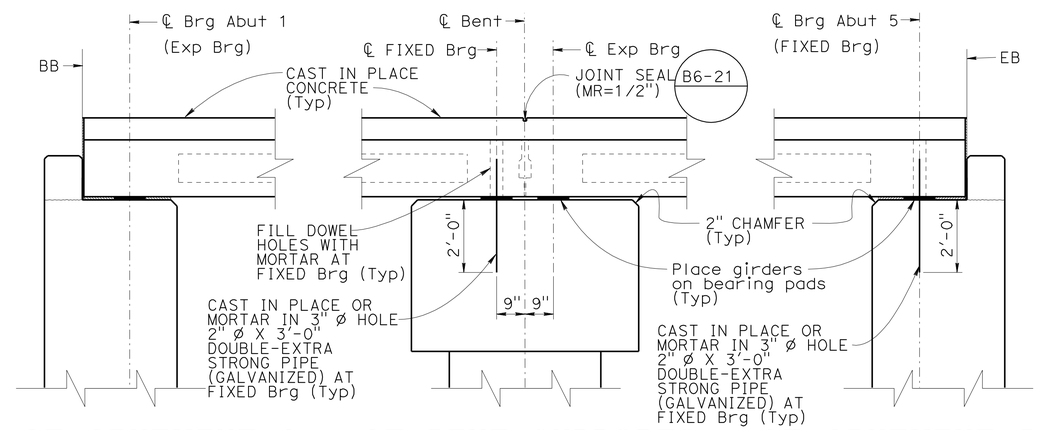

SUPPORT DETAILS
NO SCALE

NOTE:
THE CONTRACTOR SHALL VERIFY ALL CONTROLLING FIELD DIMENSIONS BEFORE ORDERING OR FABRICATING ANY MATERIAL.

	BY	CHECKED
DESIGN	T. Kirilov	V. J. Mosquera
DETAILS	J. Saldana	V. J. Mosquera
QUANTITIES	C. Stelea	R. Kelcher

DESIGN OVERSIGHT Luqi Yang
3-29-12
SIGN OFF DATE

PREPARED FOR THE STATE OF CALIFORNIA DEPARTMENT OF TRANSPORTATION

V. Jessica Mosquera
PROJECT ENGINEER

BRIDGE NO. 55-0245
POST MILES 4.26

EAST St UC (WIDEN)
GIRDER LAYOUT

DESIGN DETAIL SHEET (ENGLISH) (REV.7/16/10)

ORIGINAL SCALE IN INCHES FOR REDUCED PLANS 0 1 2 3

UNIT: 2295
PROJECT NUMBER & PHASE: 12000000791
CONTRACT NO.: 12-0C5701

DISREGARD PRINTS BEARING EARLIER REVISION DATES

REVISION DATES: 08/30/10 09/06/11 12/22/11

SHEET 12 OF 22

FILE => 55-0245-1-g_1o01.dgn

USERNAME => s121614 DATE PLOTTED => 17-AUG-2012 TIME PLOTTED => 06:03

DIST	COUNTY	ROUTE	POST MILES TOTAL PROJECT	SHEET No.	TOTAL SHEETS
12	Ora	91	0.9/5.4	703	885

REGISTERED CIVIL ENGINEER — DATE 3-15-2012

8-13-12
PLANS APPROVAL DATE

REGISTERED PROFESSIONAL ENGINEER — T. A. Kirilov — No. C67708 — Exp. 06/30/13 — CIVIL — STATE OF CALIFORNIA

The State of California or its officers or agents shall not be responsible for the accuracy or completeness of scanned copies of this plan sheet.

OCTA
550 S MAIN STREET
ORANGE, CA. 92868

RBF CONSULTING
14725 ALTON PARKWAY
IRVINE, CA 92677

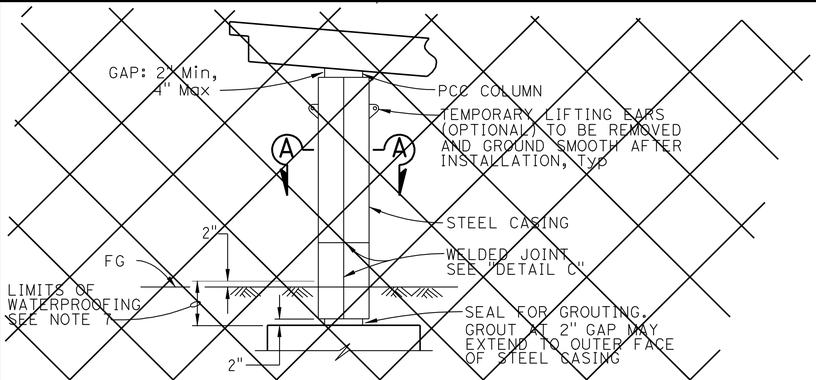

CLASS F COLUMN

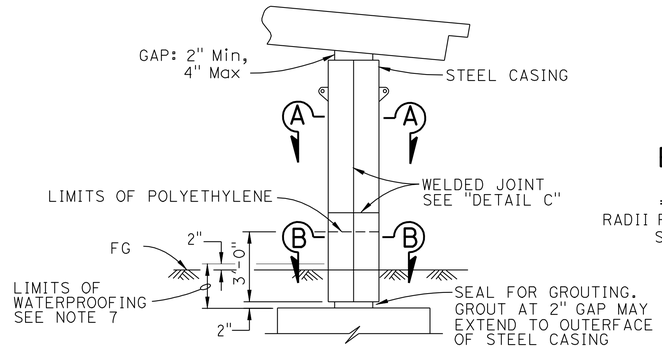

CLASS P/F COLUMN

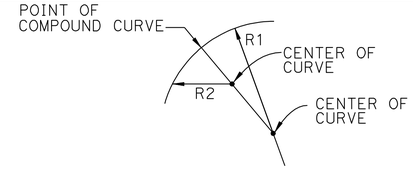

ELLIPTICAL CASING DETAIL
CLASS P/F COLUMN

RADII R1 AND R2 TO BE DETERMINED BY THE CONTRACTOR SUBJECT TO THE APPROVAL OF THE ENGINEER

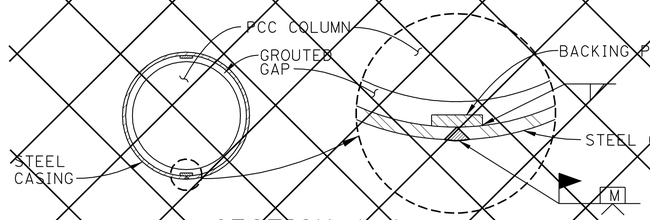

SECTION A-A

MINIMUM INSIDE DIAMETER OF STEEL CASING = 1½" GREATER THAN NOMINAL COLUMN DIAMETER FOR CLASS F AND 2½" FOR CLASS P/F

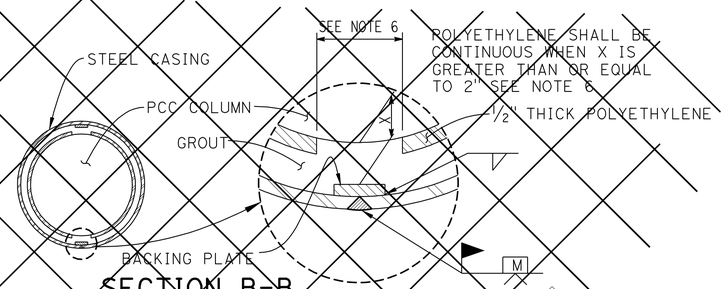

SECTION B-B

MINIMUM INSIDE DIAMETER OF STEEL CASING = 2½" GREATER THAN NOMINAL COLUMN DIAMETER FOR CLASS P/F

ROUND COLUMN

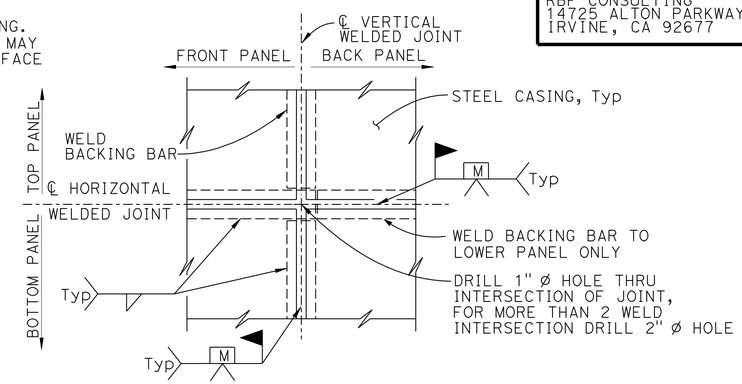

(TWO WELD INTERSECTION JOINT)

DETAIL C

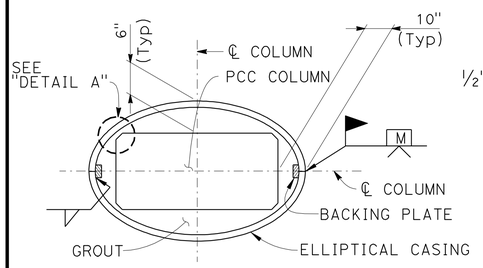

SECTION A-A

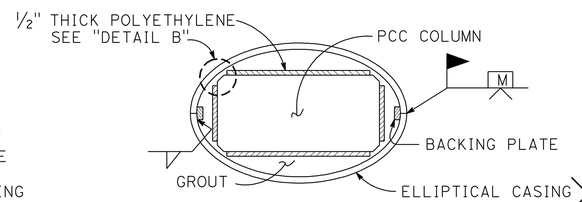

SECTION B-B

RECTANGULAR COLUMN

DETAIL A

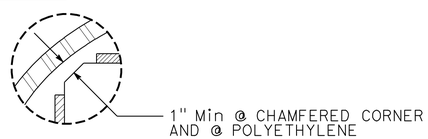

DETAIL B

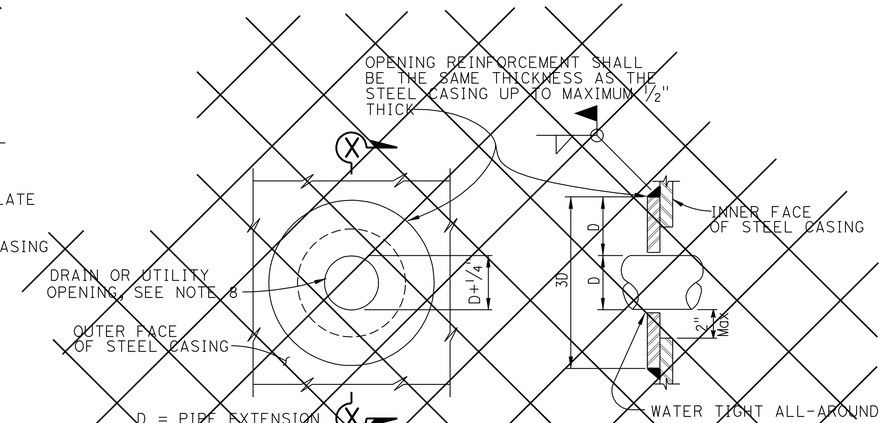

ELEVATION

SECTION X-X

CASING OPENING

NOTE: OPENING REINFORCEMENT REQUIRED FOR DRAIN OR UTILITY OPENINGS LARGER THAN 4"

NOTES:

1. For varying thickness, steel casing inside surface to remain flush. Minimum clearance from PCC column to casing shall be maintained
2. Appropriate injection nozzles to be provided on casing, but removed and ground flush following completion of grouting operation
3. All voids between steel casing and polyethylene, and steel casing and PCC column to be filled with grout
4. Location and number of vertical and horizontal welds to be determined by the Contractor and subject to the approval of the Engineer. The location of casing welds are for illustration. No skip welds allowed
5. Circular steel casing to be ¼" thick minimum for casings with a 4'-4" diameter or less; all other steel casings to be ⅜" thick unless noted differently on contract plans. Backing plates to be the same thickness as casing up to maximum ⅜" thick
6. Contractor shall remove 12" polyethylene strip behind backing plate if backing plate is closer than 2" from face of column
7. Waterproof limits for steel casings.
8. For pipe extensions, opening shall be no more than ¼" greater than the pipe extension diameter. For other openings, the opening diameter to be determined by the Engineer

NOTE:
THE CONTRACTOR SHALL VERIFY ALL CONTROLLING FIELD DIMENSIONS BEFORE ORDERING OR FABRICATING ANY MATERIAL.

NO SCALE

STANDARD DRAWING
FILE No. xs7-010
APPROVAL DATE July 2011

1 Does Not Apply
2 Added Detail or Note
3 Modified Detail or Note

STATE OF CALIFORNIA
DEPARTMENT OF TRANSPORTATION

DIVISION OF ENGINEERING SERVICES

BRIDGE No. 55-0245
POST MILE 4.26

EAST St UC (WIDEN)
COLUMN CASING - STEEL

DS OSD 2147A (ENGLISH STANDARD DRAWING "XS" BORDER REV. (02-02-11)

ORIGINAL SCALE IN INCHES FOR REDUCED PLANS 0 1 2 3

UNIT: 2295
PROJECT NUMBER & PHASE: 12000000791
CONTRACT NO.: 12-0C5701

DISREGARD PRINTS BEARING EARLIER REVISION DATES

REVISION DATES: 08/30/10 09/16/11 12/22/11 3/15/12

SHEET 13 OF 22

FILE => 55-0245-s-ciso.dgn

USERNAME => s123631 DATE PLOTTED => 17-AUG-2012 TIME PLOTTED => 17:51

DIST	COUNTY	ROUTE	POST MILES TOTAL PROJECT	SHEET No.	TOTAL SHEETS
12	Ora	91	0.9/5.4	704	885

REGISTERED CIVIL ENGINEER 3-15-2012 DATE

8-13-12
PLANS APPROVAL DATE

The State of California or its officers or agents shall not be responsible for the accuracy or completeness of scanned copies of this plan sheet.

REGISTERED PROFESSIONAL ENGINEER T. A. Kirilov No. C67708 Exp. 06/30/13 CIVIL STATE OF CALIFORNIA

OCTA
550 S MAIN STREET
ORANGE, CA. 92868

RBF CONSULTING
14725 ALTON PARKWAY
IRVINE, CA 92677

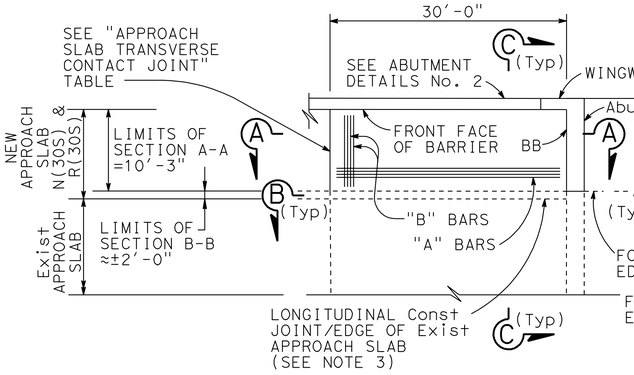

ABUT 1 PLAN

1" = 10'

3

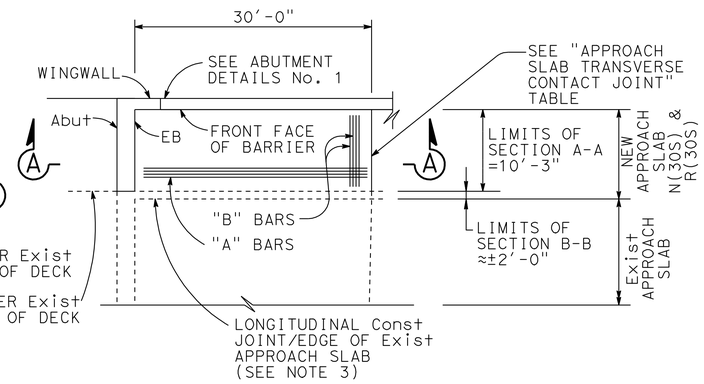

ABUT 5 PLAN

1" = 10'

3

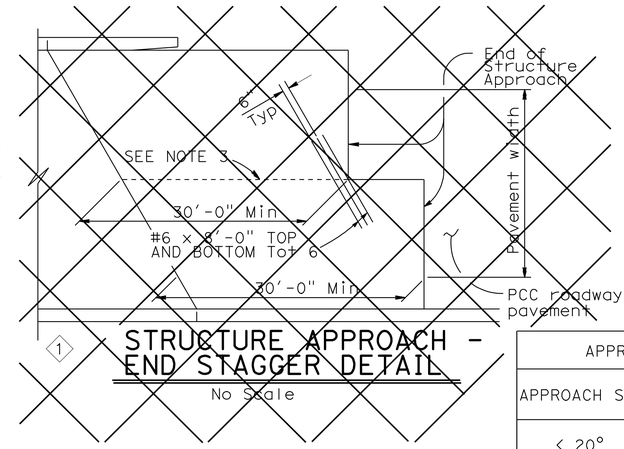

1

STRUCTURE APPROACH - END STAGGER DETAIL

No Scale

APPROACH SLAB TRANSVERSE CONTACT JOINT		
APPROACH SKEW	WITH AC ROADWAY PAVEMENT	WITH PCC ROADWAY PAVEMENT
< 20°	PARALLEL TO FACE OF PN	PARALLEL TO FACE OF PN
20° - 45°	PARALLEL TO FACE OF PN USE "DETAIL A"	STAGGER LINES 24" TO 36" APART
> 45°	PARALLEL TO FACE OF PN USE "DETAIL A"	STAGGER AT EACH LANE LINE

1

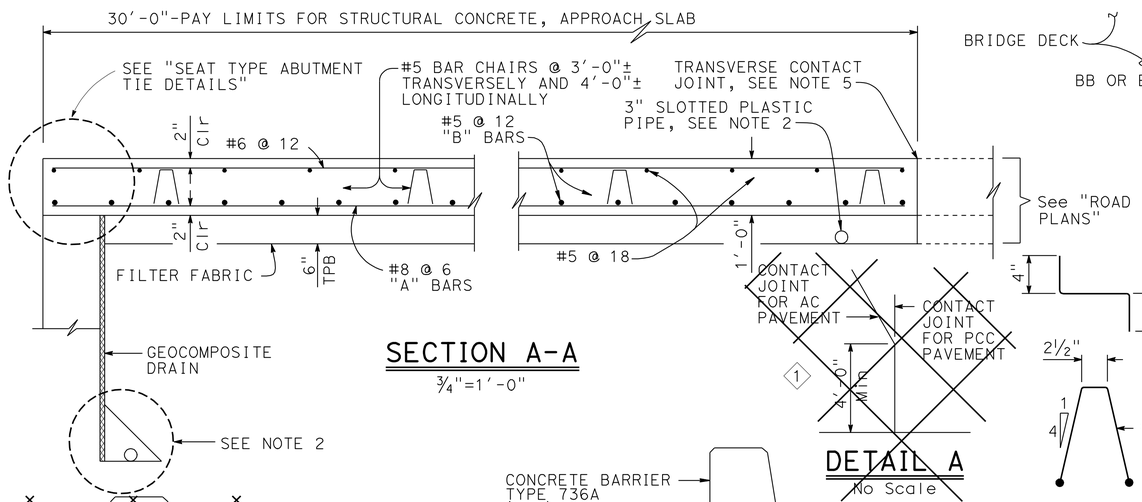

SECTION A-A

¾"=1'-0"

1

DETAIL A

No Scale

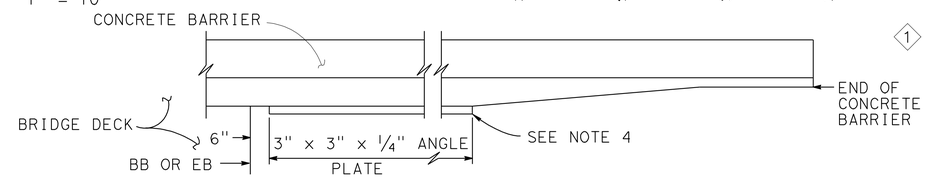

EDGE ANGLE DETAIL

½"=1'-0"

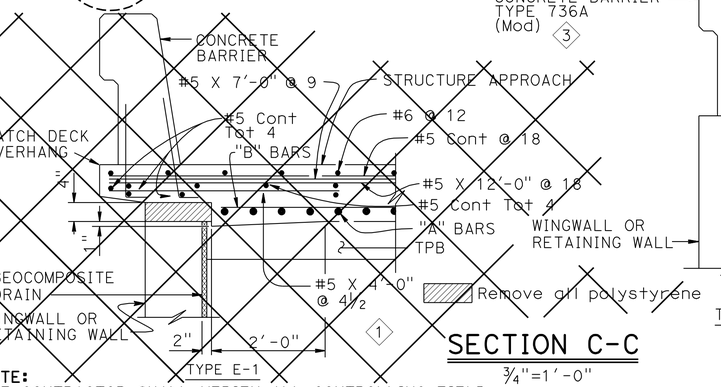

1

SECTION C-C

¾"=1'-0"

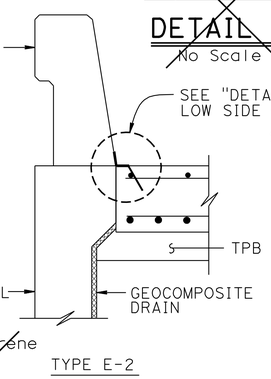

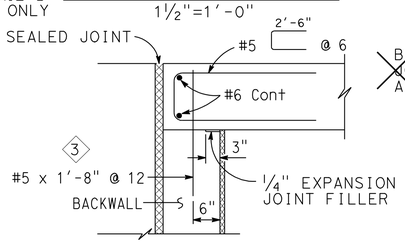

MR ≤ 2"

BAR CHAIR DETAIL

1½"=1'-0"

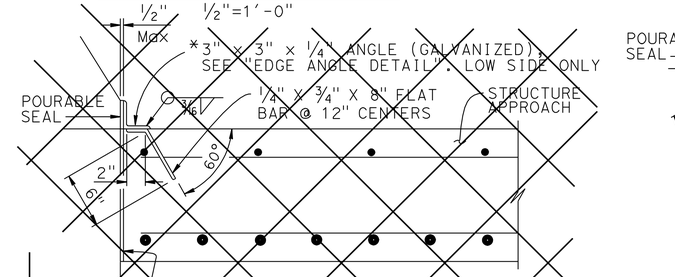

1

DETAIL B

1½" = 1'-0"

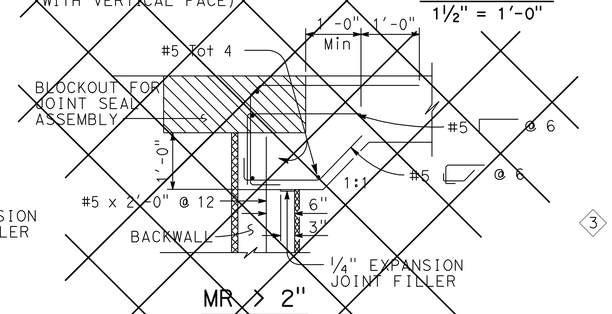

MR > 2"

SEAT TYPE ABUTMENT TIE DETAILS (SEE NOTE 1)

¾"=1'-0"

1

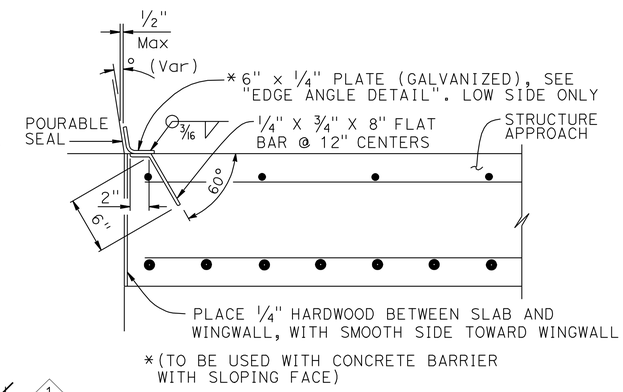

NOTES:

1. For details not shown, see Structure Plans. For MR ≤ 2", adjust bar reinforcement to clear a sawcut for sealed joint, when required
2. For drainage details, see "STRUCTURE APPROACH DRAINAGE DETAILS" sheet
3. Longitudinal construction joints, when permitted by the Engineer, shall be located on lane lines
4. End angle or plate at beginning of barrier transition, end of wingwall or end of structure approach as applicable
5. (3) For transverse contact joint with new PCC paving, refer to Revised Standard Plan P10
6. At the Contractor's option, approach slab transverse reinforcement may be placed parallel to paving notch. Spacing of transverse reinforcement is measured along ℄ roadway
7. (2) For Section B-B, see "STRUCTURE APPROACH TYPE R(30S)" sheet

NOTE:
THE CONTRACTOR SHALL VERIFY ALL CONTROLLING FIELD DIMENSIONS BEFORE ORDERING OR FABRICATING ANY MATERIAL.

REVISED STANDARD DRAWING

FILE NO. xs3-120

APPROVAL DATE July 2011

(1) Does Not Apply
(2) Added Detail or Note
(3) Modified Detail or Note

STATE OF CALIFORNIA
DEPARTMENT OF TRANSPORTATION

DIVISION OF ENGINEERING SERVICES

BRIDGE NO. 55-0245
POST MILE 4.26

EAST St UC (WIDEN)

STRUCTURE APPROACH TYPE N(30S)

DS OSD 2147A (ENGLISH STANDARD DRAWING "XS" BORDER REV. (02-02-11)

ORIGINAL SCALE IN INCHES FOR REDUCED PLANS 0 1 2 3

UNIT: 2295
PROJECT NUMBER & PHASE: 12000000791
CONTRACT NO.: 12-0C5701

DISREGARD PRINTS BEARING EARLIER REVISION DATES

REVISION DATES 08/30/10 09/06/11 12/20/11 3/15/12

SHEET 14 OF 22

FILE => 55-0245-s-sa30n.dgn

USERNAME => s123631 DATE PLOTTED => 17-AUG-2012 TIME PLOTTED => 17:52

DIST	COUNTY	ROUTE	POST MILES TOTAL PROJECT	SHEET No.	TOTAL SHEETS
12	Ora	91	0.9/5.4	705	885

REGISTERED CIVIL ENGINEER 3-15-2012 DATE

8-13-12
PLANS APPROVAL DATE

The State of California or its officers or agents shall not be responsible for the accuracy or completeness of scanned copies of this plan sheet.

REGISTERED PROFESSIONAL ENGINEER T. A. Kirilov No. C67708 Exp. 06/30/13 CIVIL STATE OF CALIFORNIA

OCTA
550 S MAIN STREET
ORANGE, CA. 92868

RBF CONSULTING
14725 ALTON PARKWAY
IRVINE, CA 92677

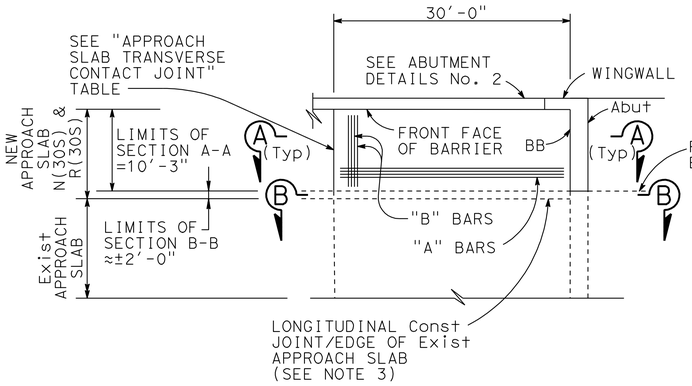

ABUT 1 PLAN

1" = 10' (3)

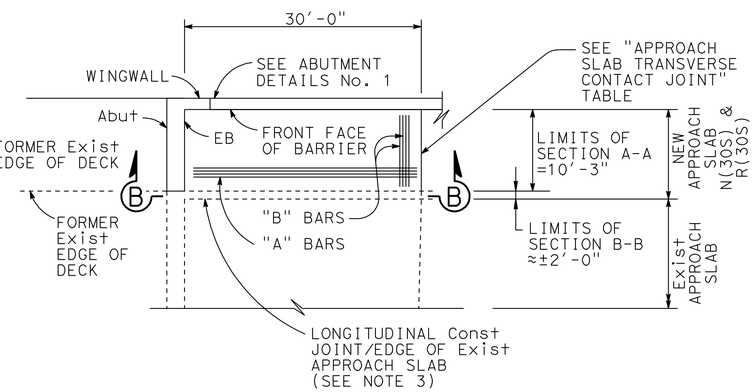

ABUT 5 PLAN

1" = 10' (3)

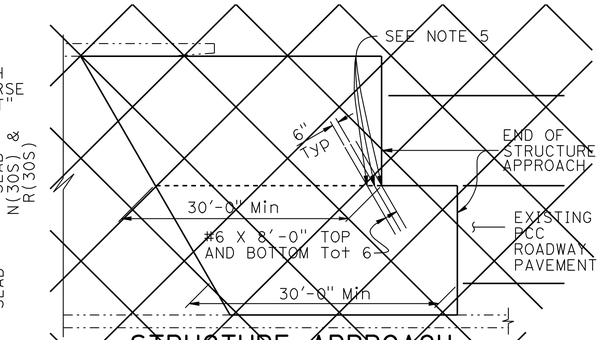

STRUCTURE APPROACH - END STAGGER DETAIL

NO SCALE (1)

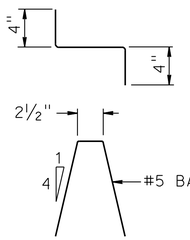

BAR CHAIR DETAIL

1½" = 1'-0"

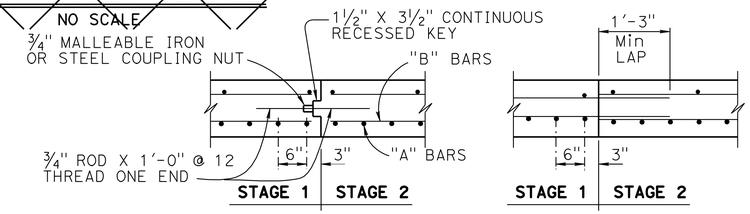

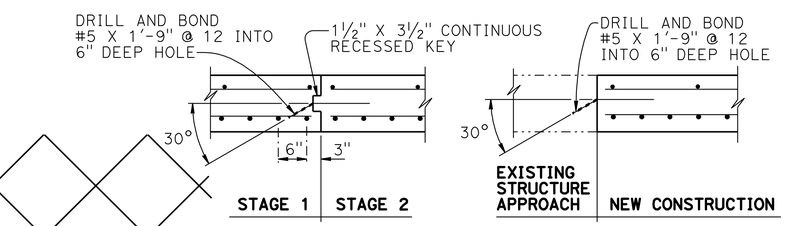

LONGITUDINAL CONSTRUCTION JOINT ALTERNATIVES

¾" = 1'-0"

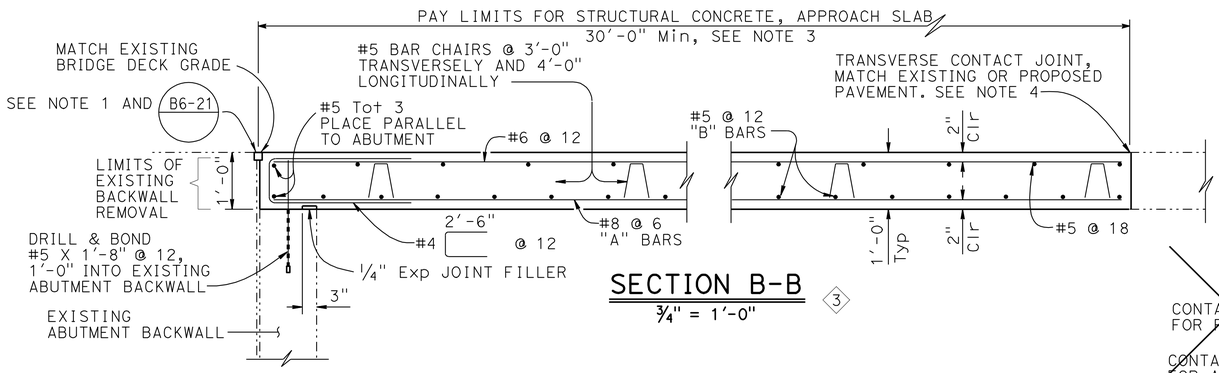

SECTION B-B

¾" = 1'-0" (3)

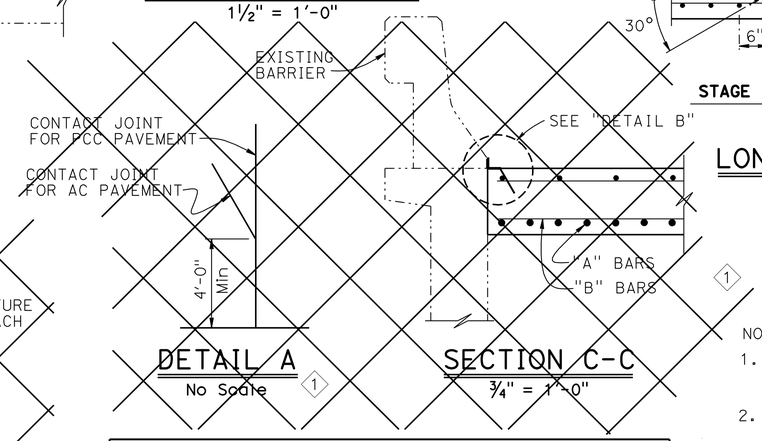

DETAIL A

No Scale (1)

SECTION C-C

¾" = 1'-0" (1)

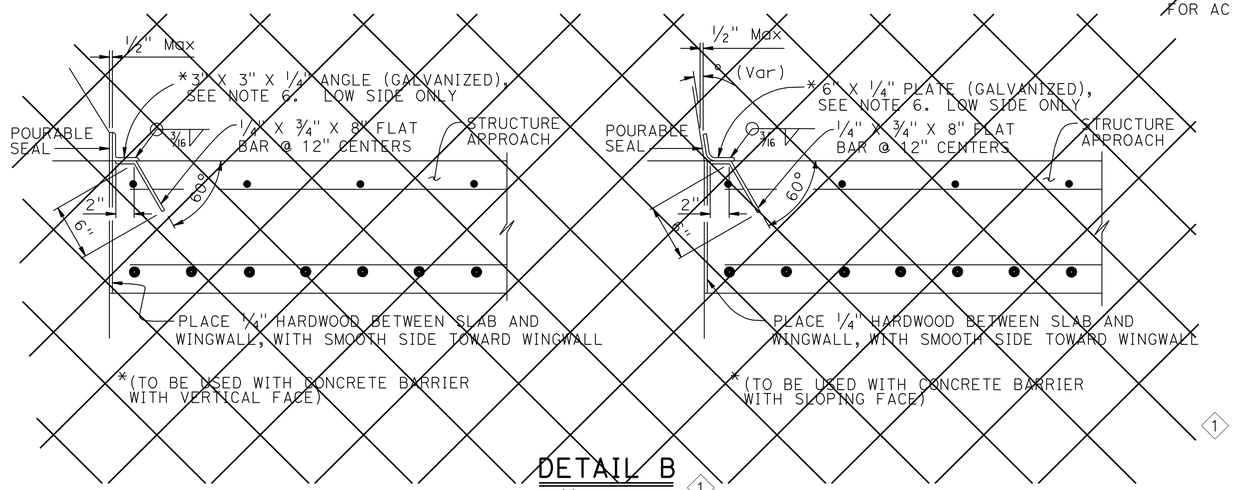

DETAIL B

1½" = 1'-0" (1)

NOTES:

1. Sealed joint,for MR see Structure Plans. Adjust bar reinforcement to clear a sawcut for sealed joint, when required
2. Longitudinal construction joints, when permitted by Engineer, shall be located on lane lines
3. Transverse contact joint shall be a minimum of 5'-0" from an existing or constructed weakened plane joint
4. (3) For transverse contact joint with new PCC paving, refer to Revised Standard Plan P10
5. (1) Couplers are required for stage construction
6. (1) End angle or plate at beginning of barrier transition, end of wingwall or end of structure approach as applicable
5. (2) For Section A-A, see "STRUCTURE APPROACH TYPE N(30S)" sheet

APPROACH SLAB TRANSVERSE CONTACT JOINT		
APPROACH SKEW	WITH AC ROADWAY PAVEMENT	WITH PCC ROADWAY PAVEMENT
< 10°	PARALLEL TO FACE OF PN	PARALLEL TO FACE OF PN
10° - 45°	PARALLEL TO FACE OF PN USE "DETAIL A"	STAGGER LINES 24' TO 36' APART
> 45°	PARALLEL TO FACE OF PN USE "DETAIL A"	STAGGER AT EACH LANE LINE

NOTE:
THE CONTRACTOR SHALL VERIFY ALL CONTROLLING FIELD DIMENSIONS BEFORE ORDERING OR FABRICATING ANY MATERIAL.

REVISED STANDARD DRAWING

FILE NO. xs3-130

APPROVAL DATE July 2011

(1) Does Not Apply
(2) Added Detail or Note
(3) Modified Detail or Note

STATE OF CALIFORNIA
DEPARTMENT OF TRANSPORTATION

DIVISION OF ENGINEERING SERVICES

BRIDGE NO. 55-0245
POST MILE 4.26

EAST St UC (WIDEN)

STRUCTURE APPROACH TYPE R(30S)

DS OSD 2147A (ENGLISH STANDARD DRAWING "XS" BORDER REV. (02-02-11)

ORIGINAL SCALE IN INCHES FOR REDUCED PLANS 0 1 2 3

UNIT: 2295
PROJECT NUMBER & PHASE: 12000000791
CONTRACT NO.: 12-0C5701

DISREGARD PRINTS BEARING EARLIER REVISION DATES

REVISION DATES: 08/30/10 09/30/11 12/22/11 3/15/12

SHEET 15 OF 22

FILE => 55-0245-s-sa30r.dgn

USERNAME => s123631 DATE PLOTTED => 17-AUG-2012 TIME PLOTTED => 17:52

DIST	COUNTY	ROUTE	POST MILES TOTAL PROJECT	SHEET No.	TOTAL SHEETS
12	Ora	91	0.9/5.4	706	885

REGISTERED CIVIL ENGINEER 3-15-2012 DATE

8-13-12
PLANS APPROVAL DATE

REGISTERED PROFESSIONAL ENGINEER T. A. Kirilov No. C67708 Exp. 06/30/13 CIVIL STATE OF CALIFORNIA

The State of California or its officers or agents shall not be responsible for the accuracy or completeness of scanned copies of this plan sheet.

OCTA
550 S MAIN STREET
ORANGE, CA. 92868

RBF CONSULTING
14725 ALTON PARKWAY
IRVINE, CA 92677

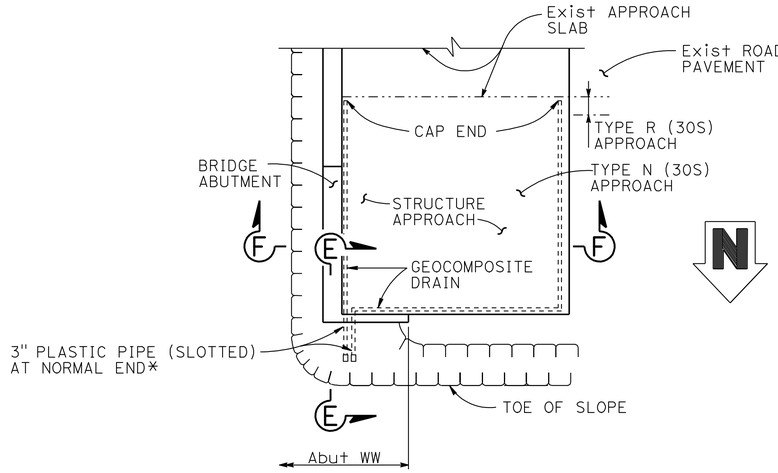

TYPICAL PLAN

1" = 10'

3 Abut 1 SHOWN, Abut 5 SIMILAR

* FOR PIPE LAYOUT AT STAGGERED END, SEE "DETAIL B"

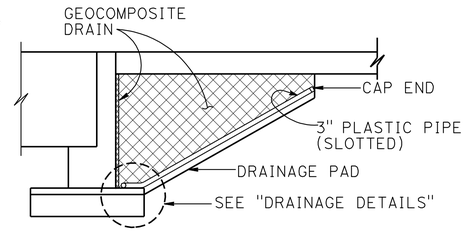

CANTILEVER WINGWALL

SECTION F-F

1/4" = 1'-0"

3

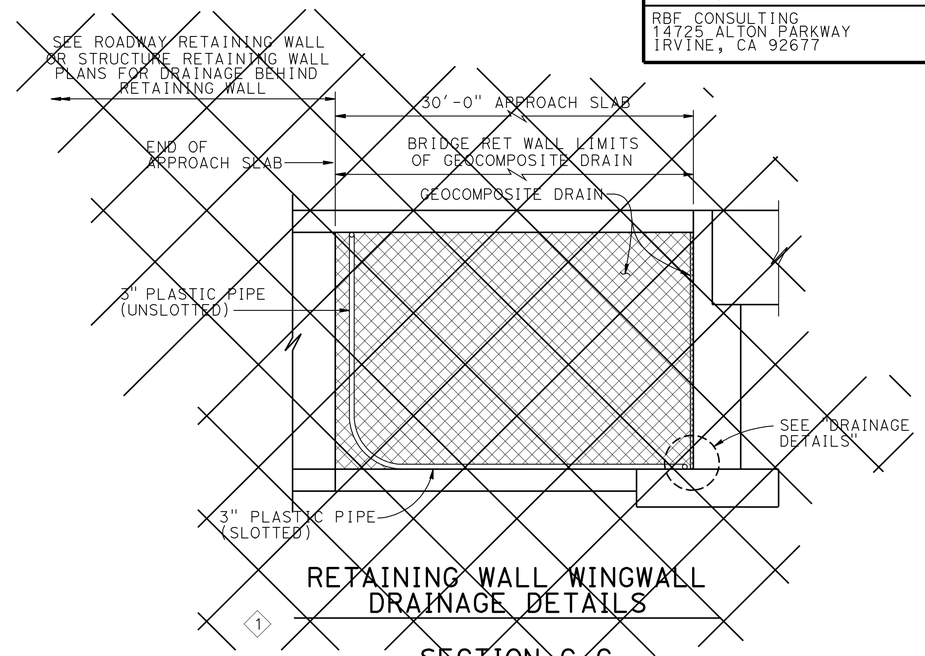

RETAINING WALL WINGWALL DRAINAGE DETAILS

1

SECTION G-G

1/4" = 1'-0"

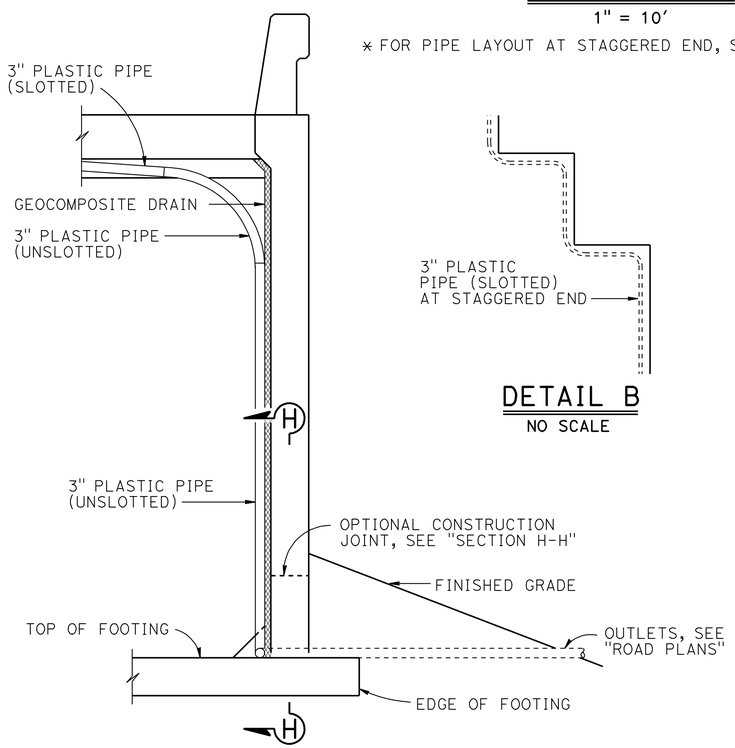

SECTION E-E

1/2" = 1'-0"

3

NOTE: Bends and junctions in 3" plastic pipe are 30" radius Min

DETAIL B

NO SCALE

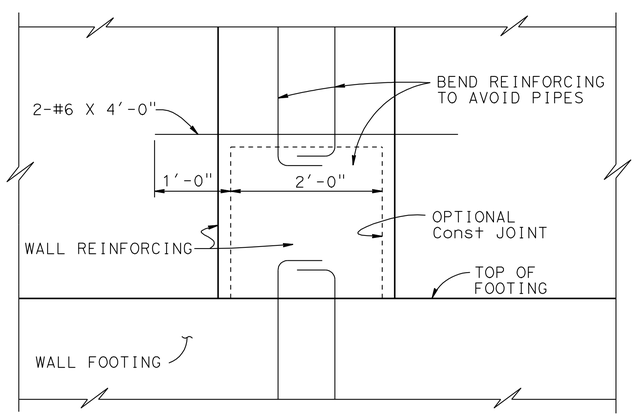

SECTION H-H

1" = 1'-0"

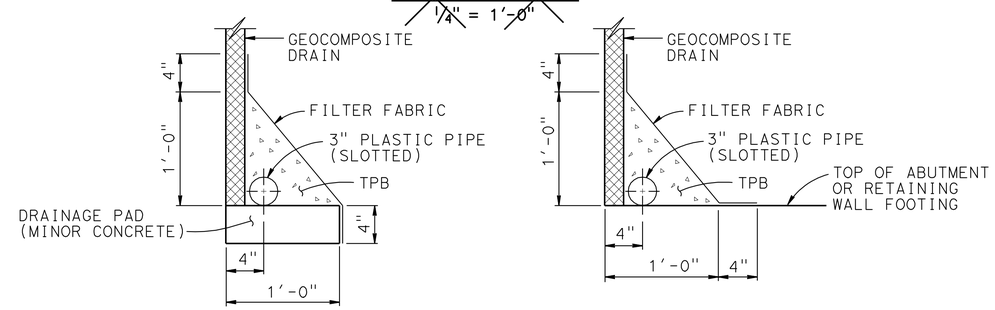

WITHOUT FOOTING

WITH FOOTING

DRAINAGE DETAILS

1 1/2" = 1'-0"

NOTE:
THE CONTRACTOR SHALL VERIFY ALL CONTROLLING FIELD DIMENSIONS BEFORE ORDERING OR FABRICATING ANY MATERIAL.

REVISED STANDARD DRAWING

FILE NO. xs3-110

APPROVAL DATE July 2011

1 Does Not Apply
2 Added Detail or Note
3 Modified Detail or Note

STATE OF CALIFORNIA
DEPARTMENT OF TRANSPORTATION

DIVISION OF ENGINEERING SERVICES

BRIDGE NO. 55-0245
POST MILE 4.26

EAST St UC (WIDEN)

STRUCTURE APPROACH DRAINAGE DETAILS

DS OSD 2147A (ENGLISH STANDARD DRAWING "XS" BORDER REV. (02-02-11)

ORIGINAL SCALE IN INCHES FOR REDUCED PLANS 0 1 2 3

UNIT: 2295
PROJECT NUMBER & PHASE: 12000000791
CONTRACT NO.: 12-0C5701

DISREGARD PRINTS BEARING EARLIER REVISION DATES

REVISION DATES 08/30/10 09/16/11 12/22/11 3/15/12

SHEET 16 OF 22

FILE => 55-0245-s-sadd.dgn

USERNAME => s121614 DATE PLOTTED => 17-AUG-2012 TIME PLOTTED => 06:03

DIST	COUNTY	ROUTE	POST MILES TOTAL PROJECT	SHEET No.	TOTAL SHEETS
12	Ora	91	0.9/5.4	707	885

REGISTERED CIVIL ENGINEER 3-15-2012 DATE

8-13-12
PLANS APPROVAL DATE

REGISTERED PROFESSIONAL ENGINEER T. A. Kirilov No. C67708 Exp. 06/30/13 CIVIL STATE OF CALIFORNIA

The State of California or its officers or agents shall not be responsible for the accuracy or completeness of scanned copies of this plan sheet.

OCTA
550 S MAIN STREET
ORANGE, CA. 92868

RBF CONSULTING
14725 ALTON PARKWAY
IRVINE, CA 92677

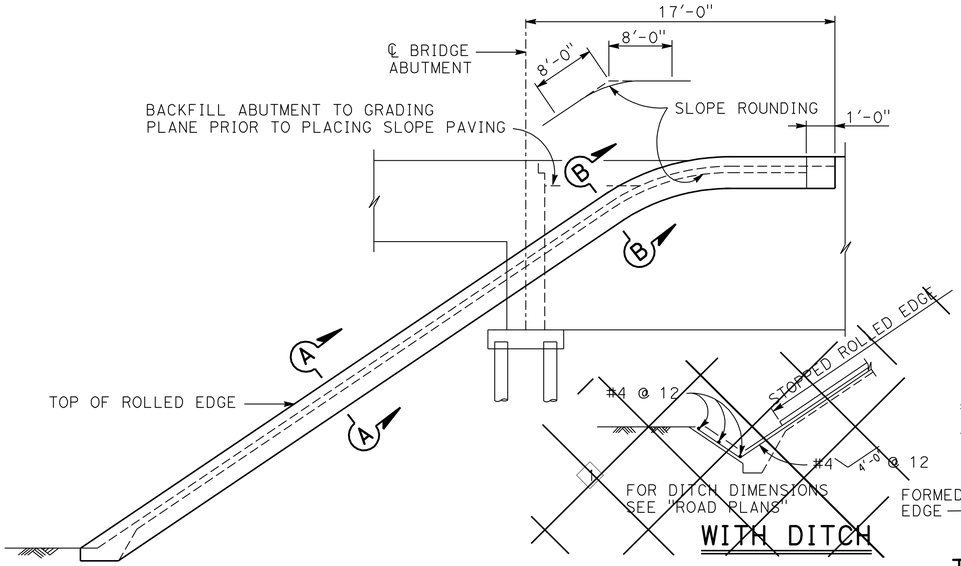

WITH DITCH

WINGWALL ELEVATION 3

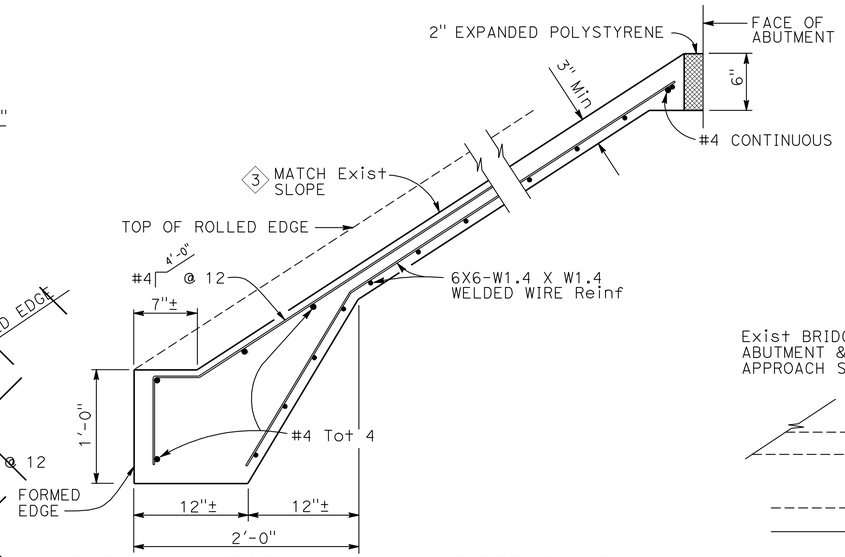

TYPICAL SECTION - CONCRETE PAVING

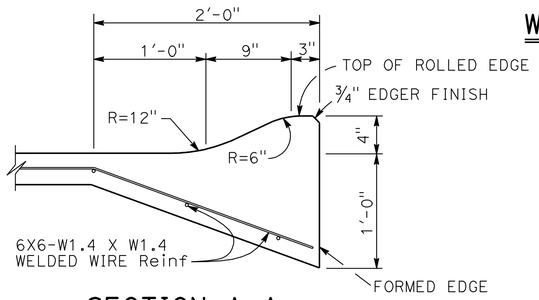

SECTION A-A

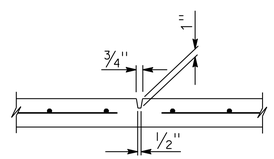

PREFORMED GROOVE

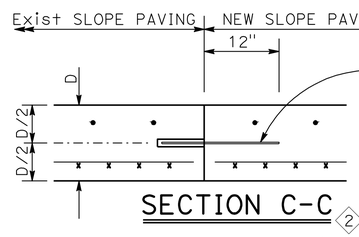

SECTION C-C 2

WEEP HOLES NOT REQUIRED WHEN IS INDICATED ON DETAIL SHEETS (BO-3 / 3-5)

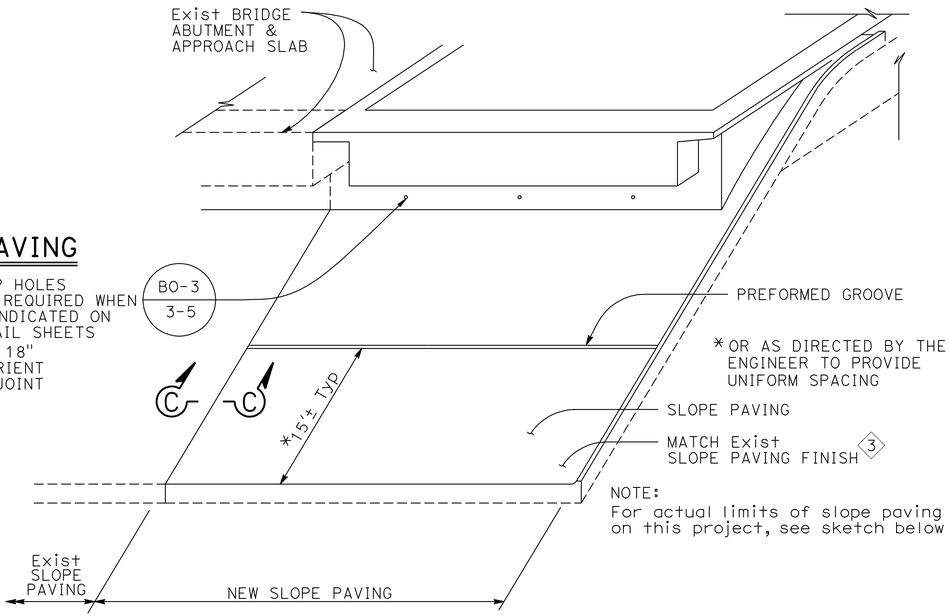

PICTORIAL VIEW OF TYPICAL INSTALLATION 2

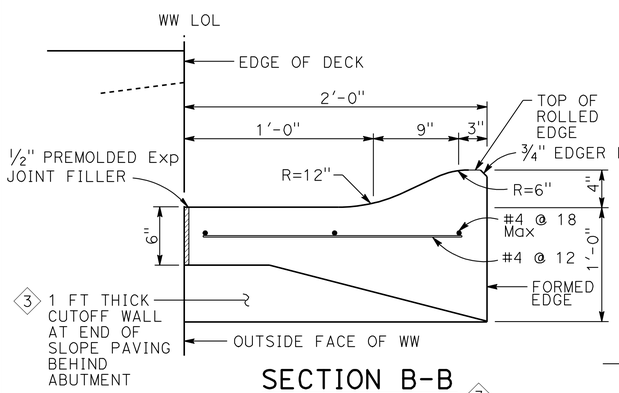

SECTION B-B 3

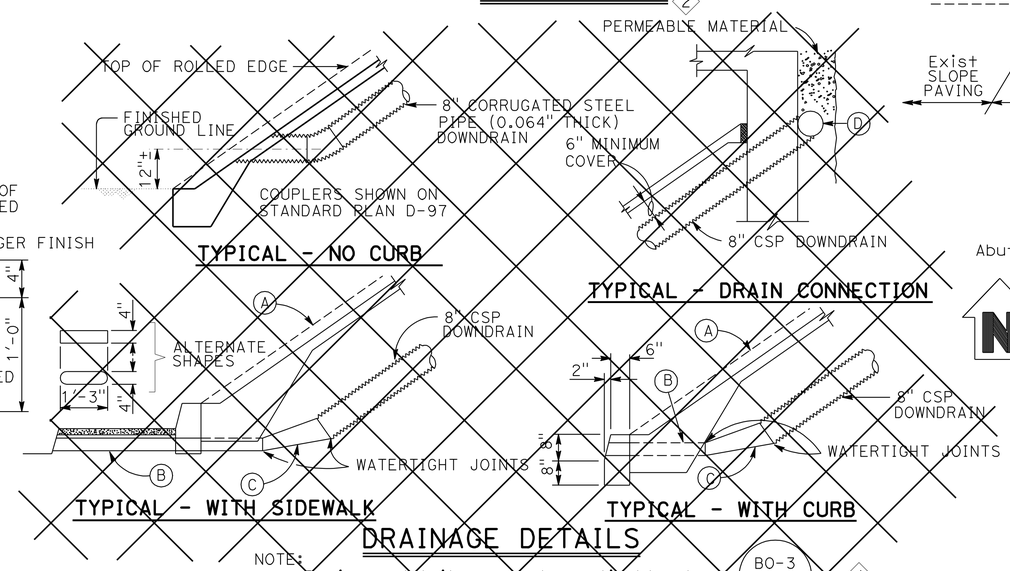

DRAINAGE DETAILS

NOTE:
Drainage details are only applicable when (BO-3 / 3-5) is indicated on detail sheets. 1

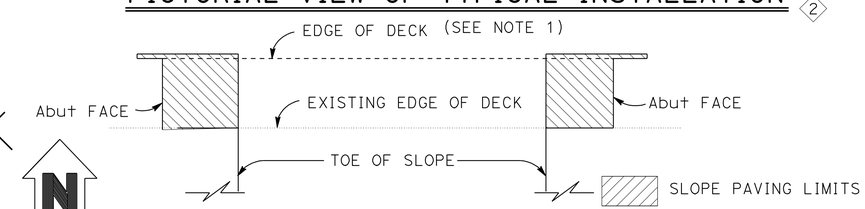

LIMITS OF SLOPE PAVING & DRAINAGE LAYOUT 2

NOTES:
1. See "BRIDGE REMOVAL DETAILS" sheet for limits of existing slope paving removal. 2
- (A) Top of rolled edge
- (B) Conduit: 0.064" galv corrugated steel or 0.109" smooth galv steel
- (C) Taper: 0.064" galv corrugated steel or 0.109" smooth galv steel 1
- (D) 8" perforated steel pipe (0.064" thick) underdrain behind abutment. Connect to downdrain as shown on limits of Slope Paving & Drainage layout.

NOTE:
THE CONTRACTOR SHALL VERIFY ALL CONTROLLING FIELD DIMENSIONS BEFORE ORDERING OR FABRICATING ANY MATERIAL.

REVISED STANDARD DRAWING

FILE NO. xs4-210

APPROVAL DATE July 2011

1 Does Not Apply
2 Added Detail or Note
3 Modified Detail or Note

STATE OF CALIFORNIA
DEPARTMENT OF TRANSPORTATION

DIVISION OF ENGINEERING SERVICES

BRIDGE NO. 55-0245
POST MILE 4.26

EAST St UC (WIDEN)

SLOPE PAVING-FULL SLOPE

DS OSD 2147A (ENGLISH STANDARD DRAWING "XS" BORDER REV. (02-02-11)

ORIGINAL SCALE IN INCHES FOR REDUCED PLANS 0 1 2 3

UNIT: 2295
PROJECT NUMBER & PHASE: 12000000791
CONTRACT NO.: 12-0C5701

DISREGARD PRINTS BEARING EARLIER REVISION DATES

REVISION DATES 08/30/10 09/16/11 12/20/11 3/15/12

SHEET 17 OF 22

FILE => 55-0245-s-spfs.dgn

USERNAME => s12614 DATE PLOTTED => 17-AUG-2012 TIME PLOTTED => 06:04

DIST	COUNTY	ROUTE	POST MILES TOTAL PROJECT	SHEET No	TOTAL SHEETS
12	Ora	91	0.9/5.4	708	885

REGISTERED CIVIL ENGINEER 3-15-2012 DATE

8-13-12
PLANS APPROVAL DATE

REGISTERED PROFESSIONAL ENGINEER
T. A. Kirilov
No. C 67708
Exp. 06/30/13
CIVIL
STATE OF CALIFORNIA

The State of California or its officers or agents shall not be responsible for the accuracy or completeness of scanned copies of this plan sheet.

OCTA
550 S MAIN STREET
ORANGE, CA. 92868

RBF CONSULTING
14725 ALTON PARKWAY
IRVINE, CA 92618

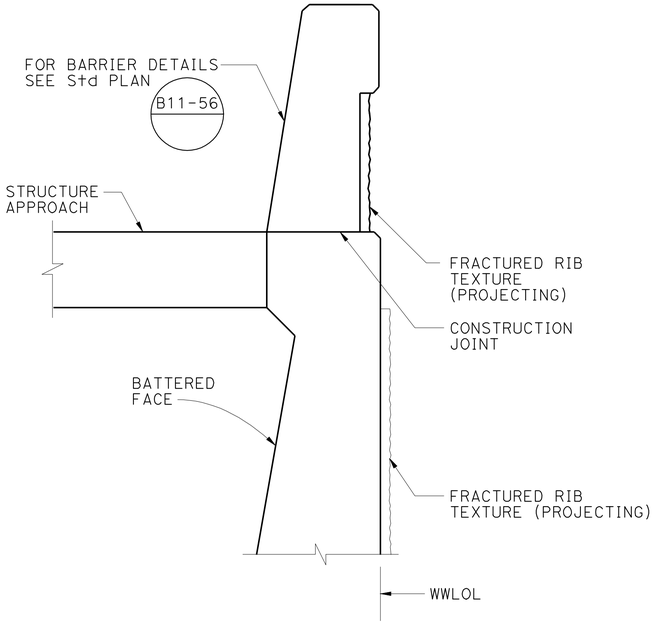

BARRIER TYPE 736A (MODIFIED) ON WINGWALL

1" = 1'-0"

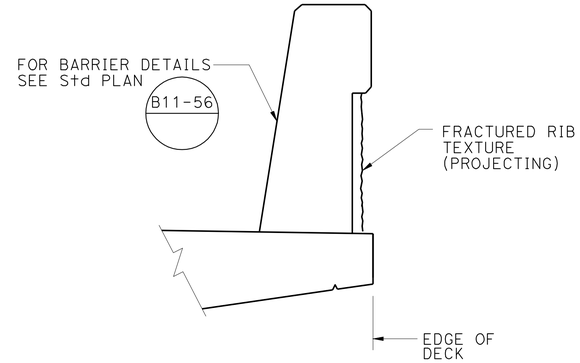

BARRIER TYPE 736 (MODIFIED) ON BRIDGE DECK

1" = 1'-0"

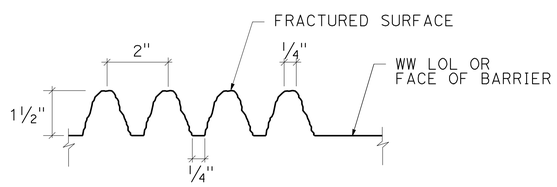

FRACTURED RIB TEXTURE 1 1/2" (PROJECTING)

NO SCALE

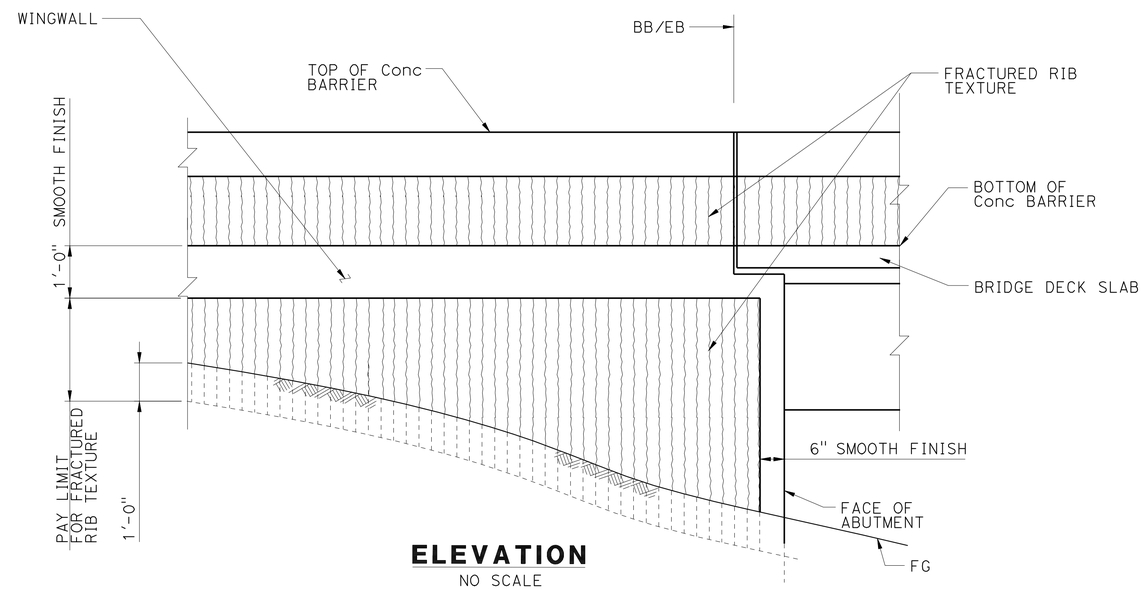

ELEVATION

NO SCALE

NOTE:
THE CONTRACTOR SHALL VERIFY ALL CONTROLLING FIELD DIMENSIONS BEFORE ORDERING OR FABRICATING ANY MATERIAL.

DESIGN OVERSIGHT Luqi Yang
3-29-12
SIGN OFF DATE

	BY	CHECKED
DESIGN	T. Kirilov	V. J. Mosquera
DETAILS	J. Saldana	V. J. Mosquera
QUANTITIES	C. Stelea	R. Kelcher

PREPARED FOR THE STATE OF CALIFORNIA DEPARTMENT OF TRANSPORTATION

V. Jessica Mosquera
PROJECT ENGINEER

BRIDGE NO. 55-0245
POST MILES 4.26

EAST St UC (WIDEN)
ARCHITECTURAL DETAILS

DESIGN DETAIL SHEET (ENGLISH) (REV.7/16/10)

ORIGINAL SCALE IN INCHES FOR REDUCED PLANS 0 1 2 3

UNIT: 2295
PROJECT NUMBER & PHASE: 12000000791 CONTRACT NO.: 12-0C5701

DISREGARD PRINTS BEARING EARLIER REVISION DATES

REVISION DATES 08/20/10 09/16/11 12/22/11 03/15/12

SHEET 18 OF 22

FILE => 55-0245-u-miscdt01.dgn

USERNAME => s12161d DATE PLOTTED => 17-AUG-2012 TIME PLOTTED => 06:04

DIST	COUNTY	ROUTE	POST MILES TOTAL PROJECT	SHEET No	TOTAL SHEETS
12	Ora	91	0.9/5.4	709	885

T. Kirilov 3-15-2012
REGISTERED CIVIL ENGINEER DATE

8-13-12
PLANS APPROVAL DATE

REGISTERED PROFESSIONAL ENGINEER T. A. Kirilov No. C 67708 Exp. 06/30/13 CIVIL STATE OF CALIFORNIA

The State of California or its officers or agents shall not be responsible for the accuracy or completeness of scanned copies of this plan sheet.

OCTA
550 S MAIN STREET
ORANGE, CA. 92868

RBF CONSULTING
14725 ALTON PARKWAY
IRVINE, CA 92618

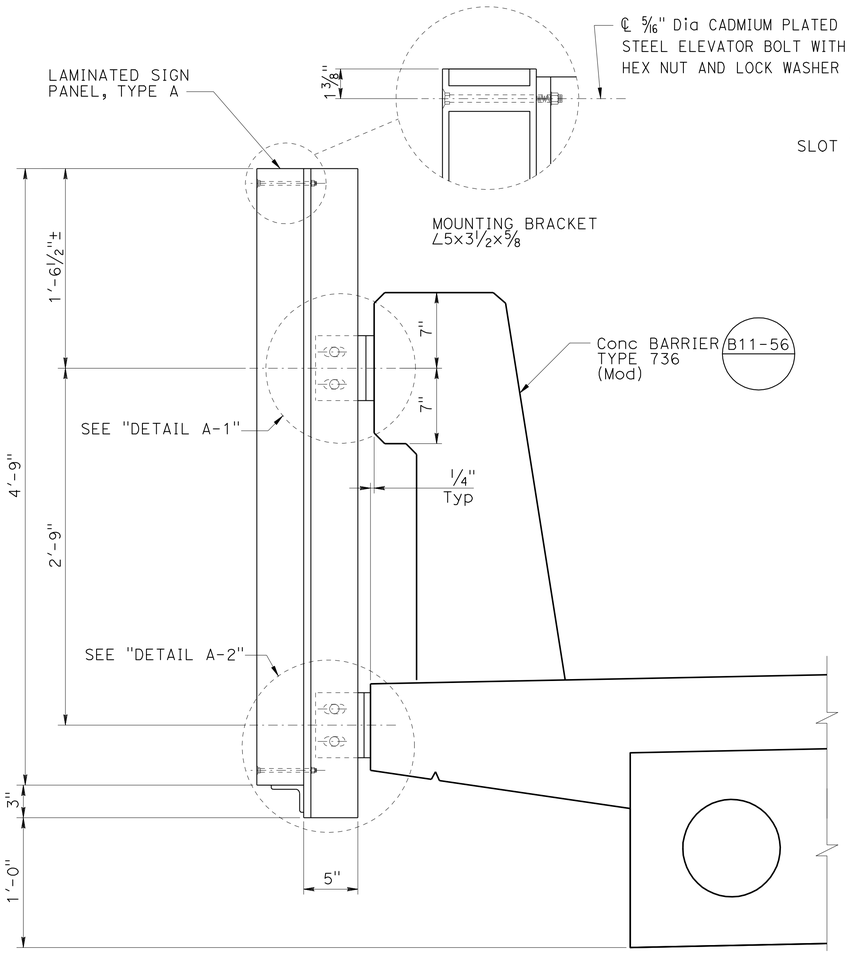

TYPICAL MOUNTING BRACKET ASSEMBLY

NO SCALE

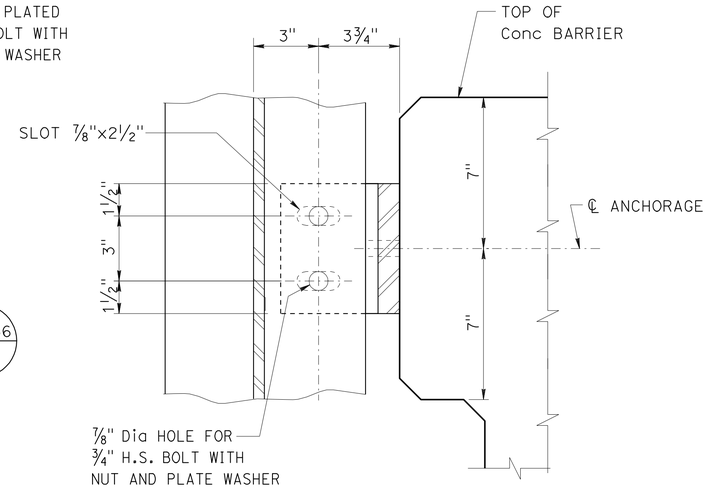

DETAIL "A-1"

NO SCALE

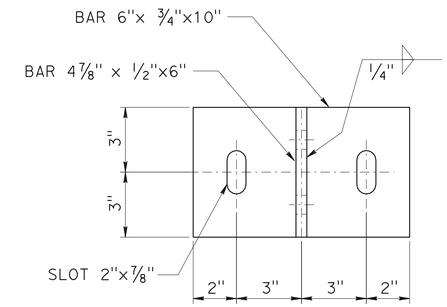

BAR DETAIL A-1

NO SCALE

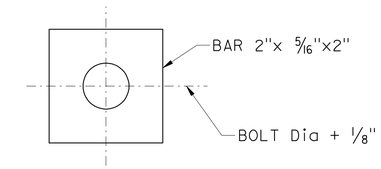

PLATE WASHER

NO SCALE
FOR ALL SLOTTED HOLES

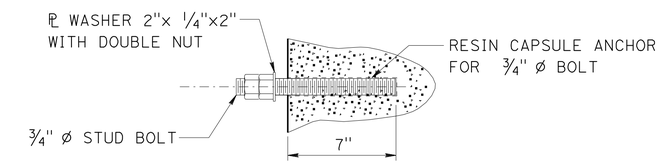

RESIN CAPSULE BOLT ANCHORAGE

NO SCALE

Note:
Resin capsule anchorage is subject to approval of the Engineer.
Installation procedures shall comply with manufacturer's instructions.
Contractor to provide anchor bolt layout before anchor bolts are placed.
Resin capsule bolt locations shall be layed out prior to pouring deck and barrier rail concrete to avoid interference with reinforcing.
Resin capsule bolt anchors shall be installed in sound concrete free of cracks or delamination.

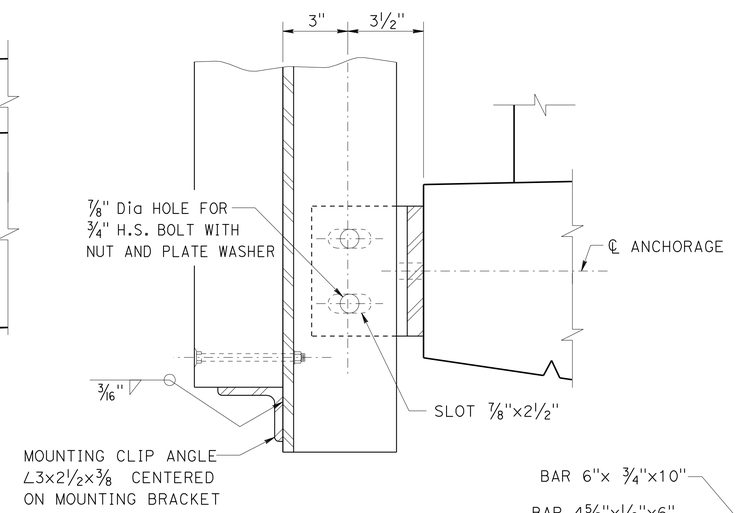

DETAIL "A-2"

NO SCALE

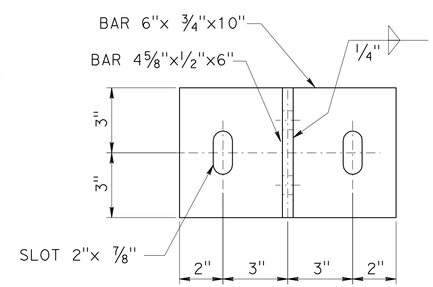

BAR DETAIL A-2

NO SCALE

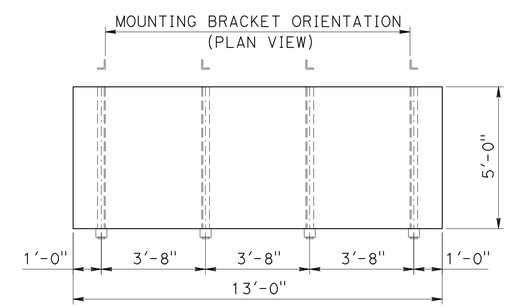

MOUNTING BRACKET ASSEMBLY SPACING

SIGN (Y) FSBT

NO SCALE

NOTES:

1. Existing bridge mounted sign anchors shall be cut flush with edge of deck by mechanical means. Damage to concrete surface resulting from cut shall be repaired at the Contractor's expense to the Engineer's satisfaction. Cut ends of anchors shall be coated with 2 coats of zinc rich primer.
2. For New Bridge Mounted Sign location, see "ROAD PLANS".
3. All bridge mounted sign steel shall be galvanized.
4. Bridge mounted sign anchorage to bridge has been designed using:
   AASHTO "Standard Specifications for Structural Supports for Highway Signs, Luminaires, and Traffic Signals" Fifth Edition (2009) using the following parameters:
   V=85 MPH
   I_r= 1.15

NOTE:
THE CONTRACTOR SHALL VERIFY ALL CONTROLLING FIELD DIMENSIONS BEFORE ORDERING OR FABRICATING ANY MATERIAL.

Luqi Yang
DESIGN OVERSIGHT Luqi Yang
3-29-12
SIGN OFF DATE

	BY	CHECKED
DESIGN	T. Kirilov	V. J. Mosquera
DETAILS	J. Saldana	V. J. Mosquera
QUANTITIES	C. Stelea	R. Kelcher

PREPARED FOR THE STATE OF CALIFORNIA DEPARTMENT OF TRANSPORTATION

V. Jessica Mosquera
PROJECT ENGINEER

BRIDGE NO. 55-0245
POST MILES 4.26

EAST St UC (WIDEN)

BRIDGE MOUNTED SIGN DETAILS

DESIGN DETAIL SHEET (ENGLISH) (REV.7/16/10)

ORIGINAL SCALE IN INCHES FOR REDUCED PLANS 0 1 2 3

UNIT: 2295
PROJECT NUMBER & PHASE: 12000000791
CONTRACT NO.: 12-0C5701

DISREGARD PRINTS BEARING EARLIER REVISION DATES
REVISION DATES 09/16/11 12/22/11 02/27/12 03/15/12

SHEET 19 OF 22

FILE => 55-0245-u-sign01.dgn

USERNAME => s121614 DATE PLOTTED => 17-AUG-2012 TIME PLOTTED => 06:04

DIST	COUNTY	ROUTE	POST MILES TOTAL PROJECT	SHEET No	TOTAL SHEETS
12	Ora	91	0.9/5.4	710	885

REGISTERED ENGINEER — DATE 3-15-2012

PLANS APPROVAL DATE 8-13-12

REGISTERED PROFESSIONAL ENGINEER S. PIRATHIVIRAJ No. C71662 EXP. 12/31/13 CIVIL STATE OF CALIFORNIA

The State of California or its officers or agents shall not be responsible for the accuracy or completeness of scanned copies of this plan sheet.

ORANGE COUNTY TRANSPORTATION AUTHORITY
550 S. MAIN STREET
ORANGE, CA 92863-1584

EARTH MECHANICS, INC.
17800 NEWHOPE STREET, SUITE B
FOUNTAIN VALLEY, CA 92708

BENCH MARK

Designation: 1G-164-05 Elev = 109.804
Described by OCS 2005 - Found 3¾" OCS Aluminum Benchmark Disk Stamped "1G-164-05", set in the Nothwesterly Corner of a 4.5 ft. by 11.0 ft. Concrete Catch Basin. Monument is located in the Southeasterly Corner of the intersection of Magnolia Avenue and Buckingham Street, 200 ft. ± from the centerline of Buckingham and 47 ft. Easterly of the centerline of Magnolia. Monument is set level with the Sidewalk

Designation: 2F-25-04 Elev = 162.700
Described by OCS 2004 - Found 3¾" OCS Aluminum Benchmark Disk Stamped "2F-25-04", set in the Nothwesterly Corner of a 7.5 ft. by 4.5 ft. Concrete Catch Basin. Monument is located in the Northeasterly Corner of the intersection of Harbor Boulevard and the Eastbound 91 Freeway On-Ramp, 39 ft. Northerly of the centerline of the On-Ramp and 40 ft. Easterly of the centerline of Harbor Boulevard. Monument is set level with the Sidewalk

Designation: 2D-35-86 Elev = 188.576
Described by OCS 2003 - Found 3¾" OCS Aluminum Benchmark Disk Stamped "2D-35-86", set in the Nothwesterly Corner of a 7 ft. by 14 ft. Concrete Catch Basin. Monument is located in the Southeasterly Corner of the intersection of Placentia Avenue and State College Boulevard, 38 ft. Easterly of the centerline of State College and 70.5 ft. Southerly of the centerline of Placentia. Monument is set level with the Sidewalk

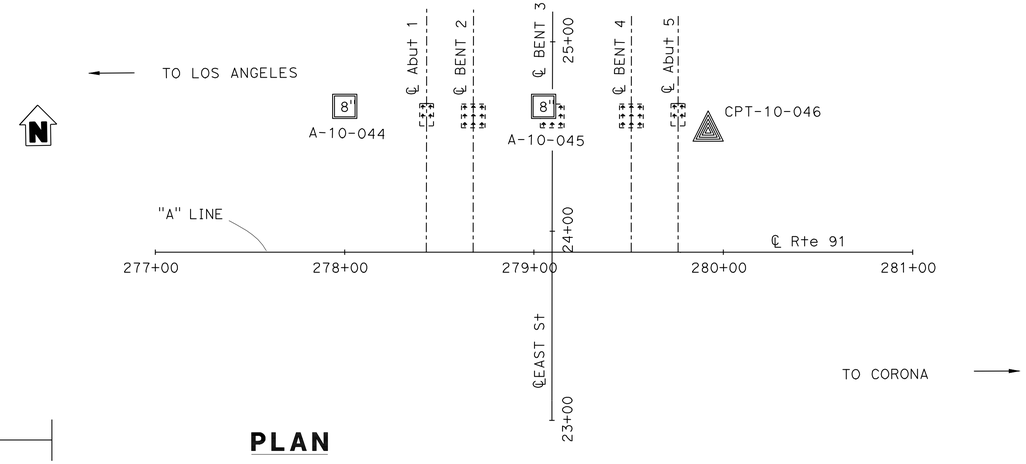

PLAN

1" = 40'

NOTES:

(1) This LOTB sheet was prepared in accordance with the Caltrans Soil and Rock Logging, Classification and Presentation Manual (June 2010).

(2) 2.4" samples were taken using a California Modified Sampler.

(3) An automatic trip hammer system consisting of a hammer weight of 140 lbs falling a distance of 30" was used to advance the drive sampler.

(4) Conversion factor from 2.4" Modified California Ring Sampler blowcounts to Standard Penetration Test (SPT) blowcounts is 0.5.

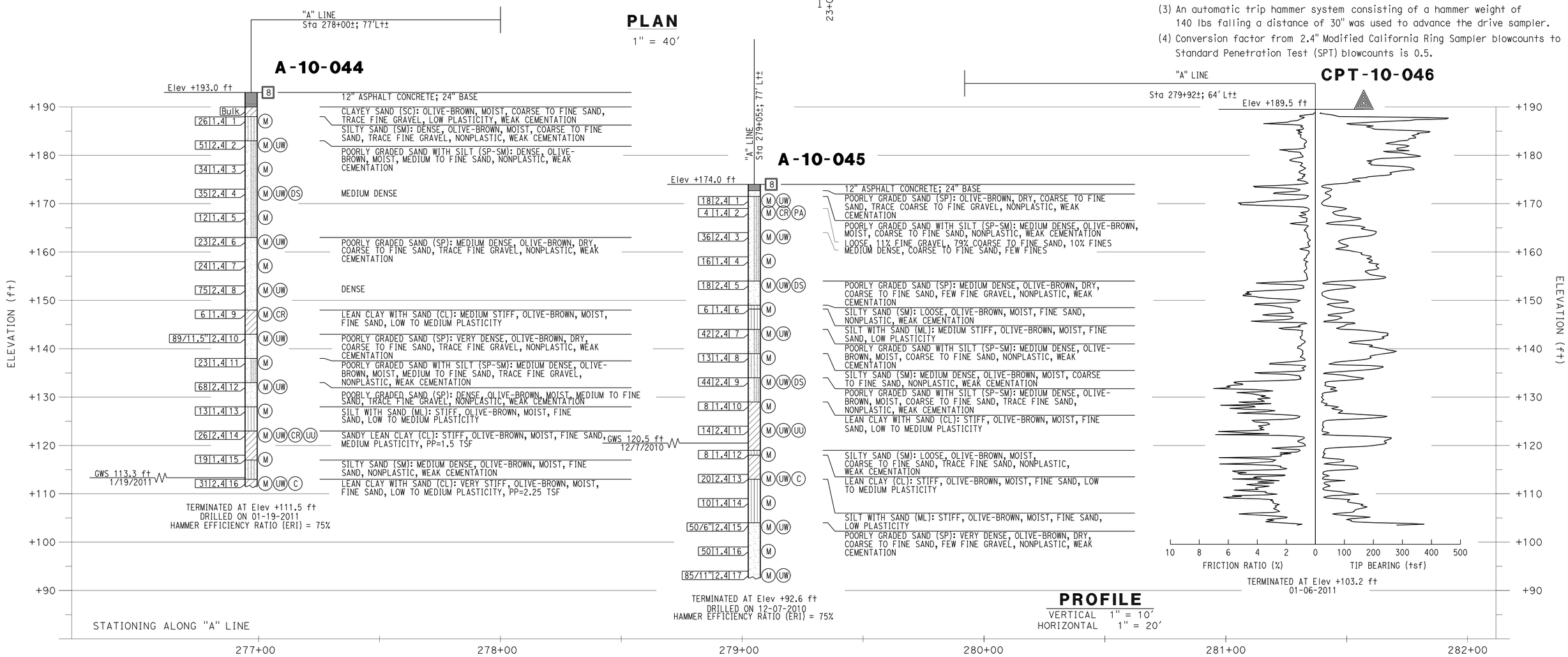

PROFILE

VERTICAL 1" = 10'
HORIZONTAL 1" = 20'

DESIGN OVERSIGHT Luqi Yang	DRAWN BY J. Fang	R. Jie FIELD INVESTIGATION BY:	PREPARED FOR THE STATE OF CALIFORNIA DEPARTMENT OF TRANSPORTATION	S. Pirathiviraj PROJECT ENGINEER	BRIDGE No. 55-0245
3-29-12 SIGN OFF DATE	CHECKED BY S. Pirathiviraj	DATE: 12/2010,1/2011			POST MILES 4.26

EAST St UC (WIDEN)

LOG OF TEST BORINGS 1 OF 3

GS GEOTECHNICAL LOG OF TEST BORINGS SHEET (ENGLISH) (REV. 7/16/10)

ORIGINAL SCALE IN INCHES FOR REDUCED PLANS 0 1 2 3

UNIT: 2295
PROJECT NUMBER & PHASE: 12000000791

DISREGARD PRINTS BEARING EARLIER REVISION DATES — REVISION DATES 08/30/10 09/07/11 12/23/11 02/17/12

SHEET 20 OF 22

CONTRACT NO.: 12-0C5701 PROJECT ID: 12-000004

FILE => 55-0245-z-1tb1.dgn

USERNAME => s121614 DATE PLOTTED => 04-SEP-2012 TIME PLOTTED => 14:58

FED. ROAD DIV. NO.	STATE	PROJ. NO.	FISCAL YEAR	SHEET NO.	TOTAL SHEETS
7	CAL.				

DIST.	COUNTY	ROUTE	SECTION	SHEET NO.	TOTAL SHEETS
07	Ora	91	3.4/R.6	206	323

Bridge Engineer — Civil and Structural Bridges — Caltrans State

DATE APPROVED JULY 1 1958

TO ACCOMPANY PLANS DATED 8-13-12

DIVISION OF ENGINEERING SERVICES - GEOTECHNICAL SERVICES

As-Built Log of Test Borings sheet is considered an informational document only. As such, the State of California registration seal with signature, license number and registration certificate expiration date confirm that this is a true and accurate copy of the original document. This drawing is available and presented only for the convenience of any bidder, contractor or other interested party.

DIST.	COUNTY	ROUTE	POST MILES-TOTAL PROJECT	Sheet No.	Total Sheets
12	Ora	91	0.9/5.4	711	885

GEOTECHNICAL PROFESSIONAL — DATE 3-15-2012

EAST St UC (WIDEN)

LOG OF TEST BORINGS 2 OF 3

NOTE: A COPY OF THIS LOG OF TEST BORINGS IS AVAILABLE AT OFFICE OF STRUCTURE MAINTENANCE AND INVESTIGATIONS, SACRAMENTO, CALIFORNIA

UNIT: 2295
PROJECT NUMBER & PHASE: 12000000791

BRIDGE No.	Sheet	of
55-0245	21	22

REGISTERED PROFESSIONAL ENGINEER — S. PIRATHIVIRAJ — No. C71662 — EXP. 12/31/13 — CIVIL — STATE OF CALIFORNIA

AS BUILT PLANS
Contract No. 07-037424
Date Completed 2-17-67
Document No. 7000022

INFORMATION ON ACTUAL FOUNDATION CONDITIONS ENCOUNTERED IS ON FILE IN BRIDGE GEOLOGY SECTION

Test Boring by Bridge Dept.

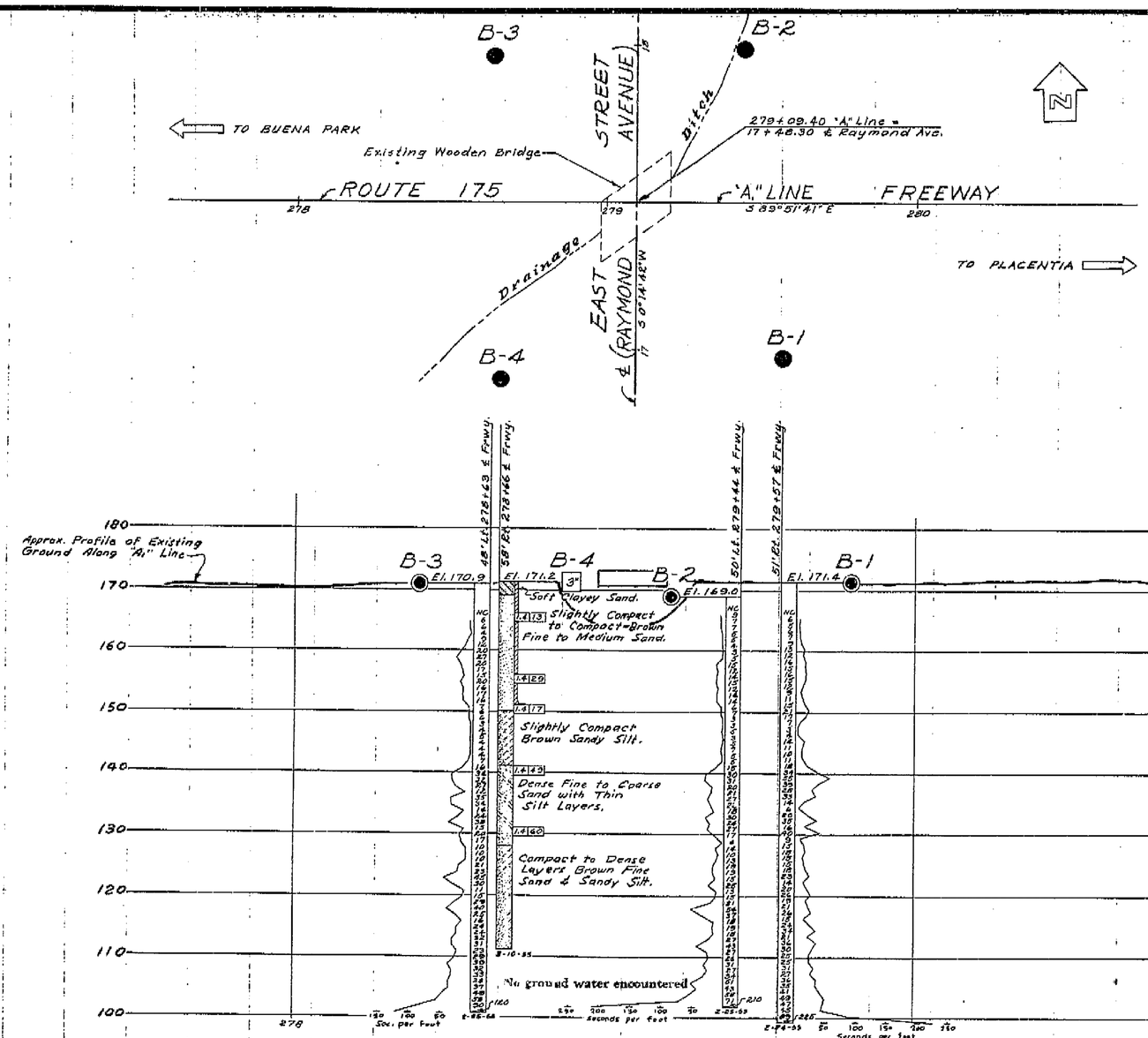

B.M. 27-B-54
Brass Cap in 4" P.C.C. Mon. 19' Lt. Sta. 16+30 East St. 2' off PP #92613E, Bur. 19'
Elev. 170.00'

B.M. 266-B-54
Chisl. Knob in S.E. Corner R.R. Signal Switch Box 98' Lt. Sta. 17+40 S.P.R.R. Tracks.
Elev. 170.96'

SHEET	OF
5	5

FIELD STUDY — M. Curdy
DRAWN — M. H. Bromberg 3-25-55
CHECKED — J. J. Mansky 3-25-55
Approval Recommended By — Bridge Engineer

CLASSIFICATION OF MATERIAL BASED ON STANDARD GRADE SIZE LIMITS

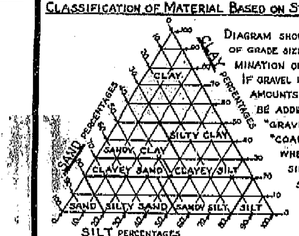

DIAGRAM SHOWING THE BASIS FOR ESTIMATES OF GRADE SIZE DISTRIBUTION USED IN DETERMINATION OF CLASS NAMES. IF GRAVEL IS PRESENT IN APPRECIABLE AMOUNTS THE TERM "GRAVELLY" MAY BE ADDED TO THE CLASS NAME, VIZ. "GRAVELLY SAND." THE TERMS "COARSE", "MEDIUM" AND "FINE" WHEN USED TO DESCRIBE SAND, SILT AND GRAVEL REFER TO STANDARD GRADE SIZE LIMITS.

LEGEND OF EARTH MATERIALS

- GRAVEL
- SAND
- SILT
- CLAY
- SANDY CLAY OR CLAYEY SAND
- SANDY SILT OR SILTY SAND
- SILTY CLAY OR CLAYEY SILT
- PEAT AND/OR ORGANIC MATTER
- FILL MATERIAL
- IGNEOUS ROCK
- SEDIMENTARY ROCK
- METAMORPHIC ROCK

LEGEND OF BORING OPERATIONS

- PLAN OF ANY BORING
- PENETROMETER
- 2½" CONE PENETROMETER
- SAMPLER BORING (DRY)
- ROTARY BORING (WET)
- AUGER BORING (DRY)
- JET BORING
- CORE BORING
- TEST PIT

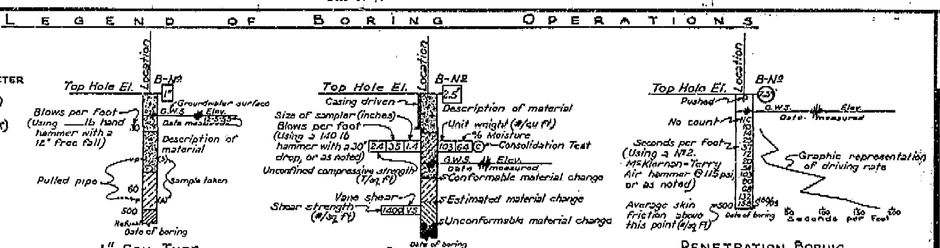

NOTES

The contractor's attention is directed to Section 2, Article (c) of the Standard Specifications and to the Special Provisions accompanying this set of plans.
Classification of earth material as shown on this sheet is based upon field inspection and is not to be construed to imply mechanical analysis.

STATE OF CALIFORNIA
DEPARTMENT OF PUBLIC WORKS
DIVISION OF HIGHWAYS

EAST STREET UNDERCROSSING

LOG OF TEST BORINGS

SCALE Horiz. 1" = 20' Vert. 1" = 10' | BRIDGE 55-245½ | FILE E-50 | DRAWING 55245-7

206

Box 101

55-0245-z-1tb2.tif

DIST.	COUNTY	ROUTE	POST MILES TOTAL PROJECT	SHEET NO.	TOTAL SHEETS
12	Ora	91	2.8/5.0	503	615

GEOTECHNICAL PROFESSIONAL 12/18/93

1-20-97
PLANS APPROVAL DATE

REGISTERED PROFESSIONAL ENGINEER THOMAS D. SWANTKO NO. G.E. 813 EXP. 12/31/97 STATE OF CALIFORNIA

GEOFON, Inc.
5552 Cerritos Avenue, Suite B
Cypress, California 90630
Job Number 92-337

The State of California or its officers or agents shall not be responsible for the accuracy or completeness of electronic copies of this plan sheet.

DIVISION OF ENGINEERING SERVICES - GEOTECHNICAL SERVICES

As-Built Log of Test Borings sheet is considered an informational document only. As such, the State of California registration seal with signature, license number and registration certificate expiration date confirm that this is a true and accurate copy of the original document. This drawing is available and presented only for the convenience of any bidder, contractor or other interested party.

DIST.	COUNTY	ROUTE	POST MILES-TOTAL PROJECT	Sheet No.	Total Sheets
12	Ora	91	0.9/5.4	712	885

GEOTECHNICAL PROFESSIONAL — DATE 3-15-2012

EAST St UC (WIDEN)

LOG OF TEST BORINGS 3 OF 3

NOTE: A COPY OF THIS LOG OF TEST BORINGS IS AVAILABLE AT OFFICE OF STRUCTURE MAINTENANCE AND INVESTIGATIONS, SACRAMENTO, CALIFORNIA

UNIT: 2295
PROJECT NUMBER & PHASE: 12000000791

BRIDGE No.	Sheet	of
55-0245	22	22

TO ACCOMPANY PLANS DATED 8-13-12

REGISTERED PROFESSIONAL ENGINEER S. PIRATHIVIRAJ No. C71662 EXP. 12/31/13 CIVIL STATE OF CALIFORNIA

Bench Mark: 288-C-72 (PM 4.4)
Set R.S. Nail on Top of Headwall, 175 Feet West of Beginning of Westbound Off-Ramp to Raymond Avenue, 15 Feet North of Edge of Shoulder on North Side of Fwy.
Elevation: 176.48 Feet.

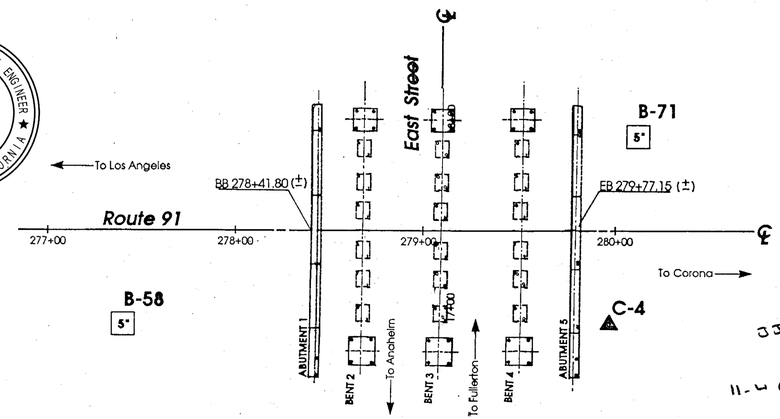

North
PLAN
SCALE: 1" = 40 FEET

AS BUILT
CORRECTIONS BY DKH
CONTRACT NO. 12012 9V9
DATE 7.5.00
11-4 02

NO AS BUILT CHANGES

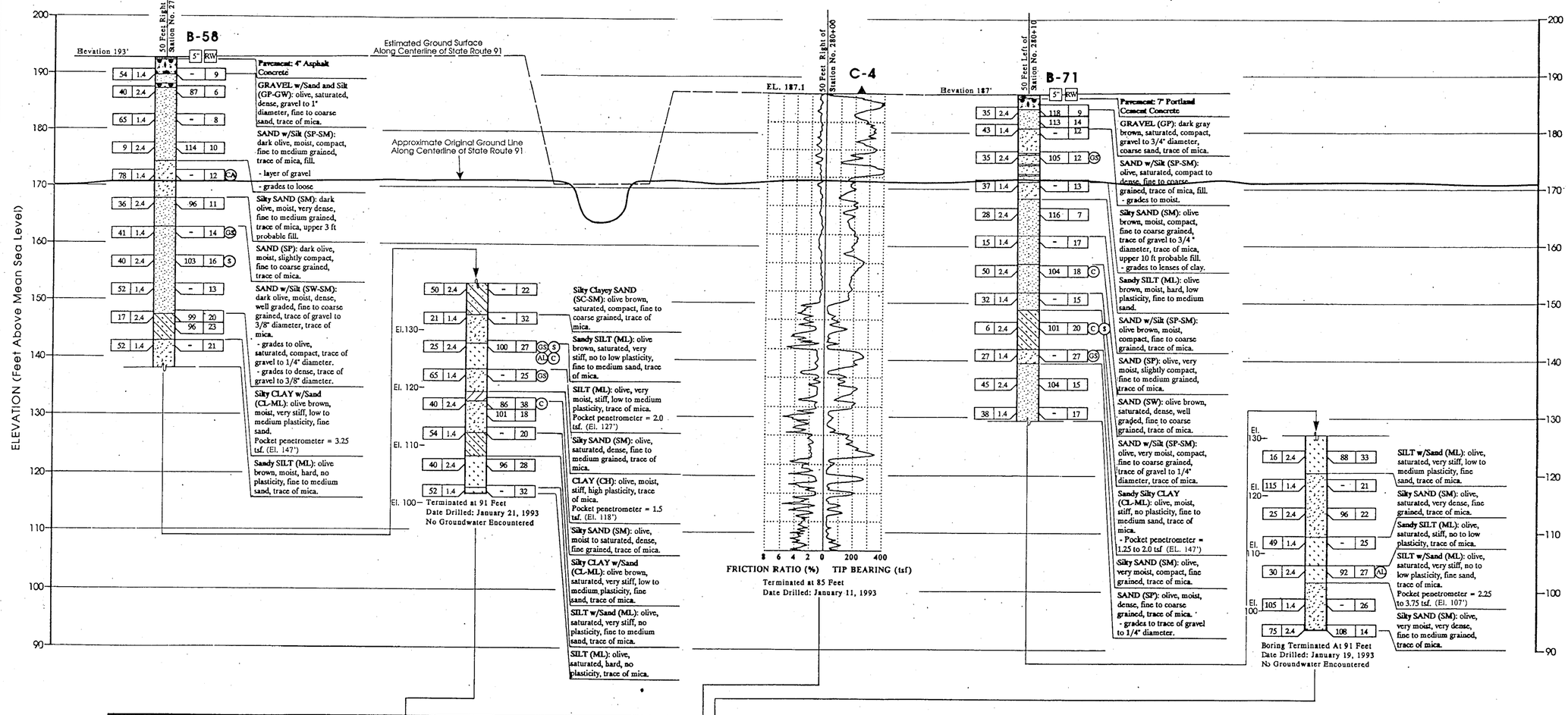

PROFILE
VERTICAL SCALE: 1" = 10 FEET
HORIZONTAL SCALE: 1" = 50 FEET

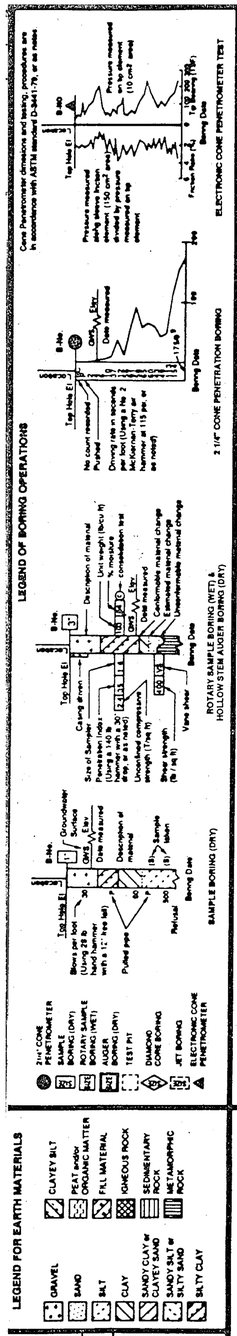

*NOTE: Where a 1.4" size sampler is used, this value is the standard penetration N-value.

NOTE: Classification of earth material as shown on this sheet is based upon field inspection and is not to be construed to imply mechanical analysis.

DESIGN OVERSIGHT	DRAWN BY	H. LEE	S. MOHAMMAD J. CUNNEEN	PREPARED FOR THE STATE OF CALIFORNIA DEPARTMENT OF TRANSPORTATION	D. K. HAGHIGHI	BRIDGE NO. 55-245	EAST STREET UNDERCROSSING WIDEN AND RETROFIT
BE NGUYEN 7-22-96	CHECKED BY	D. CORDS	FIELD INVESTIGATOR SEE EXPLORATION		PROJECT ENGINEER	POST MILE 4.26	LOG OF TEST BORINGS
SIGN OFF DATE			DATE				

ORIGINAL SCALE IN INCHES FOR REDUCED PLANS 0 1 2 3

CU 12209
EA 0124V1

DISREGARD PRINTS BEARING EARLIER REVISION DATES 12/93 1/96 4/96

REVISION DATES (PRELIMINARY STAGE ONLY)

SHEET 17 OF 21

.6051 REV 2/92 92 04014

55-0245-z-1tb3.tif

DIST	COUNTY	ROUTE	POST MILES TOTAL PROJECT	SHEET No	TOTAL SHEETS
12	Ora	91	0.9/5.4	713	885

V. Jessica Mosquera 3-15-2012
REGISTERED CIVIL ENGINEER DATE

8-13-12
PLANS APPROVAL DATE

REGISTERED PROFESSIONAL ENGINEER V. J. Mosquera No. C 051049 Exp. 09/30/13 CIVIL STATE OF CALIFORNIA

The State of California or its officers or agents shall not be responsible for the accuracy or completeness of scanned copies of this plan sheet.

OCTA
550 S MAIN STREET
ORANGE, CA 92868

RBF CONSULTING
14725 ALTON PARKWAY
IRVINE, CA 92618

NOTES:

1. For General Notes and Index to Plans, see "INDEX TO PLANS" sheet.
2. For Pile Data Table, see "FOUNDATION PLAN" sheet.

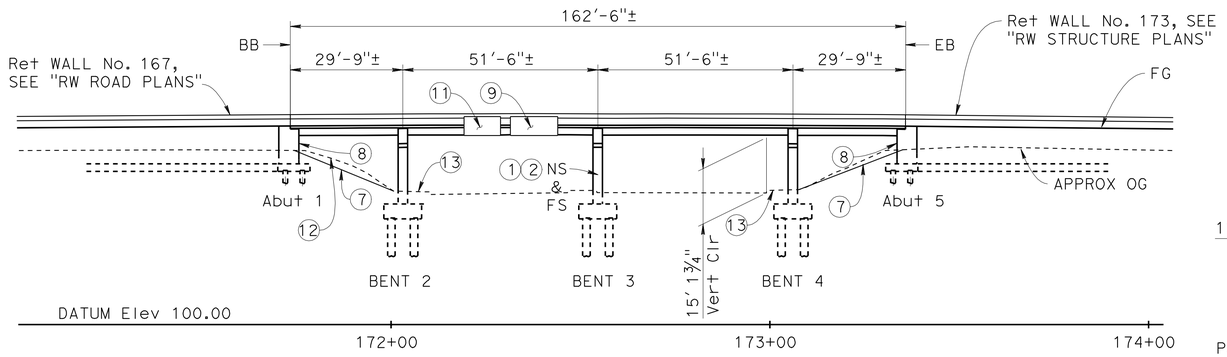

MIRROR ELEVATION

1" = 20'

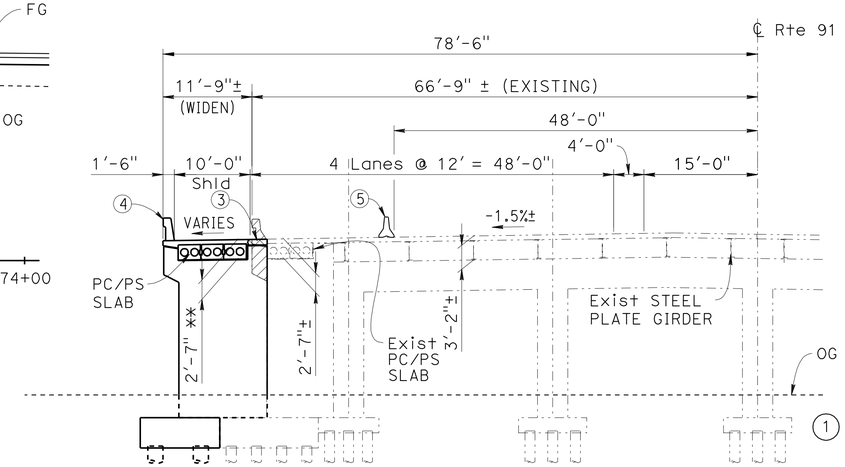

** Depth is measured at Abutments and Bent Supports

TYPICAL SECTION

1" = 10'

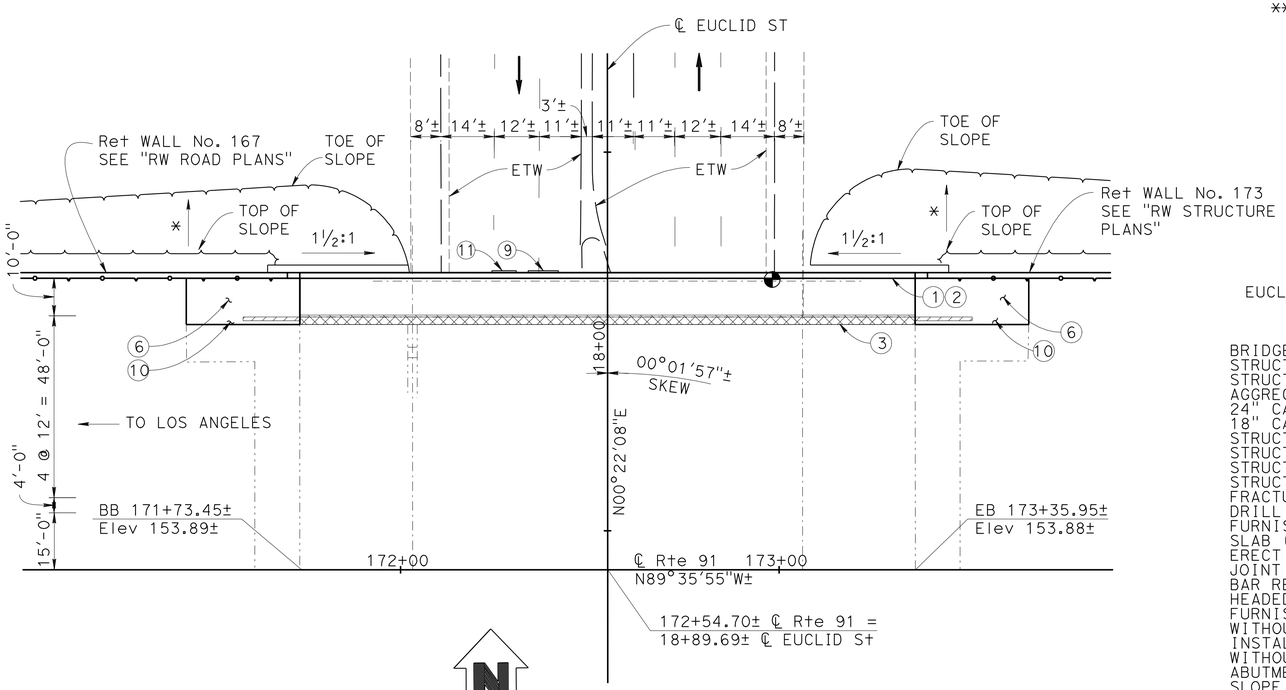

PLAN

1" = 20'

EUCLID STREET UC (WIDEN) Br No. 55-0279

QUANTITIES

BRIDGE REMOVAL (PORTION), LOCATION D	LUMP	SUM
STRUCTURE EXCAVATION (BRIDGE)	330	CY
STRUCTURE BACKFILL (BRIDGE)	219	CY
AGGREGATE BASE (APPROACH SLAB)	1	CY
24" CAST-IN-DRILLED-HOLE CONCRETE PILING	723	LF
18" CAST-IN-DRILLED-HOLE CONCRETE PILING	366	LF
STRUCTURAL CONCRETE, BRIDGE FOOTING	89	CY
STRUCTURAL CONCRETE, BRIDGE	165	CY
STRUCTURAL CONCRETE, APPROACH SLAB (TYPE N)	23	CY
STRUCTURAL CONCRETE, APPROACH SLAB (TYPE R)	5	CY
FRACTURED RIB TEXTURE	65	SQFT
DRILL AND BOND DOWEL	605	LF
FURNISH PRECAST PRESTRESSED CONCRETE SLAB (TYPE SIV)(MODIFIED)	1,462	SQFT
ERECT PRECAST PRESTRESSED CONCRETE DECK UNIT	12	EA
JOINT SEAL (MR/2")	69	LF
BAR REINFORCING STEEL (BRIDGE)	75,800	LB
HEADED BAR REINFORCEMENT	528	EA
FURNISH SIGN STRUCTURE (BRIDGE MOUNTED WITHOUT WALKWAY)	634	LB
INSTALL SIGN STRUCTURE (BRIDGE MOUNTED WITHOUT WALKWAY)	634	LB
ABUTMENT LUMBER BLOCKING	2.5	MFBM
SLOPE PAVING (CONCRETE)	13	CY
MISCELLANEOUS METAL (BRIDGE)	6,570	LB
CONCRETE BARRIER (TYPE 736 MODIFIED)	169	LF

LEGEND:

1. Paint "BRIDGE No. 55-0279" and year constructed
2. Paint "EUCLID STREET UC"
3. Closure Pour
4. Concrete Barrier Type 736 (Mod)
5. Temporary Rail, Type K, see "ROAD PLANS"
6. Structure Approach Type N(30S)
7. Slope Paving
8. Abutment Gap Retrofit & Catcher Block at Steel Girder, see "ABUTMENT RETROFIT DETAILS" sheet.
9. Bridge Mounted Sign, see "SIGN PLANS" and "BRIDGE MOUNTED SIGN DETAILS" sheet
10. Structure Approach Type R(30S)
11. Sign, see "TYPICAL SECTION" SHEET AND "SIGN PLANS"
12. Extend Existing Irrigation Lines & Strap to Slope Paving, see "IRRIGATION PLANS"
13. Remove and Replace Portion of Existing Sidewalk, see "ROAD PLANS"

Existing Structure
New Construction
Bridge Removal (Portion), Location D
Closure Pour
Point of Min Vert Clearance
* Match Existing Slope

NOTE:
THE CONTRACTOR SHALL VERIFY ALL CONTROLLING FIELD DIMENSIONS BEFORE ORDERING OR FABRICATING ANY MATERIAL.

Luqi Yang
DESIGN OVERSIGHT Luqi Yang
3-29-12
SIGN OFF DATE

	BY	CHECKED
DESIGN	J. Mosquera	T. Kirilov
DETAILS	J. Saldana	T. Kirilov
QUANTITIES	C. Stelea	R. Kelcher

LOAD & RESISTANCE FACTOR DESIGN — LIVE LOADING: HL93 W/"LOW-BOY"; PERMIT DESIGN VEHICLE
LAYOUT — BY J. Saldana — CHECKED T. Kirilov
SPECIFICATIONS — BY S. Sheikh — PLANS AND SPECS COMPARED S. Sheikh

PREPARED FOR THE STATE OF CALIFORNIA DEPARTMENT OF TRANSPORTATION

V. Jessica Mosquera
PROJECT ENGINEER

BRIDGE NO. 55-0279
POST MILES 2.2

EUCLID St UC (WIDEN)
GENERAL PLAN

DESIGN GENERAL PLAN SHEET (ENGLISH) (REV.7/16/10)

ORIGINAL SCALE IN INCHES FOR REDUCED PLANS 0 1 2 3

UNIT: 2295
PROJECT NUMBER & PHASE: 12000000791 CONTRACT NO.: 12-0C5701

DISREGARD PRINTS BEARING EARLIER REVISION DATES
REVISION DATES 09/16/11 12/22/11 02/27/12 03/15/12
SHEET 1 OF 21

FILE => 55-0279-a-gp01.dgn

USERNAME => s12161 4 DATE PLOTTED => 17-AUG-2012 TIME PLOTTED => 06:04

DIST	COUNTY	ROUTE	POST MILES TOTAL PROJECT	SHEET No	TOTAL SHEETS
12	Ora	91	0.9/5.4	714	885

V. Jessica Mosquera 3-15-2012
REGISTERED CIVIL ENGINEER DATE

8-13-12
PLANS APPROVAL DATE

REGISTERED PROFESSIONAL ENGINEER V. J. Mosquera No. C 051049 Exp. 09/30/13 CIVIL STATE OF CALIFORNIA

The State of California or its officers or agents shall not be responsible for the accuracy or completeness of scanned copies of this plan sheet.

OCTA
550 S MAIN STREET
ORANGE, CA. 92868

RBF CONSULTING
14725 ALTON PARKWAY
IRVINE, CA 92618

GENERAL NOTES
LOAD AND RESISTANCE FACTOR DESIGN

DESIGN: AASHTO LRFD Bridge Design Specifications, 4th edition and the Caltrans Amendments, preface dated September 2010; except that bridge details (including barrier and railing details) taken from Standard Plans 2010, and Standard Bridge Details 2011 XS sheets, and Bridge Abutments are designed using Bridge Design Specifications (1996 AASHTO with revisions by Caltrans).

SEISMIC DESIGN:
Caltrans Seismic Design Criteria (SDC), Version 1.5 dated September 2009.

DEAD LOAD:
Includes 35 psf for future wearing surface.

LIVE LOADING:
HL93 and permit design load.

SEISMIC LOADING:

Soil profile: V_s^{30} =886 ft/sec.
Moment Magnitude: 7.6
Peak Ground Acceleration: 0.52g

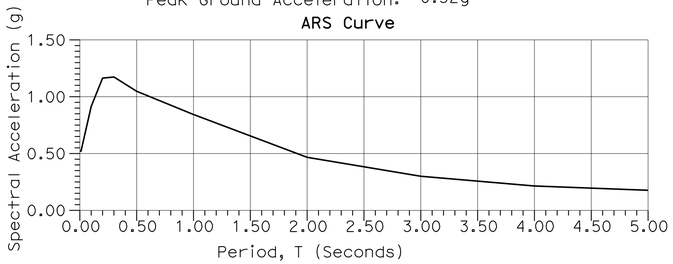

REINFORCED CONCRETE:

NEW:	EXISTING:
f_y = 60 ksi	f_y = 40 ksi
f'_c = 3.6 ksi	f'_c = 3.25 ksi
n = 8.0	

PRESTRESSED CONCRETE:
See prestressing notes on "GIRDER LAYOUT" sheet.

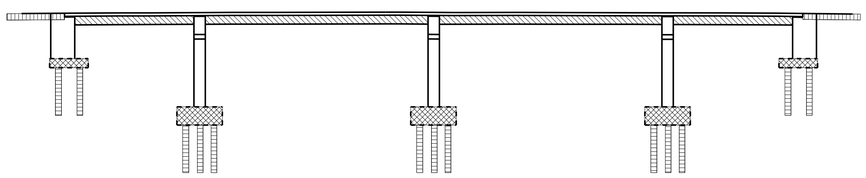

CONCRETE STRENGTH AND TYPE LIMITS
NO SCALE

LEGEND

- Structural Concrete, Bridge
- Structural Concrete, Bridge Footing
- PC / PS Slab, see "GIRDER LAYOUT" sheet
- Cast-in-Drilled Hole Concrete Pile (f'c = 4.0 ksi @ 28 days)
- Structural Concrete, Approach Slab

INDEX TO PLANS

SHEET No.	TITLE
1.	General Plan
2.	Index to Plans
3.	Bridge Removal Details
4.	Foundation Plan
5.	Abutment Layout
6.	Abutment Details No. 1
7.	Abutment Details No. 2
8.	Abutment Retrofit Details
9.	Bent Layout
10.	Bent Details
11.	Typical Section
12.	Girder Layout
13.	Structure Approach Type N (30S)
14.	Structure Approach Type R (30S)
15.	Structure Approach Drainage Details
16.	Slope Paving - Full Slope
17.	Architectural Details
18.	Bridge Mounted Sign Details
19.	Log of Test Borings 1 of 3
20.	Log of Test Borings 2 of 3
21.	Log of Test Borings 3 of 3

STANDARD PLANS DATED 2010

A10A	Abbreviations (Sheet 1 of 2)
A10B	Abbreviations (Sheet 2 of 2)
A10C	Lines and Symbols (Sheet 1 of 3)
A10D	Lines and Symbols (Sheet 2 of 3)
A10E	Lines and Symbols (Sheet 3 of 3)
A10F	Legend - Soil (Sheet 1 of 2)
A10G	Legend - Soil (Sheet 2 of 2)
A62C	Limits of Payment for Excavation and Backfill (Bridge)
BO-1	Bridge Details
BO-3	Bridge Details
BO-5	Bridge Details
BO-13	Bridge Details
B2-3	16" and 24" Cast-in-Drilled-Hole Concrete Pile
B6-21	Joint Seal (Maximum Movement Rating = 2")
B11-56	Concrete Barrier Type 736
B14-3	Communication and Sprinkler Control Conduits (Conduits less Than Size 4")
RSP P10	Concrete Pavement - Dowel Bar Details
T3A	Temporary Railing (Type K)

PLAN SYMBOLS

STANDARD PLAN SHEET No.
DETAIL No.
SECTION IDENTIFICATION

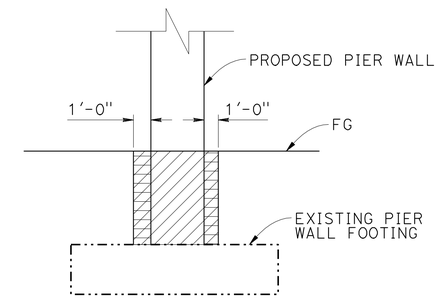

LIMITS OF PAYMENT FOR EXCAVATION AND BACKFILL BRIDGE AT EXISTING PIER FOOTING
NO SCALE

LEGEND

- Low Expansive Material EI<50 and SE>20
- Structure Excavation (Bridge)
- Structure Backfill (Bridge)
- Roadway Excavation (see "Road Plans")

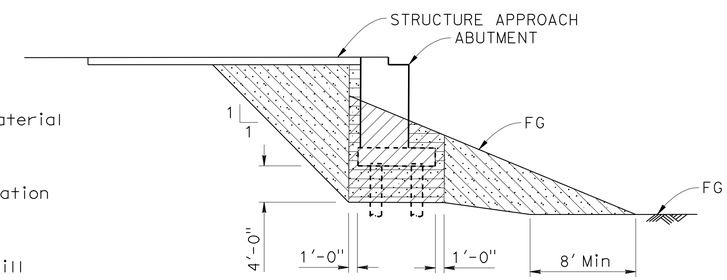

LIMITS OF EXPANSIVE SOIL EXCLUSION ZONE IN BRIDGE EMBANKMENT
NO SCALE

NOTE:
1. Transverse limit of Low Expansive Material shall be 12" from edges of abutment footing to end of existing abutment stem.

NOTE:
THE CONTRACTOR SHALL VERIFY ALL CONTROLLING FIELD DIMENSIONS BEFORE ORDERING OR FABRICATING ANY MATERIAL.

Luqi Yang
DESIGN OVERSIGHT Luqi Yang
3-29-12
SIGN OFF DATE

	BY	CHECKED
DESIGN	V. J. Mosquera	T. Kirilov
DETAILS	J. Saldana	T. Kirilov
QUANTITIES	C. Stelea	R. Kelcher

PREPARED FOR THE STATE OF CALIFORNIA DEPARTMENT OF TRANSPORTATION

V. Jessica Mosquera
PROJECT ENGINEER

BRIDGE NO. 55-0279
POST MILES 2.2

EUCLID St UC (WIDEN)
INDEX TO PLANS

DESIGN DETAIL SHEET (ENGLISH) (REV.7/16/10)

ORIGINAL SCALE IN INCHES FOR REDUCED PLANS 0 1 2 3

UNIT: 2295
PROJECT NUMBER & PHASE: 12000000791 CONTRACT NO.: 12-0C5701

DISREGARD PRINTS BEARING EARLIER REVISION DATES

REVISION DATES 08/30/10 09/08/11 12/22/11 02/17/12 SHEET 2 OF 21

FILE => 55-0279-a-itp.dgn

USERNAME => s121614 DATE PLOTTED => 17-AUG-2012 TIME PLOTTED => 06:04

DIST	COUNTY	ROUTE	POST MILES TOTAL PROJECT	SHEET No	TOTAL SHEETS
12	Ora	91	0.9/5.4	715	885

V. Jessica Mosquera 3-15-2012
REGISTERED CIVIL ENGINEER DATE

8-13-12
PLANS APPROVAL DATE

REGISTERED PROFESSIONAL ENGINEER V. J. Mosquera No. C 051049 Exp. 09/30/13 CIVIL STATE OF CALIFORNIA

The State of California or its officers or agents shall not be responsible for the accuracy or completeness of scanned copies of this plan sheet.

OCTA
550 S MAIN STREET
ORANGE, CA. 92868

RBF CONSULTING
14725 ALTON PARKWAY
IRVINE, CA 92618

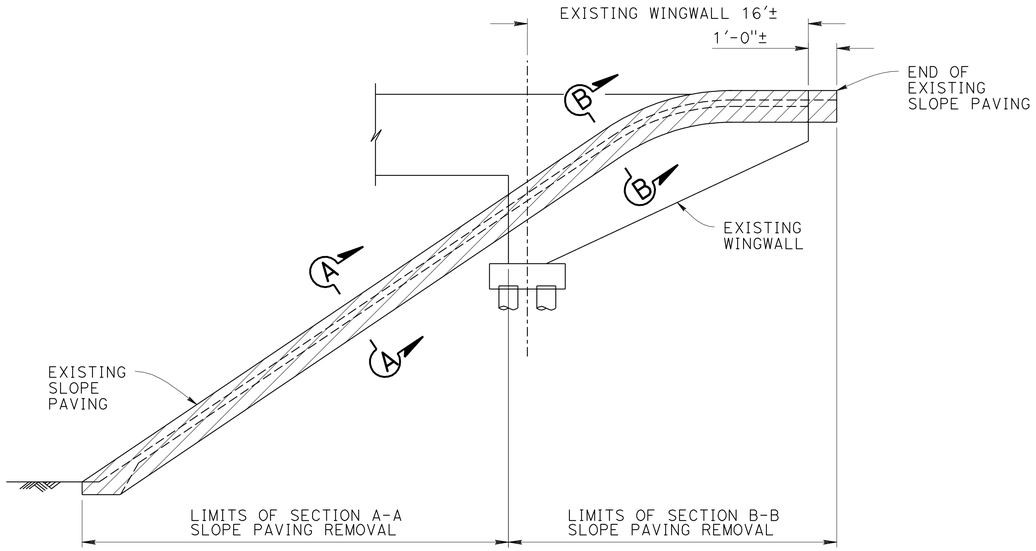

REMOVE SLOPE PAVING

NO SCALE

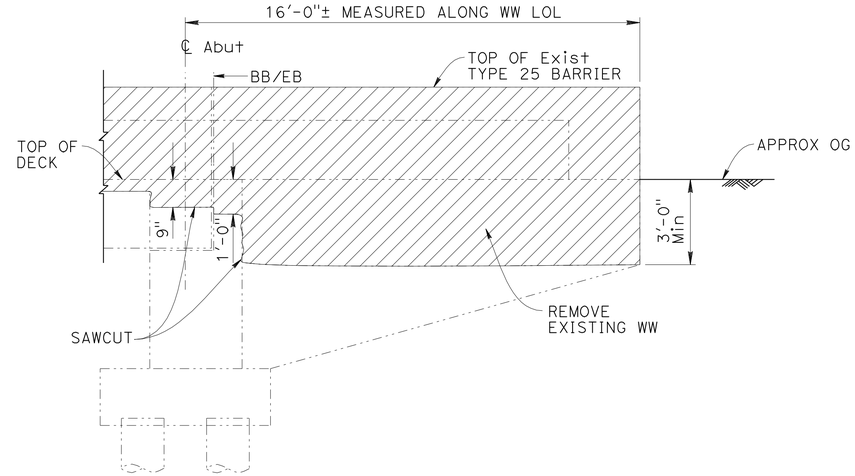

WINGWALL REMOVAL LIMITS

NO SCALE

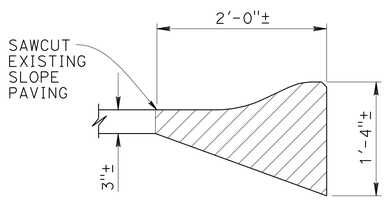

SECTION A-A

NO SCALE

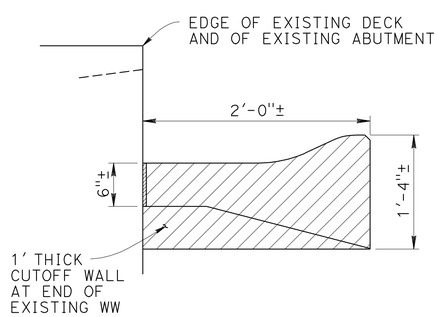

SECTION B-B

NO SCALE

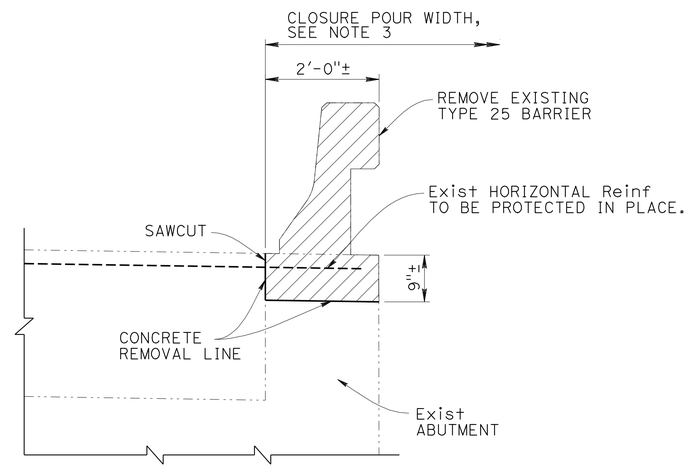

ABUTMENT CORNER REMOVAL DETAIL

NO SCALE

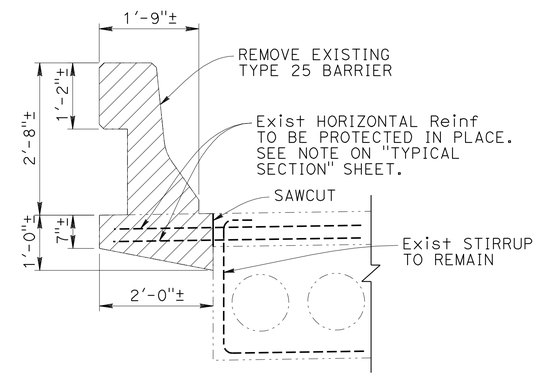

OVERHANG REMOVAL DETAIL

NO SCALE

NOTE:
THE CONTRACTOR SHALL VERIFY ALL CONTROLLING FIELD DIMENSIONS BEFORE ORDERING OR FABRICATING ANY MATERIAL.

LEGEND:

Bridge Removal (Portion), Location D

Existing Structure

NOTES:

1. The limit of Overhang Removal is from BB to EB.
2. The limit of Barrier Removal is between ends of WW.
3. Overhang at abut shall be removed to depth shown times width limits within the deck closure pour.

Luqi Yang
DESIGN OVERSIGHT Luqi Yang
3-29-12
SIGN OFF DATE

	BY	CHECKED
DESIGN	V. J. Mosquera	T. Kirilov
DETAILS	J. Saldana	T. Kirilov
QUANTITIES	C. Stelea	R. Kelcher

PREPARED FOR THE STATE OF CALIFORNIA DEPARTMENT OF TRANSPORTATION

V. Jessica Mosquera
PROJECT ENGINEER

BRIDGE NO. 55-0279
POST MILES 2.2

EUCLID St UC (WIDEN)
BRIDGE REMOVAL DETAILS

DESIGN DETAIL SHEET (ENGLISH) (REV.7/16/10)

ORIGINAL SCALE IN INCHES FOR REDUCED PLANS 0 1 2 3

UNIT: 2295
PROJECT NUMBER & PHASE: 12000000791 CONTRACT NO.: 12-0C5701

DISREGARD PRINTS BEARING EARLIER REVISION DATES

REVISION DATES: 08/30/10 09/16/11 12/22/11

SHEET 3 OF 21

FILE => 55-0279-b-br-rmv.dgn

USERNAME => s121614 DATE PLOTTED => 17-AUG-2012 TIME PLOTTED => 06:05

DIST	COUNTY	ROUTE	POST MILES TOTAL PROJECT	SHEET No	TOTAL SHEETS
12	Ora	91	0.9/5.4	716	885

V. Jessica Mosquera 3-15-2012
REGISTERED CIVIL ENGINEER DATE

8-13-12
PLANS APPROVAL DATE

REGISTERED PROFESSIONAL ENGINEER V. J. Mosquera No. C 051049 Exp. 09/30/13 CIVIL STATE OF CALIFORNIA

The State of California or its officers or agents shall not be responsible for the accuracy or completeness of scanned copies of this plan sheet.

OCTA
550 S MAIN STREET
ORANGE, CA. 92868

RBF CONSULTING
14725 ALTON PARKWAY
IRVINE, CA 92618

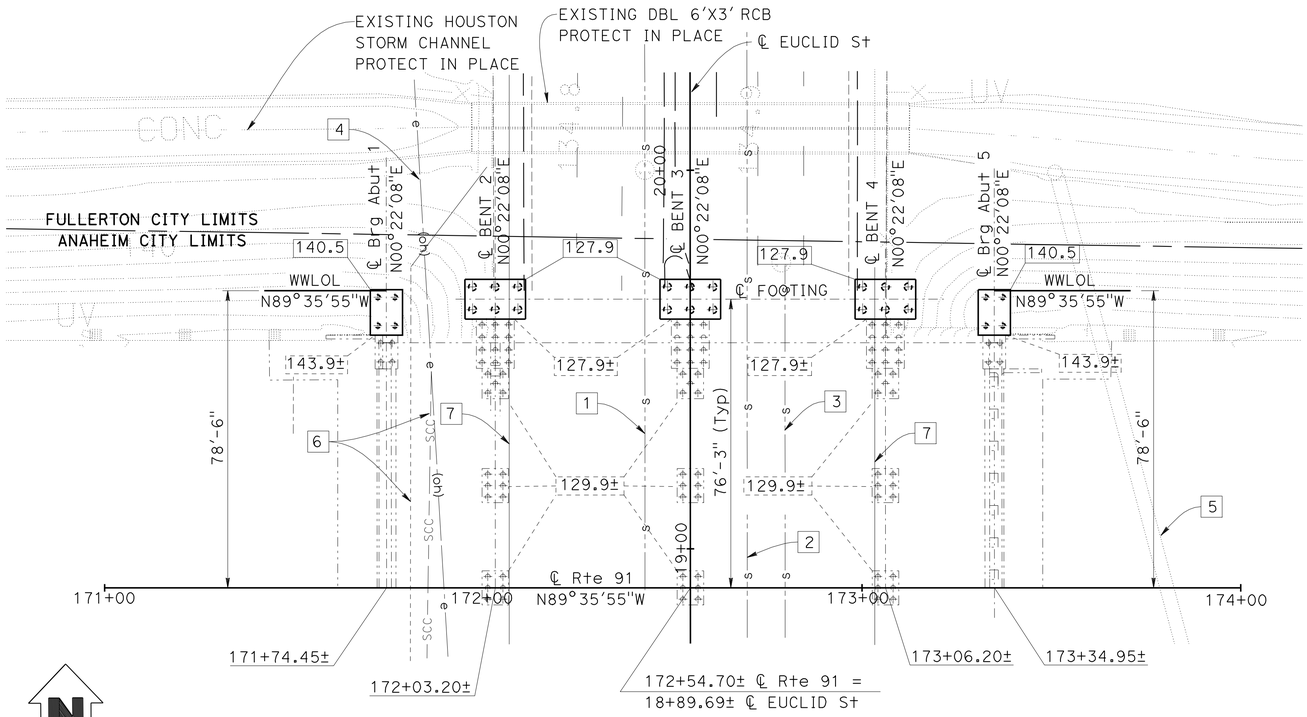

FOUNDATION PLAN
1" = 20'

PILE DATA TABLE

LOCATION	PILE TYPE	NOMINAL RESISTANCE (kips)		DESIGN TIP ELEVATION (ft)	SPECIFIED TIP ELEVATION (ft)
		COMPRESSION	TENSION		
Abut 1	18" CIDH	180	0	+95 (a) +113 (d)	+95
BENT 2	24" CIDH	270	190	+88 (a) +88 (b) +113 (c) +103 (d)	+88
BENT 3	24" CIDH	270	190	+88 (a) +88 (b) +113 (c) +103 (d)	+88
BENT 4	24" CIDH	270	190	+88 (a) +88 (b) +113 (c) +103 (d)	+88
Abut 5	18" CIDH	180	0	+95 (a) +113 (d)	+95

NOTES:
1) Design tip elevations are controlled by the following demands: (a) Compression, (b) Tension, (c) Tolerable Settlement and (d) Lateral Load.
2) There are no design tip elevations for Tension and Tolerable Settlement at Abutment 1 and 5.
3) The specified tip elevation for Abutments 1 and 5 shall not be raised above the design tip elevations for Lateral Load.
4) The specified tip elevations for Bents 2 through 4 shall not be raised above the design tip elevation for Tension, Tolerable Settlement and Lateral Load.

NOTE:
THE CONTRACTOR SHALL VERIFY ALL CONTROLLING FIELD DIMENSIONS BEFORE ORDERING OR FABRICATING ANY MATERIAL.

NOTES:

1. All existing piles not shown
2. Location of exist structure foundations is approximate
3. For R/W beyond bridge plan limits, see "ROAD PLANS"

LEGEND:

- XXX.XX — Bottom of Footing Elevation
- XXX.XX± — Bottom of Existing Footing Elevation
- Existing Structure
- New Construction
- Existing Piling
- New Piling

WARNING:

The Contractor shall be aware of the existing 12 kv OH transmission lines near Abut 1. Contractor shall work with extreme care during pile drilling construction and precast girder erection. Southern California Edison must be notified prior to start of construction work.

UTILITY NOTES:

1. Exist 15" VCP Sewer, OCSD, Protect in place
2. Exist 48" RCP Sewer, OCSD, Protect in place
3. Exist 30" Sewer, OCSD, Protect in place
4. Exist Electrical Overhead, SCE, Protect in place
5. Exist 36" RCP, Protect in place
6. Exist 3" GSP and 2" SCC, Protect in place Extend Exist Lines, see "IRRIGATION PLANS"
7. For Exist Conduits in Exist Sidewalk, see "ROAD PLANS"

BENCHMARKS:

Elevations as shown hereon are in terms of the North American Vertical Datum of 1988 (NAVD88), based locally upon the following Benchmarks as published by the County of Orange:

Designation: 1G-164-05 Elev = 109.80
Described by OCS 2005 - Found 3¾" OCS Aluminum Benchmark Disk Stamped "1G-164-05", set in the northwesterly corner of a 4.5 ft. by 11.0 ft. Concrete Catch Basin. Monument is located in the southeasterly corner of the intersection of Magnolia Avenue and Buckingham Street, 200 ft. ± from the centerline of Buckingham and 47 ft. easterly of the centerline of Magnolia. Monument is set level with the sidewalk

Designation: 2F-25-04 Elev = 162.70
Described by OCS 2004 - Found 3¾" OCS Aluminum Benchmark Disk Stamped "2F-25-04", set in the northwesterly corner of a 7.5 ft. by 4.5 ft. Concrete Catch Basin. Monument is located in the northeasterly corner of the intersection of Harbor Boulevard and the Eastbound 91 Freeway On-Ramp, 39 ft. northerly of the centerline of the On-Ramp and 40 ft. easterly of the centerline of Harbor Boulevard. Monument is set level with the sidewalk

Designation: 2D-35-86 Elev = 188.58
Described by OCS 2003 - Found 3¾" OCS Aluminum Benchmark Disk Stamped "2D-35-86", set in the northwesterly corner of a 7 ft. by 14 ft. Concrete Catch Basin. Monument is located in the southeasterly corner of the intersection of Placentia Avenue and State College Boulevard, 38 ft. easterly of the centerline of State College and 70.5 ft. southerly of the centerline of Placentia. Monument is set level with the sidewalk

BASIS OF COORDINATES:

Bearings and Coordinates as shown hereon are in terms of the California Coordinate System of 1983 (CCS83, Epoch 1991.35), Zone 6; based locally upon the following Control Stations as published by the County of Orange:

Name	Northing (ft)-Grid	Easting (ft)-Grid
OCS GPS 3511R1	2257877.29	6037582.77
OCS GPS 3518	2260444.33	6053380.91
OCS GPS 5260	2257149.07	6063970.03

GEOTECHNICAL PROFESSIONAL 3-15-2012 APPROVAL DATE

Luqi Yang
DESIGN OVERSIGHT Luqi Yang
3-29-12
SIGN OFF DATE

SCALE: X	VERT.DATUM NAVD 88	HORZ.DATUM NAD 83 (1991.35)	
PHOTOGRAMMETRY AS OF: 04-15-2010		ALIGNMENT TIES	
SURVEYED	BY B. Cox	DRAFTED	BY G. Ciampaglia
FIELD CHECKED	BY B. Cox	CHECKED	BY B. Cox

	BY	CHECKED
DESIGN	V. J. Mosquera	T. Kirilov
DETAILS	J. Saldana	T. Kirilov
QUANTITIES	C. Stelea	R. Kelcher

PREPARED FOR THE STATE OF CALIFORNIA DEPARTMENT OF TRANSPORTATION

V. Jessica Mosquera
PROJECT ENGINEER

BRIDGE NO. 55-0279
POST MILES 2.2

EUCLID St UC (WIDEN)
FOUNDATION PLAN

FOUNDATION PLAN SHEET (ENGLISH) (REV.7/16/10)

ORIGINAL SCALE IN INCHES FOR REDUCED PLANS 0 1 2 3

UNIT: 2295
PROJECT NUMBER & PHASE: 12000000791 CONTRACT NO.: 12-0C5701

DISREGARD PRINTS BEARING EARLIER REVISION DATES

REVISION DATES 08/30/10 09/06/11 12/22/11

SHEET 4 OF 21

FILE => 55-0279-e-fdp101.dgn

USERNAME => s8121614 DATE PLOTTED => 17-AUG-2012 TIME PLOTTED => 06:05

DIST	COUNTY	ROUTE	POST MILES TOTAL PROJECT	SHEET No	TOTAL SHEETS
12	Ora	91	0.9/5.4	717	885

V. Jessica Mosquera 3-15-2012
REGISTERED CIVIL ENGINEER DATE

8-13-12
PLANS APPROVAL DATE

REGISTERED PROFESSIONAL ENGINEER V. J. Mosquera No. C 051049 Exp. 09/30/13 CIVIL STATE OF CALIFORNIA

The State of California or its officers or agents shall not be responsible for the accuracy or completeness of scanned copies of this plan sheet.

OCTA
550 S MAIN STREET
ORANGE, CA. 92868

RBF CONSULTING
14725 ALTON PARKWAY
IRVINE, CA 92618

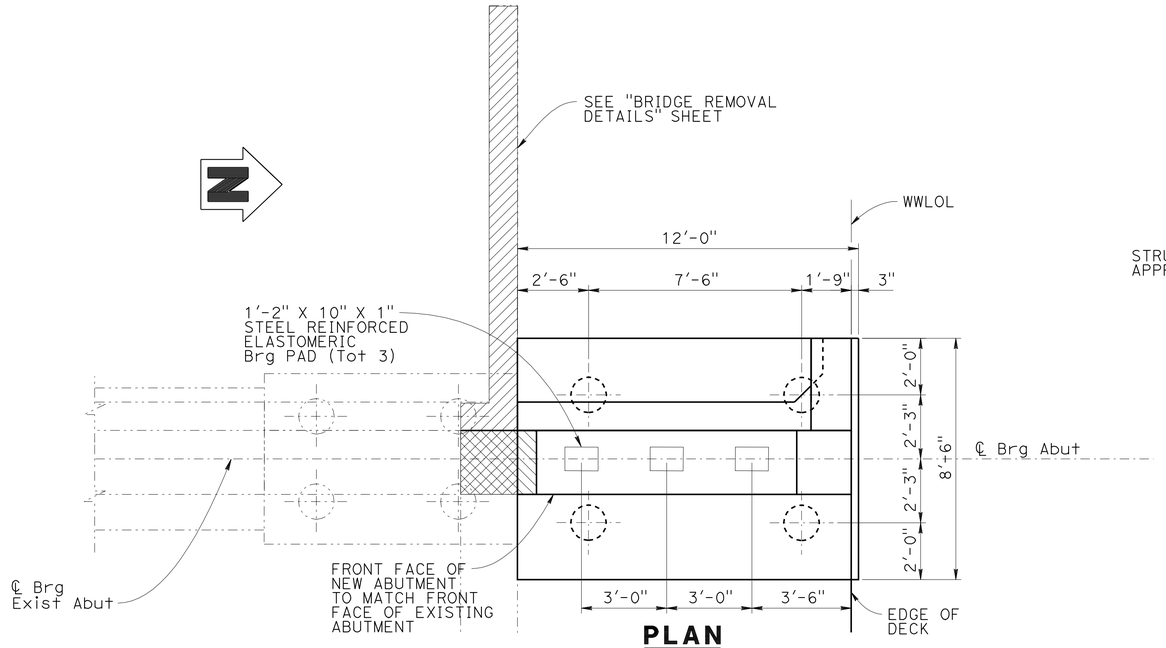

PLAN

3/8" = 1'-0"

ABUTMENT 1 SHOWN, ABUTMENT 5 SIMILAR

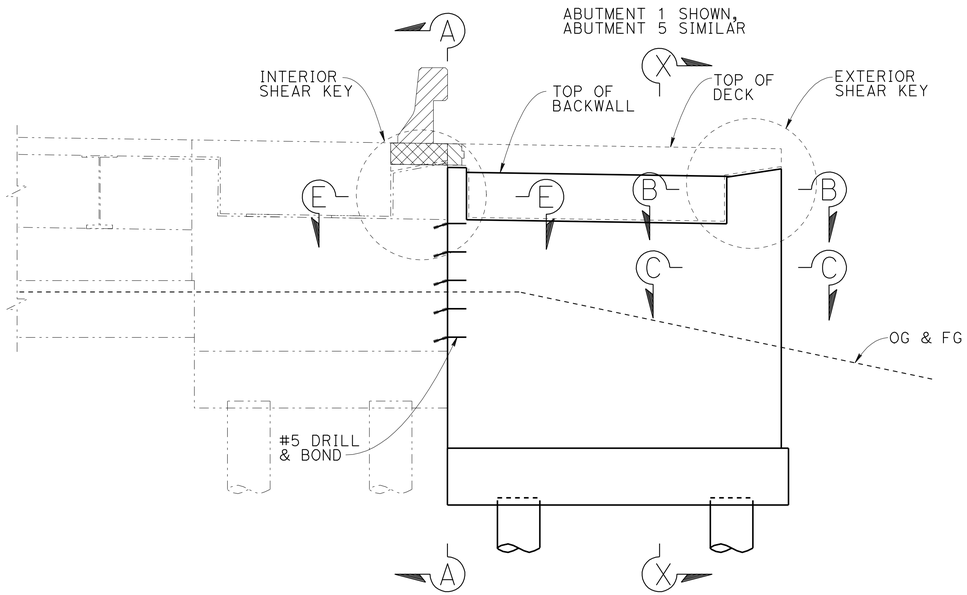

ELEVATION

3/8" = 1'-0"

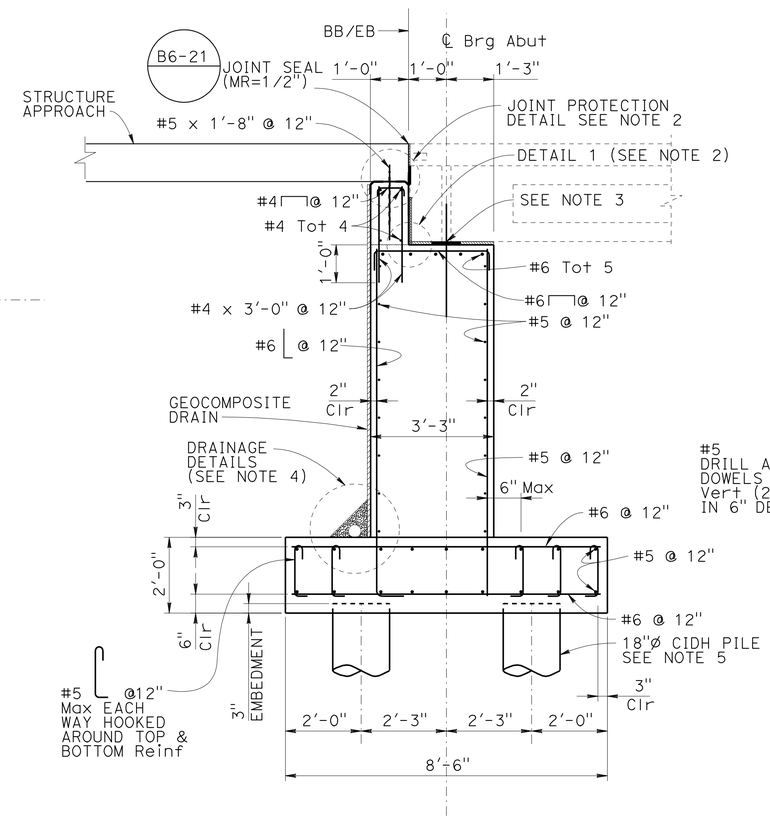

TYPICAL SECTION X-X

1/2" = 1'-0"

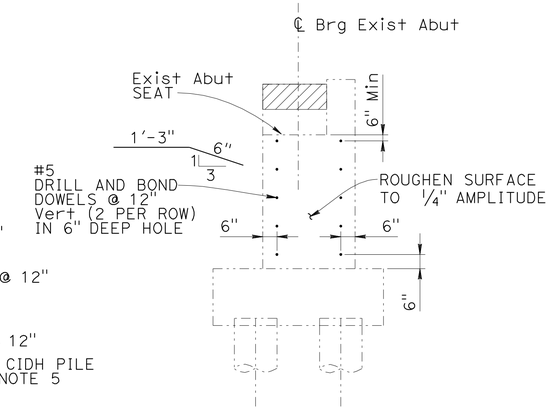

SECTION A-A

3/8" = 1'-0"

LEGEND:

- Limits of Bridge Removal (Portion), Location D
- Closure Pour
- Existing Structure
- New Construction

NOTES:

1. For Section B-B, Section C-C, Section E-E, Exterior Shear Key Detail, and Interior Shear Key Detail, see "ABUTMENT DETAILS No. 1" sheet.
2. For Detail 1 and Joint Protection Detail, see "ABUTMENT DETAILS No. 2" sheet.
3. For abutment support details, see "GIRDER LAYOUT" sheet.
4. For Drainage Details, see "STRUCTURE APPROACH DRAINAGE DETAILS" sheet.
5. For 18" Ø CIDH piles, see "ABUTMENT DETAILS No. 2" sheet.

NOTE:
THE CONTRACTOR SHALL VERIFY ALL CONTROLLING FIELD DIMENSIONS BEFORE ORDERING OR FABRICATING ANY MATERIAL.

Luqi Yang
DESIGN OVERSIGHT Luqi Yang
3-29-12
SIGN OFF DATE

	BY	CHECKED
DESIGN	V. J. Mosquera	T. Kirilov
DETAILS	J. Saldana	T. Kirilov
QUANTITIES	C. Stelea	R. Kelcher

PREPARED FOR THE STATE OF CALIFORNIA DEPARTMENT OF TRANSPORTATION

V. Jessica Mosquera
PROJECT ENGINEER

BRIDGE NO. 55-0279
POST MILES 2.2

EUCLID St UC (WIDEN)
ABUTMENT LAYOUT

DESIGN DETAIL SHEET (ENGLISH) (REV.7/16/10)

ORIGINAL SCALE IN INCHES FOR REDUCED PLANS 0 1 2 3

UNIT: 2295
PROJECT NUMBER & PHASE: 12000000791 CONTRACT NO.: 12-0C5701

DISREGARD PRINTS BEARING EARLIER REVISION DATES

REVISION DATES: 08/30/10 09/30/11 12/22/11

SHEET 5 OF 21

FILE => 55-0279-f-a01_lo1.dgn

USERNAME => s12614 DATE PLOTTED => 17-AUG-2012 TIME PLOTTED => 06:05

DIST	COUNTY	ROUTE	POST MILES TOTAL PROJECT	SHEET No	TOTAL SHEETS
12	Ora	91	0.9/5.4	718	885

V. Jessica Mosquera 3-15-2012
REGISTERED CIVIL ENGINEER DATE

8-13-12
PLANS APPROVAL DATE

REGISTERED PROFESSIONAL ENGINEER V. J. Mosquera No. C 051049 Exp. 09/30/13 CIVIL STATE OF CALIFORNIA

The State of California or its officers or agents shall not be responsible for the accuracy or completeness of scanned copies of this plan sheet.

OCTA
550 S MAIN STREET
ORANGE, CA. 92868

RBF CONSULTING
14725 ALTON PARKWAY
IRVINE, CA 92618

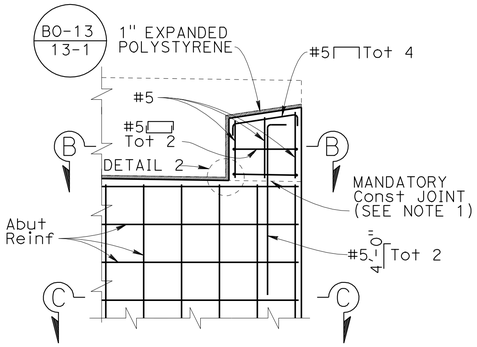

EXTERIOR SHEAR KEY

½" = 1'-0"

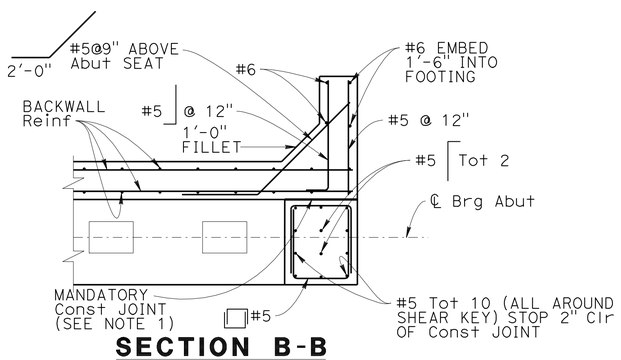

SECTION B-B

½" = 1'-0"

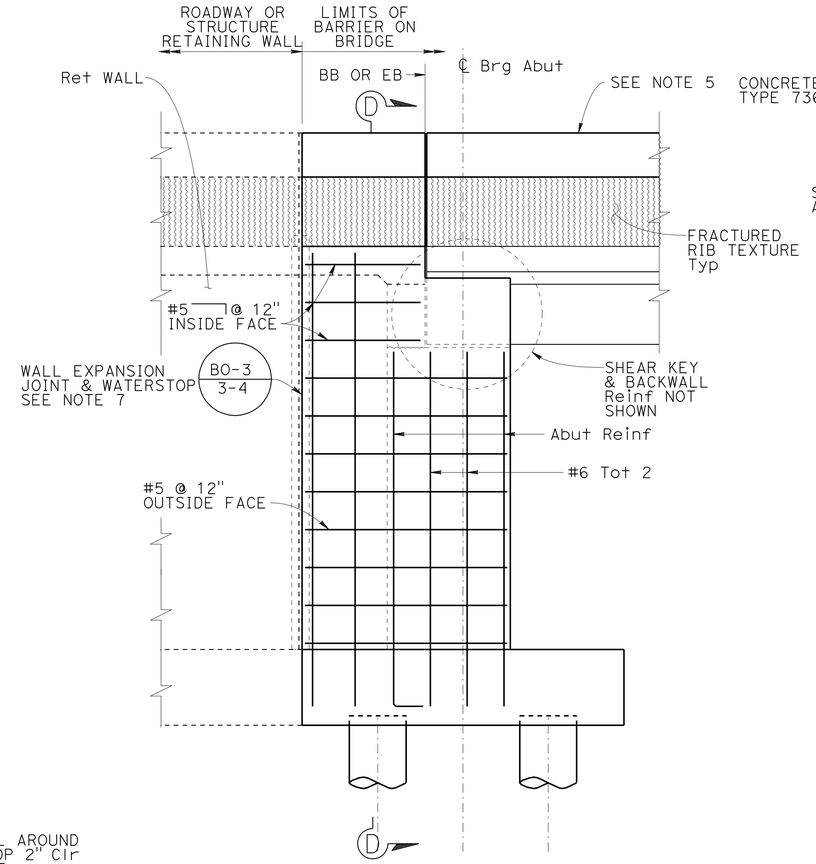

WINGWALL ELEVATION

½" = 1'-0"

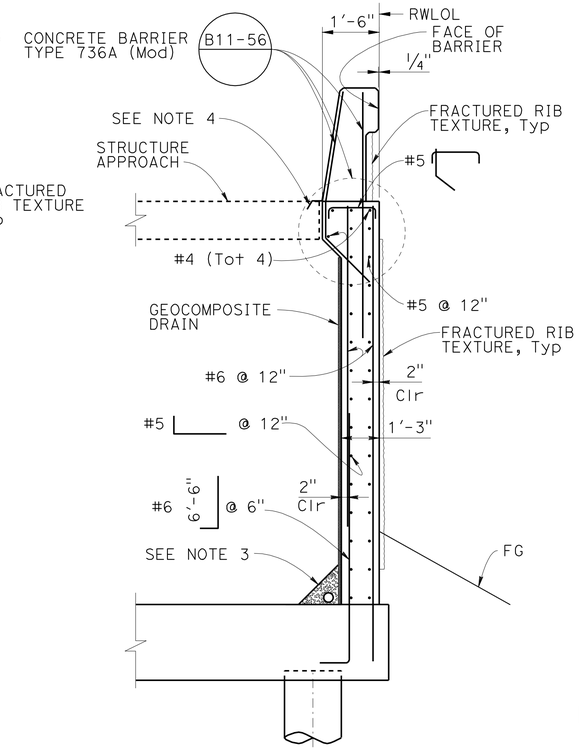

SECTION D-D

½" = 1'-0"

NOTES:

1. Mandatory joint surface shall be level smooth finished.
2. For bars and bond dowels detail, see Section A-A on "ABUTMENT LAYOUT" sheet.
3. For Drainage Details, see "STRUCTURE APPROACH DRAINAGE DETAILS" sheet.
4. For angle, see "DETAIL B" in "STRUCTURE APPROACH TYPE N (30S)" sheet.
5. For concrete barrier and wingwall aesthetic details, see "ARCHITECTURAL DETAILS" sheet.
6. For "DETAIL 2", see "ABUTMENT DETAILS No. 2" sheet.
7. Extend the waterstop 6" into the barrier.

LEGEND:

- Limits of Bridge Removal (Portion), Location D
- Closure Pour
- Existing Structure
- New Construction

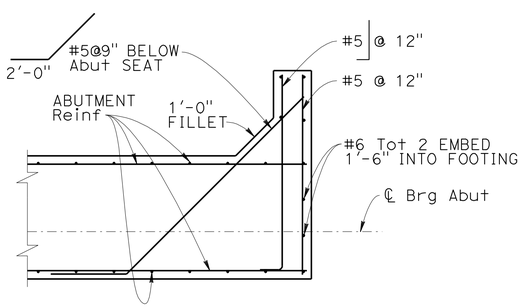

SECTION C-C

½" = 1'-0"

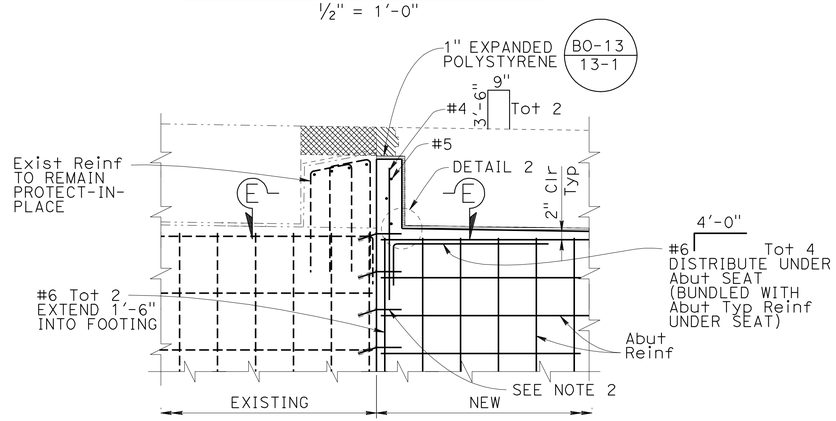

INTERIOR SHEAR KEY

½" = 1'-0"

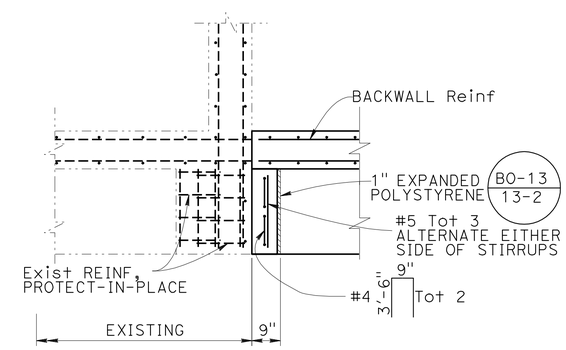

INTERIOR SHEAR KEY SECTION E-E

½" = 1'-0"

NOTE:
THE CONTRACTOR SHALL VERIFY ALL CONTROLLING FIELD DIMENSIONS BEFORE ORDERING OR FABRICATING ANY MATERIAL.

Luqi Yang
DESIGN OVERSIGHT Luqi Yang
3-29-12
SIGN OFF DATE

	BY	CHECKED
DESIGN	V. J. Mosquera	T. Kirilov
DETAILS	J. Saldana	T. Kirilov
QUANTITIES	C. Stelea	R. Kelcher

PREPARED FOR THE STATE OF CALIFORNIA DEPARTMENT OF TRANSPORTATION

V. Jessica Mosquera
PROJECT ENGINEER

BRIDGE NO. 55-0279
POST MILES 2.2

EUCLID St UC (WIDEN)
ABUTMENT DETAILS No. 1

DESIGN DETAIL SHEET (ENGLISH) (REV.7/16/10)

ORIGINAL SCALE IN INCHES FOR REDUCED PLANS 0 1 2 3

UNIT: 2295
PROJECT NUMBER & PHASE: 12000000791 CONTRACT NO.: 12-0C5701

DISREGARD PRINTS BEARING EARLIER REVISION DATES

REVISION DATES: 08/30/10 09/16/11 12/22/11

SHEET 6 OF 21

FILE => 55-0279-f-a01dt01.dgn

USERNAME => s121614 DATE PLOTTED => 17-AUG-2012 TIME PLOTTED => 06:05

DIST	COUNTY	ROUTE	POST MILES TOTAL PROJECT	SHEET No	TOTAL SHEETS
12	Ora	91	0.9/5.4	719	885

V. Jessica Mosquera 3-15-2012
REGISTERED CIVIL ENGINEER DATE

8-13-12
PLANS APPROVAL DATE

REGISTERED PROFESSIONAL ENGINEER V. J. Mosquera No. C 051049 Exp. 09/30/13 CIVIL STATE OF CALIFORNIA

The State of California or its officers or agents shall not be responsible for the accuracy or completeness of scanned copies of this plan sheet.

OCTA
550 S MAIN STREET
ORANGE, CA. 92868

RBF CONSULTING
14725 ALTON PARKWAY
IRVINE, CA 92618

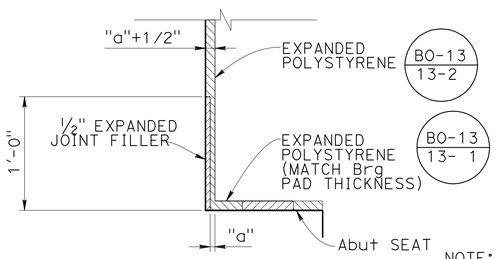

DETAIL 1
AT ABUTMENT SEAT
NO SCALE

NOTE:
For "a" dimension refer to B6-21

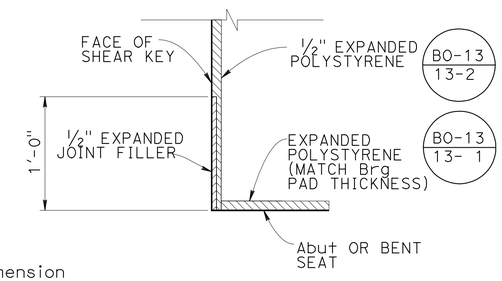

DETAIL 2
AT ABUTMENT OR BENT SHEAR KEY
NO SCALE

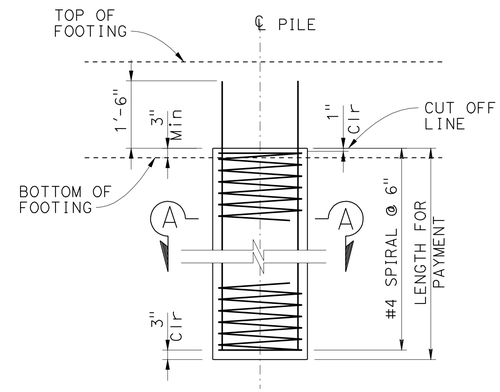

ABUTMENT PILE
18" CIDH CONCRETE PILE
NO SCALE

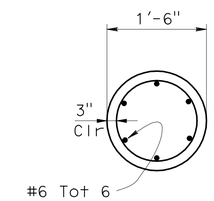

SECTION A-A
NO SCALE

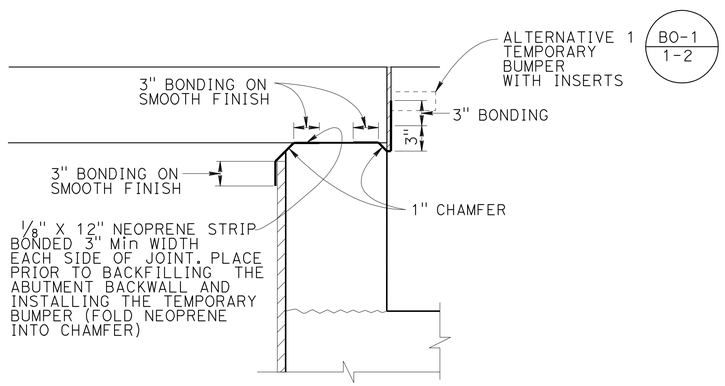

JOINT PROTECTION DETAIL
NO SCALE

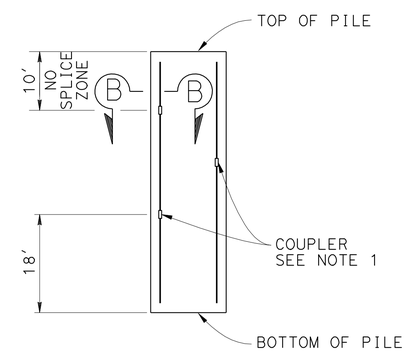

Abut 1
CIDH PILE SPLICING
NOTE: SPIRAL Reinf NOT SHOWN
NO SCALE

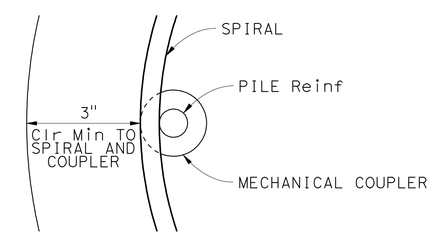

SECTION B-B
NO SCALE

NOTES:

1. Reinforcement at Abut 1 CIDH piles shall be spliced with service splice couplers, for construction under the overhead lines. Splices shall be staggered.
2. Location of splice may be modified ± 5 ft, as directed by Engineer.
3. This splice detail is only for Abut 1 piles.

NOTE:
THE CONTRACTOR SHALL VERIFY ALL CONTROLLING FIELD DIMENSIONS BEFORE ORDERING OR FABRICATING ANY MATERIAL.

Luqi Yang
DESIGN OVERSIGHT Luqi Yang
3-29-12
SIGN OFF DATE

	BY	CHECKED
DESIGN	V. J. Mosquera	T. Kirilov
DETAILS	J. Saldana	T. Kirilov
QUANTITIES	C. Stelea	R. Kelcher

PREPARED FOR THE STATE OF CALIFORNIA DEPARTMENT OF TRANSPORTATION

V. Jessica Mosquera
PROJECT ENGINEER

BRIDGE NO. 55-0279
POST MILES 2.2

EUCLID St UC (WIDEN)
ABUTMENT DETAILS No. 2

DESIGN DETAIL SHEET (ENGLISH) (REV.7/16/10)

ORIGINAL SCALE IN INCHES FOR REDUCED PLANS 0 1 2 3

UNIT: 2295
PROJECT NUMBER & PHASE: 12000000791 CONTRACT NO.: 12-0C5701

DISREGARD PRINTS BEARING EARLIER REVISION DATES

REVISION DATES 08/30/10 09/16/11 12/22/11

SHEET 7 OF 21

FILE => 55-0279-f-a01dt02.dgn

USERNAME => s121614 DATE PLOTTED => 17-AUG-2012 TIME PLOTTED => 06:05

DIST	COUNTY	ROUTE	POST MILES TOTAL PROJECT	SHEET No	TOTAL SHEETS
12	Ora	91	0.9/5.4	720	885

V. Jessica Mosquera 3-15-2012
REGISTERED CIVIL ENGINEER DATE

8-13-12
PLANS APPROVAL DATE

REGISTERED PROFESSIONAL ENGINEER V. J. Mosquera No. C 051049 Exp. 09/30/13 CIVIL STATE OF CALIFORNIA

The State of California or its officers or agents shall not be responsible for the accuracy or completeness of scanned copies of this plan sheet.

OCTA
550 S MAIN STREET
ORANGE, CA. 92868

RBF CONSULTING
14725 ALTON PARKWAY
IRVINE, CA 92618

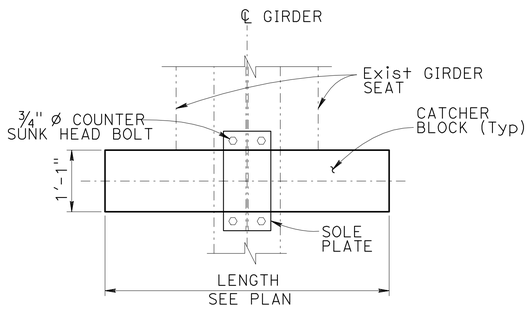

PLAN

DETAIL AT CATCHER BLOCK
¾" = 1'-0"

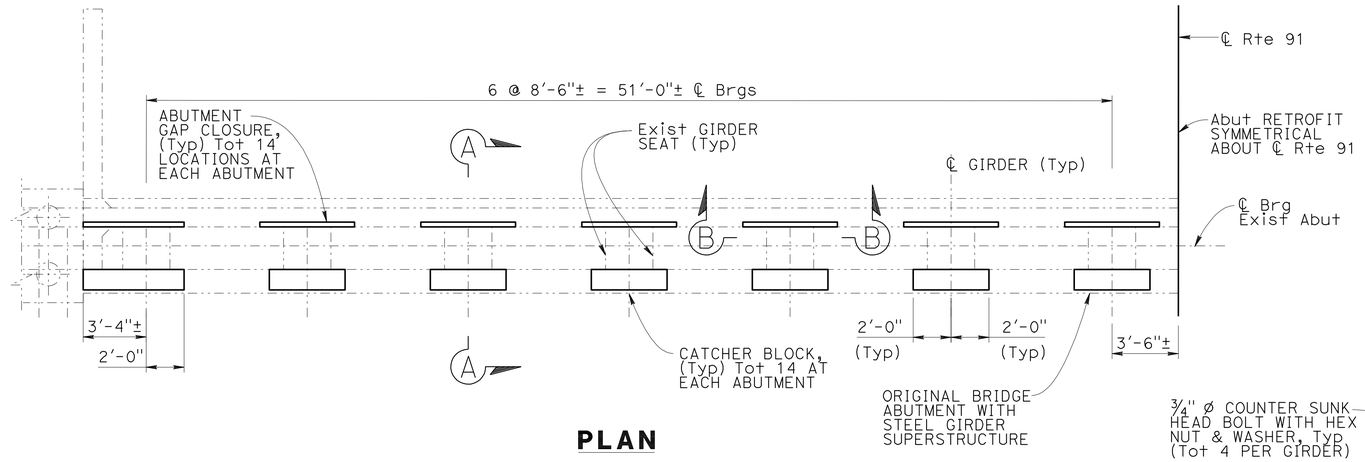

PLAN

Abut #5 SHOWN, Abut #1 SIMILAR
¼" = 1'-0"

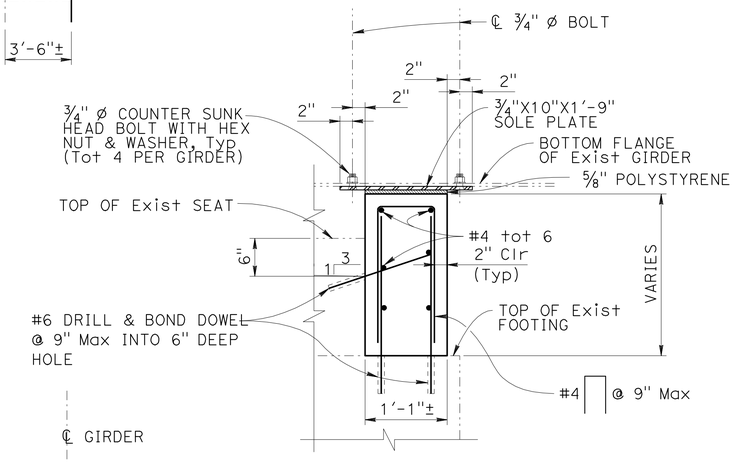

DETAIL 1

1" = 1'-0"

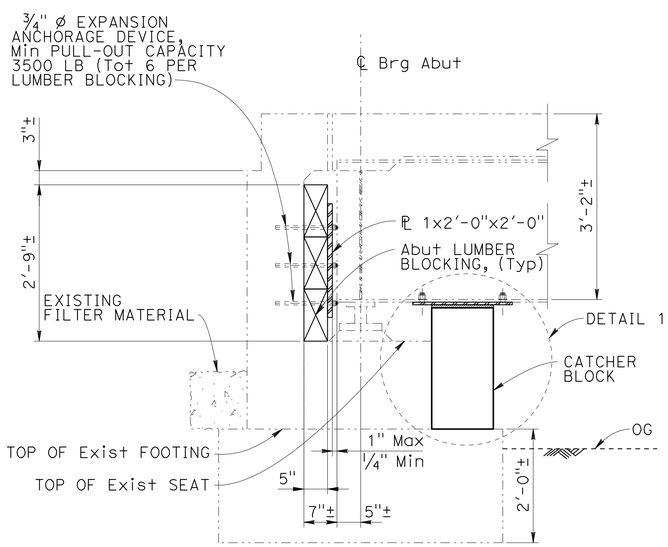

SECTION A-A

¾" = 1'-0"

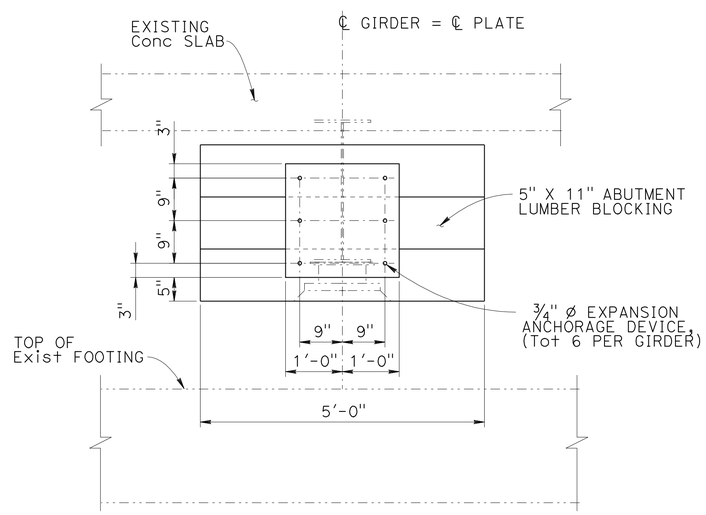

SECTION B-B

¾" = 1'-0"

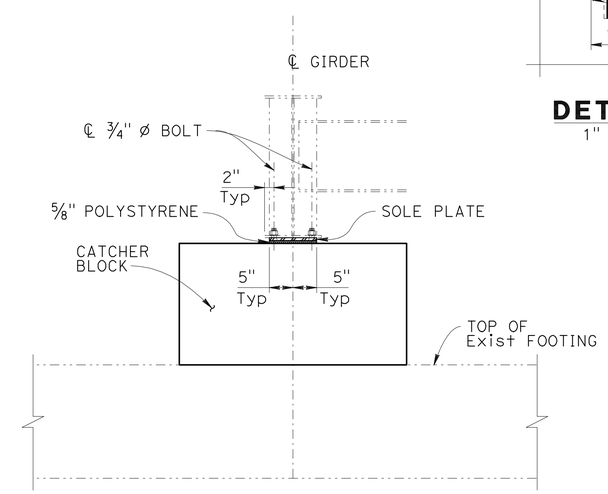

ELEVATION

¾" = 1'-0"

LEGEND:

Existing Structure
New Construction

NOTE:
THE CONTRACTOR SHALL VERIFY ALL CONTROLLING FIELD DIMENSIONS BEFORE ORDERING OR FABRICATING ANY MATERIAL.

Luqi Yang
DESIGN OVERSIGHT Luqi Yang
3-29-12
SIGN OFF DATE

	BY	CHECKED
DESIGN	V. J. Mosquera	T. Kirilov
DETAILS	J. Saldana	T. Kirilov
QUANTITIES	C. Stelea	R. Kelcher

PREPARED FOR THE STATE OF CALIFORNIA DEPARTMENT OF TRANSPORTATION

V. Jessica Mosquera
PROJECT ENGINEER

BRIDGE NO. 55-0279
POST MILES 2.2

EUCLID St UC (WIDEN)
ABUTMENT RETROFIT DETAILS

DESIGN DETAIL SHEET (ENGLISH) (REV.7/16/10)

ORIGINAL SCALE IN INCHES FOR REDUCED PLANS 0 1 2 3

UNIT: 2295
PROJECT NUMBER & PHASE: 12000000791 CONTRACT NO.: 12-0C5701

DISREGARD PRINTS BEARING EARLIER REVISION DATES

REVISION DATES: 08/30/10 09/16/11 12/22/11

SHEET 8 OF 21

FILE => 55-0279-f-a01rd01.dgn

USERNAME => s121614 DATE PLOTTED => 17-AUG-2012 TIME PLOTTED => 06:06

DIST	COUNTY	ROUTE	POST MILES TOTAL PROJECT	SHEET No	TOTAL SHEETS
12	Ora	91	0.9/5.4	721	885

V. Jessica Mosquera 3-15-2012
REGISTERED CIVIL ENGINEER DATE

8-13-12
PLANS APPROVAL DATE

REGISTERED PROFESSIONAL ENGINEER V. J. Mosquera No. C 051049 Exp. 09/30/13 CIVIL STATE OF CALIFORNIA

The State of California or its officers or agents shall not be responsible for the accuracy or completeness of scanned copies of this plan sheet.

OCTA
550 S MAIN STREET
ORANGE, CA. 92868

RBF CONSULTING
14725 ALTON PARKWAY
IRVINE, CA 92618

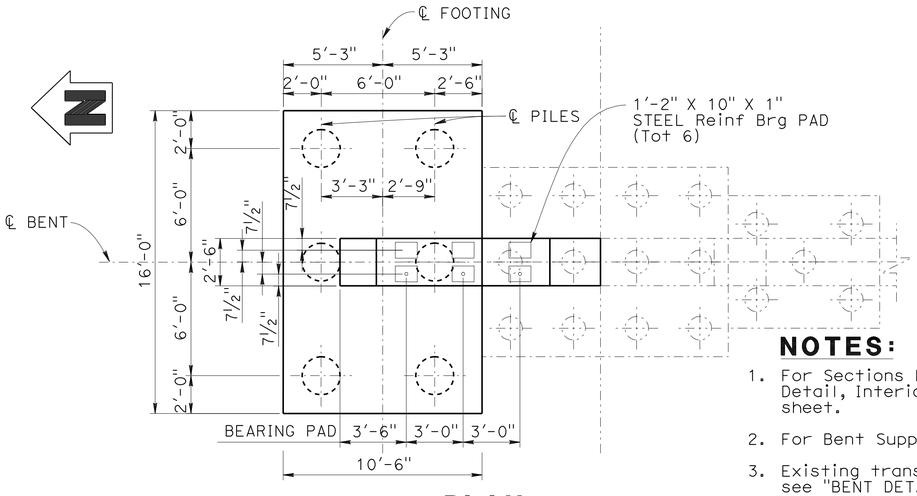

PLAN
¼" = 1'-0"

NOTES:

1. For Sections F-F, G-G & H-H, Exterior Shear Key Detail, Interior Shear Key Detail, see "BENT DETAILS" sheet.
2. For Bent Support Details, see "GIRDER LAYOUT" sheet.
3. Existing transverse pier wall reinf to remain, see "BENT DETAILS" sheet.
4. No splices permitted in pier wall reinf within the "No Splice Zone". Outside the "No Splice Zone", pier wall reinf shall meet the "ultimate splice" requirements. These splices to be staggered.
5. Tie hook lengths shall be bar bend + 6¼" minimum.

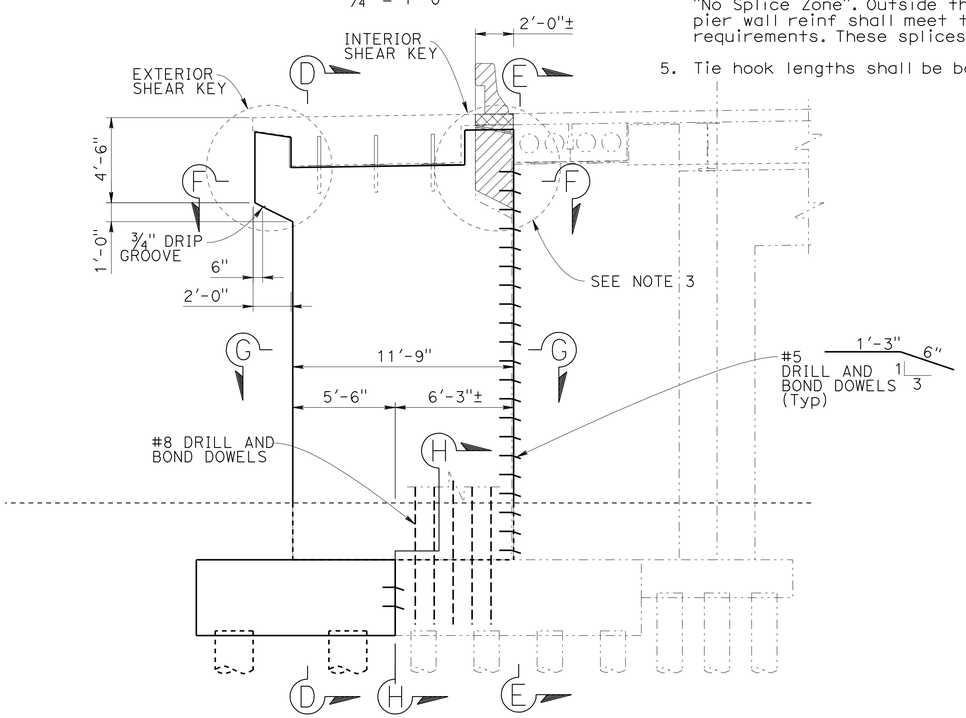

ELEVATION
¼" = 1'-0"

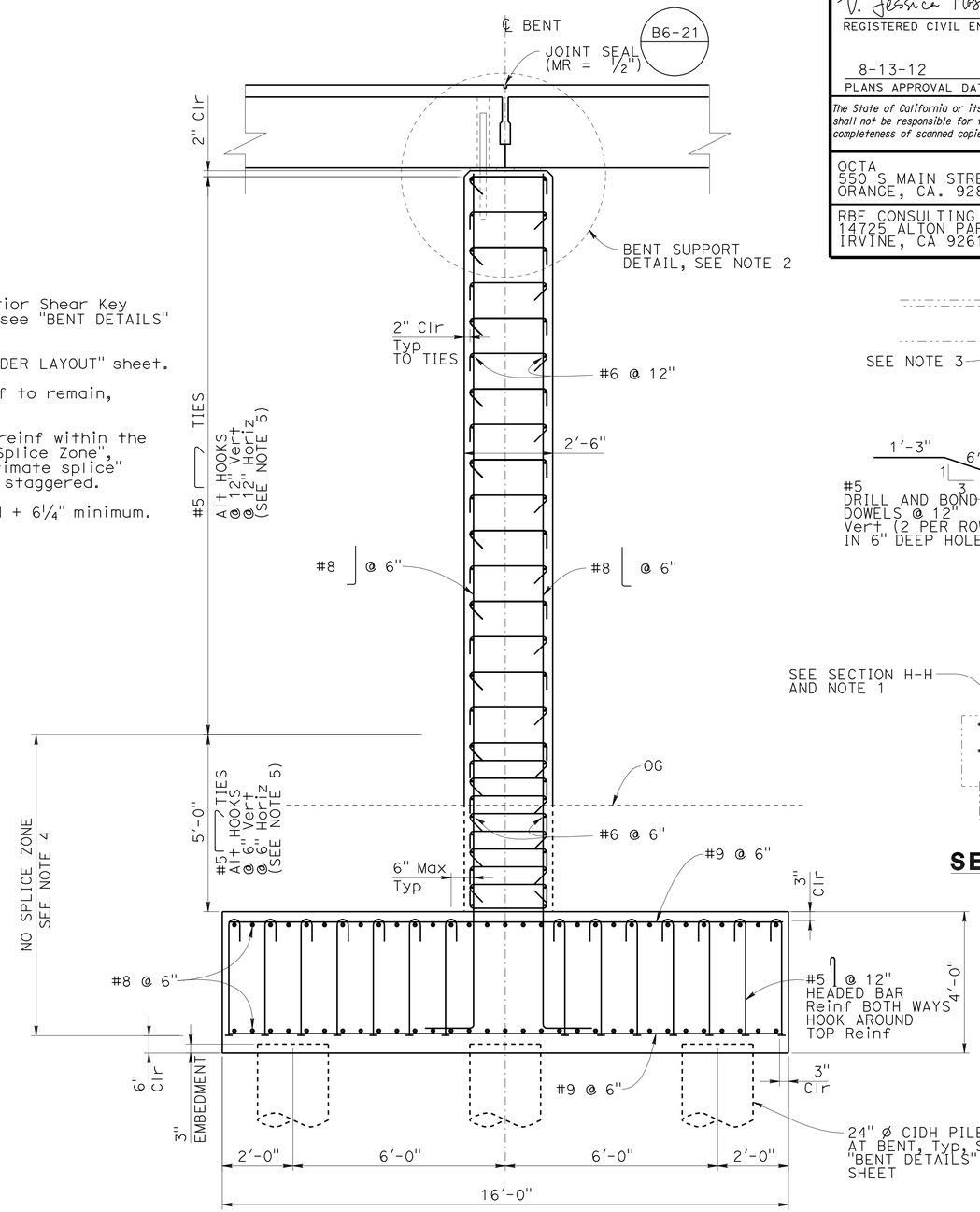

SECTION D-D
½" = 1'-0"

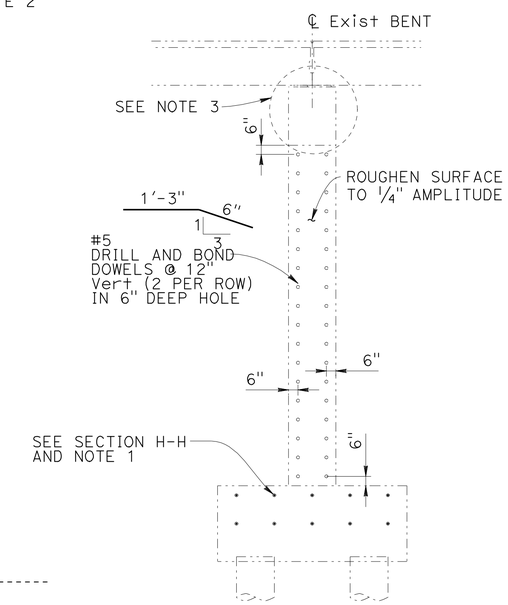

SECTION E-E
¼" = 1'-0"

LEGEND:

- Limits of Bridge Removal (Portion), Location D
- Closure Pour
- Existing Structure
- New Construction

NOTE:
THE CONTRACTOR SHALL VERIFY ALL CONTROLLING FIELD DIMENSIONS BEFORE ORDERING OR FABRICATING ANY MATERIAL.

Luqi Yang
DESIGN OVERSIGHT Luqi Yang
3-29-12
SIGN OFF DATE

	BY	CHECKED
DESIGN	V. J. Mosquera	T. Kirilov
DETAILS	J. Saldana	T. Kirilov
QUANTITIES	C. Stelea	R. Kelcher

PREPARED FOR THE STATE OF CALIFORNIA DEPARTMENT OF TRANSPORTATION

V. Jessica Mosquera
PROJECT ENGINEER

BRIDGE NO. 55-0279
POST MILES 2.2

EUCLID St UC (WIDEN)
BENT LAYOUT

DESIGN DETAIL SHEET (ENGLISH) (REV.7/16/10)

ORIGINAL SCALE IN INCHES FOR REDUCED PLANS 0 1 2 3

UNIT: 2295
PROJECT NUMBER & PHASE: 12000000791 CONTRACT NO.: 12-0C5701

DISREGARD PRINTS BEARING EARLIER REVISION DATES

REVISION DATES 08/30/10 09/08/11 12/02/11 02/17/12

SHEET 9 OF 21

FILE => 55-0279-h-b01_lo01.dgn

USERNAME => s612614 DATE PLOTTED => 17-AUG-2012 TIME PLOTTED => 06:06

DIST	COUNTY	ROUTE	POST MILES TOTAL PROJECT	SHEET No	TOTAL SHEETS
12	Ora	91	0.9/5.4	722	885

V. Jessica Mosquera 3-15-2012
REGISTERED CIVIL ENGINEER DATE

8-13-12
PLANS APPROVAL DATE

REGISTERED PROFESSIONAL ENGINEER V. J. Mosquera No. C 051049 Exp. 09/30/13 CIVIL STATE OF CALIFORNIA

The State of California or its officers or agents shall not be responsible for the accuracy or completeness of scanned copies of this plan sheet.

OCTA
550 S MAIN STREET
ORANGE, CA. 92868

RBF CONSULTING
14725 ALTON PARKWAY
IRVINE, CA 92618

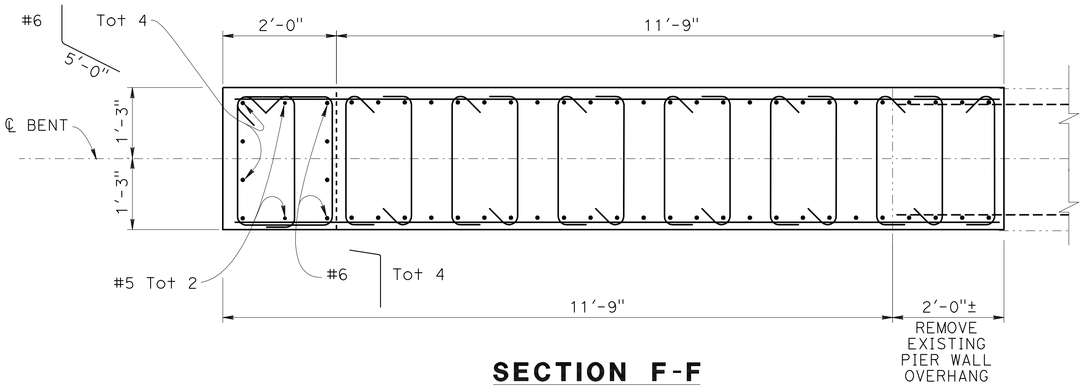

SECTION F-F
3/4" = 1'-0"

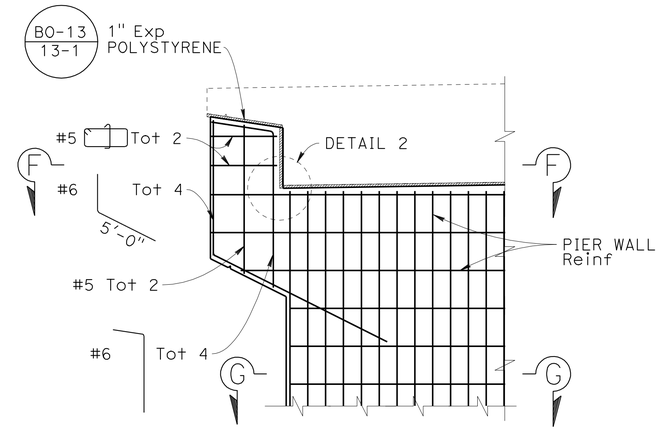

EXTERIOR SHEAR KEY
1/2" = 1'-0"

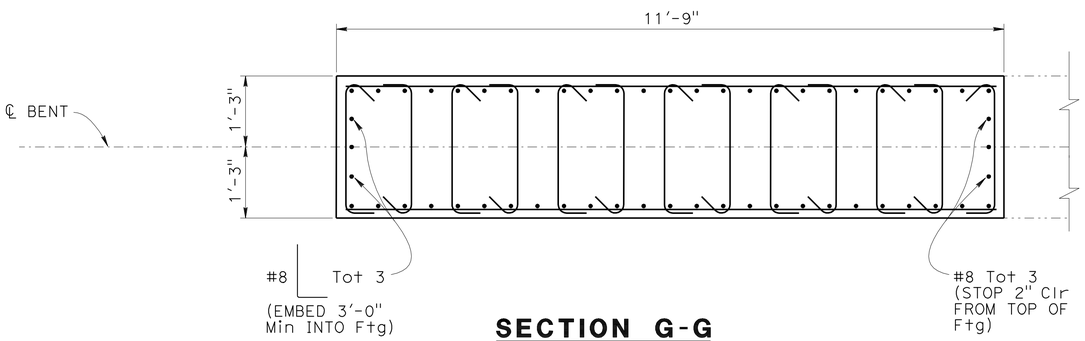

SECTION G-G
3/4" = 1'-0"

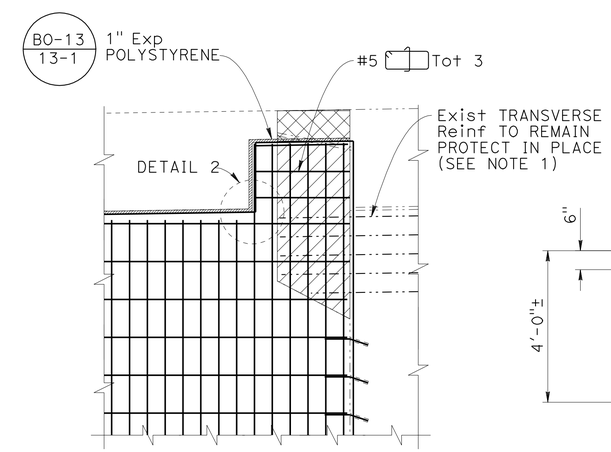

INTERIOR SHEAR KEY
1/2" = 1'-0"

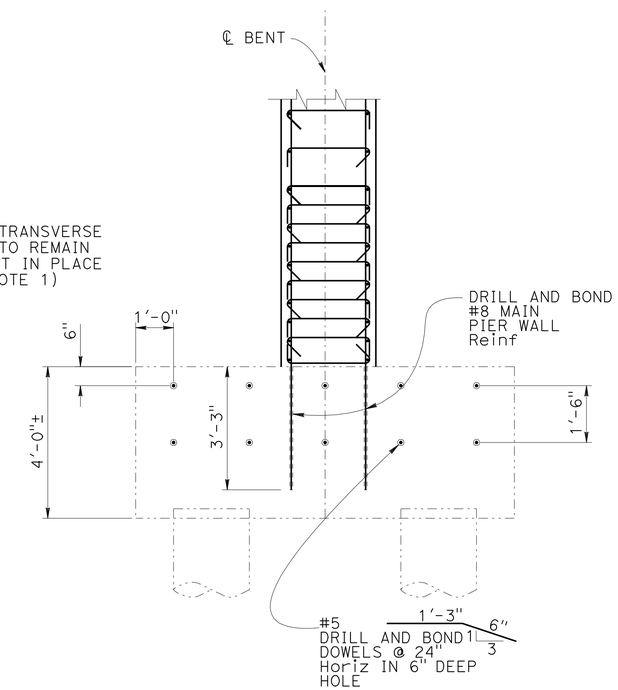

SECTION H-H
1/2" = 1'-0"

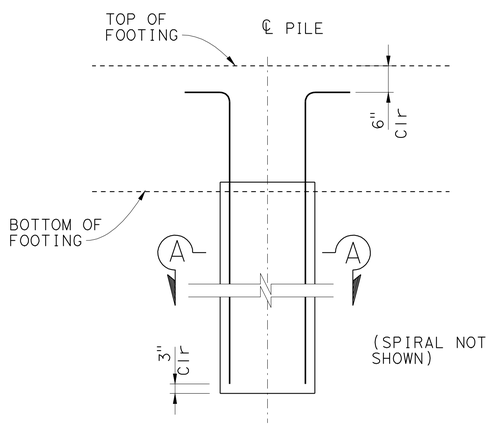

BENT PILE
24" Dia CIDH CONCRETE PILE
NO SCALE

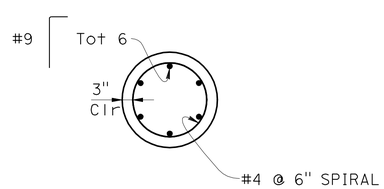

SECTION A-A
SEE NOTE 3
NO SCALE

LEGEND:

- Limits of Bridge Removal (Portion), Location D
- Closure Pour
- Existing Structure
- New Construction

NOTES:

1. Replace any damaged exist transverse deck reinf with an additional #5 $\frac{3}{1}$ $\frac{2'-0"}{}$ drill & bond dowel into 6" hole.
2. For "DETAIL 2", see "ABUTMENT DETAILS No. 2" sheet.
3. Dimensions and reinf shown supercede that shown in Standard Plan B2-3. For other reinf and notes see Standard Plan B2-3.

NOTE:
THE CONTRACTOR SHALL VERIFY ALL CONTROLLING FIELD DIMENSIONS BEFORE ORDERING OR FABRICATING ANY MATERIAL.

Luqi Yang
DESIGN OVERSIGHT Luqi Yang
3-29-12
SIGN OFF DATE

	BY	CHECKED
DESIGN	V. J. Mosquera	T. Kirilov
DETAILS	J. Saldana	T. Kirilov
QUANTITIES	C. Stelea	R. Kelcher

PREPARED FOR THE STATE OF CALIFORNIA DEPARTMENT OF TRANSPORTATION

V. Jessica Mosquera
PROJECT ENGINEER

BRIDGE NO. 55-0279
POST MILES 2.2

EUCLID St UC (WIDEN)
BENT DETAILS

DESIGN DETAIL SHEET (ENGLISH) (REV.7/16/10)

ORIGINAL SCALE IN INCHES FOR REDUCED PLANS 0 1 2 3

UNIT: 2295
PROJECT NUMBER & PHASE: 12000000791 CONTRACT NO.: 12-0C5701

DISREGARD PRINTS BEARING EARLIER REVISION DATES

REVISION DATES 08/30/10 09/16/11 12/22/11 02/17/12

SHEET 10 OF 21

FILE => 55-0279-h-b01dt01.dgn

USERNAME => s121614 DATE PLOTTED => 17-AUG-2012 TIME PLOTTED => 06:06

DIST	COUNTY	ROUTE	POST MILES TOTAL PROJECT	SHEET No	TOTAL SHEETS
12	Ora	91	0.9/5.4	723	885

V. Jessica Mosquera 3-15-2012
REGISTERED CIVIL ENGINEER DATE

8-13-12
PLANS APPROVAL DATE

REGISTERED PROFESSIONAL ENGINEER V. J. Mosquera No. C 051049 Exp. 09/30/13 CIVIL STATE OF CALIFORNIA

The State of California or its officers or agents shall not be responsible for the accuracy or completeness of scanned copies of this plan sheet.

OCTA
550 S MAIN STREET
ORANGE, CA. 92868

RBF CONSULTING
14725 ALTON PARKWAY
IRVINE, CA 92618

DECK ELEVATIONS

℄ SR-91 Sta	Elev "L"	Elev "R"
BB 171+73.45	152.44±	152.73±
171+80.00	152.48±	152.80±
172+00.00	152.58±	152.89±
172+20.00	152.65±	152.95±
172+40.00	152.69±	152.97±
172+60.00	152.69±	152.96±
172+80.00	152.66±	152.94±
173+00.00	152.60±	152.89±
173+20.00	152.50±	152.85±
EB 173+35.95	152.41±	152.73±

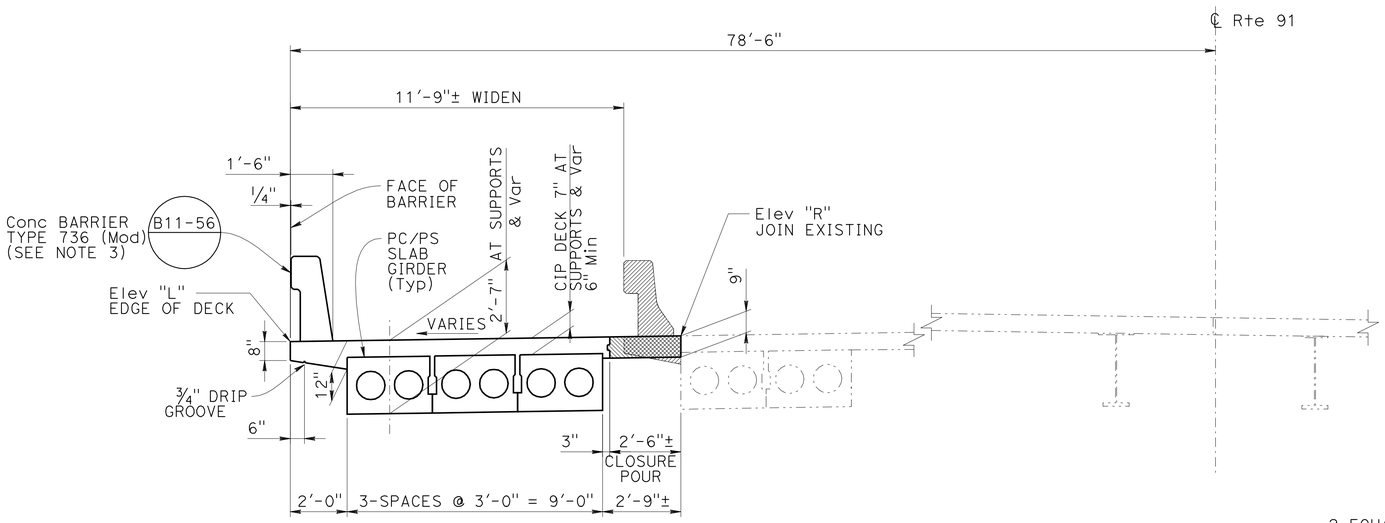

TYPICAL SECTION

3/8" = 1'-0"

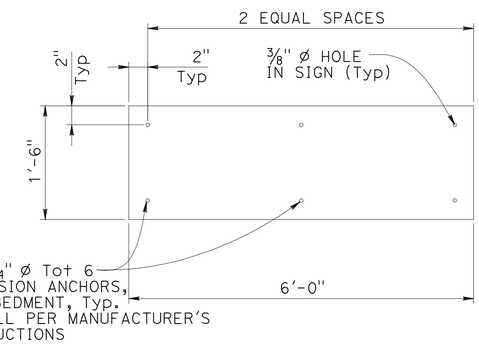

VERTICAL CLEARANCE SIGN

NO SCALE
SEE NOTE 4

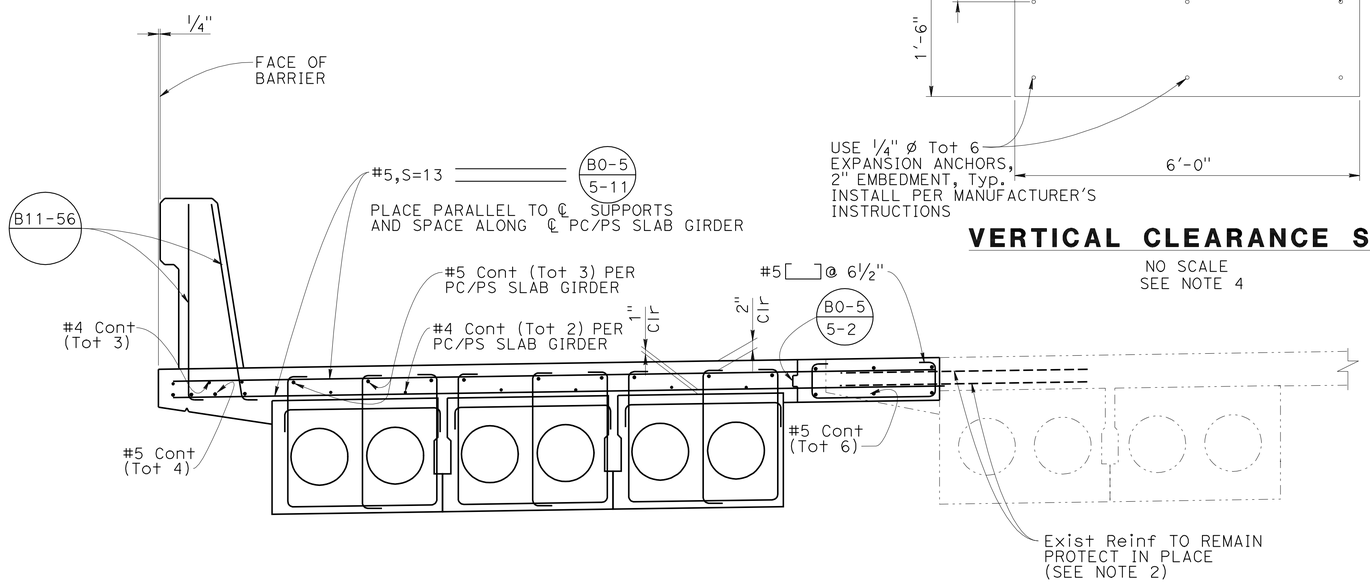

PART TYPICAL SECTION

3/4" = 1'-0"

NOTES:

1. Depth of superstructure is measured at abutments and bent supports.
2. Replace any damaged exist transverse deck reinf with an additional #5 1 3 2'-0" drill & bond dowel into 6" hole.
3. For Bridge Mounted Sign details, see "SIGN PLANS" and "BRIDGE MOUNTED SIGN DETAILS" sheet.
4. For location of Vertical Clearance Sign see "SIGN PLANS" and "GENERAL PLAN"

SUPERSTRUCTURE CIP CONCRETE NOTES:

3. The concrete barrier is placed at least 21 days after the cast-in-place deck has been placed and attained the specified concrete strength.
4. The closure pour shall not be placed sooner than 14 days after placement of the barrier.

LEGEND:

- Limits of Bridge Removal (portion), Location D
- Closure Pour
- Existing Structure
- New Construction

NOTE:
THE CONTRACTOR SHALL VERIFY ALL CONTROLLING FIELD DIMENSIONS BEFORE ORDERING OR FABRICATING ANY MATERIAL.

Luqi Yang
DESIGN OVERSIGHT Luqi Yang
3-29-12
SIGN OFF DATE

	BY	CHECKED
DESIGN	V. J. Mosquera	T. Kirilov
DETAILS	J. Saldana	T. Kirilov
QUANTITIES	C. Stelea	R. Kelcher

PREPARED FOR THE STATE OF CALIFORNIA DEPARTMENT OF TRANSPORTATION

V. Jessica Mosquera
PROJECT ENGINEER

BRIDGE NO. 55-0279
POST MILES 2.2

EUCLID St UC (WIDEN)
TYPICAL SECTION

DESIGN DETAIL SHEET (ENGLISH) (REV.7/16/10)

ORIGINAL SCALE IN INCHES FOR REDUCED PLANS 0 1 2 3

UNIT: 2295
PROJECT NUMBER & PHASE: 12000000791 CONTRACT NO.: 12-0C5701

DISREGARD PRINTS BEARING EARLIER REVISION DATES

REVISION DATES: 08/30/10 09/16/11 12/22/11 03/15/12

SHEET 11 OF 21

FILE => 55-0279-k-ts01.dgn

USERNAME => s121614 DATE PLOTTED => 17-AUG-2012 TIME PLOTTED => 06:06

DIST	COUNTY	ROUTE	POST MILES TOTAL PROJECT	SHEET No	TOTAL SHEETS
12	Ora	91	0.9/5.4	724	885

V. Jessica Mosquera 3-15-2012
REGISTERED CIVIL ENGINEER DATE

8-13-12
PLANS APPROVAL DATE

REGISTERED PROFESSIONAL ENGINEER V. J. Mosquera No. C 051049 Exp. 09/30/13 CIVIL STATE OF CALIFORNIA

The State of California or its officers or agents shall not be responsible for the accuracy or completeness of scanned copies of this plan sheet.

OCTA
550 S MAIN STREET
ORANGE, CA. 92868

RBF CONSULTING
14725 ALTON PARKWAY
IRVINE, CA 92618

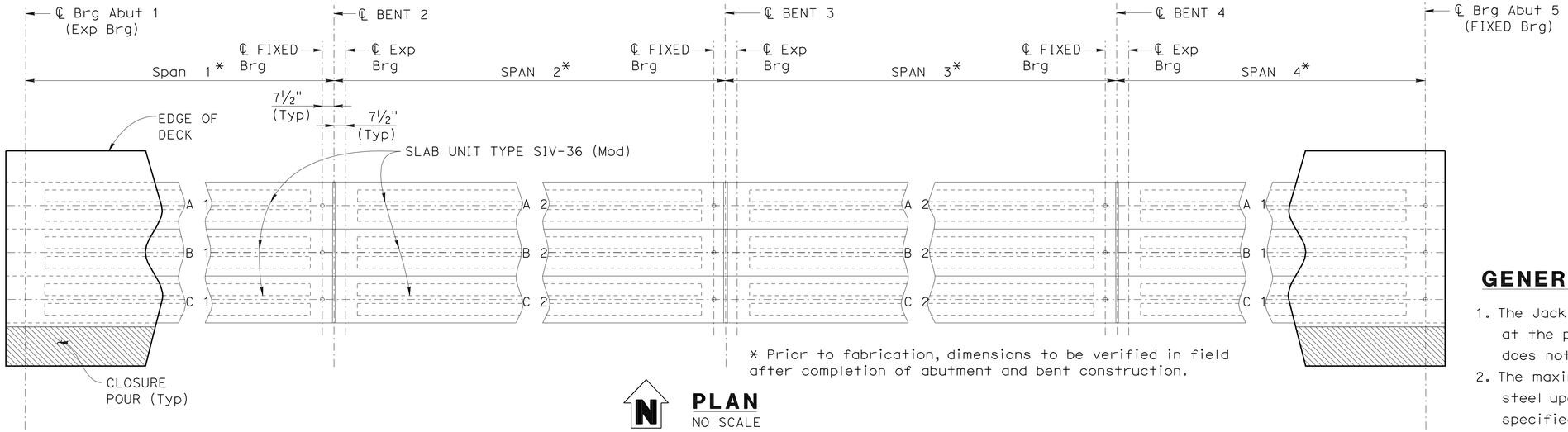

* Prior to fabrication, dimensions to be verified in field after completion of abutment and bent construction.

PLAN
NO SCALE

GENERAL NOTES:

1. The Jacking Force (P) is the jacking force required at the point of control along the span. The jacking force does not include any fabrication specific losses.
2. The maximum tensile stress in the prestressing steel upon release shall not exceed 75% of the specified minimum ultimate tensile strength of the prestressing steel.
3. The maximum temporary tensile stress (Jacking stress) in the prestressing steel shall not exceed 80% of the specified minimum ultimate tensile strength of the prestressing steel.
4. Concrete strength:
   fci′ = 5.0 ksi at time of stressing
   fc′ = 7.0 ksi at 28 days
5. Keyways to be filled with grout.
6. See other sheets for railing requirements.
7. Design based on 270 ksi low relaxation 0.6" diameter strands.

LEGEND:

Closure Pour

Indicates Existing Structure

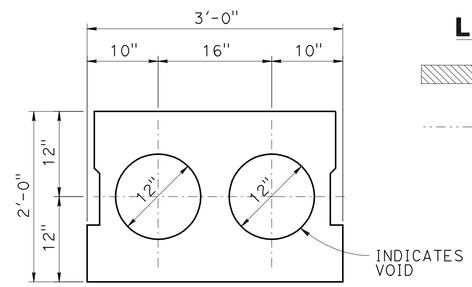

TYPICAL SECTION SIV-36 (Mod)
NO SCALE

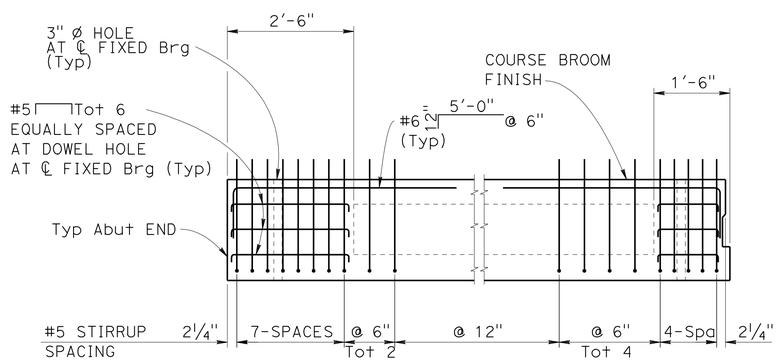

LONGITUDINAL SECTION
1½" = 1′-0"

GIRDER LOCATION	JACKING FORCE (P) IN kips	No. OF BOTTOM STRANDS **	No. OF TOP STRANDS	DEFLECTION	COMPONENT
				DECK	RAILING
A 1 & C 1	484	8	3	0	0
B 1	396	7	2	0	0
A 2 & C2	967	18	4	⅜"	0
B 2	791	14	4	¼"	0

** Bottom strands shall be placed starting with the bottom row of strands.

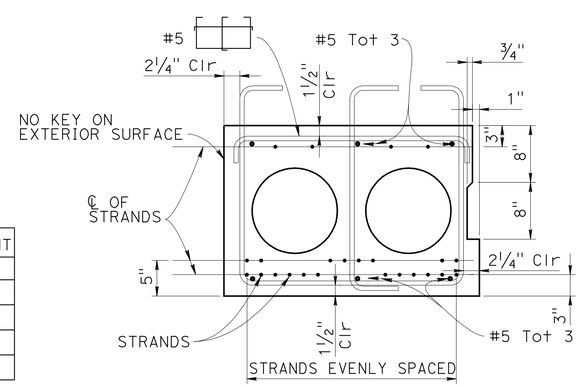

TYPICAL REINFORCEMENT
NO SCALE

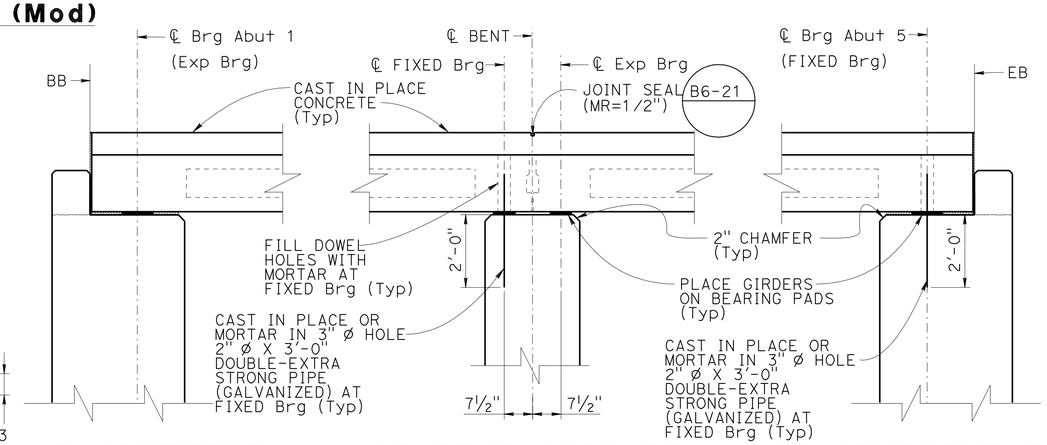

AT ABUTMENT 1 AT BENT SUPPORTS AT ABUTMENT 5

SUPPORT DETAILS
NO SCALE

NOTE:
THE CONTRACTOR SHALL VERIFY ALL CONTROLLING FIELD DIMENSIONS BEFORE ORDERING OR FABRICATING ANY MATERIAL.

Luqi Yang
DESIGN OVERSIGHT Luqi Yang
3-29-12
SIGN OFF DATE

	BY	CHECKED
DESIGN	V. J. Mosquera	T. Kirilov
DETAILS	J. Saldana	T. Kirilov
QUANTITIES	C. Stelea	R. Kelcher

PREPARED FOR THE STATE OF CALIFORNIA DEPARTMENT OF TRANSPORTATION

V. Jessica Mosquera
PROJECT ENGINEER

BRIDGE NO. 55-0279
POST MILES 2.2

EUCLID St UC (WIDEN)
GIRDER LAYOUT

DESIGN DETAIL SHEET (ENGLISH) (REV.7/16/10)

ORIGINAL SCALE IN INCHES FOR REDUCED PLANS 0 1 2 3

UNIT: 2295
PROJECT NUMBER & PHASE: 12000000791 CONTRACT NO.: 12-0C5701

DISREGARD PRINTS BEARING EARLIER REVISION DATES

REVISION DATES 08/30/10 09/08/11 12/22/11 02/17/12

SHEET 12 OF 21

FILE => 55-0279-1-g_ lo01.dgn

USERNAME => s12614 DATE PLOTTED => 17-AUG-2012 TIME PLOTTED => 06:06

DIST	COUNTY	ROUTE	POST MILES TOTAL PROJECT	SHEET No.	TOTAL SHEETS
12	Ora	91	0.9/5.4	725	885

V. Jessica Mosquera 3-15-2012
REGISTERED CIVIL ENGINEER DATE

8-13-12
PLANS APPROVAL DATE

REGISTERED PROFESSIONAL ENGINEER V. J. Mosquera No. C 051049 Exp. 09/30/13 CIVIL STATE OF CALIFORNIA

The State of California or its officers or agents shall not be responsible for the accuracy or completeness of scanned copies of this plan sheet.

OCTA
550 S MAIN STREET
ORANGE, CA. 92868

RBF CONSULTING
14725 ALTON PARKWAY
IRVINE, CA 92677

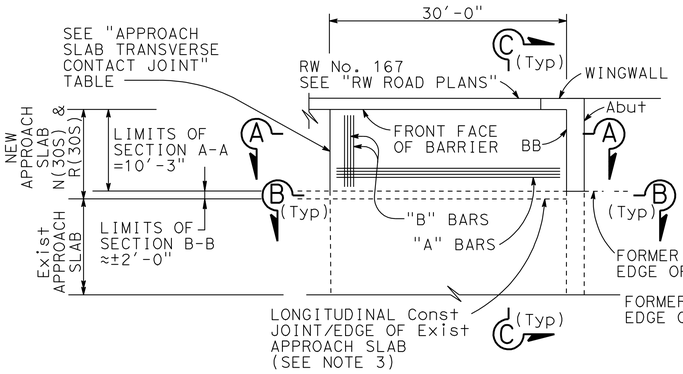

ABUT 1 PLAN

1" = 10'

3

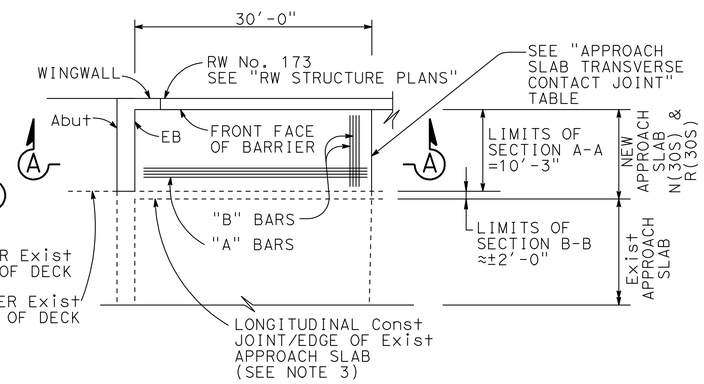

ABUT 5 PLAN

1" = 10'

3

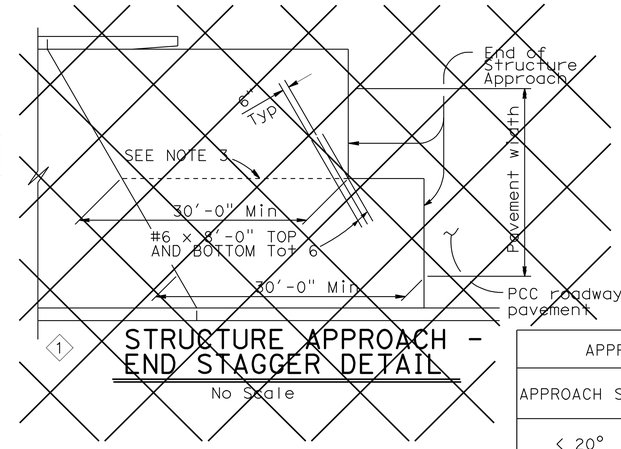

STRUCTURE APPROACH - END STAGGER DETAIL

No Scale

1

APPROACH SLAB TRANSVERSE CONTACT JOINT		
APPROACH SKEW	WITH AC ROADWAY PAVEMENT	WITH PCC ROADWAY PAVEMENT
< 20°	PARALLEL TO FACE OF PN	PARALLEL TO FACE OF PN
20° - 45°	PARALLEL TO FACE OF PN USE "DETAIL A"	STAGGER LINES 24" TO 36" APART
> 45°	PARALLEL TO FACE OF PN USE "DETAIL A"	STAGGER AT EACH LANE LINE

1

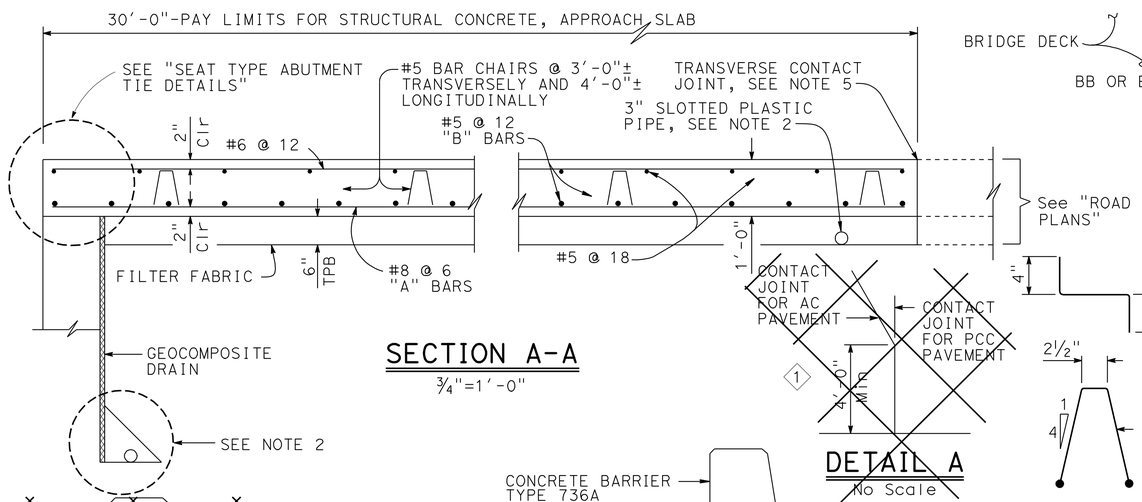

SECTION A-A

¾"=1'-0"

1

DETAIL A

No Scale

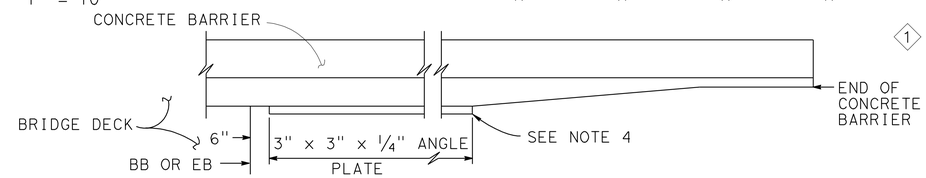

EDGE ANGLE DETAIL

½"=1'-0"

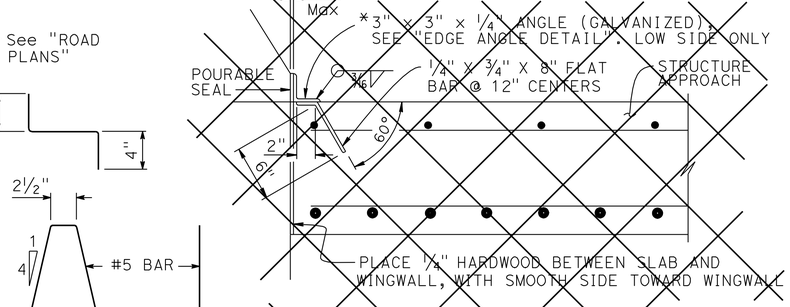

1

*(TO BE USED WITH CONCRETE BARRIER WITH VERTICAL FACE)

DETAIL B

1½" = 1'-0"

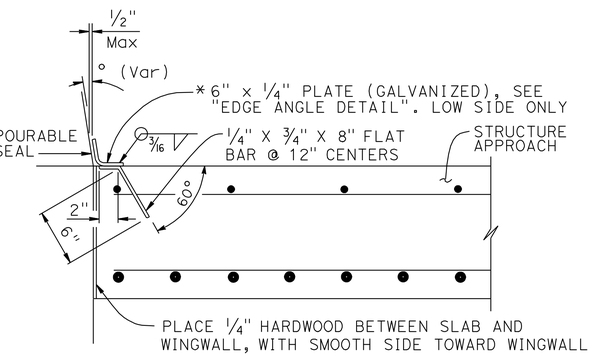

*(TO BE USED WITH CONCRETE BARRIER WITH SLOPING FACE)

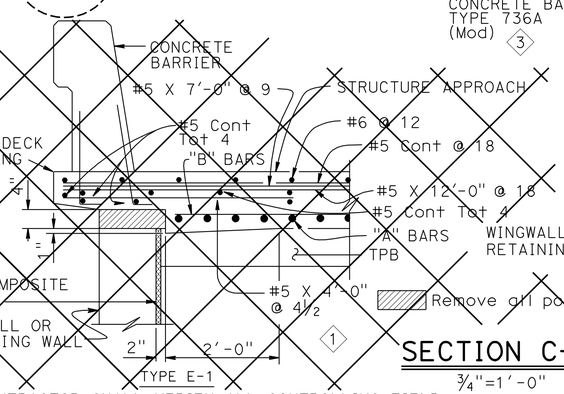

1

SECTION C-C

¾"=1'-0"

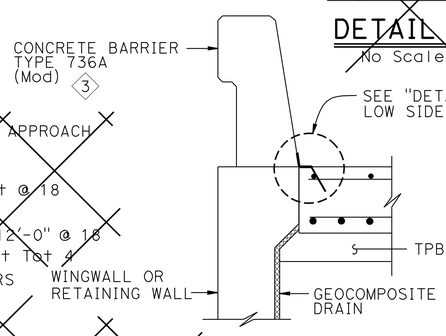

TYPE E-2

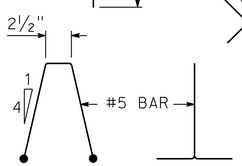

BAR CHAIR DETAIL

1½"=1'-0"

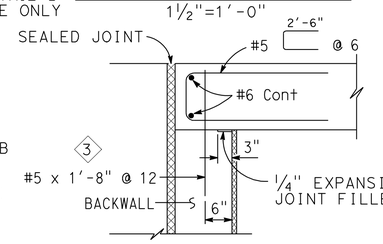

MR ≤ 2"

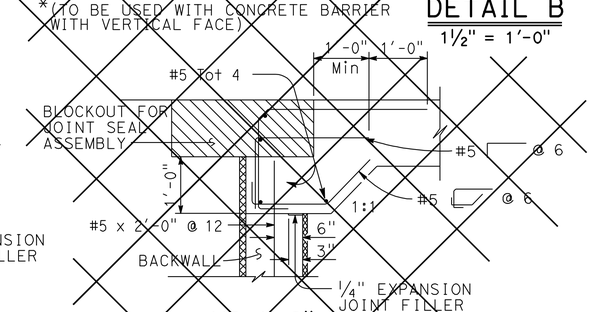

MR > 2"

1

SEAT TYPE ABUTMENT TIE DETAILS (SEE NOTE 1)

¾"=1'-0"

NOTE:
THE CONTRACTOR SHALL VERIFY ALL CONTROLLING FIELD DIMENSIONS BEFORE ORDERING OR FABRICATING ANY MATERIAL.

NOTES:

1. For details not shown, see Structure Plans. For MR ≤ 2", adjust bar reinforcement to clear a sawcut for sealed joint, when required
2. For drainage details, see "STRUCTURE APPROACH DRAINAGE DETAILS" sheet
3. Longitudinal construction joints, when permitted by the Engineer, shall be located on lane lines
4. End angle or plate at beginning of barrier transition, end of wingwall or end of structure approach as applicable
5. For transverse contact joint with new PCC paving, refer to Revised Standard Plan P10
6. At the Contractor's option, approach slab transverse reinforcement may be placed parallel to paving notch. Spacing of transverse reinforcement is measured along ℄ roadway
7. For Section B-B, see "STRUCTURE APPROACH TYPE R(30S)" sheet

2

REVISED STANDARD DRAWING

FILE NO. xs3-120

APPROVAL DATE July 2011

1 Does Not Apply
2 Added Detail or Note
3 Modified Detail or Note

STATE OF CALIFORNIA
DEPARTMENT OF TRANSPORTATION

DIVISION OF ENGINEERING SERVICES

BRIDGE NO. 55-0279
POST MILE 2.2

EUCLID St UC (WIDEN)

STRUCTURE APPROACH TYPE N(30S)

DS OSD 2147A (ENGLISH STANDARD DRAWING "XS" BORDER REV. (02-02-11)

ORIGINAL SCALE IN INCHES FOR REDUCED PLANS 0 1 2 3

UNIT: 2295
PROJECT NUMBER & PHASE: 12000000791
CONTRACT NO.: 12-0C5701

DISREGARD PRINTS BEARING EARLIER REVISION DATES

REVISION DATES 08/30/10 09/06/11 12/20/11 3/15/12

SHEET 13 OF 21

FILE => 55-0279-s-sa30n.dgn

USERNAME => s121614 DATE PLOTTED => 17-AUG-2012 TIME PLOTTED => 08:06

DIST	COUNTY	ROUTE	POST MILES TOTAL PROJECT	SHEET No.	TOTAL SHEETS
12	Ora	91	0.9/5.4	726	885

N. Jessica Mosquera 3-15-2012
REGISTERED CIVIL ENGINEER DATE

8-13-12
PLANS APPROVAL DATE

REGISTERED PROFESSIONAL ENGINEER V. J. Mosquera No. C 051049 Exp. 09/30/13 CIVIL STATE OF CALIFORNIA

The State of California or its officers or agents shall not be responsible for the accuracy or completeness of scanned copies of this plan sheet.

OCTA
550 S MAIN STREET
ORANGE, CA. 92868

RBF CONSULTING
14725 ALTON PARKWAY
IRVINE, CA 92677

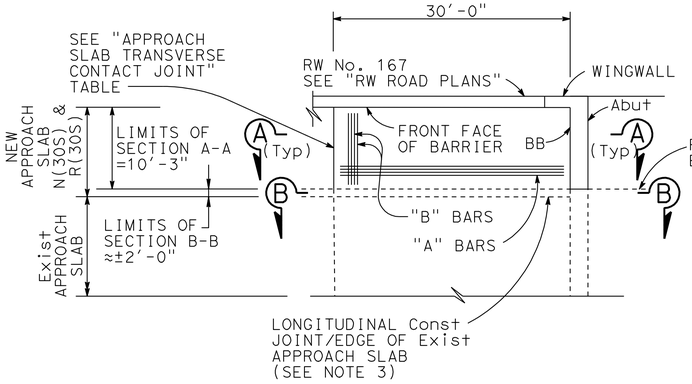

ABUT 1 PLAN
1" = 10' (3)

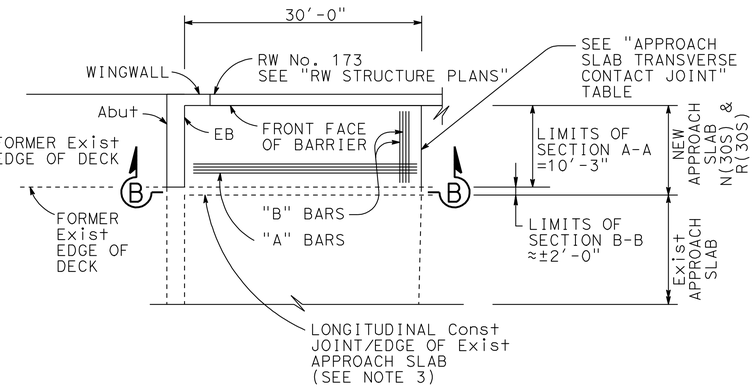

ABUT 5 PLAN
1" = 10' (3)

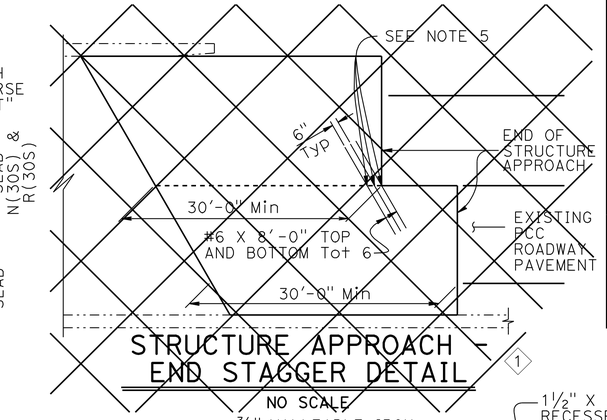

STRUCTURE APPROACH - END STAGGER DETAIL
NO SCALE (1)

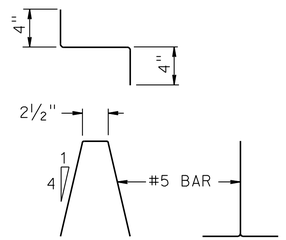

BAR CHAIR DETAIL
1½" = 1'-0"

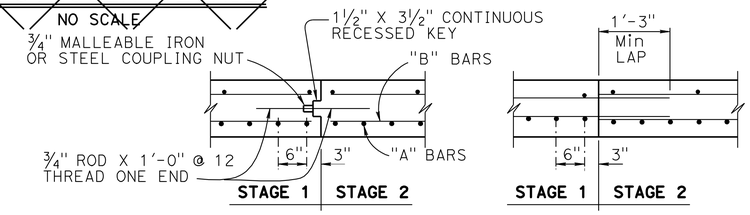

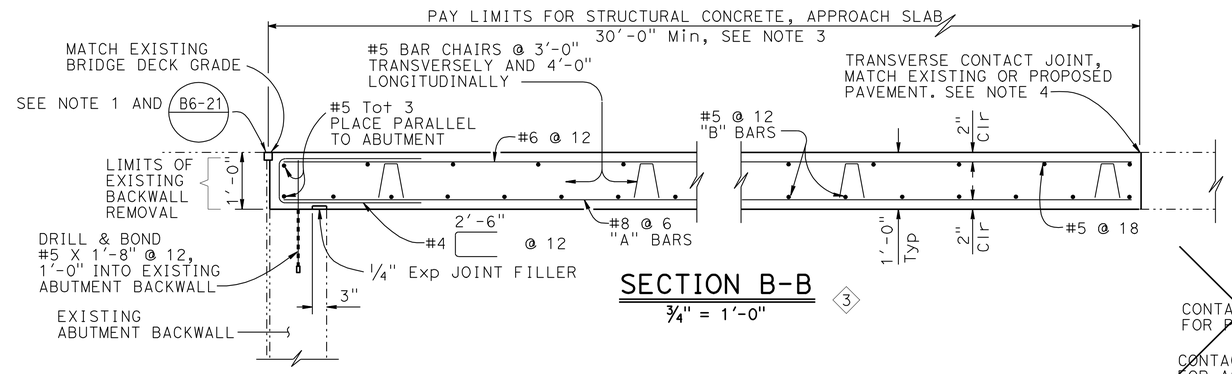

SECTION B-B
¾" = 1'-0" (3)

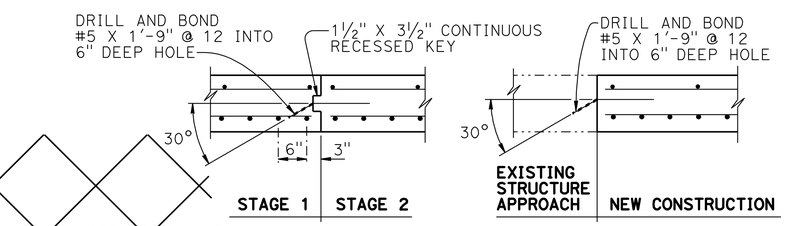

LONGITUDINAL CONSTRUCTION JOINT ALTERNATIVES
¾" = 1'-0"

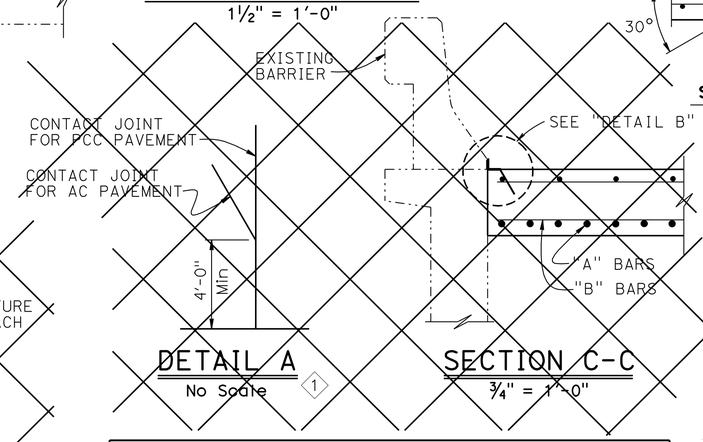

DETAIL A
No Scale (1)

SECTION C-C
¾" = 1'-0" (1)

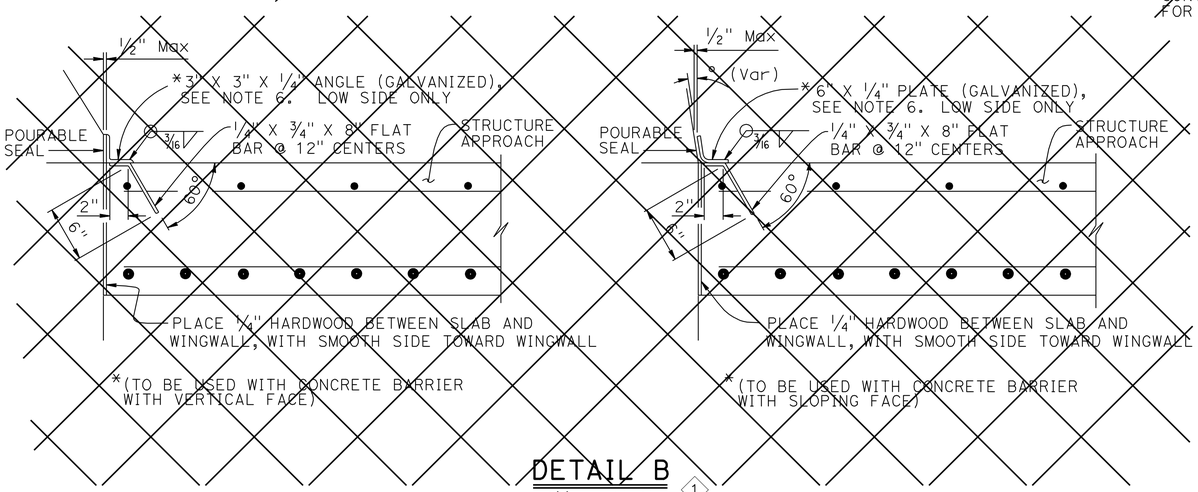

DETAIL B
1½" = 1'-0" (1)

NOTES:

1. Sealed joint,for MR see Structure Plans. Adjust bar reinforcement to clear a sawcut for sealed joint, when required
2. Longitudinal construction joints, when permitted by Engineer, shall be located on lane lines
3. Transverse contact joint shall be a minimum of 5'-0" from an existing or constructed weakened plane joint
4. (3) For transverse contact joint with new PCC paving, refer to Revised Standard Plan P10
5. (1) ~~Couplers are required for stage construction~~
6. (1) ~~End angle or plate at beginning of barrier transition, end of wingwall or end of structure approach as applicable~~
5. (2) For Section A-A, see "STRUCTURE APPROACH TYPE N(30S)" sheet

APPROACH SLAB TRANSVERSE CONTACT JOINT		
APPROACH SKEW	WITH AC ROADWAY PAVEMENT	WITH PCC ROADWAY PAVEMENT
< 10°	PARALLEL TO FACE OF PN	PARALLEL TO FACE OF PN
10° - 45°	PARALLEL TO FACE OF PN USE "DETAIL A"	STAGGER LINES 24' TO 36' APART
> 45°	PARALLEL TO FACE OF PN USE "DETAIL A"	STAGGER AT EACH LANE LINE

NOTE:
THE CONTRACTOR SHALL VERIFY ALL CONTROLLING FIELD DIMENSIONS BEFORE ORDERING OR FABRICATING ANY MATERIAL.

REVISED STANDARD DRAWING
FILE NO. xs3-130
APPROVAL DATE July 2011

(1) Does Not Apply
(2) Added Detail or Note
(3) Modified Detail or Note

STATE OF CALIFORNIA
DEPARTMENT OF TRANSPORTATION

DIVISION OF ENGINEERING SERVICES

BRIDGE NO. 55-0279
POST MILE 2.2

EUCLID St UC (WIDEN)
STRUCTURE APPROACH TYPE R(30S)

DS OSD 2147A (ENGLISH STANDARD DRAWING "XS" BORDER REV. (02-02-11)

ORIGINAL SCALE IN INCHES FOR REDUCED PLANS 0 1 2 3

UNIT: 2295
PROJECT NUMBER & PHASE: 12000000791
CONTRACT NO.: 12-0C5701

DISREGARD PRINTS BEARING EARLIER REVISION DATES
REVISION DATES: 08/30/10 09/30/11 12/22/11 3/15/12
SHEET 14 OF 21

FILE => 55-0279-s-sa30r.dgn

USERNAME => s123631 DATE PLOTTED => 17-AUG-2012 TIME PLOTTED => 17:52

DIST	COUNTY	ROUTE	POST MILES TOTAL PROJECT	SHEET No.	TOTAL SHEETS
12	Ora	91	0.9/5.4	727	885

V. Jessica Mosquera 3-15-2012
REGISTERED CIVIL ENGINEER DATE

8-13-12
PLANS APPROVAL DATE

REGISTERED PROFESSIONAL ENGINEER V. J. Mosquera No. C 051049 Exp. 09/30/13 CIVIL STATE OF CALIFORNIA

The State of California or its officers or agents shall not be responsible for the accuracy or completeness of scanned copies of this plan sheet.

OCTA
550 S MAIN STREET
ORANGE, CA. 92868

RBF CONSULTING
14725 ALTON PARKWAY
IRVINE, CA 92677

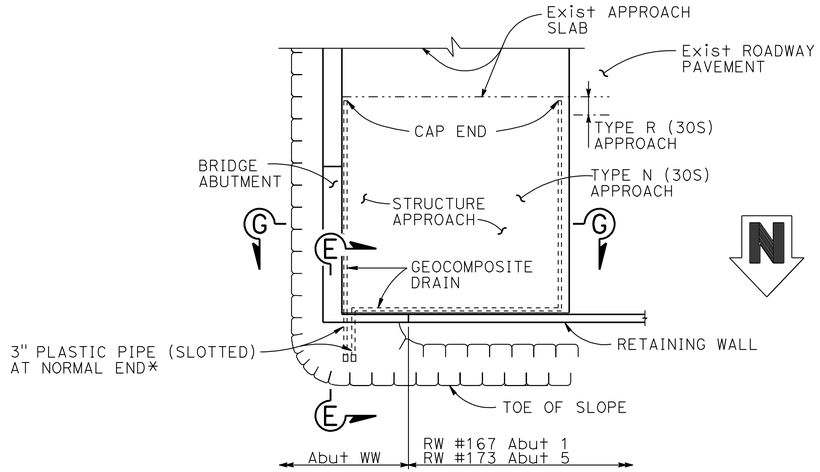

TYPICAL PLAN
1" = 10'

3 Abut 1 SHOWN, Abut 5 SIMILAR

* FOR PIPE LAYOUT AT STAGGERED END, SEE "DETAIL B"

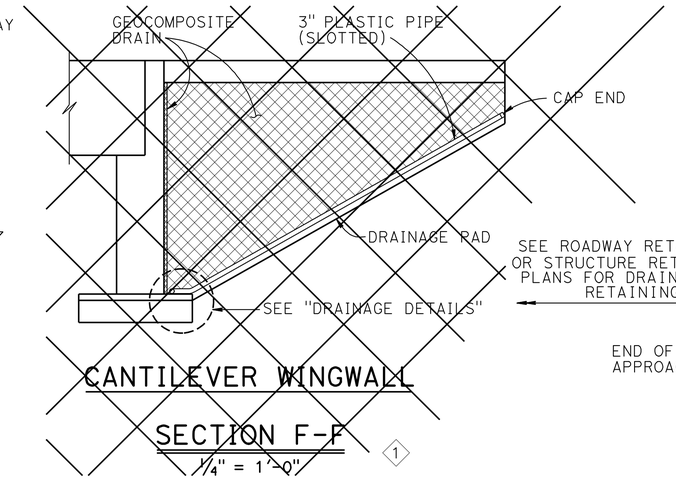

CANTILEVER WINGWALL SECTION F-F
1/4" = 1'-0"

1

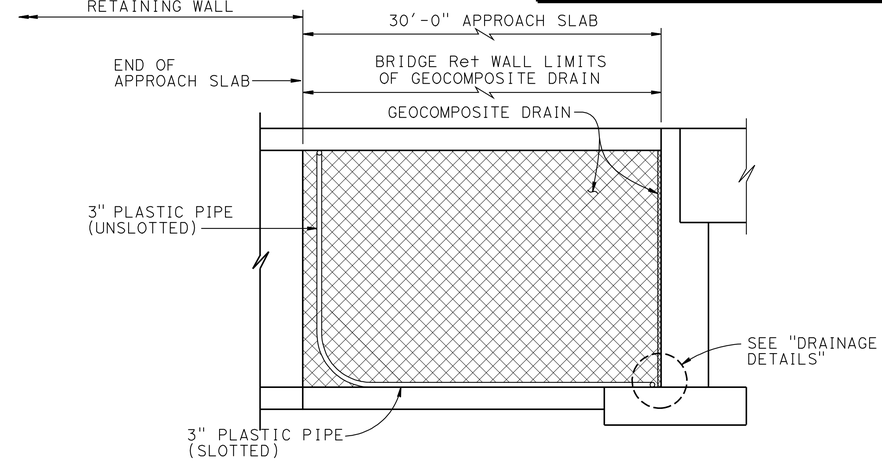

RETAINING WALL WINGWALL DRAINAGE DETAILS

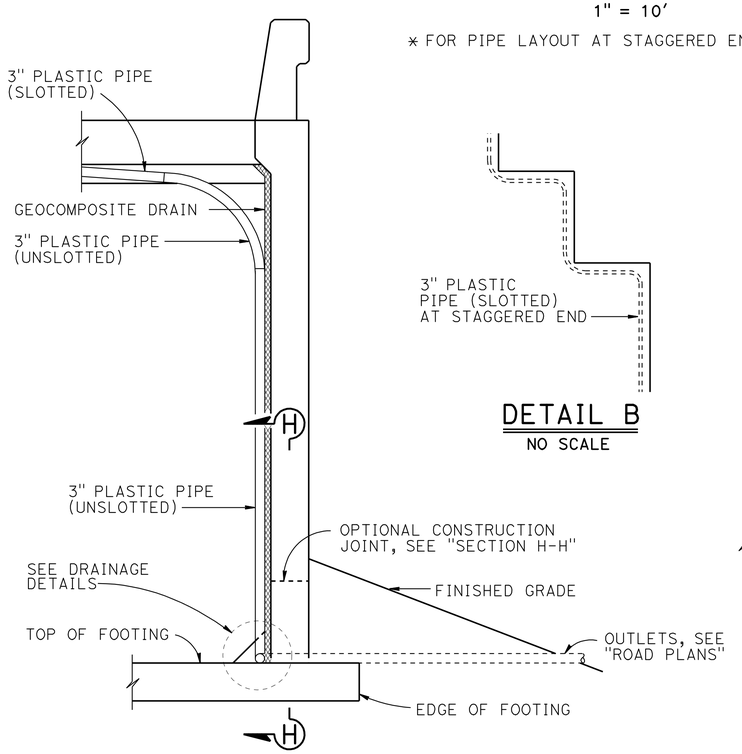

SECTION E-E
1/2" = 1'-0"

3

NOTE: Bends and junctions in 3" plastic pipe are 30" radius Min

DETAIL B
NO SCALE

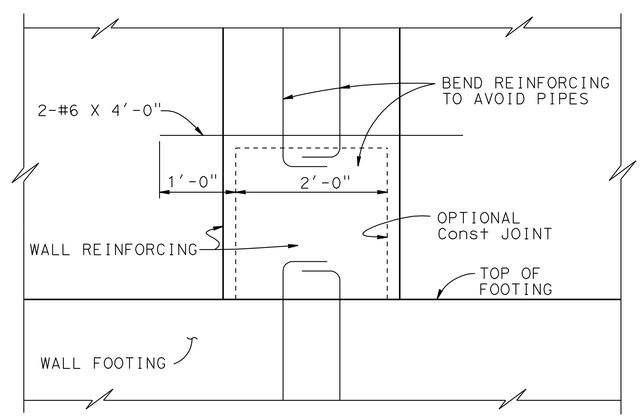

SECTION H-H
1" = 1'-0"

SECTION G-G
1/4" = 1'-0"

3

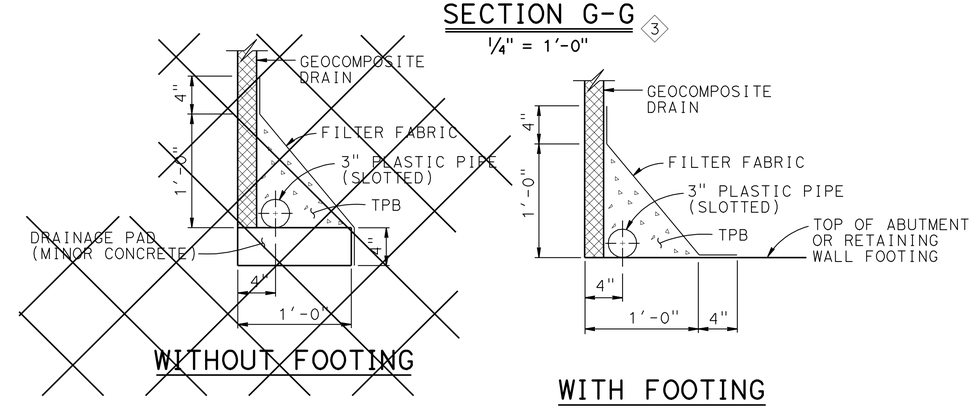

1

DRAINAGE DETAILS
1 1/2" = 1'-0"

NOTE:
THE CONTRACTOR SHALL VERIFY ALL CONTROLLING FIELD DIMENSIONS BEFORE ORDERING OR FABRICATING ANY MATERIAL.

REVISED STANDARD DRAWING

FILE NO. xs3-110

APPROVAL DATE July 2011

1 Does Not Apply
2 Added Detail or Note
3 Modifed Detail or Note

STATE OF CALIFORNIA
DEPARTMENT OF TRANSPORTATION

DIVISION OF ENGINEERING SERVICES

BRIDGE NO. 55-0279
POST MILE 2.2

EUCLID St UC (WIDEN)

STRUCTURE APPROACH DRAINAGE DETAILS

DS OSD 2147A (ENGLISH STANDARD DRAWING "XS" BORDER REV. (02-02-11)

ORIGINAL SCALE IN INCHES FOR REDUCED PLANS 0 1 2 3

UNIT: 2295
PROJECT NUMBER & PHASE: 12000000791
CONTRACT NO.: 12-0C5701

DISREGARD PRINTS BEARING EARLIER REVISION DATES

REVISION DATES: 08/30/10 09/16/11 12/22/11 3/15/12

SHEET 15 OF 21

FILE => 55-0279-s-sadd.dgn

USERNAME => s126614 DATE PLOTTED => 17-AUG-2012 TIME PLOTTED => 06:07

DIST	COUNTY	ROUTE	POST MILES TOTAL PROJECT	SHEET No.	TOTAL SHEETS
12	Ora	91	0.9/5.4	728	885

V. Jessica Mosquera 3-15-2012
REGISTERED CIVIL ENGINEER DATE

8-13-12
PLANS APPROVAL DATE

REGISTERED PROFESSIONAL ENGINEER V. J. Mosquera No. C 051049 Exp. 09/30/13 CIVIL STATE OF CALIFORNIA

The State of California or its officers or agents shall not be responsible for the accuracy or completeness of scanned copies of this plan sheet.

OCTA
550 S MAIN STREET
ORANGE, CA. 92868

RBF CONSULTING
14725 ALTON PARKWAY
IRVINE, CA 92677

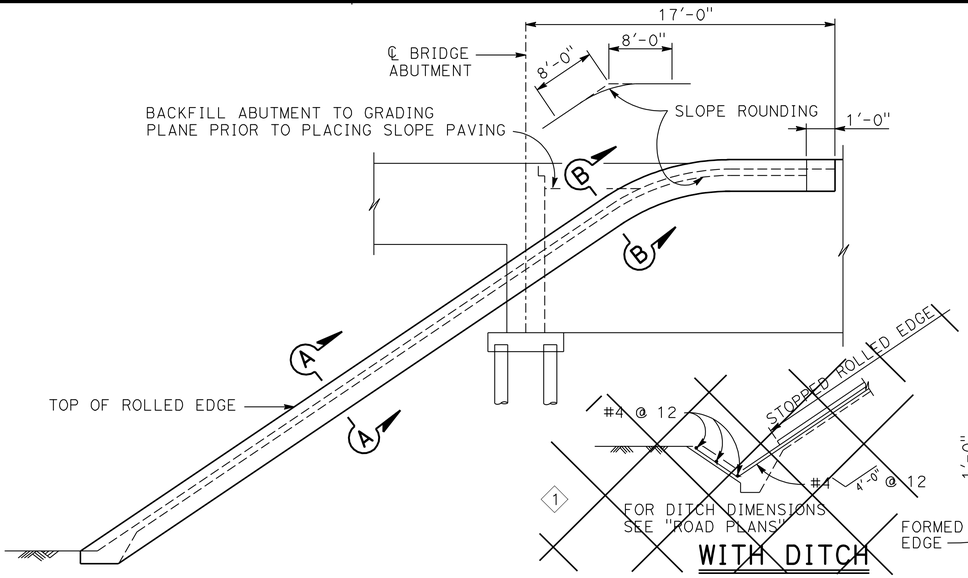

WINGWALL ELEVATION 3

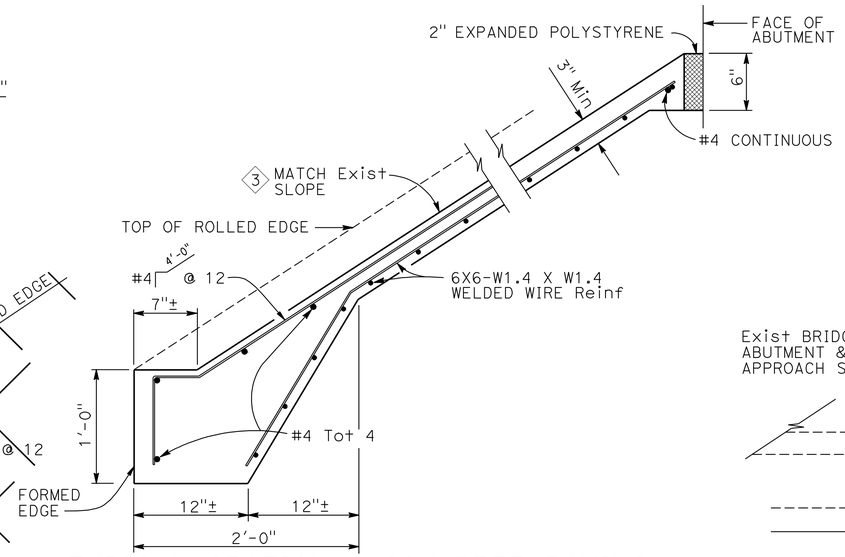

TYPICAL SECTION - CONCRETE PAVING

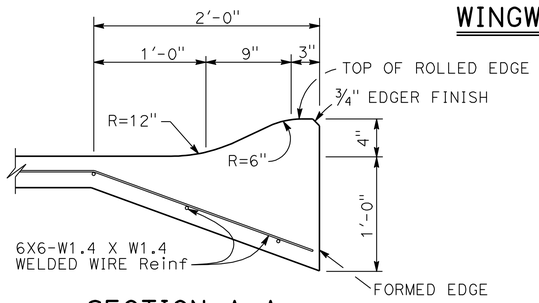

SECTION A-A

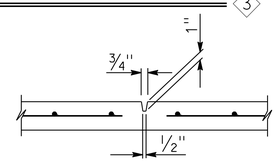

PREFORMED GROOVE

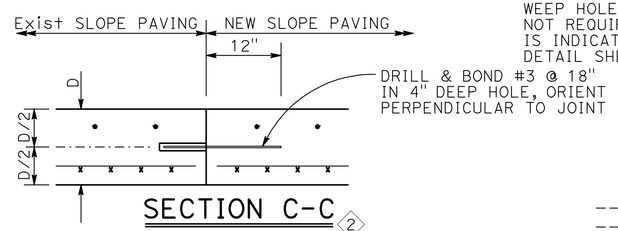

SECTION C-C 2

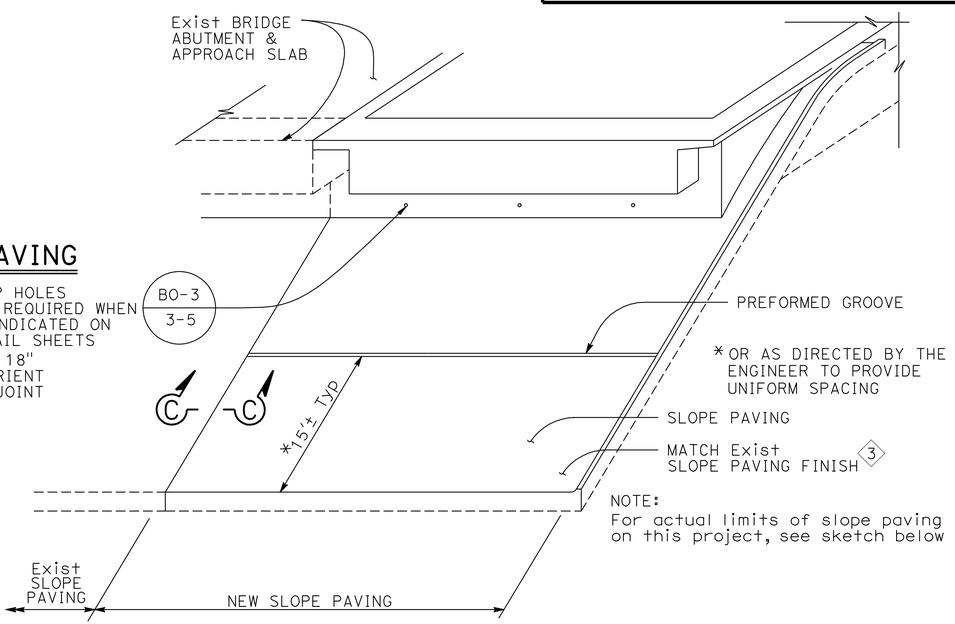

PICTORIAL VIEW OF TYPICAL INSTALLATION 2

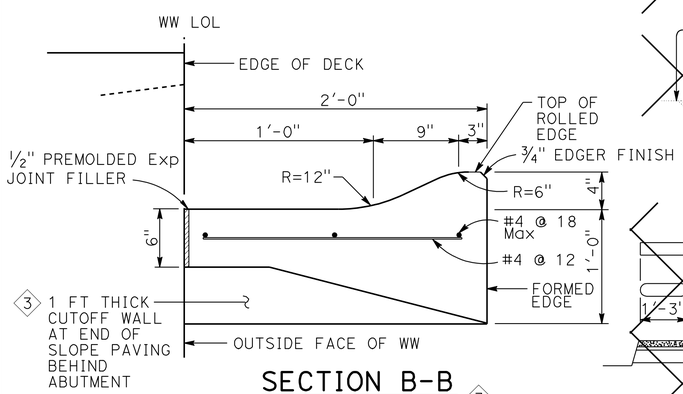

SECTION B-B 3

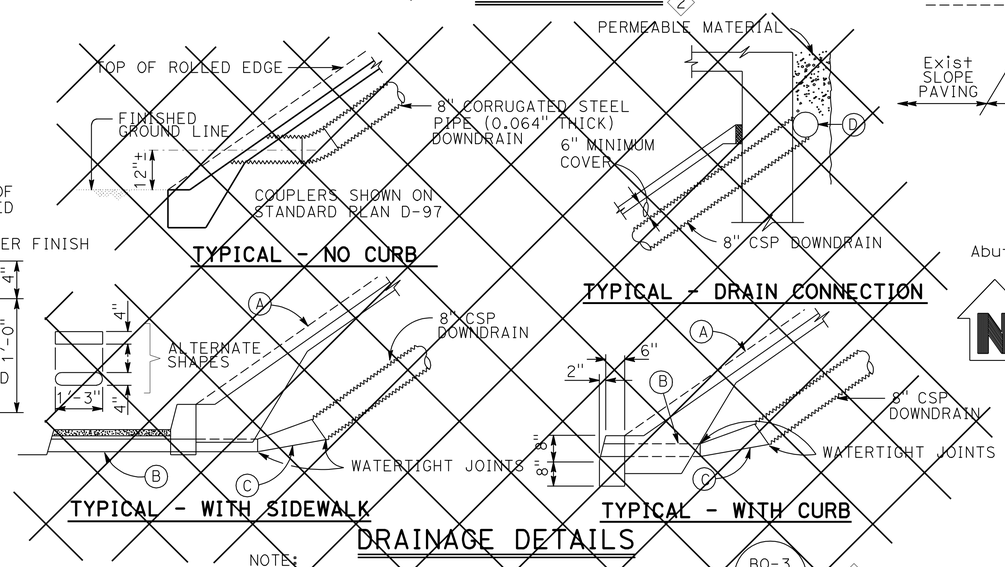

DRAINAGE DETAILS

NOTE:
Drainage details are only applicable when is indicated on detail sheets.

BO-3
3-5
1

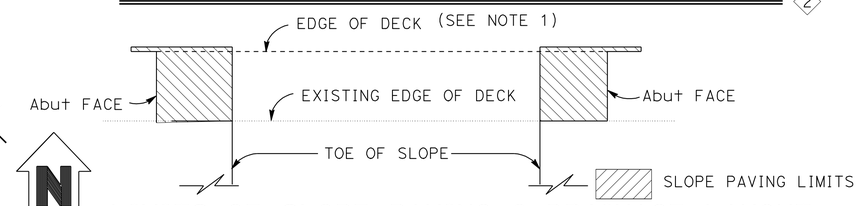

LIMITS OF SLOPE PAVING & DRAINAGE LAYOUT 2

NOTES:
1. See "BRIDGE REMOVAL DETAILS" sheet for limits of existing slope paving removal.

2
- (A) Top of rolled edge
- (B) Conduit: 0.064" galv corrugated steel or 0.109" smooth galv steel
- 1 (C) Taper: 0.064" galv corrugated steel or 0.109" smooth galv steel
- (D) 8" perforated steel pipe (0.064" thick) underdrain behind abutment. Connect to downdrain as shown on limits of Slope Paving & Drainage layout.

NOTE:
THE CONTRACTOR SHALL VERIFY ALL CONTROLLING FIELD DIMENSIONS BEFORE ORDERING OR FABRICATING ANY MATERIAL.

REVISED STANDARD DRAWING

FILE NO. xs4-210

APPROVAL DATE July 2011

1 Does Not Apply
2 Added Detail or Note
3 Modified Detail or Note

STATE OF CALIFORNIA
DEPARTMENT OF TRANSPORTATION

DIVISION OF ENGINEERING SERVICES

BRIDGE NO. 55-0279
POST MILE 2.2

EUCLID St UC (WIDEN)

SLOPE PAVING-FULL SLOPE

DS OSD 2147A (ENGLISH STANDARD DRAWING "XS" BORDER REV. (02-02-11)

ORIGINAL SCALE IN INCHES FOR REDUCED PLANS 0 1 2 3

UNIT: 2295
PROJECT NUMBER & PHASE: 12000000791
CONTRACT NO.: 12-0C5701

DISREGARD PRINTS BEARING EARLIER REVISION DATES

REVISION DATES 08/30/10 09/16/11 12/22/11 3/15/12

SHEET 16 OF 21

FILE => 55-0279-s-spfs.dgn

USERNAME => s12614 DATE PLOTTED => 17-AUG-2012 TIME PLOTTED => 06:07

DIST	COUNTY	ROUTE	POST MILES TOTAL PROJECT	SHEET No	TOTAL SHEETS
12	Ora	91	0.9/5.4	729	885

V. Jessica Mosquera 3-15-2012
REGISTERED CIVIL ENGINEER DATE

8-13-12
PLANS APPROVAL DATE

REGISTERED PROFESSIONAL ENGINEER V. J. Mosquera No. C 051049 Exp. 09/30/13 CIVIL STATE OF CALIFORNIA

The State of California or its officers or agents shall not be responsible for the accuracy or completeness of scanned copies of this plan sheet.

OCTA
550 S MAIN STREET
ORANGE, CA. 92868

RBF CONSULTING
14725 ALTON PARKWAY
IRVINE, CA 92618

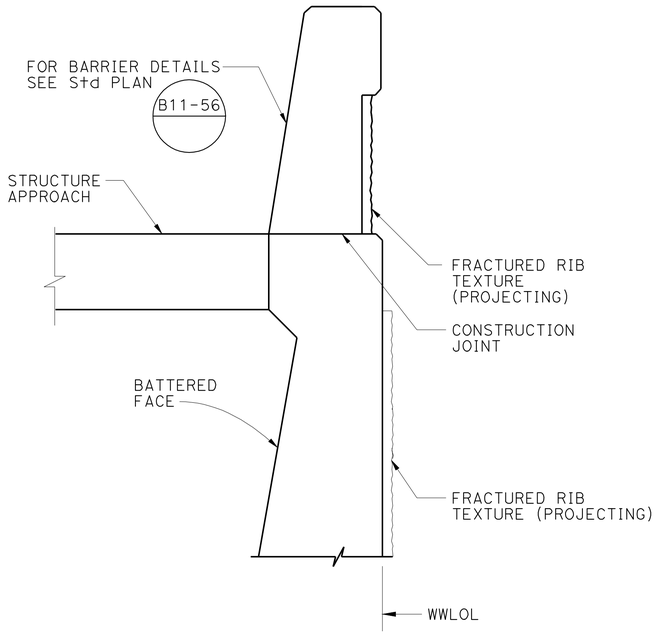

BARRIER TYPE 736A (MODIFIED) ON WINGWALL

1" = 1'-0"

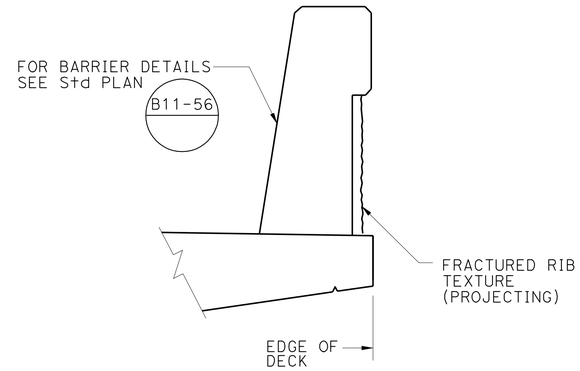

BARRIER TYPE 736 (MODIFIED) ON BRIDGE DECK

1" = 1'-0"

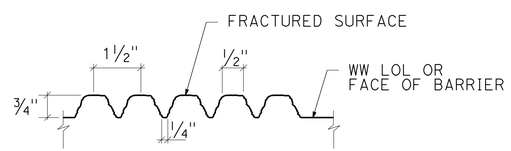

FRACTURED RIB TEXTURE 3/4" (PROJECTING)

NO SCALE

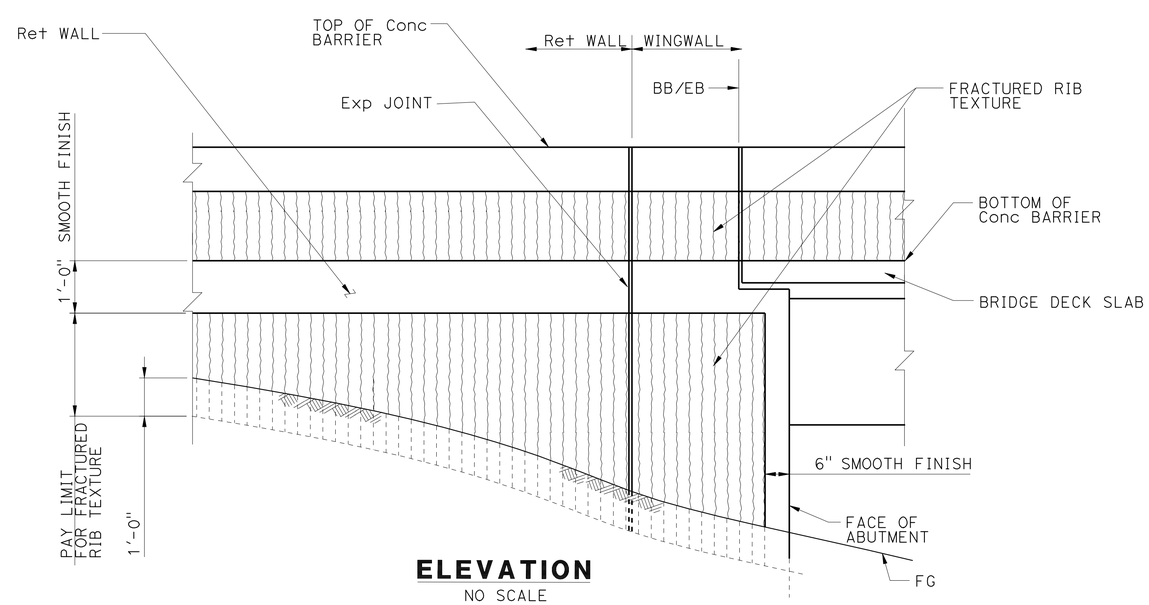

ELEVATION

NO SCALE

NOTE:
THE CONTRACTOR SHALL VERIFY ALL CONTROLLING FIELD DIMENSIONS BEFORE ORDERING OR FABRICATING ANY MATERIAL.

Luqi Yang
DESIGN OVERSIGHT Luqi Yang
3-29-12
SIGN OFF DATE

	BY	CHECKED
DESIGN	V. J. Mosquera	T. Kirilov
DETAILS	J. Saldana	T. Kirilov
QUANTITIES	C. Stelea	R. Kelcher

PREPARED FOR THE STATE OF CALIFORNIA DEPARTMENT OF TRANSPORTATION

V. Jessica Mosquera
PROJECT ENGINEER

BRIDGE NO. 55-0279
POST MILES 2.2

EUCLID St UC (WIDEN)
ARCHITECTURAL DETAILS

DESIGN DETAIL SHEET (ENGLISH) (REV.7/16/10)

ORIGINAL SCALE IN INCHES FOR REDUCED PLANS 0 1 2 3

UNIT: 2295
PROJECT NUMBER & PHASE: 12000000791 CONTRACT NO.: 12-0C5701

DISREGARD PRINTS BEARING EARLIER REVISION DATES

REVISION DATES 08/30/10 09/16/11 12/22/11 03/15/12

SHEET 17 OF 21

FILE => 55-0279-u-miscdt01.dgn

USERNAME => s121614 DATE PLOTTED => 17-AUG-2012 TIME PLOTTED => 06:07

DIST	COUNTY	ROUTE	POST MILES TOTAL PROJECT	SHEET No	TOTAL SHEETS
12	Ora	91	0.9/5.4	730	885

V. Jessica Mosquera 3-15-2012
REGISTERED CIVIL ENGINEER DATE

8-13-12
PLANS APPROVAL DATE

REGISTERED PROFESSIONAL ENGINEER V. J. Mosquera No. C 051049 Exp. 09/30/13 CIVIL STATE OF CALIFORNIA

The State of California or its officers or agents shall not be responsible for the accuracy or completeness of scanned copies of this plan sheet.

OCTA
550 S MAIN STREET
ORANGE, CA. 92868

RBF CONSULTING
14725 ALTON PARKWAY
IRVINE, CA 92618

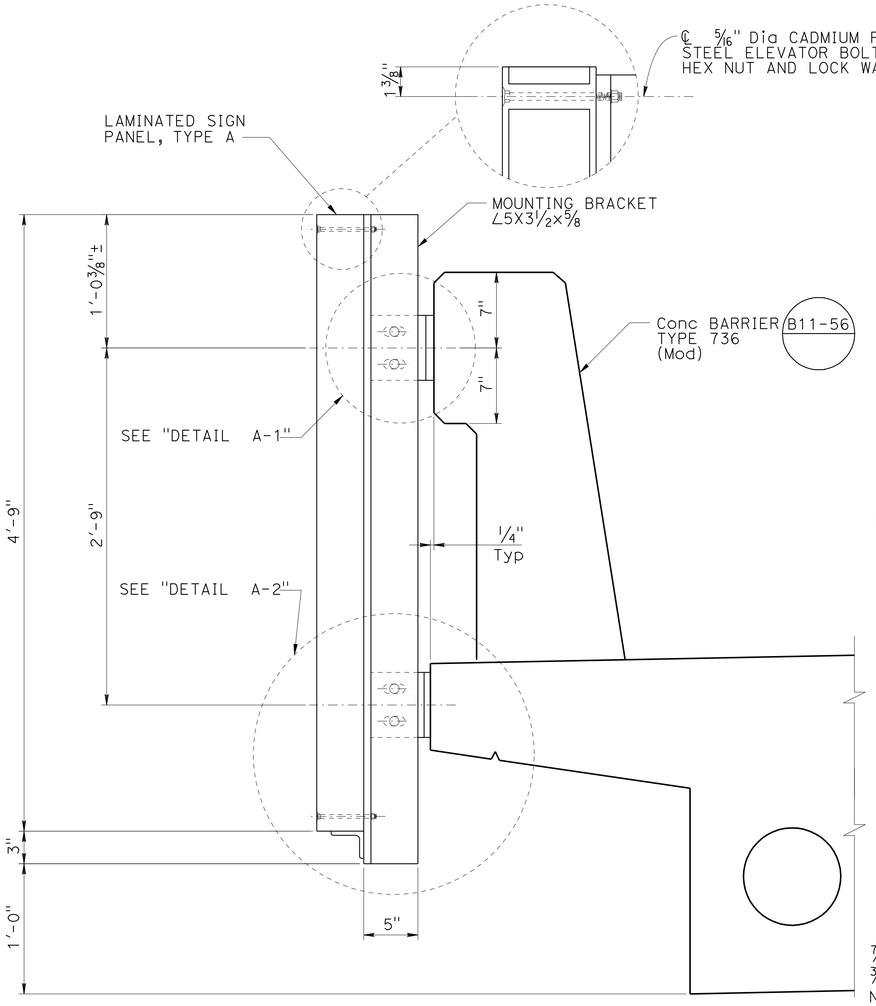

TYPICAL MOUNTING BRACKET ASSEMBLY

NO SCALE

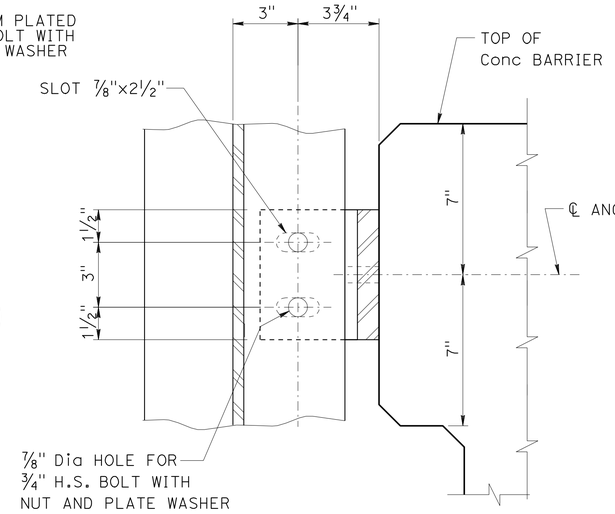

DETAIL "A-1"

NO SCALE

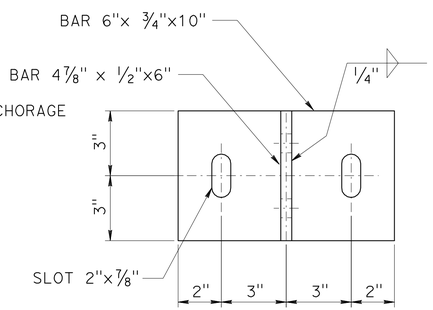

BAR DETAIL A-1

NO SCALE

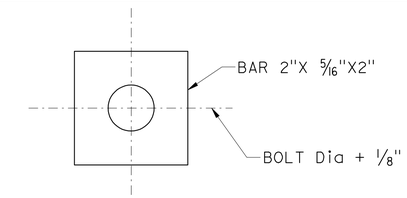

PLATE WASHER

NO SCALE
FOR ALL SLOTTED HOLES

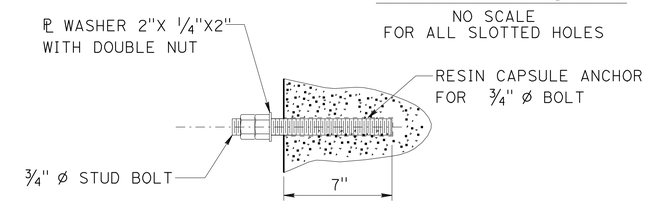

RESIN CAPSULE BOLT ANCHORAGE

NO SCALE

Note: Resin capsule anchorage is subject to approval of engineer. Installation procedures shall comply with manufacturer's instructions. Contractor to provide anchor bolt layout before anchor bolts are placed. Resin capsule bolt locations shall be layed out prior to pouring deck and barrier rail concrete to avoid interference with reinforcing. Resin capsule bolt anchors shall be installed in sound concrete free of cracks or delamination.

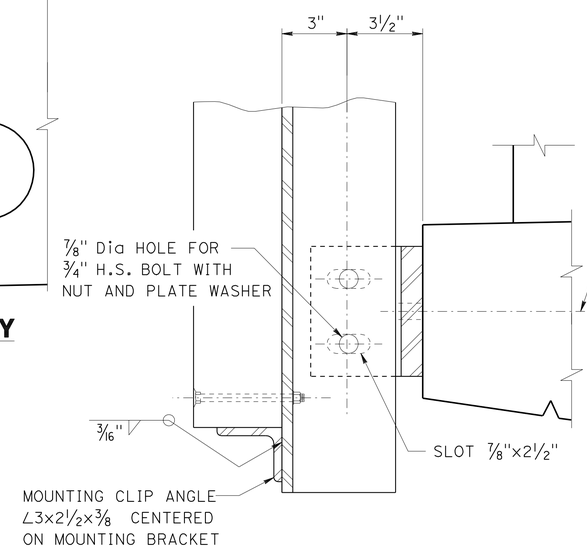

DETAIL "A-2"

NO SCALE

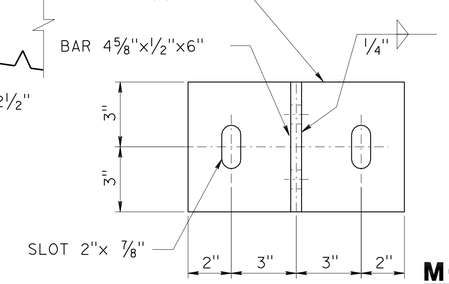

BAR DETAIL A-2

NO SCALE

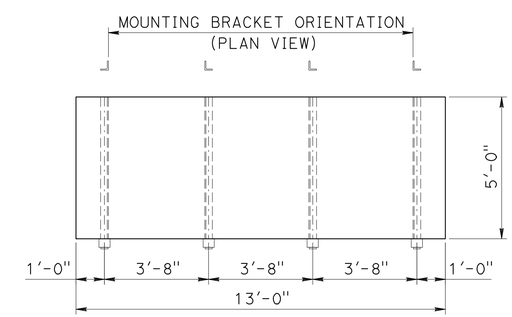

MOUNTING BRACKET ASSEMBLY SPACING

SIGN (N) FSBT

NO SCALE

NOTES:

1. Existing bridge mounted sign anchors shall be cut flush with edge of deck by mechanical means. Damage to concrete surface resulting from cut shall be repaired at the Contractor's expense to the Engineer's satisfaction. Cut ends of anchors shall be coated with 2 coats of zinc rich primer.
2. For New Bridge Mounted Sign location, see "ROAD PLANS."
3. All bridge mounted sign steel shall be galvanized.
4. Bridge mounted sign anchorage to bridge has been designed using: AASHTO "Standard Specifications for Structural Supports for Highway Signs, Luminaires, and Traffic Signals" Fifth Edition (2009) using the following parameters:
   V=85 MPH
   I_r = 1.15

NOTE:
THE CONTRACTOR SHALL VERIFY ALL CONTROLLING FIELD DIMENSIONS BEFORE ORDERING OR FABRICATING ANY MATERIAL.

Luqi Yang
DESIGN OVERSIGHT Luqi Yang
3-29-12
SIGN OFF DATE

	BY	CHECKED
DESIGN	T. Kirilov	V. J. Mosquera
DETAILS	J. Saldana	V. J. Mosquera
QUANTITIES	C. Stelea	R. Kelcher

PREPARED FOR THE STATE OF CALIFORNIA DEPARTMENT OF TRANSPORTATION

V. Jessica Mosquera
PROJECT ENGINEER

BRIDGE NO. 55-0279
POST MILES 2.2

EUCLID St UC (WIDEN)

BRIDGE MOUNTED SIGN DETAILS

DESIGN DETAIL SHEET (ENGLISH) (REV.7/16/10)

ORIGINAL SCALE IN INCHES FOR REDUCED PLANS 0 1 2 3

UNIT: 2295
PROJECT NUMBER & PHASE: 12000000791 CONTRACT NO.: 12-0C5701

DISREGARD PRINTS BEARING EARLIER REVISION DATES

REVISION DATES 09/26/11 12/27/11 02/27/12 03/15/12 SHEET 18 OF 21

FILE => 55-0279-u-sign01.dgn

USERNAME => s12614 DATE PLOTTED => 17-AUG-2012 TIME PLOTTED => 06:07

DIST	COUNTY	ROUTE	POST MILES TOTAL PROJECT	SHEET No	TOTAL SHEETS
12	Ora	91	0.9/5.4	731	885

REGISTERED ENGINEER — DATE 3-15-2012

PLANS APPROVAL DATE 8-13-12

REGISTERED PROFESSIONAL ENGINEER — S. PIRATHIVIRAJ — No. C71662 — EXP. 12/31/13 — CIVIL — STATE OF CALIFORNIA

The State of California or its officers or agents shall not be responsible for the accuracy or completeness of scanned copies of this plan sheet.

ORANGE COUNTY TRANSPORTATION AUTHORITY
550 S. MAIN STREET
ORANGE, CA 92863-1584

EARTH MECHANICS, INC.
17800 NEWHOPE STREET, SUITE B
FOUNTAIN VALLEY, CA 92708

BENCH MARK

Designation: 1G-164-05 Elev = 109.804
Described by OCS 2005 - Found 3¾" OCS Aluminum Benchmark Disk Stamped "1G-164-05", set in the Nothwesterly Corner of a 4.5 ft. by 11.0 ft. Concrete Catch Basin. Monument is located in the Southeasterly Corner of the intersection of Magnolia Avenue and Buckingham Street, 200 ft. ± from the centerline of Buckingham and 47 ft. Easterly of the centerline of Magnolia. Monument is set level with the Sidewalk

Designation: 2F-25-04 Elev = 162.700
Described by OCS 2004 - Found 3¾" OCS Aluminum Benchmark Disk Stamped "2F-25-04", set in the Nothwesterly Corner of a 7.5 ft. by 4.5 ft. Concrete Catch Basin. Monument is located in the Northeasterly Corner of the intersection of Harbor Boulevard and the Eastbound 91 Freeway On-Ramp, 39 ft. Northerly of the centerline of the On-Ramp and 40 ft. Easterly of the centerline of Harbor Boulevard. Monument is set level with the Sidewalk

Designation: 2D-35-86 Elev = 188.576
Described by OCS 2003 - Found 3¾" OCS Aluminum Benchmark Disk Stamped "2D-35-86", set in the Nothwesterly Corner of a 7 ft. by 14 ft. Concrete Catch Basin. Monument is located in the Southeasterly Corner of the intersection of Placentia Avenue and State College Boulevard, 38 ft. Easterly of the centerline of State College and 70.5 ft. Southerly of the centerline of Placentia. Monument is set level with the Sidewalk

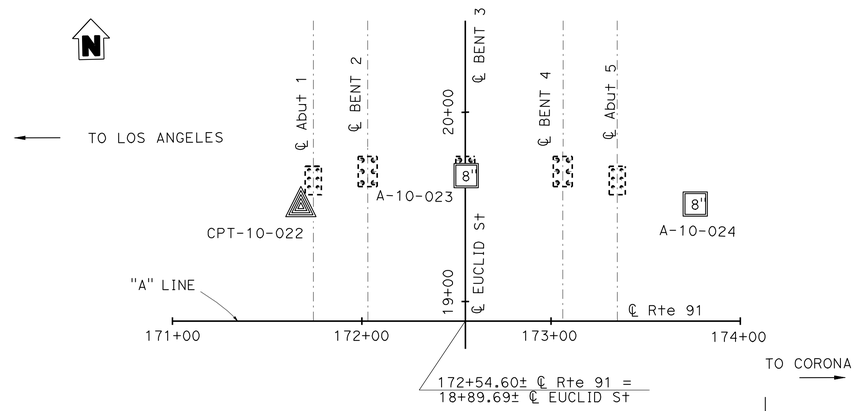

PLAN

1" = 40'

NOTES:

(1) This LOTB sheet was prepared in accordance with the Caltrans Soil and Rock Logging, Classification and Presentation Manual (June 2010).

(2) 2.4" samples were taken using a California Modified Sampler.

(3) An automatic trip hammer system consisting of a hammer weight of 140 lbs falling a distance of 30" was used to advance the drive sampler.

(4) Conversion factor from 2.4" Modified California Ring Sampler blowcounts to Standard Penetration Test (SPT) blowcounts is 0.5.

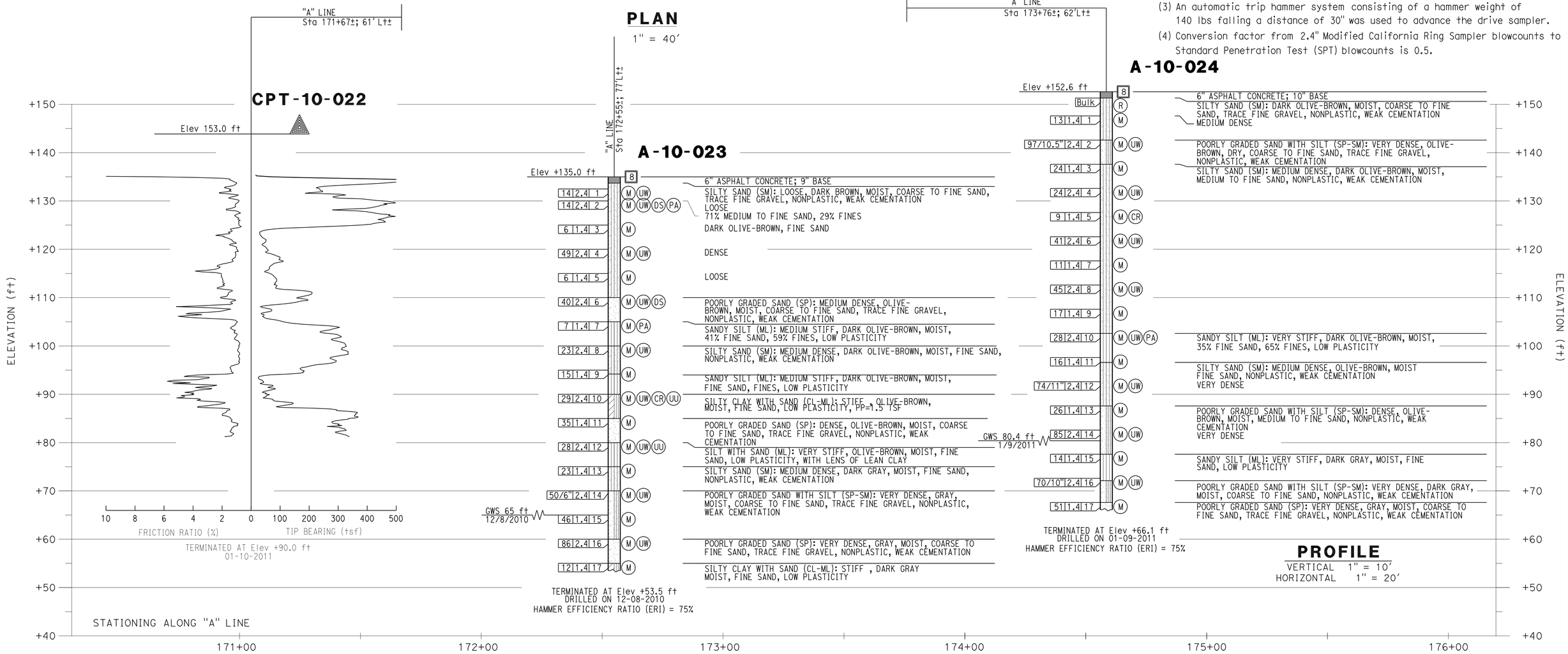

PROFILE

VERTICAL 1" = 10'
HORIZONTAL 1" = 20'

Luqi Yang — DESIGN OVERSIGHT Luqi Yang — 3-29-12 SIGN OFF DATE	DRAWN BY J. Fang	R. Jie — FIELD INVESTIGATION BY:	PREPARED FOR THE STATE OF CALIFORNIA DEPARTMENT OF TRANSPORTATION
	CHECKED BY S. Pirathiviraj	DATE: 12/2010,1/2011	S. Pirathiviraj — PROJECT ENGINEER

BRIDGE No. 55-0279 — POST MILES 2.2

EUCLID St UC (WIDEN)

LOG OF TEST BORINGS 1 OF 3

GS GEOTECHNICAL LOG OF TEST BORINGS SHEET (ENGLISH) (REV. 7/16/10)

ORIGINAL SCALE IN INCHES FOR REDUCED PLANS 0 1 2 3

UNIT: 2295
PROJECT NUMBER & PHASE: 12000000791

DISREGARD PRINTS BEARING EARLIER REVISION DATES — REVISION DATES 08/30/10 08/01/11 12/22/11 02/17/12

SHEET 19 OF 21

CONTRACT NO.:12-0C5701 PROJECT ID:

FILE => 55-0279-z-ltb1.dgn

USERNAME => s121614 DATE PLOTTED => 04-SEP-2012 TIME PLOTTED => 14:58

9-16-96 TO ACCOMPANY PLANS DATED	DIST	COUNTY	ROUTE	POST MILES TOTAL PROJECT	SHEET NO	TOTAL SHEETS
	12	Ora	91	1 0/2 8	312	312

The State of California or its officers or agents shall not be responsible for the accuracy or completeness of electronic copies of this plan sheet

TO ACCOMPANY PLANS DATED 8-13-12

DIVISION OF ENGINEERING SERVICES - GEOTECHNICAL SERVICES

As-Built Log of Test Borings sheet is considered an informational document only. As such, the State of California registration seal with signature, license number and registration certificate expiration date confirm that this is a true and accurate copy of the original document. This drawing is available and presented only for the convenience of any bidder, contractor or other interested party.

DIST.	COUNTY	ROUTE	POST MILES-TOTAL PROJECT	Sheet No.	Total Sheets
12	Ora	91	0.9/5.4	732	885

GEOTECHNICAL PROFESSIONAL — DATE 3-15-2012

EUCLID St UC (WIDEN)

LOG OF TEST BORINGS 2 OF 3

NOTE: A COPY OF THIS LOG OF TEST BORINGS IS AVAILABLE AT OFFICE OF STRUCTURE MAINTENANCE AND INVESTIGATIONS, SACRAMENTO, CALIFORNIA

UNIT: 2295
PROJECT NUMBER & PHASE: 12000000791

BRIDGE No.	Sheet	of
55-0279	20	21

REGISTERED PROFESSIONAL ENGINEER — S. PIRATHIVIRAJ — No. C71662 — EXP. 12/31/13 — CIVIL — STATE OF CALIFORNIA

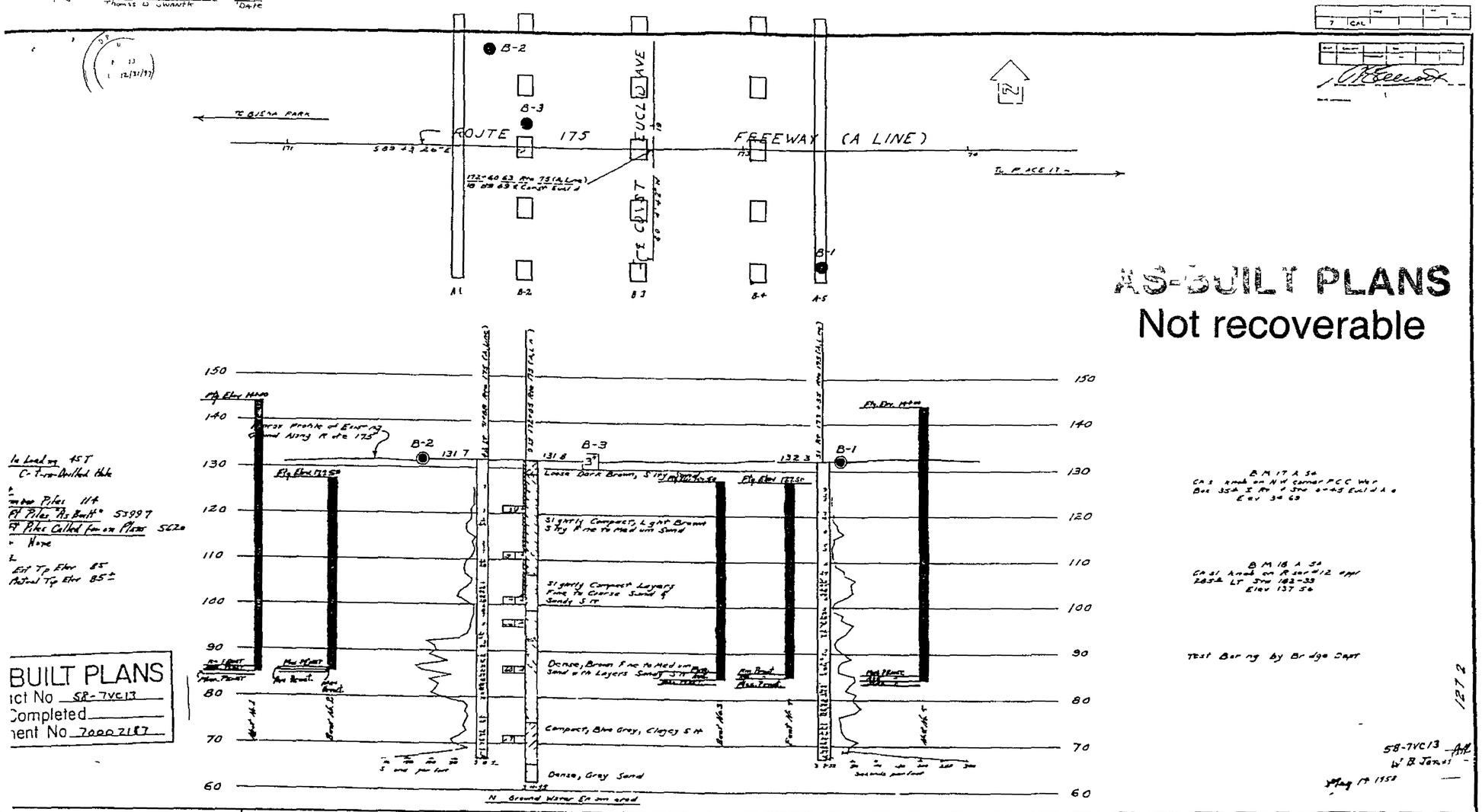

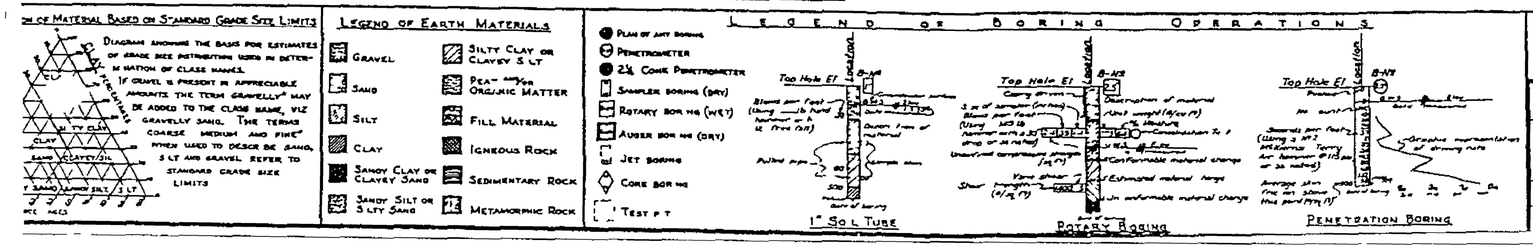

NOTES

The contractor's attention is directed to Section 2 Article (c) of the Standard Specifications and to the Special Provisions accompanying this set of plans.

Classification of earth material as shown on the sheet is based upon field inspection and not to be construed to imply mechanical analysis.

EUCLID AVE U C

LOG OF TEST BORINGS

DESIGN	J Bishop	CHECKED	Y Hu
DETAILS	K Dang	CHECKED	Y Hu
QUANTITIES	J Bishop	CHECKED	T Young

DESIGN ENGINEER — DATE 4-23-96

NOTE: ADDITIONAL AS BUILT FOUNDATION DATA MAY BE AVAILABLE AT THE DIVISION OF NEW TECHNOLOGY MATERIALS AND RESEARCH 5900 FOLSOM BOULEVARD SACRAMENTO CALIFORNIA 95819

PREPARED FOR THE STATE OF CALIFORNIA DEPARTMENT OF TRANSPORTATION

J S Bishop — DESIGN ENGINEER

ORIGINAL SCALE IN INCHES FOR REDUCED PLANS 0 1 2 3

CU 12209
EA 012411

BRIDGE NO 55 279
POST MILE 22

EUCLID AVENUE UNDERCROSSING (WIDEN)

AS-BUILT LOG OF TEST BORINGS

ULTRAVIOLET PRINT BEARING EARLIER REVISION DATE — REVISION DATE (PRELIMINARY) STAMP — SHEET 16 OF 16

FILENAME => 55-0279-z-1tb2.tif

ClibPDF - www.fastio.com

DIVISION OF ENGINEERING SERVICES - GEOTECHNICAL SERVICES					
As-Built Log of Test Borings sheet is considered an informational document only. As such, the State of California registration seal with signature, license number and registration certificate expiration date confirm that this is a true and accurate copy of the original document. This drawing is available and presented only for the convenience of any bidder, contractor or other interested party.					
DIST.	COUNTY	ROUTE	POST MILES-TOTAL PROJECT	Sheet No.	Total Sheets
12	Ora	91	0.9/5.4	733	885
GEOTECHNICAL PROFESSIONAL			3-15-2012 DATE		
EUCLID St UC (WIDEN)					
LOG OF TEST BORINGS 3 OF 3					
NOTE: A COPY OF THIS LOG OF TEST BORINGS IS AVAILABLE AT OFFICE OF STRUCTURE MAINTENANCE AND INVESTIGATIONS, SACRAMENTO, CALIFORNIA		UNIT: 2295 PROJECT NUMBER & PHASE: 12000000791			
BRIDGE No.	Sheet	of			
55-0279	21	21			

REGISTERED PROFESSIONAL ENGINEER S. PIRATHIVIRAJ No. C71662 EXP. 12/31/13 CIVIL STATE OF CALIFORNIA

TO ACCOMPANY PLANS DATED 8-13-12

The State of California or its officers or agents shall not be responsible for the accuracy or completeness of electronic copies of this plan sheet

DIST	COUNTY	ROUTE	POST MILES TOTAL PROJECT	SHEET NO	TOTAL SHEETS
12	Ora	91	10/28	311	312

GEOTECHNICAL PROFESSIONAL 3/5/96

9-16-96
PLANS APPROVAL DATE

REGISTERED PROFESSIONAL ENGINEER THOMAS D SWANTKO NO. 0 8 813 EXP 12/31/97 GEOTECHNICAL STATE OF CALIFORNIA

GEOFON Inc
3552 Cerritos Ave Suite B
Cypress California 90630
Job Number 92 336

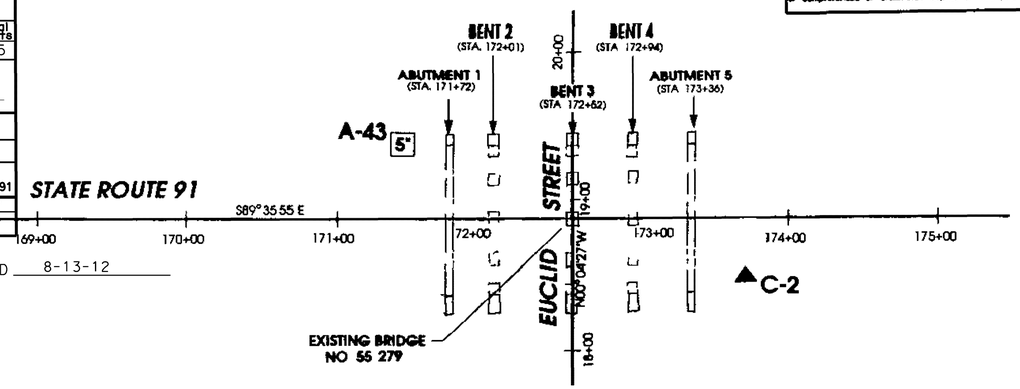

PHOTO CONTROL POINT 2069
NULL & FLASH ON SURFACE
427 FEET LEFT OF STATION 178+88 CENTERLINE ROUTE 91
ELEVATION 134.26

PLAN
SCALE 1 =50 FEET

AS-BUILT PLANS
Not recoverable

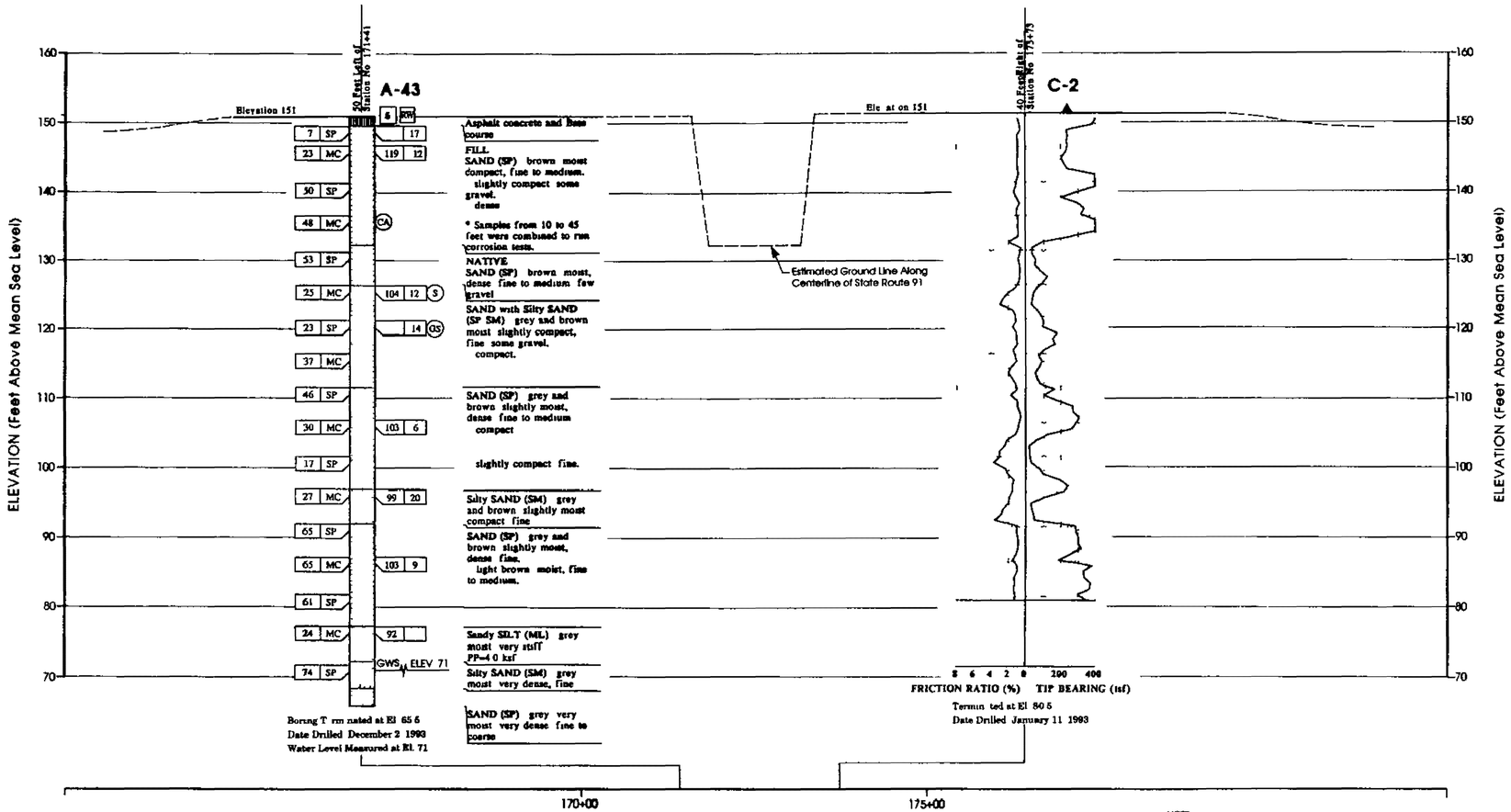

PROFILE
VERTICAL SCALE 1 = 10 FEET
HORIZONTAL SCALE 1 =100 FEET

NOTE
FOR ROTARY WASH BORINGS THE SOIL SAMPLER WAS DRIVEN WITH A 400 POUND HAMMER FALLING 18 INCHES THE BLOWCOUNTS FOR THE SAMPLER WHEN USING THE ROTARY WASH TYPE DRILLING EQUIPMENT CAN BE CONVERTED TO APPROXIMATE N-VALUE BY MULTIPLYING THE BLOWCOUNTS BY A CONVERSION FACTOR OF 0 75

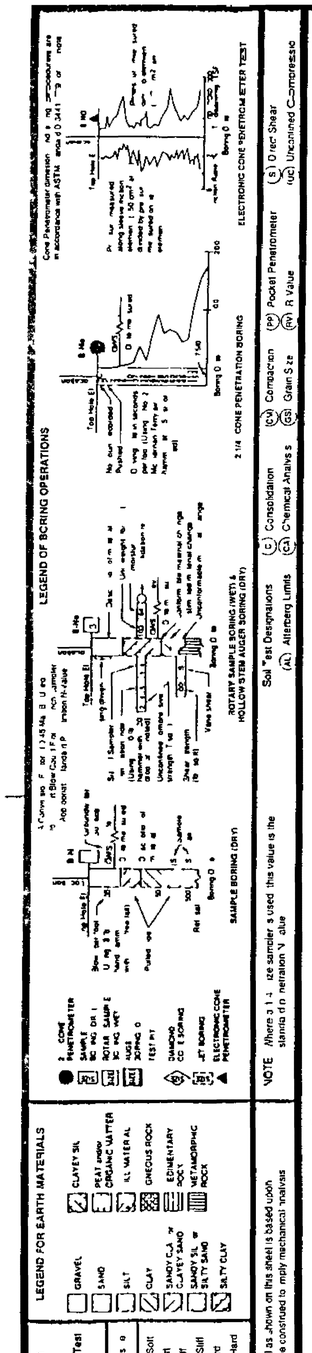

NOTE Where a 1-1/4 size sampler is used this value is the standard penetration N value

NOTE Classification of earth material as shown on this sheet is based upon field inspection and is not to be construed to imply mechanical analysis

DESIGN OVERSIGHT SIGN OFF DATE 4-23-96	DRAWN BY H LEE	J KNIGHT FIELD INVESTIGATOR	PREPARED FOR THE STATE OF CALIFORNIA DEPARTMENT OF TRANSPORTATION	PROJECT ENGINEER	BRIDGE NO 55 279 / POST MILE 0 96/2 8	EUCLID STREET UNDERCROSSING (WIDEN)
	CHECKED BY D MAR	SEE EXPLORATION DATE				LOG OF TEST BORINGS

ORIGINAL SCALE IN INCHES FOR REDUCED PLANS 0 1 2 3

CU 12209
EA 012411

DISREGARD PRINTS BEARING EARLIER REVISION DATES

REVISION DATES (PRE PRIMARY STAGE ONLY)

SHEET 15 OF 16

FILENAME => 55-0279-z-1tb3.tif

PLATE 1

ClibPDF - www.fastio.com

DIST	COUNTY	ROUTE	POST MILES TOTAL PROJECT	SHEET No	TOTAL SHEETS
12	Ora	91	0.9/5.4	734	885

V. Jessica Mosquera 3-15-2012
REGISTERED CIVIL ENGINEER DATE

8-13-12
PLANS APPROVAL DATE

REGISTERED PROFESSIONAL ENGINEER V. J. Mosquera No. C 051049 Exp. 09/30/13 CIVIL STATE OF CALIFORNIA

The State of California or its officers or agents shall not be responsible for the accuracy or completeness of scanned copies of this plan sheet.

OCTA
550 S MAIN STREET
ORANGE, CA 92868

RBF CONSULTING
14725 ALTON PARKWAY
IRVINE, CA 92618

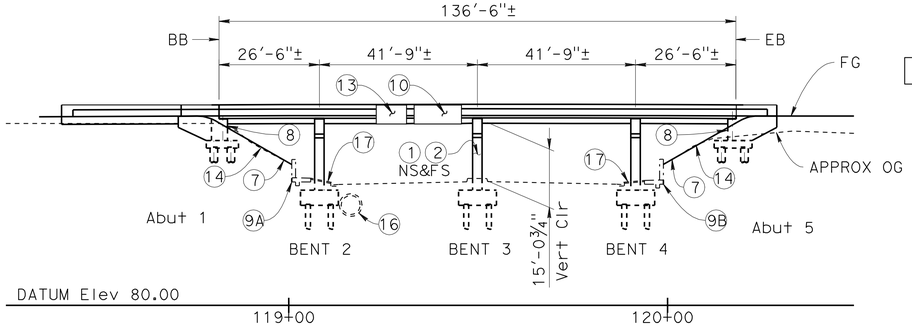

MIRROR ELEVATION

1" = 20'

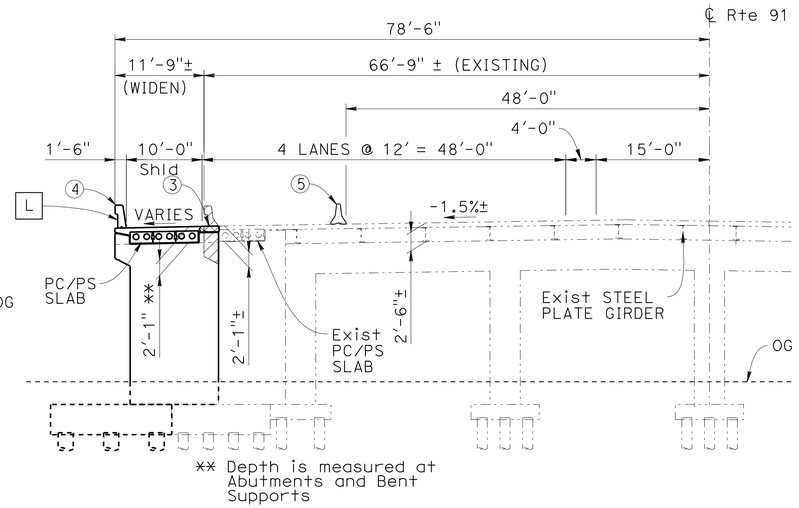

TYPICAL SECTION

1" = 10'

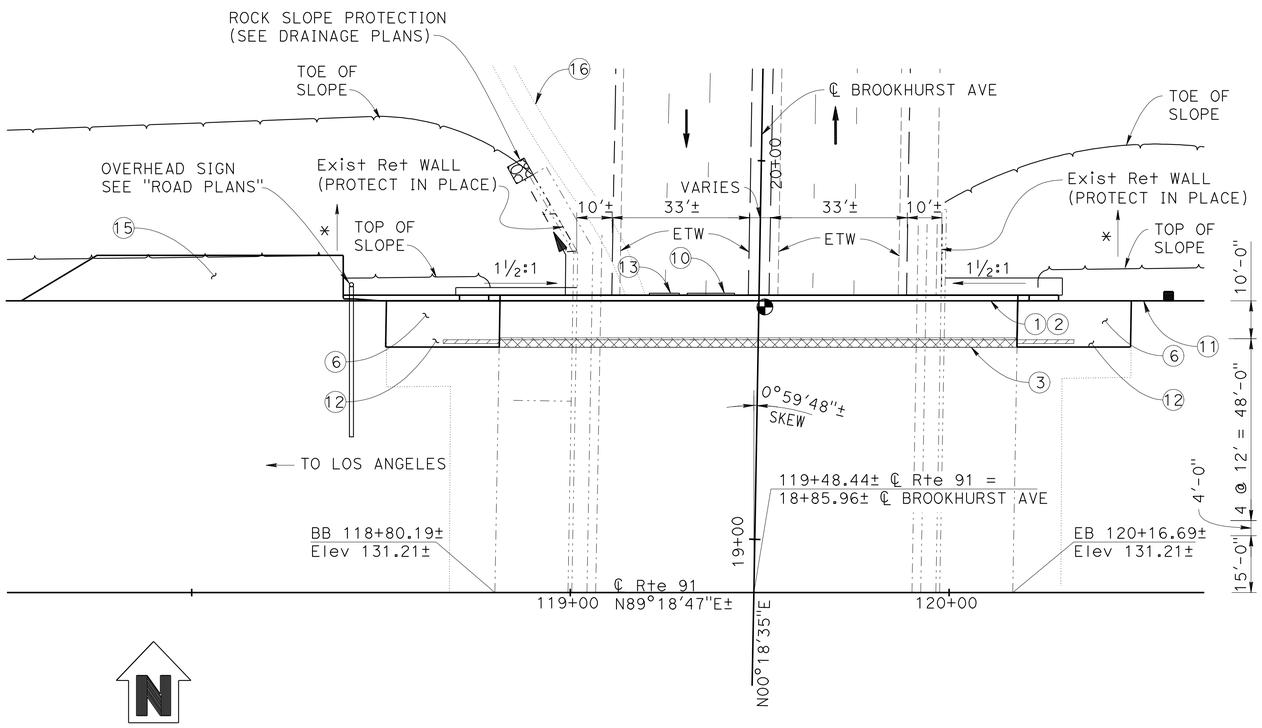

PLAN

1" = 20'

BROOKHURST Ave UC (WIDEN) Br No. 55-0280

QUANTITIES

BRIDGE REMOVAL (PORTION), LOCATION E	LUMP	SUM
STRUCTURE EXCAVATION (BRIDGE)	245	CY
STRUCTURE EXCAVATION (GROUND ANCHOR WALL)	11	CY
STRUCTURE BACKFILL (BRIDGE)	143	CY
STRUCTURE BACKFILL (GROUND ANCHOR WALL)	5	CY
AGGREGATE BASE (APPROACH SLAB)	1	CY
GROUND ANCHOR (SUBHORIZONTAL)	10	EA
32" PERMANENT STEEL CASING	8	LF
24" CAST-IN-DRILLED-HOLE CONCRETE PILING	938	LF
STRUCTURAL CONCRETE, BRIDGE FOOTING	93	CY
STRUCTURAL CONCRETE, BRIDGE	147	CY
STRUCTURAL CONCRETE, RETAINING WALL	10	CY
STRUCTURAL CONCRETE, APPROACH SLAB (TYPE N)	23	CY
STRUCTURAL CONCRETE, APPROACH SLAB (TYPE R)	5	CY
FRACTURED RIB TEXTURE	215	SQFT
DRILL AND BOND DOWEL	593	LF
FURNISH PRECAST PRESTRESSED CONCRETE SLAB (TYPE SIII)	1,229	SQFT
ERECT PRECAST PRESTRESSED CONCRETE DECK UNIT	12	EA
JOINT SEAL (MR ½")	69	LF
BAR REINFORCING STEEL (BRIDGE)	81,750	LB
BAR REINFORCING STEEL (RETAINING WALL)	2,620	LB
HEADED BAR REINFORCEMENT	400	EA
STRUCTURAL SHOTCRETE	8	CY
FURNISH SIGN STRUCTURE (BRIDGE MOUNTED WITHOUT WALKWAY)	634	LB
INSTALL SIGN STRUCTURE (BRIDGE MOUNTED WITHOUT WALKWAY)	634	LB
ABUTMENT LUMBER BLOCKING	2	MFBM
SLOPE PAVING (CONCRETE)	10	CY
MISCELLANEOUS METAL (BRIDGE)	6,565	LB
CONCRETE BARRIER (TYPE 736 MODIFIED)	190	LF

UTILITIES:

L — 1½" Lighting and Sign Illumination Conduit, see "Electrical Plans"

NOTES:

1. For General Notes and Index to Plans, see "INDEX TO PLANS" sheet.
2. For Pile Data Table, see "FOUNDATION PLAN" sheet.

LEGEND:

1. Paint "BRIDGE No. 55-0280" and year constructed
2. Paint "BROOKHURST AVENUE UC"
3. Closure Pour
4. Concrete Barrier Type 736 (Mod)
5. Temporary Rail, Type K, see "ROAD PLANS"
6. Structure Approach Type N(30S)
7. Slope Paving
8. Abutment Gap Retrofit & Catcher Block (at Steel Girder)
9. Remove RW (Portion) :
   - 9A Ground Anchor Wall-West Wall
   - 9B Ground Anchor Wall-East Wall
10. Bridge Mounted Sign, see "SIGN PLANS" and "BRIDGE MOUNTED SIGN DETAILS" sheet
11. Railing (Type WB), see "ROAD PLANS"
12. Structure Approach Type R(30S)
13. Sign, see "TYPICAL SECTION" sheet and "SIGN PLANS"
14. Extend Existing Irrigation Lines & Strap to Slope Paving, see "IRRIGATION PLANS"
15. MVP - Maintenance Vehicle Pullout, see "ROAD PLANS"
16. Existing 60" Diameter Storm Drain, see "ROAD PLANS"
17. Remove and Replace Portion of Existing Sidewalk, see "ROAD PLANS"

Existing Structure
Bridge Removal (Portion), Location E
Closure Pour
Point of Min Vert Clearance
* Match Existing Slope

NOTE:
THE CONTRACTOR SHALL VERIFY ALL CONTROLLING FIELD DIMENSIONS BEFORE ORDERING OR FABRICATING ANY MATERIAL.

Luqi Yang DESIGN OVERSIGHT Luqi Yang 3-29-12 SIGN OFF DATE	DESIGN	BY V. J. Mosquera	CHECKED T. Kirilov	LOAD & RESISTANCE FACTOR DESIGN	LIVE LOADING: HL93 W/"LOW-BOY"; PERMIT DESIGN VEHICLE
	DETAILS	BY J. Saldana	CHECKED T. Kirilov	LAYOUT BY J. Saldana	CHECKED R. Firme
	QUANTITIES	BY C. Stelea	CHECKED R. Kelcher	SPECIFICATIONS BY S. Sheikh	PLANS AND SPECS COMPARED S. Sheikh

PREPARED FOR THE STATE OF CALIFORNIA DEPARTMENT OF TRANSPORTATION

V. Jessica Mosquera
PROJECT ENGINEER

BRIDGE NO. 55-0280
POST MILES 1.2

BROOKHURST Ave UC (WIDEN)
GENERAL PLAN

DESIGN GENERAL PLAN SHEET (ENGLISH) (REV.7/16/10)

ORIGINAL SCALE IN INCHES FOR REDUCED PLANS 0 1 2 3

UNIT: 2295
PROJECT NUMBER & PHASE: 12000000791 CONTRACT NO.: 12-0C5701

DISREGARD PRINTS BEARING EARLIER REVISION DATES — REVISION DATES 09/16/11 12/28/11 02/27/12 03/15/12

SHEET 1 OF 26

FILE => 55-0280-a-gp01.dgn

USERNAME => s117606 DATE PLOTTED => 17-AUG-2012 TIME PLOTTED => 09:11

DIST	COUNTY	ROUTE	POST MILES TOTAL PROJECT	SHEET No	TOTAL SHEETS
12	Ora	91	0.9/5.4	735	885

V. Jessica Mosquera 3-15-2012
REGISTERED CIVIL ENGINEER DATE

8-13-12
PLANS APPROVAL DATE

REGISTERED PROFESSIONAL ENGINEER V. J. Mosquera No. C 051049 Exp. 09/30/13 CIVIL STATE OF CALIFORNIA

The State of California or its officers or agents shall not be responsible for the accuracy or completeness of scanned copies of this plan sheet.

OCTA
550 S MAIN STREET
ORANGE, CA. 92868

RBF CONSULTING
14725 ALTON PARKWAY
IRVINE, CA 92618

GENERAL NOTES
LOAD AND RESISTANCE FACTOR DESIGN

DESIGN: AASHTO LRFD Bridge Design Specifications, 4th edition and the Caltrans Amendments, preface dated September 2010; except that bridge details (including barrier and railing details) taken from Standard Plans 2010, and Standard Bridge Details 2011 XS sheets, and Bridge Abutments are designed using Bridge Design Specifications (1996 AASHTO with Revisions by Caltrans).

SEISMIC DESIGN:
Caltrans Seismic Design Criteria (SDC), Version 1.5 dated September 2009.

DEAD LOAD:
Includes 35 psf for future wearing surface.

LIVE LOADING:
HL93 and permit design load.

SEISMIC LOADING:
Soil profile: V_s^{30} =886 ft/sec.
Moment Magnitude: 7.6
Peak Ground Acceleration: 0.52g

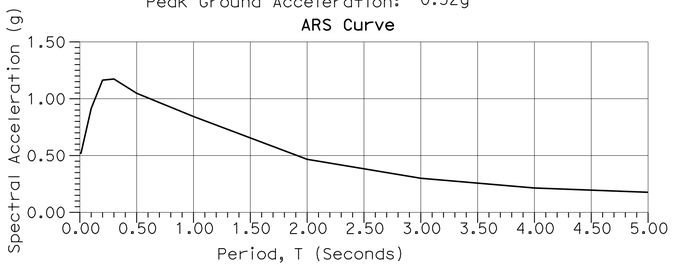

REINFORCED CONCRETE:

NEW:	EXISTING:
f_y = 60 ksi	f_y = 40 ksi
f'_c = 3.6 ksi	f'_c = 3.25 ksi
n = 8.0	

PRESTRESSED CONCRETE:
See prestressing notes on "GIRDER LAYOUT" sheet.

GROUND ANCHOR RW
See "GROUND ANCHOR WALL GENERAL NOTES & MISC DETAILS" sheet.

INDEX TO PLANS

SHEET No.	TITLE
1.	General Plan
2.	Index to Plans
3.	Bridge Removal Details
4.	Foundation Plan
5.	Abutment Layout
6.	Abutment Details No. 1
7.	Abutment Details No. 2
8.	Abutment Retrofit Details
9.	Bent Layout
10.	Bent Details
11.	Typical Section
12.	Girder Layout
13.	Structure Approach Type N (30S)
14.	Structure Approach Type R (30S)
15.	Structure Approach Drainage Details
16.	Slope Paving - Full Slope
17.	Miscellaneous Details
18.	Ground Anchor Wall General Notes & Misc Details
19.	Ground Anchor Wall Layout No. 1
20.	Ground Anchor Wall Layout No. 2
21.	Sub Horizontal Ground Anchor Details No. 1
22.	Sub Horizontal Ground Anchor Details No. 2
23.	Bridge Mounted Sign Details
24.	Log of Test Borings 1 of 3
25.	Log of Test Borings 2 of 3
26.	Log of Test Borings 3 of 3

STANDARD PLANS DATED 2010

A10A	Abbreviations (Sheet 1 of 2)
A10B	Abbreviations (Sheet 2 of 2)
A10C	Lines and Symbols (Sheet 1 of 3)
A10D	Lines and Symbols (Sheet 2 of 3)
A10E	Lines and Symbols (Sheet 3 of 3)
A10F	Legend - Soil (Sheet 1 of 2)
A10G	Legend - Soil (Sheet 2 of 2)
A62C	Limits of Payment for Excavation and Backfill (Bridge)
B0-1	Bridge Details
B0-3	Bridge Details
B0-5	Bridge Details
B0-13	Bridge Details
B2-3	16" and 24" Cast-in-Drilled-Hole Concrete Pile
B6-21	Joint Seal (Maximum Movement Rating = 2")
B11-56	Concrete Barrier Type 736
B14-3	Communication and Sprinkler Control Conduits (Conduits less Than Size 4")
RSP P10	Concrete Pavement - Dowel Bar Details
T3A	Temporary Railing (Type K)

NOTE:
For Ground Anchor Retaining Wall Standard Plans see "GROUND ANCHOR WALL GENERAL NOTES & MISC DETAILS" sheet.

PLAN SYMBOLS

STANDARD PLAN SHEET No.
DETAIL No.
SECTION IDENTIFICATION

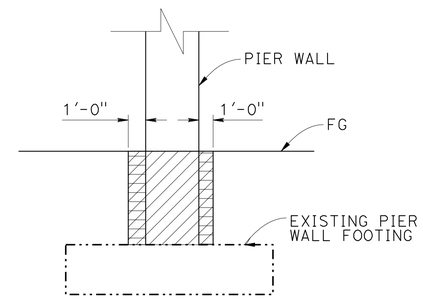

LIMITS OF PAYMENT FOR EXCAVATION AND BACKFILL BRIDGE AT EXISTING PIER FOOTING
NO SCALE

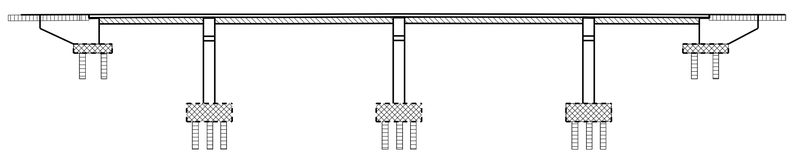

CONCRETE STRENGTH AND TYPE LIMITS
NO SCALE

LEGEND

Structural Concrete, Bridge
Structural Concrete, Bridge Footing
PC / PS Slab, see "GIRDER LAYOUT" sheet
Cast-in-Drilled Hole Concrete Pile (f'c = 4.0 ksi @ 28 days)
Structural Concrete, Approach Slab

LEGEND

Low Expansive Material EI<50 and SE>20
Structure Excavation (Bridge)
Structure Backfill (Bridge)
Roadway Excavation (see "ROAD PLANS")

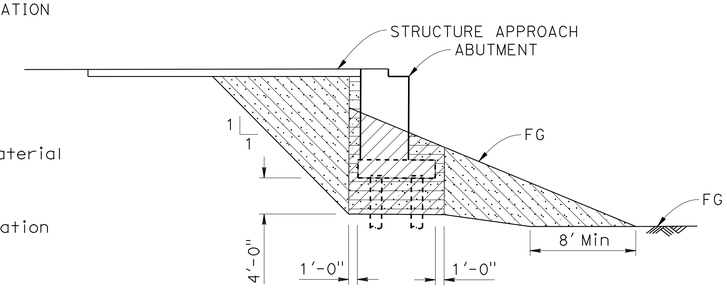

LIMITS OF EXPANSIVE SOIL EXCLUSION ZONE IN BRIDGE EMBANKMENT
NO SCALE

Notes:
1. Transverse limit of Low Expansive Material shall be 12" from edges of abutment footing to end of existing abutment stem.
2. For limits of excavation & backfill for Ground Anchor Wall, see "GROUND ANCHOR WALL GENERAL NOTES & MISC DETAILS" sheet.

NOTE:
THE CONTRACTOR SHALL VERIFY ALL CONTROLLING FIELD DIMENSIONS BEFORE ORDERING OR FABRICATING ANY MATERIAL.

Luqi Yang
DESIGN OVERSIGHT Luqi Yang
3-29-12
SIGN OFF DATE

	BY	CHECKED
DESIGN	V. J. Mosquera	T. Kirilov
DETAILS	J. Saldana	T. Kirilov
QUANTITIES	C. Stelea	R. Kelcher

PREPARED FOR THE STATE OF CALIFORNIA DEPARTMENT OF TRANSPORTATION

V. Jessica Mosquera
PROJECT ENGINEER

BRIDGE NO. 55-0280
POST MILES 1.2

BROOKHURST Ave UC (WIDEN)
INDEX TO PLANS

DESIGN DETAIL SHEET (ENGLISH) (REV.7/16/10)

ORIGINAL SCALE IN INCHES FOR REDUCED PLANS 0 1 2 3

UNIT: 2295
PROJECT NUMBER & PHASE: 12000000791 CONTRACT NO.: 12-0C5701

DISREGARD PRINTS BEARING EARLIER REVISION DATES
REVISION DATES 08/30/10 09/30/11 12/20/11 02/17/12

SHEET 2 OF 26

FILE => 55-0280-a-itp.dgn

USERNAME => s123631 DATE PLOTTED => 17-AUG-2012 TIME PLOTTED => 16:32

DIST	COUNTY	ROUTE	POST MILES TOTAL PROJECT	SHEET No	TOTAL SHEETS
12	Ora	91	0.9/5.4	736	885

V. Jessica Mosquera 3-15-2012
REGISTERED CIVIL ENGINEER DATE

8-13-12
PLANS APPROVAL DATE

REGISTERED PROFESSIONAL ENGINEER V. J. Mosquera No. C 051049 Exp. 09/30/13 CIVIL STATE OF CALIFORNIA

The State of California or its officers or agents shall not be responsible for the accuracy or completeness of scanned copies of this plan sheet.

OCTA
550 S MAIN STREET
ORANGE, CA. 92868

RBF CONSULTING
14725 ALTON PARKWAY
IRVINE, CA 92618

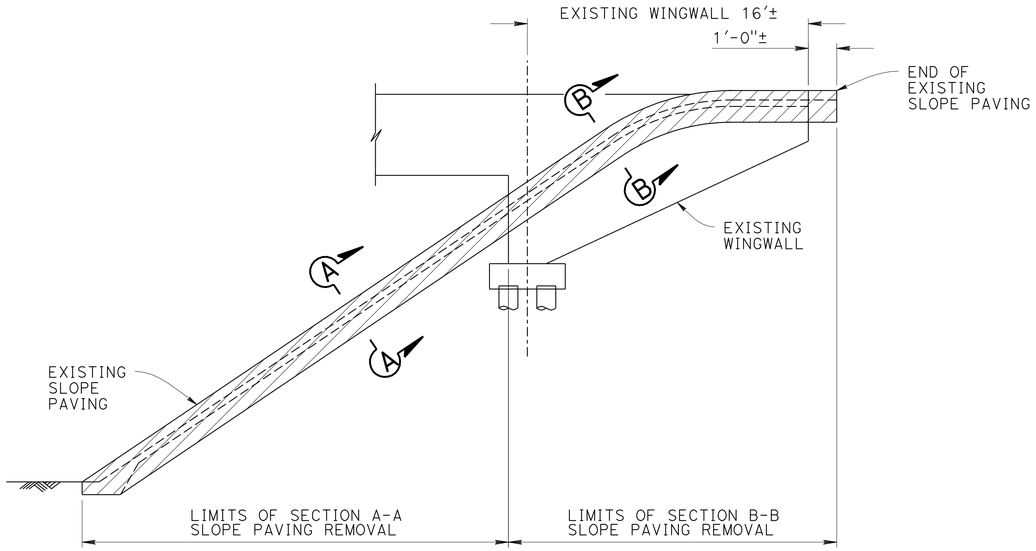

REMOVE SLOPE PAVING

NO SCALE

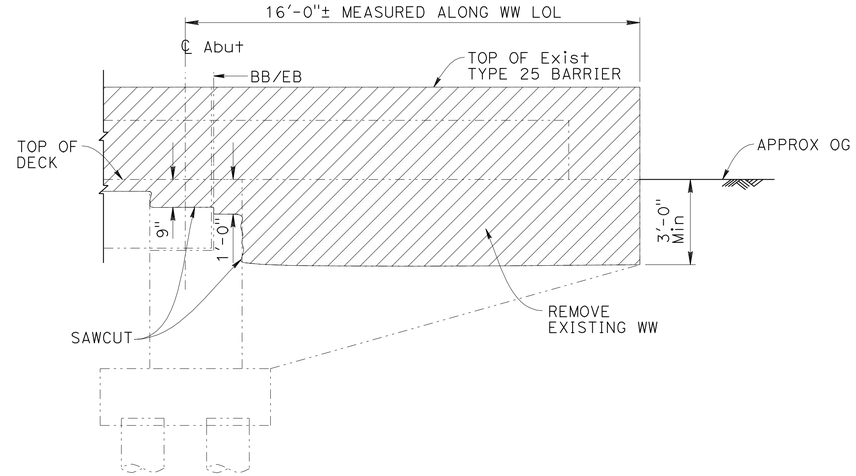

WINGWALL REMOVAL LIMITS

NO SCALE

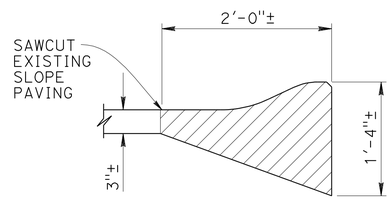

SECTION A-A

NO SCALE

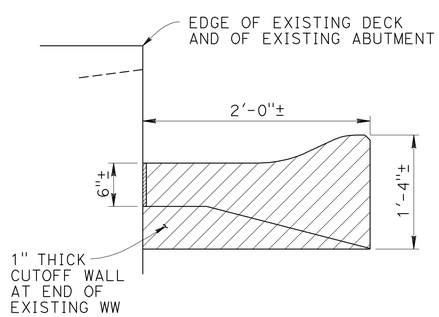

SECTION B-B

NO SCALE

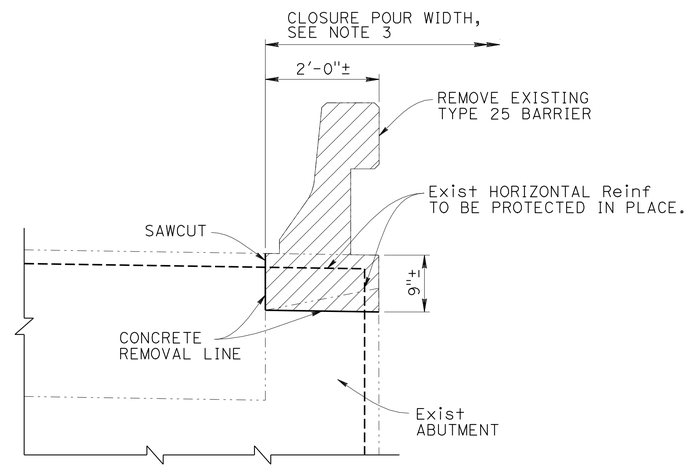

ABUTMENT CORNER REMOVAL DETAIL

NO SCALE

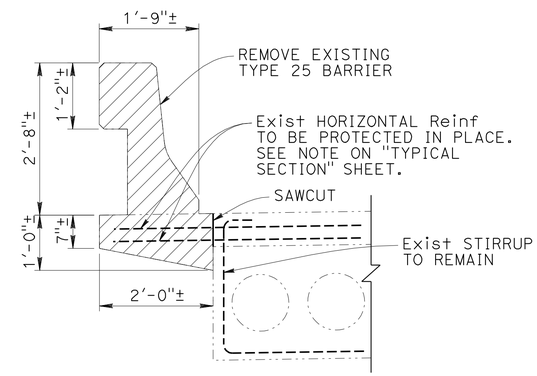

OVERHANG REMOVAL DETAIL

NO SCALE

NOTE:
THE CONTRACTOR SHALL VERIFY ALL CONTROLLING FIELD DIMENSIONS BEFORE ORDERING OR FABRICATING ANY MATERIAL.

LEGEND:

Bridge Removal (Portion), Location E

Existing Structure

NOTES:

1. The limit of Overhang Removal is from BB to EB.
2. The limit of Barrier Removal is between ends of WW.
3. Overhang at abut shall be removed to depth shown times width limits within the deck closure pour.

Luqi Yang
DESIGN OVERSIGHT Luqi Yang
3-29-12
SIGN OFF DATE

	BY	CHECKED
DESIGN	V. J. Mosquera	T. Kirilov
DETAILS	J. Saldana	T. Kirilov
QUANTITIES	C. Stelea	R. Kelcher

PREPARED FOR THE STATE OF CALIFORNIA DEPARTMENT OF TRANSPORTATION

V. Jessica Mosquera
PROJECT ENGINEER

BRIDGE NO. 55-0280
POST MILES 1.2

BROOKHURST Ave UC (WIDEN)
BRIDGE REMOVAL DETAILS

DESIGN DETAIL SHEET (ENGLISH) (REV.7/16/10)

ORIGINAL SCALE IN INCHES FOR REDUCED PLANS 0 1 2 3

UNIT: 2295
PROJECT NUMBER & PHASE: 12000000791 CONTRACT NO.: 12-0C5701

DISREGARD PRINTS BEARING EARLIER REVISION DATES

REVISION DATES: 08/30/10 09/08/11 12/22/11

SHEET 3 OF 26

FILE => 55-0280-b-br-rmv.dgn

USERNAME => s121614 DATE PLOTTED => 17-AUG-2012 TIME PLOTTED => 06:08

DIST	COUNTY	ROUTE	POST MILES TOTAL PROJECT	SHEET No	TOTAL SHEETS
12	Ora	91	0.9/5.4	737	885

V. Jessica Mosquera 3-15-2012
REGISTERED CIVIL ENGINEER DATE

8-13-12
PLANS APPROVAL DATE

The State of California or its officers or agents shall not be responsible for the accuracy or completeness of scanned copies of this plan sheet.

REGISTERED PROFESSIONAL ENGINEER V. J. Mosquera No. C 051049 Exp. 09/30/13 CIVIL STATE OF CALIFORNIA

OCTA
550 S MAIN STREET
ORANGE, CA. 92868

RBF CONSULTING
14725 ALTON PARKWAY
IRVINE, CA 92618

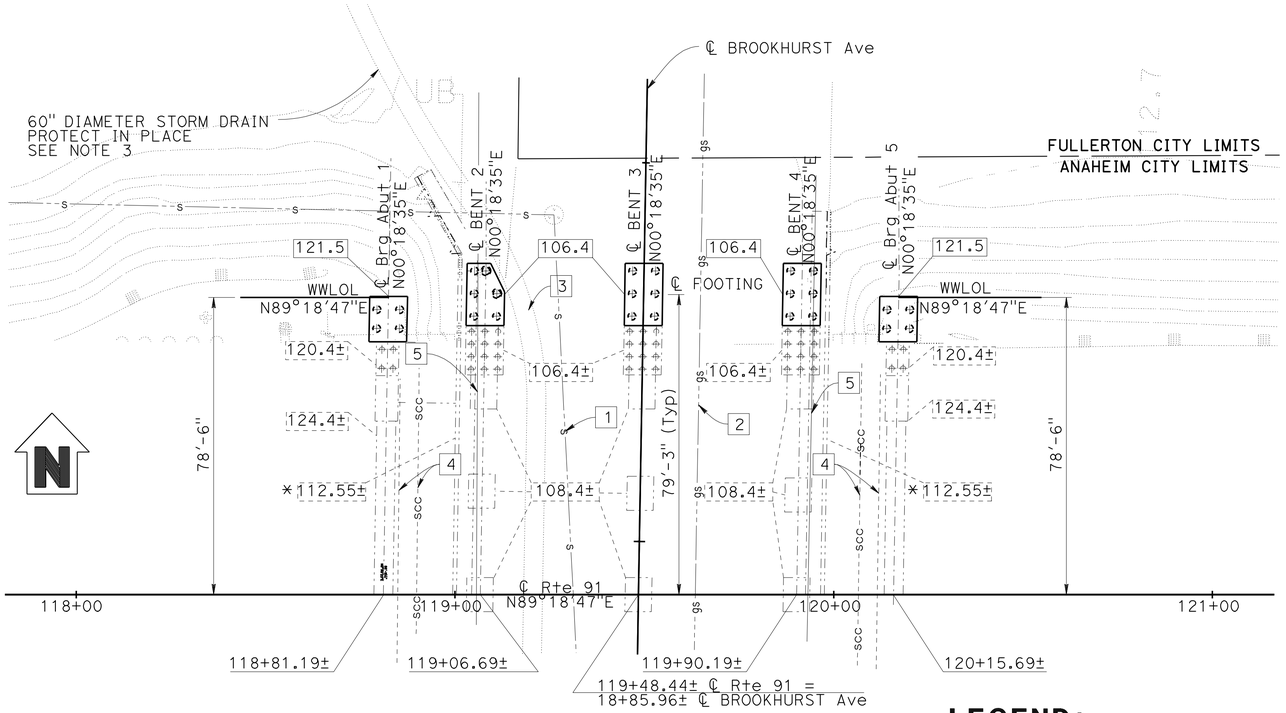

FOUNDATION PLAN

1" = 20'

NOTES:

1. All existing piles not shown.
2. Location of exist structure foundations is approximate.
3. For detail at Bent 2 footing adjacent to storm drain, see "MISCELLANEOUS DETAILS" sheet.
4. For R/W beyond bridge plan limits, see "ROAD PLANS".

UTILITY NOTES:

1. Exist 18" VCP Sewer, City of Anaheim, Protect in place
2. Exist 12" Ø HP Gas, SCG, Protect in place
3. Exist 60" Ø Storm Drain, City of Fullerton, Protect in place
4. Exist 3" GSP & 2" SCC, Protect in place Extend Lines, see "IRRIGATION PLANS"
5. For Exist Conduits in Exist Sidewalk, see "ROAD PLANS"

PILE DATA TABLE

LOCATION	PILE TYPE	NOMINAL RESISTANCE (kips)		DESIGN TIP ELEVATION (ft)	SPECIFIED TIP ELEVATION (ft)	STEEL CASING SPECIFIED TIP ELEVATION (ft)
		COMPRESSION	TENSION			
Abut 1	24" CIDH	190	0	+87 (a) +99 (d)	+87	N/A
BENT 2	24" CIDH	400	200	+68 (a) +73 (b) +81 (d)	+68	+102.4
BENT 3	24" CIDH	330	190	+71 (a) +73 (b) +81 (d)	+71	N/A
BENT 4	24" CIDH	330	190	+71 (a) +73 (b) +81 (d)	+71	N/A
Abut 5	24" CIDH	190	0	+87 (a) +99 (d)	+87	N/A

NOTES:
1) Design tip elevations are controlled by the following demands: (a) Compression, (b) Tension and (d) Lateral Load
2) There are no design tip elevations for Tension and Tolerable Settlement at Abutment 1 and 5.
3) There is no design tip elevation Tolerable Settlement at Bent 2 through 4.
4) The specified tip elevation for Abutments 1 and 5 shall not be raised above the design tip elevations for Lateral Load.
5) The specified tip elevations for Bents 2 through 4 shall not be raised above the design tip elevation for Tension and Lateral Load.

LEGEND:

- XXX.XX — Indicates Bottom of Footing Elevation
- XXX.XX± — Indicates Bottom of Existing Footing Elevation (Bridge)
- * XXX.XX± — Indicates Bottom of Existing Footing Elevation (Retaining Wall)
- Indicates Existing Structure
- Indicates Existing Piling
- Indicates New Piling

WARNING:
THE CONTRACTOR SHALL BE AWARE OF THE Exist 12" GAS LINE NEAR BENT 3. CONTRACTOR SHALL WORK WITH EXTREME CARE DURING CONSTRUCTION. SOUTHERN CALIFORNIA GAS SHOULD BE NOTIFIED PRIOR TO START OF WORK.

BENCHMARKS:

Elevations as shown hereon are in terms of the North American Vertical Datum of 1988 (NAVD88), based locally upon the following Benchmarks as published by the County of Orange:

Designation: 1G-164-05 Elev = 109.80
Described by OCS 2005 - Found 3¾" OCS Aluminum Benchmark Disk Stamped "1G-164-05", set in the northwesterly corner of a 4.5 ft. by 11.0 ft. Concrete Catch Basin. Monument is located in the southeasterly corner of the intersection of Magnolia Avenue and Buckingham Street, 200 ft. ± from the centerline of Buckingham and 47 ft. easterly of the centerline of Magnolia. Monument is set level with the sidewalk

Designation: 2F-25-04 Elev = 162.70
Described by OCS 2004 - Found 3¾" OCS Aluminum Benchmark Disk Stamped "2F-25-04", set in the northwesterly corner of a 7.5 ft. by 4.5 ft. Concrete Catch Basin. Monument is located in the northeasterly corner of the intersection of Harbor Boulevard and the Eastbound 91 Freeway On-Ramp, 39 ft. northerly of the centerline of the On-Ramp and 40 ft. easterly of the centerline of Harbor Boulevard. Monument is set level with the sidewalk

Designation: 2D-35-86 Elev = 188.58
Described by OCS 2003 - Found 3¾" OCS Aluminum Benchmark Disk Stamped "2D-35-86", set in the northwesterly corner of a 7 ft. by 14 ft. Concrete Catch Basin. Monument is located in the southeasterly corner of the intersection of Placentia Avenue and State College Boulevard, 38 ft. easterly of the centerline of State College and 70.5 ft. southerly of the centerline of Placentia. Monument is set level with the sidewalk

BASIS OF COORDINATES:

Bearings and Coordinates as shown hereon are in terms of the California Coordinate System of 1983 (CCS83, Epoch 1991.35), Zone 6; based locally upon the following Control Stations as published by the County of Orange:

Name	Northing (ft)-Grid	Easting (ft)-Grid
OCS GPS 3511R1	2257877.29	6037582.77
OCS GPS 3518	2260444.33	6053380.91
OCS GPS 5260	2257149.07	6063970.03

NOTE:
THE CONTRACTOR SHALL VERIFY ALL CONTROLLING FIELD DIMENSIONS BEFORE ORDERING OR FABRICATING ANY MATERIAL.

GEOTECHNICAL PROFESSIONAL 3-15-2012 APPROVAL DATE

Luqi Yang
DESIGN OVERSIGHT Luqi Yang
3-29-12
SIGN OFF DATE

SCALE: X	VERT.DATUM NAVD 88	HORZ.DATUM NAD 83 (1991.35)	
PHOTOGRAMMETRY AS OF: 04-15-2010	ALIGNMENT TIES		
SURVEYED	BY B. Cox	DRAFTED	BY G. Ciampaglia
FIELD CHECKED	BY B. Cox	CHECKED	BY B. Cox

	BY	CHECKED
DESIGN	V. J. Mosquera	T. Kirilov
DETAILS	J. Saldana	T. Kirilov
QUANTITIES	C. Stelea	R. Kelcher

PREPARED FOR THE STATE OF CALIFORNIA DEPARTMENT OF TRANSPORTATION

V. Jessica Mosquera
PROJECT ENGINEER

BRIDGE NO. 55-0280
POST MILES 1.2

BROOKHURST Ave UC (WIDEN)
FOUNDATION PLAN

FOUNDATION PLAN SHEET (ENGLISH) (REV.7/16/10)

ORIGINAL SCALE IN INCHES FOR REDUCED PLANS 0 1 2 3

UNIT: 2295
PROJECT NUMBER & PHASE: 12000000791 CONTRACT NO.: 12-0C5701

DISREGARD PRINTS BEARING EARLIER REVISION DATES 08/30/10 09/16/11 12/22/11

SHEET	OF
4	26

FILE => 55-0280-e-fdp101.dgn

D:\Con_CADD_\D12\0C5701\Expedite___3-28-12_\dgn__\Brookhurst_55-0280__\DGN\55-0280-e-fdp101.dgn

USERNAME => s117606 DATE PLOTTED => 17-AUG-2012 TIME PLOTTED => 09:02

DIST	COUNTY	ROUTE	POST MILES TOTAL PROJECT	SHEET No	TOTAL SHEETS
12	Ora	91	0.9/5.4	738	885

V. Jessica Mosquera 3-15-2012
REGISTERED CIVIL ENGINEER DATE

8-13-12
PLANS APPROVAL DATE

REGISTERED PROFESSIONAL ENGINEER V. J. Mosquera No. C 051049 Exp. 09/30/13 CIVIL STATE OF CALIFORNIA

The State of California or its officers or agents shall not be responsible for the accuracy or completeness of scanned copies of this plan sheet.

OCTA
550 S MAIN STREET
ORANGE, CA. 92868

RBF CONSULTING
14725 ALTON PARKWAY
IRVINE, CA 92618

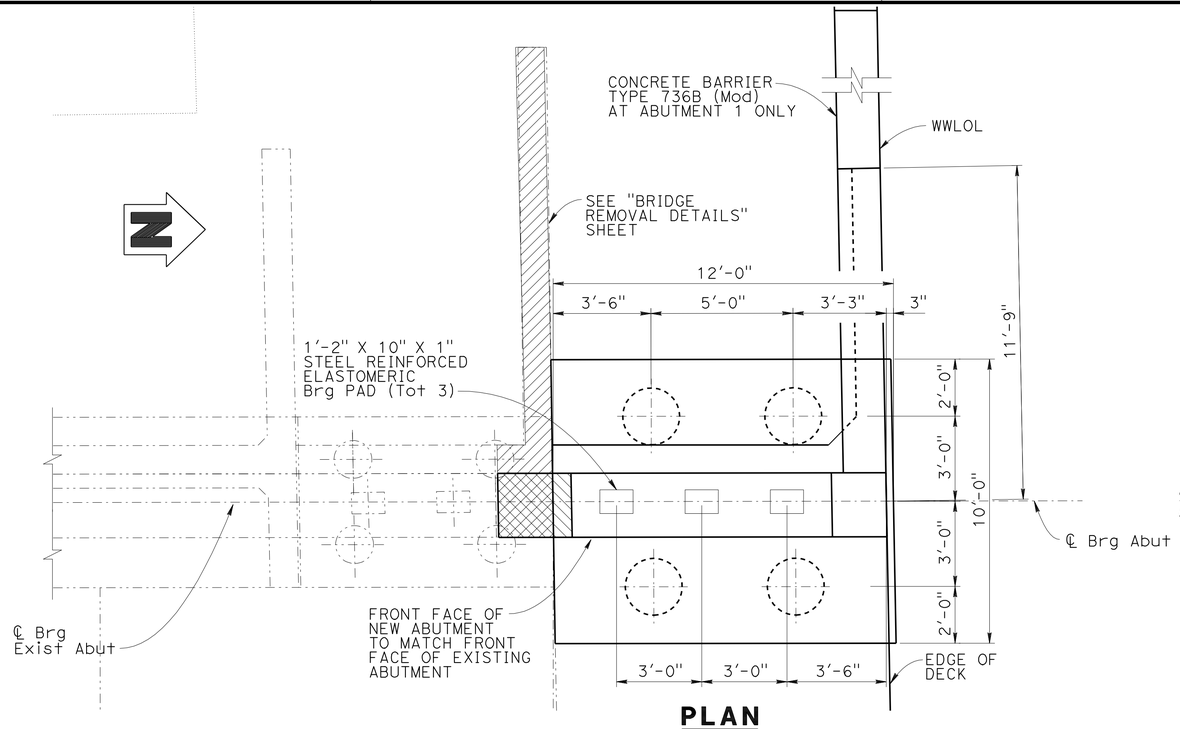

PLAN

3/8" = 1'-0"

NOTE: ABUTMENT 1 SHOWN, ABUTMENT 5 SIMILAR

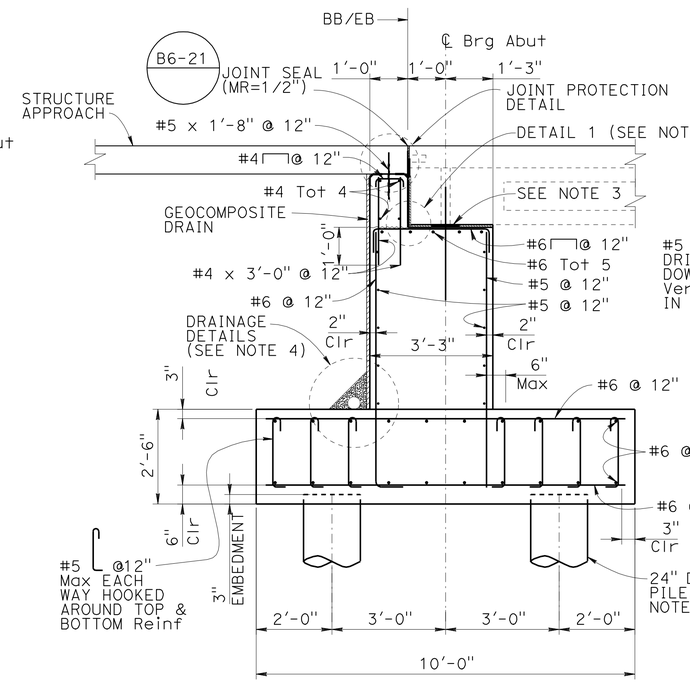

TYPICAL SECTION X-X

1/2" = 1'-0"

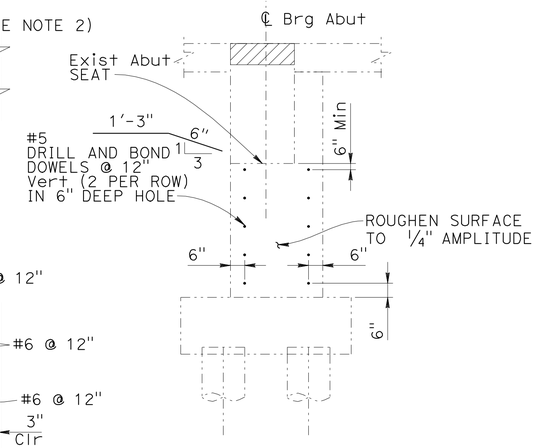

SECTION A-A

3/8" = 1'-0"

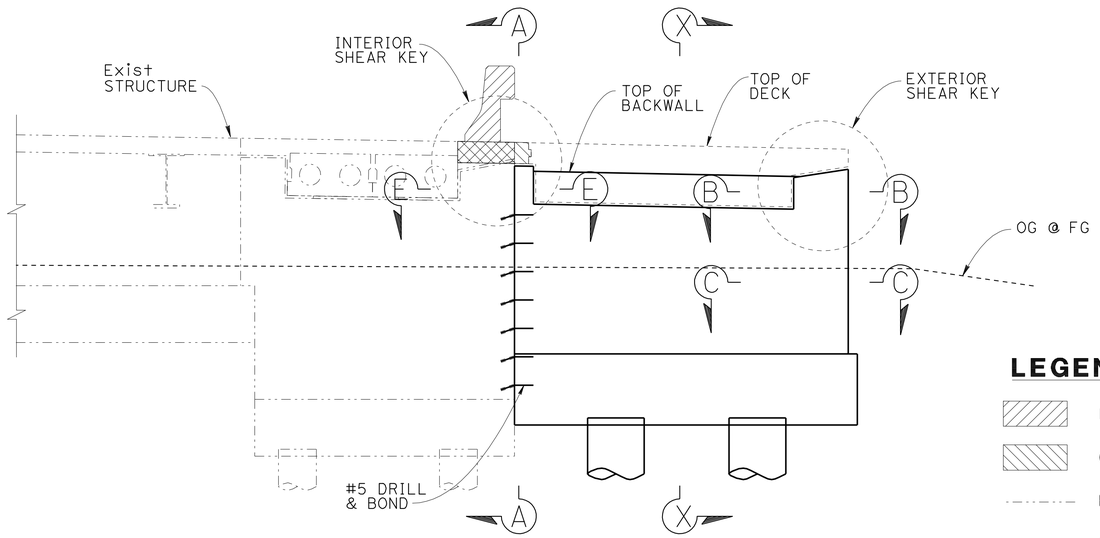

ELEVATION

3/8" = 1'-0"

LEGEND:

- Limits of Bridge Removal (Portion), Location E
- Closure Pour
- Existing Structure
- New Construction

NOTES:

1. For Section B-B, Section C-C, Section E-E, Exterior Shear Key Detail, and Interior Shear Key Detail, see "ABUTMENT DETAILS No.1" sheet.
2. For Detail 1 and Joint Protection Detail, see "ABUTMENT DETAILS No. 2" sheet.
3. For abutment support details, see "GIRDER LAYOUT" sheet.
4. For Drainage Details, see "STRUCTURE APPROACH DRAINAGE DETAILS" sheet.
5. For 24" Dia CIDH pile details, see Standard Plan B2-3. Include inspection tubes. Use hooked bars into footing for main pile reinforcement. Stop hooked bar 6" clear from top of footing.

NOTE:
THE CONTRACTOR SHALL VERIFY ALL CONTROLLING FIELD DIMENSIONS BEFORE ORDERING OR FABRICATING ANY MATERIAL.

Luqi Yang
DESIGN OVERSIGHT Luqi Yang
3-29-12
SIGN OFF DATE

	BY	CHECKED
DESIGN	V. J. Mosquera	T. Kirilov
DETAILS	J. Saldana	T. Kirilov
QUANTITIES	C. Stelea	R. Kelcher

PREPARED FOR THE STATE OF CALIFORNIA DEPARTMENT OF TRANSPORTATION

V. Jessica Mosquera
PROJECT ENGINEER

BRIDGE NO. 55-0280
POST MILES 1.2

BROOKHURST Ave UC (WIDEN)
ABUTMENT LAYOUT

DESIGN DETAIL SHEET (ENGLISH) (REV.7/16/10)

ORIGINAL SCALE IN INCHES FOR REDUCED PLANS 0 1 2 3

UNIT: 2295
PROJECT NUMBER & PHASE: 12000000791 CONTRACT NO.: 12-0C5701

DISREGARD PRINTS BEARING EARLIER REVISION DATES

REVISION DATES: 08/30/10 09/16/11 12/22/11

SHEET 5 OF 26

FILE => 55-0280-f-a01_lo1.dgn

USERNAME => s121614 DATE PLOTTED => 17-AUG-2012 TIME PLOTTED => 06:09

DIST	COUNTY	ROUTE	POST MILES TOTAL PROJECT	SHEET No	TOTAL SHEETS
12	Ora	91	0.9/5.4	739	885

V. Jessica Mosquera 3-15-2012
REGISTERED CIVIL ENGINEER DATE

8-13-12
PLANS APPROVAL DATE

REGISTERED PROFESSIONAL ENGINEER V. J. Mosquera No. C 051049 Exp. 09/30/13 CIVIL STATE OF CALIFORNIA

The State of California or its officers or agents shall not be responsible for the accuracy or completeness of scanned copies of this plan sheet.

OCTA
550 S MAIN STREET
ORANGE, CA. 92868

RBF CONSULTING
14725 ALTON PARKWAY
IRVINE, CA 92618

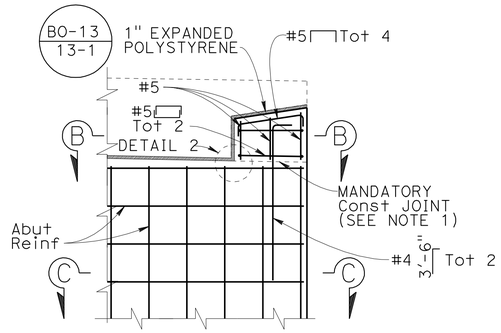

EXTERIOR SHEAR KEY

½" = 1'-0"

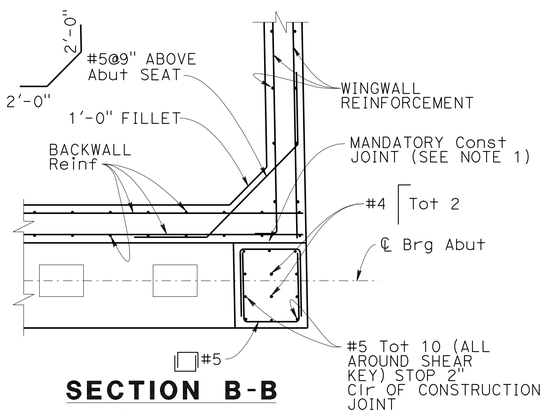

SECTION B-B

½" = 1'-0"

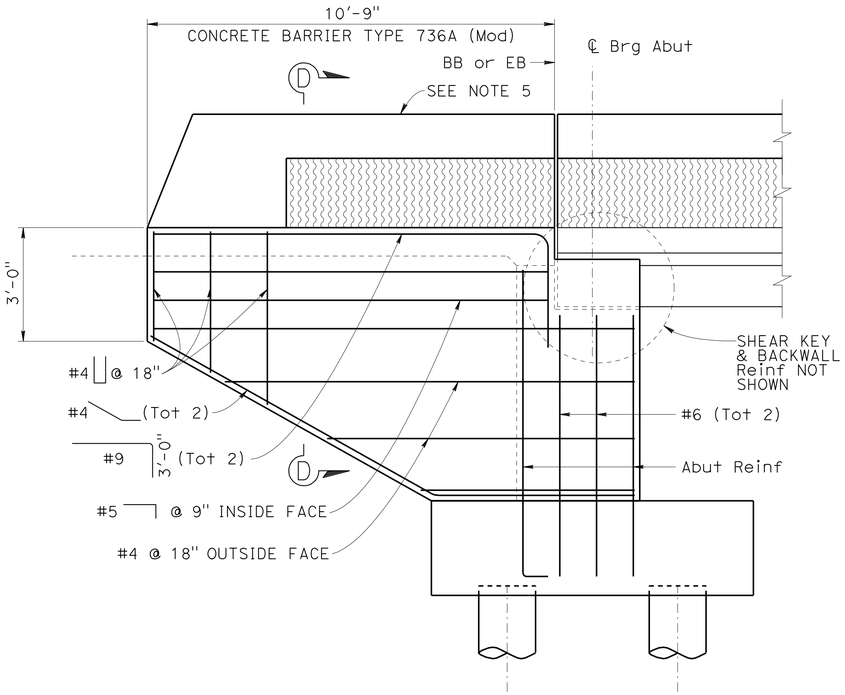

Abut 5
WINGWALL ELEVATION

½" = 1'-0"

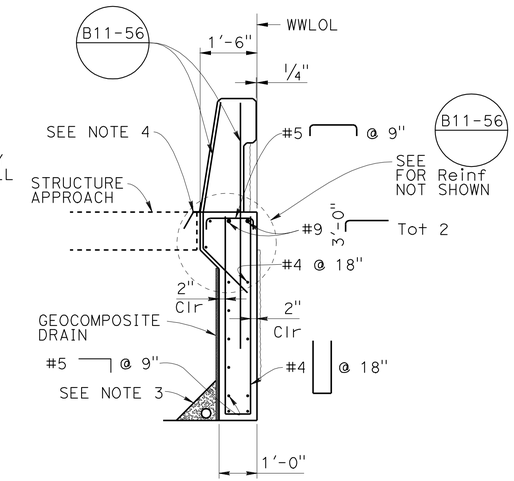

SECTION D-D

½" = 1'-0"

NOTES:

1. Mandatory joint surface shall be level smooth finished.
2. For bars and bond dowels detail, see Section A-A on "ABUTMENT LAYOUT" sheet.
3. For Drainage Details, see "STRUCTURE APPROACH DRAINAGE DETAILS" sheet.
4. For angle, see "DETAIL B" in "STRUCTURE APPROACH TYPE N (30S)" sheet.
5. For concrete barrier aesthetic and wingwall details, see "MISCELLANEOUS DETAILS" sheet.
6. For "DETAIL 2", See "ABUTMENT DETAILS No. 2" sheet.

LEGEND:

- Limits of Bridge Removal (Portion), Location E
- Closure Pour
- Existing Structure
- New Construction

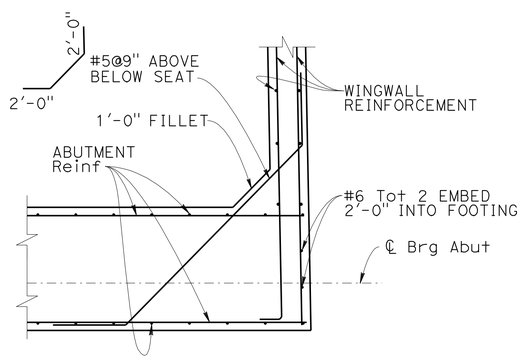

SECTION C-C

½" = 1'-0"

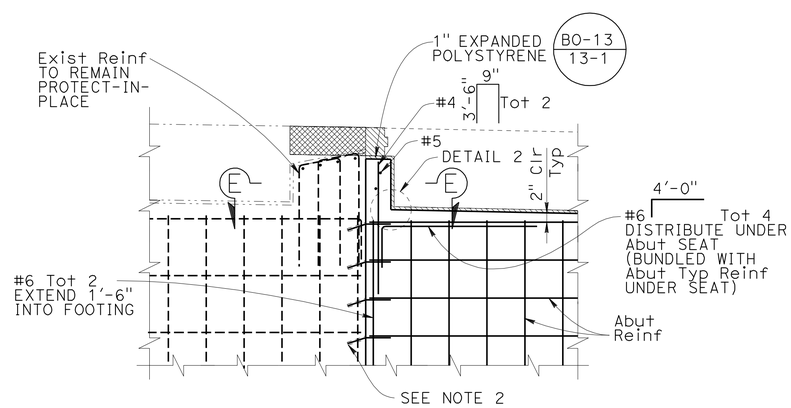

INTERIOR SHEAR KEY

½" = 1'-0"

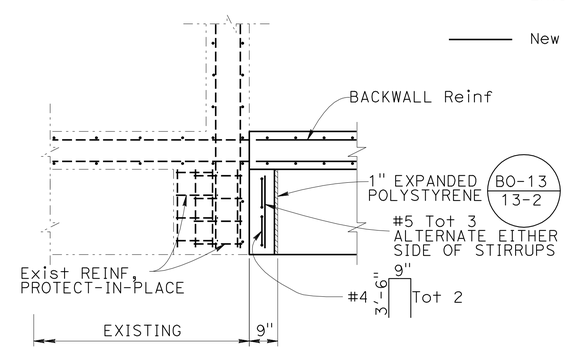

INTERIOR SHEAR KEY SECTION E-E

½" = 1'-0"

NOTE:
THE CONTRACTOR SHALL VERIFY ALL CONTROLLING FIELD DIMENSIONS BEFORE ORDERING OR FABRICATING ANY MATERIAL.

Luqi Yang
DESIGN OVERSIGHT Luqi Yang
3-29-12
SIGN OFF DATE

	BY	CHECKED
DESIGN	V. J. Mosquera	T. Kirilov
DETAILS	J. Saldana	T. Kirilov
QUANTITIES	C. Stelea	R. Kelcher

PREPARED FOR THE STATE OF CALIFORNIA DEPARTMENT OF TRANSPORTATION

V. Jessica Mosquera
PROJECT ENGINEER

BRIDGE NO. 55-0280
POST MILES 1.2

BROOKHURST Ave UC (WIDEN)
ABUTMENT DETAILS No. 1

DESIGN DETAIL SHEET (ENGLISH) (REV.7/16/10)

ORIGINAL SCALE IN INCHES FOR REDUCED PLANS 0 1 2 3

UNIT: 2295
PROJECT NUMBER & PHASE: 12000000791 CONTRACT NO.: 12-0C5701

DISREGARD PRINTS BEARING EARLIER REVISION DATES

REVISION DATES 08/30/10 09/16/11 12/22/11

SHEET 6 OF 26

FILE => 55-0280-f-a01dt01.dgn

USERNAME => s12161h DATE PLOTTED => 17-AUG-2012 TIME PLOTTED => 06:09

DIST	COUNTY	ROUTE	POST MILES TOTAL PROJECT	SHEET No	TOTAL SHEETS
12	Ora	91	0.9/5.4	740	885

V. Jessica Mosquera 3-15-2012
REGISTERED CIVIL ENGINEER DATE

8-13-12
PLANS APPROVAL DATE

REGISTERED PROFESSIONAL ENGINEER V. J. Mosquera No. C 051049 Exp. 09/30/13 CIVIL STATE OF CALIFORNIA

The State of California or its officers or agents shall not be responsible for the accuracy or completeness of scanned copies of this plan sheet.

OCTA
550 S MAIN STREET
ORANGE, CA. 92868

RBF CONSULTING
14725 ALTON PARKWAY
IRVINE, CA 92618

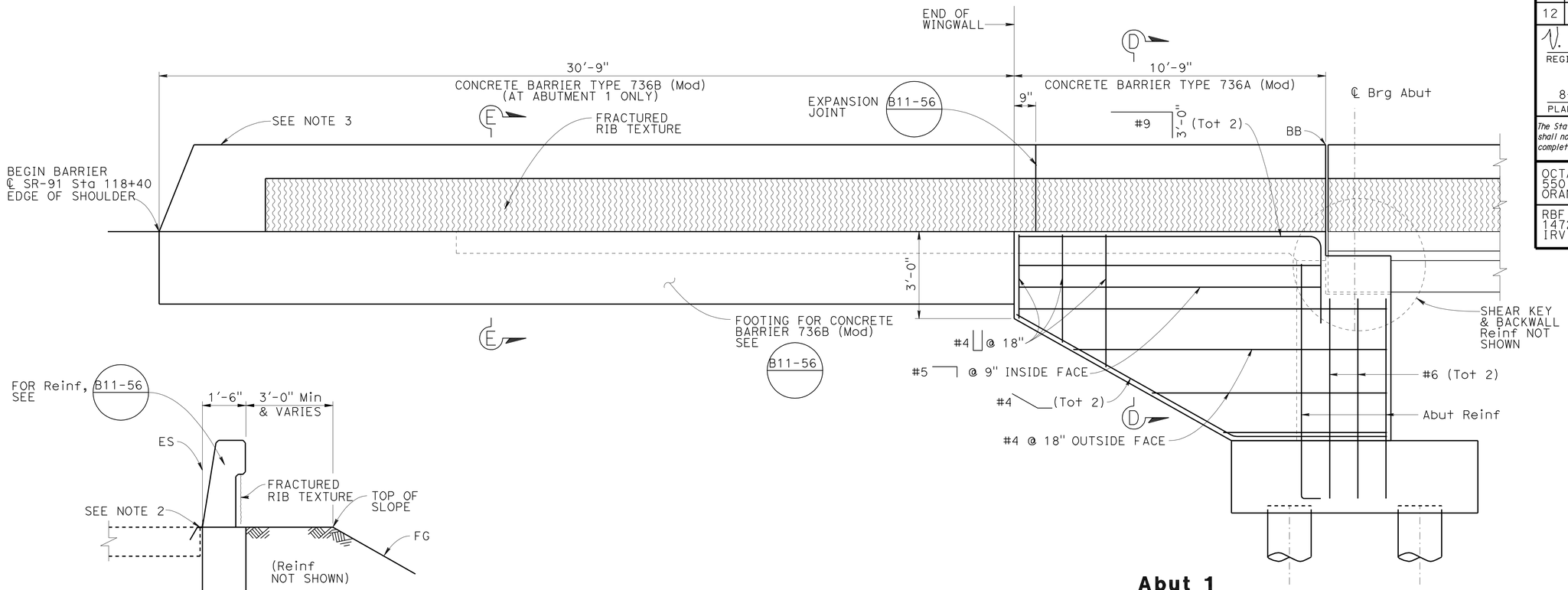

Abut 1
MIRRORED WINGWALL ELEVATION
½" = 1'-0"

SECTION E-E
½" = 1'-0"

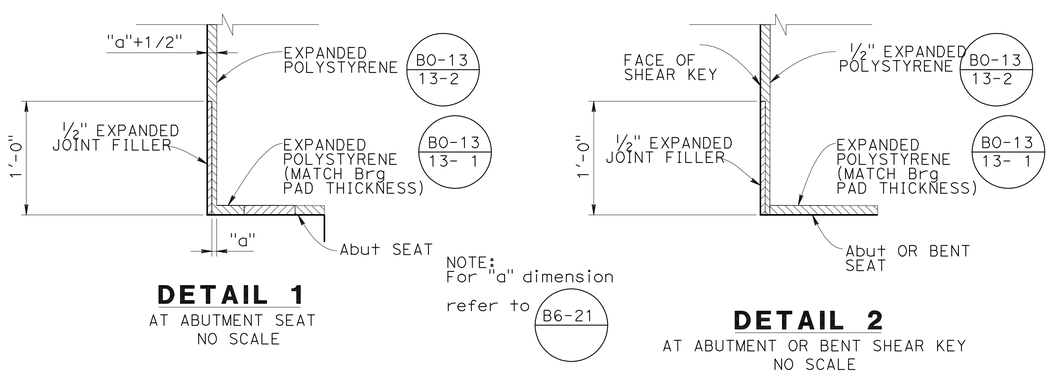

DETAIL 1
AT ABUTMENT SEAT
NO SCALE

DETAIL 2
AT ABUTMENT OR BENT SHEAR KEY
NO SCALE

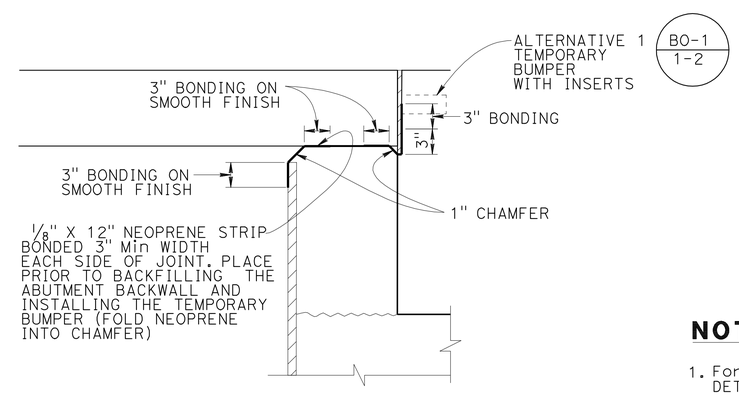

JOINT PROTECTION DETAIL
NO SCALE

NOTES:

1. For Section D-D, see "ABUTMENT DETAILS No. 1" sheet.
2. For angle, see "DETAIL B" in "STRUCTURE APPROACH TYPE N (30S)" sheet.
3. For concrete barrier aesthetic and wingwall details, see "MISCELLANEOUS DETAILS" sheet.

NOTE:
THE CONTRACTOR SHALL VERIFY ALL CONTROLLING FIELD DIMENSIONS BEFORE ORDERING OR FABRICATING ANY MATERIAL.

Luqi Yang
DESIGN OVERSIGHT Luqi Yang
3-29-12
SIGN OFF DATE

	BY	CHECKED
DESIGN	V. J. Mosquera	T. Kirilov
DETAILS	J. Saldana	T. Kirilov
QUANTITIES	C. Stelea	R. Kelcher

PREPARED FOR THE STATE OF CALIFORNIA DEPARTMENT OF TRANSPORTATION

V. Jessica Mosquera
PROJECT ENGINEER

BRIDGE NO. 55-0280
POST MILES 1.2

BROOKHURST Ave UC (WIDEN)
ABUTMENT DETAILS No. 2

DESIGN DETAIL SHEET (ENGLISH) (REV.7/16/10)

ORIGINAL SCALE IN INCHES FOR REDUCED PLANS 0 1 2 3

UNIT: 2295
PROJECT NUMBER & PHASE: 12000000791 CONTRACT NO.: 12-0C5701

DISREGARD PRINTS BEARING EARLIER REVISION DATES
REVISION DATES 08/30/10 09/30/11 12/22/11

SHEET 7 OF 26

FILE => 55-0280-f-a01dt02.dgn

USERNAME => s121614 DATE PLOTTED => 17-AUG-2012 TIME PLOTTED => 06:09

DIST	COUNTY	ROUTE	POST MILES TOTAL PROJECT	SHEET No	TOTAL SHEETS
12	Ora	91	0.9/5.4	741	885

V. Jessica Mosquera 3-15-2012
REGISTERED CIVIL ENGINEER DATE

8-13-12
PLANS APPROVAL DATE

The State of California or its officers or agents shall not be responsible for the accuracy or completeness of scanned copies of this plan sheet.

REGISTERED PROFESSIONAL ENGINEER V. J. Mosquera No. C 051049 Exp. 09/30/13 CIVIL STATE OF CALIFORNIA

OCTA
550 S MAIN STREET
ORANGE, CA. 92868

RBF CONSULTING
14725 ALTON PARKWAY
IRVINE, CA 92618

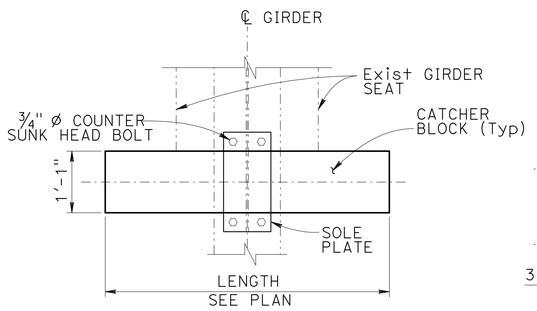

PLAN

DETAIL AT CATCHER BLOCK
¾" = 1'-0"

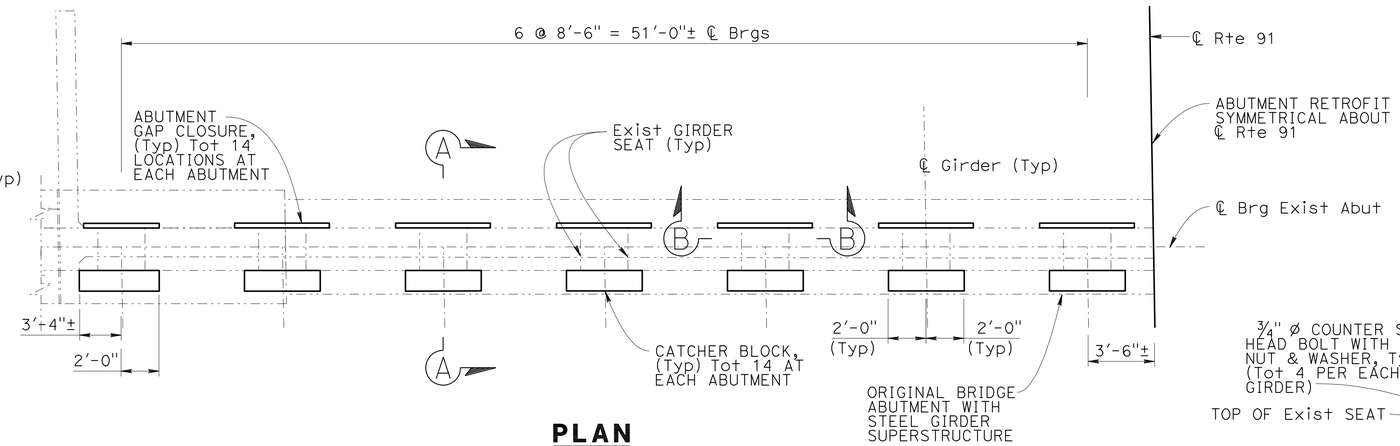

PLAN

Abut #5 SHOWN, Abut #1 SIMILAR
¼" = 1'-0"

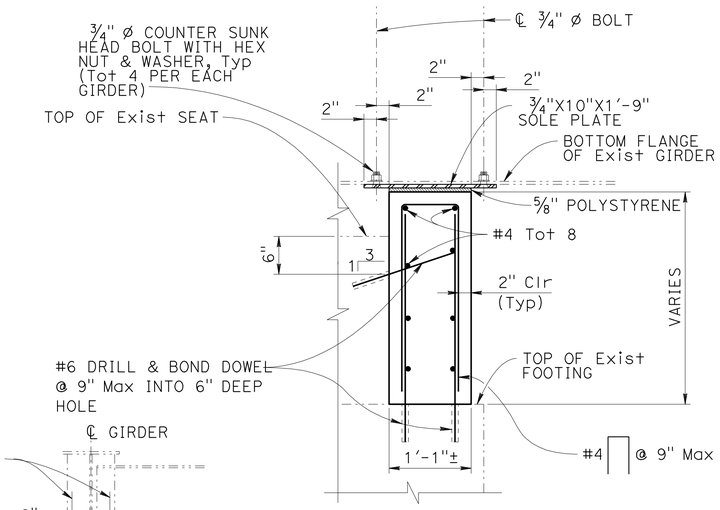

DETAIL 1

1" = 1'-0"

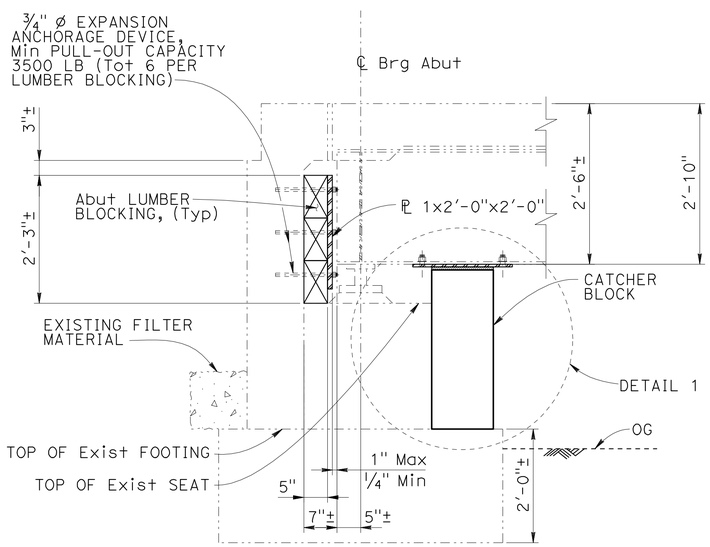

SECTION A-A

¾" = 1'-0"

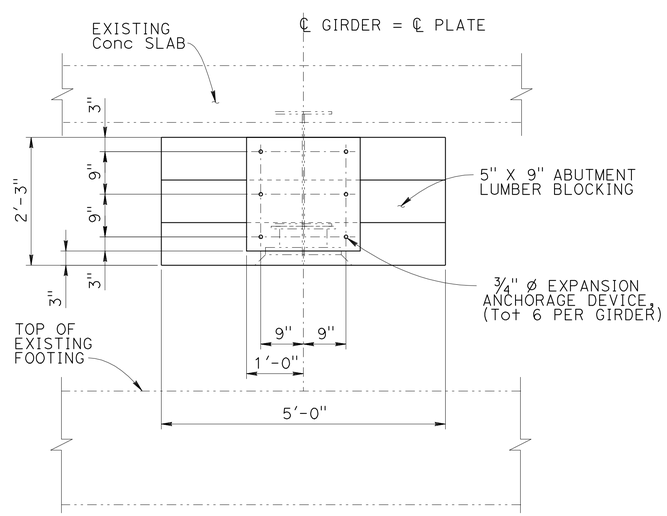

SECTION B-B

¾" = 1'-0"

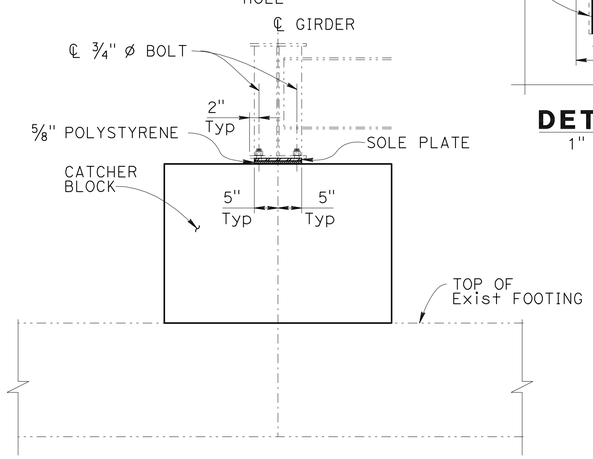

ELEVATION

¾" = 1'-0"

LEGEND

Existing Concrete

New Construction

NOTE:
THE CONTRACTOR SHALL VERIFY ALL CONTROLLING FIELD DIMENSIONS BEFORE ORDERING OR FABRICATING ANY MATERIAL.

Luqi Yang
DESIGN OVERSIGHT Luqi Yang
3-29-12
SIGN OFF DATE

	BY	CHECKED
DESIGN	V. J. Mosquera	T. Kirilov
DETAILS	J. Saldana	T. Kirilov
QUANTITIES	C. Stelea	R. Kelcher

PREPARED FOR THE STATE OF CALIFORNIA DEPARTMENT OF TRANSPORTATION

V. Jessica Mosquera
PROJECT ENGINEER

BRIDGE NO. 55-0280
POST MILES 1.2

BROOKHURST Ave UC (WIDEN)
ABUTMENT RETROFIT DETAILS

DESIGN DETAIL SHEET (ENGLISH) (REV.7/16/10)

ORIGINAL SCALE IN INCHES FOR REDUCED PLANS 0 1 2 3

UNIT: 2295
PROJECT NUMBER & PHASE: 12000000791 CONTRACT NO.: 12-0C5701

DISREGARD PRINTS BEARING EARLIER REVISION DATES

REVISION DATES 08/30/10 09/16/11 12/22/11

SHEET 8 OF 26

FILE => 55-0280-f-a01rd01.dgn

USERNAME => s121614 DATE PLOTTED => 17-AUG-2012 TIME PLOTTED => 06:09

DIST	COUNTY	ROUTE	POST MILES TOTAL PROJECT	SHEET No	TOTAL SHEETS
12	Ora	91	0.9/5.4	742	885

V. Jessica Mosquera 3-15-2012
REGISTERED CIVIL ENGINEER DATE

8-13-12
PLANS APPROVAL DATE

REGISTERED PROFESSIONAL ENGINEER V. J. Mosquera No. C 051049 Exp. 09/30/13 CIVIL STATE OF CALIFORNIA

The State of California or its officers or agents shall not be responsible for the accuracy or completeness of scanned copies of this plan sheet.

OCTA
550 S MAIN STREET
ORANGE, CA. 92868

RBF CONSULTING
14725 ALTON PARKWAY
IRVINE, CA 92618

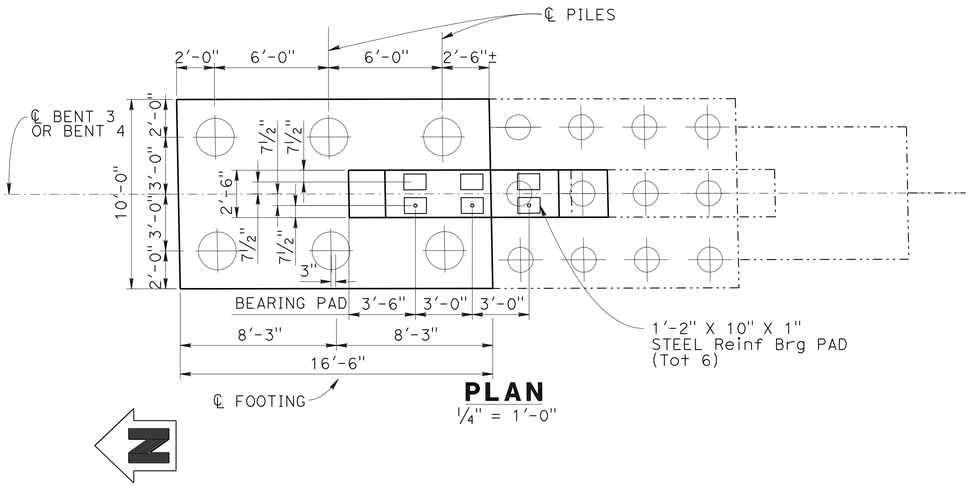

PLAN
¼" = 1'-0"

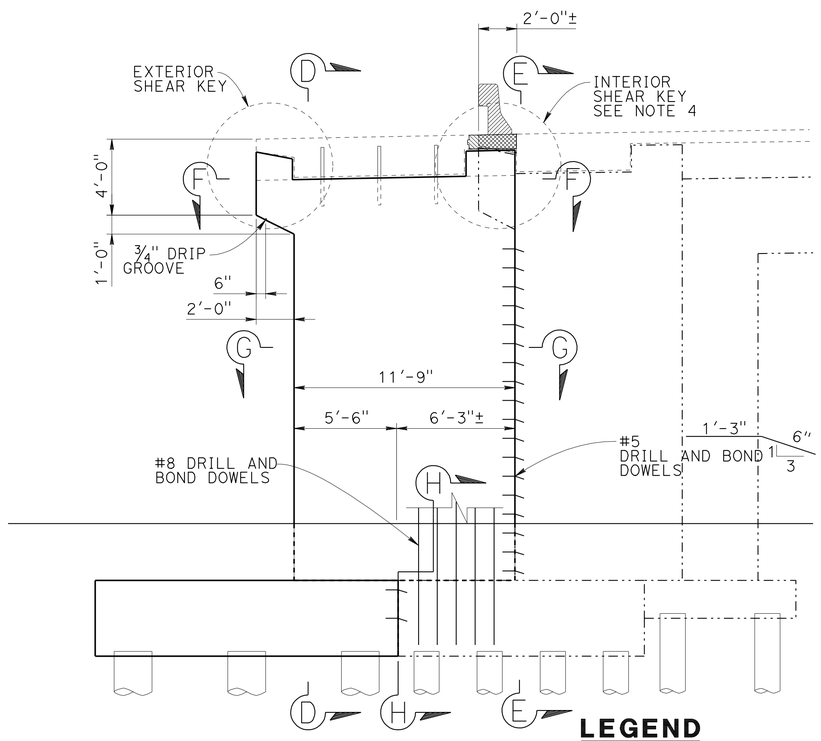

ELEVATION
¼" = 1'-0"

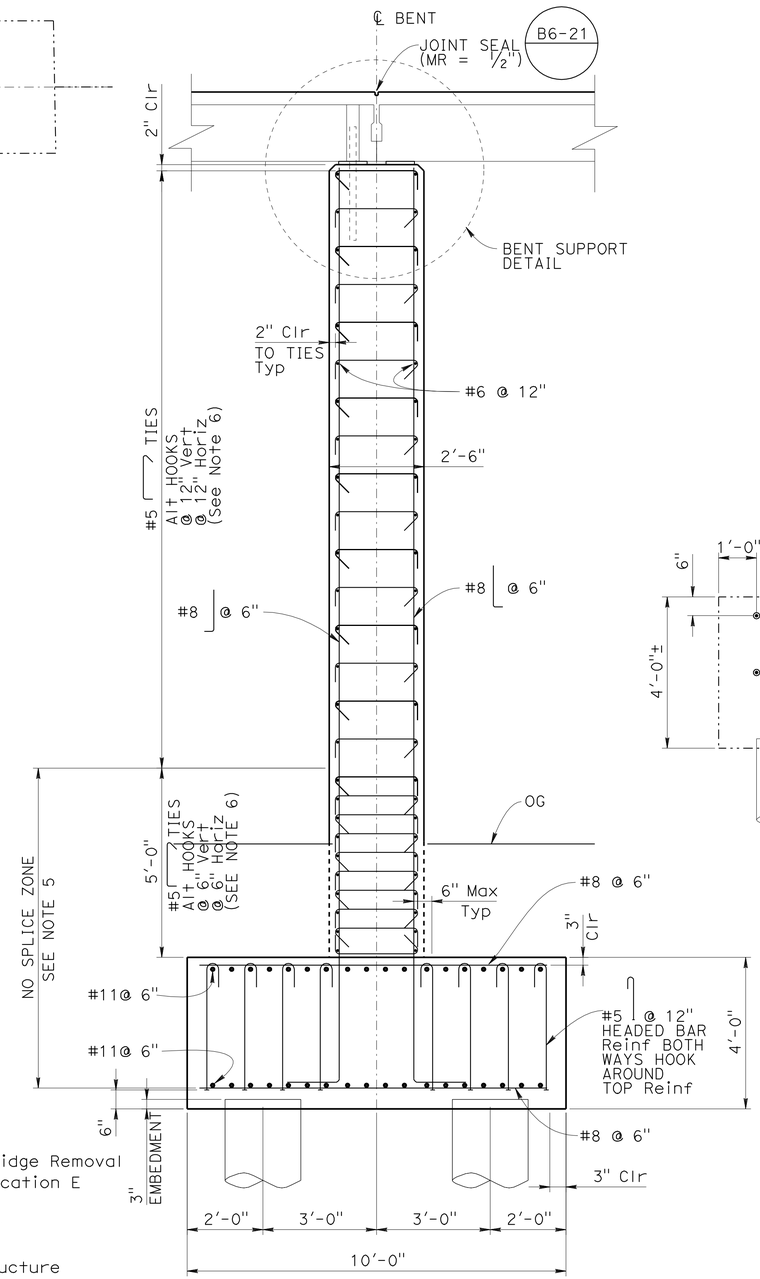

SECTION D-D
½" = 1'-0"

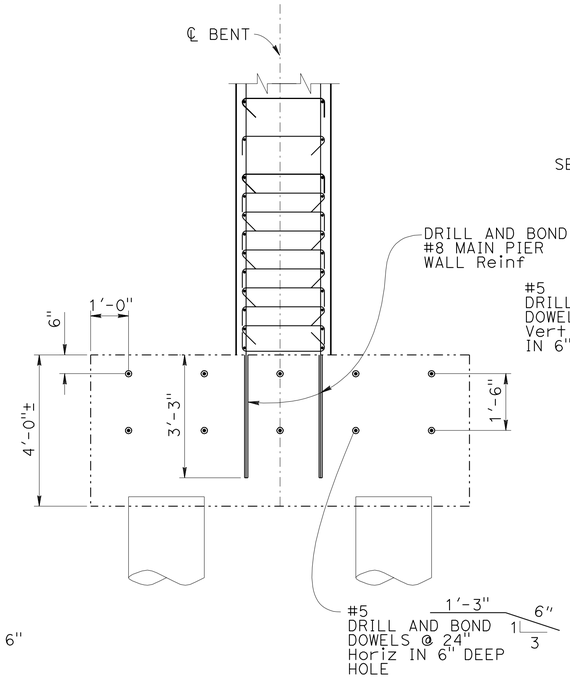

SECTION H-H
½" = 1'-0"

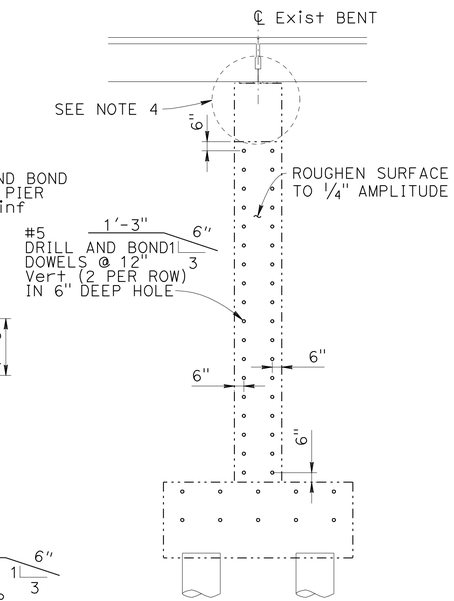

SECTION E-E
¼" = 1'-0"

LEGEND

- Limits of Bridge Removal (Portion), Location E
- Closure Pour
- Existing Structure
- New Construction

NOTES:

1. For Sections F-F & G-G, Exterior Shear Key Detail and Interior Shear Key Detail, see "BENT DETAILS" sheet.
2. For Bent Support Details, see "GIRDER LAYOUT" sheet.
3. For pile details, see "BENT DETAILS" sheet.
4. Exist transverse pier wall reinf to remain, see "BENT DETAILS" sheet.
5. No splices permitted in pier wall reinf within the "No Splice Zone". Outside the "No Splice Zone" pier wall reinf shall meet the "Ultimate Splice" requirements. These splices to be staggered.
6. Tie hook lengths shall be bar bend + 6¼" minimum.

NOTE:
THE CONTRACTOR SHALL VERIFY ALL CONTROLLING FIELD DIMENSIONS BEFORE ORDERING OR FABRICATING ANY MATERIAL.

Luqi Yang
DESIGN OVERSIGHT Luqi Yang
3-29-12
SIGN OFF DATE

	BY	CHECKED
DESIGN	V. J. Mosquera	T. Kirilov
DETAILS	J. Saldana	T. Kirilov
QUANTITIES	C. Stelea	R. Kelcher

PREPARED FOR THE STATE OF CALIFORNIA DEPARTMENT OF TRANSPORTATION

V. Jessica Mosquera
PROJECT ENGINEER

BRIDGE NO. 55-0280
POST MILES 1.2

BROOKHURST Ave UC (WIDEN)
BENT LAYOUT

DESIGN DETAIL SHEET (ENGLISH) (REV.7/16/10)

ORIGINAL SCALE IN INCHES FOR REDUCED PLANS 0 1 2 3

UNIT: 2295
PROJECT NUMBER & PHASE: 12000000791 CONTRACT NO.: 12-0C5701

DISREGARD PRINTS BEARING EARLIER REVISION DATES

REVISION DATES: 08/30/10 09/06/11 12/20/11 02/17/12

SHEET 9 OF 26

FILE => 55-0280-h-b01_lo01.dgn

USERNAME => s121614 DATE PLOTTED => 17-AUG-2012 TIME PLOTTED => 06:03

DIST	COUNTY	ROUTE	POST MILES TOTAL PROJECT	SHEET No	TOTAL SHEETS
12	Ora	91	0.9/5.4	743	885

V. Jessica Mosquera 3-15-2012
REGISTERED CIVIL ENGINEER DATE

8-13-12
PLANS APPROVAL DATE

REGISTERED PROFESSIONAL ENGINEER V. J. Mosquera No. C 051049 Exp. 09/30/13 CIVIL STATE OF CALIFORNIA

The State of California or its officers or agents shall not be responsible for the accuracy or completeness of scanned copies of this plan sheet.

OCTA
550 S MAIN STREET
ORANGE, CA. 92868

RBF CONSULTING
14725 ALTON PARKWAY
IRVINE, CA 92618

LEGEND

- Limits of Bridge Removal (Portion), Location E
- Closure Pour
- Existing Structure
- New Construction

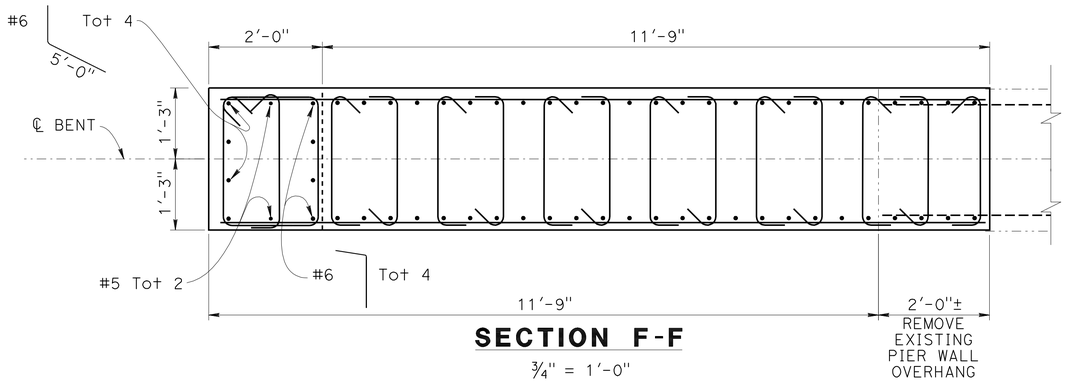

SECTION F-F

3/4" = 1'-0"

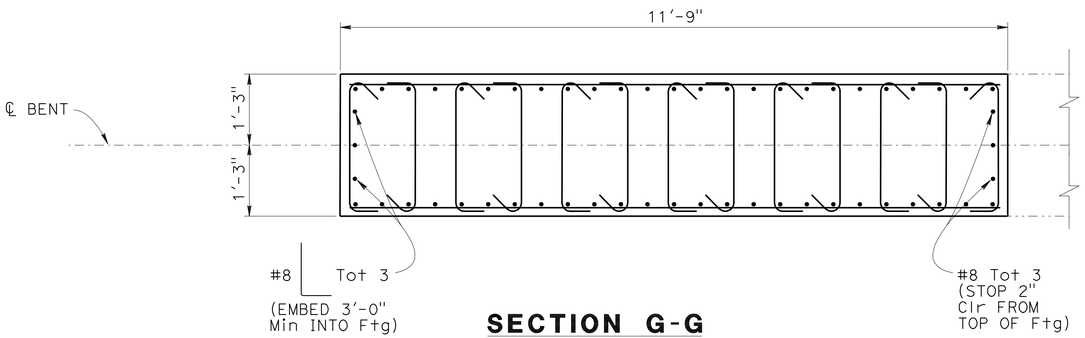

SECTION G-G

3/4" = 1'-0"

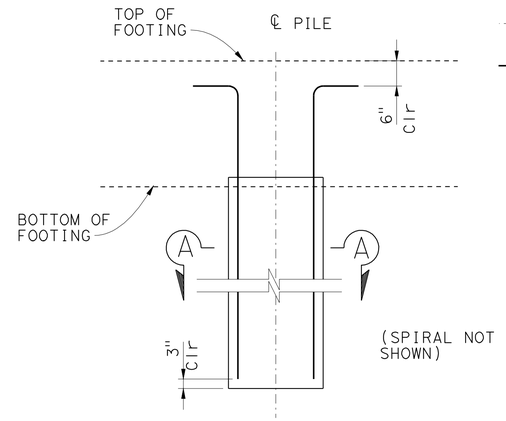

BENT PILE

24" Dia CIDH CONCRETE PILE
NO SCALE

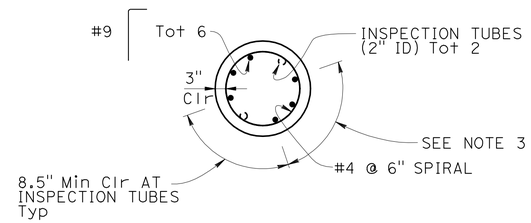

SECTION A-A

SEE NOTE 4
NO SCALE

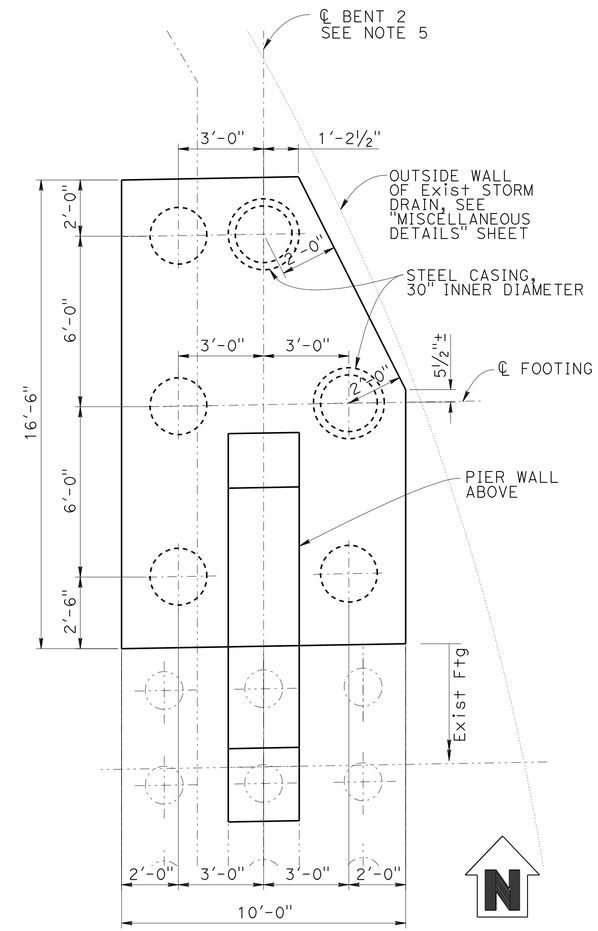

PLAN
BENT 2 FOOTING

3/8" = 1'-0"

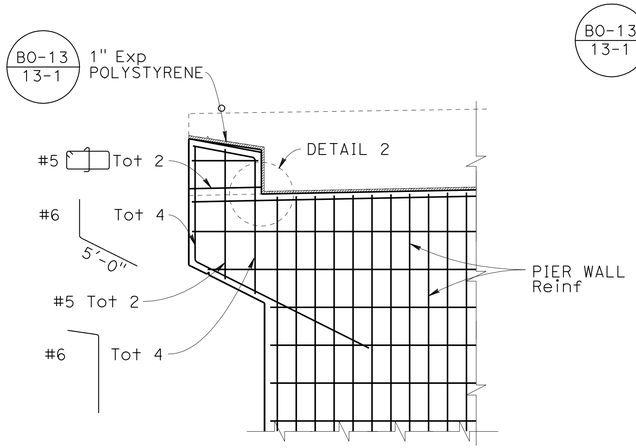

EXTERIOR SHEAR KEY

1/2" = 1'-0"

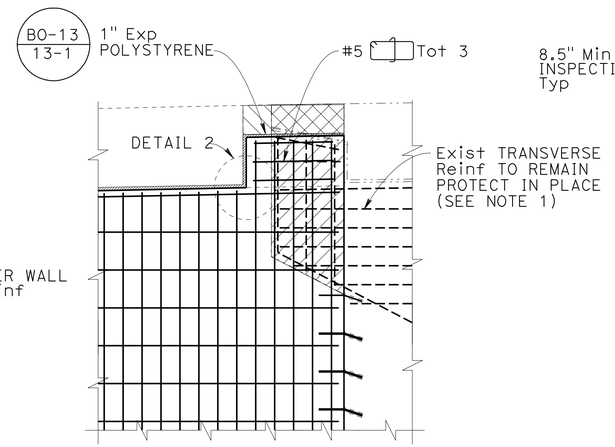

INTERIOR SHEAR KEY

1/2" = 1'-0"

NOTES:

1. Replace any damaged exist transverse deck reinf with an additional #5 $\frac{3}{1}$ 2'-0" drill & bond dowel into 6" hole.
2. For "DETAIL 2", see "ABUTMENT DETAILS No. 2" sheet.
3. Reinf on either side of inspection tubes shall be evenly spaced.
4. Dimensions and reinf shown supercede that shown in Standard Plan B2-3. For other reinf and notes see Standard Plan B2-3.
5. For footing reinf and pier wall reinf, see "SECTION D-D" in "BENT LAYOUT" sheet.

NOTE:
THE CONTRACTOR SHALL VERIFY ALL CONTROLLING FIELD DIMENSIONS BEFORE ORDERING OR FABRICATING ANY MATERIAL.

Luqi Yang
DESIGN OVERSIGHT Luqi Yang
3-29-12
SIGN OFF DATE

	BY	CHECKED
DESIGN	V. J. Mosquera	T. Kirilov
DETAILS	J. Saldana	T. Kirilov
QUANTITIES	C. Stelea	R. Kelcher

PREPARED FOR THE STATE OF CALIFORNIA DEPARTMENT OF TRANSPORTATION

V. Jessica Mosquera
PROJECT ENGINEER

BRIDGE NO. 55-0280
POST MILES 1.2

BROOKHURST Ave UC (WIDEN)
BENT DETAILS

DESIGN DETAIL SHEET (ENGLISH) (REV.7/16/10)

ORIGINAL SCALE IN INCHES FOR REDUCED PLANS 0 1 2 3

UNIT: 2295
PROJECT NUMBER & PHASE: 12000000791 CONTRACT NO.: 12-0C5701

DISREGARD PRINTS BEARING EARLIER REVISION DATES

REVISION DATES 08/30/10 09/16/11 12/20/11 02/17/12

SHEET 10 OF 26

FILE => 55-0280-h-b01dt01.dgn

USERNAME => s12614 DATE PLOTTED => 17-AUG-2012 TIME PLOTTED => 06:09

DIST	COUNTY	ROUTE	POST MILES TOTAL PROJECT	SHEET No	TOTAL SHEETS
12	Ora	91	0.9/5.4	744	885

V. Jessica Mosquera 3-15-2012
REGISTERED CIVIL ENGINEER DATE

8-13-12
PLANS APPROVAL DATE

REGISTERED PROFESSIONAL ENGINEER V. J. Mosquera No. C 051049 Exp. 09/30/13 CIVIL STATE OF CALIFORNIA

The State of California or its officers or agents shall not be responsible for the accuracy or completeness of scanned copies of this plan sheet.

OCTA
550 S MAIN STREET
ORANGE, CA. 92868

RBF CONSULTING
14725 ALTON PARKWAY
IRVINE, CA 92618

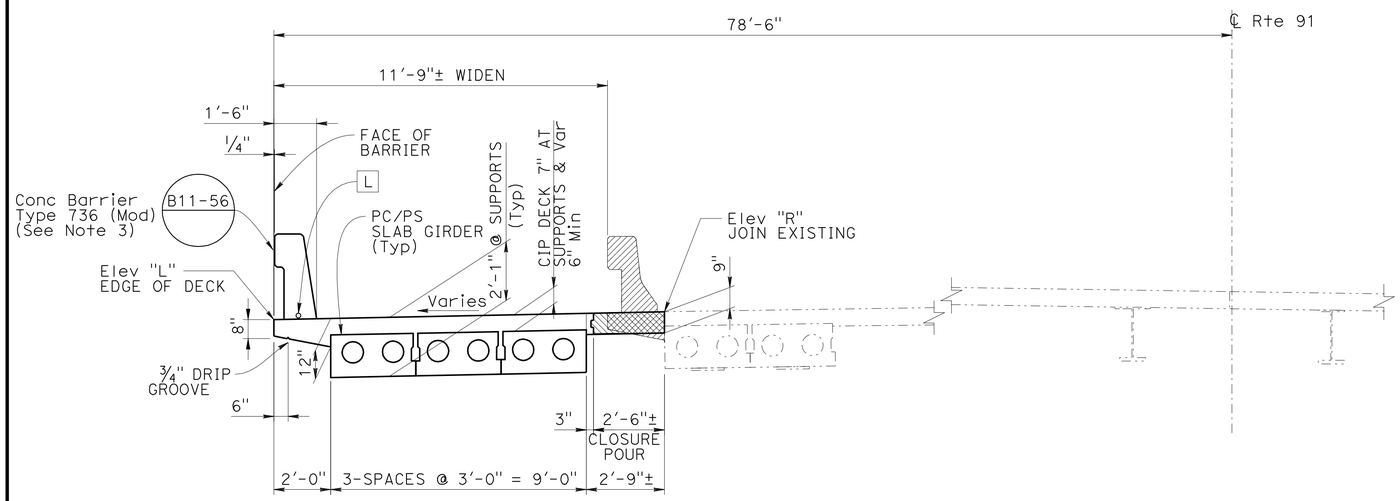

TYPICAL SECTION

3/8" = 1'-0"

DECK ELEVATIONS		
℄ SR-91 Sta	Elev "L"	Elev "R"
BB 118+80.19	129.75±	130.02±
119+00.00	129.90±	130.17±
119+20.00	130.01±	130.31±
119+40.00	130.05±	130.44±
119+60.00	130.05±	130.34±
119+80.00	130.00±	130.30±
120+00.00	129.89±	130.16±
EB 120+16.69	129.76±	130.04±

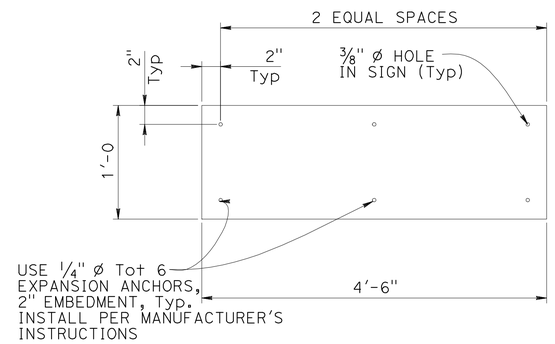

VERTICAL CLEARANCE SIGN

NO SCALE
SEE NOTE 4

NOTES:

1. Depth of superstructure is measured at abutments and bent supports.
2. Replace any damaged exist transverse deck reinf with an additional #5 3 2'-0" 1 drill & bond dowel into 6" hole.
3. For Bridge Mounted Sign details, see "SIGN PLANS" and "BRIDGE MOUNTED SIGN DETAILS" sheet.
4. For location of Vertical Clearance Sign see "SIGN PLANS" and "GENERAL PLAN"

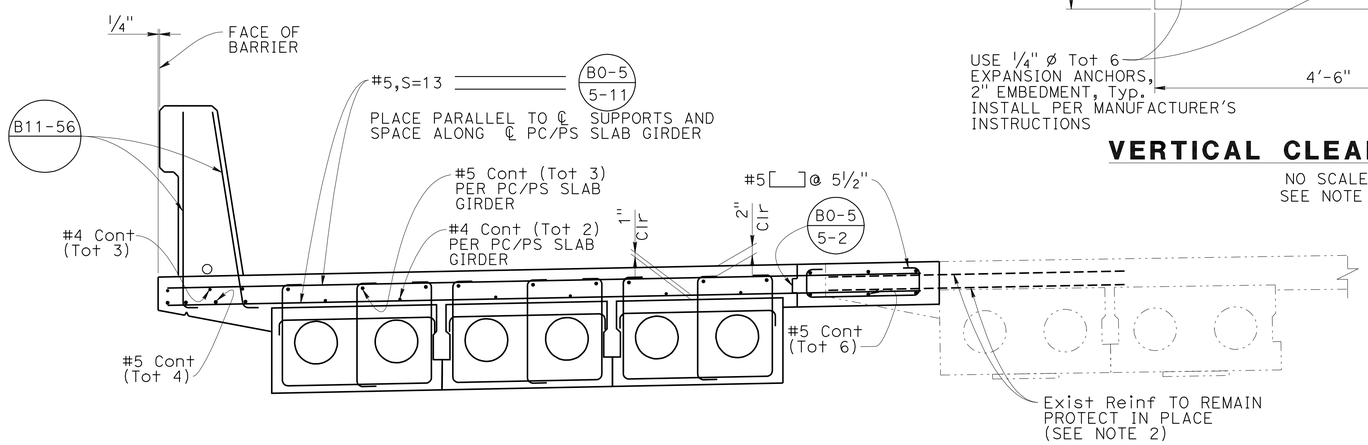

PART TYPICAL SECTION

3/4" = 1'-0"

SUPERSTRUCTURE CIP CONCRETE NOTES:

3. The concrete barrier is placed at least 21 days after the cast-in-place deck has been placed and attained the specified concrete strength.
4. The closure pour shall not be placed sooner than 14 days after placement of the barrier.

LEGEND:

- Limits of Bridge Removal (Portion), Location E
- Closure Pour
- Existing Structure
- New Construction
- [L] 1 1/2" Lighting and Sign Illumination Conduit, see "ELECTRICAL PLANS"

NOTE:
THE CONTRACTOR SHALL VERIFY ALL CONTROLLING FIELD DIMENSIONS BEFORE ORDERING OR FABRICATING ANY MATERIAL.

Luqi Yang
DESIGN OVERSIGHT Luqi Yang
3-29-12
SIGN OFF DATE

	BY	CHECKED
DESIGN	V. J. Mosquera	T. Kirilov
DETAILS	J. Saldana	T. Kirilov
QUANTITIES	C. Stelea	R. Kelcher

PREPARED FOR THE STATE OF CALIFORNIA DEPARTMENT OF TRANSPORTATION

V. Jessica Mosquera
PROJECT ENGINEER

BRIDGE NO. 55-0280
POST MILES 1.2

BROOKHURST Ave UC (WIDEN)
TYPICAL SECTION

DESIGN DETAIL SHEET (ENGLISH) (REV.7/16/10)

ORIGINAL SCALE IN INCHES FOR REDUCED PLANS 0 1 2 3

UNIT: 2295
PROJECT NUMBER & PHASE: 12000000791 CONTRACT NO.: 12-0C5701

DISREGARD PRINTS BEARING EARLIER REVISION DATES

REVISION DATES: 08/30/10 09/16/11 12/22/11 03/15/12

SHEET 11 OF 26

FILE => 55-0280-k-ts01.dgn

USERNAME => s117606 DATE PLOTTED => 17-AUG-2012 TIME PLOTTED => 09:02

DIST	COUNTY	ROUTE	POST MILES TOTAL PROJECT	SHEET No	TOTAL SHEETS
12	Ora	91	0.9/5.4	745	885

V. Jessica Mosquera 3-15-2012
REGISTERED CIVIL ENGINEER DATE

8-13-12
PLANS APPROVAL DATE

REGISTERED PROFESSIONAL ENGINEER V. J. Mosquera No. C 051049 Exp. 09/30/13 CIVIL STATE OF CALIFORNIA

The State of California or its officers or agents shall not be responsible for the accuracy or completeness of scanned copies of this plan sheet.

OCTA
550 S MAIN STREET
ORANGE, CA. 92868

RBF CONSULTING
14725 ALTON PARKWAY
IRVINE, CA 92618

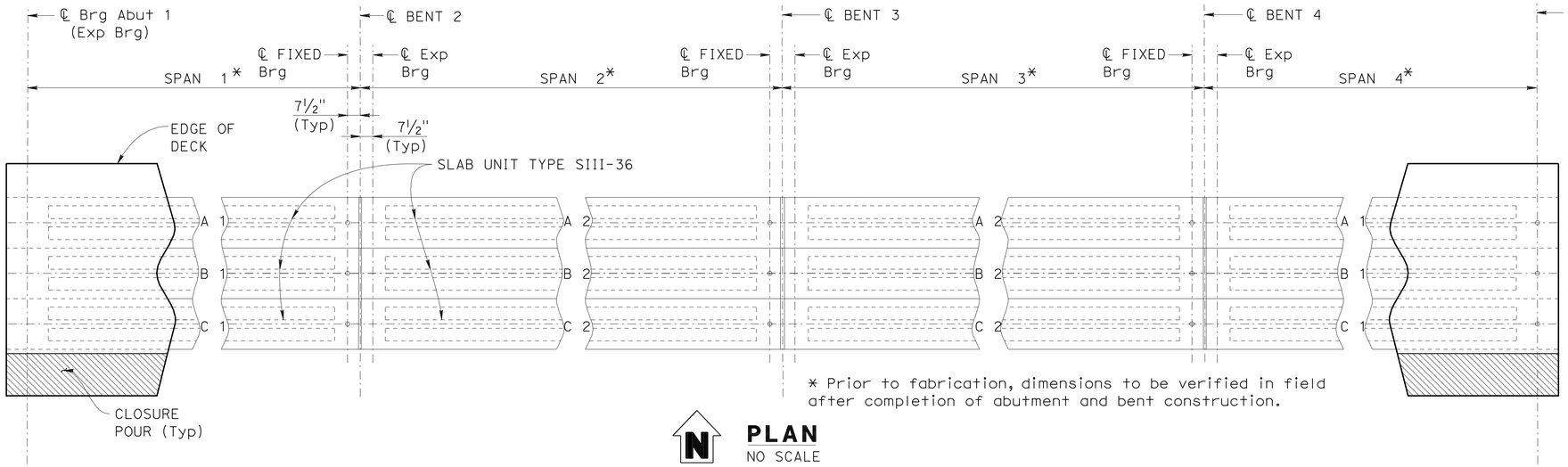

* Prior to fabrication, dimensions to be verified in field after completion of abutment and bent construction.

PLAN
NO SCALE

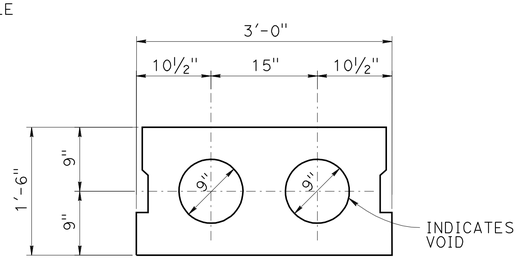

TYPICAL SECTION SIII-36
NO SCALE

GENERAL NOTES:

1. The Jacking Force (P) is the jacking force required at the point of control along the span. The jacking force does not include any fabrication specific losses.
2. The maximum tensile stress in the prestressing steel upon release shall not exceed 75% of the specified minimum ultimate tensile strength of the prestressing steel.
3. The maximum temporary tensile stress (Jacking stress) in the prestressing steel shall not exceed 80% of the specified minimum ultimate tensile strength of the prestressing steel.
4. Concrete strength:
   fci' = 5.2 ksi at time of stressing
   fc' = 6.1 ksi at 28 days
5. Keyways to be filled with grout.
6. See other sheets for railing requirements.
7. Design based on 270 ksi low relaxation 0.6" diameter strands.

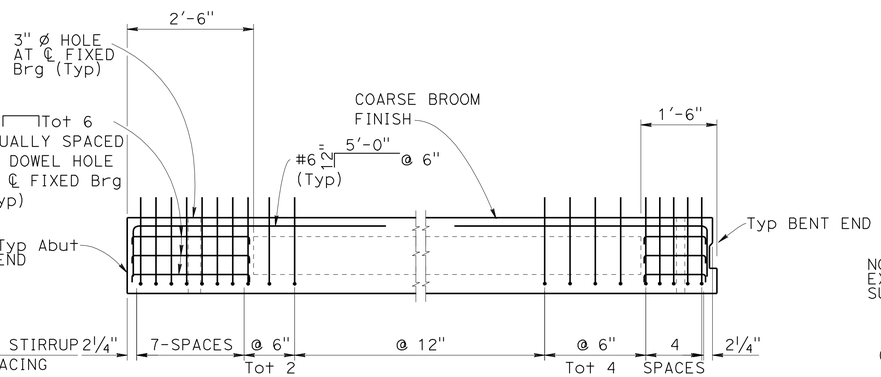

LONGITUDINAL SECTION
1½" = 1'-0"

Girder Location	Jacking Force (P) in Kips	No.** of Bottom Strands	No. of Top Strands	Deflection	Component
				Deck	Railing
A 1 & C 1	440	8	2	0	0
B 1	352	6	2	0	0
A 2 & C 2	835	17	2	⅜"	0
B 2	660	12	3	¼"	0

** Bottom strands shall be placed starting with the bottom row of strands.

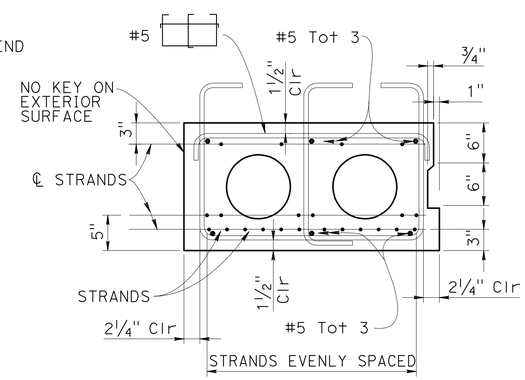

TYPICAL REINFORCEMENT
NO SCALE

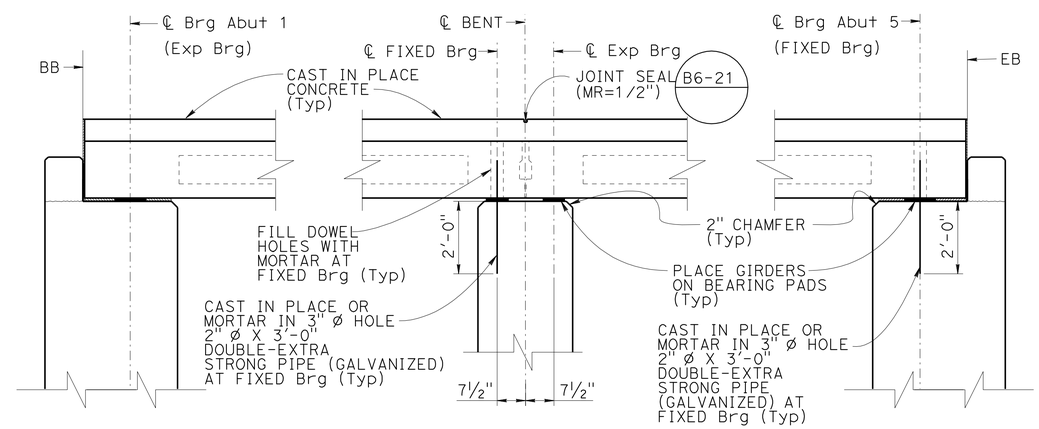

AT ABUTMENT 1 AT BENT SUPPORTS AT ABUTMENT 5
SUPPORT DETAILS
No Scale

NOTE:
THE CONTRACTOR SHALL VERIFY ALL CONTROLLING FIELD DIMENSIONS BEFORE ORDERING OR FABRICATING ANY MATERIAL.

Luqi Yang
DESIGN OVERSIGHT Luqi Yang
3-29-12
SIGN OFF DATE

	BY	CHECKED
DESIGN	V. J. Mosquera	T. Kirilov
DETAILS	J. Saldana	T. Kirilov
QUANTITIES	C. Stelea	R. Kelcher

PREPARED FOR THE STATE OF CALIFORNIA DEPARTMENT OF TRANSPORTATION

V. Jessica Mosquera
PROJECT ENGINEER

BRIDGE NO. 55-0280
POST MILES 1.2

BROOKHURST Ave UC (WIDEN)
GIRDER LAYOUT

DESIGN DETAIL SHEET (ENGLISH) (REV.7/16/10)

ORIGINAL SCALE IN INCHES FOR REDUCED PLANS 0 1 2 3

UNIT: 2295
PROJECT NUMBER & PHASE: 12000000791 CONTRACT NO.: 12-0C5701

DISREGARD PRINTS BEARING EARLIER REVISION DATES 08/30/10 09/16/11 12/22/11 02/17/12

SHEET 12 OF 26

FILE => 55-0280-1-g_1o01.dgn

USERNAME => s12614 DATE PLOTTED => 17-AUG-2012 TIME PLOTTED => 06:10

DIST	COUNTY	ROUTE	POST MILES TOTAL PROJECT	SHEET No.	TOTAL SHEETS
12	Ora	91	0.9/5.4	746	885

V. Jessica Mosquera 3-15-2012
REGISTERED CIVIL ENGINEER DATE

8-13-12
PLANS APPROVAL DATE

REGISTERED PROFESSIONAL ENGINEER V. J. Mosquera No. C 051049 Exp. 09/30/13 CIVIL STATE OF CALIFORNIA

The State of California or its officers or agents shall not be responsible for the accuracy or completeness of scanned copies of this plan sheet.

OCTA
550 S MAIN STREET
ORANGE, CA. 92868

RBF CONSULTING
14725 ALTON PARKWAY
IRVINE, CA 92677

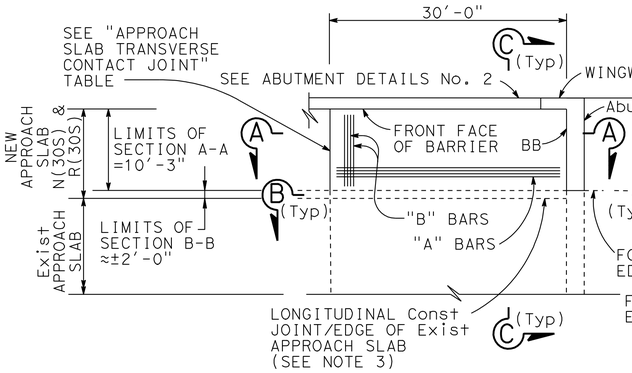

ABUT 1 PLAN

1" = 10'

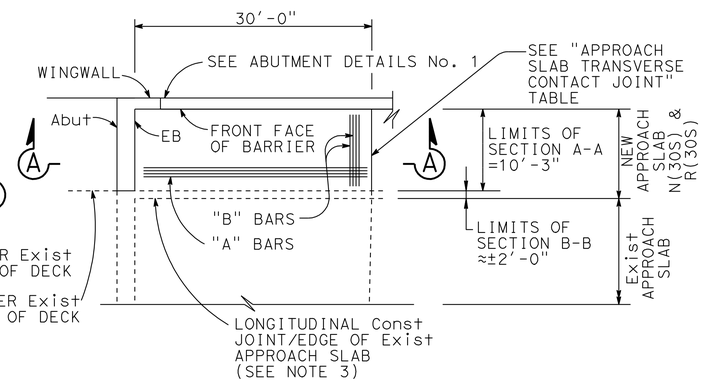

ABUT 5 PLAN

1" = 10'

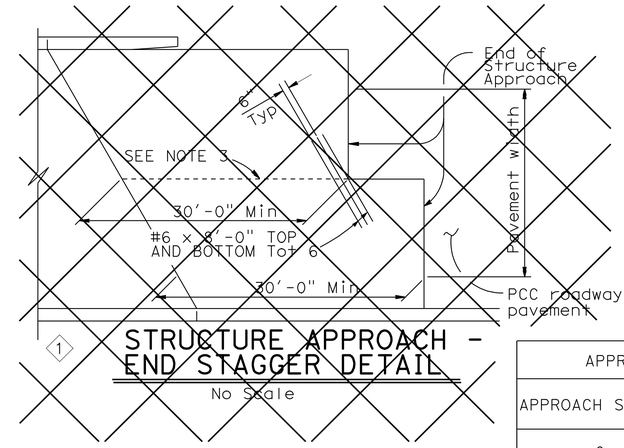

STRUCTURE APPROACH - END STAGGER DETAIL

No Scale

APPROACH SLAB TRANSVERSE CONTACT JOINT		
APPROACH SKEW	WITH AC ROADWAY PAVEMENT	WITH PCC ROADWAY PAVEMENT
< 20°	PARALLEL TO FACE OF PN	PARALLEL TO FACE OF PN
20° - 45°	PARALLEL TO FACE OF PN USE "DETAIL A"	STAGGER LINES 24" TO 36" APART
>45°	PARALLEL TO FACE OF PN USE "DETAIL A"	STAGGER AT EACH LANE LINE

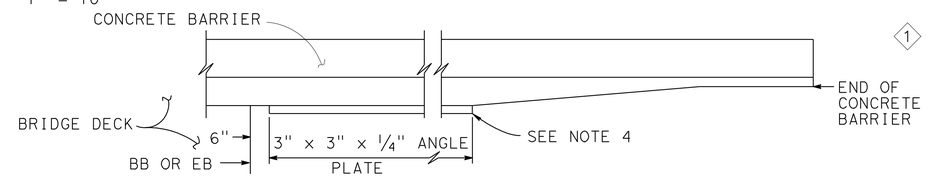

EDGE ANGLE DETAIL

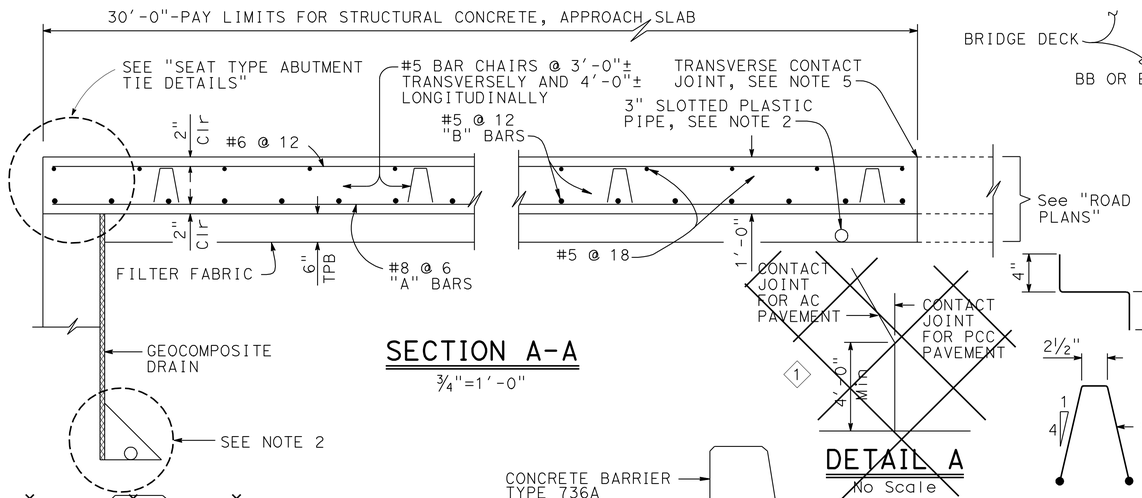

SECTION A-A

¾"=1'-0"

DETAIL A

No Scale

BAR CHAIR DETAIL

1½"=1'-0"

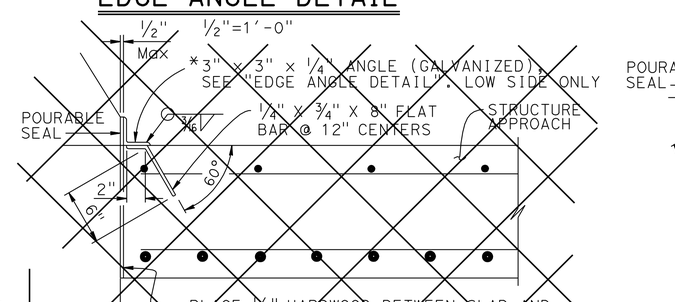

DETAIL B

1½" = 1'-0"

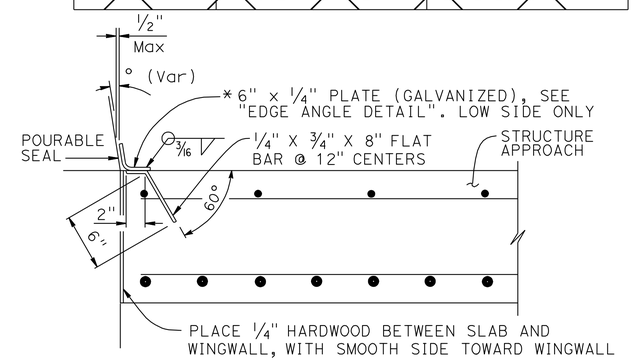

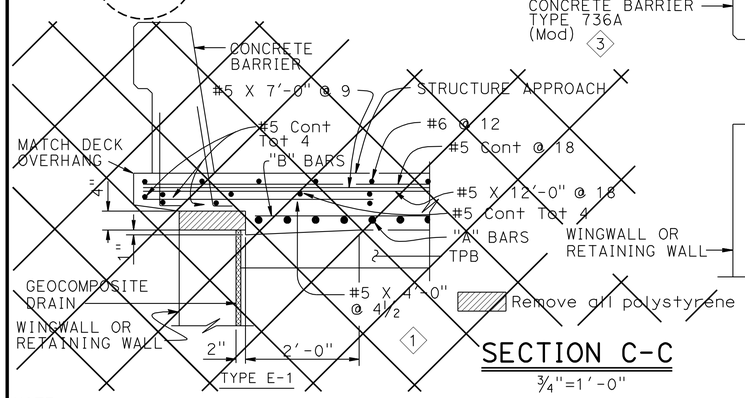

SECTION C-C

¾"=1'-0"

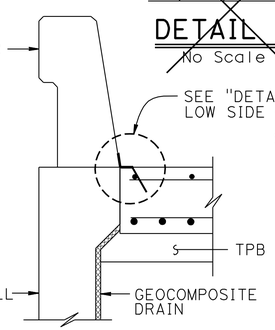

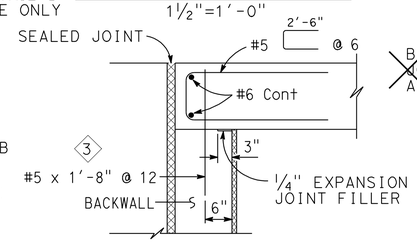

MR ≤ 2"

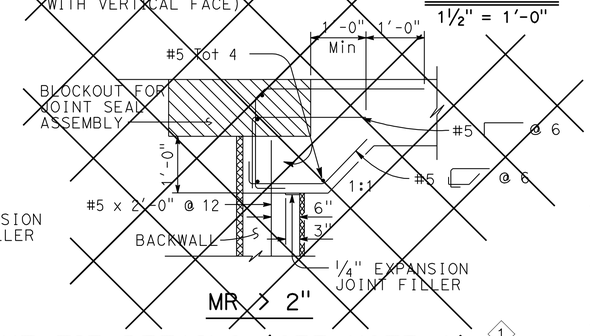

MR > 2"

SEAT TYPE ABUTMENT TIE DETAILS (SEE NOTE 1)

¾"=1'-0"

NOTES:

1. For details not shown, see Structure Plans. For MR ≤ 2", adjust bar reinforcement to clear a sawcut for sealed joint, when required
2. For drainage details, see "STRUCTURE APPROACH DRAINAGE DETAILS" sheet
3. Longitudinal construction joints, when permitted by the Engineer, shall be located on lane lines
4. End angle or plate at beginning of barrier transition, end of wingwall or end of structure approach as applicable
3. 5. For transverse contact joint with new PCC paving, refer to Revised Standard Plan P10
6. At the Contractor's option, approach slab transverse reinforcement may be placed parallel to paving notch. Spacing of transverse reinforcement is measured along ℄ roadway
2. 7. For Section B-B, see "STRUCTURE APPROACH TYPE R(30S)" sheet

NOTE:
THE CONTRACTOR SHALL VERIFY ALL CONTROLLING FIELD DIMENSIONS BEFORE ORDERING OR FABRICATING ANY MATERIAL.

REVISED STANDARD DRAWING

FILE NO. xs3-120

APPROVAL DATE July 2011

1 Does Not Apply
2 Added Detail or Note
3 Modified Detail or Note

STATE OF CALIFORNIA
DEPARTMENT OF TRANSPORTATION

DIVISION OF ENGINEERING SERVICES

BRIDGE NO. 55-0280
POST MILE 1.2

BROOKHURST Ave UC (WIDEN)

STRUCTURE APPROACH TYPE N(30S)

DS OSD 2147A (ENGLISH STANDARD DRAWING "XS" BORDER REV. (02-02-11)

ORIGINAL SCALE IN INCHES FOR REDUCED PLANS 0 1 2 3

UNIT: 2295
PROJECT NUMBER & PHASE: 12000000791
CONTRACT NO.: 12-0C5701

DISREGARD PRINTS BEARING EARLIER REVISION DATES

REVISION DATES 08/30/10 09/30/11 12/22/11 3/15/12

SHEET 13 OF 26

FILE => 55-0280-s-sa30n.dgn

USERNAME => s123631 DATE PLOTTED => 17-AUG-2012 TIME PLOTTED => 16:33

DIST	COUNTY	ROUTE	POST MILES TOTAL PROJECT	SHEET No.	TOTAL SHEETS
12	Ora	91	0.9/5.4	747	885

V. Jessica Mosquera 3-15-2012
REGISTERED CIVIL ENGINEER DATE

8-13-12
PLANS APPROVAL DATE

REGISTERED PROFESSIONAL ENGINEER V. J. Mosquera No. C 051049 Exp. 09/30/13 CIVIL STATE OF CALIFORNIA

The State of California or its officers or agents shall not be responsible for the accuracy or completeness of scanned copies of this plan sheet.

OCTA
550 S MAIN STREET
ORANGE, CA. 92868

RBF CONSULTING
14725 ALTON PARKWAY
IRVINE, CA 92677

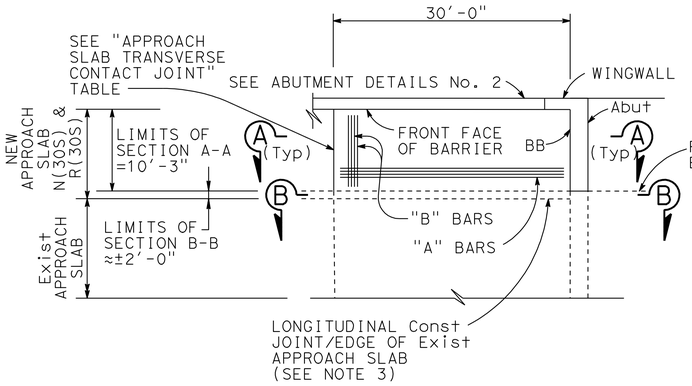

ABUT 1 PLAN

1" = 10' (3)

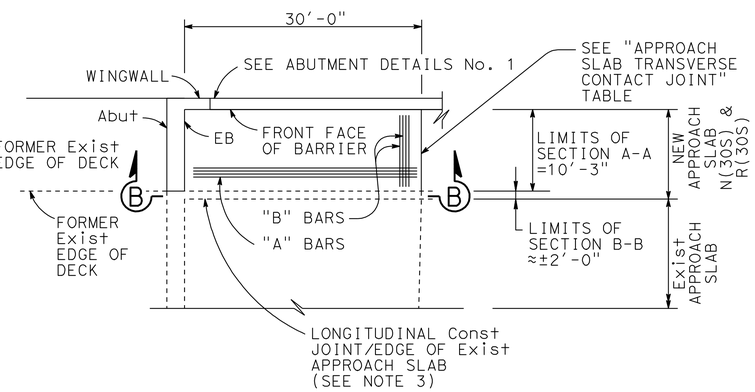

ABUT 5 PLAN

1" = 10' (3)

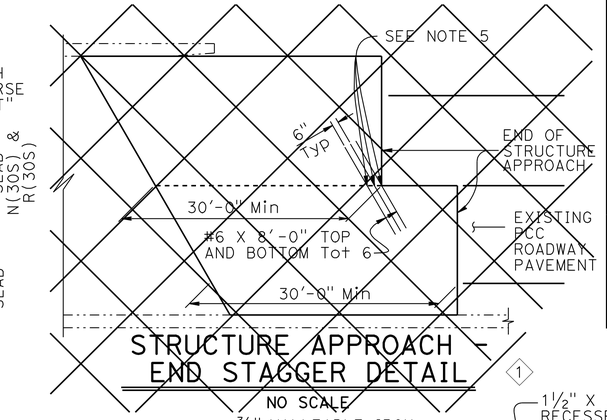

STRUCTURE APPROACH - END STAGGER DETAIL

NO SCALE (1)

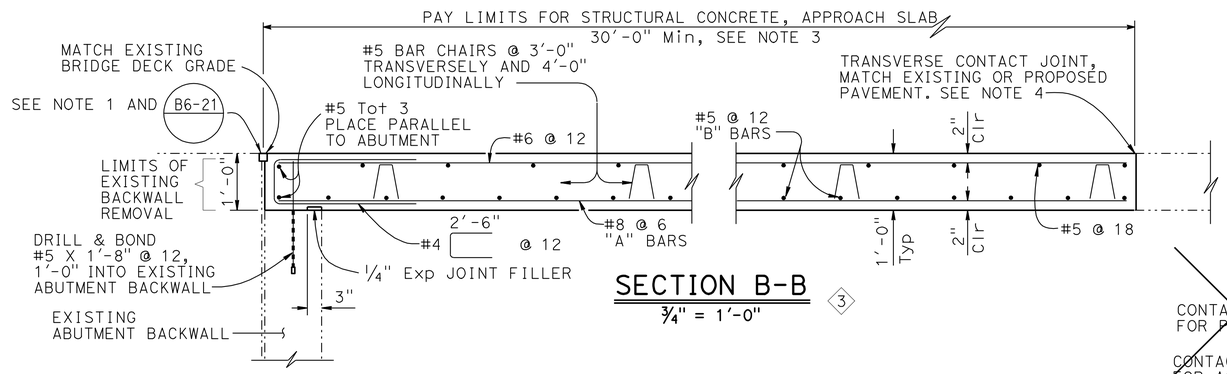

SECTION B-B

3/4" = 1'-0" (3)

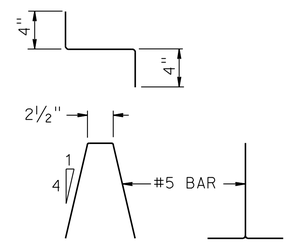

BAR CHAIR DETAIL

1 1/2" = 1'-0"

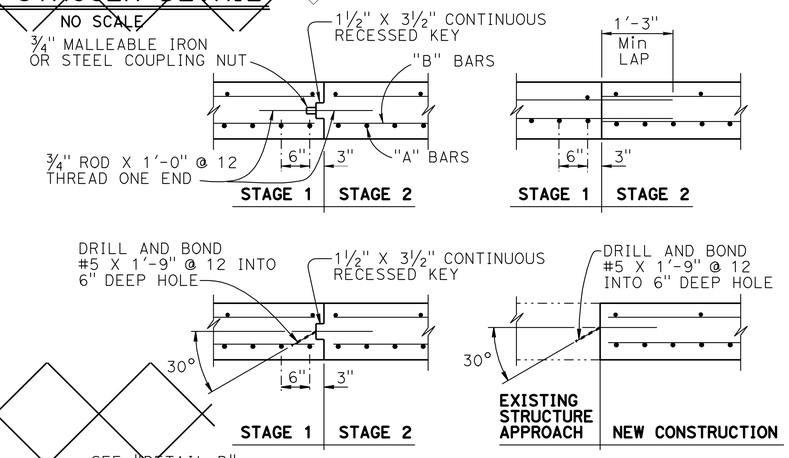

LONGITUDINAL CONSTRUCTION JOINT ALTERNATIVES

3/4" = 1'-0"

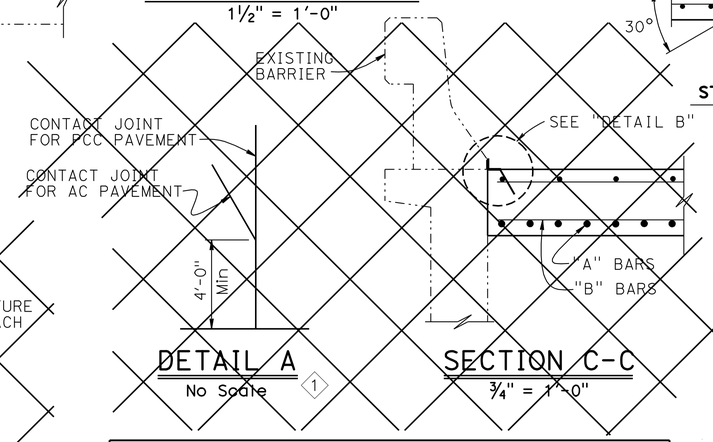

DETAIL A

No Scale (1)

SECTION C-C

3/4" = 1'-0" (1)

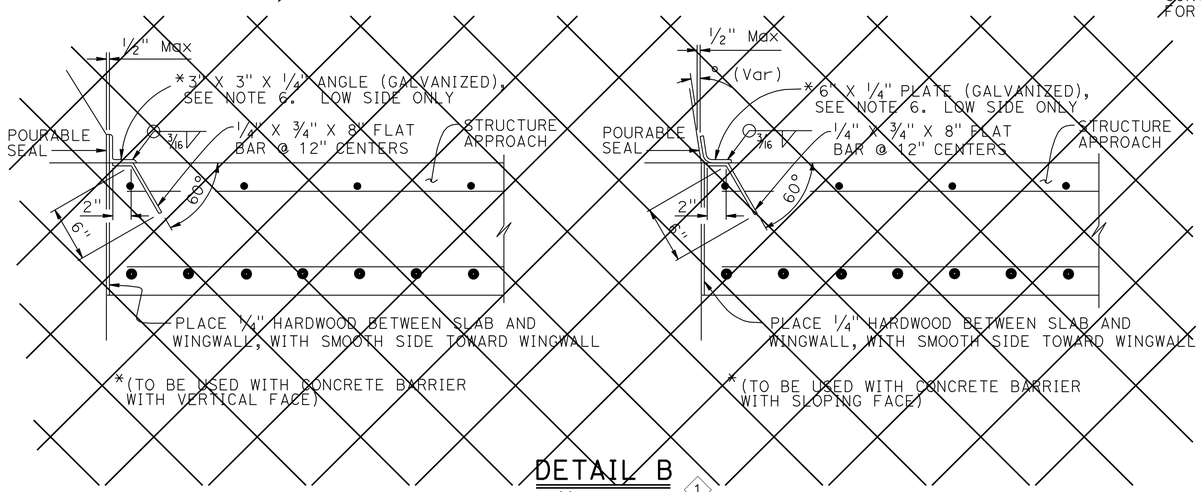

DETAIL B

1 1/2" = 1'-0" (1)

APPROACH SLAB TRANSVERSE CONTACT JOINT		
APPROACH SKEW	WITH AC ROADWAY PAVEMENT	WITH PCC ROADWAY PAVEMENT
< 10°	PARALLEL TO FACE OF PN	PARALLEL TO FACE OF PN
10° - 45°	PARALLEL TO FACE OF PN USE "DETAIL A"	STAGGER LINES 24' TO 36' APART
> 45°	PARALLEL TO FACE OF PN USE "DETAIL A"	STAGGER AT EACH LANE LINE

NOTES:

1. Sealed joint, for MR see Structure Plans. Adjust bar reinforcement to clear a sawcut for sealed joint, when required
2. Longitudinal construction joints, when permitted by Engineer, shall be located on lane lines
3. Transverse contact joint shall be a minimum of 5'-0" from an existing or constructed weakened plane joint
4. (3) For transverse contact joint with new PCC paving, refer to Revised Standard Plan P10
5. (1) ~~Couplers are required for stage construction~~
6. (1) ~~End angle or plate at beginning of barrier transition, end of wingwall or end of structure approach as applicable~~
5. (2) For Section A-A, see "STRUCTURE APPROACH TYPE N(30S)" sheet

NOTE:
THE CONTRACTOR SHALL VERIFY ALL CONTROLLING FIELD DIMENSIONS BEFORE ORDERING OR FABRICATING ANY MATERIAL.

REVISED STANDARD DRAWING

FILE NO. xs3-130

APPROVAL DATE July 2011

(1) Does Not Apply
(2) Added Detail or Note
(3) Modified Detail or Note

STATE OF CALIFORNIA
DEPARTMENT OF TRANSPORTATION

DIVISION OF ENGINEERING SERVICES

BRIDGE NO. 55-0280
POST MILE 1.2

BROOKHURST Ave UC (WIDEN)
STRUCTURE APPROACH TYPE R(30S)

DS OSD 2147A (ENGLISH STANDARD DRAWING "XS" BORDER REV. (02-02-11)

ORIGINAL SCALE IN INCHES FOR REDUCED PLANS 0 1 2 3

UNIT: 2295
PROJECT NUMBER & PHASE: 12000000791
CONTRACT NO.: 12-0C5701

DISREGARD PRINTS BEARING EARLIER REVISION DATES

REVISION DATES: 08/30/10 09/30/11 12/22/11 3/15/12

SHEET 14 OF 26

FILE => 55-0280-s-sa30r.dgn

USERNAME => s123631 DATE PLOTTED => 17-AUG-2012 TIME PLOTTED => 17:52

DIST	COUNTY	ROUTE	POST MILES TOTAL PROJECT	SHEET No.	TOTAL SHEETS
12	Ora	91	0.9/5.4	748	885

V. Jessica Mosquera 3-15-2012
REGISTERED CIVIL ENGINEER DATE

8-13-12
PLANS APPROVAL DATE

REGISTERED PROFESSIONAL ENGINEER V. J. Mosquera No. C 051049 Exp. 09/30/13 CIVIL STATE OF CALIFORNIA

The State of California or its officers or agents shall not be responsible for the accuracy or completeness of scanned copies of this plan sheet.

OCTA
550 S MAIN STREET
ORANGE, CA. 92868

RBF CONSULTING
14725 ALTON PARKWAY
IRVINE, CA 92677

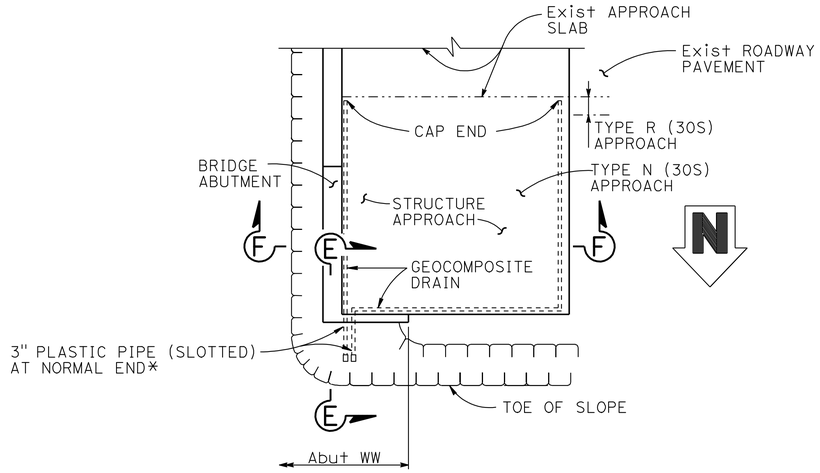

TYPICAL PLAN

1" = 10'

3 Abut 1 SHOWN, Abut 5 SIMILAR

* FOR PIPE LAYOUT AT STAGGERED END, SEE "DETAIL B"

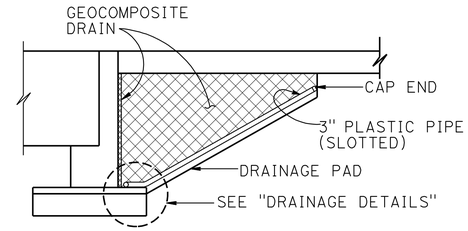

CANTILEVER WINGWALL

SECTION F-F

1/4" = 1'-0"

3

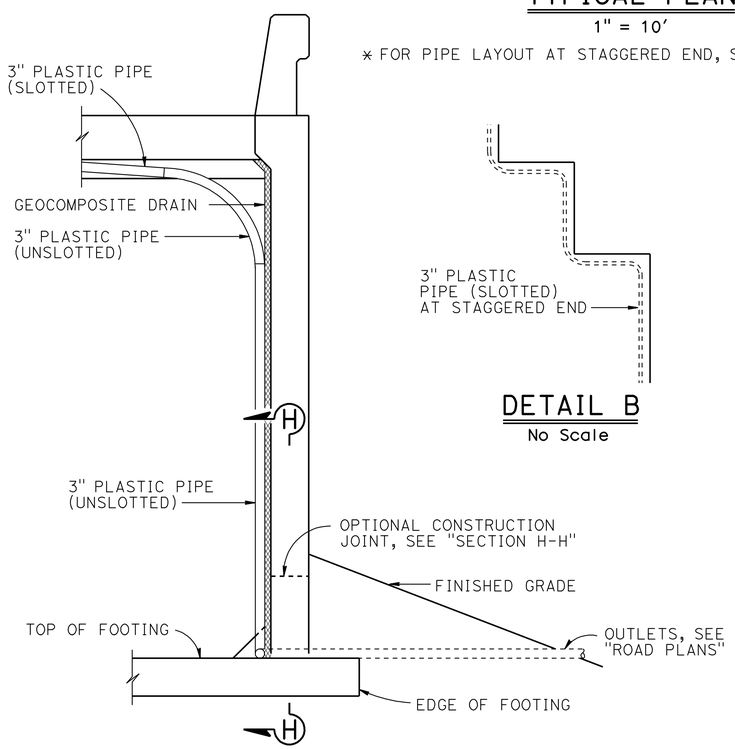

SECTION E-E

1/2" = 1'-0"

3

NOTE: Bends and junctions in 3" plastic pipe are 30" radius Min

DETAIL B

No Scale

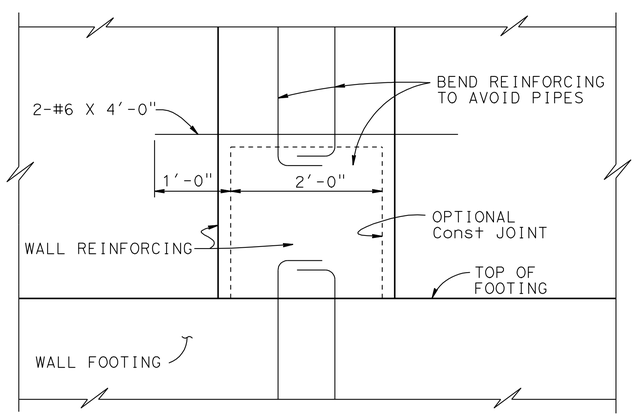

SECTION H-H

1" = 1'-0"

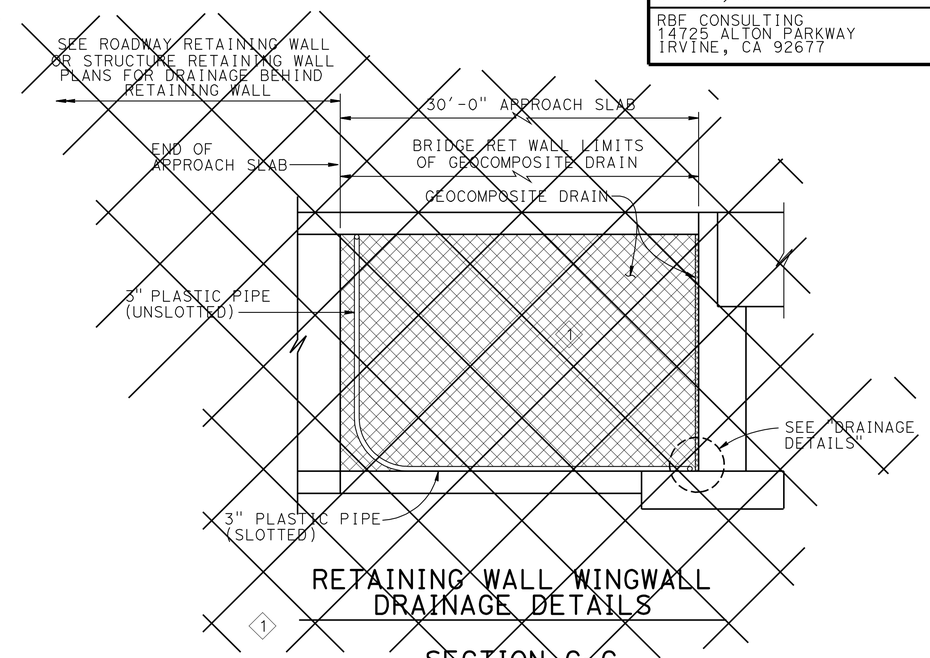

SECTION G-G

1/4" = 1'-0"

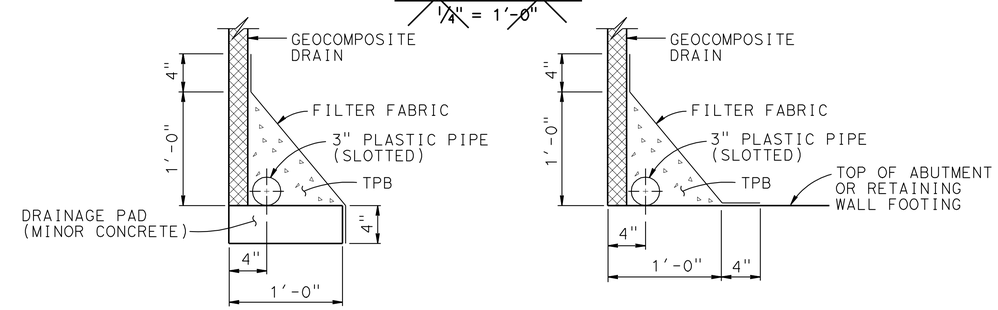

WITHOUT FOOTING

WITH FOOTING

DRAINAGE DETAILS

1 1/2" = 1'-0"

NOTE:
THE CONTRACTOR SHALL VERIFY ALL CONTROLLING FIELD DIMENSIONS BEFORE ORDERING OR FABRICATING ANY MATERIAL.

REVISED STANDARD DRAWING

FILE NO. xs3-110

APPROVAL DATE July 2011

1 Does Not Apply
2 Added Detail or Note
3 Modified Detail or Note

STATE OF CALIFORNIA
DEPARTMENT OF TRANSPORTATION

DIVISION OF ENGINEERING SERVICES

BRIDGE NO. 55-0280
POST MILE 1.2

BROOKHURST Ave UC (WIDEN)
STRUCTURE APPROACH DRAINAGE DETAILS

DS OSD 2147A (ENGLISH STANDARD DRAWING "XS" BORDER REV. (02-02-11)

ORIGINAL SCALE IN INCHES FOR REDUCED PLANS 0 1 2 3

UNIT: 2295
PROJECT NUMBER & PHASE: 12000000791
CONTRACT NO.: 12-0C5701

DISREGARD PRINTS BEARING EARLIER REVISION DATES

REVISION DATES: 08/30/10 09/16/11 12/22/11 3/15/12

SHEET 15 OF 26

FILE => 55-0280-s-sadd.dgn

USERNAME => s121614 DATE PLOTTED => 17-AUG-2012 TIME PLOTTED => 06:10

DIST	COUNTY	ROUTE	POST MILES TOTAL PROJECT	SHEET No.	TOTAL SHEETS
12	Ora	91	0.9/5.4	749	885

V. Jessica Mosquera 3-15-2012
REGISTERED CIVIL ENGINEER DATE

8-13-12
PLANS APPROVAL DATE

REGISTERED PROFESSIONAL ENGINEER V. J. Mosquera No. C 051049 Exp. 09/30/13 CIVIL STATE OF CALIFORNIA

The State of California or its officers or agents shall not be responsible for the accuracy or completeness of scanned copies of this plan sheet.

OCTA
550 S MAIN STREET
ORANGE, CA. 92868

RBF CONSULTING
14725 ALTON PARKWAY
IRVINE, CA 92677

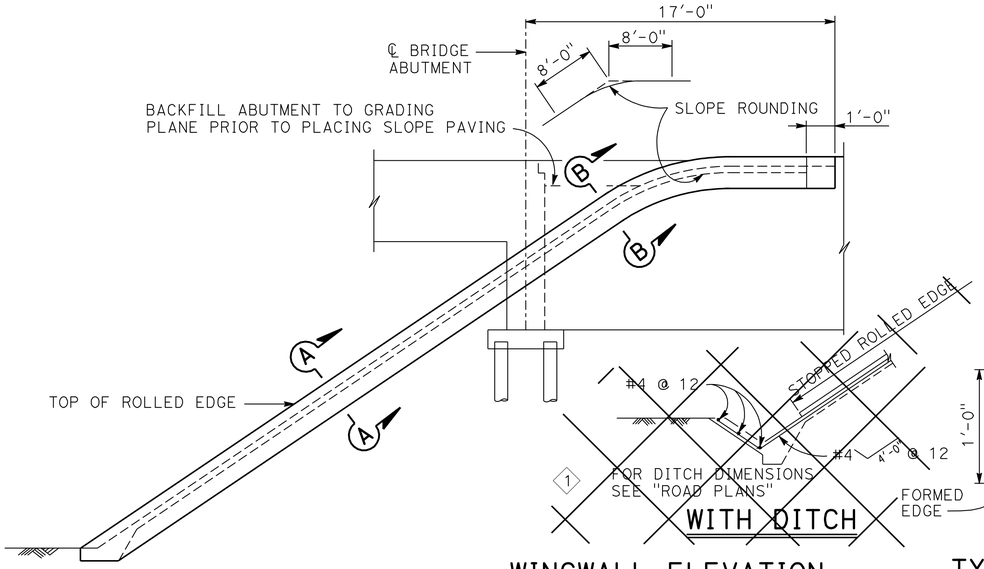

WINGWALL ELEVATION 3

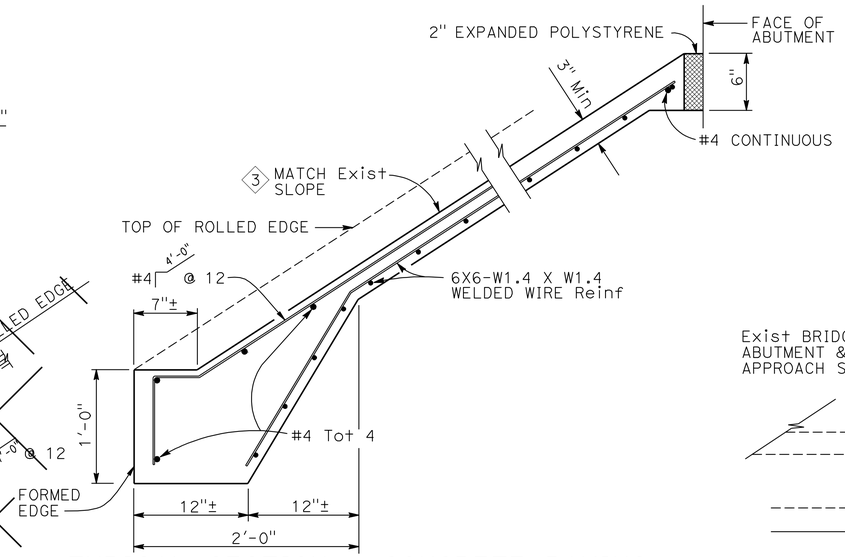

TYPICAL SECTION - CONCRETE PAVING

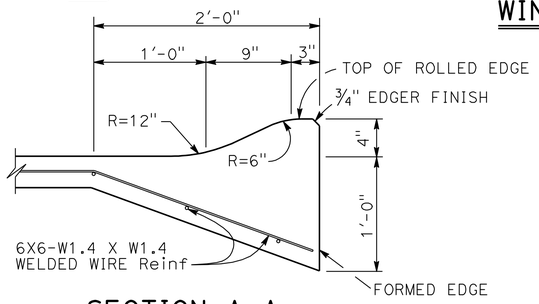

SECTION A-A

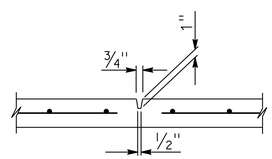

PREFORMED GROOVE

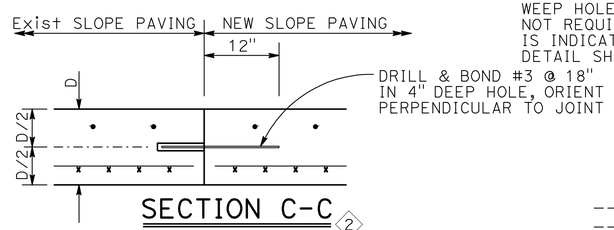

SECTION C-C 2

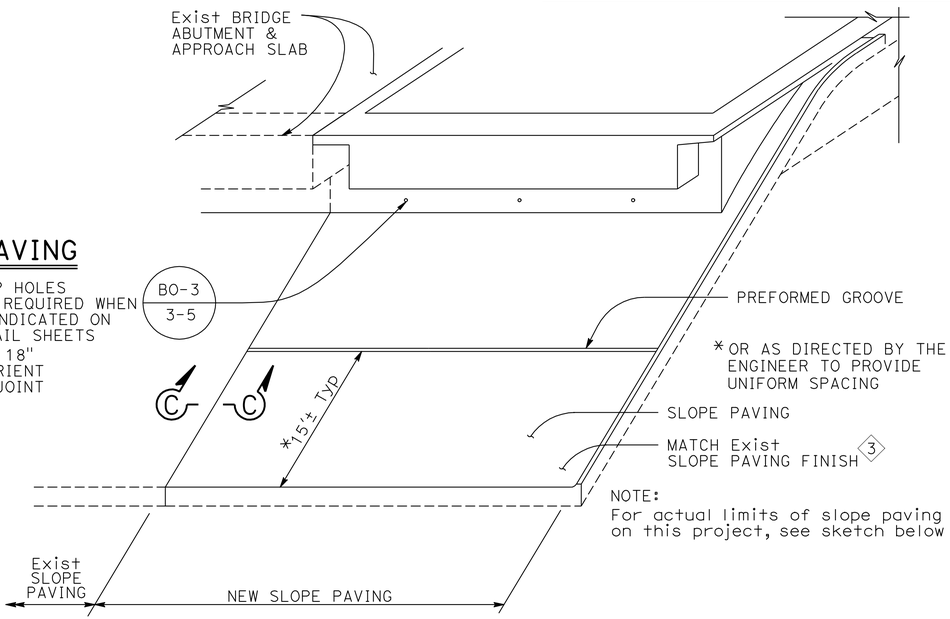

PICTORIAL VIEW OF TYPICAL INSTALLATION 2

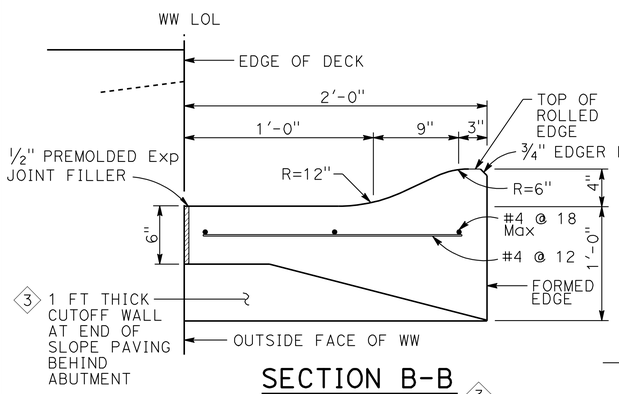

SECTION B-B 3

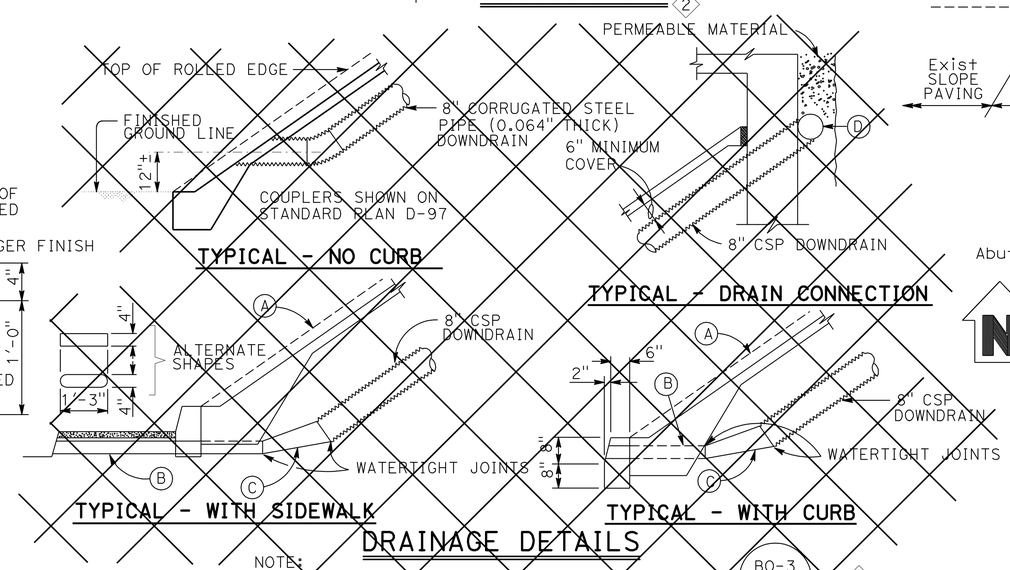

DRAINAGE DETAILS

NOTE:
Drainage details are only applicable when is indicated on detail sheets

BO-3
3-5 1

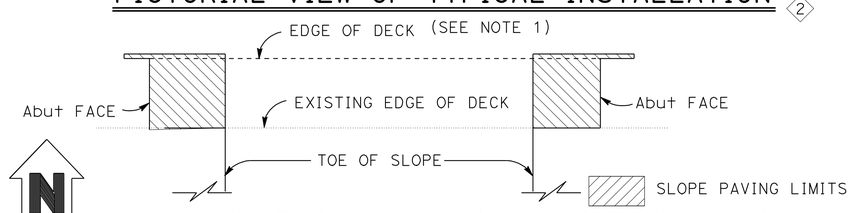

LIMITS OF SLOPE PAVING & DRAINAGE LAYOUT 2

NOTES:
2 1. See "BRIDGE REMOVAL DETAILS" sheet for limits of existing slope paving removal.
(A) Top of rolled edge
(B) Conduit: 0.064" galv corrugated steel or 0.109" smooth galv steel
1 (C) Taper: 0.064" galv corrugated steel or 0.109" smooth galv steel
(D) 8" perforated steel pipe (0.064" thick) underdrain behind abutment. Connect to downdrain as shown on limits of Slope Paving & Drainage layout.

NOTE:
THE CONTRACTOR SHALL VERIFY ALL CONTROLLING FIELD DIMENSIONS BEFORE ORDERING OR FABRICATING ANY MATERIAL.

REVISED STANDARD DRAWING

FILE NO. xs4-210

APPROVAL DATE July 2011

1 Does Not Apply
2 Added Detail or Note
3 Modified Detail or Note

STATE OF CALIFORNIA
DEPARTMENT OF TRANSPORTATION

DIVISION OF ENGINEERING SERVICES

BRIDGE NO. 55-0280
POST MILE 1.2

BROOKHURST Ave UC (WIDEN)
SLOPE PAVING-FULL SLOPE

DS OSD 2147A (ENGLISH STANDARD DRAWING "XS" BORDER REV. (02-02-11)

ORIGINAL SCALE IN INCHES FOR REDUCED PLANS 0 1 2 3

UNIT: 2295
PROJECT NUMBER & PHASE: 12000000791
CONTRACT NO.: 12-0C5701

DISREGARD PRINTS BEARING EARLIER REVISION DATES

REVISION DATES 08/30/10 09/16/11 12/22/11 3/15/12

SHEET 16 OF 26

FILE => 55-0280-s-spfs.dgn

USERNAME => s121614 DATE PLOTTED => 17-AUG-2012 TIME PLOTTED => 06:11

DIST	COUNTY	ROUTE	POST MILES TOTAL PROJECT	SHEET No	TOTAL SHEETS
12	Ora	91	0.9/5.4	750	885

V. Jessica Mosquera 3-15-2012
REGISTERED CIVIL ENGINEER DATE

8-13-12
PLANS APPROVAL DATE

REGISTERED PROFESSIONAL ENGINEER V. J. Mosquera No. C 051049 Exp. 09/30/13 CIVIL STATE OF CALIFORNIA

The State of California or its officers or agents shall not be responsible for the accuracy or completeness of scanned copies of this plan sheet.

OCTA
550 S MAIN STREET
ORANGE, CA. 92868

RBF CONSULTING
14725 ALTON PARKWAY
IRVINE, CA 92618

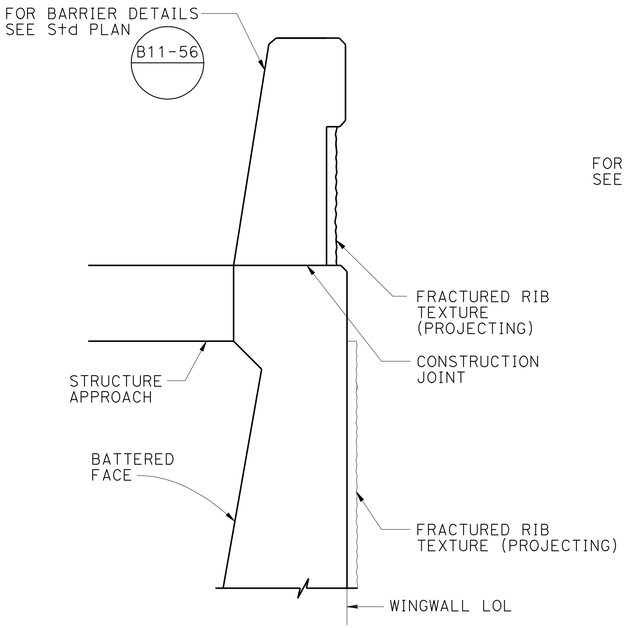

BARRIER TYPE 736A (MODIFIED) ON WINGWALL

1" = 1'-0"

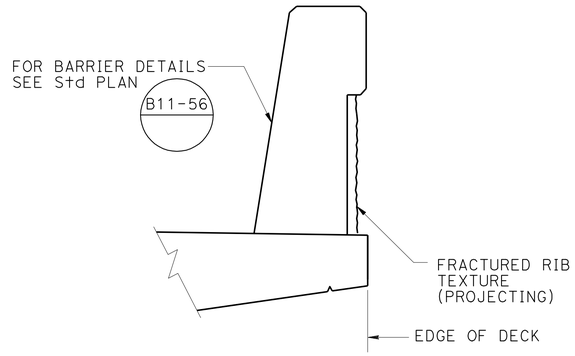

BARRIER TYPE 736 (MODIFIED) ON BRIDGE DECK

1" = 1'-0"

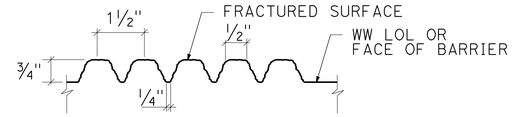

FRACTURED RIB TEXTURE 3/4" (PROJECTING)

NO SCALE

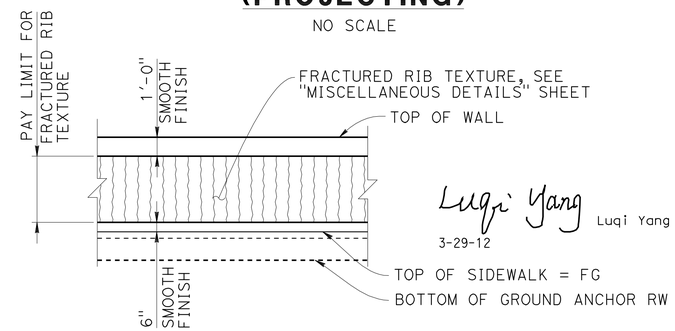

Luqi Yang Luqi Yang
3-29-12

TIEBACK RETAINING WALL ARCHITECTURAL DETAILS

1/4" = 1'-0"

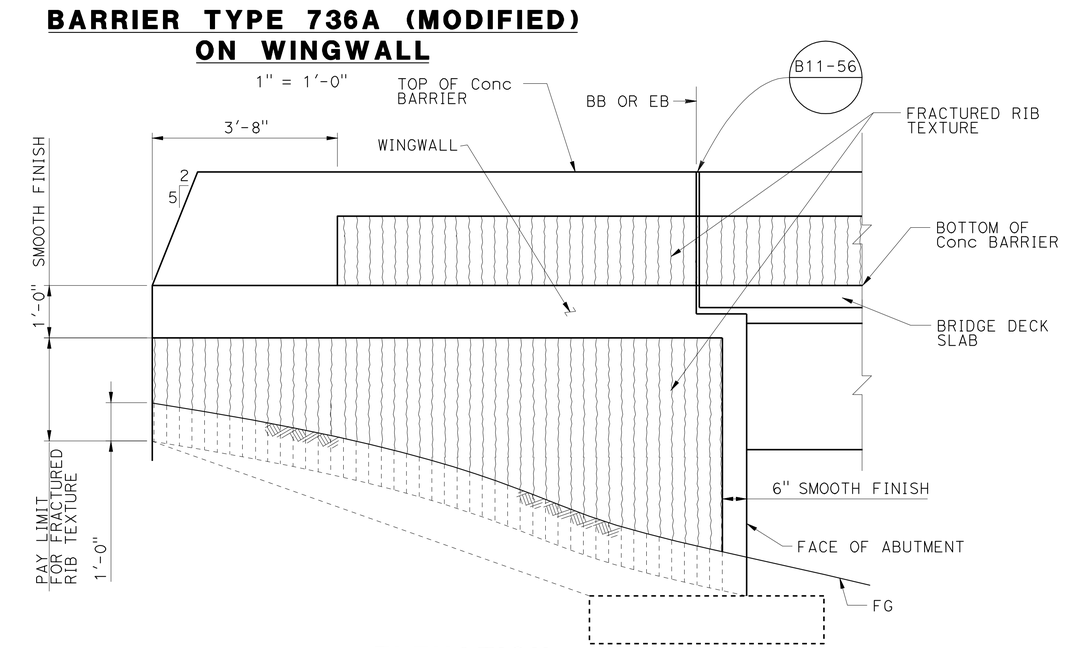

ELEVATION

NO SCALE

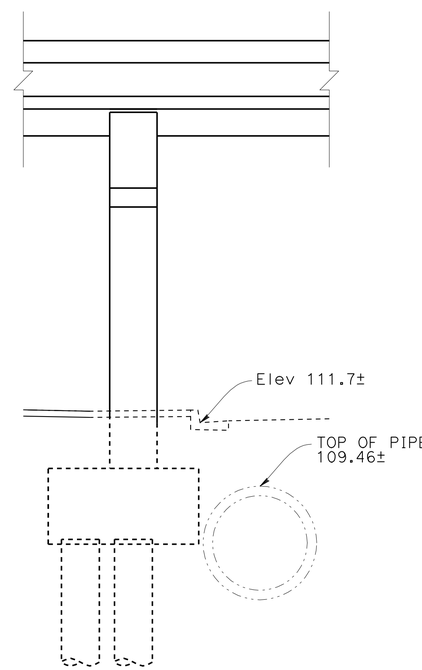

STORM DRAIN AT BENT 2 SECTION A-A

NO SCALE

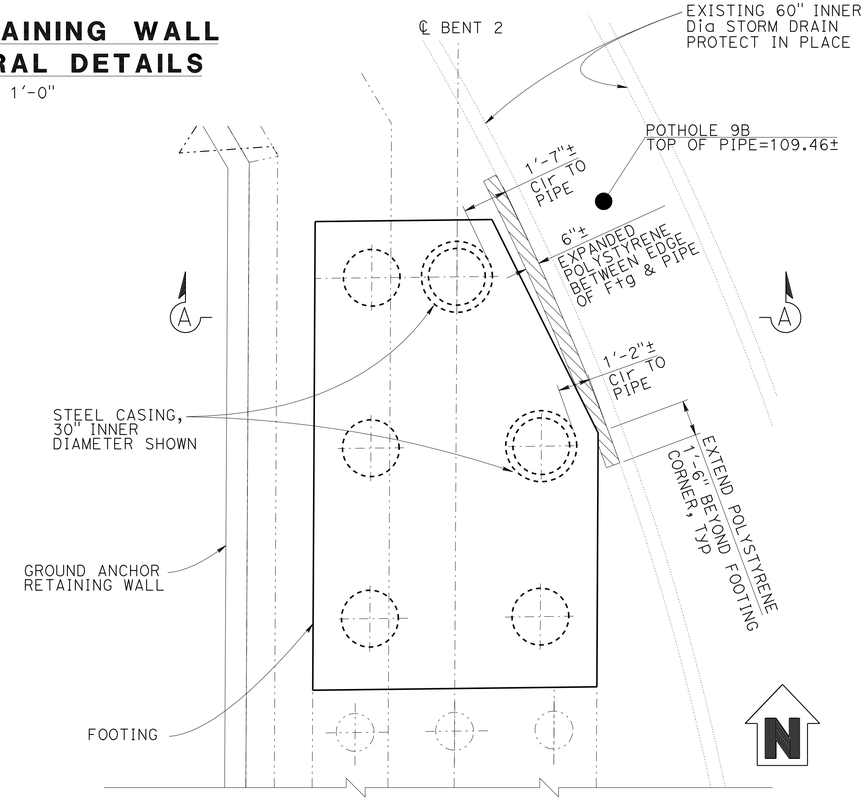

STORM DRAIN AT BENT 2

3/8" = 1'-0"

NOTE:
THE CONTRACTOR SHALL VERIFY ALL CONTROLLING FIELD DIMENSIONS BEFORE ORDERING OR FABRICATING ANY MATERIAL.

Luqi Yang Luqi Yang
DESIGN OVERSIGHT
3-29-12
SIGN OFF DATE

	BY	CHECKED
DESIGN	V. J. Mosquera	T. Kirilov
DETAILS	J. Saldana	T. Kirilov
QUANTITIES	C. Stelea	R. Kelcher

PREPARED FOR THE STATE OF CALIFORNIA DEPARTMENT OF TRANSPORTATION

V. Jessica Mosquera
PROJECT ENGINEER

BRIDGE NO. 55-0280
POST MILES 1.2

BROOKHURST Ave UC (WIDEN)
MISCELLANEOUS DETAILS

DESIGN DETAIL SHEET (ENGLISH) (REV.7/16/10)

ORIGINAL SCALE IN INCHES FOR REDUCED PLANS 0 1 2 3

UNIT: 2295
PROJECT NUMBER & PHASE: 12000000791 CONTRACT NO.: 12-0C5701

DISREGARD PRINTS BEARING EARLIER REVISION DATES → REVISION DATES 09/16/11 12/28/11 02/17/12 03/15/12

SHEET 17 OF 26

FILE => 55-0280-u-miscdt01.dgn

USERNAME => s12614 DATE PLOTTED => 17-AUG-2012 TIME PLOTTED => 06:11

DIST	COUNTY	ROUTE	POST MILES TOTAL PROJECT	SHEET No	TOTAL SHEETS
12	Ora	91	0.9/5.4	751	885

V. Jessica Mosquera 3-15-2012
REGISTERED CIVIL ENGINEER DATE

8-13-12
PLANS APPROVAL DATE

REGISTERED PROFESSIONAL ENGINEER V. J. Mosquera No. C 051049 Exp. 09/30/13 CIVIL STATE OF CALIFORNIA

The State of California or its officers or agents shall not be responsible for the accuracy or completeness of scanned copies of this plan sheet.

OCTA
550 S MAIN STREET
ORANGE, CA. 92868

RBF CONSULTING
14725 ALTON PARKWAY
IRVINE, CA 92618

GENERAL NOTES

LOAD AND RESISTANCE FACTOR DESIGN

Design:	AASHTO LRFD Bridge Design Specifications, 4th Edition with California Amendments
Reinforced Concrete For Cast-In-Place:	fy = 60 ksi f'c = 4 ksi (at 28 days) n = 8
Reinforced Concrete For Shotcrete:	fy = 60 ksi f'c = 4 ksi (at 28 days) fci = 3 ksi At Stressing n = 8
Structural Steel Bearing Plate:	ASTM Designation A36 fy = 36 ksi
Prestressing Steel (Ground Anchor):	For Notes see "SUB HORIZONTAL GROUND ANCHOR DETAILS No. 1" sheet.

SOIL PARAMETERS

(For Ground Anchor Wall Only)

Soil Density: γ = 120 Pcf
Internal Friction Angle: ϕ = 31°
Cohesion: C = 100 Psf

STANDARD PLANS DATED 2010

A10A	Abbreviations (Sheet 1 of 2)
A10B	Abbreviations (Sheet 2 of 2)
A10C	Lines and Symbols (Sheet 1 of 3)
A10D	Lines and Symbols (Sheet 2 of 3)
A10E	Lines and Simbols (Sheet 3 of 3)
B0-1	Bridge Details

Standard Plan Sheet No.

Detail No.

Section Identification

LEGEND:

Bridge Removal (Portion), Location E

Structure Excavation (Ground Anchor Wall)

Lean Concrete Backfill

Structure Backfill (Ground Anchor Wall)

Denotes Existing Structure

Denotes Proposed Structure

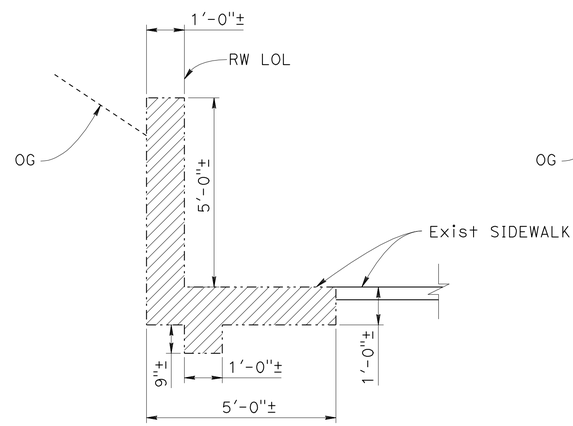

Ret WALL REMOVAL LIMITS

NO SCALE

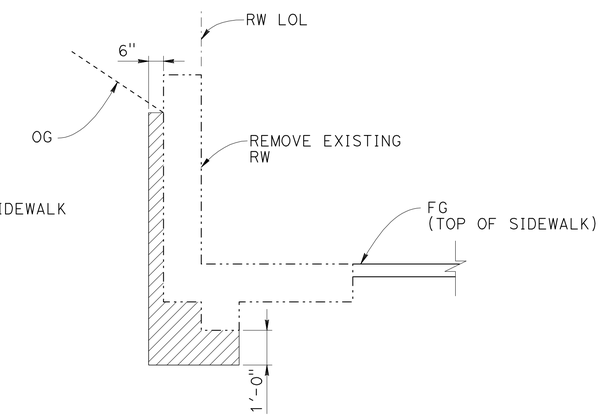

LIMITS OF PAYMENT FOR EXCAVATION GROUND ANCHOR WALL

NO SCALE

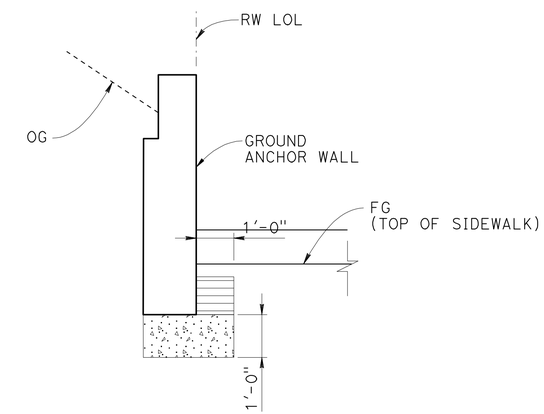

LIMITS OF PAYMENT FOR BACKFILL GROUND ANCHOR WALL

NO SCALE

NOTES:

1. For fractured rib texture details on retaining wall, see "MISCELLANEOUS DETAILS" sheet.
2. Provide 18" wide filter fabric continuous behind geocomposite drain, bond to slotted pipe.

NOTE:
THE CONTRACTOR SHALL VERIFY ALL CONTROLLING FIELD DIMENSIONS BEFORE ORDERING OR FABRICATING ANY MATERIAL.

Luqi Yang
DESIGN OVERSIGHT Luqi Yang
3-29-12
SIGN OFF DATE

DESIGN	H. Montoya	CHECKED	S. McCauley
DETAILS	BY J. Saldana	CHECKED	S. McCauley
QUANTITIES	BY C. Stelea	CHECKED	R. Kelcher

PREPARED FOR THE STATE OF CALIFORNIA DEPARTMENT OF TRANSPORTATION

V. Jessica Mosquera
PROJECT ENGINEER

BRIDGE NO. 55-0280
POST MILES 1.2

BROOKHURST Ave UC (WIDEN)

GROUND ANCHOR WALL

GROUND ANCHOR WALL GENERAL NOTES & MISC DETAILS

DESIGN DETAIL SHEET (ENGLISH) (REV.7/16/10)

ORIGINAL SCALE IN INCHES FOR REDUCED PLANS 0 1 2 3

UNIT: 2295
PROJECT NUMBER & PHASE: 12000000791 CONTRACT NO.: 12-0C5701

DISREGARD PRINTS BEARING EARLIER REVISION DATES

REVISION DATES 09/26/11 12/22/11 02/27/12 03/15/12

SHEET 18 OF 26

FILE => 55-0280-u-miscdt02.dgn

USERNAME => s121614 DATE PLOTTED => 17-AUG-2012 TIME PLOTTED => 06:11

DIST	COUNTY	ROUTE	POST MILES TOTAL PROJECT	SHEET No	TOTAL SHEETS
12	Ora	91	0.9/5.4	752	885

V. Jessica Mosquera 3-15-2012
REGISTERED CIVIL ENGINEER DATE

8-13-12
PLANS APPROVAL DATE

REGISTERED PROFESSIONAL ENGINEER V. J. Mosquera No. C 051049 Exp. 09/30/13 CIVIL STATE OF CALIFORNIA

The State of California or its officers or agents shall not be responsible for the accuracy or completeness of scanned copies of this plan sheet.

OCTA
550 S MAIN STREET
ORANGE, CA. 92868

RBF CONSULTING
14725 ALTON PARKWAY
IRVINE, CA 92618

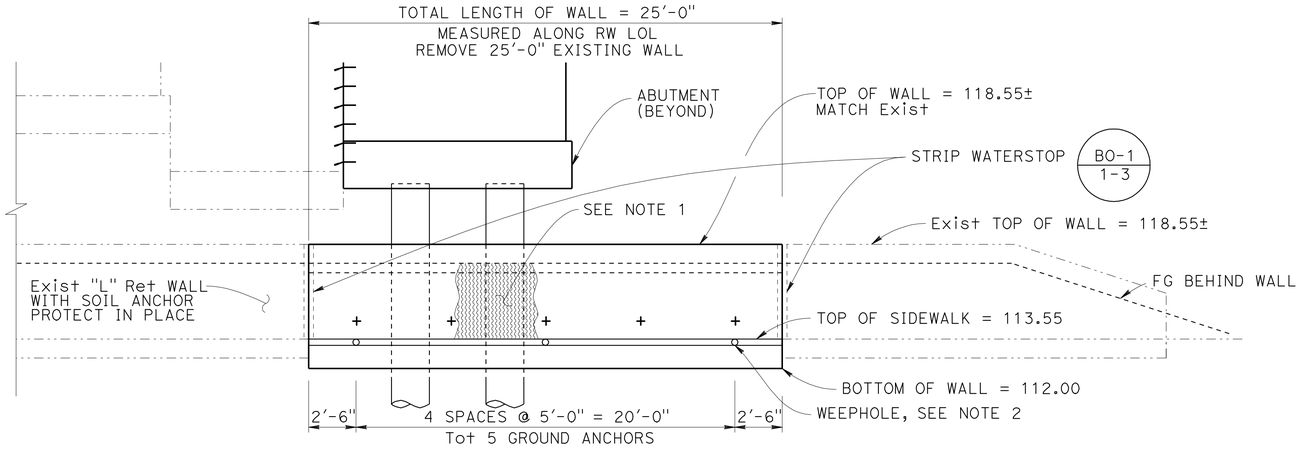

DATUM Elev 105.00

ELEVATION WEST Ret WALL

Horiz SCALE: 1/4" = 1'-0"
Vert SCALE: 1/4" = 1'-0"

NOTES:

1. For additional information, see "GENERAL PLAN" and "FOUNDATION PLAN" sheets.
2. All ground anchors are perpendicular to wall horizontally, unless noted otherwise.
3. Ground anchor bonded lengths to be determined by Contractor. Minimum unbonded length shall extend 8'-0" past abutment piles.
4. New ground anchors shall not interfere with the abutment piles of abutment widening. Locations of holes for ground anchors are approximate. The Contractor shall carefully drill the holes for ground anchors and adjust the location of the holes which are determined to be in conflict with the location of the existing piling to clear all bridge piles. Final hole locations are subject to the approval of the engineer. Abandoned drilled holes shall be filled with cement slurry.
5. For fractured rib texture details on retaining wall, see "MISCELLANEOUS DETAILS" sheet.
6. For weephole, geocomposite drain details and Additional Ground Anchor Details see "SUB HORIZONTAL GROUND ANCHOR DETAILS No. 2" sheet.
7. Post - Grout all ground anchors.
8. To Accommodate Future Widening of Rte 91 Contractor Shall Install Brass Tacks at Top of Wall to Designate Location of Tieback Lines.

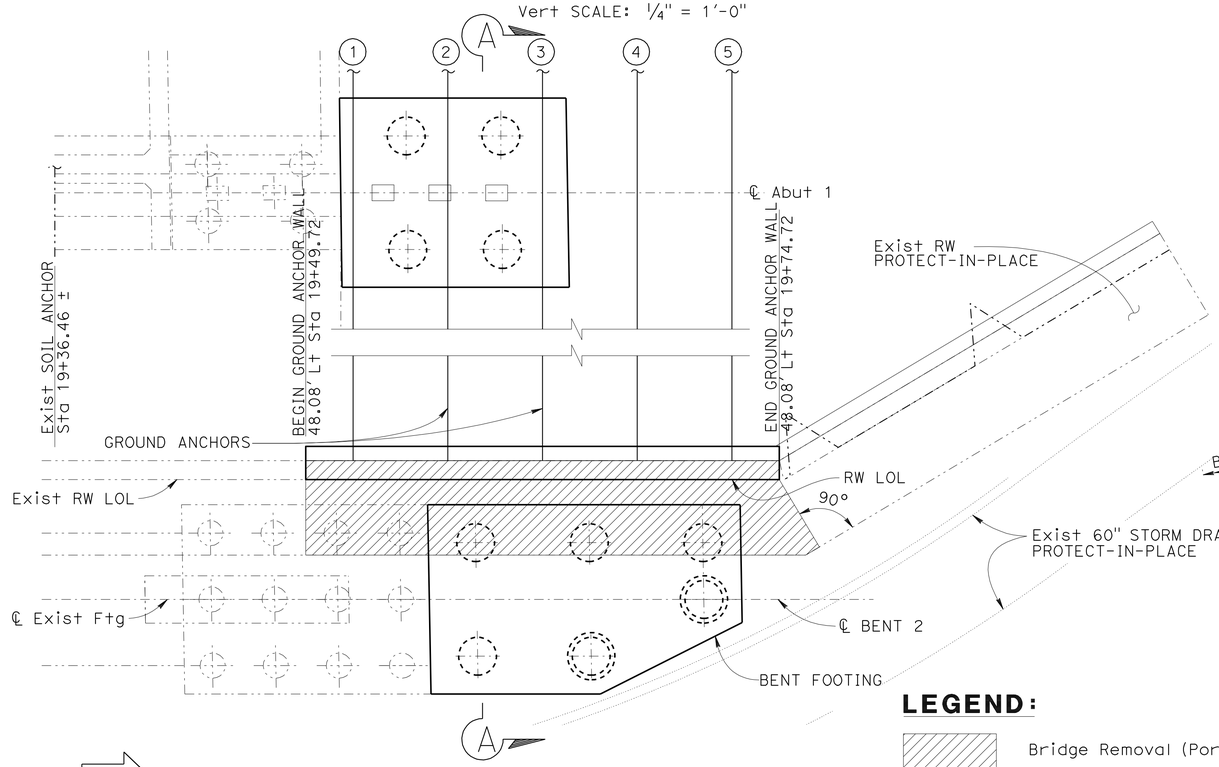

PLAN WEST Ret WALL

1/4" = 1'-0"

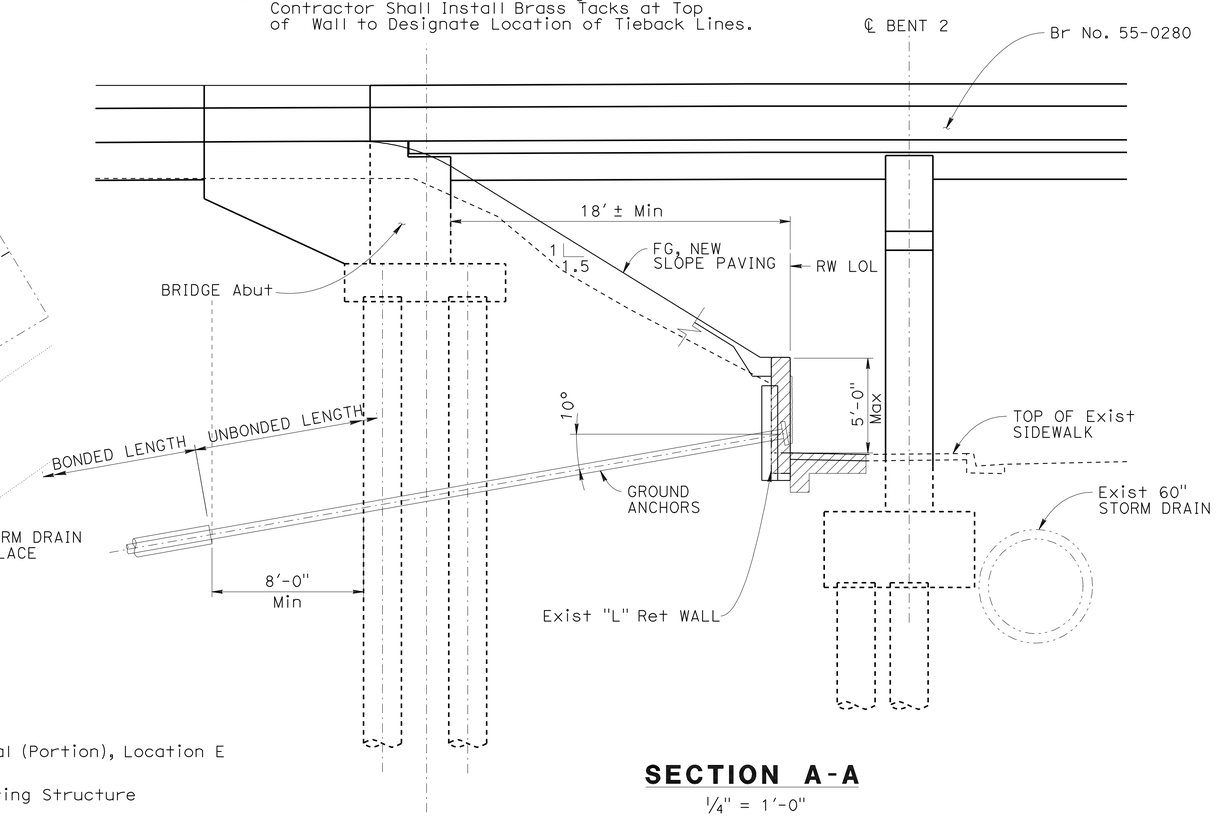

SECTION A-A

1/4" = 1'-0"
NOTE: WEST RW SHOWN, EAST RW SIMILAR

LEGEND:

- Bridge Removal (Portion), Location E
- Denotes Existing Structure
- Denotes Structure

NOTE:
THE CONTRACTOR SHALL VERIFY ALL CONTROLLING FIELD DIMENSIONS BEFORE ORDERING OR FABRICATING ANY MATERIAL.

Luqi Yang
DESIGN OVERSIGHT Luqi Yang
3-29-12
SIGN OFF DATE

	BY	CHECKED
DESIGN	H. Montoya	S. McCauley
DETAILS	J. Saldana	S. McCauley
QUANTITIES	C. Stelea	R. Kelcher

PREPARED FOR THE STATE OF CALIFORNIA DEPARTMENT OF TRANSPORTATION

V. Jessica Mosquera
PROJECT ENGINEER

BRIDGE NO. 55-0280
POST MILES 1.2

BROOKHURST Ave UC (WIDEN)
GROUND ANCHOR WALL
GROUND ANCHOR WALL LAYOUT No. 1

DESIGN DETAIL SHEET (ENGLISH) (REV.7/16/10)

ORIGINAL SCALE IN INCHES FOR REDUCED PLANS 0 1 2 3

UNIT: 2295
PROJECT NUMBER & PHASE: 12000000791 CONTRACT NO.: 12-0C5701

DISREGARD PRINTS BEARING EARLIER REVISION DATES

REVISION DATES 09/16/11 12/22/11 03/05/12 02/17/12 SHEET 19 OF 26

FILE => 55-0280-u-miscdt03.dgn

USERNAME => s12614 DATE PLOTTED => 17-AUG-2012 TIME PLOTTED => 06:11

DIST	COUNTY	ROUTE	POST MILES TOTAL PROJECT	SHEET No	TOTAL SHEETS
12	Ora	91	0.9/5.4	753	885

V. Jessica Mosquera 3-15-2012
REGISTERED CIVIL ENGINEER DATE

8-13-12
PLANS APPROVAL DATE

REGISTERED PROFESSIONAL ENGINEER V. J. Mosquera No. C 051049 Exp. 09/30/13 CIVIL STATE OF CALIFORNIA

The State of California or its officers or agents shall not be responsible for the accuracy or completeness of scanned copies of this plan sheet.

OCTA
550 S MAIN STREET
ORANGE, CA. 92868

RBF CONSULTING
14725 ALTON PARKWAY
IRVINE, CA 92618

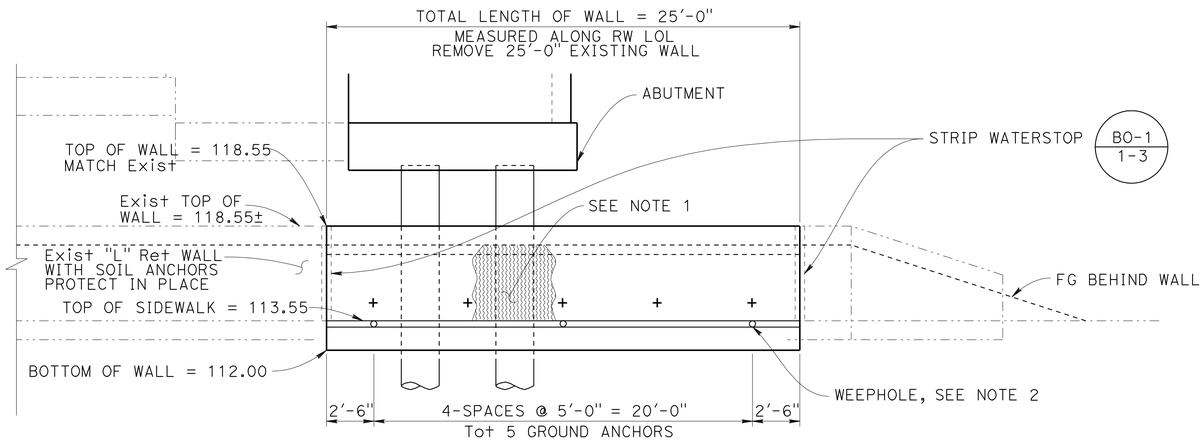

DATUM Elev 105.00

MIRRORED ELEVATION EAST Ret WALL

Horiz SCALE: 1/4" = 1'-0"
Vert SCALE: 1/4" = 1'-0"

GROUND ANCHOR DESIGN FORCE TABLE

TIEBACK No.	FACTORED TEST LOAD (FTL)	LOCK-OFF LOAD
1 2 3	36 k	33 k
4 5	25 k	18 k
6 7 8	36 k	33 k
9 10	25 k	18 k

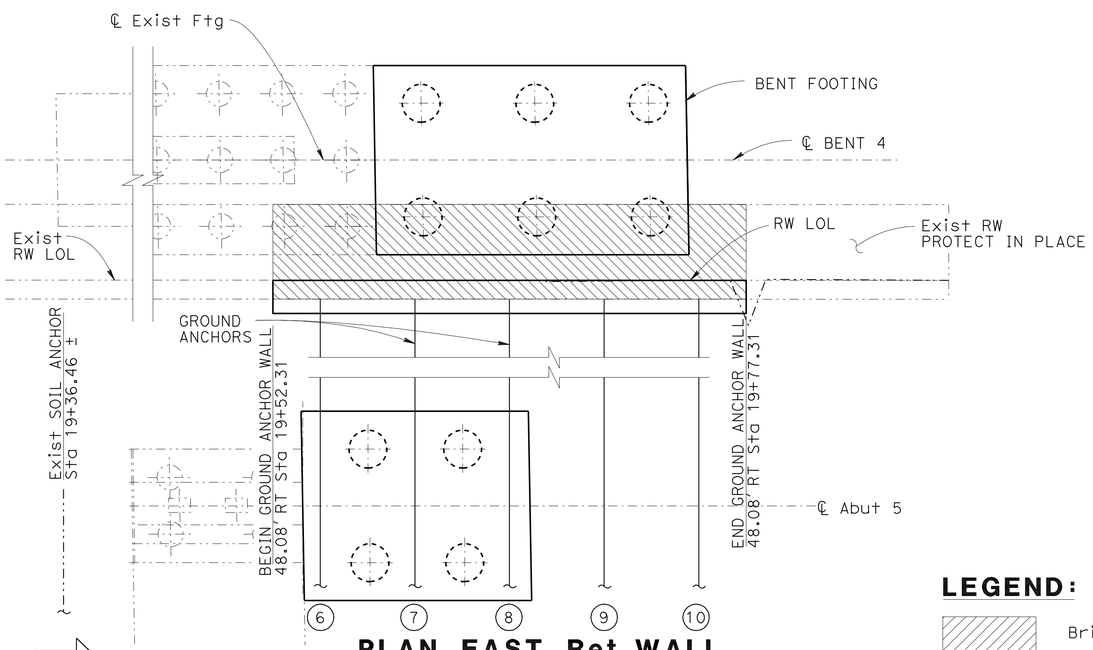

PLAN EAST Ret WALL

1/4" = 1'-0"

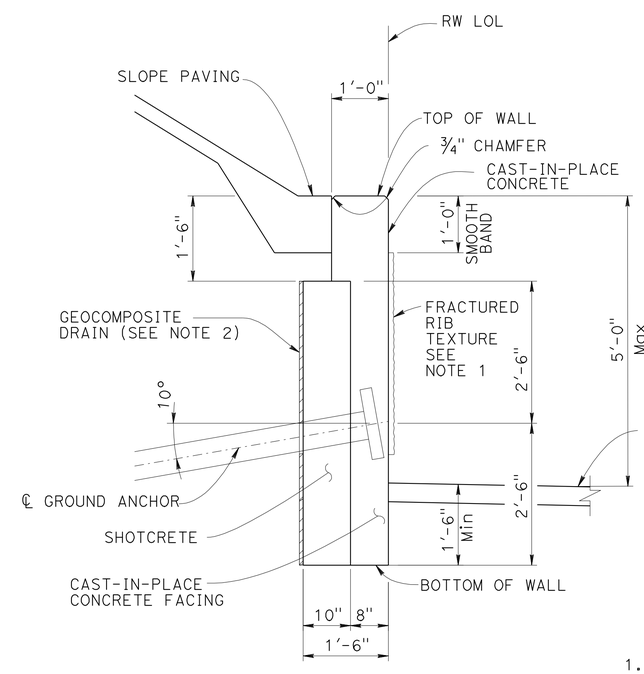

TYPICAL SECTION

3/4" = 1'-0"

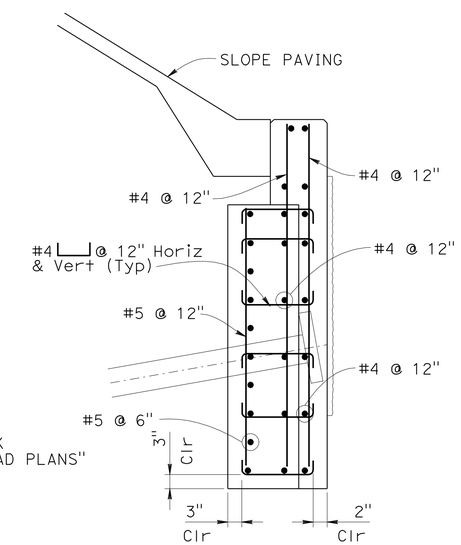

TYPICAL WALL REINFORCEMNT

3/4" = 1'-0"

NOTES:

1. For fractured rib texture details on retaining wall, see "MISCELLANEOUS DETAILS" sheet.
2. For weephole geocomposite drain details and Additional Ground Anchor Details see "SUB HORIZONTAL GROUND ANCHOR DETAILS No. 2" sheet.
3. For additional notes regarding tieback anchors, see "GROUND ANCHOR WALL LAYOUT No. 1" sheet.

LEGEND:

- Bridge Removal (Portion), Location E
- Denotes Existing Structure
- Denotes Structure

NOTE:
THE CONTRACTOR SHALL VERIFY ALL CONTROLLING FIELD DIMENSIONS BEFORE ORDERING OR FABRICATING ANY MATERIAL.

Luqi Yang
DESIGN OVERSIGHT Luqi Yang
3-29-12
SIGN OFF DATE

	BY	CHECKED
DESIGN	H. Montoya	S. McCauley
DETAILS	J. Saldana	S. McCauley
QUANTITIES	C. Stelea	R. Kelcher

PREPARED FOR THE STATE OF CALIFORNIA DEPARTMENT OF TRANSPORTATION

V. Jessica Mosquera
PROJECT ENGINEER

BRIDGE NO. 55-0280
POST MILES 1.2

BROOKHURST Ave UC (WIDEN)
GROUND ANCHOR WALL
GROUND ANCHOR WALL LAYOUT No. 2

DESIGN DETAIL SHEET (ENGLISH) (REV.7/16/10)

ORIGINAL SCALE IN INCHES FOR REDUCED PLANS 0 1 2 3

UNIT: 2295
PROJECT NUMBER & PHASE: 12000000791 CONTRACT NO.: 12-0C5701

DISREGARD PRINTS BEARING EARLIER REVISION DATES

REVISION DATES: 08/30/10 09/08/11 12/20/11 03/15/12

SHEET 20 OF 26

FILE => 55-0280-u-miscdt04.dgn

USERNAME => s121614 DATE PLOTTED => 17-AUG-2012 TIME PLOTTED => 06:11

DIST	COUNTY	ROUTE	POST MILES TOTAL PROJECT	SHEET No.	TOTAL SHEETS
12	Ora	91	0.9/5.4	754	885

V. Jessica Mosquera 3-15-2012
REGISTERED CIVIL ENGINEER DATE

8-13-12
PLANS APPROVAL DATE

REGISTERED PROFESSIONAL ENGINEER V. J. Mosquera No. C 051049 Exp. 09/30/13 CIVIL STATE OF CALIFORNIA

The State of California or its officers or agents shall not be responsible for the accuracy or completeness of scanned copies of this plan sheet.

OCTA
550 S MAIN STREET
ORANGE, CA. 92868

RBF CONSULTING
14725 ALTON PARKWAY
IRVINE, CA 92618

GENERAL NOTES

DESIGN:

AASHTO LRFD Bridge Design Specifications, 4th Edition with California Amendments.

PRESTRESSING STEEL:

Bars - ASTM Designation: A722 Type II (150 ksi)

Strand Tendons-ASTM Designation: A416 (270 Ksi Low Relaxation steel)

FTL = Factored Test Load per anchor (Kips)

fpu = Minimum tensile strength of prestressing steel

As = Minimum cross sectional area of prestressing steel in ground anchor (square inch)

$$As(Min) = \frac{1.0\ FTL}{0.75\ fpu} \quad \text{(Strands)}$$

$$As(Min) = \frac{1.0\ FTL}{0.80\ fpu} \quad \text{(Bars)}$$

NOTES:

(A) Level of initial grouting for drill hole 6" in diameter or smaller

(B) Level of secondary grouting

(C) Level of initial grouting inside corrugated sheathing

(D) Bonded length shall be determined by the Contractor

3 (E) For unbonded length, see "GROUND ANCHOR WALL LAYOUT No. 1" sheet

3 (F) For inclination, see "SUB HORIZONTAL GROUND ANCHOR DETAIL No. 2" sheet

(G) Face of Wall Excavation

NOTES:

2 1. Anchorage enclosure shall only be used when anchor head assembly is not enclosed in concrete.

2 2. Anchorage enclosure shall have provisions to allow injecting grout at low end and venting at high end. Galvanize after fabrication.

2 3. Silicone sealant to cover full width of flange.

3 4. Steel tube (Min thickness = 1/4", Min length = 3'-3") welded to bearing plate. Galvanize assembly after fabrication

5. Steel tube welded to bearing plate. Inside diameter of steel tube (Min thickness = 1/4") to be 1" greater than outside diameter of smooth sheathing.

6. Galvanize assembly after fabrication.

3 7. For other wall details, see BRIDGE PLANS.

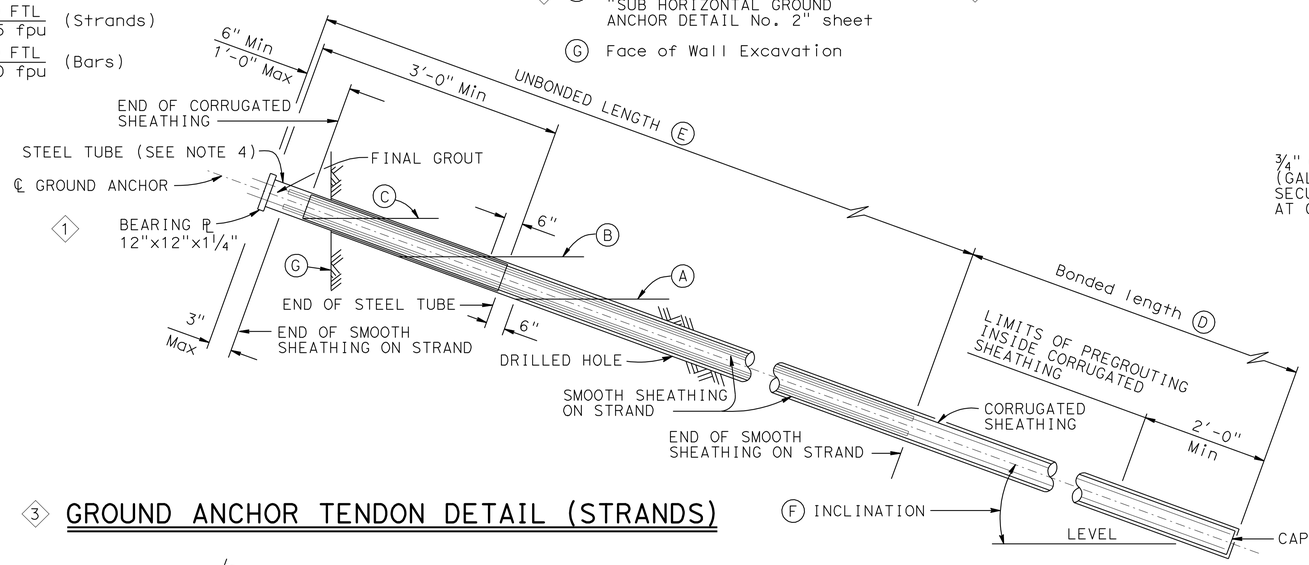

3 GROUND ANCHOR TENDON DETAIL (STRANDS)

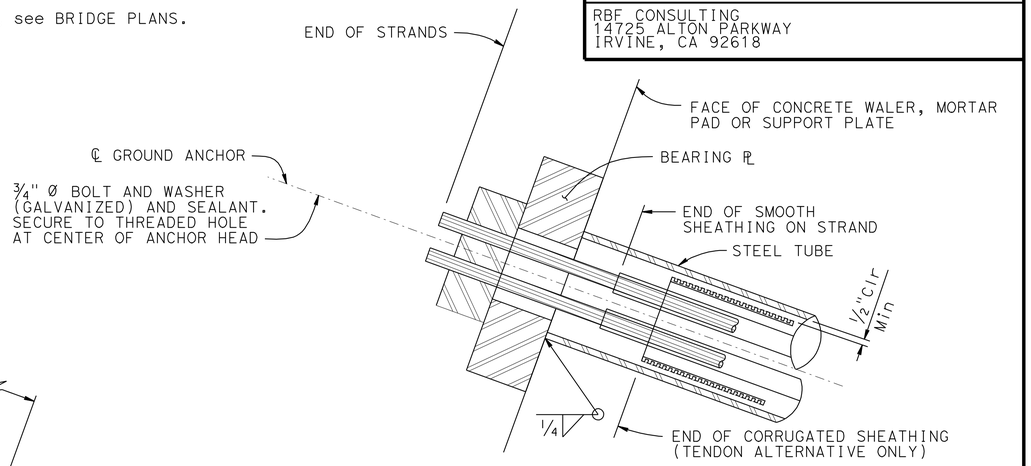

ALTERNATIVE X 3

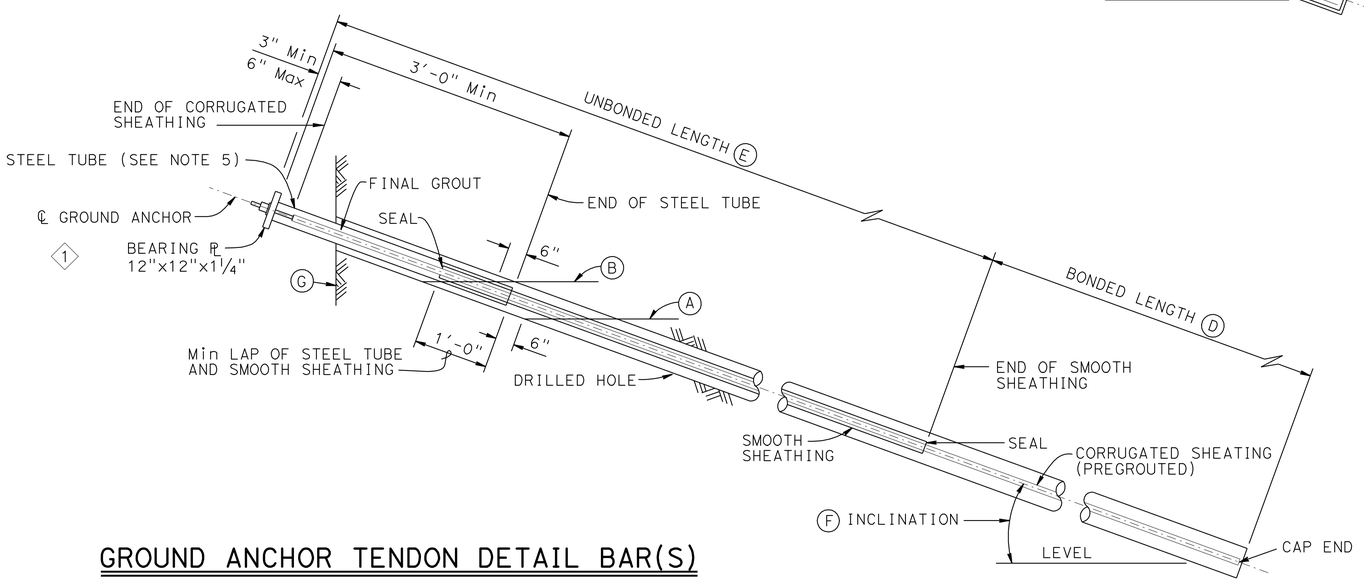

GROUND ANCHOR TENDON DETAIL BAR(S)

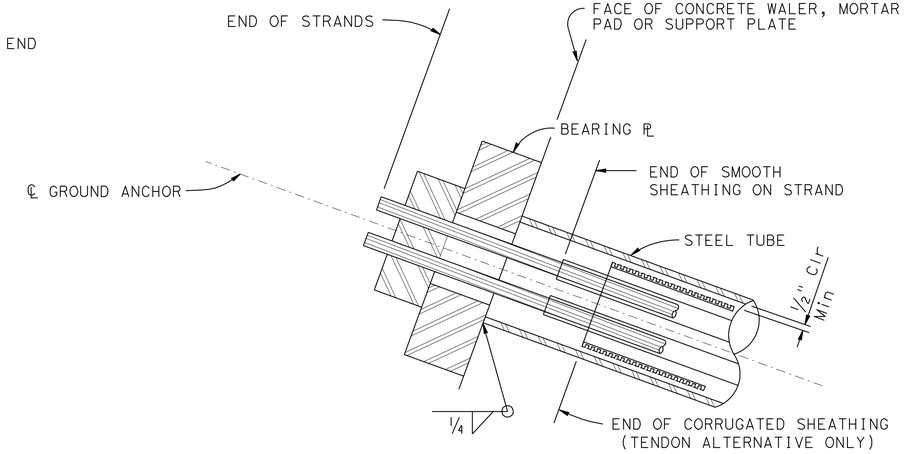

ALTERNATIVE Y

ANCHORAGE ENCLOSURE DETAILS 3

NO SCALE

STANDARD DRAWING

FILE NO. xs12-040

APPROVAL DATE July 2011

1 Added Bearing Plate size 12"x12"x1 1/4"
2 Does Not Apply
3 Modified Detail or Note

STATE OF CALIFORNIA DEPARTMENT OF TRANSPORTATION

DIVISION OF ENGINEERING SERVICES

BRIDGE NO. 55-0280
POST MILE 1.2

BROOKHURST Ave UC (WIDEN)

GROUND ANCHOR WALL

SUB HORIZONTAL GROUND ANCHOR DETAILS NO. 1

DS OSD 2147A (ENGLISH STANDARD DRAWING "XS" BORDER REV. (02-02-11)

ORIGINAL SCALE IN INCHES FOR REDUCED PLANS 0 1 2 3

UNIT: 2295
PROJECT NUMBER & PHASE: 12000000791
CONTRACT NO.: 12-0C5701

DISREGARD PRINTS BEARING EARLIER REVISION DATES

REVISION DATES 9-16-11 12-20-11 02/17/12

SHEET 21 OF 26

FILE => 55-0280-u-miscdt05.dgn

USERNAME => s121614 DATE PLOTTED => 17-AUG-2012 TIME PLOTTED => 06:12

DIST	COUNTY	ROUTE	POST MILES TOTAL PROJECT	SHEET No	TOTAL SHEETS
12	Ora	91	0.9/5.4	755	885

V. Jessica Mosquera 3-15-2012
REGISTERED CIVIL ENGINEER DATE

8-13-12
PLANS APPROVAL DATE

REGISTERED PROFESSIONAL ENGINEER V. J. Mosquera No. C 051049 Exp. 09/30/13 CIVIL STATE OF CALIFORNIA

The State of California or its officers or agents shall not be responsible for the accuracy or completeness of scanned copies of this plan sheet.

OCTA
550 S MAIN STREET
ORANGE, CA. 92868

RBF CONSULTING
14725 ALTON PARKWAY
IRVINE, CA 92618

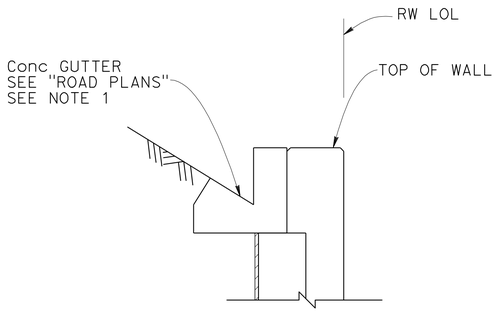

CONCRETE GUTTER

NO SCALE

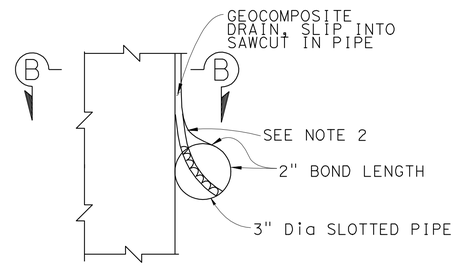

DETAIL A

NO SCALE

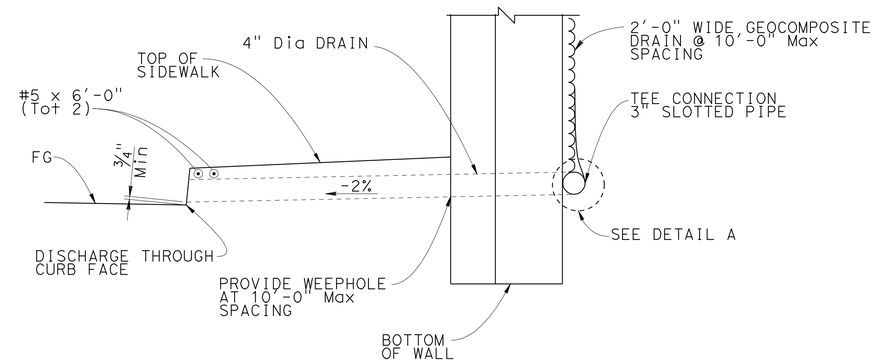

GROUND ANCHOR WALL DRAINAGE DETAIL

NO SCALE

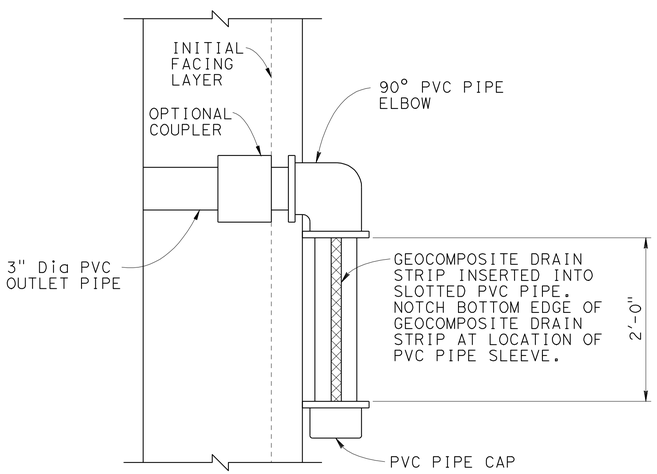

SECTION B-B

NO SCALE

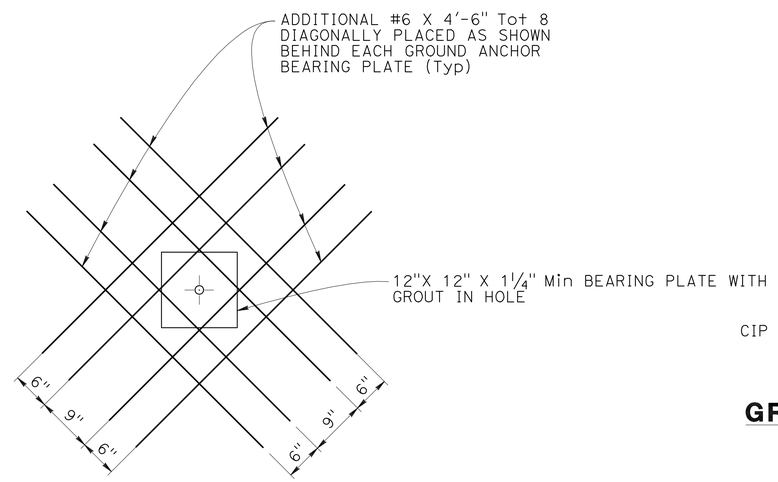

GROUND ANCHOR WALER BAR DETAIL

NO SCALE

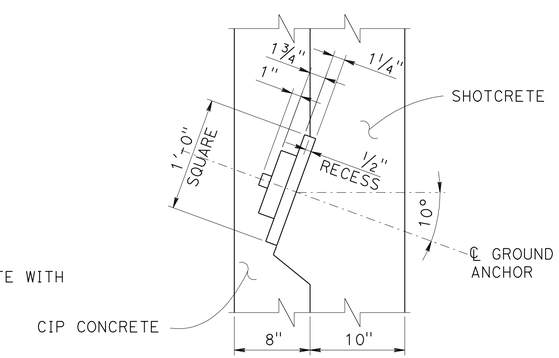

GROUND ANCHORAGE DETAIL (Typ)

1½" = 1'-0"

NOTES:

1. Concrete gutter limits are beyond slope paving limits. For details, see "ROAD PLANS".
2. 1'-6" wide Filter Fabric continuous behind geocomposite drain.

NOTE:
THE CONTRACTOR SHALL VERIFY ALL CONTROLLING FIELD DIMENSIONS BEFORE ORDERING OR FABRICATING ANY MATERIAL.

Luqi Yang
DESIGN OVERSIGHT Luqi Yang
3-29-12
SIGN OFF DATE

	BY	CHECKED
DESIGN	H. Montoya	S. McCauley
DETAILS	J. Saldana	S. McCauley
QUANTITIES	C. Stelea	R. Kelcher

PREPARED FOR THE STATE OF CALIFORNIA DEPARTMENT OF TRANSPORTATION

V. Jessica Mosquera
PROJECT ENGINEER

BRIDGE NO. 55-0280
POST MILES 1.2

BROOKHURST Ave UC (WIDEN)
GROUND ANCHOR WALL
SUB HORIZONTAL GROUND ANCHOR DETAILS No. 2

DESIGN DETAIL SHEET (ENGLISH) (REV.7/16/10)

ORIGINAL SCALE IN INCHES FOR REDUCED PLANS 0 1 2 3

UNIT: 2295
PROJECT NUMBER & PHASE: 12000000791 CONTRACT NO.: 12-0C5701

DISREGARD PRINTS BEARING EARLIER REVISION DATES → 08/30/10 09/16/11 12/20/11 02/17/12

SHEET 22 OF 26

FILE => 55-0280-u-miscdt06.dgn

USERNAME => s121614 DATE PLOTTED => 17-AUG-2012 TIME PLOTTED => 06:12

DIST	COUNTY	ROUTE	POST MILES TOTAL PROJECT	SHEET No	TOTAL SHEETS
12	Ora	91	0.9/5.4	756	885

V. Jessica Mosquera 3-15-2012
REGISTERED CIVIL ENGINEER DATE

8-13-12
PLANS APPROVAL DATE

REGISTERED PROFESSIONAL ENGINEER V. J. Mosquera No. C 051049 Exp. 09/30/13 CIVIL STATE OF CALIFORNIA

The State of California or its officers or agents shall not be responsible for the accuracy or completeness of scanned copies of this plan sheet.

OCTA
550 S MAIN STREET
ORANGE, CA. 92868

RBF CONSULTING
14725 ALTON PARKWAY
IRVINE, CA 92618

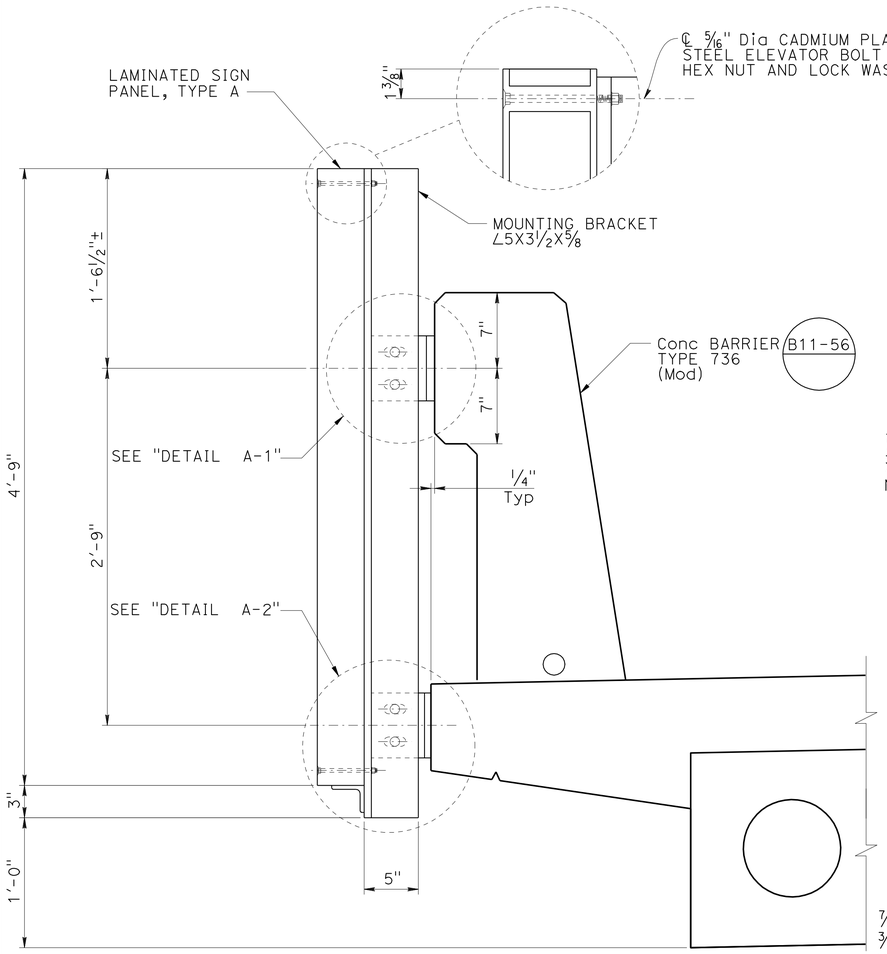

TYPICAL MOUNTING BRACKET ASSEMBLY

NO SCALE

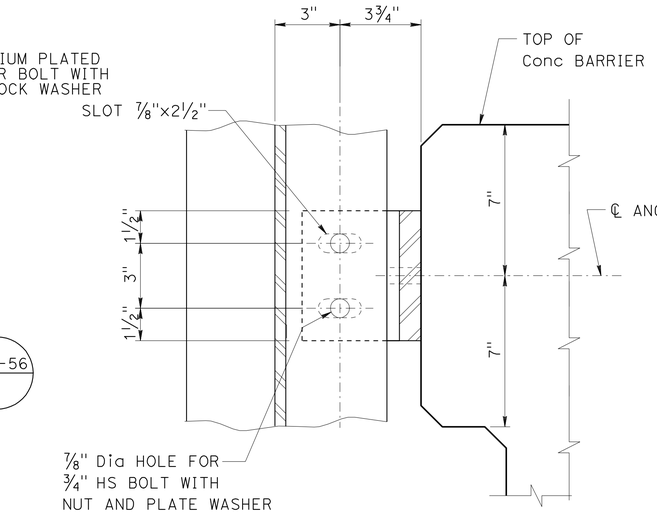

DETAIL "A-1"

NO SCALE

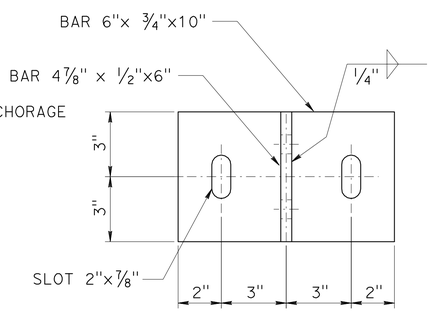

BAR DETAIL A-1

NO SCALE

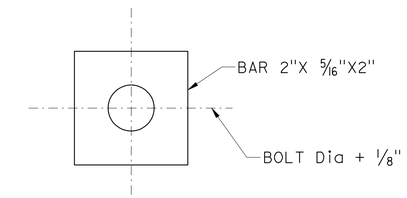

PLATE WASHER

NO SCALE
FOR ALL SLOTTED HOLES

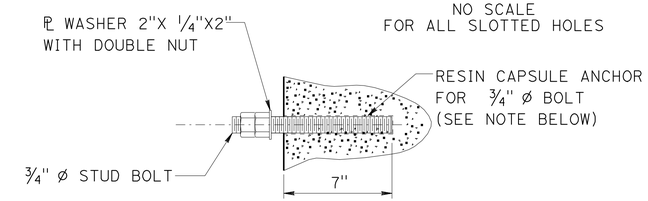

RESIN CAPSULE BOLT ANCHORAGE

NO SCALE

Note: Resin capsule anchorage is subject to approval of the Engineer. Installation procedures shall comply with manufacturer's instructions. Contractor to provide anchor bolt layout before anchor bolts are placed. Resin capsule bolt locations shall be layed out prior to pouring deck and barrier rail concrete to avoid interference with reinforcing. Resin capsule bolt anchors shall be installed in sound concrete free of cracks or delamination.

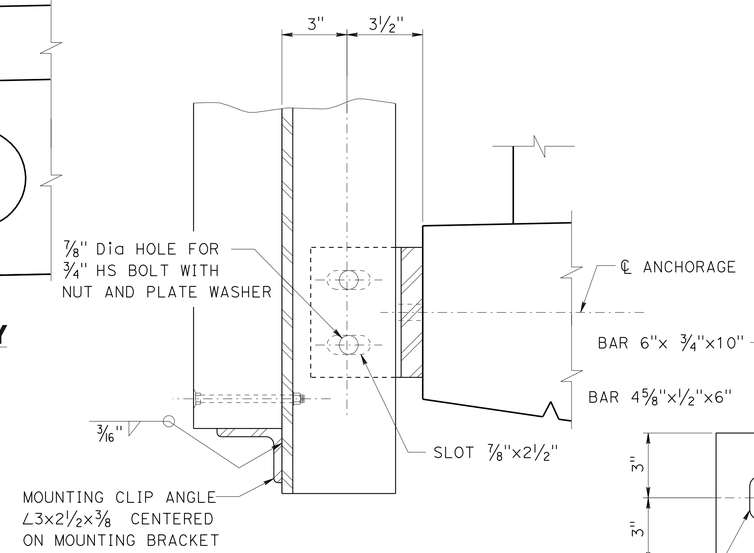

DETAIL "A-2"

NO SCALE

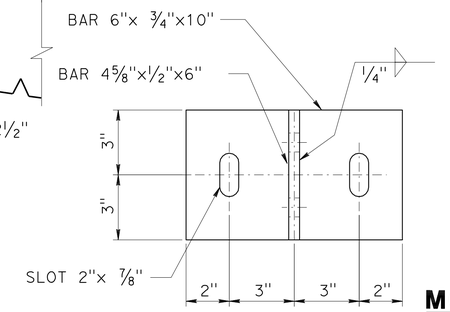

BAR DETAIL A-2

NO SCALE

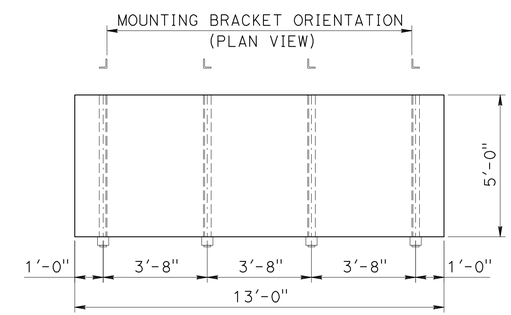

MOUNTING BRACKET ASSEMBLY SPACING SIGN (F) FSBT

NO SCALE

NOTES:

1. Existing bridge mounted sign anchors shall be cut flush with edge of deck by mechanical means. Damage to concrete surface resulting from cut shall be repaired at the Contractor's expense to the Engineer's satisfaction. Cut ends of anchors shall be coated with 2 coats of zinc rich primer.
2. For New Bridge Mounted Sign location, see "ROAD PLANS".
3. All bridge mounted sign steel shall be galvanized.
4. Bridge mounted sign anchorage to bridge has been designed using: AASHTO "Standard Specifications for Structural Signs, Luminaires, and Traffic Signals" Fifth Edition (2009) using the following parameters:
   V=85 MPH
   I_r = 1.15

NOTE:
THE CONTRACTOR SHALL VERIFY ALL CONTROLLING FIELD DIMENSIONS BEFORE ORDERING OR FABRICATING ANY MATERIAL.

Luqi Yang
DESIGN OVERSIGHT Luqi Yang
3-29-12
SIGN OFF DATE

	BY	CHECKED
DESIGN	T. Kirilov	V. J. Mosquera
DETAILS	J. Saldana	V. J. Mosquera
QUANTITIES	C. Stelea	R. Kelcher

PREPARED FOR THE STATE OF CALIFORNIA DEPARTMENT OF TRANSPORTATION

V. Jessica Mosquera
PROJECT ENGINEER

BRIDGE NO. 55-0280
POST MILES 1.2

BROOKHURST Ave UC (WIDEN)
BRIDGE MOUNTED SIGN DETAILS

DESIGN DETAIL SHEET (ENGLISH) (REV.7/16/10)

ORIGINAL SCALE IN INCHES FOR REDUCED PLANS 0 1 2 3

UNIT: 2295
PROJECT NUMBER & PHASE: 12000000791
CONTRACT NO.: 12-0C5701

DISREGARD PRINTS BEARING EARLIER REVISION DATES

REVISION DATES 09/16/11 12/22/11 02/17/12 03/15/12

SHEET 23 OF 26

FILE => 55-0280-u-sign01.dgn

USERNAME => s121614 DATE PLOTTED => 17-AUG-2012 TIME PLOTTED => 06:12

DIST	COUNTY	ROUTE	POST MILES TOTAL PROJECT	SHEET No	TOTAL SHEETS
12	Ora	91	0.9/5.4	757	885

REGISTERED ENGINEER — DATE: 3-15-2012

PLANS APPROVAL DATE: 8-13-12

REGISTERED PROFESSIONAL ENGINEER — S. PIRATHIVIRAJ — No. C71662 — EXP. 12/31/13 — CIVIL — STATE OF CALIFORNIA

The State of California or its officers or agents shall not be responsible for the accuracy or completeness of scanned copies of this plan sheet.

ORANGE COUNTY TRANSPORTATION AUTHORITY
550 S. MAIN STREET
ORANGE, CA 92863-1584

EARTH MECHANICS, INC.
17800 NEWHOPE STREET, SUITE B
FOUNTAIN VALLEY, CA 92708

BENCH MARK

Designation: 1G-164-05 Elev = 109.804
Described by OCS 2005 - Found 3¾" OCS Aluminum Benchmark Disk Stamped "1G-164-05", set in the Nothwesterly Corner of a 4.5 ft. by 11.0 ft. Concrete Catch Basin. Monument is located in the Southeasterly Corner of the intersection of Magnolia Avenue and Buckingham Street, 200 ft. ± from the centerline of Buckingham and 47 ft. Easterly of the centerline of Magnolia. Monument is set level with the Sidewalk

Designation: 2F-25-04 Elev = 162.700
Described by OCS 2004 - Found 3¾" OCS Aluminum Benchmark Disk Stamped "2F-25-04", set in the Nothwesterly Corner of a 7.5 ft. by 4.5 ft. Concrete Catch Basin. Monument is located in the Northeasterly Corner of the intersection of Harbor Boulevard and the Eastbound 91 Freeway On-Ramp, 39 ft. Northerly of the centerline of the On-Ramp and 40 ft. Easterly of the centerline of Harbor Boulevard. Monument is set level with the Sidewalk

Designation: 2D-35-86 Elev = 188.576
Described by OCS 2003 - Found 3¾" OCS Aluminum Benchmark Disk Stamped "2D-35-86", set in the Nothwesterly Corner of a 7 ft. by 14 ft. Concrete Catch Basin. Monument is located in the Southeasterly Corner of the intersection of Placentia Avenue and State College Boulevard, 38 ft. Easterly of the centerline of State College and 70.5 ft. Southerly of the centerline of Placentia. Monument is set level with the Sidewalk

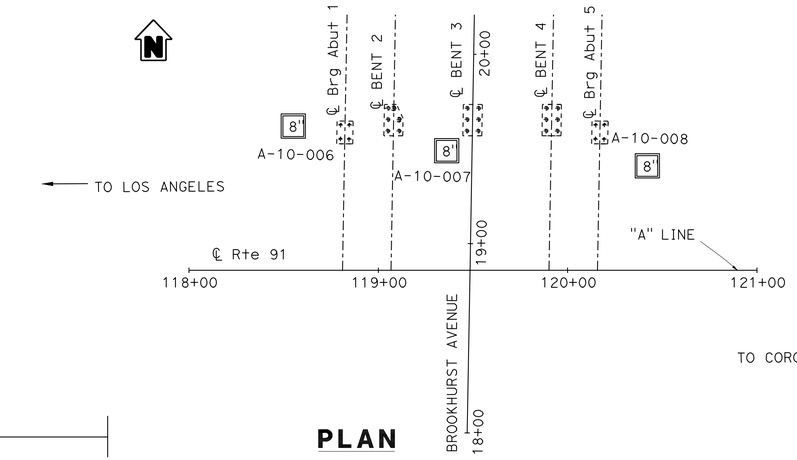

PLAN

1" = 40'

NOTES:

(1) This LOTB sheet was prepared in accordance with the Caltrans Soil and Rock Logging, Classification and Presentation Manual (June 2010).

(2) 2.4" samples were taken using a California Modified Sampler.

(3) An automatic trip hammer system consisting of a hammer weight of 140 lbs falling a distance of 30" was used to advance the drive sampler.

(4) Conversion factor from 2.4" Modified California Ring Sampler blowcounts to Standard Penetration Test (SPT) blowcounts is 0.5.

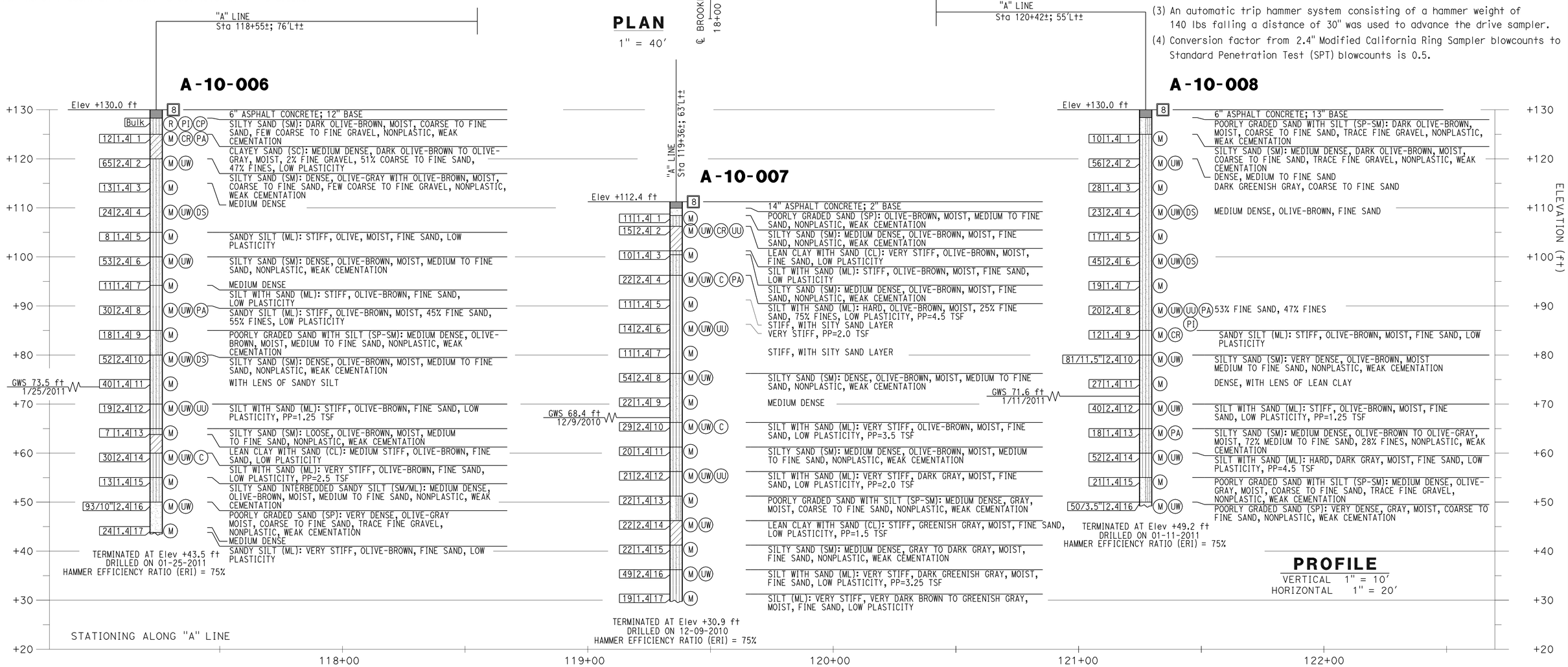

PROFILE

VERTICAL 1" = 10'
HORIZONTAL 1" = 20'

DESIGN OVERSIGHT: Luqi Yang	DRAWN BY: J. Fang	R. Jie — FIELD INVESTIGATION BY:	PREPARED FOR THE STATE OF CALIFORNIA DEPARTMENT OF TRANSPORTATION
3-29-12 SIGN OFF DATE	CHECKED BY: S. Pirathiviraj	DATE: 12/2010,1/2011	S. Pirathiviraj — PROJECT ENGINEER

BRIDGE No. 55-0280 — POST MILES 1.2

BROOKHURST Ave UC (WIDEN)

LOG OF TEST BORINGS 1 OF 3

GS GEOTECHNICAL LOG OF TEST BORINGS SHEET (ENGLISH) (REV. 7/16/10)

ORIGINAL SCALE IN INCHES FOR REDUCED PLANS 0 1 2 3

UNIT: 2295
PROJECT NUMBER & PHASE: 12000000791

DISREGARD PRINTS BEARING EARLIER REVISION DATES — REVISION DATES: 08/30/10 08/01/11 12/28/11 02/17/12

SHEET 24 OF 26

CONTRACT NO.: 12-0C5701 PROJECT ID:

FILE => 55-0280-z-ltb1.dgn

USERNAME => s121614 DATE PLOTTED => 17-AUG-2012 TIME PLOTTED => 06:12

9-16-96 TO ACCOMPANY PLANS DATED	DIST	COUNTY	ROUTE	POST MILES TOTAL PROJECT	SHEET NO	TOTAL SHEETS
	12	Ora	91	10/28	256	312

This information has been considered in preparing the plans for this project. Thomas D Gunther 1/22/96 Thomas D Gunther date

The State of California or its officers or agents shall not be responsible for the accuracy or completeness of electronic copies of this plan sheet

AS-BUILT PLANS
Not recoverable

ORIGINAL
BRIDGE DEPARTMENT

AS BUILT PLANS
Contract No SB-7VC13
Date Completed
Document No 7600 2107

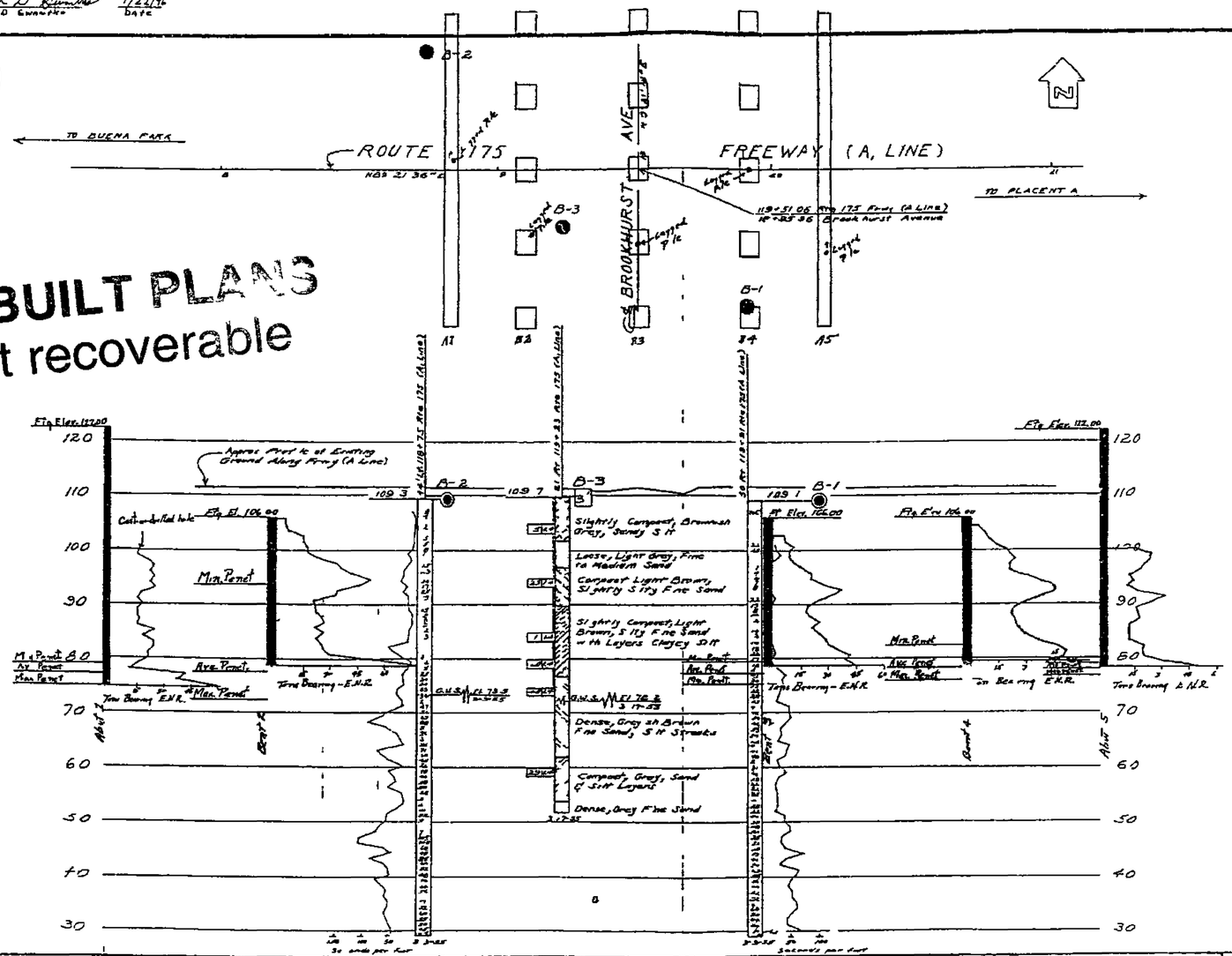

Design Pile Loading 45T
Type Pile Steel Pipe
Diameter 12"
Total Number Piles 103
Lineal Ft Piles Pile Built 3496 ft
Lineal Ft Piles Called for in Plans 5330
Hammer Vulcan No 1
Remarks
1- Pile holes drilled thru piles at abutments 12'± below existing grade and then driven
2- Est Tip Elev 60
Actual Tip El (Ave) 78±

TO ACCOMPANY PLANS DATED 8-13-12

DIVISION OF ENGINEERING SERVICES - GEOTECHNICAL SERVICES

As-Built Log of Test Borings sheet is considered an informational document only. As such, the State of California registration seal with signature, license number and registration certificate expiration date confirm that this is a true and accurate copy of the original document. This drawing is available and presented only for the convenience of any bidder, contractor or other interested party.

DIST.	COUNTY	ROUTE	POST MILES-TOTAL PROJECT	Sheet No.	Total sheets
12	Ora	91	0.9/5.4	758	885

GEOTECHNICAL PROFESSIONAL — DATE 3-15-2012

BROOKHURST Ave UC (WIDEN)
LOG OF TEST BORINGS 2 OF 3

NOTE: A COPY OF THIS LOG OF TEST BORINGS IS AVAILABLE AT OFFICE OF STRUCTURE MAINTENANCE AND INVESTIGATIONS, SACRAMENTO, CALIFORNIA

UNIT: 2295
PROJECT NUMBER & PHASE: 12000000791

BRIDGE No.	Sheet	of
55-0280	25	26

BM 1 A-54
Chisel 0" VE corner PCC Drive NB L Sta 107+88 P line 18 Lt
Elev 105 97

BM 12-A-54
Cut Sq top of washer Sta 116+87.70 P.L. P line and Brookhurst Houston
Elev 110 61

Test Boring by Bridge Dept

REGISTERED PROFESSIONAL ENGINEER
S. PIRATHIVIRAJ
No. C71662
EXP. 12/31/13
CIVIL
STATE OF CALIFORNIA

58 7VC13
W B James
May 16, 1958

CLASSIFICATION OF MATERIAL BASED ON STANDARD GRADE SIZE LIMITS

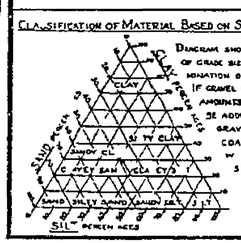

DIAGRAM SHOWING THE BASIS FOR ESTIMATING GRADE SIZE DISTRIBUTION USED IN DETERMINATION OF CLASS NAMES. IF GRAVEL IS PRESENT IN APPRECIABLE AMOUNTS THE TERM "GRAVELLY" MAY BE ADDED TO THE CLASS NAME, VIZ. GRAVELLY SAND. THE TERMS COARSE, MEDIUM AND FINE WHEN USED TO DESCRIBE SAND, SILT AND GRAVEL REFER TO STANDARD GRADE SIZE LIMITS.

LEGEND OF EARTH MATERIALS

Gravel; Sand; Silt; Clay; Sandy Clay or Clayey Sand; Sandy Silt or Silty Sand; Silty Clay or Clayey Silt; Peat and Organic Matter; Fill Material; Igneous Rock; Sedimentary Rock; Metamorphic Rock

LEGEND OF BORING OPERATIONS

Plan of any boring; Penetrometer; 2½ Cone Penetrometer; Sampler boring (dry); Rotary Boring (wet); Auger Boring (dry); Jet boring; Core boring; Test pit

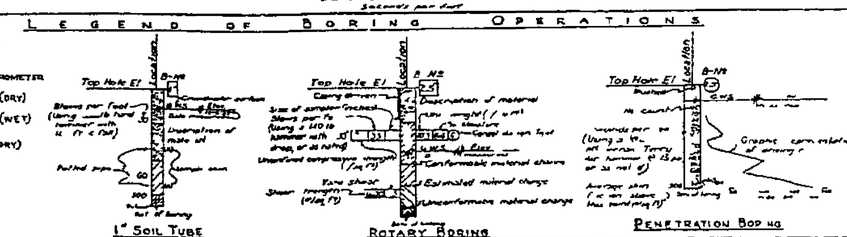

NOTES

The contractor's attention is directed to Section 2 Article ( ) of the Standard Specifications and to the Special Provisions accompanying the set of plans.
Classification of earth material as shown on this sheet is based upon field inspection and is not to be construed to imply mechanical analysis.

STATE OF CALIFORNIA
DEPARTMENT OF PUBLIC WORKS
DIVISION OF HIGHWAYS

BROOKHURST AVE U C

LOG OF TEST BORINGS

SCALE Vert 1" = 10' Horiz 1" = 10' BRIDGE 55 280 FILE 1 DATE 1 45 7 10

PRELIMINARY UP 4551 35

DESIGN OVERSIGHT	Be Nguyen
8-23-96	

NOTE:
ADDITIONAL AS BUILT FOUNDATION DATA MAY BE AVAILABLE AT THE DIVISION OF NEW TECHNOLOGY MATERIALS AND RESEARCH 5900 FOLSOM BOULEVARD SACRAMENTO CALIFORNIA 95819

	BY	CHECKED
DESIGN	J Bishop	Y Hu
DETAILS	K Dang	Y Hu
QUANTITIES	J Bishop	T Young

PREPARED FOR THE
STATE OF CALIFORNIA
DEPARTMENT OF TRANSPORTATION

J S Bishop
PROJECT ENGINEER

BRIDGE NO 55 280
POST MILE 12

BROOKHURST AVENUE UNDERCROSSING (WIDEN)
AS-BUILT LOG OF TEST BORINGS

ORIGINAL SCALE IN INCHES

CU 12209
FILENAME => 55-0280-z-ltb2.tif

DISREGARD PRINTS BEARING EARLIER REVISION DATES

REVISION DATES (PRELIMINARY STAGE ONLY) SHEET OF

TO ACCOMPANY PLANS DATED 8-13-12

DIVISION OF ENGINEERING SERVICES - GEOTECHNICAL SERVICES

As-Built Log of Test Borings sheet is considered an informational document only. As such, the State of California registration seal with signature, license number and registration certificate expiration date confirm that this is a true and accurate copy of the original document. This drawing is available and presented only for the convenience of any bidder, contractor or other interested party.

DIST.	COUNTY	ROUTE	POST MILES-TOTAL PROJECT	Sheet No.	Total Sheets
12	Ora	91	0.9/5.4	759	885

GEOTECHNICAL PROFESSIONAL — DATE 3-15-2012

BROOKHURST Ave UC (WIDEN)

LOG OF TEST BORINGS 3 OF 3

NOTE: A COPY OF THIS LOG OF TEST BORINGS IS AVAILABLE AT OFFICE OF STRUCTURE MAINTENANCE AND INVESTIGATIONS, SACRAMENTO, CALIFORNIA

UNIT: 2295
PROJECT NUMBER & PHASE: 12000000791

BRIDGE No.	Sheet	of
55-0280	26	26

The State of California or its officers or agents shall not be responsible for the accuracy or completeness of electronic copies of this plan sheet

DIST	COUNTY	ROUTE	POST MILES TOTAL PROJECT	SHEET NO	TOTAL SHEETS
12	Ora	91	1 0/2 8	255	312

GEOTECHNICAL PROFESSIONAL — 3/5/96

9-16-96
PLANS APPROVAL DATE

REGISTERED PROFESSIONAL ENGINEER — THOMAS D SWANTKO — NO. GE 813 — EXP 12/31/97 — GEOTECHNICAL — STATE OF CALIFORNIA

GEOFON Inc
5552 Cerritos Avenue Suite B
Cypress California 90630
Job Number 92 336

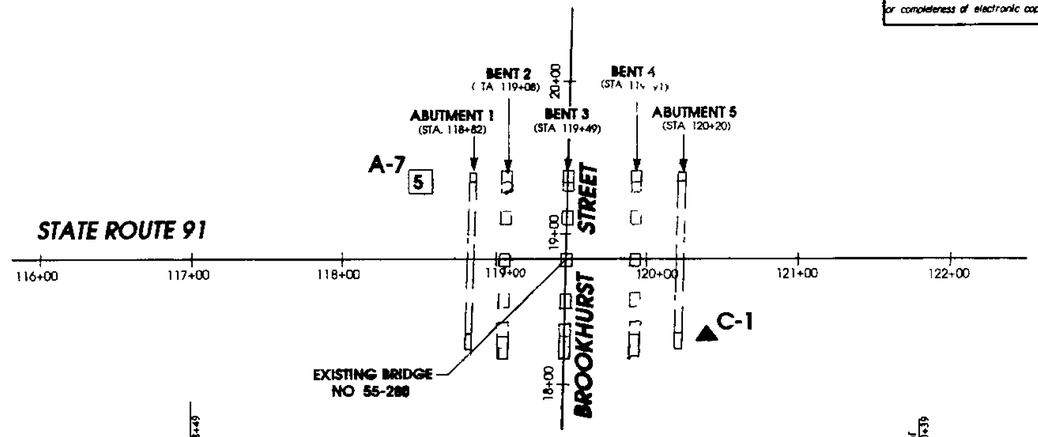

PHOTO CONTROL POINT 2080
NULL & FLASH ON SURFACE
274 FEET LEFT OF STATION 116+61 CENTERLINE ROUTE 91
ELEVATION 107 52

PLAN

SCALE 1 =50 FEET

REGISTERED PROFESSIONAL ENGINEER — S. PIRATHIVIRAJ — No. C71662 — EXP. 12/31/13 — CIVIL — STATE OF CALIFORNIA

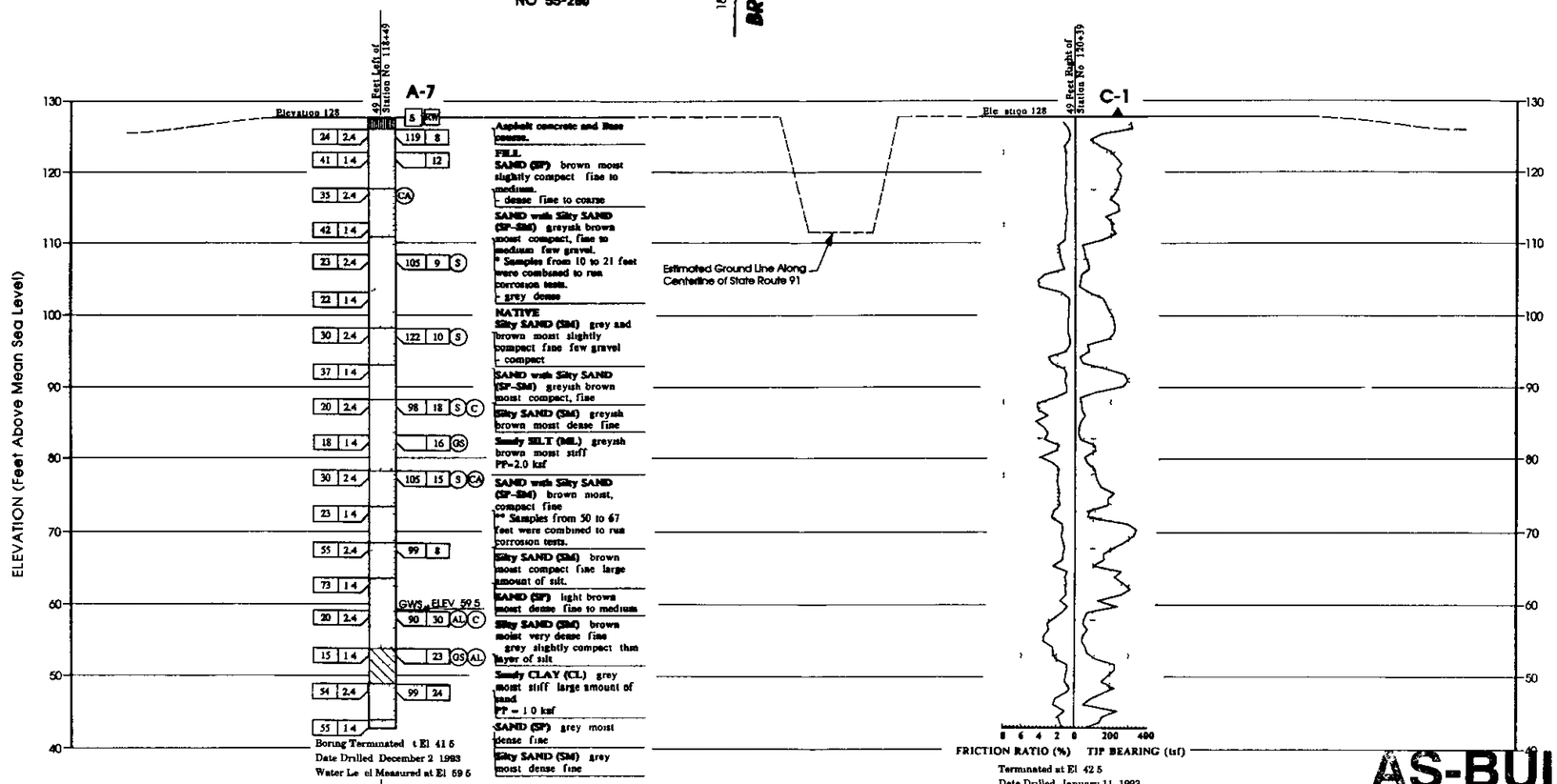

PROFILE

VERTICAL SCALE 1 =10 FEET
HORIZONTAL SCALE 1 =100 FEET

AS-BUILT PLANS
Not recoverable

NOTE

FOR ROTARY WASH BORING THE SOIL SAMPLER WAS DRIVEN WITH A 400 POUND HAMMER FALLING 18-INCHES THE BLOWCOUNTS FOR THE SAMPLER WHEN USING THE ROTARY WASH-TYPE DRILLING EQUIPMENT CAN BE CONVERTED TO APPROXIMATE N VALUE BY MULTIPLYING THE BLOWCOUNTS BY A CONVERSION FACTOR OF 0 75

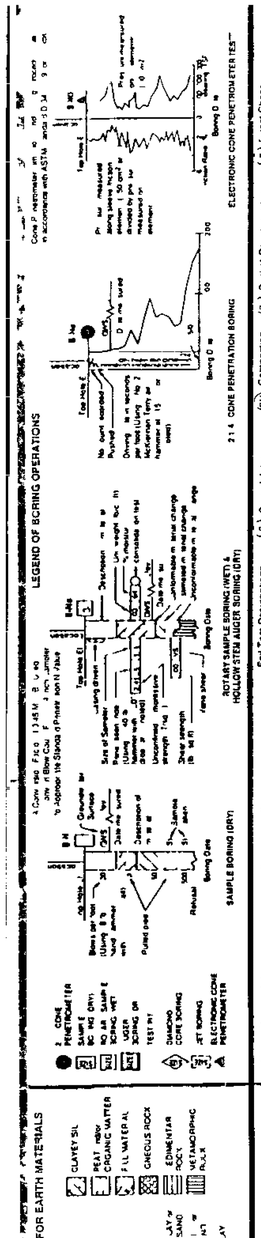

DESIGN OVERSIGHT — SIGN OFF DATE 4-23-96	DRAWN BY H LEE	FIELD INVESTIGATOR J KNIGHT	PREPARED FOR THE STATE OF CALIFORNIA DEPARTMENT OF TRANSPORTATION	PROJECT ENGINEER	BRIDGE NO 55 280 — POST MILE 0 96/2 8
	CHECKED BY D MAR	DATE SEE EXPLORATION			BROOKHURST AVENUE UNDERCROSSING (WIDEN) — LOG OF TEST BORINGS

ORIGINAL SCALE IN INCHES FOR REDUCED PLANS 0 1 2 3

CU 12209
EA 012411

DISREGARD PRINTS BEARING EARLIER REVISION DATES

REVISION DATES (PRELIMINARY STAGE ONLY) SHEET 15 OF 16

TL 6051 (REV 2-9)

FILENAME => 55-0280-z-ltb3.tif

PLATE 1

DIST	COUNTY	ROUTE	POST MILES TOTAL PROJECT	SHEET No	TOTAL SHEETS
12	Ora	91	0.9/5.4	760	885

REGISTERED CIVIL ENGINEER — DATE 3-15-12

8-13-12
PLANS APPROVAL DATE

REGISTERED PROFESSIONAL ENGINEER — Peter Liu — No. C48409 — Exp. 6/30/14 — CIVIL — STATE OF CALIFORNIA

The State of California or its officers or agents shall not be responsible for the accuracy or completeness of scanned copies of this plan sheet.

OCTA
550 S MAIN STREET
ORANGE, CA. 92868

PACRIM ENGINEERING
233 W CERRITOS AVE
ANAHEIM, CA 92805

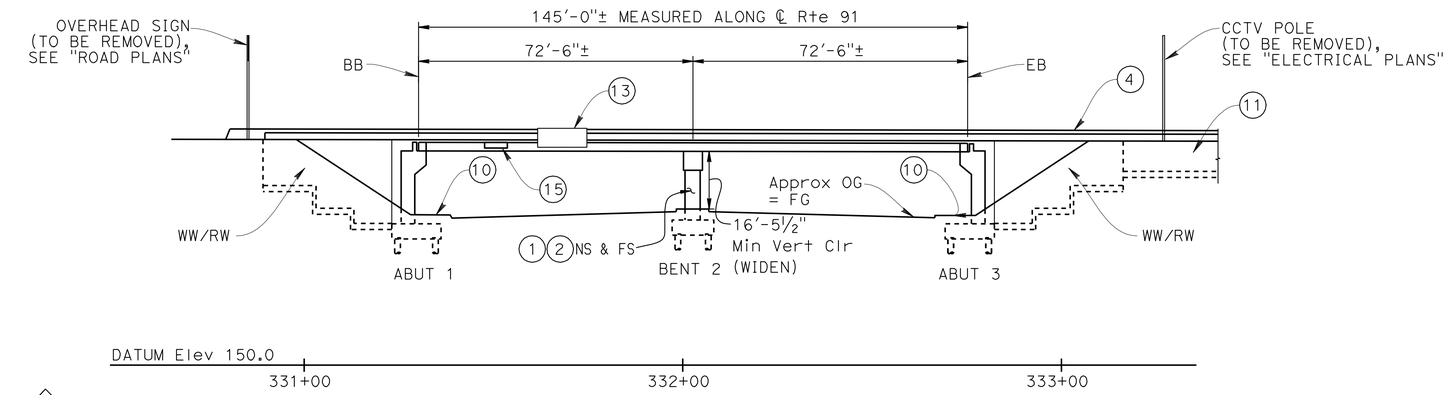

MIRROR ELEVATION

1" = 20'

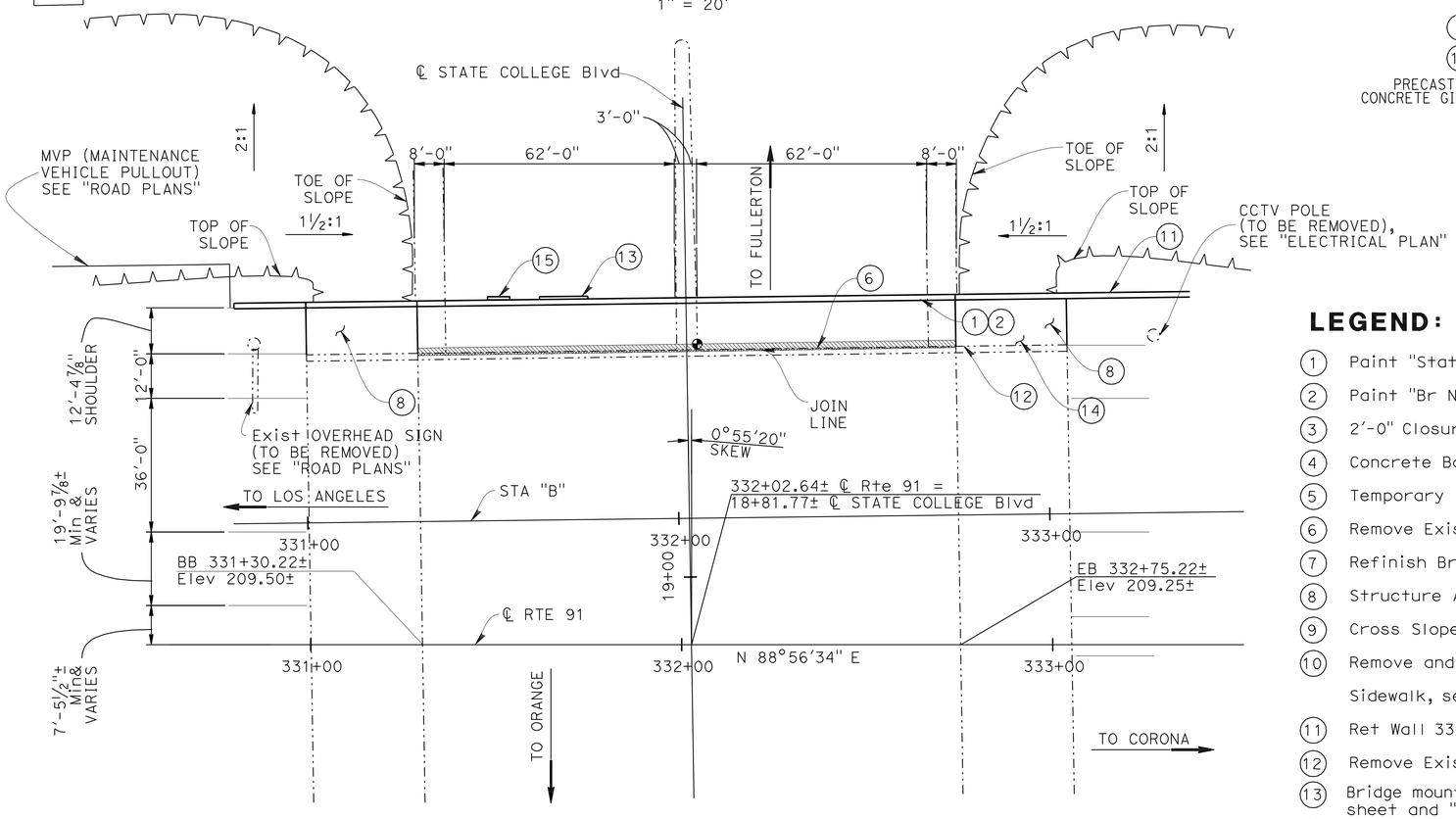

PLAN

1" = 20'

NOTE:
The contractor shall verify all controlling field dimensions before ordering or fabricating any material.

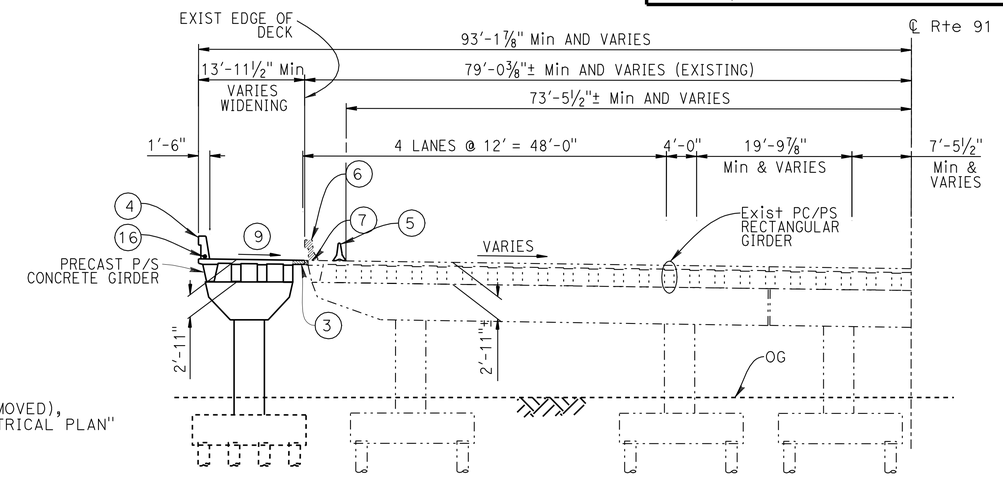

TYPICAL SECTION

1" = 10'

LEGEND:

1. Paint "State College Blvd Undercrossing"
2. Paint "Br No 55-0852" and year constructed
3. 2'-0" Closure Pour
4. Concrete Barrier Type 736
5. Temporary Rail, Type K, see "Road Plans"
6. Remove Exist Concrete Barrier Type 25 and Overhang
7. Refinish Bridge Deck
8. Structure Approach Type N(30S)
9. Cross Slope Varies
10. Remove and Replace Portion of Exist Sidewalk, see "Road Plans"
11. Ret Wall 335, see "RW Road Plans"
12. Remove Exist MBGR, see "Road Plans"
13. Bridge mounted sign, see "Bridge Mounted Sign Details" sheet and "Sign Plans"
14. Structure Approach Type R(30S)
15. Sign, see "Typical Section" sheet and "Sign Plans"
16. 1½" Electric conduit, see "Electrical Plans"

- Indicates Existing Structure
- Indicates New Construction
- Indicates MBGR
- Bridge Removal (Portion), Location F
- Closure Pour
- Point of Min Vert Clearance (Widen)
- STANDARD PLAN SHEET No.
- DETAIL No.

NOTES:

1. For General Notes and Index to Plans, see "Index to Plans" sheet.
2. For Pile Data Table, see "Foundation Plan" sheet.
3. Point of Min Bridge Vert Clearance of 15' per As-Built is not shown on the plans.
4. For Quantities, see "Index to Plans" sheet.

Luqi Yang — DESIGN OVERSIGHT Luqi Yang — 3-29-12 SIGN OFF DATE	DESIGN	BY A. Jin	CHECKED B. Araujo	LOAD & RESISTANCE FACTOR DESIGN	LIVE LOADING: HL93 W/"LOW-BOY"; PERMIT DESIGN VEHICLE
	DETAILS	BY Y. Fan	CHECKED B. Araujo	LAYOUT	BY A. Jin — CHECKED P. Liu
	QUANTITIES	BY A. Jin	CHECKED B. Araujo	SPECIFICATIONS	BY S. Sheikh — PLANS AND SPECS COMPARED S. Sheikh

PREPARED FOR THE STATE OF CALIFORNIA DEPARTMENT OF TRANSPORTATION

Peter L. Liu — PROJECT ENGINEER

BRIDGE No. 55-0852 — POST MILES 5.3

STATE COLLEGE Blvd UC (WIDEN)
GENERAL PLAN

DESIGN GENERAL PLAN SHEET (ENGLISH) (REV.7/16/10)

ORIGINAL SCALE IN INCHES FOR REDUCED PLANS 0 1 2 3

UNIT: 2295
PROJECT NUMBER & PHASE: 12000000791 CONTRACT NO.: 12-0C5701

DISREGARD PRINTS BEARING EARLIER REVISION DATES — REVISION DATES 03/15/12 09/16/11 12/13/11 02/17/12 — SHEET 1 OF 20

FILE => 55-0852I-a-gp01.DGN

USERNAME => s117606 DATE PLOTTED => 17-AUG-2012 TIME PLOTTED => 09:03

DIST	COUNTY	ROUTE	POST MILES TOTAL PROJECT	SHEET No	TOTAL SHEETS
12	Ora	91	0.9/5.4	761	885

REGISTERED CIVIL ENGINEER — DATE 3-15-12

8-13-12
PLANS APPROVAL DATE

REGISTERED PROFESSIONAL ENGINEER — Peter Liu — No. C48409 — Exp. 6/30/14 — CIVIL — STATE OF CALIFORNIA

The State of California or its officers or agents shall not be responsible for the accuracy or completeness of scanned copies of this plan sheet.

OCTA
550 S MAIN STREET
ORANGE, CA 92868

PACRIM ENGINEERING
233 W CERRITOS AVE
ANAHEIM, CA 92805

GENERAL NOTES
LOAD AND RESISTANCE FACTOR DESIGN

DESIGN: AASHTO LRFD Bridge Design Specifications, 4th edition and the Caltrans Amendments, preface dated September 2010; except that bridge details (including barrier and railing details) taken from Standard Plans 2010 and Standard Bridge 2011 XS sheets, and Bridge Abutments are designed using Bridge Design Specifications (1996 AASHTO with Revisions by Caltrans)

SEISMIC DESIGN:
Caltrans Seismic Design Criteria (SDC), Version 1.5 dated September 2009.

DEAD LOAD:
Includes 35 psf for future wearing surface.

LIVE LOADING:
HL93 and permit design load.

SEISMIC LOADING:
Soil profile: V_s^{30}=886 ft/sec
Maximun Moment Magnitude: 7.6
Peak Ground Acceleration 0.52g

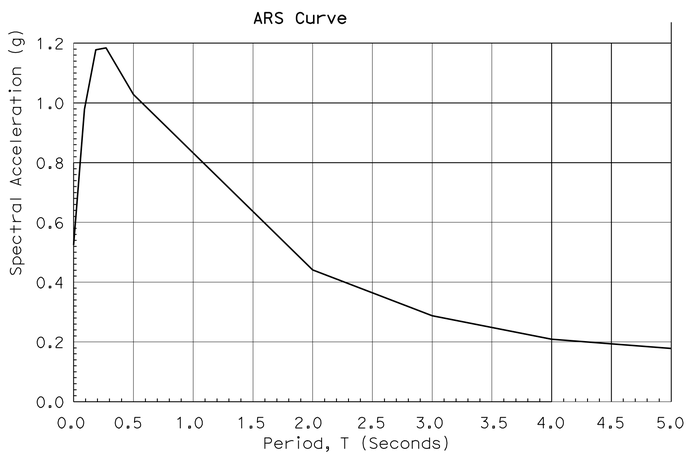

REINFORCED CONCRETE:

NEW:	EXISTING:
f_y = 60 ksi	f_y = 60 ksi
f'_c = 3.6 ksi	f'_c = 3.25 ksi
n = 8.0	

Prestressed Concrete:
See prestressing notes on "PRESTRESSED GIRDER" sheet.

NOTE:
The Contractor shall verify all controlling field dimensions before ordering or fabricating any material.

INDEX TO PLANS

SHEET No.	TITLE
1.	General Plan
2.	Index to Plans
3.	Bridge Removal Details
4.	Foundation Plan
5.	Abutment Layout
6.	Abutment Details No. 1
7.	Abutment Dettails No. 2
8.	Retaining Wall Layout
9.	Bent Layout
10.	Bent Details
11.	Typical Section
12.	Girder Layout
13.	Prestressed Girder
14.	Structure Approach Type N (30S)
15.	Structure Approach Type R (30S)
16.	Structure Approach Drainage Details
17.	Bridge Mounted Sign Details
18.	Log of Test Borings 1 of 3
19.	Log of Test Borings 2 of 3
20.	Log of Test Borings 3 of 3

STANDARD PLANS DATED 2010

A10A	Abbreviations (Sheet 1 of 2)
A10B	Abbreviations (Sheet 2 of 2)
A10C	Lines and Symbols (Sheet 1 of 3)
A10D	Lines and Symbols (Sheet 2 of 3)
A10E	Lines and Symbols (Sheet 3 of 3)
A10F	Legend - Soil (Sheet 1 of 2)
A10G	Legend - Soil (Sheet 2 of 2)
A62C	Limits of Payment for Excavation and Backfill - Bridge
B0-1	Bridge Details
B0-3	Bridge Details
B0-5	Bridge Details
B0-13	Bridge Details
B2-3	16" and 24" Cast-in-Drilled-Hole Concrete Pile
RSP B3-1A	Retaining Wall Type 1 (Case 1)
RSP B3-5	Retaining Wall Details No. 1
B6-21	Joint Seal (Maximum Movement Rating = 2")
B11-56	Concrete Barrier Type 736
B14-3	Communication and Sprinkler Control Conduits (Conduits less Than Size 4")
RSP P10	Concrete Pavement - Dowel Bar Details
T3A	Temporary Railing (Type K)

PLAN SYMBOLS

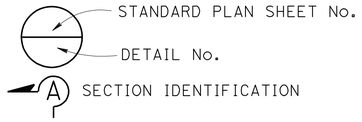

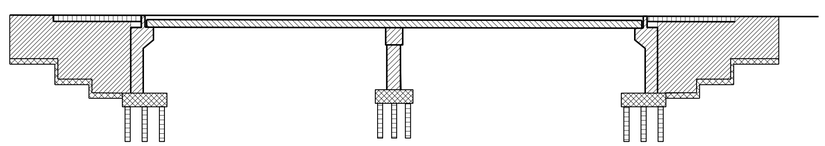

CONCRETE STRENGTH AND TYPE LIMITS
NO SCALE

LEGEND:

- Structural Concrete, Bridge (f'c = 6.0 ksi @ 28 days)
- PC/PS Concrete Girder, See "PRESTRESSED GIRDER" Sheet
- Structural Concrete, Bridge (f'c = 4.0 ksi @ 28 days)
- Structural Concrete, Bridge Footing (f'c = 4.0 ksi @ 28 days)
- Cost-in-Drilled Hole Concrete Pile (f'c = 4.0 ksi @ 28 days)
- Structural Concrete, Approach Slab

STATE COLLEGE Blvd UC (WIDEN) BR No. 55-0852

QUANTITIES

BRIDGE REMOVAL (PORTION), LOCATION F	LUMP	SUM
STRUCTURE EXCAVATION (BRIDGE)	190	CY
STRUCTURE EXCAVATION (RETAINING WALL)	260	CY
STRUCTURE BACKFILL (BRIDGE)	165	CY
STRUCTURE BACKFILL (RETAINING WALL)	415	CY
AGGREGATE BASE (APPROACH SLAB)	16	CY
16" CAST-IN-DRILLED-HOLE CONCRETE PILING	1,113	LF
STRUCTURAL CONCRETE, BRIDGE FOOTING	82	CY
STRUCTURAL CONCRETE, BRIDGE	168	CY
STRUCTURAL CONCRETE, RETAINING WALL	103	CY
STRUCTURAL CONCRETE, APPROACH SLAB (TYPE N)	28	CY
STRUCTURAL CONCRETE, APPROACH SLAB (TYPE R)	5	CY
FRACTURED RIB TEXTURE	850	SQFT
DRILL AND BOND DOWEL	264	LF
FURNISH PRECAST PRESTRESSED CONCRETE RECTANGULAR GIRDER (70'- 80')	6	EA
FURNISH PRECAST PRESTRESSED CONCRETE TRAPEZOIDAL GIRDER (70'- 80')	2	EA
ERECT PRECAST PRESTRESSED CONCRETE GIRDER	8	EA
REFINISH BRIDGE DECK	290	SQFT
JOINT SEAL (MR 1/2 ")	29	LF
BAR REINFORCING STEEL (BRIDGE)	55,000	LB
BAR REINFORCING STEEL (RETAINING WALL)	12,500	LB
HEADED BAR REINFORCEMENT	105	EA
FURNISH SIGN STRUCTURE (BRIDGE MOUNTED WITHOUT WALKWAY)	630	LB
INSTALL SIGN STRUCTURE (BRIDGE MOUNTED WITHOUT WALKWAY)	630	LB
SLOPE PAVING (CONCRETE)	8	CY
CONCRETE BARRIER (TYPE 736)	236	LF

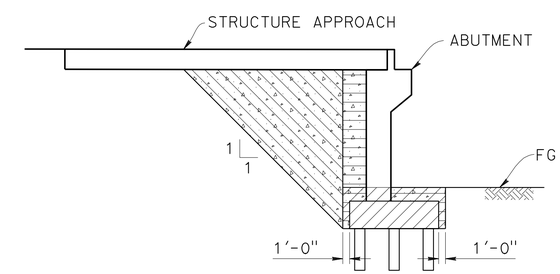

LIMITS OF EXPANSIVE SOIL EXCLUSION ZONE IN BRIDGE EMBANKMENT
NO SCALE

LEGEND:

- Low Expansive Material EI<50 and SE>20
- Structural Excavation (Bridge)
- Structural Backfill (Bridge)
- Roadway Excavation (See "Road Plans")

Note:
Transverse limit of Low Expansive Material shall be 12" from edges of abutment footing to end of existing abutment stem.

Luqi Yang
DESIGN OVERSIGHT — Luqi Yang
3-29-12
SIGN OFF DATE

	BY	CHECKED
DESIGN	A. Jin	B. Araujo
DETAILS	Y. Fan	B. Araujo
QUANTITIES	A. Jin	B. Araujo

PREPARED FOR THE STATE OF CALIFORNIA DEPARTMENT OF TRANSPORTATION

Peter L. Liu
PROJECT ENGINEER

BRIDGE No. 55-0852
POST MILES 5.3

STATE COLLEGE Blvd UC (WIDEN)
INDEX TO PLANS

DESIGN DETAIL SHEET (ENGLISH) (REV.7/16/10)

ORIGINAL SCALE IN INCHES FOR REDUCED PLANS 0 1 2 3

UNIT: 2295
PROJECT NUMBER & PHASE: 12000000791 CONTRACT NO.: 12-0C5701

DISREGARD PRINTS BEARING EARLIER REVISION DATES

REVISION DATES 03/15/12 09/14/11 12/28/11 02/24/12

SHEET 2 OF 20

FILE => 55-0852I-a-itp.DGN

USERNAME => s123631 DATE PLOTTED => 17-AUG-2012 TIME PLOTTED => 16:33

DIST	COUNTY	ROUTE	POST MILES TOTAL PROJECT	SHEET No	TOTAL SHEETS
12	Ora	91	0.9/5.4	762	885

REGISTERED CIVIL ENGINEER 3-15-12 DATE

8-13-12
PLANS APPROVAL DATE

REGISTERED PROFESSIONAL ENGINEER Peter Liu No. C48409 Exp. 6/30/14 CIVIL STATE OF CALIFORNIA

The State of California or its officers or agents shall not be responsible for the accuracy or completeness of scanned copies of this plan sheet.

OCTA
550 S MAIN STREET
ORANGE, CA 92868

PACRIM ENGINEERING
233 W CERRITOS AVE
ANAHEIM, CA 92805

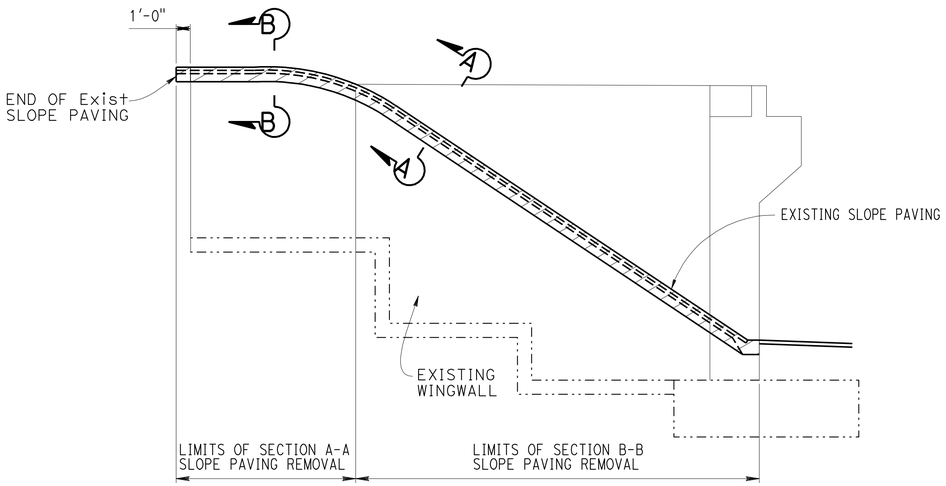

REMOVE SLOPE PAVING

NO SCALE

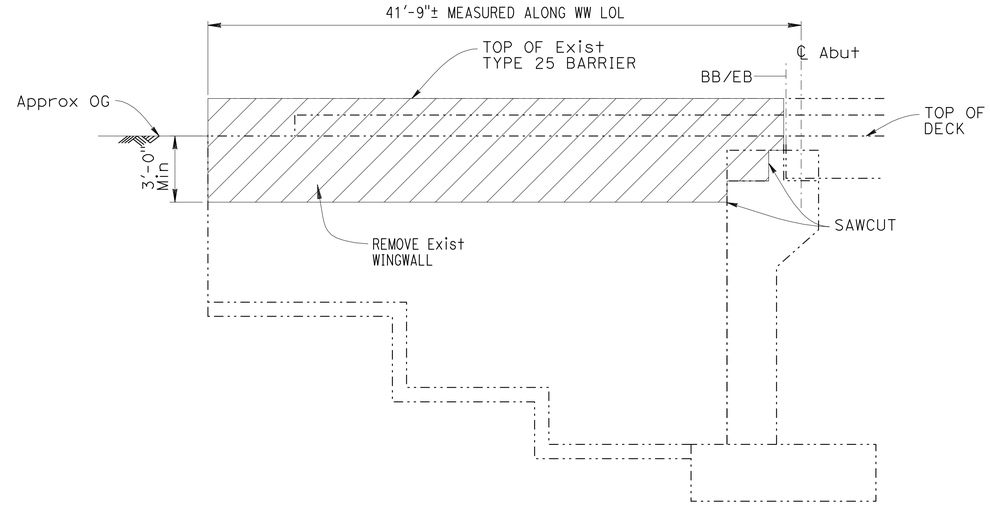

WINGWALL REMOVAL LIMITS

NO SCALE

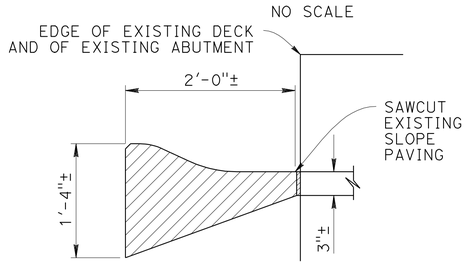

SECTION A-A

NO SCALE

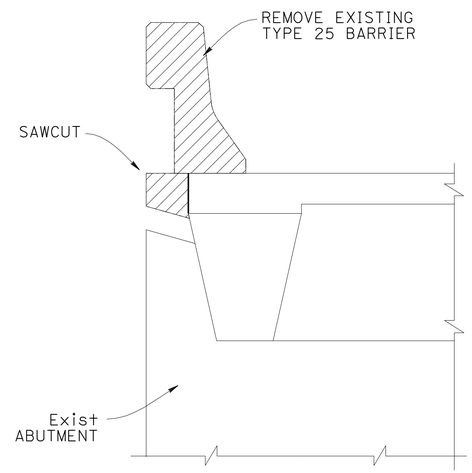

ABUTMENT CORNER REMOVAL DETAIL

NO SCALE

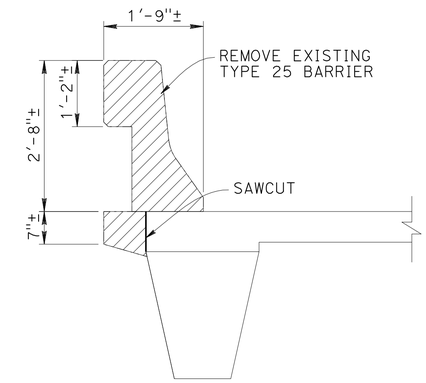

OVERHANG REMOVAL DETAIL

NO SCALE

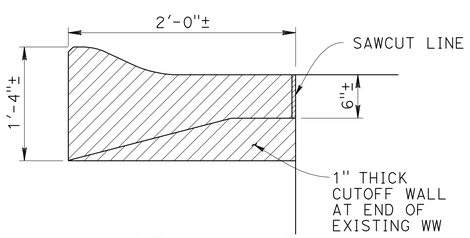

SECTION B-B

NO SCALE

NOTE:
The Contractor shall verify all controlling field dimensions before ordering or fabricating any material.

LEGEND:

Bridge Removal (Portion), Location F

Indicates Existing Structure

NOTES:

1. The limit of Overhang Removal is from BB to EB.
2. The limit of Barrier Removal is between ends of WW.
3. Overhang at Abut shall be removed to depth shown times width limits within the deck closure pour.

DESIGN OVERSIGHT Luqi Yang
3-29-12
SIGN OFF DATE

	BY	CHECKED
DESIGN	A. Jin	B. Araujo
DETAILS	Y. Fan	B. Araujo
QUANTITIES	A. Jin	B. Araujo

PREPARED FOR THE STATE OF CALIFORNIA DEPARTMENT OF TRANSPORTATION

Peter L. Liu
PROJECT ENGINEER

BRIDGE No. 55-0852
POST MILES 5.3

STATE COLLEGE Blvd UC (WIDEN)
BRIDGE REMOVAL DETAILS

DESIGN DETAIL SHEET (ENGLISH) (REV.7/16/10)

ORIGINAL SCALE IN INCHES FOR REDUCED PLANS 0 1 2 3

UNIT: 2295
PROJECT NUMBER & PHASE: 12000000791 CONTRACT NO.: 12-0C5701

DISREGARD PRINTS BEARING EARLIER REVISION DATES

REVISION DATES 08/30/10 09/16/11 12/16/11 03/15/12 SHEET 3 OF 20

FILE => 55-0852I-u-miscdt01.DGN

USERNAME => s121614 DATE PLOTTED => 17-AUG-2012 TIME PLOTTED => 06:13

DIST	COUNTY	ROUTE	POST MILES TOTAL PROJECT	SHEET No	TOTAL SHEETS
12	Ora	91	0.9/5.4	763	885

REGISTERED CIVIL ENGINEER — DATE 3-15-12

8-13-12
PLANS APPROVAL DATE

REGISTERED PROFESSIONAL ENGINEER — Peter Liu — No. C48409 — Exp. 6/30/14 — CIVIL — STATE OF CALIFORNIA

The State of California or its officers or agents shall not be responsible for the accuracy or completeness of scanned copies of this plan sheet.

OCTA
550 S MAIN STREET
ORANGE, CA 92868

PACRIM ENGINEERING
233 W CERRITOS AVE
ANAHEIM, CA 92805

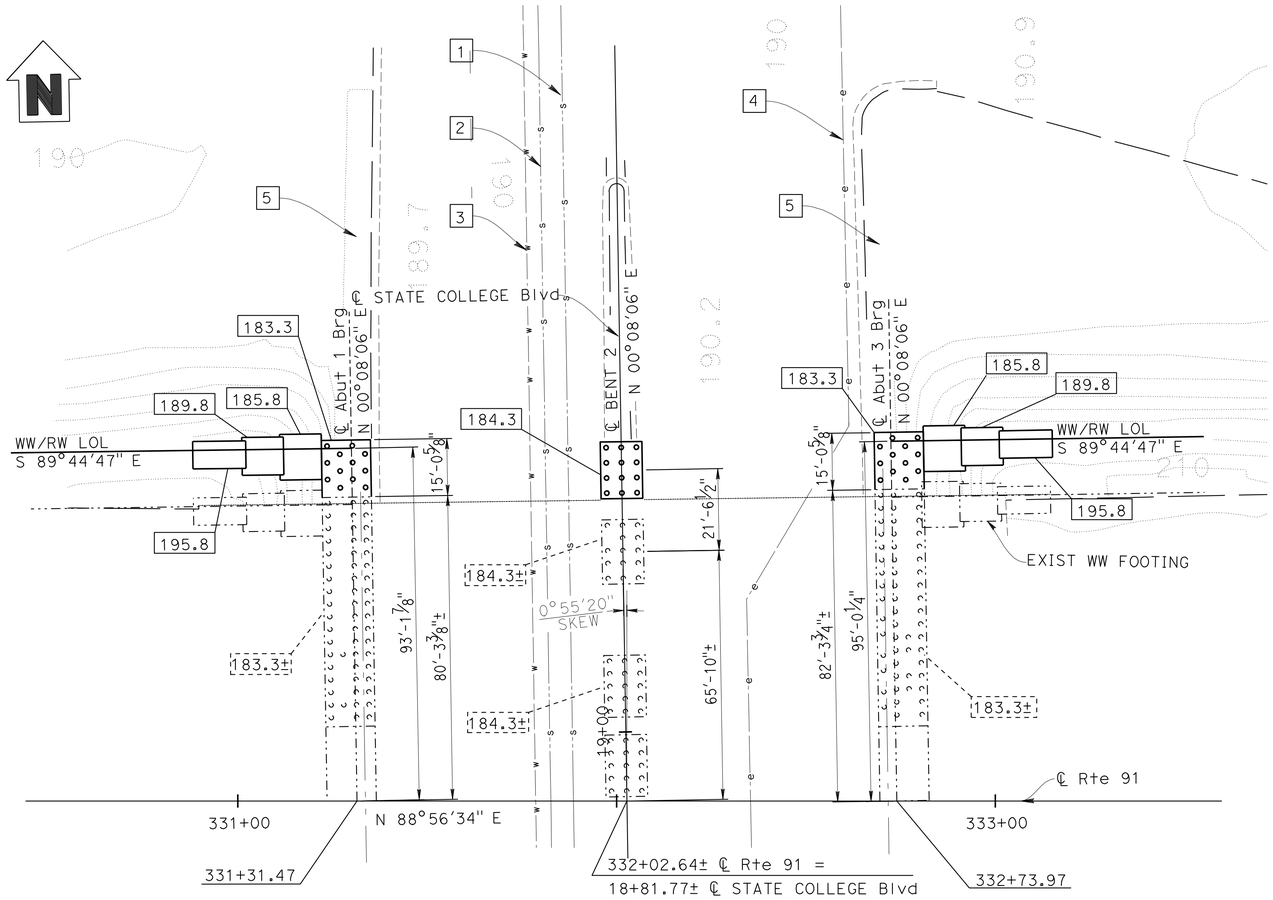

FOUNDATION PLAN

1" = 20'

PILE DATA TABLE

LOCATION	PILE TYPE	NOMINAL RESISTANCE (kips)		DESIGN TIP ELEVATION (ft)	SPECIFIED TIP ELEVATION (ft)
		COMPRESSION	TENSION		
Abut 1	16" CIDH	170	0	153(a) 158(d)	+153
BENT 2	16" CIDH	180	80	153(a) 160(b) 159(d)	+153
Abut 3	16" CIDH	170	0	153(a) 158(d)	+153

NOTES:

1. Design tip elevations are controlled by following demands: (a)Compression, (b)Tension, (c)Settlement, and (d)Lateral Load
2. There is no design tip elevation for Tension at Abutments 1 and 3.
3. There is no design tip elevation for Settlement at Abutments 1 and 3 and bent 2.
4. The specified tip elevations shall not be raised above the design tip elevation for Tension and Lateral Load.

NOTE:
The Contractor shall verify all controlling field dimensions before ordering or fabricating any material.

GEOTECHNICAL PROFESSIONAL — APPROVAL DATE

NOTES:

1. All Piles not Shown
2. Location of Existing Structure Foundations is Approximate.
3. For Right of Way and city limits, see "Roadway Plans"

LEGEND:

- 181.0 — Indicates Bottom of Footing Elevation
- 181.0 — Indicates Bottom of Existing Footing Elevation
- Indicates Existing Structure
- Indicates New Construction
- Indicates Existing Piling
- Indicates New Piling

WARNING:

The Contrator shall be aware of the existing 12kV underground electrical lines near Abut 3. Contractor shall work with extreme care during pile drilling construction and precast girder erection. Anaheim Public Utility District must be notified prior to start of construction work.

UTILITIES:

1. Existing 33" Sewer Line (OCSD)
2. Existing 10" Sewer Line (City of Anaheim)
3. Existing 10" Water Line (APUD)
4. Existing 12kV Electrical Line (APUD)
5. For existing conduits in existing sidewalk, see "Road Plans"

BENCHMARKS:

Elevations as shown hereon are in terms of the North American Vertical Datum of 1988 (NAVD88), based locally upon the following Benchmarks as published by the County of Orange:

Designation: 1G-164-05 Elev = 109.80
Described by OCS 2005 - Found 3¾" OCS Aluminum Benchmark Disk Stamped "1G-164-05", set in the northwesterly corner of a 4.5 ft. by 11.0 ft. Concrete Catch Basin. Monument is located in the southeasterly corner of the intersection of Magnolia Avenue and Buckingham Street, 200 ft. ± from the centerline of Buckingham and 47 ft. easterly of the centerline of Magnolia. Monument is set level with the sidewalk

Designation: 2F-25-04 Elev = 162.70
Described by OCS 2004 - Found 3¾" OCS Aluminum Benchmark Disk Stamped "2F-25-04", set in the northwesterly corner of a 7.5 ft. by 4.5 ft. Concrete Catch Basin. Monument is located in the northeasterly corner of the intersection of Harbor Boulevard and the Eastbound 91 Freeway On-Ramp, 39 ft. northerly of the centerline of the On-Ramp and 40 ft. easterly of the centerline of Harbor Boulevard. Monument is set level with the sidewalk

Designation: 2D-35-86 Elev = 188.58
Described by OCS 2003 - Found 3¾" OCS Aluminum Benchmark Disk Stamped "2D-35-86", set in the northwesterly corner of a 7 ft. by 14 ft. Concrete Catch Basin. Monument is located in the southeasterly corner of the intersection of Placentia Avenue and State College Boulevard, 38 ft. easterly of the centerline of State College and 70.5 ft. southerly of the centerline of Placentia. Monument is set level with the sidewalk

BASIS OF COORDINATES:

Bearings and Coordinates as shown hereon are in terms of the California Coordinate System of 1983 (CCS83, Epoch 1991.35), Zone 6; based locally upon the following Control Stations as published by the County of Orange:

Name	Northing (ft)-Grid	Easting (ft)-Grid
OCS GPS 3511R1	2257877.29	6037582.77
OCS GPS 3518	2260444.33	6053380.91
OCS GPS 5260	2257149.07	6063970.03

Luqi Yang
DESIGN OVERSIGHT — Luqi Yang
3-29-12
SIGN OFF DATE

SCALE: 1"=20' | VERT.DATUM NAVD 88 | HORZ.DATUM NAD 83 (1991.35)
PHOTOGRAMMETRY AS OF: 04-15-2010 | ALIGNMENT TIES
SURVEYED | BY B. Cox | DRAFTED | BY G. Ciampaglia
FIELD CHECKED | BY B. Cox | CHECKED | BY B. Cox

	BY	CHECKED
DESIGN	A. Jin	B. Araujo
DETAILS	Y. Fan	B. Araujo
QUANTITIES	A. Jin	B. Araujo

PREPARED FOR THE STATE OF CALIFORNIA DEPARTMENT OF TRANSPORTATION

PETER L. LIU
PROJECT ENGINEER

BRIDGE No. 55-0852
POST MILES 5.3

STATE COLLEGE Blvd UC (WIDEN)
FOUNDATION PLAN

FOUNDATION PLAN SHEET (ENGLISH) (REV.7/16/10)

ORIGINAL SCALE IN INCHES FOR REDUCED PLANS 0 1 2 3

UNIT: 2295
PROJECT NUMBER & PHASE: 12000000791 CONTRACT NO.: 12-0C5701

DISREGARD PRINTS BEARING EARLIER REVISION DATES

REVISION DATES 08/26/10 09/16/11 12/09/11 03/15/12 | SHEET 4 OF 20

FILE => 55-08521-e-fp101.DGN

USERNAME => s8121614 DATE PLOTTED => 17-AUG-2012 TIME PLOTTED => 06:13

DIST	COUNTY	ROUTE	POST MILES TOTAL PROJECT	SHEET No	TOTAL SHEETS
12	Ora	91	0.9/5.4	764	885

REGISTERED CIVIL ENGINEER 3-15-12 DATE

8-13-12
PLANS APPROVAL DATE

REGISTERED PROFESSIONAL ENGINEER Peter Liu No. C48409 Exp. 6/30/14 CIVIL STATE OF CALIFORNIA

The State of California or its officers or agents shall not be responsible for the accuracy or completeness of scanned copies of this plan sheet.

OCTA
550 S MAIN STREET
ORANGE, CA 92868

PACRIM ENGINEERING
233 W CERRITOS AVE
ANAHEIM, CA 92805

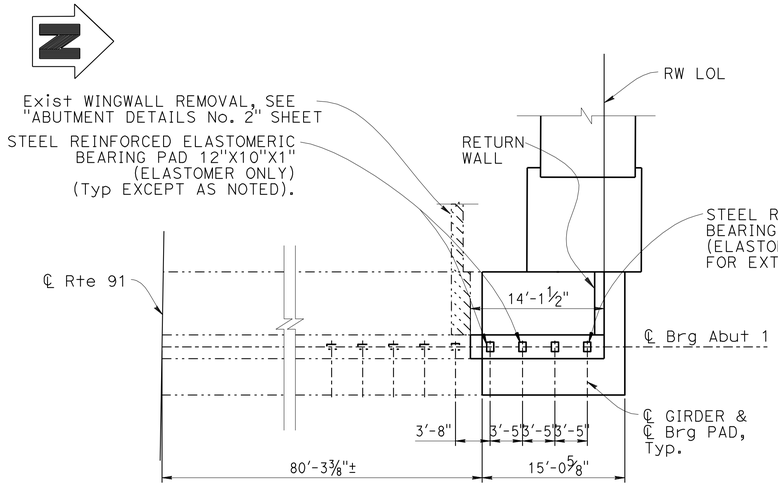

ABUTMENT 1 LAYOUT

1/8" = 1'-0"

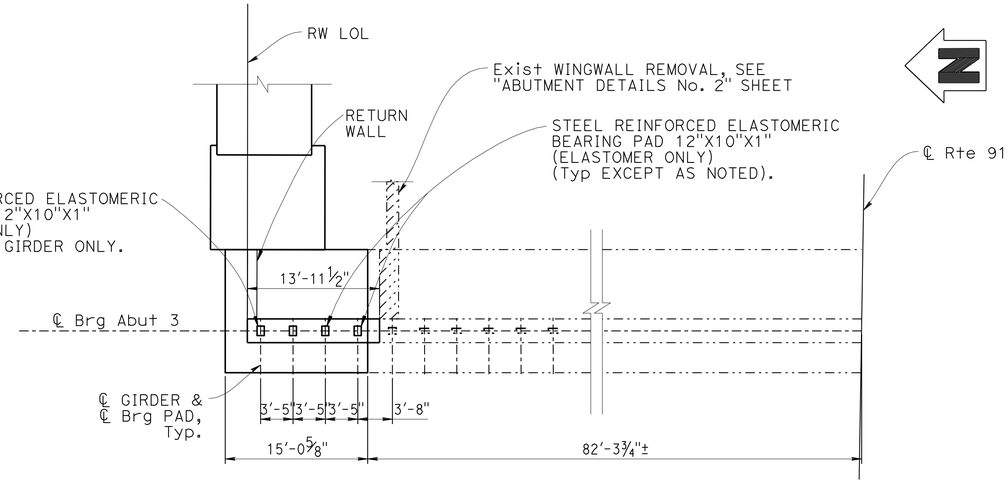

ABUTMENT 3 LAYOUT

1/8" = 1'-0"

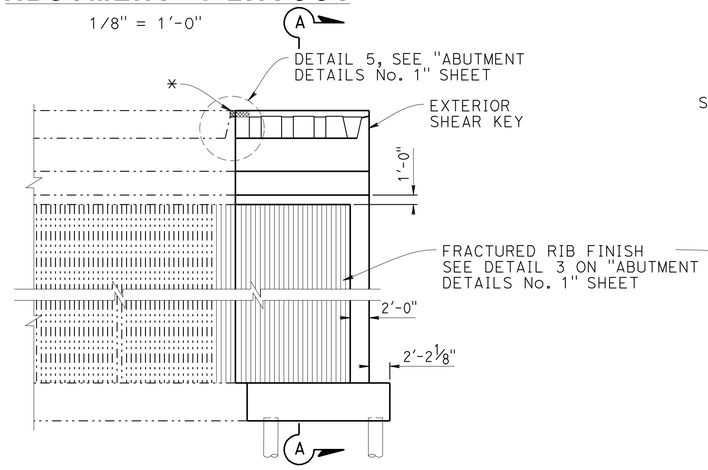

ABUTMENT 1 ELEVATION

1/8" = 1'-0"

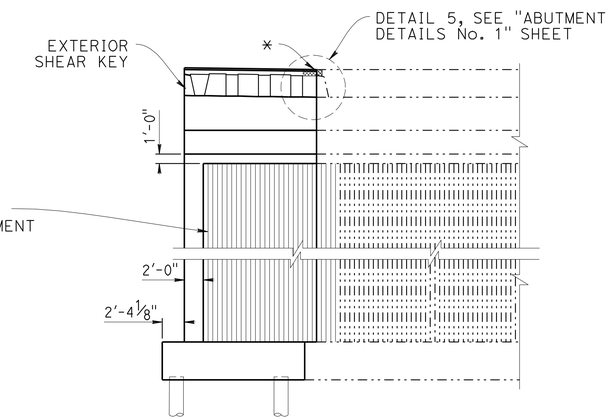

ABUTMENT 3 ELEVATION

1/8" = 1'-0"

LEGEND

- New Pile
- Exist Pile
- Indicates Existing Structure
- Indicates New Construction
- Bridge Removal (Portion), Location F
- Closure Pour
- * Match Existing Grade

NOTE:

For return wall details see "ABUTMENT DETAILS No. 2" sheet

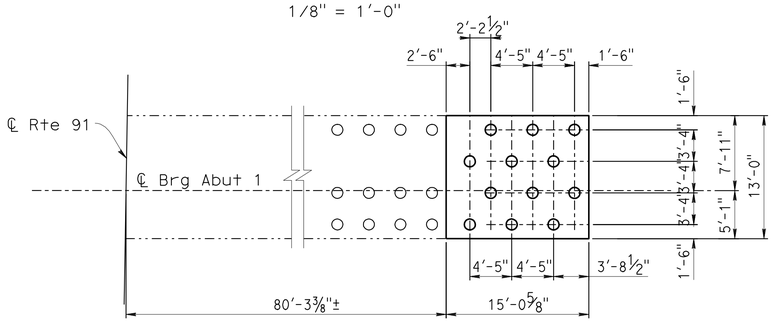

ABUTMENT 1 PILE LAYOUT

1/8" = 1'-0"

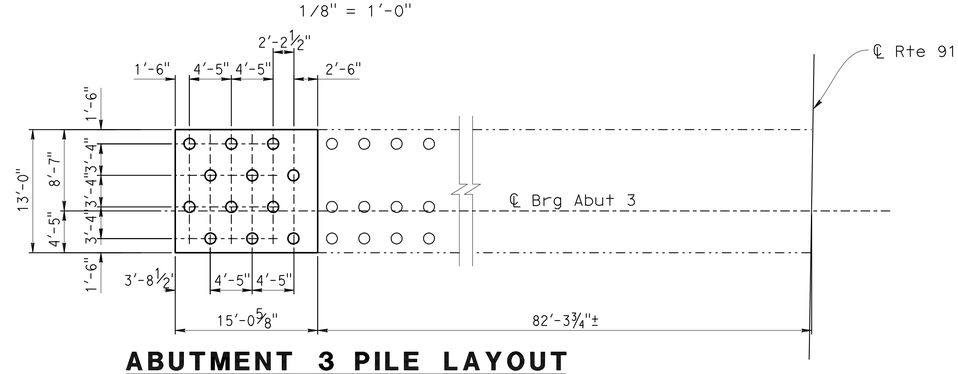

ABUTMENT 3 PILE LAYOUT

1/8" = 1'-0"

Note:
The Contractor shall verify all controlling field dimensions before ordering or fabricating any material.

DESIGN	BY A. Jin	CHECKED B. Araujo	
DETAILS	BY Y. Fan	CHECKED B. Araujo	
QUANTITIES	BY A. Jin	CHECKED B. Araujo	

Luqi Yang
DESIGN OVERSIGHT Luqi Yang
3-29-12
SIGN OFF DATE

PREPARED FOR THE STATE OF CALIFORNIA DEPARTMENT OF TRANSPORTATION

Peter L. Liu
PROJECT ENGINEER

BRIDGE No. 55-0852
POST MILES 5.3

STATE COLLEGE Blvd UC (WIDEN)

ABUTMENT LAYOUT

DESIGN DETAIL SHEET (ENGLISH) (REV.7/16/10)

ORIGINAL SCALE IN INCHES FOR REDUCED PLANS 0 1 2 3

UNIT: 2295
PROJECT NUMBER & PHASE: 12000000791 CONTRACT NO.: 12-0C5701

DISREGARD PRINTS BEARING EARLIER REVISION DATES

REVISION DATES 08/26/10 09/16/11 12/22/11 03/15/12

SHEET 5 OF 20

FILE => 55-08521-f-a01_1o01.DGN

USERNAME => s121614 DATE PLOTTED => 17-AUG-2012 TIME PLOTTED => 06:13

DIST	COUNTY	ROUTE	POST MILES TOTAL PROJECT	SHEET No	TOTAL SHEETS
12	Ora	91	0.9/5.4	765	885

REGISTERED CIVIL ENGINEER — DATE 3-15-12

8-13-12
PLANS APPROVAL DATE

REGISTERED PROFESSIONAL ENGINEER — Peter Liu — No. C48409 — Exp. 6/30/14 — CIVIL — STATE OF CALIFORNIA

The State of California or its officers or agents shall not be responsible for the accuracy or completeness of scanned copies of this plan sheet.

OCTA
550 S MAIN STREET
ORANGE, CA 92868

PACRIM ENGINEERING
233 W CERRITOS AVE
ANAHEIM, CA 92805

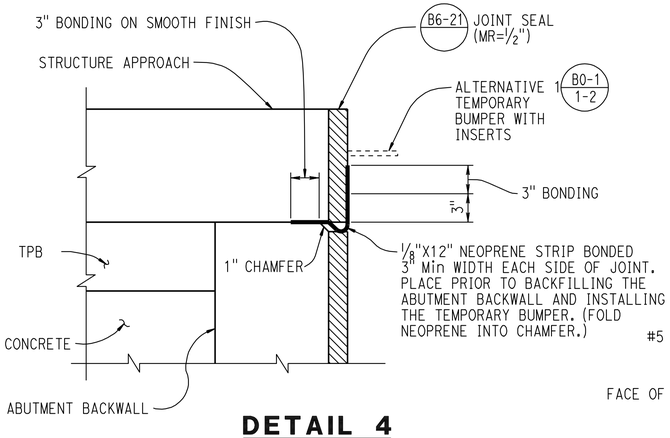

DETAIL 4
NO SCALE

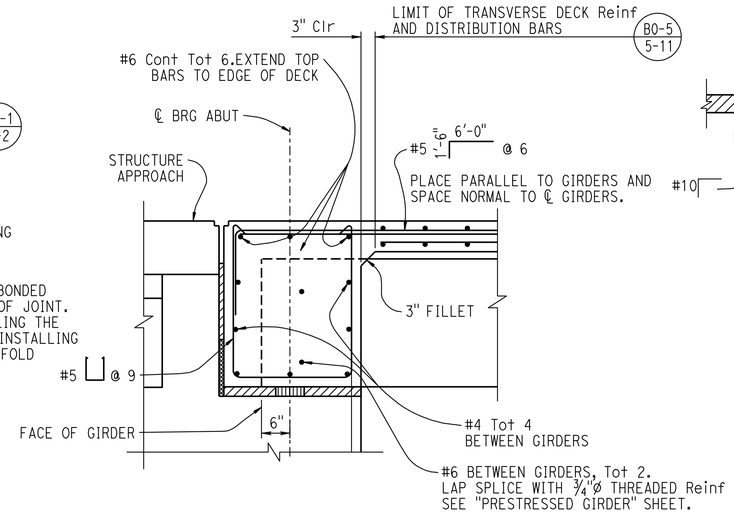

END DIAPHRAGM DETAIL
3/4" = 1'-0"

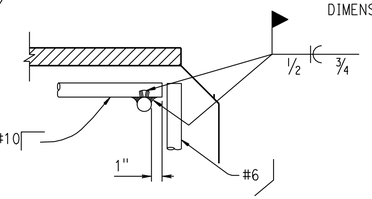

DETAIL 1
NO SCALE

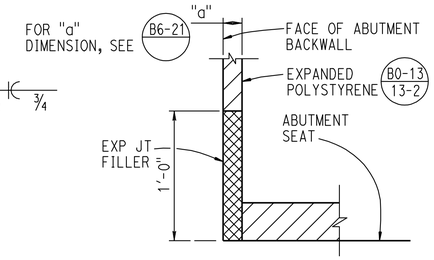

DETAIL 2
NO SCALE

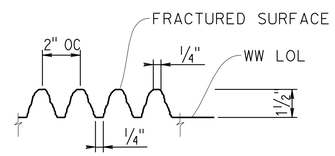

DETAIL 3
NO SCALE

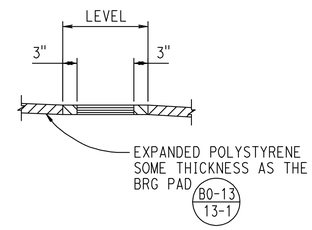

SECTION B-B
3/4" = 1'-0"

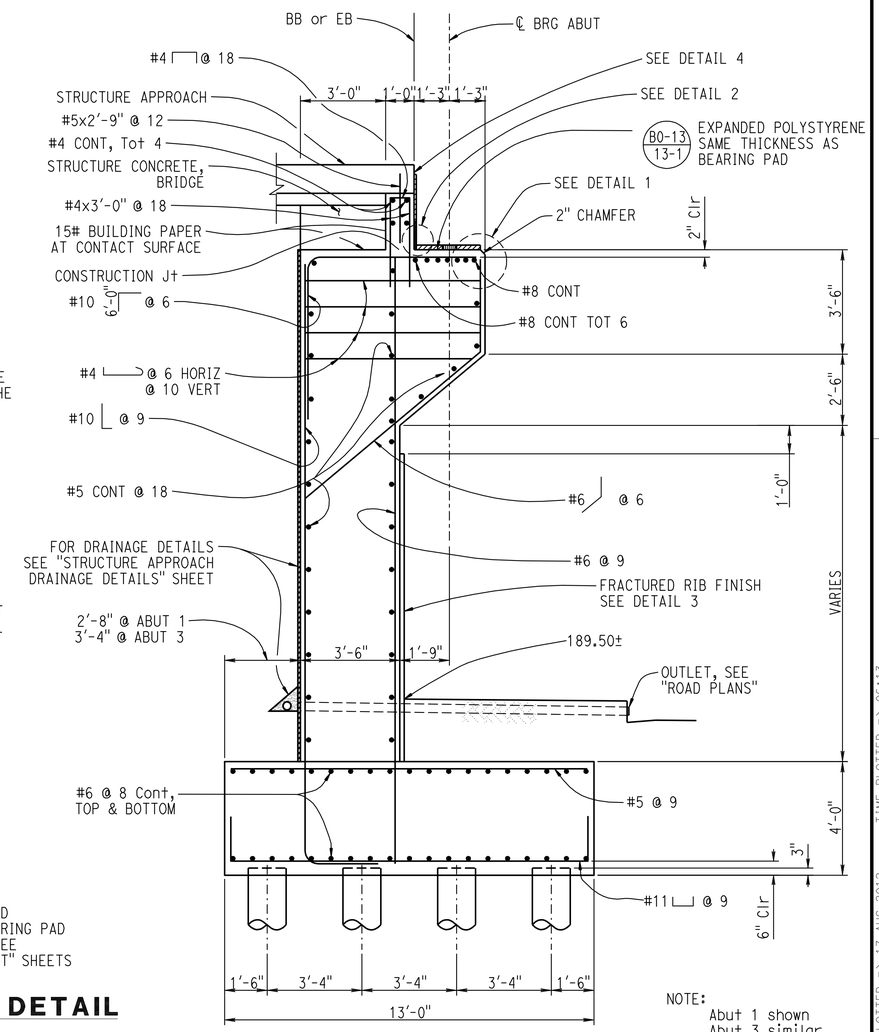

NOTE:
Abut 1 shown
Abut 3 similar.

SECTION A-A
3/8" = 1'-0"

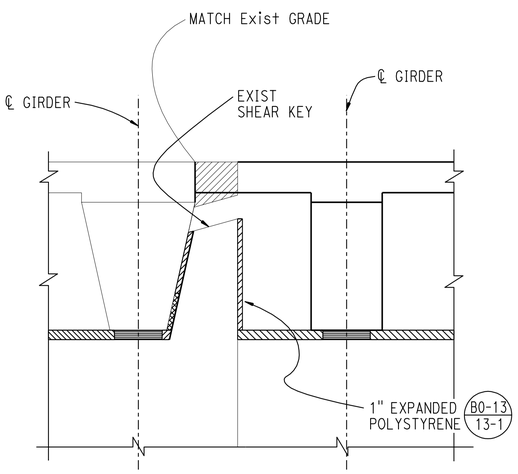

DETAIL 5
3/4" = 1'-0"

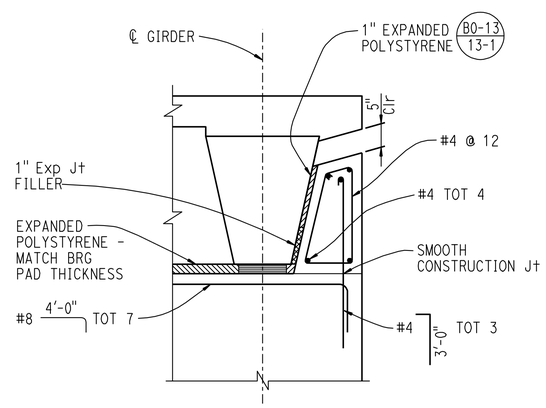

EXTERIOR SHEAR KEY
3/4" = 1'-0"

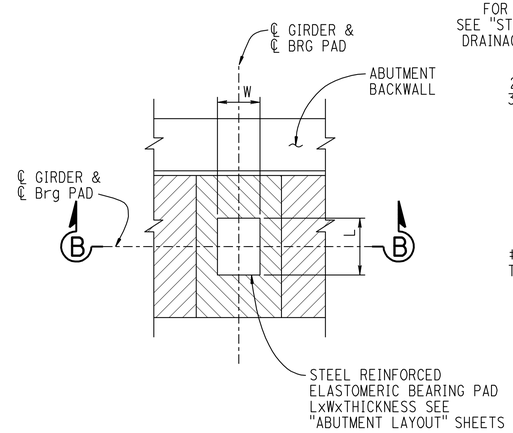

ELASTOMERIC BEARING PAD DETAIL
3/4" = 1'-0"

NOTE:
The Contractor shall verify all controlling field dimensions before ordering or fabricating any material.

DESIGN OVERSIGHT Luqi Yang 3-29-12 SIGN OFF DATE	DESIGN	BY A. Jin	CHECKED B. Araujo
	DETAILS	BY Y. Fan	CHECKED B. Araujo
	QUANTITIES	BY A. Jin	CHECKED B. Araujo

PREPARED FOR THE STATE OF CALIFORNIA DEPARTMENT OF TRANSPORTATION

Peter L. Liu
PROJECT ENGINEER

BRIDGE No. 55-0852
POST MILES 5.3

STATE COLLEGE Blvd UC (WIDEN)
ABUTMENT DETAILS No. 1

DESIGN DETAIL SHEET (ENGLISH) (REV.7/16/10)

ORIGINAL SCALE IN INCHES FOR REDUCED PLANS 0 1 2 3

UNIT: 2295
PROJECT NUMBER & PHASE: 12000000791 CONTRACT NO.: 12-0C5701

DISREGARD PRINTS BEARING EARLIER REVISION DATES

REVISION DATES: 08/06/10 09/14/11 12/09/11 03/15/12

SHEET 6 OF 20

FILE => 55-08521-f-a01dt01.DGN

USERNAME => s121614 DATE PLOTTED => 17-AUG-2012 TIME PLOTTED => 06:13

DIST	COUNTY	ROUTE	POST MILES TOTAL PROJECT	SHEET No	TOTAL SHEETS
12	Ora	91	0.9/5.4	766	885

REGISTERED CIVIL ENGINEER — DATE 3-15-12

8-13-12
PLANS APPROVAL DATE

REGISTERED PROFESSIONAL ENGINEER — Peter Liu — No. C48409 — Exp. 6/30/14 — CIVIL — STATE OF CALIFORNIA

The State of California or its officers or agents shall not be responsible for the accuracy or completeness of scanned copies of this plan sheet.

OCTA
550 S MAIN STREET
ORANGE, CA 92868

PACRIM ENGINEERING
233 W CERRITOS AVE
ANAHEIM, CA 92805

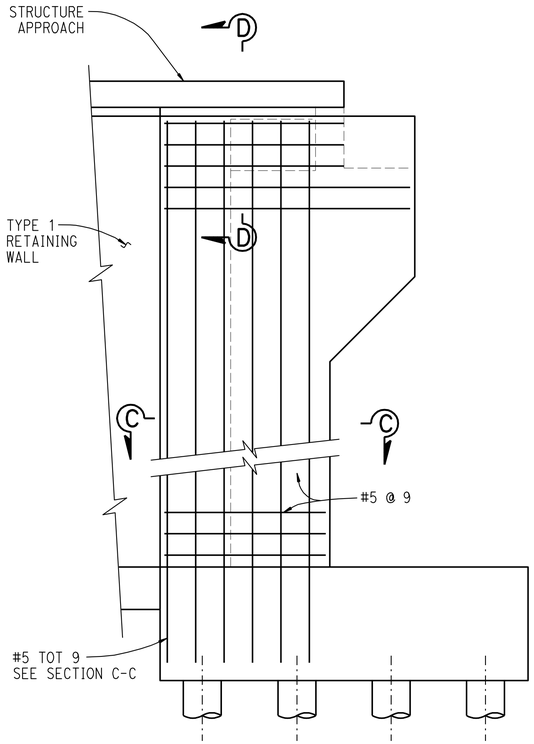

NOTES:
1. For information not shown, see section A-A on "Abutment Details No. 1" sheet.
2. Abut 1 shown, Abut 3 similar.

RETURN WALL DETAIL 1
3/8" = 1'-0"

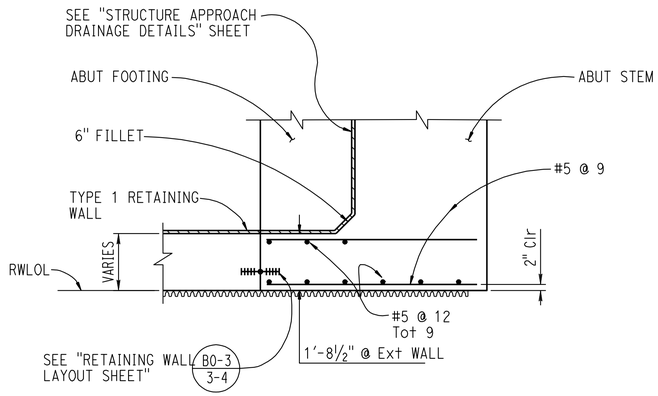

SECTION C-C
1/2" = 1'-0"

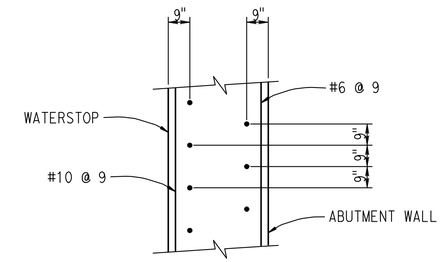

ABUTMENT WALL DOWEL PATTERN DETAIL
3/8" = 1'-0"

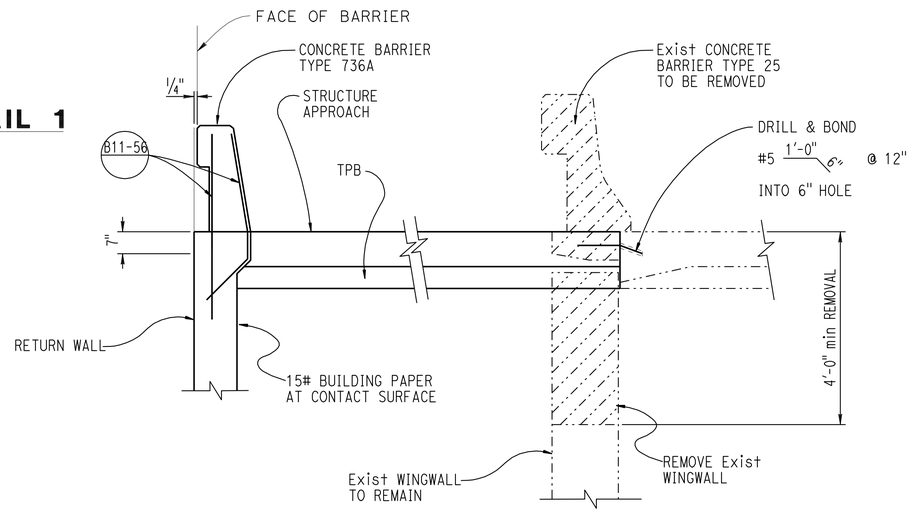

SECTION D-D
1/2" = 1'-0"

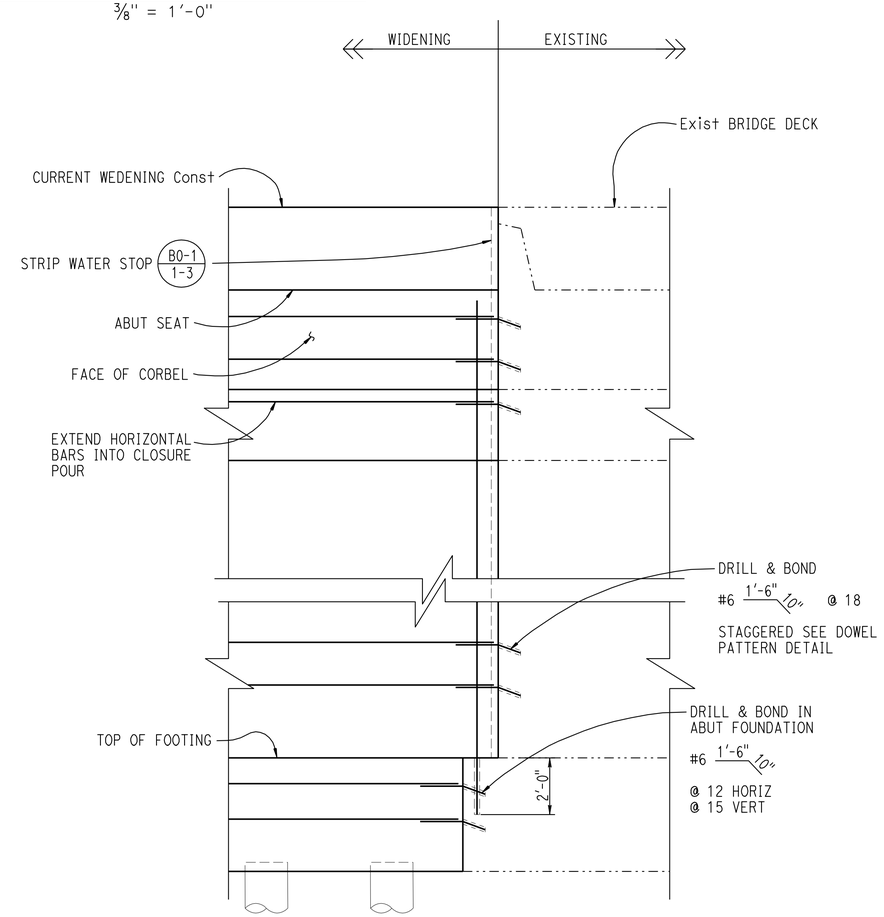

* Closure pour shall not be placed before the construction of the superstructure is completed.

ABUTMENT ELEVATION
3/8" = 1'-0"

NOTE:
The Contractor shall verify all controlling field dimensions before ordering or fabricating any material.

DESIGN OVERSIGHT Luqi Yang — 3-29-12 SIGN OFF DATE

	BY	CHECKED
DESIGN	A. Jin	B. Araujo
DETAILS	Y. Fan	B. Araujo
QUANTITIES	A. Jin	B. Araujo

PREPARED FOR THE STATE OF CALIFORNIA DEPARTMENT OF TRANSPORTATION

Peter L. Liu — PROJECT ENGINEER

BRIDGE No. 55-0852 — POST MILES 5.3

STATE COLLEGE Blvd UC (WIDEN)
ABUTMENT DETAILS No. 2

DESIGN DETAIL SHEET (ENGLISH) (REV.7/16/10)

ORIGINAL SCALE IN INCHES FOR REDUCED PLANS 0 1 2 3

UNIT: 2295
PROJECT NUMBER & PHASE: 12000000791 CONTRACT NO.: 12-0C5701

DISREGARD PRINTS BEARING EARLIER REVISION DATES — REVISION DATES 08/30/10 09/16/11 12/02/11 03/15/12 — SHEET 7 OF 20

FILE => 55-0852I-f-a01dt02.DGN

USERNAME => s12614 DATE PLOTTED => 17-AUG-2012 TIME PLOTTED => 06:14

DIST	COUNTY	ROUTE	POST MILES TOTAL PROJECT	SHEET No	TOTAL SHEETS
12	Ora	91	0.9/5.4	767	885

REGISTERED CIVIL ENGINEER — DATE 3-15-12

8-13-12
PLANS APPROVAL DATE

REGISTERED PROFESSIONAL ENGINEER — Peter Liu — No. C48409 — Exp. 6/30/14 — CIVIL — STATE OF CALIFORNIA

The State of California or its officers or agents shall not be responsible for the accuracy or completeness of scanned copies of this plan sheet.

OCTA
550 S MAIN STREET
ORANGE, CA 92868

PACRIM ENGINEERING
233 W CERRITOS AVE
ANAHEIM, CA 92805

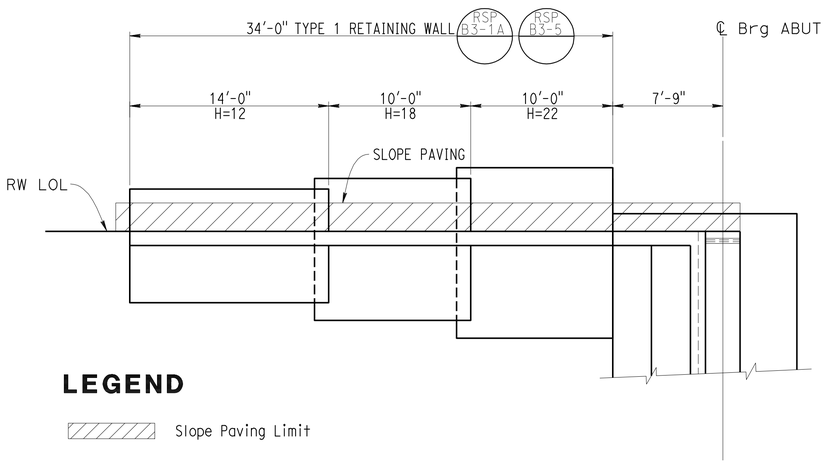

LEGEND

Slope Paving Limit

PLAN

3/16"=1'-0"

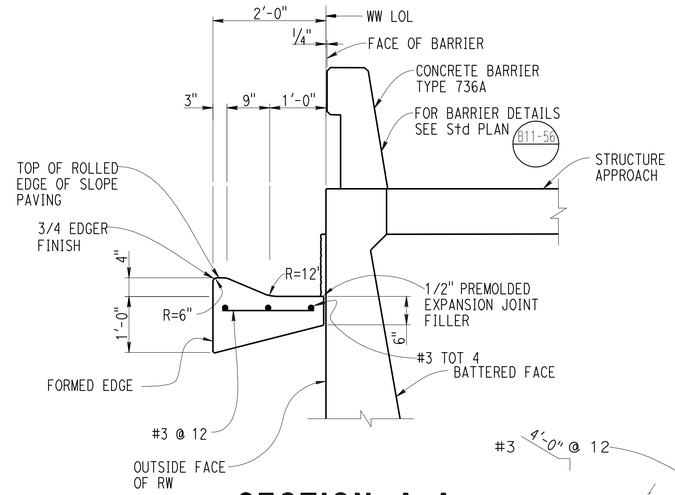

SECTION A-A

No scale

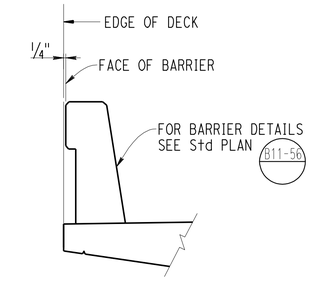

BARRIER TYPE 736 ON BRIDGE DECK

NO SCALE

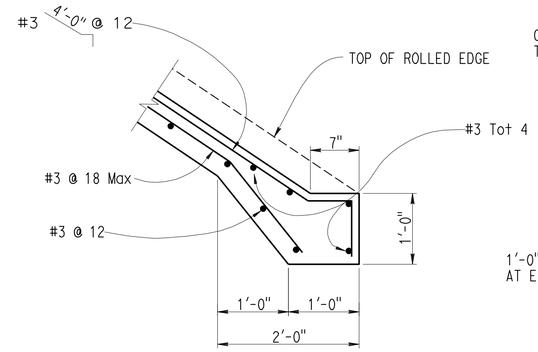

DETAIL 1

No scale

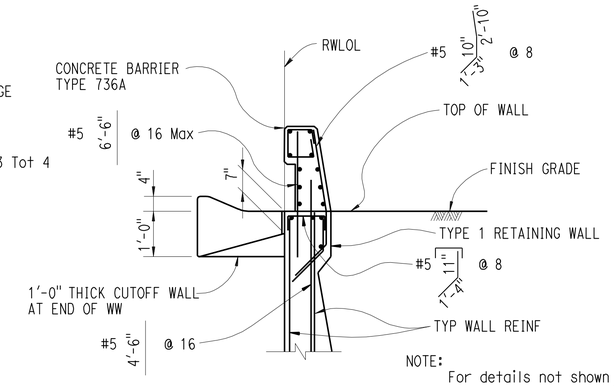

NOTE:
For details not shown see B11-56

SECTION B-B

NO SCALE

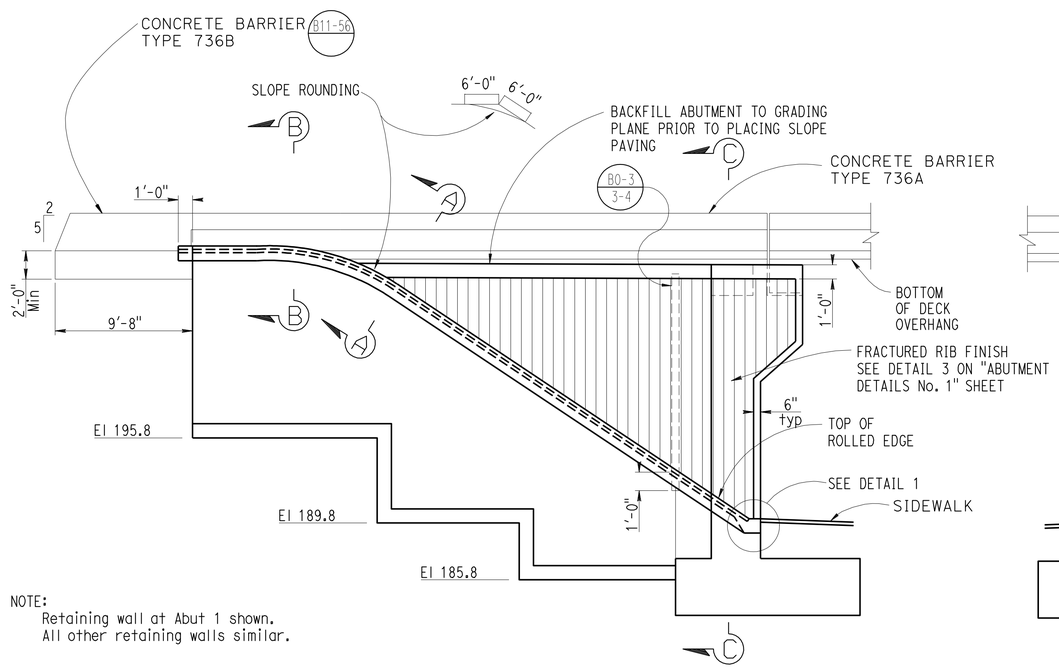

NOTE:
Retaining wall at Abut 1 shown.
All other retaining walls similar.

Abut 1 MIRROR ELEVATION

3/16"=1'-0"

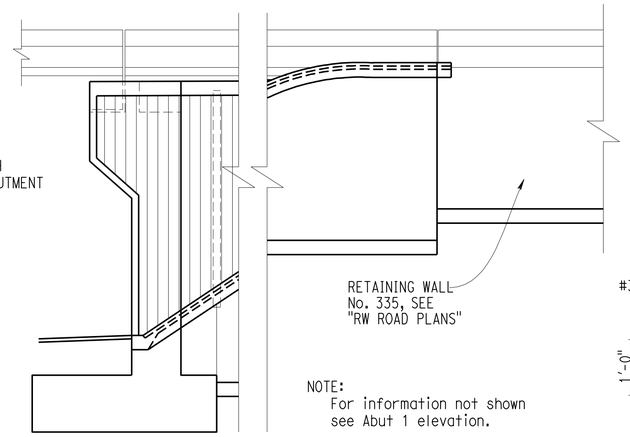

NOTE:
For information not shown see Abut 1 elevation.

Abut 3 MIRROR ELEVATION

3/16"=1'-0"

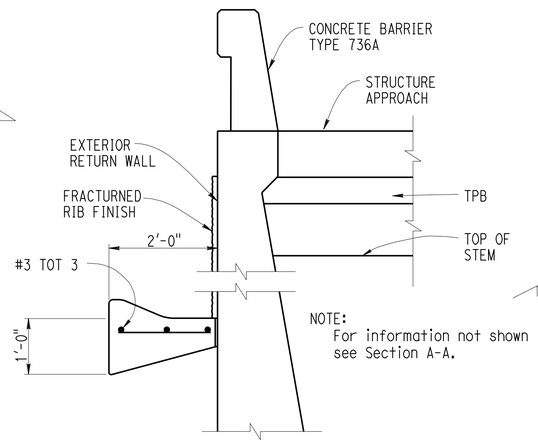

NOTE:
For information not shown see Section A-A.

SECTION C-C

NO SCALE

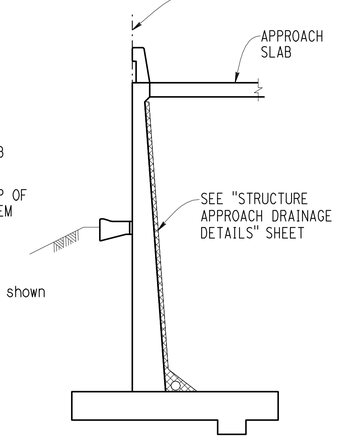

RETAINING WALL SECTION

NO SCALE

NOTE:
The Contractor shall verify all controlling field dimensions before ordering or fabricating any material.

DESIGN OVERSIGHT Luqi Yang — 3-29-12 — SIGN OFF DATE

	BY	CHECKED
DESIGN	A. Jin	B. Araujo
DETAILS	Y. Fan	B. Araujo
QUANTITIES	A. Jin	B. Araujo

PREPARED FOR THE STATE OF CALIFORNIA DEPARTMENT OF TRANSPORTATION

Peter L. Liu — PROJECT ENGINEER

BRIDGE No. 55-0852 — POST MILES 5.3

STATE COLLEGE Blvd UC (WIDEN)
RETAINING WALL LAYOUT

DESIGN DETAIL SHEET (ENGLISH) (REV.7/16/10)

ORIGINAL SCALE IN INCHES FOR REDUCED PLANS 0 1 2 3

UNIT: 2295
PROJECT NUMBER & PHASE: 12000000791 CONTRACT NO.: 12-0C5701

DISREGARD PRINTS BEARING EARLIER REVISION DATES — REVISION DATES 03/15/12 09/18/11 12/02/11 02/17/12 — SHEET 8 OF 20

FILE => 55-0852I-f-a01rdt01.DGN

USERNAME => s12161d DATE PLOTTED => 17-AUG-2012 TIME PLOTTED => 06:14

DIST	COUNTY	ROUTE	POST MILES TOTAL PROJECT	SHEET No	TOTAL SHEETS
12	Ora	91	0.9/5.4	768	885

REGISTERED CIVIL ENGINEER — DATE 3-15-12

8-13-12
PLANS APPROVAL DATE

REGISTERED PROFESSIONAL ENGINEER — Peter Liu — No. C48409 — Exp. 6/30/14 — CIVIL — STATE OF CALIFORNIA

The State of California or its officers or agents shall not be responsible for the accuracy or completeness of scanned copies of this plan sheet.

OCTA
550 S MAIN STREET
ORANGE, CA 92868

PACRIM ENGINEERING
233 W CERRITOS AVE
ANAHEIM, CA 92805

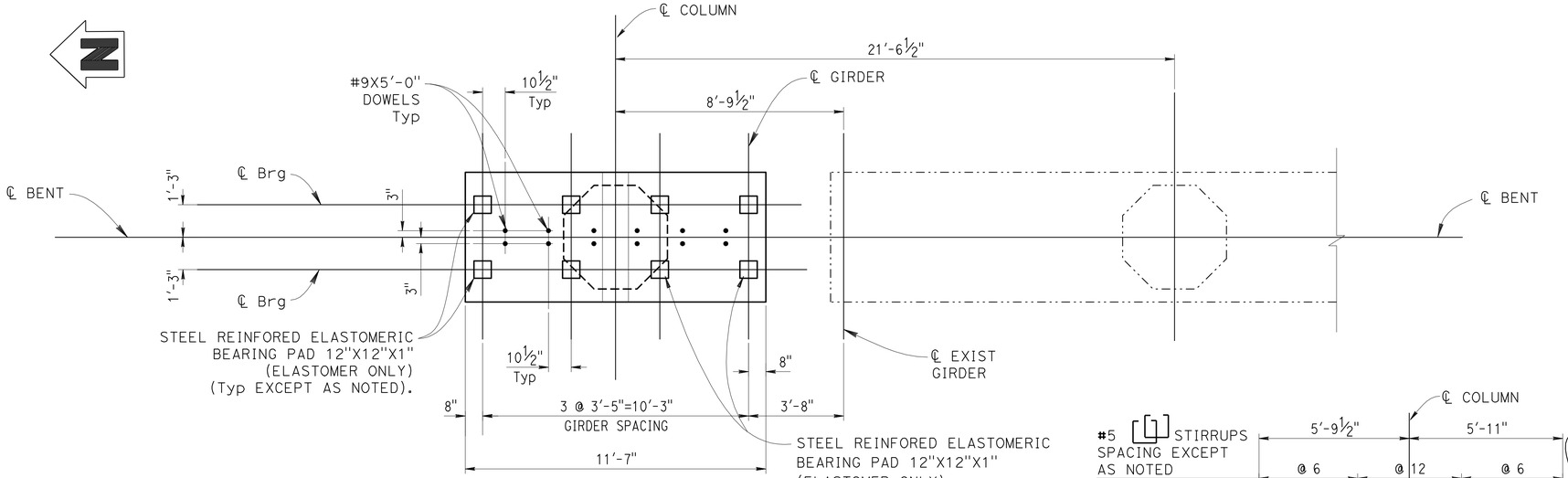

PLAN

⅜"=1'-0"

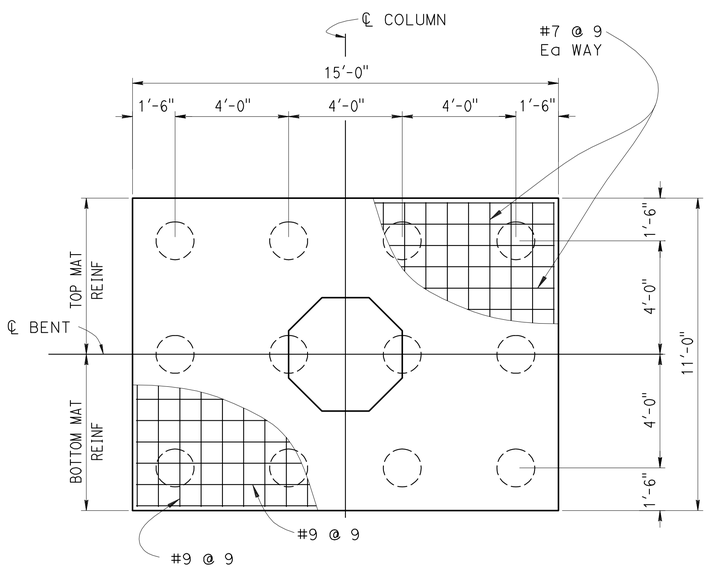

FOOTING PLAN

⅜"=1'-0"

NOTE:
The Contractor shall verify all controlling field dimensions before ordering or fabricating any material.

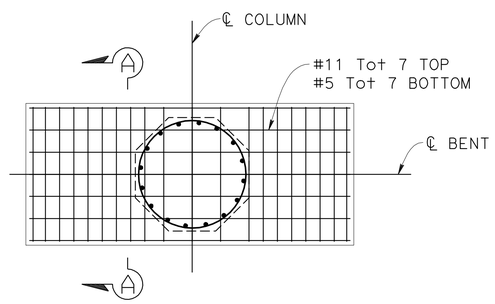

BENT CAP REINFORCEMENT

½"=1'-0"

NOTE:
For Section A-A, See "BENT DETAILS" Sheet

NOTES:
1. No splice is allowed for column longitudinal reinforcement.
2. Welded hoops per "Ultimate Butt Splice".
3. For typical Column and Bent Cap Sections, and diaphragm and shear key details see "BENT DETAILS" sheet.

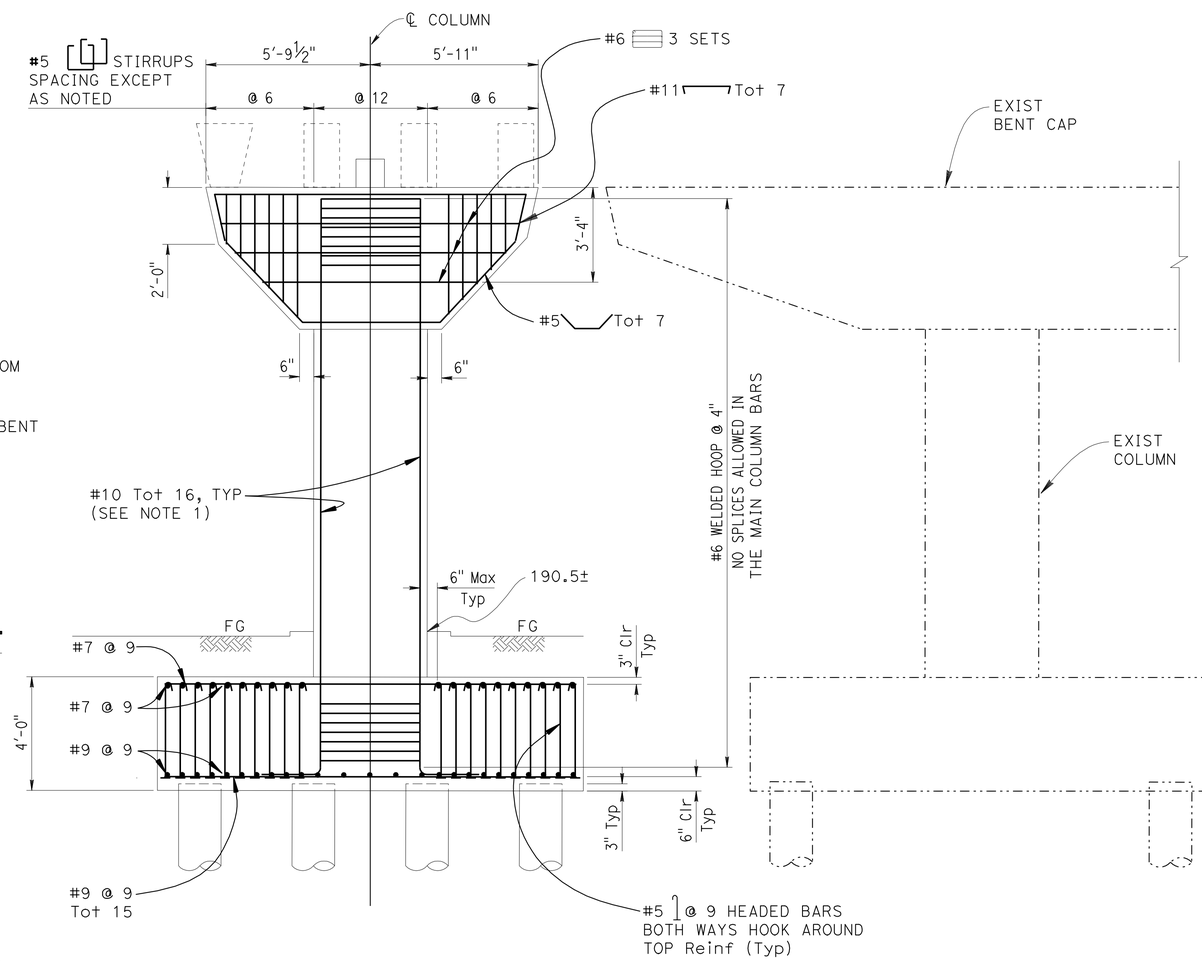

ELEVATION

⅜"=1'-0"

Luqi Yang — DESIGN OVERSIGHT Luqi Yang — 3-29-12 SIGN OFF DATE	DESIGN	BY A. Jin	CHECKED B. Araujo	PREPARED FOR THE STATE OF CALIFORNIA DEPARTMENT OF TRANSPORTATION	Peter L. Liu — PROJECT ENGINEER
	DETAILS	BY Y. Fan	CHECKED B. Araujo		BRIDGE No. 55-0852
	QUANTITIES	BY A. Jin	CHECKED B. Araujo		POST MILES 5.3

STATE COLLEGE Blvd UC (WIDEN)

BENT LAYOUT

DESIGN DETAIL SHEET (ENGLISH) (REV.7/16/10)

ORIGINAL SCALE IN INCHES FOR REDUCED PLANS 0 1 2 3

UNIT: 2295
PROJECT NUMBER & PHASE: 12000000791 CONTRACT NO.: 12-0C5701

DISREGARD PRINTS BEARING EARLIER REVISION DATES → REVISION DATES 08/30/10 09/16/11 12/16/11 03/15/12 — SHEET 9 OF 20

FILE => 55-08521-h-b01_1o01.dgn

USERNAME => s121614 DATE PLOTTED => 17-AUG-2012 TIME PLOTTED => 06:14

DIST	COUNTY	ROUTE	POST MILES TOTAL PROJECT	SHEET No	TOTAL SHEETS
12	Ora	91	0.9/5.4	769	885

REGISTERED CIVIL ENGINEER — DATE 3-15-12

8-13-12
PLANS APPROVAL DATE

The State of California or its officers or agents shall not be responsible for the accuracy or completeness of scanned copies of this plan sheet.

REGISTERED PROFESSIONAL ENGINEER — Peter Liu — No. C48409 — Exp. 6/30/14 — CIVIL — STATE OF CALIFORNIA

OCTA
550 S MAIN STREET
ORANGE, CA 92868

PACRIM ENGINEERING
233 W CERRITOS AVE
ANAHEIM, CA 92805

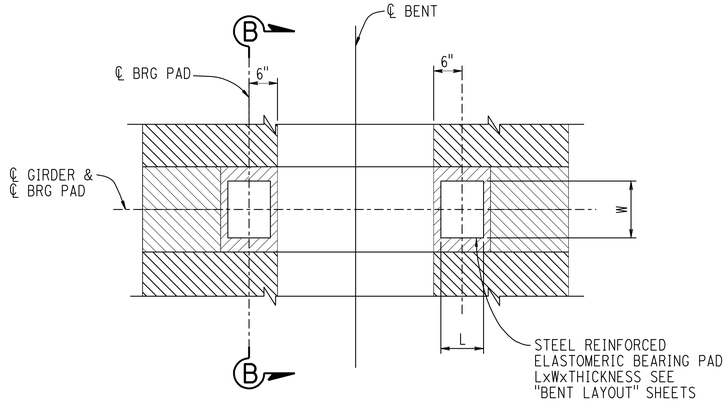

ELASTOMERIC BEARING PAD DETAIL
3/4" = 1'-0"

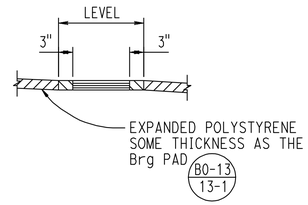

SECTION B-B
3/4" = 1'-0"

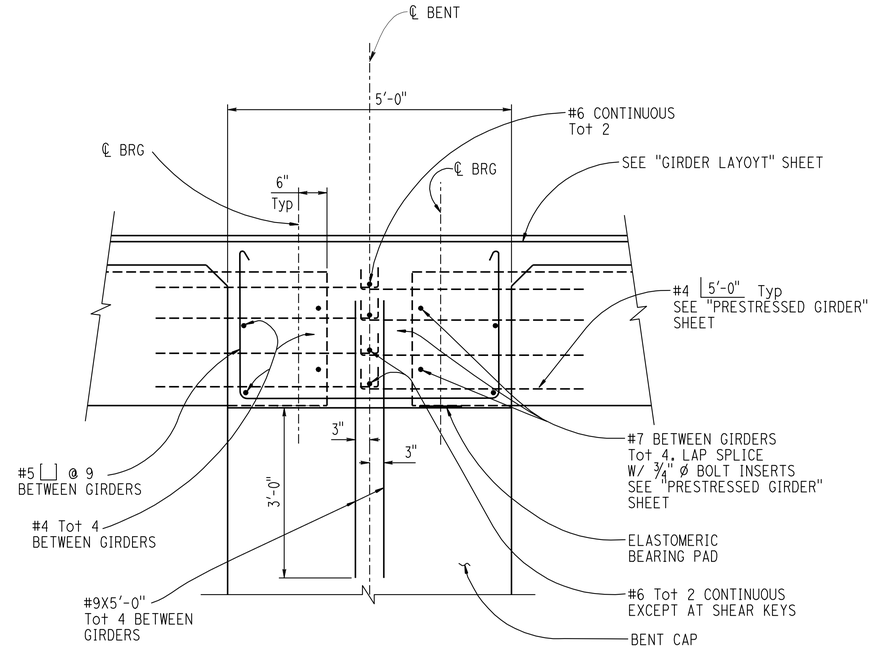

DIAPHRAGM DETAIL
3/4" = 1'-0"

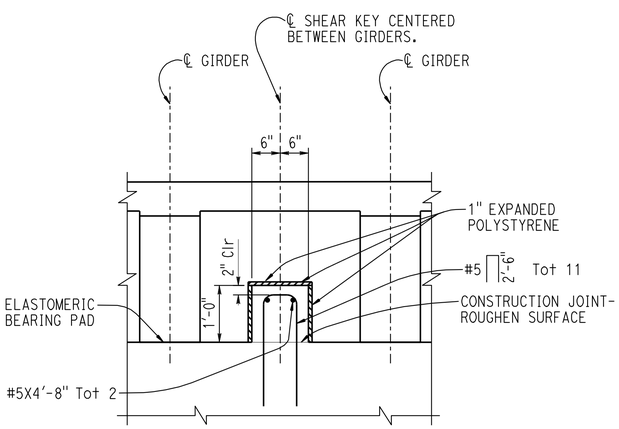

SHEAR KEY DETAIL
3/4" = 1'-0"

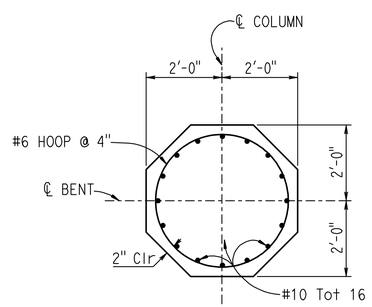

TYPICAL COLUMN SECTION
1/2" = 1'-0"

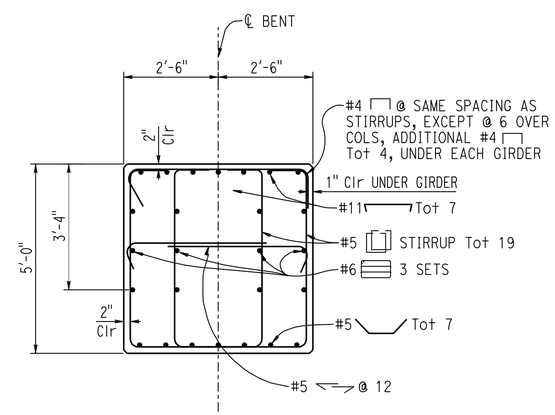

SECTION A-A
1/2" = 1'-0"

NOTE:
The Contractor shall verify all controlling field dimensions before ordering or fabricating any material.

Luqi Yang
DESIGN OVERSIGHT — Luqi Yang
3-29-12
SIGN OFF DATE

	BY	CHECKED
DESIGN	A. Jin	B. Araujo
DETAILS	Y. Fan	B. Araujo
QUANTITIES	A. Jin	B. Araujo

PREPARED FOR THE
STATE OF CALIFORNIA
DEPARTMENT OF TRANSPORTATION

Peter L. Liu
PROJECT ENGINEER

BRIDGE NO. 55-0852
POST MILES 5.3

STATE COLLEGE Blvd UC (WIDEN)
BENT DETAILS

DESIGN DETAIL SHEET (ENGLISH) (REV.7/16/10)

ORIGINAL SCALE IN INCHES FOR REDUCED PLANS 0 1 2 3

UNIT: 2295
PROJECT NUMBER & PHASE: 12000000791 CONTRACT NO.: 12-0C5701

DISREGARD PRINTS BEARING EARLIER REVISION DATES

REVISION DATES: 08/06/10 09/14/11 12/09/11 03/15/12

SHEET 10 OF 20

FILE => 55-08521-h-b01dt01.DGN

USERNAME => s12614 DATE PLOTTED => 17-AUG-2012 TIME PLOTTED => 06:14

DIST	COUNTY	ROUTE	POST MILES TOTAL PROJECT	SHEET No	TOTAL SHEETS
12	Ora	91	0.9/5.4	770	885

REGISTERED CIVIL ENGINEER 3-15-12 DATE

8-13-12
PLANS APPROVAL DATE

REGISTERED PROFESSIONAL ENGINEER Peter Liu No. C48409 Exp. 6/30/14 CIVIL STATE OF CALIFORNIA

The State of California or its officers or agents shall not be responsible for the accuracy or completeness of scanned copies of this plan sheet.

OCTA
550 S MAIN STREET
ORANGE, CA 92868

PACRIM ENGINEERING
233 W CERRITOS AVE
ANAHEIM, CA 92805

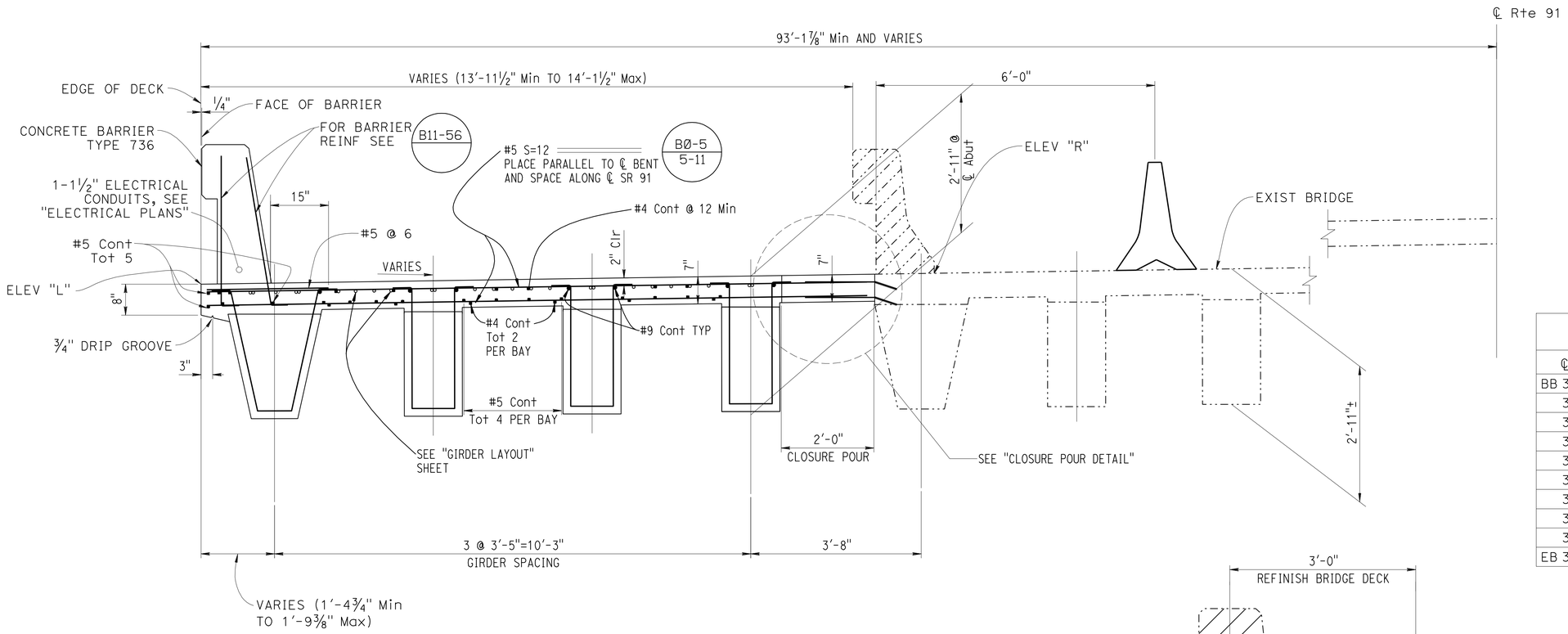

TYPICAL SECTION

¾"=1'-0"

DECK ELEVATIONS

℄ RTE 91	ELEV "L"	ELEV "R"	STA "B"
BB 331+30.22	209.42±	209.44±	331+31.12
331+40.00	209.53±	209.52±	331+40.90
331+60.00	209.74±	209.75±	331+60.90
331+80.00	209.92±	209.94±	331+80.90
332+00.00	210.07±	209.99±	332+00.91
332+20.00	210.19±	210.16±	332+20.91
332+40.00	210.27±	210.27±	332+40.91
332+60.00	210.33±	210.18±	332+60.91
332+70.00	210.34±	210.17±	332+70.91
EB 332+75.22	210.35±	210.17±	332+76.13

NOTES:

1. See "Prestressed Girder" sheet for girder details.
2. Prior to placing holes for drill & bond dowels, the contractor shall locate all reinf. and adjust the locations of the holes to clear all reinf.
3. The Contractor shall locate the existing electrical conduit and adjust the connection to clear all reinf.
4. Depth of superstructure is measured at abutment and bent supports.

CLOSURE POUR NOTES:

1. The concrete barrier is placed at least 21 days after the cast-in-place deck has been placed and attained the specified concrete strength.
2. The closure pour shall hot be placed sooner than 14 days after placement of barrier.

LEGEND:

Indicates Existing Structure

Indicates New Construction

Bridge Removal (Portion), Location F

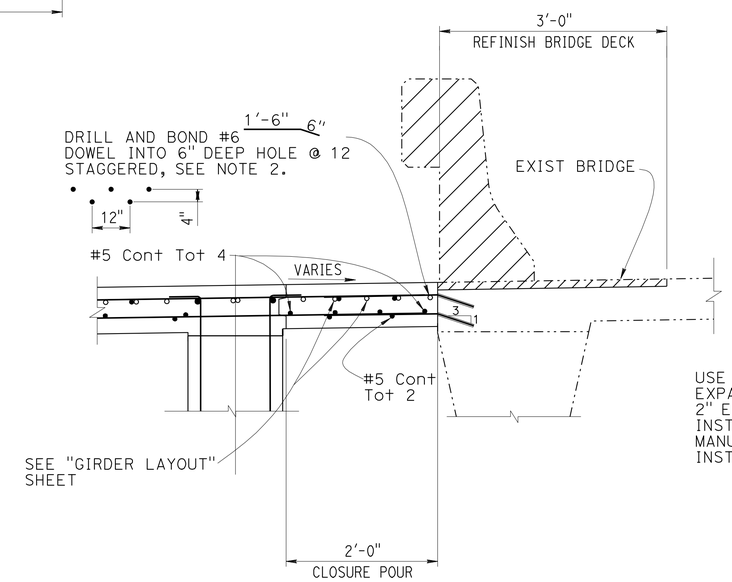

CLOSURE POUR DETAIL

1"=1'-0"

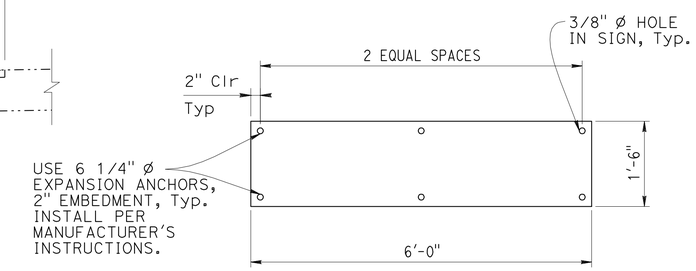

1. For location see "GENERAL PLAN" sheet item 15 and "Sign Plans"

VERTICAL CLEARANCE SIGN

NOTE:
The Contractor shall verify all controlling field dimensions before ordering or fabricating any material.

Luqi Yang
DESIGN OVERSIGHT Luqi Yang
3-29-12
SIGN OFF DATE

	BY	CHECKED
DESIGN	A. Jin	B. Araujo
DETAILS	Y. Fan	B. Araujo
QUANTITIES	A. Jin	B. Araujo

PREPARED FOR THE STATE OF CALIFORNIA DEPARTMENT OF TRANSPORTATION

Peter L. Liu
PROJECT ENGINEER

BRIDGE No. 55-0852
POST MILES 5.3

STATE COLLEGE Blvd UC (WIDEN)

TYPICAL SECTION

DESIGN DETAIL SHEET (ENGLISH) (REV.7/16/10)

ORIGINAL SCALE IN INCHES FOR REDUCED PLANS 0 1 2 3

UNIT: 2295
PROJECT NUMBER & PHASE: 12000000791
CONTRACT NO.: 12-0C5701

DISREGARD PRINTS BEARING EARLIER REVISION DATES

REVISION DATES 03/15/12 09/16/11 12/20/11 02/27/12

SHEET 11 OF 20

FILE => 55-08521-k-ts01.DGN

USERNAME => s12614 DATE PLOTTED => 17-AUG-2012 TIME PLOTTED => 06:14

DIST	COUNTY	ROUTE	POST MILES TOTAL PROJECT	SHEET No	TOTAL SHEETS
12	Ora	91	0.9/5.4	771	885

REGISTERED CIVIL ENGINEER 3-15-12 DATE

8-13-12
PLANS APPROVAL DATE

REGISTERED PROFESSIONAL ENGINEER Peter Liu No. C48409 Exp. 6/30/14 CIVIL STATE OF CALIFORNIA

The State of California or its officers or agents shall not be responsible for the accuracy or completeness of scanned copies of this plan sheet.

OCTA
550 S MAIN STREET
ORANGE, CA 92868

PACRIM ENGINEERING
233 W CERRITOS AVE
ANAHEIM, CA 92805

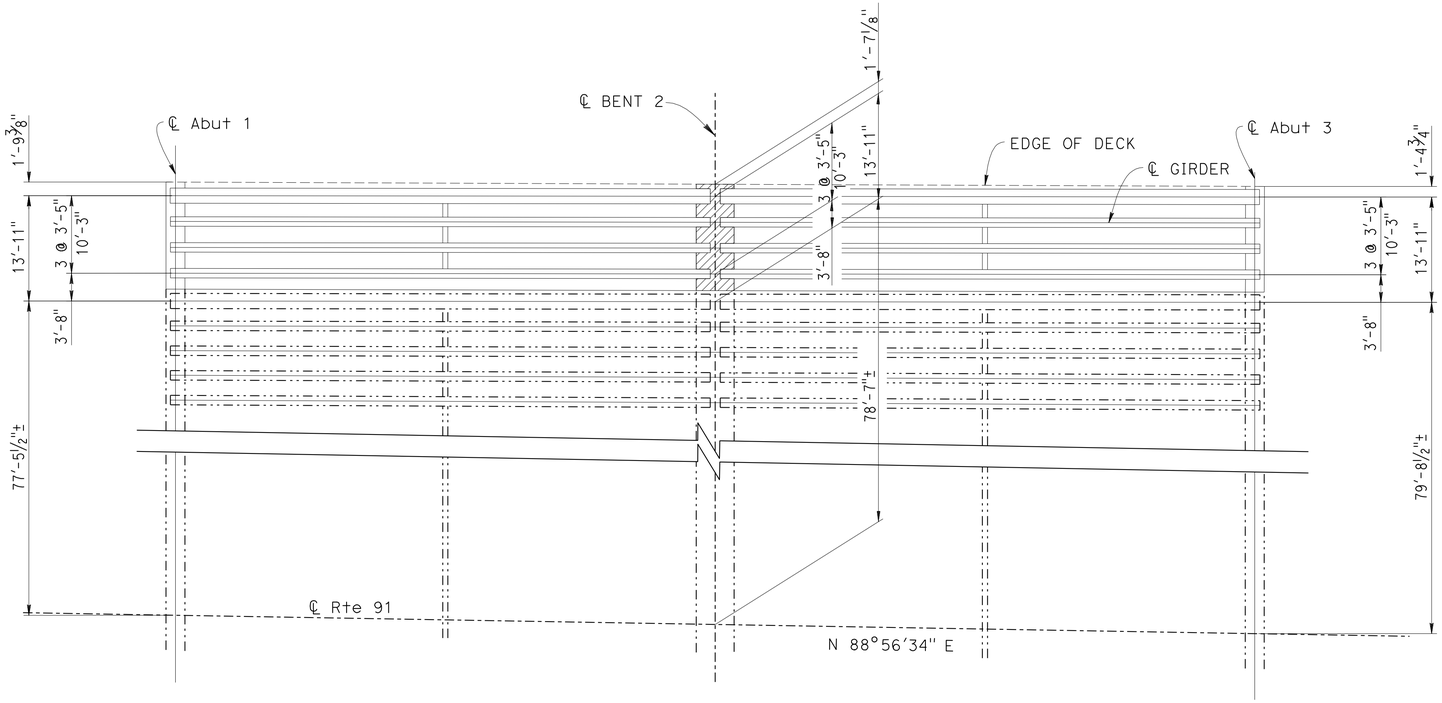

GIRDER LAYOUT

1" = 10'

LEGEND:

Indicates Existing Structure

Indicates New Construction

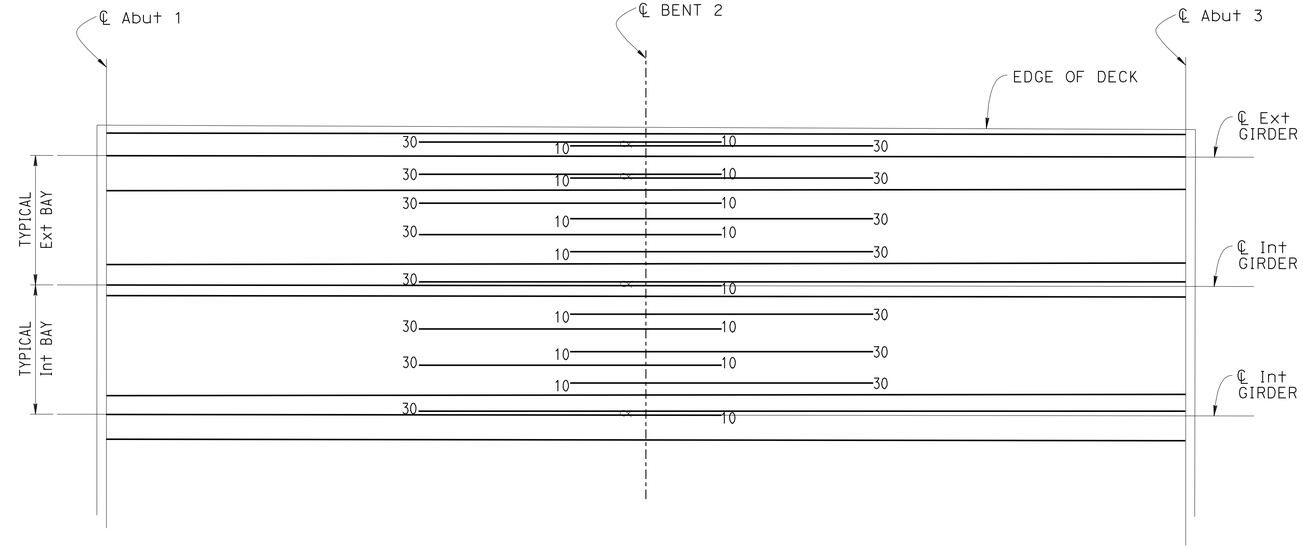

NOTE:
All reinforcement #9 Unless otherwise noted.
Numbers at ends of bars indicate distance in feet from bent centerline.

Denotes bundled bars

ADDITIONAL TOP SLAB REINFORCEMENT

NTS

NOTE:
The Contractor shall verify all controlling field dimensions before ordering or fabricating any material.

Luqi Yang
DESIGN OVERSIGHT Luqi Yang
3-29-12
SIGN OFF DATE

	BY	CHECKED
DESIGN	A. Jin	B. Araujo
DETAILS	Y. Fan	B. Araujo
QUANTITIES	A. Jin	B. Araujo

PREPARED FOR THE STATE OF CALIFORNIA DEPARTMENT OF TRANSPORTATION

Peter L. Liu
PROJECT ENGINEER

BRIDGE No. 55-0852
POST MILES 5.3

STATE COLLEGE Blvd UC (WIDEN)
GIRDER LAYOUT

DESIGN DETAIL SHEET (ENGLISH) (REV.7/16/10)

ORIGINAL SCALE IN INCHES FOR REDUCED PLANS 0 1 2 3

UNIT: 2295
PROJECT NUMBER & PHASE: 12000000791 CONTRACT NO.: 12-0C5701

DISREGARD PRINTS BEARING EARLIER REVISION DATES

REVISION DATES 08/30/10 09/07/11 12/02/11 03/15/12

SHEET 12 OF 20

FILE => 55-08521-1-g_1o01.DGN

USERNAME => s12164 DATE PLOTTED => 17-AUG-2012 TIME PLOTTED => 06:14

DIST	COUNTY	ROUTE	POST MILES TOTAL PROJECT	SHEET No	TOTAL SHEETS
12	Ora	91	0.9/5.4	772	885

REGISTERED CIVIL ENGINEER — DATE 3-15-12

8-13-12
PLANS APPROVAL DATE

REGISTERED PROFESSIONAL ENGINEER — Peter Liu — No. C48409 — Exp. 6/30/14 — CIVIL — STATE OF CALIFORNIA

The State of California or its officers or agents shall not be responsible for the accuracy or completeness of scanned copies of this plan sheet.

OCTA
550 S MAIN STREET
ORANGE, CA 92868

PACRIM ENGINEERING
233 W CERRITOS AVE
ANAHEIM, CA 92805

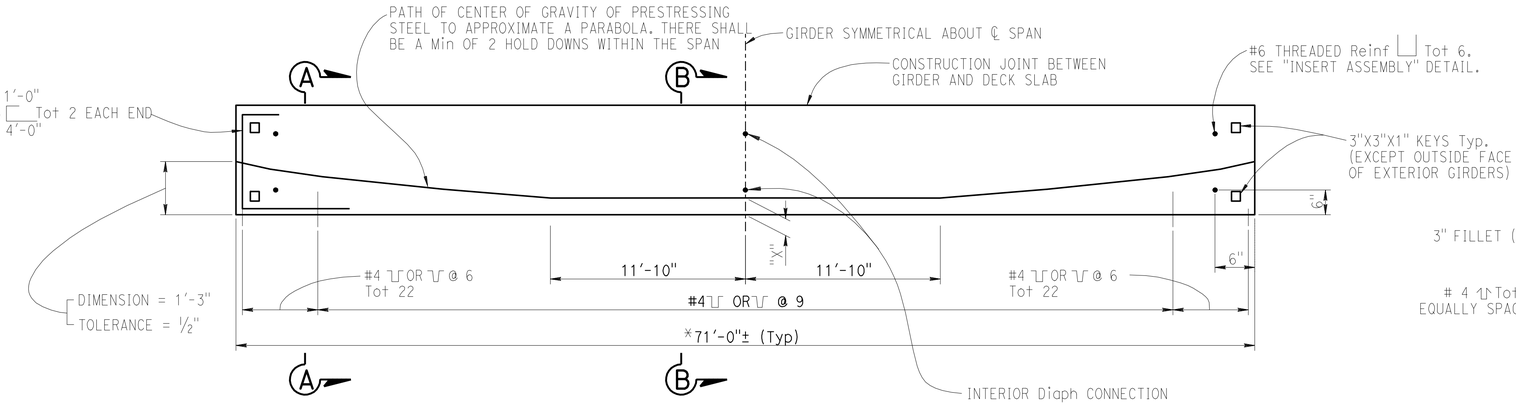

* Prior to fabrication, dimension to be verified in field after completion of abutment and bent construction.

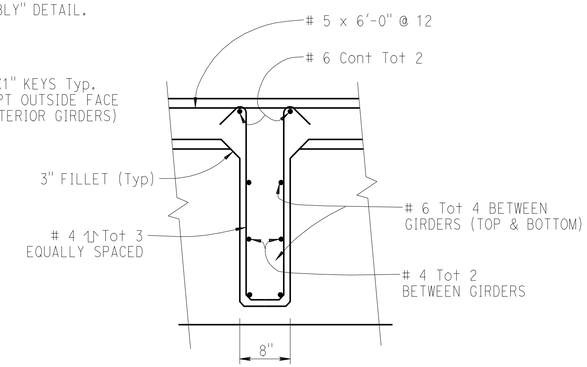

SECTION C-C

1" = 1'-0"

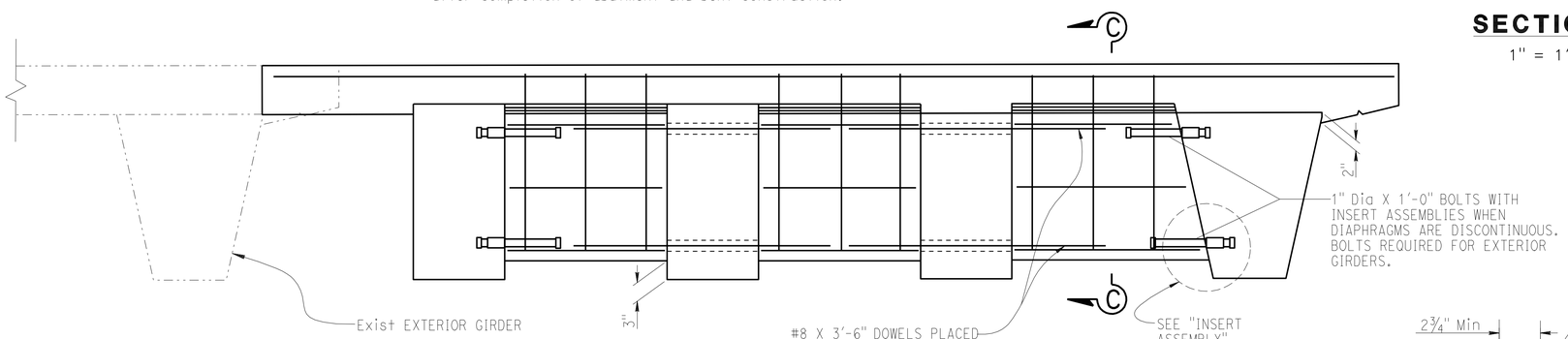

INTERMEDIATE DIAPHRAGM

1" = 1'-0"

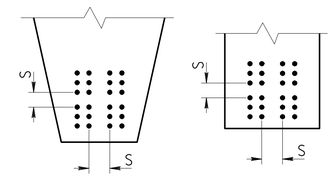

CLEARANCES FOR PRETENSIONED STRANDS:

1. Strands may be bundled in groups consisting of 3 vertically, 2 horizontally, and separated at the ends.
2. The Min distance "S" between groups or individual strands is 1 1/2" for 3/8" strands, 1 3/4" for 7/16" strands and 2" for 1/2" strands.
3. "S" is measured between centers of adjacent strands.
4. Approval of Engineer is required for deviation.

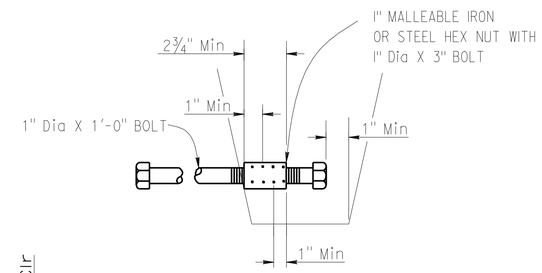

INSERT ASSEMBLY

NO SCALE

PRESTRESSING NOTES:

Jacking Force: The manufacture jacking force required at the point of control along the span. The jacking force close not include any fabrication specific losses.

Concrete Strength: f'ci is at time of initial stressing. f'c is at 28 days, psi.

Deflection components: Informational - to be used in setting screed line elevations.

Screed line elevations for deck concrete will be determined by the Engineer.

Contractor may interpolate "Pj" and "X" values between limits shown, as approved by the Engineer.

GIRDER TYPE	No. GIRDERS	"X"	Pj = JACKING FORCE IN kips	CONCRETE STRENGTH (KSI)		DEFLECTION COMPONENTS IN INCHES	
				f'ci	f'c	DECK DL	RAIL DL
RECTANGULAR	6	4"	580	5.3	6.0	1.56	0.04
TRAPEZOIDAL	2	4"	680	5.3	6.0	1.46	0.05

NOTE:
Details shown are for Pretensioned Girders. The Contractor may submit details for Post-tensioning which shall be subject to the approval of the Engineer.

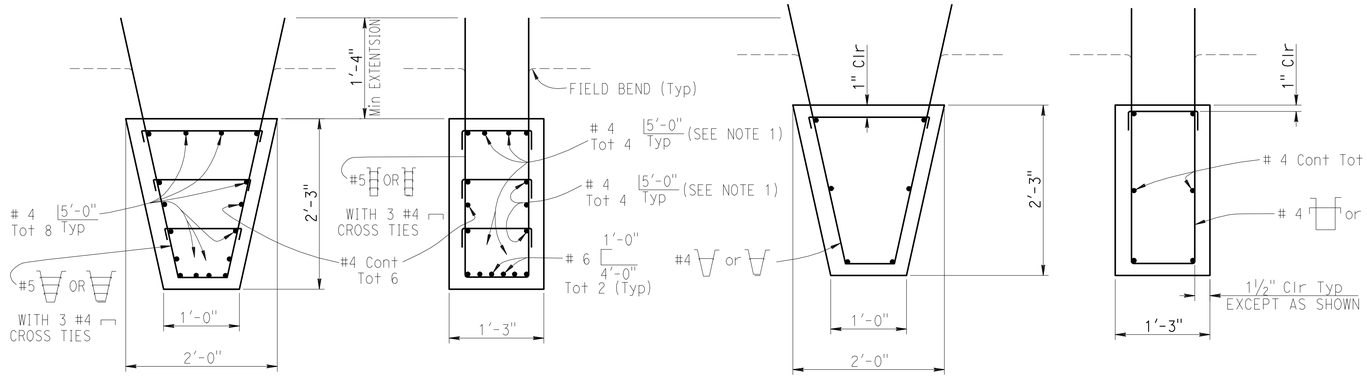

SECTION A-A

1" = 1'-0"

NOTE:
1. Extend hooked end 12" past end of girder at bent 2.

SECTION B-B

1" = 1'-0"

NOTE:
The Contractor shall verify all controlling field dimensions before ordering or fabricating any material.

DESIGN OVERSIGHT Luqi Yang — 3-29-12 — SIGN OFF DATE

	BY	CHECKED
DESIGN	A. Jin	B. Araujo
DETAILS	Y. Fan	B. Araujo
QUANTITIES	A. Jin	B. Araujo

PREPARED FOR THE STATE OF CALIFORNIA DEPARTMENT OF TRANSPORTATION

Peter L. Liu — PROJECT ENGINEER

BRIDGE No. 55-0852 — POST MILES 5.3

STATE COLLEGE Blvd UC (WIDEN)
PRESTRESSED GIRDER

DESIGN DETAIL SHEET (ENGLISH) (REV.7/16/10)

ORIGINAL SCALE IN INCHES FOR REDUCED PLANS 0 1 2 3

UNIT: 2295
PROJECT NUMBER & PHASE: 12000000791 CONTRACT NO.: 12-0C5701

DISREGARD PRINTS BEARING EARLIER REVISION DATES — REVISION DATES 08/30/10 09/16/11 12/23/11 03/15/12 — SHEET 13 OF 20

FILE => 55-08521-1-pre-gir01.DGN

USERNAME => s121614 DATE PLOTTED => 17-AUG-2012 TIME PLOTTED => 06:14

DIST.	COUNTY	ROUTE	POST MILES TOTAL PROJECT	SHEET NO.	TOTAL SHEETS
12	Ora	91	0.9/5.4	773	885

REGISTERED CIVIL ENGINEER 3-15-12 DATE

8-13-12
PLANS APPROVAL DATE

REGISTERED PROFESSIONAL ENGINEER Peter Liu No. C48409 Exp. 6/30/14 CIVIL STATE OF CALIFORNIA

The State of California or its officers or agents shall not be responsible for the accuracy or completeness of scanned copies of this plan sheet.

OCTA
550 S MAIN STREET
ORANGE, CA 92868

PACRIM ENGINEERING
233 W CERRITOS AVE
ANAHEIM, CA 92805

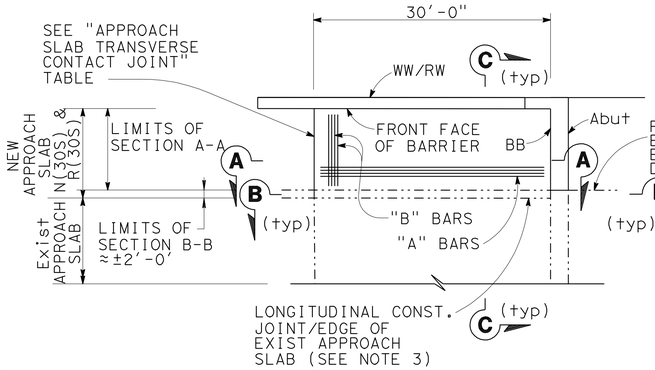

ABUT 1 PLAN ◇2
1"=10'

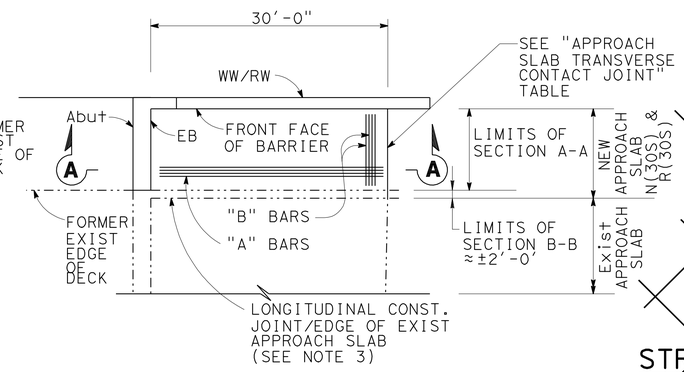

ABUT 3 PLAN ◇2
1"=10'

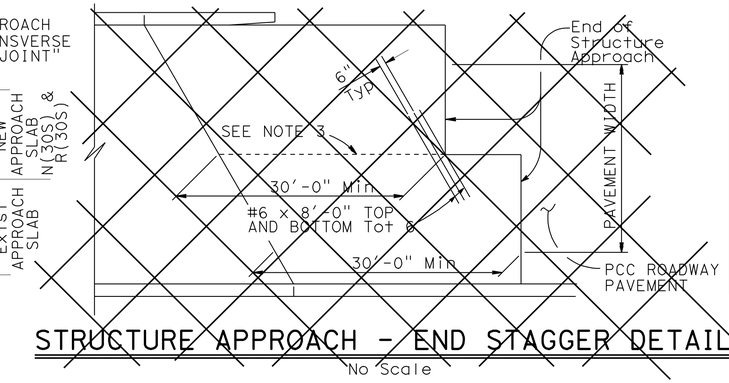

STRUCTURE APPROACH - END STAGGER DETAIL ◇1

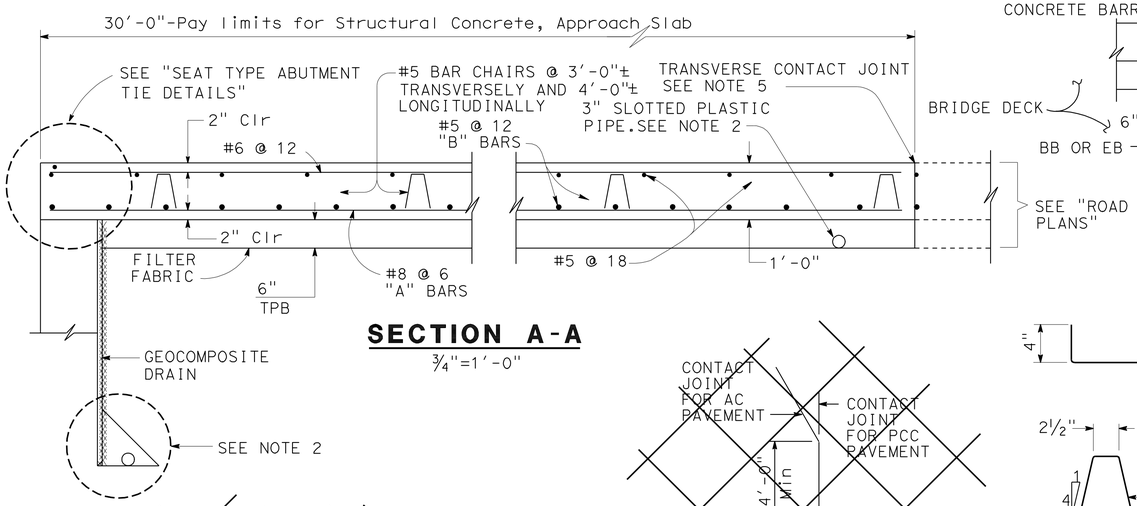

SECTION A-A
¾"=1'-0"

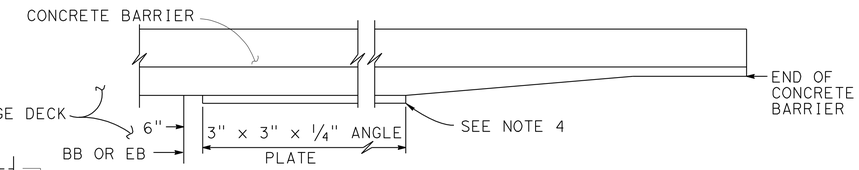

EDGE ANGLE DETAIL
½"=1'-0"

APPROACH SLAB TRANSVERSE CONTACT JOINT		
APPROACH SKEW	WITH AC ROADWAY PAVEMENT	WITH PCC ROADWAY PAVEMENT
< 20°	Parallel to face of paving notch	Parallel to face of paving notch
20° - 45°	PARALLEL TO FACE OF PN USE "DETAIL A"	STAGGER LINES 24' TO 36' APART
> 45°	PARALLEL TO FACE OF PN USE "DETAIL A"	STAGGER AT EACH LANE LINE

◇1

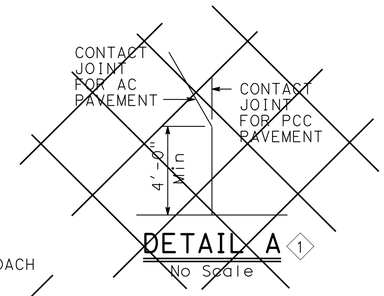

DETAIL A ◇1
No Scale

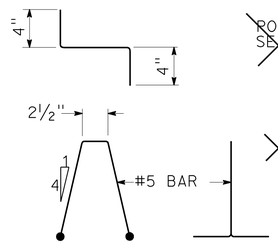

BAR CHAIR DETAIL
1½"=1'-0"

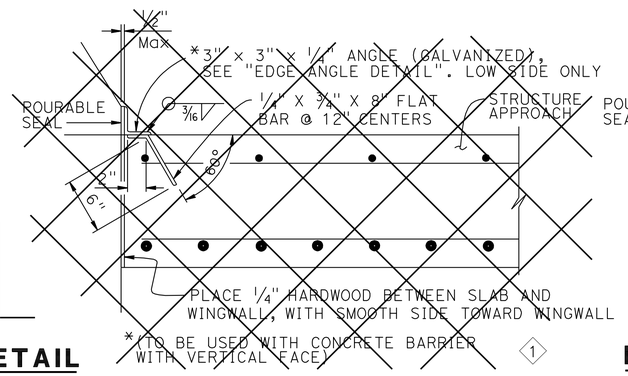

◇1

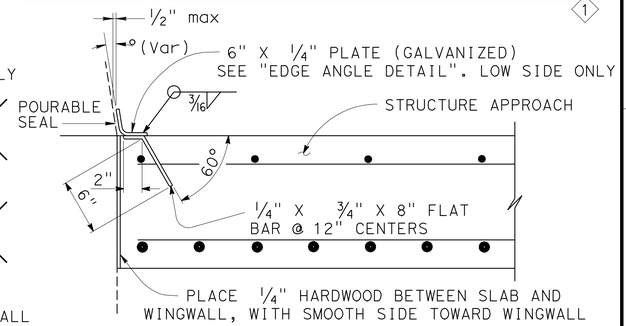

DETAIL B
1½"=1'-0"

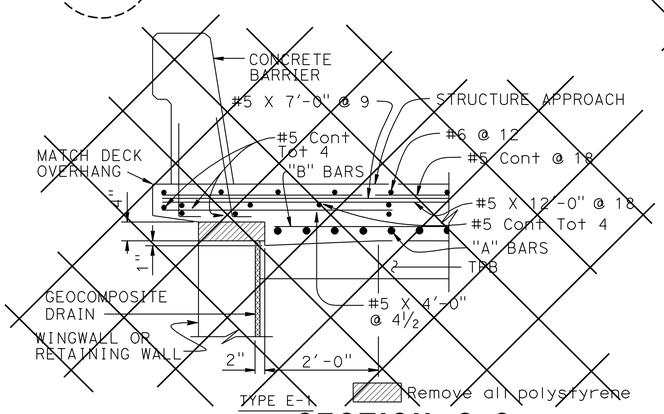

SECTION C-C ◇1
¾"=1'-0"

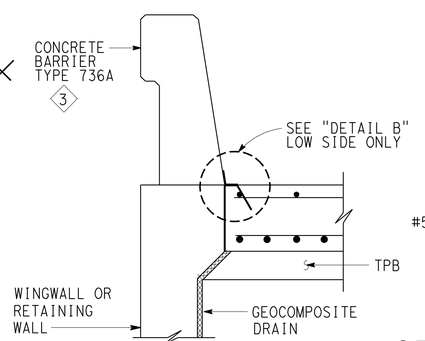

TYPE E-2

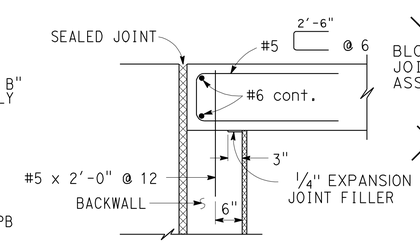

MR ≤ 2"

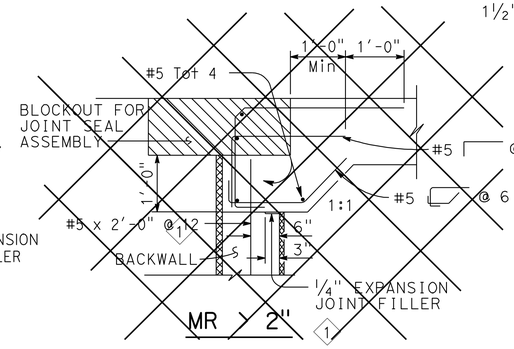

MR > 2" ◇1

SEAT TYPE ABUTMENT TIE DETAILS (SEE NOTE 1)
¾"=1'-0"

NOTES:

1. For details not shown, see Structure Plans. For MR ≤ 2", adjust bar reinforcement to clear a sawcut for sealed joint, when required
2. For drainage details, see "Structure Approach Drainage Details" sheet
3. Longitudinal construction joints, when permitted by the Engineer, shall be located on lane lines
4. End angle or plate at beginning of barrier transition, end of wingwall or end of structure approach as applicable
5. ◇3 For transverse contact joint with new PCC paving, refer to Revised Standard Plan P10
6. At the Contractor's option, approach slab transverse reinforcement may be placed parallel to paving notch. Spacing of transverse reinforcement is measured along ℄ roadway
7. ◇2 For section B-B, see "Structure Approach Type R(30S)" sheet

NOTE:
The Contractor shall verify all controlling field dimensions before ordering or fabricating any material.

STANDARD DRAWING
FILE NO. XS3-120
APPROVAL DATE July 2011

◇1 DOES NOT APPLY
◇2 Added Detail or Note
◇3 Modified Detail or Note

STATE OF CALIFORNIA
DEPARTMENT OF TRANSPORTATION

DIVISION OF ENGINEERING SERVICES

BRIDGE NO. 55-0852
POST MILE 5.3

STATE COLLLEGE BLVD UC (WIDEN)
STRUCTURE APPROACH TYPE N(30S)

DS OSD 2147A (ENGLISH STANDARD DRAWING "XS" BORDER REV. (02-02-11)

ORIGINAL SCALE IN INCHES FOR REDUCED PLANS 0 1 2 3

UNIT: 2295
PROJECT NUMBER & PHASE: 12000000791
CONTRACT NO.: 12-0C5701

DISREGARD PRINTS BEARING EARLIER REVISION DATES

REVISION DATES 08/26/10 09/16/11 12/27/11 03/15/12

SHEET 14 OF 20

FILE => 55-0852I-s-sa30n.dgn

USERNAME => s121614 DATE PLOTTED => 17-AUG-2012 TIME PLOTTED => 13:55

DIST.	COUNTY	ROUTE	POST MILES TOTAL PROJECT	SHEET NO.	TOTAL SHEETS
12	Ora	91	0.9/5.4	774	885

REGISTERED CIVIL ENGINEER 3-15-12 DATE

8-13-12
PLANS APPROVAL DATE

REGISTERED PROFESSIONAL ENGINEER Peter Liu No. C48409 Exp. 6/30/14 CIVIL STATE OF CALIFORNIA

The State of California or its officers or agents shall not be responsible for the accuracy or completeness of scanned copies of this plan sheet.

OCTA
550 S MAIN STREET
ORANGE, CA 92868

PACRIM ENGINEERING
233 W CERRITOS AVE
ANAHEIM, CA 92805

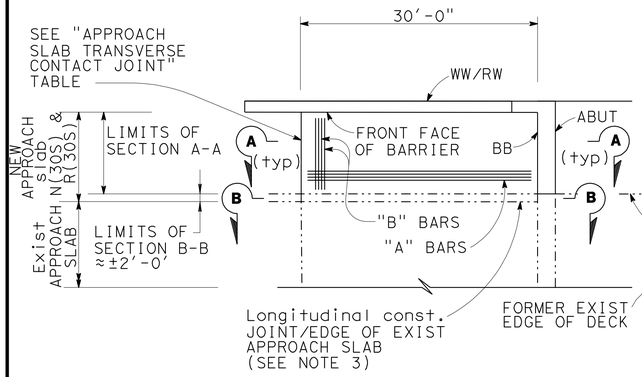

ABUT 1 PLAN ◇2
1"=10'

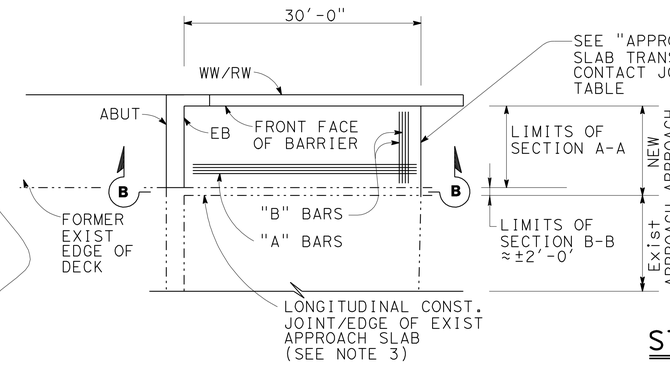

ABUT 3 PLAN ◇2
1"=10'

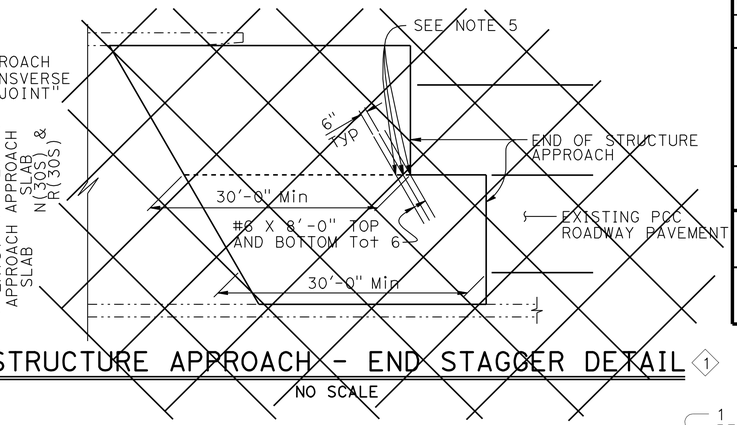

STRUCTURE APPROACH - END STAGGER DETAIL ◇1
NO SCALE

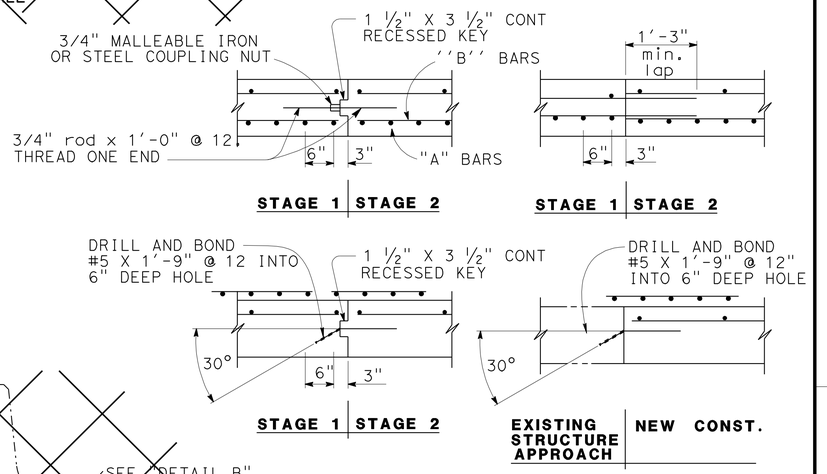

LONGITUDINAL CONSTRUCTION JOINT ALTERNATIVES
¾"=1'-0"

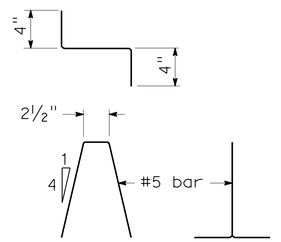

BAR CHAIR DETAIL
1½"=1'-0"

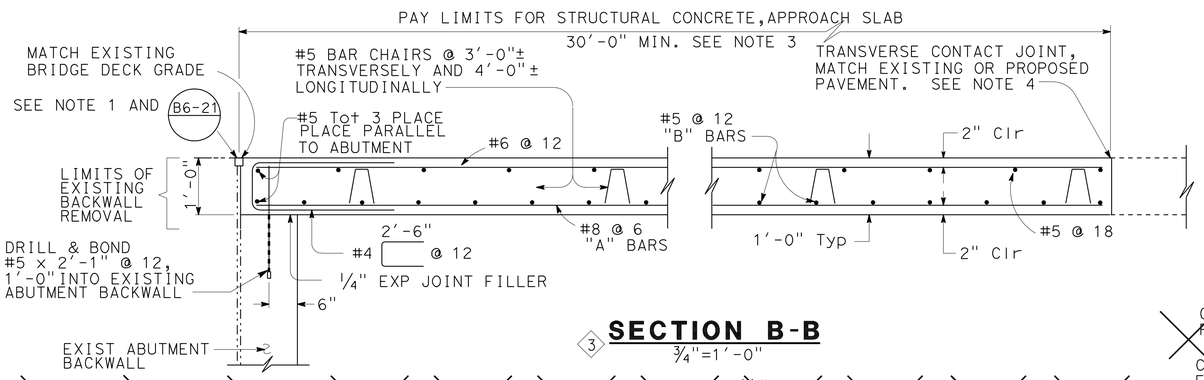

SECTION B-B ◇3
¾"=1'-0"

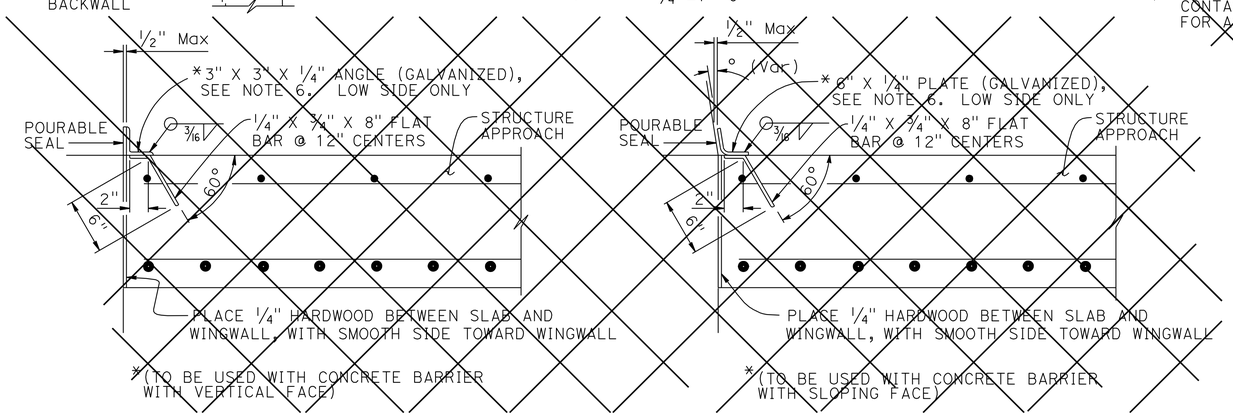

DETAIL B ◇1
1½" = 1'-0"

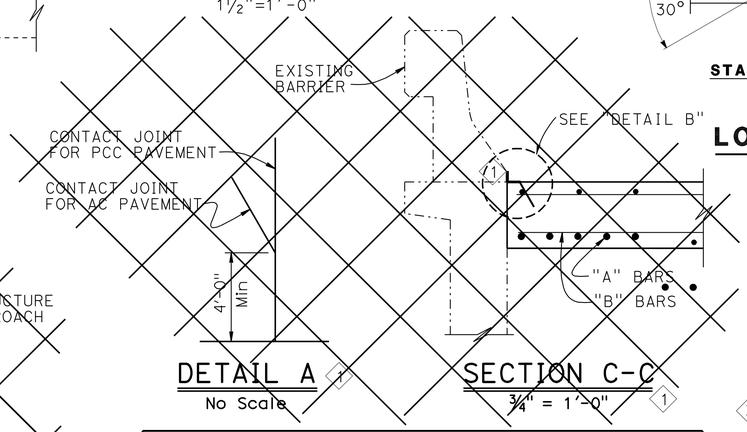

DETAIL A ◇1
No Scale

SECTION C-C ◇1
¾" = 1'-0"

APPROACH SLAB TRANSVERSE CONTACT JOINT		
APPROACH SKEW	WITH AC ROADWAY PAVEMENT	WITH PCC ROADWAY PAVEMENT
< 10°	PARALLEL TO FACE OF PAVING NOTCH	PARALLEL TO FACE OF PAVING NOTCH
10° - 45°	PARALLEL TO FACE OF PN USE "DETAIL A"	STAGGER LINES 24' TO 36' APART
> 45°	PARALLEL TO FACE OF PN USE "DETAIL A"	STAGGER AT EACH LANE LINE

◇1

NOTES:

1. Sealed joint, for MR see Structure Plans. Adjust bar reinforcement to clear a sawcut for sealed joint, when required
2. Longitudinal construction joints, when permitted by Engineer, shall be located on lane lines
3. Transverse contact joint shall be a minimum of 5'-0" from an existing or constructed weakened plane joint
4. ◇3 For transverse contact joint with new PCC paving, refer to REVISED Standard Plan P10
5. Couplers are required for stage construction
6. ◇1 End angle or plate at beginning of barrier transition, end of wingwall or end of structure approach as applicable
7. ◇2 For section A-A, see "Structure Approach Type N(30S)" sheet

NOTE:
The Contractor shall verify all controlling field dimensions before ordering or fabricating any material.

STANDARD DRAWING
FILE NO. XS3-130
APPROVAL DATE July 2011

◇1 DOES NOT APPLY
◇2 Added Detail or Note
◇3 Modified Detail or Note

STATE OF CALIFORNIA
DEPARTMENT OF TRANSPORTATION
DIVISION OF ENGINEERING SERVICES

BRIDGE NO. 55-0852
POST MILE 5.3

STATE COLLLEGE BLVD UC (WIDEN)
STRUCTURE APPROACH TYPE R(30S)

DS OSD 2147A (ENGLISH STANDARD DRAWING "XS" BORDER REV. (02-02-11)

ORIGINAL SCALE IN INCHES FOR REDUCED PLANS 0 1 2 3

UNIT: 2295
PROJECT NUMBER & PHASE: 12000000791
CONTRACT NO.: 12-0C5701

DISREGARD PRINTS BEARING EARLIER REVISION DATES
REVISION DATES 08/06/10 09/15/11 12/02/11 03/15/12
SHEET 15 OF 20

FILE => 55-0852I-s-sa30r.dgn

USERNAME => s123631 DATE PLOTTED => 17-AUG-2012 TIME PLOTTED => 17:52

DIST.	COUNTY	ROUTE	POST MILES TOTAL PROJECT	SHEET NO.	TOTAL SHEETS
12	Ora	91	0.9/5.4	775	885

REGISTERED CIVIL ENGINEER 3-15-12 DATE

8-13-12
PLANS APPROVAL DATE

REGISTERED PROFESSIONAL ENGINEER Peter Liu No. C48409 Exp. 6/30/14 CIVIL STATE OF CALIFORNIA

The State of California or its officers or agents shall not be responsible for the accuracy or completeness of scanned copies of this plan sheet.

OCTA
550 S MAIN STREET
ORANGE, CA 92868

PACRIM ENGINEERING
233 W CERRITOS AVE
ANAHEIM, CA 92805

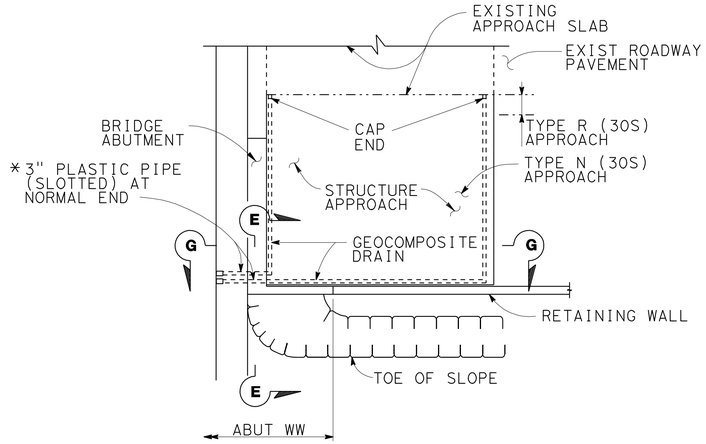

TYPICAL PLAN 3

1"=10'

ABUT 3 SHOWN, ABUT 1 SIMILAR

*FOR PIPE LAYOUT AT STAGGERED END, SEE "DETAIL B".

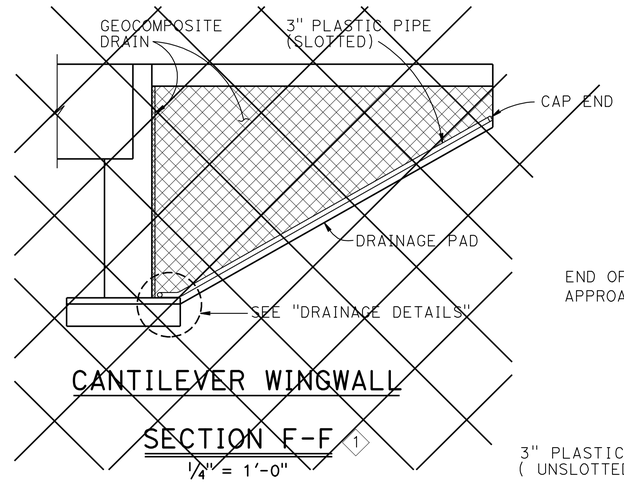

CANTILEVER WINGWALL SECTION F-F 1

1/4" = 1'-0"

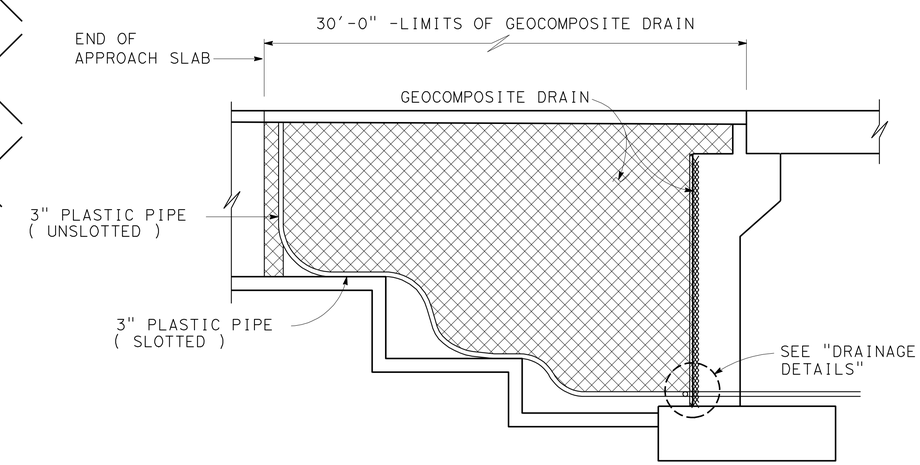

WINGWALL SECTION G-G 3

1/4"=1'-0"

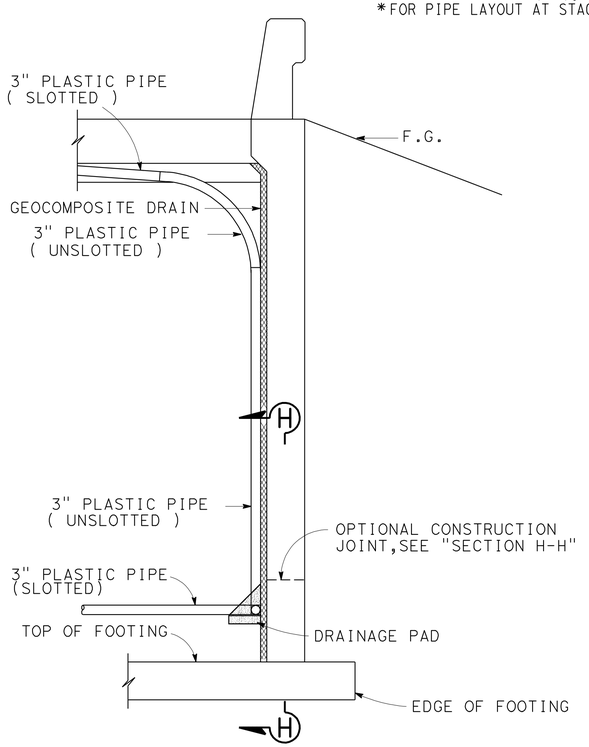

SECTION E-E 3

1/2"=1'-0"

NOTE: BENDS AND JUNCTIONS IN 3" PLASTIC PIPE ARE 30" RADIUS Min

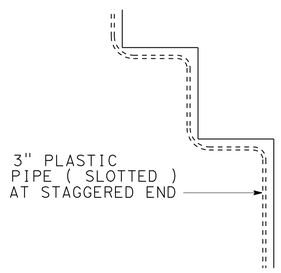

DETAIL B

NO SCALE

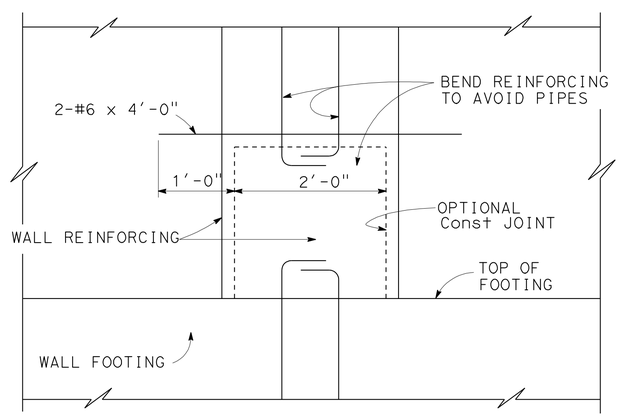

SECTION H-H

1"=1'-0"

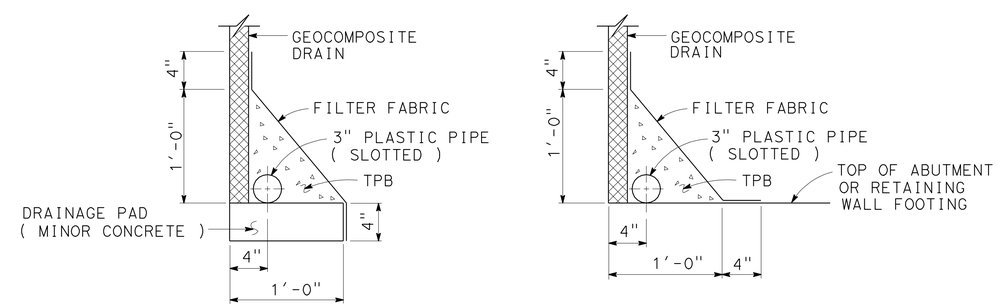

WITHOUT FOOTING WITH FOOTING

DRAINAGE DETAILS

1 1/2"=1'-0"

NOTE:
The Contractor shall verify all controlling field dimensions before ordering or fabricating any material.

STANDARD DRAWING

FILE NO. XS3-110

APPROVAL DATE July 2011

1 DOES NOT APPLY
2 Added Detail or Note
3 Modified Detail or Note

STATE OF CALIFORNIA
DEPARTMENT OF TRANSPORTATION

DIVISION OF ENGINEERING SERVICES

BRIDGE NO. 55-0852
POST MILE 5.3

STATE COLLLEGE BLVD UC (WIDEN)
STRUCTURE APPROACH DRAINAGE DETAILS

DS OSD 2147A (ENGLISH STANDARD DRAWING "XS" BORDER REV. (02-02-11)

ORIGINAL SCALE IN INCHES FOR REDUCED PLANS 0 1 2 3

UNIT: 2295
PROJECT NUMBER & PHASE: 12000000791
CONTRACT NO.: 12-0C5701

DISREGARD PRINTS BEARING EARLIER REVISION DATES

REVISION DATES 08/30/10 09/16/11 12/22/11 03/15/12

SHEET 16 OF 20

FILE => 55-0852I-s-sadd.dgn

USERNAME => s126614 DATE PLOTTED => 17-AUG-2012 TIME PLOTTED => 06:15

DIST	COUNTY	ROUTE	POST MILES TOTAL PROJECT	SHEET No	TOTAL SHEETS
12	Ora	91	0.9/5.4	776	885

REGISTERED CIVIL ENGINEER 3-15-12 DATE

8-13-12
PLANS APPROVAL DATE

REGISTERED PROFESSIONAL ENGINEER Peter Liu No. C48409 Exp. 6/30/14 CIVIL STATE OF CALIFORNIA

The State of California or its officers or agents shall not be responsible for the accuracy or completeness of scanned copies of this plan sheet.

OCTA
550 S MAIN STREET
ORANGE, CA 92868

PACRIM ENGINEERING
233 W CERRITOS AVE
ANAHEIM, CA 92805

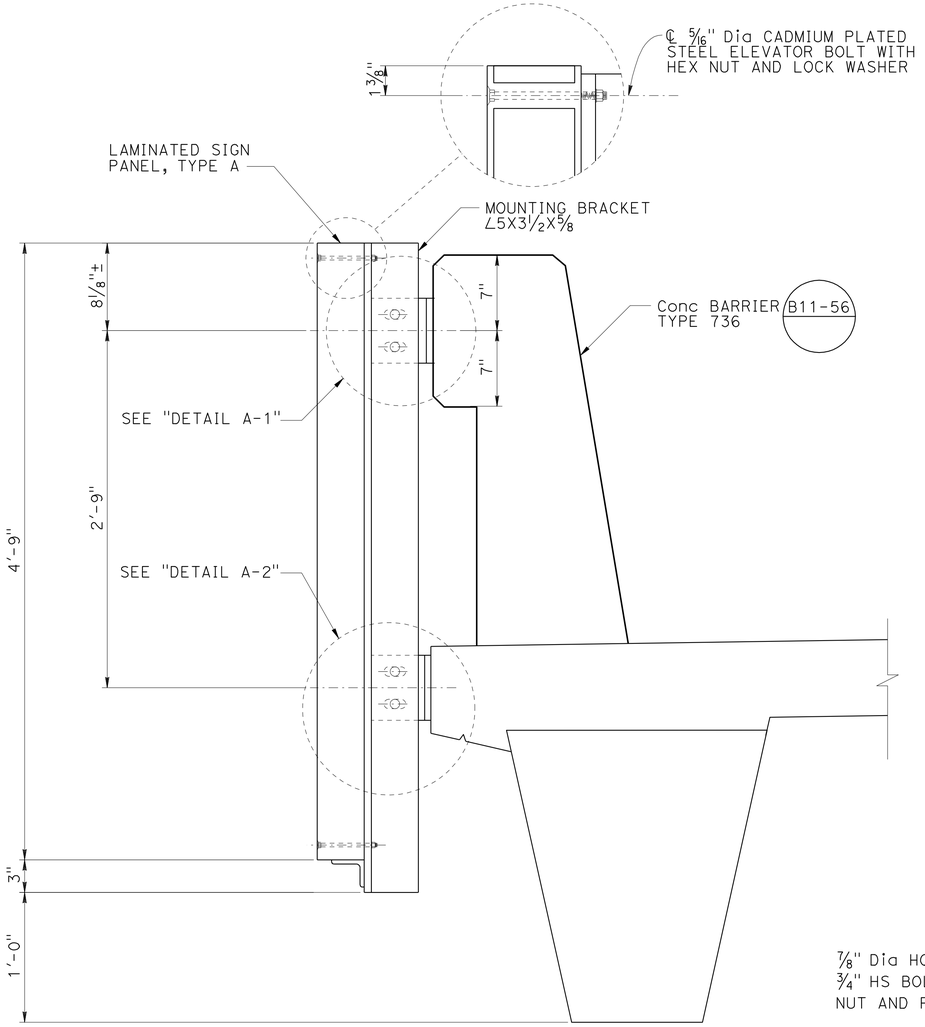

TYPICAL MOUNTING BRACKET ASSEMBLY

NO SCALE

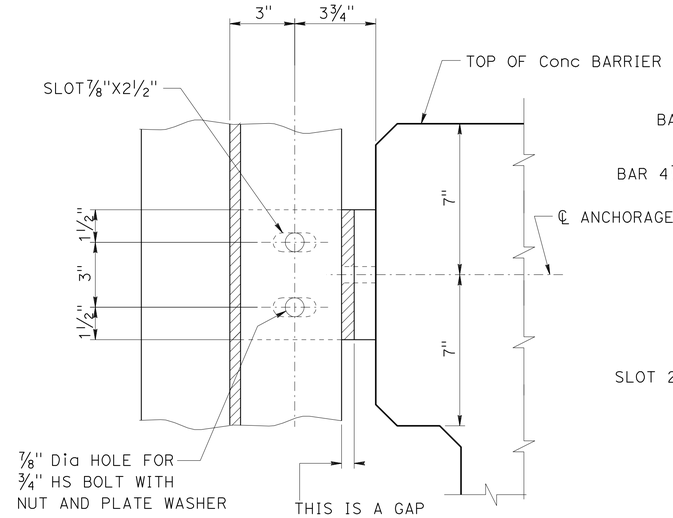

DETAIL "A-1"

NO SCALE

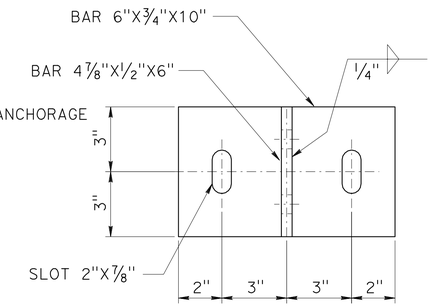

BAR DETAIL

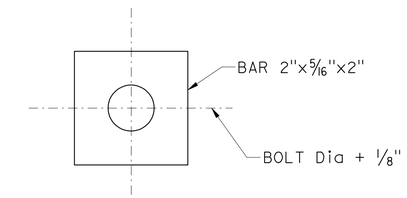

PLATE WASHER

No Scale
For all slotted holes

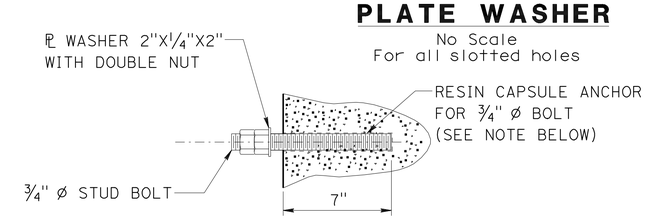

RESIN CAPSULE BOLT ANCHORAGE

NO SCALE

Note: Resin capsule anchorage is subject to approval of the Engineer. Installation procedures shall comply with manufacturer's instructions. Contractor to provide anchor bolt layout before anchor bolts are placed. Resin capsule bolt locations shall be layed out prior to pouring deck and barrier rail concrete to avoid interference with reinforcing. Resin capsule bolt anchors shall be installed in sound concrete free of cracks or delamination.

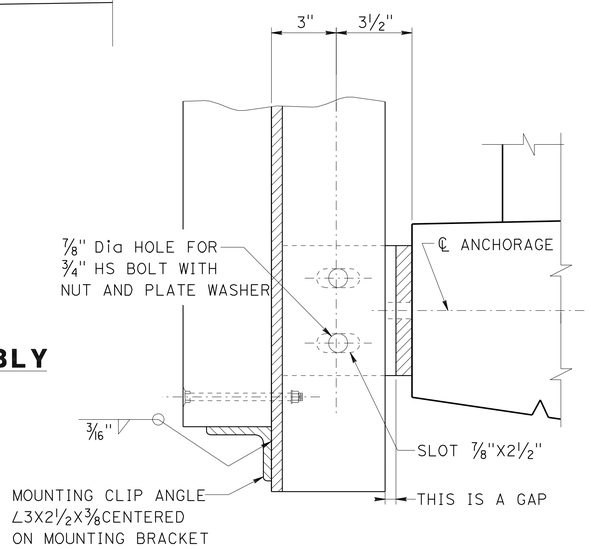

DETAIL "A-2"

NO SCALE

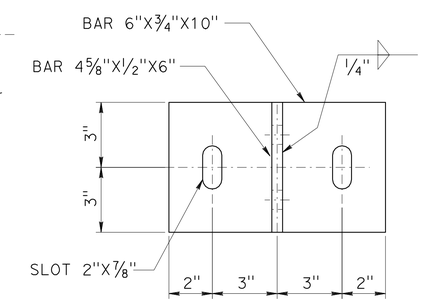

BAR DETAIL

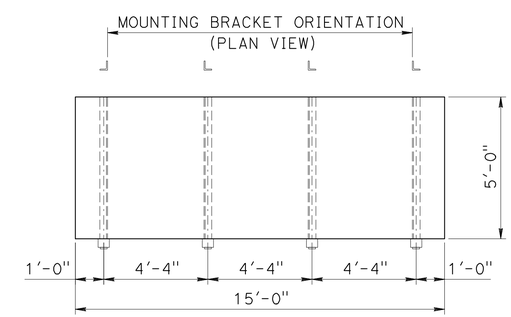

MOUNTING BRACKET ASSEMBLY SPACING SIGN GG FSBT

NO SCALE

NOTES:

1. Existing bridge mounted sign anchors shall be cut flush with edge of deck by mechanical means. Damage to concrete surface resulting from cut shall be repaired at the Contractor's expense to the Engineer's satisfaction. Cut ends of anchors shall be coated with 2 coats of zinc rich primer.
2. For New Bridge Mounted Sign location, see "Road Plans."
3. All bridge mounted sign steel shall be galvanized.
4. Bridge mounted sign anchorage to bridge has been designed using: AASHTO "Standard Specifications for Structural Supports for Highway Signs, Luminaires, and Traffic Signals" Fifth Edition (2009) using the following parameters:
   V=85 MPH
   I_r = 1.15

NOTE:
The Contractor shall verify all controlling field dimensions before ordering or fabricating any material.

Luqi Yang
DESIGN OVERSIGHT Luqi Yang
3-29-12
SIGN OFF DATE

	BY	CHECKED
DESIGN	A. Jin	B. Araujo
DETAILS	Y. Fan	B. Araujo
QUANTITIES	A. Jin	B. Araujo

PREPARED FOR THE STATE OF CALIFORNIA DEPARTMENT OF TRANSPORTATION

Peter L. Liu
PROJECT ENGINEER

BRIDGE NO. 55-0852
POST MILES 5.3

STATE COLLEGE Blvd UC (WIDEN)
BRIDGE MOUNTED SIGN DETAILS

DESIGN DETAIL SHEET (ENGLISH) (REV.7/16/10)

ORIGINAL SCALE IN INCHES FOR REDUCED PLANS 0 1 2 3

UNIT: 2295
PROJECT NUMBER & PHASE: 12000000791 CONTRACT NO.: 12-0C5701

DISREGARD PRINTS BEARING EARLIER REVISION DATES

REVISION DATES 03/15/12 09/14/11 12/13/11 02/14/12

SHEET 17 OF 20

FILE => 55-08521-u-sign01.dgn

USERNAME => s12161d DATE PLOTTED => 17-AUG-2012 TIME PLOTTED => 06:15

DIST	COUNTY	ROUTE	POST MILES TOTAL PROJECT	SHEET No	TOTAL SHEETS
12	Ora	91	0.9/5.4	777	885

REGISTERED ENGINEER — DATE 3-15-12

8-13-12
PLANS APPROVAL DATE

The State of California or its officers or agents shall not be responsible for the accuracy or completeness of scanned copies of this plan sheet.

REGISTERED PROFESSIONAL ENGINEER S. PIRATHIVIRAJ NO. C71662 EXP. 12/31/13 CIVIL STATE OF CALIFORNIA

ORANGE COUNTY TRANSPORTATION AUTHORITY
550 S. MAIN STREET
ORANGE, CA 92863-1584

EARTH MECHANICS, INC.
17800 NEWHOPE STREET, SUITE B
FOUNTAIN VALLEY, CA 92708

BENCH MARK

Designation: 1G-164-05 Elev = 109.804
Described by OCS 2005 - Found 3¾" OCS Aluminum Benchmark Disk Stamped "1G-164-05", set in the Nothwesterly Corner of a 4.5 ft. by 11.0 ft. Concrete Catch Basin. Monument is located in the Southeasterly Corner of the intersection of Magnolia Avenue and Buckingham Street, 200 ft. ± from the centerline of Buckingham and 47 ft. Easterly of the centerline of Magnolia. Monument is set level with the Sidewalk

Designation: 2F-25-04 Elev = 162.700
Described by OCS 2004 - Found 3¾" OCS Aluminum Benchmark Disk Stamped "2F-25-04", set in the Nothwesterly Corner of a 7.5 ft. by 4.5 ft. Concrete Catch Basin. Monument is located in the Northeasterly Corner of the intersection of Harbor Boulevard and the Eastbound 91 Freeway On-Ramp, 39 ft. Northerly of the centerline of the On-Ramp and 40 ft. Easterly of the centerline of Harbor Boulevard. Monument is set level with the Sidewalk

Designation: 2D-35-86 Elev = 188.576
Described by OCS 2003 - Found 3¾" OCS Aluminum Benchmark Disk Stamped "2D-35-86", set in the Nothwesterly Corner of a 7 ft. by 14 ft. Concrete Catch Basin. Monument is located in the Southeasterly Corner of the intersection of Placentia Avenue and State College Boulevard, 38 ft. Easterly of the centerline of State College and 70.5 ft. Southerly of the centerline of Placentia. Monument is set level with the Sidewalk

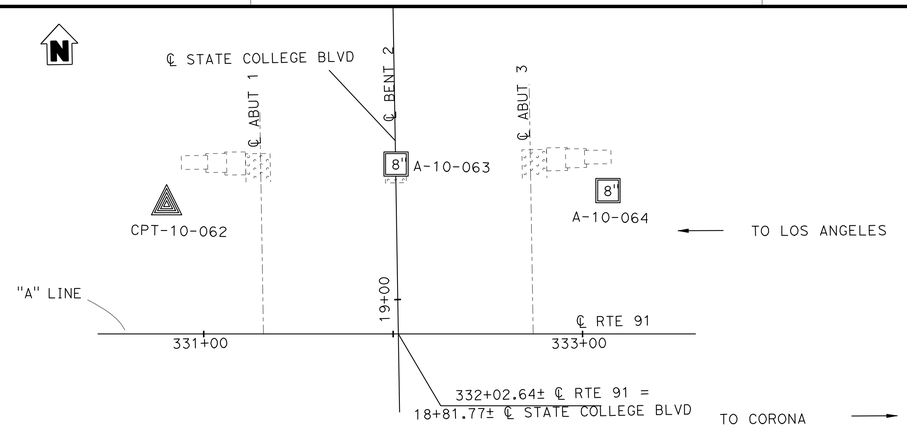

PLAN

1" = 40'

NOTES:

(1) This LOTB sheet was prepared in accordance with the Caltrans Soil and Rock Logging, Classification and Presentation Manual (June 2010).

(2) 2.4" samples were taken using a California Modified Sampler.

(3) An automatic trip hammer system consisting of a hammer weight of 140 lbs falling a distance of 30" was used to advance the drive sampler.

(4) Conversion factor from 2.4" Modified California Ring Sampler blowcounts to Standard Penetration Test (SPT) blowcounts is 0.5.

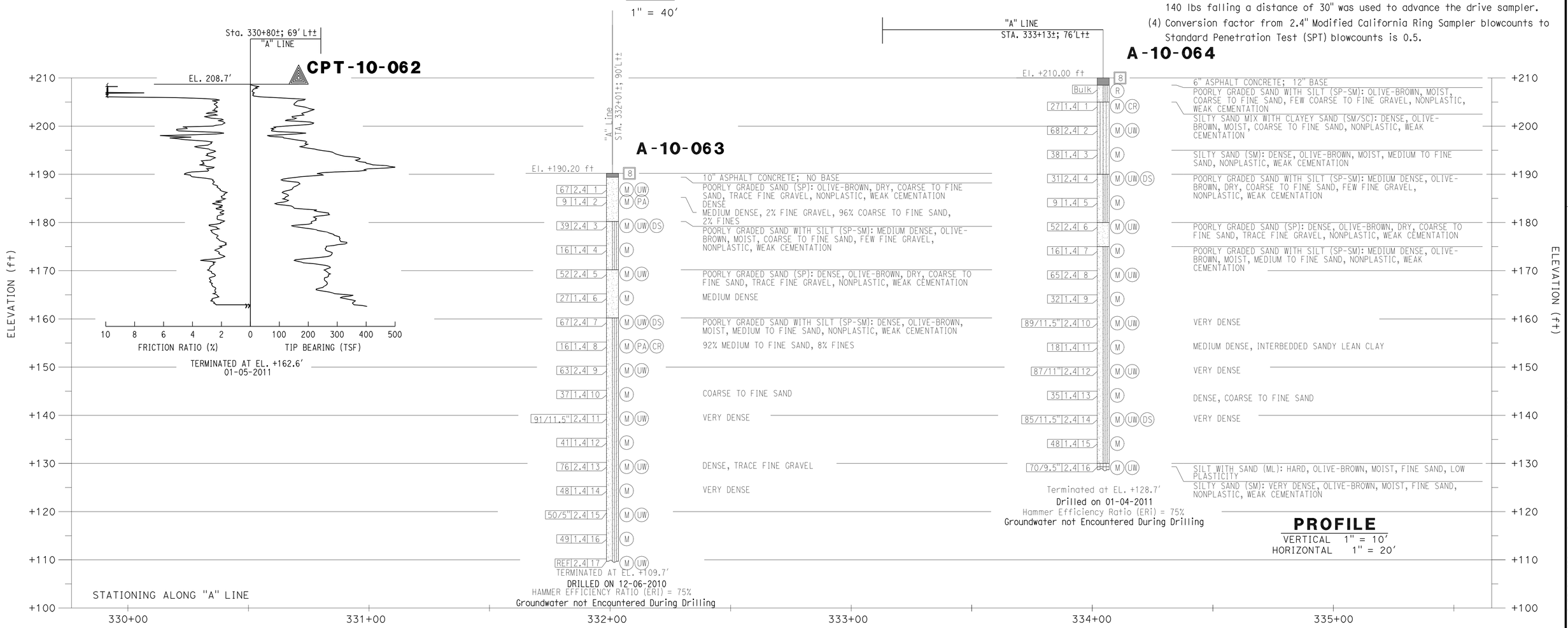

Luqi Yang — DESIGN OVERSIGHT Luqi Yang; 3-29-12 SIGN OFF DATE	DRAWN BY J. Fang	R. Jie — FIELD INVESTIGATION BY:	PREPARED FOR THE STATE OF CALIFORNIA DEPARTMENT OF TRANSPORTATION	S. Pirathiviraj — PROJECT ENGINEER	BRIDGE NO. 55-0852
	CHECKED BY G. J. Gunaranjan	DATE: 12/2010,1/2011			POST MILES 5.3

STATE COLLEGE BOULEVARD UC (WIDEN)

LOG OF TEST BORINGS 1 OF 3

GS GEOTECHNICAL LOG OF TEST BORINGS SHEET (ENGLISH) (REV. 7/16/10)

ORIGINAL SCALE IN INCHES FOR REDUCED PLANS 0 1 2 3

UNIT: 2295
PROJECT NUMBER & PHASE: 12000000791

DISREGARD PRINTS BEARING EARLIER REVISION DATES

REVISION DATES

SHEET 18 OF 20

FILE => 55-0852-z-1tb1.dgn

CONTRACT NO.: 12-0C5701 PROJECT ID:

USERNAME => s121614 DATE PLOTTED => 17-AUG-2012 TIME PLOTTED => 06:16

The State of California or its officers or agents shall not be responsible for the accuracy or completeness of electronic copies of this plan sheet.

8-26-98
TO ACCOMPANY PLANS DATED

DIST	COUNTY	ROUTE	POST MILES TOTAL PROJECT	SHEET NO.	TOTAL SHEETS
12	Ora	57, 91	15.6/16.6, 5.0/6.7	677	852

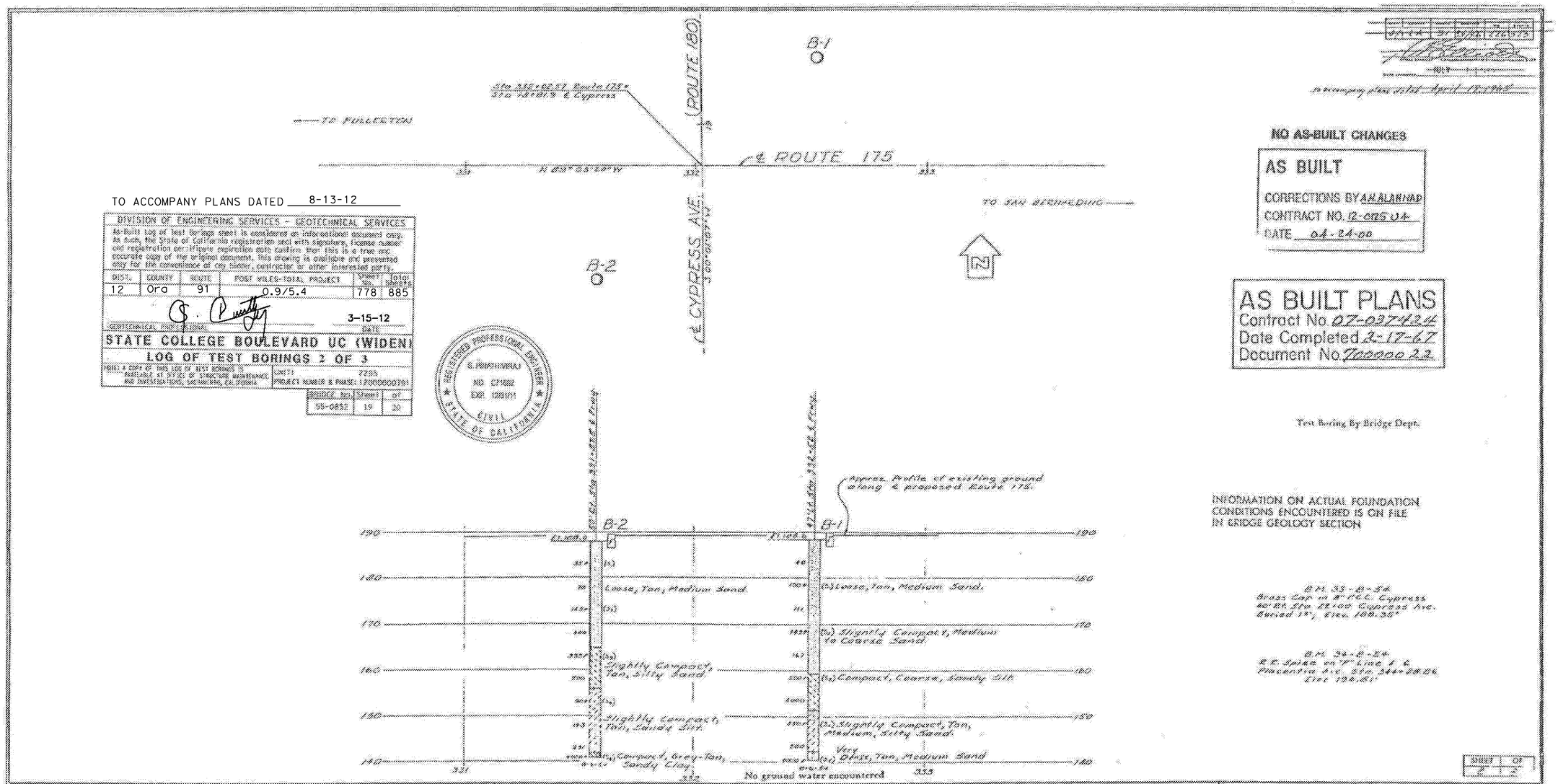

Be Nguyen
BRIDGE DESIGN
3-14-96
SHEET SEC

NOTE:
ADDITIONAL AS-BUILT FOUNDATION DATA MAY BE AVAILABLE AT THE OFFICE OF TRANSPORTATION MATERIALS AND RESEARCH 5900 FOLSOM BOULEVARD, SACRAMENTO, CALIFORNIA 95819

DESIGN	V. Lee / D. Kuang	CHECKED	F. Agha Mohammadi
DETAILS	V. Ramirez	CHECKED	F. Agha Mohammadi
QUANTITIES	G. Takara	CHECKED	J. Fujita

PREPARED FOR THE
STATE OF CALIFORNIA
DEPARTMENT OF TRANSPORTATION

Daniel J. Narik
PROJECT ENGINEER

BRIDGE No. 55-0852
POST MILE 5.3

STATE COLLEGE BLVD UC (REPLACE)
AS-BUILT LOG OF TEST BORINGS

ORIGINAL SCALE IN INCHES
CU 12209
EA 010411

DISREGARD PRINTS BEARING EARLIER REVISION DATES

REVISION DATES (PRELIMINARY STAGE ONLY)
BY/DATE | BY/DATE

SHEET 19 OF 20

FILENAME => 55-0852-z-1tb2.tif

TO ACCOMPANY PLANS DATED 8-13-12

DIVISION OF ENGINEERING SERVICES - GEOTECHNICAL SERVICES

As-Built Log of Test Borings sheet is considered an informational document only. As such, the State of California registration seal with signature, license number and registration or certificate expiration date confirm that this is a true and accurate copy of the original document. This drawing is available and presented only for the convenience of any bidder, contractor or other interested party.

DIST.	COUNTY	ROUTE	POST MILES-TOTAL PROJECT	SHEET No.	TOTAL SHEETS
12	Ora	91	0.9/5.4	779	885

GEOTECHNICAL PROFESSIONAL — 3-15-12 DATE

STATE COLLEGE BOULEVARD UC (WIDEN)

LOG OF TEST BORINGS 3 OF 3

NOTE: A copy of this Log of Test Borings is available at Office of Structure Maintenance and Investigations, Sacramento, California

UNIT: 2235 — PROJECT NUMBER & PHASE: 12000000791

BR. DSG. No.	Sheet	of
55-0852	20	20

DIST	COUNTY	ROUTE	POST MILES TOTAL PROJECT	SHEET NO.	TOTAL SHEETS
12	Ora	57, 91	15.8/16.8, 5.0/6.7	676	852

REGISTERED PROFESSIONAL ENGINEER

8-26-96
PLANS APPROVAL DATE

EARTH MECHANICS, INC.
Geotechnical & Earthquake Engineering
17660 NEWHOPE STREET, SUITE E • FOUNTAIN VALLEY, CA 92708
Phone (714) 751-3826

THE STATE OF CALIFORNIA OR ITS OFFICERS OR AGENTS SHALL NOT BE RESPONSIBLE FOR THE ACCURACY OR COMPLETENESS OF ELECTRONIC COPIES OF THIS PLAN SHEET.

NO AS-BUILT CHANGES

AS BUILT
CORRECTIONS BY A.H.ALHINAD
CONTRACT NO. 12-085 U4
DATE 04-24-00

NOTES:

1. NO GROUNDWATER ENCOUNTERED.
2. ELEVATIONS BASED ON SURVEY BY COAST SURVEYING, INC.
3. BORINGS LOGGED BY ENRIQUE RIUTORT, STAFF ENGINEER.
4. BENCHMARK - 57/91-8-88(PM 15.9) ~3.5 IN. DIA. CADT STA. MARK DISK SET IN EPOXY ON TOP OF PCC SIDEWALK ON THE NE'LY CORNER OF THE MIRALOMA AVE. BRIDGE OVER RTE-57 FWY, ABOUT 150 FT. E'LY OF ℄ OF RTE-57, 38 FT. N'LY OF ℄ OF MIRALOMA. ELEV. 229.49
5. NSR INDICATES NO SAMPLE RECOVERY

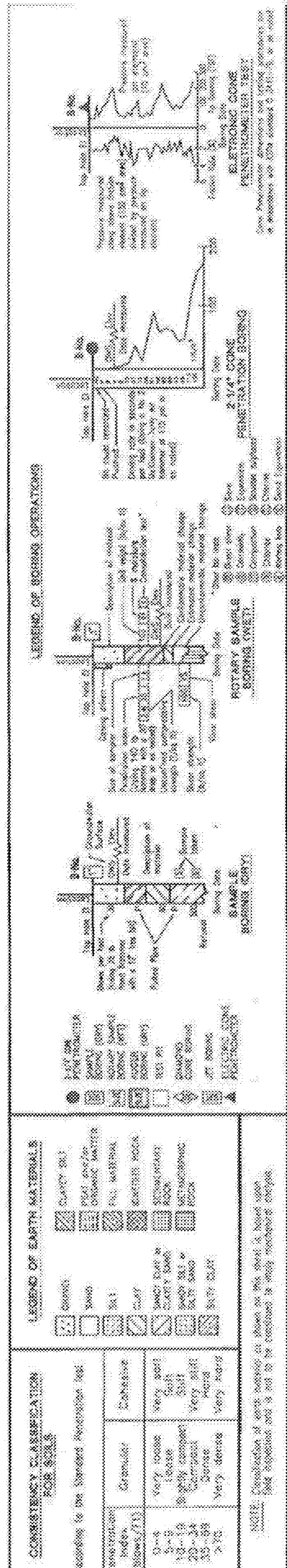

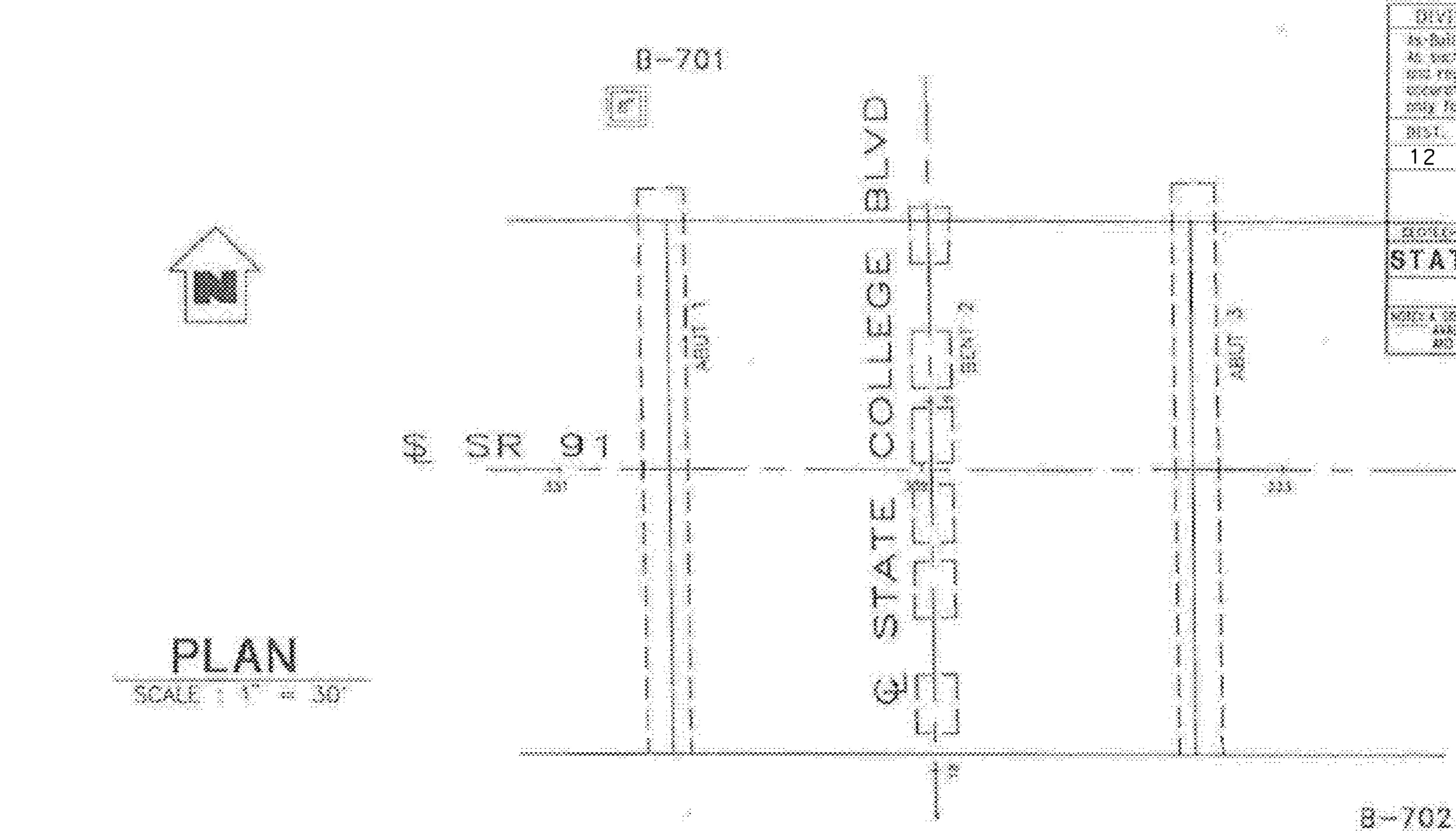

PLAN
SCALE : 1" = 30'

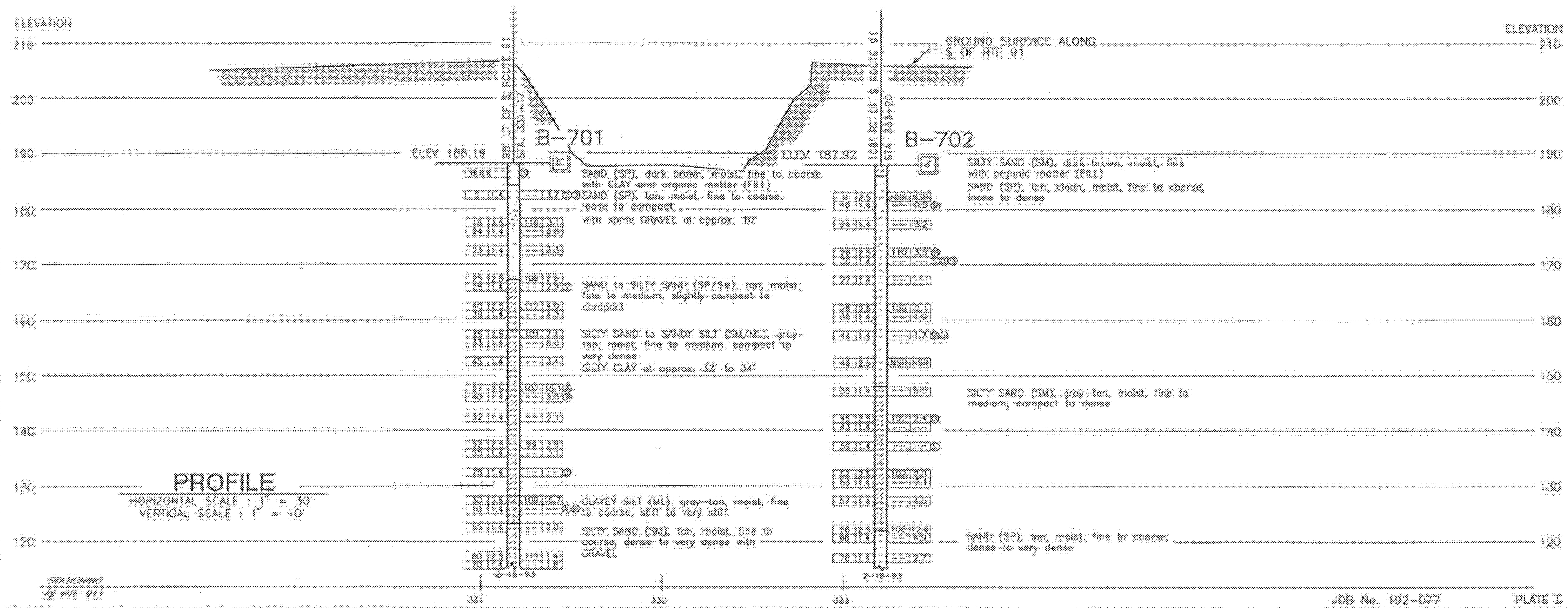

PROFILE
HORIZONTAL SCALE : 1" = 30'
VERTICAL SCALE : 1" = 10'

JOB No. 192-077 PLATE I

BE NGUYEN — DESIGN OVERSIGHT — 3.14.96 SIGN OFF DATE	DRAWN BY: JOE MAGLIATO	CHECK BY: E.A. RIUTORT
E.A. RIUTORT — FIELD INVESTIGATOR — DATE 2-16-93	M&T AGRA — Geotechnical and Environmental Services	PREPARED FOR THE STATE OF CALIFORNIA DEPARTMENT OF TRANSPORTATION
DANIEL J. NOVAK — PROJECT ENGINEER	BRIDGE NO. 55-0852 — POST MILE 5.3	STATE COLLEGE BLVD UC (REPLACE) — LOG OF TEST BORINGS

ORIGINAL SCALE IN INCHES FOR REDUCED PLANS 0 1 2 3

CU 12208
EA 01230h

DISREGARD PRINTS BEARING EARLIER REVISION DATES → REVISION DATES (PRELIMINARY STAGE ONLY) — SHEET 20 OF 20

FILENAME => 55-0852-z-ltb3.tif

DIST	COUNTY	ROUTE	POST MILES TOTAL PROJECT	SHEET No	TOTAL SHEETS
12	Ora	91	0.9/5.4	780	885

REGISTERED CIVIL ENGINEER 3/15/12 DATE

8-13-12
PLANS APPROVAL DATE

REGISTERED PROFESSIONAL ENGINEER Christopher Cho No. C74020 Exp. 06/30/13 CIVIL STATE OF CALIFORNIA

The State of California or its officers or agents shall not be responsible for the accuracy or completeness of scanned copies of this plan sheet.

OCTA
550 S MAIN STREET
ORANGE, CA 92868

RBF CONSULTING
14725 ALTON PARKWAY
IRVINE, CA 92677

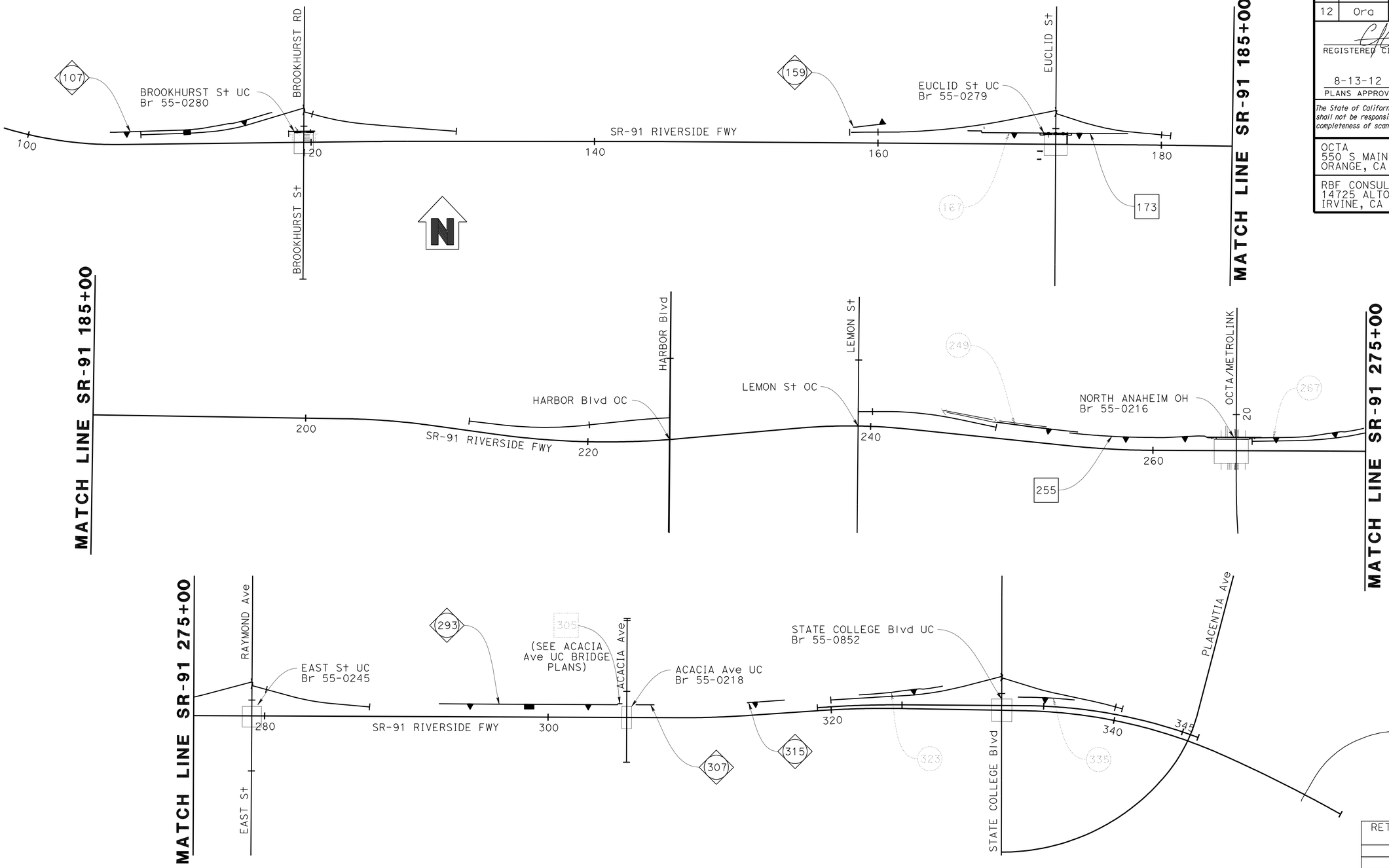

LEGEND:

- XXX — Retaining Wall (see ROADWAY PLANS)
- XXX — Sound/Retaining Wall
- XXX — Retaining Wall
- 305 — (See Acacia Ave UC BRIDGE PLANS)

RETAINING WALL NUMBER	BRIDGE NUMBER
173	55E0122
255	55E0123
315	55E0124
107	55E0125
159	55E0126
293	55E0127
307	55E0128

SOUND WALL & RETAINING WALL KEY PLAN

1" = 350'

NOTE:
THE CONTRACTOR SHALL VERIFY ALL CONTROLLING FIELD DIMENSIONS BEFORE ORDERING OR FABRICATING ANY MATERIAL.

Luqi Yang
DESIGN OVERSIGHT Luqi Yang
3-29-12
SIGN OFF DATE

	BY	CHECKED
DESIGN	C. CHO	C. HARDEN
DETAILS	J. SALDANA	C. HARDEN
QUANTITIES	C. HARDEN	J. VOEPEL

LOAD & RESISTANCE FACTOR DESIGN — LIVE LOADING: HL93 W/"LOW-BOY"; PERMIT DESIGN VEHICLE

	BY	CHECKED
LAYOUT	C. CHO	C. HARDEN
SPECIFICATIONS	S. SHEIKH	PLANS AND SPECS COMPARED S. SHEIKH

PREPARED FOR THE STATE OF CALIFORNIA DEPARTMENT OF TRANSPORTATION

CHAD HARDEN
PROJECT ENGINEER

BRIDGE NO. 55E0122, 55E0123, 55E0124, 55E0125, 55E0126, 55E0127, 55E0128
POST MILES VARIES

SOUND WALL & RETAINING WALL KEY PLAN

DESIGN GENERAL PLAN SHEET (ENGLISH) (REV.7/16/10)

ORIGINAL SCALE IN INCHES FOR REDUCED PLANS 0 1 2 3

UNIT: 2295
PROJECT NUMBER & PHASE: 12000000791 CONTRACT NO.: 12-0C5701

DISREGARD PRINTS BEARING EARLIER REVISION DATES

REVISION DATES

SHEET 1 OF 1

FILE => 55-E0122-aa-kp01.dgn

USERNAME => s12161 4 DATE PLOTTED => 17-AUG-2012 TIME PLOTTED => 06:16

DIST	COUNTY	ROUTE	POST MILES TOTAL PROJECT	SHEET No	TOTAL SHEETS
12	Ora	91	0.9/5.4	781	885

REGISTERED CIVIL ENGINEER 3/15/12 DATE

8-13-12
PLANS APPROVAL DATE

REGISTERED PROFESSIONAL ENGINEER Christopher Cho No. C74020 Exp. 06/30/13 CIVIL STATE OF CALIFORNIA

The State of California or its officers or agents shall not be responsible for the accuracy or completeness of scanned copies of this plan sheet.

OCTA
550 S MAIN STREET
ORANGE, CA 92868

RBF CONSULTING
14725 ALTON PARKWAY
IRVINE, CA 92677

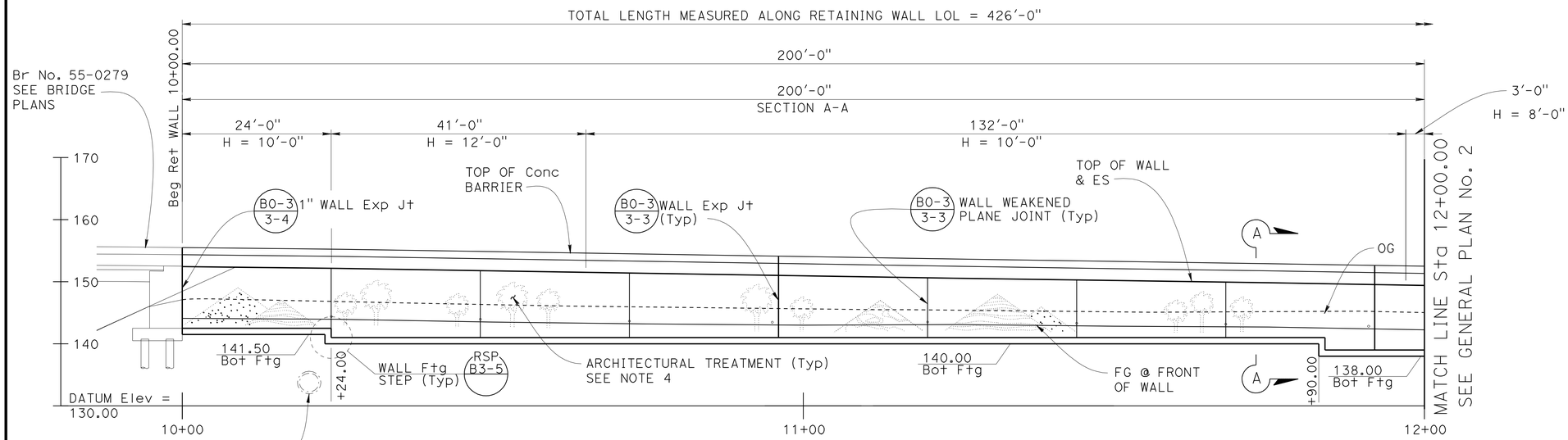

MIRRORED ELEVATION

SCALE: 1" = 10'

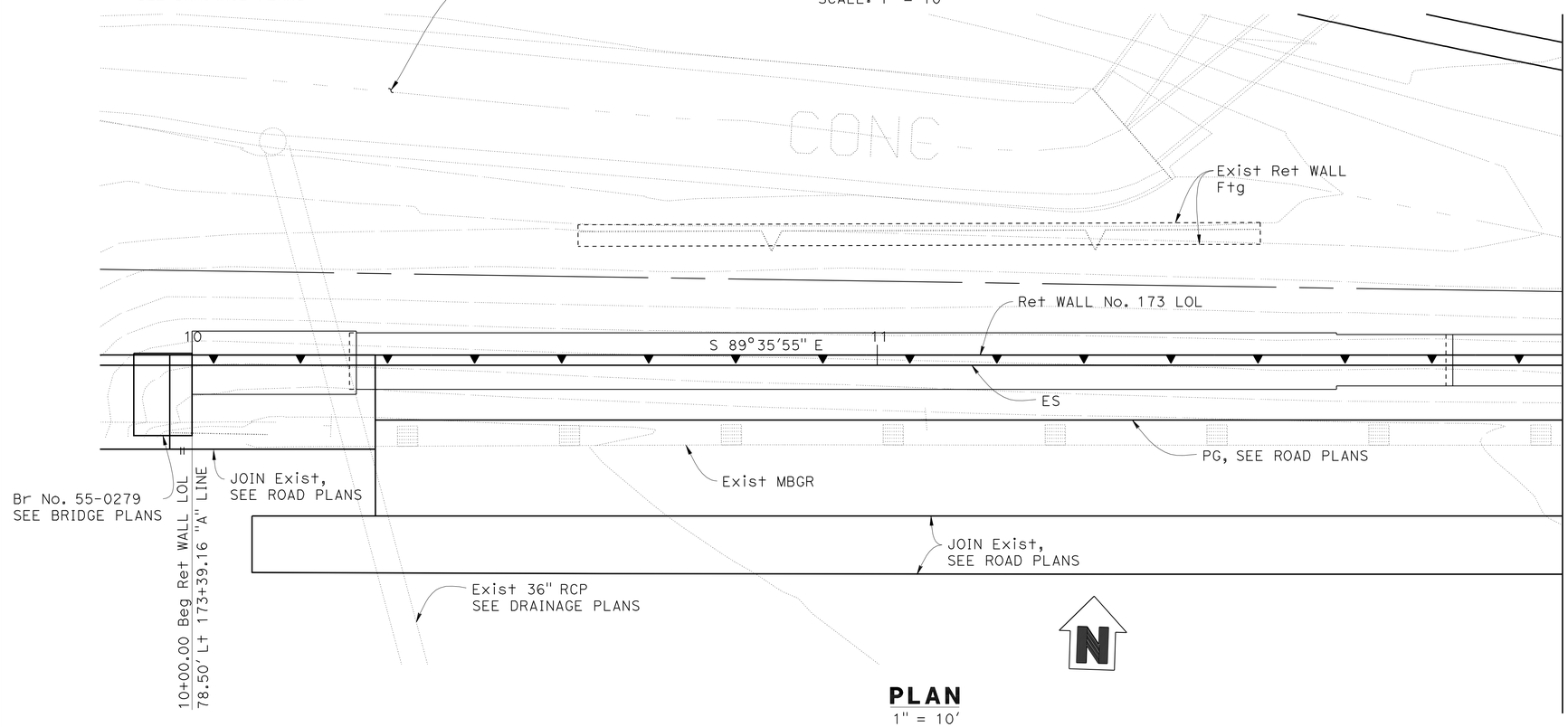

PLAN

1" = 10'

RETAINING WALL No. 173

QUANTITIES

STRUCTURE EXCAVATION (RETAINING WALL)	1,110	CY
STRUCTURE BACKFILL (RETAINING WALL)	960	CY
STRUCTURAL CONCRETE, RETAINING WALL	320	CY
ARCHITECTURAL TREATMENT	800	SQFT
FRACTURED RIB TEXTURE	2,720	SQFT
BAR REINFORCING STEEL (RETAINING WALL)	44,200	LB
CONCRETE BARRIER (TYPE 60D)	182	LF
CONCRETE BARRIER (TYPE 736 MODIFIED)	458	LF

NOTES:

1. This Plan Accurate for Retaining Wall work only.
2. For Section A-A, see "TYPICAL SECTIONS" sheet.
3. For Top of Wall Elevations, see "TYPICAL SECTIONS" sheet.
4. For Architectural Treatment see "ARCHITECTURAL TREATMENT LAYOUT" and "ARCHITECTURAL DETAILS" sheets.

NOTE:
THE CONTRACTOR SHALL VERIFY ALL CONTROLLING FIELD DIMENSIONS BEFORE ORDERING OR FABRICATING ANY MATERIAL.

Luqi Yang
DESIGN OVERSIGHT Luqi Yang
3-29-12
SIGN OFF DATE

	BY	CHECKED				
DESIGN	C. CHO	C. HARDEN	LOAD & RESISTANCE FACTOR DESIGN	LIVE LOADING: HL93 W/"LOW-BOY"; PERMIT DESIGN VEHICLE		
DETAILS	J. SALDANA	C. HARDEN	LAYOUT	C. CHO		C. HARDEN
QUANTITIES	C. HARDEN	J. VOEPEL	SPECIFICATIONS	S. SHEIKH	PLANS AND SPECS COMPARED	S. SHEIKH

PREPARED FOR THE STATE OF CALIFORNIA DEPARTMENT OF TRANSPORTATION

CHAD HARDEN
PROJECT ENGINEER

BRIDGE NO. 55E0122
POST MILES 2.3

RETAINING WALL No. 173
GENERAL PLAN No. 1

DESIGN GENERAL PLAN SHEET (ENGLISH) (REV.7/16/10)

ORIGINAL SCALE IN INCHES FOR REDUCED PLANS 0 1 2 3

UNIT: 2295
PROJECT NUMBER & PHASE: 12000000791 CONTRACT NO.: 12-0C5701

DISREGARD PRINTS BEARING EARLIER REVISION DATES

REVISION DATES

SHEET 1 OF 11

FILE => 55-E0122-a-gp01.dgn

USERNAME => s12614 DATE PLOTTED => 17-AUG-2012 TIME PLOTTED => 06:16

DIST	COUNTY	ROUTE	POST MILES TOTAL PROJECT	SHEET No	TOTAL SHEETS
12	Ora	91	0.9/5.4	782	885

REGISTERED CIVIL ENGINEER 3/15/12 DATE

8-13-12
PLANS APPROVAL DATE

The State of California or its officers or agents shall not be responsible for the accuracy or completeness of scanned copies of this plan sheet.

REGISTERED PROFESSIONAL ENGINEER
Christopher Cho
No. C74020
Exp. 06/30/13
CIVIL
STATE OF CALIFORNIA

OCTA
550 S MAIN STREET
ORANGE, CA 92868

RBF CONSULTING
14725 ALTON PARKWAY
IRVINE, CA 92677

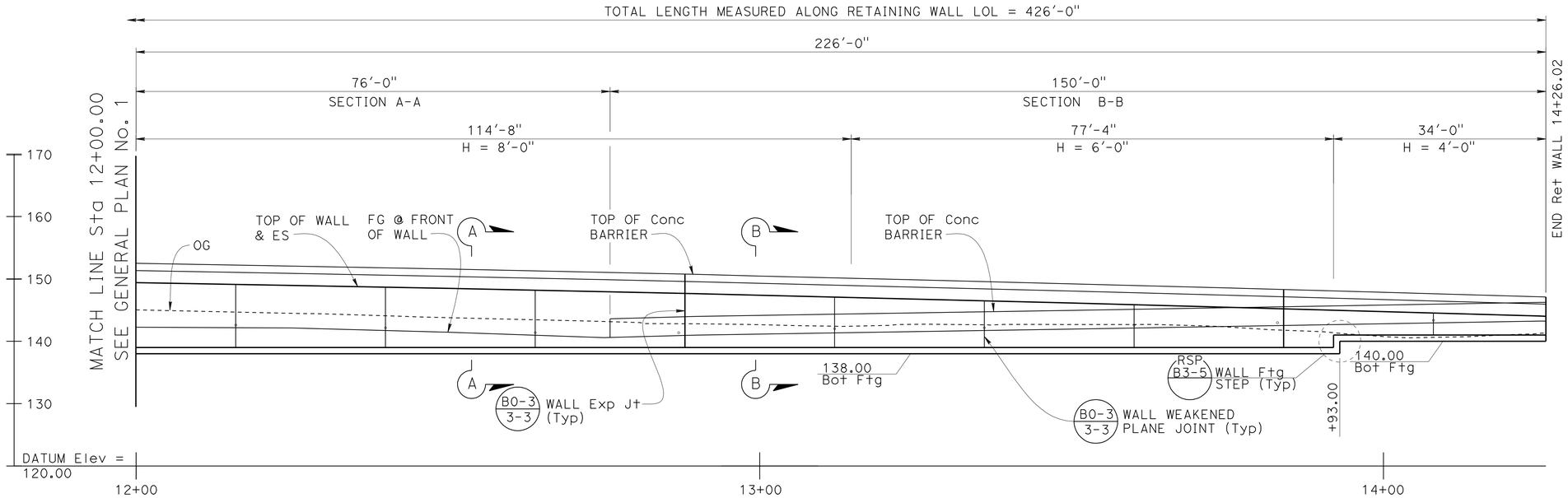

MIRRORED ELEVATION

SCALE: 1" = 10'

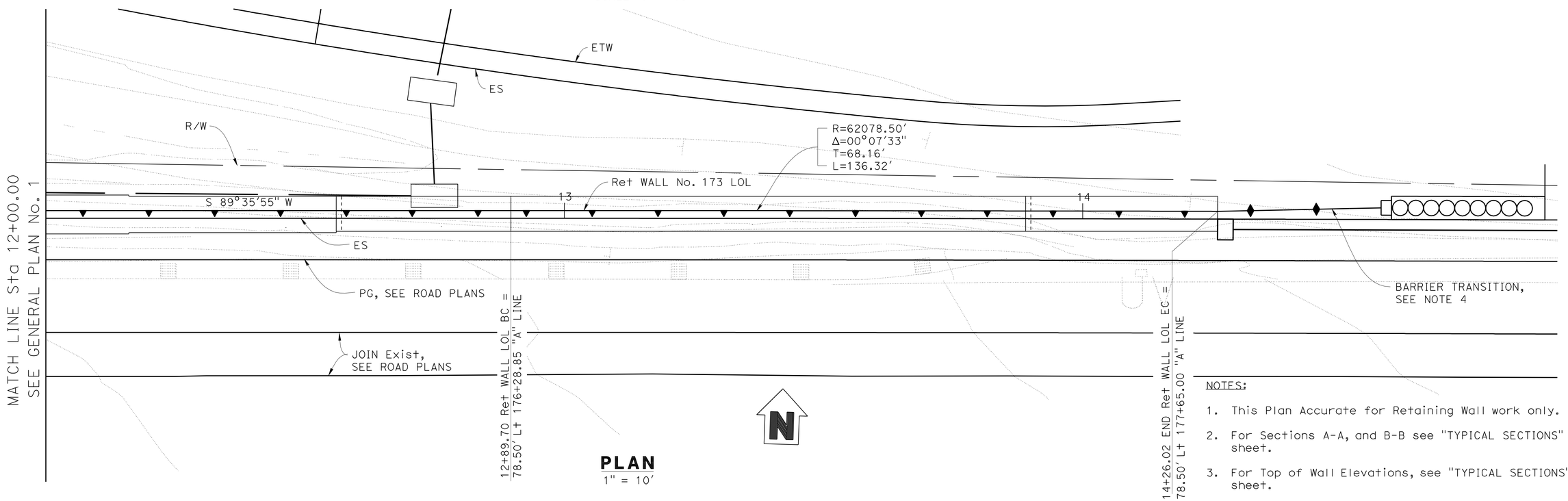

PLAN

1" = 10'

NOTES:

1. This Plan Accurate for Retaining Wall work only.
2. For Sections A-A, and B-B see "TYPICAL SECTIONS" sheet.
3. For Top of Wall Elevations, see "TYPICAL SECTIONS" sheet.
4. For Barrier Transition Details, see "MISCELLANEOUS DETAILS No. 2" sheet.

NOTE:
THE CONTRACTOR SHALL VERIFY ALL CONTROLLING FIELD DIMENSIONS BEFORE ORDERING OR FABRICATING ANY MATERIAL.

Luqi Yang
DESIGN OVERSIGHT Luqi Yang
3-29-12
SIGN OFF DATE

	BY	CHECKED
DESIGN	C. CHO	C. HARDEN
DETAILS	J. SALDANA	C. HARDEN
QUANTITIES	C. HARDEN	J. VOEPEL

LOAD & RESISTANCE FACTOR DESIGN — LIVE LOADING: HL93 W/"LOW-BOY"; PERMIT DESIGN VEHICLE

	BY	CHECKED
LAYOUT	C. CHO	C. HARDEN
SPECIFICATIONS	S. SHEIKH	PLANS AND SPECS COMPARED S. SHEIKH

PREPARED FOR THE STATE OF CALIFORNIA DEPARTMENT OF TRANSPORTATION

CHAD HARDEN
PROJECT ENGINEER

BRIDGE NO. 55E0122
POST MILES 2.3

RETAINING WALL No. 173
GENERAL PLAN No. 2

DESIGN GENERAL PLAN SHEET (ENGLISH) (REV.7/16/10)

ORIGINAL SCALE IN INCHES FOR REDUCED PLANS 0 1 2 3

UNIT: 2295
PROJECT NUMBER & PHASE: 12000000791 CONTRACT NO.: 12-0C5701

DISREGARD PRINTS BEARING EARLIER REVISION DATES

REVISION DATES

SHEET 2 OF 11

FILE => 55-E0122-a-gp02.dgn

USERNAME => s121614 DATE PLOTTED => 17-AUG-2012 TIME PLOTTED => 06:16

DIST	COUNTY	ROUTE	POST MILES TOTAL PROJECT	SHEET No	TOTAL SHEETS
12	Ora	91	0.9/5.4	783	885

REGISTERED CIVIL ENGINEER 3/15/12 DATE

8-13-12
PLANS APPROVAL DATE

REGISTERED PROFESSIONAL ENGINEER
Christopher Cho
No. C74020
Exp. 06/30/13
CIVIL
STATE OF CALIFORNIA

The State of California or its officers or agents shall not be responsible for the accuracy or completeness of scanned copies of this plan sheet.

OCTA
550 S MAIN STREET
ORANGE, CA. 92868

RBF CONSULTING
14725 ALTON PARKWAY
IRVINE, CA 92677

INDEX TO PLANS

SHEET No.	TITLE
1	General Plan No. 1
2	General Plan No. 2
3	Index to Plans
4	Typical Sections
5	Retaining Wall Type 1 (Case 1)
6	Miscellaneous Details No. 1
7	Miscellaneous Details No. 2
8	Limits of Payment for Excavation and Backfill
9	Architectural Treatment Layout
10	Architectural Details
11	Log of Test Borings 1 of 1

STANDARD PLANS DATED 2010

A10A	Abbreviations (Sheet 1 of 2)
A10B	Abbreviations (Sheet 2 of 2)
A10C	Lines and Symbols (Sheet 1 of 3)
A10D	Lines and Symbols (Sheet 2 of 3)
A10E	Lines and Symbols (Sheet 3 of 3)
A10F	Legend - Soil (Sheet 1 of 2)
A10G	Legend - Soil (Sheet 2 of 2)
A76A	Concrete Barrier Type 60
B0-3	Bridge Details
RSP B3-1A	Retaining Wall Type 1 (Case 1)
RSP B3-5	RW Details No. 1
B3-6	RW Details No. 2
B11-56	Concrete Barrier Type 736

STANDARD PLAN SHEET No.

DETAIL No.

Luqi Yang
DESIGN OVERSIGHT Luqi Yang
3-29-12
SIGN OFF DATE

	BY	CHECKED
DESIGN	C. CHO	C. HARDEN
DETAILS	C. CHO	C. HARDEN
QUANTITIES	C. CHO	J. VOEPEL

PREPARED FOR THE
STATE OF CALIFORNIA
DEPARTMENT OF TRANSPORTATION

CHAD HARDEN
PROJECT ENGINEER

BRIDGE NO. 55E0122
POST MILES 2.3

RETAINING WALL No. 173
INDEX TO PLANS

DESIGN DETAIL SHEET (ENGLISH) (REV.7/16/10)

ORIGINAL SCALE IN INCHES FOR REDUCED PLANS 0 1 2 3

UNIT: 2295
PROJECT NUMBER & PHASE: 12000000791 CONTRACT NO.: 12-0C5701

DISREGARD PRINTS BEARING EARLIER REVISION DATES

REVISION DATES

SHEET 3 OF 11

FILE => 55-E0122-a-itp01.dgn

USERNAME => s119571 DATE PLOTTED => 17-AUG-2012 TIME PLOTTED => 09:02

DIST	COUNTY	ROUTE	POST MILES TOTAL PROJECT	SHEET No	TOTAL SHEETS
12	Ora	91	0.9/5.4	784	885

REGISTERED CIVIL ENGINEER 3/15/12 DATE

8-13-12
PLANS APPROVAL DATE

REGISTERED PROFESSIONAL ENGINEER Christopher Cho No. C74020 Exp. 06/30/13 CIVIL STATE OF CALIFORNIA

The State of California or its officers or agents shall not be responsible for the accuracy or completeness of scanned copies of this plan sheet.

OCTA
550 S MAIN STREET
ORANGE, CA. 92868

RBF CONSULTING
14725 ALTON PARKWAY
IRVINE, CA 92677

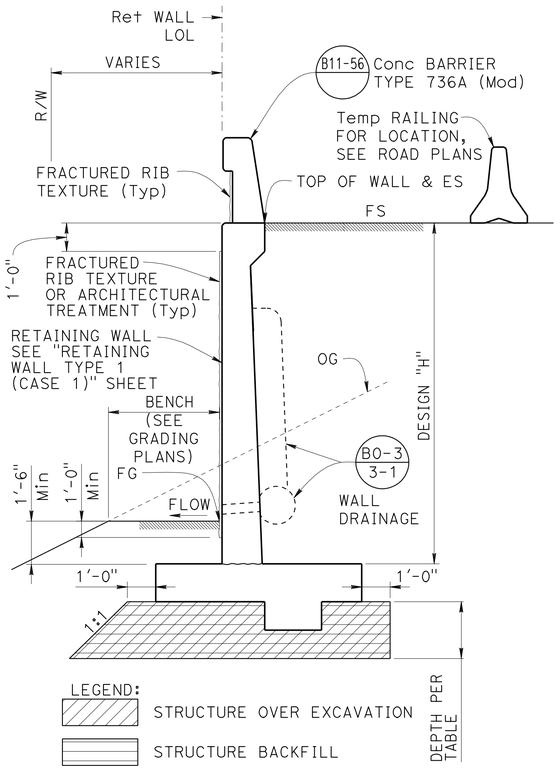

SECTION A-A

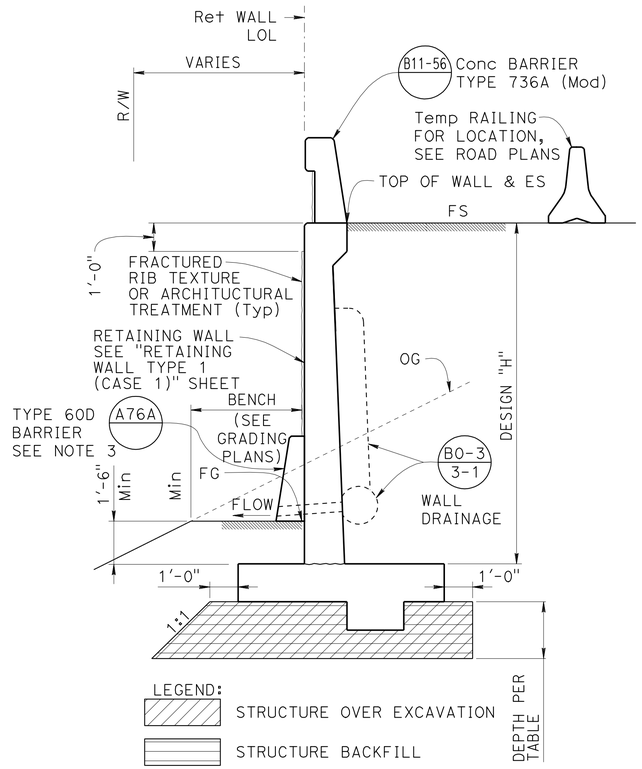

SECTION B-B

TOP OF WALL ELEVATION TABLE

WALL LOL STATION	TOP OF WALL Elev
10+00.00	152.42
+10	152.31
+20	152.20
+30	152.07
+40	151.91
+50	151.75
+60	151.59
+70	151.43
+80	151.27
+90	151.12
11+00.00	150.96
+10	150.80
+20	150.64
+30	150.49
+40	150.34
+50	150.19
+60	150.04
+70	149.89
+80	149.74
+90	149.57
12+00.00	149.41
+10	149.23
+20	149.05
+30	148.86
+40	148.67
+50	148.48
+60	148.27
+70	148.06
+80	147.84
+90	147.62
13+00.00	147.37
+10	147.13
+20	146.88
+30	146.63
+40	146.38
+50	146.12
+60	145.85
+70	145.58
+80	145.31
+90	145.03

WALL LOL STATION	TOP OF WALL Elev
14+00.00	144.75
+10	144.47
+20	144.18
+26.02	144.01

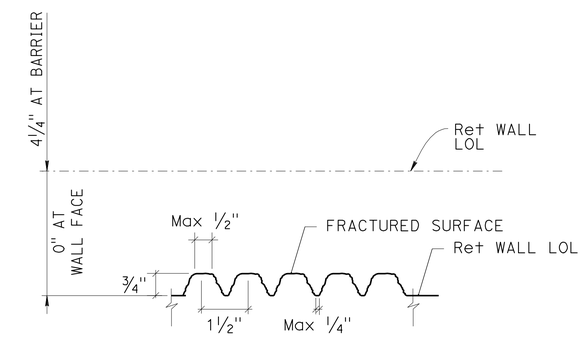

FRACTURED RIB TEXTURE 3/4" (PROJECTING)

NO SCALE

NOTES:

1. This Plan Accurate for Retaining Wall work only.
2. For Excavation and Backfill Details, see "LIMITS OF PAYMENT FOR EXCAVATION AND BACKFILL" sheet.
3. Where Top of Type 60D Barrier is above Top of Wall, see Fill Between Barriers Detail, this sheet.

DESIGN "H"	OVER EXCAVATION DEPTH
4'-0"	1'-0"
6'-0"	1'-0"
8'-0"	1'-0"
10'-0"	1'-0"
12'-0"	3'-0"

TYPICAL SECTION

NO SCALE

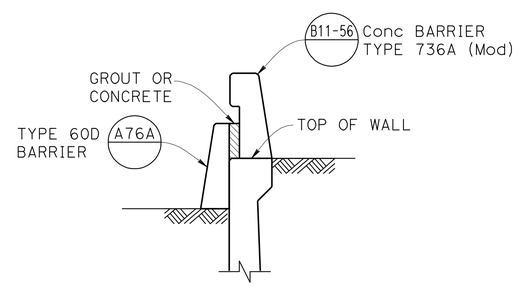

FILL BETWEEN BARRIERS DETAIL

NO SCALE

Luqi Yang
DESIGN OVERSIGHT Luqi Yang
3-29-12
SIGN OFF DATE

	BY	CHECKED
DESIGN	C. CHO	C. HARDEN
DETAILS	C. CHO	C. HARDEN
QUANTITIES	C. CHO	J. VOEPEL

PREPARED FOR THE STATE OF CALIFORNIA DEPARTMENT OF TRANSPORTATION

CHAD HARDEN
PROJECT ENGINEER

BRIDGE NO. 55E0122
POST MILES 2.3

RETAINING WALL No. 173
TYPICAL SECTIONS

DESIGN DETAIL SHEET (ENGLISH) (REV.7/16/10)

ORIGINAL SCALE IN INCHES FOR REDUCED PLANS 0 1 2 3

UNIT: 2295
PROJECT NUMBER & PHASE: 12000000791 CONTRACT NO.: 12-0C5701

DISREGARD PRINTS BEARING EARLIER REVISION DATES

REVISION DATES

SHEET 4 OF 11

FILE => 55-E0122-k-ts01.dgn

USERNAME => s12614 DATE PLOTTED => 17-AUG-2012 TIME PLOTTED => 06:16

DIST	COUNTY	ROUTE	POST MILES TOTAL PROJECT	SHEET No	TOTAL SHEETS
12	Ora	91	0.9/5.4	785	885

REGISTERED CIVIL ENGINEER 3/15/12 DATE

8-13-12
PLANS APPROVAL DATE

REGISTERED PROFESSIONAL ENGINEER Christopher Cho No. C74020 Exp. 06/30/13 CIVIL STATE OF CALIFORNIA

The State of California or its officers or agents shall not be responsible for the accuracy or completeness of scanned copies of this plan sheet.

OCTA
550 S MAIN STREET
ORANGE, CA. 92868

RBF CONSULTING
14725 ALTON PARKWAY
IRVINE, CA 92677

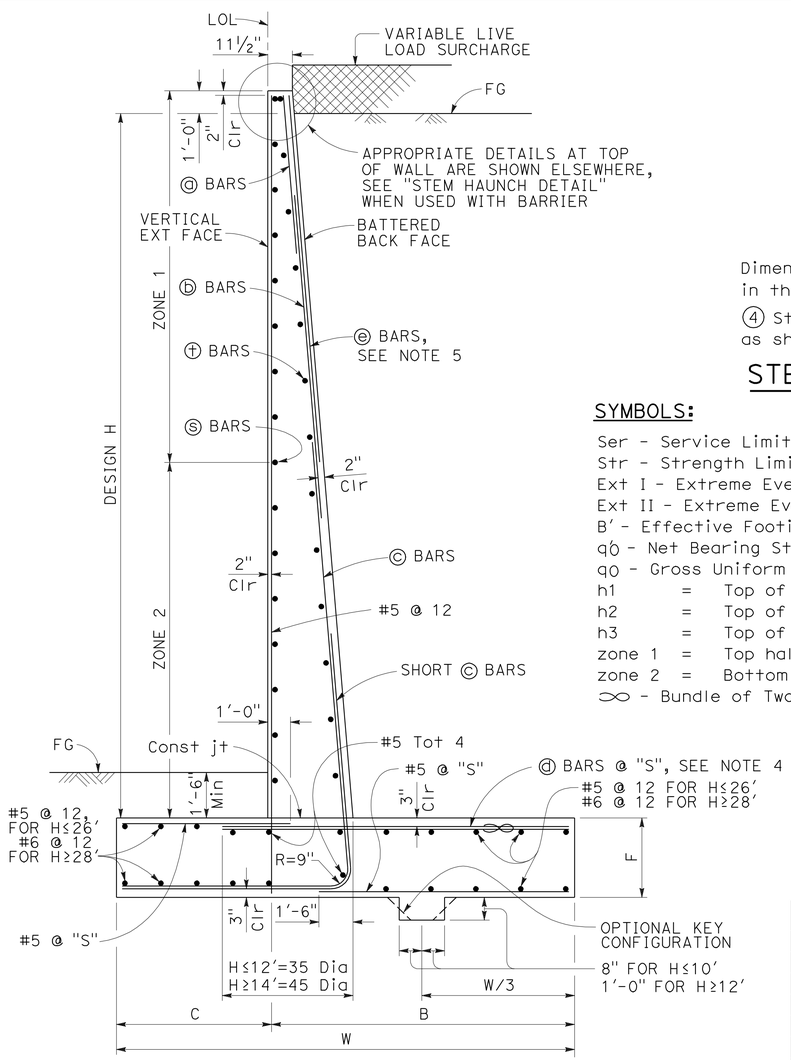

TYPICAL SECTION

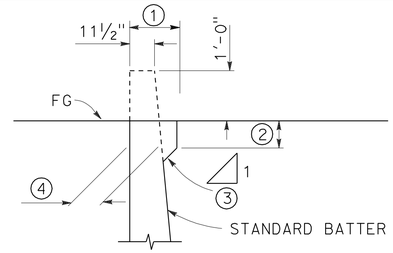

Dimensions ①, ② and ③ to be as shown elsewhere in the Project Plans.

④ Stem Width at Base of Haunch to be Determined as shown.

STEM WIDTH AT BASE OF HAUNCH

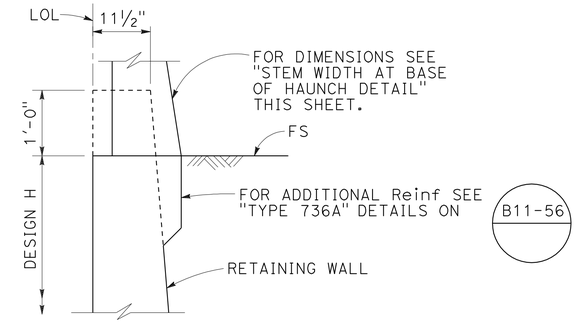

STEM HAUNCH DETAIL

SYMBOLS:

Ser - Service Limit State I
Str - Strength Limit State I
Ext I - Extreme Event Limit State I
Ext II - Extreme Event Limit State II
B' - Effective Footing Width (ft)
q_0' - Net Bearing Stress (ksf), OG assumed to be FG at Toe
q_0 - Gross Uniform Bearing Stress (ksf)
h1 = Top of Footing to Top of Short ⓒ Bar
h2 = Top of Footing to Top of ⓒ Bar
h3 = Top of Footing to Top of ⓓ Bar
zone 1 = Top half of Stem Height
zone 2 = Bottom half of Stem Height
∞ - Bundle of Two Bars

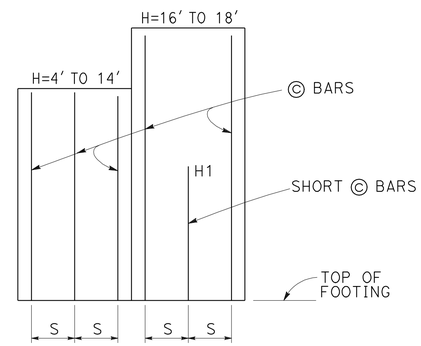

ELEVATION

DESIGN CONDITIONS:

Design H may be Exceeded by 6" before going to the next size. Special Footing Design is Required where Foundation Material is Incapable of Supporting Bearing Stress Listed in the Table.

DESIGN NOTES:

DESIGN: AASHTO LRFD Bridge Design Specifications, 4th edition with California Amendments

LS: Varied surcharge on level ground surface

DC: Stem architectural treatment of thickness up to 6" of concrete (75 psf) considered

CT: 54 kip transverse force applied at he = 32", distributed over 10 feet at the top of wall and 1 : 1 distribution down and outward. Distribution below footing taken no less than 40'.

SEISMIC: $K_H = 0.2$, $K_V = 0.0$

SOIL: $\phi = 34°$, $\gamma = 120$ pcf

REINFORCED CONCRETE: f'c = 3,600 psi
fy = 60,000 psi

LOAD COMBINATIONS AND LIMIT STATES:

SERVICE I	Q = 1.00DC+1.00EV+1.00EH+1.00LS
STRENGTH I	Q = αDC+βEV+ηEH+1.75LS
EXTREME I	Q = 1.00DC+1.00EV+1.00EH+1.00EQD+1.00EQE
EXTREME II	Q = 1.00DC+1.00EV+1.00EH+1.00CT

WHERE:

Q:	Force effects
α:	1.25 or 0.90, whichever controls design
β:	1.35 or 1.00, whichever controls design
η:	1.50 or 0.90, whichever controls design
DC:	Dead load of structure components
EH:	Horizontal earth fill pressure
EV:	Vertical earth pressure from earth fill weight
LS:	Live load surcharge
EQE:	Seismic earth pressure
EQD:	Soil and structural and nonstructural Components inertia
CT:	Vehicular collision force

NOTES:

1. For Details not shown and Drainage Notes see RSP (RSP B3-5)
2. For Wall Stem Joint Details see (B0-3 / 3-3) and (B0-3 / 3-4)
3. At ⓒ Bars:
   h ≤ 6', no Splices are allowed within 1'-8" above the Top of Footing.
   h > 6', no Splices are allowed within h/4 above the Top of Footing.
4. Bundle ⓓ Bars for H = 34' & 36'.
5. Provide #6 @ 10" x 15'-0" ⓔ Bars over a Distance of 8'-0" Measured from all Expansion Joints, Begin Wall and End Wall Locations. For H ≤ 14', Hook ⓔ Bar into Footing and Reduce Bar Length as Needed to Maintain Min Clr Cover.

TABLE OF REINFORCING STEEL, DIMENSIONS AND DATA

DESIGN H	4'	6'	8'	10'	12'	14'	16'	18'
W	6'-10"	7'-0"	7'-3"	7'-7"	8'-4"	9'-7"	10'-9"	12'-0"
C	2'-2"	2'-3"	2'-3"	2'-4"	2'-6"	3'-0"	3'-6"	4'-0"
B	4'-8"	4'-9"	5'-0"	5'-3"	5'-10"	6'-7"	7'-3"	8'-0"
F	1'-4"	1'-4"	1'-4"	1'-4"	1'-6"	1'-8"	1'-8"	1'-9"
BATTER	½: 12	½: 12	½: 12	½: 12	½: 12	½: 12	½: 12	½: 12
SPACING "S"	9"	9"	9"	9"	9"	7"	6"	5"
ⓐ BARS	-	-	-	-	-	-	-	-
ⓑ BARS	-	-	-	-	-	-	-	-
ⓒ BARS	#6	#6	#6	#6	#6	#6	#7	#7
ⓓ BARS	#5	#5	#6	#6	#6	#6	#9	#8
H1	-	-	-	-	-	-	5'-9"	5'-10"
H2	-	-	-	-	-	-	-	-
H3	-	-	-	-	-	-	-	-
ZONE 1 ⓢ BARS	#5 @ 18	#5 @ 18	#5 @ 18	#5 @ 18	#5 @ 18	#5 @ 18	#5 @ 18	#5 @ 18
ZONE 2 ⓢ BARS	#5 @ 18	#5 @ 18	#5 @ 18	#5 @ 18	#5 @ 18	#5 @ 18	#5 @ 12	#5 @ 12
ZONE 1 ⓕ BARS	#4 @ 18	#4 @ 18	#4 @ 18	#4 @ 18	#4 @ 18	#4 @ 18	#4 @ 18	#4 @ 18
ZONE 2 ⓕ BARS	#4 @ 18	#4 @ 18	#4 @ 18	#4 @ 18	#4 @ 18	#4 @ 18	#4 @ 18	#4 @ 18
SER: B', q_0'	6.8, 0.7	6.5, 1.0	6.2, 1.3	6.0, 1.6	6.3, 2.0	7.5, 2.1	8.6, 2.2	9.8, 2.3
STR: B', q_0	6.6, 1.6	5.0, 1.8	3.6, 2.3	3.0, 3.3	3.2, 4.0	4.3, 3.8	5.3, 3.7	6.4, 3.7
EXT I: B', q_0	5.2, 1.1	4.7, 1.5	3.9, 2.2	3.1, 3.4	2.8, 4.8	3.2, 5.3	3.6, 5.7	4.1, 6.1
EXT II: B', q_0	2.6, 2.2	2.7, 2.6	2.8, 3.1	2.9, 3.6	3.7, 3.6	5.2, 3.3	6.7, 3.1	8.3, 3.0

Luqi Yang
DESIGN OVERSIGHT Luqi Yang
3-29-12
SIGN OFF DATE

	BY	CHECKED
DESIGN	C. CHO	C. HARDEN
DETAILS	C. CHO	C. HARDEN
QUANTITIES	C. CHO	J. VOEPEL

PREPARED FOR THE STATE OF CALIFORNIA DEPARTMENT OF TRANSPORTATION

CHAD HARDEN
PROJECT ENGINEER

BRIDGE NO. 55E0122
POST MILES

RETAINING WALL No. 173
RETAINING WALL TYPE 1 (CASE 1)

DESIGN DETAIL SHEET (ENGLISH) (REV.7/16/10)

ORIGINAL SCALE IN INCHES FOR REDUCED PLANS 0 1 2 3

UNIT: 2295
PROJECT NUMBER & PHASE: 12000000791 CONTRACT NO.: 12-0C5701

DISREGARD PRINTS BEARING EARLIER REVISION DATES

REVISION DATES

SHEET 5 OF 11

FILE => 55-E0122-u-miscdt01.dgn

USERNAME => s113571 DATE PLOTTED => 17-AUG-2012 TIME PLOTTED => 08:36

DIST	COUNTY	ROUTE	POST MILES TOTAL PROJECT	SHEET No	TOTAL SHEETS
12	Ora	91	0.9/5.4	786	885

REGISTERED CIVIL ENGINEER 3/15/12 DATE

8-13-12
PLANS APPROVAL DATE

REGISTERED PROFESSIONAL ENGINEER Christopher Cho No. C74020 Exp. 06/30/13 CIVIL STATE OF CALIFORNIA

The State of California or its officers or agents shall not be responsible for the accuracy or completeness of scanned copies of this plan sheet.

OCTA
550 S MAIN STREET
ORANGE, CA. 92868

RBF CONSULTING
14725 ALTON PARKWAY
IRVINE, CA 92677

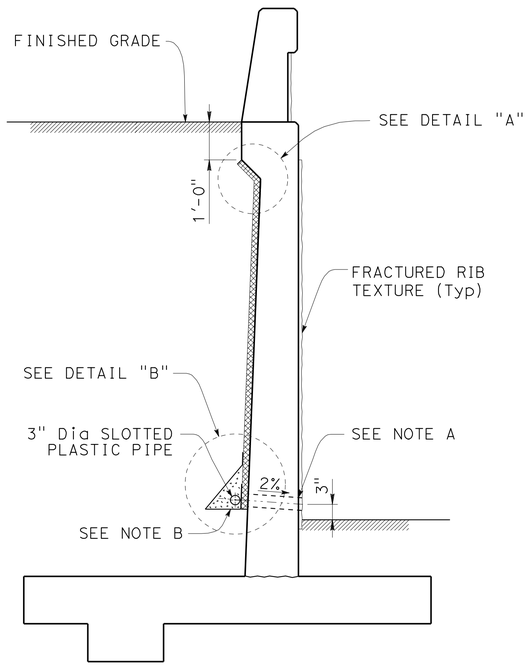

RETAINING WALL WEEP HOLE AND GEOCOMPOSITE DRAIN

NO SCALE

ALTERNATIVE TO BRIDGE DETAIL (BO-3 / 3-1)

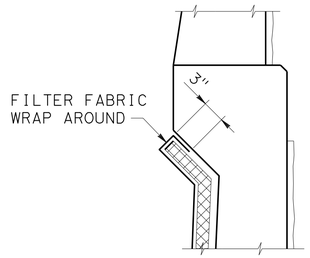

DETAIL "A"

NO SCALE

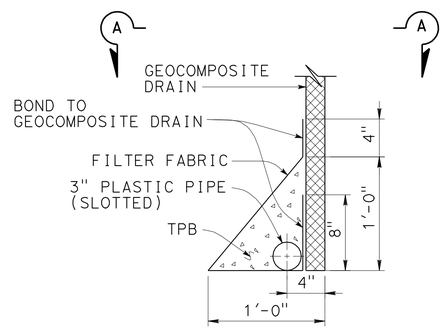

DETAIL "B"

NO SCALE

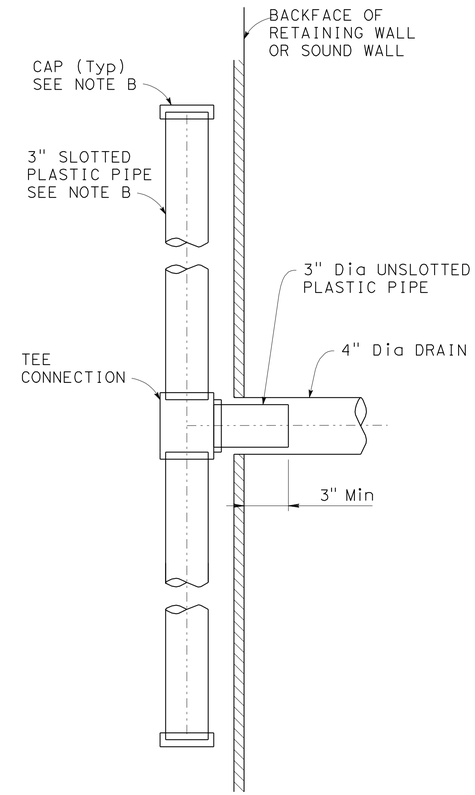

SECTION A-A

NO SCALE

NOTES

A. 4" Dia Drains at Intermediate Sag Points and at 25' Max Center to Center. For Walls Adjacent to Sidewalks or Curbs, Provide 4' Cast Iron or Asbestos Cement Pipe under the Sidewalk to Discharge through Curb Face. Exposed Wall Drains shall be Located 3"± above Finished Grade.

B. Geocomposite Drain, Cement Treated Permeable Base, and 3" Dia Slotted Plastic Pipe continuous behind Retaining Wall or Abutment. Cap Ends of Pipe. Provide 'Tee' Connection at Each 4" Dia Drain.

C. Connect the low End of Plastic Pipe to the main Outlet Pipe as applicable.

Luqi Yang
DESIGN OVERSIGHT Luqi Yang
3-29-12
SIGN OFF DATE

	BY	CHECKED
DESIGN	C. CHO	C. HARDEN
DETAILS	C. CHO	C. HARDEN
QUANTITIES	C. CHO	J. VOEPEL

PREPARED FOR THE STATE OF CALIFORNIA DEPARTMENT OF TRANSPORTATION

CHAD HARDEN
PROJECT ENGINEER

BRIDGE NO. 55E0122
POST MILES 2.3

RETAINING WALL No. 173
MISCELLANEOUS DETAILS No. 1

DESIGN DETAIL SHEET (ENGLISH) (REV.7/16/10)

ORIGINAL SCALE IN INCHES FOR REDUCED PLANS 0 1 2 3

UNIT: 2295
PROJECT NUMBER & PHASE: 12000000791
CONTRACT NO.: 12-0C5701

DISREGARD PRINTS BEARING EARLIER REVISION DATES

REVISION DATES

SHEET 6 OF 11

FILE => 55-E0122-u-miscdt02.dgn

USERNAME => s121614 DATE PLOTTED => 17-AUG-2012 TIME PLOTTED => 06:17

DIST	COUNTY	ROUTE	POST MILES TOTAL PROJECT	SHEET No	TOTAL SHEETS
12	Ora	91	0.9/5.4	787	885

REGISTERED CIVIL ENGINEER 3/15/12 DATE

8-13-12
PLANS APPROVAL DATE

REGISTERED PROFESSIONAL ENGINEER Christopher Cho No. C74020 Exp. 06/30/13 CIVIL STATE OF CALIFORNIA

The State of California or its officers or agents shall not be responsible for the accuracy or completeness of scanned copies of this plan sheet.

OCTA
550 S MAIN STREET
ORANGE, CA. 92868

RBF CONSULTING
14725 ALTON PARKWAY
IRVINE, CA 92677

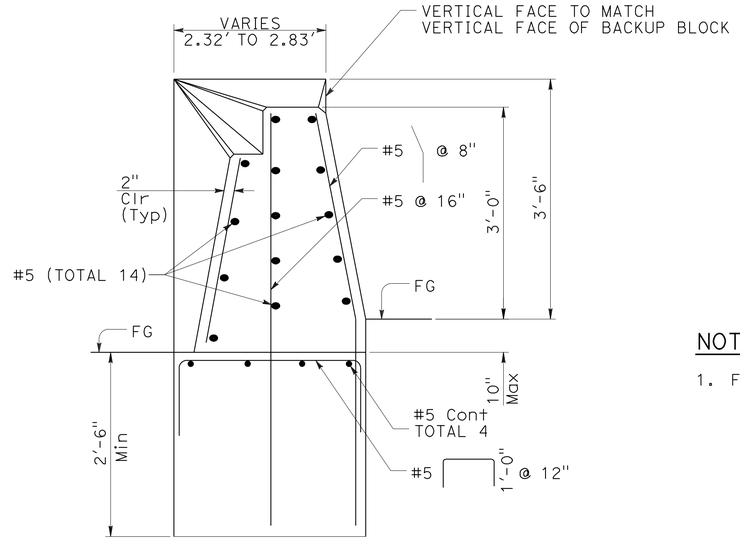

SECTION A-A

NOTE:

1. For Reinforcement, see "RETAINING WALL TYPE 1 (CASE 1)" sheet.

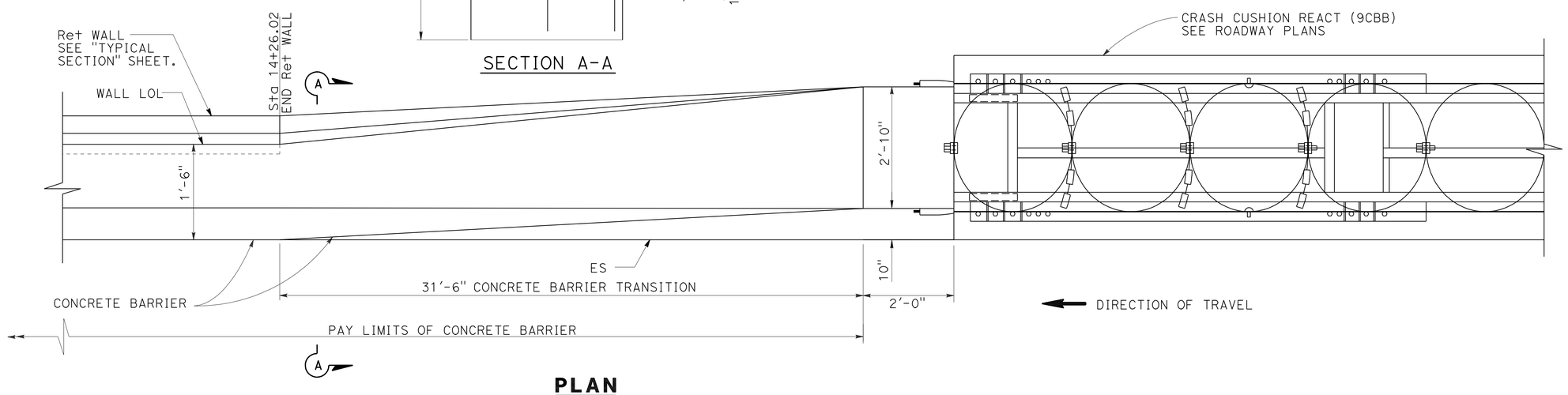

PLAN

NO SCALE

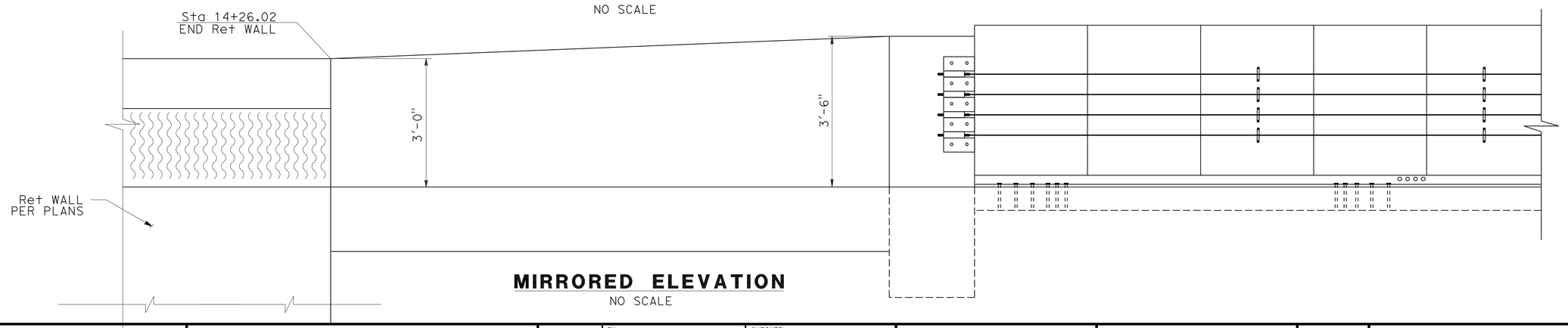

MIRRORED ELEVATION

NO SCALE

Luqi Yang
DESIGN OVERSIGHT Luqi Yang
3-29-12
SIGN OFF DATE

	BY	CHECKED
DESIGN	C. CHO	C. HARDEN
DETAILS	C. CHO	C. HARDEN
QUANTITIES	C. CHO	J. VOEPEL

PREPARED FOR THE
STATE OF CALIFORNIA
DEPARTMENT OF TRANSPORTATION

CHAD HARDEN
PROJECT ENGINEER

BRIDGE NO. 55E0122
POST MILES 2.3

RETAINING WALL No. 173
MISCELLANEOUS DETAILS No. 2

DESIGN DETAIL SHEET (ENGLISH) (REV.7/16/10)

ORIGINAL SCALE IN INCHES FOR REDUCED PLANS 0 1 2 3

UNIT: 2295
PROJECT NUMBER & PHASE: 12000000791 CONTRACT NO.: 12-0C5701

DISREGARD PRINTS BEARING EARLIER REVISION DATES

REVISION DATES

SHEET 7 OF 11

FILE => 55-E0122-u-miscdt03.dgn

USERNAME => s12614 DATE PLOTTED => 17-AUG-2012 TIME PLOTTED => 06:17

DIST	COUNTY	ROUTE	POST MILES TOTAL PROJECT	SHEET No	TOTAL SHEETS
12	Ora	91	0.9/5.4	788	885

REGISTERED CIVIL ENGINEER 3/15/12 DATE

8-13-12
PLANS APPROVAL DATE

REGISTERED PROFESSIONAL ENGINEER
Christopher Cho
No. C74020
Exp. 06/30/13
CIVIL
STATE OF CALIFORNIA

The State of California or its officers or agents shall not be responsible for the accuracy or completeness of scanned copies of this plan sheet.

OCTA
550 S MAIN STREET
ORANGE, CA. 92868

RBF CONSULTING
14725 ALTON PARKWAY
IRVINE, CA 92677

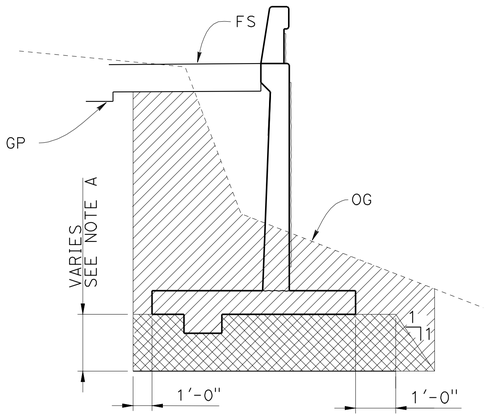

EXCAVATION
NO SCALE

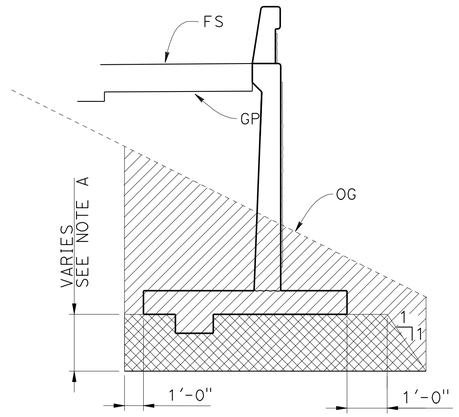

EXCAVATION
NO SCALE

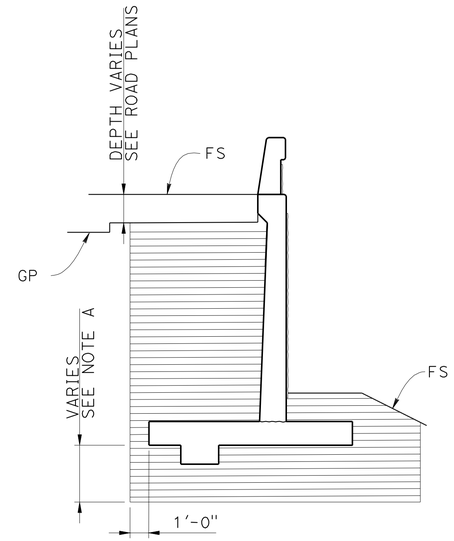

BACKFILL
NO SCALE

RETAINING WALL IN FILL AND CUT

LIMITS OF PAYMENT FOR RETAINING WALL EXCAVATION AND BACKFILL

LEGEND:

- Structure Excavation
- Structure Backfill
- Structure Over Excavation See Note A

NOTE:

A. For depth of Structure Over Excavation, See Retaining Wall Typical Section(s).

Luqi Yang
DESIGN OVERSIGHT Luqi Yang
3-29-12
SIGN OFF DATE

	BY	CHECKED
DESIGN	C. CHO	C. HARDEN
DETAILS	C. CHO	C. HARDEN
QUANTITIES	C. CHO	J. VOEPEL

PREPARED FOR THE
STATE OF CALIFORNIA
DEPARTMENT OF TRANSPORTATION

CHAD HARDEN
PROJECT ENGINEER

BRIDGE NO. 55E0122
POST MILES 2.3

RETAINING WALL No. 173
LIMITS OF PAYMENT FOR EXCAVATION AND BACKFILL

DESIGN DETAIL SHEET (ENGLISH) (REV.7/16/10)

ORIGINAL SCALE IN INCHES FOR REDUCED PLANS 0 1 2 3

UNIT: 2295
PROJECT NUMBER & PHASE: 12000000791 CONTRACT NO.: 12-0C5701

DISREGARD PRINTS BEARING EARLIER REVISION DATES

REVISION DATES

SHEET 8 OF 11

FILE => 55-E0122-u-miscdt04.dgn

USERNAME => s121614 DATE PLOTTED => 17-AUG-2012 TIME PLOTTED => 06:17

DIST	COUNTY	ROUTE	POST MILES TOTAL PROJECT	SHEET No	TOTAL SHEETS
12	Ora	91	0.9/5.4	789	885

LICENSED LANDSCAPE ARCHITECT

8-13-12
PLANS APPROVAL DATE

LICENSED LANDSCAPE ARCHITECT
CATHY L. JOHNSON
No. 4545
Signature
01-31-14
Renewal Date
03-15-12
Date
STATE OF CALIFORNIA

The State of California or its officers or agents shall not be responsible for the accuracy or completeness of scanned copies of this plan sheet.

OCTA
550 S MAIN STREET
ORANGE, CA. 92868

RBF CONSULTING
14725 ALTON PARKWAY
IRVINE, CA 92677

TABLE OF TREATMENT LOCATIONS

TYPE	STATION														
	10+09	10+16	10+26	10+53	10+44	10+54	10+59	10+93	11+00	11+12	11+31	11+38	11+61	11+64	11+72
PALM SECTION 1-1	-	-	-	X	-	X	-	X	-	-	-	-	-	-	-
PALM SECTION 5-5	-	-	X	-	X	-	X	-	X	-	-	-	X	X	X
MOUNTAIN	X	X	-	-	-	-	-	-	-	X	X	X	-	-	-

NOTE:
For Palm Section 1-1, Palm Section 5-5 and Mountain Architectural Treatments, see "ARCHITECTURAL DETAILS" sheet.

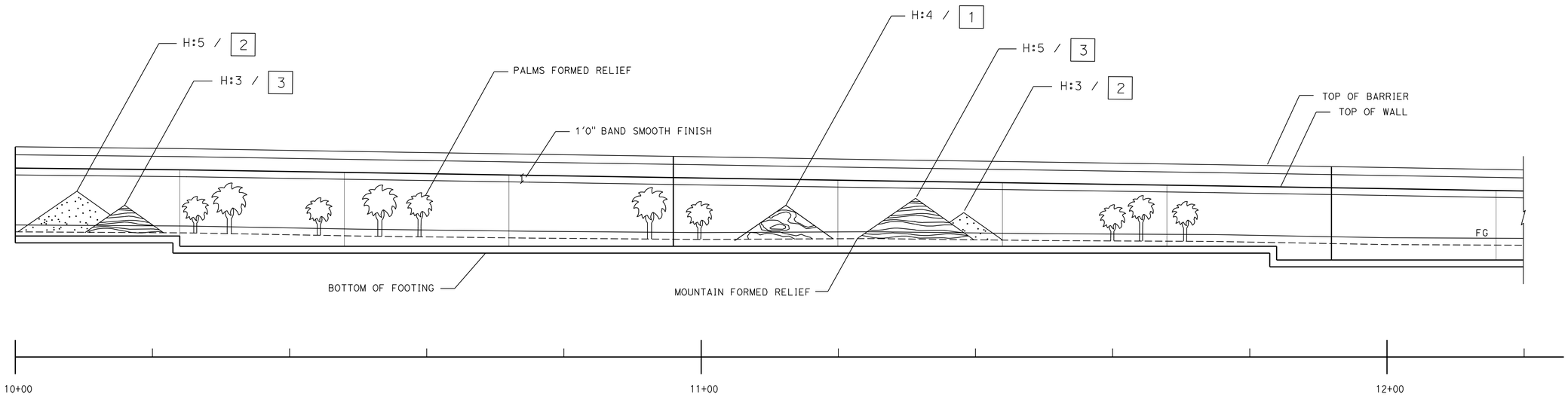

MIRRORED ELEVATION

SCALE: HORIZ 1" = 10'
VERT 1" = 10'

Luqi Yang
DESIGN OVERSIGHT Luqi Yang
3-29-12
SIGN OFF DATE

	BY	CHECKED
DESIGN	C. CHO	C. HARDEN
DETAILS	C. CHO	C. HARDEN
QUANTITIES	C. CHO	J. VOEPEL

PREPARED FOR THE
STATE OF CALIFORNIA
DEPARTMENT OF TRANSPORTATION

CHAD HARDEN
PROJECT ENGINEER

BRIDGE NO. 55E0122
POST MILES 2.3

RETAINING WALL No. 173
ARCHITECTURAL TREATMENT LAYOUT

DESIGN DETAIL SHEET (ENGLISH) (REV.7/16/10)

ORIGINAL SCALE IN INCHES FOR REDUCED PLANS 0 1 2 3

UNIT: 2295
PROJECT NUMBER & PHASE: 12000000791
CONTRACT NO.: 12-0C5701

DISREGARD PRINTS BEARING EARLIER REVISION DATES

REVISION DATES

SHEET 9 OF 11

FILE => 55-E0122-u-miscdt05.dgn

USERNAME => s12614 DATE PLOTTED => 17-AUG-2012 TIME PLOTTED => 06:17

DIST	COUNTY	ROUTE	POST MILES TOTAL PROJECT	SHEET No	TOTAL SHEETS
12	Ora	91	0.9/5.4	790	885

LICENSED LANDSCAPE ARCHITECT

8-13-12
PLANS APPROVAL DATE

LICENSED LANDSCAPE ARCHITECT
CATHY L. JOHNSON
No. 4545
Signature
01-31-14
Renewal Date
03-15-12
Date
STATE OF CALIFORNIA

The State of California or its officers or agents shall not be responsible for the accuracy or completeness of scanned copies of this plan sheet.

OCTA
550 S MAIN STREET
ORANGE, CA. 92868

RBF CONSULTING
14725 ALTON PARKWAY
IRVINE, CA 92677

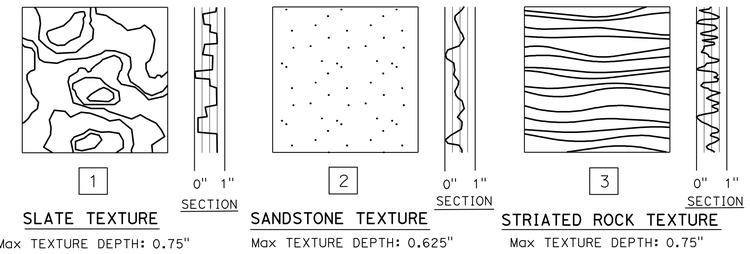

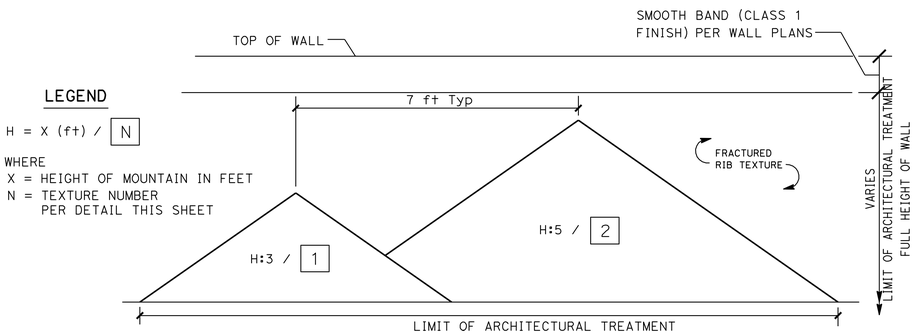

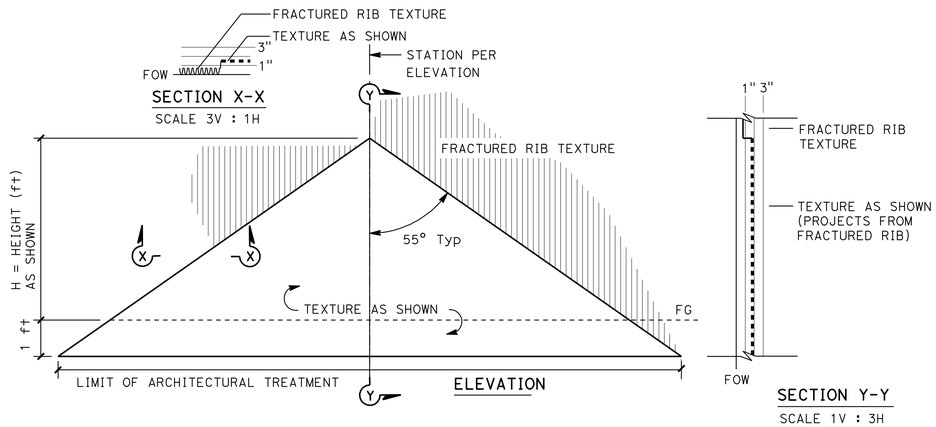

MOUNTAIN FORMED RELIEF (PROJECTING) WITH 3/4" FRACTURED RIB TEXTURE

NO SCALE

ABBREVIATION:

FOW FACE OF WALL

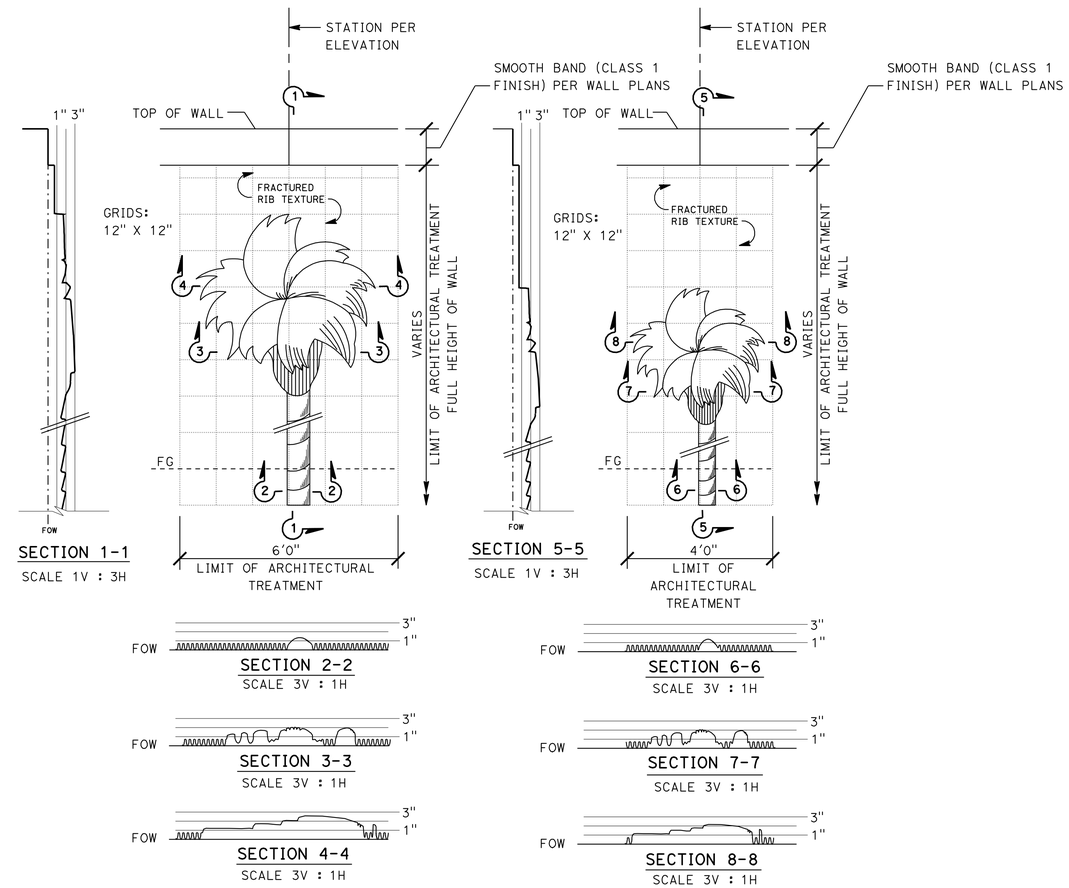

PALMS FORMED RELIEF (PROJECTING) WITH 3/4" FRACTURED RIB TEXTURE

NO SCALE

Luqi Yang
DESIGN OVERSIGHT Luqi Yang
3-29-12
SIGN OFF DATE

	BY	CHECKED
DESIGN	C. CHO	C. HARDEN
DETAILS	C. CHO	C. HARDEN
QUANTITIES	C. CHO	J. VOEPEL

PREPARED FOR THE STATE OF CALIFORNIA DEPARTMENT OF TRANSPORTATION

CHAD HARDEN
PROJECT ENGINEER

BRIDGE NO. 55E0122
POST MILES 2.3

RETAINING WALL No. 173

ARCHITECTURAL DETAILS

DESIGN DETAIL SHEET (ENGLISH) (REV.7/16/10)

ORIGINAL SCALE IN INCHES FOR REDUCED PLANS 0 1 2 3

UNIT: 2295
PROJECT NUMBER & PHASE: 12000000791 CONTRACT NO.: 12-0C5701

DISREGARD PRINTS BEARING EARLIER REVISION DATES

REVISION DATES

SHEET 10 OF 11

FILE => 55-E0122-u-miscdt06.dgn

USERNAME => s126614 DATE PLOTTED => 17-AUG-2012 TIME PLOTTED => 06:17

DIST	COUNTY	ROUTE	POST MILES TOTAL PROJECT	SHEET NO	TOTAL SHEETS
12	Ora	91	0.9/5.4	791	885

REGISTERED ENGINEER 3/15/12 DATE

8-13-12
PLANS APPROVAL DATE

REGISTERED PROFESSIONAL ENGINEER S. PIRATHIVIRAJ No. C71662 EXP. 12/31/11 CIVIL STATE OF CALIFORNIA

THE STATE OF CALIFORNIA OR ITS OFFICERS OR AGENTS SHALL NOT BE RESPONSIBLE FOR THE ACCURACY OR COMPLETENESS OF SCANNED COPIES OF THIS PLAN SHEET.

ORANGE COUNTY TRANSPORTATION AUTHORITY
550 S. MAIN STREET
ORANGE, CA 92863-1584

EARTH MECHANICS, INC.
17800 NEWHOPE STREET, SUITE B
FOUNTAIN VALLEY, CA 92708

BENCH MARK

Designation: 1G-164-05 Elev = 109.804
Described by OCS 2005 - Found 3¾" OCS Aluminum Benchmark Disk Stamped "1G-164-05", set in the Nothwesterly Corner of a 4.5 ft. by 11.0 ft. Concrete Catch Basin. Monument is located in the Southeasterly Corner of the intersection of Magnolia Avenue and Buckingham Street, 200 ft. ± from the centerline of Buckingham and 47 ft. Easterly of the centerline of Magnolia. Monument is set level with the Sidewalk

Designation: 2F-25-04 Elev = 162.700
Described by OCS 2004 - Found 3¾" OCS Aluminum Benchmark Disk Stamped "2F-25-04", set in the Nothwesterly Corner of a 7.5 ft. by 4.5 ft. Concrete Catch Basin. Monument is located in the Northeasterly Corner of the intersection of Harbor Boulevard and the Eastbound 91 Freeway On-Ramp, 39 ft. Northerly of the centerline of the On-Ramp and 40 ft. Easterly of the centerline of Harbor Boulevard. Monument is set level with the Sidewalk

Designation: 2D-35-86 Elev = 188.576
Described by OCS 2003 - Found 3¾" OCS Aluminum Benchmark Disk Stamped "2D-35-86", set in the Nothwesterly Corner of a 7 ft. by 14 ft. Concrete Catch Basin. Monument is located in the Southeasterly Corner of the intersection of Placentia Avenue and State College Boulevard, 38 ft. Easterly of the centerline of State College and 70.5 ft. Southerly of the centerline of Placentia. Monument is set level with the Sidewalk

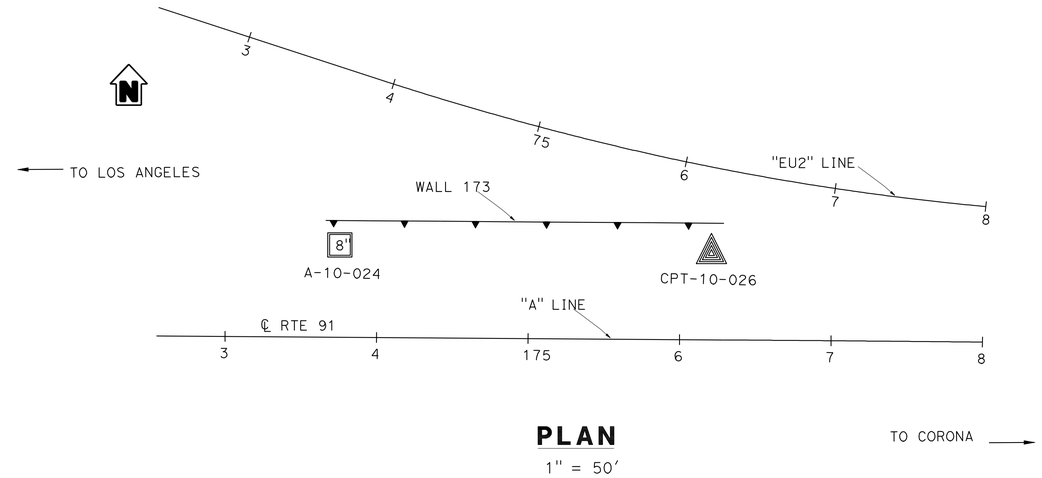

PLAN

1" = 50'

NOTES:

(1) This LOTB sheet was prepared in accordance with the Caltrans Soil and Rock Logging, Classification and Presentation Manual (June 2010).

(2) 2.4" samples were taken using a California Modified Sampler.

(3) An automatic trip hammer system consisting of a hammer weight of 140 lbs falling a distance of 30" was used to advance the drive sampler.

(4) Blowcounts for 2.4" Modified California Ring Samplers are raw blowcounts. A conversion factor of 0.5 can be used to convert the 2.4" Modified California Ring Sampler blowcounts to Standard Penetration Test (SPT) blowcounts.

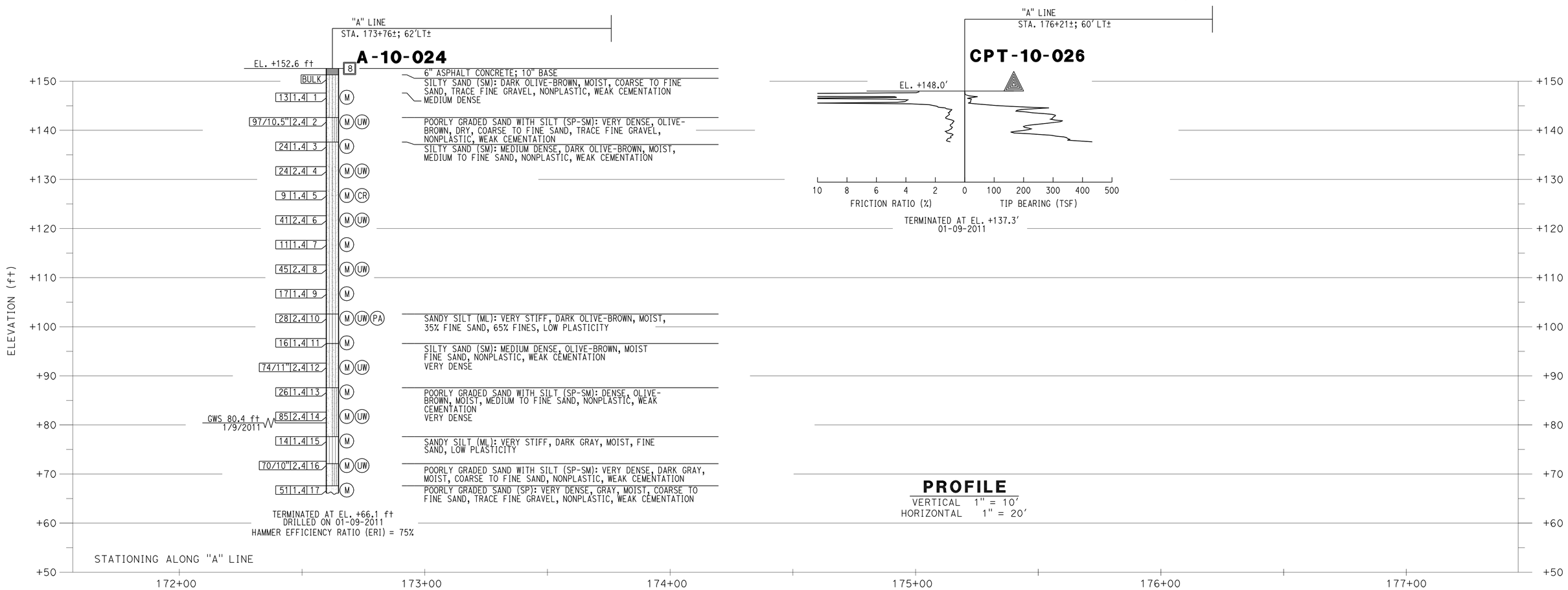

PROFILE

VERTICAL 1" = 10'
HORIZONTAL 1" = 20'

Luqi Yang
DESIGN OVERSIGHT Luqi Yang
3-29-12
SIGN OFF DATE

DRAWN BY J. FANG
CHECKED BY S. PIRATHIVIRAJ

R. JIE
FIELD INVESTIGATION BY:
DATE: 1/9/2011

PREPARED FOR THE STATE OF CALIFORNIA DEPARTMENT OF TRANSPORTATION

S. PIRATHIVIRAJ
PROJECT ENGINEER

BRIDGE No. 55E0122
POST MILES 2.3

RETAINING WALL No. 173

LOG OF TEST BORING 1 OF 1

GS GEOTECHNICAL LOG OF TEST BORINGS SHEET (ENGLISH) (REV. 7/16/10)

ORIGINAL SCALE IN INCHES FOR REDUCED PLANS 0 1 2 3

UNIT: 2295
PROJECT NUMBER & PHASE: 12000000791

DISREGARD PRINTS BEARING EARLIER REVISION DATES

REVISION DATES

SHEET 11 OF 11

FILE => 55-E0122-z-ltb1.dgn

CONTRACT NO.: 12-0C5701 PROJECT ID:

USERNAME => s121614 DATE PLOTTED => 04-SEP-2012 TIME PLOTTED => 14:58

DIST	COUNTY	ROUTE	POST MILES TOTAL PROJECT	SHEET No	TOTAL SHEETS
12	Ora	91	0.9/5.4	792	885

REGISTERED CIVIL ENGINEER 3/15/12 DATE

8-13-12
PLANS APPROVAL DATE

REGISTERED PROFESSIONAL ENGINEER Christopher Cho No. C74020 Exp. 06/30/13 CIVIL STATE OF CALIFORNIA

The State of California or its officers or agents shall not be responsible for the accuracy or completeness of scanned copies of this plan sheet.

OCTA
550 S MAIN STREET
ORANGE, CA 92868

RBF CONSULTING
14725 ALTON PARKWAY
IRVINE, CA 92677

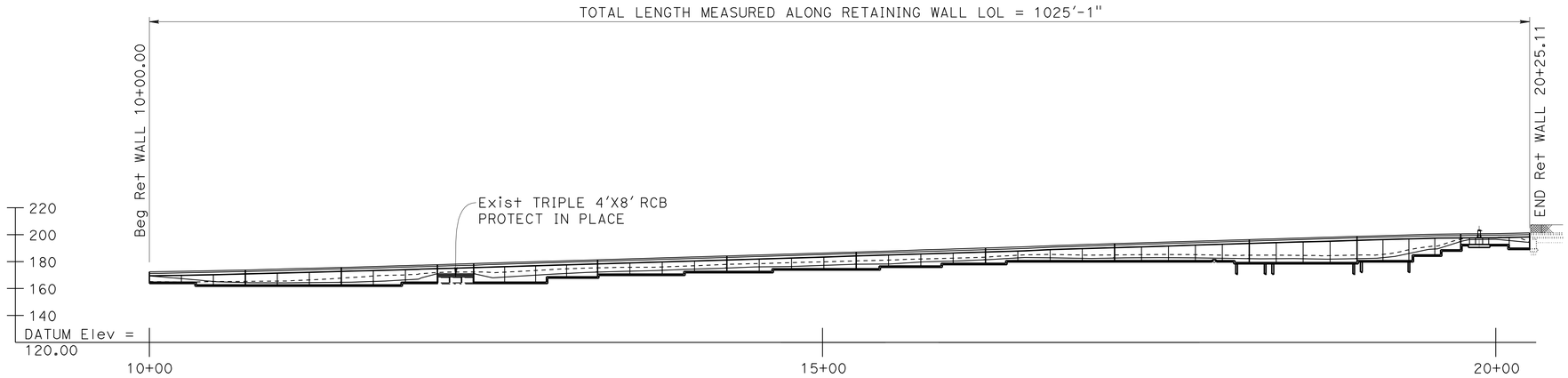

MIRRORED ELEVATION

SCALE: 1" = 50'

RETAINING WALL No. 255

QUANTITIES

STRUCTURE EXCAVATION (RETAINING WALL)	3,670	CY
STRUCTURE BACKFILL (RETAINING WALL)	3,125	CY
16" CAST-IN-DRILLED-HOLE CONCRETE PILING	1,892	LF
STRUCTURAL CONCRETE, RETAINING WALL	917	CY
FRACTURED RIB TEXTURE	9,050	SQFT
BAR REINFORCING STEEL (RETAINING WALL)	138,000	LB
CONCRETE BARRIER (TYPE 736 MODIFIED)	1,025	LF

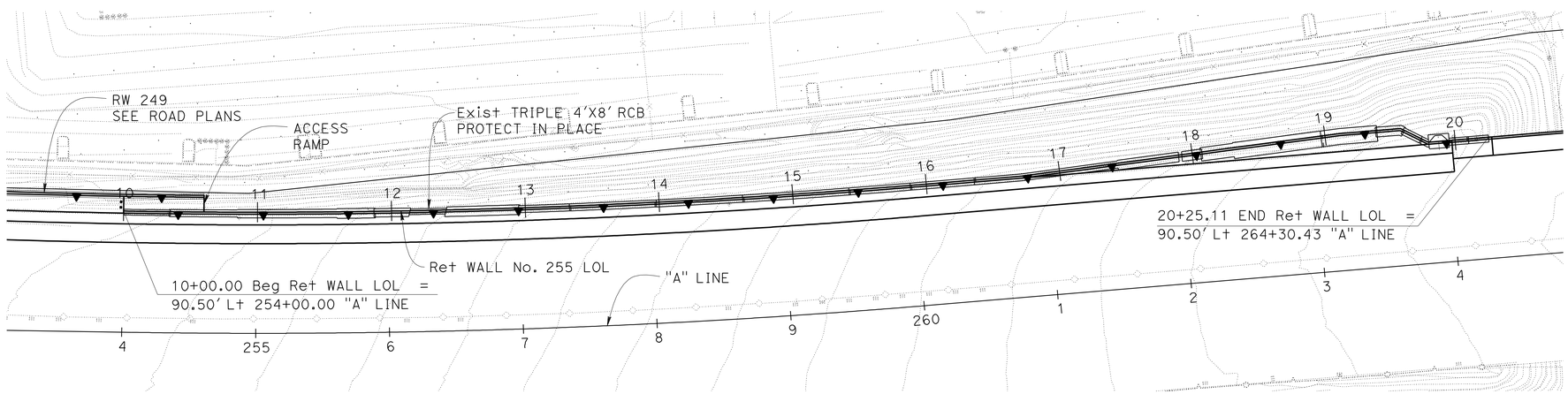

PLAN

1" = 50'

NOTES:

1. This Plan Accurate for Retaining Wall work only.
2. For Typical Sections see "TYPICAL SECTIONS" sheet.
3. For Top of Wall Elevations, see "TYPICAL SECTIONS" sheet.

NOTE:
THE CONTRACTOR SHALL VERIFY ALL CONTROLLING FIELD DIMENSIONS BEFORE ORDERING OR FABRICATING ANY MATERIAL.

Luqi Yang
DESIGN OVERSIGHT Luqi Yang
3-29-12
SIGN OFF DATE

	BY	CHECKED
DESIGN	C. CHO	C. HARDEN
DETAILS	J. SALDANA	C. HARDEN
QUANTITIES	C. HARDEN	J. VOEPEL

LOAD & RESISTANCE FACTOR DESIGN — LIVE LOADING: HL93 W/"LOW-BOY"; PERMIT DESIGN VEHICLE

	BY	CHECKED
LAYOUT	C. CHO	C. HARDEN
SPECIFICATIONS	S. SHEIKH	PLANS AND SPECS COMPARED S. SHEIKH

PREPARED FOR THE STATE OF CALIFORNIA DEPARTMENT OF TRANSPORTATION

CHAD HARDEN
PROJECT ENGINEER

BRIDGE NO. 55E0123
POST MILES 3.8

RETAINING WALL No. 255
GENERAL PLAN

DESIGN GENERAL PLAN SHEET (ENGLISH) (REV.7/16/10)

ORIGINAL SCALE IN INCHES FOR REDUCED PLANS 0 1 2 3

UNIT: 2295
PROJECT NUMBER & PHASE: 12000000791 CONTRACT NO.: 12-0C5701

DISREGARD PRINTS BEARING EARLIER REVISION DATES

REVISION DATES

SHEET 1 OF 17

FILE => 55-E0123-a-gp01.dgn

USERNAME => s12614 DATE PLOTTED => 17-AUG-2012 TIME PLOTTED => 06:17

DIST	COUNTY	ROUTE	POST MILES TOTAL PROJECT	SHEET No	TOTAL SHEETS
12	Ora	91	0.9/5.4	793	885

REGISTERED CIVIL ENGINEER — DATE 3/15/12

8-13-12
PLANS APPROVAL DATE

REGISTERED PROFESSIONAL ENGINEER — Christopher Cho — No. C74020 — Exp. 06/30/13 — CIVIL — STATE OF CALIFORNIA

The State of California or its officers or agents shall not be responsible for the accuracy or completeness of scanned copies of this plan sheet.

OCTA
550 S MAIN STREET
ORANGE, CA. 92868

RBF CONSULTING
14725 ALTON PARKWAY
IRVINE, CA 92677

INDEX TO PLANS

SHEET No.	TITLE
1	General Plan
2	Index to Plans
3	Structure Plan No. 1
4	Structure Plan No. 2
5	Structure Plan No. 3
6	Structure Plan No. 4
7	Structure Plan No. 5
8	Foundation Plan
9	Typical Sections
10	Retaining Wall Type 1 (Case 1)
11	Retaining Wall Type 1 Details
12	Miscellaneous Details No. 1
13	Miscellaneous Details No. 2
14	Overhead Sign Pedestal Details
15	Limits of Payment for Excavation and Backfill
16	Log of Test Borings 1 of 2
17	Log of Test Borings 2 of 2

STANDARD PLANS DATED 2010

A10A	Abbreviations (Sheet 1 of 2)
A10B	Abbreviations (Sheet 2 of 2)
A10C	Lines and Symbols (Sheet 1 of 3)
A10D	Lines and Symbols (Sheet 2 of 3)
A10E	Lines and Symbols (Sheet 3 of 3)
A10F	Legend - Soil (Sheet 1 of 2)
A10G	Legend - Soil (Sheet 2 of 2)
B0-3	Bridge Details
B2-3	16" and 24" Cast-in-Drilled-Hole Concrete Pile
RSP B3-1A	Retaining Wall Type 1 (Case 1)
RSP B3-5	RW Details No. 1
B3-6	RW Details No. 2
B11-56	Concrete Barrier Type 736

STANDARD PLAN SHEET No.

DETAIL No.

Luqi Yang
DESIGN OVERSIGHT — Luqi Yang
3-29-12
SIGN OFF DATE

	BY	CHECKED
DESIGN	C. CHO	C. HARDEN
DETAILS	C. CHO	C. HARDEN
QUANTITIES	C. CHO	J. VOEPEL

PREPARED FOR THE STATE OF CALIFORNIA DEPARTMENT OF TRANSPORTATION

CHAD HARDEN
PROJECT ENGINEER

BRIDGE NO. 55E0123
POST MILES 3.8

RETAINING WALL No. 255
INDEX TO PLANS

DESIGN DETAIL SHEET (ENGLISH) (REV.7/16/10)

ORIGINAL SCALE IN INCHES FOR REDUCED PLANS 0 1 2 3

UNIT: 2295
PROJECT NUMBER & PHASE: 12000000791 CONTRACT NO.: 12-0C5701

DISREGARD PRINTS BEARING EARLIER REVISION DATES

REVISION DATES

SHEET 2 OF 17

FILE => 55-E0123-a-itp01.dgn

USERNAME => s119571 DATE PLOTTED => 17-AUG-2012 TIME PLOTTED => 03:02

DIST	COUNTY	ROUTE	POST MILES TOTAL PROJECT	SHEET No	TOTAL SHEETS
12	Ora	91	0.9/5.4	794	885

REGISTERED CIVIL ENGINEER 3/15/12 DATE

8-13-12
PLANS APPROVAL DATE

REGISTERED PROFESSIONAL ENGINEER Christopher Cho No. C74020 Exp. 06/30/13 CIVIL STATE OF CALIFORNIA

The State of California or its officers or agents shall not be responsible for the accuracy or completeness of scanned copies of this plan sheet.

OCTA
550 S MAIN STREET
ORANGE, CA 92868

RBF CONSULTING
14725 ALTON PARKWAY
IRVINE, CA 92677

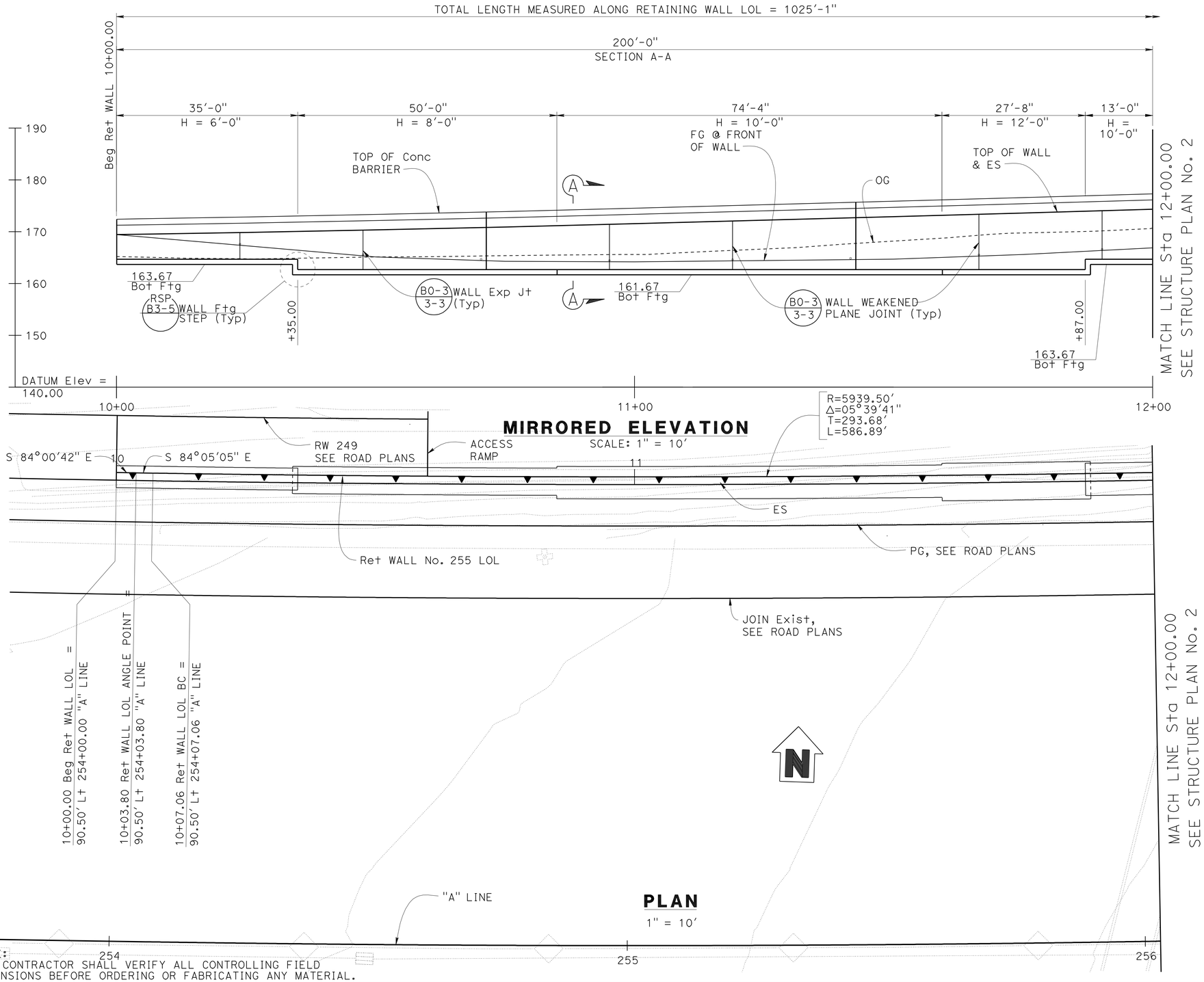

NOTES:

1. This Plan Accurate for Retaining Wall work only.
2. For Section A-A see "TYPICAL SECTIONS" sheet.
3. For Top of Wall Elevations, see "TYPICAL SECTIONS" sheet.

NOTE:
THE CONTRACTOR SHALL VERIFY ALL CONTROLLING FIELD DIMENSIONS BEFORE ORDERING OR FABRICATING ANY MATERIAL.

Luqi Yang
DESIGN OVERSIGHT Luqi Yang
3-29-12
SIGN OFF DATE

	BY	CHECKED
DESIGN	C. CHO	C. HARDEN
DETAILS	J. SALDANA	C. HARDEN
QUANTITIES	C. HARDEN	J. VOEPEL

LOAD & RESISTANCE FACTOR DESIGN — LIVE LOADING: HL93 W/"LOW-BOY"; PERMIT DESIGN VEHICLE

	BY	CHECKED
LAYOUT	C. CHO	C. HARDEN
SPECIFICATIONS	S. SHEIKH	PLANS AND SPECS COMPARED S. SHEIKH

PREPARED FOR THE STATE OF CALIFORNIA DEPARTMENT OF TRANSPORTATION

CHAD HARDEN
PROJECT ENGINEER

BRIDGE NO. 55E0123
POST MILES 3.8

RETAINING WALL No. 255
STRUCTURE PLAN No. 1

DESIGN GENERAL PLAN SHEET (ENGLISH) (REV.7/16/10)

ORIGINAL SCALE IN INCHES FOR REDUCED PLANS 0 1 2 3

UNIT: 2295
PROJECT NUMBER & PHASE: 12000000791 CONTRACT NO.: 12-0C5701

DISREGARD PRINTS BEARING EARLIER REVISION DATES

REVISION DATES

SHEET 3 OF 17

FILE => 55-E0123-g-rw_lo01.dgn

USERNAME => s119571 DATE PLOTTED => 17-AUG-2012 TIME PLOTTED => 08:36

DIST	COUNTY	ROUTE	POST MILES TOTAL PROJECT	SHEET No	TOTAL SHEETS
12	Ora	91	0.9/5.4	795	885

REGISTERED CIVIL ENGINEER 3/15/12 DATE

8-13-12
PLANS APPROVAL DATE

The State of California or its officers or agents shall not be responsible for the accuracy or completeness of scanned copies of this plan sheet.

REGISTERED PROFESSIONAL ENGINEER Christopher Cho No. C74020 Exp. 06/30/13 CIVIL STATE OF CALIFORNIA

OCTA
550 S MAIN STREET
ORANGE, CA 92868

RBF CONSULTING
14725 ALTON PARKWAY
IRVINE, CA 92677

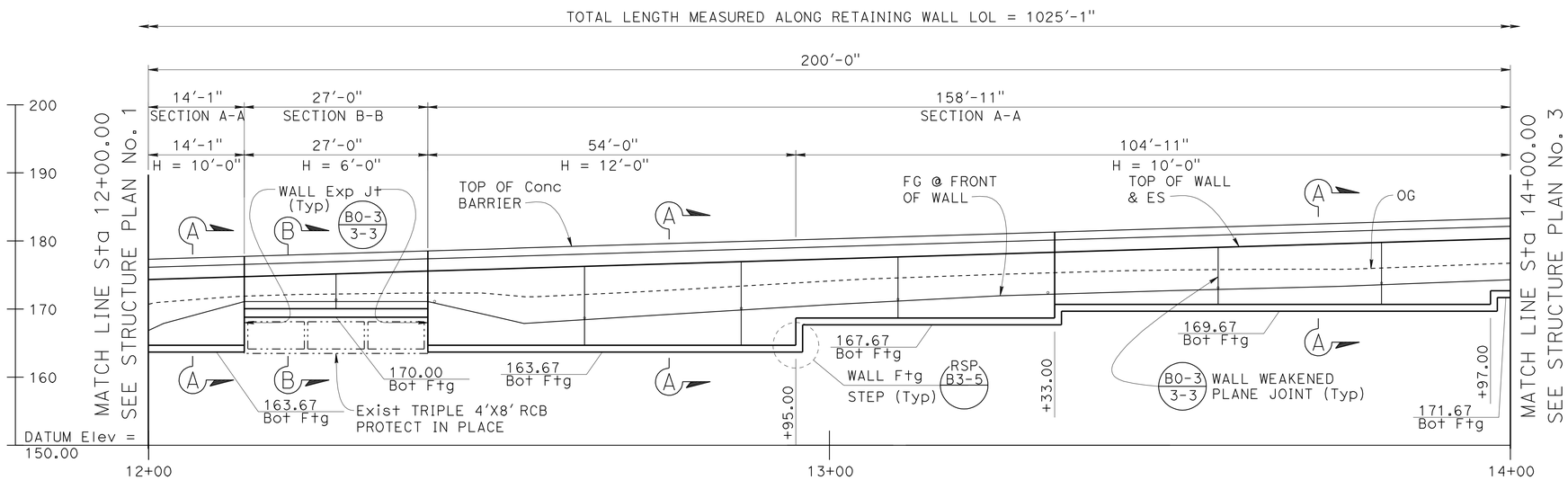

MIRRORED ELEVATION

SCALE: 1" = 10'

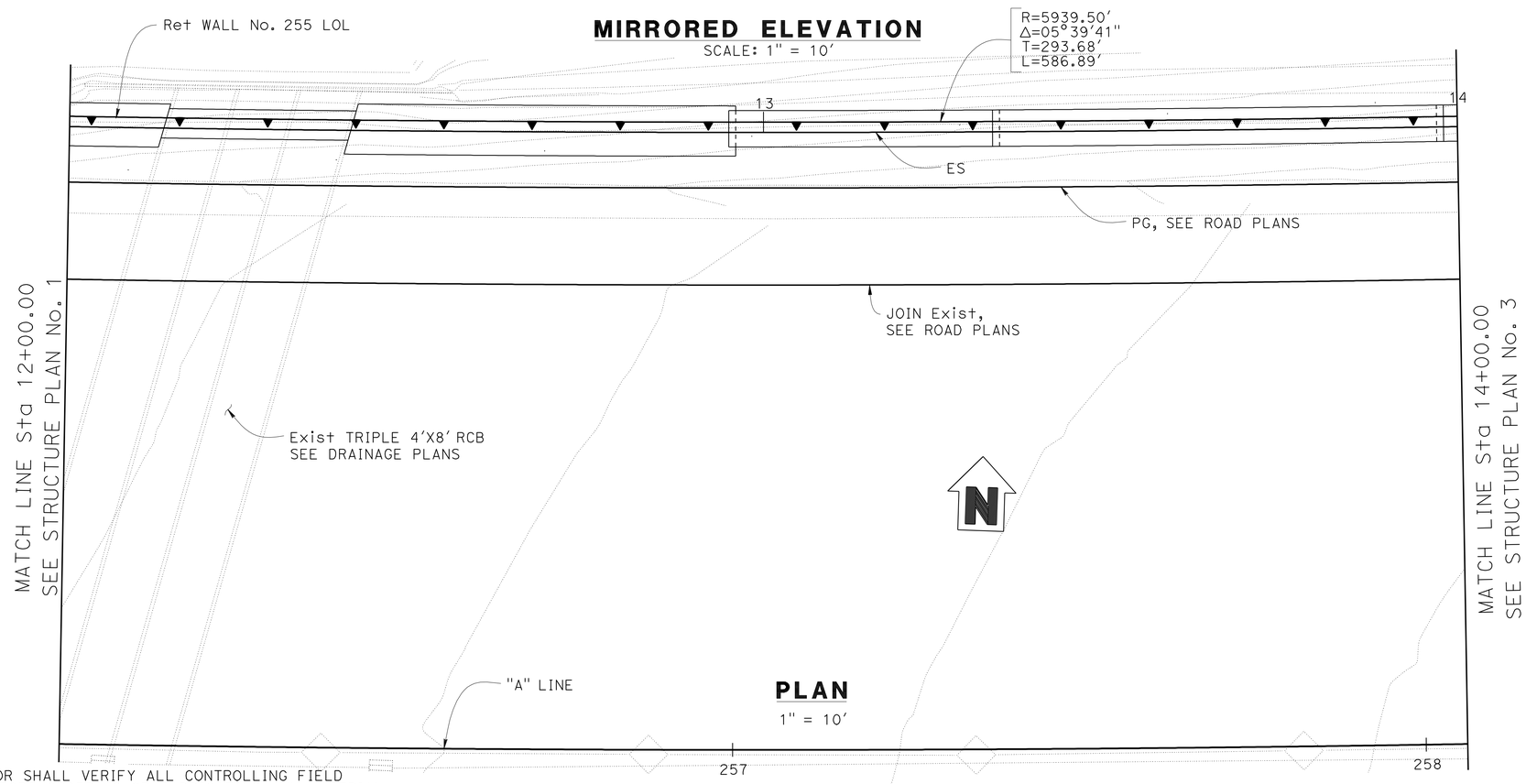

PLAN

1" = 10'

NOTES:

1. This Plan Accurate for Retaining Wall work only.
2. For Sections A-A and B-B see "TYPICAL SECTIONS" sheet.
3. For Top of Wall Elevations, see "TYPICAL SECTIONS" sheet.

NOTE:
THE CONTRACTOR SHALL VERIFY ALL CONTROLLING FIELD DIMENSIONS BEFORE ORDERING OR FABRICATING ANY MATERIAL.

Luqi Yang
DESIGN OVERSIGHT Luqi Yang
3-29-12
SIGN OFF DATE

	BY	CHECKED		
DESIGN	C. CHO	C. HARDEN	LOAD & RESISTANCE FACTOR DESIGN	LIVE LOADING: HL93 W/"LOW-BOY"; PERMIT DESIGN VEHICLE
DETAILS	J. SALDANA	C. HARDEN	LAYOUT: C. CHO	C. HARDEN
QUANTITIES	C. HARDEN	J. VOEPEL	SPECIFICATIONS: S. SHEIKH	PLANS AND SPECS COMPARED S. SHEIKH

PREPARED FOR THE STATE OF CALIFORNIA DEPARTMENT OF TRANSPORTATION

CHAD HARDEN
PROJECT ENGINEER

BRIDGE NO. 55E0123
POST MILES 3.8

RETAINING WALL No. 255
STRUCTURE PLAN No. 2

DESIGN GENERAL PLAN SHEET (ENGLISH) (REV.7/16/10)

ORIGINAL SCALE IN INCHES FOR REDUCED PLANS 0 1 2 3

UNIT: 2295
PROJECT NUMBER & PHASE: 12000000791 CONTRACT NO.: 12-0C5701

DISREGARD PRINTS BEARING EARLIER REVISION DATES

REVISION DATES

SHEET 4 OF 17

FILE => 55-E0123-g-rw_1o02.dgn

USERNAME => s121614 DATE PLOTTED => 17-AUG-2012 TIME PLOTTED => 13:55

DIST	COUNTY	ROUTE	POST MILES TOTAL PROJECT	SHEET No	TOTAL SHEETS
12	Ora	91	0.9/5.4	796	885

REGISTERED CIVIL ENGINEER 3/15/12 DATE

8-13-12
PLANS APPROVAL DATE

REGISTERED PROFESSIONAL ENGINEER Christopher Cho No. C74020 Exp. 06/30/13 CIVIL STATE OF CALIFORNIA

The State of California or its officers or agents shall not be responsible for the accuracy or completeness of scanned copies of this plan sheet.

OCTA
550 S MAIN STREET
ORANGE, CA 92868

RBF CONSULTING
14725 ALTON PARKWAY
IRVINE, CA 92677

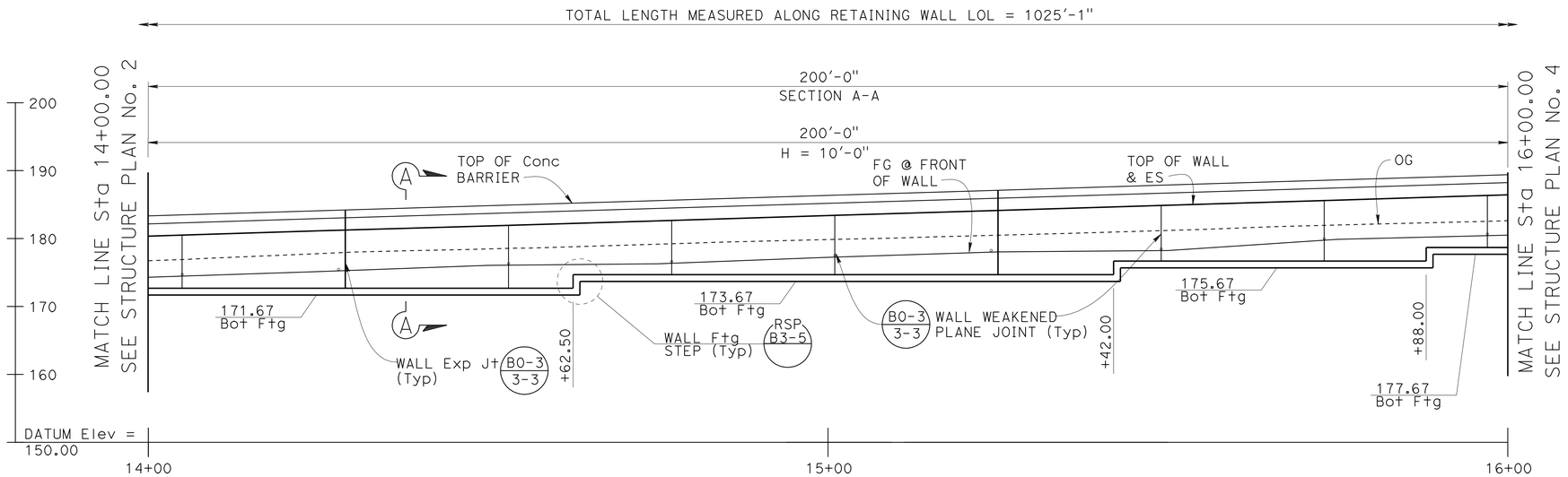

MIRRORED ELEVATION

SCALE: 1" = 10'

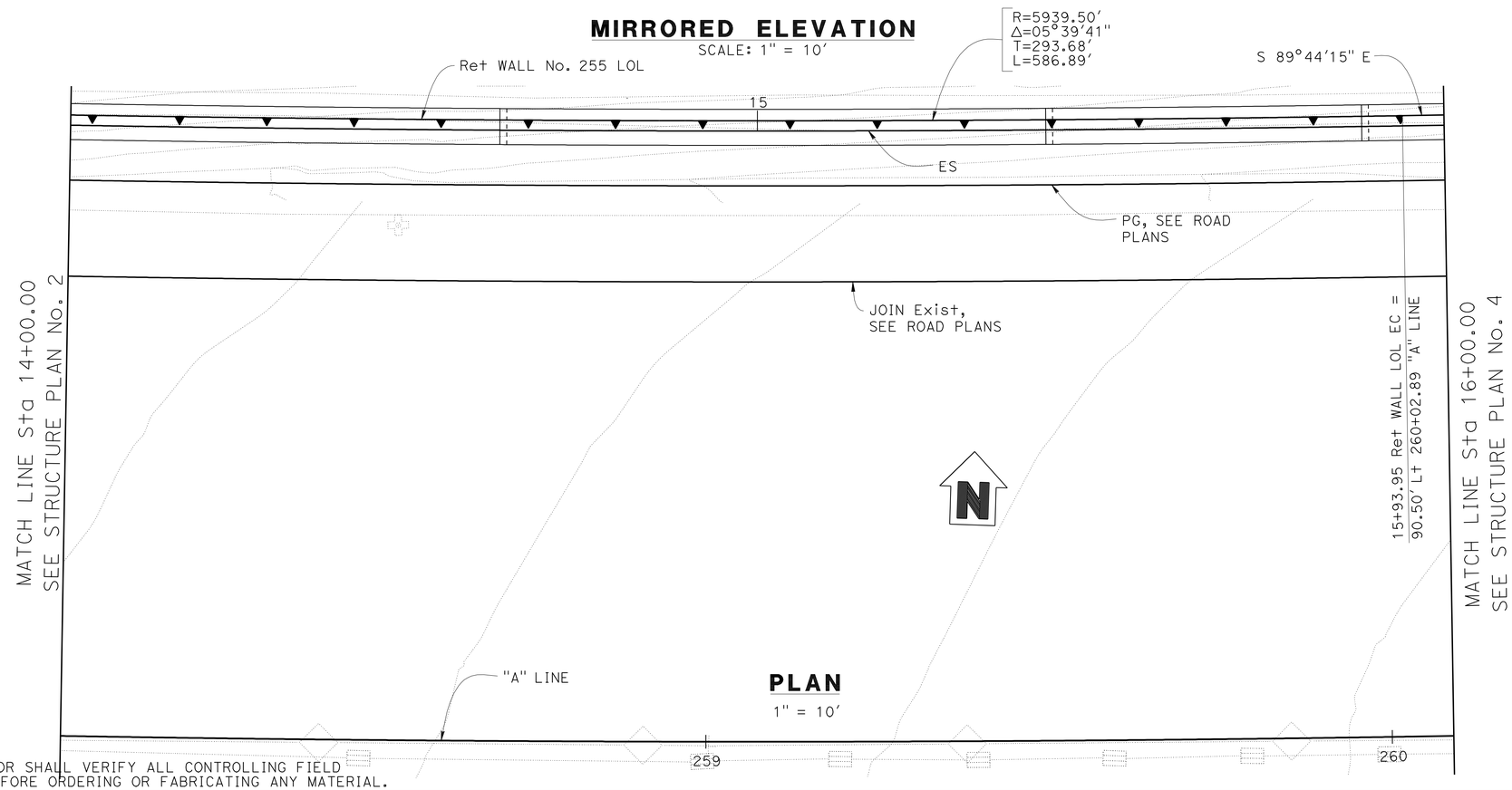

PLAN

1" = 10'

NOTES:

1. This Plan Accurate for Retaining Wall work only.
2. For Section A-A, see "TYPICAL SECTIONS" sheet.
3. For Top of Wall Elevations, see "TYPICAL SECTIONS" sheet.

NOTE:
THE CONTRACTOR SHALL VERIFY ALL CONTROLLING FIELD DIMENSIONS BEFORE ORDERING OR FABRICATING ANY MATERIAL.

Luqi Yang DESIGN OVERSIGHT Luqi Yang 3-29-12 SIGN OFF DATE	DESIGN	BY C. CHO	CHECKED C. HARDEN	LOAD & RESISTANCE FACTOR DESIGN — LIVE LOADING: HL93 W/"LOW-BOY"; PERMIT DESIGN VEHICLE
	DETAILS	BY J. SALDANA	CHECKED C. HARDEN	LAYOUT — BY C. CHO — CHECKED C. HARDEN
	QUANTITIES	BY C. HARDEN	CHECKED J. VOEPEL	SPECIFICATIONS — BY S. SHEIKH — PLANS AND SPECS COMPARED S. SHEIKH

DESIGN GENERAL PLAN SHEET (ENGLISH) (REV.7/16/10)

ORIGINAL SCALE IN INCHES FOR REDUCED PLANS 0 1 2 3

PREPARED FOR THE STATE OF CALIFORNIA DEPARTMENT OF TRANSPORTATION

CHAD HARDEN
PROJECT ENGINEER

BRIDGE NO. 55E0123
POST MILES 3.8

RETAINING WALL No. 255
STRUCTURE PLAN No. 3

UNIT: 2295
PROJECT NUMBER & PHASE: 12000000791 CONTRACT NO.: 12-0C5701

DISREGARD PRINTS BEARING EARLIER REVISION DATES

REVISION DATES

SHEET 5 OF 17

FILE => 55-E0123-g-rw_1o03.dgn

USERNAME => s119571 DATE PLOTTED => 17-AUG-2012 TIME PLOTTED => 08:36

DIST	COUNTY	ROUTE	POST MILES TOTAL PROJECT	SHEET No	TOTAL SHEETS
12	Ora	91	0.9/5.4	797	885

REGISTERED CIVIL ENGINEER 3/15/12 DATE

8-13-12
PLANS APPROVAL DATE

REGISTERED PROFESSIONAL ENGINEER Christopher Cho No. C74020 Exp. 06/30/13 CIVIL STATE OF CALIFORNIA

The State of California or its officers or agents shall not be responsible for the accuracy or completeness of scanned copies of this plan sheet.

OCTA
550 S MAIN STREET
ORANGE, CA 92868

RBF CONSULTING
14725 ALTON PARKWAY
IRVINE, CA 92677

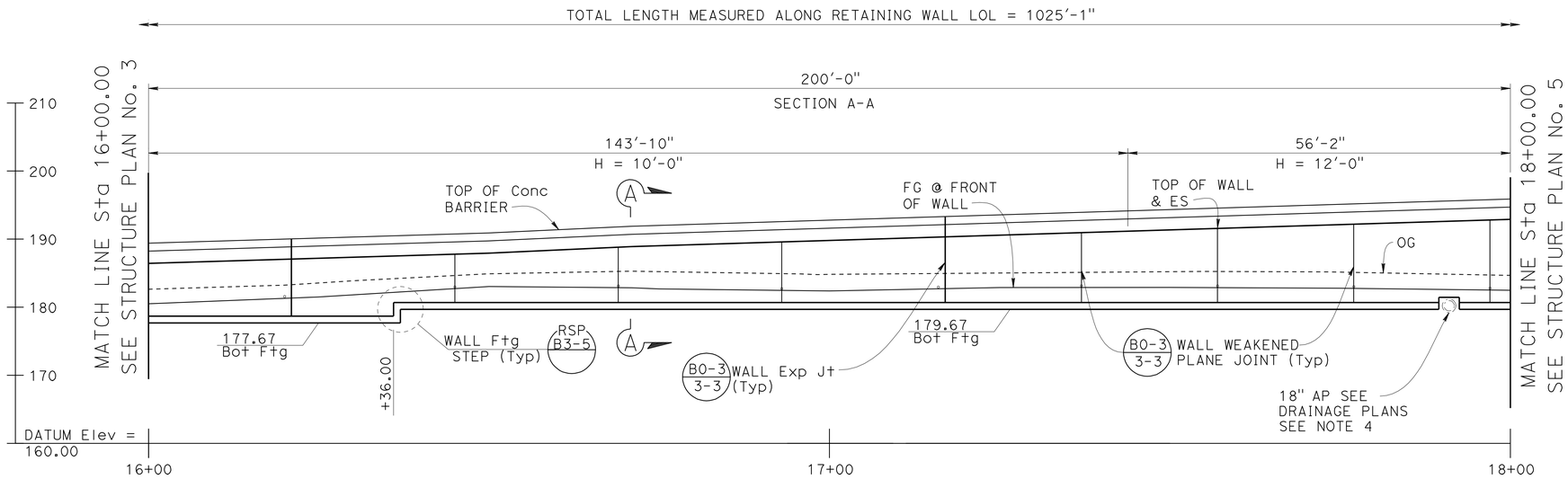

MIRRORED ELEVATION

SCALE: 1" = 10'

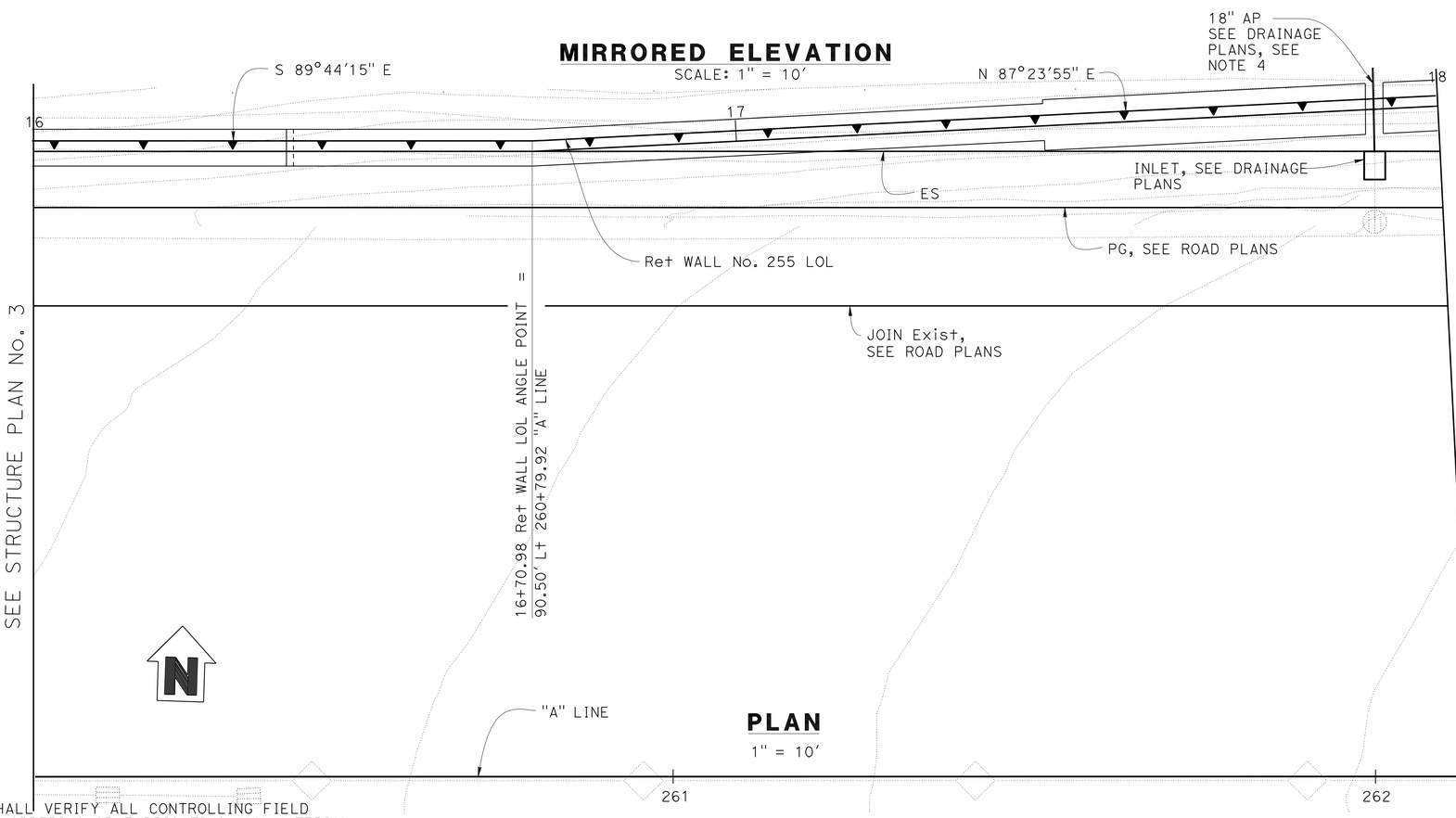

PLAN

1" = 10'

NOTES:

1. This Plan Accurate for Retaining Wall work only.
2. For Section A-A see "TYPICAL SECTIONS" sheet.
3. For Top of Wall Elevations, see "TYPICAL SECTIONS" sheet.
4. For Utility Bridge over Detail, see "MISCELLANEOUS DETAILS No. 2" sheet.

NOTE:
THE CONTRACTOR SHALL VERIFY ALL CONTROLLING FIELD DIMENSIONS BEFORE ORDERING OR FABRICATING ANY MATERIAL.

Luqi Yang
DESIGN OVERSIGHT Luqi Yang
3-29-12
SIGN OFF DATE

	BY	CHECKED
DESIGN	C. CHO	C. HARDEN
DETAILS	J. SALDANA	C. HARDEN
QUANTITIES	C. HARDEN	J. VOEPEL

LOAD & RESISTANCE FACTOR DESIGN — LIVE LOADING: HL93 W/"LOW-BOY"; PERMIT DESIGN VEHICLE

	BY	CHECKED
LAYOUT	C. CHO	C. HARDEN
SPECIFICATIONS	S. SHEIKH	PLANS AND SPECS COMPARED S. SHEIKH

PREPARED FOR THE STATE OF CALIFORNIA DEPARTMENT OF TRANSPORTATION

CHAD HARDEN
PROJECT ENGINEER

BRIDGE NO. 55E0123
POST MILES 3.8

RETAINING WALL No. 255
STRUCTURE PLAN No. 4

DESIGN GENERAL PLAN SHEET (ENGLISH) (REV.7/16/10)

ORIGINAL SCALE IN INCHES FOR REDUCED PLANS 0 1 2 3

UNIT: 2295
PROJECT NUMBER & PHASE: 12000000791 CONTRACT NO.: 12-0C5701

DISREGARD PRINTS BEARING EARLIER REVISION DATES

REVISION DATES

SHEET 6 OF 17

FILE => 55-E0123-g-rw_lo04.dgn

USERNAME => s119571 DATE PLOTTED => 17-AUG-2012 TIME PLOTTED => 08:36

DIST	COUNTY	ROUTE	POST MILES TOTAL PROJECT	SHEET No	TOTAL SHEETS
12	Ora	91	0.9/5.4	798	885

REGISTERED CIVIL ENGINEER 8/1/12 DATE

8-13-12
PLANS APPROVAL DATE

REGISTERED PROFESSIONAL ENGINEER Christopher Cho No. C74020 Exp. 06/30/13 CIVIL STATE OF CALIFORNIA

The State of California or its officers or agents shall not be responsible for the accuracy or completeness of scanned copies of this plan sheet.

OCTA
550 S MAIN STREET
ORANGE, CA 92868

RBF CONSULTING
14725 ALTON PARKWAY
IRVINE, CA 92677

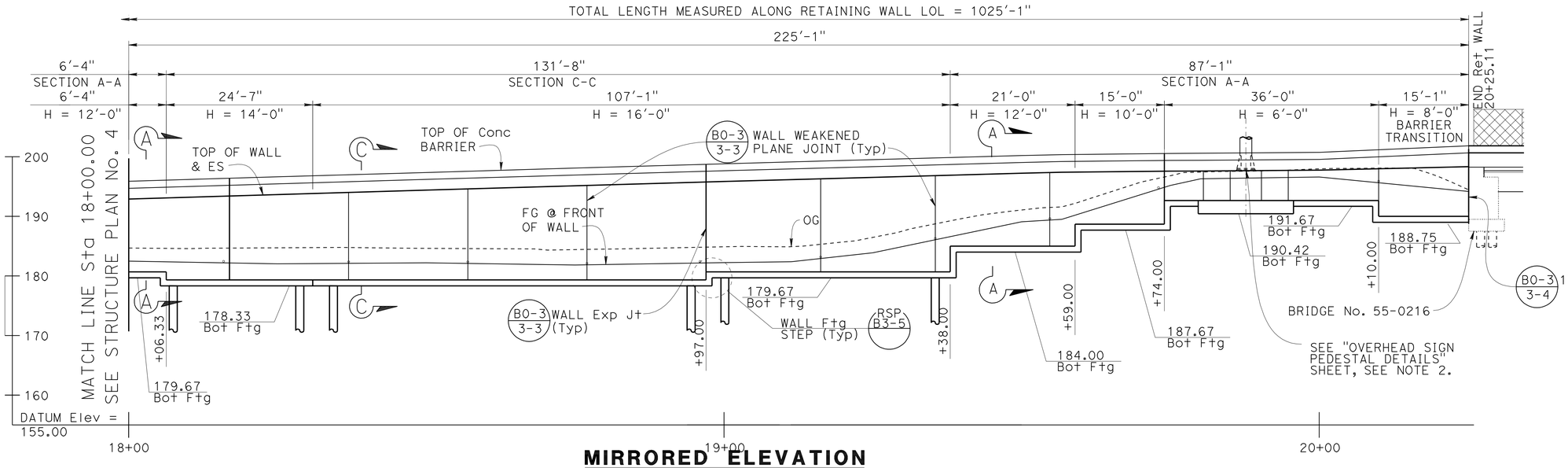

MIRRORED ELEVATION

SCALE: 1" = 10'

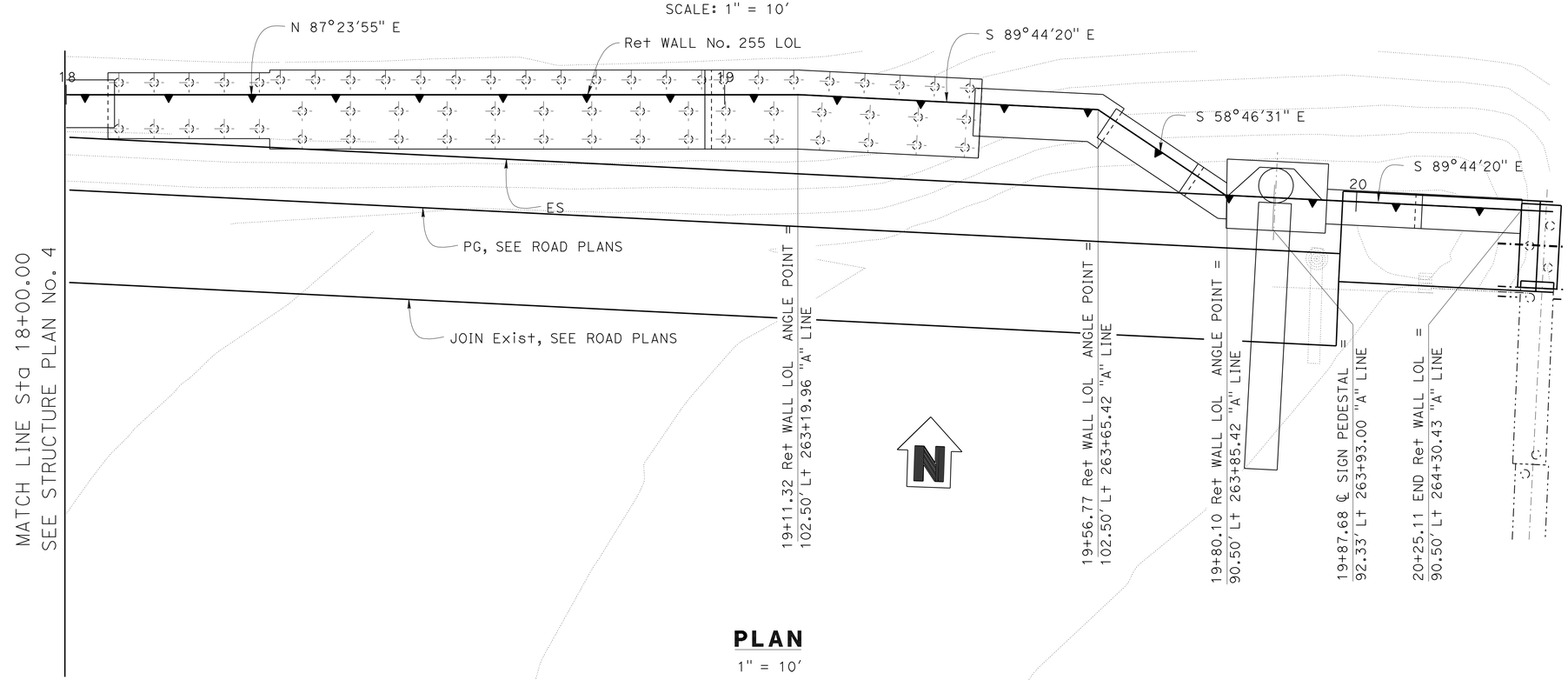

PLAN

1" = 10'

NOTES:

1. This Plan Accurate for Retaining Wall work only.
2. For Sign Location and Details, see ROADWAY PLANS, SIGN PLANS, and SIGN DETAIL sheets.
3. For Sections A-A and C-C see "TYPICAL SECTIONS" sheet.
4. For Top of Wall Elevations, see "TYPICAL SECTIONS" sheet.
5. For Barrier Transition Detail, see "MISCELLANEOUS DETAILS No. 2" sheet

NOTE:
THE CONTRACTOR SHALL VERIFY ALL CONTROLLING FIELD DIMENSIONS BEFORE ORDERING OR FABRICATING ANY MATERIAL.

Luqi Yang DESIGN OVERSIGHT Luqi Yang 8-6-12 SIGN OFF DATE	DESIGN	BY C. CHO	CHECKED C. HARDEN	LOAD & RESISTANCE FACTOR DESIGN	LIVE LOADING: HL93 W/"LOW-BOY"; PERMIT DESIGN VEHICLE
	DETAILS	BY J. SALDANA	CHECKED C. HARDEN	LAYOUT BY C. CHO	CHECKED C. HARDEN
	QUANTITIES	BY C. HARDEN	CHECKED J. VOEPEL	SPECIFICATIONS BY S. SHEIKH	PLANS AND SPECS COMPARED S. SHEIKH

PREPARED FOR THE STATE OF CALIFORNIA DEPARTMENT OF TRANSPORTATION

CHAD HARDEN
PROJECT ENGINEER

BRIDGE NO. 55E0123
POST MILES 3.8

RETAINING WALL No. 255
STRUCTURE PLAN No. 5

DESIGN GENERAL PLAN SHEET (ENGLISH) (REV.7/16/10)

ORIGINAL SCALE IN INCHES FOR REDUCED PLANS 0 1 2 3

UNIT: 2295
PROJECT NUMBER & PHASE: 12000000791 CONTRACT NO.: 12-0C5701

DISREGARD PRINTS BEARING EARLIER REVISION DATES

REVISION DATES

SHEET 7 OF 17

FILE => 55-E0123-g-rw_1o05.dgn

D:\Con_CADD_\D12\0C5701\Expedite___3-28-12__\Rev_8-3-12__\55-E0123-g-rw_1o05.dgn

USERNAME => s123631 DATE PLOTTED => 17-AUG-2012 TIME PLOTTED => 15:48

DIST	COUNTY	ROUTE	POST MILES TOTAL PROJECT	SHEET No	TOTAL SHEETS
12	Ora	91	0.9/5.4	799	885

REGISTERED CIVIL ENGINEER 3/15/12 DATE

8-13-12
PLANS APPROVAL DATE

REGISTERED PROFESSIONAL ENGINEER Christopher Cho No. C74020 Exp. 06/30/13 CIVIL STATE OF CALIFORNIA

The State of California or its officers or agents shall not be responsible for the accuracy or completeness of scanned copies of this plan sheet.

OCTA
550 S MAIN STREET
ORANGE, CA. 92868

RBF CONSULTING
14725 ALTON PARKWAY
IRVINE, CA 92677

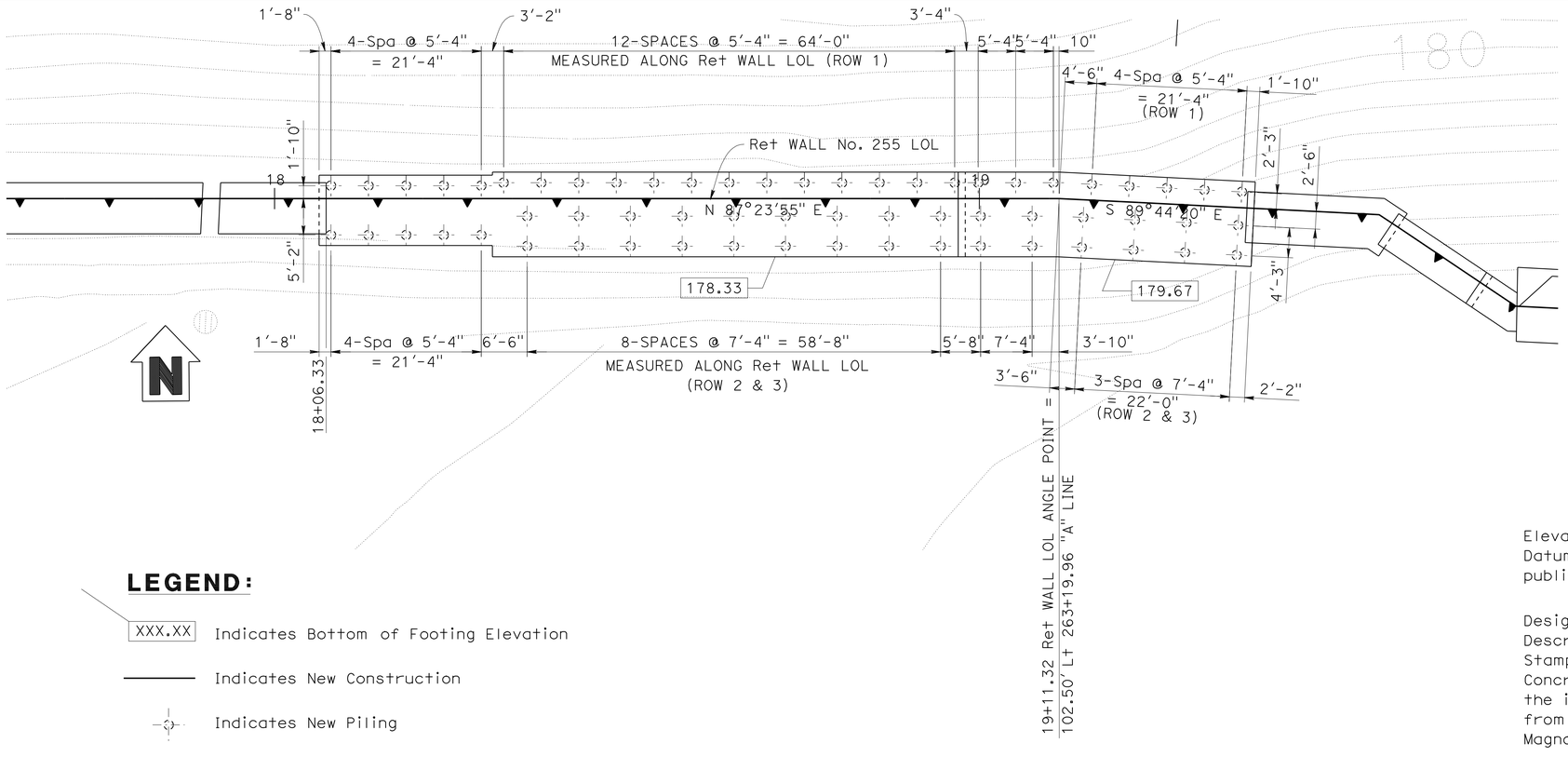

NOTE:

1. For Location of Existing Utilities, see "ROAD PLANS"

LEGEND:

XXX.XX Indicates Bottom of Footing Elevation

Indicates New Construction

Indicates New Piling

FOUNDATION PLAN

1" = 10'

BENCHMARKS:

Elevations as shown hereon are in terms of the North American Vertical Datum of 1988 (NAVD88), based locally upon the following Benchmarks as published by the County of Orange:

Designation: 1G-164-05 Elev = 109.80
Described by OCS 2005 - Found 3¾" OCS Aluminum Benchmark Disk Stamped "1G-164-05", set in the northwesterly corner of a 4.5 ft. by 11.0 ft. Concrete Catch Basin. Monument is located in the southeasterly corner of the intersection of Magnolia Avenue and Buckingham Street, 200 ft. ± from the centerline of Buckingham and 47 ft. easterly of the centerline of Magnolia. Monument is set level with the sidewalk

Designation: 2F-25-04 Elev = 162.70
Described by OCS 2004 - Found 3¾" OCS Aluminum Benchmark Disk Stamped "2F-25-04", set in the northwesterly corner of a 7.5 ft. by 4.5 ft. Concrete Catch Basin. Monument is located in the northeasterly corner of the intersection of Harbor Boulevard and the Eastbound 91 Freeway On-Ramp, 39 ft. northerly of the centerline of the On-Ramp and 40 ft. easterly of the centerline of Harbor Boulevard. Monument is set level with the sidewalk

Designation: 2D-35-86 Elev = 188.58
Described by OCS 2003 - Found 3¾" OCS Aluminum Benchmark Disk Stamped "2D-35-86", set in the northwesterly corner of a 7 ft. by 14 ft. Concrete Catch Basin. Monument is located in the southeasterly corner of the intersection of Placentia Avenue and State College Boulevard, 38 ft. easterly of the centerline of State College and 70.5 ft. southerly of the centerline of Placentia. Monument is set level with the sidewalk

PILE DATA TABLE

LOCATION	PILE TYPE	DESIGN LOADING (SERVICE) (kips)	NOMINAL RESISTANCE (kips)		DESIGN TIP ELEVATION (ft)	SPECIFIED TIP ELEVATION (ft)
			COMPRESSION	TENSION		
ALL PILES	16" Dia CIDH PILE	80	180	--	+148 (a) & +152 (d)	+148

NOTES:

1. Design tip elevations are controlled by: (a) compression, and (d) lateral load.
2. The specified tip elevation shall not be raised above the design tip elevations for compression load, tension load, and lateral load.

BASIS OF COORDINATES:

Bearings and Coordinates as shown hereon are in terms of the California Coordinate System of 1983 (CCS83, Epoch 1991.35), Zone 6; based locally upon the following Control Stations as published by the County of Orange:

Name	Northing (ft)-Grid	Easting (ft)-Grid
OCS GPS 3511R1	2257877.29	6037582.77
OCS GPS 3518	2260444.33	6053380.91
OCS GPS 5260	2257149.07	6063970.03

GEOTECHNICAL PROFESSIONAL APPROVAL DATE 3/15/12

Luqi Yang
DESIGN OVERSIGHT Luqi Yang
3-29-12
SIGN OFF DATE

SCALE:	VERT.DATUM NAVD88	HORZ.DATUM NAD83 (1991.35)	
PHOTOGRAMMETRY AS OF: 04-15-2010	ALIGNMENT TIES		
SURVEYED	BY B. COX	DRAFTED	BY G. CIAMPAGLIA
FIELD CHECKED	BY B. COX	CHECKED	BY B. COX

	BY	CHECKED
DESIGN	C. CHO	C. HARDEN
DETAILS	J. SALDANA	C. HARDEN
QUANTITIES	C. HARDEN	J. VOEPEL

PREPARED FOR THE STATE OF CALIFORNIA DEPARTMENT OF TRANSPORTATION

CHAD HARDEN
PROJECT ENGINEER

BRIDGE NO. 55E0123
POST MILES 3.8

RETAINING WALL No. 255
FOUNDATION PLAN

FOUNDATION PLAN SHEET (ENGLISH) (REV.7/16/10)

ORIGINAL SCALE IN INCHES FOR REDUCED PLANS 0 1 2 3

UNIT: 2295
PROJECT NUMBER & PHASE: 12000000791 CONTRACT NO.: 12-0C5701

DISREGARD PRINTS BEARING EARLIER REVISION DATES

REVISION DATES

SHEET 8 OF 17

FILE => 55-E0123-g-rwftg01.dgn

USERNAME => s119571 DATE PLOTTED => 17-AUG-2012 TIME PLOTTED => 08:37

DIST	COUNTY	ROUTE	POST MILES TOTAL PROJECT	SHEET No	TOTAL SHEETS
12	Ora	91	0.9/5.4	800	885

REGISTERED CIVIL ENGINEER 3/15/12 DATE

8-13-12
PLANS APPROVAL DATE

REGISTERED PROFESSIONAL ENGINEER Christopher Cho No. C74020 Exp. 06/30/13 CIVIL STATE OF CALIFORNIA

The State of California or its officers or agents shall not be responsible for the accuracy or completeness of scanned copies of this plan sheet.

OCTA
550 S MAIN STREET
ORANGE, CA. 92868

RBF CONSULTING
14725 ALTON PARKWAY
IRVINE, CA 92677

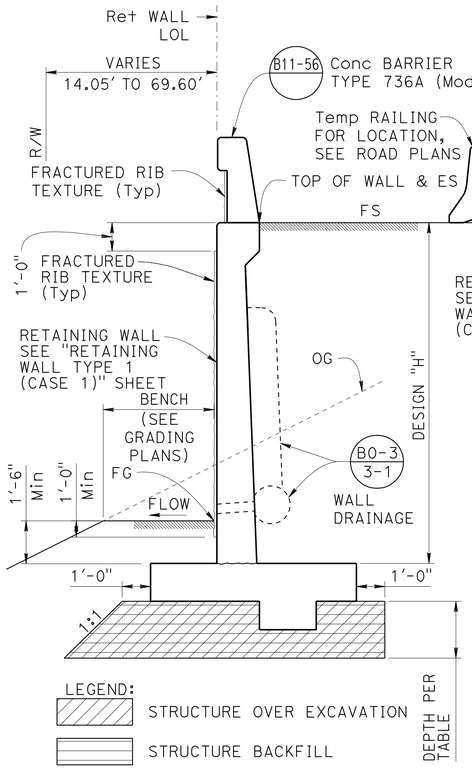

SECTION A-A

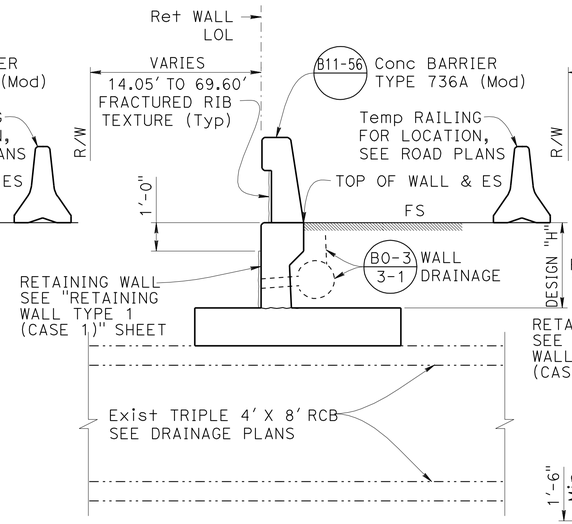

SECTION B-B

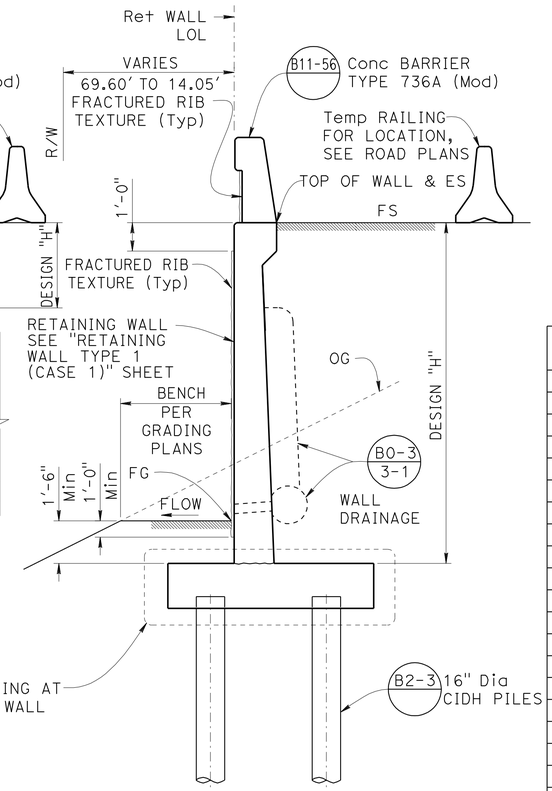

SECTION C-C

TYPICAL SECTIONS
NO SCALE

WALL STATION	DESIGN "H"	OVER EXCAVATION DEPTH
10+00 TO 12+10.00	6'-0"	1'-0"
12+31.00 TO 15+88.00	8'-0"	1'-0"
	10'-0"	2'-0"
	12'-0"	4'-0"
15+88.00 TO 20+26.00	6'-0"	1'-0"
	8'-0"	1'-0"
	10'-0"	1'-0"
	12'-0"	3'-0"

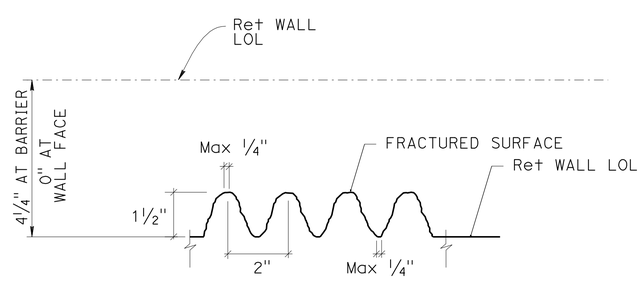

FRACTURED RIB TEXTURE 1 1/2" (PROJECTING)
NO SCALE

TOP OF WALL ELEVATION TABLE

WALL LOL STATION	TOP OF WALL Elev	WALL LOL STATION	TOP OF WALL Elev	WALL LOL STATION	TOP OF WALL Elev
10+00.00	169.44	14+00.00	180.36	18+00.00	192.91
+10	169.60	+10	180.66	+10	193.21
+20	169.77	+20	180.97	+20	193.51
+30	169.95	+30	181.27	+30	193.81
+40	170.16	+40	181.57	+40	194.10
+50	170.36	+50	181.87	+50	194.40
+60	170.58	+60	182.17	+60	194.69
+70	170.80	+70	182.47	+70	194.98
+80	171.04	+80	182.77	+80	195.27
+90	171.30	+90	183.08	+90	195.56
11+00.00	171.56	15+00.00	183.38	19+00.00	195.85
+10	171.83	+10	183.68	+10	196.13
+20	172.10	+20	183.99	+20	196.40
+30	172.37	+30	184.29	+30	196.67
+40	172.64	+40	184.60	+40	196.95
+50	172.91	+50	184.91	+50	197.23
+60	173.19	+60	185.21	+60	197.43
+70	173.46	+70	185.52	+70	197.53
+80	173.75	+80	185.82	+80	197.62
+90	174.04	+90	186.13	+90	197.69
12+00.00	174.34	16+00.00	186.43	20+00.00	197.76
+10	174.64	+10	186.73	+10	197.99
+20	174.94	+20	187.03	+20	198.22
+30	175.24	+30	187.33	+25.11	198.33
+40	175.54	+40	187.64		
+50	175.84	+50	187.94		
+60	176.15	+60	188.40		
+70	176.45	+70	188.86		
+80	176.75	+80	189.19		
+90	177.05	+90	189.50		
13+00.00	177.35	17+00.00	189.81		
+10	177.65	+10	190.12		
+20	177.95	+20	190.43		
+30	178.25	+30	190.74		
+40	178.56	+40	191.05		
+50	178.86	+50	191.36		
+60	179.16	+60	191.67		
+70	179.46	+70	191.98		
+80	179.76	+80	192.29		
+90	180.06	+90	192.60		

NOTES:

1. This Plan Accurate for Retaining Wall work only.
2. For Excavation and Backfill Details, see "LIMITS OF PAYMENT FOR EXCAVATION AND BACKFILL" sheet.

Luqi Yang
DESIGN OVERSIGHT Luqi Yang
3-29-12
SIGN OFF DATE

	BY	CHECKED
DESIGN	C. CHO	C. HARDEN
DETAILS	C. CHO	C. HARDEN
QUANTITIES	C. CHO	J. VOEPEL

PREPARED FOR THE STATE OF CALIFORNIA DEPARTMENT OF TRANSPORTATION

CHAD HARDEN
PROJECT ENGINEER

BRIDGE NO. 55E0123
POST MILES 3.8

RETAINING WALL No. 255
TYPICAL SECTIONS

DESIGN DETAIL SHEET (ENGLISH) (REV.7/16/10)

ORIGINAL SCALE IN INCHES FOR REDUCED PLANS 0 1 2 3

UNIT: 2295
PROJECT NUMBER & PHASE: 12000000791 CONTRACT NO.: 12-0C5701

DISREGARD PRINTS BEARING EARLIER REVISION DATES

REVISION DATES

SHEET 9 OF 17

FILE => 55-E0123-k-ts01.dgn

USERNAME => s12614 DATE PLOTTED => 17-AUG-2012 TIME PLOTTED => 06:19