Dist	COUNTY	ROUTE	POST MILES TOTAL PROJECT	SHEET No.	TOTAL SHEETS
11	SD	76	R4.2/R7.6	1	217

ACHSNHPG-P076(029)E

STATE OF CALIFORNIA
DEPARTMENT OF TRANSPORTATION

PROJECT PLANS FOR CONSTRUCTION ON
STATE HIGHWAY

IN SAN DIEGO COUNTY
IN OCEANSIDE
FROM RANCHO DEL ORO DRIVE TO
0.2 MILE WEST OF MELROSE DRIVE

TO BE SUPPLEMENTED BY STANDARD PLANS DATED 2010

INDEX OF PLANS

SHEET No.	DESCRIPTION
1	TITLE AND LOCATION MAP
2-7	TYPICAL CROSS SECTIONS
8	PROJECT CONTROL
9-22	LAYOUTS
23-36	CONSTRUCTION DETAILS
37-51	WATER POLLUTION CONTROL PLANS AND QUANTITIES
52-85	DRAINAGE PLANS, PROFILES, DETAILS AND QUANTITIES
86-99	UTILITY PLANS
100	CONSTRUCTION AREA SIGNS
101-124	STAGE CONSTRUCTION PLANS AND QUANTITIES
125-130	TRAFFIC HANDLING PLANS
131-153	PAVEMENT DELINEATION AND SIGN PLANS, DETAILS AND QUANTITIES
154-158	SIGN QUANTITIES
159-161	SUMMARY OF QUANTITIES
162-168	ELECTRICAL PLANS
169-217	REVISED STANDARD PLANS

THE STANDARD PLANS LIST APPLICABLE TO THIS CONTRACT IS INCLUDED IN THE NOTICE TO BIDDERS AND SPECIAL PROVISIONS BOOK.

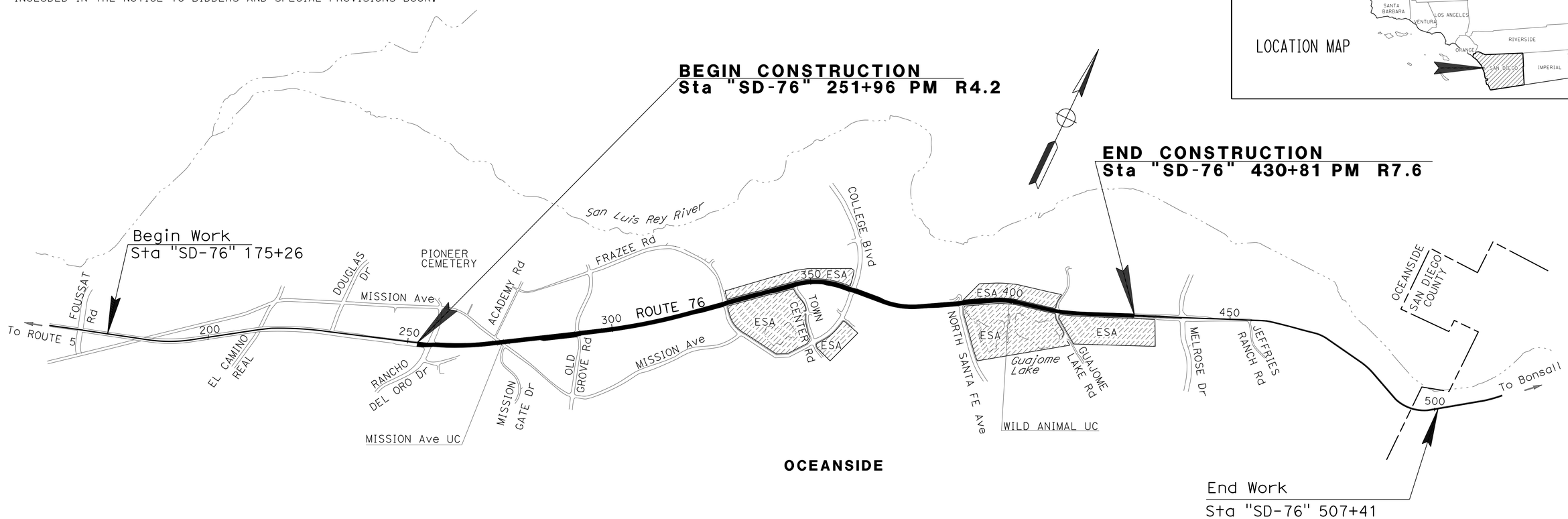

THE CONTRACTOR SHALL POSSESS THE CLASS (OR CLASSES) OF LICENSE AS SPECIFIED IN THE "NOTICE TO BIDDERS."

NO SCALE

Barzan Aran 04-24-14
PROJECT ENGINEER DATE
REGISTERED CIVIL ENGINEER

May 19, 2014
PLANS APPROVAL DATE

REGISTERED PROFESSIONAL ENGINEER
BARZAN A. ARAN
No. C75167
Exp. 12/31/15
CIVIL
STATE OF CALIFORNIA

THE STATE OF CALIFORNIA OR ITS OFFICERS OR AGENTS SHALL NOT BE RESPONSIBLE FOR THE ACCURACY OR COMPLETENESS OF SCANNED COPIES OF THIS PLAN SHEET.

PROJECT MANAGER RICHARD ESTRADA
DESIGN ENGINEER BARZAN ARAN

CONTRACT No.	11-406604
PROJECT ID	1100020326

LAST REVISION 03-18-14
DATE PLOTTED => 29-MAY-2014
TIME PLOTTED => 09:16

Dist	COUNTY	ROUTE	POST MILES TOTAL PROJECT	SHEET No.	TOTAL SHEETS
11	SD	76	R4.2/R7.6	1	217

ACHSNHPG-P076(029)E

STATE OF CALIFORNIA
DEPARTMENT OF TRANSPORTATION

PROJECT PLANS FOR CONSTRUCTION ON
STATE HIGHWAY

IN SAN DIEGO COUNTY
IN OCEANSIDE
FROM RANCHO DEL ORO DRIVE TO
0.2 MILE WEST OF MELROSE DRIVE

TO BE SUPPLEMENTED BY STANDARD PLANS DATED 2010

INDEX OF PLANS

SHEET No.	DESCRIPTION
1	TITLE AND LOCATION MAP
2-7	TYPICAL CROSS SECTIONS
8	PROJECT CONTROL
9-22	LAYOUTS
23-36	CONSTRUCTION DETAILS
37-51	WATER POLLUTION CONTROL PLANS AND QUANTITIES
52-85	DRAINAGE PLANS, PROFILES, DETAILS AND QUANTITIES
86-99	UTILITY PLANS
100	CONSTRUCTION AREA SIGNS
101-124	STAGE CONSTRUCTION PLANS AND QUANTITIES
125-130	TRAFFIC HANDLING PLANS
131-153	PAVEMENT DELINEATION AND SIGN PLANS, DETAILS AND QUANTITIES
154-158	SPECIAL DESIGN SIGNS AND SIGN QUANTITIES
159-161	SUMMARY OF QUANTITIES
162-168	ELECTRICAL PLANS
169-217	REVISED STANDARD PLANS

THE STANDARD PLANS LIST APPLICABLE TO THIS CONTRACT IS INCLUDED IN THE NOTICE TO BIDDERS AND SPECIAL PROVISIONS BOOK.

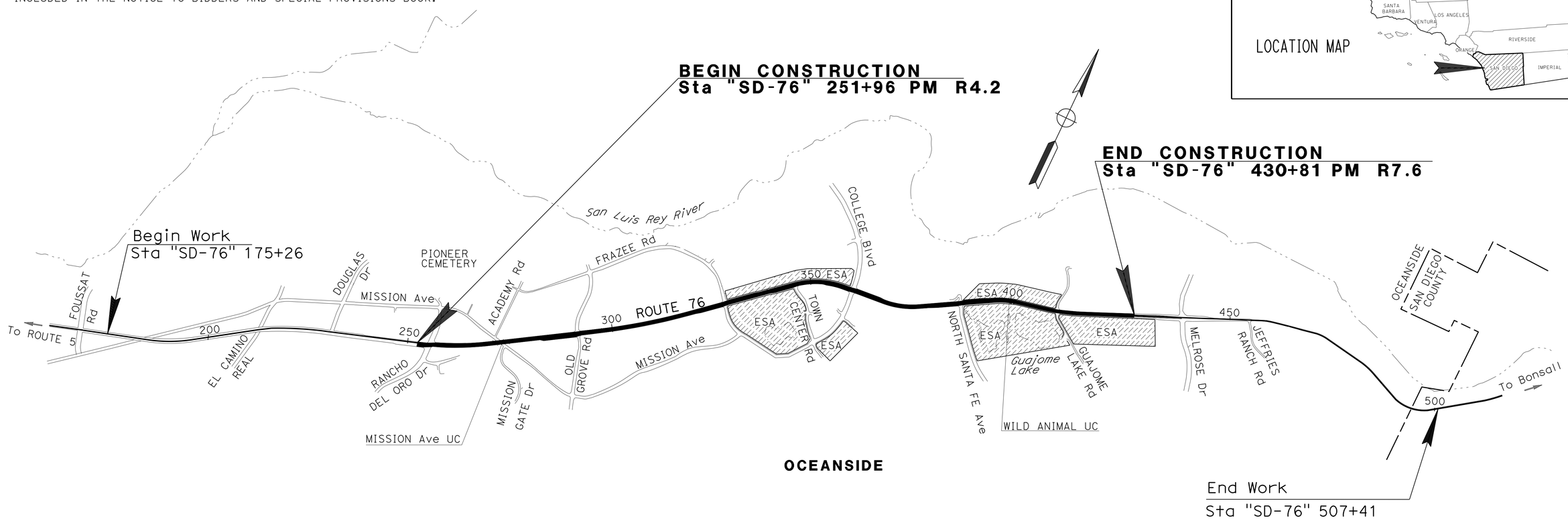

PROJECT MANAGER: RICHARD ESTRADA

DESIGN ENGINEER: BARZAN ARAN

04-24-14
PROJECT ENGINEER DATE
REGISTERED CIVIL ENGINEER

May 19, 2014
PLANS APPROVAL DATE

REGISTERED PROFESSIONAL ENGINEER — BARZAN A. ARAN — No. C75167 — Exp. 12/31/15 — CIVIL — STATE OF CALIFORNIA

THE STATE OF CALIFORNIA OR ITS OFFICERS OR AGENTS SHALL NOT BE RESPONSIBLE FOR THE ACCURACY OR COMPLETENESS OF SCANNED COPIES OF THIS PLAN SHEET.

THE CONTRACTOR SHALL POSSESS THE CLASS (OR CLASSES) OF LICENSE AS SPECIFIED IN THE "NOTICE TO BIDDERS."

NO SCALE

CONTRACT No.	11-406604
PROJECT ID	1100020326

LAST REVISION 03-18-14 — DATE PLOTTED => 29-MAY-2014 — TIME PLOTTED => 13:49

Dist	COUNTY	ROUTE	POST MILES TOTAL PROJECT	SHEET No.	TOTAL SHEETS
11	SD	76	R4.2/R7.6	2	217

REGISTERED CIVIL ENGINEER 04-24-14 DATE

05-19-14
PLANS APPROVAL DATE

REGISTERED PROFESSIONAL ENGINEER BARZAN A. ARAN No. C75167 Exp. 12/31/15 CIVIL STATE OF CALIFORNIA

THE STATE OF CALIFORNIA OR ITS OFFICERS OR AGENTS SHALL NOT BE RESPONSIBLE FOR THE ACCURACY OR COMPLETENESS OF SCANNED COPIES OF THIS PLAN SHEET.

NOTES:

1. DIMENSIONS OF THE STRUCTURAL SECTIONS ARE SUBJECT TO TOLERANCES SPECIFIED IN THE STANDARD SPECIFICATIONS.
2. SEE LAYOUT AND QUANTITY SHEETS FOR EXACT LOCATION AND TYPE OF CONCRETE BARRIER, HMA DIKE, MGS, AND RUMBLE STRIPS.
3. FOG SEAL COAT SHALL BE APPLIED TO ALL NEW HMA SURFACES EXCEPT TRAVELED WAYS.
4. SEE CONSTRUCTION DETAILS AND SUMMARY OF QUANTITIES FOR HIGH FRICTION SURFACE TREATMENT LOCATIONS.

STRUCTURAL SECTION

1
- 0.30' HMA (TYPE A)
- 1.25' CI 2 AB

2
- 0.60' HMA (TYPE A)
- 2.10' CI 2 AB

A
- Exist
- 0.55' AC (TYPE B)
- 0.60' CI 2 AB
- 1.40' CI 4 AS

B
- Exist
- 0.50' TEXTURED Conc
- 0.30' AC (TYPE B)

C
- Exist
- 0.30' AC (TYPE B)

D
- Exist
- 0.60' HMA (TYPE A)
- 1.0' CI 2 AB
- BIAXIAL GEOGRID

DESIGN DESIGNATION

ADT (2008)	44,000	D	52%
ADT (2020)	55,256	T	5%
DHV	4,534	V	55 mph
		TI_{20}	11

PAVEMENT CLIMATE REGION: SOUTH COAST

PAVEMENT WIDTH TABLE

WIDTH (A)	STATION TO STATION	LINE
0' TO 23'	256+19.0 TO 256+58.0	"SD-76"
23'	256+58.0 TO 260+07.0	"SD-76"
21'	260+07.0 TO 264+55.5	"SD-76"

PAVEMENT WIDTH TABLE

WIDTH (B)	STATION TO STATION	LINE
13'	256+19.0 TO 263+35.5	"SD-76"
13' TO 24'	263+35.5 TO 264+55.5	"SD-76"

PAVEMENT WIDTH TABLE

WIDTH (C)	STATION TO STATION	LINE
3' TO 12'	273+70.2 TO 280+50.0	"SD-76"
16'	280+50.0 TO 281+97.0	"SD-76"

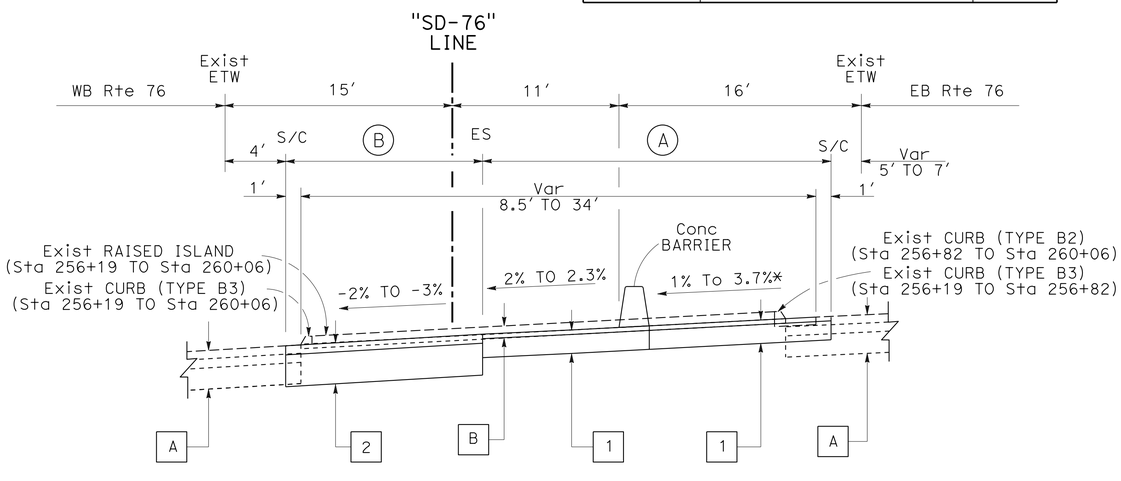

"SD-76" LINE Sta 256+19.0 TO Sta 264+55.5

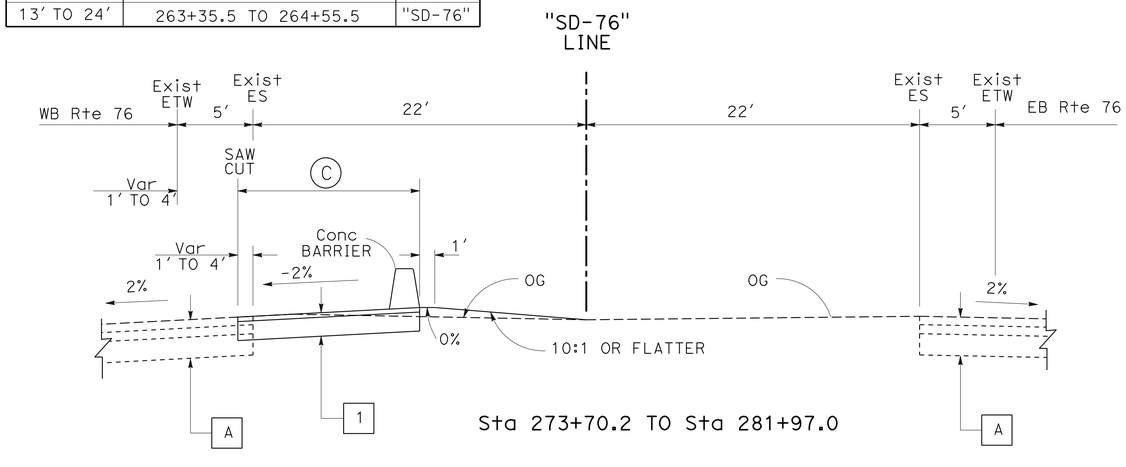

Sta 273+70.2 TO Sta 281+97.0

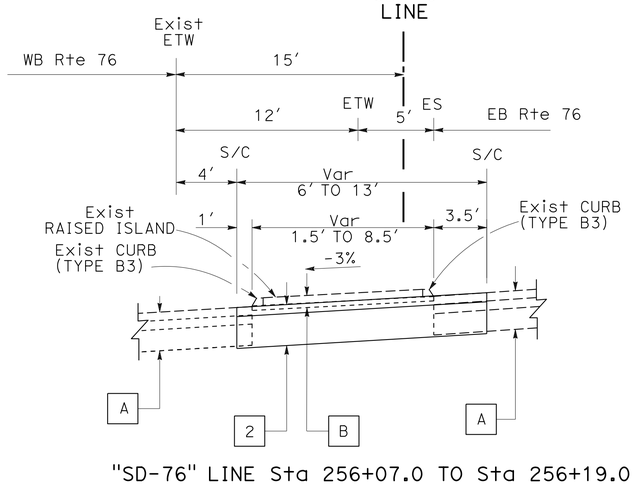

"SD-76" LINE Sta 256+07.0 TO Sta 256+19.0

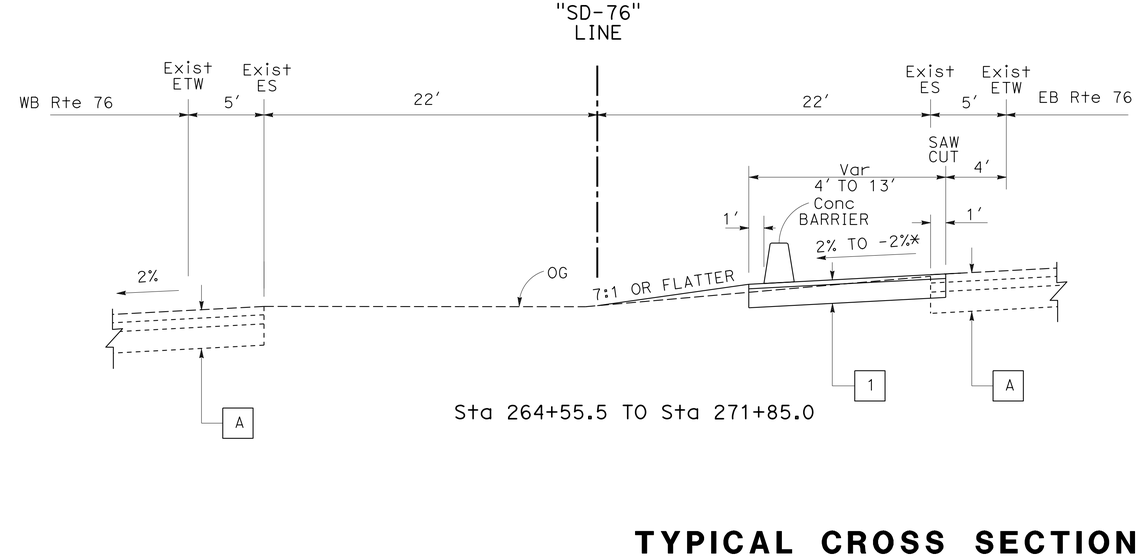

Sta 264+55.5 TO Sta 271+85.0

* MATCH EXISTING ROADWAY CROSS SLOPE

ROUTE 76

TYPICAL CROSS SECTIONS
NO SCALE

X-1

STATE OF CALIFORNIA - DEPARTMENT OF TRANSPORTATION
Caltrans PROJECT DEVELOPMENT
TRAFFIC

FUNCTIONAL SUPERVISOR: RICHARD ESTRADA
CALCULATED-DESIGNED BY: BETHNAY DES JARDINS
CHECKED BY: BARZAN ARAN
REVISED BY
DATE REVISED

LAST REVISION 03-18-14
DATE PLOTTED => 28-MAY-2014
TIME PLOTTED => 14:17

Dist	COUNTY	ROUTE	POST MILES TOTAL PROJECT	SHEET No.	TOTAL SHEETS
11	SD	76	R4.2/R7.6	3	217

REGISTERED CIVIL ENGINEER 04-24-14 DATE

05-19-14
PLANS APPROVAL DATE

REGISTERED PROFESSIONAL ENGINEER BARZAN A. ARAN No. C75167 Exp. 12/31/15 CIVIL STATE OF CALIFORNIA

THE STATE OF CALIFORNIA OR ITS OFFICERS OR AGENTS SHALL NOT BE RESPONSIBLE FOR THE ACCURACY OR COMPLETENESS OF SCANNED COPIES OF THIS PLAN SHEET.

PAVEMENT WIDTH TABLE

(C) WIDTH	(D) WIDTH	STATION TO STATION	LINE
4′	6′ TO 13′	292+16.0 TO 292+25.2	"SD-76"
4′	6′ TO 13′	329+03.0 TO 329+10.0	"SD-76"
3′	6′ TO 14′	388+29.0 TO 388+40.0	"SD-76"

PAVEMENT WIDTH TABLE

(E) WIDTH	STATION TO STATION	LINE
13′ TO 25′	292+25.2 TO 297+53.0	"SD-76"

PAVEMENT WIDTH TABLE

(F) WIDTH	STATION TO STATION	LINE
0′ TO 21′	292+25.2 TO 292+53.0	"SD-76"
21′	292+53.0 TO 298+55.0	"SD-76"

PAVEMENT WIDTH TABLE

(A) WIDTH	STATION TO STATION	LINE
25′	281+97.0 TO Sta 290+37.0	"SD-76"
0′ TO 25′	290+37.0 TO Sta 290+86.0	"SD-76"
21′	320+17.0 TO Sta 327+51.0	"SD-76"
0′ TO 21′	327+51.0 TO Sta 327+65.3	"SD-76"

PAVEMENT WIDTH TABLE

(B) WIDTH	STATION TO STATION	LINE
13′ TO 24′	281+97.0 TO 283+01.0	"SD-76"
13′	283+01.0 TO 290+86.0	"SD-76"
13′ TO 24′	320+17.0 TO 327+65.3	"SD-76"

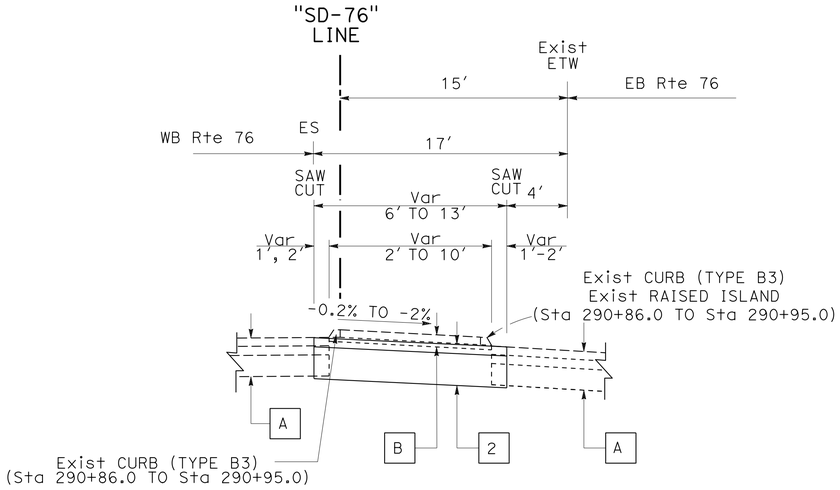

"SD-76" LINE Sta 290+86.0 TO Sta 290+95.0
"SD-76" LINE Sta 327+65.3 TO Sta 327+70.0

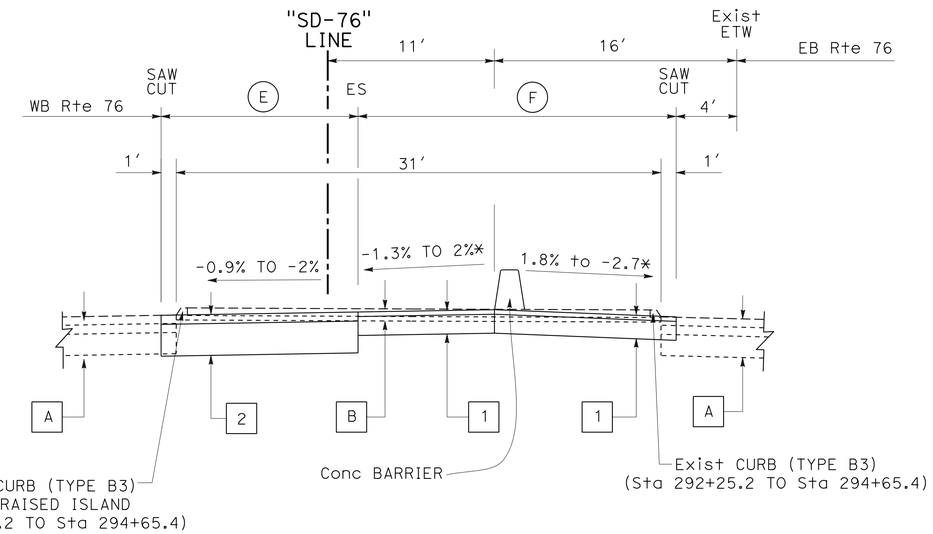

"SD-76" LINE Sta 292+25.2 TO Sta 298+55.0

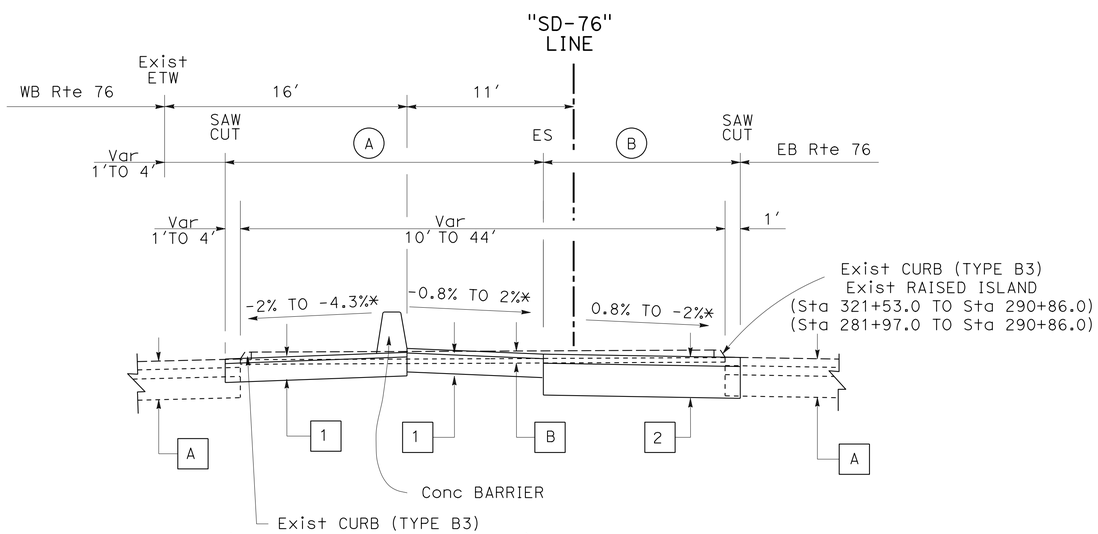

"SD-76" LINE Sta 281+97.0 TO Sta 290+86.0
"SD-76" LINE Sta 320+17.0 TO Sta 327+65.3

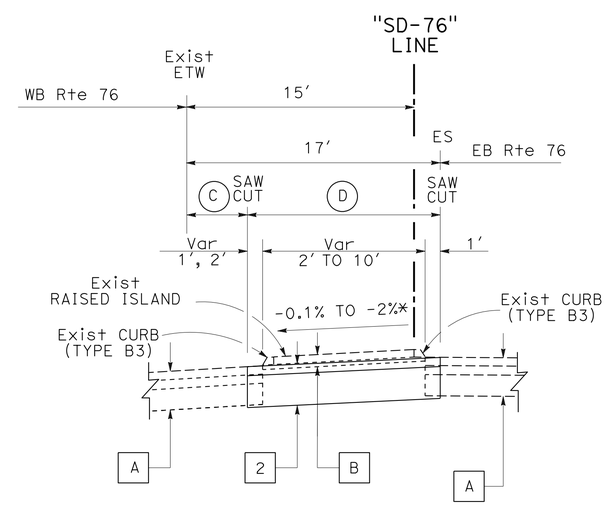

"SD-76" LINE Sta 292+16.0 TO Sta 292+25.2
"SD-76" LINE Sta 329+03.0 TO Sta 329+10.0
"SD-76" LINE Sta 388+29.0 TO Sta 388+40.0

* MATCH EXISTING ROADWAY CROSS SLOPE

ROUTE 76

TYPICAL CROSS SECTIONS
NO SCALE

X-2

STATE OF CALIFORNIA - DEPARTMENT OF TRANSPORTATION
Caltrans PROJECT DEVELOPMENT
TRAFFIC

FUNCTIONAL SUPERVISOR: RICHARD ESTRADA
CALCULATED-DESIGNED BY: BETHNAY DES JARDINS
CHECKED BY: BARZAN ARAN
REVISED BY
DATE REVISED

LAST REVISION 03-18-14
DATE PLOTTED => 28-MAY-2014
TIME PLOTTED => 14:17

Dist	COUNTY	ROUTE	POST MILES TOTAL PROJECT	SHEET No.	TOTAL SHEETS
11	SD	76	R4.2/R7.6	4	217

REGISTERED CIVIL ENGINEER 04-24-14 DATE

05-19-14
PLANS APPROVAL DATE

REGISTERED PROFESSIONAL ENGINEER BARZAN A. ARAN No. C75167 Exp. 12/31/15 CIVIL STATE OF CALIFORNIA

THE STATE OF CALIFORNIA OR ITS OFFICERS OR AGENTS SHALL NOT BE RESPONSIBLE FOR THE ACCURACY OR COMPLETENESS OF SCANNED COPIES OF THIS PLAN SHEET.

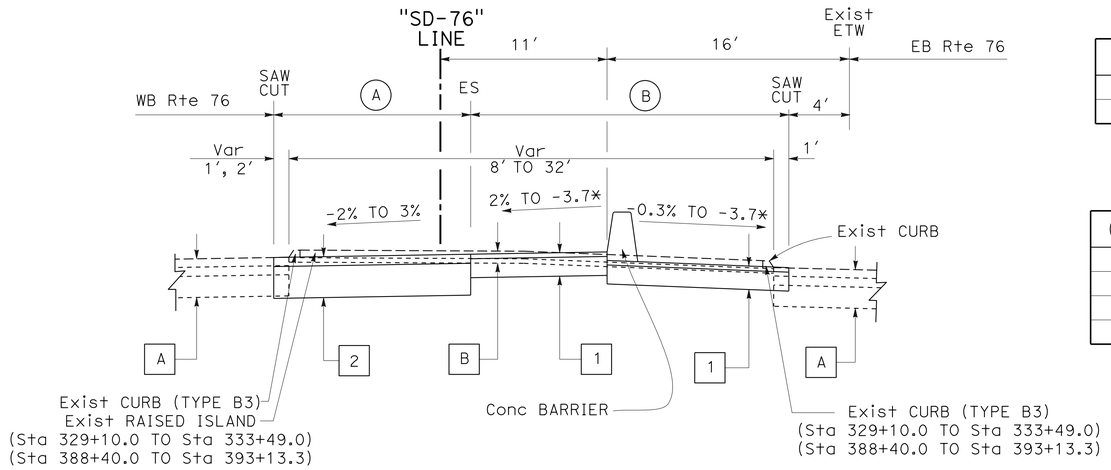

"SD-76" LINE Sta 329+10.0 TO Sta 337+17.0
"SD-76" LINE Sta 388+40.0 TO Sta 394+97.0

PAVEMENT WIDTH TABLE

(A) WIDTH	STATION TO STATION	LINE
13′ TO 24.2′	329+10.0 TO 337+17.0	"SD-76"
14′ TO 24.2′	388+40.0 TO 394+97.0	"SD-76"

PAVEMENT WIDTH TABLE

(B) WIDTH	STATION TO STATION	LINE
0′ TO 21′	329+10.0 TO 329+31.0	"SD-76"
21′	329+31.0 TO 337+16.0	"SD-76"
0′ TO 21′	388+40.0 TO 388+70.0	"SD-76"
21′	388+70.0 TO 394+97.0	"SD-76"

PAVEMENT WIDTH TABLE

(C) WIDTH	STATION TO STATION	LINE
46′	341+09.7 TO 344+72.0	"SD-76"
6′ TO 46′	344+72.0 TO 345+62.0	"SD-76"

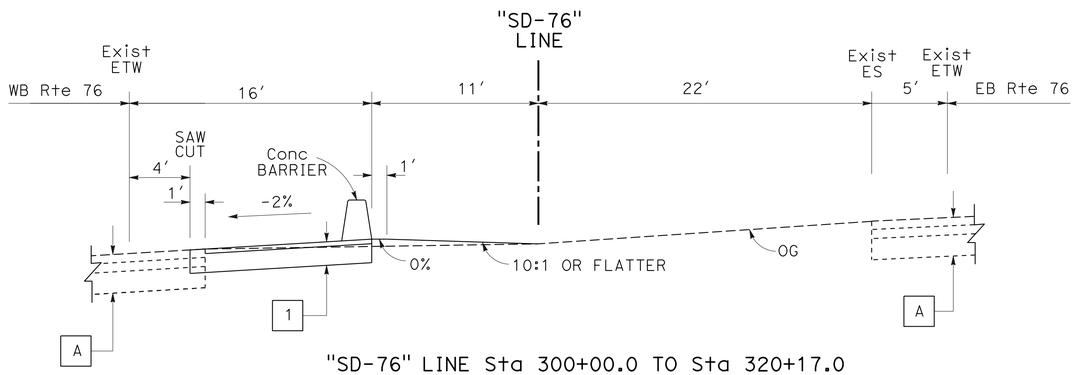

"SD-76" LINE Sta 300+00.0 TO Sta 320+17.0

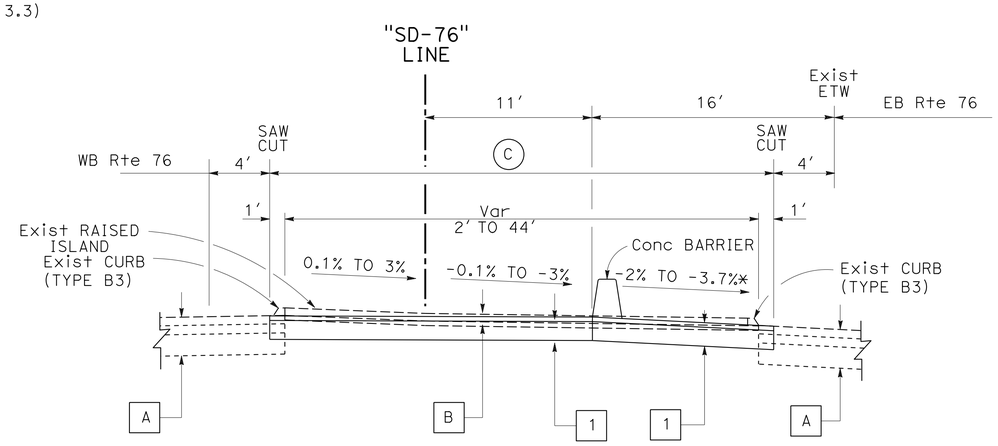

"SD-76" LINE Sta Sta 341+09.7 TO 345+62.0

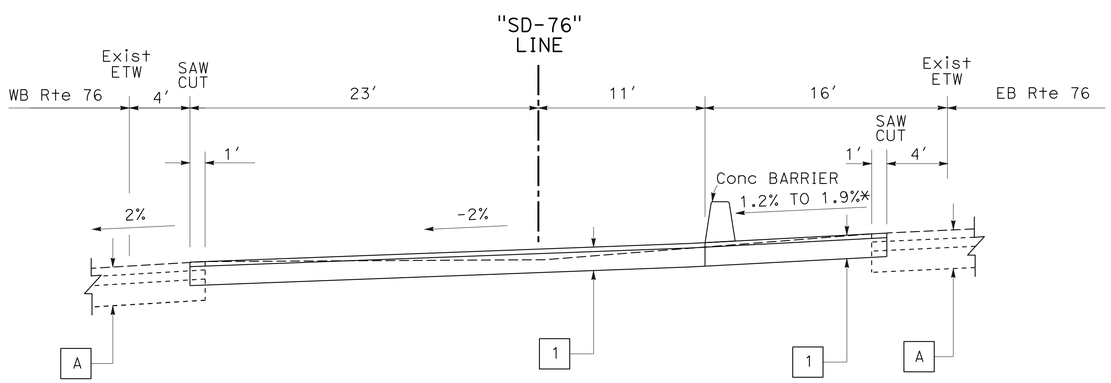

"SD-76" LINE Sta 298+55.0 TO Sta 300+00.0

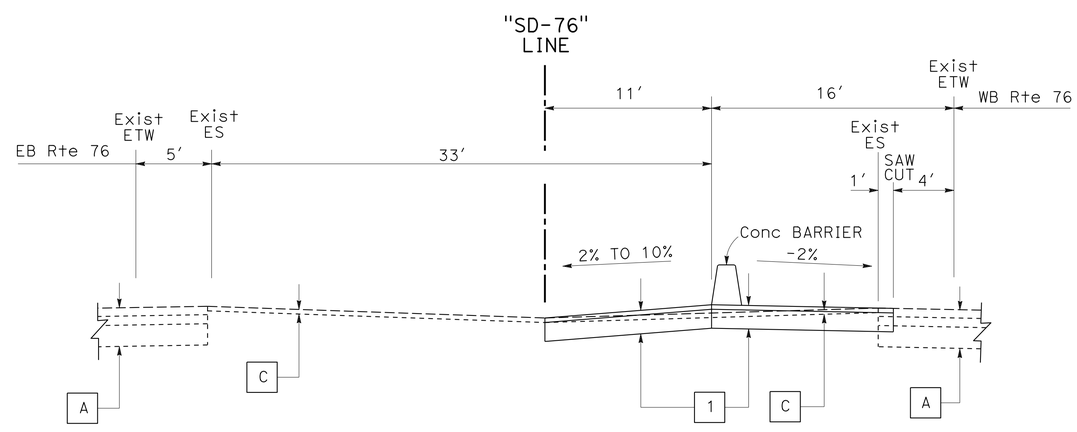

"SD-76" LINE Sta 337+17.0 TO Sta 341+09.7

* MATCH EXISTING ROADWAY CROSS SLOPE

ROUTE 76

TYPICAL CROSS SECTIONS
NO SCALE

X-3

STATE OF CALIFORNIA - DEPARTMENT OF TRANSPORTATION
Caltrans PROJECT DEVELOPMENT
TRAFFIC

FUNCTIONAL SUPERVISOR: RICHARD ESTRADA
CALCULATED-DESIGNED BY: BARZAN ARAN
CHECKED BY
REVISED BY
DATE REVISED
BETHNAY DES JARDINS

LAST REVISION 03-18-14
DATE PLOTTED => 28-MAY-2014
TIME PLOTTED => 14:17

Dist	COUNTY	ROUTE	POST MILES TOTAL PROJECT	SHEET No.	TOTAL SHEETS
11	SD	76	R4.2/R7.6	5	217

REGISTERED CIVIL ENGINEER 04-24-14 DATE

05-19-14
PLANS APPROVAL DATE

REGISTERED PROFESSIONAL ENGINEER BARZAN A. ARAN No. C75167 Exp. 12/31/15 CIVIL STATE OF CALIFORNIA

THE STATE OF CALIFORNIA OR ITS OFFICERS OR AGENTS SHALL NOT BE RESPONSIBLE FOR THE ACCURACY OR COMPLETENESS OF SCANNED COPIES OF THIS PLAN SHEET.

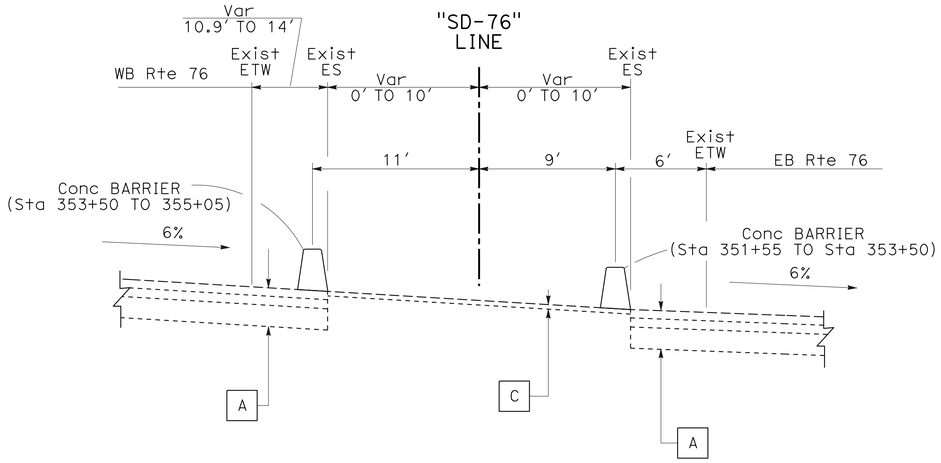

"SD-76" LINE Sta 351+55.0 TO Sta 355+05.0

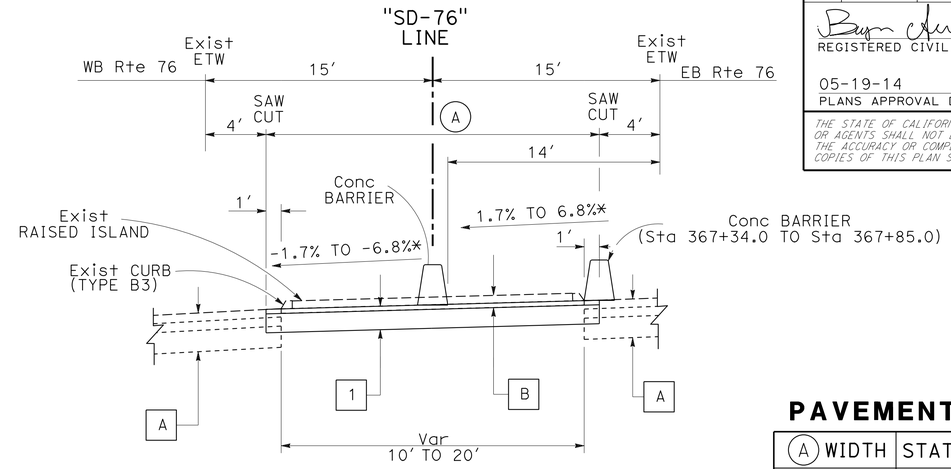

"SD-76" LINE Sta 367+34.0 TO Sta 372+30.0

PAVEMENT WIDTH TABLE

(A) WIDTH	STATION TO STATION	LINE
5' TO 22'	367+34.0 TO 367+85.0	"SD-76"
22' TO 22.4'	367+85.2 TO 372+30.0	"SD-76"

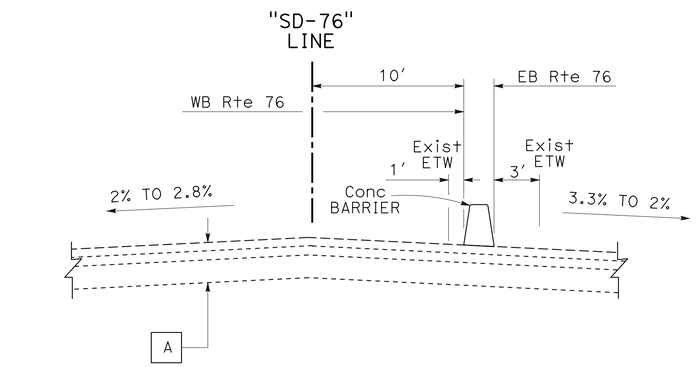

"SD-76" LINE Sta 362+00.0 TO Sta 367+34.0

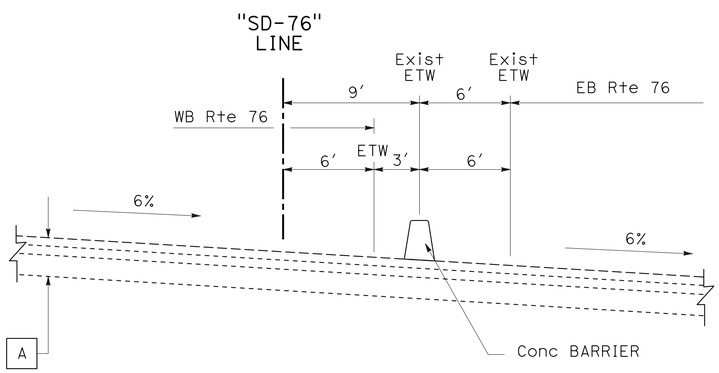

"SD-76" LINE Sta 347+50.0 TO Sta 351+55.0

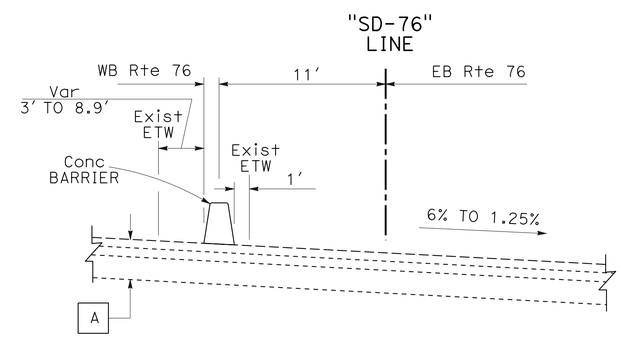

"SD-76" LINE Sta 355+05.0 TO Sta 359+30.0

* MATCH EXISTING ROADWAY CROSS SLOPE

ROUTE 76

TYPICAL CROSS SECTIONS X-4

NO SCALE

STATE OF CALIFORNIA - DEPARTMENT OF TRANSPORTATION
Caltrans PROJECT DEVELOPMENT
TRAFFIC

FUNCTIONAL SUPERVISOR: RICHARD ESTRADA
CALCULATED-DESIGNED BY: BARZAN ARAN
CHECKED BY
REVISED BY
DATE REVISED

BETHNAY DES JARDINS

LAST REVISION 03-18-14 | DATE PLOTTED => 28-MAY-2014 | TIME PLOTTED => 14:17

Dist	COUNTY	ROUTE	POST MILES TOTAL PROJECT	SHEET No.	TOTAL SHEETS
11	SD	76	R4.2/R7.6	6	217

REGISTERED CIVIL ENGINEER 04-24-14 DATE

05-19-14
PLANS APPROVAL DATE

REGISTERED PROFESSIONAL ENGINEER BARZAN A. ARAN No. C75167 Exp. 12/31/15 CIVIL STATE OF CALIFORNIA

THE STATE OF CALIFORNIA OR ITS OFFICERS OR AGENTS SHALL NOT BE RESPONSIBLE FOR THE ACCURACY OR COMPLETENESS OF SCANNED COPIES OF THIS PLAN SHEET.

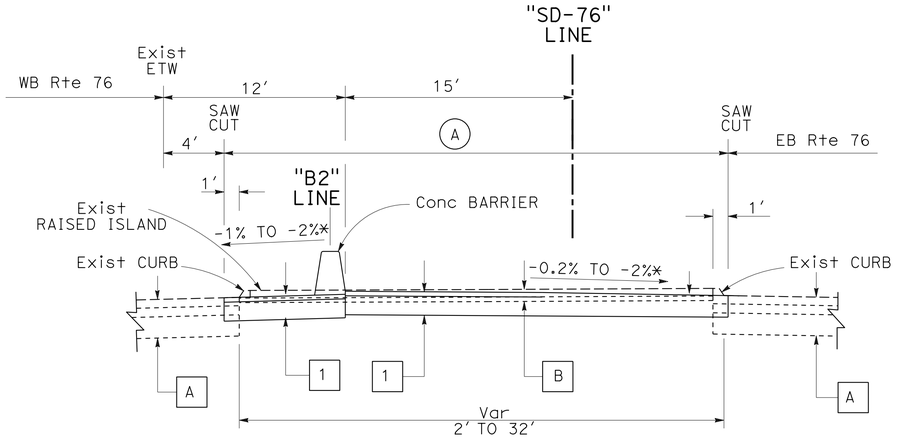

"SD-76" LINE Sta 381+96.0 TO Sta 387+08.0

PAVEMENT WIDTH TABLE

(A) WIDTH	STATION TO STATION	LINE
34'	381+96.0 TO 386+78.0	"SD-76"
15'-34'	386+78.0 TO 387+08.0	"SD-76"

PAVEMENT WIDTH TABLE

(B) WIDTH	STATION TO STATION	LINE
27'	394+97.0 TO 395+85.2	"SD-76"
27' TO 23.3'	395+85.2 TO 399+70.7	"SD-76"
22' TO 21'	400+93.0 TO 402+01.9	"SD-76"
21'	402+01.9 TO 404+00.0	"SD-76"

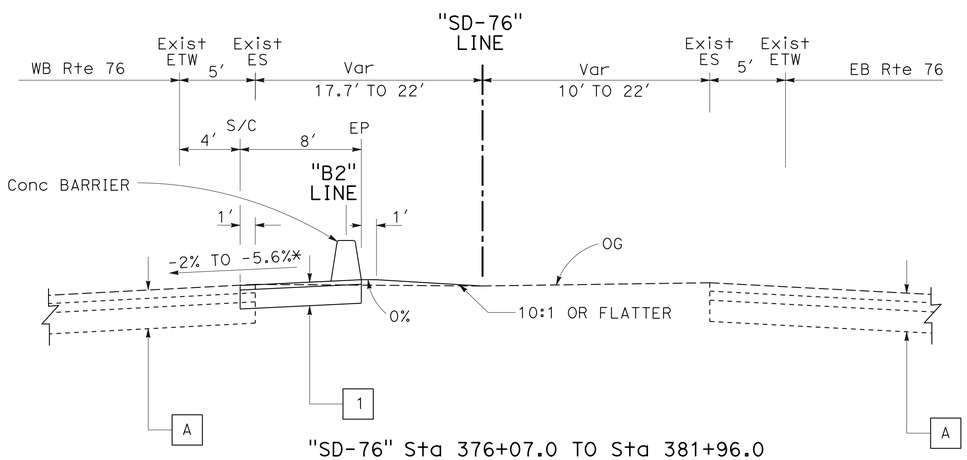

"SD-76" Sta 376+07.0 TO Sta 381+96.0

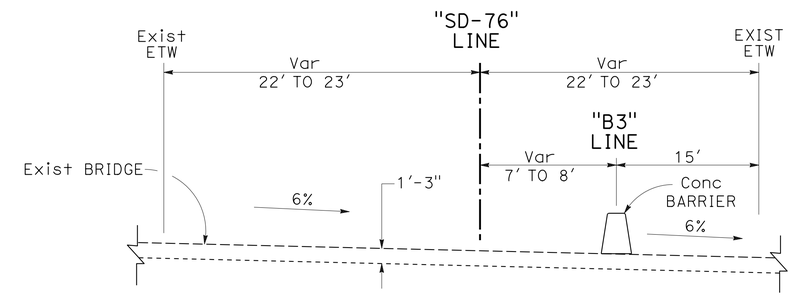

"SD-76" LINE Sta 399+70.7 TO Sta 400+93.1

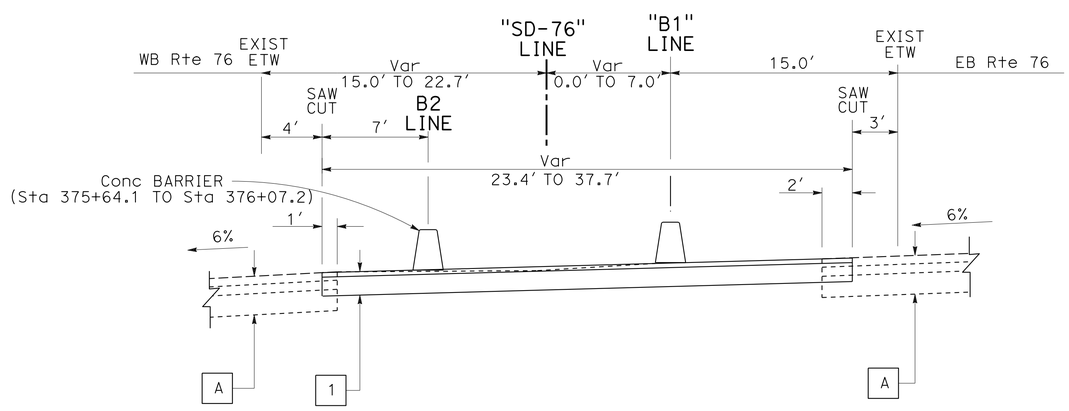

"SD-76" LINE Sta 372+30.0 TO Sta 376+07.0

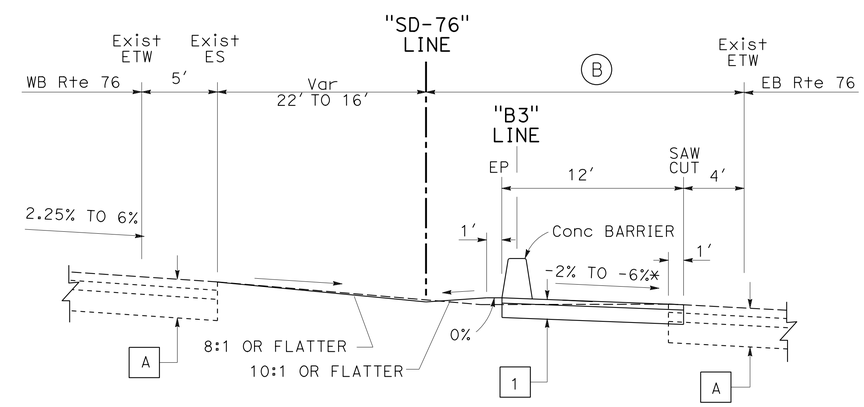

"SD-76" LINE Sta 394+97.0 TO Sta 399+70.7
"SD-76" LINE Sta 400+93.0 TO Sta 404+00.0

* MATCH EXISTING ROADWAY CROSS SLOPE

ROUTE 76

TYPICAL CROSS SECTIONS
NO SCALE

X-5

STATE OF CALIFORNIA - DEPARTMENT OF TRANSPORTATION
Caltrans PROJECT DEVELOPMENT
TRAFFIC

FUNCTIONAL SUPERVISOR: RICHARD ESTRADA
CALCULATED-DESIGNED BY: BETHNAY DES JARDINS
CHECKED BY: BARZAN ARAN
REVISED BY
DATE REVISED

LAST REVISION 03-18-14
DATE PLOTTED => 28-MAY-2014
TIME PLOTTED => 14:17

Dist	COUNTY	ROUTE	POST MILES TOTAL PROJECT	SHEET No.	TOTAL SHEETS
11	SD	76	R4.2/R7.6	7	217

REGISTERED CIVIL ENGINEER 04-24-14 DATE

05-19-14
PLANS APPROVAL DATE

REGISTERED PROFESSIONAL ENGINEER BARZAN A. ARAN No. C75167 Exp. 12/31/15 CIVIL STATE OF CALIFORNIA

THE STATE OF CALIFORNIA OR ITS OFFICERS OR AGENTS SHALL NOT BE RESPONSIBLE FOR THE ACCURACY OR COMPLETENESS OF SCANNED COPIES OF THIS PLAN SHEET.

PAVEMENT WIDTH TABLE

(A) WIDTH	STATION TO STATION	LINE
24.5′ TO 35′	404+00.0 TO 404+96.0	"SD-76"
24.5′	404+96.0 TO 410+81.0	"SD-76"
6 TO 24.5′	410+81.0 TO 411+10.0	"SD-76"

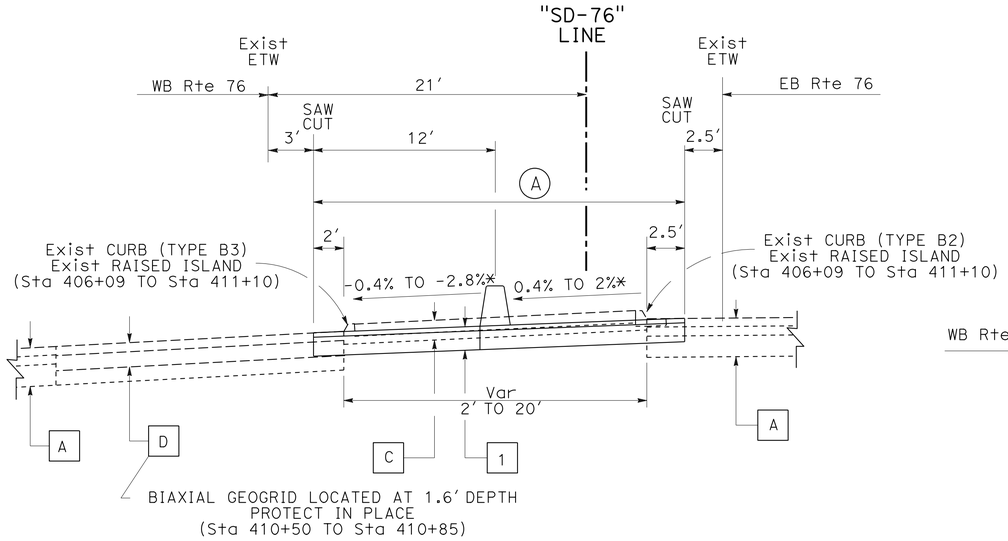

"SD-76" LINE Sta 405+80.0 TO Sta 411+10.0

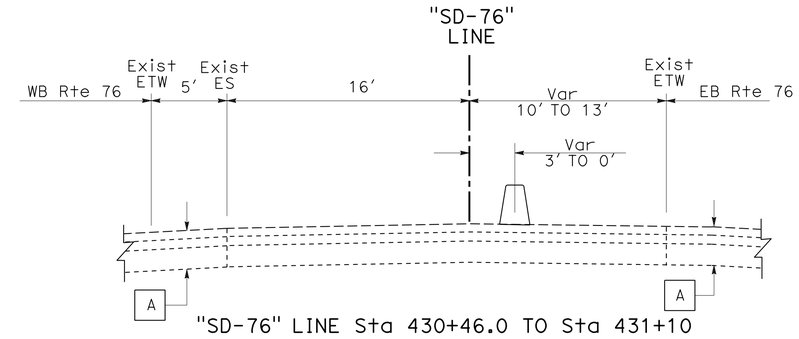

"SD-76" LINE Sta 430+46.0 TO Sta 431+10

PAVEMENT WIDTH TABLE

(C) WIDTH	STATION TO STATION	LINE
8′	419+55.0 TO Sta 429+10.0	"SD-76"
3′	429+10.0 TO Sta 430+46.0	"SD-76"

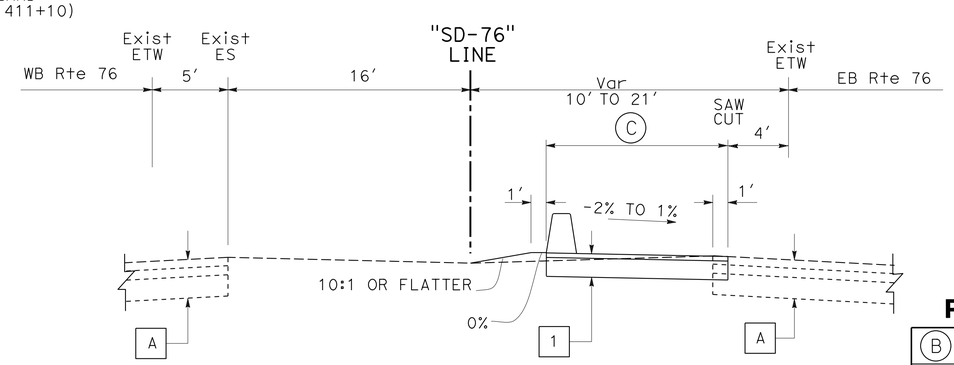

"SD-76" LINE Sta 419+55.0 TO Sta 430+46.0

PAVEMENT WIDTH TABLE

(B) WIDTH	STATION TO STATION	LINE
6′ TO 23′	412+14.0 TO 412+38.0	"SD-76"
23′	412+38.0 TO 417+16.3	"SD-76"
22′	417+16.3 TO 418+35.0	"SD-76"
22′ TO 32′	418+35.0 TO 419+55.0	"SD-76"

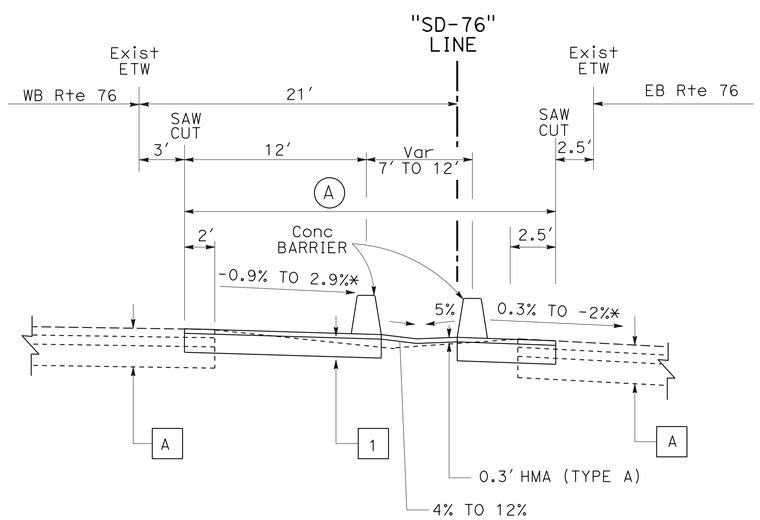

"SD-76" LINE Sta 404+00.0 TO Sta 405+80.0

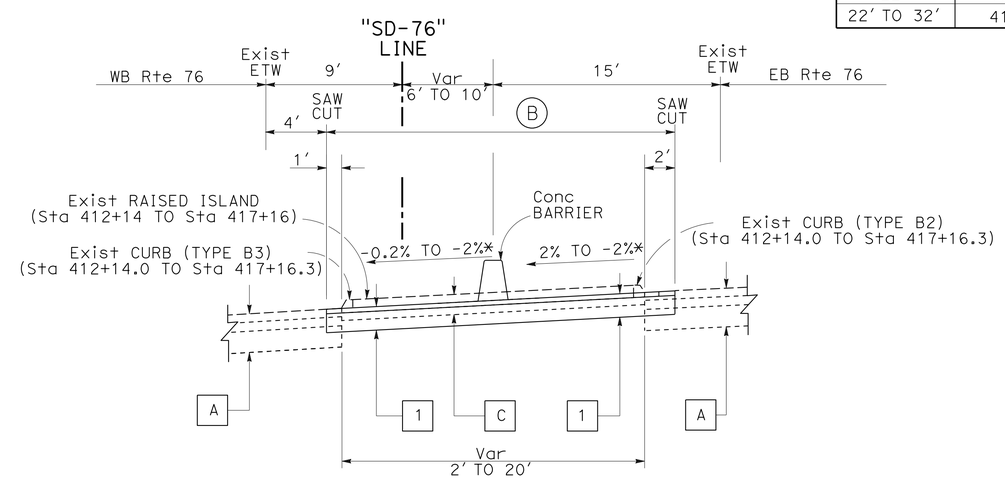

"SD-76" LINE Sta 412+14.0 TO Sta 419+55.0

* MATCH EXISTING ROADWAY CROSS SLOPE

ROUTE 76

TYPICAL CROSS SECTIONS X-6

NO SCALE

STATE OF CALIFORNIA - DEPARTMENT OF TRANSPORTATION
Caltrans PROJECT DEVELOPMENT
TRAFFIC

FUNCTIONAL SUPERVISOR: RICHARD ESTRADA
CALCULATED-DESIGNED BY: BETHNAY DES JARDINS
CHECKED BY: BARZAN ARAN
REVISED BY / DATE REVISED

LAST REVISION 03-18-14 | DATE PLOTTED => 28-MAY-2014 | TIME PLOTTED => 14:17

Dist	COUNTY	ROUTE	POST MILES TOTAL PROJECT	SHEET No.	TOTAL SHEETS
11	SD	76	R4.2/R7.6	8	217

George J. Schuh 04-28-14
LICENSED LAND SURVEYOR DATE

05-19-14
PLANS APPROVAL DATE

PROFESSIONAL LAND SURVEYOR GEORGE J. SCHUH L.S. 7121 Exp. 12/31/2014 STATE OF CALIFORNIA

THE STATE OF CALIFORNIA OR ITS OFFICERS OR AGENTS SHALL NOT BE RESPONSIBLE FOR THE ACCURACY OR COMPLETENESS OF SCANNED COPIES OF THIS PLAN SHEET.

NOTES:

FOR COMPLETE PROJECT CONTROL AND MONUMENTATION DATA, SEE THE SURVEY RECORDS ON FILE AT DISTRICT 11 SURVEYS.

BASIS OF BEARINGS AND COORDINATES

FOR THIS PROJECT IS THE CALIFORNIA COORDINATE SYSTEM OF 1983, HPGN EPOCH ADJUSTMENT [CCS 83 (1991.35)], ZONE 6. 2ND ORDER PROJECT CONTROL STATION VALUES WERE ESTABLISHED IN AUGUST 2002 BASED ON THE CRITERIA SET FORTH IN THE FEDERAL GEODETIC CONTROL SUBCOMMITTEE'S "GEOMETRIC GEODETIC ACCURACY STANDARDS AND SPECIFICATIONS FOR USING GPS RELATIVE POSITIONING TECHNIQUES" REPRINTED AUGUST 1, 1989.

BASIS OF ELEVATIONS

FOR THIS PROJECT IS THE NORTH AMERICAN VERTICAL DATUM OF 1988 (NAVD88). ELEVATIONS WERE ESTABLISHED BY GPS FAST STATIC SURVEY.

LEGEND

(2) 2ND ORDER STATION

(3) 3RD ORDER STATION

ABBREVIATIONS:

CADT	CALIFORNIA DEPARTMENT OF TRANSPORTATION
IP	IRON PIPE
AC	ASPHALTIC CONCRETE
PCC	PORTLAND CEMENT CONCRETE
PK	PARKER-KALON NAIL

CONTROL FOR DESIGN AND CONSTRUCTION

STATION DESIGNATION	ORDER	NORTHING	EASTING	ELEVATION	DESCRIPTION
76 4.15	3RD	2028163.67	6235075.29	74.90	PK & WASHER IN PCC
76-5.44	2ND	2031753.92	6240449.13	77.72	2 1/4" CADT BRASS DISK IN 2" IP
76 5.88	3RD	2033213.57	6242226.56	107.12	CHISELED X IN PCC
76-6.43	2ND	2034083.69	6244907.59	157.58	2 1/4" CADT BRASS DISK IN 2" IP
76-6.98	2ND	2035445.57	6247519.94	137.31	2 1/4" CADT BRASS DISK IN 2" IP
76 7.13	3RD	2035526.14	6248380.88	120.00	PK & WASHER IN PCC
76 7.30	3RD	2035747.06	6249200.51	106.08	PK & WASHER ON AC DIKE
76-7.55	2ND	2036388.61	6250303.88	131.37	2 1/4" CADT BRASS DISK IN 2" IP

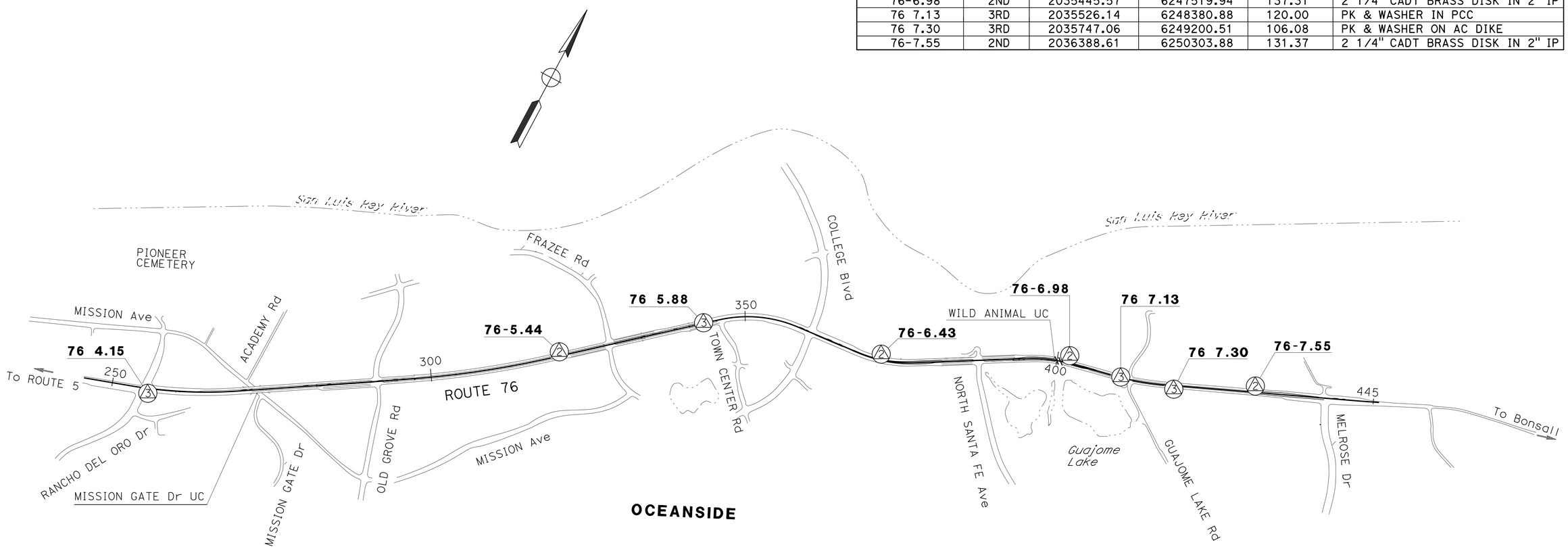

PROJECT CONTROL

NO SCALE

PC-1

APPROVED FOR PROJECT CONTROL INFORMATION ONLY

STATE OF CALIFORNIA - DEPARTMENT OF TRANSPORTATION
Caltrans® LAND SURVEYS DIVISION

FUNCTIONAL SUPERVISOR: BRUCE URQUHART
CALCULATED-DESIGNED BY: GEORGE SCHUH
CHECKED BY: NED SALMAN
REVISED BY
DATE REVISED

LAST REVISION 10-24-12
DATE PLOTTED => 28-MAY-2014
TIME PLOTTED => 14:17

Dist	COUNTY	ROUTE	POST MILES TOTAL PROJECT	SHEET No.	TOTAL SHEETS
11	SD	76	R4.2/R7.6	9	217

REGISTERED CIVIL ENGINEER 04-24-14 DATE

05-19-14
PLANS APPROVAL DATE

REGISTERED PROFESSIONAL ENGINEER BARZAN A. ARAN No. C75167 Exp. 12/31/15 CIVIL STATE OF CALIFORNIA

THE STATE OF CALIFORNIA OR ITS OFFICERS OR AGENTS SHALL NOT BE RESPONSIBLE FOR THE ACCURACY OR COMPLETENESS OF SCANNED COPIES OF THIS PLAN SHEET.

NOTES:

1. FOR ACCURATE RIGHT OF WAY DATA, CONTACT RIGHT OF WAY ENGINEERING AT THE DISTRICT OFFICE.
1. FOR LOCATIONS OF HIGH FRICTION SURFACE TREATMENT SEE CONSTRUCTION DETAILS.

LEGEND:

= 0.30′ HMA (TYPE A)
1.25′ CLASS 2 AB

= 0.60′ HMA (TYPE A)
2.10′ CL 2 AB

X = MGS

IRRX = IRRIGATION CONDUIT

RS = SHOULDER RUMBLE STRIP (HMA GROUND-IN IDENTATIONS)

OCEANSIDE

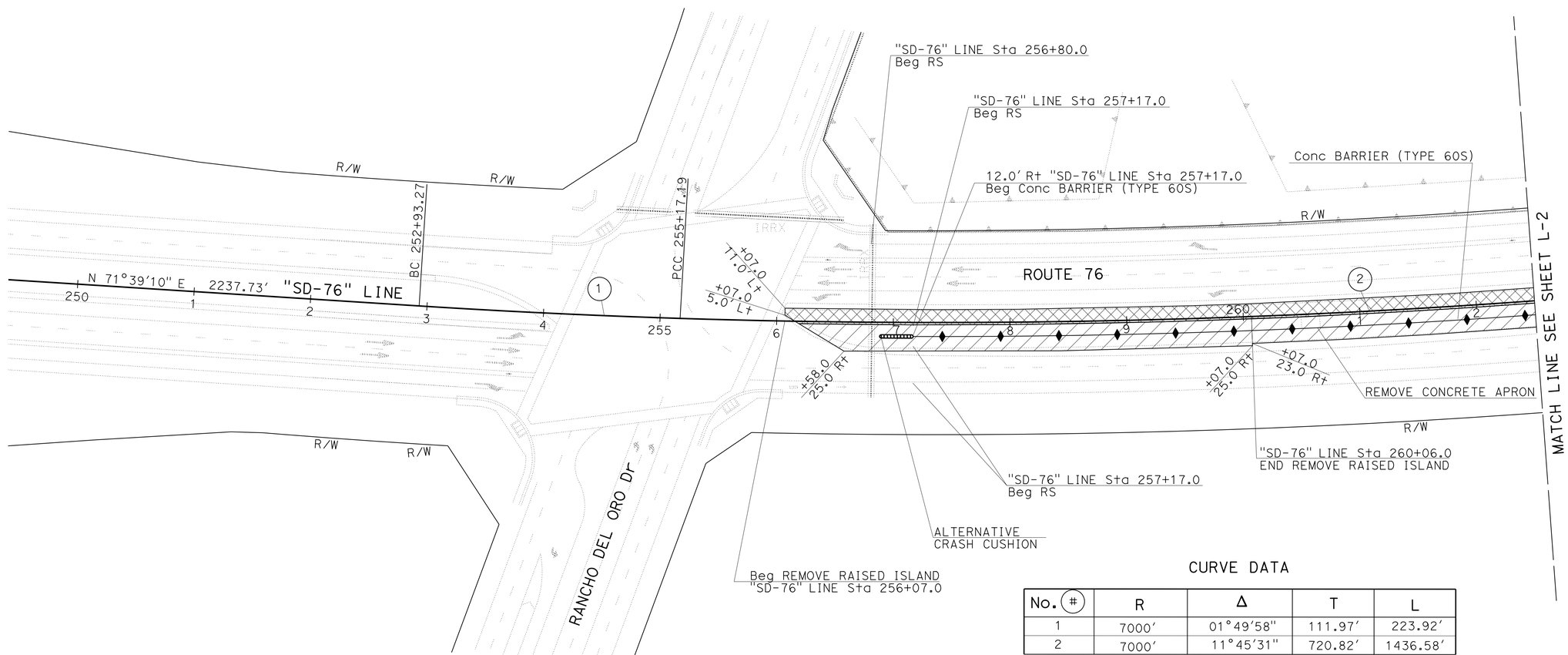

CURVE DATA

No. (#)	R	Δ	T	L
1	7000′	01°49′58″	111.97′	223.92′
2	7000′	11°45′31″	720.82′	1436.58′

SCALE: 1″ = 50′

LAYOUT L-1

STATE OF CALIFORNIA - DEPARTMENT OF TRANSPORTATION
Caltrans PROJECT DEVELOPMENT
TRAFFIC

FUNCTIONAL SUPERVISOR: RICHARD ESTRADA
CALCULATED-DESIGNED BY: BETHNAY DES JARDINS
CHECKED BY: BARZAN ARAN
REVISED BY
DATE REVISED

LAST REVISION 03-18-14
DATE PLOTTED => 28-MAY-2014
TIME PLOTTED => 14:17

Dist	COUNTY	ROUTE	POST MILES TOTAL PROJECT	SHEET No.	TOTAL SHEETS
11	SD	76	R4.2/R7.6	10	217

REGISTERED CIVIL ENGINEER 04-24-14 DATE

05-19-14
PLANS APPROVAL DATE

REGISTERED PROFESSIONAL ENGINEER BARZAN A. ARAN No. C75167 Exp. 12/31/15 CIVIL STATE OF CALIFORNIA

THE STATE OF CALIFORNIA OR ITS OFFICERS OR AGENTS SHALL NOT BE RESPONSIBLE FOR THE ACCURACY OR COMPLETENESS OF SCANNED COPIES OF THIS PLAN SHEET.

NOTE:

1. FOR ACCURATE RIGHT OF WAY DATA, CONTACT RIGHT OF WAY ENGINEERING AT THE DISTRICT OFFICE.

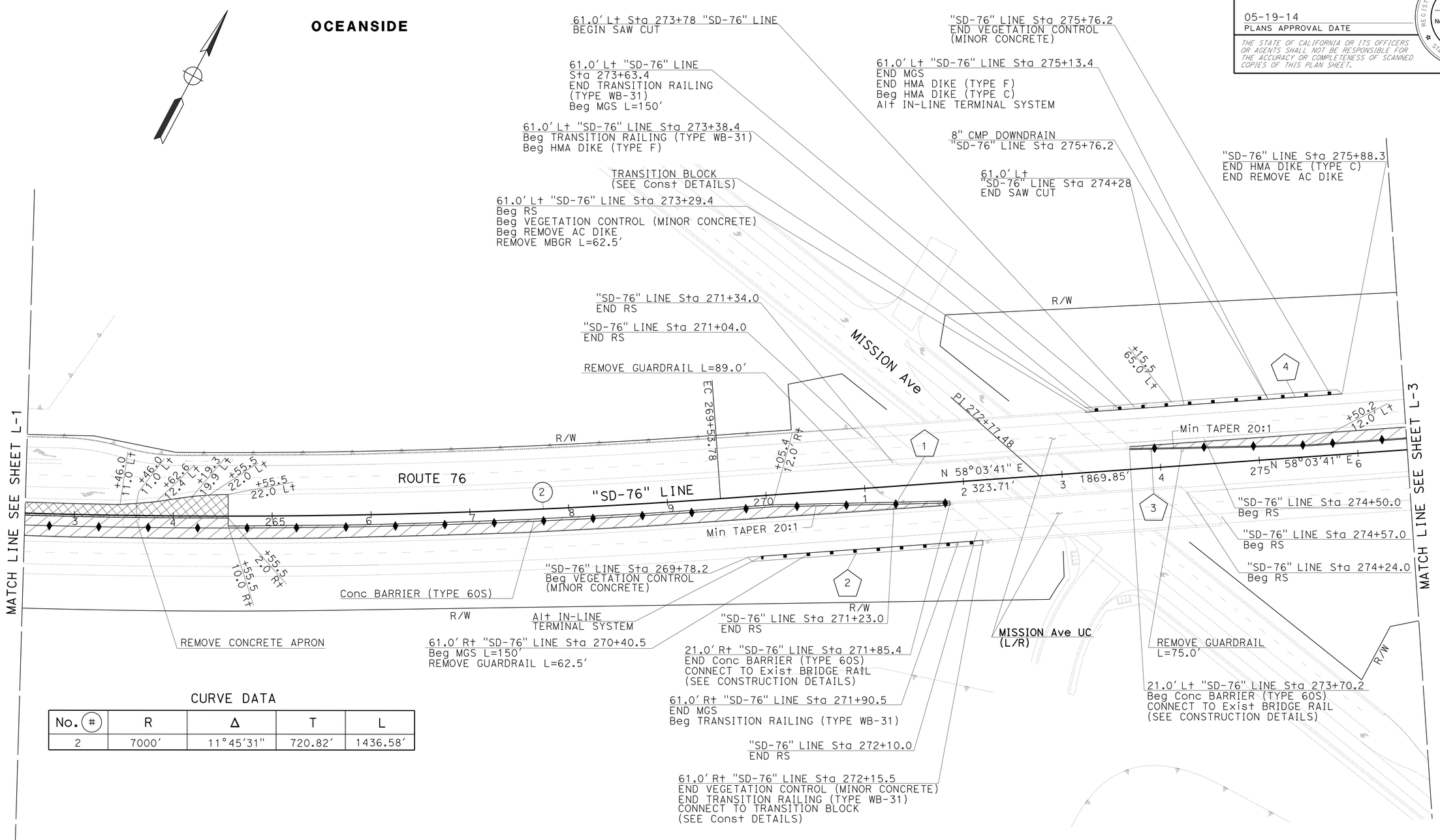

CURVE DATA

No. (#)	R	Δ	T	L
2	7000'	11°45'31"	720.82'	1436.58'

SCALE: 1" = 50'

LAYOUT L-2

REVISED BY	DATE REVISED

BETHNAY DES JARDINS — BARZAN ARAN

CALCULATED-DESIGNED BY — CHECKED BY

FUNCTIONAL SUPERVISOR — RICHARD ESTRADA

STATE OF CALIFORNIA - DEPARTMENT OF TRANSPORTATION
Caltrans PROJECT DEVELOPMENT
TRAFFIC

LAST REVISION 03-05-14 — DATE PLOTTED => 28-MAY-2014 — TIME PLOTTED => 14:17

Dist	COUNTY	ROUTE	POST MILES TOTAL PROJECT	SHEET No.	TOTAL SHEETS
11	SD	76	R4.2/R7.6	11	217

REGISTERED CIVIL ENGINEER 04-24-14 DATE

05-19-14
PLANS APPROVAL DATE

REGISTERED PROFESSIONAL ENGINEER BARZAN A. ARAN No. C75167 Exp. 12/31/15 CIVIL STATE OF CALIFORNIA

THE STATE OF CALIFORNIA OR ITS OFFICERS OR AGENTS SHALL NOT BE RESPONSIBLE FOR THE ACCURACY OR COMPLETENESS OF SCANNED COPIES OF THIS PLAN SHEET.

NOTE:

1. FOR ACCURATE RIGHT OF WAY DATA, CONTACT RIGHT OF WAY ENGINEERING AT THE DISTRICT OFFICE.

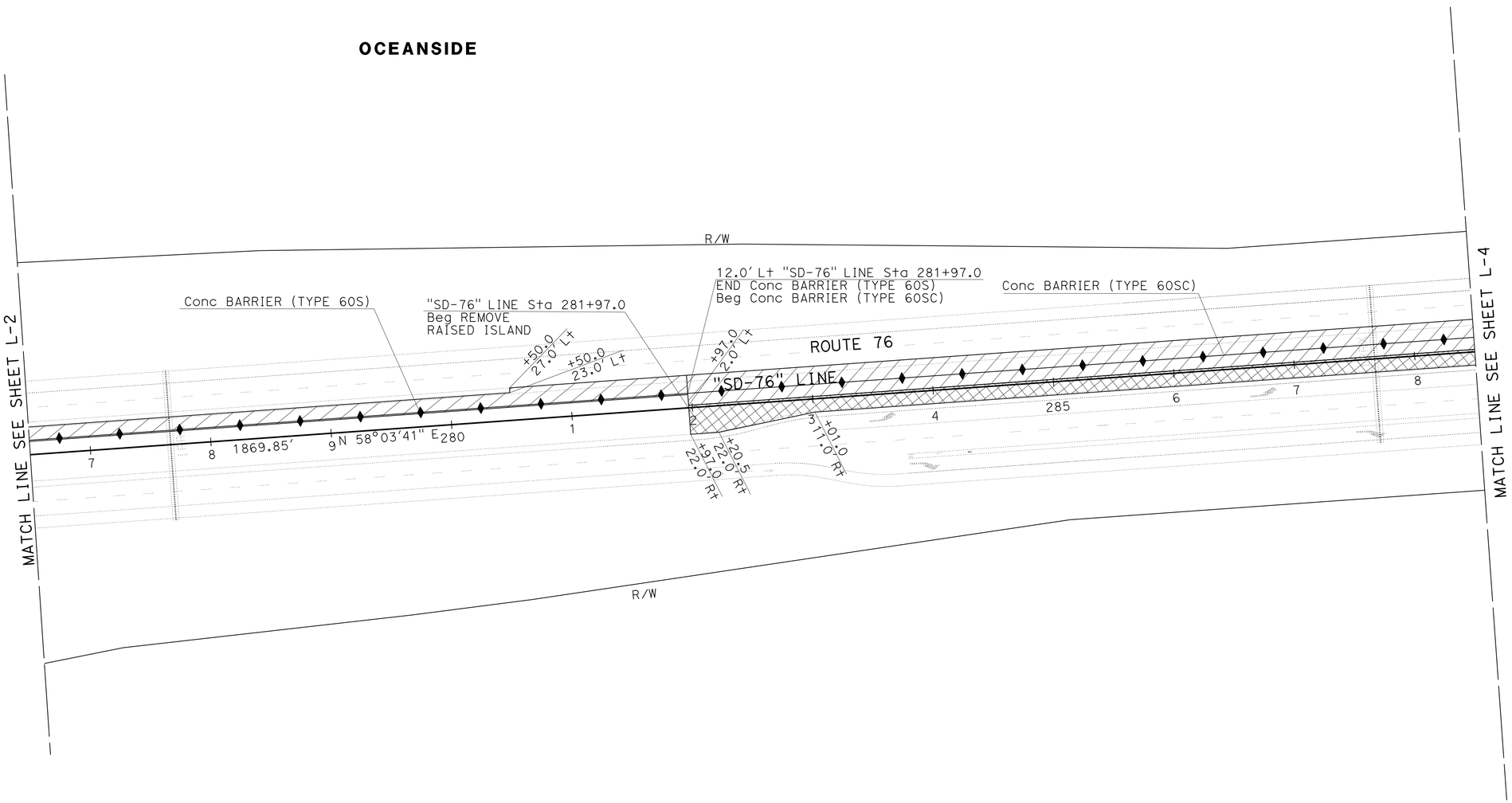

SCALE: 1" = 50'

LAYOUT L-3

STATE OF CALIFORNIA - DEPARTMENT OF TRANSPORTATION
Caltrans PROJECT DEVELOPMENT
TRAFFIC

FUNCTIONAL SUPERVISOR: RICHARD ESTRADA
CALCULATED-DESIGNED BY: BETHNAY DES JARDINS
CHECKED BY: BARZAN ARAN
REVISED BY
DATE REVISED

LAST REVISION 03-05-14
DATE PLOTTED => 28-MAY-2014
TIME PLOTTED => 14:17

Dist	COUNTY	ROUTE	POST MILES TOTAL PROJECT	SHEET No.	TOTAL SHEETS
11	SD	76	R4.2/R7.6	12	217

REGISTERED CIVIL ENGINEER 04-24-14 DATE

05-19-14
PLANS APPROVAL DATE

REGISTERED PROFESSIONAL ENGINEER BARZAN A. ARAN No. C75167 Exp. 12/31/15 CIVIL STATE OF CALIFORNIA

THE STATE OF CALIFORNIA OR ITS OFFICERS OR AGENTS SHALL NOT BE RESPONSIBLE FOR THE ACCURACY OR COMPLETENESS OF SCANNED COPIES OF THIS PLAN SHEET.

NOTE:

1. FOR ACCURATE RIGHT OF WAY DATA, CONTACT RIGHT OF WAY ENGINEERING AT THE DISTRICT OFFICE.

OCEANSIDE

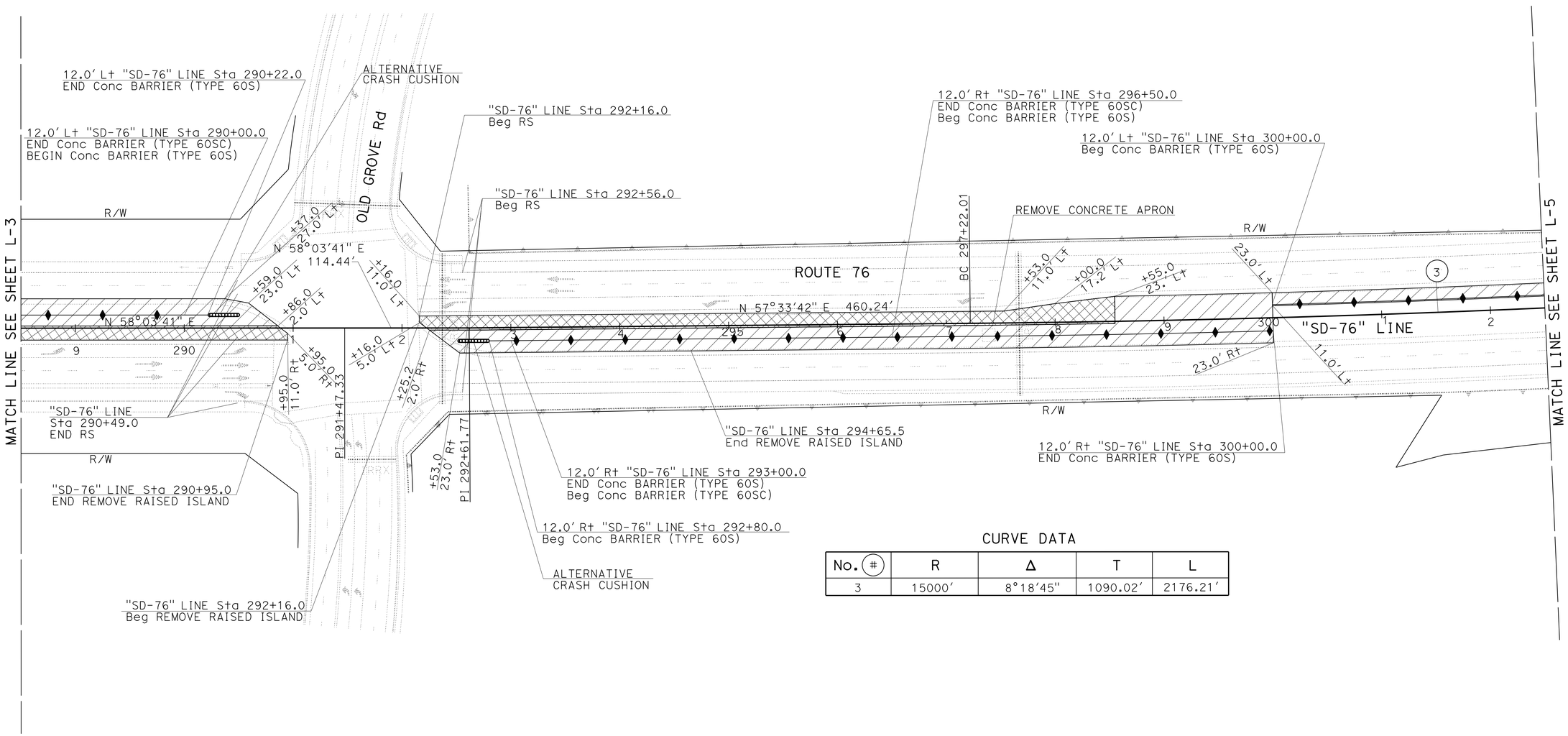

CURVE DATA

No. (#)	R	Δ	T	L
3	15000'	8°18'45"	1090.02'	2176.21'

SCALE: 1" = 50'

LAYOUT L-4

STATE OF CALIFORNIA - DEPARTMENT OF TRANSPORTATION
Caltrans TRAFFIC PROJECT DEVELOPMENT

FUNCTIONAL SUPERVISOR: RICHARD ESTRADA
CALCULATED-DESIGNED BY: BETHNAY DES JARDINS
CHECKED BY: BARZAN ARAN
REVISED BY
DATE REVISED

LAST REVISION 03-05-14
DATE PLOTTED => 28-MAY-2014
TIME PLOTTED => 14:17

Dist	COUNTY	ROUTE	POST MILES TOTAL PROJECT	SHEET No.	TOTAL SHEETS
11	SD	76	R4.2/R7.6	13	217

REGISTERED CIVIL ENGINEER 04-24-14 DATE

05-19-14
PLANS APPROVAL DATE

REGISTERED PROFESSIONAL ENGINEER BARZAN A. ARAN No. C75167 Exp. 12/31/15 CIVIL STATE OF CALIFORNIA

THE STATE OF CALIFORNIA OR ITS OFFICERS OR AGENTS SHALL NOT BE RESPONSIBLE FOR THE ACCURACY OR COMPLETENESS OF SCANNED COPIES OF THIS PLAN SHEET.

NOTE:

1. FOR ACCURATE RIGHT OF WAY DATA, CONTACT RIGHT OF WAY ENGINEERING AT THE DISTRICT OFFICE.

OCEANSIDE

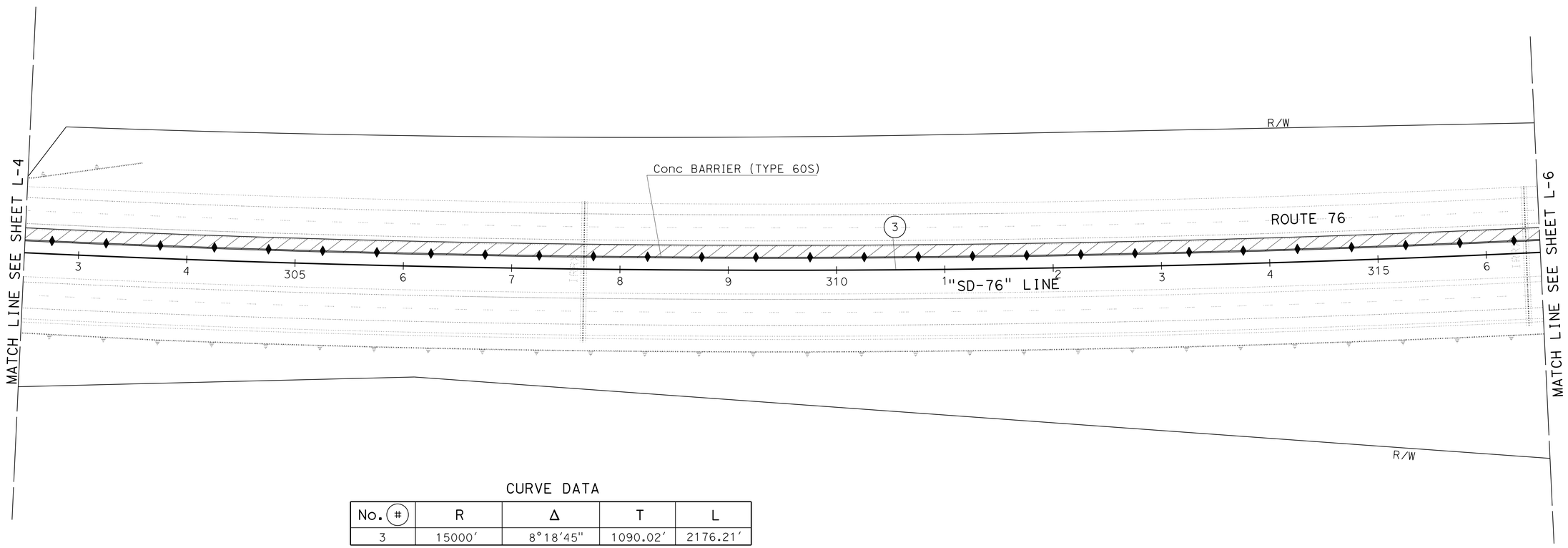

CURVE DATA

No. (#)	R	Δ	T	L
3	15000′	8°18′45"	1090.02′	2176.21′

SCALE: 1" = 50′

LAYOUT L-5

STATE OF CALIFORNIA - DEPARTMENT OF TRANSPORTATION
Caltrans PROJECT DEVELOPMENT
TRAFFIC

FUNCTIONAL SUPERVISOR: RICHARD ESTRADA
CALCULATED-DESIGNED BY: BETHNAY DES JARDINS
CHECKED BY: BARZAN ARAN
REVISED BY
DATE REVISED

LAST REVISION 03-05-14
DATE PLOTTED => 28-MAY-2014
TIME PLOTTED => 14:17

Dist	COUNTY	ROUTE	POST MILES TOTAL PROJECT	SHEET No.	TOTAL SHEETS
11	SD	76	R4.2/R7.6	14	217

REGISTERED CIVIL ENGINEER 04-24-14 DATE

05-19-14
PLANS APPROVAL DATE

REGISTERED PROFESSIONAL ENGINEER BARZAN A. ARAN No. C75167 Exp. 12/31/15 CIVIL STATE OF CALIFORNIA

THE STATE OF CALIFORNIA OR ITS OFFICERS OR AGENTS SHALL NOT BE RESPONSIBLE FOR THE ACCURACY OR COMPLETENESS OF SCANNED COPIES OF THIS PLAN SHEET.

NOTE:

1. FOR ACCURATE RIGHT OF WAY DATA, CONTACT RIGHT OF WAY ENGINEERING AT THE DISTRICT OFFICE.

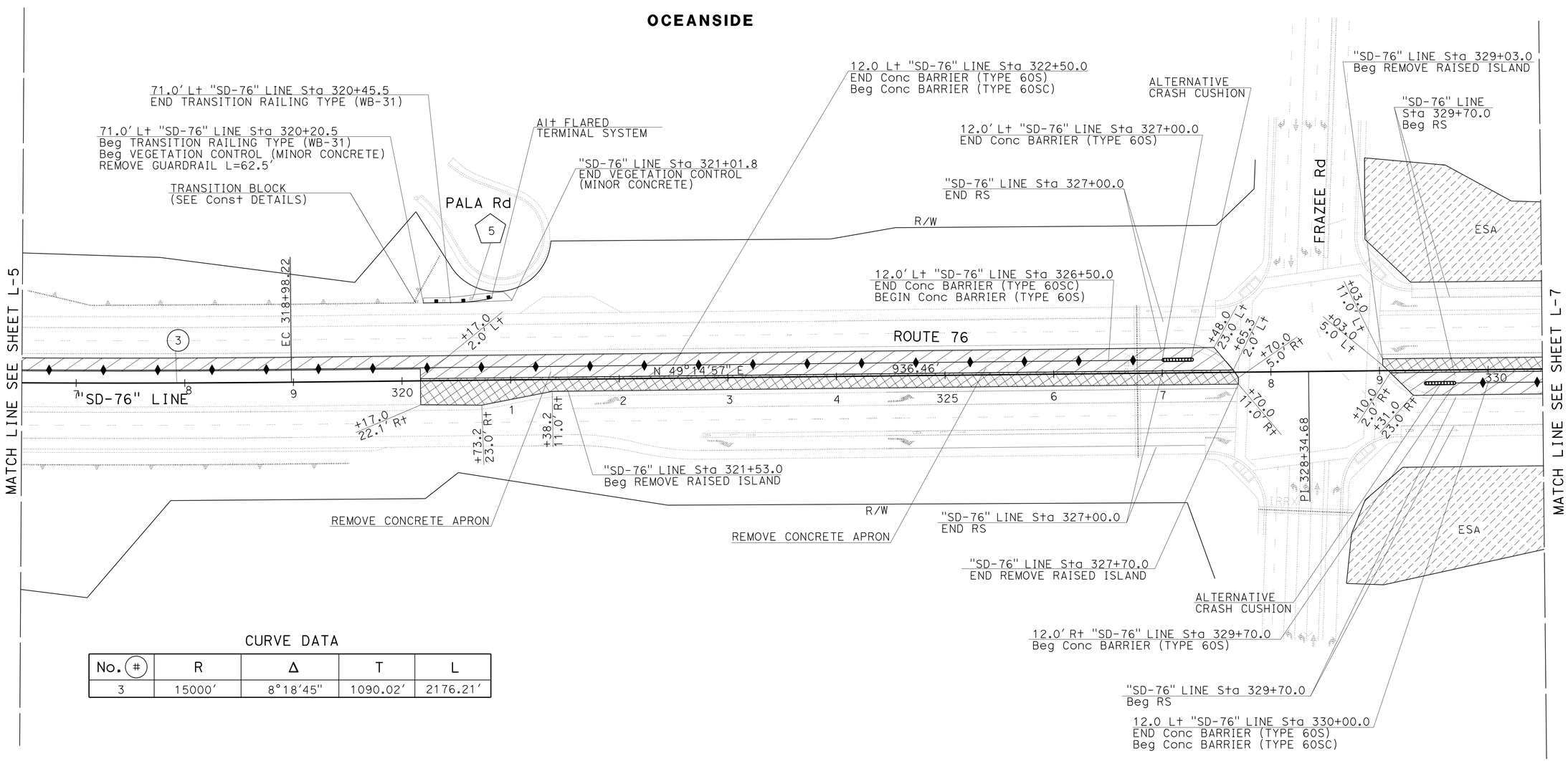

CURVE DATA

No. (#)	R	Δ	T	L
3	15000'	8°18'45"	1090.02'	2176.21'

SCALE: 1" = 50'

LAYOUT L-6

STATE OF CALIFORNIA - DEPARTMENT OF TRANSPORTATION
Caltrans PROJECT DEVELOPMENT
TRAFFIC

FUNCTIONAL SUPERVISOR: RICHARD ESTRADA
CALCULATED-DESIGNED BY: BETHNAY DES JARDINS
CHECKED BY: BARZAN ARAN
REVISED BY
DATE REVISED

LAST REVISION 03-18-14
DATE PLOTTED => 28-MAY-2014
TIME PLOTTED => 14:17

Dist	COUNTY	ROUTE	POST MILES TOTAL PROJECT	SHEET No.	TOTAL SHEETS
11	SD	76	R4.2/R7.6	15	217

REGISTERED CIVIL ENGINEER 04-24-14 DATE

05-19-14
PLANS APPROVAL DATE

REGISTERED PROFESSIONAL ENGINEER BARZAN A. ARAN No. C75167 Exp. 12/31/15 CIVIL STATE OF CALIFORNIA

THE STATE OF CALIFORNIA OR ITS OFFICERS OR AGENTS SHALL NOT BE RESPONSIBLE FOR THE ACCURACY OR COMPLETENESS OF SCANNED COPIES OF THIS PLAN SHEET.

NOTE:

1. FOR ACCURATE RIGHT OF WAY DATA, CONTACT RIGHT OF WAY ENGINEERING AT THE DISTRICT OFFICE.

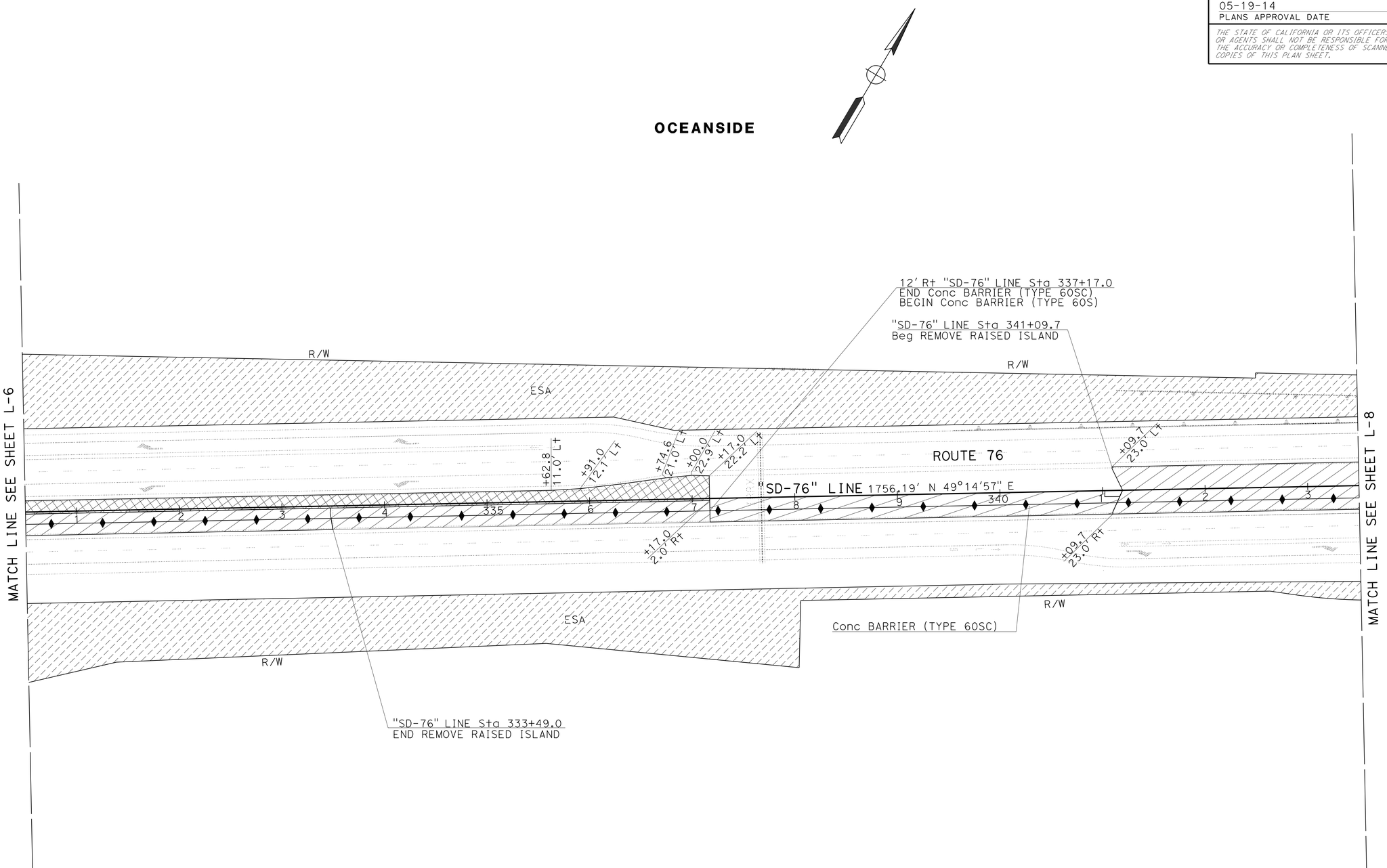

SCALE: 1" = 50'

LAYOUT L-7

STATE OF CALIFORNIA - DEPARTMENT OF TRANSPORTATION
Caltrans PROJECT DEVELOPMENT
TRAFFIC

FUNCTIONAL SUPERVISOR: RICHARD ESTRADA
CALCULATED-DESIGNED BY: BARZAN ARAN
CHECKED BY
REVISED BY
DATE REVISED

BETHNAY DES JARDINS

LAST REVISION 03-05-14
DATE PLOTTED => 28-MAY-2014
TIME PLOTTED => 14:17

Dist	COUNTY	ROUTE	POST MILES TOTAL PROJECT	SHEET No.	TOTAL SHEETS
11	SD	76	R4.2/R7.6	16	217

REGISTERED CIVIL ENGINEER 04-24-14 DATE

05-19-14
PLANS APPROVAL DATE

REGISTERED PROFESSIONAL ENGINEER BARZAN A. ARAN No. C75167 Exp. 12/31/15 CIVIL STATE OF CALIFORNIA

THE STATE OF CALIFORNIA OR ITS OFFICERS OR AGENTS SHALL NOT BE RESPONSIBLE FOR THE ACCURACY OR COMPLETENESS OF SCANNED COPIES OF THIS PLAN SHEET.

NOTE:

1. FOR ACCURATE RIGHT OF WAY DATA, CONTACT RIGHT OF WAY ENGINEERING AT THE DISTRICT OFFICE.

OCEANSIDE

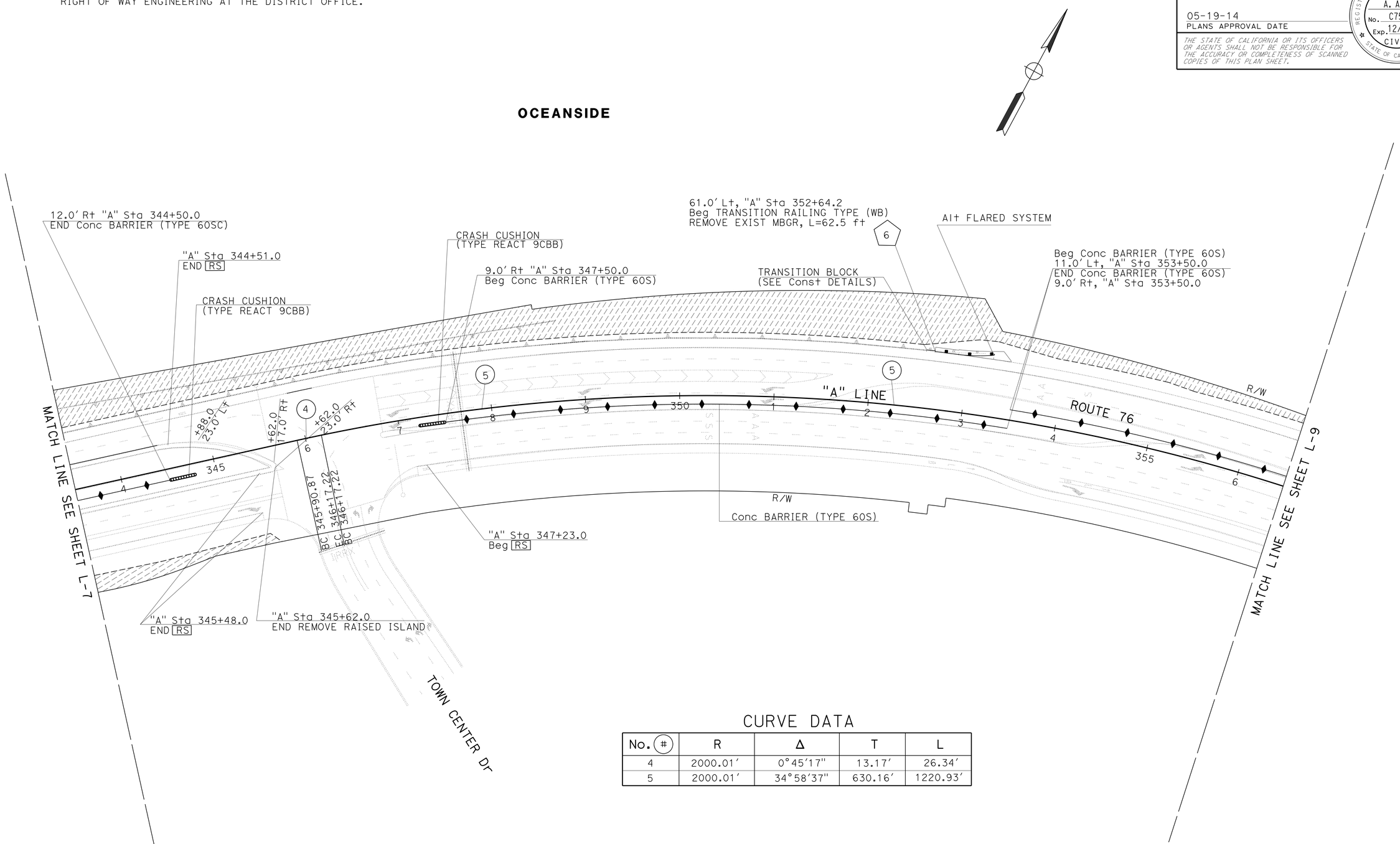

CURVE DATA

No. (#)	R	Δ	T	L
4	2000.01'	0°45'17"	13.17'	26.34'
5	2000.01'	34°58'37"	630.16'	1220.93'

SCALE: 1" = 50'

LAYOUT L-8

STATE OF CALIFORNIA - DEPARTMENT OF TRANSPORTATION
Caltrans PROJECT DEVELOPMENT
TRAFFIC

FUNCTIONAL SUPERVISOR: RICHARD ESTRADA
CALCULATED-DESIGNED BY: BETHNAY DES JARDINS
CHECKED BY: BARZAN ARAN
REVISED BY / DATE REVISED

LAST REVISION 03-05-14
DATE PLOTTED => 28-MAY-2014
TIME PLOTTED => 14:17

Dist	COUNTY	ROUTE	POST MILES TOTAL PROJECT	SHEET No.	TOTAL SHEETS
11	SD	76	R4.2/R7.6	17	217

REGISTERED CIVIL ENGINEER 04-24-14 DATE

05-19-14
PLANS APPROVAL DATE

REGISTERED PROFESSIONAL ENGINEER BARZAN A. ARAN No. C75167 Exp. 12/31/15 CIVIL STATE OF CALIFORNIA

THE STATE OF CALIFORNIA OR ITS OFFICERS OR AGENTS SHALL NOT BE RESPONSIBLE FOR THE ACCURACY OR COMPLETENESS OF SCANNED COPIES OF THIS PLAN SHEET.

NOTE:

1. FOR ACCURATE RIGHT OF WAY DATA, CONTACT RIGHT OF WAY ENGINEERING AT THE DISTRICT OFFICE.

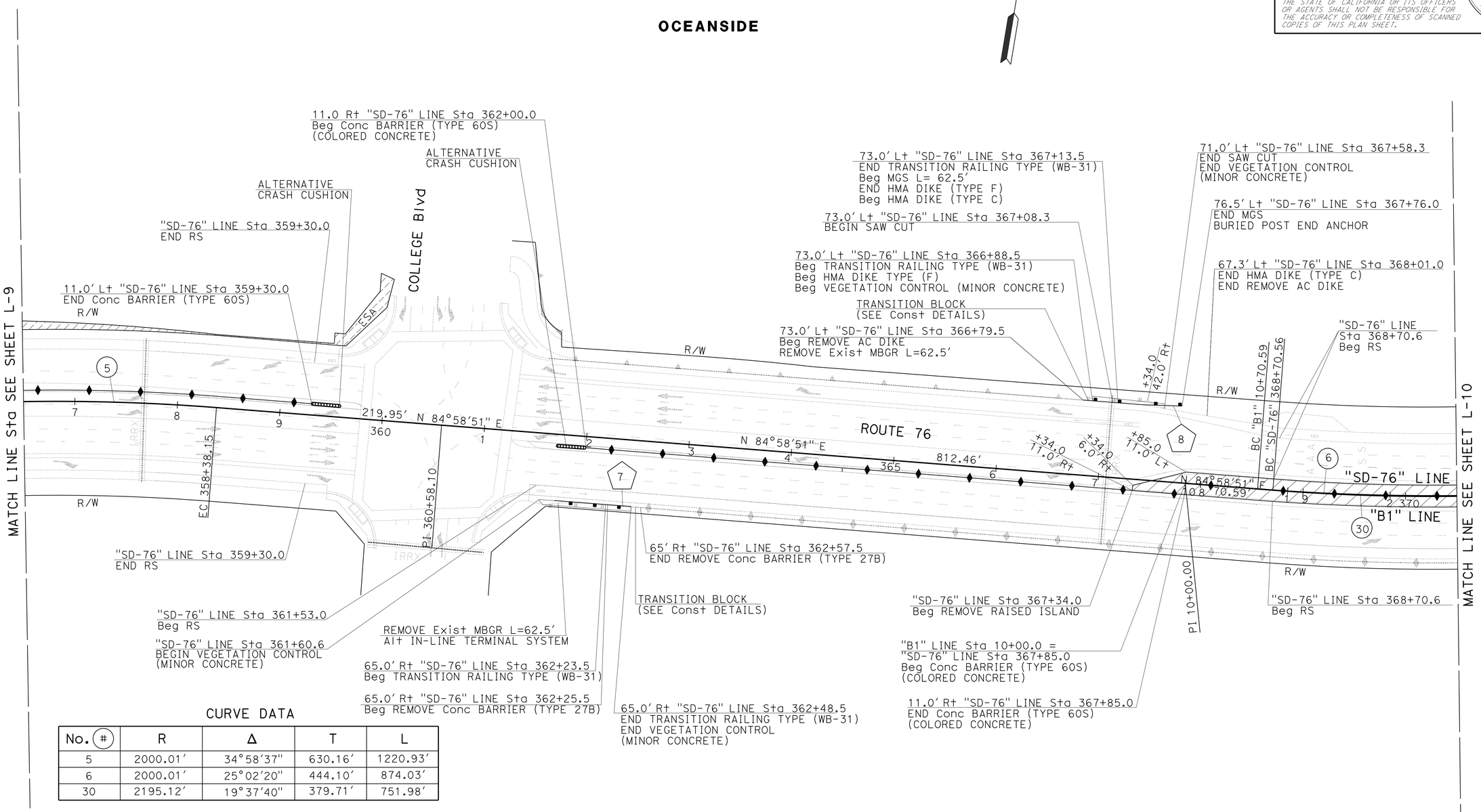

CURVE DATA

No. (#)	R	Δ	T	L
5	2000.01'	34°58'37"	630.16'	1220.93'
6	2000.01'	25°02'20"	444.10'	874.03'
30	2195.12'	19°37'40"	379.71'	751.98'

SCALE: 1" = 50'

LAYOUT L-9

STATE OF CALIFORNIA - DEPARTMENT OF TRANSPORTATION
Caltrans TRAFFIC PROJECT DEVELOPMENT

FUNCTIONAL SUPERVISOR: RICHARD ESTRADA
CALCULATED-DESIGNED BY: BETHNAY DES JARDINS
CHECKED BY: BARZAN ARAN
REVISED BY / DATE REVISED

LAST REVISION 03-05-14 | DATE PLOTTED => 28-MAY-2014 | TIME PLOTTED => 14:17

Dist	COUNTY	ROUTE	POST MILES TOTAL PROJECT	SHEET No.	TOTAL SHEETS
11	SD	76	R4.2/R7.6	18	217

REGISTERED CIVIL ENGINEER 04-24-14 DATE

05-19-14
PLANS APPROVAL DATE

REGISTERED PROFESSIONAL ENGINEER BARZAN A. ARAN No. C75167 Exp. 12/31/15 CIVIL STATE OF CALIFORNIA

THE STATE OF CALIFORNIA OR ITS OFFICERS OR AGENTS SHALL NOT BE RESPONSIBLE FOR THE ACCURACY OR COMPLETENESS OF SCANNED COPIES OF THIS PLAN SHEET.

NOTE:

1. FOR ACCURATE RIGHT OF WAY DATA, CONTACT RIGHT OF WAY ENGINEERING AT THE DISTRICT OFFICE.

OCEANSIDE

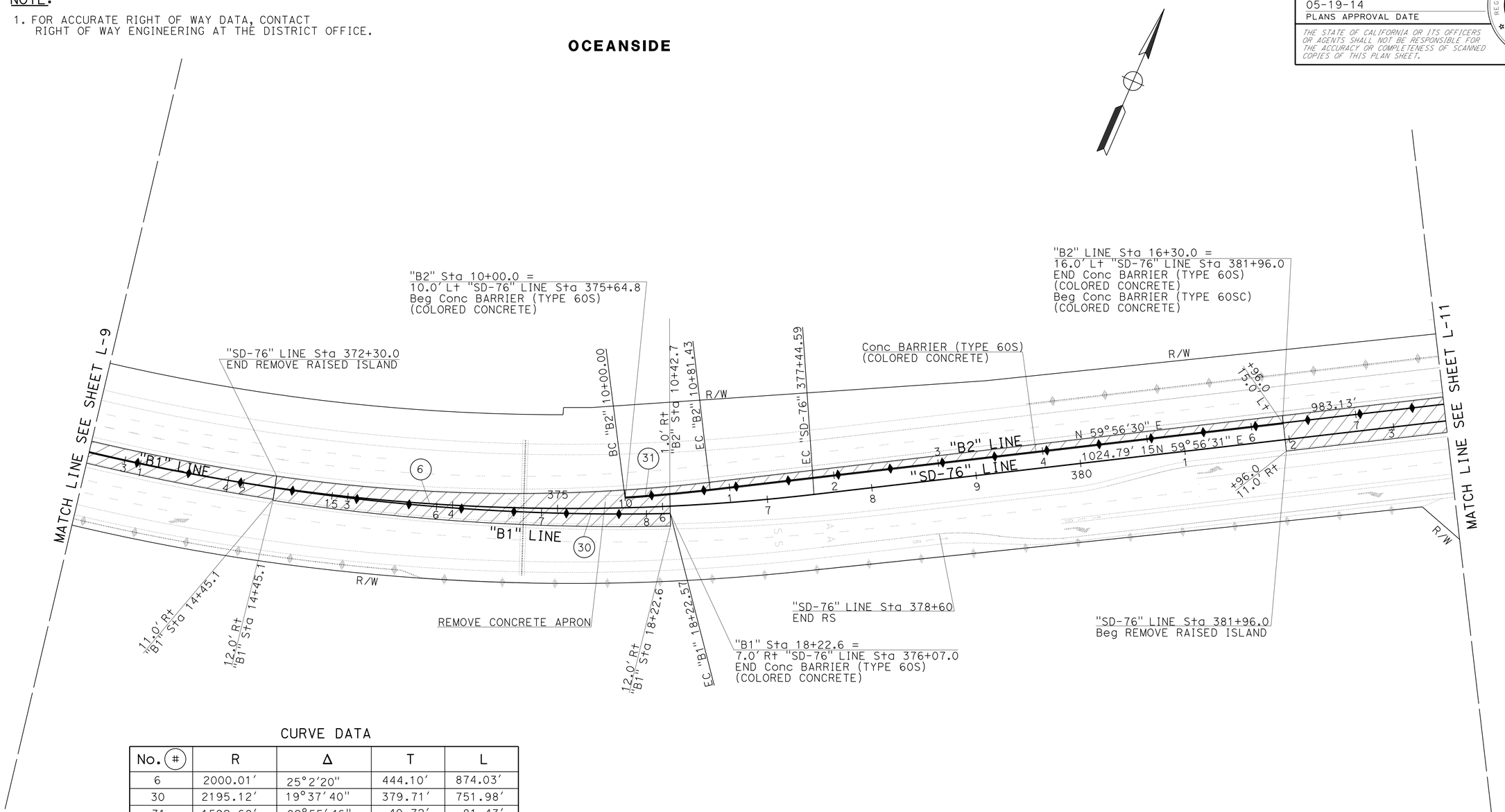

CURVE DATA

No. (#)	R	Δ	T	L
6	2000.01'	25°2'20"	444.10'	874.03'
30	2195.12'	19°37'40"	379.71'	751.98'
31	1592.68'	02°55'46"	40.72'	81.43'

SCALE: 1" = 50'

LAYOUT L-10

STATE OF CALIFORNIA - DEPARTMENT OF TRANSPORTATION
Caltrans PROJECT DEVELOPMENT
TRAFFIC

FUNCTIONAL SUPERVISOR: RICHARD ESTRADA
CALCULATED-DESIGNED BY: BETHNAY DES JARDINS
CHECKED BY: BARZAN ARAN
REVISED BY
DATE REVISED

LAST REVISION 03-05-14 | DATE PLOTTED => 28-MAY-2014 | TIME PLOTTED => 14:17

Dist	COUNTY	ROUTE	POST MILES TOTAL PROJECT	SHEET No.	TOTAL SHEETS
11	SD	76	R4.2/R7.6	19	217

REGISTERED CIVIL ENGINEER 04-24-14 DATE

05-19-14
PLANS APPROVAL DATE

REGISTERED PROFESSIONAL ENGINEER BARZAN A. ARAN No. C75167 Exp. 12/31/15 CIVIL STATE OF CALIFORNIA

THE STATE OF CALIFORNIA OR ITS OFFICERS OR AGENTS SHALL NOT BE RESPONSIBLE FOR THE ACCURACY OR COMPLETENESS OF SCANNED COPIES OF THIS PLAN SHEET.

NOTE:

1. FOR ACCURATE RIGHT OF WAY DATA, CONTACT RIGHT OF WAY ENGINEERING AT THE DISTRICT OFFICE.

OCEANSIDE

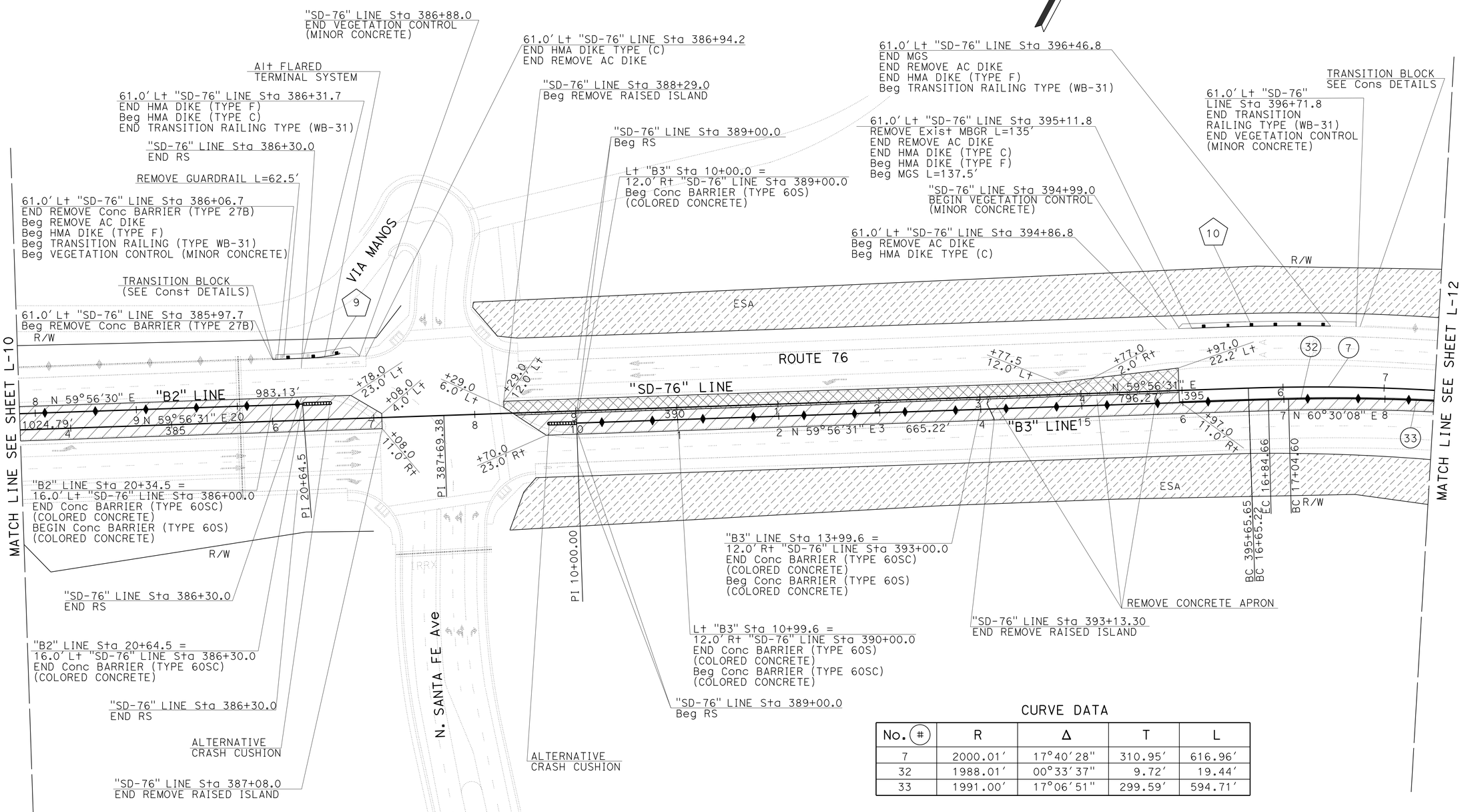

CURVE DATA

No. (#)	R	Δ	T	L
7	2000.01'	17°40'28"	310.95'	616.96'
32	1988.01'	00°33'37"	9.72'	19.44'
33	1991.00'	17°06'51"	299.59'	594.71'

SCALE: 1" = 50'

LAYOUT L-11

STATE OF CALIFORNIA - DEPARTMENT OF TRANSPORTATION
Caltrans PROJECT DEVELOPMENT
TRAFFIC

FUNCTIONAL SUPERVISOR: RICHARD ESTRADA
CALCULATED-DESIGNED BY: BARZAN ARAN
CHECKED BY: BETHNAY DES JARDINS
REVISED BY / DATE REVISED

LAST REVISION 03-05-14 DATE PLOTTED => 28-MAY-2014 TIME PLOTTED => 14:17

Dist	COUNTY	ROUTE	POST MILES TOTAL PROJECT	SHEET No.	TOTAL SHEETS
11	SD	76	R4.2/R7.6	20	217

REGISTERED CIVIL ENGINEER 04-24-14 DATE

05-19-14
PLANS APPROVAL DATE

REGISTERED PROFESSIONAL ENGINEER BARZAN A. ARAN No. C75167 Exp. 12/31/15 CIVIL STATE OF CALIFORNIA

THE STATE OF CALIFORNIA OR ITS OFFICERS OR AGENTS SHALL NOT BE RESPONSIBLE FOR THE ACCURACY OR COMPLETENESS OF SCANNED COPIES OF THIS PLAN SHEET.

NOTE:

1. FOR ACCURATE RIGHT OF WAY DATA, CONTACT RIGHT OF WAY ENGINEERING AT THE DISTRICT OFFICE.

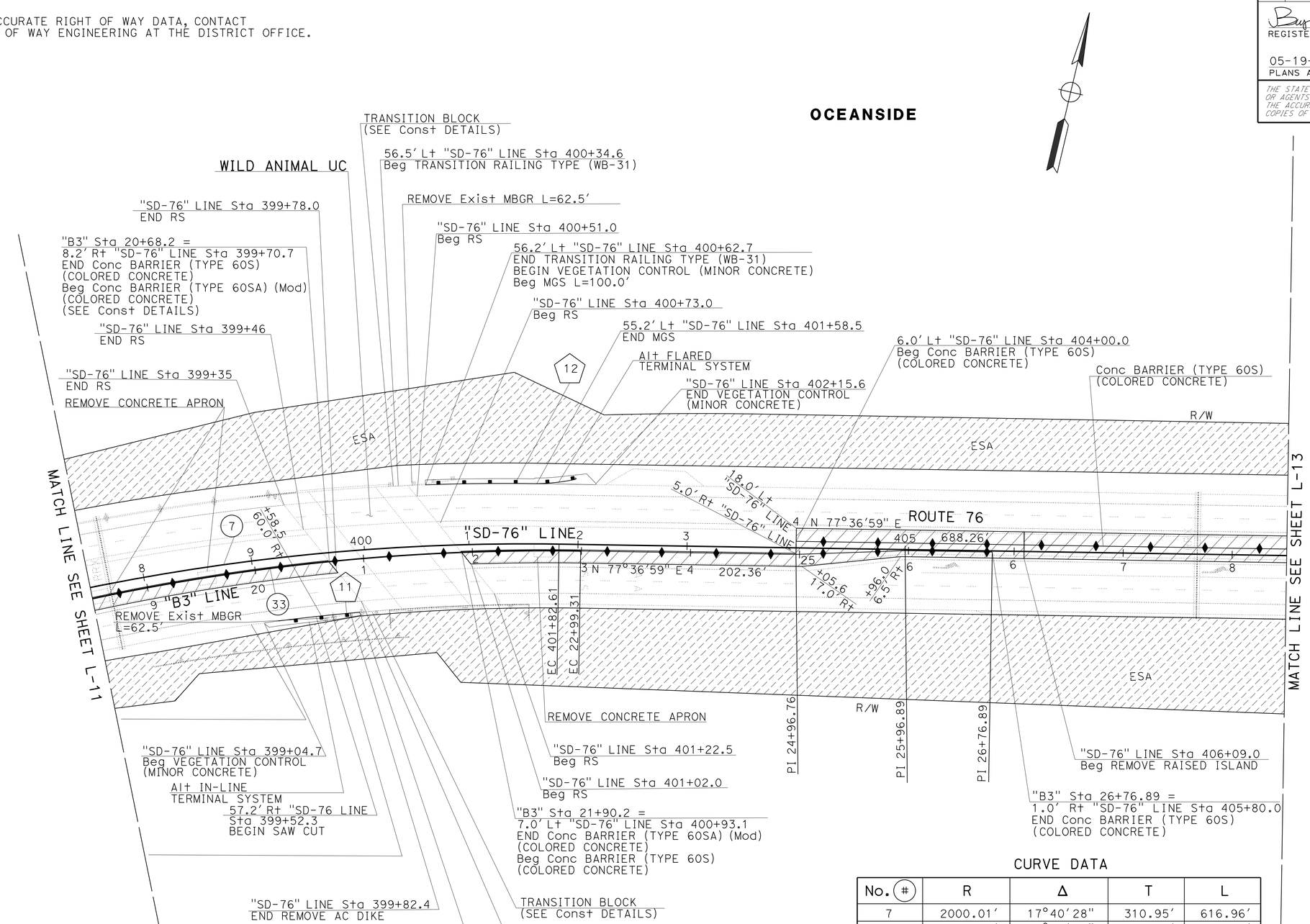

CURVE DATA

No. (#)	R	Δ	T	L
7	2000.01'	17°40'28"	310.95'	616.96'
33	1991.00'	17°06'51"	299.59'	594.71'

SCALE: 1" = 50'

LAYOUT L-12

STATE OF CALIFORNIA - DEPARTMENT OF TRANSPORTATION
Caltrans PROJECT DEVELOPMENT
TRAFFIC

FUNCTIONAL SUPERVISOR: RICHARD ESTRADA
CALCULATED-DESIGNED BY: BETHNAY DES JARDINS
CHECKED BY: BARZAN ARAN
REVISED BY
DATE REVISED

LAST REVISION 03-05-14 DATE PLOTTED => 28-MAY-2014 TIME PLOTTED => 14:17

Dist	COUNTY	ROUTE	POST MILES TOTAL PROJECT	SHEET No.	TOTAL SHEETS
11	SD	76	R4.2/R7.6	21	217

REGISTERED CIVIL ENGINEER 04-24-14 DATE

05-19-14
PLANS APPROVAL DATE

REGISTERED PROFESSIONAL ENGINEER BARZAN A. ARAN No. C75167 Exp. 12/31/15 CIVIL STATE OF CALIFORNIA

THE STATE OF CALIFORNIA OR ITS OFFICERS OR AGENTS SHALL NOT BE RESPONSIBLE FOR THE ACCURACY OR COMPLETENESS OF SCANNED COPIES OF THIS PLAN SHEET.

NOTE:

1. FOR ACCURATE RIGHT OF WAY DATA, CONTACT RIGHT OF WAY ENGINEERING AT THE DISTRICT OFFICE.

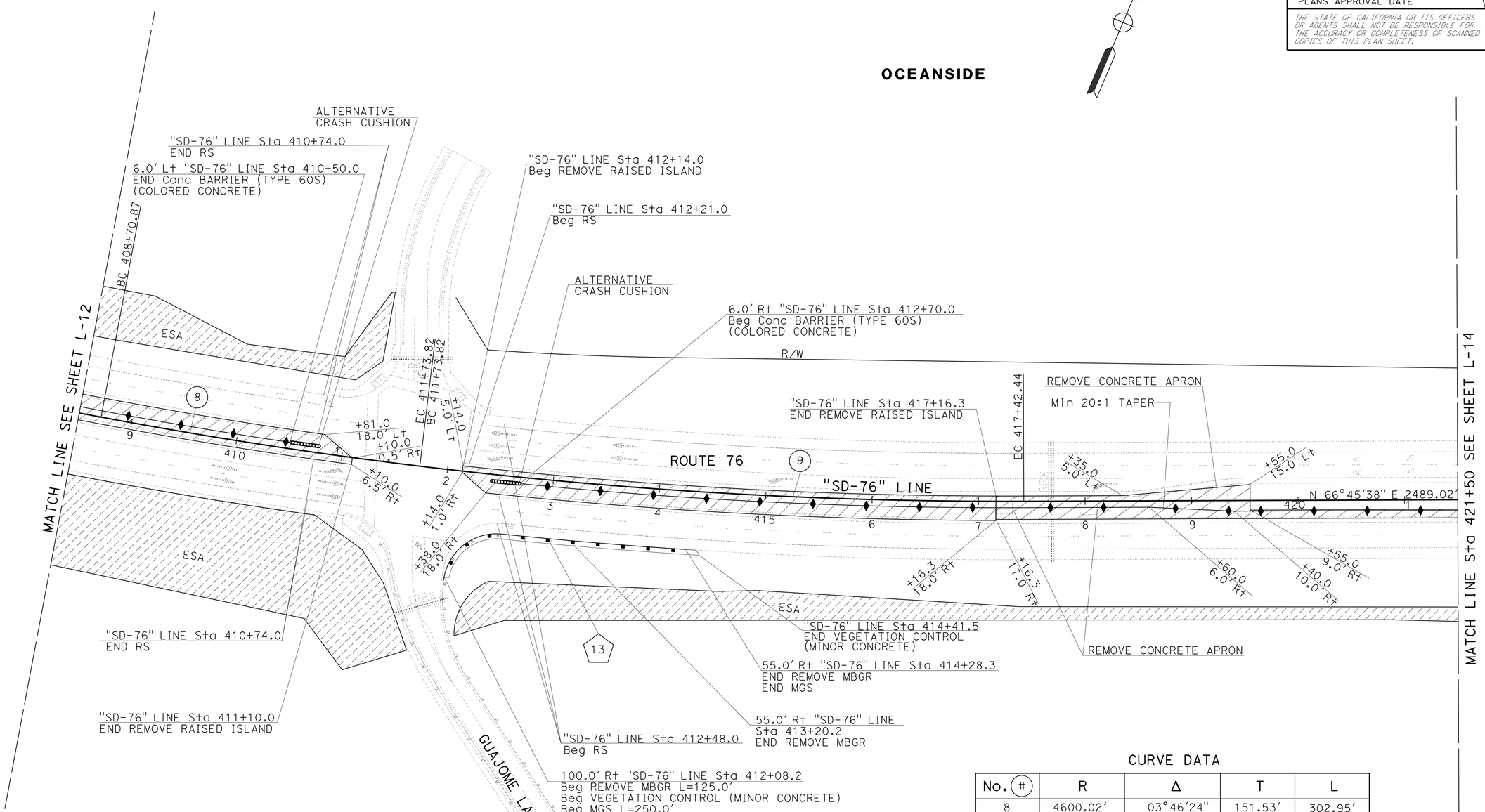

CURVE DATA

No. (#)	R	Δ	T	L
8	4600.02'	03°46'24"	151.53'	302.95'
9	4600.02'	07°4'57"	284.67'	568.62'

SCALE: 1" = 50'

LAYOUT L-13

STATE OF CALIFORNIA - DEPARTMENT OF TRANSPORTATION
Caltrans PROJECT DEVELOPMENT
TRAFFIC

FUNCTIONAL SUPERVISOR: RICHARD ESTRADA
CALCULATED-DESIGNED BY: BETHNAY DES JARDINS
CHECKED BY: BARZAN ARAN
REVISED BY
DATE REVISED

LAST REVISION 03-05-14
DATE PLOTTED => 28-MAY-2014
TIME PLOTTED => 14:17

Dist	COUNTY	ROUTE	POST MILES TOTAL PROJECT	SHEET No.	TOTAL SHEETS
11	SD	76	R4.2/R7.6	22	217

REGISTERED CIVIL ENGINEER 04-24-14 DATE

05-19-14
PLANS APPROVAL DATE

REGISTERED PROFESSIONAL ENGINEER BARZAN A. ARAN No. C75167 Exp. 12/31/15 CIVIL STATE OF CALIFORNIA

THE STATE OF CALIFORNIA OR ITS OFFICERS OR AGENTS SHALL NOT BE RESPONSIBLE FOR THE ACCURACY OR COMPLETENESS OF SCANNED COPIES OF THIS PLAN SHEET.

NOTE:

1. FOR ACCURATE RIGHT OF WAY DATA, CONTACT RIGHT OF WAY ENGINEERING AT THE DISTRICT OFFICE.

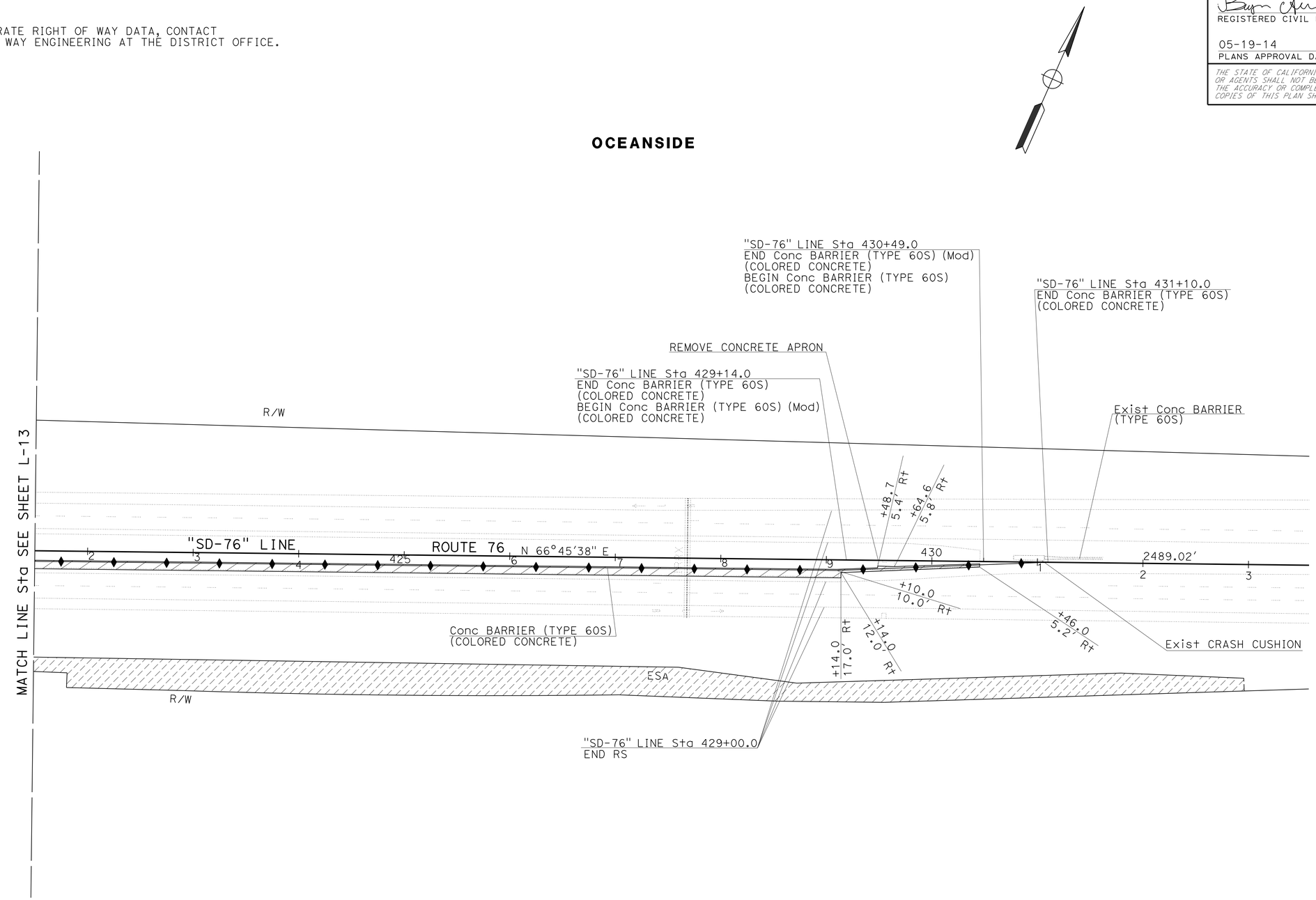

SCALE: 1" = 50'

LAYOUT L-14

STATE OF CALIFORNIA - DEPARTMENT OF TRANSPORTATION
Caltrans TRAFFIC PROJECT DEVELOPMENT

FUNCTIONAL SUPERVISOR: RICHARD ESTRADA
CALCULATED-DESIGNED BY: BETHNAY DES JARDINS
CHECKED BY: BARZAN ARAN
REVISED BY
DATE REVISED

LAST REVISION 03-05-14
DATE PLOTTED => 28-MAY-2014
TIME PLOTTED => 14:17

BORDER LAST REVISED 7/2/2010
USERNAME => s127400
DGN FILE => 1100020326ea014.dgn
RELATIVE BORDER SCALE IS IN INCHES 0 1 2 3
UNIT 2771
PROJECT NUMBER & PHASE 11000203261

Dist	COUNTY	ROUTE	POST MILES TOTAL PROJECT	SHEET No.	TOTAL SHEETS
11	SD	76	R4.2/R7.6	23	217

REGISTERED CIVIL ENGINEER 04-24-14 DATE

05-19-14
PLANS APPROVAL DATE

REGISTERED PROFESSIONAL ENGINEER BARZAN A. ARAN No. C75167 Exp. 12/31/15 CIVIL STATE OF CALIFORNIA

THE STATE OF CALIFORNIA OR ITS OFFICERS OR AGENTS SHALL NOT BE RESPONSIBLE FOR THE ACCURACY OR COMPLETENESS OF SCANNED COPIES OF THIS PLAN SHEET.

NOTES:

1. FOR DETAILS NOT SHOWN, SEE STANDARD PLANS.
2. DEPENDENT DIMENSIONS WILL BE VERIFIED IN THE FIELD BEFORE FABRICATING ANY END CONNECTION TO CONFORM WITH EXISTING PAVED CONDITIONS.
3. ALL PLATES AND BOLTS ARE GALVANIZED.
4. WING WALL REINFORCEMENT TO REMAIN.

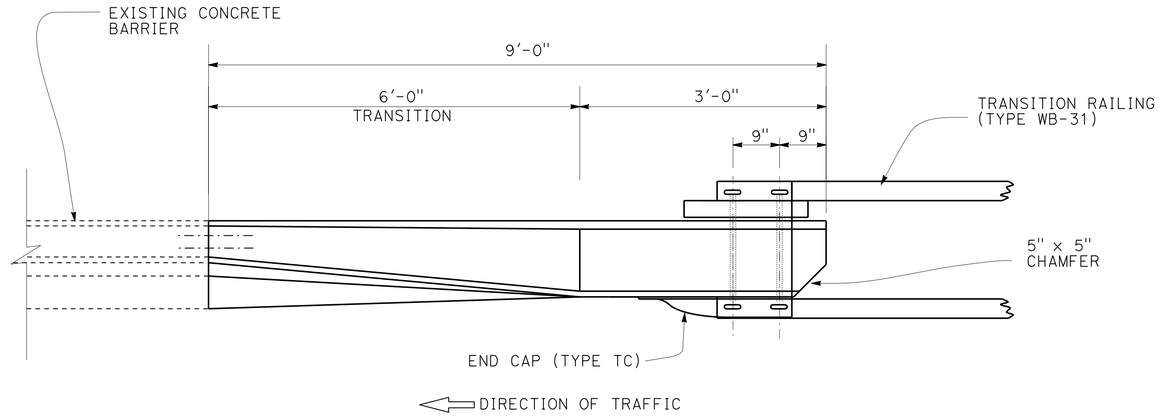

PLAN

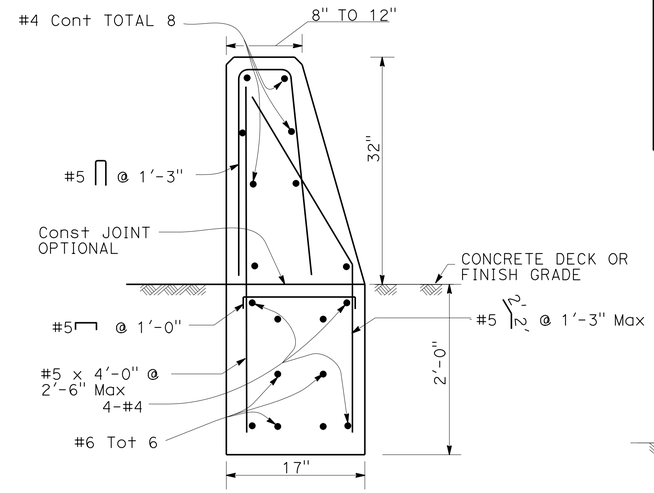

SECTION B-B

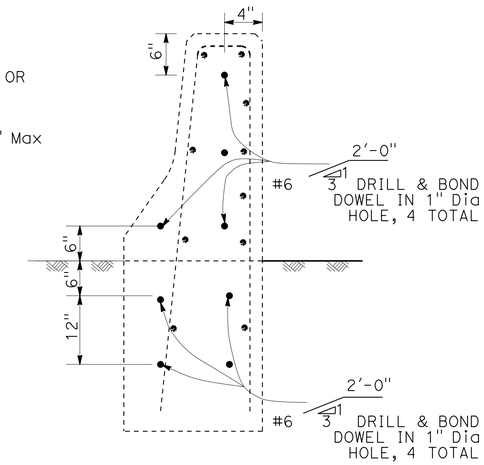

SECTION A-A

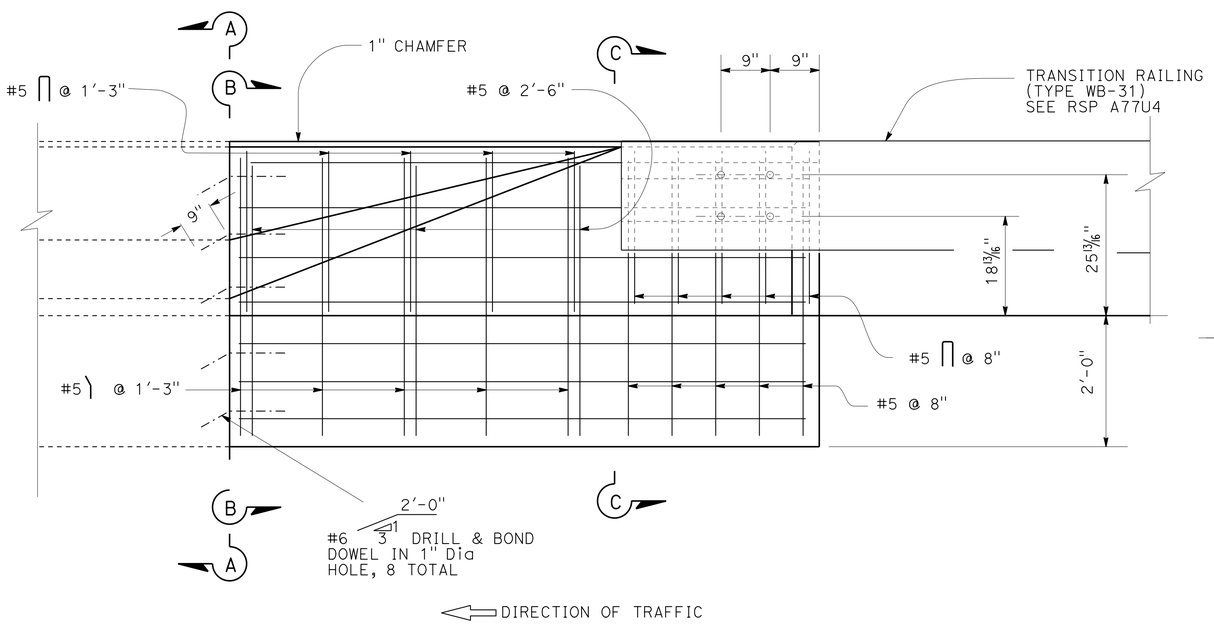

ELEVATION

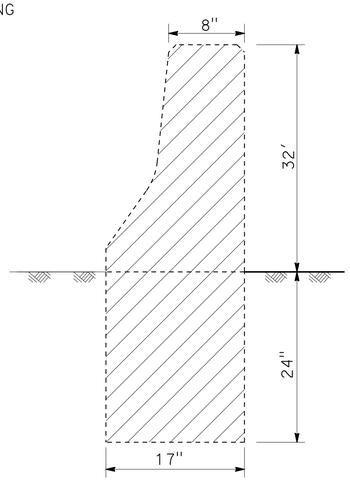

CONCRETE BARRER (TYPE 27B) REMOVAL

LOCATION 9

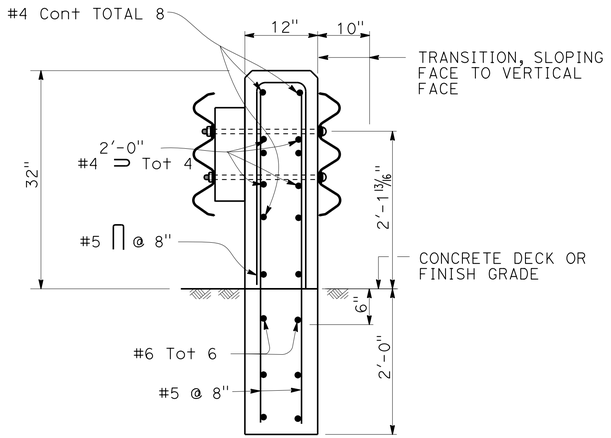

SECTION C-C

NOTES:

1. FOR DETAILS NOT SHOWN, SEE STANDARD PLANS A77U4.
2. DEPENDENT DIMENSIONS WILL BE VERIFIED IN THE FIELD BEFORE FABRICATING ANY END CONNECTION TO CONFORM WITH EXISTING PAVED CONDITIONS.
3. ALL PLATES AND BOLTS ARE GALVANIZED.

LOCATIONS: 8 9

TRANSITION RAILING (TYPE WB-31) CONNECTION TO EXISTING BARRIER DETAIL

ANCHOR BLOCK (Mod 1)

CONSTRUCTION DETAILS C-1

NO SCALE

STATE OF CALIFORNIA - DEPARTMENT OF TRANSPORTATION
Caltrans TRAFFIC PROJECT DEVELOPMENT

FUNCTIONAL SUPERVISOR: RICHARD ESTRADA
CALCULATED-DESIGNED BY: BETHNAY DES JARDINS
CHECKED BY: BARZAN ARAN
REVISED BY / DATE REVISED

LAST REVISION 03-05-14
DATE PLOTTED => 28-MAY-2014
TIME PLOTTED => 14:17

Dist	COUNTY	ROUTE	POST MILES TOTAL PROJECT	SHEET No.	TOTAL SHEETS
11	SD	76	R4.2/R7.6	24	217

REGISTERED CIVIL ENGINEER 04-24-14 DATE

05-19-14
PLANS APPROVAL DATE

REGISTERED PROFESSIONAL ENGINEER BARZAN A. ARAN No. C75167 Exp. 12/31/15 CIVIL STATE OF CALIFORNIA

THE STATE OF CALIFORNIA OR ITS OFFICERS OR AGENTS SHALL NOT BE RESPONSIBLE FOR THE ACCURACY OR COMPLETENESS OF SCANNED COPIES OF THIS PLAN SHEET.

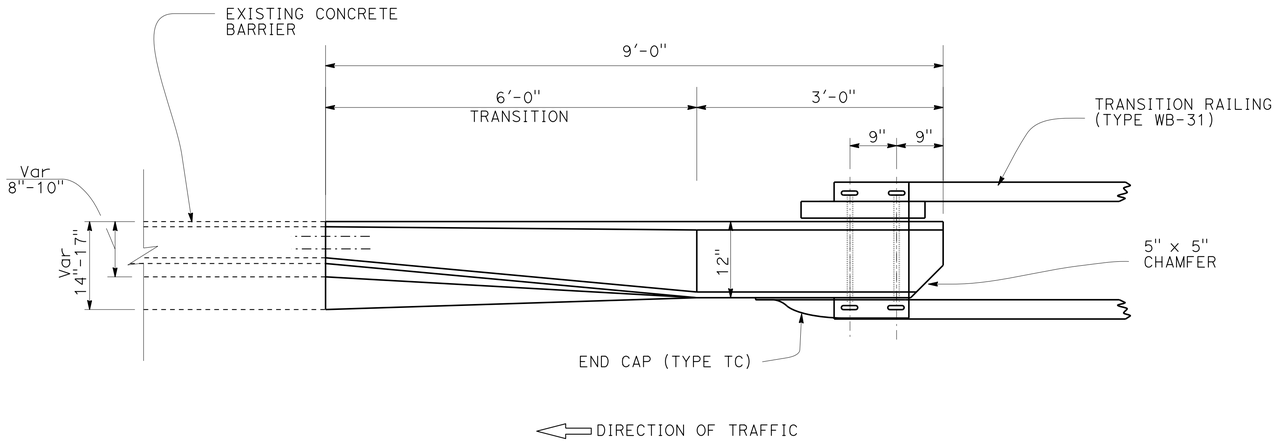

PLAN

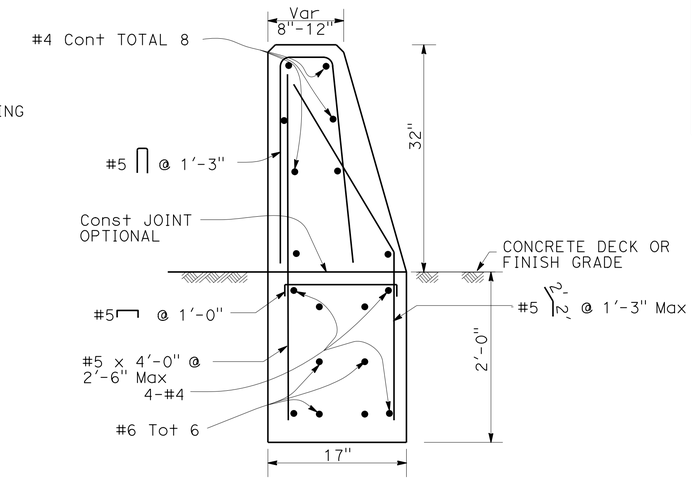

SECTION B-B

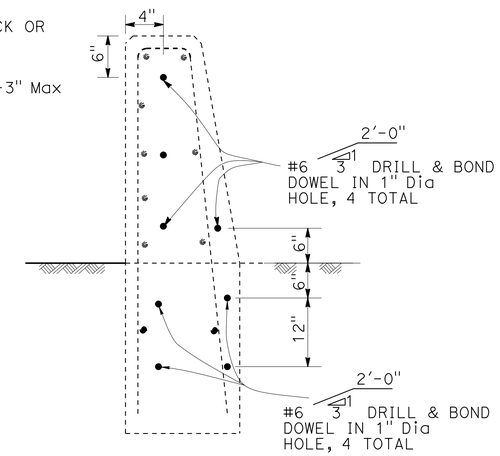

SECTION A-A

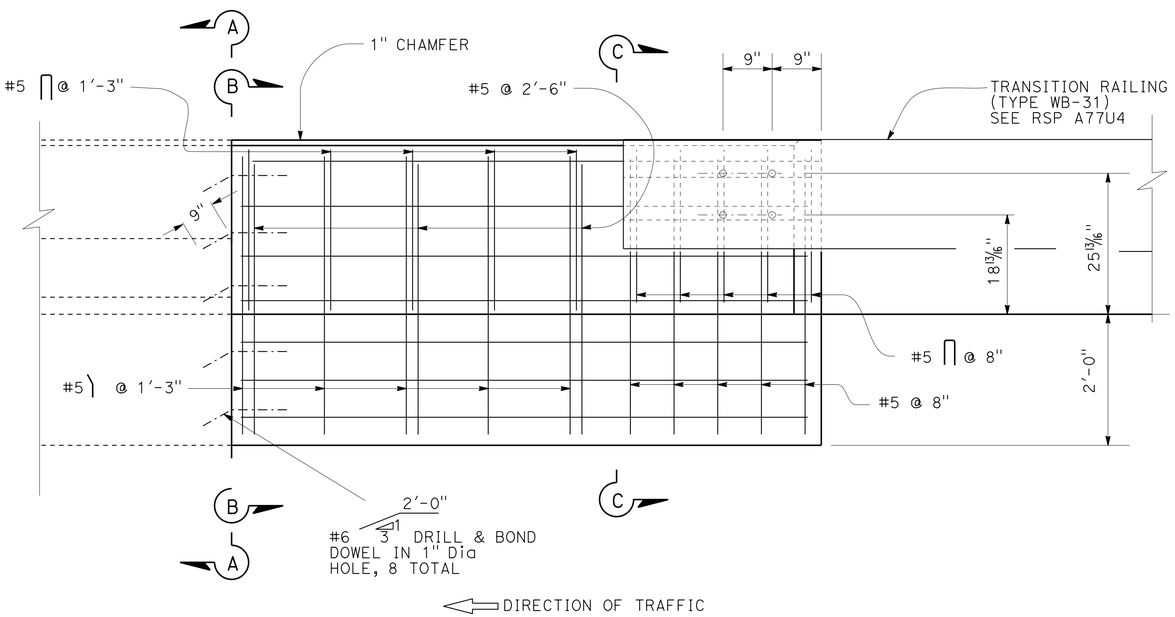

ELEVATION

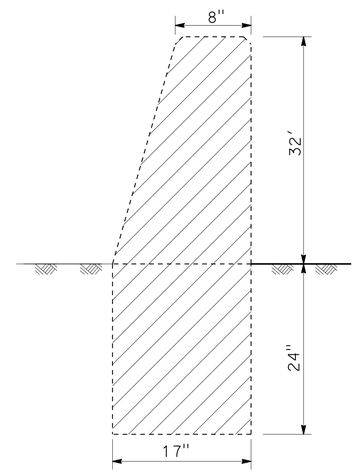

CONCRETE BARRER (TYPE 27B) REMOVAL

LOCATION 7

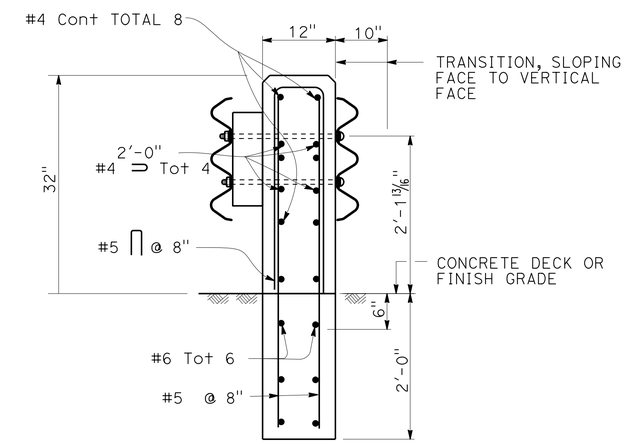

SECTION C-C

LOCATIONS 2 4 5 6 7 11

TRANSITION RAILING (TYPE WB-31) CONNECTION TO BRIDGE RAIL DETAIL

ANCHOR BLOCK (Mod 2)

NOTES:

1. FOR DETAILS NOT SHOWN, SEE STANDARD PLANS A77U4.
2. DEPENDENT DIMENSIONS WILL BE VERIFIED IN THE FIELD BEFORE FABRICATING ANY END CONNECTION TO CONFORM WITH EXISTING PAVED CONDITIONS.
3. ALL PLATES AND BOLTS ARE GALVANIZED.

CONSTRUCTION DETAILS C-2

NO SCALE

STATE OF CALIFORNIA - DEPARTMENT OF TRANSPORTATION
Caltrans TRAFFIC PROJECT DEVELOPMENT

FUNCTIONAL SUPERVISOR: RICHARD ESTRADA
CALCULATED-DESIGNED BY: BETHNAY DES JARDINS
CHECKED BY: BARZAN ARAN
REVISED BY / DATE REVISED

LAST REVISION 03-05-14 | DATE PLOTTED => 28-MAY-2014 | TIME PLOTTED => 14:17

Dist	COUNTY	ROUTE	POST MILES TOTAL PROJECT	SHEET No.	TOTAL SHEETS
11	SD	76	R4.2/R7.6	25	217

REGISTERED CIVIL ENGINEER 04-24-14 DATE

05-19-14
PLANS APPROVAL DATE

REGISTERED PROFESSIONAL ENGINEER BARZAN A. ARAN No. C75167 Exp. 12/31/15 CIVIL STATE OF CALIFORNIA

THE STATE OF CALIFORNIA OR ITS OFFICERS OR AGENTS SHALL NOT BE RESPONSIBLE FOR THE ACCURACY OR COMPLETENESS OF SCANNED COPIES OF THIS PLAN SHEET.

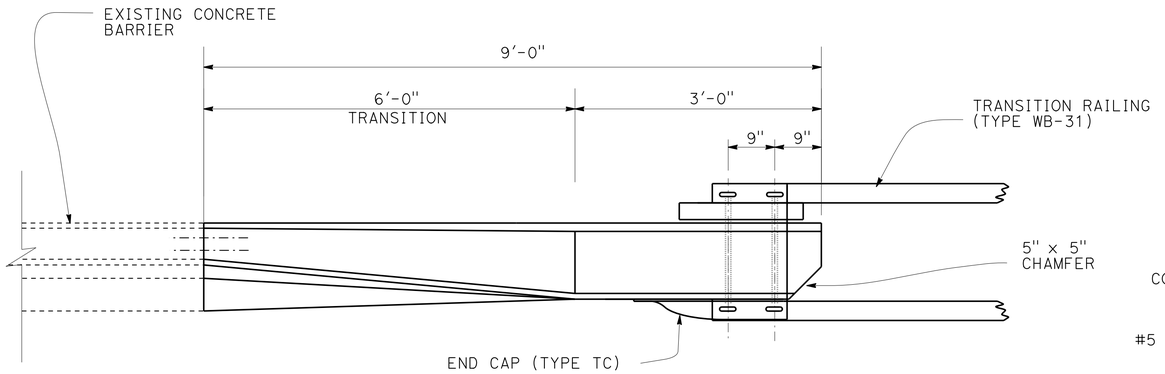

PLAN

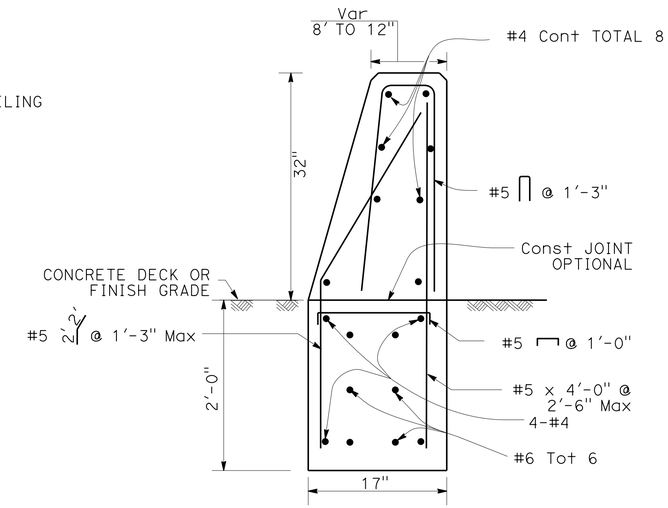

SECTION B-B

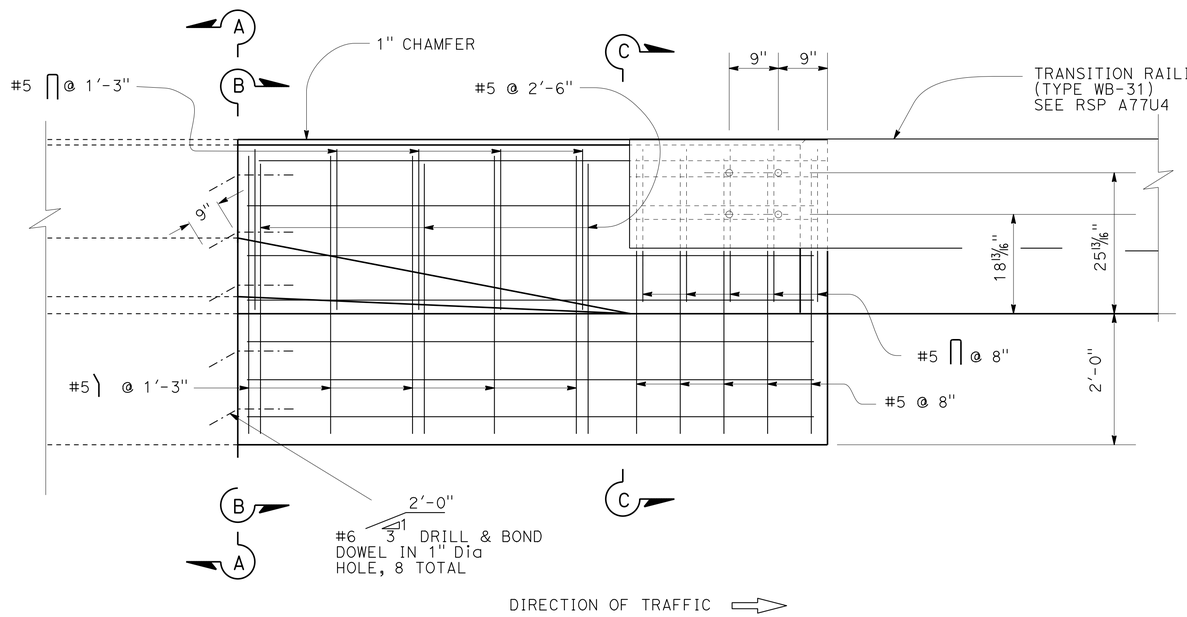

ELEVATION

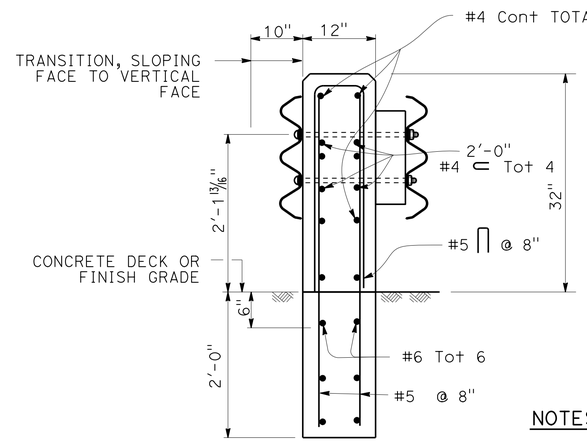

SECTION C-C

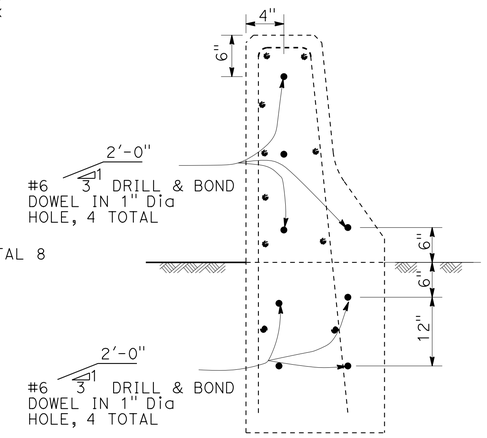

SECTION A-A

NOTES:

1. FOR DETAILS NOT SHOWN, SEE STANDARD PLANS A77U4.
2. DEPENDENT DIMENSIONS WILL BE VERIFIED IN THE FIELD BEFORE FABRICATING ANY END CONNECTION TO CONFORM WITH EXISTING PAVED CONDITIONS.
3. ALL PLATES AND BOLTS ARE GALVANIZED.

LOCATION 10

TRANSITION RAILING (TYPE WB-31) CONNECTION TO EXISTING BARRIER DETAIL

ANCHOR BLOCK (Mod 3)

61.0' Lt "SD-76" LINE Sta 396+71.8

CONSTRUCTION DETAILS C-3

NO SCALE

STATE OF CALIFORNIA - DEPARTMENT OF TRANSPORTATION
Caltrans TRAFFIC PROJECT DEVELOPMENT

FUNCTIONAL SUPERVISOR: RICHARD ESTRADA
CALCULATED-DESIGNED BY: BETHNAY DES JARDINS
CHECKED BY: BARZAN ARAN
REVISED BY / DATE REVISED

LAST REVISION 03-05-14 | DATE PLOTTED => 28-MAY-2014 | TIME PLOTTED => 14:17

Dist	COUNTY	ROUTE	POST MILES TOTAL PROJECT	SHEET No.	TOTAL SHEETS
11	SD	76	R4.2/R7.6	26	217

REGISTERED CIVIL ENGINEER 04-24-14 DATE

05-19-14
PLANS APPROVAL DATE

REGISTERED PROFESSIONAL ENGINEER BARZAN A. ARAN No. C75167 Exp. 12/31/15 CIVIL STATE OF CALIFORNIA

THE STATE OF CALIFORNIA OR ITS OFFICERS OR AGENTS SHALL NOT BE RESPONSIBLE FOR THE ACCURACY OR COMPLETENESS OF SCANNED COPIES OF THIS PLAN SHEET.

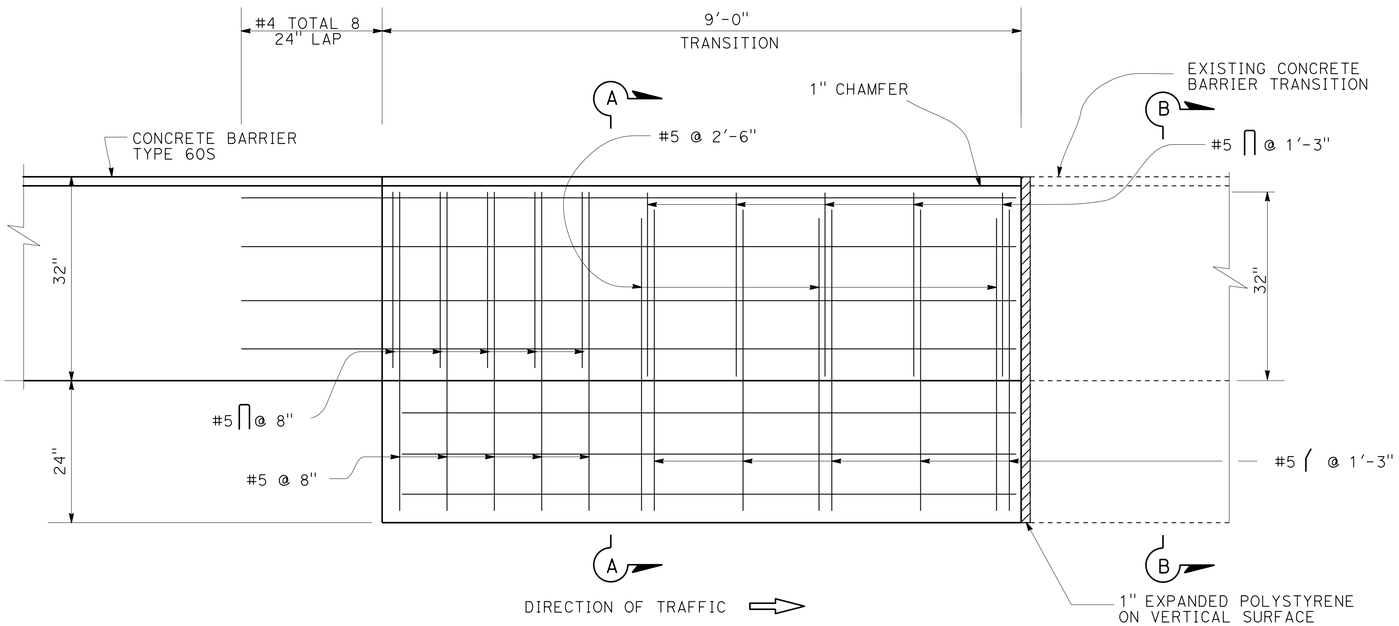

ELEVATION

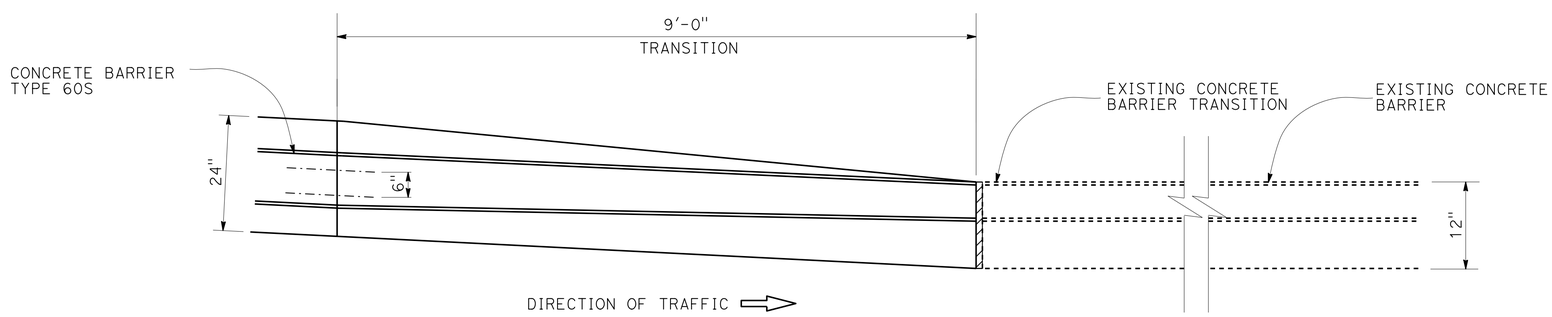

PLAN

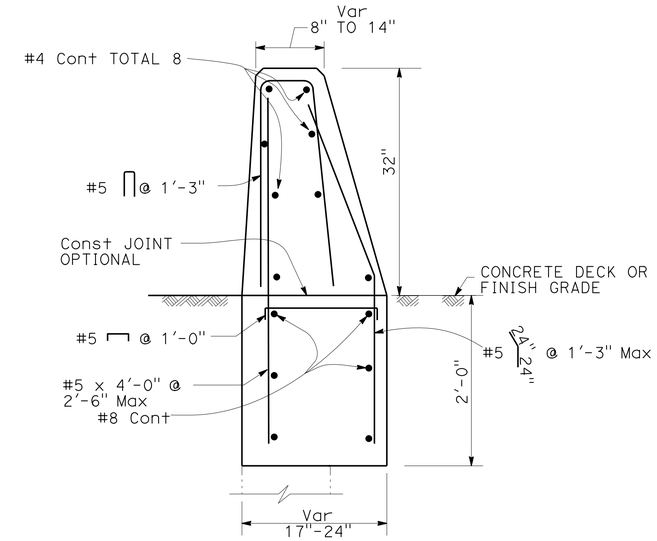

SECTION A-A

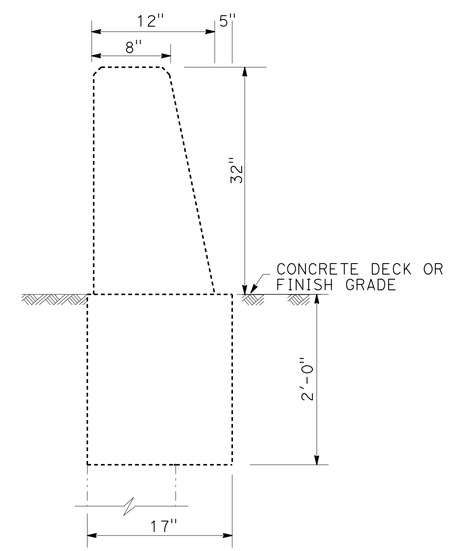

SECTION B-B

LOCATIONS 1 & 3

TRANSITION BRIDGE RAIL TYPE 27 TO CONRETE BARRIER TYPE 60S DETAIL

CONSTRUCTION DETAILS
NO SCALE

C-4

STATE OF CALIFORNIA - DEPARTMENT OF TRANSPORTATION
Caltrans TRAFFIC PROJECT DEVELOPMENT

FUNCTIONAL SUPERVISOR: RICHARD ESTRADA
CALCULATED-DESIGNED BY: BETHNAY DES JARDINS
CHECKED BY: BARZAN ARAN
REVISED BY / DATE REVISED

LAST REVISION 03-05-14 | DATE PLOTTED => 28-MAY-2014 | TIME PLOTTED => 14:18

Dist	COUNTY	ROUTE	POST MILES TOTAL PROJECT	SHEET No.	TOTAL SHEETS
11	SD	76	R4.2/R7.6	27	217

REGISTERED CIVIL ENGINEER 04-24-14 DATE

05-19-14
PLANS APPROVAL DATE

REGISTERED PROFESSIONAL ENGINEER BARZAN A. ARAN No. C75167 Exp. 12/31/15 CIVIL STATE OF CALIFORNIA

THE STATE OF CALIFORNIA OR ITS OFFICERS OR AGENTS SHALL NOT BE RESPONSIBLE FOR THE ACCURACY OR COMPLETENESS OF SCANNED COPIES OF THIS PLAN SHEET.

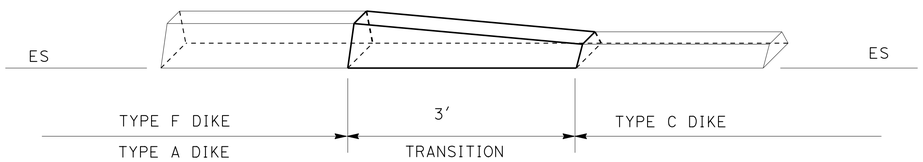

TYPE A OR F TO TYPE C

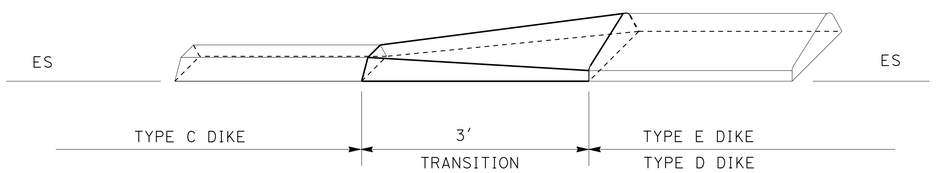

TYPE C TO TYPE E OR D

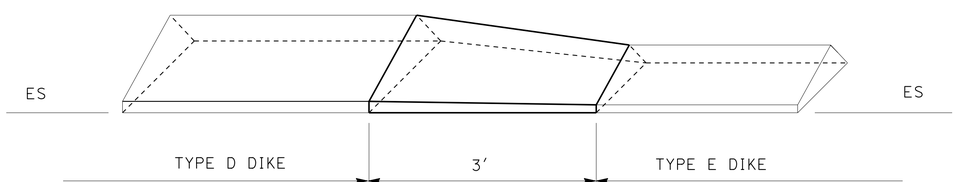

TYPE D TO TYPE E

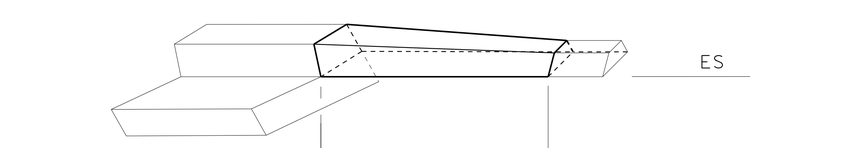

STATION CALLOUT
PER LAYOUT PLANS
UNLESS NOTED OTHERWISE

TYPE C TO Curb

HMA DIKE TRANSITION DETAILS

FOR DETAILS NOT SHOWN, SEE STANDARD PLANS.

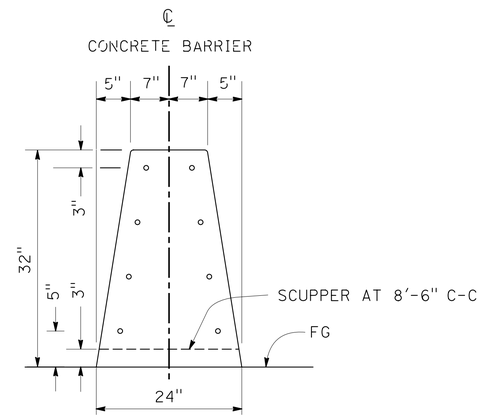

SECTION A-A

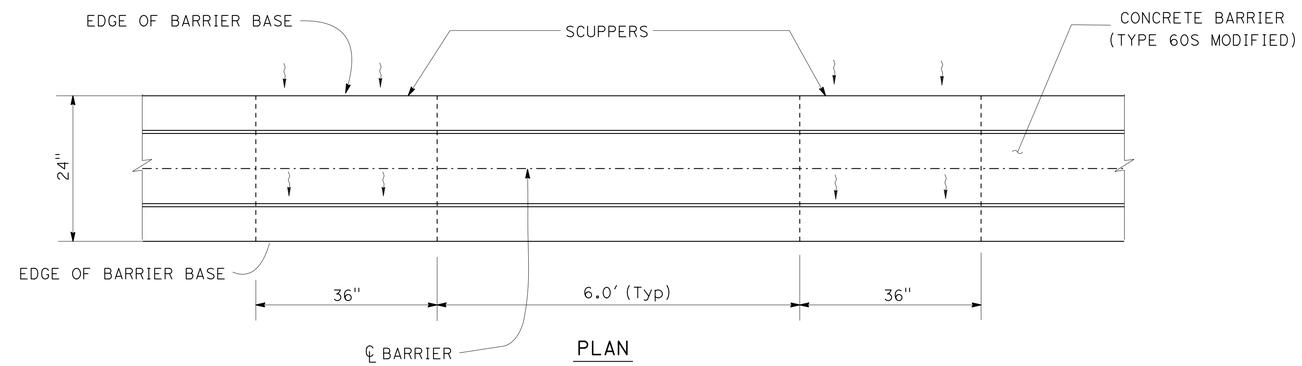

PLAN

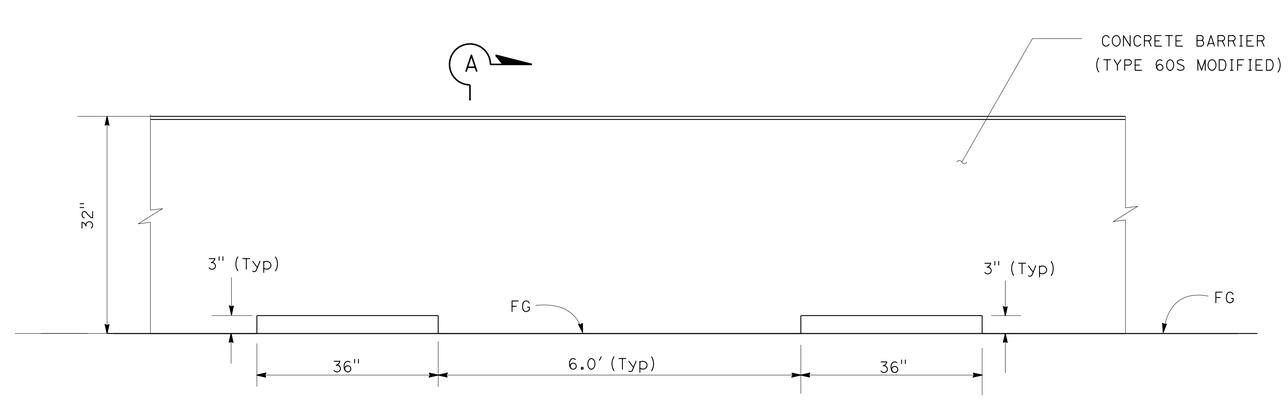

ELEVATION

CONCRETE BARRIER (TYPE 60S Mod)

FOR DETAILS NOT SHOWN SEE STANDARD PLAN A76G.
NO SCUPPERS AT END ANCHORAGE.

CONSTRUCTION DETAILS
C-5

NO SCALE

STATE OF CALIFORNIA - DEPARTMENT OF TRANSPORTATION
Caltrans PROJECT DEVELOPMENT
TRAFFIC

FUNCTIONAL SUPERVISOR: RICHARD ESTRADA
CALCULATED-DESIGNED BY: BETHNAY DES JARDINS
CHECKED BY: BARZAN ARAN
REVISED BY
DATE REVISED

LAST REVISION 03-05-14
DATE PLOTTED => 28-MAY-2014
TIME PLOTTED => 14:18

Dist	COUNTY	ROUTE	POST MILES TOTAL PROJECT	SHEET No.	TOTAL SHEETS
11	SD	76	R4.2/R7.6	28	217

REGISTERED CIVIL ENGINEER 5/22/13 DATE

05-19-14
PLANS APPROVAL DATE

REGISTERED PROFESSIONAL ENGINEER TILLAT SATTER No. C42892 Exp. 3-31-16 CIVIL STATE OF CALIFORNIA

THE STATE OF CALIFORNIA OR ITS OFFICERS OR AGENTS SHALL NOT BE RESPONSIBLE FOR THE ACCURACY OR COMPLETENESS OF SCANNED COPIES OF THIS PLAN SHEET.

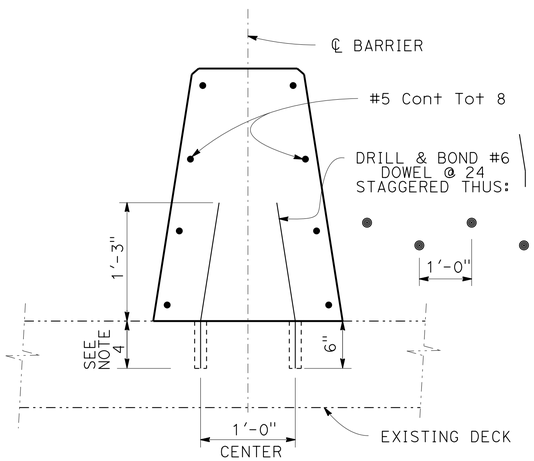

TYPE 60SA (MODIFIED)

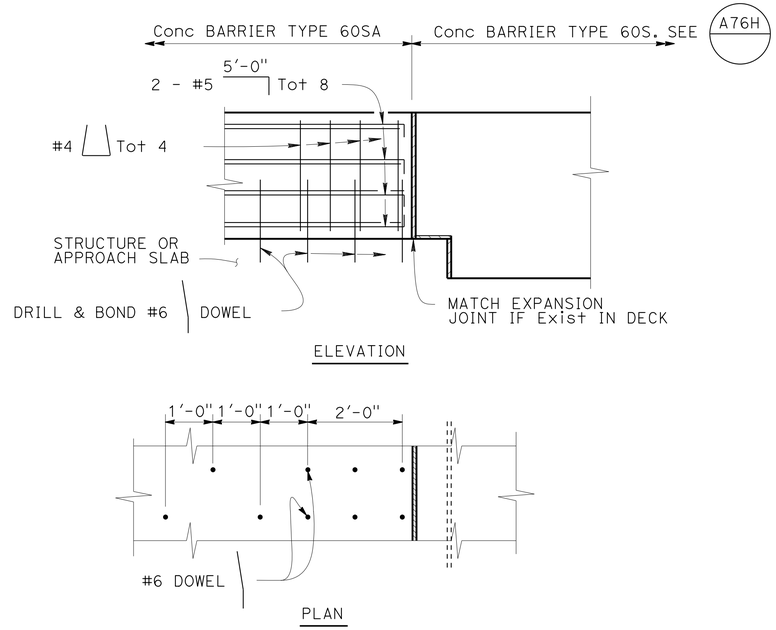

CONNECTION TO STRUCTURE

NOTES:

1. TRANSVERSE EXPANSION JOINTS IN CONCRETE BARRIER SHALL MATCH ALL DECK JOINTS
2. DEPTH OF DRILLED HOLE EQUALS DEPTH OF SLAB MINUS 1 ½", UP TO 6" MAXIMUM
3. MINOR ADJUSTMENTS MAY BE MADE IN DOWEL SPACING TO CLEAR MAIN REINFORCEMENT
4. BARRIER TO BE DOWELED ON EITHER SIDE OF deck joints.
5. FOR CONCRETE BARRIER TYPE 60SA DETAILS NOT SHOWN, SEE STANDARD PLANS A76G.
6. BARRIER DIMENSIONS-TYPE 60SA, SEE SKETCH BELOW:
7. THE CONTRACTOR SHALL VERIFY ALL CONTROLLING FIELD DIMENSIONS BEFORE ORDERING OR FABRICATING ANY MATERIAL.

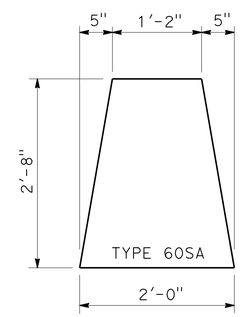

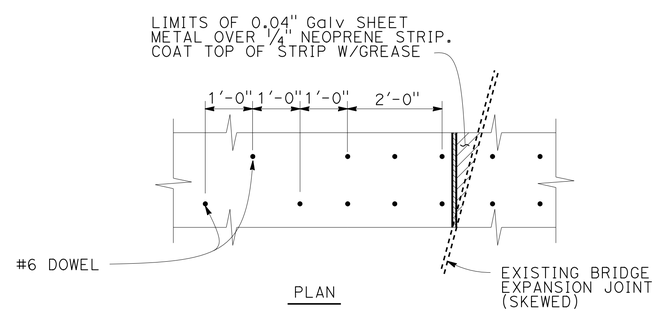

DOWEL SPACING AT EXPANSION JOINT

LEGEND:

—·—·— - INDICTATES EXISTING STRUCTURE
——— - INDICTATES NEW STRUCTURE

CONCRETE BARRIER TYPE 60SA Mod
WILD ANIMAL UNDERCROSSING

BRIDGE No. 57-1023
PM 6.99

CONSTRUCTION DETAILS
NO SCALE

C-6

STATE OF CALIFORNIA - DEPARTMENT OF TRANSPORTATION
Caltrans TRAFFIC PROJECT DEVELOPMENT

FUNCTIONAL SUPERVISOR: RICHARD ESTRADA
CALCULATED-DESIGNED BY: BARZAN ARAN
CHECKED BY
REVISED BY
DATE REVISED

BETHNAY DES JARDINS

LAST REVISION 05-20-13
DATE PLOTTED => 28-MAY-2014
TIME PLOTTED => 14:18

Dist	COUNTY	ROUTE	POST MILES TOTAL PROJECT	SHEET No.	TOTAL SHEETS
11	SD	76	R4.2/R7.6	29	217

REGISTERED CIVIL ENGINEER 04-24-14 DATE

05-19-14
PLANS APPROVAL DATE

REGISTERED PROFESSIONAL ENGINEER BARZAN A. ARAN No. C75167 Exp. 12/31/15 CIVIL STATE OF CALIFORNIA

THE STATE OF CALIFORNIA OR ITS OFFICERS OR AGENTS SHALL NOT BE RESPONSIBLE FOR THE ACCURACY OR COMPLETENESS OF SCANNED COPIES OF THIS PLAN SHEET.

NOTE:
1. USE 15'-7½" LENGTH RAIL.

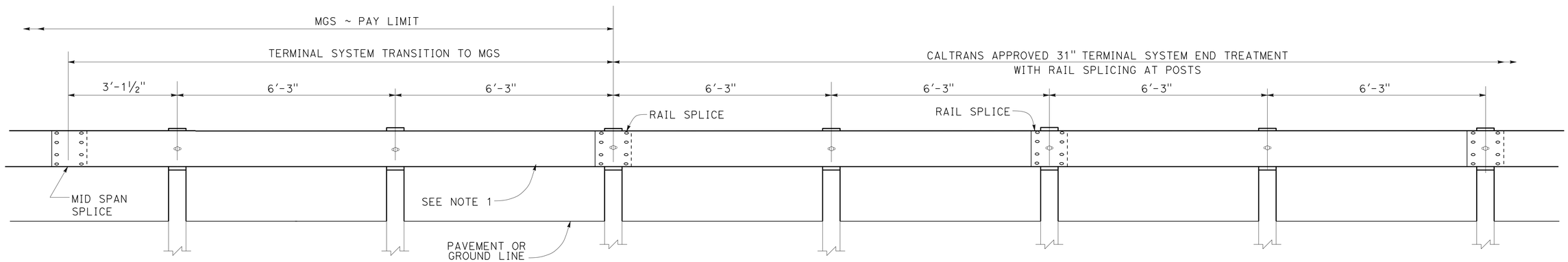

TRANSITION DETAIL FOR 31" TERMINAL SYSTEM END TREATMENT WITH RAIL SPLICING AT POSTS TO MIDWEST GUARDRAIL SYSTEM

CONSTRUCTION DETAILS
NO SCALE
C-7

STATE OF CALIFORNIA - DEPARTMENT OF TRANSPORTATION
Caltrans TRAFFIC PROJECT DEVELOPMENT

FUNCTIONAL SUPERVISOR: RICHARD ESTRADA
CALCULATED-DESIGNED BY: BETHNAY DES JARDINS
CHECKED BY: BARZAN ARAN
REVISED BY
DATE REVISED

LAST REVISION 03-05-14 | DATE PLOTTED => 28-MAY-2014 | TIME PLOTTED => 14:18

Dist	COUNTY	ROUTE	POST MILES TOTAL PROJECT	SHEET No.	TOTAL SHEETS
11	SD	76	R4.2/R7.6	30	217

REGISTERED CIVIL ENGINEER 04-24-14 DATE

05-19-14
PLANS APPROVAL DATE

REGISTERED PROFESSIONAL ENGINEER
BARZAN A. ARAN
No. C75167
Exp. 12/31/15
CIVIL
STATE OF CALIFORNIA

THE STATE OF CALIFORNIA OR ITS OFFICERS OR AGENTS SHALL NOT BE RESPONSIBLE FOR THE ACCURACY OR COMPLETENESS OF SCANNED COPIES OF THIS PLAN SHEET.

NOTE:

FOR ACCURATE RIGHT OF WAY DATA, CONTACT RIGHT OF WAY ENGINEERING AT THE DISTRICT OFFICE.

LEGEND:

HIGH FRICTION SURFACE TREATMENT

OCEANSIDE

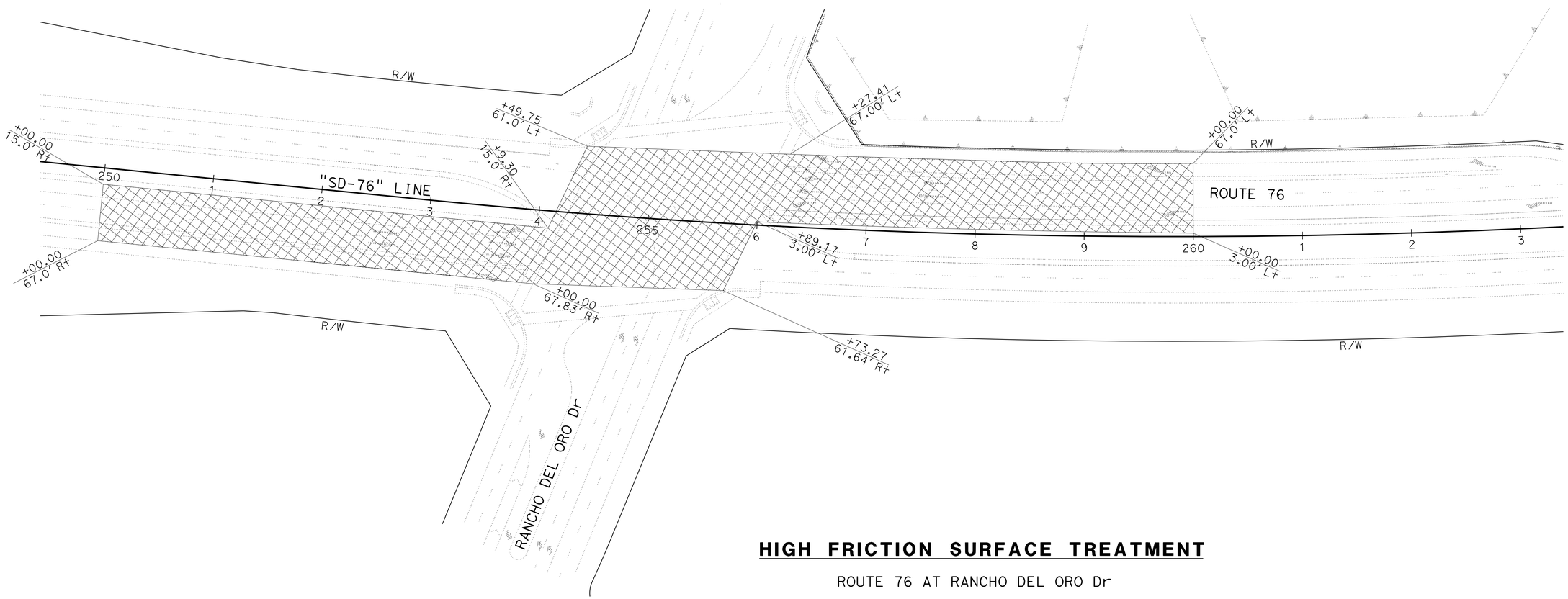

HIGH FRICTION SURFACE TREATMENT

ROUTE 76 AT RANCHO DEL ORO Dr

CONSTRUCTION DETAILS

SCALE: 1" = 50'

C-8

STATE OF CALIFORNIA - DEPARTMENT OF TRANSPORTATION
Caltrans TRAFFIC PROJECT DEVELOPMENT

FUNCTIONAL SUPERVISOR: RICHARD ESTRADA

CALCULATED-DESIGNED BY: BETHNAY DES JARDINS
CHECKED BY: BARZAN ARAN

REVISED BY
DATE REVISED

LAST REVISION 03-05-14
DATE PLOTTED => 28-MAY-2014
TIME PLOTTED => 14:18

Dist	COUNTY	ROUTE	POST MILES TOTAL PROJECT	SHEET No.	TOTAL SHEETS
11	SD	76	R4.2/R7.6	31	217

REGISTERED CIVIL ENGINEER 04-24-14 DATE

05-19-14
PLANS APPROVAL DATE

REGISTERED PROFESSIONAL ENGINEER
BARZAN A. ARAN
No. C75167
Exp. 12/31/15
CIVIL
STATE OF CALIFORNIA

THE STATE OF CALIFORNIA OR ITS OFFICERS OR AGENTS SHALL NOT BE RESPONSIBLE FOR THE ACCURACY OR COMPLETENESS OF SCANNED COPIES OF THIS PLAN SHEET.

NOTE:

FOR ACCURATE RIGHT OF WAY DATA, CONTACT RIGHT OF WAY ENGINEERING AT THE DISTRICT OFFICE.

LEGEND:

HIGH FRICTION SURFACE TREATMENT

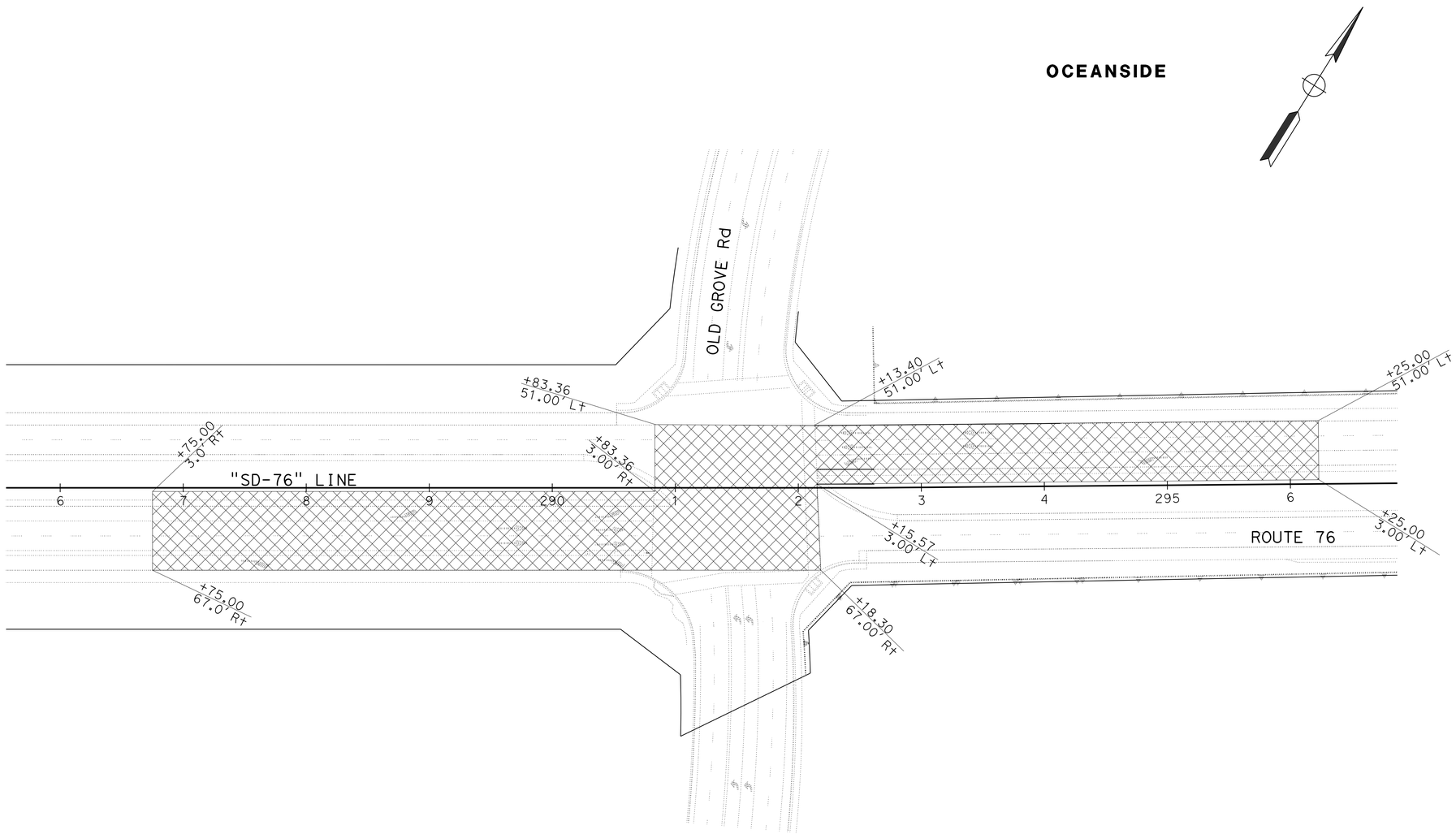

HIGH FRICTION SURFACE TREATMENT

ROUTE 76 AT OLD GROVE Rd

CONSTRUCTION DETAILS
C-9

SCALE: 1" = 50'

STATE OF CALIFORNIA - DEPARTMENT OF TRANSPORTATION
Caltrans TRAFFIC PROJECT DEVELOPMENT

FUNCTIONAL SUPERVISOR: RICHARD ESTRADA
CALCULATED-DESIGNED BY: BETHNAY DES JARDINS
CHECKED BY: BARZAN ARAN
REVISED BY
DATE REVISED

LAST REVISION 03-05-14
DATE PLOTTED => 28-MAY-2014
TIME PLOTTED => 14:18

Dist	COUNTY	ROUTE	POST MILES TOTAL PROJECT	SHEET No.	TOTAL SHEETS
11	SD	76	R4.2/R7.6	32	217

REGISTERED CIVIL ENGINEER 04-24-14 DATE

05-19-14
PLANS APPROVAL DATE

REGISTERED PROFESSIONAL ENGINEER
BARZAN A. ARAN
No. C75167
Exp. 12/31/15
CIVIL
STATE OF CALIFORNIA

THE STATE OF CALIFORNIA OR ITS OFFICERS OR AGENTS SHALL NOT BE RESPONSIBLE FOR THE ACCURACY OR COMPLETENESS OF SCANNED COPIES OF THIS PLAN SHEET.

NOTE:

FOR ACCURATE RIGHT OF WAY DATA, CONTACT RIGHT OF WAY ENGINEERING AT THE DISTRICT OFFICE.

LEGEND:

HIGH FRICTION SURFACE TREATMENT

OCEANSIDE

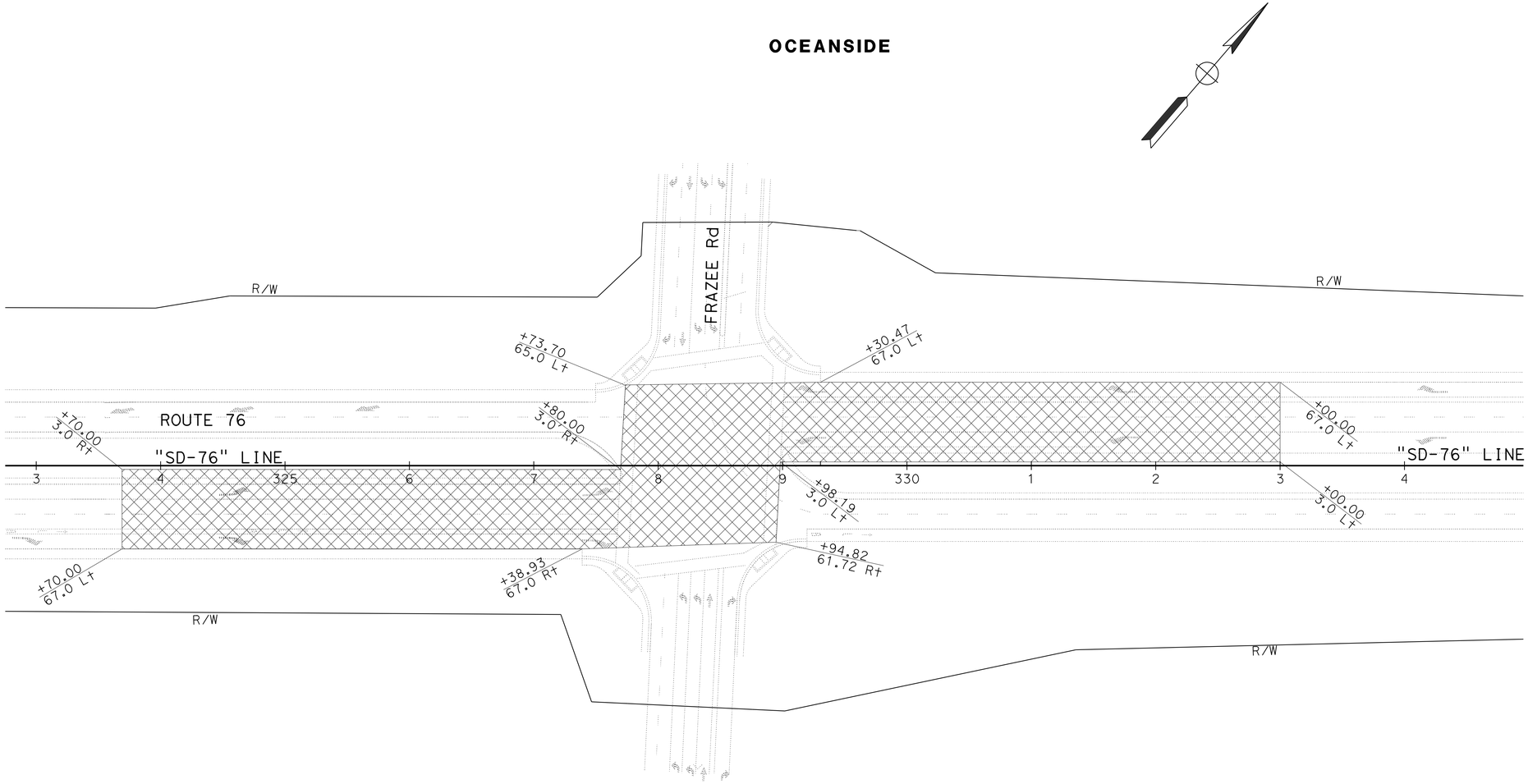

HIGH FRICTION SURFACE TREATMENT

ROUTE 76 AT FRAZEE Rd

CONSTRUCTION DETAILS

SCALE: 1" = 50'

C-10

STATE OF CALIFORNIA - DEPARTMENT OF TRANSPORTATION
Caltrans TRAFFIC PROJECT DEVELOPMENT

FUNCTIONAL SUPERVISOR: RICHARD ESTRADA
CALCULATED-DESIGNED BY: BETHNAY DES JARDINS
CHECKED BY: BARZAN ARAN
REVISED BY
DATE REVISED

LAST REVISION 03-05-14
DATE PLOTTED => 28-MAY-2014
TIME PLOTTED => 14:18

Dist	COUNTY	ROUTE	POST MILES TOTAL PROJECT	SHEET No.	TOTAL SHEETS
11	SD	76	R4.2/R7.6	33	217

REGISTERED CIVIL ENGINEER 04-24-14 DATE

05-19-14
PLANS APPROVAL DATE

REGISTERED PROFESSIONAL ENGINEER BARZAN A. ARAN No. C75167 Exp. 12/31/15 CIVIL STATE OF CALIFORNIA

THE STATE OF CALIFORNIA OR ITS OFFICERS OR AGENTS SHALL NOT BE RESPONSIBLE FOR THE ACCURACY OR COMPLETENESS OF SCANNED COPIES OF THIS PLAN SHEET.

NOTE:

FOR ACCURATE RIGHT OF WAY DATA, CONTACT RIGHT OF WAY ENGINEERING AT THE DISTRICT OFFICE.

LEGEND:

HIGH FRICTION SURFACE TREATMENT

OCEANSIDE

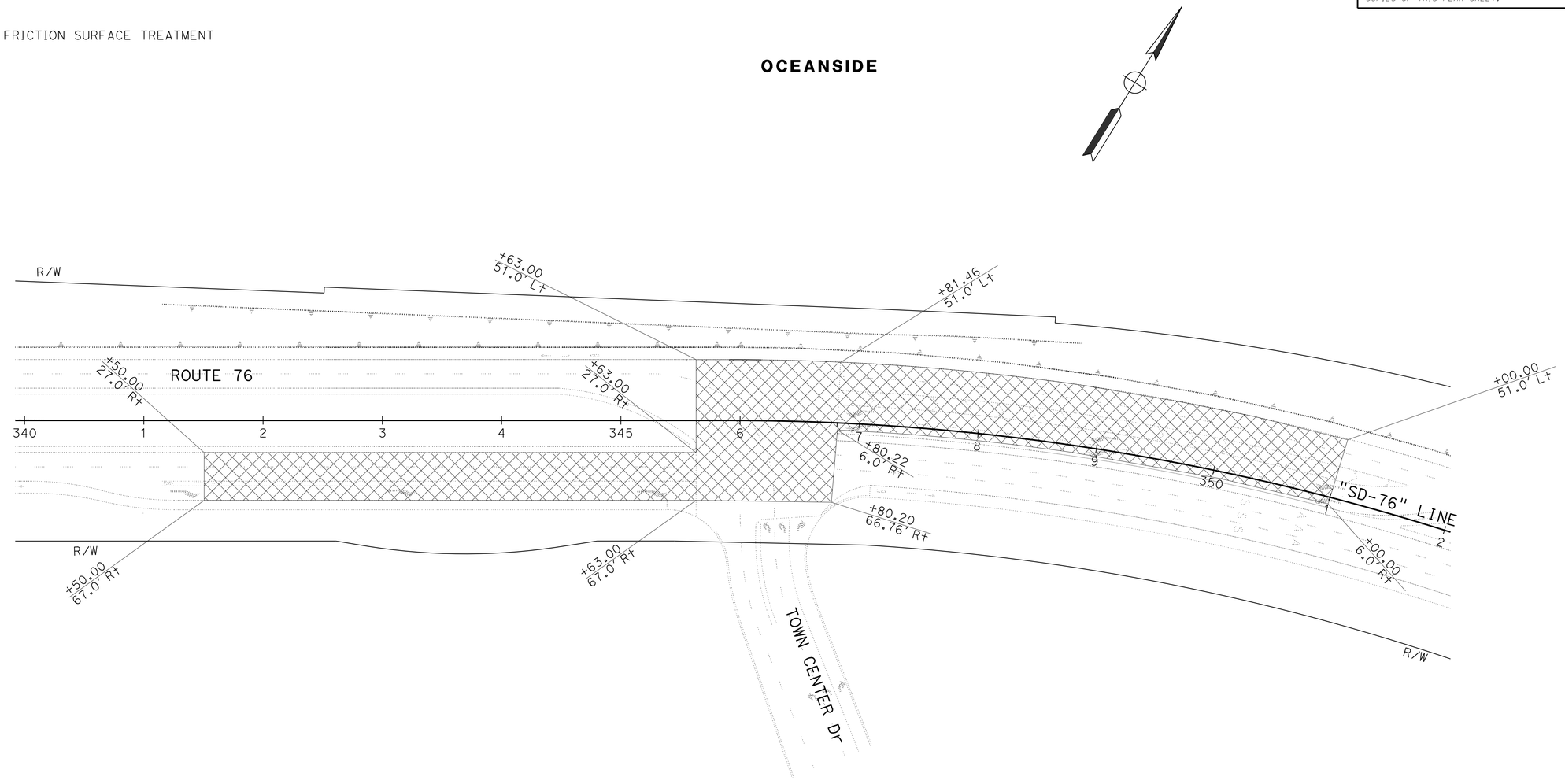

HIGH FRICTION SURFACE TREATMENT

ROUTE 76 AT TOWN CENTER Dr

CONSTRUCTION DETAILS
C-11

SCALE: 1" = 50'

STATE OF CALIFORNIA - DEPARTMENT OF TRANSPORTATION
Caltrans PROJECT DEVELOPMENT
TRAFFIC

FUNCTIONAL SUPERVISOR: RICHARD ESTRADA
CALCULATED-DESIGNED BY: BARZAN ARAN
CHECKED BY: BETHNAY DES JARDINS
REVISED BY
DATE REVISED

LAST REVISION 03-05-14
DATE PLOTTED => 28-MAY-2014
TIME PLOTTED => 14:18

Dist	COUNTY	ROUTE	POST MILES TOTAL PROJECT	SHEET No.	TOTAL SHEETS
11	SD	76	R4.2/R7.6	34	217

REGISTERED CIVIL ENGINEER 04-24-14 DATE

05-19-14
PLANS APPROVAL DATE

REGISTERED PROFESSIONAL ENGINEER
BARZAN A. ARAN
No. C75167
Exp. 12/31/15
CIVIL
STATE OF CALIFORNIA

THE STATE OF CALIFORNIA OR ITS OFFICERS OR AGENTS SHALL NOT BE RESPONSIBLE FOR THE ACCURACY OR COMPLETENESS OF SCANNED COPIES OF THIS PLAN SHEET.

NOTE:

FOR ACCURATE RIGHT OF WAY DATA, CONTACT RIGHT OF WAY ENGINEERING AT THE DISTRICT OFFICE.

LEGEND:

HIGH FRICTION SURFACE TREATMENT

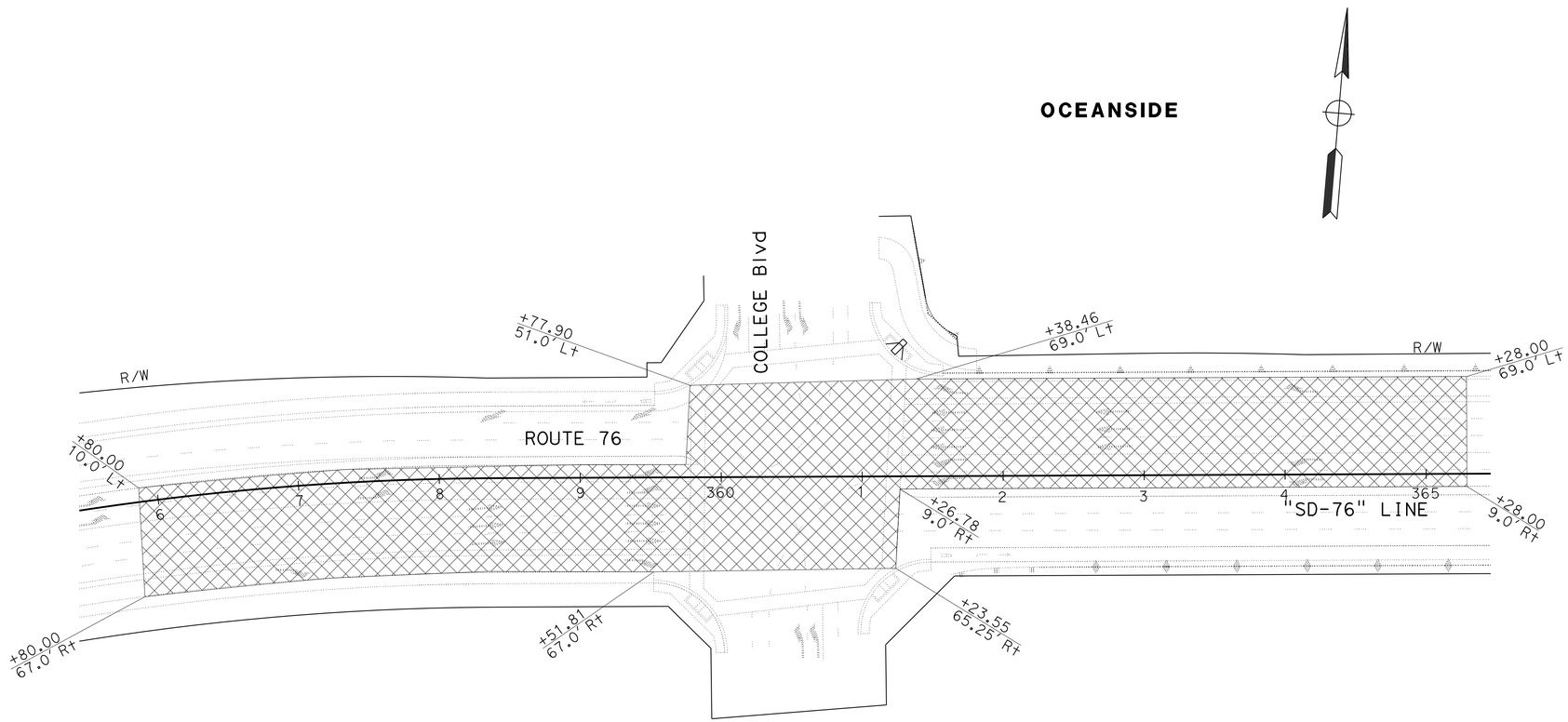

HIGH FRICTION SURFACE TREATMENT

ROUTE 76 AT COLLEGE Blvd

CONSTRUCTION DETAILS
C-12

SCALE: 1" = 50'

STATE OF CALIFORNIA - DEPARTMENT OF TRANSPORTATION
Caltrans TRAFFIC PROJECT DEVELOPMENT

FUNCTIONAL SUPERVISOR: RICHARD ESTRADA
CALCULATED-DESIGNED BY: BETHNAY DES JARDINS
CHECKED BY: BARZAN ARAN
REVISED BY
DATE REVISED

LAST REVISION 03-05-14
DATE PLOTTED => 28-MAY-2014
TIME PLOTTED => 14:18

Dist	COUNTY	ROUTE	POST MILES TOTAL PROJECT	SHEET No.	TOTAL SHEETS
11	SD	76	R4.2/R7.6	35	217

REGISTERED CIVIL ENGINEER 04-24-14 DATE

05-19-14
PLANS APPROVAL DATE

REGISTERED PROFESSIONAL ENGINEER BARZAN A. ARAN No. C75167 Exp. 12/31/15 CIVIL STATE OF CALIFORNIA

THE STATE OF CALIFORNIA OR ITS OFFICERS OR AGENTS SHALL NOT BE RESPONSIBLE FOR THE ACCURACY OR COMPLETENESS OF SCANNED COPIES OF THIS PLAN SHEET.

OCEANSIDE

NOTE:

FOR ACCURATE RIGHT OF WAY DATA, CONTACT RIGHT OF WAY ENGINEERING AT THE DISTRICT OFFICE.

LEGEND:

HIGH FRICTION SURFACE TREATMENT

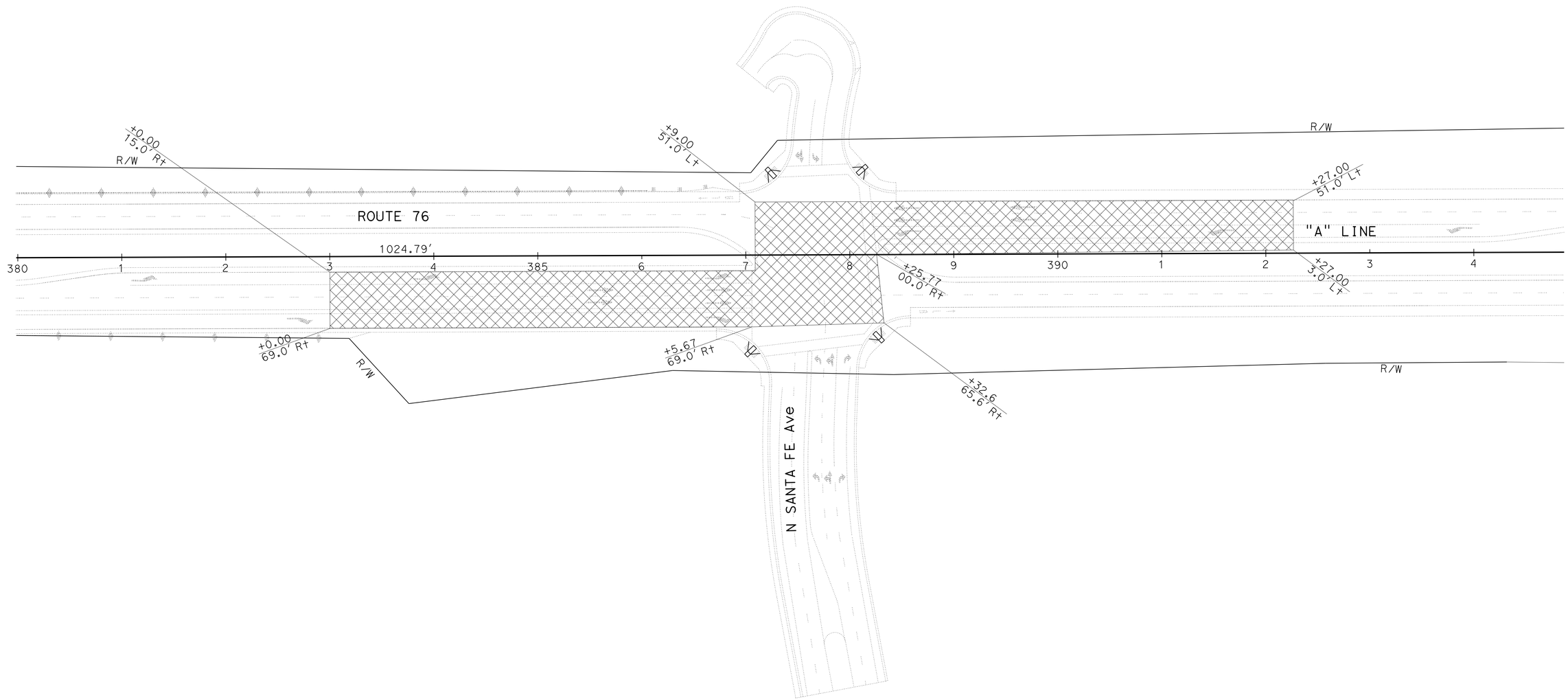

HIGH FRICTION SURFACE TREATMENT

ROUTE 76 AT N SANTA FE Ave

CONSTRUCTION DETAILS
C-13

SCALE: 1" = 50'

STATE OF CALIFORNIA - DEPARTMENT OF TRANSPORTATION
Caltrans PROJECT DEVELOPMENT
TRAFFIC

FUNCTIONAL SUPERVISOR: RICHARD ESTRADA
CALCULATED-DESIGNED BY: BETHNAY DES JARDINS
CHECKED BY: BARZAN ARAN
REVISED BY
DATE REVISED

LAST REVISION 03-05-14
DATE PLOTTED => 28-MAY-2014
TIME PLOTTED => 14:18

Dist	COUNTY	ROUTE	POST MILES TOTAL PROJECT	SHEET No.	TOTAL SHEETS
11	SD	76	R4.2/R7.6	36	217

REGISTERED CIVIL ENGINEER 04-24-14 DATE

05-19-14
PLANS APPROVAL DATE

REGISTERED PROFESSIONAL ENGINEER
BARZAN A. ARAN
No. C75167
Exp. 12/31/15
CIVIL
STATE OF CALIFORNIA

THE STATE OF CALIFORNIA OR ITS OFFICERS OR AGENTS SHALL NOT BE RESPONSIBLE FOR THE ACCURACY OR COMPLETENESS OF SCANNED COPIES OF THIS PLAN SHEET.

NOTE:

FOR ACCURATE RIGHT OF WAY DATA, CONTACT RIGHT OF WAY ENGINEERING AT THE DISTRICT OFFICE.

LEGEND:

HIGH FRICTION SURFACE TREATMENT

OCEANSIDE

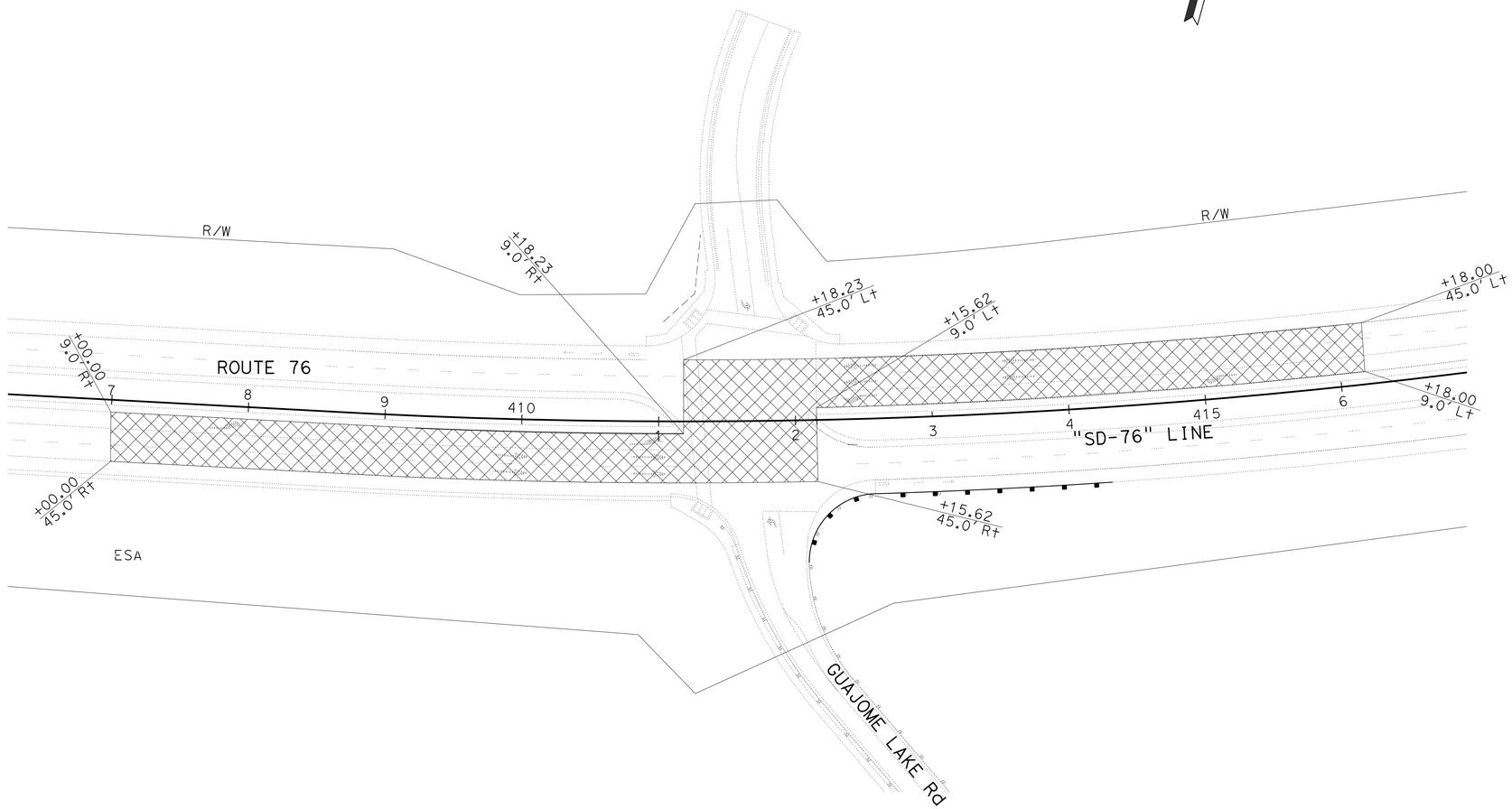

HIGH FRICTION SURFACE TREATMENT

ROUTE 76 AT GUAJOME LAKE Rd

CONSTRUCTION DETAILS

SCALE: 1" = 50'

C-14

STATE OF CALIFORNIA - DEPARTMENT OF TRANSPORTATION
Caltrans TRAFFIC PROJECT DEVELOPMENT

FUNCTIONAL SUPERVISOR: RICHARD ESTRADA
CALCULATED-DESIGNED BY: BETHNAY DES JARDINS
CHECKED BY: BARZAN ARAN
REVISED BY
DATE REVISED

LAST REVISION 03-05-14
DATE PLOTTED => 28-MAY-2014
TIME PLOTTED => 14:18

Dist	COUNTY	ROUTE	POST MILES TOTAL PROJECT	SHEET No.	TOTAL SHEETS
11	SD	76	R4.2/R7.6	37	217

REGISTERED CIVIL ENGINEER 04-24-14 DATE

05-19-14
PLANS APPROVAL DATE

REGISTERED PROFESSIONAL ENGINEER
BARZAN A. ARAN
No. C75167
Exp. 12/31/15
CIVIL
STATE OF CALIFORNIA

THE STATE OF CALIFORNIA OR ITS OFFICERS OR AGENTS SHALL NOT BE RESPONSIBLE FOR THE ACCURACY OR COMPLETENESS OF SCANNED COPIES OF THIS PLAN SHEET.

NOTES:

1. FOR ACCURATE RIGHT OF WAY DATA, CONTACT RIGHT OF WAY ENGINEERING AT THE DISTRICT OFFICE.
2. FOR ESA LIMITS, SEE LAYOUT SHEETS.
3. EROSION CONTROL (BONDED FIBER MATRIX) IS THE ONLY PERMANENT ITEM OF WORK.
4. FOR EROSION CONTROL LEGEND AND SEQUENCE INFORMATION SEE WATER POLLUTION CONTROL QUANTITIES SHEET.

LEGEND:

= EROSION CONTROL (BONDED FIBER MATRIX) (BFM)

OCEANSIDE

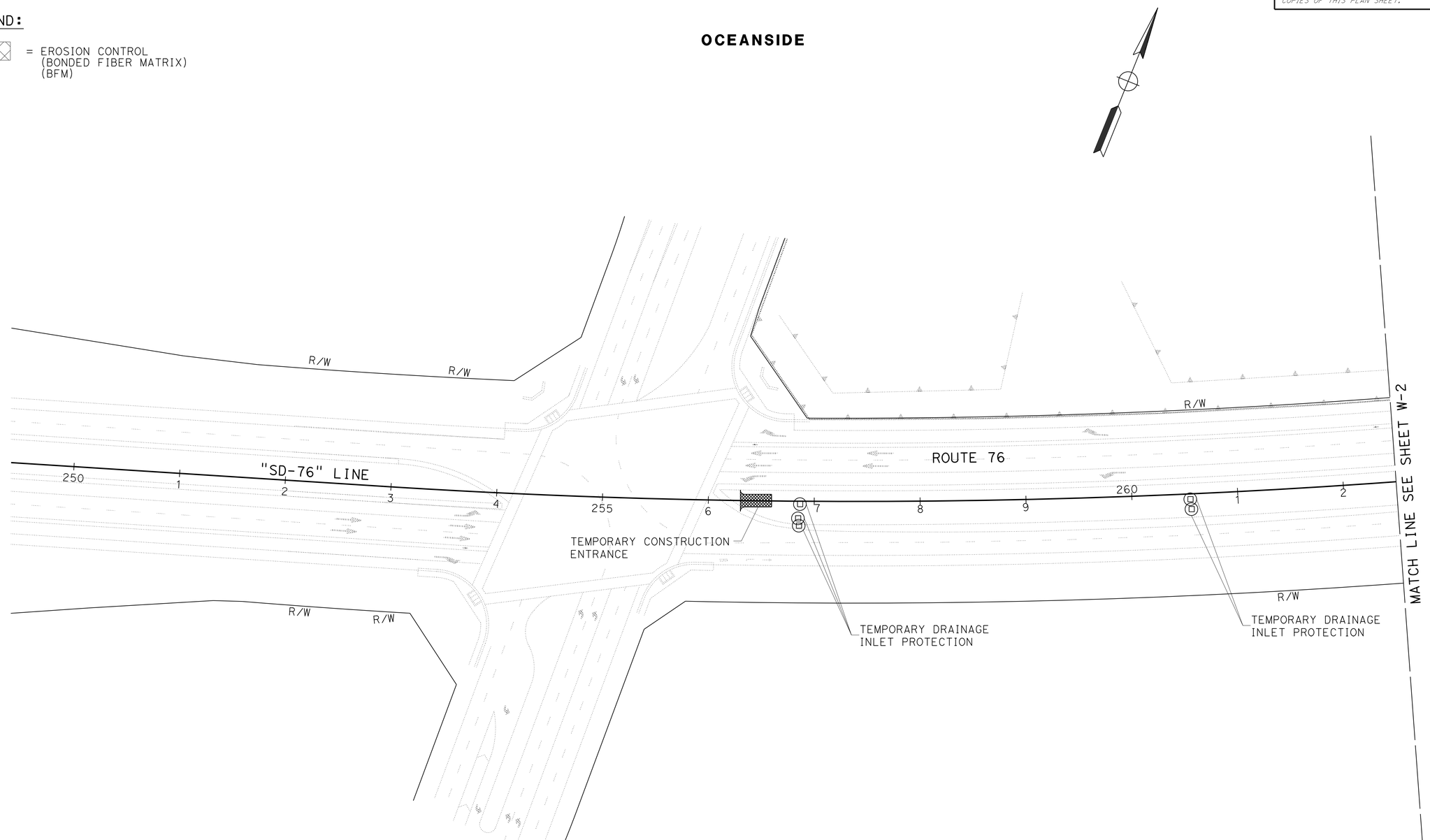

APPROVED FOR WATER POLLUTION CONTROL WORK ONLY

WATER POLLUTION CONTROL PLAN
W-1

SCALE: 1" = 50'

STATE OF CALIFORNIA - DEPARTMENT OF TRANSPORTATION
Caltrans PROJECT DEVELOPMENT
TRAFFIC

FUNCTIONAL SUPERVISOR: RICHARD ESTRADA
CALCULATED-DESIGNED BY: KENNY T. NGUYEN
CHECKED BY: BARZAN ARAN
REVISED BY
DATE REVISED

LAST REVISION 12-16-13
DATE PLOTTED => 28-MAY-2014
TIME PLOTTED => 14:18

Dist	COUNTY	ROUTE	POST MILES TOTAL PROJECT	SHEET No.	TOTAL SHEETS
11	SD	76	R4.2/R7.6	38	217

REGISTERED CIVIL ENGINEER 04-24-14 DATE

05-19-14
PLANS APPROVAL DATE

REGISTERED PROFESSIONAL ENGINEER
BARZAN A. ARAN
No. C75167
Exp. 12/31/15
CIVIL
STATE OF CALIFORNIA

THE STATE OF CALIFORNIA OR ITS OFFICERS OR AGENTS SHALL NOT BE RESPONSIBLE FOR THE ACCURACY OR COMPLETENESS OF SCANNED COPIES OF THIS PLAN SHEET.

NOTE:

FOR ACCURATE RIGHT OF WAY DATA, CONTACT RIGHT OF WAY ENGINEERING AT THE DISTRICT OFFICE.

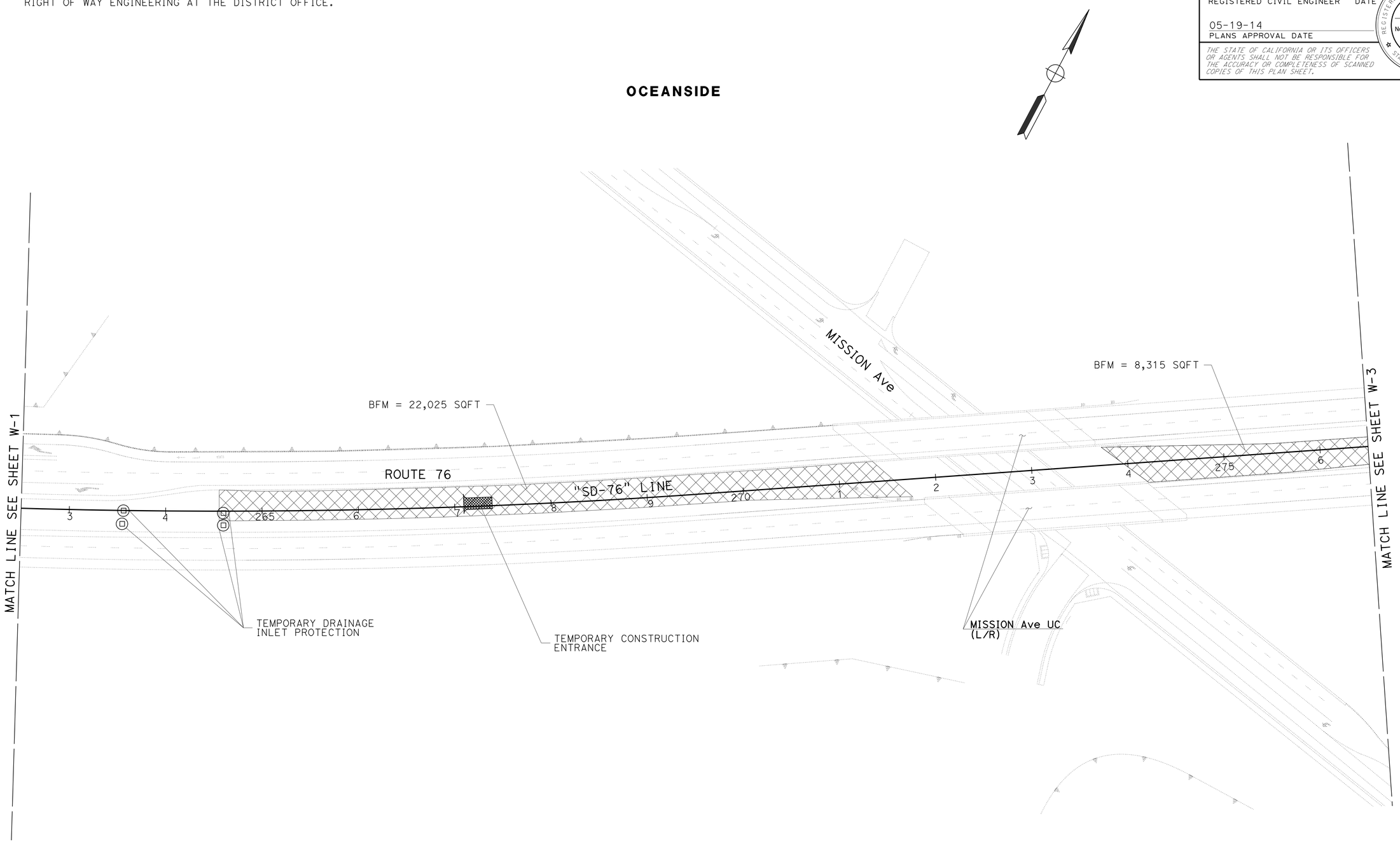

WATER POLLUTION CONTROL PLAN

W-2

SCALE: 1" = 50'

APPROVED FOR WATER POLLUTION CONTROL WORK ONLY

STATE OF CALIFORNIA - DEPARTMENT OF TRANSPORTATION
Caltrans
TRAFFIC PROJECT DEVELOPMENT

FUNCTIONAL SUPERVISOR: RICHARD ESTRADA
CALCULATED-DESIGNED BY: KENNY T. NGUYEN
CHECKED BY: BARZAN ARAN
REVISED BY
DATE REVISED

LAST REVISION 12-16-13
DATE PLOTTED => 28-MAY-2014
TIME PLOTTED => 14:18

BORDER LAST REVISED 7/2/2010
USERNAME => s127400
DGN FILE => 1100020326gi002.dgn
RELATIVE BORDER SCALE IS IN INCHES 0 1 2 3
UNIT 2771
PROJECT NUMBER & PHASE 11000203261

Dist	COUNTY	ROUTE	POST MILES TOTAL PROJECT	SHEET No.	TOTAL SHEETS
11	SD	76	R4.2/R7.6	39	217

REGISTERED CIVIL ENGINEER 04-24-14 DATE

05-19-14
PLANS APPROVAL DATE

REGISTERED PROFESSIONAL ENGINEER
BARZAN A. ARAN
No. C75167
Exp. 12/31/15
CIVIL
STATE OF CALIFORNIA

THE STATE OF CALIFORNIA OR ITS OFFICERS OR AGENTS SHALL NOT BE RESPONSIBLE FOR THE ACCURACY OR COMPLETENESS OF SCANNED COPIES OF THIS PLAN SHEET.

NOTE:

FOR ACCURATE RIGHT OF WAY DATA, CONTACT RIGHT OF WAY ENGINEERING AT THE DISTRICT OFFICE.

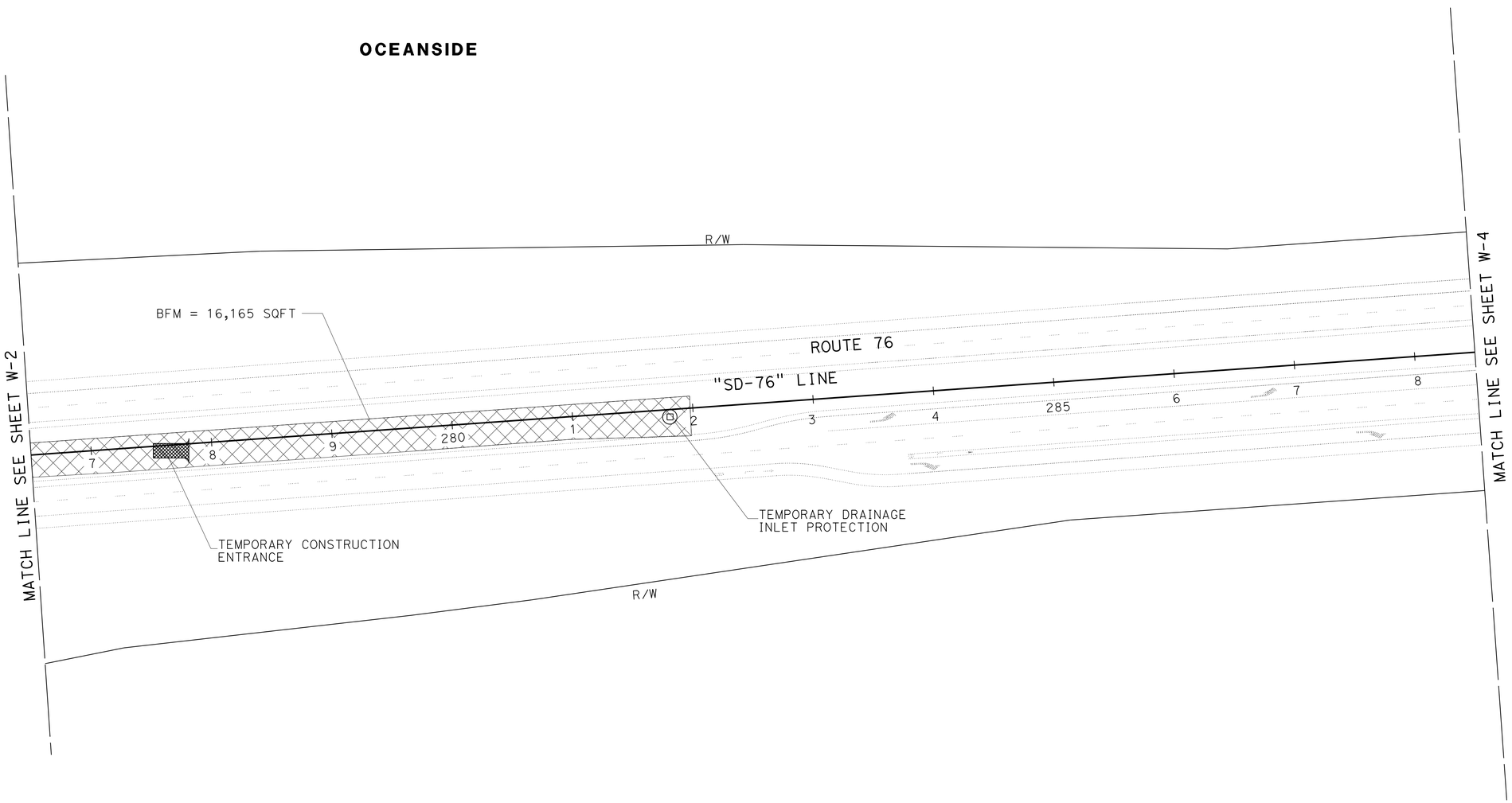

APPROVED FOR WATER POLLUTION CONTROL WORK ONLY

WATER POLLUTION CONTROL PLAN

W-3

SCALE: 1" = 50'

STATE OF CALIFORNIA - DEPARTMENT OF TRANSPORTATION
Caltrans PROJECT DEVELOPMENT
TRAFFIC

FUNCTIONAL SUPERVISOR: RICHARD ESTRADA
CALCULATED-DESIGNED BY: KENNY T. NGUYEN
CHECKED BY: BARZAN ARAN
REVISED BY
DATE REVISED

LAST REVISION 12-16-13
DATE PLOTTED => 28-MAY-2014
TIME PLOTTED => 14:18

Dist	COUNTY	ROUTE	POST MILES TOTAL PROJECT	SHEET No.	TOTAL SHEETS
11	SD	76	R4.2/R7.6	40	217

REGISTERED CIVIL ENGINEER 04-24-14 DATE

05-19-14
PLANS APPROVAL DATE

REGISTERED PROFESSIONAL ENGINEER BARZAN A. ARAN No. C75167 Exp. 12/31/15 CIVIL STATE OF CALIFORNIA

THE STATE OF CALIFORNIA OR ITS OFFICERS OR AGENTS SHALL NOT BE RESPONSIBLE FOR THE ACCURACY OR COMPLETENESS OF SCANNED COPIES OF THIS PLAN SHEET.

NOTE:

FOR ACCURATE RIGHT OF WAY DATA, CONTACT
RIGHT OF WAY ENGINEERING AT THE DISTRICT OFFICE.

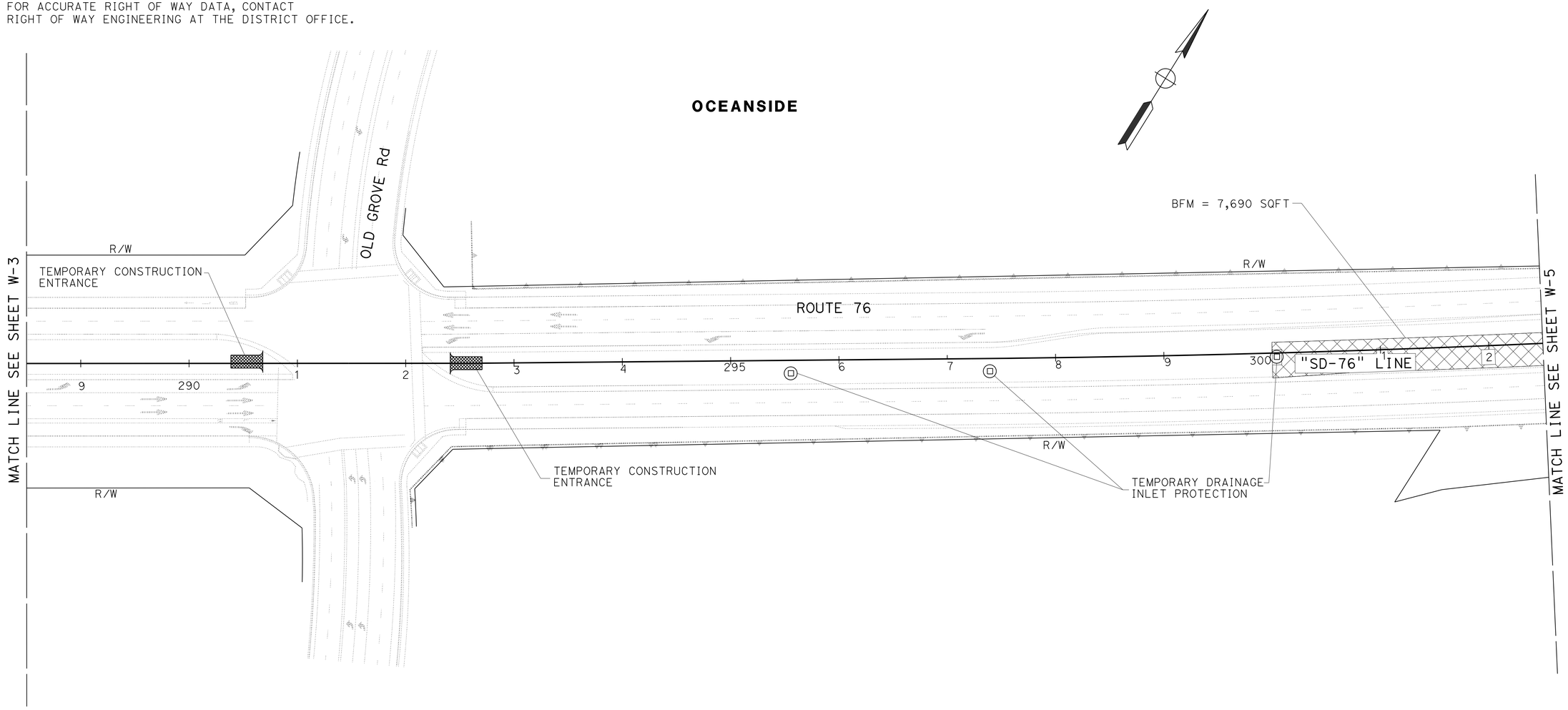

APPROVED FOR WATER POLLUTION CONTROL WORK ONLY

WATER POLLUTION CONTROL PLAN
W-4

SCALE: 1" = 50'

REVISED BY | DATE REVISED
KENNY T. NGUYEN | BARZAN ARAN
CALCULATED-DESIGNED BY | CHECKED BY
FUNCTIONAL SUPERVISOR
RICHARD ESTRADA

STATE OF CALIFORNIA - DEPARTMENT OF TRANSPORTATION
Caltrans PROJECT DEVELOPMENT
TRAFFIC

LAST REVISION 12-16-13 | DATE PLOTTED => 28-MAY-2014 | TIME PLOTTED => 14:18

Dist	COUNTY	ROUTE	POST MILES TOTAL PROJECT	SHEET No.	TOTAL SHEETS
11	SD	76	R4.2/R7.6	41	217

REGISTERED CIVIL ENGINEER 04-24-14 DATE

05-19-14
PLANS APPROVAL DATE

REGISTERED PROFESSIONAL ENGINEER BARZAN A. ARAN No. C75167 Exp. 12/31/15 CIVIL STATE OF CALIFORNIA

THE STATE OF CALIFORNIA OR ITS OFFICERS OR AGENTS SHALL NOT BE RESPONSIBLE FOR THE ACCURACY OR COMPLETENESS OF SCANNED COPIES OF THIS PLAN SHEET.

NOTE:

FOR ACCURATE RIGHT OF WAY DATA, CONTACT RIGHT OF WAY ENGINEERING AT THE DISTRICT OFFICE.

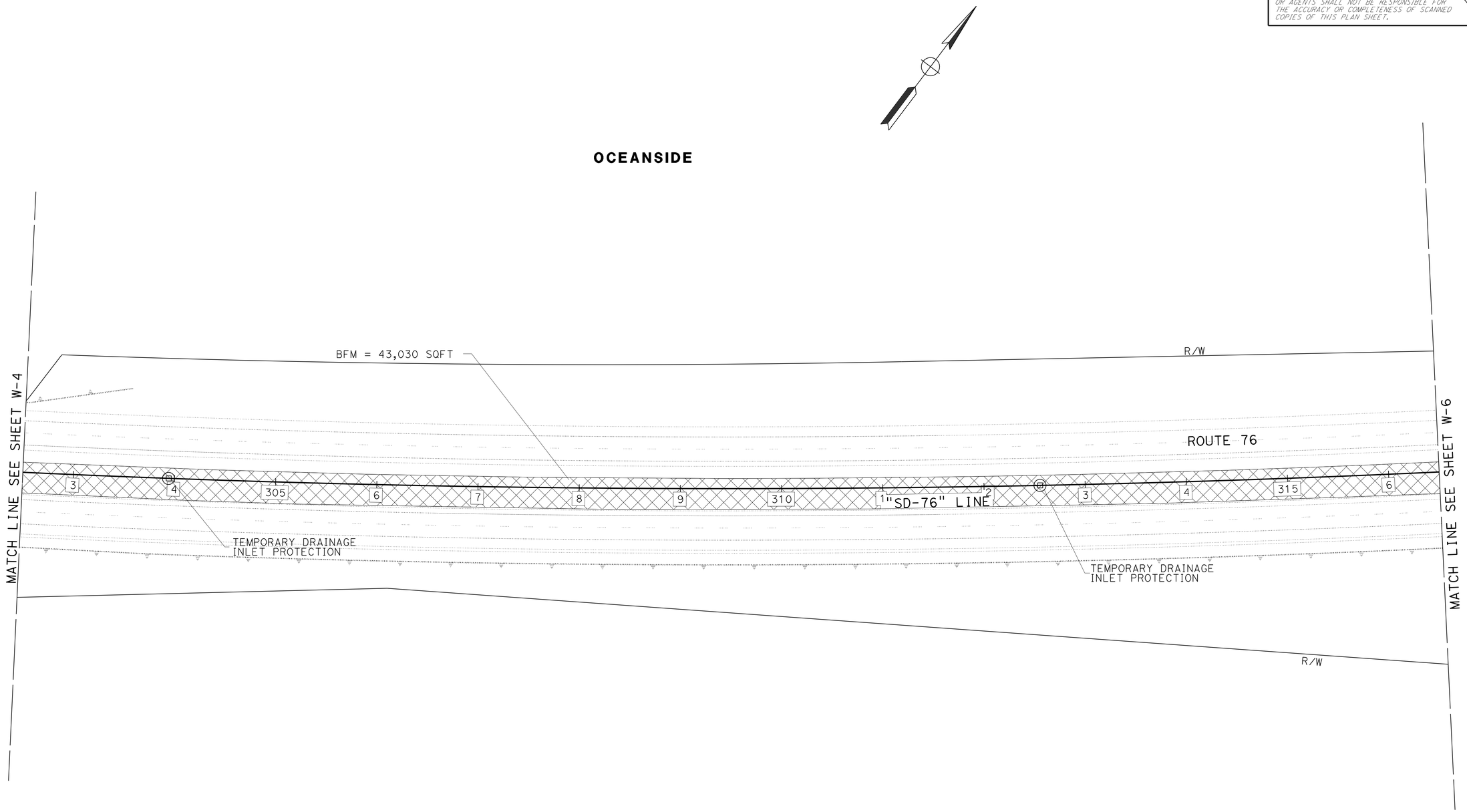

APPROVED FOR WATER POLLUTION CONTROL WORK ONLY

WATER POLLUTION CONTROL PLAN

W-5

SCALE: 1" = 50'

STATE OF CALIFORNIA - DEPARTMENT OF TRANSPORTATION
Caltrans TRAFFIC PROJECT DEVELOPMENT

FUNCTIONAL SUPERVISOR: RICHARD ESTRADA
CALCULATED-DESIGNED BY: KENNY T. NGUYEN
CHECKED BY: BARZAN ARAN
REVISED BY
DATE REVISED

LAST REVISION 12-16-13
DATE PLOTTED => 28-MAY-2014
TIME PLOTTED => 14:18

Dist	COUNTY	ROUTE	POST MILES TOTAL PROJECT	SHEET No.	TOTAL SHEETS
11	SD	76	R4.2/R7.6	42	217

REGISTERED CIVIL ENGINEER 04-24-14 DATE

05-19-14
PLANS APPROVAL DATE

REGISTERED PROFESSIONAL ENGINEER
BARZAN A. ARAN
No. C75167
Exp. 12/31/15
CIVIL
STATE OF CALIFORNIA

THE STATE OF CALIFORNIA OR ITS OFFICERS OR AGENTS SHALL NOT BE RESPONSIBLE FOR THE ACCURACY OR COMPLETENESS OF SCANNED COPIES OF THIS PLAN SHEET.

NOTE:

FOR ACCURATE RIGHT OF WAY DATA, CONTACT RIGHT OF WAY ENGINEERING AT THE DISTRICT OFFICE.

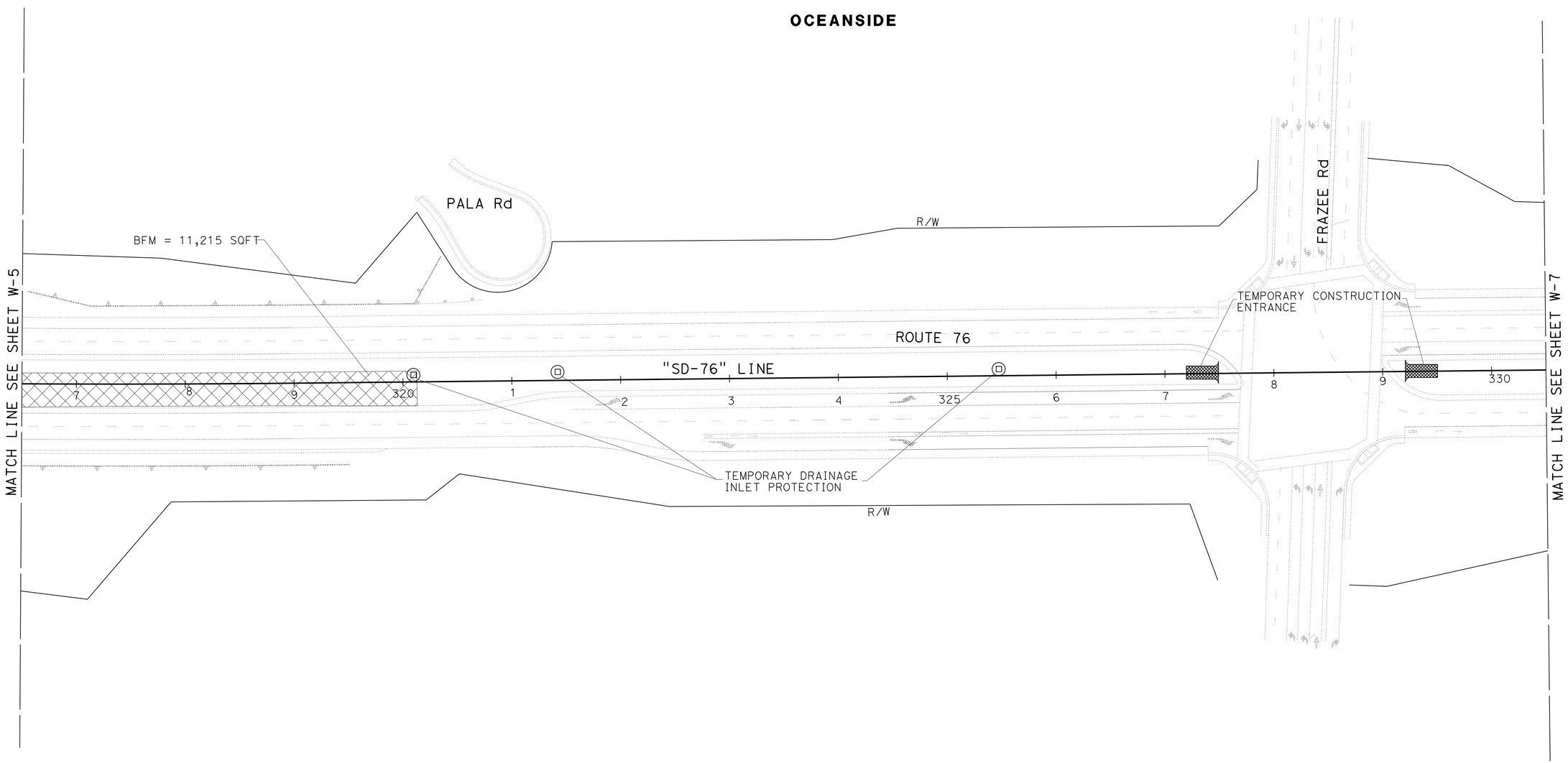

APPROVED FOR WATER POLLUTION CONTROL WORK ONLY

WATER POLLUTION CONTROL PLAN
W-6

SCALE: 1" = 50'

REVISED BY | DATE REVISED
KENNY T. NGUYEN | BARZAN ARAN
CALCULATED-DESIGNED BY | CHECKED BY
FUNCTIONAL SUPERVISOR
RICHARD ESTRADA

STATE OF CALIFORNIA - DEPARTMENT OF TRANSPORTATION
Caltrans
TRAFFIC PROJECT DEVELOPMENT

LAST REVISION 12-16-13
DATE PLOTTED => 28-MAY-2014
TIME PLOTTED => 14:18

Dist	COUNTY	ROUTE	POST MILES TOTAL PROJECT	SHEET No.	TOTAL SHEETS
11	SD	76	R4.2/R7.6	43	217

REGISTERED CIVIL ENGINEER 04-24-14 DATE

05-19-14
PLANS APPROVAL DATE

REGISTERED PROFESSIONAL ENGINEER BARZAN A. ARAN No. C75167 Exp. 12/31/15 CIVIL STATE OF CALIFORNIA

THE STATE OF CALIFORNIA OR ITS OFFICERS OR AGENTS SHALL NOT BE RESPONSIBLE FOR THE ACCURACY OR COMPLETENESS OF SCANNED COPIES OF THIS PLAN SHEET.

NOTE:

FOR ACCURATE RIGHT OF WAY DATA, CONTACT
RIGHT OF WAY ENGINEERING AT THE DISTRICT OFFICE.

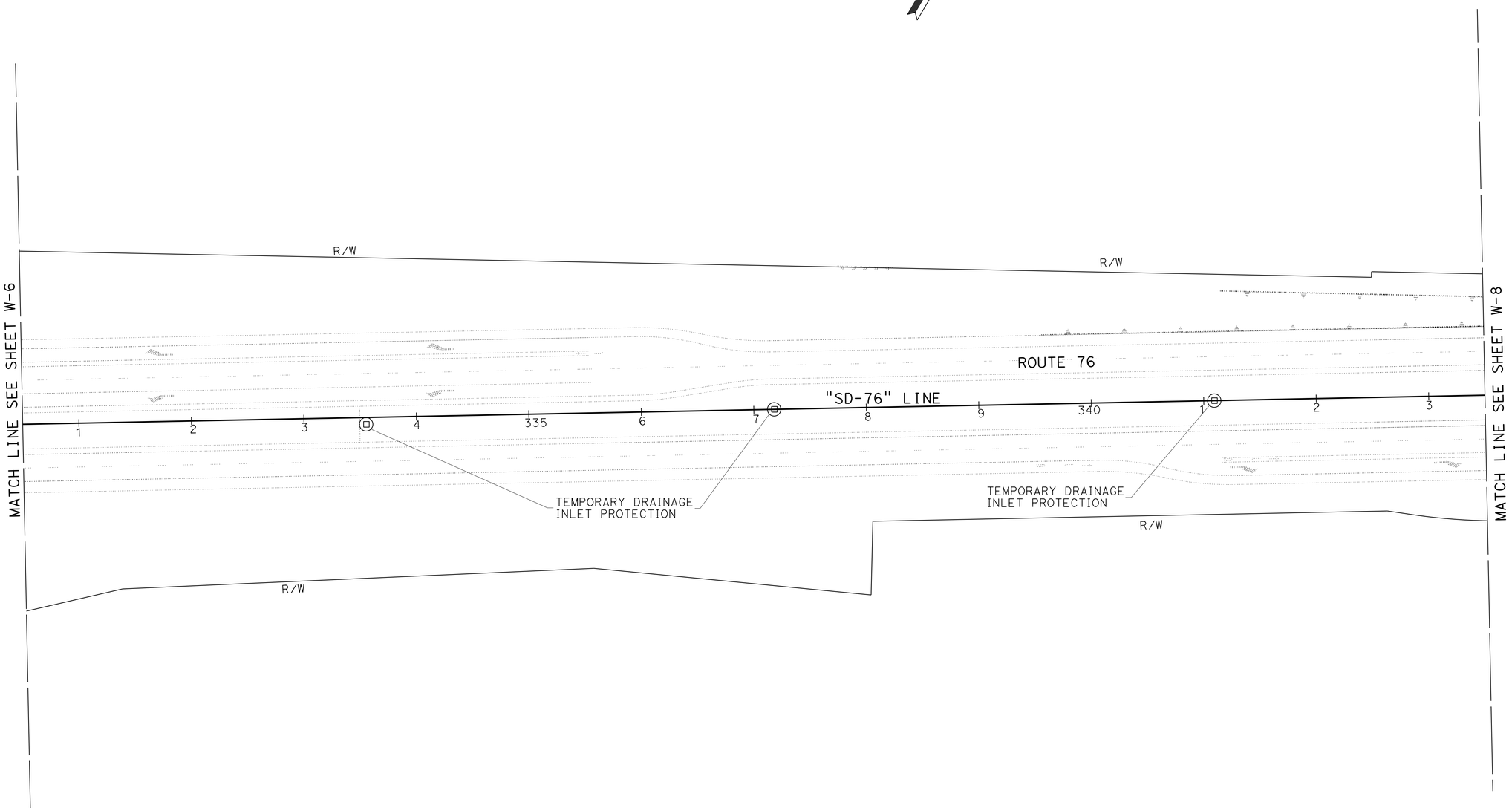

APPROVED FOR WATER POLLUTION CONTROL WORK ONLY

WATER POLLUTION CONTROL PLAN
W-7

SCALE: 1" = 50'

STATE OF CALIFORNIA - DEPARTMENT OF TRANSPORTATION
Caltrans PROJECT DEVELOPMENT
TRAFFIC

FUNCTIONAL SUPERVISOR: RICHARD ESTRADA
CALCULATED-DESIGNED BY: KENNY T. NGUYEN
CHECKED BY: BARZAN ARAN
REVISED BY
DATE REVISED

LAST REVISION 12-16-13
DATE PLOTTED => 28-MAY-2014
TIME PLOTTED => 14:18

Dist	COUNTY	ROUTE	POST MILES TOTAL PROJECT	SHEET No.	TOTAL SHEETS
11	SD	76	R4.2/R7.6	44	217

REGISTERED CIVIL ENGINEER 04-24-14 DATE

05-19-14
PLANS APPROVAL DATE

REGISTERED PROFESSIONAL ENGINEER
BARZAN A. ARAN
No. C75167
Exp. 12/31/15
CIVIL
STATE OF CALIFORNIA

THE STATE OF CALIFORNIA OR ITS OFFICERS OR AGENTS SHALL NOT BE RESPONSIBLE FOR THE ACCURACY OR COMPLETENESS OF SCANNED COPIES OF THIS PLAN SHEET.

NOTE:

FOR ACCURATE RIGHT OF WAY DATA, CONTACT RIGHT OF WAY ENGINEERING AT THE DISTRICT OFFICE.

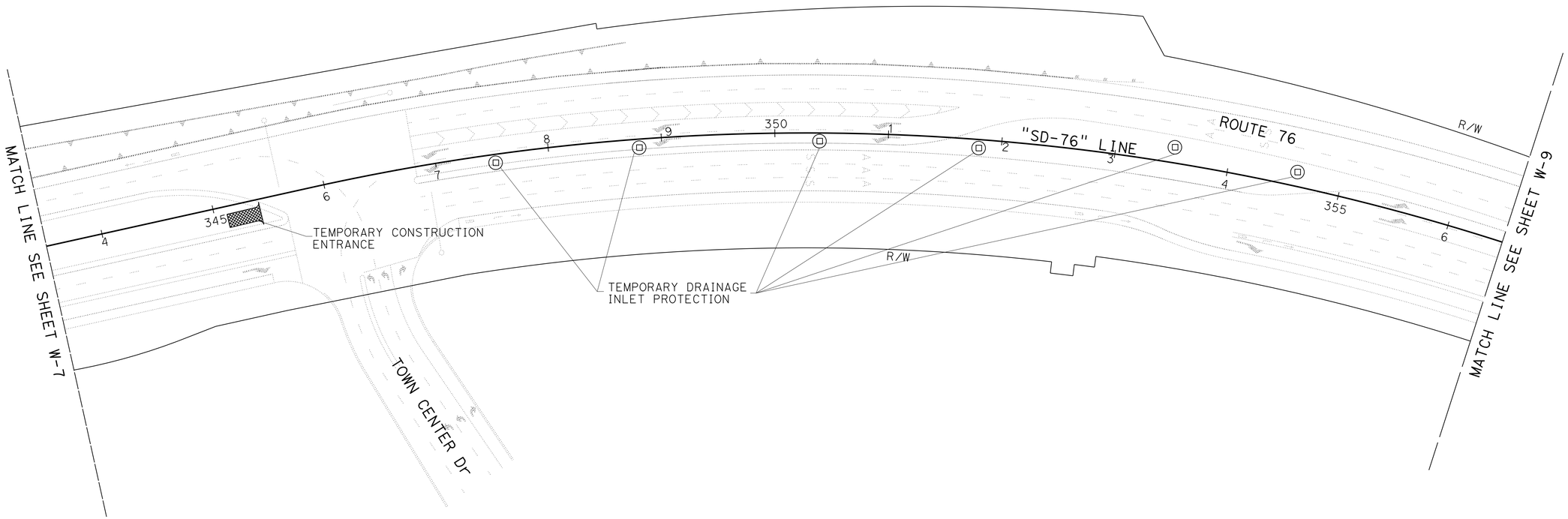

APPROVED FOR WATER POLLUTION CONTROL WORK ONLY

WATER POLLUTION CONTROL PLAN

W-8

SCALE: 1" = 50'

STATE OF CALIFORNIA - DEPARTMENT OF TRANSPORTATION
Caltrans PROJECT DEVELOPMENT
TRAFFIC

FUNCTIONAL SUPERVISOR: RICHARD ESTRADA
CALCULATED-DESIGNED BY: KENNY T. NGUYEN
CHECKED BY: BARZAN ARAN
REVISED BY
DATE REVISED

LAST REVISION 12-16-13
DATE PLOTTED => 28-MAY-2014
TIME PLOTTED => 14:18

Dist	COUNTY	ROUTE	POST MILES TOTAL PROJECT	SHEET No.	TOTAL SHEETS
11	SD	76	R4.2/R7.6	45	217

REGISTERED CIVIL ENGINEER 04-24-14 DATE

05-19-14
PLANS APPROVAL DATE

REGISTERED PROFESSIONAL ENGINEER BARZAN A. ARAN No. C75167 Exp. 12/31/15 CIVIL STATE OF CALIFORNIA

THE STATE OF CALIFORNIA OR ITS OFFICERS OR AGENTS SHALL NOT BE RESPONSIBLE FOR THE ACCURACY OR COMPLETENESS OF SCANNED COPIES OF THIS PLAN SHEET.

NOTE:
FOR ACCURATE RIGHT OF WAY DATA, CONTACT RIGHT OF WAY ENGINEERING AT THE DISTRICT OFFICE.

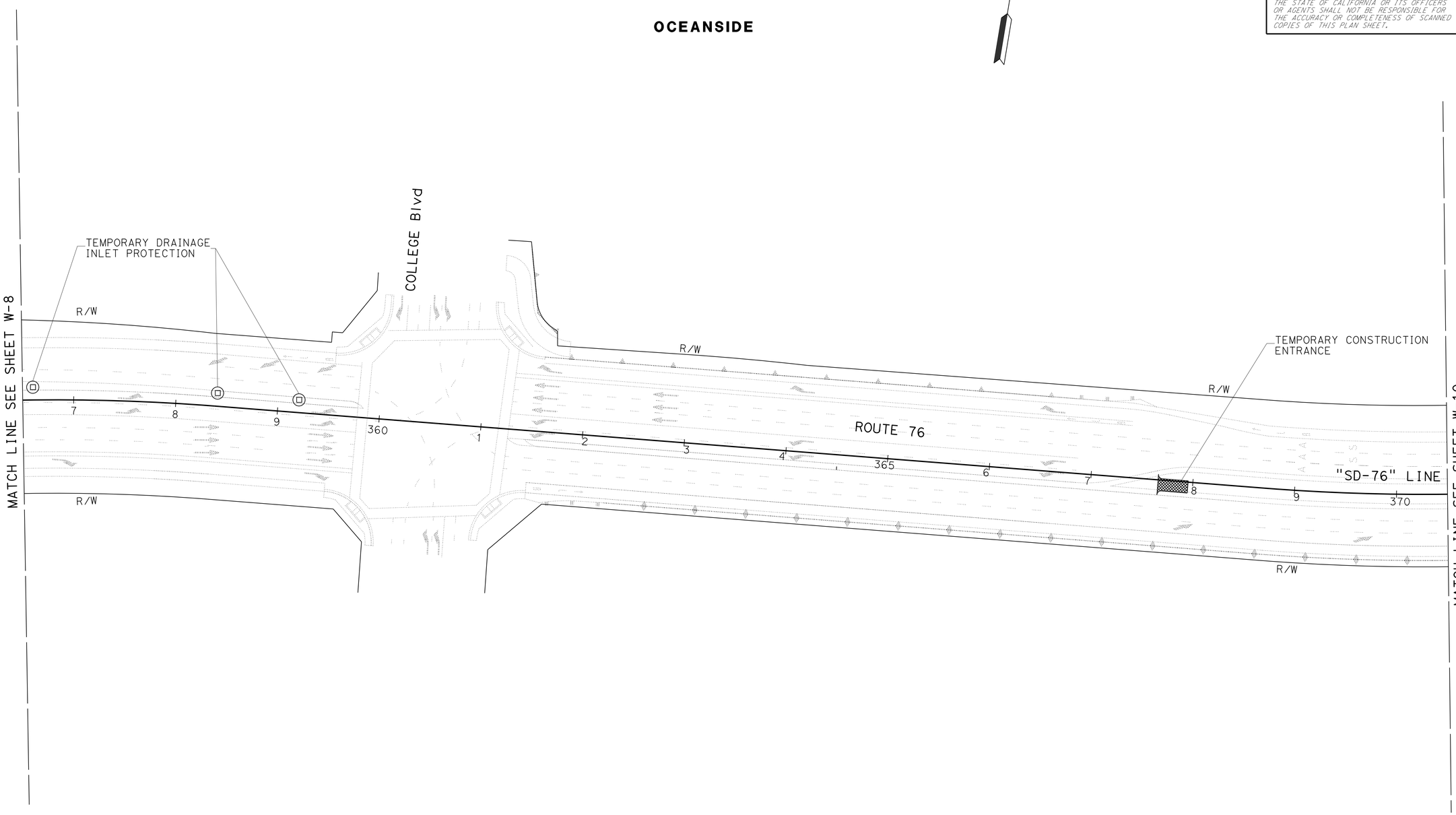

WATER POLLUTION CONTROL PLAN
W-9

APPROVED FOR WATER POLLUTION CONTROL WORK ONLY

SCALE: 1" = 50'

STATE OF CALIFORNIA - DEPARTMENT OF TRANSPORTATION
Caltrans PROJECT DEVELOPMENT
TRAFFIC

FUNCTIONAL SUPERVISOR: RICHARD ESTRADA
CALCULATED-DESIGNED BY: KENNY T. NGUYEN
CHECKED BY: BARZAN ARAN
REVISED BY
DATE REVISED

LAST REVISION 12-16-13
DATE PLOTTED => 28-MAY-2014
TIME PLOTTED => 14:18

Dist	COUNTY	ROUTE	POST MILES TOTAL PROJECT	SHEET No.	TOTAL SHEETS
11	SD	76	R4.2/R7.6	46	217

REGISTERED CIVIL ENGINEER 04-24-14 DATE

05-19-14
PLANS APPROVAL DATE

REGISTERED PROFESSIONAL ENGINEER BARZAN A. ARAN No. C75167 Exp. 12/31/15 CIVIL STATE OF CALIFORNIA

THE STATE OF CALIFORNIA OR ITS OFFICERS OR AGENTS SHALL NOT BE RESPONSIBLE FOR THE ACCURACY OR COMPLETENESS OF SCANNED COPIES OF THIS PLAN SHEET.

NOTE:

FOR ACCURATE RIGHT OF WAY DATA, CONTACT RIGHT OF WAY ENGINEERING AT THE DISTRICT OFFICE.

OCEANSIDE

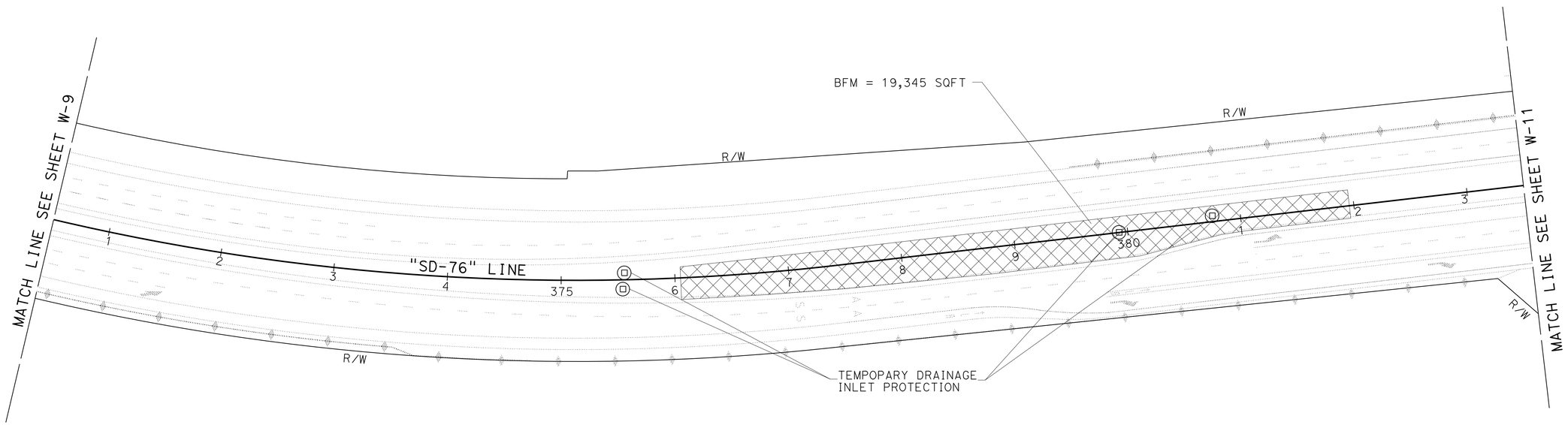

APPROVED FOR WATER POLLUTION CONTROL WORK ONLY

WATER POLLUTION CONTROL PLAN
W-10

SCALE: 1" = 50'

STATE OF CALIFORNIA - DEPARTMENT OF TRANSPORTATION
Caltrans TRAFFIC PROJECT DEVELOPMENT

FUNCTIONAL SUPERVISOR: RICHARD ESTRADA
CALCULATED-DESIGNED BY: KENNY T. NGUYEN
CHECKED BY: BARZAN ARAN
REVISED BY
DATE REVISED

LAST REVISION 12-16-13
DATE PLOTTED => 28-MAY-2014
TIME PLOTTED => 14:18

Dist	COUNTY	ROUTE	POST MILES TOTAL PROJECT	SHEET No.	TOTAL SHEETS
11	SD	76	R4.2/R7.6	47	217

REGISTERED CIVIL ENGINEER 04-24-14 DATE

05-19-14
PLANS APPROVAL DATE

REGISTERED PROFESSIONAL ENGINEER BARZAN A. ARAN No. C75167 Exp. 12/31/15 CIVIL STATE OF CALIFORNIA

THE STATE OF CALIFORNIA OR ITS OFFICERS OR AGENTS SHALL NOT BE RESPONSIBLE FOR THE ACCURACY OR COMPLETENESS OF SCANNED COPIES OF THIS PLAN SHEET.

NOTE:

FOR ACCURATE RIGHT OF WAY DATA, CONTACT RIGHT OF WAY ENGINEERING AT THE DISTRICT OFFICE.

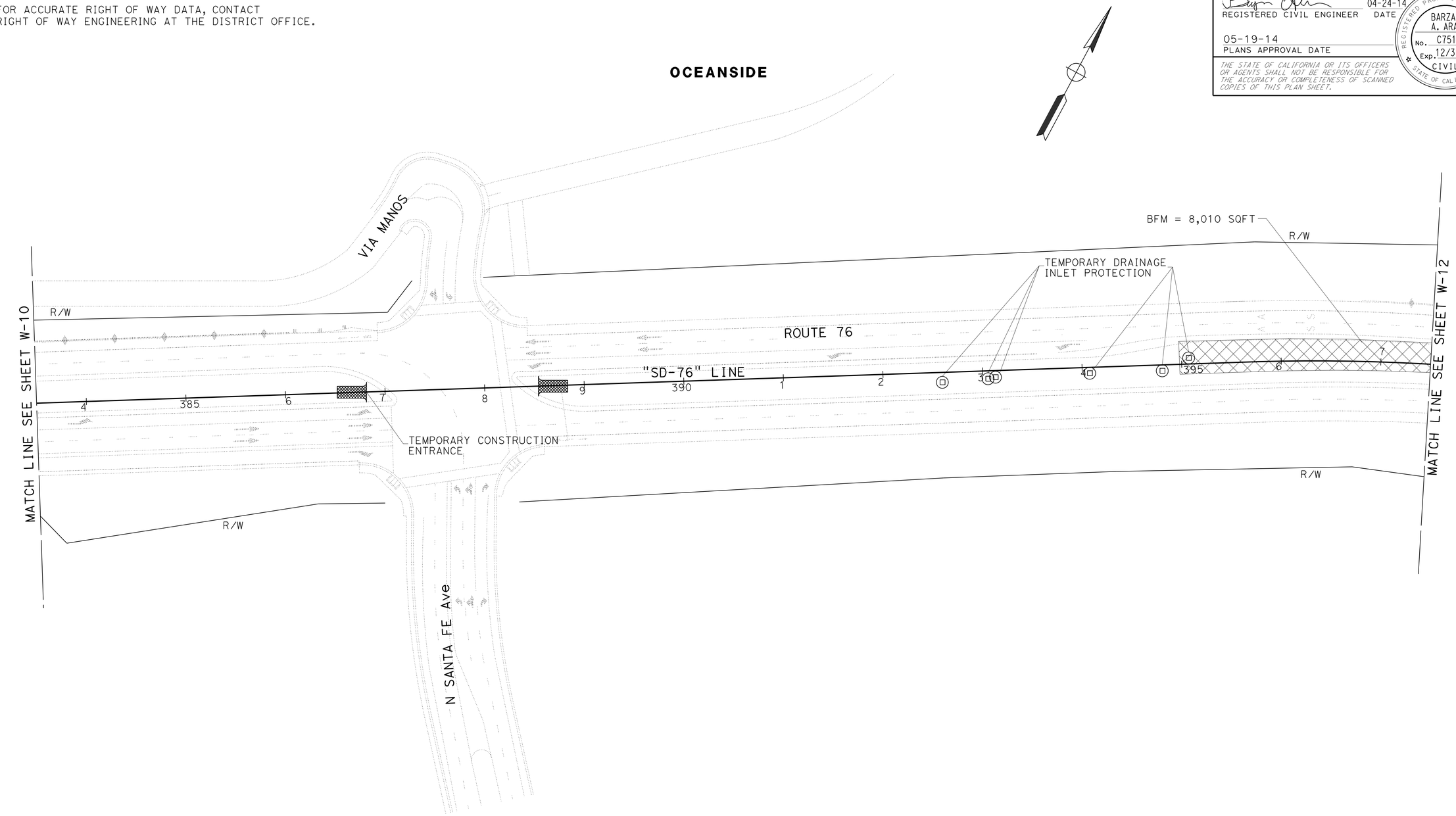

WATER POLLUTION CONTROL PLAN

W-11

APPROVED FOR WATER POLLUTION CONTROL WORK ONLY

SCALE: 1" = 50'

STATE OF CALIFORNIA - DEPARTMENT OF TRANSPORTATION
Caltrans TRAFFIC PROJECT DEVELOPMENT

FUNCTIONAL SUPERVISOR: RICHARD ESTRADA
CALCULATED-DESIGNED BY: KENNY T. NGUYEN
CHECKED BY: BARZAN ARAN
REVISED BY
DATE REVISED

LAST REVISION 12-16-13
DATE PLOTTED => 28-MAY-2014
TIME PLOTTED => 14:18

Dist	COUNTY	ROUTE	POST MILES TOTAL PROJECT	SHEET No.	TOTAL SHEETS
11	SD	76	R4.2/R7.6	48	217

REGISTERED CIVIL ENGINEER 04-24-14 DATE

05-19-14
PLANS APPROVAL DATE

REGISTERED PROFESSIONAL ENGINEER BARZAN A. ARAN No. C75167 Exp. 12/31/15 CIVIL STATE OF CALIFORNIA

THE STATE OF CALIFORNIA OR ITS OFFICERS OR AGENTS SHALL NOT BE RESPONSIBLE FOR THE ACCURACY OR COMPLETENESS OF SCANNED COPIES OF THIS PLAN SHEET.

NOTE:

FOR ACCURATE RIGHT OF WAY DATA, CONTACT RIGHT OF WAY ENGINEERING AT THE DISTRICT OFFICE.

OCEANSIDE

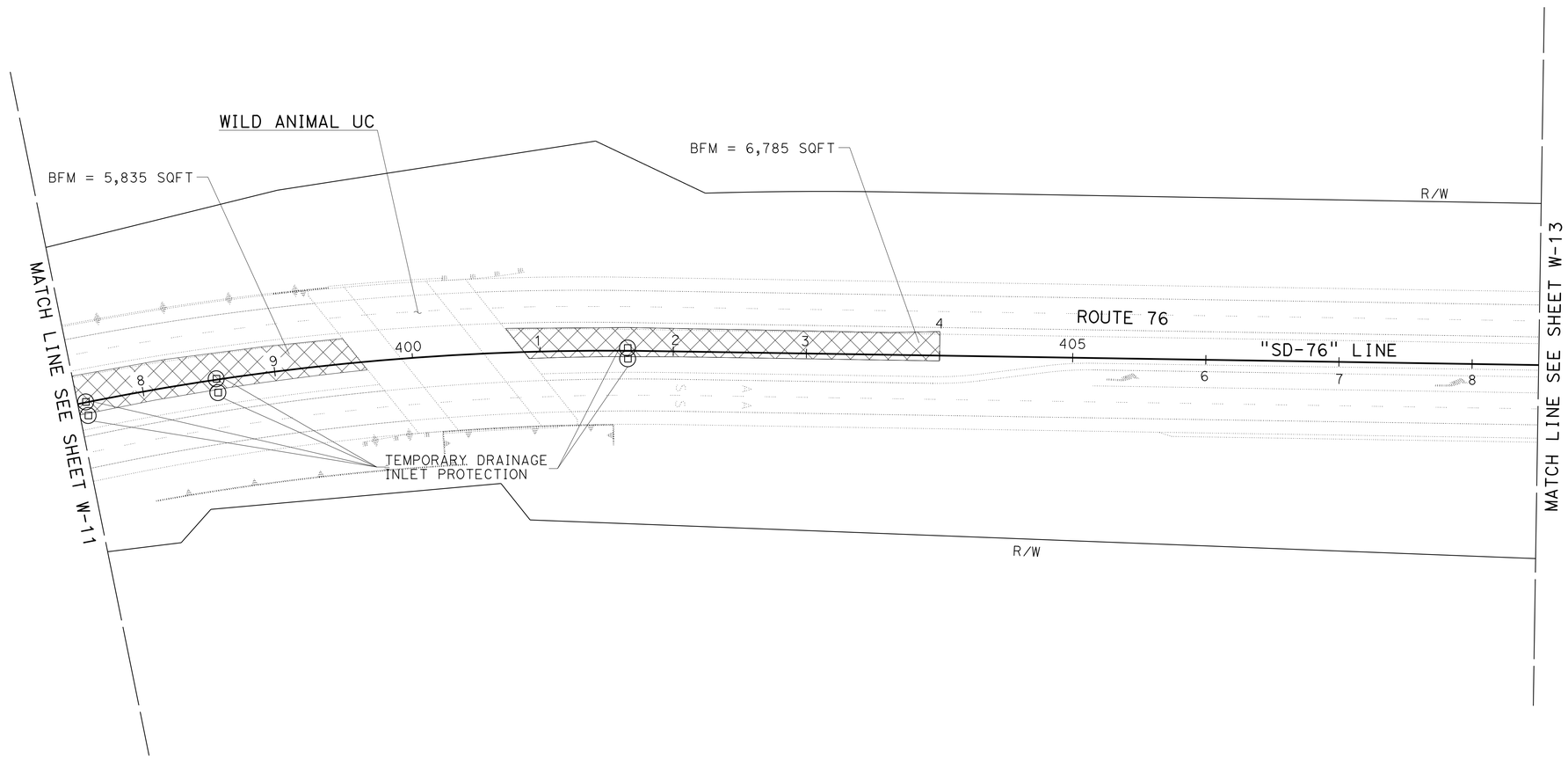

APPROVED FOR WATER POLLUTION CONTROL WORK ONLY

WATER POLLUTION CONTROL PLAN

W-12

SCALE: 1" = 50'

STATE OF CALIFORNIA - DEPARTMENT OF TRANSPORTATION
Caltrans PROJECT DEVELOPMENT
TRAFFIC

FUNCTIONAL SUPERVISOR: RICHARD ESTRADA
CALCULATED-DESIGNED BY: KENNY T. NGUYEN
CHECKED BY: BARZAN ARAN
REVISED BY
DATE REVISED

LAST REVISION 12-16-13
DATE PLOTTED => 28-MAY-2014
TIME PLOTTED => 14:18

Dist	COUNTY	ROUTE	POST MILES TOTAL PROJECT	SHEET No.	TOTAL SHEETS
11	SD	76	R4.2/R7.6	49	217

REGISTERED CIVIL ENGINEER 04-24-14 DATE

05-19-14
PLANS APPROVAL DATE

REGISTERED PROFESSIONAL ENGINEER BARZAN A. ARAN No. C75167 Exp. 12/31/15 CIVIL STATE OF CALIFORNIA

THE STATE OF CALIFORNIA OR ITS OFFICERS OR AGENTS SHALL NOT BE RESPONSIBLE FOR THE ACCURACY OR COMPLETENESS OF SCANNED COPIES OF THIS PLAN SHEET.

NOTE:

FOR ACCURATE RIGHT OF WAY DATA, CONTACT RIGHT OF WAY ENGINEERING AT THE DISTRICT OFFICE.

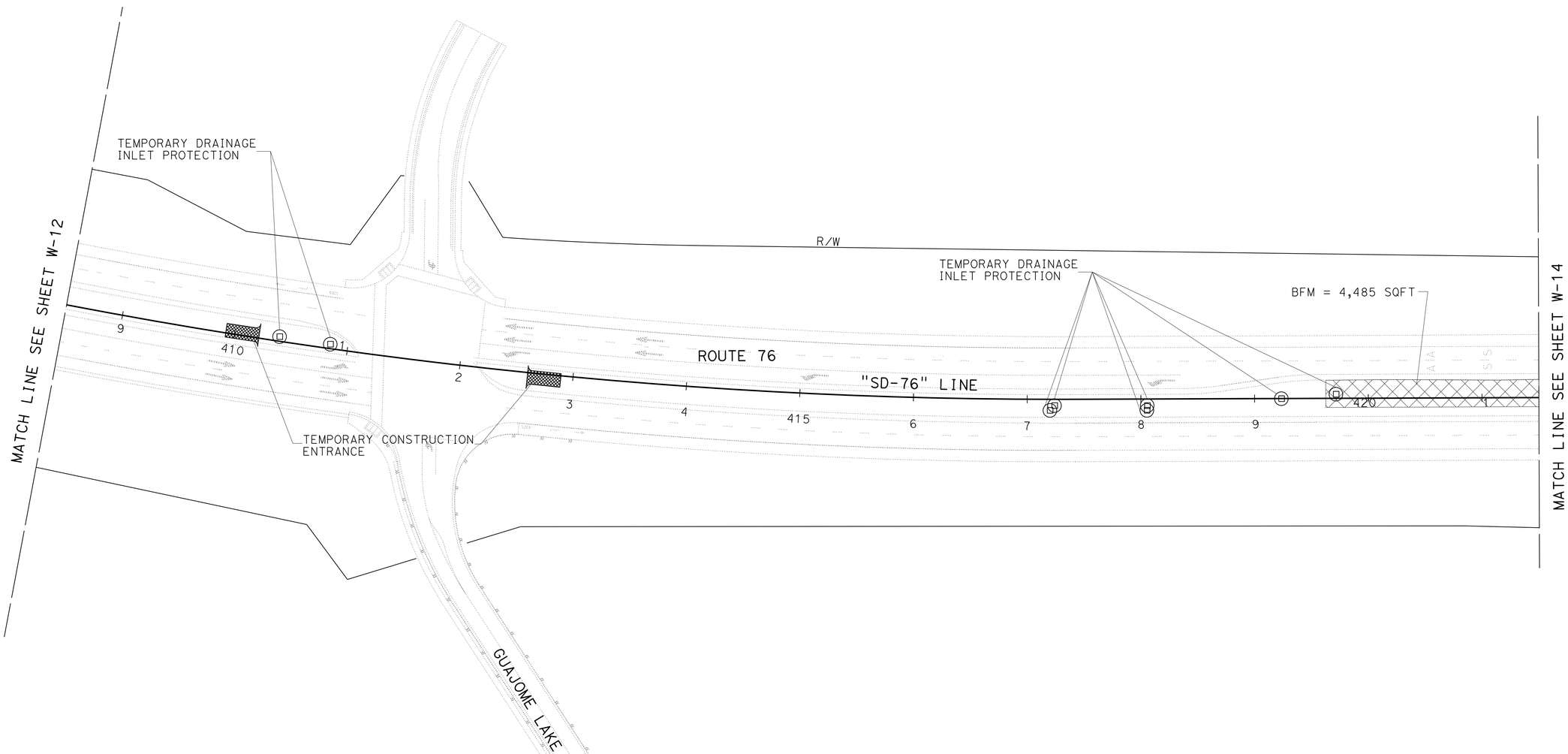

APPROVED FOR WATER POLLUTION CONTROL WORK ONLY

WATER POLLUTION CONTROL PLAN
W-13

SCALE: 1" = 50'

STATE OF CALIFORNIA - DEPARTMENT OF TRANSPORTATION
Caltrans PROJECT DEVELOPMENT
TRAFFIC

FUNCTIONAL SUPERVISOR: RICHARD ESTRADA
CALCULATED-DESIGNED BY: KENNY T. NGUYEN
CHECKED BY: BARZAN ARAN
REVISED BY
DATE REVISED

LAST REVISION 12-16-13
DATE PLOTTED => 28-MAY-2014
TIME PLOTTED => 14:18

Dist	COUNTY	ROUTE	POST MILES TOTAL PROJECT	SHEET No.	TOTAL SHEETS
11	SD	76	R4.2/R7.6	50	217

REGISTERED CIVIL ENGINEER 04-24-14 DATE

05-19-14
PLANS APPROVAL DATE

REGISTERED PROFESSIONAL ENGINEER BARZAN A. ARAN No. C75167 Exp. 12/31/15 CIVIL STATE OF CALIFORNIA

THE STATE OF CALIFORNIA OR ITS OFFICERS OR AGENTS SHALL NOT BE RESPONSIBLE FOR THE ACCURACY OR COMPLETENESS OF SCANNED COPIES OF THIS PLAN SHEET.

NOTE:

FOR ACCURATE RIGHT OF WAY DATA, CONTACT RIGHT OF WAY ENGINEERING AT THE DISTRICT OFFICE.

OCEANSIDE

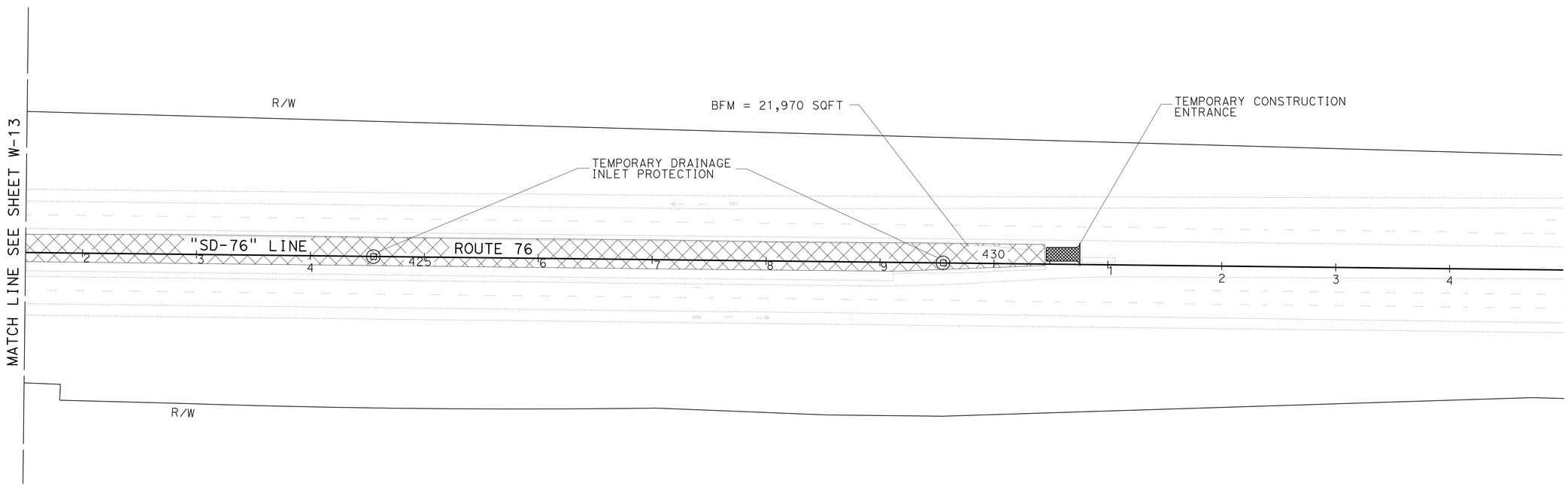

APPROVED FOR WATER POLLUTION CONTROL WORK ONLY

WATER POLLUTION CONTROL PLAN

W-14

SCALE: 1" = 50'

STATE OF CALIFORNIA - DEPARTMENT OF TRANSPORTATION
Caltrans TRAFFIC PROJECT DEVELOPMENT

FUNCTIONAL SUPERVISOR: RICHARD ESTRADA
CALCULATED-DESIGNED BY: KENNY T. NGUYEN
CHECKED BY: BARZAN ARAN
REVISED BY
DATE REVISED

LAST REVISION 12-16-13
DATE PLOTTED => 28-MAY-2014
TIME PLOTTED => 14:18

Dist	COUNTY	ROUTE	POST MILES TOTAL PROJECT	SHEET No.	TOTAL SHEETS
11	SD	76	R4.2/R7.6	51	217

REGISTERED CIVIL ENGINEER 04-24-14 DATE

05-19-14
PLANS APPROVAL DATE

REGISTERED PROFESSIONAL ENGINEER BARZAN A. ARAN No. C75167 Exp. 12/31/15 CIVIL STATE OF CALIFORNIA

THE STATE OF CALIFORNIA OR ITS OFFICERS OR AGENTS SHALL NOT BE RESPONSIBLE FOR THE ACCURACY OR COMPLETENESS OF SCANNED COPIES OF THIS PLAN SHEET.

EROSION CONTROL

LOCATION	SHEET	EROSION CONTROL (BONDED FIBER MATRIX)
		SQFT
Rte 76	W-2	30,340
Rte 76	W-3	16,165
Rte 76	W-4	7,690
Rte 76	W-5	43,030
Rte 76	W-6	11,215
Rte 76	W-10	19,345
Rte 76	W-11	8,010
Rte 76	W-12	12,620
Rte 76	W-13	4,485
Rte 76	W-14	21,970
	TOTAL	174,870

EROSION CONTROL LEGEND

SEQUENCE	ITEM	MATERIAL		APPLICATION RATE	REMARKS
		DESCRIPTION	TYPE		
STEP 1	EROSION CONTROL (BONDED FIBER MATRIX)	FIBER	-	2500 LB/ACRE FOR SLOPES ≤ 4:1 (Horiz:Vert) 3000 LB/ACRE FOR SLOPES > 4:1 and ≤ 3:1 (Horiz:Vert) 3500 LB/ACRE FOR SLOPES > 3:1 and ≤ 2:1 (Horiz:Vert) 4000 LB/ACRE FOR SLOPES > 2:1 and ≤ 1:1 (Horiz:Vert) 4500 LB/ACRE FOR SLOPES > 1:1 (Horiz:Vert)	APPLICATION RATE IS FOR FIBER AND TACKIFIER COMBINED
		TACKIFIER	-		
STEP 2	EROSION CONTROL (BONDED FIBER MATRIX)	FIBER	-	500 LB/ACRE	
		TACKIFIER	-		
		SEED	-	27 LB/ACRE	

SEED MIX

BOTANICAL NAME (COMMON NAME)	PERCENT GERMINATION (MINIMUM)	POUNDS PURE LIVE SEED PER ACRE (SLOPE MEASUREMENT)
ERIOGONUM FASCICULATUM [1] (CALIFORNIA BUCKWHEAT)	35	4.0
ESCHOLACHOLZIA CALIFORNICA[1] (CALIFORNIA POPPY)	60	3.0
LASTHENIA CALIFORNICA [1] (GOLDFIELDS)	35	2.0
LOTUS SCOPARIUS [1] (DEERWEED)	35	3.0
LUPINUS SUCCULENTUS [1] (ARROYO LUPINE)	50	4.0
NASSELLA PULCHRA [1] (PURPLE NEEDLEGRASS)	35	6.0
VULPIA MICROSTACHYS [1] (SMALL FESCUE)	40	5.0
	TOTAL	27.0

[1] SEED PRODUCED IN CALIFORNIA ONLY

TEMPORARY WATER POLLUTION CONTROL QUANTITIES

LOCATION	SHEET	TEMPORARY DRAINAGE INLET PROTECTION	TEMPORARY CONSTRUCTION ENTRANCE
		EA	EA
Rte 76	W-1	5	1
Rte 76	W-2	4	1
Rte 76	W-3	1	1
Rte 76	W-4	3	2
Rte 76	W-5	2	
Rte 76	W-6	3	2
Rte 76	W-7	3	
Rte 76	W-8	6	1
Rte 76	W-9	3	1
Rte 76	W-10	4	
Rte 76	W-11	6	2
Rte 76	W-12	6	
Rte 76	W-13	8	2
Rte 76	W-14	2	1
	TOTAL	56	14

WATER POLLUTION CONTROL QUANTITIES
WQ-1

NO SCALE

REVISED BY | DATE REVISED
KENNY T. NGUYEN | BARZAN ARAN
CALCULATED-DESIGNED BY | CHECKED BY
FUNCTIONAL SUPERVISOR: RICHARD ESTRADA

STATE OF CALIFORNIA - DEPARTMENT OF TRANSPORTATION
Caltrans TRAFFIC PROJECT DEVELOPMENT

LAST REVISION 12-16-13 | DATE PLOTTED => 28-MAY-2014 | TIME PLOTTED => 14:18

Dist	COUNTY	ROUTE	POST MILES TOTAL PROJECT	SHEET No.	TOTAL SHEETS
11	SD	76	R4.2/R7.6	52	217

REGISTERED CIVIL ENGINEER 04-24-14 DATE

05-19-14
PLANS APPROVAL DATE

REGISTERED PROFESSIONAL ENGINEER BARZAN A. ARAN No. C75167 Exp. 12/31/15 CIVIL STATE OF CALIFORNIA

THE STATE OF CALIFORNIA OR ITS OFFICERS OR AGENTS SHALL NOT BE RESPONSIBLE FOR THE ACCURACY OR COMPLETENESS OF SCANNED COPIES OF THIS PLAN SHEET.

NOTE:

1. FOR ACCURATE RIGHT OF WAY DATA, CONTACT RIGHT OF WAY ENGINEERING AT THE DISTRICT OFFICE.

LEGEND:

GLD = GRATED LINE DRAIN; 0.6% PRE-SLOPED, DEPTH=10" Min

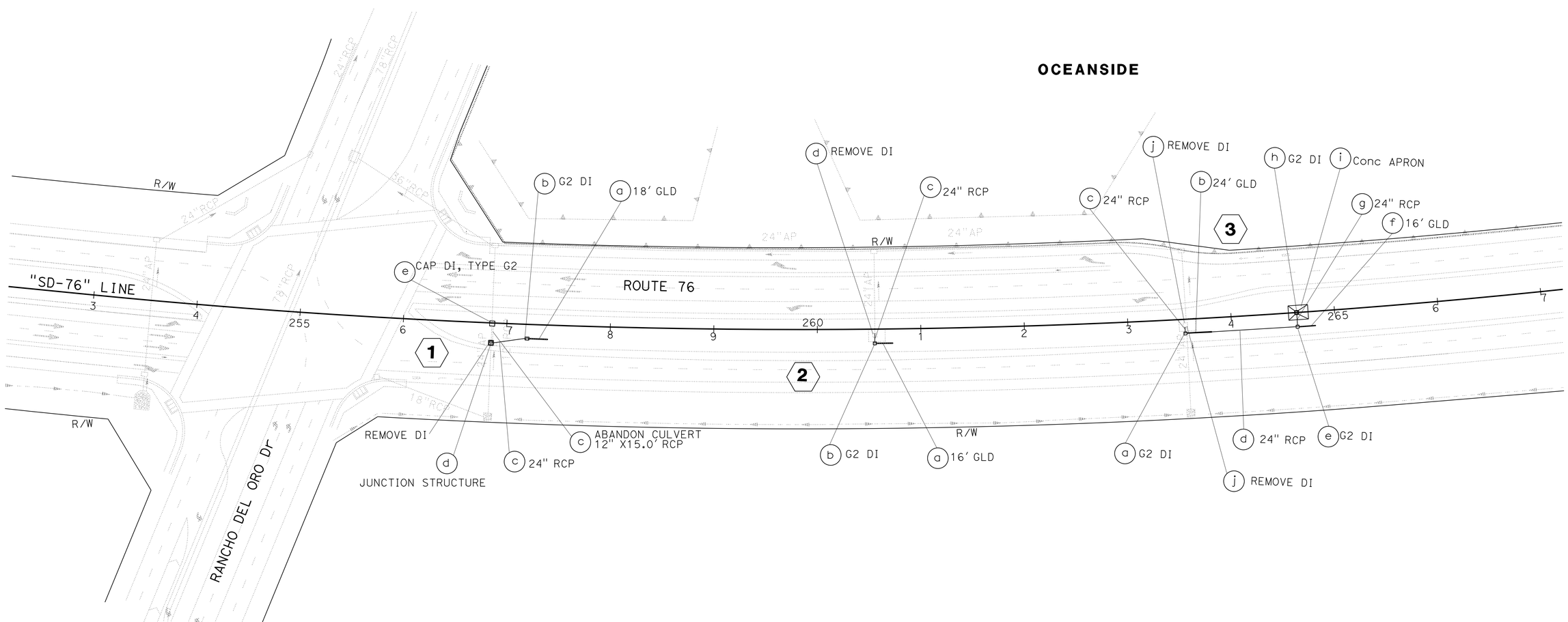

APPROVED FOR DRAINAGE WORK ONLY

SCALE: 1" = 50'

DRAINAGE PLAN D-1

STATE OF CALIFORNIA - DEPARTMENT OF TRANSPORTATION
Caltrans PROJECT DEVELOPMENT
TRAFFIC

FUNCTIONAL SUPERVISOR: RICHARD ESTRADA
CALCULATED-DESIGNED BY: BETHNAY DES JARDINS
CHECKED BY: BARZAN ARAN
REVISED BY
DATE REVISED

LAST REVISION 03-18-14
DATE PLOTTED => 28-MAY-2014
TIME PLOTTED => 14:18

Dist	COUNTY	ROUTE	POST MILES TOTAL PROJECT	SHEET No.	TOTAL SHEETS
11	SD	76	R4.2/R7.6	53	217

REGISTERED CIVIL ENGINEER 04-24-14 DATE

05-19-14
PLANS APPROVAL DATE

REGISTERED PROFESSIONAL ENGINEER
BARZAN A. ARAN
No. C75167
Exp. 12/31/15
CIVIL
STATE OF CALIFORNIA

THE STATE OF CALIFORNIA OR ITS OFFICERS OR AGENTS SHALL NOT BE RESPONSIBLE FOR THE ACCURACY OR COMPLETENESS OF SCANNED COPIES OF THIS PLAN SHEET.

NOTE:

1. FOR ACCURATE RIGHT OF WAY DATA, CONTACT RIGHT OF WAY ENGINEERING AT THE DISTRICT OFFICE.

OCEANSIDE

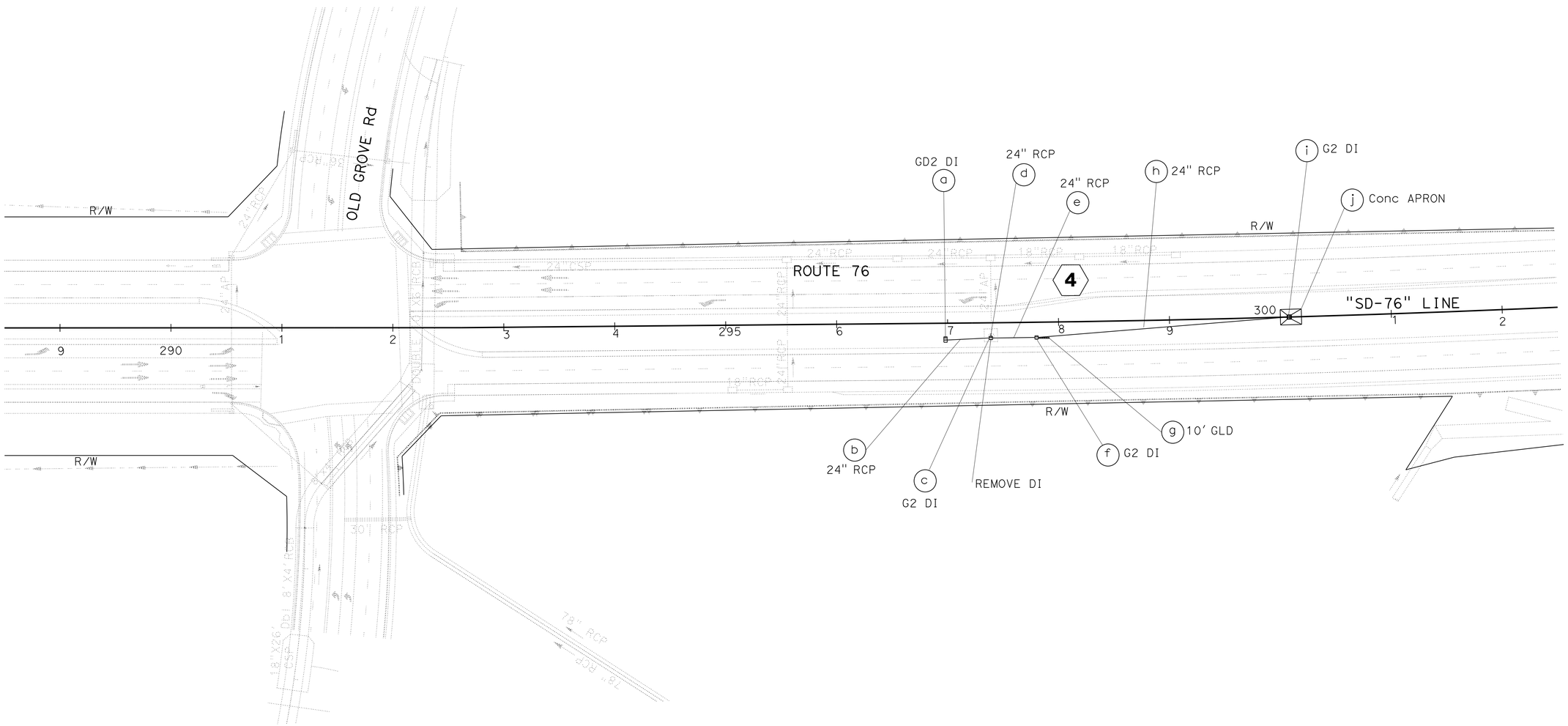

APPROVED FOR DRAINAGE WORK ONLY

SCALE: 1" = 50'

DRAINAGE PLAN
D-2

STATE OF CALIFORNIA - DEPARTMENT OF TRANSPORTATION
Caltrans PROJECT DEVELOPMENT
TRAFFIC

FUNCTIONAL SUPERVISOR: RICHARD ESTRADA
CALCULATED-DESIGNED BY: BETHNAY DES JARDINS
CHECKED BY: BARZAN ARAN
REVISED BY
DATE REVISED

LAST REVISION 03-05-14
DATE PLOTTED => 28-MAY-2014
TIME PLOTTED => 14:18

Dist	COUNTY	ROUTE	POST MILES TOTAL PROJECT	SHEET No.	TOTAL SHEETS
11	SD	76	R4.2/R7.6	54	217

REGISTERED CIVIL ENGINEER 04-24-14 DATE

05-19-14
PLANS APPROVAL DATE

REGISTERED PROFESSIONAL ENGINEER BARZAN A. ARAN No. C75167 Exp. 12/31/15 CIVIL STATE OF CALIFORNIA

THE STATE OF CALIFORNIA OR ITS OFFICERS OR AGENTS SHALL NOT BE RESPONSIBLE FOR THE ACCURACY OR COMPLETENESS OF SCANNED COPIES OF THIS PLAN SHEET.

NOTE:

1. FOR ACCURATE RIGHT OF WAY DATA, CONTACT RIGHT OF WAY ENGINEERING AT THE DISTRICT OFFICE.

OCEANSIDE

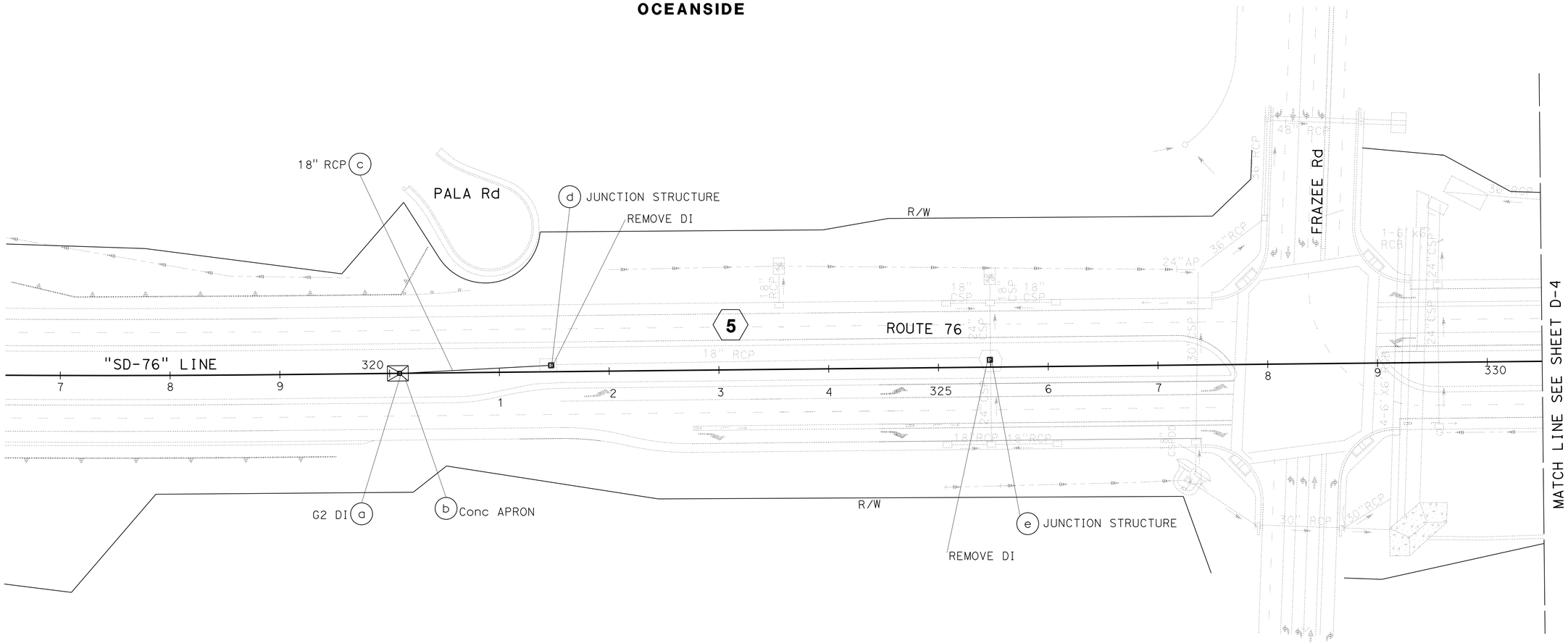

APPROVED FOR DRAINAGE WORK ONLY

SCALE: 1" = 50'

DRAINAGE PLAN D-3

STATE OF CALIFORNIA - DEPARTMENT OF TRANSPORTATION
Caltrans PROJECT DEVELOPMENT
TRAFFIC

FUNCTIONAL SUPERVISOR: RICHARD ESTRADA
CALCULATED-DESIGNED BY: BETHNAY DES JARDINS
CHECKED BY: BARZAN ARAN
REVISED BY
DATE REVISED

LAST REVISION 03-05-14
DATE PLOTTED => 28-MAY-2014
TIME PLOTTED => 14:18

Dist	COUNTY	ROUTE	POST MILES TOTAL PROJECT	SHEET No.	TOTAL SHEETS
11	SD	76	R4.2/R7.6	55	217

REGISTERED CIVIL ENGINEER 04-24-14 DATE

05-19-14
PLANS APPROVAL DATE

REGISTERED PROFESSIONAL ENGINEER BARZAN A. ARAN No. C75167 Exp. 12/31/15 CIVIL STATE OF CALIFORNIA

THE STATE OF CALIFORNIA OR ITS OFFICERS OR AGENTS SHALL NOT BE RESPONSIBLE FOR THE ACCURACY OR COMPLETENESS OF SCANNED COPIES OF THIS PLAN SHEET.

NOTE:

1. FOR ACCURATE RIGHT OF WAY DATA, CONTACT RIGHT OF WAY ENGINEERING AT THE DISTRICT OFFICE.

OCEANSIDE

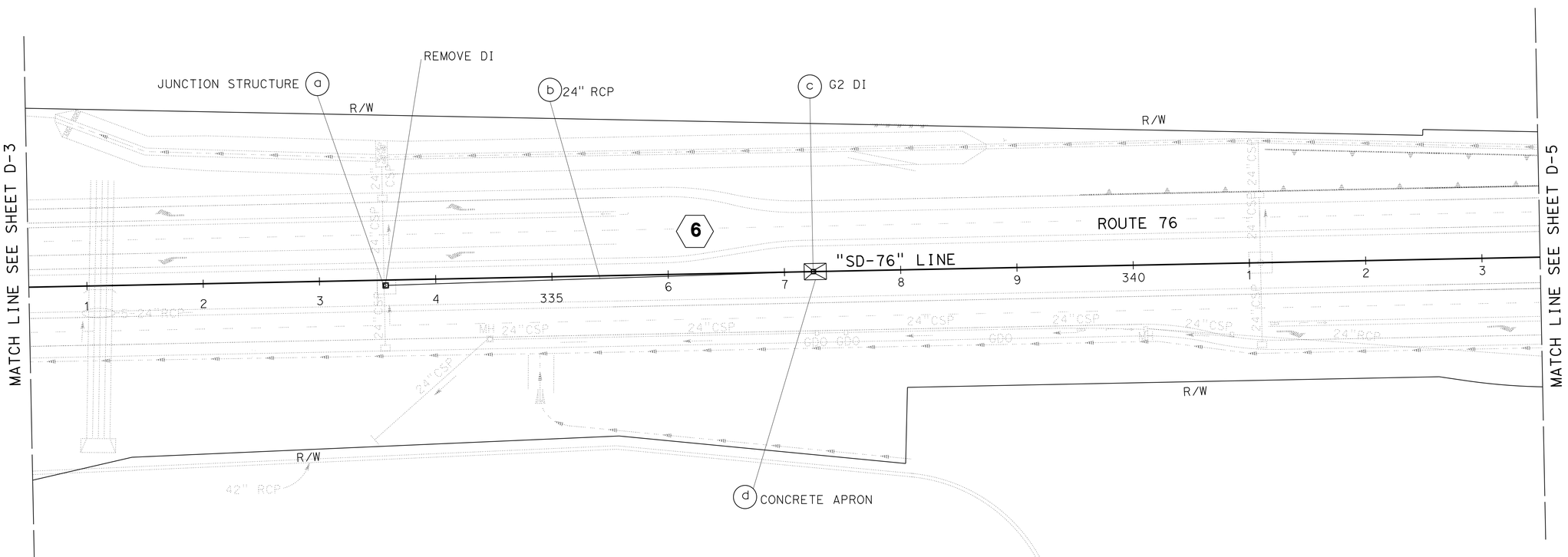

APPROVED FOR DRAINAGE WORK ONLY

SCALE: 1" = 50'

DRAINAGE PLAN D-4

STATE OF CALIFORNIA - DEPARTMENT OF TRANSPORTATION
Caltrans PROJECT DEVELOPMENT
TRAFFIC

FUNCTIONAL SUPERVISOR: RICHARD ESTRADA
CALCULATED-DESIGNED BY: BETHNAY DES JARDINS
CHECKED BY: BARZAN ARAN
REVISED BY
DATE REVISED

LAST REVISION 03-05-14
DATE PLOTTED => 28-MAY-2014
TIME PLOTTED => 14:18

Dist	COUNTY	ROUTE	POST MILES TOTAL PROJECT	SHEET No.	TOTAL SHEETS
11	SD	76	R4.2/R7.6	56	217

REGISTERED CIVIL ENGINEER 04-24-14 DATE

05-19-14
PLANS APPROVAL DATE

REGISTERED PROFESSIONAL ENGINEER BARZAN A. ARAN No. C75167 Exp. 12/31/15 CIVIL STATE OF CALIFORNIA

THE STATE OF CALIFORNIA OR ITS OFFICERS OR AGENTS SHALL NOT BE RESPONSIBLE FOR THE ACCURACY OR COMPLETENESS OF SCANNED COPIES OF THIS PLAN SHEET.

NOTE:

1. FOR ACCURATE RIGHT OF WAY DATA, CONTACT RIGHT OF WAY ENGINEERING AT THE DISTRICT OFFICE.

OCEANSIDE

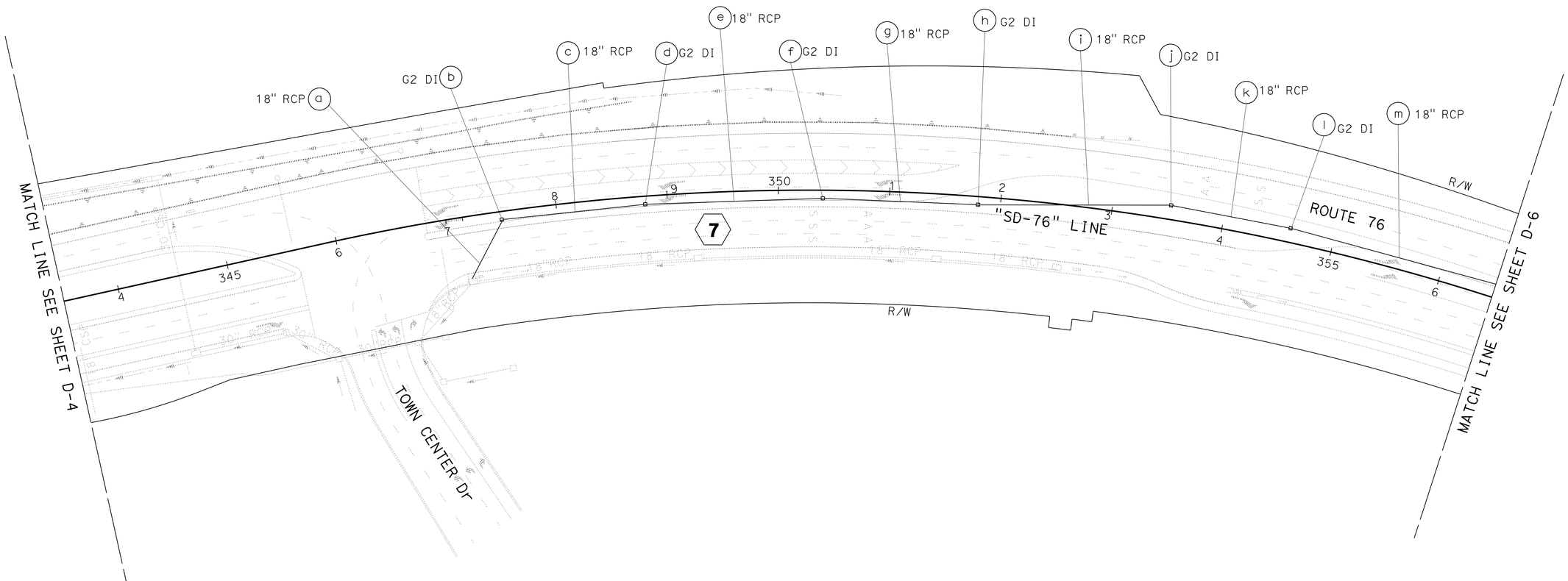

APPROVED FOR DRAINAGE WORK ONLY

SCALE: 1" = 50'

DRAINAGE PLAN D-5

STATE OF CALIFORNIA - DEPARTMENT OF TRANSPORTATION
Caltrans PROJECT DEVELOPMENT
TRAFFIC

FUNCTIONAL SUPERVISOR: RICHARD ESTRADA
CALCULATED-DESIGNED BY: BETHNAY DES JARDINS
CHECKED BY: BARZAN ARAN
REVISED BY / DATE REVISED

LAST REVISION 03-05-14
DATE PLOTTED => 28-MAY-2014
TIME PLOTTED => 14:18

Dist	COUNTY	ROUTE	POST MILES TOTAL PROJECT	SHEET No.	TOTAL SHEETS
11	SD	76	R4.2/R7.6	57	217

REGISTERED CIVIL ENGINEER 04-24-14 DATE

05-19-14
PLANS APPROVAL DATE

REGISTERED PROFESSIONAL ENGINEER
BARZAN A. ARAN
No. C75167
Exp. 12/31/15
CIVIL
STATE OF CALIFORNIA

THE STATE OF CALIFORNIA OR ITS OFFICERS OR AGENTS SHALL NOT BE RESPONSIBLE FOR THE ACCURACY OR COMPLETENESS OF SCANNED COPIES OF THIS PLAN SHEET.

NOTE:

1. FOR ACCURATE RIGHT OF WAY DATA, CONTACT RIGHT OF WAY ENGINEERING AT THE DISTRICT OFFICE.

OCEANSIDE

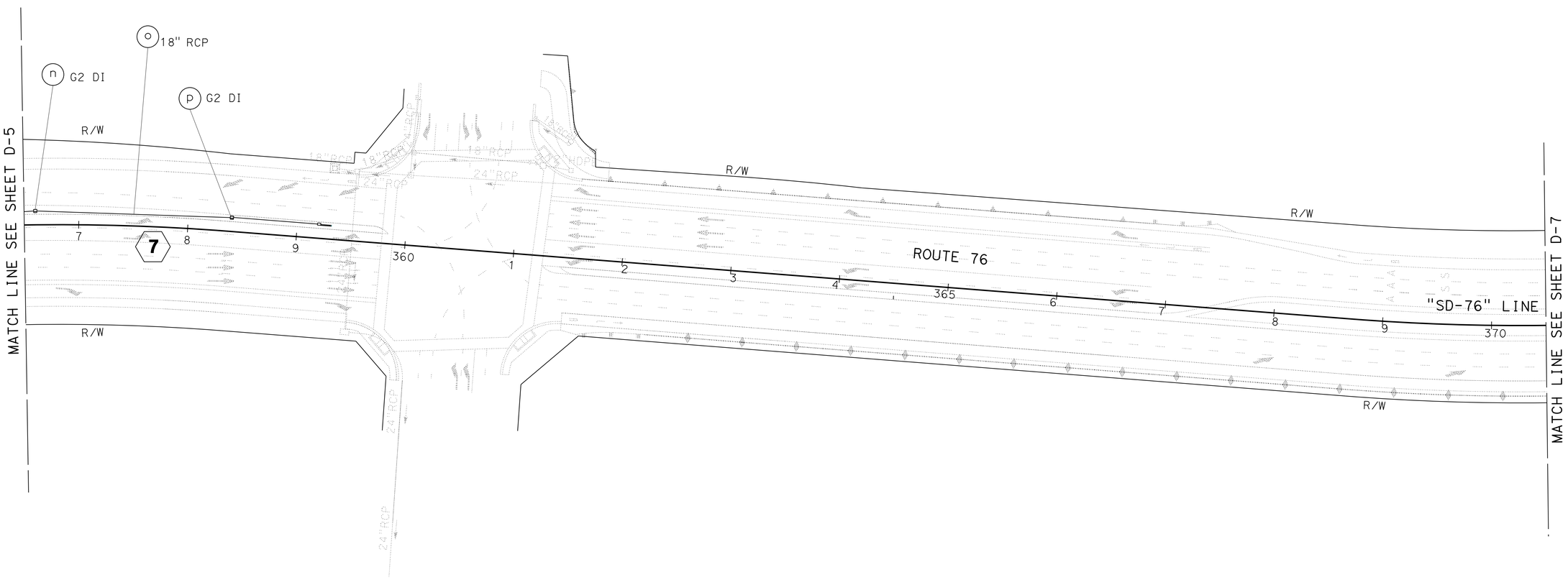

APPROVED FOR DRAINAGE WORK ONLY

SCALE: 1" = 50'

DRAINAGE PLAN D-6

STATE OF CALIFORNIA - DEPARTMENT OF TRANSPORTATION
Caltrans TRAFFIC PROJECT DEVELOPMENT

FUNCTIONAL SUPERVISOR: RICHARD ESTRADA

CALCULATED-DESIGNED BY: BETHNAY DES JARDINS
CHECKED BY: BARZAN ARAN

REVISED BY
DATE REVISED

LAST REVISION 03-05-14 | DATE PLOTTED => 28-MAY-2014 | TIME PLOTTED => 14:18

Dist	COUNTY	ROUTE	POST MILES TOTAL PROJECT	SHEET No.	TOTAL SHEETS
11	SD	76	R4.2/R7.6	58	217

REGISTERED CIVIL ENGINEER 04-24-14 DATE

05-19-14
PLANS APPROVAL DATE

REGISTERED PROFESSIONAL ENGINEER BARZAN A. ARAN No. C75167 Exp. 12/31/15 CIVIL STATE OF CALIFORNIA

THE STATE OF CALIFORNIA OR ITS OFFICERS OR AGENTS SHALL NOT BE RESPONSIBLE FOR THE ACCURACY OR COMPLETENESS OF SCANNED COPIES OF THIS PLAN SHEET.

NOTE:

1. FOR ACCURATE RIGHT OF WAY DATA, CONTACT RIGHT OF WAY ENGINEERING AT THE DISTRICT OFFICE.

OCEANSIDE

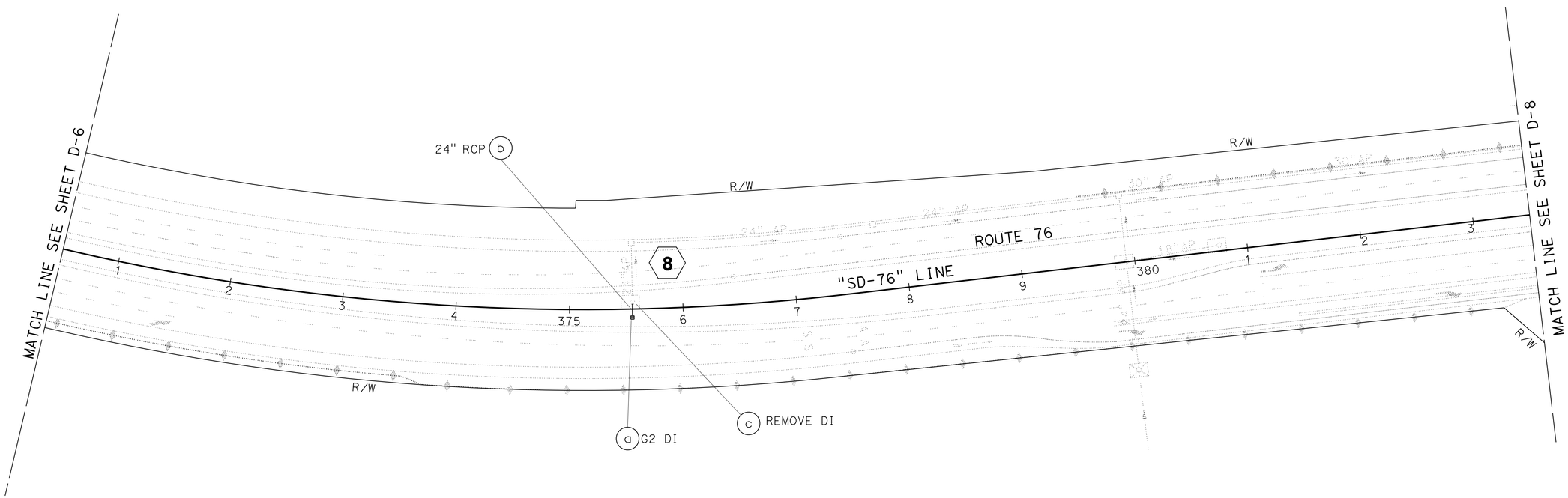

APPROVED FOR DRAINAGE WORK ONLY

SCALE: 1" = 50'

DRAINAGE PLAN D-7

STATE OF CALIFORNIA - DEPARTMENT OF TRANSPORTATION
Caltrans PROJECT DEVELOPMENT
TRAFFIC

FUNCTIONAL SUPERVISOR: RICHARD ESTRADA
CALCULATED-DESIGNED BY: BETHNAY DES JARDINS
CHECKED BY: BARZAN ARAN
REVISED BY
DATE REVISED

LAST REVISION 03-05-14
DATE PLOTTED => 28-MAY-2014
TIME PLOTTED => 14:18

Dist	COUNTY	ROUTE	POST MILES TOTAL PROJECT	SHEET No.	TOTAL SHEETS
11	SD	76	R4.2/R7.6	59	217

REGISTERED CIVIL ENGINEER 04-24-14 DATE

05-19-14
PLANS APPROVAL DATE

REGISTERED PROFESSIONAL ENGINEER BARZAN A. ARAN No. C75167 Exp. 12/31/15 CIVIL STATE OF CALIFORNIA

THE STATE OF CALIFORNIA OR ITS OFFICERS OR AGENTS SHALL NOT BE RESPONSIBLE FOR THE ACCURACY OR COMPLETENESS OF SCANNED COPIES OF THIS PLAN SHEET.

NOTE:

1. FOR ACCURATE RIGHT OF WAY DATA, CONTACT RIGHT OF WAY ENGINEERING AT THE DISTRICT OFFICE.

OCEANSIDE

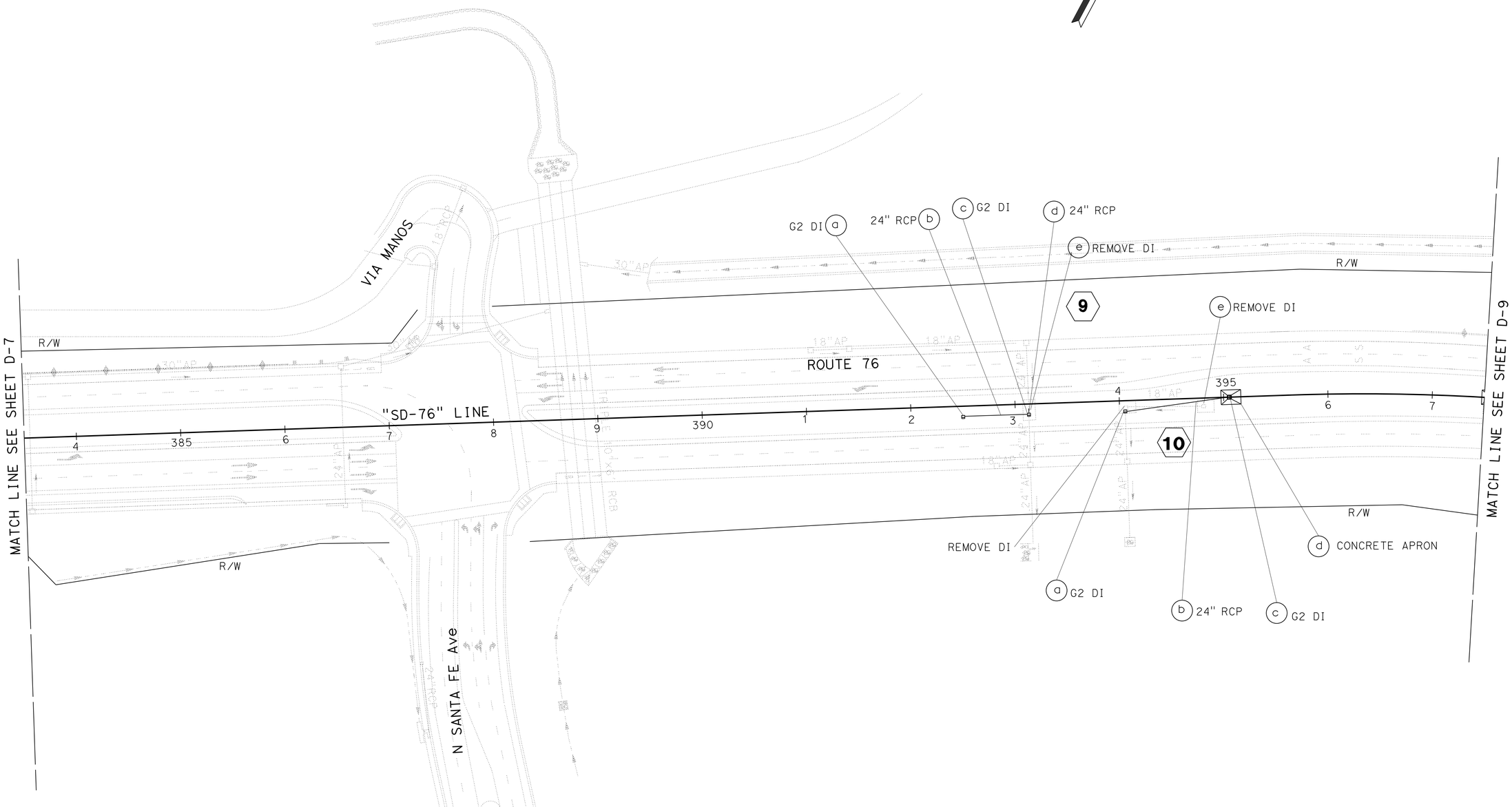

APPROVED FOR DRAINAGE WORK ONLY

SCALE: 1" = 50'

DRAINAGE PLAN D-8

STATE OF CALIFORNIA - DEPARTMENT OF TRANSPORTATION
Caltrans PROJECT DEVELOPMENT
TRAFFIC

FUNCTIONAL SUPERVISOR: RICHARD ESTRADA
CALCULATED-DESIGNED BY: BARZAN ARAN
CHECKED BY:
REVISED BY
DATE REVISED
BETHNAY DES JARDINS

LAST REVISION 03-05-14
DATE PLOTTED => 28-MAY-2014
TIME PLOTTED => 14:18

Dist	COUNTY	ROUTE	POST MILES TOTAL PROJECT	SHEET No.	TOTAL SHEETS
11	SD	76	R4.2/R7.6	60	217

REGISTERED CIVIL ENGINEER 04-24-14 DATE

05-19-14
PLANS APPROVAL DATE

REGISTERED PROFESSIONAL ENGINEER BARZAN A. ARAN No. C75167 Exp. 12/31/15 CIVIL STATE OF CALIFORNIA

THE STATE OF CALIFORNIA OR ITS OFFICERS OR AGENTS SHALL NOT BE RESPONSIBLE FOR THE ACCURACY OR COMPLETENESS OF SCANNED COPIES OF THIS PLAN SHEET.

NOTE:

1. FOR ACCURATE RIGHT OF WAY DATA, CONTACT RIGHT OF WAY ENGINEERING AT THE DISTRICT OFFICE.

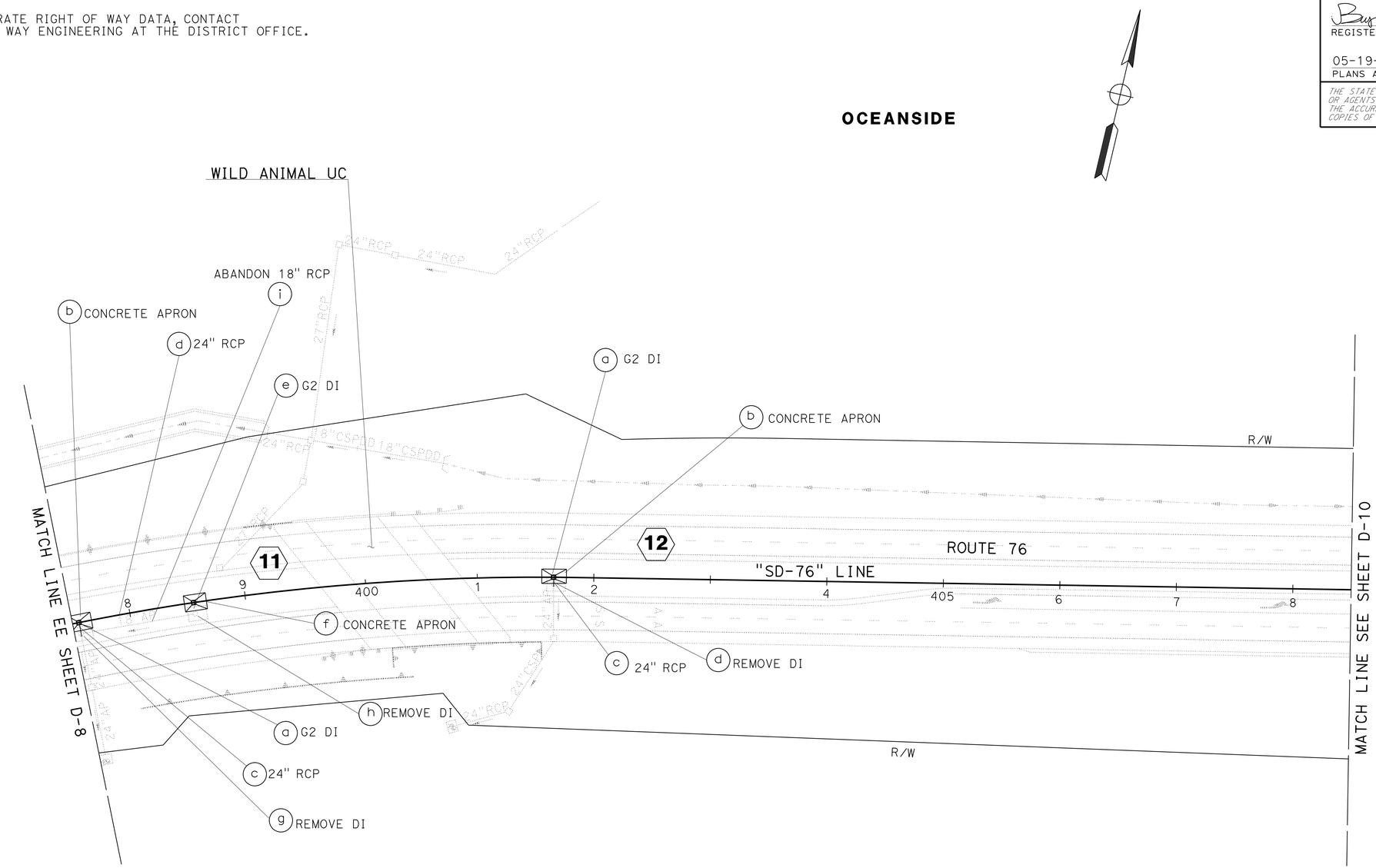

APPROVED FOR DRAINAGE WORK ONLY

SCALE: 1" = 50'

DRAINAGE PLAN D-9

STATE OF CALIFORNIA - DEPARTMENT OF TRANSPORTATION
Caltrans TRAFFIC PROJECT DEVELOPMENT

FUNCTIONAL SUPERVISOR: RICHARD ESTRADA
CALCULATED-DESIGNED BY: BETHNAY DES JARDINS
CHECKED BY: BARZAN ARAN
REVISED BY / DATE REVISED

LAST REVISION 03-05-14 | DATE PLOTTED => 28-MAY-2014 | TIME PLOTTED => 14:18

Dist	COUNTY	ROUTE	POST MILES TOTAL PROJECT	SHEET No.	TOTAL SHEETS
11	SD	76	R4.2/R7.6	61	217

REGISTERED CIVIL ENGINEER 04-24-14 DATE

05-19-14
PLANS APPROVAL DATE

REGISTERED PROFESSIONAL ENGINEER BARZAN A. ARAN No. C75167 Exp. 12/31/15 CIVIL STATE OF CALIFORNIA

THE STATE OF CALIFORNIA OR ITS OFFICERS OR AGENTS SHALL NOT BE RESPONSIBLE FOR THE ACCURACY OR COMPLETENESS OF SCANNED COPIES OF THIS PLAN SHEET.

NOTE:

1. FOR ACCURATE RIGHT OF WAY DATA, CONTACT RIGHT OF WAY ENGINEERING AT THE DISTRICT OFFICE.

OCEANSIDE

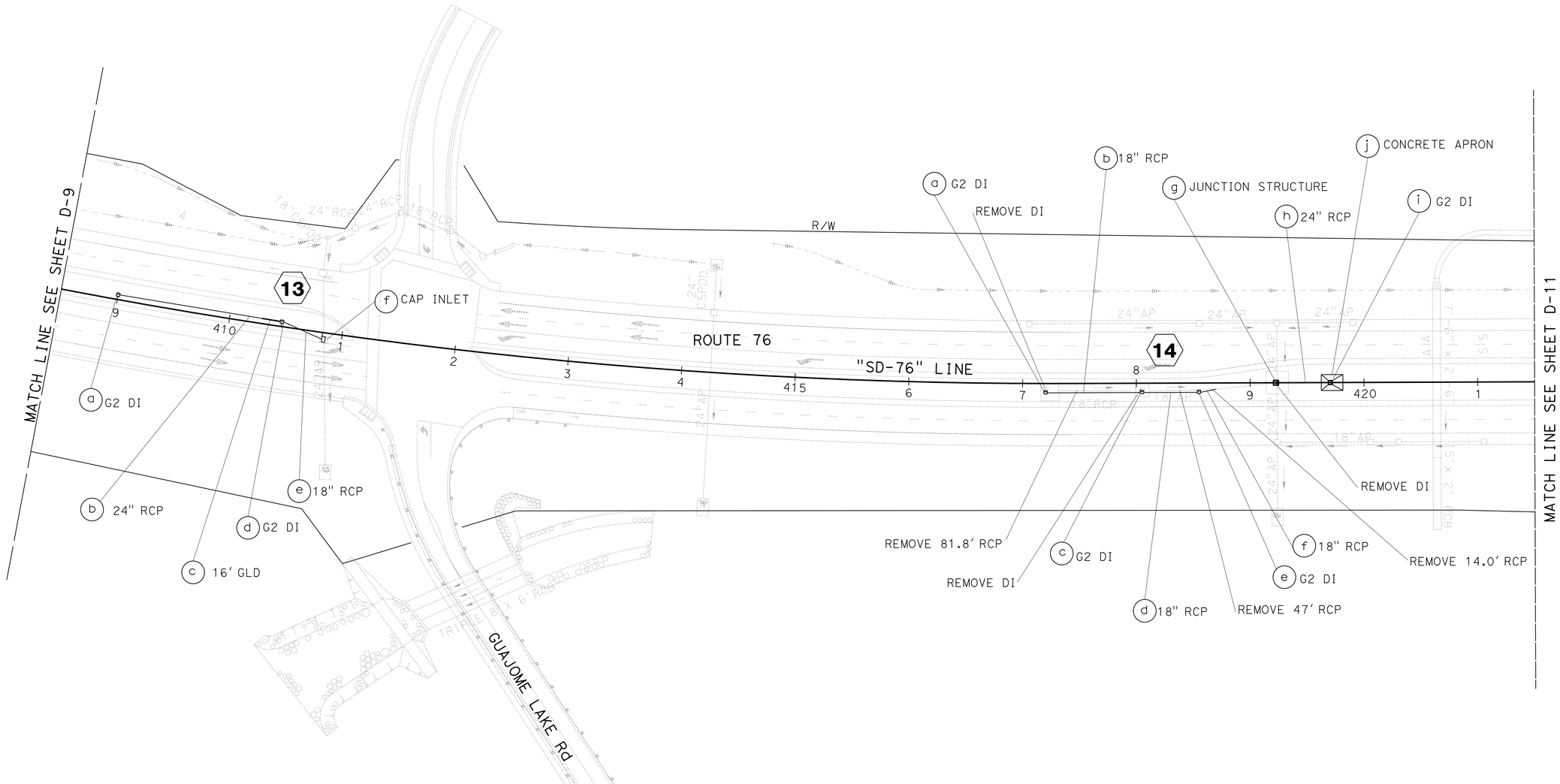

APPROVED FOR DRAINAGE WORK ONLY

SCALE: 1" = 50'

DRAINAGE PLAN D-10

STATE OF CALIFORNIA - DEPARTMENT OF TRANSPORTATION
Caltrans PROJECT DEVELOPMENT
TRAFFIC

FUNCTIONAL SUPERVISOR: RICHARD ESTRADA
CALCULATED-DESIGNED BY: BETHNAY DES JARDINS
CHECKED BY: BARZAN ARAN
REVISED BY
DATE REVISED

LAST REVISION 03-05-14
DATE PLOTTED => 28-MAY-2014
TIME PLOTTED => 14:18

Dist	COUNTY	ROUTE	POST MILES TOTAL PROJECT	SHEET No.	TOTAL SHEETS
11	SD	76	R4.2/R7.6	62	217

REGISTERED CIVIL ENGINEER 04-24-14 DATE

05-19-14
PLANS APPROVAL DATE

REGISTERED PROFESSIONAL ENGINEER BARZAN A. ARAN No. C75167 Exp. 12/31/15 CIVIL STATE OF CALIFORNIA

THE STATE OF CALIFORNIA OR ITS OFFICERS OR AGENTS SHALL NOT BE RESPONSIBLE FOR THE ACCURACY OR COMPLETENESS OF SCANNED COPIES OF THIS PLAN SHEET.

NOTE:

1. FOR ACCURATE RIGHT OF WAY DATA, CONTACT RIGHT OF WAY ENGINEERING AT THE DISTRICT OFFICE.

OCEANSIDE

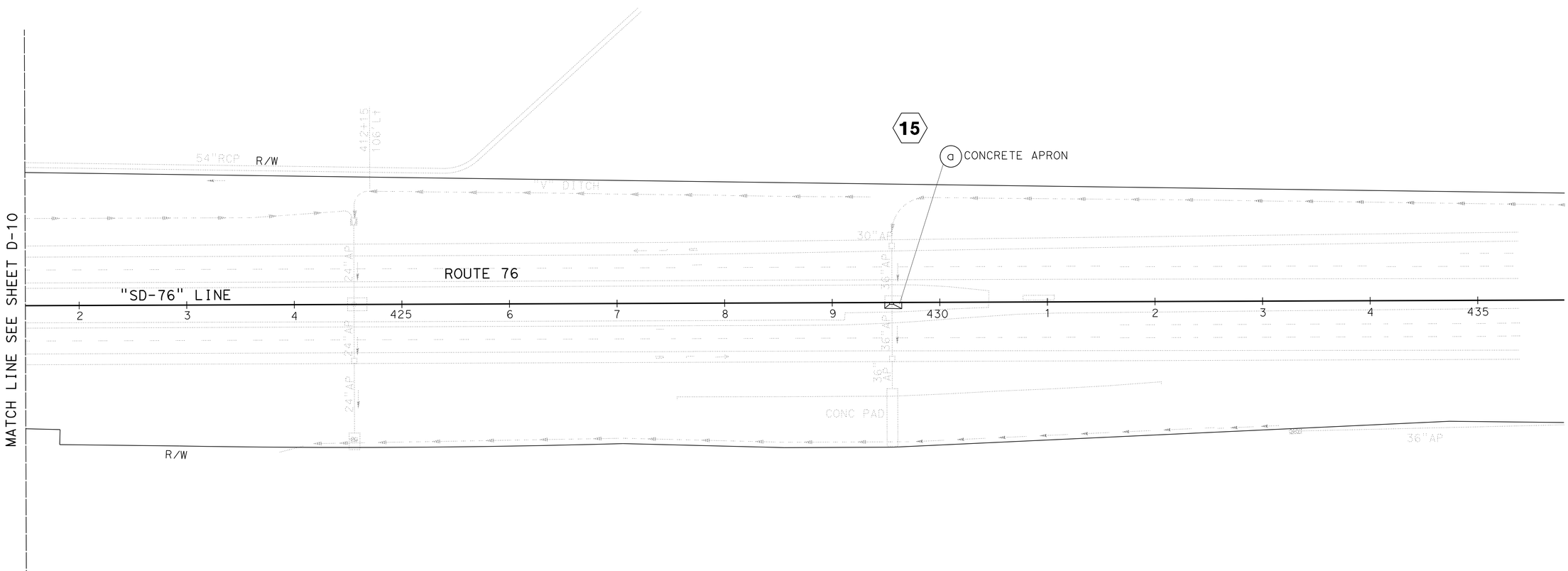

APPROVED FOR DRAINAGE WORK ONLY

SCALE: 1" = 50'

DRAINAGE PLAN D-11

STATE OF CALIFORNIA - DEPARTMENT OF TRANSPORTATION
Caltrans PROJECT DEVELOPMENT
TRAFFIC

FUNCTIONAL SUPERVISOR: RICHARD ESTRADA
CALCULATED-DESIGNED BY: BETHNAY DES JARDINS
CHECKED BY: BARZAN ARAN
REVISED BY
DATE REVISED

LAST REVISION 03-18-14
DATE PLOTTED => 28-MAY-2014
TIME PLOTTED => 14:18

Dist	COUNTY	ROUTE	POST MILES TOTAL PROJECT	SHEET No.	TOTAL SHEETS
11	SD	76	R4.2/R7.6	63	217

REGISTERED CIVIL ENGINEER 04-24-14 DATE

05-19-14
PLANS APPROVAL DATE

REGISTERED PROFESSIONAL ENGINEER BARZAN A. ARAN No. C75167 Exp. 12/31/15 CIVIL STATE OF CALIFORNIA

THE STATE OF CALIFORNIA OR ITS OFFICERS OR AGENTS SHALL NOT BE RESPONSIBLE FOR THE ACCURACY OR COMPLETENESS OF SCANNED COPIES OF THIS PLAN SHEET.

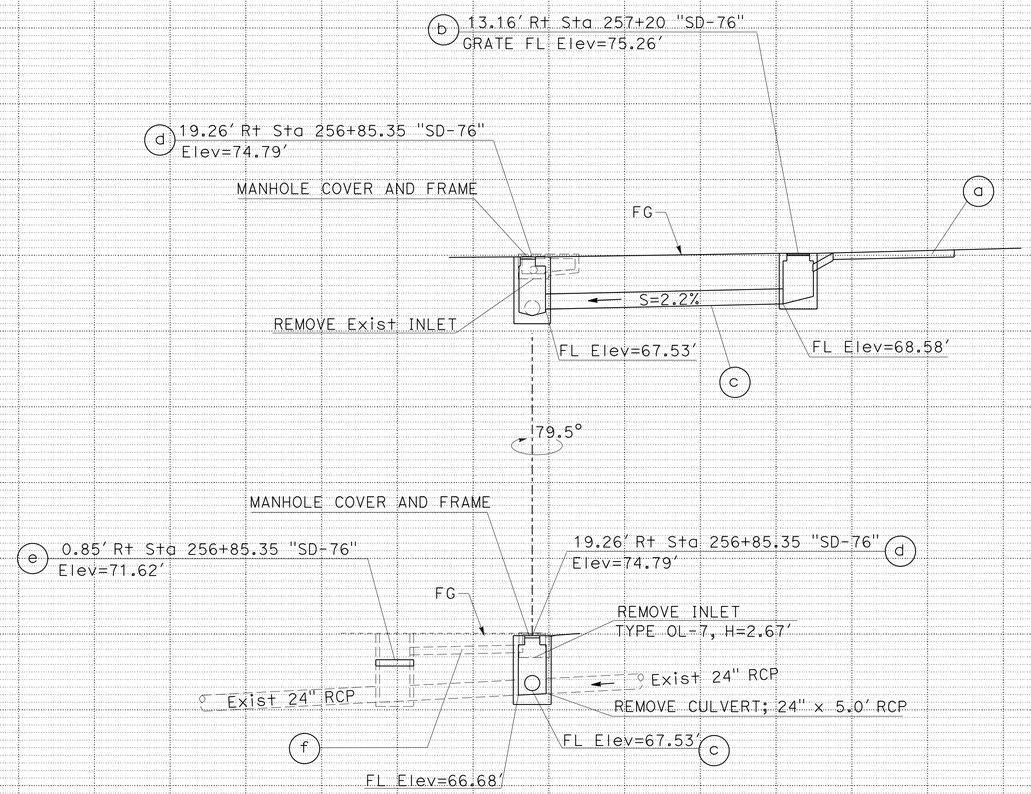

DRAINAGE SYSTEM (1)
Sta 256+85.35 "SD-76"

- (a) GRATED LINE DRAIN, L=18'
- (b) TYPE G2 INLET WITH 24-12 GRATE, FRAME & CHAIN; L=0.5', H=6.68'
- (c) 24" X 31.4' RCP
- (d) JUNCTION STRUCTURE WITH MANHOLE COVER AND FRAME L=5.0', SPAN=3.5', Hb=6.64'
- (e) CAP INLET, TYPE G2 (SEE DRAINAGE DETAILS)
- (f) ABANDON CULVERT; 12" x 15.0' RCP

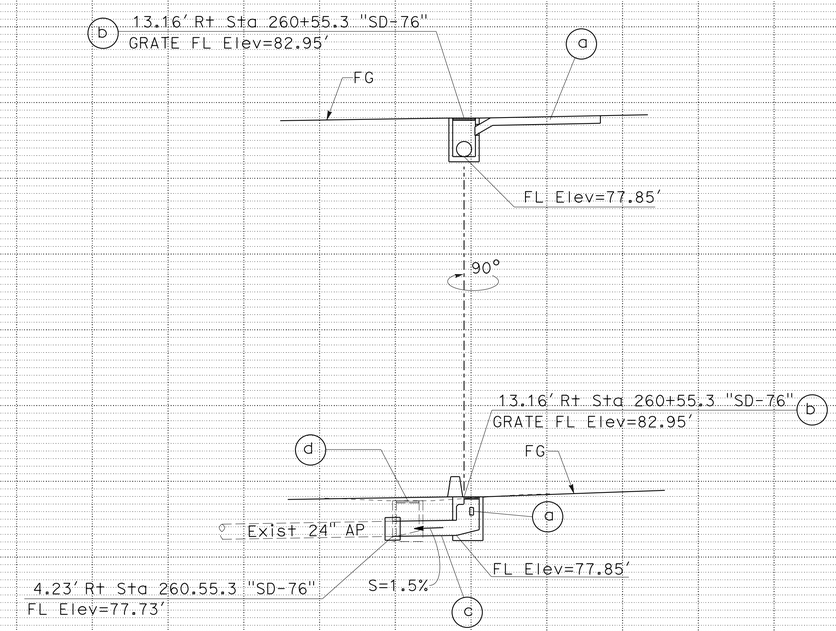

DRAINAGE SYSTEM (2)
Sta 260+55.3 "SD-76"

- (a) GRATED LINE DRAIN, L=16'
- (b) TYPE G2 INLET WITH 24-12 GRATE AND FRAME; H=5.10';L=0
- (c) 24" X 8.4' RCP WITH CONCRETE COLLAR (TYPE L-2) (SEE DRAINAGE DETAILS)
- (d) REMOVE G2 INLET; H=4.72'

DRAINAGE PROFILES

SCALE: Horiz 1" = 10'
Vert 1" = 10'

DP-1

STATE OF CALIFORNIA - DEPARTMENT OF TRANSPORTATION
Caltrans PROJECT DEVELOPMENT
TRAFFIC

FUNCTIONAL SUPERVISOR: RICHARD ESTRADA
CALCULATED-DESIGNED BY: BARZAN ARAN
CHECKED BY
REVISED BY
DATE REVISED

BETHNAY DES JARDINS

LAST REVISION 04-10-14 | DATE PLOTTED => 28-MAY-2014 | TIME PLOTTED => 14:18

Dist	COUNTY	ROUTE	POST MILES TOTAL PROJECT	SHEET No.	TOTAL SHEETS
11	SD	76	R4.2/R7.6	64	217

REGISTERED CIVIL ENGINEER 04-24-14 DATE

05-19-14
PLANS APPROVAL DATE

BARZAN A. ARAN No. C75167 Exp. 12/31/15 CIVIL STATE OF CALIFORNIA REGISTERED PROFESSIONAL ENGINEER

THE STATE OF CALIFORNIA OR ITS OFFICERS OR AGENTS SHALL NOT BE RESPONSIBLE FOR THE ACCURACY OR COMPLETENESS OF SCANNED COPIES OF THIS PLAN SHEET.

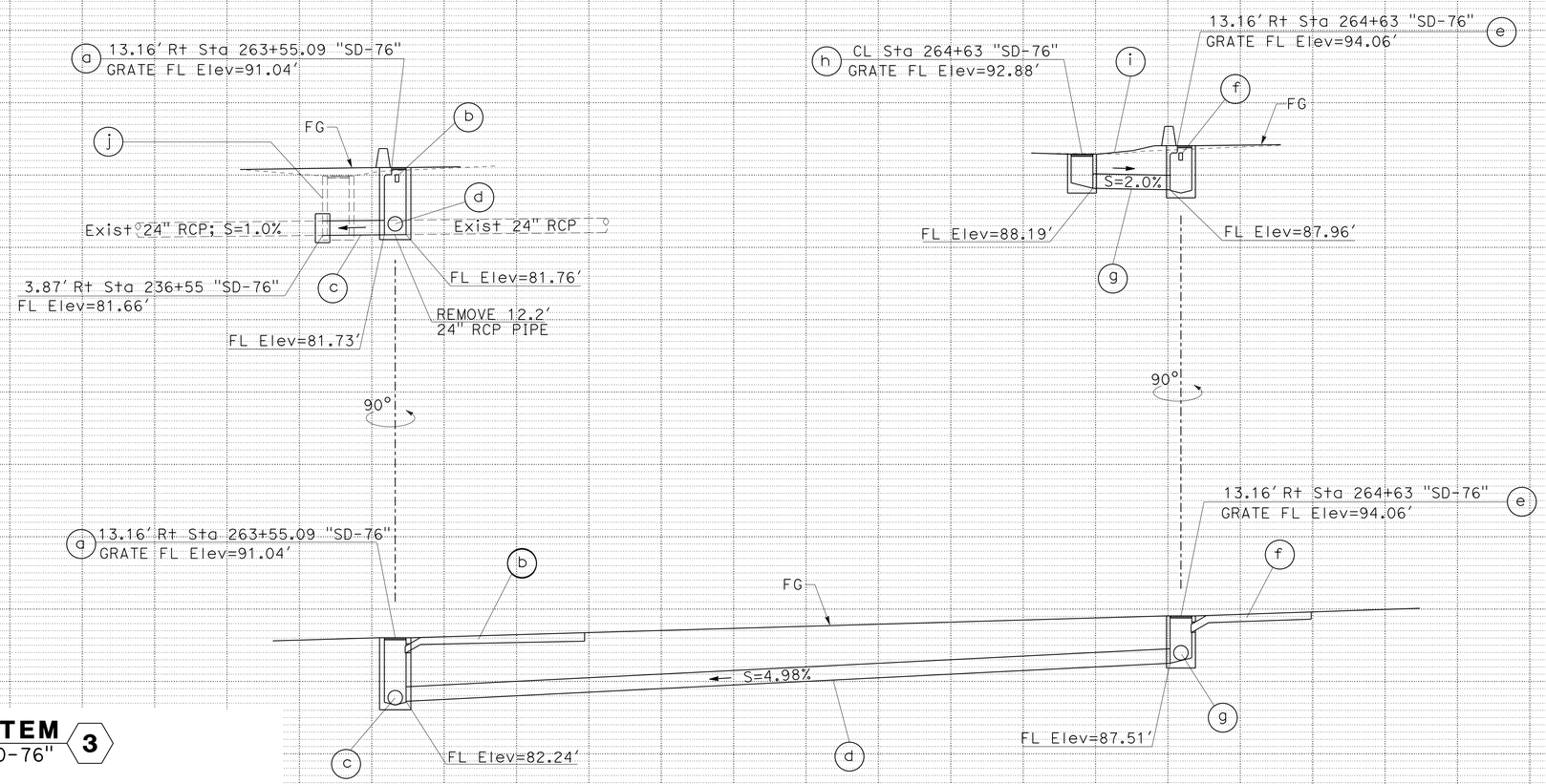

DRAINAGE SYSTEM 3
Sta 263+55.09 "SD-76"

- a TYPE G2 INLET WITH 24-12 GRATE AND FRAME & CHAIN; H=9.30′; L=0′
- b GRATED LINE DRAIN; L=24.0′
- c 24" X 8.5′ RCP WITH CONCRETE COLLAR (TYPE L-2) (SEE DRAINAGE DETAILS)
- d 24" X 105.7′ RCP
- e TYPE G2 INLET WITH 24-12 GRATE AND FRAME & CHAIN; H=6.55′; L=0′
- f GRATED LINE DRAIN; L=16′
- g 24" X 10.7′ RCP
- h TYPE G2 INLET WITH 24-12 GRATE AND FRAME & CHAIN; H=4.70′; L=0′
- i CONCRETE APRON (SEE DRAINAGE DETAILS)
- j REMOVE G2 INLET; H=8.2′

DRAINAGE PROFILES

SCALE: Horiz 1" = 10′
Vert 1" = 10′

DP-2

REVISED BY | DATE REVISED
BETHNAY DES JARDINS | BARZAN ARAN
CALCULATED-DESIGNED BY | CHECKED BY
FUNCTIONAL SUPERVISOR | RICHARD ESTRADA

STATE OF CALIFORNIA - DEPARTMENT OF TRANSPORTATION
Caltrans TRAFFIC PROJECT DEVELOPMENT

LAST REVISION 04-10-14 | DATE PLOTTED => 28-MAY-2014 | TIME PLOTTED => 14:18

Dist	COUNTY	ROUTE	POST MILES TOTAL PROJECT	SHEET No.	TOTAL SHEETS
11	SD	76	R4.2/R7.6	65	217

REGISTERED CIVIL ENGINEER 04-24-14 DATE

05-19-14
PLANS APPROVAL DATE

REGISTERED PROFESSIONAL ENGINEER BARZAN A. ARAN No. C75167 Exp. 12/31/15 CIVIL STATE OF CALIFORNIA

THE STATE OF CALIFORNIA OR ITS OFFICERS OR AGENTS SHALL NOT BE RESPONSIBLE FOR THE ACCURACY OR COMPLETENESS OF SCANNED COPIES OF THIS PLAN SHEET.

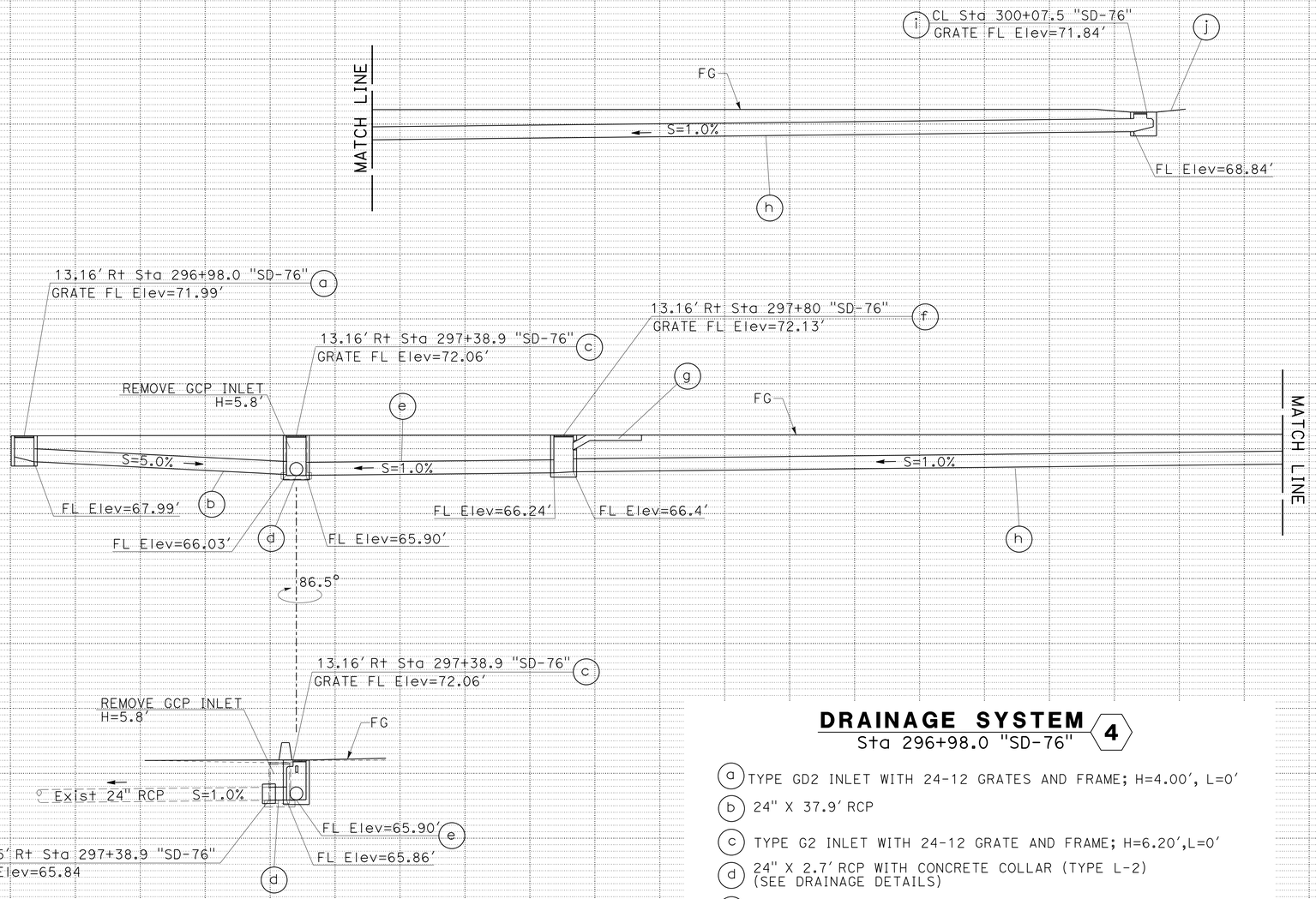

DRAINAGE SYSTEM 4
Sta 296+98.0 "SD-76"

a TYPE GD2 INLET WITH 24-12 GRATES AND FRAME; H=4.00', L=0'
b 24" X 37.9' RCP
c TYPE G2 INLET WITH 24-12 GRATE AND FRAME; H=6.20',L=0'
d 24" X 2.7' RCP WITH CONCRETE COLLAR (TYPE L-2) (SEE DRAINAGE DETAILS)
e 24" X 38.2' RCP
f TYPE G2 INLET WITH 24-12 GRATE AND FRAME; H=5.82',L=0'
g GRATED LINE DRAIN, L=10'
h 24" X 226.5' RCP
i TYPE G2 INLET WITH 24-12 GRATE AND FRAME; H=3.00',L=0'
j CONCRETE APRON (SEE DRAINAGE DETAILS)

DRAINAGE PROFILES

SCALE: Horiz 1" = 10'
Vert 1" = 10'

DP-3

REVISED BY | DATE REVISED
BETHNAY DES JARDINS | BARZAN ARAN
CALCULATED-DESIGNED BY | CHECKED BY
FUNCTIONAL SUPERVISOR
RICHARD ESTRADA

STATE OF CALIFORNIA - DEPARTMENT OF TRANSPORTATION
Caltrans PROJECT DEVELOPMENT
TRAFFIC

LAST REVISION 04-10-14
DATE PLOTTED => 28-MAY-2014
TIME PLOTTED => 14:18

Dist	COUNTY	ROUTE	POST MILES TOTAL PROJECT	SHEET No.	TOTAL SHEETS
11	SD	76	R4.2/R7.6	66	217

REGISTERED CIVIL ENGINEER 04-24-14 DATE

05-19-14
PLANS APPROVAL DATE

REGISTERED PROFESSIONAL ENGINEER BARZAN A. ARAN No. C75167 Exp. 12/31/15 CIVIL STATE OF CALIFORNIA

THE STATE OF CALIFORNIA OR ITS OFFICERS OR AGENTS SHALL NOT BE RESPONSIBLE FOR THE ACCURACY OR COMPLETENESS OF SCANNED COPIES OF THIS PLAN SHEET.

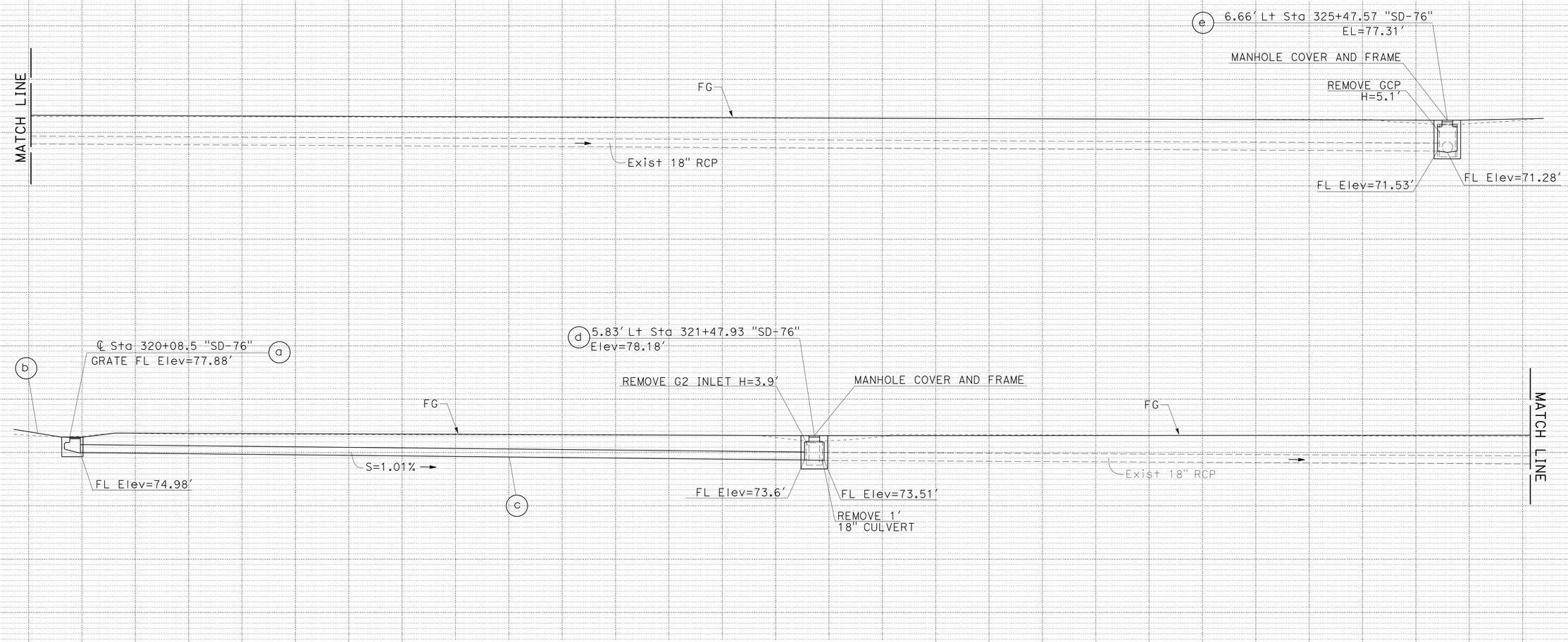

DRAINAGE SYSTEM 5
Sta 320+08.5 "SD-76"

(a) TYPE G2 INLET WITH 24-12 GRATE, FRAME AND CHAIN; H=3.00'; L=0'

(b) CONCRETE APRON (SEE DRAINAGE DETAILS)

(c) 18" X 135.7' RCP

(d) JUNCTION STRUCTURE WITH MANHOLE COVER AND FRAME L=5.0', SPAN=3.5', Hb=3.46'

(e) JUNCTION STRUCTURE WITH MANHOLE COVER AND FRAME L=5.0', SPAN=3.5', Hb=4.82

DRAINAGE PROFILES

SCALE: Horiz 1" = 10'
Vert 1" = 10'

DP-4

STATE OF CALIFORNIA - DEPARTMENT OF TRANSPORTATION
Caltrans TRAFFIC PROJECT DEVELOPMENT

FUNCTIONAL SUPERVISOR: RICHARD ESTRADA
CALCULATED-DESIGNED BY: BETHNAY DES JARDINS
CHECKED BY: BARZAN ARAN
REVISED BY / DATE REVISED

LAST REVISION 04-10-14 DATE PLOTTED => 28-MAY-2014 TIME PLOTTED => 14:18

Dist	COUNTY	ROUTE	POST MILES TOTAL PROJECT	SHEET No.	TOTAL SHEETS
11	SD	76	R4.2/R7.6	67	217

REGISTERED CIVIL ENGINEER 04-24-14 DATE

05-19-14
PLANS APPROVAL DATE

REGISTERED PROFESSIONAL ENGINEER BARZAN A. ARAN No. C75167 Exp. 12/31/15 CIVIL STATE OF CALIFORNIA

THE STATE OF CALIFORNIA OR ITS OFFICERS OR AGENTS SHALL NOT BE RESPONSIBLE FOR THE ACCURACY OR COMPLETENESS OF SCANNED COPIES OF THIS PLAN SHEET.

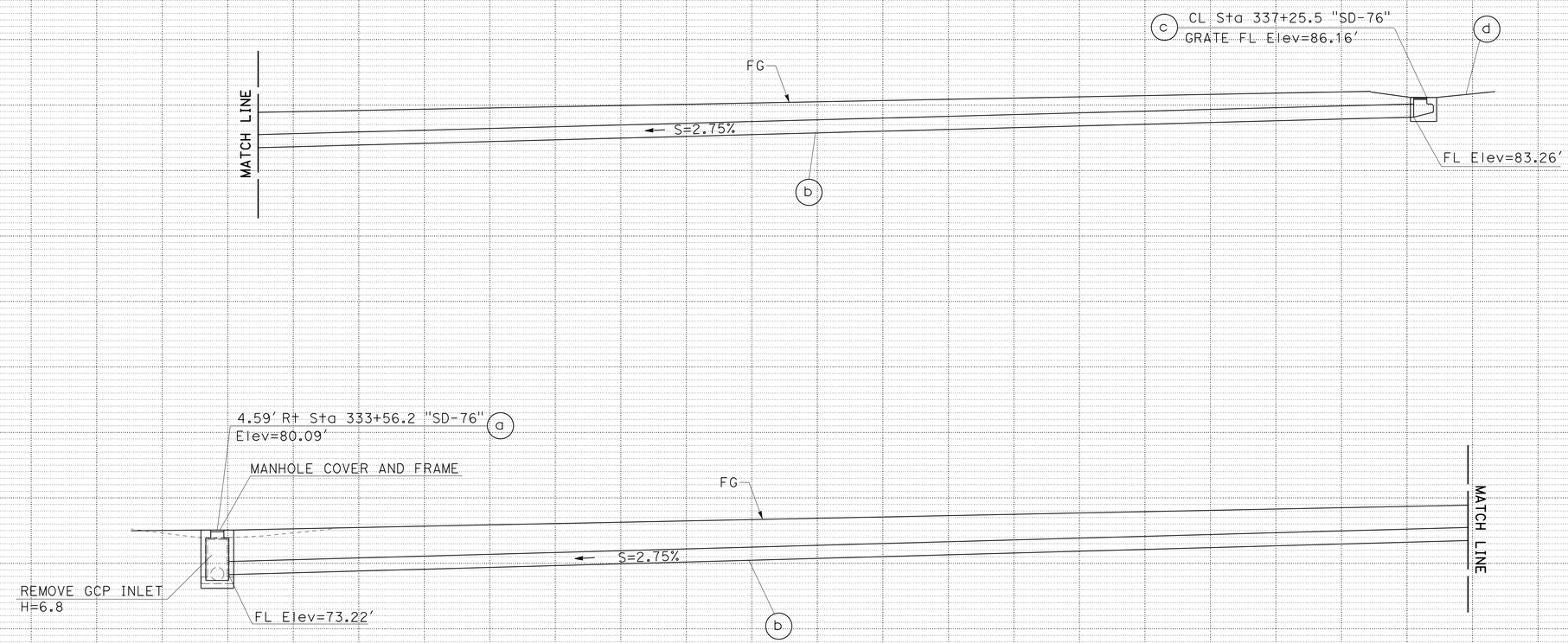

DRAINAGE SYSTEM 6
Sta 333+56.2 "SD-76"

- (a) JUNCTION STRUCTURE WITH MANHOLE COVER AND FRAME L=5.0', SPAN=3.5', Hb=6.50'
- (b) 24" X 365.7' RCP
- (c) TYPE G2 INLET WITH 24-12 GRATE AND FRAME; H=3.00'; L=0
- (d) CONCRETE APRON (SEE DRAINAGE DETAILS)

DRAINAGE PROFILES

SCALE: Horiz 1" = 10'
Vert 1" = 10'

DP-5

STATE OF CALIFORNIA - DEPARTMENT OF TRANSPORTATION
Caltrans TRAFFIC PROJECT DEVELOPMENT

FUNCTIONAL SUPERVISOR: RICHARD ESTRADA
CALCULATED-DESIGNED BY: BETHNAY DES JARDINS
CHECKED BY: BARZAN ARAN
REVISED BY / DATE REVISED

LAST REVISION 04-10-14 DATE PLOTTED => 28-MAY-2014 TIME PLOTTED => 14:18

Dist	COUNTY	ROUTE	POST MILES TOTAL PROJECT	SHEET No.	TOTAL SHEETS
11	SD	76	R4.2/R7.6	68	217

REGISTERED CIVIL ENGINEER 04-24-14 DATE

05-19-14
PLANS APPROVAL DATE

REGISTERED PROFESSIONAL ENGINEER BARZAN A. ARAN No. C75167 Exp. 12/31/15 CIVIL STATE OF CALIFORNIA

THE STATE OF CALIFORNIA OR ITS OFFICERS OR AGENTS SHALL NOT BE RESPONSIBLE FOR THE ACCURACY OR COMPLETENESS OF SCANNED COPIES OF THIS PLAN SHEET.

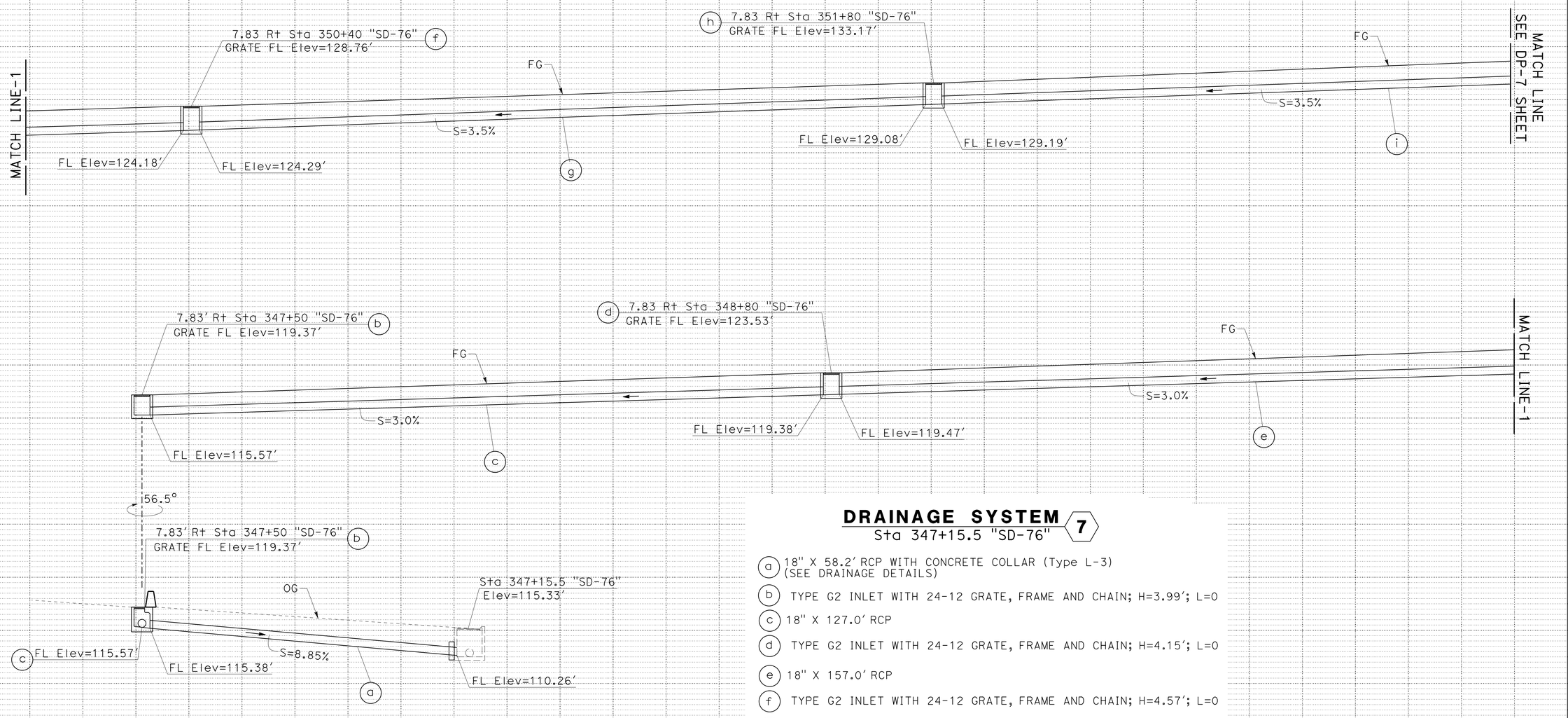

DRAINAGE SYSTEM 7
Sta 347+15.5 "SD-76"

a 18" X 58.2' RCP WITH CONCRETE COLLAR (Type L-3) (SEE DRAINAGE DETAILS)

b TYPE G2 INLET WITH 24-12 GRATE, FRAME AND CHAIN; H=3.99'; L=0

c 18" X 127.0' RCP

d TYPE G2 INLET WITH 24-12 GRATE, FRAME AND CHAIN; H=4.15'; L=0

e 18" X 157.0' RCP

f TYPE G2 INLET WITH 24-12 GRATE, FRAME AND CHAIN; H=4.57'; L=0

g 18" X 137.0' RCP

h TYPE G2 INLET WITH 24-12 GRATE, FRAME AND CHAIN; H=4.09'; L=0

i 18" X 168.6' RCP

DRAINAGE PROFILES

SCALE: Horiz 1" = 10'
Vert 1" = 10'

DP-6

STATE OF CALIFORNIA - DEPARTMENT OF TRANSPORTATION
Caltrans PROJECT DEVELOPMENT
TRAFFIC

FUNCTIONAL SUPERVISOR: RICHARD ESTRADA
CALCULATED-DESIGNED BY: BARZAN ARAN
CHECKED BY
REVISED BY
DATE REVISED
BETHNAY DES JARDINS

LAST REVISION 04-10-14 DATE PLOTTED => 28-MAY-2014 TIME PLOTTED => 14:18

Dist	COUNTY	ROUTE	POST MILES TOTAL PROJECT	SHEET No.	TOTAL SHEETS
11	SD	76	R4.2/R7.6	69	217

REGISTERED CIVIL ENGINEER 04-24-14 DATE

05-19-14
PLANS APPROVAL DATE

REGISTERED PROFESSIONAL ENGINEER BARZAN A. ARAN No. C75167 Exp. 12/31/15 CIVIL STATE OF CALIFORNIA

THE STATE OF CALIFORNIA OR ITS OFFICERS OR AGENTS SHALL NOT BE RESPONSIBLE FOR THE ACCURACY OR COMPLETENESS OF SCANNED COPIES OF THIS PLAN SHEET.

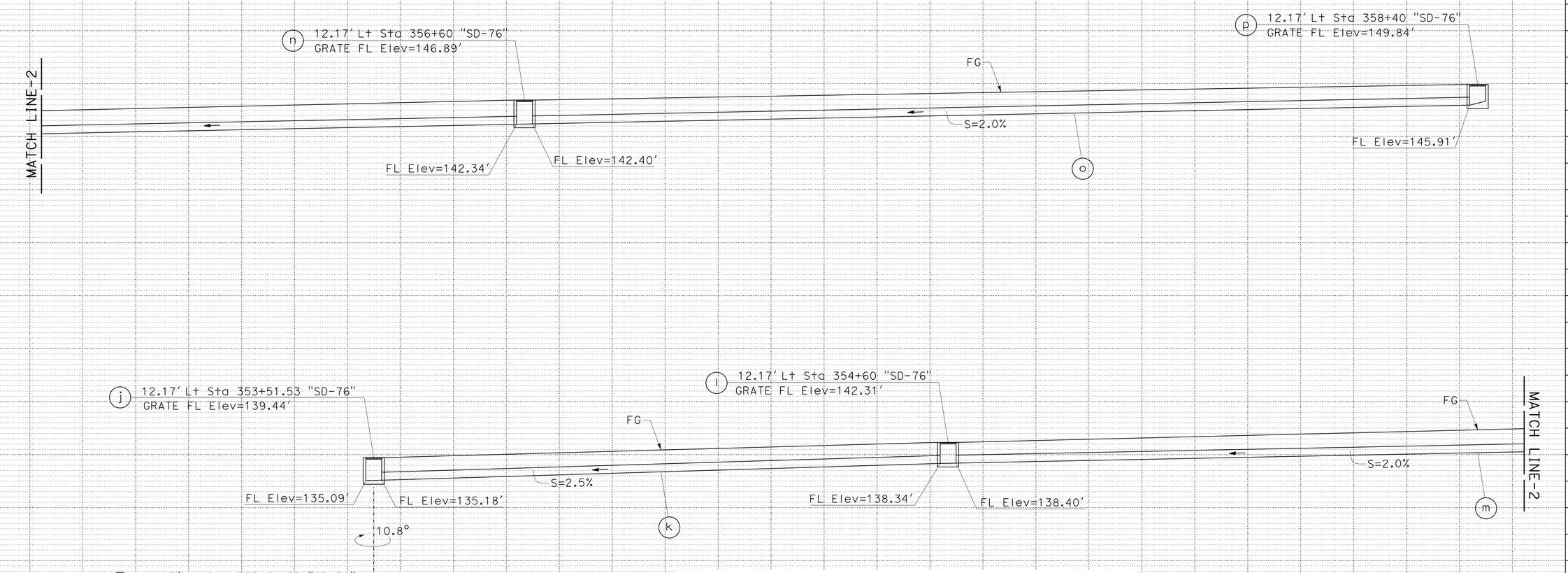

DRAINAGE SYSTEM 7

Sta 347+15.5 "SD-76"

- (j) TYPE G2 INLET WITH 24-12 GRATE, FRAEM AND CHAIN; H=4.35'; L=0
- (k) 18" X 105.5' RCP
- (l) TYPE G2 INLET WITH 24-12 GRATE, FRAEM AND CHAIN; H=3.97'; L=0
- (m) 18" X 197.0' RCP
- (n) TYPE G2 INLET WITH 24-12 GRATE, FRAEM AND CHAIN; H=4.55'; L=0
- (o) 18" X 177.0' RCP
- (p) TYPE G2 INLET WITH 24-12 GRATE, FRAEM AND CHAIN; H=3.90'; L=0

DRAINAGE PROFILES

SCALE: Horiz 1" = 10'
Vert 1" = 10'

DP-7

STATE OF CALIFORNIA - DEPARTMENT OF TRANSPORTATION
Caltrans TRAFFIC PROJECT DEVELOPMENT

FUNCTIONAL SUPERVISOR: RICHARD ESTRADA
CALCULATED-DESIGNED BY: BARZAN ARAN
CHECKED BY: BETHNAY DES JARDINS
REVISED BY / DATE REVISED

LAST REVISION 04-10-14 DATE PLOTTED => 28-MAY-2014 TIME PLOTTED => 14:18

Dist	COUNTY	ROUTE	POST MILES TOTAL PROJECT	SHEET No.	TOTAL SHEETS
11	SD	76	R4.2/R7.6	70	217

REGISTERED CIVIL ENGINEER 04-24-14 DATE

05-19-14
PLANS APPROVAL DATE

REGISTERED PROFESSIONAL ENGINEER BARZAN A. ARAN No. C75167 Exp. 12/31/15 CIVIL STATE OF CALIFORNIA

THE STATE OF CALIFORNIA OR ITS OFFICERS OR AGENTS SHALL NOT BE RESPONSIBLE FOR THE ACCURACY OR COMPLETENESS OF SCANNED COPIES OF THIS PLAN SHEET.

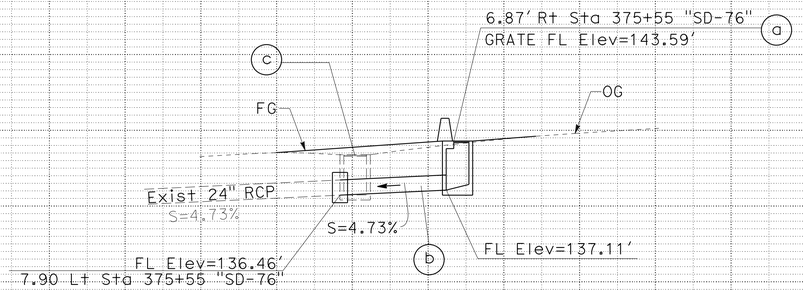

DRAINAGE SYSTEM 8
Sta 375+55 "SD-76"

a TYPE G2 INLET WITH 24-12 GRATE, FRAME AND CHAIN; H=6.48'; L=0

b 24" X 14.0' RCP WITH CONCRETE COLLAR (TYPE L-2) (SEE DRAINAGE DETAILS)

c REMOVE G2 INLET; H=5.3'

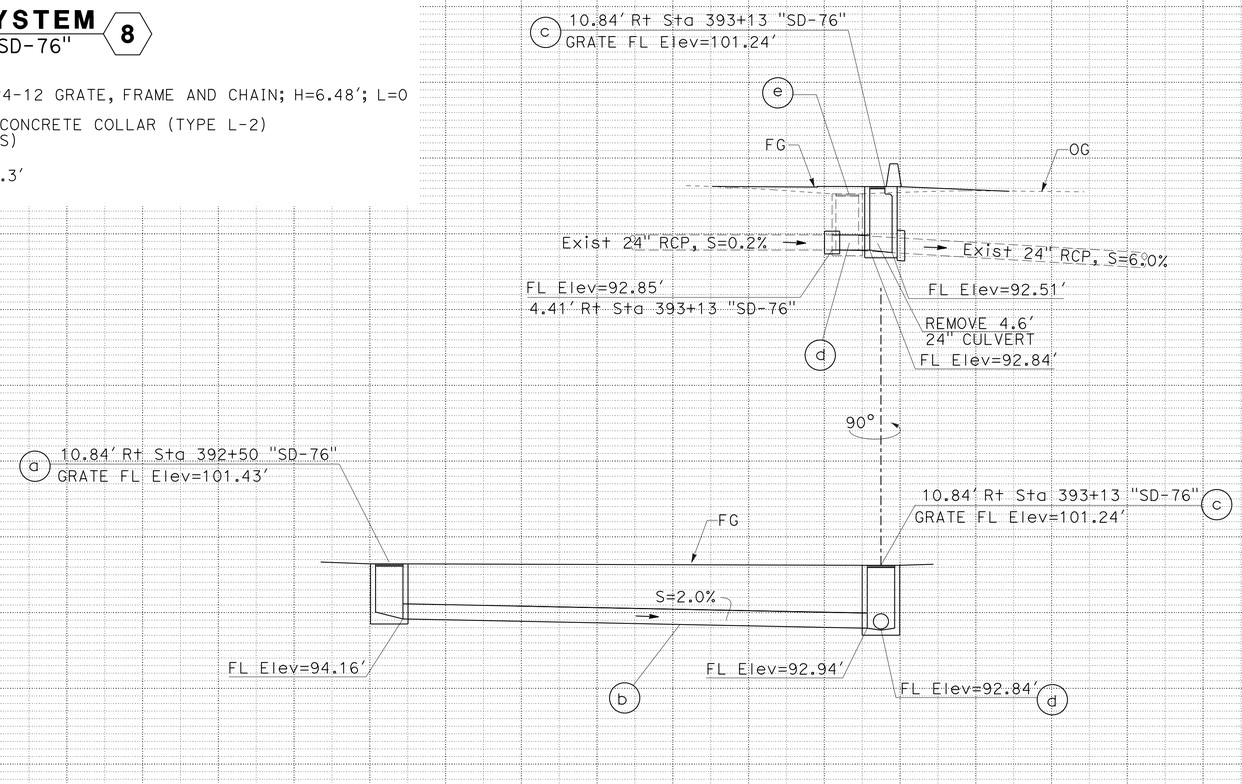

DRAINAGE SYSTEM 9
Sta 392+50 "SD-76"

a TYPE G2 INLET WITH TYPE 24-12 GRATE, FRAME AND CHAIN; H=7.27'; L=0'

b 24" X 61.3' RCP

c TYPE G2 INLET WITH TYPE 24-12 GRATE, FRAME AND CHAIN; H=8.73'; L=0'

d 24" X 4.6' RCP WITH CONCRETE COLLAR (TYPE L-2) (SEE DRAINAGE DETAILS')

e REMOVE G2 INLET; H=7.75'

DRAINAGE PROFILES

SCALE: Horiz 1" = 10'
Vert 1" = 10'

DP-8

REVISED BY | DATE REVISED
KENNY T. NGUYEN | BARZAN ARAN
CALCULATED-DESIGNED BY | CHECKED BY
FUNCTIONAL SUPERVISOR: RICHARD ESTRADA

STATE OF CALIFORNIA - DEPARTMENT OF TRANSPORTATION
Caltrans TRAFFIC PROJECT DEVELOPMENT

LAST REVISION 01-31-14 | DATE PLOTTED => 28-MAY-2014 | TIME PLOTTED => 14:18

Dist	COUNTY	ROUTE	POST MILES TOTAL PROJECT	SHEET No.	TOTAL SHEETS
11	SD	76	R4.2/R7.6	71	217

REGISTERED CIVIL ENGINEER 04-24-14 DATE

05-19-14
PLANS APPROVAL DATE

REGISTERED PROFESSIONAL ENGINEER BARZAN A. ARAN No. C75167 Exp. 12/31/15 CIVIL STATE OF CALIFORNIA

THE STATE OF CALIFORNIA OR ITS OFFICERS OR AGENTS SHALL NOT BE RESPONSIBLE FOR THE ACCURACY OR COMPLETENESS OF SCANNED COPIES OF THIS PLAN SHEET.

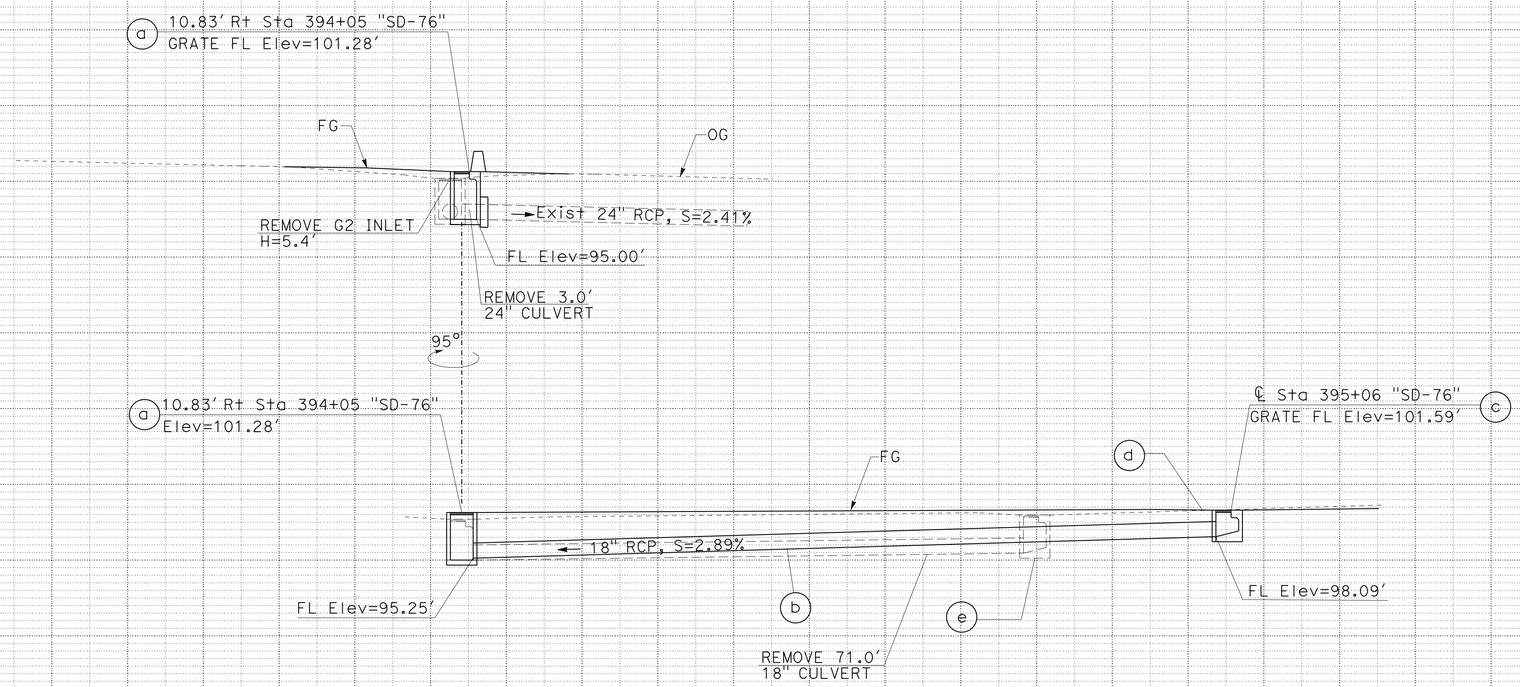

DRAINAGE SYSTEM 10
Sta 394+05 "SD-76"

(a) TYPE G2 INLET WITH TYPE 24-12 GRATE, FRAME AND CHAIN; H=6.33';L=0

(b) 24" X 98.1' RCP

(c) TYPE G2 INLET WITH TYPE 24-12 GRATE, FRAME AND CHAIN; H=3.50'; L=0

(d) CONCRETE APRON (SEE DRAINAGE DETAILS)

(e) REMOVE G2 INLET; H=5.04'

DRAINAGE PROFILES

SCALE: Horiz 1" = 10'
Vert 1" = 10'

DP-9

STATE OF CALIFORNIA - DEPARTMENT OF TRANSPORTATION
Caltrans TRAFFIC PROJECT DEVELOPMENT

FUNCTIONAL SUPERVISOR: RICHARD ESTRADA
CALCULATED-DESIGNED BY: BARZAN ARAN
CHECKED BY: KENNY T. NGUYEN
REVISED BY / DATE REVISED

LAST REVISION 01-31-14 | DATE PLOTTED => 28-MAY-2014 | TIME PLOTTED => 14:18

Dist	COUNTY	ROUTE	POST MILES TOTAL PROJECT	SHEET No.	TOTAL SHEETS
11	SD	76	R4.2/R7.6	72	217

REGISTERED CIVIL ENGINEER 04-24-14 DATE

05-19-14
PLANS APPROVAL DATE

REGISTERED PROFESSIONAL ENGINEER BARZAN A. ARAN No. C75167 Exp. 12/31/15 CIVIL STATE OF CALIFORNIA

THE STATE OF CALIFORNIA OR ITS OFFICERS OR AGENTS SHALL NOT BE RESPONSIBLE FOR THE ACCURACY OR COMPLETENESS OF SCANNED COPIES OF THIS PLAN SHEET.

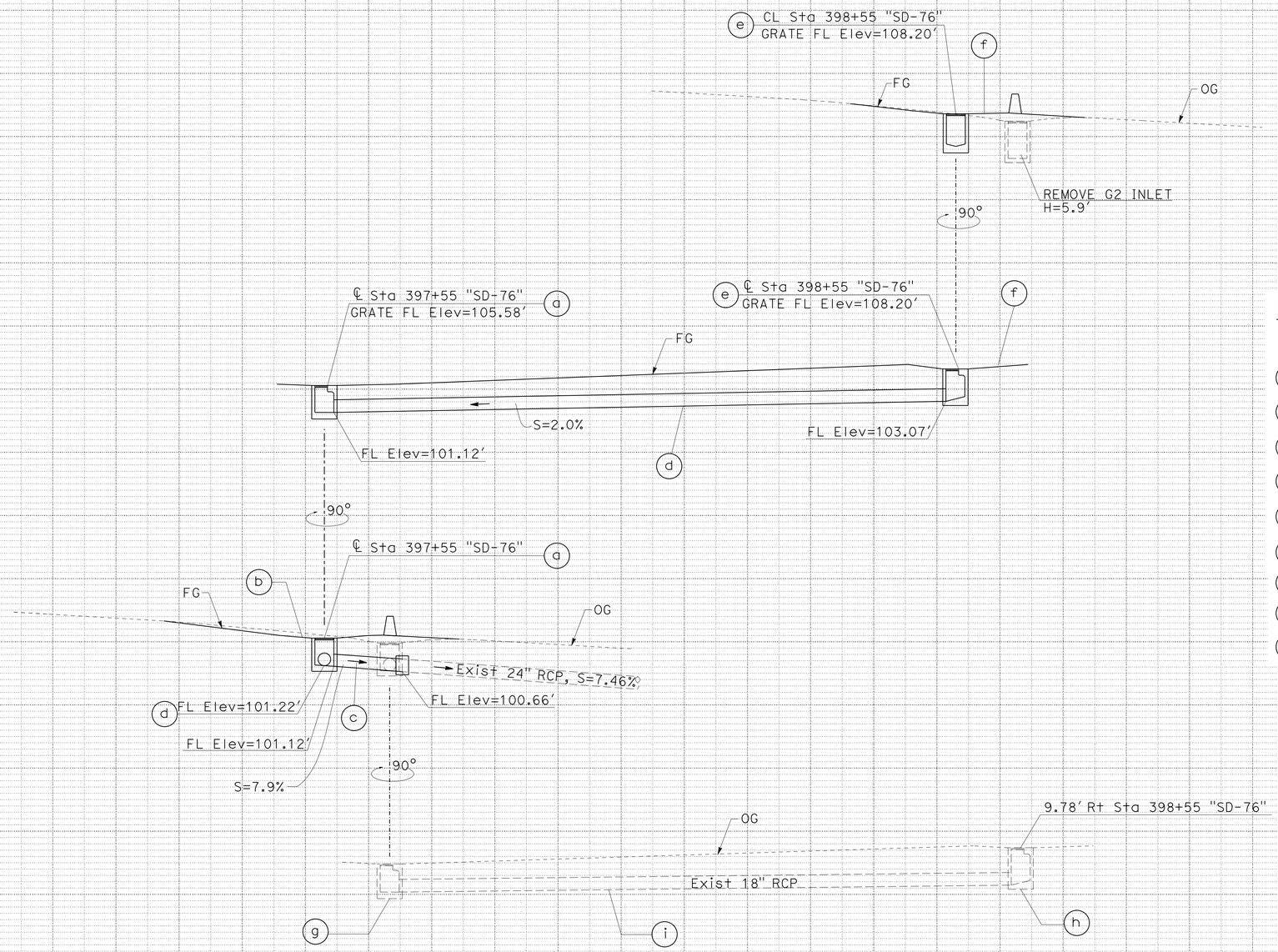

DRAINAGE SYSTEM 11

Sta 397+55 "SD-76"

- (a) TYPE G2 INLET WITH TYPE 24-12 GRATE AND FRAME; H=4.46'; L=0'
- (b) CONCRETE APRON (SEE DRAINAGE DETAILS)
- (c) 24" X 10.9' RCP WITH CONCRETE COLLAR (TYPE L-2) (SEE DRAINAGE DETAILS)
- (d) 24" X 97.0' RCP
- (e) TYPE G2 INLET WITH TYPE 24-12 GRATE AND FRAME; H=5.13'; L=0'
- (f) CONCRETE APRON (SEE DRAINAGE DETAILS)
- (g) REMOVE G2 INLET; H=4.50'
- (h) REMOVE G2 INLET; H=5.90'
- (i) ABANDON 18" X 96.5' RCP

DRAINAGE PROFILES

SCALE: Horiz 1" = 10'
Vert 1" = 10'

DP-10

STATE OF CALIFORNIA - DEPARTMENT OF TRANSPORTATION
Caltrans TRAFFIC PROJECT DEVELOPMENT

FUNCTIONAL SUPERVISOR: RICHARD ESTRADA
CALCULATED-DESIGNED BY: BARZAN ARAN
CHECKED BY: KENNY T. NGUYEN
REVISED BY / DATE REVISED

LAST REVISION 05-13-14 DATE PLOTTED => 28-MAY-2014 TIME PLOTTED => 14:18

Dist	COUNTY	ROUTE	POST MILES TOTAL PROJECT	SHEET No.	TOTAL SHEETS
11	SD	76	R4.2/R7.6	73	217

REGISTERED CIVIL ENGINEER 04-24-14 DATE

05-19-14
PLANS APPROVAL DATE

REGISTERED PROFESSIONAL ENGINEER BARZAN A. ARAN No. C75167 Exp. 12/31/15 CIVIL STATE OF CALIFORNIA

THE STATE OF CALIFORNIA OR ITS OFFICERS OR AGENTS SHALL NOT BE RESPONSIBLE FOR THE ACCURACY OR COMPLETENESS OF SCANNED COPIES OF THIS PLAN SHEET.

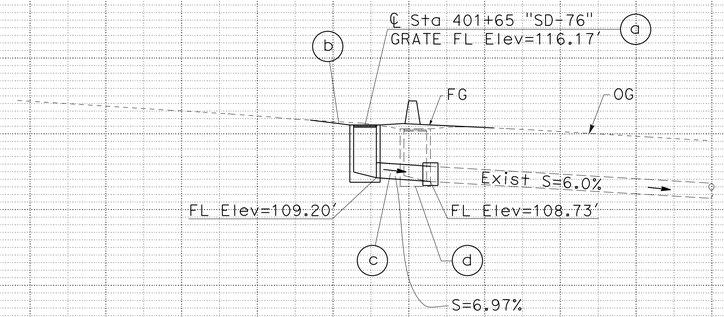

DRAINAGE SYSTEM 12
Sta 401+65 "SD-76"

(a) TYPE G2 INLET WITH TYPE 24-12 GRATE, FRAME AND CHAIN; H=6.97'; L=0

(b) CONCRETE APRON (SEE DRAINAGE DETAILS)

(c) 24" X 7.2' RCP WITH CONCRETE COLLAR (TYPE L-2) (SEE DRAINAGE DETAILS)

(d) REMOVE G2 INLET; H=6.92'

DRAINAGE PROFILES

SCALE: Horiz 1" = 10'
Vert 1" = 10'

DP-11

STATE OF CALIFORNIA - DEPARTMENT OF TRANSPORTATION
Caltrans TRAFFIC PROJECT DEVELOPMENT

FUNCTIONAL SUPERVISOR: RICHARD ESTRADA
CALCULATED-DESIGNED BY: KENNY T. NGUYEN
CHECKED BY: BARZAN ARAN
REVISED BY
DATE REVISED

LAST REVISION 01-31-14
DATE PLOTTED => 28-MAY-2014
TIME PLOTTED => 14:18

Dist	COUNTY	ROUTE	POST MILES TOTAL PROJECT	SHEET No.	TOTAL SHEETS
11	SD	76	R4.2/R7.6	74	217

REGISTERED CIVIL ENGINEER 04-24-14 DATE

05-19-14
PLANS APPROVAL DATE

REGISTERED PROFESSIONAL ENGINEER BARZAN A. ARAN No. C75167 Exp. 12/31/15 CIVIL STATE OF CALIFORNIA

THE STATE OF CALIFORNIA OR ITS OFFICERS OR AGENTS SHALL NOT BE RESPONSIBLE FOR THE ACCURACY OR COMPLETENESS OF SCANNED COPIES OF THIS PLAN SHEET.

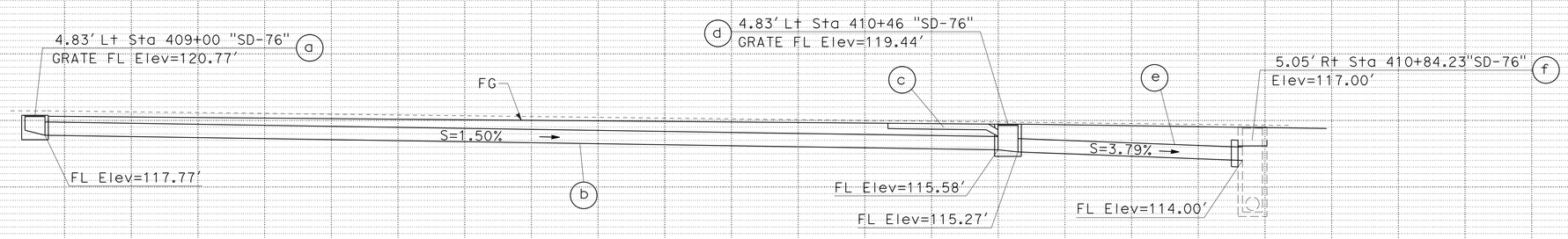

DRAINAGE SYSTEM 13
Sta 409+00 "SD-76"

- (a) TYPE G2 INLET WITH 24-12 GRATE AND FRAME; H=3.00'; L=0
- (b) 24" X 143.0' RCP
- (c) GRATED LINE DRAIN; L=16'
- (d) TYPE G2 INLET WITH 24-12 GRATE AND FRAME; H=4.17'; L=0
- (e) 24" X 33.7' RCP WITH CONCRETE COLLAR (TYPE L-3) (SEE DRAINAGE DETAILS)
- (f) CAP INLET (SEE DRAINAGE DETAILS)

DRAINAGE PROFILES

SCALE: Horiz 1" = 10'
Vert 1" = 10'

DP-12

REVISED BY | DATE REVISED
BETHNAY DES JARDINS | BARZAN ARAN
CALCULATED-DESIGNED BY | CHECKED BY
FUNCTIONAL SUPERVISOR | RICHARD ESTRADA

STATE OF CALIFORNIA - DEPARTMENT OF TRANSPORTATION
Caltrans PROJECT DEVELOPMENT
TRAFFIC

LAST REVISION 04-10-14 | DATE PLOTTED => 28-MAY-2014 | TIME PLOTTED => 14:18

Dist	COUNTY	ROUTE	POST MILES TOTAL PROJECT	SHEET No.	TOTAL SHEETS
11	SD	76	R4.2/R7.6	75	217

REGISTERED CIVIL ENGINEER 04-24-14 DATE

05-19-14
PLANS APPROVAL DATE

REGISTERED PROFESSIONAL ENGINEER BARZAN A. ARAN No. C75167 Exp. 12/31/15 CIVIL STATE OF CALIFORNIA

THE STATE OF CALIFORNIA OR ITS OFFICERS OR AGENTS SHALL NOT BE RESPONSIBLE FOR THE ACCURACY OR COMPLETENESS OF SCANNED COPIES OF THIS PLAN SHEET.

DRAINAGE SYSTEM 14

Sta 417+20 "SD-76"

(a) TYPE G2 INLET WITH TYPE 24-12 GRATE AND FRAME; H=3.67′; L=0

(b) 18" X 81.8′ RCP

(c) TYPE G2 INLET WITH TYPE 24-12 GRATE AND FRAME; H=4.61′; L=0

(d) 18" X 47.0′ RCP

(e) TYPE G2 INLET WITH TYPE 24-12 GRATE AND FRAME; H=5.28′; L=0

(f) 18" X 14.0′ RCP WITH CONCRETE COLLAR (TYPE L-2) (SEE DRAINAGE DETAILS)

(g) JUNCTION STRUCTURE WITH MANHOLE COVER AND FRAME L=5.0′, SPAN=4.0′, Hb=5.24′

(h) 24" X 44.5′ RCP

(i) TYPE G2 INLET WITH TYPE 24-12 GRATE AND FRAME; H=5.34′; L=0

(j) CONCRETE APRON (SEE DRAINAGE DETAILS)

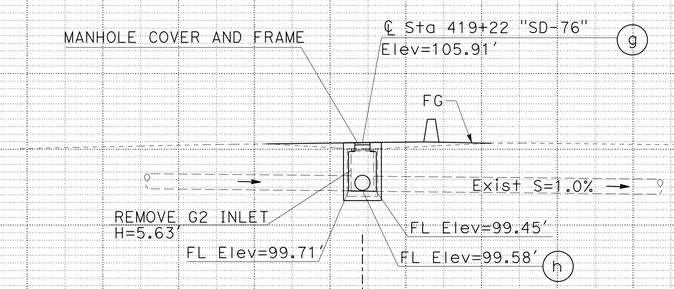

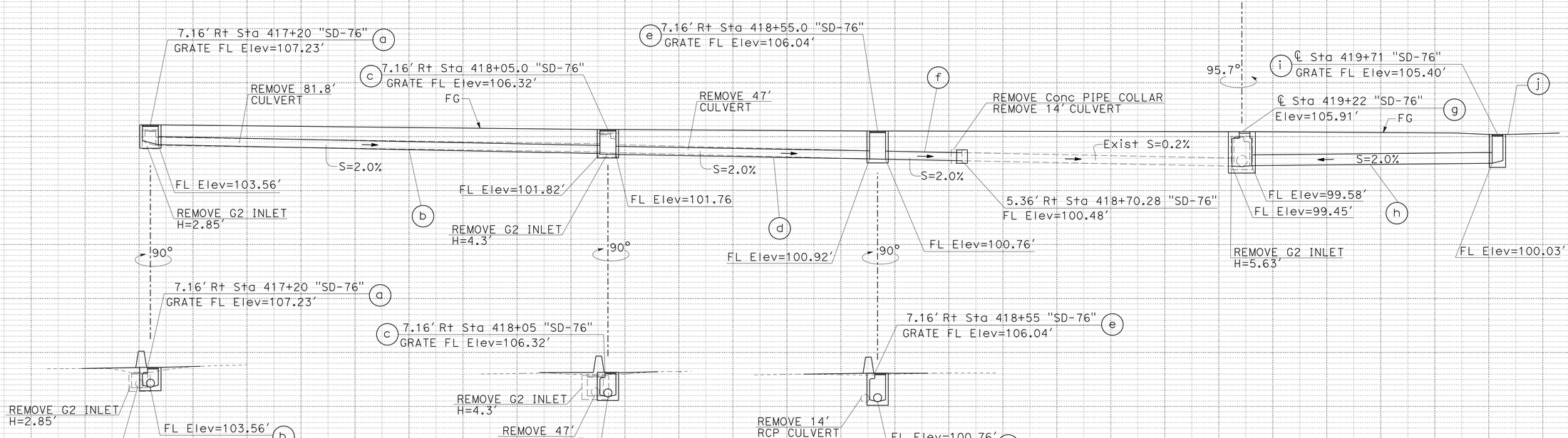

DRAINAGE PROFILES

SCALE: Horiz 1" = 10′
Vert 1" = 10′

DP-13

STATE OF CALIFORNIA - DEPARTMENT OF TRANSPORTATION
Caltrans TRAFFIC PROJECT DEVELOPMENT

FUNCTIONAL SUPERVISOR: RICHARD ESTRADA
CALCULATED-DESIGNED BY: KENNY T. NGUYEN
CHECKED BY: BARZAN ARAN
REVISED BY / DATE REVISED

LAST REVISION 05-13-14 DATE PLOTTED => 28-MAY-2014 TIME PLOTTED => 14:18

Dist	COUNTY	ROUTE	POST MILES TOTAL PROJECT	SHEET No.	TOTAL SHEETS
11	SD	76	R4.2/R7.6	76	217

REGISTERED CIVIL ENGINEER 04-24-14 DATE

05-19-14
PLANS APPROVAL DATE

REGISTERED PROFESSIONAL ENGINEER BARZAN A. ARAN No. C75167 Exp. 12/31/15 CIVIL STATE OF CALIFORNIA

THE STATE OF CALIFORNIA OR ITS OFFICERS OR AGENTS SHALL NOT BE RESPONSIBLE FOR THE ACCURACY OR COMPLETENESS OF SCANNED COPIES OF THIS PLAN SHEET.

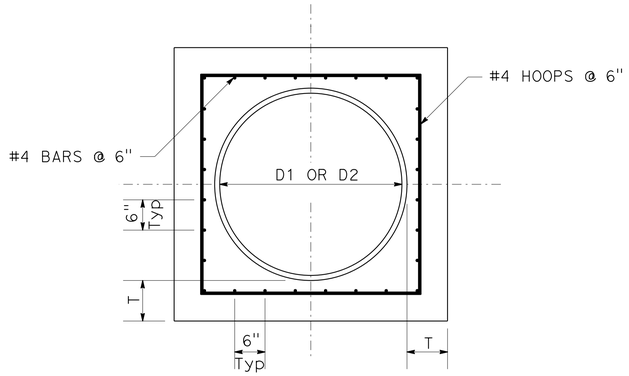

SECTION B-B

TABLE D

D	L (Min)	T (Min)
1'-6"	1'-0"	6"
2'-0"	1'-0"	6"
3'-0"	1'-6"	8"
4'-0"	1'-6"	8"
4'-6"	1'-6"	9"
5'-0"	2'-0"	1'-0"
5'-6"	2'-0"	1'-0"
6'-0"	2'-0"	1'-0"

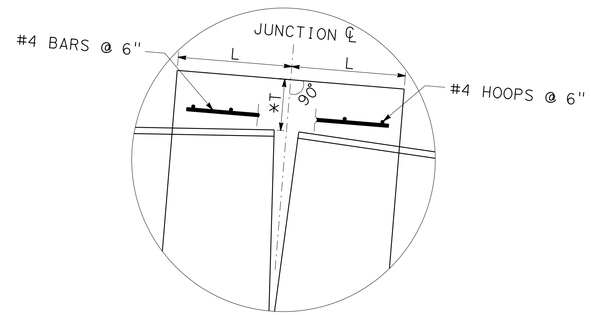

DETAIL C

*MEASURED ALONG JUNCTION ℄

NOTES:

1. WHERE PIPES OF DIFFERENT DIAMETERS ARE JOINED WITH A Conc COLLAR, L & T SHALL CORRESPOND WITH THE LARGER OF THE TWO PIPE DIAMETERS.
2. JOIN PIPES AT INVERTS

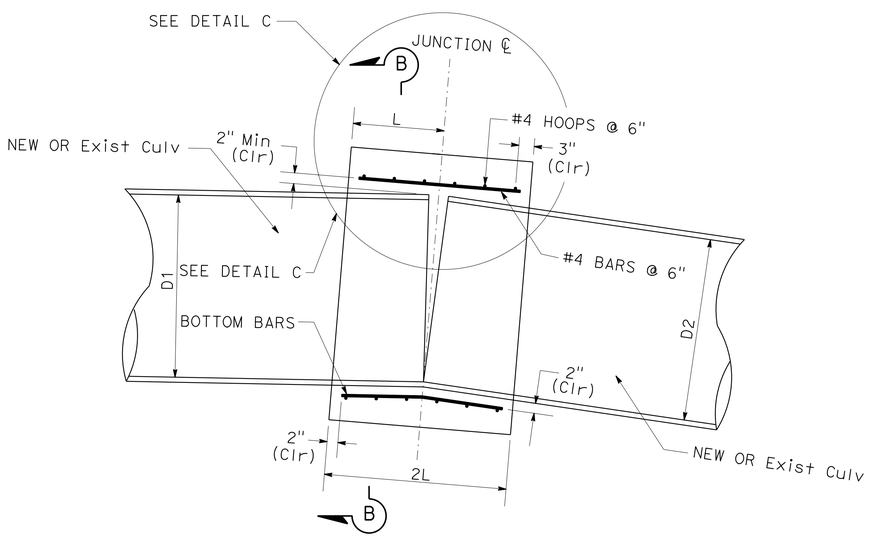

SECTION A-A

NOTE:
BEND BOTTOM BARS AS NECESSARY TO MAINTAIN 2" CLEARANCE

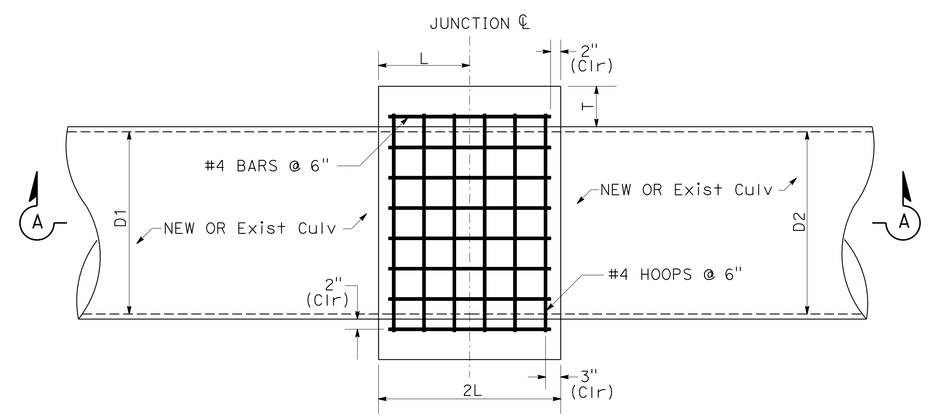

CONCRETE COLLAR PLAN

CONCRETE COLLAR (TYPE L-2)

2 c, 3 c, 4 b, 9 d, 10 b, 11 c, 12 c, 14 f

DRAINAGE DETAILS

NO SCALE

DD-1

STATE OF CALIFORNIA - DEPARTMENT OF TRANSPORTATION
Caltrans PROJECT DEVELOPMENT
TRAFFIC

FUNCTIONAL SUPERVISOR: RICHARD ESTRADA
CALCULATED-DESIGNED BY: KENNY T. NGUYEN
CHECKED BY: BARZAN ARAN
REVISED BY
DATE REVISED

LAST REVISION 02-10-14
DATE PLOTTED => 28-MAY-2014
TIME PLOTTED => 14:18

Dist	COUNTY	ROUTE	POST MILES TOTAL PROJECT	SHEET No.	TOTAL SHEETS
11	SD	76	R4.2/R7.6	77	217

REGISTERED CIVIL ENGINEER 04-24-14 DATE

05-19-14
PLANS APPROVAL DATE

REGISTERED PROFESSIONAL ENGINEER BARZAN A. ARAN No. C75167 Exp. 12/31/15 CIVIL STATE OF CALIFORNIA

THE STATE OF CALIFORNIA OR ITS OFFICERS OR AGENTS SHALL NOT BE RESPONSIBLE FOR THE ACCURACY OR COMPLETENESS OF SCANNED COPIES OF THIS PLAN SHEET.

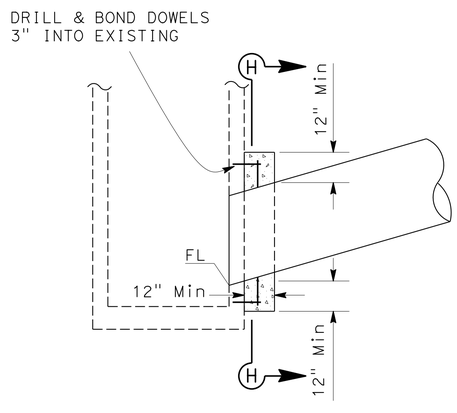

NOTE: BEND EXPOSED REINFORCING STEEL INTO CONCRETE COLLAR.

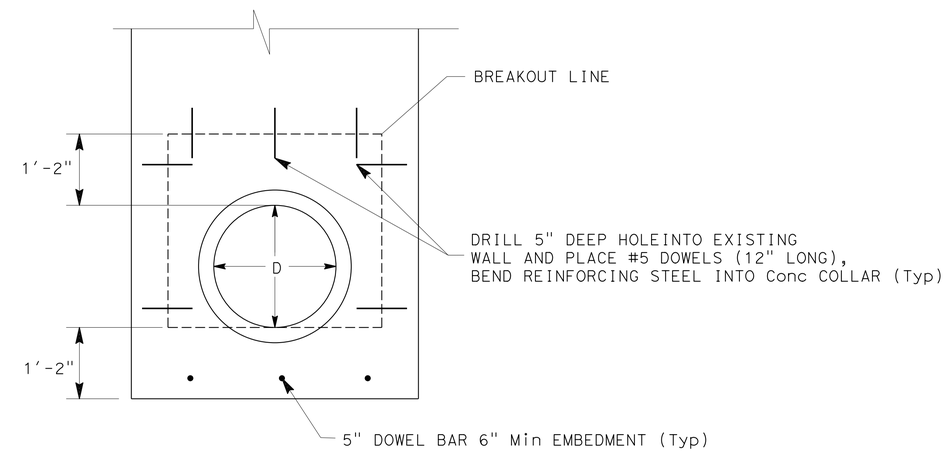

SECTION H-H

CONCRETE COLLAR (TYPE L-3)

7 a , 13 e

DRAINAGE DETAILS

NO SCALE

DD-2

STATE OF CALIFORNIA - DEPARTMENT OF TRANSPORTATION
Caltrans TRAFFIC PROJECT DEVELOPMENT

FUNCTIONAL SUPERVISOR: RICHARD ESTRADA
CALCULATED-DESIGNED BY: KENNY T. NGUYEN
CHECKED BY: BARZAN ARAN
REVISED BY
DATE REVISED

LAST REVISION 02-10-14 | DATE PLOTTED => 28-MAY-2014 | TIME PLOTTED => 14:18

Dist	COUNTY	ROUTE	POST MILES TOTAL PROJECT	SHEET No.	TOTAL SHEETS
11	SD	76	R4.2/R7.6	78	217

REGISTERED CIVIL ENGINEER 04-24-14 DATE

05-19-14
PLANS APPROVAL DATE

REGISTERED PROFESSIONAL ENGINEER BARZAN A. ARAN No. C75167 Exp. 12/31/15 CIVIL STATE OF CALIFORNIA

THE STATE OF CALIFORNIA OR ITS OFFICERS OR AGENTS SHALL NOT BE RESPONSIBLE FOR THE ACCURACY OR COMPLETENESS OF SCANNED COPIES OF THIS PLAN SHEET.

TABLE D

DRAINAGE SYSTEM	R	S	T	U	V
1 (e)	4.33′	4.33′	3.66′	3.66′	3.22′
13 (f)	6.08′	4.33′	5.41′	3.66′	2.00′

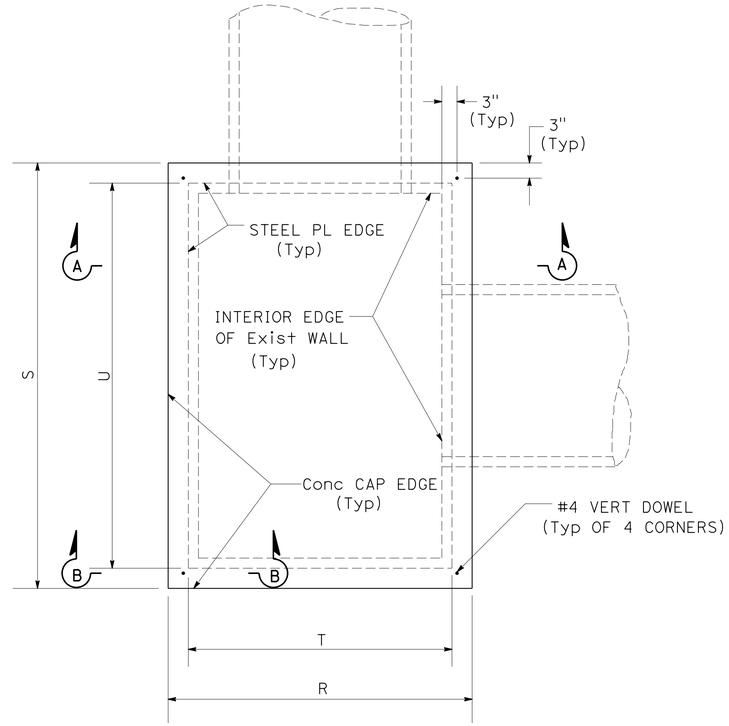

CONCRETE CAP (Exist DI) PLAN

NOTES:

1. USE PCC FOR Conc CAP.
2. SEE STANDARD SPECIFICATIONS OR SPECIAL PROVISIONS FOR STEEL PLATE GALVANIZING.
3. DRILL & BOND VERT DOWELS INTO ExistING DI WALLS AT LOCATIONS SHOWN.
4. "V" IS THE DI REMOVAL HEIGHT.
5. STEEL PL IS "T" WIDE x "U" THICK x ¼" THICK.

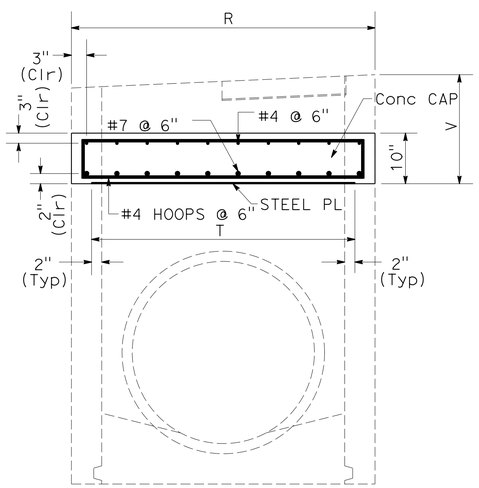

SECTION A-A

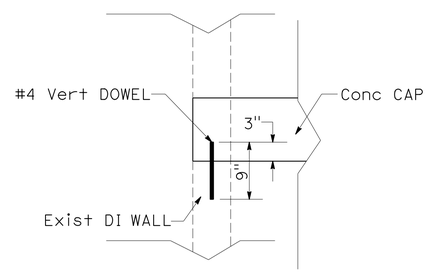

SECTION B-B

CAP INLET

1 (e), 13 (f)

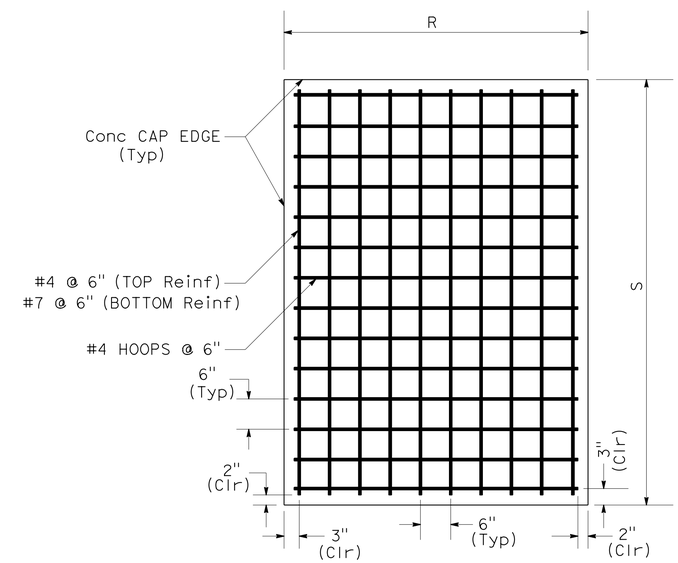

Conc CAP ReinfORCEMENT PLAN

DRAINAGE DETAILS

NO SCALE

DD-3

STATE OF CALIFORNIA - DEPARTMENT OF TRANSPORTATION
Caltrans TRAFFIC PROJECT DEVELOPMENT

FUNCTIONAL SUPERVISOR: RICHARD ESTRADA
CALCULATED-DESIGNED BY: KENNY T. NGUYEN
CHECKED BY: BARZAN ARAN
REVISED BY / DATE REVISED

LAST REVISION 02-10-14 | DATE PLOTTED => 28-MAY-2014 | TIME PLOTTED => 14:18

Dist	COUNTY	ROUTE	POST MILES TOTAL PROJECT	SHEET No.	TOTAL SHEETS
11	SD	76	R4.2/R7.6	79	217

REGISTERED CIVIL ENGINEER 04-24-14 DATE

05-19-14
PLANS APPROVAL DATE

REGISTERED PROFESSIONAL ENGINEER BARZAN A. ARAN No. C75167 Exp. 12/31/15 CIVIL STATE OF CALIFORNIA

THE STATE OF CALIFORNIA OR ITS OFFICERS OR AGENTS SHALL NOT BE RESPONSIBLE FOR THE ACCURACY OR COMPLETENESS OF SCANNED COPIES OF THIS PLAN SHEET.

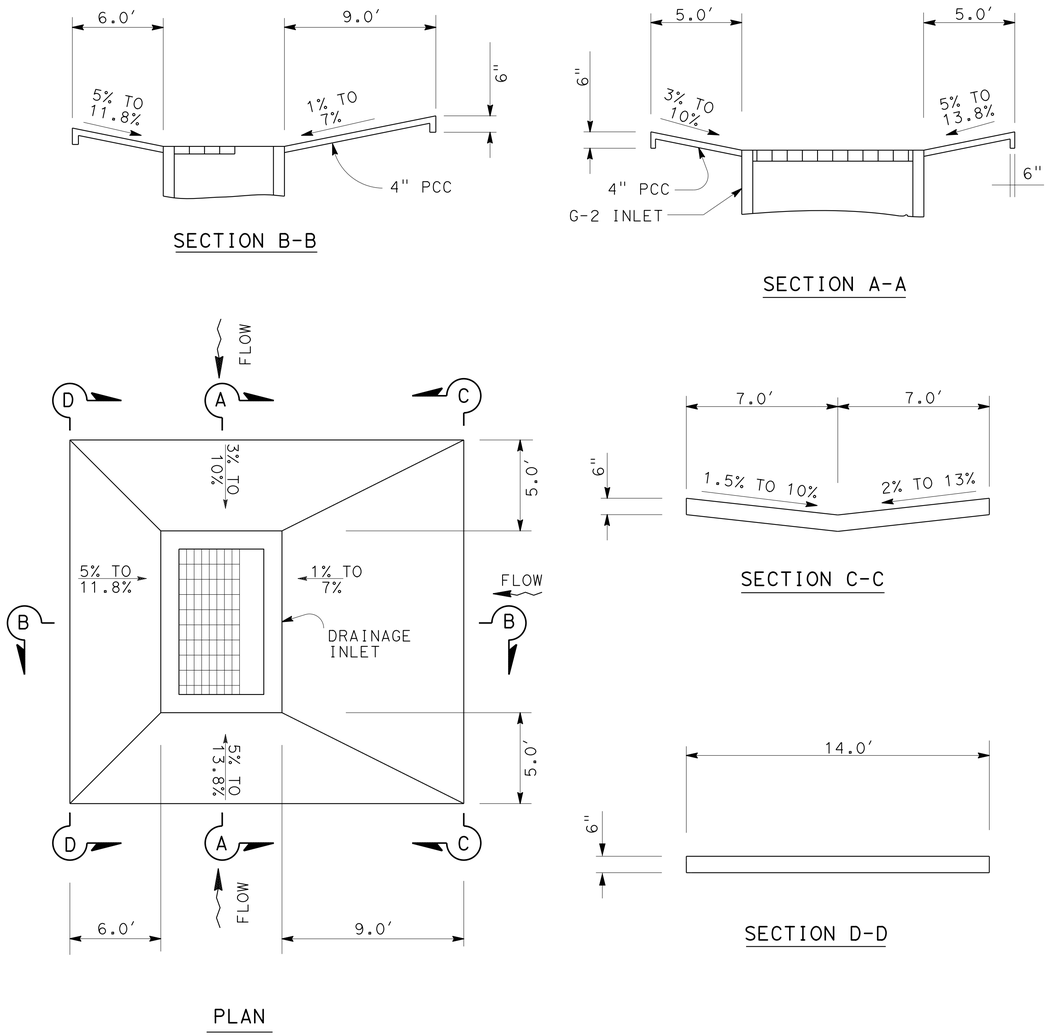

CONCRETE APRON FOR G2 INLET

(3)(i), (4)(e), (5)(b), (6)(d), (10)(d), (11)(b)(f), (14)(j)

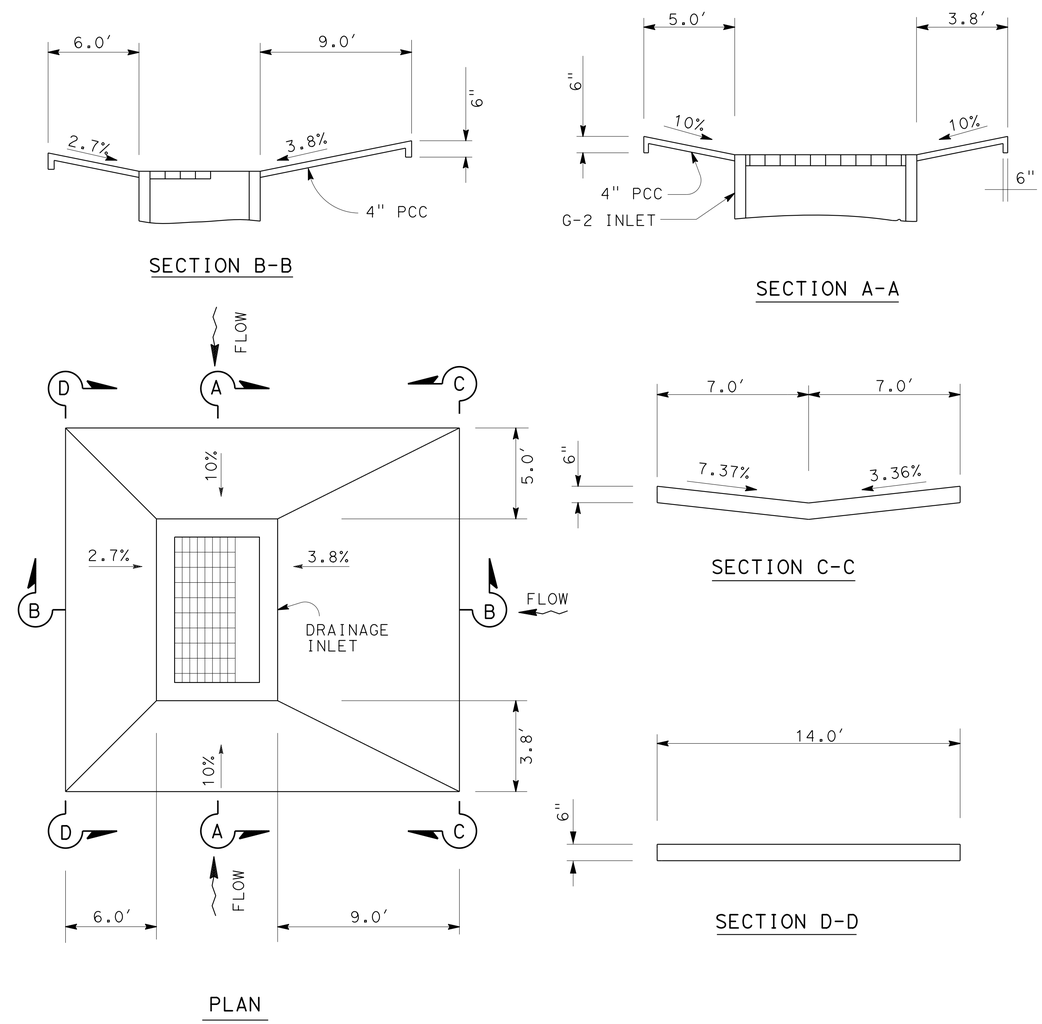

CONCRETE APRON FOR G2 INLET

(12)(b)

DRAINAGE DETAILS

NO SCALE

DD-4

STATE OF CALIFORNIA - DEPARTMENT OF TRANSPORTATION
Caltrans TRAFFIC PROJECT DEVELOPMENT

FUNCTIONAL SUPERVISOR: RICHARD ESTRADA
CALCULATED-DESIGNED BY: KENNY T. NGUYEN
CHECKED BY: BARZAN ARAN
REVISED BY / DATE REVISED

LAST REVISION 02-10-14 | DATE PLOTTED => 28-MAY-2014 | TIME PLOTTED => 14:18

Dist	COUNTY	ROUTE	POST MILES TOTAL PROJECT	SHEET No.	TOTAL SHEETS
11	SD	76	R4.2/R7.6	80	217

REGISTERED CIVIL ENGINEER 04-24-14 DATE

05-19-14
PLANS APPROVAL DATE

REGISTERED PROFESSIONAL ENGINEER BARZAN A. ARAN No. C75167 Exp. 12/31/15 CIVIL STATE OF CALIFORNIA

THE STATE OF CALIFORNIA OR ITS OFFICERS OR AGENTS SHALL NOT BE RESPONSIBLE FOR THE ACCURACY OR COMPLETENESS OF SCANNED COPIES OF THIS PLAN SHEET.

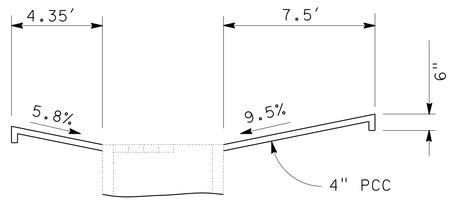

SECTION B-B

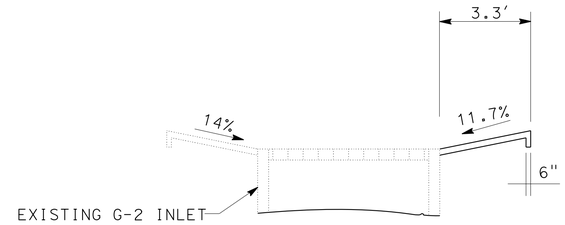

SECTION A-A

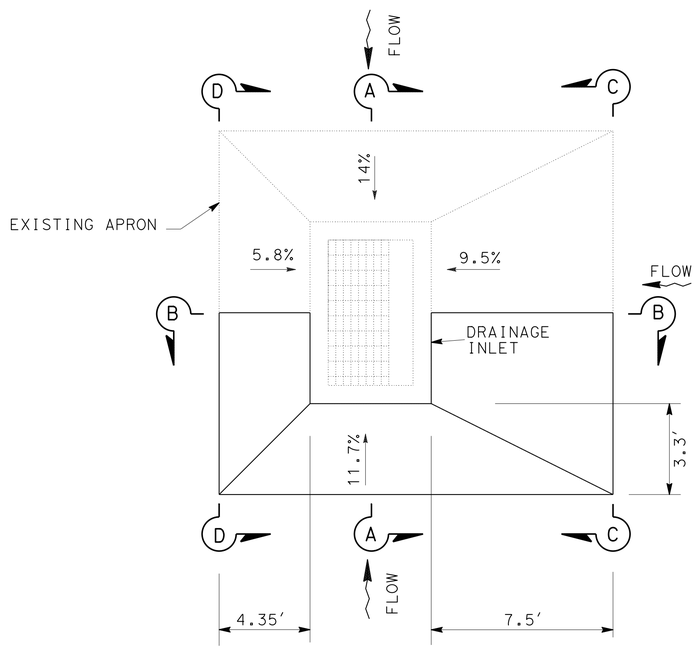

PLAN

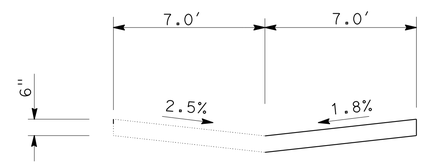

SECTION C-C

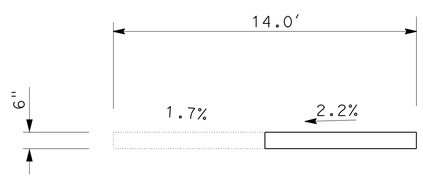

SECTION D-D

CONCRETE APRON FOR G2 INLET

15 a

DRAINAGE DETAILS

NO SCALE

DD-5

REVISED BY	DATE REVISED

CALCULATED-DESIGNED BY	CHECKED BY
KENNY T. NGUYEN	BARZAN ARAN

FUNCTIONAL SUPERVISOR: RICHARD ESTRADA

STATE OF CALIFORNIA - DEPARTMENT OF TRANSPORTATION
Caltrans TRAFFIC PROJECT DEVELOPMENT

LAST REVISION 02-10-14 | DATE PLOTTED => 28-MAY-2014 | TIME PLOTTED => 14:18

Dist	COUNTY	ROUTE	POST MILES TOTAL PROJECT	SHEET No.	TOTAL SHEETS
11	SD	76	R4.2/R7.6	81	217

REGISTERED CIVIL ENGINEER 04-24-14 DATE

05-19-14
PLANS APPROVAL DATE

REGISTERED PROFESSIONAL ENGINEER BARZAN A. ARAN No. C75167 Exp. 12/31/15 CIVIL STATE OF CALIFORNIA

THE STATE OF CALIFORNIA OR ITS OFFICERS OR AGENTS SHALL NOT BE RESPONSIBLE FOR THE ACCURACY OR COMPLETENESS OF SCANNED COPIES OF THIS PLAN SHEET.

NOTES:

1. FOR INLET DETAILS NOT SHOWN, SEE REVISED Std PLAN D73.
2. INLET TYPE CAN BE G1, G2, GD2, G4, G5, GT3, OR GT4.

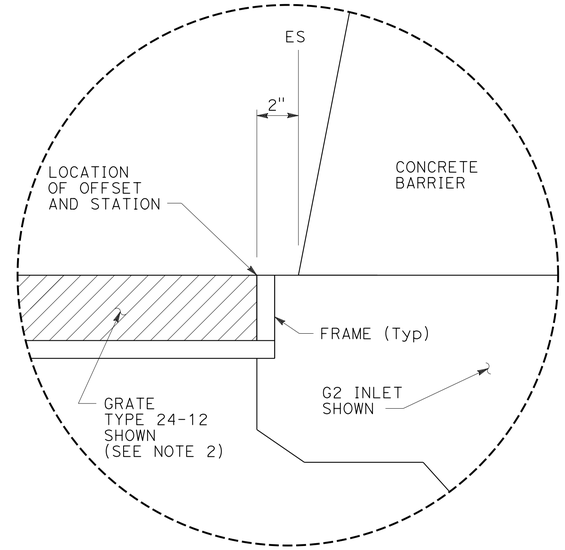

DETAIL "A"

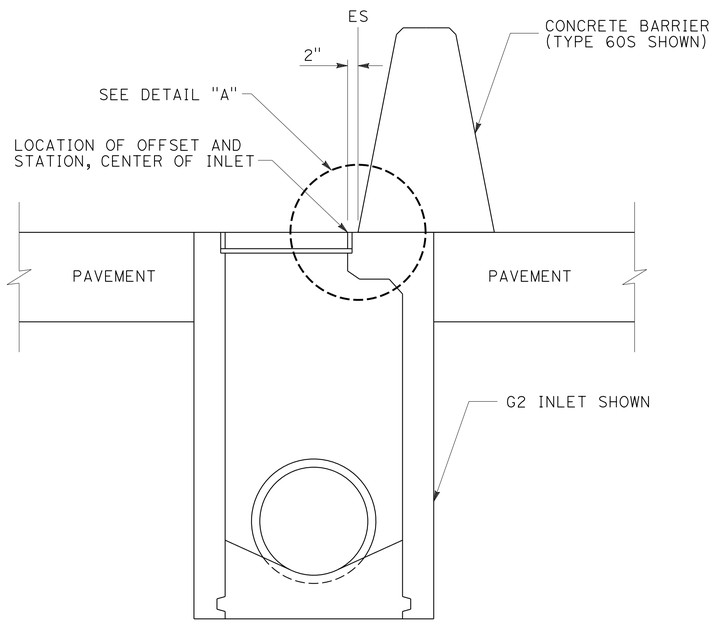

CASE 1

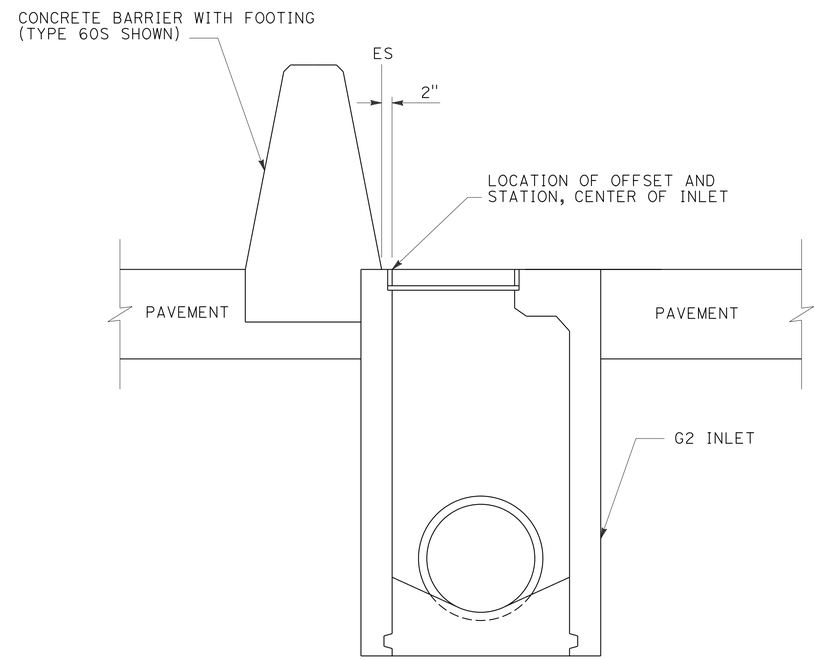

CASE 2

INLET (G SERIES) AT BARRIER

DRAINAGE DETAILS

NO SCALE

DD-6

STATE OF CALIFORNIA - DEPARTMENT OF TRANSPORTATION
Caltrans TRAFFIC PROJECT DEVELOPMENT

FUNCTIONAL SUPERVISOR: RICHARD ESTRADA
CALCULATED-DESIGNED BY: KENNY T. NGUYEN
CHECKED BY: BARZAN ARAN
REVISED BY
DATE REVISED

LAST REVISION 02-10-14
DATE PLOTTED => 28-MAY-2014
TIME PLOTTED => 14:18

Dist	COUNTY	ROUTE	POST MILES TOTAL PROJECT	SHEET No.	TOTAL SHEETS
11	SD	76	R4.2/R7.6	82	217

REGISTERED CIVIL ENGINEER 04-24-14 DATE

05-19-14
PLANS APPROVAL DATE

REGISTERED PROFESSIONAL ENGINEER BARZAN A. ARAN No. C75167 Exp. 12/31/15 CIVIL STATE OF CALIFORNIA

THE STATE OF CALIFORNIA OR ITS OFFICERS OR AGENTS SHALL NOT BE RESPONSIBLE FOR THE ACCURACY OR COMPLETENESS OF SCANNED COPIES OF THIS PLAN SHEET.

MISCELLANEOUS IRON & STEEL		
GRATE TYPE	No. OF GRATES	WEIGHT
24 - 12	2	616 lbs
24 - 10C	2	373 lbs
24 - 10S	2	438 lbs
24 - 12X	2	455 lbs
24 - 13	2	356 lbs

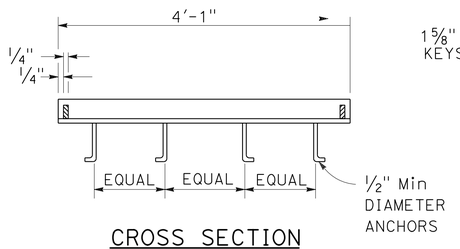

CROSS SECTION
(Thru frame)

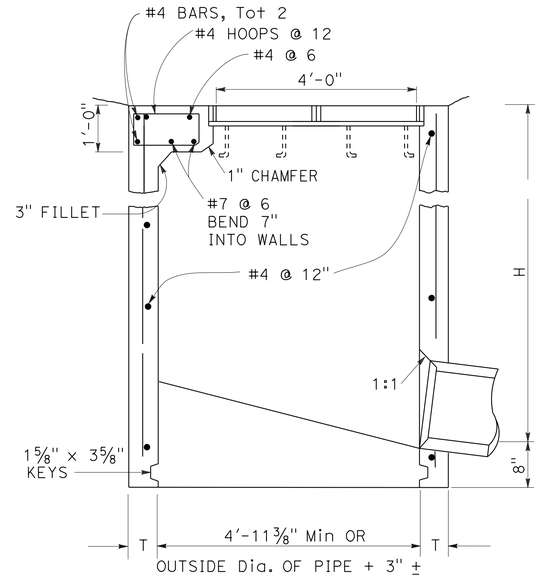

SECTION B-B

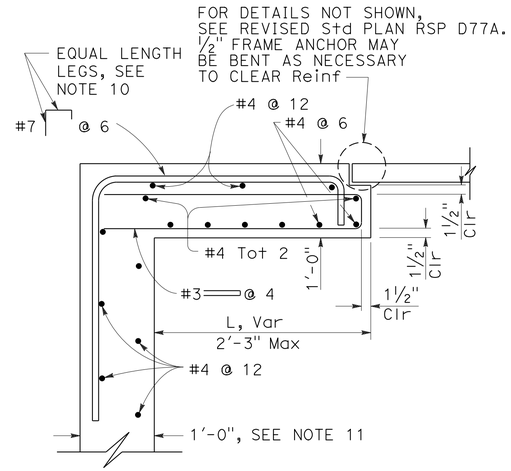

SECTION C-C

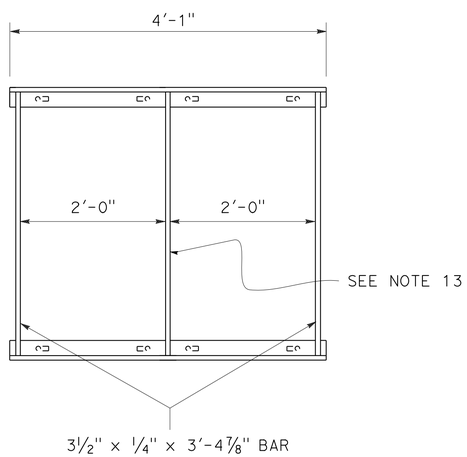

GRATE FRAME

RECTANGULAR FRAME DETAILS
(For double rectangular grates)

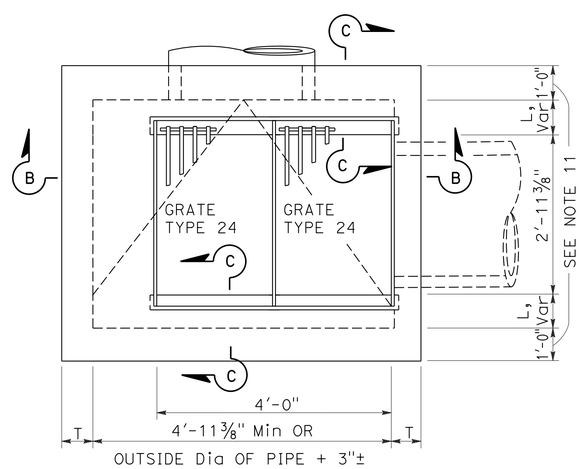

PLAN

TYPE GD2 DETAILS

NOTES:

1. "H" IS THE DIFFERENCE IN ELEVATION BETWEEN THE OUTLET PIPE FLOW LINE AND THE NORMAL GUTTER GRADE LINE UNDEPRESSED.
2. FOR "T" WALL THICKNESS, SEE TABLE A BELOW.
3. WALL REINFORCING NOT REQUIRED WHEN "H" IS 8'-0" OR LESS AND THE UNSUPPORTED WIDTH OR LENGTH IS 7'-0" OR LESS. WALLS EXCEEDING THESE LIMITS SHALL BE REINFORCED WITH #4 BARS @ 12" ± CENTERS PLACED 1 1/2" CLEAR TO INSIDE OF BOX UNLESS OTHERWISE SHOWN.
4. STEPS-NONE REQUIRED WHERE "H" IS LESS THAN 2'-6". WHERE "H" IS 2'-6" OR MORE, INSTALL STEPS WITH LOWEST RUNG 1'-0" ABOVE THE FLOOR AND HIGHEST RUNG NOT MORE THAN 6" BELOW TOP OF INLET. THE DISTANCE BETWEEN STEPS SHALL NOT EXCEED 1'-0" AND SHALL BE UNIFORM THROUGHOUT THE LENGTH OF THE WALL. PLACE STEPS IN THE WALL WITHOUT AN OPENING. STEPS INSERTS MAY BE SUBSTITUTED FOR THE BAR STEPS. STEP INSERTS SHALL COMPLY WITH STATE INDUSTRIAL SAFETY REQUIREMENTS. SEE STANDARD PLAN D74C FOR STEP DETAILS.
5. DETAILS SHOWN APPLY TO BOTH METAL AND CONCRETE PIPE.
6. PIPE(S) CAN BE PLACED IN ANY WALL.
7. BASIN FLOORS SHALL HAVE WOOD TROWEL FINISH AND A MINIMUM SLOPE OF 12:3 FROM ALL DIRECTIONS TOWARD OUTLET PIPE.
8. SET INLET SO THAT GRATE BARS ARE PARALLEL TO DIRECTION OF PRINCIPAL SURFACE FLOW.
9. SEE REVISED STANDARD PLANS RSP D77A AND RSP D77B FOR GRATE AND FRAME DETAILS NOT SHOWN HERE.
10. BAR MAY BE ROTATED AS NECESSARY TO CLEAR OPENING. WHERE "L" IS 6" OR LESS, BAR MAY BE OMITTED.
11. WHERE "L" IS 6" OR LESS, WALL THICKNESS SHALL BE AS SHOWN IN TABLE A.
12. CAST-IN-PLACE INLETS TO BE FORMED AROUND ALL PIPES/STUBS INTERSECTING THE INLET, AND CONCRETE POURED IN ONE CONTINUOUS OPERATION.
13. WHEN TYPE 24-10S, 24-12X OR 24-13 GRATES ARE USED WITH GD2 INLETS, A 1/4" X 3 1/2" X 3'-4 7/8" STEEL BAR SHALL BE WELDED ACROSS THE CENTER OF INLET FRAME TO SEPARATE THE INDIVIDUAL GRATES.
14. CONNECT CHAIN TO GRATE AND FRAME ONLY AT LOCATIONS SHOWN ON THE PLANS. WHEN CHAIN IS REQUIRED, DO NOT USE CAST DUCTILE IRON GRATES. SEE REVISED STANDARD PLAN RSP D77A FOR DETAILS.

TABLE A

CONCRETE QUANTITIES				
TYPE	H=3'-0" TO 8'-0" (T= 6")		H=8'-1"TO 20'-0" (T= 8")	
	H=3'-0" (CY)	ADDITIONAL PCC PER FOOT (CY)	H=8'-1" (CY)	ADDITIONAL PCC PER FOOT (CY)
GD2	2.84	0.552	6.15	0.615

TABLE BASED ON 8" FLOOR SLAB. NO DEDUCTIONS OR ADJUSTMENTS ARE TO BE MADE TO THESE QUANTITIES BECAUSE OF PIPE OPENINGS, DIFFERENT FLOOR ALTERNATIVES OR DIFFERENT CURB TYPES.

QUANTITIES FOR TYPE GD2 INLETS BASED ON Min INTERIOR DIMENSIONS SHOWN.

DRAINAGE DETAILS

NO SCALE

DD-7

STATE OF CALIFORNIA - DEPARTMENT OF TRANSPORTATION
Caltrans TRAFFIC PROJECT DEVELOPMENT

FUNCTIONAL SUPERVISOR: RICHARD ESTRADA
CALCULATED-DESIGNED BY: BARZAN ARAN
CHECKED BY
REVISED BY
DATE REVISED
BETHNAY DES JARDINS

LAST REVISION 03-18-14 DATE PLOTTED => 28-MAY-2014 TIME PLOTTED => 14:19

Dist	COUNTY	ROUTE	POST MILES TOTAL PROJECT	SHEET No.	TOTAL SHEETS
11	SD	76	R4.2/R7.6	83	217

REGISTERED CIVIL ENGINEER 04-24-14 DATE

05-19-14
PLANS APPROVAL DATE

REGISTERED PROFESSIONAL ENGINEER BARZAN A. ARAN No. C75167 Exp. 12/31/15 CIVIL STATE OF CALIFORNIA

THE STATE OF CALIFORNIA OR ITS OFFICERS OR AGENTS SHALL NOT BE RESPONSIBLE FOR THE ACCURACY OR COMPLETENESS OF SCANNED COPIES OF THIS PLAN SHEET.

NOTE:
ALL PIPE JOINTS ARE STANDARD.

DRAINAGE QUANTITIES

DRAINAGE SHEET No.	DRAINAGE SYSTEM	DRAINAGE UNIT	24" RCP LF	18" RCP LF	Max FILL HEIGHT (N) LF	REMOVE INLET (N) EA	REMOVE INLET EA	CONCRETE COLLAR (N) EA	STRUCTURAL Conc (JUNCTION STRUCTURE) CY	MINOR Conc (MINOR STRUCTURE) CY	Misc IRON AND STEEL LB	HEIGHT OF INLET (N) LF	CAP INLET EA	GRATED LINE DRAIN LF	CONCRETE (CONCRETE APRON) CY	ABANDON CULVERT LF	DESCRIPTION	STATION	DRAINAGE SHEET No.	DRAINAGE SYSTEM	DRAINAGE UNIT
D-1	1	a												18.0			GRATED LINE DRAIN; L=16.0′				
D-1		b								2.25	329	6.68					TYPE G2 INLET WITH 24-12 GRATE,FRAME AND CHAIN; H=6.68′, L=0.5′	257+20.00 "SR-76" LINE	D-1	1	a
D-1		c	31.4		5.4												24" X 31.4′ RCP		D-1		b
D-1		d				1			4.56		864						JUNCTION STRUCTURE WITH MANHOLE, Hb=6.64′		D-1		c
D-1		e											1				CAP INLET	256+85.35 "SR-76" LINE	D-1		d
D-1		f														15.0	12" x 15.0′ RCP	256+85.35 "SR-76" LINE	D-1		e
D-1	2	a												20.0			GRATED LINE DRAIN; L=20.0′		D-1	2	a
D-1		b								1.85	329	5.10					TYPE G2 INLET WITH 24-12 GRATE,FRAME AND CHAIN; H=5.10′, L=0.0′	260+55.30 "SR-76" LINE	D-1		b
D-1		c	8.4		3.3			1									24" X 8.4′ RCP WITH Conc COLLAR		D-1		c
D-1		d					1										REMOVE G2 INLET; H=4.72	260+55.30 "SR-76" LINE	D-1		
D-1	3	a								3.93	329	9.30					TYPE G2 INLET WITH 24-12 GRATE, FRAME AND CHAIN; H=9.30′, L=0.0′	263+55.09 "SR-76" LINE	D-1	3	a
D-1		b												16.0			GRATED LINE DRAIN; L=16.0′		D-1		b
D-1		c	8.5		7.5			1									24" X 8.5′ RCP WITH Conc COLLAR (TYPE L-2)		D-1		c
D-1		d	105.7		6.9												24" X 105.7′ RCP		D-1		d
D-1		e								2.22	329	6.55					TYPE G2 INLET WITH 24-12 GRATE, FRAME AND CHAIN; H=6.55′, L=0.0′	264+63.00 "SR-76" LINE	D-1		e
D-1		f												12.0			GRATED LINE DRAIN; L=12.0′		D-1		f
D-1		g	10.7		4.2												24" X 10.7′ RCP		D-1		g
D-1		h								1.74	329	4.70					TYPE G2 INLET WITH 24-12 GRATE, FRAME AND CHAIN; H=4.70′, L=0.0′	264+63.00 "SR-76" LINE	D-1		h
D-1		i													2.94		CONCRETE APRON		D-1		i
D-1		j					1										REMOVE G2 INLET; H=8.2	263+55.09 "SR-76" LINE	D-1		j
D-2	4	a								3.39	616	4.00					TYPE GD2 INLET WITH 2x24-12 GRATES, FRAME AND 2-CHAINS; H=4.00′, L=0.0′	296+98.00 "SR-76" LINE	D-2	4	a
D-2		b	37.9		4.1												24" X 37.9′ RCP		D-2		b
D-2		c								2.13	329	6.20					TYPE G2 INLET WITH 24-12 GRATE, FRAME AND CHAIN; H=6.20′, L=0.0′	297+38.90 "SR-76" LINE	D-2		c
D-2		d	2.7		4.2			1									24" X 2.7′ RCP WITH Conc COLLAR (TYPE L-2)		D-2		d
D-2		e	38.2		4.3												24" X 38.2′ RCP		D-2		e
D-2		f								2.03	329	5.82					TYPE G2 INLET WITH 24-12 GRATE, FRAME AND CHAIN; H=5.82′, L=0.0′	297+80.00 "SR-76" LINE	D-2		f
D-2		g												10.0			GRATED LINE DRAIN; L=10.0′		D-2		g
D-2		h	226.5		3.8												24" X 226.5′ RCP		D-2		h
D-2		i								1.31	329	3.00					TYPE G2 INLET WITH 24-12 GRATE, FRAME AND CHAIN; H=3.00′, L=0.0′	300+07.50 "SR-76" LINE	D-2		i
D-2		j													2.94		CONCRETE APRON		D-2		j
D-3	5	a								1.31	329	3.00					TYPE G2 INLET WITH 24-12 GRATE, FRAME AND CHAIN; H=3.00′, L=0.0′	320+08.50 "SR-76" LINE	D-3	5	a
D-3		b													2.94		CONCRETE APRON		D-3		b
D-3		c		135.7	3.2												18" X 135.7′ RCP		D-3		c
D-3		d				1			3.22		864						JUNCTION STRUCTURE, Hb=3.46′	321+47.93 "SR-76" LINE	D-3		d
D-3		e				1			3.79		864						JUNCTION STRUCTURE, Hb=4.82′	32547.57 "SR-76" LINE	D-3		e
	SUBTOTAL		470.0	135.7			2		11.57	22.16	6,169		1	76.0	8.82	15.0					

(N) - NOT A SEPARATE PAY ITEM, FOR INFORMATION ONLY.

STATE OF CALIFORNIA - DEPARTMENT OF TRANSPORTATION
Caltrans PROJECT DEVELOPMENT
TRAFFIC

FUNCTIONAL SUPERVISOR: RICHARD ESTRADA
CALCULATED-DESIGNED BY: BETHNAY DES JARDINS
CHECKED BY: BARZAN ARAN
REVISED BY
DATE REVISED

DRAINAGE QUANTITIES
DQ-1

LAST REVISION 03-18-14
DATE PLOTTED => 28-MAY-2014
TIME PLOTTED => 14:19

Dist	COUNTY	ROUTE	POST MILES TOTAL PROJECT	SHEET No.	TOTAL SHEETS
11	SD	76	R4.2/R7.6	84	217

REGISTERED CIVIL ENGINEER 04-24-14 DATE

05-19-14
PLANS APPROVAL DATE

REGISTERED PROFESSIONAL ENGINEER BARZAN A. ARAN No. C75167 Exp. 12/31/15 CIVIL STATE OF CALIFORNIA

THE STATE OF CALIFORNIA OR ITS OFFICERS OR AGENTS SHALL NOT BE RESPONSIBLE FOR THE ACCURACY OR COMPLETENESS OF SCANNED COPIES OF THIS PLAN SHEET.

DRAINAGE QUANTITIES

DRAINAGE SHEET No.	DRAINAGE SYSTEM	DRAINAGE UNIT	24" RCP LF	18" RCP LF	Max FILL HEIGHT (N) LF	REMOVE INLET (N) EA	REMOVE INLET EA	CONCRETE COLLAR (N) EA	STRUCTURAL Conc (JUNCTION STRUCTURE) CY	MINOR Conc (MINOR STRUCTURE) CY	Misc IRON AND STEEL LB	HEIGHT OF INLET (N) LF	CAP INLET EA	GRATED LINE DRAIN LF	CONCRETE (CONCRETE APRON) CY	ABANDON CULVERT LF	DESCRIPTION	STATION	DRAINAGE SHEET No.	DRAINAGE SYSTEM	DRAINAGE UNIT
D-4	6	a				1			4.41		864						JUNCTION STRUCTURE, Hb=6.50′	333+36.20 "SR-76" LINE	D-4	6	a
D-4		b	365.7		4.9												24" X 365.7′ RCP		D-4		b
D-4		c								1.31	329	3.00					TYPE G2 INLET WITH 24-12 GRATE, FRAME AND CHAIN; H=3.00′, L=0.0′	337+24.50 "SR-76" LINE	D-4		c
D-4		d													2.94		CONCRETE APRON		D-4		d
D-5	7	a		58.2	3.6												18" X 58.2′ RCP WITH Conc COLLAR		D-5	7	a
D-5		b								1.56	329	3.99					TYPE G2 INLET WITH 24-12 GRATE, FRAME AND CHAIN; H=3.99′, L=0.0′	347+50.00 "SR-76" LINE	D-5		b
D-5		c		127.0	2.7												18" X 127.0′ RCP		D-5		c
D-5		d								1.60	329	4.15					TYPE G2 INLET WITH 24-12 GRATE, FRAME AND CHAIN; H=4.15′, L=0.0′	348+80.00 "SR-76" LINE	D-5		d
D-5		e		157.0	3.2												18" X 157.0′ RCP		D-5		e
D-5		f								1.71	329	4.57					TYPE G2 INLET WITH 24-12 GRATE, FRAME AND CHAIN; H=4.57′, L=0.0′	350+40.00 "SR-76" LINE	D-5		f
D-5		g		137.0	3.1												18" X 137.0′ RCP		D-5		g
D-5		h								1.59	329	4.09					TYPE G2 INLET WITH 24-12 GRATE, FRAME AND CHAIN; H=4.09′, L=0.0′	351+80.00 "SR-76" LINE	D-5		h
D-5		i		168.6	2.9												18" X 168.6′ RCP		D-5		i
D-5		j								1.65	329	4.35					TYPE G2 INLET WITH 24-12 GRATE, FRAME AND CHAIN; H=4.35′, L=0.0′	353+51.53 "SD-76" LINE	D-5		j
D-5		k		105.5	4.1												18" X 105.5′ RCP		D-5		k
D-5		l								1.56	329	3.97					TYPE G2 INLET WITH 24-12 GRATE, FRAME AND CHAIN; H=3.97′, L=0.0′	354+60.00 "SD-76" LINE	D-5		l
D-5		m		197.0	3.1												18" X 197.0′ RCP		D-5		m
D-6		n								1.71	329	4.55					TYPE G2 INLET WITH 24-12 GRATE, FRAME AND CHAIN; H=4.55′, L=0.0′	356+60.00 "SD-76" LINE	D-6		n
D-6		o		177.0	3.1												18" X 177.0′ RCP		D-6		o
D-6		p								1.54	329	3.90					TYPE G2 INLET WITH 24-12 GRATE, FRAME AND CHAIN; H=3.90′, L=0.0′	358+40.00 "SD-76" LINE	D-6		p
D-7	8	a								2.20	329	6.48					TYPE G2 INLET WITH 24-12 GRATE, FRAME AND CHAIN; H=6.48′, L=0.0′	375+55.28 "SD-76" LINE	D-7	8	a
D-7		b	14.0		4.5												24" X 14.0′ RCP WITH Conc COLLAR		D-7		b
D-7		c					1										REMOVE G2 INLET, H=5.3′	375+55.28 "SD-76" LINE	D-7		c
D-8	9	a								2.57	329	7.95					TYPE G2 INLET WITH 24-12 GRATE, FRAME AND CHAIN; H=7.95′, L=0.0′	393+13.00 "SD-76" LINE	D-8	9	a
D-8		b	61.3		6.3												24" X 62.3′ RCP		D-8		b
D-8		c								3.73	329	8.73					TYPE G2 INLET WITH 24-12 GRATE, FRAME AND CHAIN; H=8.73′, L=0.0′	392+50.00 "SD-76" LINE	D-8		c
D-8		d	4.6		6.3												24" X 4.6′ RCP WITH Conc COLLAR		D-8		d
D-8		e					1										REMOVE G2 INLET; H=7.75′	393+13.00 "SD-76" LINE	D-8		e
D-8	10	a				1				2.16	329	6.33					TYPE G2 INLET WITH 24-12 GRATE, FRAME AND CHAIN; H=6.33′, L=0.0′	394+05.00 "SD-76" LINE	D-8	10	a
D-8		b	98.1		4.0												24" X 98.1′ RCP WITH Conc COLLAR		D-8		b
D-8		c								1.44	329	3.50					TYPE G2 INLET WITH 24-12 GRATE, FRAME AND CHAIN; H=3.50′, L=0.0′	395+06.00 "SD-76" LINE	D-8		c
D-8		d													2.94		CONCRETE APRON		D-8		d
D-8		e					1										REMOVE G2 INLET; H=5.04′	394+80.70 "SD-76" LINE	D-8		e
D-9	11	a								1.68	329	4.46					TYPE G2 INLET WITH 24-12 GRATE, FRAME AND CHAIN; H=4.46′, L=0.0′	397+55.00 "SD-76" LINE	D-9	11	a
D-9		b													2.94		CONCRETE APRON		D-9		b
D-9		c	10.9		2.5												24" X 10.9′ RCP WITH Conc COLLAR		D-9		c
D-9		d	97.0		4.0												24" X 97.0′ RCP		D-9		d
	SUBTOTAL		651.6	1,127.3			3		4.41	28.01	5,799				8.82						

(N) - NOT A SEPARATE PAY ITEM, FOR INFORMATION ONLY.

SUBTOTAL 271.0 1,127.3

STATE OF CALIFORNIA - DEPARTMENT OF TRANSPORTATION
Caltrans PROJECT DEVELOPMENT
TRAFFIC

FUNCTIONAL SUPERVISOR: RICHARD ESTRADA
CALCULATED-DESIGNED BY: BETHNAY DES JARDINS
CHECKED BY: BARZAN ARAN
REVISED BY
DATE REVISED

DRAINAGE QUANTITIES
DQ-2

LAST REVISION 03-18-14
DATE PLOTTED => 28-MAY-2014
TIME PLOTTED => 14:19

Dist	COUNTY	ROUTE	POST MILES TOTAL PROJECT	SHEET No.	TOTAL SHEETS
11	SD	76	R4.2/R7.6	85	217

REGISTERED CIVIL ENGINEER 04-24-14 DATE

05-19-14
PLANS APPROVAL DATE

REGISTERED PROFESSIONAL ENGINEER BARZAN A. ARAN No. C75167 Exp. 12/31/15 CIVIL STATE OF CALIFORNIA

THE STATE OF CALIFORNIA OR ITS OFFICERS OR AGENTS SHALL NOT BE RESPONSIBLE FOR THE ACCURACY OR COMPLETENESS OF SCANNED COPIES OF THIS PLAN SHEET.

DRAINAGE QUANTITIES

DRAINAGE SHEET No.	DRAINAGE SYSTEM	DRAINAGE UNIT	24" RCP LF	18" RCP LF	Max FILL HEIGHT (N) LF	REMOVE INLET (N) EA	REMOVE INLET EA	CONCRETE COLLAR (N) EA	STRUCTURAL Conc (JUNCTION STRUCTURE) CY	MINOR Conc (MINOR STRUCTURE) CY	Misc IRON AND STEEL LB	HEIGHT OF INLET (N) LF	CAP INLET EA	GRATED LINE DRAIN LF	CONCRETE (CONCRETE APRON) CY	ABANDON CULVERT LF	DESCRIPTION	STATION	DRAINAGE SHEET No.	DRAINAGE SYSTEM	DRAINAGE UNIT
D-9	11	e								1.85	329	5.13					TYPE G2 INLET WITH 24-12 GRATE, FRAME AND CHAIN; H=5.13′, L=0.0′	398+55.00 "SD-76" LINE	D-9		e
D-9		f													2.94		CONCRETE APRON		D-9		f
D-9		g					1										REMOVE G2 INLET; H=4.50′		D-9		g
D-9		h					1										REMOVE G2 INLET; H=5.90′		D-9		h
D-9		i														96.5	18" X 96.5′ RCP		D-9		i
D-9	12	a				1				2.32	329	6.97					TYPE G2 INLET WITH 24-12 GRATE, FRAME AND CHAIN; H=6.97′, L=0.0′	401+65.00 "SD-76" LINE	D-9	12	a
D-9		b													2.94		CONCRETE APRON		D-9		b
D-9		c	7.2		5.0			1									24" X 7.2′ RCP WITH Conc COLLAR		D-9		c
		d					1										REMOVE G2 INLET; H=6.92′	401+65.00 "SD-76" LINE			d
D-10	13	a								1.31	329	3.00					TYPE G2 INLET WITH 24-12 GRATE, FRAME AND CHAIN; H=3.00′, L=0.0′	409+00.00 "SD-76" LINE	D-10	13	a
D-10		b	143.0		3.6												24" X 143.0′ RCP		D-10		b
D-10		c												16.0			GRATED LINE DRAIN, L=16.0′		D-10		c
D-10		d								1.61	329	4.17					TYPE G2 INLET WITH 24-12 GRATE, FRAME AND CHAIN; H=4.17′, L=0.0′	410+46.00 "SD-76" LINE	D-10		d
D-10		e	33.7		2.5			1									24" X 33.7′ RCP WITH Conc COLLAR		D-10		e
D-10		f											1				CAP INLET		D-10		f
D-10	14	a				1				1.49	329	3.67					TYPE G2 INLET WITH 24-12 GRATE, FRAME AND CHAIN; H=3.67′, L=0.0′	417+20.00 "SD-76" LINE	D-10	14	a
D-10		b		81.8	3.0												18" X 87.0′ RCP		D-10		b
D-10		c				1				1.72	329	4.61					TYPE G2 INLET WITH 24-12 GRATE, FRAME AND CHAIN; H=4.61′, L=0.0′	418+10.00 "SD-76" LINE	D-10		c
D-10		d		47.0	3.7												18" X 42.0′ RCP		D-10		d
D-10		e								1.89	329	5.28					TYPE G2 INLET WITH 24-12 GRATE, FRAME AND CHAIN; H=5.28′, L=0.0′	418+55.00 "SD-76" LINE	D-10		e
D-10		f		14.0	5.0			1									18" X 14.0′ RCP WITH Conc COLLAR		D-10		f
D-10		g				1			3.90		864						JUNCTION STRUCTURE, Hb=5.20′	257+20.00 "SR-76" LINE	D-10		g
D-10		h	44.5		4.33												24" X 44.8′ RCP		D-10		h
D-10		i								1.91	329	5.34					TYPE G2 INLET WITH 24-12 GRATE, FRAME AND CHAIN; H=5.34′, L=0.5′	256+85.35 "SR-76" LINE	D-10		i
D-10		j													2.94		CONCRETE APRON	256+85.35 "SR-76" LINE	D-10		j
D-11	15	a													1.00		CONCRETE APRON		D-11		a
SUBTOTAL			228.4	142.8			3		3.90	14.1	3,496		1	16.0	9.82	96.5					
SUBTOTAL DQ-1			470.0	135.7			2		11.57	22.16	6,169		1	76.0	8.82	15.0					
SUBTOTAL DQ-2			651.6	1,127.3			3		4.41	28.01	5,799				8.82						
TOTAL			1,350.0	1,405.8			8		19.88	64.27*	15,464**		2	92.0	27.46	111.5					

(N) NOT A SEPARATE PAY ITEM, FOR INFORMATION ONLY.
* SEE Q SHEETS FOR ADDITIONAL QUANTITIES.
** INCLUDES WEIGHT OF CHAIN.

STATE OF CALIFORNIA - DEPARTMENT OF TRANSPORTATION
Caltrans TRAFFIC PROJECT DEVELOPMENT

FUNCTIONAL SUPERVISOR: RICHARD ESTRADA
CALCULATED-DESIGNED BY: BETHNAY DES JARDINS
CHECKED BY: BARZAN ARAN
REVISED BY / DATE REVISED

DRAINAGE QUANTITIES
DQ-3

LAST REVISION 03-18-14 | DATE PLOTTED => 28-MAY-2014 | TIME PLOTTED => 14:19

Dist	COUNTY	ROUTE	POST MILES TOTAL PROJECT	SHEET No.	TOTAL SHEETS
11	SD	76	R4.2/R7.6	86	217

REGISTERED CIVIL ENGINEER 04-28-14 DATE

05-19-14
PLANS APPROVAL DATE

REGISTERED PROFESSIONAL ENGINEER
ARTURO A. REYES
No. C75491
Exp. 06/30/14
CIVIL
STATE OF CALIFORNIA

THE STATE OF CALIFORNIA OR ITS OFFICERS OR AGENTS SHALL NOT BE RESPONSIBLE FOR THE ACCURACY OR COMPLETENESS OF SCANNED COPIES OF THIS PLAN SHEET.

NOTES:

1. FOR ACCURATE RIGHT OF WAY DATA, CONTACT RIGHT OF WAY ENGINEERING AT THE DISTRICT OFFICE.

LEGEND:

UTILITY	EXISTING	OWNER
GAS	----gs———	SDG&E
ELECTRIC	———-e———-	SDG&E
WATER	-———w———	CITY OF OCEANSIDE
SEWER	———--S———---	CITY OF OCEANSIDE
TELEPHONE	———--t———	AT&T
CABLE TV	———---tv———	COX CABLE

OCEANSIDE

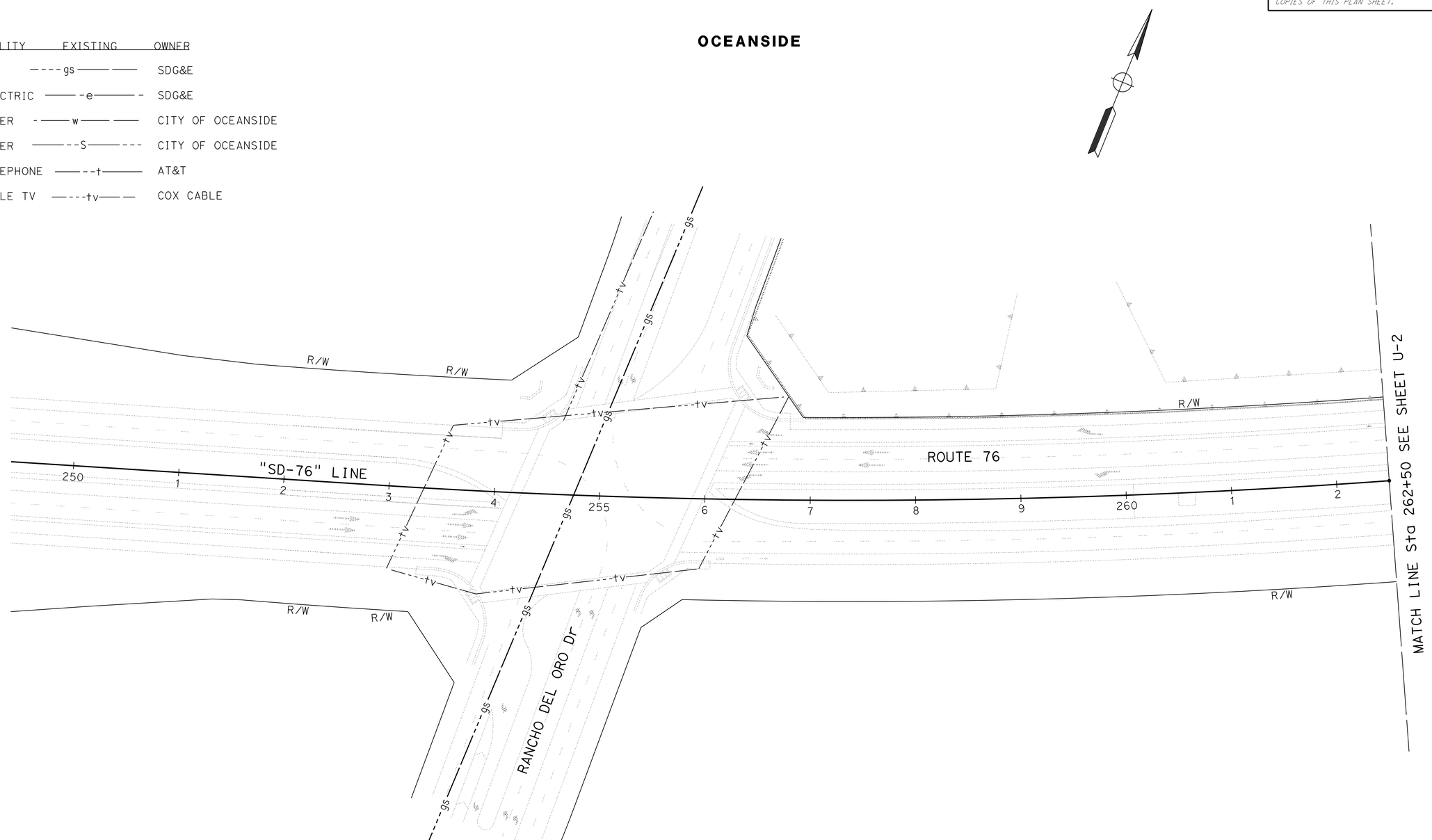

APPROVED FOR UTILITY WORK ONLY

SCALE: 1" = 50'

UTILITY PLAN
U-1

STATE OF CALIFORNIA - DEPARTMENT OF TRANSPORTATION
Caltrans
DESIGN

FUNCTIONAL SUPERVISOR: ABU-BAKR AL-JAFRI
CALCULATED-DESIGNED BY: ARTURO REYES
CHECKED BY: BARZAN ARAN
REVISED BY
DATE REVISED

LAST REVISION 10-11-13
DATE PLOTTED => 28-MAY-2014
TIME PLOTTED => 14:19

Dist	COUNTY	ROUTE	POST MILES TOTAL PROJECT	SHEET No.	TOTAL SHEETS
11	SD	76	R4.2/R7.6	87	217

REGISTERED CIVIL ENGINEER 04-28-14 DATE

05-19-14
PLANS APPROVAL DATE

REGISTERED PROFESSIONAL ENGINEER
ARTURO A. REYES
No. C75491
Exp. 06/30/14
CIVIL
STATE OF CALIFORNIA

THE STATE OF CALIFORNIA OR ITS OFFICERS OR AGENTS SHALL NOT BE RESPONSIBLE FOR THE ACCURACY OR COMPLETENESS OF SCANNED COPIES OF THIS PLAN SHEET.

NOTE:

1. FOR ACCURATE RIGHT OF WAY DATA, CONTACT RIGHT OF WAY ENGINEERING AT THE DISTRICT OFFICE.

OCEANSIDE

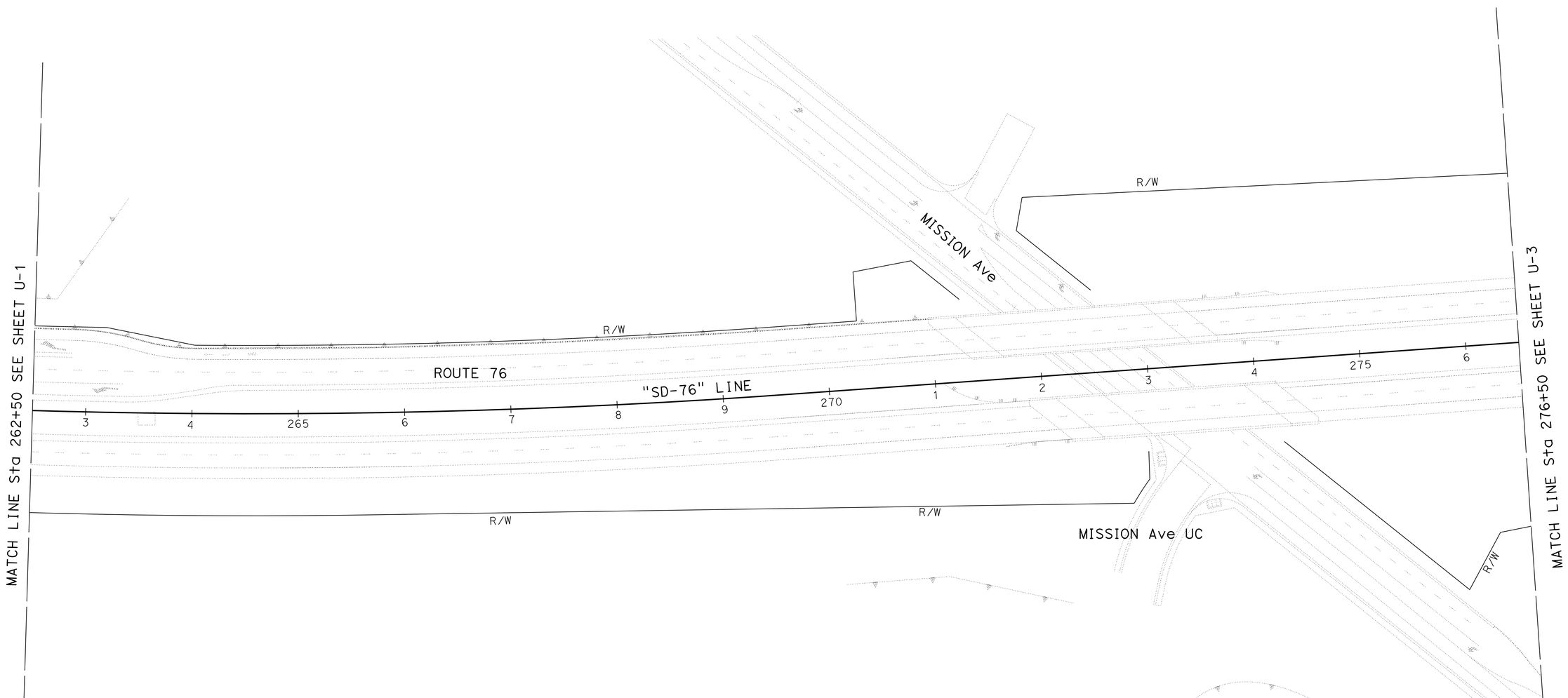

APPROVED FOR UTILITY WORK ONLY

SCALE: 1" = 50'

UTILITY PLAN
U-2

STATE OF CALIFORNIA - DEPARTMENT OF TRANSPORTATION
Caltrans
DESIGN

FUNCTIONAL SUPERVISOR: ABU-BAKR AL-JAFRI

CALCULATED-DESIGNED BY: ARTURO REYES
CHECKED BY: BARZAN ARAN

REVISED BY
DATE REVISED

LAST REVISION 10-11-13
DATE PLOTTED => 28-MAY-2014
TIME PLOTTED => 14:19

Dist	COUNTY	ROUTE	POST MILES TOTAL PROJECT	SHEET No.	TOTAL SHEETS
11	SD	76	R4.2/R7.6	88	217

REGISTERED CIVIL ENGINEER 04-28-14 DATE

05-19-14
PLANS APPROVAL DATE

REGISTERED PROFESSIONAL ENGINEER
ARTURO A. REYES
No. C75491
Exp. 06/30/14
CIVIL
STATE OF CALIFORNIA

THE STATE OF CALIFORNIA OR ITS OFFICERS OR AGENTS SHALL NOT BE RESPONSIBLE FOR THE ACCURACY OR COMPLETENESS OF SCANNED COPIES OF THIS PLAN SHEET.

NOTE:

1. FOR ACCURATE RIGHT OF WAY DATA, CONTACT RIGHT OF WAY ENGINEERING AT THE DISTRICT OFFICE.

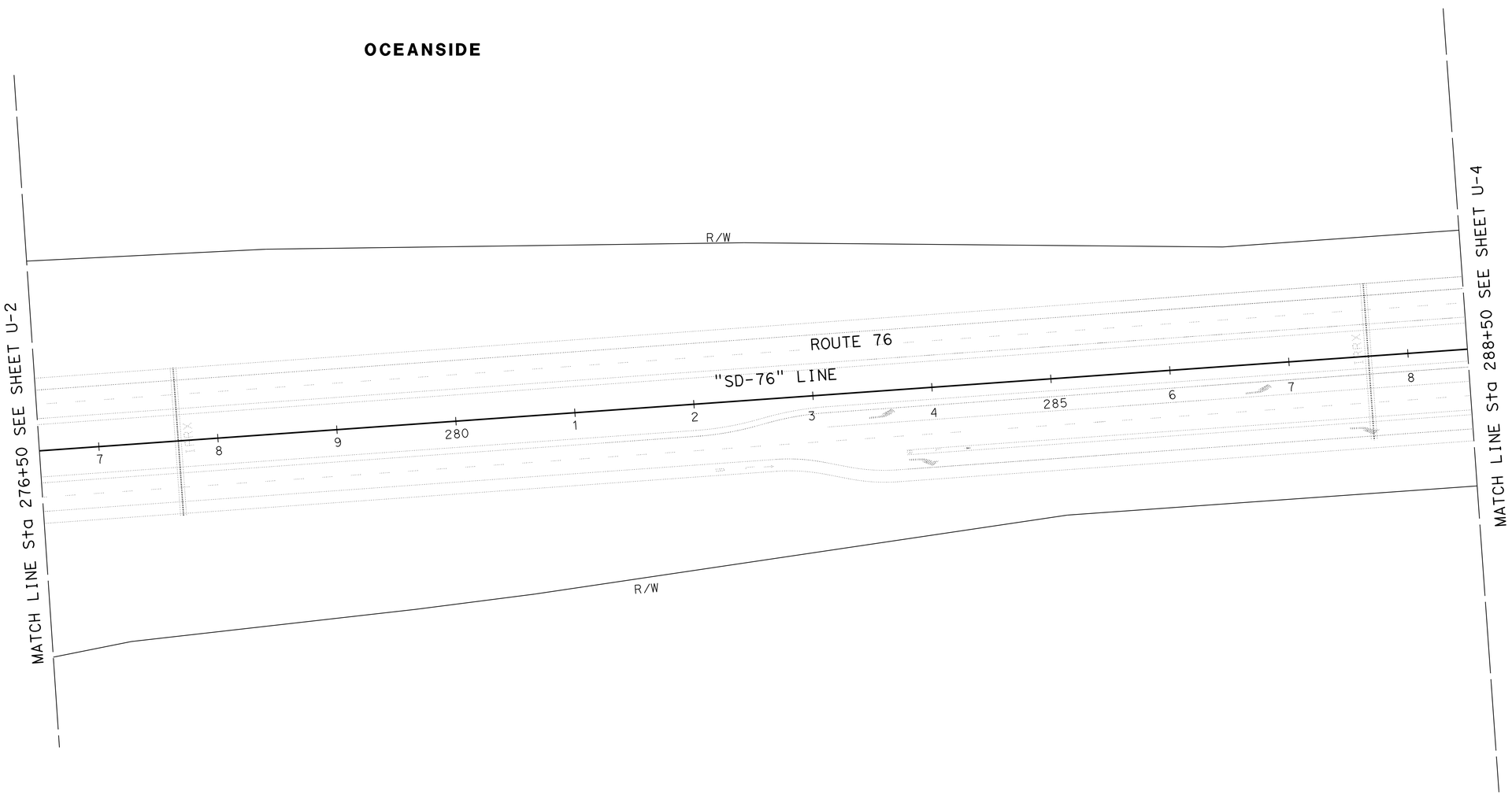

APPROVED FOR UTILITY WORK ONLY

SCALE: 1" = 50'

UTILITY PLAN
U-3

STATE OF CALIFORNIA - DEPARTMENT OF TRANSPORTATION
Caltrans
DESIGN

FUNCTIONAL SUPERVISOR: ABU-BAKR AL-JAFRI
CALCULATED-DESIGNED BY: ARTURO REYES
CHECKED BY: BARZAN ARAN
REVISED BY
DATE REVISED

LAST REVISION 10-11-13
DATE PLOTTED => 28-MAY-2014
TIME PLOTTED => 14:19

Dist	COUNTY	ROUTE	POST MILES TOTAL PROJECT	SHEET No.	TOTAL SHEETS
11	SD	76	R4.2/R7.6	89	217

REGISTERED CIVIL ENGINEER 04-28-14 DATE

05-19-14
PLANS APPROVAL DATE

REGISTERED PROFESSIONAL ENGINEER ARTURO A. REYES No. C75491 Exp. 06/30/14 CIVIL STATE OF CALIFORNIA

THE STATE OF CALIFORNIA OR ITS OFFICERS OR AGENTS SHALL NOT BE RESPONSIBLE FOR THE ACCURACY OR COMPLETENESS OF SCANNED COPIES OF THIS PLAN SHEET.

NOTE:

1. FOR ACCURATE RIGHT OF WAY DATA, CONTACT RIGHT OF WAY ENGINEERING AT THE DISTRICT OFFICE.

OCEANSIDE

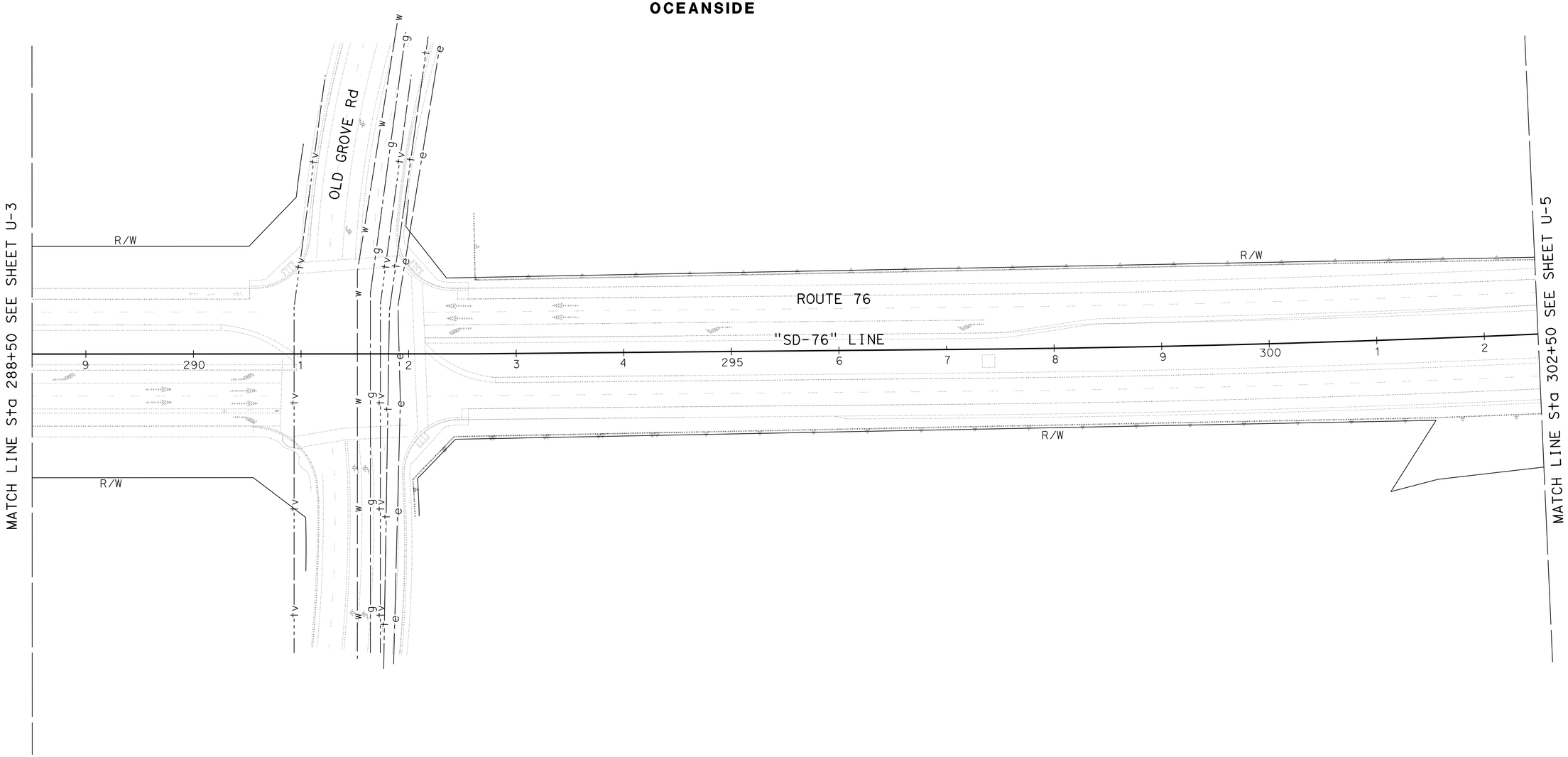

APPROVED FOR UTILITY WORK ONLY

SCALE: 1" = 50'

UTILITY PLAN U-4

STATE OF CALIFORNIA - DEPARTMENT OF TRANSPORTATION
Caltrans® DESIGN

FUNCTIONAL SUPERVISOR: ABU-BAKR AL-JAFRI
CALCULATED-DESIGNED BY: ARTURO REYES
CHECKED BY: BARZAN ARAN
REVISED BY
DATE REVISED

LAST REVISION 10-11-13 | DATE PLOTTED => 28-MAY-2014 | TIME PLOTTED => 14:19

Dist	COUNTY	ROUTE	POST MILES TOTAL PROJECT	SHEET No.	TOTAL SHEETS
11	SD	76	R4.2/R7.6	90	217

REGISTERED CIVIL ENGINEER 04-28-14 DATE

05-19-14
PLANS APPROVAL DATE

REGISTERED PROFESSIONAL ENGINEER ARTURO A. REYES No. C75491 Exp. 06/30/14 CIVIL STATE OF CALIFORNIA

THE STATE OF CALIFORNIA OR ITS OFFICERS OR AGENTS SHALL NOT BE RESPONSIBLE FOR THE ACCURACY OR COMPLETENESS OF SCANNED COPIES OF THIS PLAN SHEET.

NOTE:

1. FOR ACCURATE RIGHT OF WAY DATA, CONTACT RIGHT OF WAY ENGINEERING AT THE DISTRICT OFFICE.

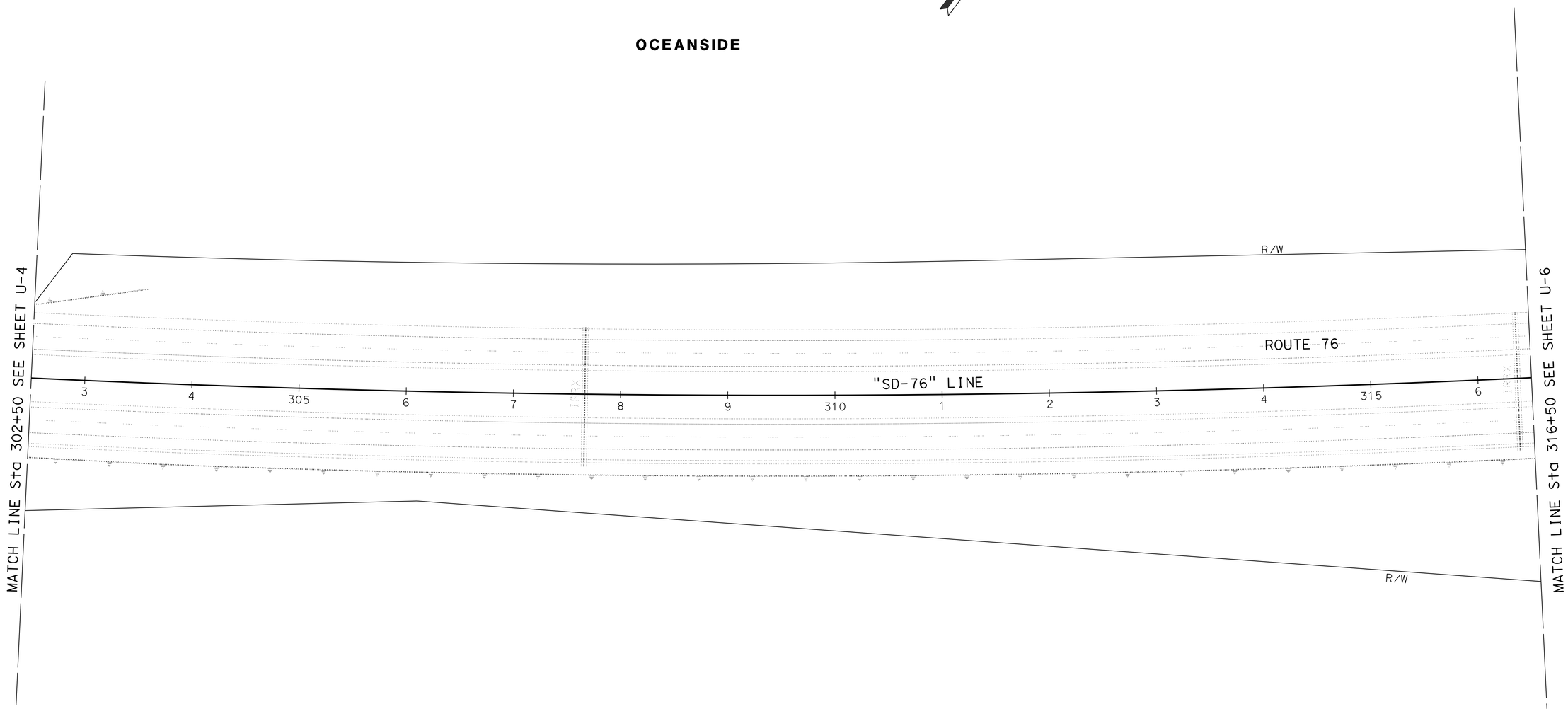

APPROVED FOR UTILITY WORK ONLY

SCALE: 1" = 50'

UTILITY PLAN
U-5

STATE OF CALIFORNIA - DEPARTMENT OF TRANSPORTATION
Caltrans
DESIGN

FUNCTIONAL SUPERVISOR: ABU-BAKR AL-JAFRI
CALCULATED-DESIGNED BY: ARTURO REYES
CHECKED BY: BARZAN ARAN
REVISED BY
DATE REVISED

LAST REVISION 10-11-13
DATE PLOTTED => 28-MAY-2014
TIME PLOTTED => 14:19

BORDER LAST REVISED 7/2/2010
USERNAME => s127400
DGN FILE => 1100020326ka005.dgn
RELATIVE BORDER SCALE IS IN INCHES 0 1 2 3
UNIT 2796
PROJECT NUMBER & PHASE 11000203261

Dist	COUNTY	ROUTE	POST MILES TOTAL PROJECT	SHEET No.	TOTAL SHEETS
11	SD	76	R4.2/R7.6	91	217

REGISTERED CIVIL ENGINEER 04-28-14 DATE

05-19-14
PLANS APPROVAL DATE

REGISTERED PROFESSIONAL ENGINEER ARTURO A. REYES No. C75491 Exp. 06/30/14 CIVIL STATE OF CALIFORNIA

THE STATE OF CALIFORNIA OR ITS OFFICERS OR AGENTS SHALL NOT BE RESPONSIBLE FOR THE ACCURACY OR COMPLETENESS OF SCANNED COPIES OF THIS PLAN SHEET.

NOTE:

1. FOR ACCURATE RIGHT OF WAY DATA, CONTACT RIGHT OF WAY ENGINEERING AT THE DISTRICT OFFICE.

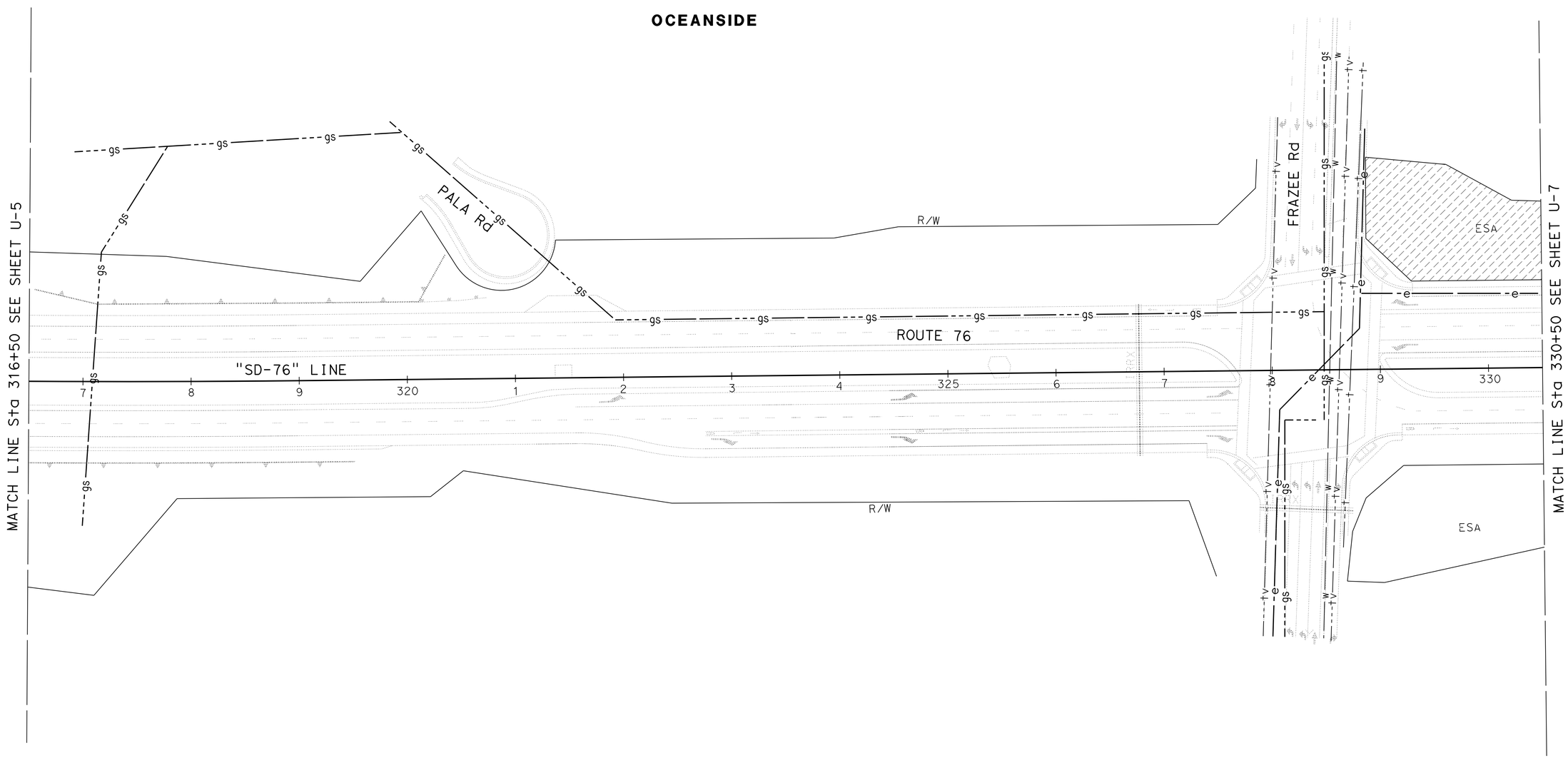

APPROVED FOR UTILITY WORK ONLY

SCALE: 1" = 50'

UTILITY PLAN
U-6

STATE OF CALIFORNIA - DEPARTMENT OF TRANSPORTATION
Caltrans®
DESIGN

FUNCTIONAL SUPERVISOR: ABU-BAKR AL-JAFRI
CALCULATED-DESIGNED BY: ARTURO REYES
CHECKED BY: BARZAN ARAN
REVISED BY
DATE REVISED

LAST REVISION 10-11-13
DATE PLOTTED => 28-MAY-2014
TIME PLOTTED => 14:19

Dist	COUNTY	ROUTE	POST MILES TOTAL PROJECT	SHEET No.	TOTAL SHEETS
11	SD	76	R4.2/R7.6	92	217

REGISTERED CIVIL ENGINEER 04-28-14 DATE

05-19-14
PLANS APPROVAL DATE

REGISTERED PROFESSIONAL ENGINEER ARTURO A. REYES No. C75491 Exp. 06/30/14 CIVIL STATE OF CALIFORNIA

THE STATE OF CALIFORNIA OR ITS OFFICERS OR AGENTS SHALL NOT BE RESPONSIBLE FOR THE ACCURACY OR COMPLETENESS OF SCANNED COPIES OF THIS PLAN SHEET.

NOTE:

1. FOR ACCURATE RIGHT OF WAY DATA, CONTACT RIGHT OF WAY ENGINEERING AT THE DISTRICT OFFICE.

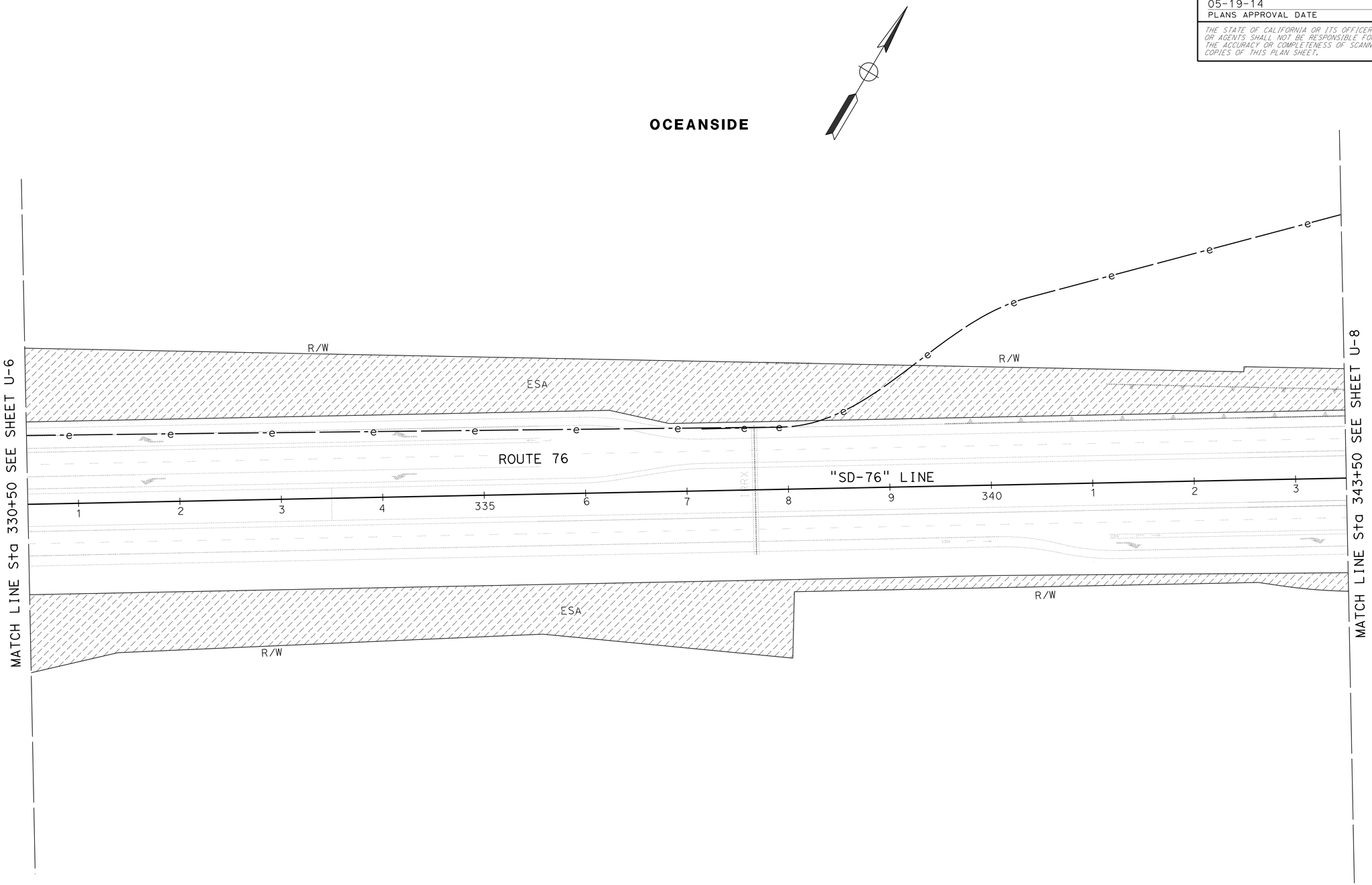

APPROVED FOR UTILITY WORK ONLY

SCALE: 1" = 50'

UTILITY PLAN
U-7

STATE OF CALIFORNIA - DEPARTMENT OF TRANSPORTATION
Caltrans
DESIGN

FUNCTIONAL SUPERVISOR: ABU-BAKR AL-JAFRI
CALCULATED-DESIGNED BY: ARTURO REYES
CHECKED BY: BARZAN ARAN
REVISED BY
DATE REVISED

LAST REVISION 10-11-13
DATE PLOTTED => 28-MAY-2014
TIME PLOTTED => 14:19

Dist	COUNTY	ROUTE	POST MILES TOTAL PROJECT	SHEET No.	TOTAL SHEETS
11	SD	76	R4.2/R7.6	93	217

REGISTERED CIVIL ENGINEER 04-28-14 DATE

05-19-14
PLANS APPROVAL DATE

REGISTERED PROFESSIONAL ENGINEER
ARTURO A. REYES
No. C75491
Exp. 06/30/14
CIVIL
STATE OF CALIFORNIA

THE STATE OF CALIFORNIA OR ITS OFFICERS OR AGENTS SHALL NOT BE RESPONSIBLE FOR THE ACCURACY OR COMPLETENESS OF SCANNED COPIES OF THIS PLAN SHEET.

NOTE:

1. FOR ACCURATE RIGHT OF WAY DATA, CONTACT RIGHT OF WAY ENGINEERING AT THE DISTRICT OFFICE.

OCEANSIDE

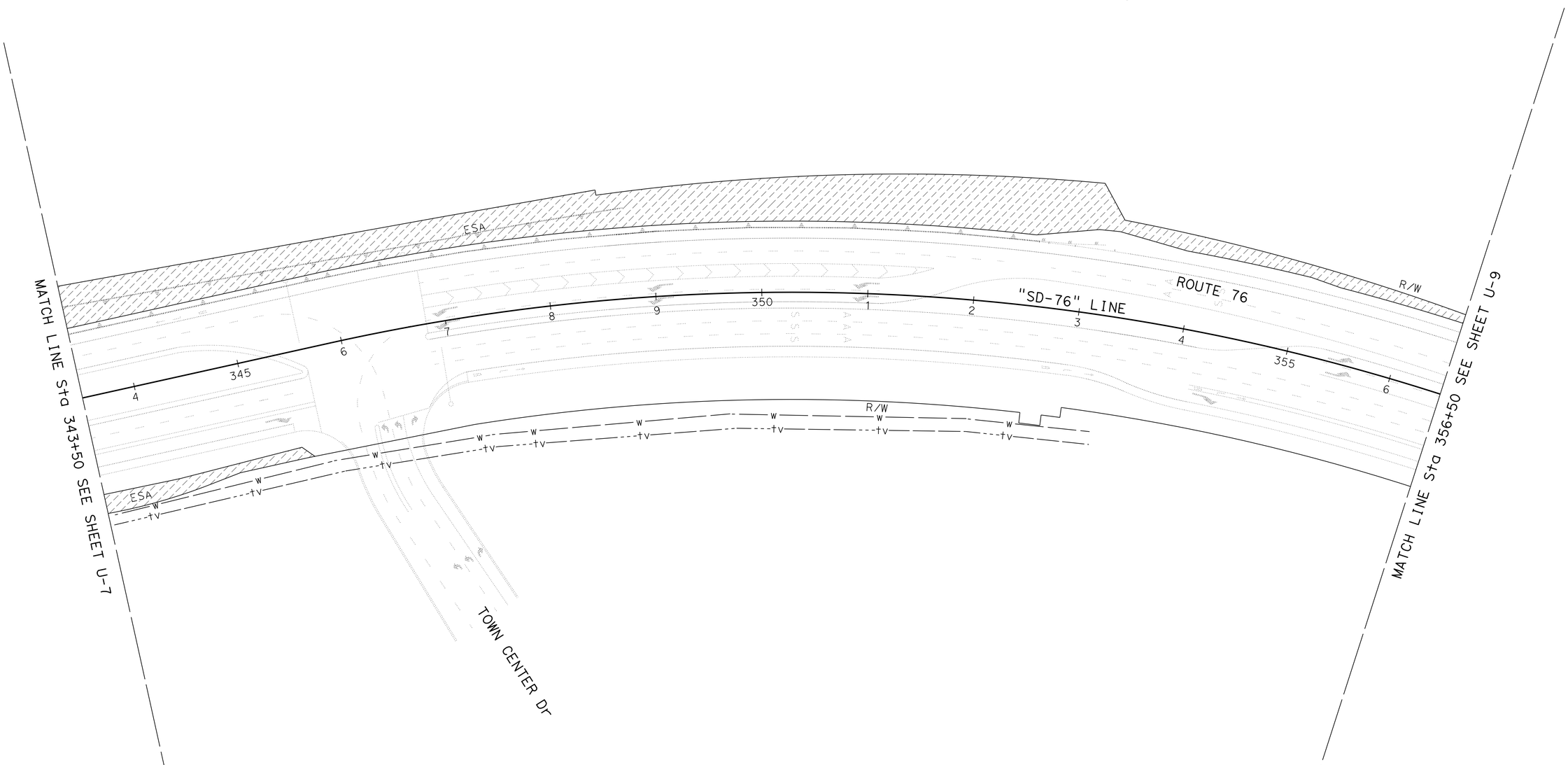

APPROVED FOR UTILITY WORK ONLY

SCALE: 1" = 50'

UTILITY PLAN U-8

STATE OF CALIFORNIA - DEPARTMENT OF TRANSPORTATION
Caltrans
DESIGN

FUNCTIONAL SUPERVISOR: ABU-BAKR AL-JAFRI
CALCULATED-DESIGNED BY: ARTURO REYES
CHECKED BY: BARZAN ARAN
REVISED BY
DATE REVISED

LAST REVISION 10-11-13
DATE PLOTTED => 28-MAY-2014
TIME PLOTTED => 14:19

BORDER LAST REVISED 7/2/2010
USERNAME => s127400
DGN FILE => 1100020326ka008.dgn
RELATIVE BORDER SCALE IS IN INCHES 0 1 2 3
UNIT 2796
PROJECT NUMBER & PHASE 11000203261

Dist	COUNTY	ROUTE	POST MILES TOTAL PROJECT	SHEET No.	TOTAL SHEETS
11	SD	76	R4.2/R7.6	94	217

REGISTERED CIVIL ENGINEER 04-28-14 DATE

05-19-14
PLANS APPROVAL DATE

REGISTERED PROFESSIONAL ENGINEER
ARTURO A. REYES
No. C75491
Exp. 06/30/14
CIVIL
STATE OF CALIFORNIA

THE STATE OF CALIFORNIA OR ITS OFFICERS OR AGENTS SHALL NOT BE RESPONSIBLE FOR THE ACCURACY OR COMPLETENESS OF SCANNED COPIES OF THIS PLAN SHEET.

NOTE:

1. FOR ACCURATE RIGHT OF WAY DATA, CONTACT RIGHT OF WAY ENGINEERING AT THE DISTRICT OFFICE.

OCEANSIDE

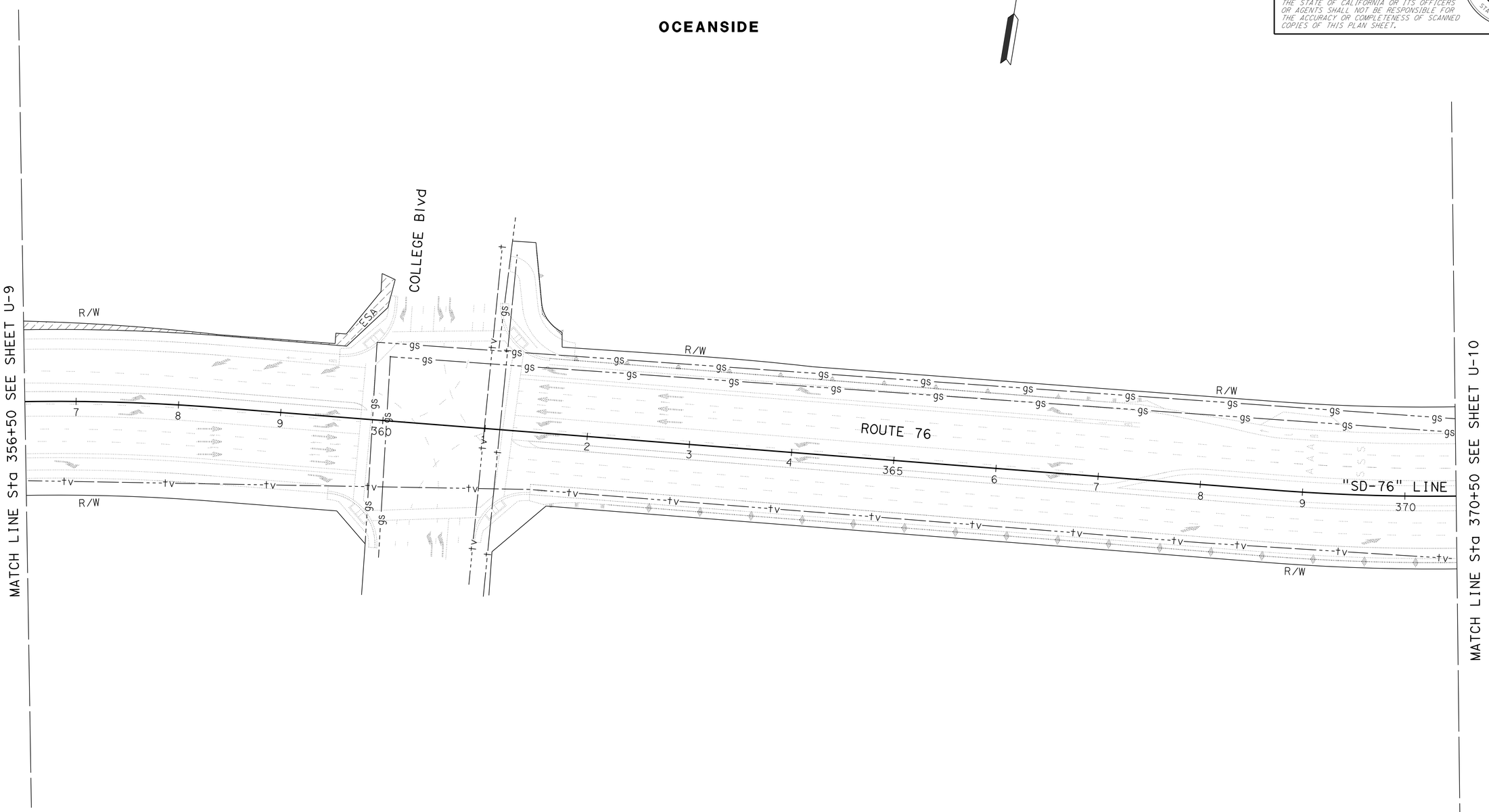

APPROVED FOR UTILITY WORK ONLY

SCALE: 1" = 50'

UTILITY PLAN
U-9

STATE OF CALIFORNIA - DEPARTMENT OF TRANSPORTATION
Caltrans
DESIGN

FUNCTIONAL SUPERVISOR: ABU-BAKR AL-JAFRI
CALCULATED-DESIGNED BY: ARTURO REYES
CHECKED BY: BARZAN ARAN
REVISED BY
DATE REVISED

LAST REVISION 10-11-13
DATE PLOTTED => 28-MAY-2014
TIME PLOTTED => 14:19

Dist	COUNTY	ROUTE	POST MILES TOTAL PROJECT	SHEET No.	TOTAL SHEETS
11	SD	76	R4.2/R7.6	95	217

REGISTERED CIVIL ENGINEER 04-28-14 DATE

05-19-14
PLANS APPROVAL DATE

REGISTERED PROFESSIONAL ENGINEER ARTURO A. REYES No. C75491 Exp. 06/30/14 CIVIL STATE OF CALIFORNIA

THE STATE OF CALIFORNIA OR ITS OFFICERS OR AGENTS SHALL NOT BE RESPONSIBLE FOR THE ACCURACY OR COMPLETENESS OF SCANNED COPIES OF THIS PLAN SHEET.

NOTE:

1. FOR ACCURATE RIGHT OF WAY DATA, CONTACT RIGHT OF WAY ENGINEERING AT THE DISTRICT OFFICE.

OCEANSIDE

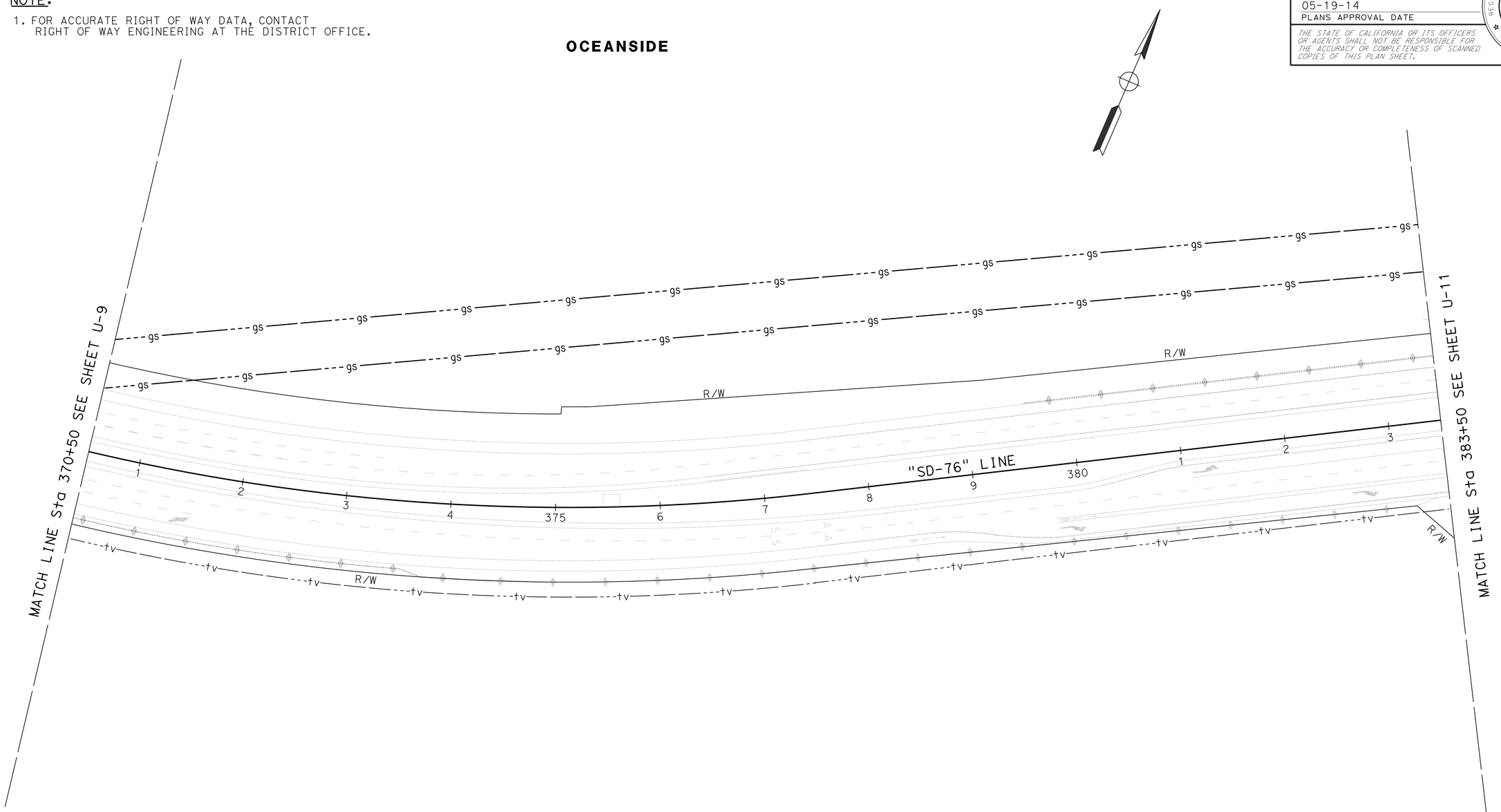

APPROVED FOR UTILITY WORK ONLY

SCALE: 1" = 50'

UTILITY PLAN U-10

STATE OF CALIFORNIA - DEPARTMENT OF TRANSPORTATION
Caltrans
DESIGN

FUNCTIONAL SUPERVISOR: ABU-BAKR AL-JAFRI
CALCULATED-DESIGNED BY: ARTURO REYES
CHECKED BY: BARZAN ARAN
REVISED BY
DATE REVISED

LAST REVISION 10-11-13
DATE PLOTTED => 28-MAY-2014
TIME PLOTTED => 14:19

Dist	COUNTY	ROUTE	POST MILES TOTAL PROJECT	SHEET No.	TOTAL SHEETS
11	SD	76	R4.2/R7.6	96	217

REGISTERED CIVIL ENGINEER 04-28-14 DATE

05-19-14
PLANS APPROVAL DATE

REGISTERED PROFESSIONAL ENGINEER ARTURO A. REYES No. C75491 Exp. 06/30/14 CIVIL STATE OF CALIFORNIA

THE STATE OF CALIFORNIA OR ITS OFFICERS OR AGENTS SHALL NOT BE RESPONSIBLE FOR THE ACCURACY OR COMPLETENESS OF SCANNED COPIES OF THIS PLAN SHEET.

NOTE:

1. FOR ACCURATE RIGHT OF WAY DATA, CONTACT RIGHT OF WAY ENGINEERING AT THE DISTRICT OFFICE.

OCEANSIDE

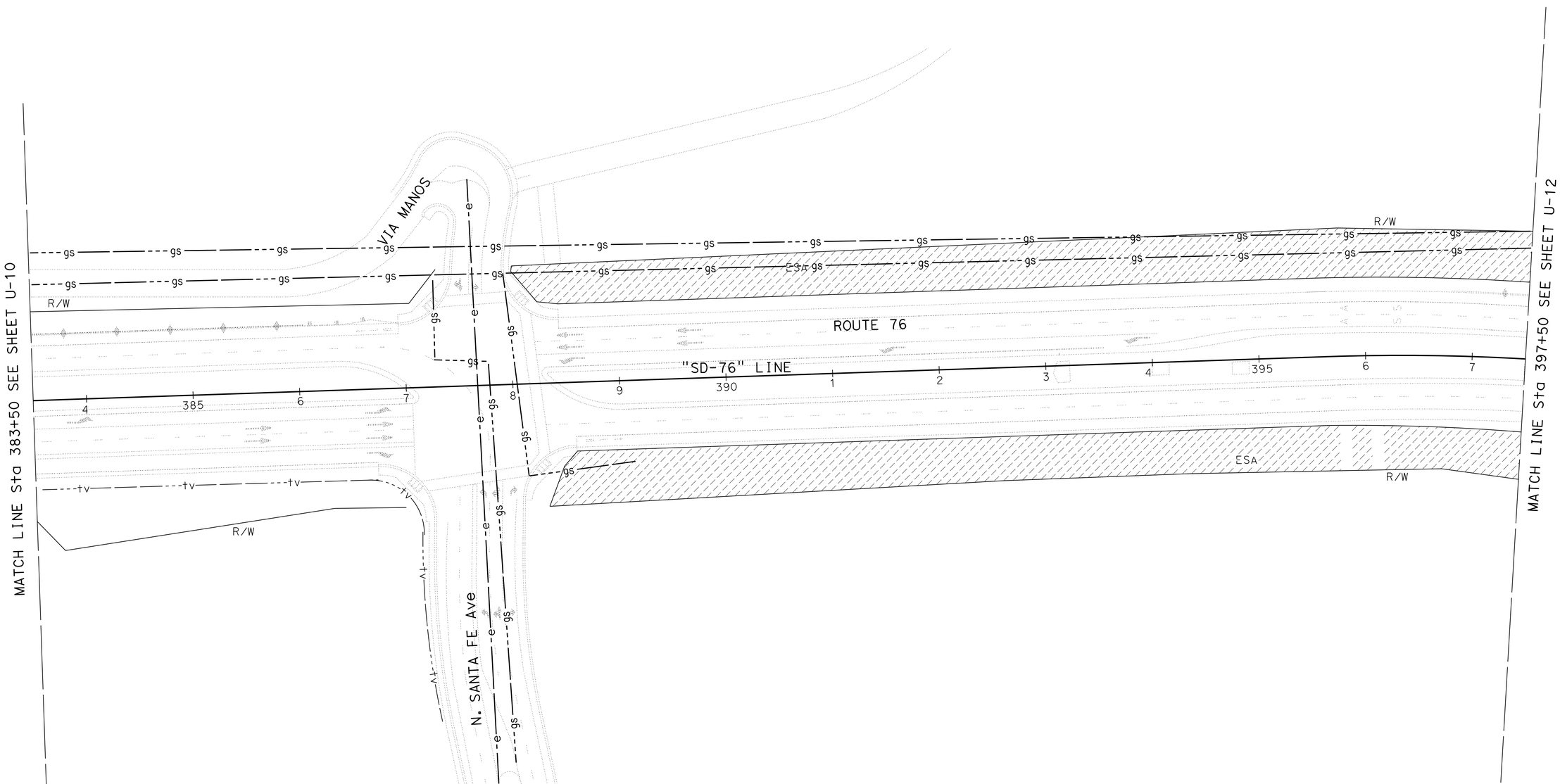

APPROVED FOR UTILITY WORK ONLY

SCALE: 1" = 50'

UTILITY PLAN
U-11

STATE OF CALIFORNIA - DEPARTMENT OF TRANSPORTATION
Caltrans
DESIGN

FUNCTIONAL SUPERVISOR: ABU-BAKR AL-JAFRI
CALCULATED-DESIGNED BY: ARTURO REYES
CHECKED BY: BARZAN ARAN
REVISED BY
DATE REVISED

LAST REVISION 10-11-13
DATE PLOTTED => 28-MAY-2014
TIME PLOTTED => 14:19

BORDER LAST REVISED 7/2/2010
USERNAME => s127400
DGN FILE => 1100020326ka011.dgn
RELATIVE BORDER SCALE IS IN INCHES 0 1 2 3
UNIT 2796
PROJECT NUMBER & PHASE 11000203261

Dist	COUNTY	ROUTE	POST MILES TOTAL PROJECT	SHEET No.	TOTAL SHEETS
11	SD	76	R4.2/R7.6	97	217

REGISTERED CIVIL ENGINEER 04-28-14 DATE

05-19-14
PLANS APPROVAL DATE

REGISTERED PROFESSIONAL ENGINEER ARTURO A. REYES No. C75491 Exp. 06/30/14 CIVIL STATE OF CALIFORNIA

THE STATE OF CALIFORNIA OR ITS OFFICERS OR AGENTS SHALL NOT BE RESPONSIBLE FOR THE ACCURACY OR COMPLETENESS OF SCANNED COPIES OF THIS PLAN SHEET.

NOTE:

1. FOR ACCURATE RIGHT OF WAY DATA, CONTACT RIGHT OF WAY ENGINEERING AT THE DISTRICT OFFICE.

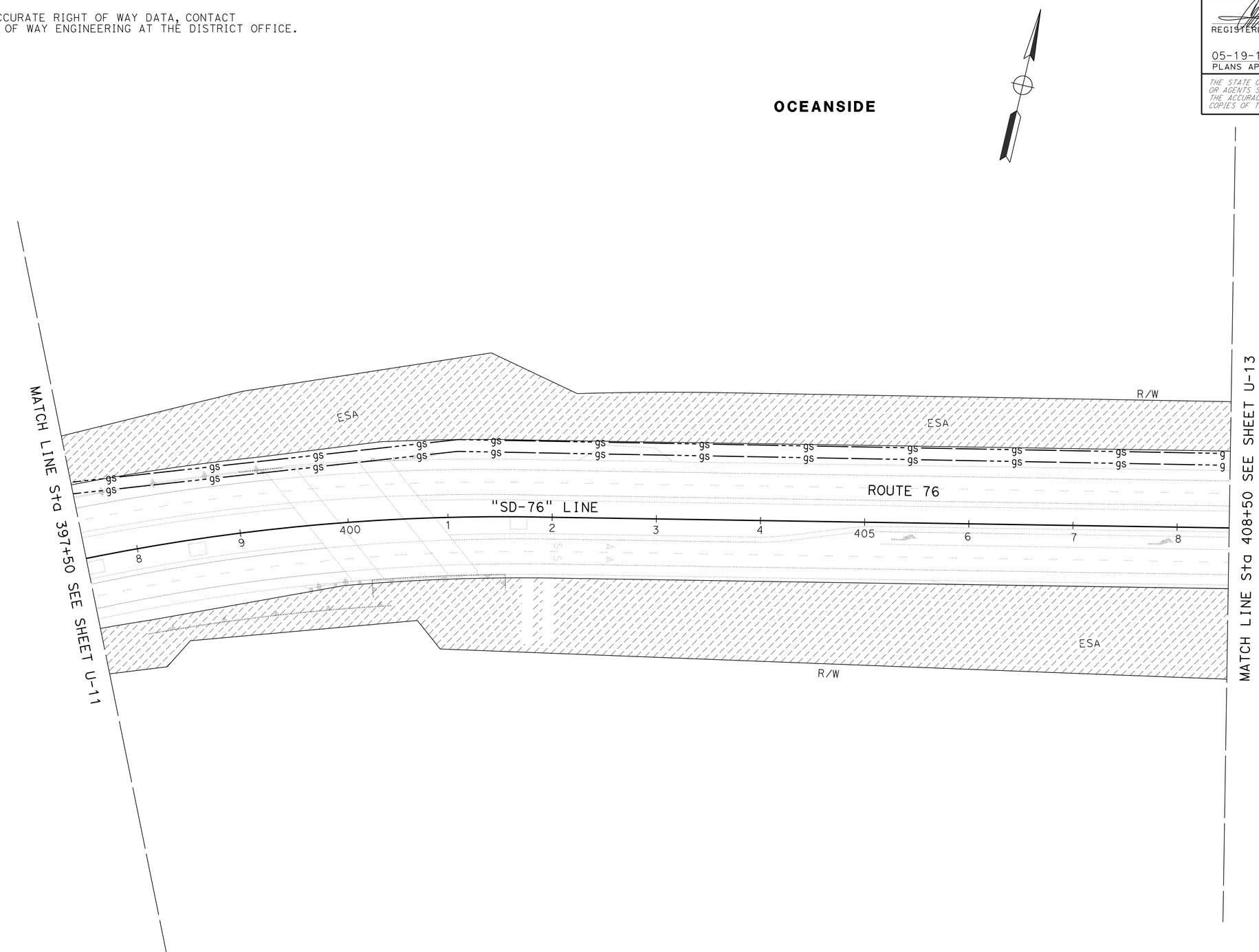

APPROVED FOR UTILITY WORK ONLY

SCALE: 1" = 50'

UTILITY PLAN U-12

STATE OF CALIFORNIA - DEPARTMENT OF TRANSPORTATION
Caltrans
DESIGN

FUNCTIONAL SUPERVISOR: ABU-BAKR AL-JAFRI
CALCULATED-DESIGNED BY: ARTURO REYES
CHECKED BY: BARZAN ARAN
REVISED BY
DATE REVISED

LAST REVISION 10-11-13
DATE PLOTTED => 28-MAY-2014
TIME PLOTTED => 14:19

BORDER LAST REVISED 7/2/2010
USERNAME => s127400
DGN FILE => 1100020326ka012.dgn
RELATIVE BORDER SCALE IS IN INCHES 0 1 2 3
UNIT 2796
PROJECT NUMBER & PHASE 11000203261

Dist	COUNTY	ROUTE	POST MILES TOTAL PROJECT	SHEET No.	TOTAL SHEETS
11	SD	76	R4.2/R7.6	98	217

REGISTERED CIVIL ENGINEER 04-28-14 DATE

05-19-14
PLANS APPROVAL DATE

REGISTERED PROFESSIONAL ENGINEER
ARTURO A. REYES
No. C75491
Exp. 06/30/14
CIVIL
STATE OF CALIFORNIA

THE STATE OF CALIFORNIA OR ITS OFFICERS OR AGENTS SHALL NOT BE RESPONSIBLE FOR THE ACCURACY OR COMPLETENESS OF SCANNED COPIES OF THIS PLAN SHEET.

NOTE:

1. FOR ACCURATE RIGHT OF WAY DATA, CONTACT RIGHT OF WAY ENGINEERING AT THE DISTRICT OFFICE.

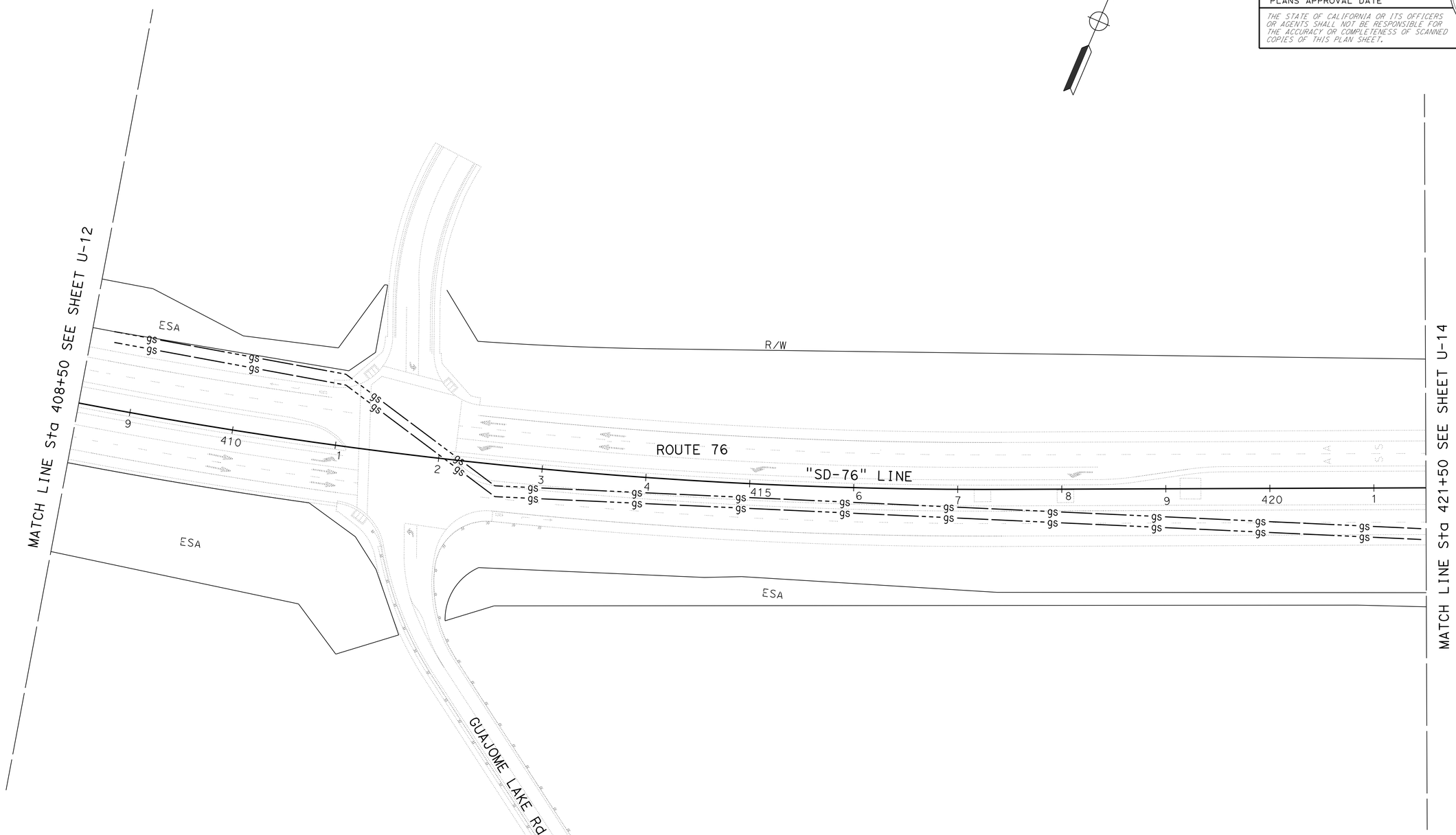

APPROVED FOR UTILITY WORK ONLY

SCALE: 1" = 50'

UTILITY PLAN
U-13

STATE OF CALIFORNIA - DEPARTMENT OF TRANSPORTATION
Caltrans®
DESIGN

FUNCTIONAL SUPERVISOR: ABU-BAKR AL-JAFRI
CALCULATED-DESIGNED BY: ARTURO REYES
CHECKED BY: BARZAN ARAN
REVISED BY
DATE REVISED

LAST REVISION 10-11-13
DATE PLOTTED => 28-MAY-2014
TIME PLOTTED => 14:19

BORDER LAST REVISED 7/2/2010
USERNAME => s127400
DGN FILE => 1100020326ka013.dgn
RELATIVE BORDER SCALE IS IN INCHES 0 1 2 3
UNIT 2796
PROJECT NUMBER & PHASE 11000203261

Dist	COUNTY	ROUTE	POST MILES TOTAL PROJECT	SHEET No.	TOTAL SHEETS
11	SD	76	R4.2/R7.6	99	217

REGISTERED CIVIL ENGINEER 04-28-14 DATE

05-19-14
PLANS APPROVAL DATE

REGISTERED PROFESSIONAL ENGINEER
ARTURO A. REYES
No. C75491
Exp. 06/30/14
CIVIL
STATE OF CALIFORNIA

THE STATE OF CALIFORNIA OR ITS OFFICERS OR AGENTS SHALL NOT BE RESPONSIBLE FOR THE ACCURACY OR COMPLETENESS OF SCANNED COPIES OF THIS PLAN SHEET.

NOTE:

1. FOR ACCURATE RIGHT OF WAY DATA, CONTACT RIGHT OF WAY ENGINEERING AT THE DISTRICT OFFICE.

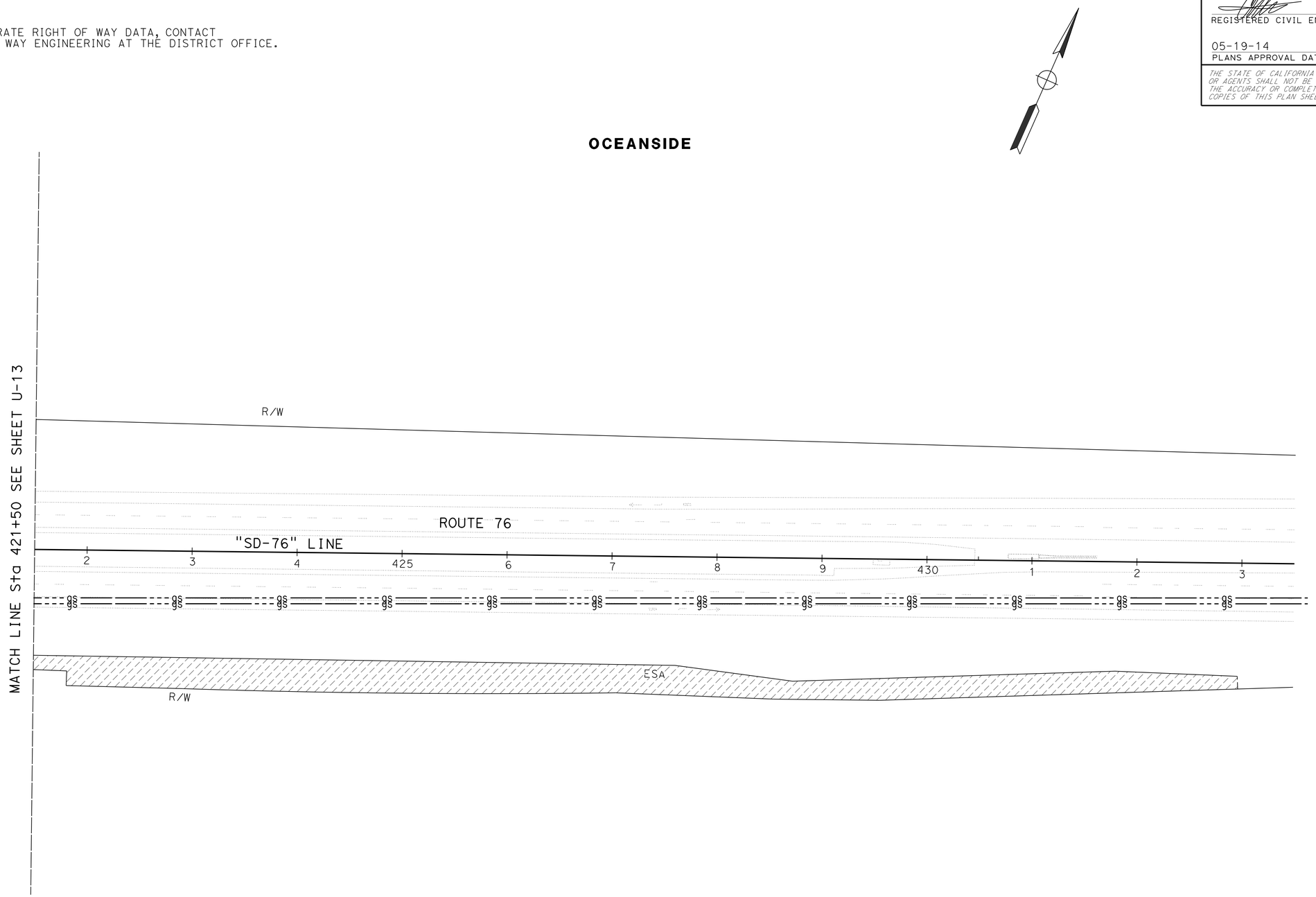

APPROVED FOR UTILITY WORK ONLY

SCALE: 1" = 50'

UTILITY PLAN
U-14

STATE OF CALIFORNIA - DEPARTMENT OF TRANSPORTATION
Caltrans
DESIGN

FUNCTIONAL SUPERVISOR: ABU-BAKR AL-JAFRI
CALCULATED-DESIGNED BY: ARTURO REYES
CHECKED BY: BARZAN ARAN
REVISED BY
DATE REVISED

LAST REVISION 10-11-13
DATE PLOTTED => 28-MAY-2014
TIME PLOTTED => 14:19

Dist	COUNTY	ROUTE	POST MILES TOTAL PROJECT	SHEET No.	TOTAL SHEETS
11	SD	76	R4.2/R7.6	100	217

REGISTERED CIVIL ENGINEER 04-28-14 DATE

05-19-14
PLANS APPROVAL DATE

REGISTERED PROFESSIONAL ENGINEER SHAHIN T. ADIBI No. 54839 Exp. 06-30-14 CIVIL STATE OF CALIFORNIA

THE STATE OF CALIFORNIA OR ITS OFFICERS OR AGENTS SHALL NOT BE RESPONSIBLE FOR THE ACCURACY OR COMPLETENESS OF SCANNED COPIES OF THIS PLAN SHEET.

NOTES:

1. EXACT LOCATION OF CONSTRUCTION AREA SIGNS WILL BE DETERMINED BY THE ENGINEER.
2. FEDERAL MANUAL ON UNIFORM TRAFFIC CONTROL DEVICES (MUTCD) SIGN CODES ARE SHOWN UNLESS DESIGNATED BY (CA), INDICATING CALIFORNIA MUTCD.
3. EXISTING UTILITIES ARE NOT SHOWN ON THESE PLAN SHEETS. THE CONTRACTOR SHALL VERIFY LOCATIONS OF EXISTING UTILITIES AND ADJUST THE FIELD LOCATION OF THE SIGN POSTS IN CONSULTATION WITH THE ENGINEER.
4. SEE TRAFFIC HANDLING PLAN FOR ADDITIONAL CONSTRUCTION AREA SIGNS.

LEGEND:

(X) = CONSTRUCTION AREA SIGN

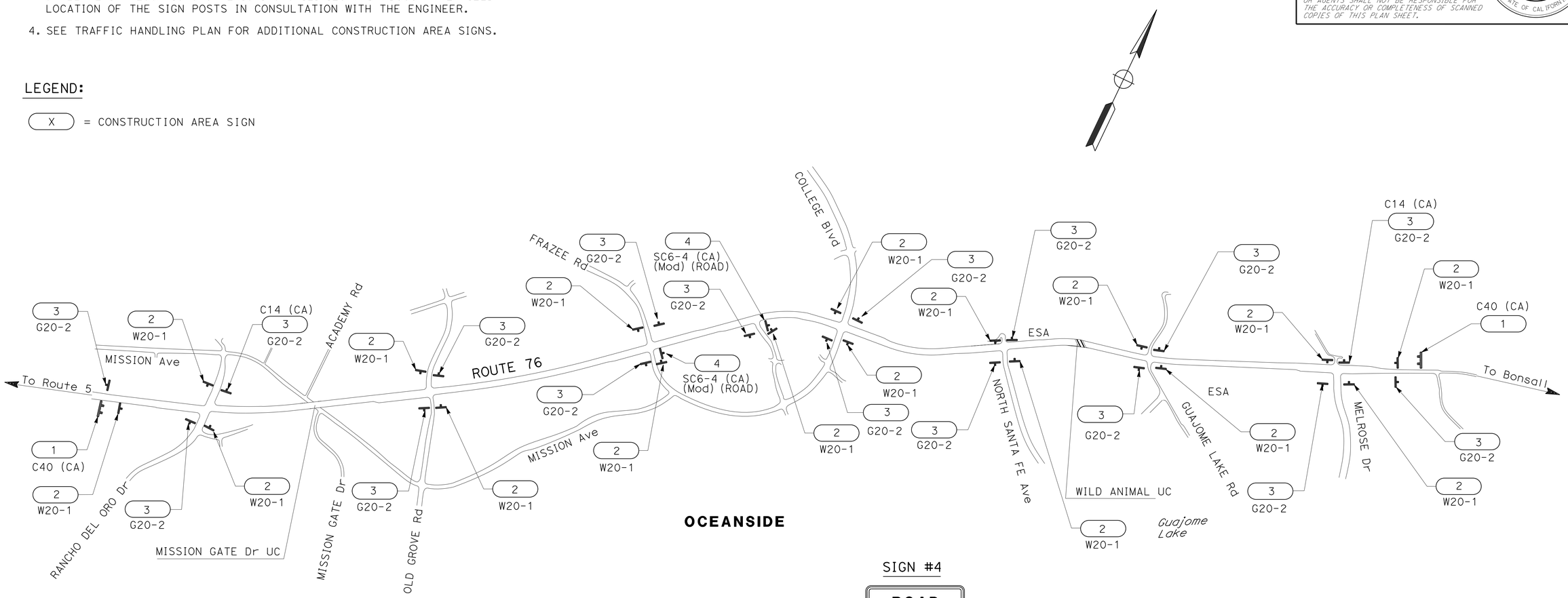

CONSTRUCTION AREA SIGNS

SIGN No.	TYPE	PANEL SIZE (In)	No. OF POST AND SIZE (In)	No. OF SIGNS
1	C40 (CA)	108 X 42	2-4 X 6 (S)	2
2	W20-1	48 X 48	1-4 X 6 (S)	17
3	G20-2	36 X 18	1-4 X 4 (S)	17
4	SC6-4 (CA) (Mod) (ROAD)	48 X 60	PORTABLE	2

(S) DENOTES STATIONARY MOUNTED SIGN
SEE SCQ AND TH SHEETS FOR ADDITIONAL CONSTRUCTION AREA SIGNS.

SIGN #4

ROAD CLOSED
*
THRU
*
*

60"
48"

SC6-4 (CA) (Mod) (ROAD)

*NOTE: DAYS, DATES AND TIMES WILL VARY, SPECIFY WHEN ORDERING. SEE SC6-A (CA) AND SC6-B (CA).

APPROVED FOR CONSTRUCTION AREA SIGN WORK ONLY

CONSTRUCTION AREA SIGNS

NO SCALE

CS-1

REVISED BY | DATE REVISED
ROBERT EDEJER | SHAHIN ADIBI
CALCULATED-DESIGNED BY | CHECKED BY
FUNCTIONAL SUPERVISOR
CAMILLE ABOU FADEL

STATE OF CALIFORNIA - DEPARTMENT OF TRANSPORTATION
Caltrans
TRAFFIC DESIGN

LAST REVISION 01-24-14 | DATE PLOTTED => 28-MAY-2014 | TIME PLOTTED => 14:19