| Dist | COUNTY | ROUTE | POST MILES TOTAL PROJECT | SHEET No. | TOTAL SHEETS |
|---|---|---|---|---|---|
| 11 | SD | 5 | R22.3 | 1 | 30 |

INDEX OF PLANS


| SHEET NO. | DESCRIPTION |
|---|---|
| 1 | TITLE AND LOCATION MAP |
| 2 | LAYOUT |
| 3-5 | CONSTRUCTION DETAILS |
| 6 | CONSTRUCTION AREA SIGNS |
| 7-8 | TRAFFIC HANDLING PLAN |
| 9-11 | PAVEMENT DELINEATION DETAILS AND QUANTITIES |
| 12-13 | SIGN PLAN AND QUANTITIES |
| 14-15 | SUMMARY OF QUANTITIES |
| 16-17 | ELECTRICAL PLANS |
| 18-27 | REVISED STANDARD PLANS |
| STRUCTURE PLANS | |
| 28 | GENERAL PLAN |
| 29-30 | MISCELLANEOUS DETAILS |


THE STANDARD PLANS LIST APPLICABLE TO THIS CONTRACT IS INCLUDED IN THE NOTICE TO BIDDERS AND SPECIAL PROVISIONS BOOK.

STATE OF CALIFORNIA

# DEPARTMENT OF TRANSPORTATION

# PROJECT PLANS FOR CONSTRUCTION ON

# STATE HIGHWAY

## IN SAN DIEGO COUNTY
## IN SAN DIEGO
## AT CLAIREMONT DRIVE OVERCROSSING

TO BE SUPPLEMENTED BY STANDARD PLANS DATED MAY 2006

## LOCATION OF CONSTRUCTION

**PM R22.3**

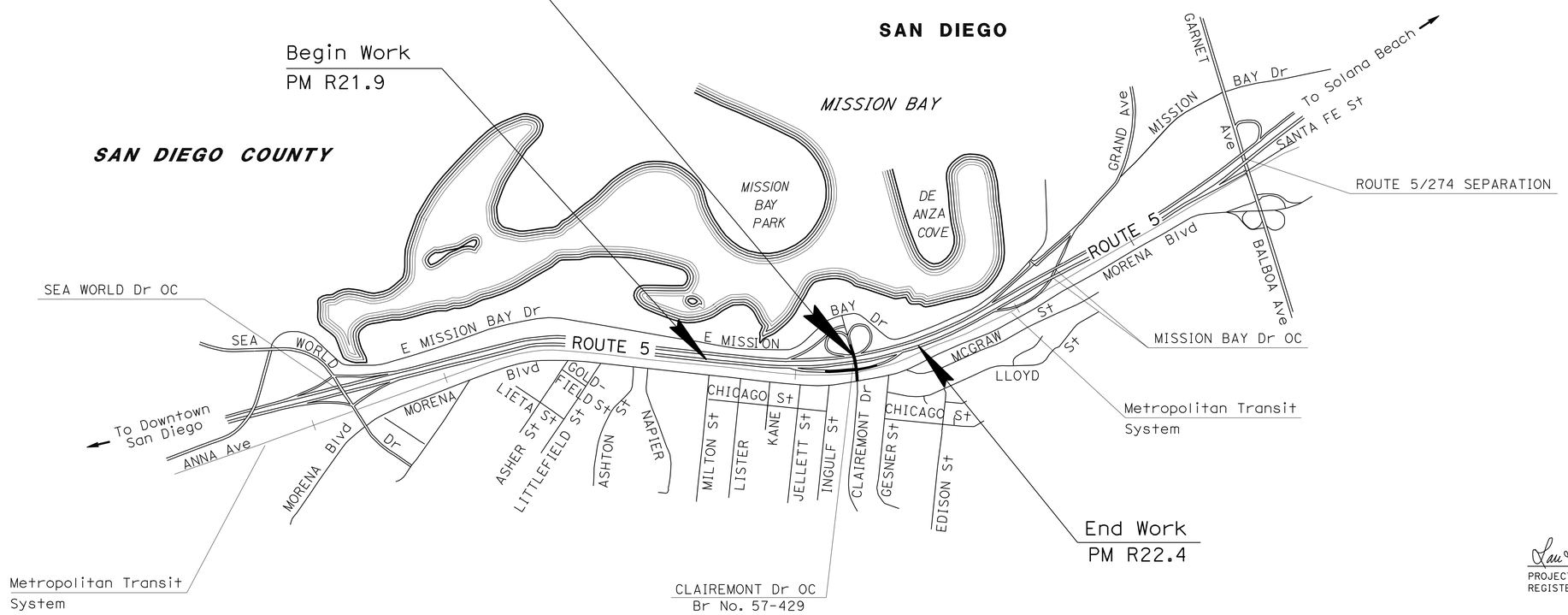


Lan Thi Pham 06-24-11
PROJECT ENGINEER DATE
REGISTERED CIVIL ENGINEER

REGISTERED PROFESSIONAL ENGINEER
LANTHI PHAM
No. C68408
Exp. 09-30-11
CIVIL
STATE OF CALIFORNIA

July 25, 2011
PLANS APPROVAL DATE

*THE STATE OF CALIFORNIA OR ITS OFFICERS OR AGENTS SHALL NOT BE RESPONSIBLE FOR THE ACCURACY OR COMPLETENESS OF SCANNED COPIES OF THIS PLAN SHEET.*

THE CONTRACTOR SHALL POSSESS THE CLASS (OR CLASSES) OF LICENSE AS SPECIFIED IN THE "NOTICE TO BIDDERS."

NO SCALE

| CONTRACT No. | 11-403304 |
|---|---|
| PROJECT ID | 1100000783 |

PROJECT MANAGER: ALBERTO GAYON
DESIGN ENGINEER: LANTHI PHAM

LAST REVISION 07-11-11
DATE PLOTTED => 18-JUL-2011
TIME PLOTTED => 10:20

| Dist | COUNTY | ROUTE | POST MILES TOTAL PROJECT | SHEET No. | TOTAL SHEETS |
|---|---|---|---|---|---|
| 11 | SD | 5 | R22.3 | 2 | 30 |

REGISTERED CIVIL ENGINEER 06-24-11 DATE

07-25-11
PLANS APPROVAL DATE

REGISTERED PROFESSIONAL ENGINEER GEORGE H. MAMAGHANI No. 44842 Exp. 3-31-12 CIVIL STATE OF CALIFORNIA

*THE STATE OF CALIFORNIA OR ITS OFFICERS OR AGENTS SHALL NOT BE RESPONSIBLE FOR THE ACCURACY OR COMPLETENESS OF SCANNED COPIES OF THIS PLAN SHEET.*

## NOTES:

1. FOR ACCURATE RIGHT OF WAY DATA, CONTACT RIGHT OF WAY ENGINEERING AT THE DISTRICT OFFICE.
2. LOCATION OF CURB RAMPS ARE APPROXIMATE.
3. FINAL RAMP LOCATIONS WILL BE DETERMINED BY THE ENGINEER.
4. EXISTING UTILITY FACILITIES HAVE NOT BEEN PLOTTED ON THESE PLANS.

| LOCATION | DESCRIPTION | CASE | COMMENTS |
|---|---|---|---|
| 1.3 | 47′ Lt 33+74 "C" LINE | F (Mod) | CURB RAMP (SEE CONSTRUCTION DETAILS) |
| 1.3a | | | MODIFY BRIDGE SIDEWALK (SEE CONSTRUCTION DETAILS) |
| 1.4 | 44′ Lt 34+75 "C" LINE | CM (Mod) | CURB RAMP (SEE CONSTRUCTION DETAILS) |
| 1.4a | | | MODIFY BRIDGE SIDEWALK (SEE CONSTRUCTION DETAILS) |
| 1.11 | 43′ Rt 33+83 "C" LINE | CM | CURB RAMP |
| 1.12a | 50′ Rt 34+40 "C" LINE | | TYPE B PASSAGEWAY |
| 1.12b | 49′ Rt 34+28 "C" LINE | | |
| 1.13 | 53′ Rt 34+64 "C" LINE | C (Mod) | CURB RAMP (SEE CONSTRUCTION DETAILS) |

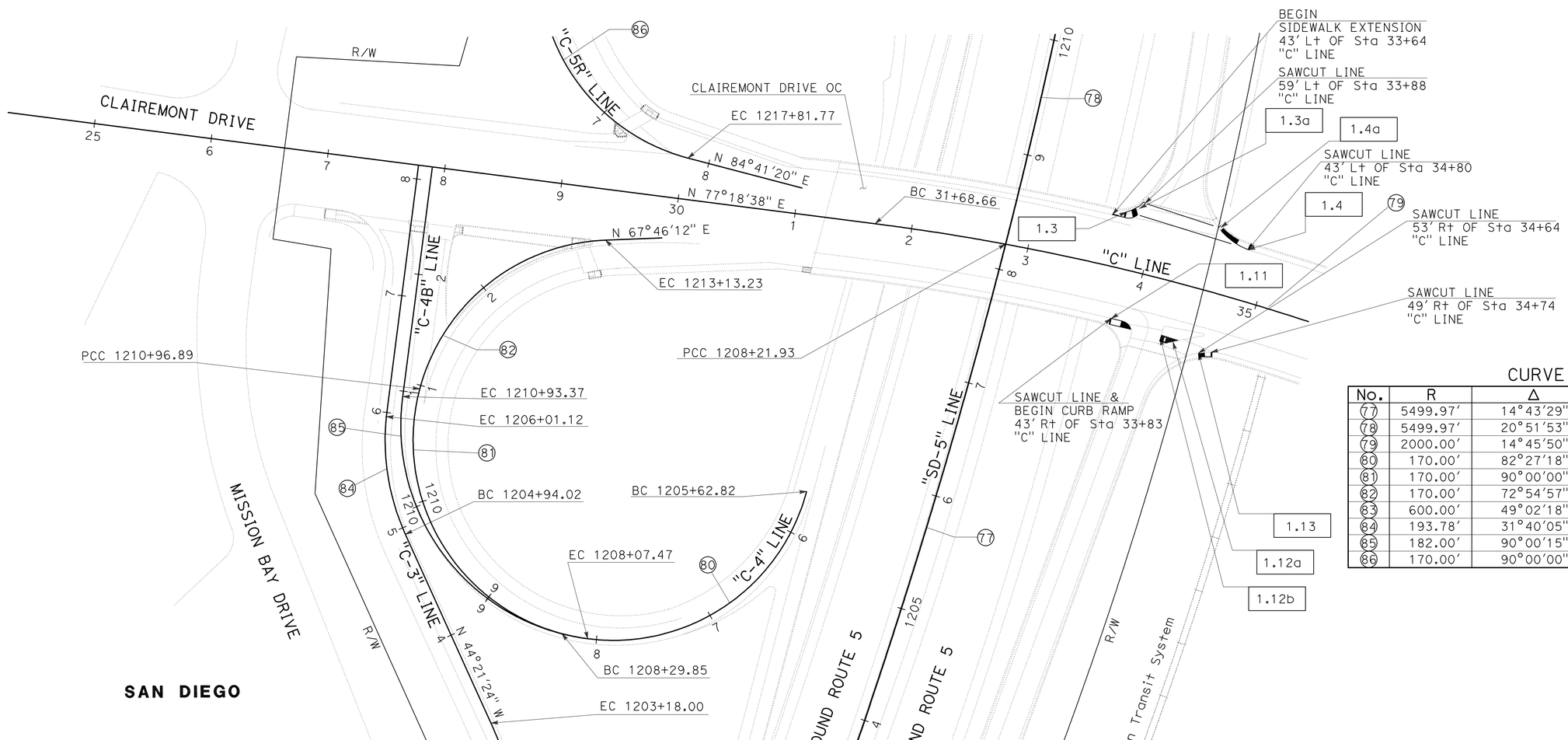


## CURVE DATA

| No. | R | Δ | T | L |
|---|---|---|---|---|
| 77 | 5499.97′ | 14°43′29" | 710.65′ | 1413.46′ |
| 78 | 5499.97′ | 20°51′53" | 1012.64′ | 2002.85′ |
| 79 | 2000.00′ | 14°45′50" | 259.11′ | 515.36′ |
| 80 | 170.00′ | 82°27′18" | 148.97′ | 244.65′ |
| 81 | 170.00′ | 90°00′00" | 170.00′ | 267.03′ |
| 82 | 170.00′ | 72°54′57" | 125.60′ | 216.35′ |
| 83 | 600.00′ | 49°02′18" | 273.68′ | 513.53′ |
| 84 | 193.78′ | 31°40′05" | 54.96′ | 107.10′ |
| 85 | 182.00′ | 90°00′15" | 182.01′ | 285.90′ |
| 86 | 170.00′ | 90°00′00" | 170.00′ | 267.03′ |

# LAYOUT

SCALE: 1" = 50′ **L-1**

REVISED BY | DATE REVISED
MOHAMMAD OLADI | GEORGE MAMAGHANI
CALCULATED-DESIGNED BY | CHECKED BY
FUNCTIONAL SUPERVISOR: ED HAJJ

STATE OF CALIFORNIA - DEPARTMENT OF TRANSPORTATION
Caltrans®
DESIGN

LAST REVISION 07-11-11 | DATE PLOTTED => 18-JUL-2011 | TIME PLOTTED => 10:20

| Dist | COUNTY | ROUTE | POST MILES TOTAL PROJECT | SHEET No. | TOTAL SHEETS |
|---|---|---|---|---|---|
| 11 | SD | 5 | R22.3 | 3 | 30 |

REGISTERED CIVIL ENGINEER DATE 06-24-11

PLANS APPROVAL DATE 07-25-11

REGISTERED PROFESSIONAL ENGINEER GEORGE H. MAMAGHANI No. 44842 Exp. 3-31-12 CIVIL STATE OF CALIFORNIA

*THE STATE OF CALIFORNIA OR ITS OFFICERS OR AGENTS SHALL NOT BE RESPONSIBLE FOR THE ACCURACY OR COMPLETENESS OF SCANNED COPIES OF THIS PLAN SHEET.*

**NOTE:**

1. 12" DOWELS (#4) EMBEDDED 6" INTO Exist BRIDGE SIDEWALK FILLED WITH EPOXY (TOTAL 3).

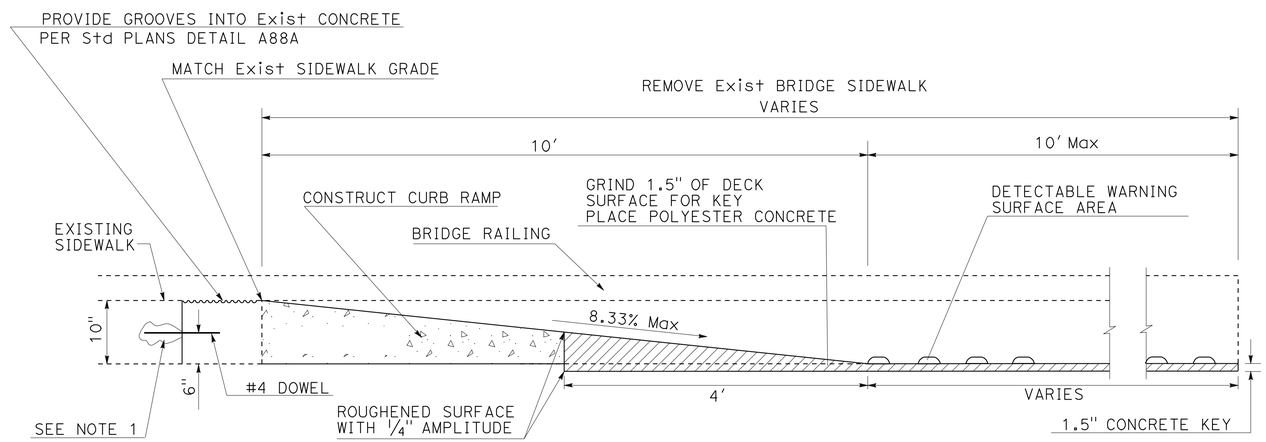


TYPICAL CURB RAMP
℄ PROFILE ON BRIDGES

FOR SUB-LOCATIONS
1.3, 1.4, 1.11, 1.13

**LEGEND:**

AREA OF CURB RAMP WITH POLYESTER CONCRETE

# CONSTRUCTION DETAILS

NO SCALE

C-1

STATE OF CALIFORNIA - DEPARTMENT OF TRANSPORTATION

Caltrans

DESIGN

FUNCTIONAL SUPERVISOR: ED HAJJ

CALCULATED-DESIGNED BY: MOHAMMAD OLADI

CHECKED BY: GEORGE MAMAGHANI

REVISED BY

DATE REVISED

LAST REVISION 07-11-11

DATE PLOTTED => 18-JUL-2011

TIME PLOTTED => 10:20

| Dist | COUNTY | ROUTE | POST MILES TOTAL PROJECT | SHEET No. | TOTAL SHEETS |
|---|---|---|---|---|---|
| 11 | SD | 5 | R22.3 | 4 | 30 |

REGISTERED CIVIL ENGINEER 06-24-11 DATE

07-25-11
PLANS APPROVAL DATE

GEORGE H. MAMAGHANI No. 44842 Exp. 3-31-12 CIVIL — REGISTERED PROFESSIONAL ENGINEER — STATE OF CALIFORNIA

*THE STATE OF CALIFORNIA OR ITS OFFICERS OR AGENTS SHALL NOT BE RESPONSIBLE FOR THE ACCURACY OR COMPLETENESS OF SCANNED COPIES OF THIS PLAN SHEET.*

## NOTES:

1. UTILITIES ARE NOT SHOWN.
2. 12" DOWELS (#4) EMBEDDED 8" INTO THE Exist SIDEWALK FILLED WITH EPOXY (TOTAL 2).
3. 12" DOWELS (#4) EMBEDDED 4" INTO THE Exist BRIDGE DECK FILLED WITH EPOXY (@12" SPACINGS, TOTAL 11).
4. REFER TO ELECTRICAL SHEETS FOR PULL BOX LOCATIONS.
5. MAXIMUM SIZE OF THE DETECTABLE WARNING SURFACE PANEL IS 10'

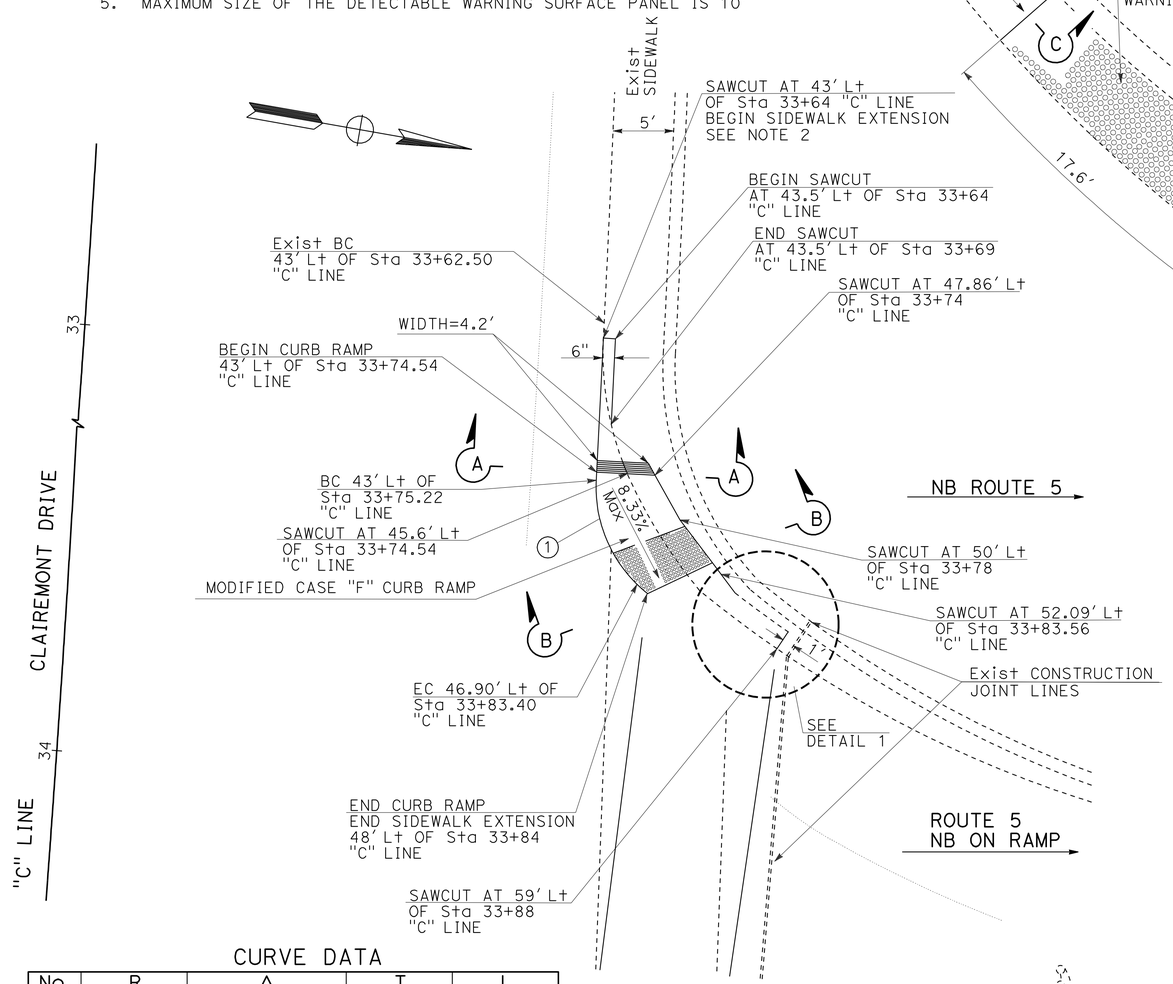


MODIFIED CASE F CURB RAMP WITH CURB EXTENSION AND SAWCUT DETAIL

(LOCATION 1.3)

### CURVE DATA

| No. | R | Δ | T | L |
|---|---|---|---|---|
| 1 | 11.18' | 48°40'29" | 5.06' | 9.50' |

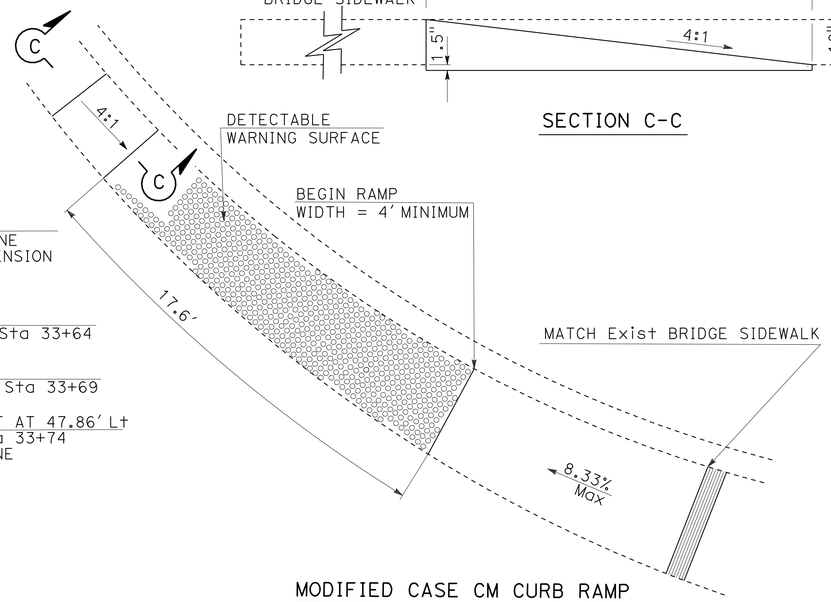


MODIFIED CASE CM CURB RAMP

(LOCATION 1.4)

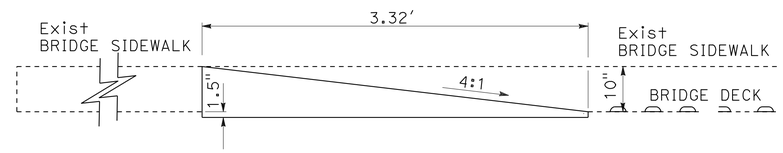


SECTION C-C

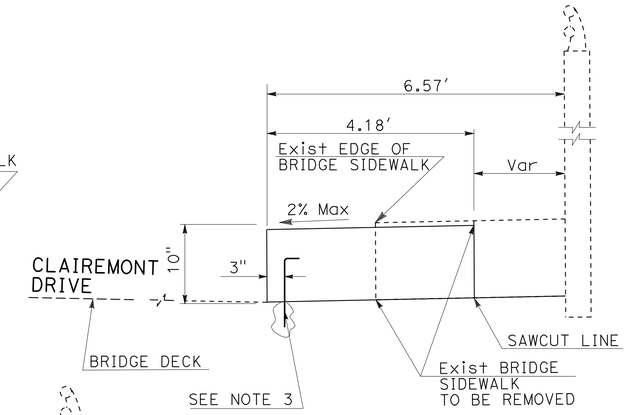


SECTION A-A

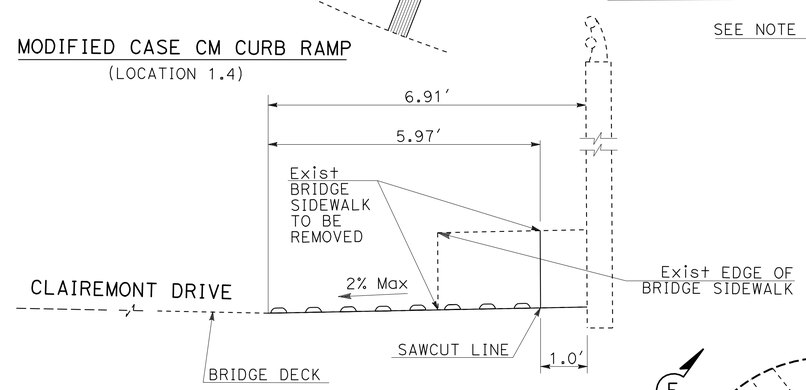


SECTION B-B

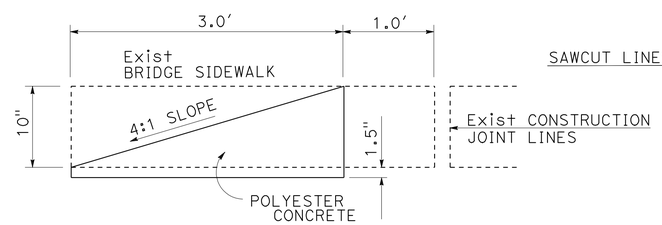


SECTION E-E

BRIDGE SIDEWALK RAMP DETAIL

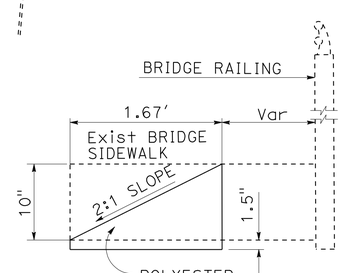


SECTION D-D

BRIDGE SIDEWALK RAMP DETAIL

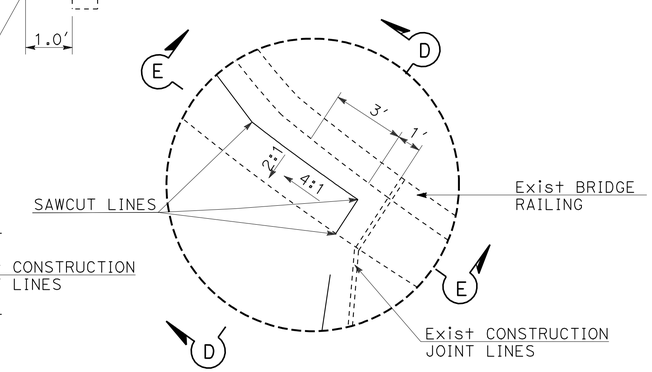


DETAIL 1

# CONSTRUCTION DETAILS

NO SCALE

C-2

STATE OF CALIFORNIA - DEPARTMENT OF TRANSPORTATION
DESIGN
FUNCTIONAL SUPERVISOR: ED HAJJ
CALCULATED-DESIGNED BY: MOHAMMAD OLADI
CHECKED BY: GEORGE MAMAGHANI
REVISED BY
DATE REVISED

LAST REVISION 07-11-11
DATE PLOTTED => 18-JUL-2011
TIME PLOTTED => 10:20

| Dist | COUNTY | ROUTE | POST MILES TOTAL PROJECT | SHEET No. | TOTAL SHEETS |
|---|---|---|---|---|---|
| 11 | SD | 5 | R22.3 | 5 | 30 |

REGISTERED CIVIL ENGINEER DATE 06-24-11

PLANS APPROVAL DATE 07-25-11

REGISTERED PROFESSIONAL ENGINEER GEORGE H. MAMAGHANI No. 44842 Exp. 3-31-12 CIVIL STATE OF CALIFORNIA

THE STATE OF CALIFORNIA OR ITS OFFICERS OR AGENTS SHALL NOT BE RESPONSIBLE FOR THE ACCURACY OR COMPLETENESS OF SCANNED COPIES OF THIS PLAN SHEET.

## NOTES:

1. UTILITIES ARE NOT SHOWN.
2. 12" DOWELS (#4) EMBEDDED 4" INTO BRIDGE DECK FILLED WITH EPOXY (TOTAL 3).
3. FOR LOCATIONS OF PULLBOX, SEE ELECTRICAL PLANS SHEET(S).

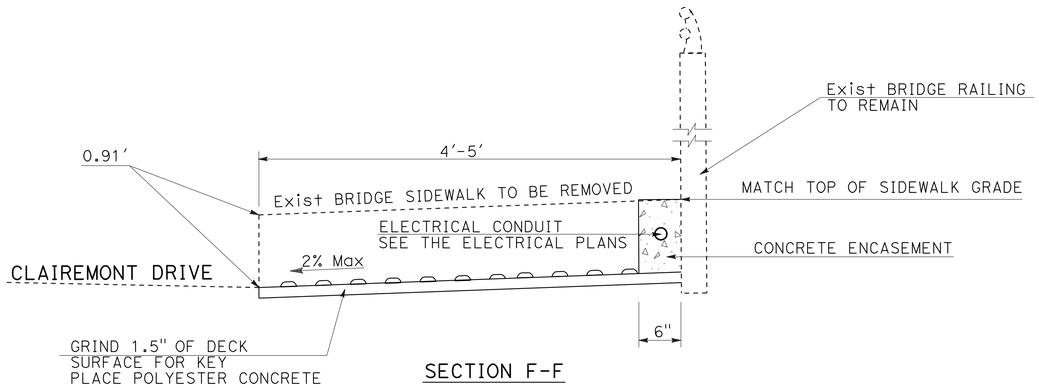


SECTION F-F

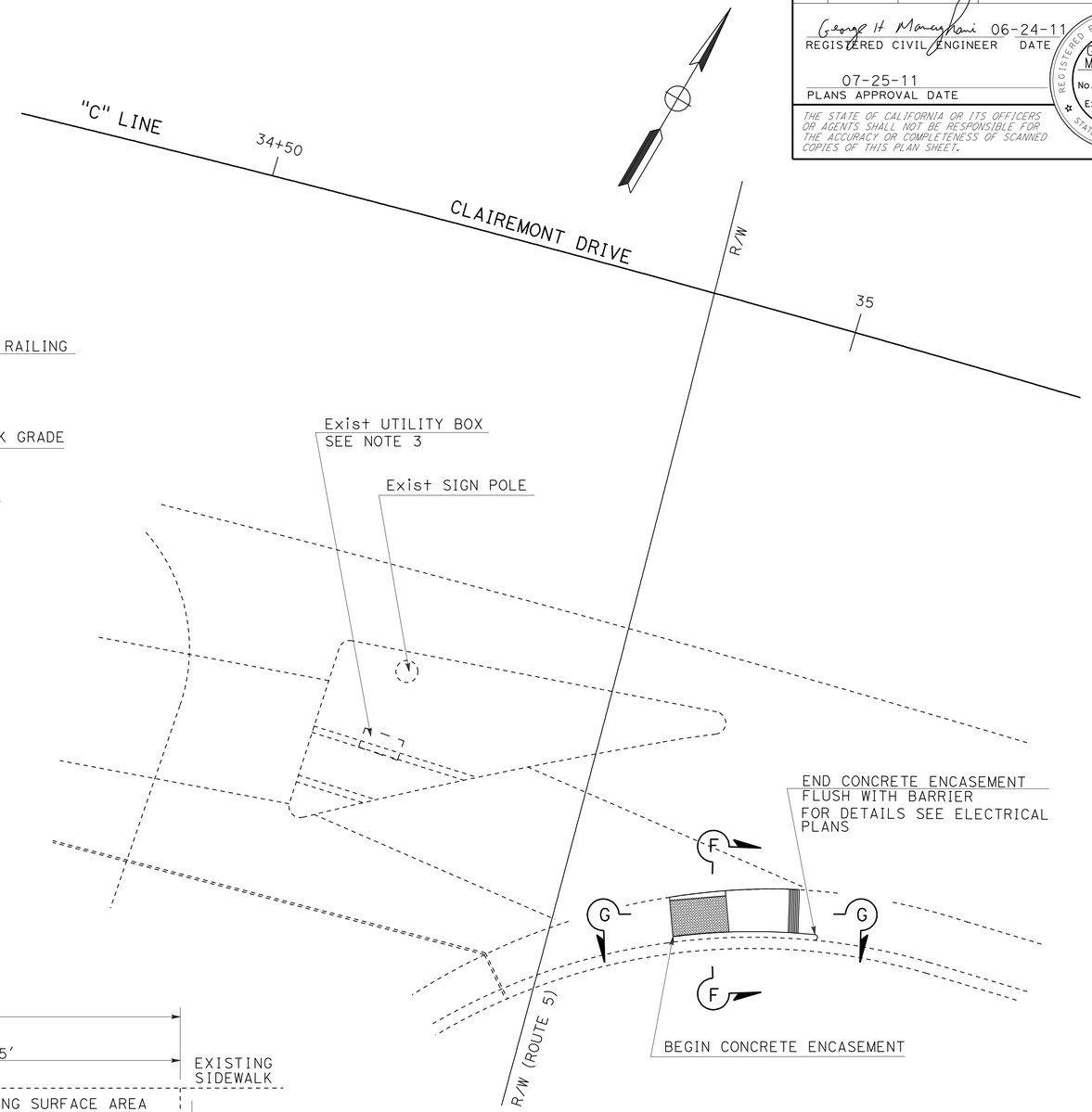


CURB RAMP DETAILS (TYPE C Mod)

(LOCATION 1.13)

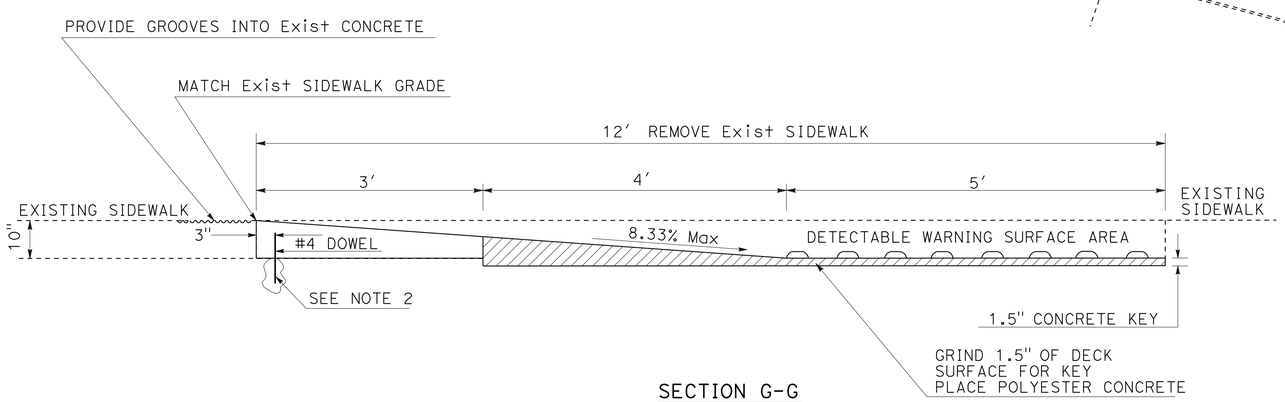


SECTION G-G

# CONSTRUCTION DETAILS

NO SCALE

C-3

STATE OF CALIFORNIA - DEPARTMENT OF TRANSPORTATION

DESIGN

FUNCTIONAL SUPERVISOR: ED HAJJ

CALCULATED-DESIGNED BY: MOHAMMAD OLADI

CHECKED BY: GEORGE MAMAGHANI

REVISED BY

DATE REVISED

LAST REVISION 07-11-11

DATE PLOTTED => 18-JUL-2011

TIME PLOTTED => 10:20

| Dist | COUNTY | ROUTE | POST MILES TOTAL PROJECT | SHEET No. | TOTAL SHEETS |
|---|---|---|---|---|---|
| 11 | SD | 5 | R22.3 | 6 | 30 |

REGISTERED CIVIL ENGINEER 06-24-11 DATE

PLANS APPROVAL DATE 07-25-11

REGISTERED PROFESSIONAL ENGINEER SHAHIN T. ADIBI No. 54839 Exp. 06-30-12 CIVIL STATE OF CALIFORNIA

*THE STATE OF CALIFORNIA OR ITS OFFICERS OR AGENTS SHALL NOT BE RESPONSIBLE FOR THE ACCURACY OR COMPLETENESS OF SCANNED COPIES OF THIS PLAN SHEET.*

## NOTES:

1. EXACT LOCATION OF CONSTRUCTION AREA SIGNS WILL BE DETERMINED BY THE ENGINEER.
2. FEDERAL MANUAL ON UNIFORM TRAFFIC CONTROL DEVICES (MUTCD) SIGN CODES ARE SHOWN UNLESS DESIGNATED BY (CA), INDICATING CALIFORNIA MUTCD.
3. EXISTING UTILITIES ARE NOT SHOWN ON THESE PLAN SHEETS. THE CONTRACTOR SHALL VERIFY LOCATIONS OF EXISTING UTILITIES AND ADJUST THE FIELD LOCATION OF THE SIGN POSTS IN CONSULTATION WITH THE ENGINEER.

## LEGEND:

XX = CONSTRUCTION AREA SIGN

→ = DIRECTION OF TRAFFIC

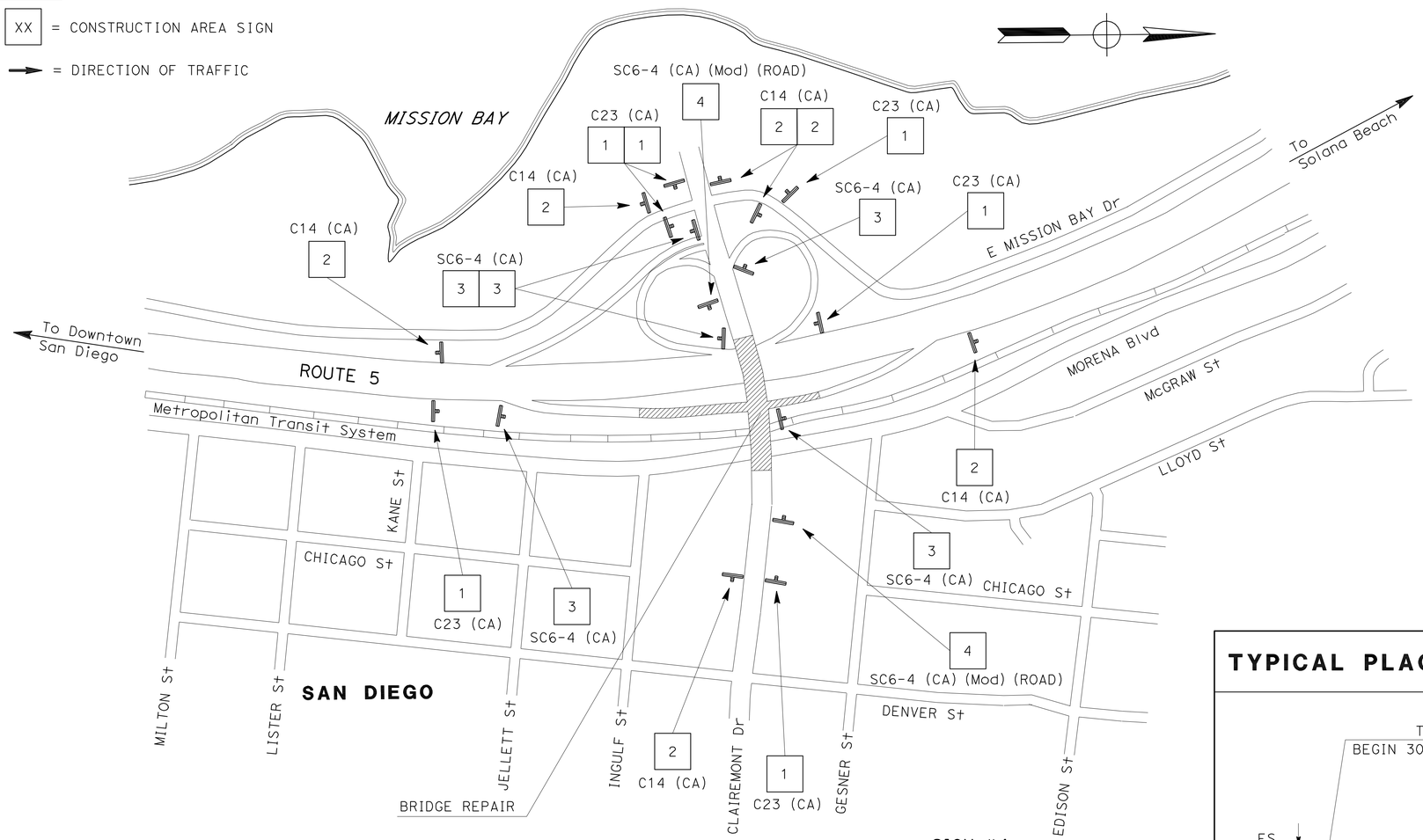


## TYPICAL PLACEMENT OF R9-10

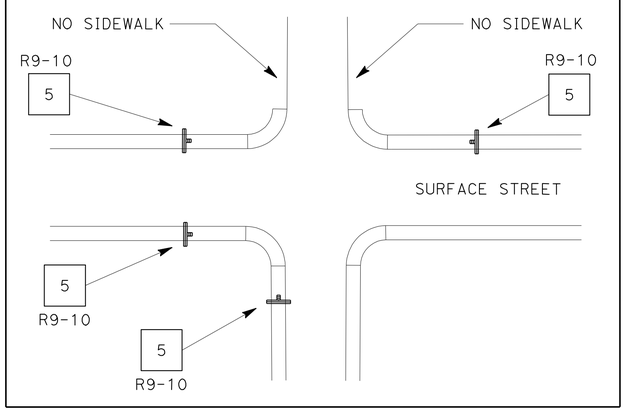


## TYPICAL PLACEMENT OF TRAFFIC PLASTIC DRUM

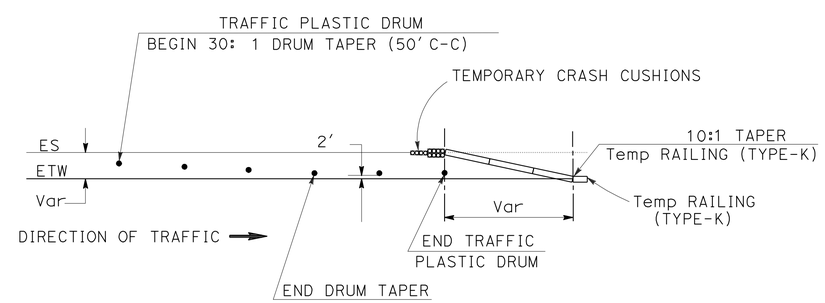


## CONSTRUCTION AREA SIGNS

| SIGN No. | CODE | PANEL SIZE (In) | No. OF POST AND SIZE | No. OF SIGNS | REMARKS |
|---|---|---|---|---|---|
| 1 | C23 (CA) | 48 X 48 | 1 - 4 X 6 (S) | 6 | |
| 2 | C14 (CA) | 48 X 24 | 1 - 4 X 4 (S) | 6 | |
| 3 | SC6-4 (CA) | 48 X 60 | PORTABLE | 5 | |
| 4 | SC6-4 (CA) (Mod) (ROAD) | 48 X 60 | PORTABLE | 2 | |
| 5 | R9-10 | 48 X 24 | PORTABLE | 8 | PEDESTRIAN |
| | | | TOTAL | 27* | |

(S) DENOTES STATIONARY MOUNTED SIGN.

* - SEE TRAFFIC HANDLING PLANS FOR ADDITIONAL CONSTRUCTION AREA SIGNS.

SIGN #4

ROAD CLOSED
*MON.JUL.21
THRU
*FRI.JUL.25
*8 PM-5 AM

60" × 48"

SC6-4 (CA) (Mod) (ROAD)

*NOTE: DAYS, DATES AND TIMES WILL VARY, SPECIFY WHEN ORDERING.

*APPROVED FOR CONSTRUCTION AREA SIGN WORK ONLY*

# CONSTRUCTION AREA SIGNS

NO SCALE

CS-1

STATE OF CALIFORNIA - DEPARTMENT OF TRANSPORTATION
Caltrans
TRAFFIC DESIGN

FUNCTIONAL SUPERVISOR: CAMILLE ABOU FADEL
CALCULATED-DESIGNED BY: SHAHIN ADIBI
CHECKED BY: ROBERT EDEJER
REVISED BY
DATE REVISED

LAST REVISION 07-11-11
DATE PLOTTED => 18-JUL-2011
TIME PLOTTED => 10:21

| Dist | COUNTY | ROUTE | POST MILES TOTAL PROJECT | SHEET No. | TOTAL SHEETS |
|---|---|---|---|---|---|
| 11 | SD | 5 | R22.3 | 7 | 30 |

REGISTERED CIVIL ENGINEER 06-24-11 DATE

07-25-11
PLANS APPROVAL DATE

REGISTERED PROFESSIONAL ENGINEER SHAHIN T. ADIBI No. 54839 Exp. 06-30-12 CIVIL STATE OF CALIFORNIA

*THE STATE OF CALIFORNIA OR ITS OFFICERS OR AGENTS SHALL NOT BE RESPONSIBLE FOR THE ACCURACY OR COMPLETENESS OF SCANNED COPIES OF THIS PLAN SHEET.*

## NOTES:

1. EXACT LOCATION OF DETOUR SIGNS WILL BE DETERMINED BY THE ENGINEER.
2. FEDERAL MANUAL ON UNIFORM TRAFFIC CONTROL DEVICES (MUTCD) SIGN CODES ARE SHOWN UNLESS DESIGNATED BY (CA), INDICATING CALIFORNIA MUTCD.
3. SEE CONSTRUCTION AREA SIGN PLAN FOR ADDITIONAL CONSTRUCTION AREA SIGNS.

## LEGEND

XX = CONSTRUCTION AREA SIGNS

SPCL = SPECIAL CONSTRUCTION AREA SIGN

Caps = CAPITAL LETTERING

→ = DETOUR DIRECTION OF TRAVEL

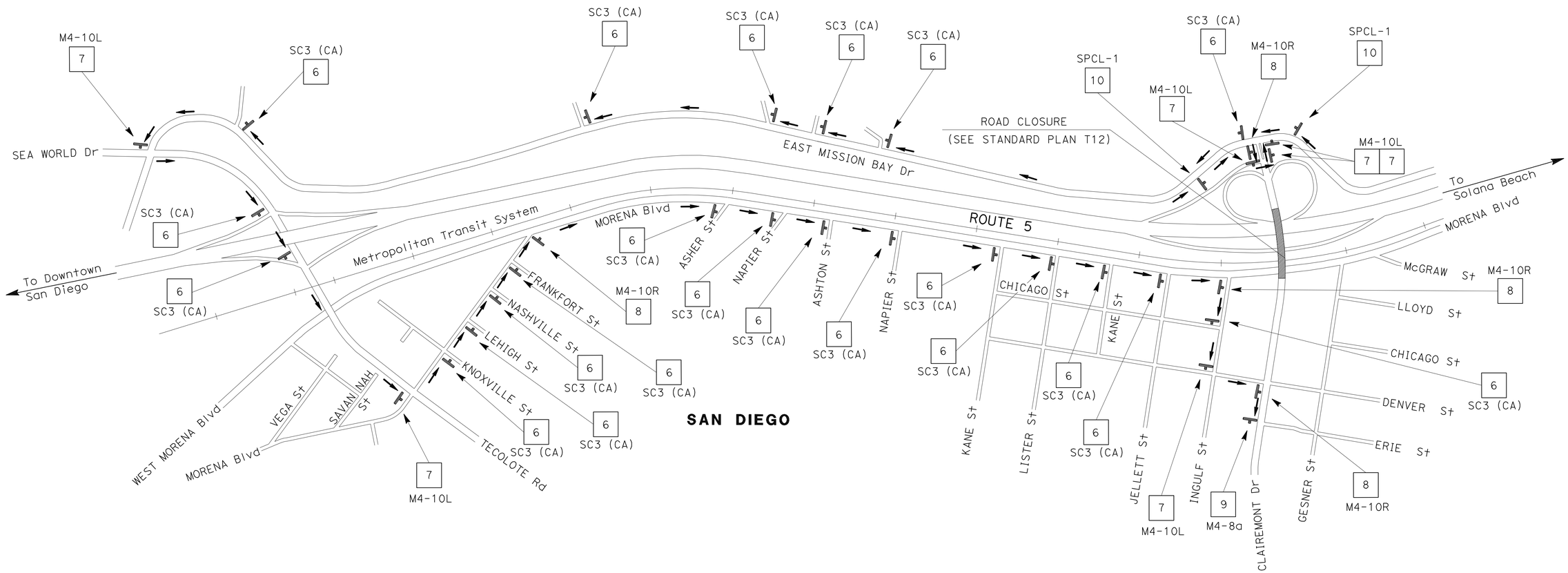


## SIGN #10

SPCL-1 8" Caps

CLAIREMONT
DRIVE
USE
DETOUR

72" × 72"

## CONSTRUCTION AREA SIGNS

| SIGN No. | TYPE | PANEL SIZE (In) | No. OF POSTS AND SIZE (In) | No. OF SIGNS |
|---|---|---|---|---|
| 6 | SC3 (CA) | 48 X 18 | PORTABLE | 29 |
| 7 | M4-10L | 48 X 18 | PORTABLE | 9 |
| 8 | M4-10R | 48 X 18 | PORTABLE | 7 |
| 9 | M4-8a | 24 X 18 | PORTABLE | 2 |
| 10 | SPCL-1 | 72 X 72 | PORTABLE | 3 |
| | | | | |
| | | | TOTAL | 50* |

* - SEE CONSTRUCTION AREA SIGNS FOR ADDTIONAL CONSTRUCTION AREA SIGNS.

*APPROVED FOR TRAFFIC HANDLING WORK ONLY*

EB CLAIREMONT DRIVE OVERCROSSING

# TRAFFIC HANDLING PLAN

NO SCALE

**TH-1**

STATE OF CALIFORNIA - DEPARTMENT OF TRANSPORTATION
Caltrans® TRAFFIC DESIGN

FUNCTIONAL SUPERVISOR: CAMILLE ABOU FADEL
CALCULATED-DESIGNED BY: ROBERT EDEJER
CHECKED BY: SHAHIN ADIBI
REVISED BY
DATE REVISED

LAST REVISION 07-13-11
DATE PLOTTED => 18-JUL-2011
TIME PLOTTED => 10:21

| Dist | COUNTY | ROUTE | POST MILES TOTAL PROJECT | SHEET No. | TOTAL SHEETS |
|---|---|---|---|---|---|
| 11 | SD | 5 | R22.3 | 8 | 30 |

06-24-11
REGISTERED CIVIL ENGINEER DATE

07-25-11
PLANS APPROVAL DATE

REGISTERED PROFESSIONAL ENGINEER
SHAHIN T. ADIBI
No. 54839
Exp. 06-30-12
CIVIL
STATE OF CALIFORNIA

*THE STATE OF CALIFORNIA OR ITS OFFICERS OR AGENTS SHALL NOT BE RESPONSIBLE FOR THE ACCURACY OR COMPLETENESS OF SCANNED COPIES OF THIS PLAN SHEET.*

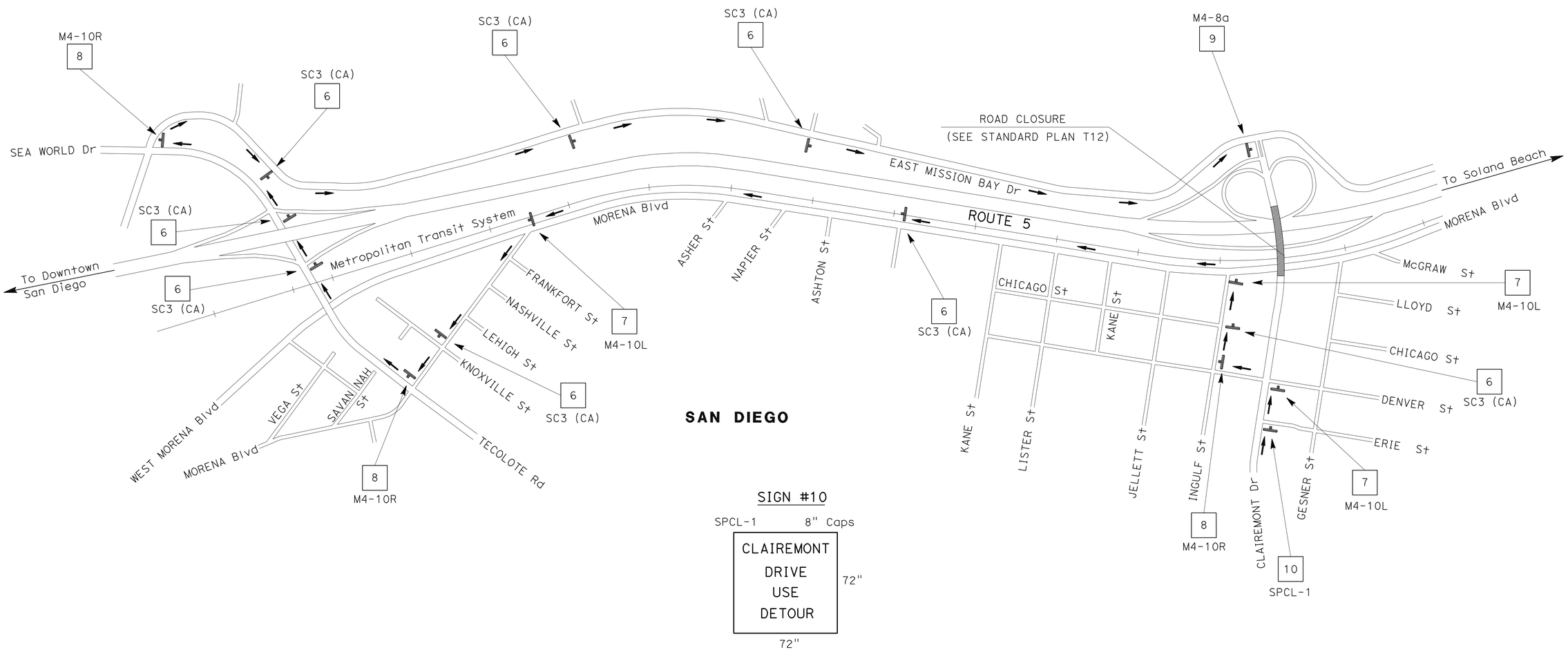


SIGN #10

SPCL-1 8" Caps

CLAIREMONT
DRIVE
USE
DETOUR

72"

72"

WB CLAIREMONT DRIVE OVERCROSSING

# TRAFFIC HANDLING PLAN

NO SCALE

**TH-2**

*APPROVED FOR TRAFFIC HANDLING WORK ONLY*

STATE OF CALIFORNIA - DEPARTMENT OF TRANSPORTATION
Caltrans®
**TRAFFIC DESIGN**

FUNCTIONAL SUPERVISOR: CAMILLE ABOU FADEL
CALCULATED-DESIGNED BY: ROBERT EDEJER
CHECKED BY: SHAHIN ADIBI
REVISED BY
DATE REVISED

LAST REVISION 07-13-11
DATE PLOTTED => 18-JUL-2011
TIME PLOTTED => 10:21

| Dist | COUNTY | ROUTE | POST MILES TOTAL PROJECT | SHEET No. | TOTAL SHEETS |
|---|---|---|---|---|---|
| 11 | SD | 5 | R22.3 | 9 | 30 |

06-24-11
REGISTERED CIVIL ENGINEER DATE

07-25-11
PLANS APPROVAL DATE

REGISTERED PROFESSIONAL ENGINEER
SHAHIN T. ADIBI
No. 54839
Exp. 06-30-12
CIVIL
STATE OF CALIFORNIA

*THE STATE OF CALIFORNIA OR ITS OFFICERS OR AGENTS SHALL NOT BE RESPONSIBLE FOR THE ACCURACY OR COMPLETENESS OF SCANNED COPIES OF THIS PLAN SHEET.*

## TYPICAL-DETAIL 8/10 (COMBINATION)

TYPICAL

## DETAIL 25A (Mod)

TYPICAL

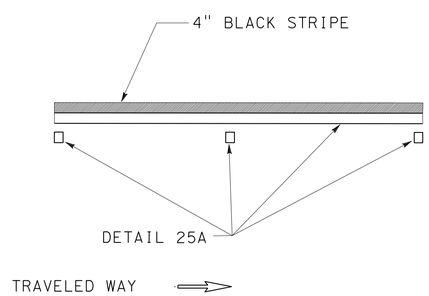


## DETAIL 27B (Mod)

TYPICAL

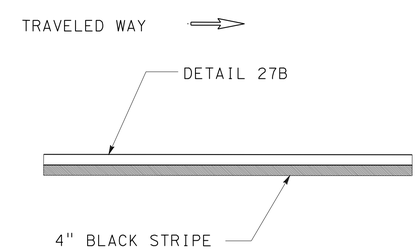


# PAVEMENT DELINEATION DETAILS

NO SCALE

**PDD-1**

STATE OF CALIFORNIA - DEPARTMENT OF TRANSPORTATION
Caltrans
TRAFFIC DESIGN

FUNCTIONAL SUPERVISOR: CAMILLE ABOU FADEL
CALCULATED-DESIGNED BY: ROBERT EDEJER
CHECKED BY: SHAHIN ADIBI
REVISED BY
DATE REVISED

LAST REVISION 07-13-11
DATE PLOTTED => 18-JUL-2011
TIME PLOTTED => 10:21

| Dist | COUNTY | ROUTE | POST MILES TOTAL PROJECT | SHEET No. | TOTAL SHEETS |
|---|---|---|---|---|---|
| 11 | SD | 5 | R22.3 | 10 | 30 |

REGISTERED CIVIL ENGINEER 06-24-11 DATE

07-25-11
PLANS APPROVAL DATE

REGISTERED PROFESSIONAL ENGINEER SHAHIN T. ADIBI No. 54839 Exp. 06-30-12 CIVIL STATE OF CALIFORNIA

*THE STATE OF CALIFORNIA OR ITS OFFICERS OR AGENTS SHALL NOT BE RESPONSIBLE FOR THE ACCURACY OR COMPLETENESS OF SCANNED COPIES OF THIS PLAN SHEET.*

NOTES:

1. ALL PAVEMENT DELINEATION SHALL BE REPLACED IN KIND UNLESS INDICATED OTHERWISE.
2. ALL PAVEMENT DELINEATION ON BRIDGES SHALL BE REPLACED WITH THERMOPLASTIC TRAFFIC STRIPE.

| ROUTE | DESCRIPTION | POSTMILE | DETAIL | PAVEMENT MARKER SUMMARY | | | TRAFFIC STRIPE SUMMARY | | | | REMARKS |
|---|---|---|---|---|---|---|---|---|---|---|---|
| | | | | NON-REFLECTIVE (EA) | RETROREFLECTIVE (EA) | | PAINT (LF) | THERMOPLASTIC (LF) | | | |
| | | | | TYPE A | TYPE G | TYPE H | (1-COAT) | 4" | 8" | 4" | |
| | | | | WHITE | CLEAR | YELLOW | | SOLID | SOLID | (BROKEN 17-7) | |
| 5 | WB CLAIREMONT Dr OC | R22.3 | 9 | | 12 | | | | | 530 | |
| | | | 25A(Mod) | | | 23 | 530* | 530 | | | |
| | | | 38A | | | | | | 265 | | |
| 5 | EB CLAIREMONT Dr OC | R22.3 | 9 | | 12 | | | | | 526 | |
| | | | 25A(Mod) | | | 23 | 526* | 526 | | | |
| | | | 38 | | 9 | | | | 200 | | |
| | | | 38A | | | | | | 500 | | |
| 5 | NB OFF-RAMP | R22.3 | 8/10 | 54 | 9 | | | | | 400 | |
| | | | 25A(Mod) | | | 20 | 460* | 460 | | | |
| | | | 27B(Mod) | | | | 460* | 460 | | | |
| | | | 38A | | | | | | 180 | | |
| 5 | NB ON-RAMP | R22.3 | 25A(Mod) | | | 13 | 280* | 280 | | | |
| | | | 27B(Mod) | | | | 285* | 285 | | | |
| | | | 38 | | 13 | | | | 285 | | |
| | | | | | | | | | | | |
| | | | SUBTOTAL | 54 | 55 | 79 | 2,541* | 2,541 | 1,430 | 1,456 | |
| | | | TOTAL | 54 | 134 | | 2,541* | 2,541 | 1,430 | 1,456 | |

* - BLACK PAINT

## THERMOPLASTIC PAVEMENT MARKING

| ROUTE | DESCRIPTION | POSTMILE | TYPE I-24" SQFT | TYPE II (L) SQFT | TYPE III (R) SQFT | TYPE V SQFT | DIAMOND SYMBOL SQFT | 12" LIMIT LINE SQFT |
|---|---|---|---|---|---|---|---|---|
| 5 | WB CLAIREMONT Dr OC | R22.3 | | | | | | 34 |
| 5 | EB CLAIREMONT Dr OC | R22.3 | | | | | | 38 |
| 5 | NB OFF-RAMP | R22.3 | | 90 | 84 | 66 | | 75 |
| 5 | NB ON-RAMP | R22.3 | 31 | | | | 22 | 140 |
| 5 | SB OFF-RAMP | R22.3 | | | | | | 44 |
| 5 | SB ON-RAMP | R22.3 | | | | | | 52 |
| | | SUBTOTAL | 31 | 90 | 84 | 66 | 22 | 383 |
| | | TOTAL | 676 | | | | | |

# PAVEMENT DELINEATION QUANTITIES
# PDQ-1

REVISED BY | DATE REVISED
ROBERT EDEJER | SHAHIN ADIBI
CALCULATED-DESIGNED BY | CHECKED BY
FUNCTIONAL SUPERVISOR: CAMILLE ABOU FADEL
STATE OF CALIFORNIA - DEPARTMENT OF TRANSPORTATION
Caltrans TRAFFIC DESIGN

LAST REVISION 07-13-11 | DATE PLOTTED => 18-JUL-2011 | TIME PLOTTED => 10:21

| Dist | COUNTY | ROUTE | POST MILES TOTAL PROJECT | SHEET No. | TOTAL SHEETS |
|---|---|---|---|---|---|
| 11 | SD | 5 | R22.3 | 11 | 30 |

REGISTERED CIVIL ENGINEER 06-24-11 DATE

07-25-11
PLANS APPROVAL DATE

REGISTERED PROFESSIONAL ENGINEER SHAHIN T. ADIBI No. 54839 Exp. 06-30-12 CIVIL STATE OF CALIFORNIA

*THE STATE OF CALIFORNIA OR ITS OFFICERS OR AGENTS SHALL NOT BE RESPONSIBLE FOR THE ACCURACY OR COMPLETENESS OF SCANNED COPIES OF THIS PLAN SHEET.*

## REMOVE THERMOPLASTIC PAVEMENT MARKING

| ROUTE | DESCRIPTION | POSTMILE | TYPE I-24" SQFT | TYPE II (L) SQFT | TYPE III (R) SQFT | TYPE V SQFT | DIAMOND SYMBOL SQFT | 12" LIMIT LINE SQFT |
|---|---|---|---|---|---|---|---|---|
| 5 | WB CLAIREMONT Dr OC | R22.3 | | | | | | 34 |
| 5 | EB CLAIREMONT Dr OC | R22.3 | | | | | | 38 |
| 5 | NB OFF-RAMP | R22.3 | | 90 | 84 | 66 | | 75 |
| 5 | NB ON-RAMP | R22.3 | 31 | | | | 22 | 140 |
| 5 | SB OFF-RAMP | R22.3 | | | | | | 44 |
| 5 | SB ON-RAMP | R22.3 | | | | | | 52 |
| | | SUBTOTAL | 31 | 90 | 84 | 66 | 22 | 383 |
| | | TOTAL | 676 | | | | | |

## REMOVE YELLOW PAINTED TRAFFIC STRIPE (HAZARDOUS WASTE)

| ROUTE | DESCRIPTION | POSTMILE | DETAIL | LENGTH (LF) |
|---|---|---|---|---|
| 5 | WB CLAIREMONT Dr OC | R22.3 | 24 | 530 |
| 5 | EB CLAIREMONT Dr OC | R22.3 | 24 | 526 |
| 5 | NB OFF-RAMP | R22.3 | 25A(Mod) | 460 |
| 5 | NB ON-RAMP | R22.3 | 25A(Mod) | 280 |
| | | | TOTAL | 1,796 |

## REMOVE PAINTED TRAFFIC STRIPE

| ROUTE | DESCRIPTION | POSTMILE | DETAIL | LENGTH (LF) |
|---|---|---|---|---|
| 5 | WB CLAIREMONT Dr OC | R22.3 | 9 | 160 |
| 5 | EB CLAIREMONT Dr OC | R22.3 | 9 | 155 |
| 5 | NB OFF-RAMP | R22.3 | 8/10 | 120 |
| | | | | |
| | | | TOTAL | 435 |

## REMOVE PAVEMENT MARKER (N)

| ROUTE | DESCRIPTION | POSTMILE | NON-REFLECTIVE (EA) | RETROREFLECTIVE (EA) | |
|---|---|---|---|---|---|
| | | | TYPE A | TYPE G | TYPE H |
| | | | WHITE | CLEAR | YELLOW |
| 5 | WB CLAIREMONT Dr OC | R22.3 | | 12 | |
| 5 | EB CLAIREMONT Dr OC | R22.3 | | 21 | |
| 5 | NB OFF-RAMP | R22.3 | 54 | 9 | 20 |
| 5 | NB ON-RAMP | R22.3 | | 13 | 13 |
| | | SUBTOTAL | 54 | 55 | 33 |
| | | TOTAL | 54 | 88 | |
| | | GRAND TOTAL | 142 | | |

(N) - NOT A SEPARATE PAY ITEM, FOR INFORMATION ONLY.

## REMOVE THERMOPLASTIC TRAFFIC STRIPE

| ROUTE | DESCRIPTION | POSTMILE | DETAIL | LENGTH (LF) |
|---|---|---|---|---|
| 5 | WB CLAIREMONT Dr OC | R22.3 | 38A | 530 |
| 5 | EB CLAIREMONT Dr OC | R22.3 | 38 | 400 |
| | | | 38A | 1,000 |
| 5 | NB OFF-RAMP | R22.3 | 38A | 460 |
| 5 | NB ON-RAMP | R22.3 | 38 | 570 |
| | | | TOTAL | 2,960 |

# PAVEMENT DELINEATION QUANTITIES

# PDQ-2

REVISED BY | DATE REVISED
ROBERT EDEJER | SHAHIN ADIBI
CALCULATED-DESIGNED BY | CHECKED BY
FUNCTIONAL SUPERVISOR | CAMILLE ABOU FADEL
STATE OF CALIFORNIA - DEPARTMENT OF TRANSPORTATION
Caltrans® TRAFFIC DESIGN

LAST REVISION 07-13-11 | DATE PLOTTED => 18-JUL-2011 | TIME PLOTTED => 10:21

| Dist | COUNTY | ROUTE | POST MILES TOTAL PROJECT | SHEET No. | TOTAL SHEETS |
|---|---|---|---|---|---|
| 11 | SD | 5 | R22.3 | 12 | 30 |

REGISTERED CIVIL ENGINEER 06-24-11 DATE

07-25-11
PLANS APPROVAL DATE

REGISTERED PROFESSIONAL ENGINEER
SHAHIN T. ADIBI
No. 54839
Exp. 06-30-12
CIVIL
STATE OF CALIFORNIA

*THE STATE OF CALIFORNIA OR ITS OFFICERS OR AGENTS SHALL NOT BE RESPONSIBLE FOR THE ACCURACY OR COMPLETENESS OF SCANNED COPIES OF THIS PLAN SHEET.*

LEGEND:

S/S (XX) = INSTALL SIGN (STRAP AND SADDLE BRACKET METHOD)

EP (XX) = INSTALL ROADSIDE SIGN ON EXISTING POST

RM (XX) = REMOVE ROADSIDE SIGN (STRAP AND SADDLE BRACKET METHOD)

RS (XX) = RESET ROADSIDE SIGN

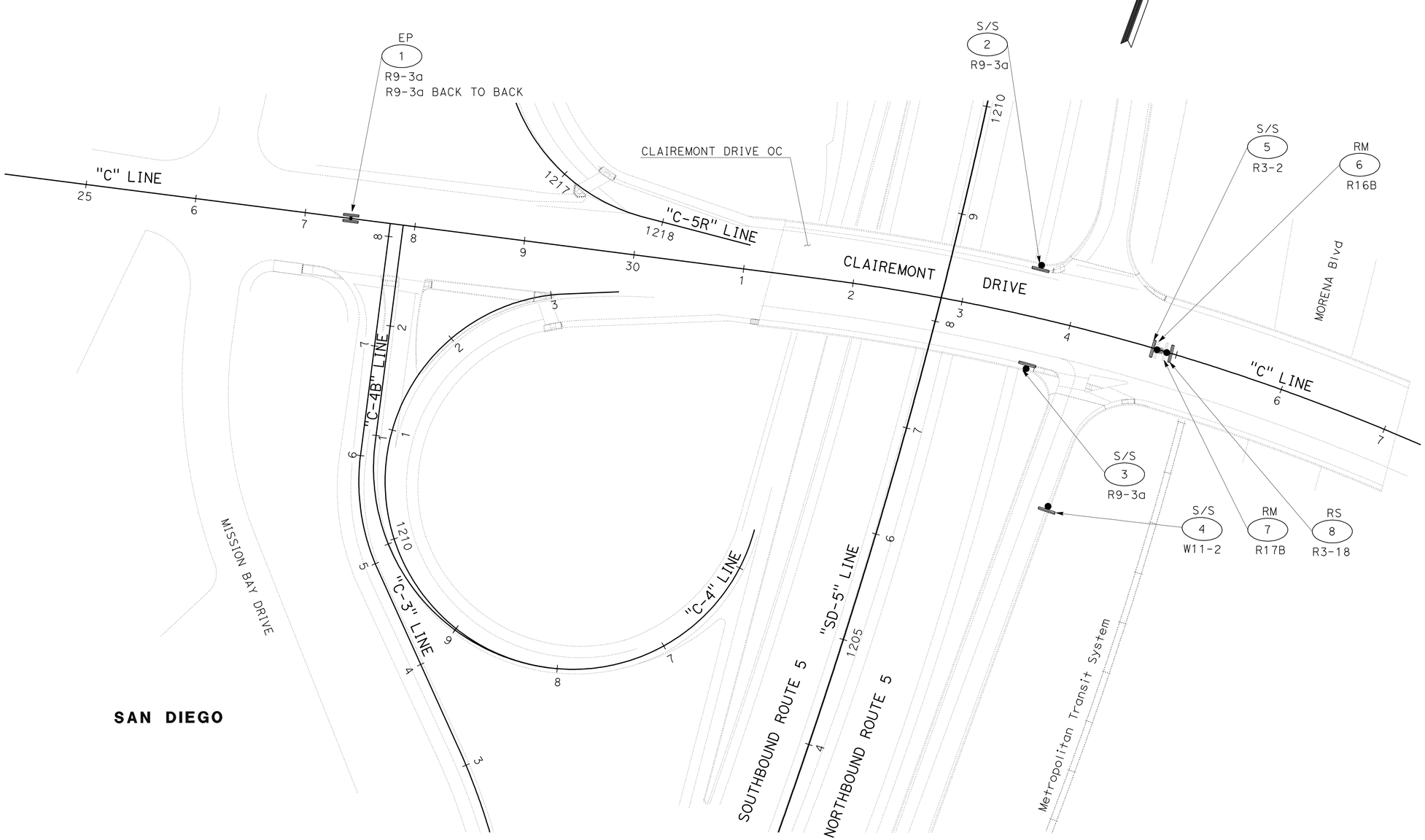


# SIGN PLAN

SCALE: 1" = 50'

**S-1**

*APPROVED FOR SIGN WORK ONLY*

STATE OF CALIFORNIA - DEPARTMENT OF TRANSPORTATION
Caltrans
TRAFFIC DESIGN

FUNCTIONAL SUPERVISOR: CAMILLE ABOU FADEL
CALCULATED-DESIGNED BY: ROBERT EDEJER
CHECKED BY: SHAHIN ADIBI
REVISED BY
DATE REVISED

LAST REVISION 07-13-11
DATE PLOTTED => 18-JUL-2011
TIME PLOTTED => 10:21

| Dist | COUNTY | ROUTE | POST MILES TOTAL PROJECT | SHEET No. | TOTAL SHEETS |
|---|---|---|---|---|---|
| 11 | SD | 5 | R22.3 | 13 | 30 |

REGISTERED CIVIL ENGINEER 06-24-11 DATE

07-25-11
PLANS APPROVAL DATE

REGISTERED PROFESSIONAL ENGINEER SHAHIN T. ADIBI No. 54839 Exp. 06-30-12 CIVIL STATE OF CALIFORNIA

*THE STATE OF CALIFORNIA OR ITS OFFICERS OR AGENTS SHALL NOT BE RESPONSIBLE FOR THE ACCURACY OR COMPLETENESS OF SCANNED COPIES OF THIS PLAN SHEET.*

NOTES:

1. CALIFORNIA SIGN QUANTITIES ARE DESIGNATED BY (CA) OTHERWISE FEDERAL MANUAL OF UNIFORM TRAFFIC CONTROL DEVICES (MUTCD) SIGN CODES ARE SHOWN.
2. EXACT LOCATION OF SIGNS AND POSTS TO BE DETERMINED BY THE ENGINEER.
3. MINIMUM POST LENGTHS WERE CALCULATED ASSUMING LEVEL GROUND SURFACE FROM THE EP. ENSURE "C" DIMENSIONS ARE MET. POST LENGTHS MAY VARY DUE TO SITE CONDITIONS.
4. REFER TO "FURNISH ROADSIDE SIGN PANEL" CHART FOR FURTHER INFORMATION.

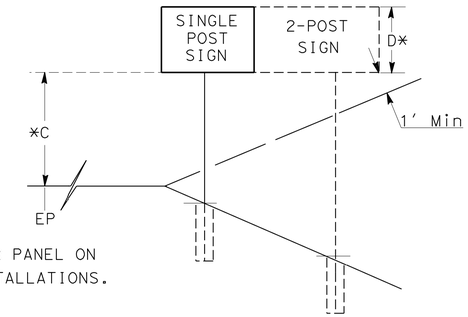


*TO BOTTOM OF LOWER PANEL ON MULTIPLE SIGN INSTALLATIONS.

## ROADSIDE SIGN QUANTITIES

| SIGN No. | CODE | SHEET No. | PANEL SIZE Horiz | PANEL SIZE Vert | D | C | INSTALL ROADSIDE SIGN PANEL ON EXISTING POST | INSTALL SIGN (STRAP & SADDLE BRACKET METHOD) | REMOVE ROADSIDE SIGN (STRAP & SADDLE BRACKET METHOD) | RESET ROADSIDE SIGN | REMARKS |
|---|---|---|---|---|---|---|---|---|---|---|---|
| | | | INCHES X INCHES | | Ft | Ft | EA | EA | EA | EA | |
| 1 | R9-3a | S-1 | 24 X 24 | | 2.0 | 7.0 | 2 | | | | ATTACH TO EXISTING SIGN POST |
| 2 | R9-3a | S-1 | 24 X 24 | | 2.0 | 7.0 | | 1 | | | ATTACH TO EXISTING SIGNAL POLE |
| 3 | R9-3a | S-1 | 24 X 24 | | 2.0 | 7.0 | | 1 | | | ATTACH TO EXISTING SIGNAL POLE |
| 4 | W11-2 | S-1 | 30 X 30 | | 2.5 | 6.0 | | 1 | | | ATTACH TO EXISTING SIGNAL POLE |
| 5 | R3-2 | S-1 | 24 X 24 | | 2.0 | 7.0 | | 1 | | | ATTACH TO EXISTING SIGNAL POLE |
| 6 | R16B | S-1 | 30 X 36 | | | | | | 1 | | REMOVE |
| 7 | R17B | S-1 | 30 X 36 | | | | | | 1 | | REMOVE |
| 8 | R3-18 | S-1 | 24 X 24 | | 2.0 | 7.0 | | | | 1 | ATTACH TO EXISTING SIGNAL POLE |
| | | | | | | TOTAL | 2 | 4 | 2 | 1 | |

## FURNISH ROADSIDE SIGN PANEL

| SIGN No. | CODE | PANEL SIZE Horiz | PANEL SIZE Vert | BACKGROUND SHEETING COLOR | BACKGROUND RETRO-REFLECTIVE ASTM TYPE | LEGEND SHEETING COLOR | LEGEND REFLECTIVE ASTM TYPE | LEGEND BLACK(NON-REFLECTIVE) | SIGN PANEL SINGLE SHEET ALUMINUM (SQFT) UNFRAMED 0.063" | SIGN PANEL PROTECTIVE OVERLAY PF | REMARKS |
|---|---|---|---|---|---|---|---|---|---|---|---|
| | | INCHES X INCHES | | | | | | | | | |
| 1 | R9-3a | 24 X 24 | | WHITE | IV | Red/Blk | IV | X | 8 | X | |
| 2 | R9-3a | 24 X 24 | | WHITE | IV | Red/Blk | IV | X | 4 | X | |
| 3 | R9-3a | 24 X 24 | | WHITE | IV | Red/Blk | IV | X | 4 | X | |
| 4 | W11-2 | 30 X 30 | | YELLOW | IV | BLACK | IV | X | 6.25 | X | |
| 5 | R3-2 | 24 X 24 | | WHITE | VII | Red/Blk | VII | X | 4 | X | |
| | | | | | | | | | | | |
| | | | | | | | | TOTAL | 26.25 | | |

NOTES:

1. PROTECTIVE OVERLAY DESIGNATIONS ARE AS FOLLOWS: SOC- SPRAY ON COATING, SF-STANDARD FILM, PF-PREMIUM FILM.
2. GREEN-Grn, WHITE-Wht, BLACK-Blk, BLUE-Blu, YELLOW-Ylw, BROWN-Brn, RED-Red, ORANGE-Org, CREAM-Crm.
3. REFER TO "ROADSIDE SIGN QUANTITIES" CHART FOR FURTHER INFORMATION.

# SIGN QUANTITIES

SQ-1

REVISED BY | DATE REVISED

ROBERT EDEJER | SHAHIN ADIBI

CALCULATED-DESIGNED BY | CHECKED BY

FUNCTIONAL SUPERVISOR: CAMILLE ABOU FADEL

STATE OF CALIFORNIA - DEPARTMENT OF TRANSPORTATION
Caltrans® TRAFFIC DESIGN

LAST REVISION 07-13-11 | DATE PLOTTED => 18-JUL-2011 | TIME PLOTTED => 10:21

| Dist | COUNTY | ROUTE | POST MILES TOTAL PROJECT | SHEET No. | TOTAL SHEETS |
|---|---|---|---|---|---|
| 11 | SD | 5 | R22.3 | 14 | 30 |

REGISTERED CIVIL ENGINEER 06-24-11 DATE

PLANS APPROVAL DATE 07-25-11

REGISTERED PROFESSIONAL ENGINEER GEORGE H. MAMAGHANI No. 44842 Exp. 3-31-12 CIVIL STATE OF CALIFORNIA

*THE STATE OF CALIFORNIA OR ITS OFFICERS OR AGENTS SHALL NOT BE RESPONSIBLE FOR THE ACCURACY OR COMPLETENESS OF SCANNED COPIES OF THIS PLAN SHEET.*

## MILEPOST MARKER

| IN NB DIRECTION | IN SB DIRECTION | LOCATION OF MISSING PM PADDLES | EACH |
|---|---|---|---|
| R22.00 | | 0.262 MILE S/O CLAIREMONT DRIVE OC (57-429) | 1 |
| R22.50 | | 0.238 MILE N/O CLAIREMONT DRIVE OC (57-429) | 1 |
| | R22.50 | 0.238 MILE N/O CLAIREMONT DRIVE OC (57-429) | 1 |
| TOTAL | | | 3 |

## BAR REINFORCING STEEL (N)

| SHEET | LOCATION | #4 BARS | |
|---|---|---|---|
| | | LF | LB |
| L-1 | 1.3 | 16 | 10.66 |
| L-1 | 1.4 | 3 | 2.00 |
| L-1 | 1.11 | 3 | 2.00 |
| L-1 | 1.13 | 3 | 2.00 |
| TOTAL | | 25 | 16.66 |

(N) = NON PAY ITEM

## DRILL AND BOND DOWEL (N)

| SHEET | LOCATION | #4 BARS |
|---|---|---|
| | | EACH |
| L-1 | 1.3 | 16 |
| L-1 | 1.4 | 3 |
| L-1 | 1.11 | 3 |
| L-1 | 1.13 | 3 |
| TOTAL | | 25 |

## FURNISH POLYESTER CONCRETE OVERLAY

| SHEET | LOCATION | QUANTITY CF |
|---|---|---|
| L-1 | 1.3 | 18.7 |
| L-1 | 1.3a | 3.0 |
| L-1 | 1.4 | 29.1 |
| L-1 | 1.4a | 5.4 |
| L-1 | 1.11 | 18.7 |
| L-1 | 1.13 | 18.7 |
| TOTAL | | 93.6 |

## DETECTABLE WARNING SURFACE

| SHEET | SUB-LOCATION | QUANTITY SQFT |
|---|---|---|
| L-1 | 1.3 | 26 |
| L-1 | 1.4 | 41 |
| L-1 | 1.11 | 26 |
| L-1 | 1.12a | 24 |
| L-1 | 1.12b | 14 |
| L-1 | 1.13 | 15 |
| TOTAL | | 146 |

## PLACE POLYESTER CONCRETE OVERLAY

| SHEET | LOCATION | QUANTITY SQFT |
|---|---|---|
| L-1 | 1.3 | 47.6 |
| L-1 | 1.3a | 5.0 |
| L-1 | 1.4 | 64.5 |
| L-1 | 1.4a | 10.0 |
| L-1 | 1.11 | 56.4 |
| L-1 | 1.13 | 31.8 |
| TOTAL | | 215.3 |

# SUMMARY OF QUANTITIES

Q-1

REVISED BY | DATE REVISED

RANDY SALAZAR | GEORGE MAMAGHANI

CALCULATED-DESIGNED BY | CHECKED BY

FUNCTIONAL SUPERVISOR: ED HAJJ

STATE OF CALIFORNIA - DEPARTMENT OF TRANSPORTATION

Caltrans® DESIGN

LAST REVISION 07-13-11 | DATE PLOTTED => 21-JUL-2011 | TIME PLOTTED => 10:44

| Dist | COUNTY | ROUTE | POST MILES TOTAL PROJECT | SHEET No. | TOTAL SHEETS |
|---|---|---|---|---|---|
| 11 | SD | 5 | R22.3 | 15 | 30 |

REGISTERED CIVIL ENGINEER DATE 06-24-11

07-25-11
PLANS APPROVAL DATE

REGISTERED PROFESSIONAL ENGINEER GEORGE H. MAMAGHANI No. 44842 Exp. 3-31-12 CIVIL STATE OF CALIFORNIA

*THE STATE OF CALIFORNIA OR ITS OFFICERS OR AGENTS SHALL NOT BE RESPONSIBLE FOR THE ACCURACY OR COMPLETENESS OF SCANNED COPIES OF THIS PLAN SHEET.*

## CURBS AND SIDEWALKS

| SHEET | LOCATION | CURB RAMP CASE | MINOR CONCRETE (Misc CONSTRUCTION) | REMOVE CONCRETE |
|---|---|---|---|---|
| | | | CY | CY |
| L-1 | 1.3 | F (Mod) | 1.14 | 1.20 |
| | 1.3a | | | 0.20 |
| | 1.4 | CM (Mod) | 1.22 | 1.22 |
| | 1.4a | | | 0.40 |
| | 1.11 | CM | 1.24 | 1.24 |
| | 1.12a | | 0.40 | 0.40 |
| | 1.12b | | 0.40 | 0.40 |
| | 1.13 | C (Mod) | 0.91 | 0.91 |
| TOTAL | | | 5.31 | 5.97 |

# SUMMARY OF QUANTITIES
## Q-2

STATE OF CALIFORNIA - DEPARTMENT OF TRANSPORTATION
Caltrans® DESIGN

FUNCTIONAL SUPERVISOR: ED HAJJ
CALCULATED-DESIGNED BY: RANDY SALAZAR
CHECKED BY: GEORGE MAMAGHANI
REVISED BY
DATE REVISED

LAST REVISION 07-13-11
DATE PLOTTED => 21-JUL-2011
TIME PLOTTED => 10:44

| Dist | COUNTY | ROUTE | POST MILES TOTAL PROJECT | SHEET No. | TOTAL SHEETS |
|---|---|---|---|---|---|
| 11 | SD | 5 | R22.3 | 16 | 30 |

Héctor A. Santamaría 06-24-11
REGISTERED ELECTRICAL ENGINEER DATE

07-25-11
PLANS APPROVAL DATE

REGISTERED PROFESSIONAL ENGINEER HECTOR A. SANTAMARIA No. 18207 Exp. 12-31-11 ELECTRICAL STATE OF CALIFORNIA

*THE STATE OF CALIFORNIA OR ITS OFFICERS OR AGENTS SHALL NOT BE RESPONSIBLE FOR THE ACCURACY OR COMPLETENESS OF SCANNED COPIES OF THIS PLAN SHEET.*

## LEGEND:

N△C = EXISTING CONDUIT NO CHANGE

SDG&E = SAN DIEGO GAS AND ELECTRIC COMPANY

VDU = VIDEO DETECTION UNIT

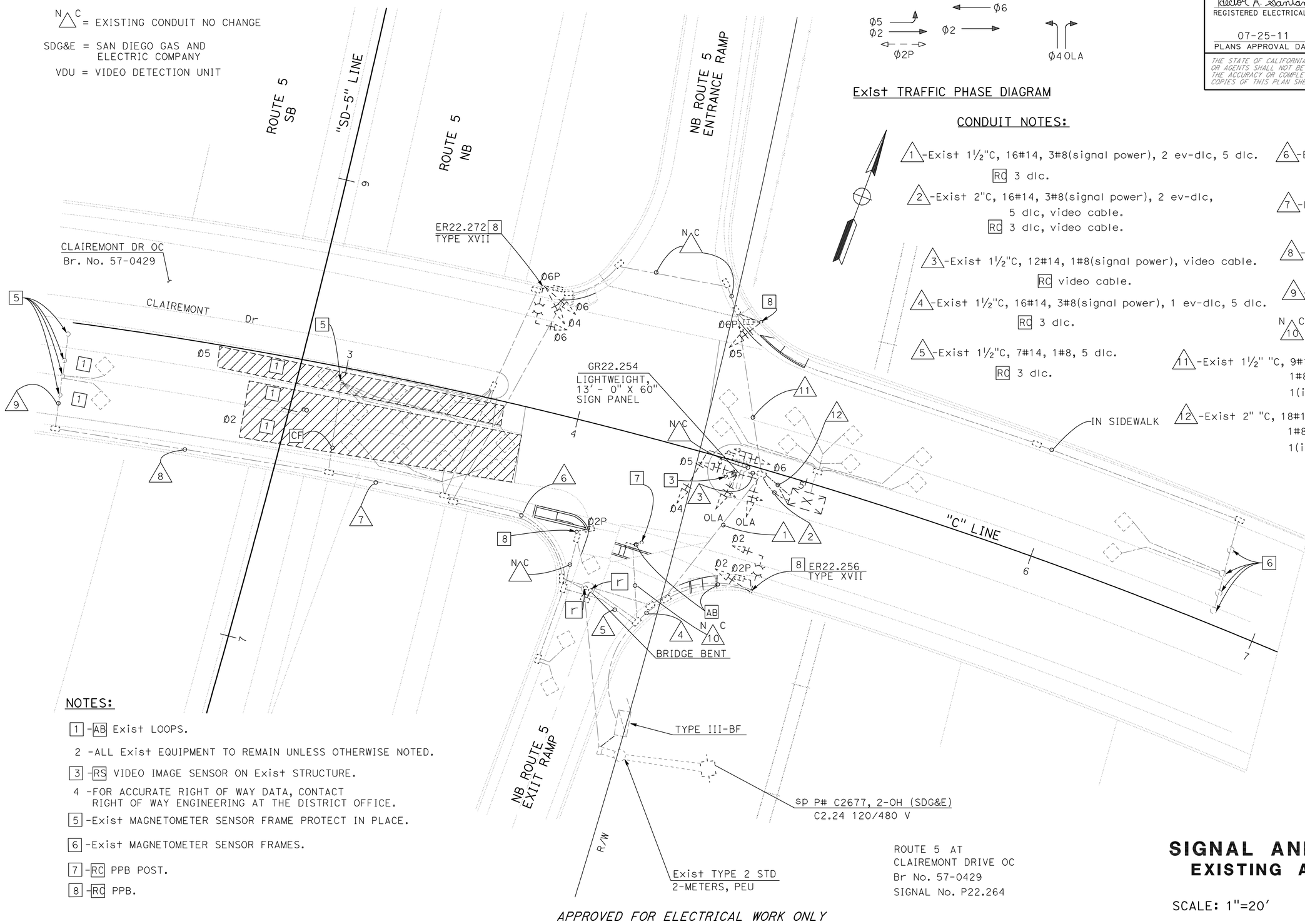


## Exist TRAFFIC PHASE DIAGRAM

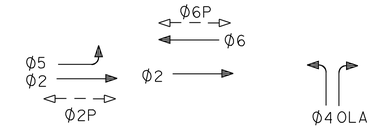


## CONDUIT NOTES:

1 -Exist 1½"C, 16#14, 3#8(signal power), 2 ev-dlc, 5 dlc.
RC 3 dlc.

2 -Exist 2"C, 16#14, 3#8(signal power), 2 ev-dlc, 5 dlc, video cable.
RC 3 dlc, video cable.

3 -Exist 1½"C, 12#14, 1#8(signal power), video cable.
RC video cable.

4 -Exist 1½"C, 16#14, 3#8(signal power), 1 ev-dlc, 5 dlc.
RC 3 dlc.

5 -Exist 1½"C, 7#14, 1#8, 5 dlc.
RC 3 dlc.

6 -Exist 1½"C, 4 dlc.
RC 3 dlc.

7 -Exist 1½"C, 3 dlc.
RC 3 dlc.

8 -Exist 1½"C, 2 dlc.
RC 2 dlc.

9 -Exist 1"C, 2 dlc.
RC 2 dlc.

N△C 10 -Exist 1½"C, 15 dlc.

11 -Exist 1½" "C, 9#14(signal), 7#14(ppb), 1#8(ground), 1 ev-dlc, 1(interconect), 3 dlc.

12 -Exist 2" "C, 18#14(signal), 7#14(ppb), 1#8(ground), 1 ev-dlc, 1(interconect), 3 dlc.

## NOTES:

1 -AB Exist LOOPS.

2 -ALL Exist EQUIPMENT TO REMAIN UNLESS OTHERWISE NOTED.

3 -RS VIDEO IMAGE SENSOR ON Exist STRUCTURE.

4 -FOR ACCURATE RIGHT OF WAY DATA, CONTACT RIGHT OF WAY ENGINEERING AT THE DISTRICT OFFICE.

5 -Exist MAGNETOMETER SENSOR FRAME PROTECT IN PLACE.

6 -Exist MAGNETOMETER SENSOR FRAMES.

7 -RC PPB POST.

8 -RC PPB.

ROUTE 5 AT
CLAIREMONT DRIVE OC
Br No. 57-0429
SIGNAL No. P22.264

*APPROVED FOR ELECTRICAL WORK ONLY*

# SIGNAL AND LIGHTING
## EXISTING AND REMOVE

SCALE: 1"=20'

**E-1**

STATE OF CALIFORNIA - DEPARTMENT OF TRANSPORTATION
Caltrans® ELECTRICAL DESIGN

FUNCTIONAL SUPERVISOR: DALE WILSON
CALCULATED-DESIGNED BY: ENRIQUE BERNAL
CHECKED BY: HECTOR SANTAMARIA
REVISED BY
DATE REVISED

LAST REVISION 07-13-11
DATE PLOTTED => 18-JUL-2011
TIME PLOTTED => 10:38

| Dist | COUNTY | ROUTE | POST MILES TOTAL PROJECT | SHEET No. | TOTAL SHEETS |
|---|---|---|---|---|---|
| 11 | SD | 5 | R22.3 | 17 | 30 |

Héctor A. Santamaría 06-24-11
REGISTERED ELECTRICAL ENGINEER DATE

07-25-11
PLANS APPROVAL DATE

REGISTERED PROFESSIONAL ENGINEER HECTOR A. SANTAMARIA No. 18207 Exp. 12-31-11 ELECTRICAL STATE OF CALIFORNIA

*THE STATE OF CALIFORNIA OR ITS OFFICERS OR AGENTS SHALL NOT BE RESPONSIBLE FOR THE ACCURACY OR COMPLETENESS OF SCANNED COPIES OF THIS PLAN SHEET.*

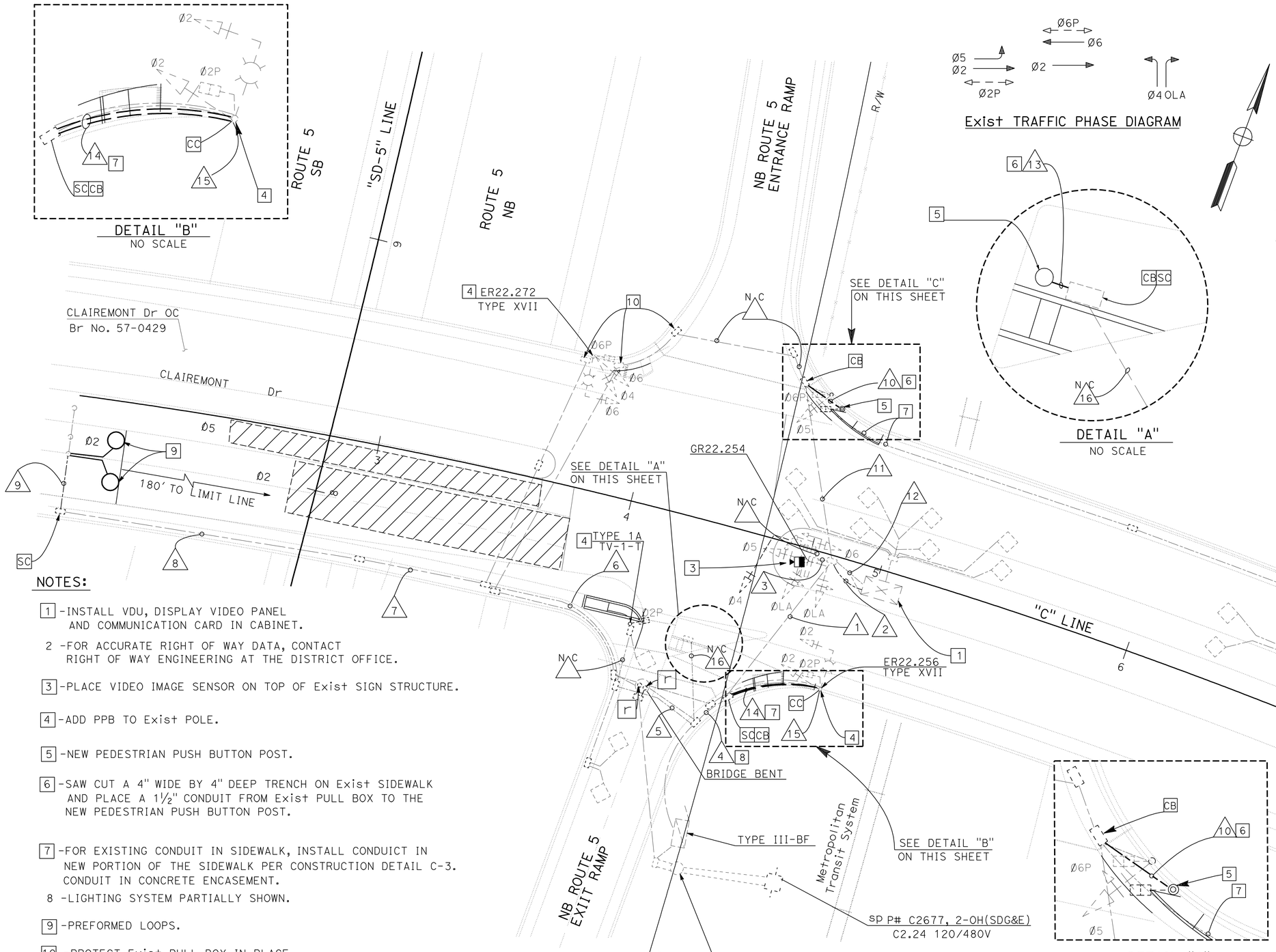


## NOTES:

1 -INSTALL VDU, DISPLAY VIDEO PANEL AND COMMUNICATION CARD IN CABINET.

2 -FOR ACCURATE RIGHT OF WAY DATA, CONTACT RIGHT OF WAY ENGINEERING AT THE DISTRICT OFFICE.

3 -PLACE VIDEO IMAGE SENSOR ON TOP OF Exist SIGN STRUCTURE.

4 -ADD PPB TO Exist POLE.

5 -NEW PEDESTRIAN PUSH BUTTON POST.

6 -SAW CUT A 4" WIDE BY 4" DEEP TRENCH ON Exist SIDEWALK AND PLACE A 1½" CONDUIT FROM Exist PULL BOX TO THE NEW PEDESTRIAN PUSH BUTTON POST.

7 -FOR EXISTING CONDUIT IN SIDEWALK, INSTALL CONDUICT IN NEW PORTION OF THE SIDEWALK PER CONSTRUCTION DETAIL C-3. CONDUIT IN CONCRETE ENCASEMENT.

8 -LIGHTING SYSTEM PARTIALLY SHOWN.

9 -PREFORMED LOOPS.

10 -PROTECT Exist PULL BOX IN PLACE.

## CONDUIT NOTES:

1 -Exist 1½"C, 16#14, 3#8, 2((ev-dlc), 2 dlc.
ADD 2 DLC

2 -Exist 2"C, 12#14,(signal) 4#14(ppb), 2 dlc 3#8(signal power)), 2 (ev-dlc).
ADD 1 VIDEO CABLE HARNESS, 2 DLC

3 -Exist 1½"C, 12#14, 1#8.
ADD 1 VIDEO CABLE HARNESS

4 -Exist 1½"C, 16#14, 3#8, 2 dlc.
ADD 2 DLC

5 -Exist 1½"C, 7#14, 1#8, 2 dlc.
ADD 2 DLC

6 -Exist 1½"C, 1 dlc.
ADD 2 DLC

7 -Exist 1½"C, ADD 2 DLC

8 -Exist 1½"C, ADD 2 DLC

9 -Exist 1"C, ADD 4 LOOP WIRES.

10 -1½"C, 1-3CSC.

11 -Exist 1½"C, 16#14, 1#8, 5 dlc.
RC 2#14
ADD 1-3CSC

12 -Exist TWO 2" "C, 31#14, 4#8, 4 evc, 8 dlc.
RC 2#14
ADD 1-3CSC

13 -1½"C, 2#14.

14 -1½"C, 15#14, 1#8, 1½"C, 2#8 (LTG)

15 -Exist 1½"C, 15#14, 1#8,

16 -Exist 1½"C, 15 dlc.

ROUTE 5 AT
CLAIREMONT DRIVE OC
Br No. 57-0429
SIGNAL No. P22.264

# SIGNAL AND LIGHTING

SCALE: 1" = 20'

**E-2**

*APPROVED FOR ELECTRICAL WORK ONLY*

STATE OF CALIFORNIA - DEPARTMENT OF TRANSPORTATION
Caltrans
ELECTRICAL DESIGN

FUNCTIONAL SUPERVISOR: DALE WILSON
CALCULATED-DESIGNED BY: ENRIQUE BERNAL
CHECKED BY: HECTOR SANTAMARIA
REVISED BY
DATE REVISED

LAST REVISION 07-13-11
DATE PLOTTED => 18-JUL-2011
TIME PLOTTED => 10:38

| DIST | COUNTY | ROUTE | POST MILES TOTAL PROJECT | SHEET NO. | TOTAL SHEETS |
|---|---|---|---|---|---|
| 11 | SD | 5 | R22.3 | 18 | 30 |

REGISTERED CIVIL ENGINEER

June 6, 2008
PLANS APPROVAL DATE

REGISTERED PROFESSIONAL ENGINEER
Donald E. Howe
No. C46402
Exp. 3-31-09
CIVIL
STATE OF CALIFORNIA

*The State of California or its officers or agents shall not be responsible for the accuracy or completeness of electronic copies of this plan sheet.*

*To accompany plans dated* 07-25-11

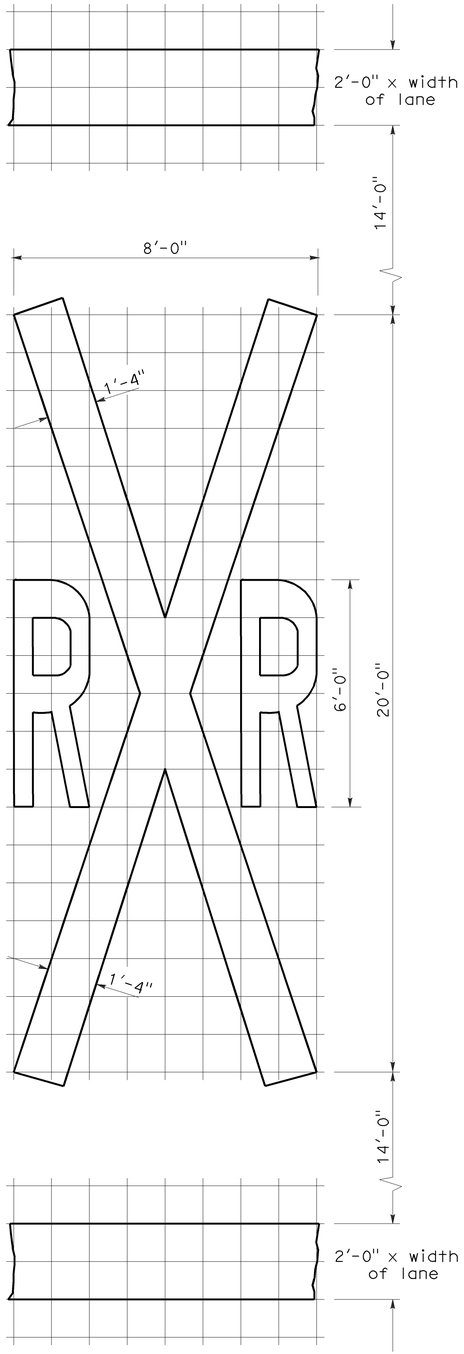


1'-0" GRID
A=70 sq ft ✳

RAILROAD CROSSING SYMBOL

✳70 sq ft DOES NOT INCLUDE THE 2'-0" x VARIABLE WIDTH TRANSVERSE LINES.

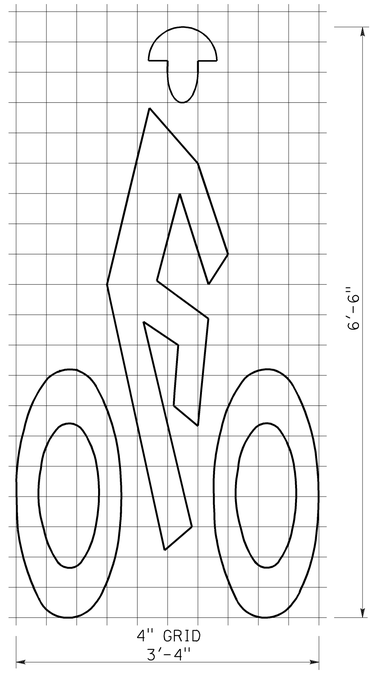


A=7 sq ft

BIKE LANE SYMBOL

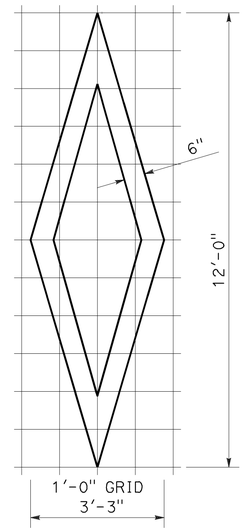


A=11 sq ft

DIAMOND SYMBOL

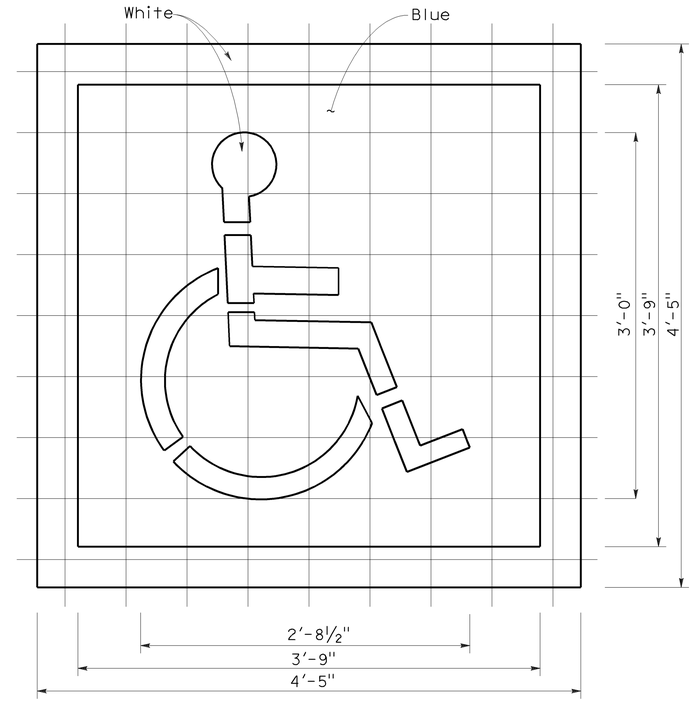


6" GRID
A (White) =9 sq ft
A (Blue) =14 sq ft

INTERNATIONAL SYMBOL OF ACCESSIBILITY MARKING

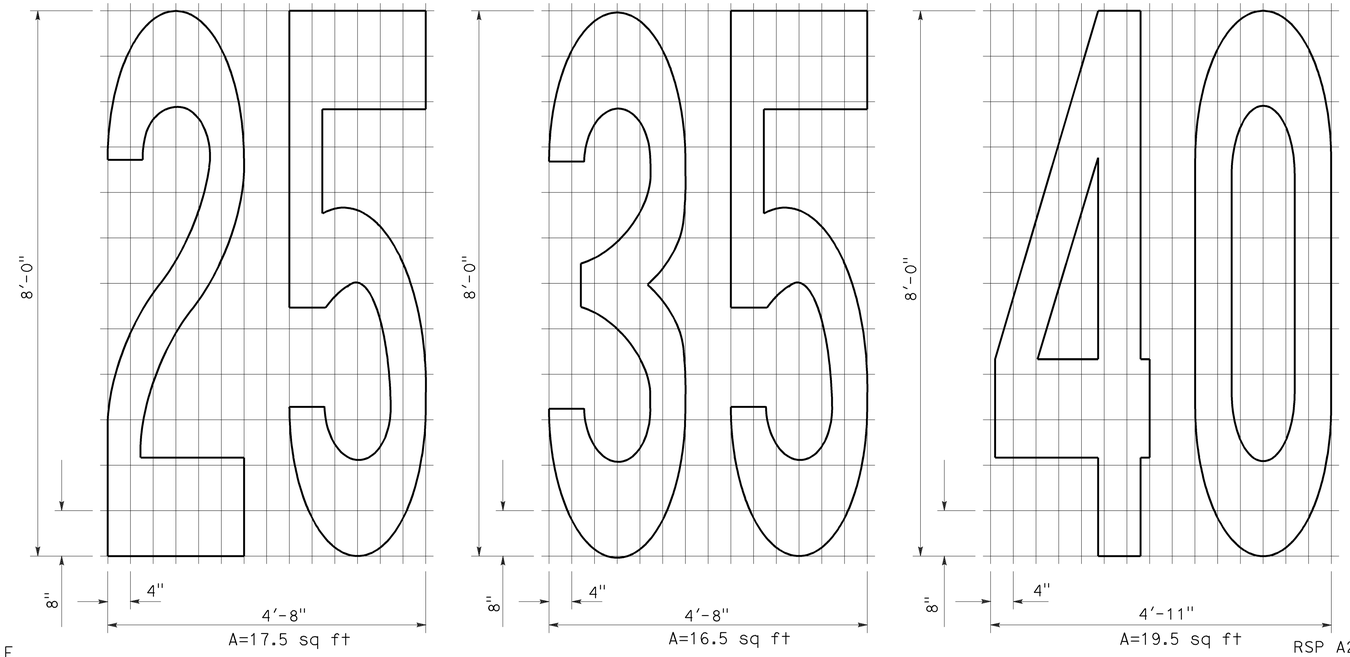


A=17.5 sq ft
A=16.5 sq ft
A=19.5 sq ft

NUMERALS

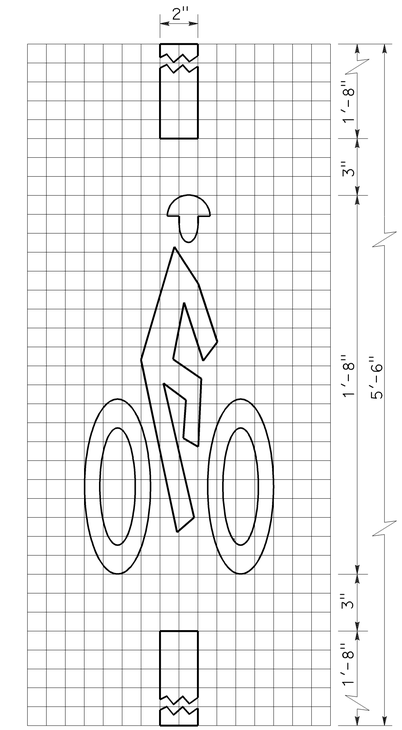


A=2 sq ft

BICYCLE LOOP DETECTOR SYMBOL

NOTE:

1. Minor variations in dimensions may be accepted by the Engineer.

STATE OF CALIFORNIA
DEPARTMENT OF TRANSPORTATION

# PAVEMENT MARKINGS SYMBOLS AND NUMERALS

NO SCALE

RSP A24C DATED JUNE 6, 2008 SUPERSEDES STANDARD PLAN A24C DATED MAY 1, 2006 - PAGE 11 OF THE STANDARD PLANS BOOK DATED MAY 2006.

**REVISED STANDARD PLAN RSP A24C**

**2006 REVISED STANDARD PLAN RSP A24C**

5-27-08

| DIST | COUNTY | ROUTE | POST MILES TOTAL PROJECT | SHEET NO. | TOTAL SHEETS |
|---|---|---|---|---|---|
| 11 | SD | 5 | R22.3 | 19 | 30 |

REGISTERED CIVIL ENGINEER

November 17, 2006
PLANS APPROVAL DATE

REGISTERED PROFESSIONAL ENGINEER Michael Janzen No. 44788 Exp. 03-31-08 CIVIL STATE OF CALIFORNIA

*The State of California or its officers or agents shall not be responsible for the accuracy or completeness of electronic copies of this plan sheet.*

*To accompany plans dated* 07-25-11

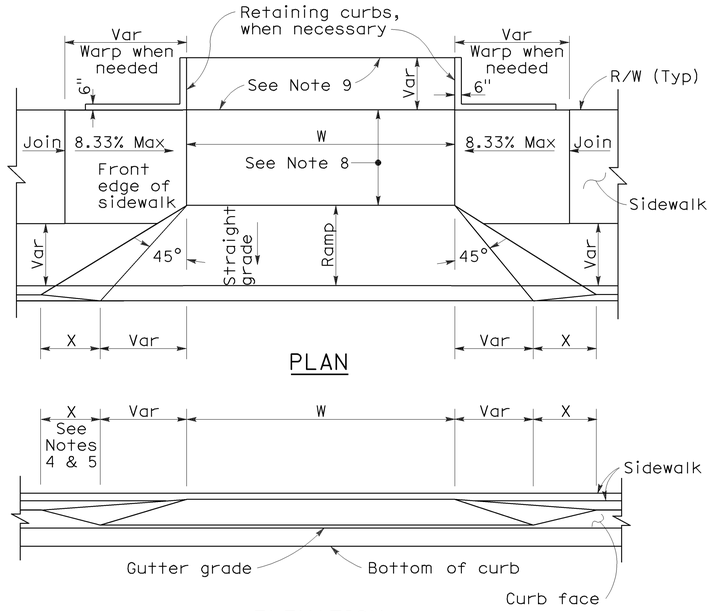


PLAN

ELEVATION

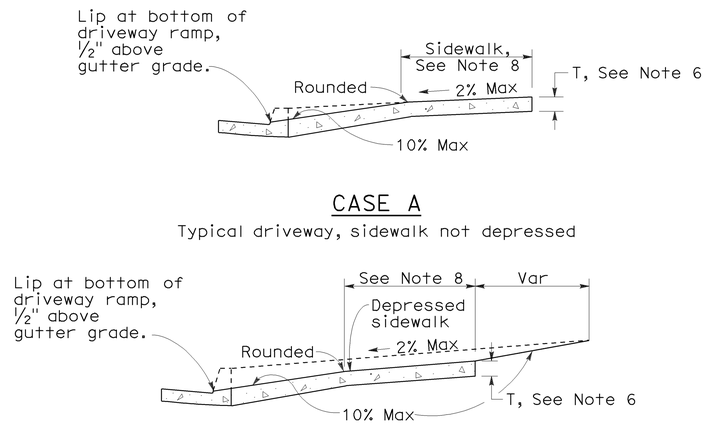


CASE A

Typical driveway, sidewalk not depressed

CASE B

Driveway with depressed sidewalk

SECTIONS

## CURB QUANTITIES

| TYPE | CUBIC YARDS PER LINEAR FOOT |
|---|---|
| A1-6 | 0.02585 |
| A1-8 | 0.03084 |
| A2-6 | 0.05903 |
| A2-8 | 0.06379 |
| A3-6 | 0.01036 |
| A3-8 | 0.01435 |
| B1-4 | 0.02185 |
| B1-6 | 0.02930 |
| B2-4 | 0.05515 |
| B2-6 | 0.06171 |
| B3-4 | 0.00641 |
| B3-6 | 0.01074 |
| B4 | 0.05709 |
| D-4 | 0.04083 |
| D-6 | 0.06804 |
| E | 0.06661 |

## TABLE A

| CURB TYPE | DIMENSIONS "H1" | "H2" | "W1" | "W2" |
|---|---|---|---|---|
| A1-6 | 1'-2" | 6" | 7½" | 1½" |
| A1-8 | 1'-4" | 8" | 8" | 2" |
| A2-6 | 1'-0" | 6" | 2'-7½" | 1½" |
| A2-8 | 1'-2" | 8" | 2'-8" | 2" |
| A3-6 | 6" | 5" | 7¼" | 1¼" |
| A3-8 | 8" | 7" | 7¾" | 1¾" |
| B1-4 | 1'-0" | 4" | 7½" | 2½" |
| B1-6 | 1'-2" | 6" | 9" | 4" |
| B2-4 | 10" | 4" | 2'-7½" | 2½" |
| B2-6 | 1'-0" | 6" | 2'-9" | 4" |
| B3-4 | 4" | 3" | 7" | 2" |
| B3-6 | 6" | 5" | 8½" | 3½" |
| D-4 | 10" | 4" | 1'-6" | 1'-1" |
| D-6 | 1'-0" | 6" | 2'-2" | 1'-8" |

## DRIVEWAYS

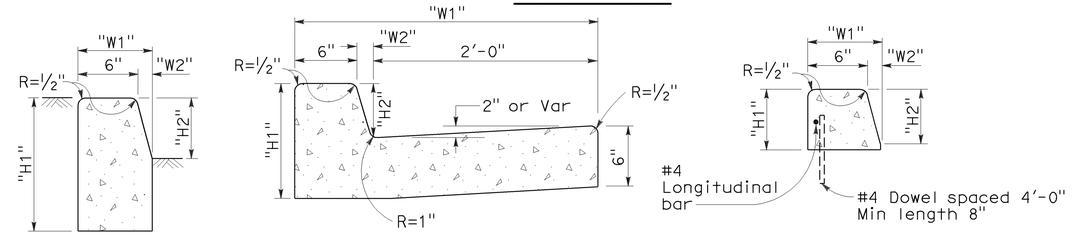


TYPE A1 CURBS
See Table A

TYPE A2 CURBS
See Table A

TYPE A3 CURBS
Superimposed on existing pavement
See Table A

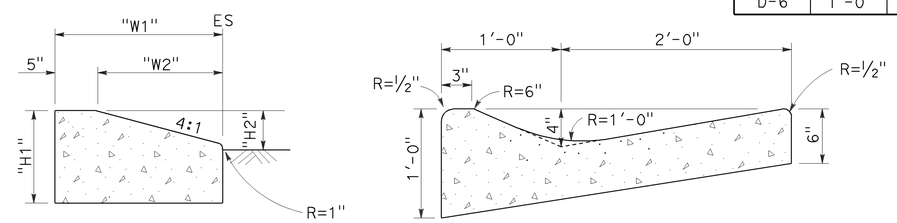


TYPE D CURBS
See Table A

TYPE E CURB

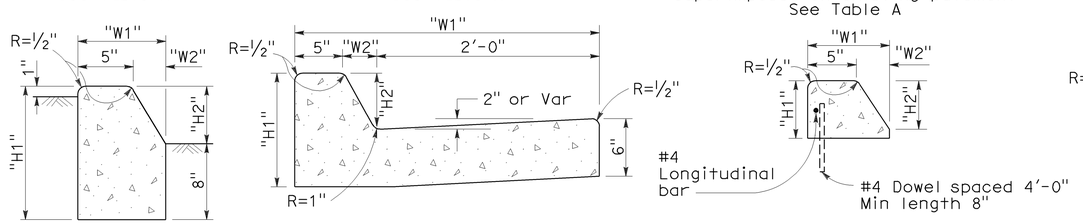


TYPE B1 CURBS
See Table A

TYPE B2 CURBS
See Table A

TYPE B3 CURBS
Superimposed on existing pavement
See Table A

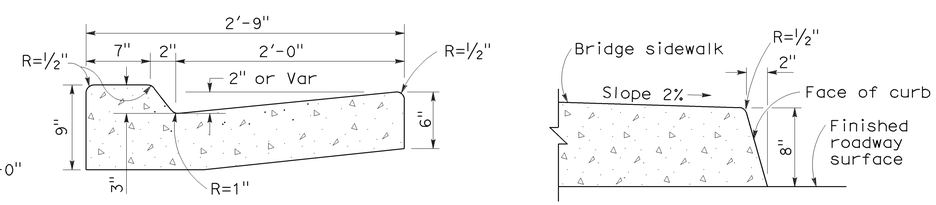


TYPE B4 CURBS

TYPE H CURB
On Bridges

## CURBS

## NOTES:

1. Case A driveway section typically applies.
2. Use Case B driveway section when ramp slopes would exceed 10% in Case A.
3. Use Case B driveway section when sidewalk cross slope would exceed 2% in Case A.
4. X=3'-0" except for curb heights over 10" where 4:1 slopes shall be used on curb slope.
5. X is a variable when sidewalk is located where wheelchairs may traverse the surface. Slopes shall not exceed 8.33%.
6. Sidewalk and ramp thickness "T" at driveway shall be 4" for residental and 6" for commercial.
7. Difference in slope of the driveway ramp and the slope of a line between the gutter and a point on the roadway 5'-0" from gutter line shall not exceed 15%. Reduce driveway ramp slope, not gutter slope, where required.
8. Minimum width of clear passageway for sidewalk shall be 4'-0".
9. Retaining curbs and acquisition of construction easement may be necessary for narrow sidewalks or curb heights in excess of 6".
10. Across the pedestrian route at curb ramp locations, the gutter pan slope shall not exceed 1" of depth for each 2'-0" of width.

STATE OF CALIFORNIA
DEPARTMENT OF TRANSPORTATION

# CURBS AND DRIVEWAYS

NO SCALE

RSP A87A DATED NOVEMBER 17, 2006 SUPERSEDES STANDARD PLAN A87A DATED MAY 1, 2006 - PAGE 113 OF THE STANDARD PLANS BOOK DATED MAY 2006.

**REVISED STANDARD PLAN RSP A87A**

**2006 REVISED STANDARD PLAN RSP A87A**

10-25-06

| DIST | COUNTY | ROUTE | POST MILES TOTAL PROJECT | SHEET NO. | TOTAL SHEETS |
|---|---|---|---|---|---|
| 11 | SD | 5 | R22.3 | 20 | 30 |

REGISTERED CIVIL ENGINEER

September 1, 2006
PLANS APPROVAL DATE

REGISTERED PROFESSIONAL ENGINEER Hector David Cordova No. C41957 Exp. 3-31-08 CIVIL STATE OF CALIFORNIA

*The State of California or its officers or agents shall not be responsible for the accuracy or completeness of electronic copies of this plan sheet.*

*To accompany plans dated* 07-25-11

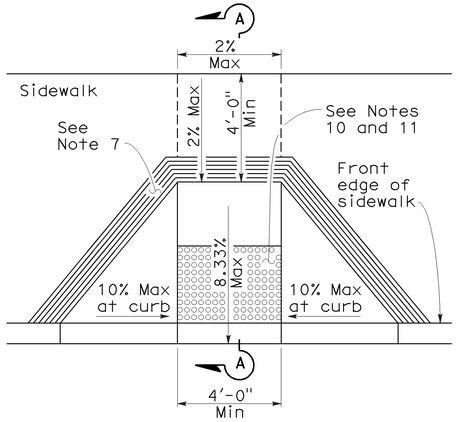


CASE A

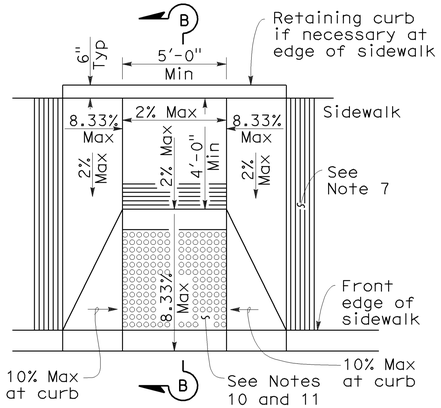


CASE B

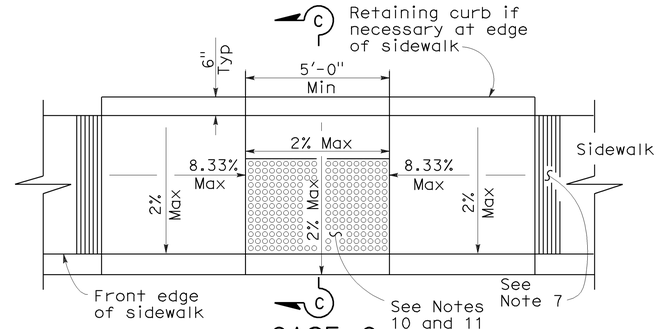


CASE C

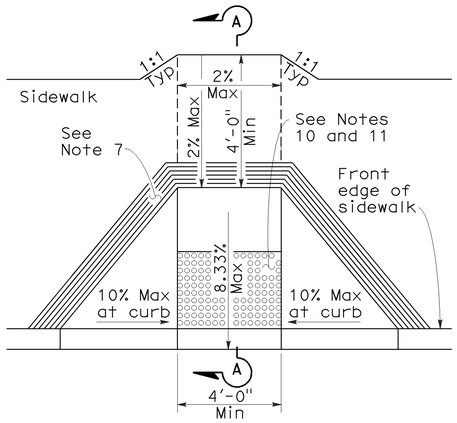


CASE D

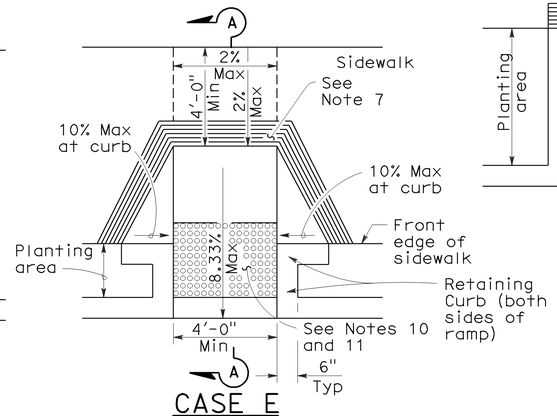


CASE E

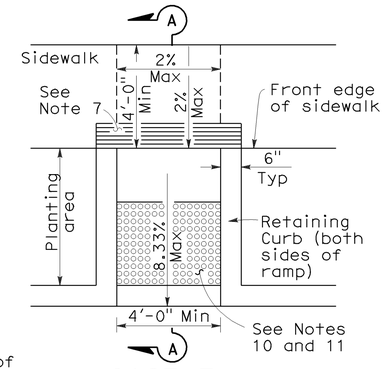


CASE F

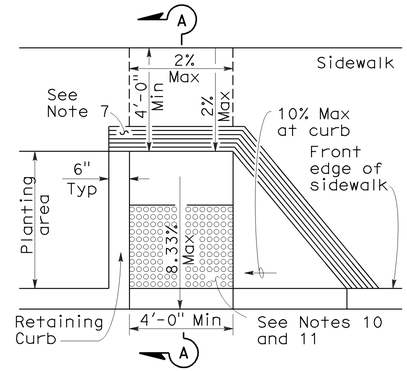


CASE G
See Note 4

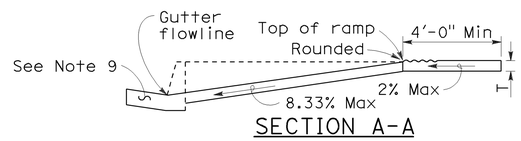


SECTION A-A

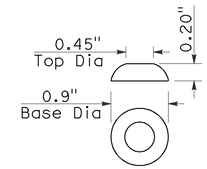


RAISED TRUNCATED DOME

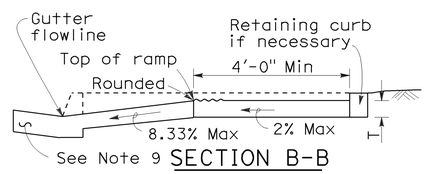


SECTION B-B
Depress entire sidewalk as required

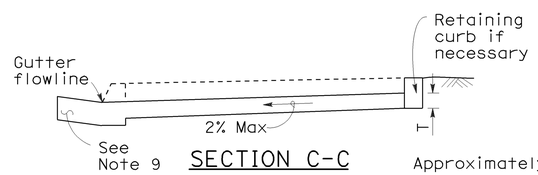


SECTION C-C

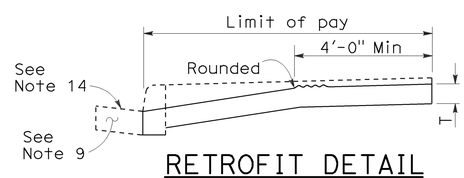


RETROFIT DETAIL
Existing curb and sidewalk

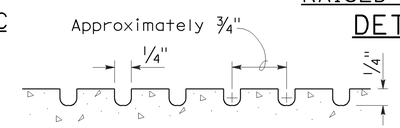


GROOVING DETAIL

## NOTES:

1. As site conditions dictate, Case A through Case G curb ramps may be used for corner installations similar to those shown in Detail A and Detail B. The case of curb ramps used in Detail A do not have to be the same. Case A through Case G curb ramps also may be used at mid block locations, as site conditions dictate.
2. If distance from curb to back of sidewalk is too short to accommodate ramp and 4'-0" platform (landing) as shown in Case A, the sidewalk may be depressed longitudinally as in Case B, or C or may be widened as in Case D.
3. When ramp is located in center of curb return, crosswalk configuration must be similar to that shown for Detail B.
4. As site conditions dictate, the retaining curb side and the flared side of the Case G ramp shall be constructed in reversed position.
5. If located on a curve, the sides of the ramp need not be parallel, but the minimum width of the ramp shall be 4'-0".
6. Side slope of ramp flares vary uniformly from a maximum of 10% at curb to conform with longitudinal sidewalk slope adjacent to top of the ramp, except in Case C and Case F.
7. The curb ramp shall be outlined, as shown, with a 1'-0" wide border with 1/4" grooves approximately 3/4" on center. See grooving detail.
8. Transitions from ramps and landing to walks, gutters or streets shall be flush and free of abrupt changes.
9. Maximum slopes of adjoining gutters, the road surface immediately adjacent to the curb ramp or accessible route shall not exceed 5 percent within 4'-0" of the top and bottom of the curb ramp.
10. Curb ramps shall have a detectable warning surface that extends the full width and 3'-0" depth of the ramp. Detectable Warning Surfaces shall conform to the details on this plan and the requirements in the Special Provisions.
11. The edge of the detectable warning surface nearest the street shall be between 6" and 8" from the gutter flowline.
12. Sidewalk and ramp thickness, "T", shall be 3½" minimum.
13. Utility pull boxes, manholes, vaults and all other utility facilities within the boundaries of the curb ramp will be relocated or adjusted to grade by the owner prior to, or in conjunction with, curb ramp construction.
14. For retrofit conditions, removal and replacement of curb apron will be at the Contractor's option, unless otherwise shown on project plans.

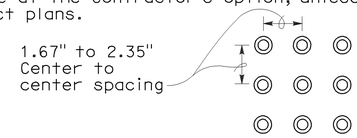


RAISED TRUNCATED DOME PATTERN (IN-LINE)
DETECTABLE WARNING SURFACE
See Note 10

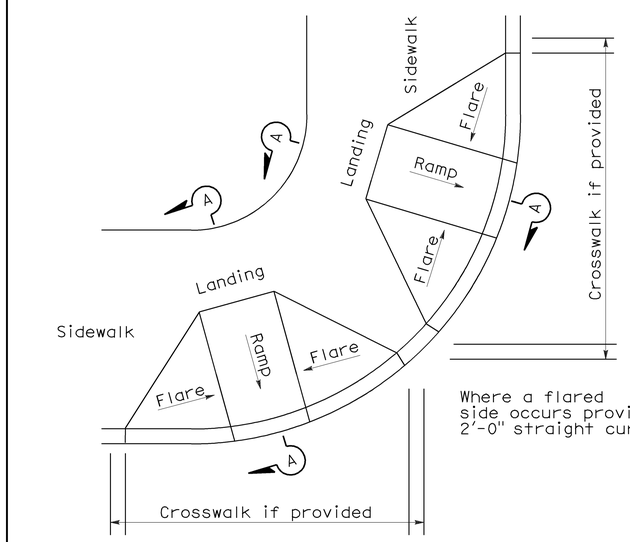


DETAIL A
TYPICAL TWO-RAMP CORNER INSTALLATION
See Note 1

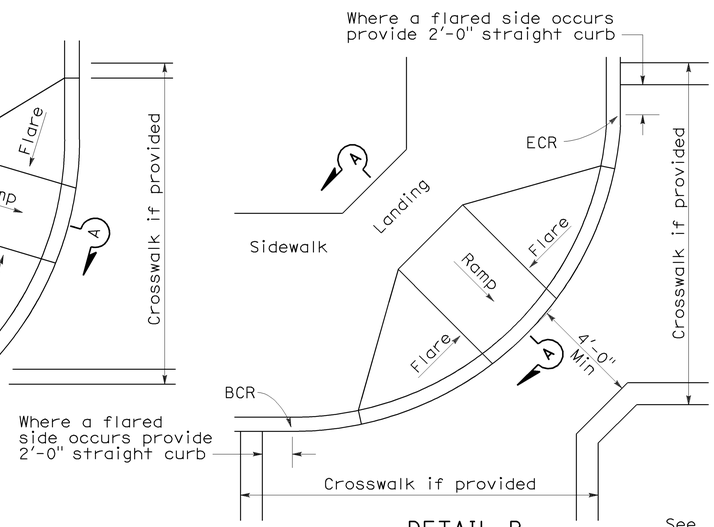


DETAIL B
TYPICAL ONE-RAMP CORNER INSTALLATION
See Notes 1 and 3

STATE OF CALIFORNIA
DEPARTMENT OF TRANSPORTATION

# CURB RAMP DETAILS

NO SCALE

RSP A88A DATED SEPTEMBER 1, 2006 SUPERSEDES STANDARD PLAN A88A DATED MAY 1, 2006 - PAGE 115 OF THE STANDARD PLANS BOOK DATED MAY 2006.

**REVISED STANDARD PLAN RSP A88A**

**2006 REVISED STANDARD PLAN RSP A88A**

8-3-06

| DIST | COUNTY | ROUTE | POST MILES TOTAL PROJECT | SHEET NO. | TOTAL SHEETS |
|---|---|---|---|---|---|
| 11 | SD | 5 | R22.3 | 21 | 30 |

REGISTERED CIVIL ENGINEER

October 5, 2007
PLANS APPROVAL DATE

REGISTERED PROFESSIONAL ENGINEER Efthymios Delis No. C51434 Exp. 6-30-08 CIVIL STATE OF CALIFORNIA

*The State of California or its officers or agents shall not be responsible for the accuracy or completeness of electronic copies of this plan sheet.*

*To accompany plans dated* 07-25-11

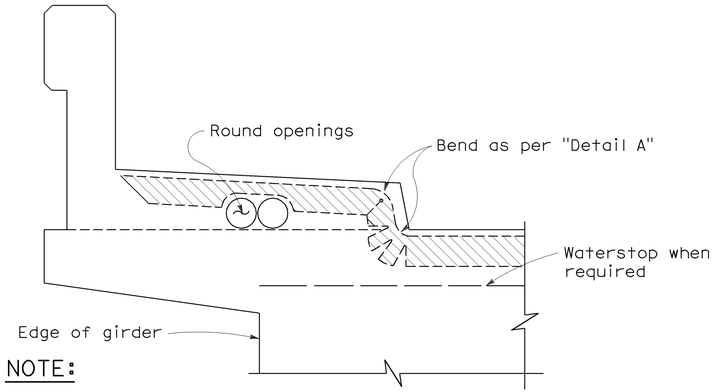


NOTE:

Type "B" seal shown. Type "A" seals to comform to the general path of seal shown, cuts for bending not required. Bend Type "A" seals 3" up into curb or barrier rail on only the low end of the seal.

CONCRETE BARRIER AND SIDEWALK

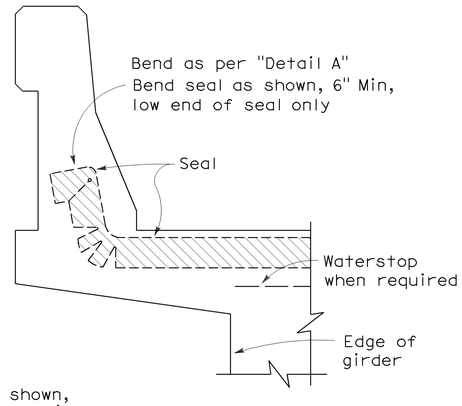


CONCRETE BARRIER

## JOINT SEALS DETAILS

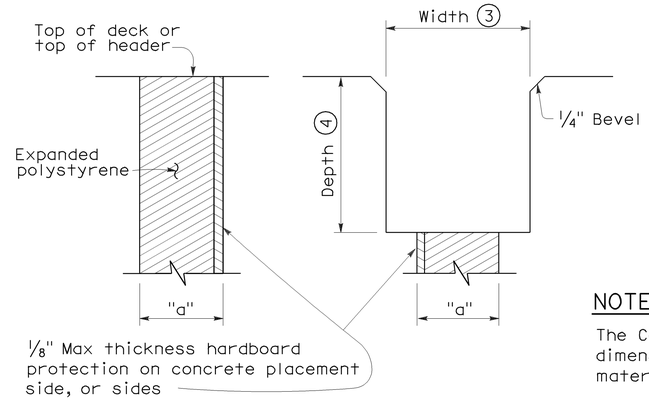


FORMING DETAIL SAWCUT DETAIL

NOTE:

The Contractor shall verify all controlling field dimensions before ordering or fabricatiing any material.

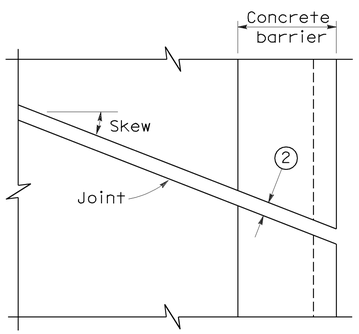


PLAN OF JOINT (SKEW ≤ 20°)

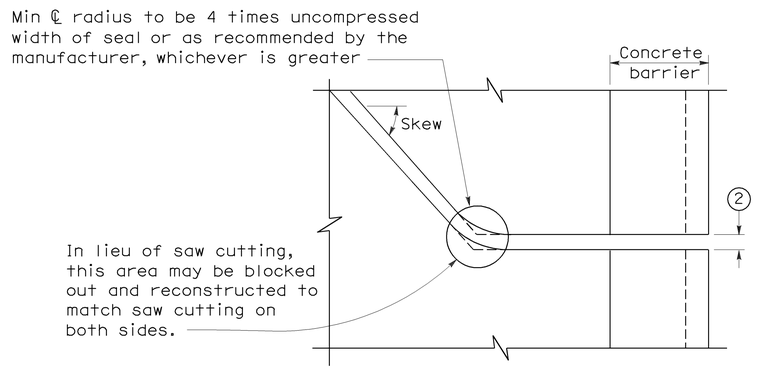


PLAN OF JOINT (SKEW > 20°)

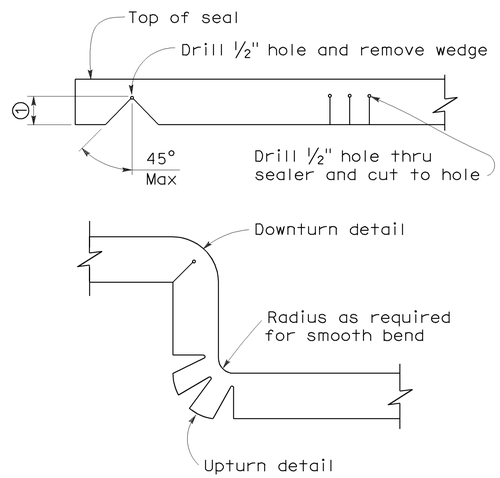


DETAIL A

NOTES:

1. Make smooth cuts from the bottom of seal to 1½" clear of top leaving at least one complete cell between the top of the cut and top of the seal. When necessary cut back of seal to clear conduit and round openings.
2. Opening in barrier to match width of sawn deck joint.
3. Sawcut groove widths shall be as ordered by the Engineer.
4. Depth of sawcut: Type A - Depth to be 2" minimum.
   Type B - Depth to be equal to or greater than the depth of seal measured along the contact surface, when compressed to minimum width position ($W_2$) plus dimensions shown.
5. MR (movement rating) as shown on other plan sheets.
6. Other depths must be approved by the Engineer.

DIMENSIONS "a" OF JOINT REQUIRED

| Movement Rating (MR) (5) | Bridge Type | "a" Dimension Deck Concrete Placed | | |
|---|---|---|---|---|
| | | Winter | Fall-Spring | Summer |
| 2" | All except CIP/PS | 1½" | 1¼" | ¾" |
| | CIP/PS | 1¼" | 1" | ½" |
| 1½" | All except CIP/PS | 1¼" | 1" | ½" |
| | CIP/PS | 1" | ¾" | ½" |
| 1" | All except CIP/PS | 1" | ¾" | ½" |
| | CIP/PS | ¾" | ½" | ½" |
| ½" | All except CIP/PS | ¾" | ¾" | ½" |
| | CIP/PS | ½" | ½" | ½" |

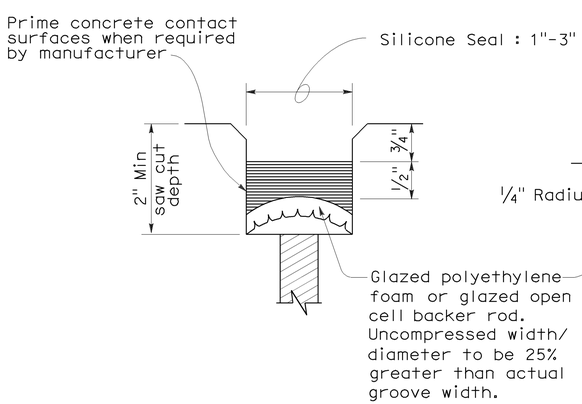


TYPE A SEAL

Movement rating : Silicone = 1" Max

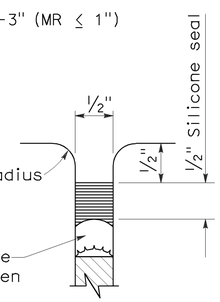


TYPE AL SEAL

Longitudinal joints only

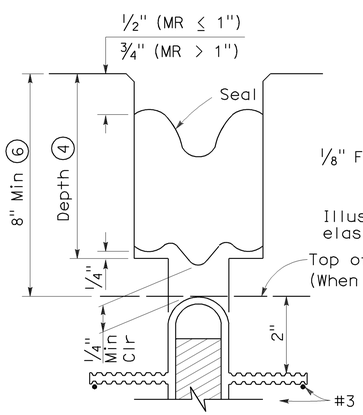


TYPE B JOINT SEAL
IN MINIMUM WIDTH POSITION ($W_2$)

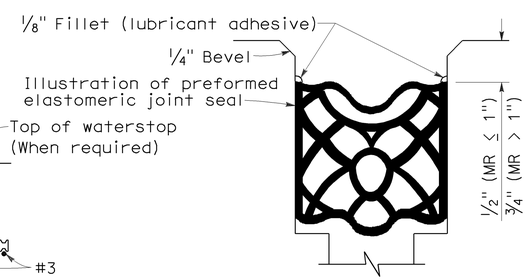


TYPE B SEAL

Movement Rating ≤ 2"

STATE OF CALIFORNIA
DEPARTMENT OF TRANSPORTATION

# JOINT SEALS (MAXIMUM MOVEMENT RATING = 2")

NO SCALE

RSP B6-21 DATED OCTOBER 5, 2007 SUPERSEDES STANDARD PLAN B6-21 DATED MAY 1, 2006 - PAGE 258 OF THE STANDARD PLANS BOOK DATED MAY 2006.

**REVISED STANDARD PLAN RSP B6-21**

**2006 REVISED STANDARD PLAN RSP B6-21**

5-8-07

| DIST | COUNTY | ROUTE | POST MILES TOTAL PROJECT | SHEET NO. | TOTAL SHEETS |
|---|---|---|---|---|---|
| 11 | SD | 5 | R22.3 | 22 | 30 |

REGISTERED ELECTRICAL ENGINEER

October 5, 2007
PLANS APPROVAL DATE

REGISTERED PROFESSIONAL ENGINEER Jeffery G. McRae No. E14512 Exp. 6-30-08 ELECTRICAL STATE OF CALIFORNIA

*The State of California or its officers or agents shall not be responsible for the accuracy or completeness of electronic copies of this plan sheet.*

*To accompany plans dated* 07-25-11

## ELECTROLIERS

| STANDARD TYPES |
|---|
| 15, 15D |
| 15 STRUCTURE |
| 21, 21D STRUCTURE |
| 30 |
| 31 |
| 32 |
| 35 |
| 36-20A |

High mast light pole

Double Arm lighting standard

Existing electrolier

Electrolier foundation (Future installation)

### NOTES:

1. Luminaires shall be 310 W HPS when installed on Type 21, 21D, 30, 31, 32, 35 and 36-20A Standards, unless otherwise specified. Luminaires shall be 200 W HPS when installed on other type standards or poles, unless otherwise specified.
2. Luminaires shall be the cutoff type, ANSI Type Ⅲ medium cutoff lighting distribution, unless otherwise specified.
3. Variations noted adjacent to symbol on project plans.

Electrolier (see project notes or project plans)

Luminaire on wood pole

## STANDARD NOTES:

- AB — Abandon. If applied to conduit, remove conductors.
- BC — Install pull box in existing conduit run.
- BP — Pedestrian barricade, type as indicated on plan.
- CB — Install conduit into existing pull box.
- CC — Connect new and existing conduit. Remove existing conductors and install conductors as indicated.
- CF — Conduit to remain for future use. Remove conductors. Install pull wire or rope.
- DH — Detector handhole.
- FA — Foundation to be abandoned.
- IS — Install sign on signal mast arm.
- NS — No slip base on standard.
- PEC — Photoelectric control.
- PEU — Photoelectric unit.
- RC — Equipment or material to be removed and become the property of the Contractor.
- RE — Remove electrolier, fuses and ballast. Tape ends of conductors.
- RL — Relocate equipment.
- RR — Remove and reuse equipment.
- RS — Remove and salvage equipment.
- SC — Splice new to existing conductors.
- SD — Service disconnect.
- SF — Standard to remain for future use. Remove luminaire, pole conductors, fuses and ballast.
- TSP — Telephone service point.

## ABBREVIATIONS AND EQUIPMENT DESIGNATIONS

| PROPOSED | EXISTING | |
|---|---|---|
| BBS | bbs | Battery backup system |
| BC | bc | Bolt circle |
| C | C | Conduit |
| CCTV | cctv | Closed circuit television |
| CKT | ckt | Circuit |
| CMS | cms | Changeable message sign |
| DLC | dlc | Loop detector lead-in cable |
| EMS | ems | Extinguishable message sign |
| EVC | evc | Emergency vehicle cable |
| EVD | evd | Emergency vehicle detector |
| FB | fb | Flashing beacon |
| FBCA | fbca | Flashing beacon control assembly |
| FBS | fbs | Flashing beacon with slip base |
| FO | fo | Fiber optic |
| G | G | Ground (Equipment Grounding Conductor) |
| GFCI | GFCI | Ground fault circuit interrupt |
| HAR | har | Highway advisory radio |
| HEX | hex | Hexagonal |
| HPS | hps | High pressure sodium |
| IISNS | iisns | Internally illuminated street name sign |
| ISL | isl | Induction sign lighting |
| LED | led | Light emitting diode |
| LMA | lma | Luminaire mast arm |
| LPS | lps | Low pressure sodium |
| LTG | ltg | Lighting |
| LUM | lum | Luminaire |
| MAT | mat | Mast arm mounting vehicle signal faces, top attachment |
| MAS | mas | Mast arm mounting vehicle signal faces, side attachment |
| MAS-4A | mas-4A | Mast arm mounting vehicle signal faces, side attachment - 4 signal section |
| MAS-4B | mas-4B | |
| MAS-4C | mas-4C | |
| MAS-5A | mas-5A | Mast arm mounting vehicle signal faces, side attachment - 5 signal section |
| MAS-5B | mas-5B | |
| MC | mc | Mercury contactor |
| M/M | m/m | Multiple to multiple transformer |
| MT | mt | Conduit with pull wire or rope only |
| MTG | mtg | Mounting |
| | mv | Mercury vapor lighting fixture |
| N | N | Neutral (Grounded Conductor) |
| NC | NC | Normally closed |
| NO | NO | Normally open |
| PB | pb | Pull box |
| PEC | pec | Photoelectric control (Type Ⅰ, Ⅱ, Ⅲ, Ⅳ or Ⅴ as shown) |
| PED | ped | Pedestrian |
| PEU | peu | Photoelectric unit |
| PPB | ppb | Pedestrian push button |
| RL | | Relocated equipment |
| RM | rm | Ramp metering |
| SB | sb | Slip base |
| SIC | sic | Signal interconnect cable |
| SIG | sig | Signal |
| SMA | sma | Signal mast arm |
| SNS | sns | Street name sign |
| SP | sp | Service point |
| TDC | tdc | Telephone demarcation cabinet |
| TMS | tms | Traffic monitoring station |
| TOS | tos | Traffic Operations System |
| VEH | veh | Vehicle |
| XFMR | xfmr | Transformer |
| COMM | comm | Communication |
| RWIS | rwis | Roadway weather information system |

## SOFFIT AND WALL MOUNTED LUMINAIRES

Pendant, 70 W HPS unless otherwise specified.

Flush, 70 W HPS unless otherwise specified.

Wall surface, 70 W HPS unless otherwise specified.

Existing soffit or wall luminaire to remain unmodified.

Existing soffit or wall luminaire to be modified as specified.

### NOTE:

Arrow indicates "street side" of luminaire.

STATE OF CALIFORNIA
DEPARTMENT OF TRANSPORTATION

# ELECTRICAL SYSTEMS (SYMBOLS AND ABBREVIATIONS)

NO SCALE

RSP ES-1A DATED OCTOBER 5, 2007 SUPERSEDES STANDARD PLAN ES-1A DATED MAY 1, 2006 - PAGE 400 OF THE STANDARD PLANS BOOK DATED MAY 2006.

**REVISED STANDARD PLAN RSP ES-1A**

**2006 REVISED STANDARD PLAN RSP ES-1A**

| DIST | COUNTY | ROUTE | POST MILES TOTAL PROJECT | SHEET NO. | TOTAL SHEETS |
|---|---|---|---|---|---|
| 11 | SD | 5 | R22.3 | 23 | 30 |

REGISTERED ELECTRICAL ENGINEER

October 5, 2007
PLANS APPROVAL DATE

REGISTERED PROFESSIONAL ENGINEER Jeffery G. McRae No. E14512 Exp. 6-30-08 ELECTRICAL STATE OF CALIFORNIA

*The State of California or its officers or agents shall not be responsible for the accuracy or completeness of electronic copies of this plan sheet.*

*To accompany plans dated* 07-25-11

## CONDUIT

| PROPOSED | EXISTING | |
|---|---|---|
| | | Lighting Conduit, unless otherwise indicated or noted |
| | | Traffic signal conduit |
| C | c | Communication conduit |
| T | t | Telephone conduit |
| F | f | Fire alarm conduit |
| FO | fo | Fiber optic conduit |
| | | Conduit termination (RSP ES-9A C) |
| R | r | Conduit riser in/on structure or service pole |

## SERVICE EQUIPMENT

| PROPOSED | EXISTING | |
|---|---|---|
| OH | oh | Overhead lines |
| U | U | Wood pole "U" indicates utility owned |
| | | Pole guy with anchor |
| | | Utility transformer - ground mounted |
| III | | Service equipment enclosure type |
| | | Service equipment enclosure door indicates front of enclosure |
| T | t | Telephone demarcation cabinet |

## POLE-MOUNTED SERVICE DESIGNATION

Type of installation

TYPE H SERVICE - 28'-10" ← Pole height above grade

## ILLUMINATED OVERHEAD SIGN

| PROPOSED | EXISTING | |
|---|---|---|
| | | Overhead sign - Single post |
| | | Overhead sign - Two post |
| | | Overhead sign - Mounted on structure |
| | | Overhead sign with electrolier |

## SIGNAL EQUIPMENT

| PROPOSED | EXISTING | |
|---|---|---|
| | | Pedestrian signal face |
| | | Pedestrian push button post |
| | | Pedestrian barricade |
| | | Vehicle signal face (with backplate, 3-Section: red, yellow and green) |
| | | Vehicle signal face with angle visors |
| PV | PV | Modifications of basic symbols: "L" Indicates all non-arrow sections louvered "LG" Indicates louvered green section only "PV" indicates 12" programmed visibility sections "8" indicates all 8" sections (only when specified) |
| | | Type 15TS and Vehicle signal face |
| | | Vehicle signal face with red, yellow and green left arrow sections |
| | | Vehicle signal face with red and yellow sections and up green arrow |
| | | Vehicle signal face (5 Section) with red, yellow and green sections and yellow and green right arrows |
| | | Type 1 Standard and attached vehicle signal faces |
| | | Standard with signal mast arm only and attached vehicle signal faces and internally illuminated street name sign |
| | | Type 33 Standard, Left-turn vehicle signal face and sign |
| | | Standard with luminaire and signal mast arms and attached vehicle signal faces |
| | | Cantilever flashing beacon Type 9 Frame, with a sign unless otherwise specified or indicated |
| | | Type 15-FBS Standard with two vehicle signal face sections with lens, backplate and visor with a sign |
| R | Y | Flashing beacon. One vehicle signal face section with lens, backplate and visor. "R" indicates red indication, "Y" indicates yellow indication |
| | | Controller assembly. Door indicates front of cabinet |

## SIGNAL EQUIPMENT Cont

| PROPOSED | EXISTING | |
|---|---|---|
| | | Guard post |
| | | Type 1 Standard with "Meter On" sign |
| | | Emergency Vehicle detector |

## NOTES:

1. All signal sections shall be 12" unless shown otherwise.
2. Signal heads shall be provided with backplates unless shown otherwise.
3. Signal indication shall be LED.

STATE OF CALIFORNIA
DEPARTMENT OF TRANSPORTATION

# ELECTRICAL SYSTEMS (SYMBOLS AND ABBREVIATIONS)

NO SCALE

RSP ES-1B DATED OCTOBER 5, 2007 SUPERCEDES STANDARD PLAN ES-1B DATED MAY 1, 2006 - PAGE 401 OF THE STANDARD PLANS BOOK DATED MAY 2006.

**REVISED STANDARD PLAN RSP ES-1B**

**2006 REVISED STANDARD PLAN RSP ES-1B**

7-10-07

| DIST | COUNTY | ROUTE | POST MILES TOTAL PROJECT | SHEET NO. | TOTAL SHEETS |
|---|---|---|---|---|---|
| 11 | SD | 5 | R22.3 | 24 | 30 |

REGISTERED ELECTRICAL ENGINEER

October 5, 2007
PLANS APPROVAL DATE

REGISTERED PROFESSIONAL ENGINEER Jeffery G. McRae No. E14512 Exp. 6-30-08 ELECTRICAL STATE OF CALIFORNIA

*The State of California or its officers or agents shall not be responsible for the accuracy or completeness of electronic copies of this plan sheet.*

*To accompany plans dated* 07-25-11

# EQUIPMENT IDENTIFICATION

## ILLUMINATED SIGN IDENTIFICATION NUMBER:

Sign No. 12345 — Sign number - Place on post or structure

10 ISL SCI 1.0

- 1.0 — Transformer rating (kVA)
- SCI — Lighting control type
- ISL — Number and type of fixtures

Do NOT place on standard or structure

## ELECTROLIER OR EQUIPMENT IDENTIFICATION NUMBER:

12345 - 15'-0"

- 15'-0" — Mast arm length, if shown. Do not place on standard or structure.
- 12345 — Equipment number - Place on standard or structure. Existing equipment numbers are shown in parenthesis

## CONDUIT AND CONDUCTOR IDENTIFICATION:

1½"C, 2#10, 15#14, 2 DLC

- 2#10, 15#14, 2 DLC — Number and size of conductors and cables
- 1½"C — Size of conduit in inches

| | |
|---|---|
| Ø1, Ø2, Ø2P, etc. | Traffic phase identification for signal faces, detectors and phase diagrams |
| 1 2 3 | Project note numbers |
| A B C | Equipment description, installation or item numbers |
| 1 2 3 | Conduit run numbers |

## SIGNAL AND LIGHTING STANDARD (TYPICAL DESIGNATION):

19A - 3 - 100

- 100 — Wind velocity = 100 mph
- 3 — Case 3 arm loading
- 19A — Standard type
- Standard Plan sheet number
- Detail number or letter

## MISCELLANEOUS EQUIPMENT

| PROPOSED | EXISTING | |
|---|---|---|
| CMS | cms | Changeable message sign |
| | | Closed circuit television camera |
| | | Highway advisory radio pole and antenna |
| EMS | ems | Extinguishable message sign |
| M V | m v | Detection device<br>M = Microwave sensor<br>V = Video image sensor |

## WIRING DIAGRAM LEGEND

| | |
|---|---|
| P | Pole |
| CB | Circuit breaker |
| A | Ampere |
| V | Volt |
| M | Metered |
| UM | Unmetered |
| NB | Neutral bus |
| GB | Ground bus |
| G | Equipment grounding conductor |
| N | Grounded conductor (Neutral) |

- External conductor
- Conductor or bus
- Tie point
- Contactor coil
- Contactor, Contact NO
- Terminal blocks
- Contactor, Contact NC
- Enclosure bond
- Grounding electrode
- Circuit breaker
- Receptacle

## PULL BOXES

PROPOSED EXISTING

Pull box-No. 5 unless otherwise indicated or noted.

3 — 9A(21)

Pull box-Additional designations or descriptions

| | |
|---|---|
| 3 | = No. 3½ pull box |
| 5 | = No. 5 pull box |
| 6 | = No. 6 pull box |
| 7 | = No. 7 (Ceiling pull box) |
| 8 | = No. 8 (Pendant soffit pull box) |
| 9 | = No. 9 pull box |
| 9A | = No. 9A pull box |

(C) = Communications pull box
(E) = Pull box with extension
(S) = Sprinkler control pull box
(21) = Anchor bolts and conduit for future installation of Type 21 Standard
(T) = Traffic pull box

## VEHICLE DETECTORS

5 J 9 U

- U — U = Upper, L = Lower
- 9 — Slot number in input file
- J — Input file (I or J)
- 5 — Phase

PROPOSED EXISTING

| | |
|---|---|
| | Type A detector loop. Outline of sawcut shown. |
| | Type B detector loop. Outline of sawcut shown. |
| | Type C detector loop. Outline of sawcut shown. |
| | Type D detector loop. Outline of sawcut shown. |
| | Type E detector loop. Outline of sawcut shown. |
| | Type Q detector loop. Outline of sawcut shown. |
| | Magnetic detector |
| DH / dh | Detector handhole |
| | Microwave or video detection zone |

STATE OF CALIFORNIA
DEPARTMENT OF TRANSPORTATION

# ELECTRICAL SYSTEMS (SYMBOLS AND ABBREVIATIONS)

NO SCALE

RSP ES-1C DATED OCTOBER 5, 2007 SUPERCEDES STANDARD PLAN ES-1C DATED MAY 1, 2006 - PAGE 402 OF THE STANDARD PLANS BOOK DATED MAY 2006.

**REVISED STANDARD PLAN RSP ES-1C**

**2006 REVISED STANDARD PLAN RSP ES-1C**

| DIST | COUNTY | ROUTE | POST MILES TOTAL PROJECT | SHEET NO. | TOTAL SHEETS |
|---|---|---|---|---|---|
| 11 | SD | 5 | R22.3 | 25 | 30 |

Randell D. Hiatt
REGISTERED CIVIL ENGINEER

June 6, 2008
PLANS APPROVAL DATE

REGISTERED PROFESSIONAL ENGINEER
Randell D. Hiatt
No. C50200
Exp. 6-30-09
CIVIL
STATE OF CALIFORNIA

*The State of California or its officers or agents shall not be responsible for the accuracy or completeness of electronic copies of this plan sheet.*

*To accompany plans dated* 07-25-11

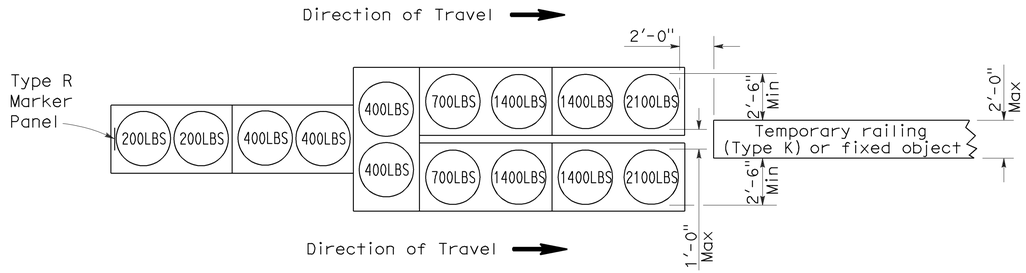


## ARRAY 'TU14'

Approach speed 45 mph or more

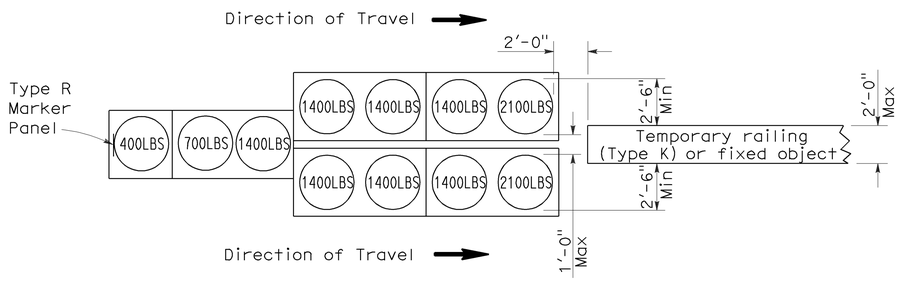


## ARRAY 'TU11'

Approach speed less than 45 mph

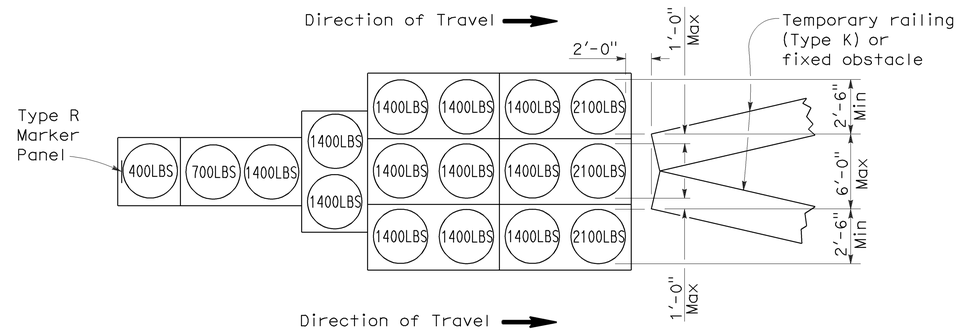


## ARRAY 'TU17'

Approach speed less than 45 mph

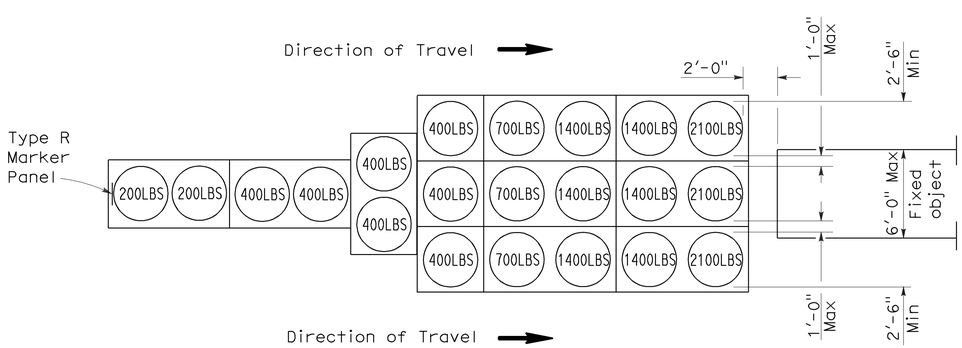


## ARRAY 'TU21'

Approach speed 45 mph or more

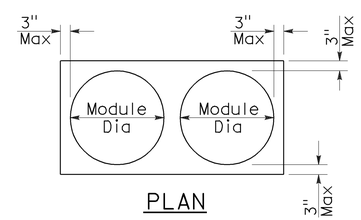


PLAN

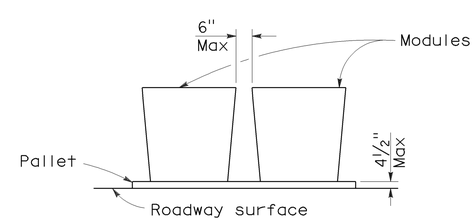


ELEVATION

## CRASH CUSHION PALLET DETAIL

See Note 7

## NOTES:

1. (XXX) Indicates sand filled module location and weight of sand in pounds for each module. Module spacing is based on the greater diameter of the module.
2. All sand weights are nominal.
3. Temporary crash cushion arrays shall not encroach on the traveled way.
4. Place the top of Type R marker panel 1" below the module lid.
5. Refer to Standard Plan A73B for marker details.
6. Approach speeds indicated conform to NCHRP 350 Report criteria.
7. Use of pallets is optional.

STATE OF CALIFORNIA
DEPARTMENT OF TRANSPORTATION

# TEMPORARY CRASH CUSHION, SAND FILLED (UNIDIRECTIONAL)

NO SCALE

RSP T1A DATED JUNE 6, 2008 SUPERSEDES STANDARD PLAN T1A
DATED MAY 1, 2006 - PAGE 211 OF THE STANDARD PLANS BOOK DATED MAY 2006.

**REVISED STANDARD PLAN RSP T1A**

**2006 REVISED STANDARD PLAN RSP T1A**

| DIST | COUNTY | ROUTE | POST MILES TOTAL PROJECT | SHEET NO. | TOTAL SHEETS |
|---|---|---|---|---|---|
| 11 | SD | 5 | R22.3 | 26 | 30 |

Randell D. Hiatt
REGISTERED CIVIL ENGINEER

June 6, 2008
PLANS APPROVAL DATE

REGISTERED PROFESSIONAL ENGINEER
Randell D. Hiatt
No. C50200
Exp. 6-30-09
CIVIL
STATE OF CALIFORNIA

*The State of California or its officers or agents shall not be responsible for the accuracy or completeness of electronic copies of this plan sheet.*

*To accompany plans dated* 07-25-11

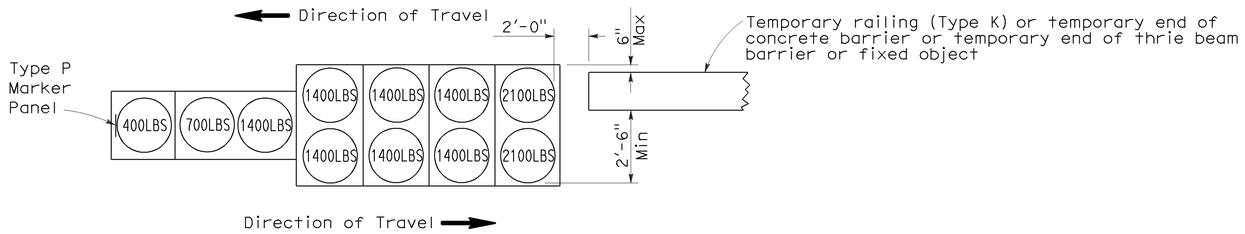


ARRAY 'TB11'

Approach speed less than 45 mph

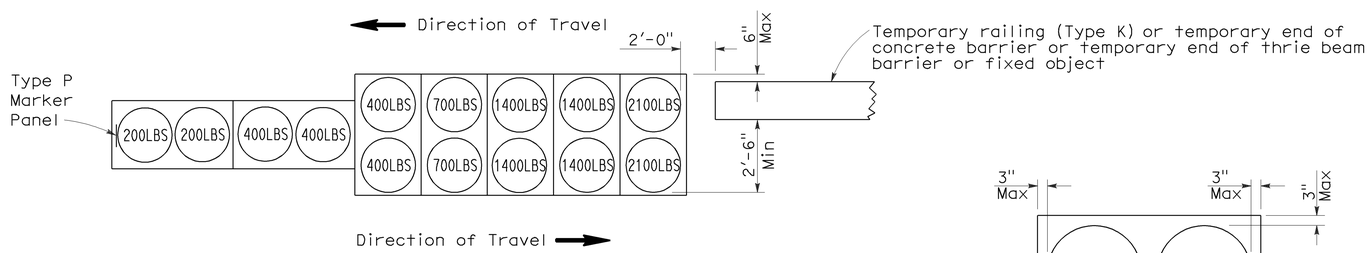


ARRAY 'TB14'

Approach speed 45 mph or more

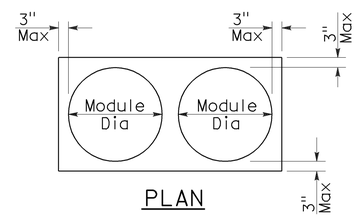


PLAN

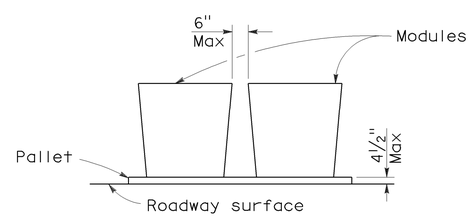


ELEVATION

CRASH CUSHION PALLET DETAIL

See Note 7

## NOTES:

1. (XXX) Indicates sand filled module location and weight of sand in pounds for each module. Module spacing is based on the greater diameter of the module.
2. All sand weights are nominal.
3. Temporary crash cushion arrays shall not encroach on the traveled way.
4. Place the Type P marker panel so that the bottom of the panel rests upon the pallet.
5. Refer to Standard Plan A73B for marker details.
6. Approach speeds indicated conform to NCHRP 350 Report criteria.
7. Use of pallets is optional.

STATE OF CALIFORNIA
DEPARTMENT OF TRANSPORTATION

# TEMPORARY CRASH CUSHION, SAND FILLED (BIDIRECTIONAL)

NO SCALE

RSP T1B DATED JUNE 6, 2008 SUPERSEDES STANDARD PLAN T1B
DATED MAY 1, 2006 - PAGE 212 OF THE STANDARD PLANS BOOK DATED MAY 2006.

**REVISED STANDARD PLAN RSP T1B**

**2006 REVISED STANDARD PLAN RSP T1B**

5-15-08

| DIST | COUNTY | ROUTE | POST MILES TOTAL PROJECT | SHEET NO. | TOTAL SHEETS |
|---|---|---|---|---|---|
| 11 | SD | 5 | R22.3 | 27 | 30 |

Randell D. Hiatt
REGISTERED CIVIL ENGINEER

June 6, 2008
PLANS APPROVAL DATE

REGISTERED PROFESSIONAL ENGINEER
Randell D. Hiatt
No. C50200
Exp. 6-30-09
CIVIL
STATE OF CALIFORNIA

*The State of California or its officers or agents shall not be responsible for the accuracy or completeness of electronic copies of this plan sheet.*

*To accompany plans dated* 07-25-11

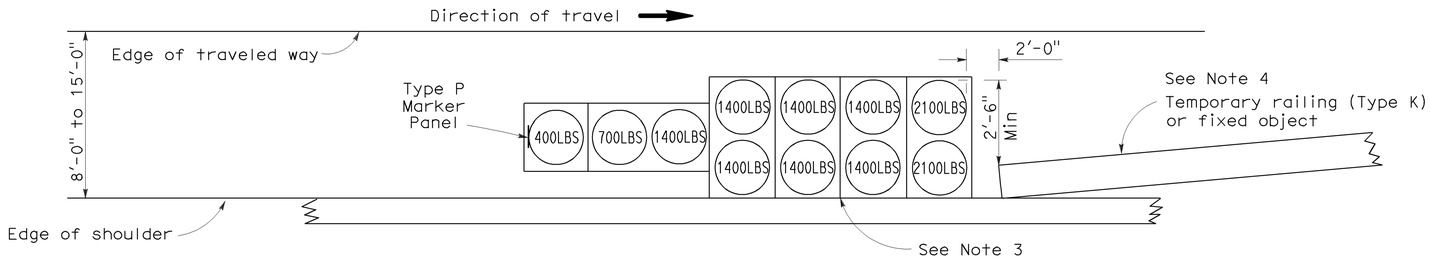


## ARRAY 'TS11'

Approach speed less than 45 mph
See Note 9

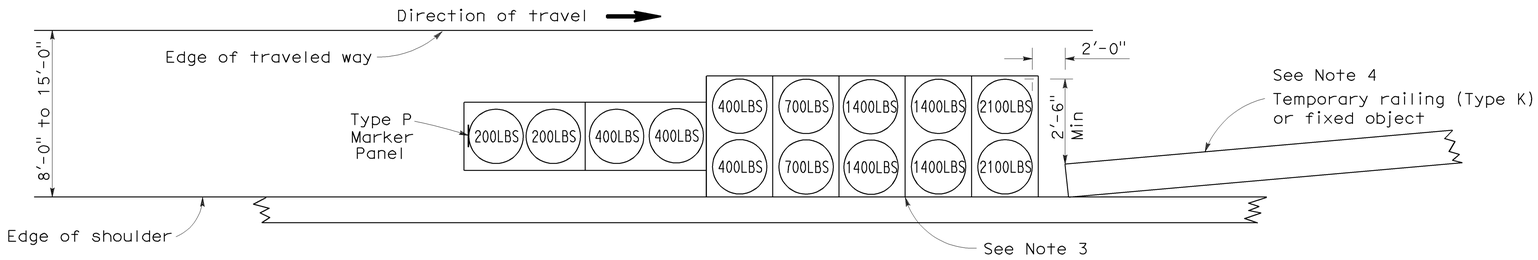


## ARRAY 'TS14'

Approach speed 45 mph or more
See Note 9

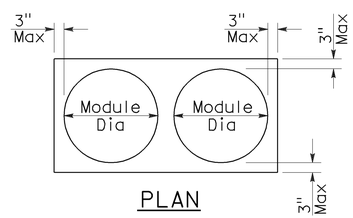


PLAN

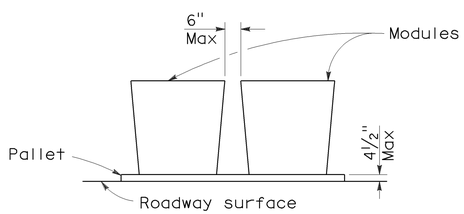


ELEVATION

## CRASH CUSHION PALLET DETAIL

See Note 11

## NOTES:

1. (XXX) Indicates sand filled module location and weight of sand in pounds for each module. Module spacing is based on the greater diameter of the module.
2. All sand weights are nominal.
3. The temporary crash cushion arrays shown on this plan shall be used only in locations where there will be traffic on one side of the temporary crash cushion array.
4. If the fixed object or approach end of the temporary railing is less than 15'-0" from the edge of traveled way, a temporary crash cushion is required in a construction or work zone.
5. Temporary crash cushion arrays shall not encroach on the traveled way.
6. Arrays for median shoulders shall conform to details shown on this plan for outside shoulders.
7. Place the Type P marker panel so that the bottom of the panel rests upon the pallet and faces traffic.
8. Refer to Standard Plan A73B for marker details.
9. For shoulder widths less than 8'-0", appropriate approved crash cushion protection, other than sand filled modules, shall be provided at fixed objects and at approach ends of temporary railing. The specific type of crash cushion shall be as shown on the project plans or as specified in the Special Provisions, or if not shown on the project plans or specified in the Special Provisions, shall be as approved by the Engineer.
10. Approach speeds indicated conform to NCHRP 350 Report criteria.
11. Use of pallets is optional.

STATE OF CALIFORNIA
DEPARTMENT OF TRANSPORTATION

# TEMPORARY CRASH CUSHION, SAND FILLED (SHOULDER INSTALLATIONS)

NO SCALE

RSP T2 DATED JUNE 6, 2008 SUPERSEDES STANDARD PLAN T2
DATED MAY 1, 2006 - PAGE 213 OF THE STANDARD PLANS BOOK DATED MAY 2006.

**REVISED STANDARD PLAN RSP T2**

**2006 REVISED STANDARD PLAN RSP T2**

5-15-08

| DIST | COUNTY | ROUTE | POST MILES TOTAL PROJECT | SHEET No | TOTAL SHEETS |
|---|---|---|---|---|---|
| 11 | SD | 5 | R22.3 | 28 | 30 |

REGISTERED CIVIL ENGINEER 10/12/10 DATE

07-25-11
PLANS APPROVAL DATE

REGISTERED PROFESSIONAL ENGINEER VINH DUC L. DANG No. C65096 Exp. 09/30/11 CIVIL STATE OF CALIFORNIA

*The State of California or its officers or agents shall not be responsible for the accuracy or completeness of electronic copies of this plan sheet.*

## STANDARD PLANS DATED MAY 2006

| SHEET NO. | TITLE |
|---|---|
| A10A | ACRONYMS AND ABBREVIATIONS (SHEET 1 OF 2) |
| A10B | ACRONYMS AND ABBREVIATIONS (SHEET 2 OF 2) |
| A10C | SYMBOLS (SHEET 1 OF 2) |
| A10D | SYMBOLS (SHEET 2 OF 2) |
| RSP B6-21 | JOINT SEALS (MAXIMUM MOVEMENT RATING = 2") |

STANDARD PLAN SHEET NO.

DETAIL NO.

CLAIREMONT DRIVE BRIDGE NO. 57-0429

QUANTITIES

| | | |
|---|---|---|
| REMOVE CONCRETE DECK SURFACE | 16,481 | SQFT |
| REMOVE UNSOUND CONCRETE | 121 | CF |
| PREPARE CONCRETE BRIDGE DECK SURFACE | 16,481 | SQFT |
| CLEAN BRIDGE DECK | 48,237 | SQFT |
| CLEAN EXPANSION JOINT | 138 | LF |
| RAPID SETTING CONCRETE (PATCH) | 121 | CF |
| FURNISH POLYESTER CONCRETE OVERLAY | 2,747 | CF |
| PLACE POLYESTER CONCRETE OVERLAY | 16,481 | SQFT |
| JOINT SEAL (MR 1 1/2") | 52 | LF |
| JOINT SEAL (MR 2") | 86 | LF |
| TREAT BRIDGE DECK | 48,237 | SQFT |
| FURNISH BRIDGE DECK TREATMENT MATERIAL | 603 | GAL |
| PUBLIC SAFETY PLAN | LUMP | SUM |

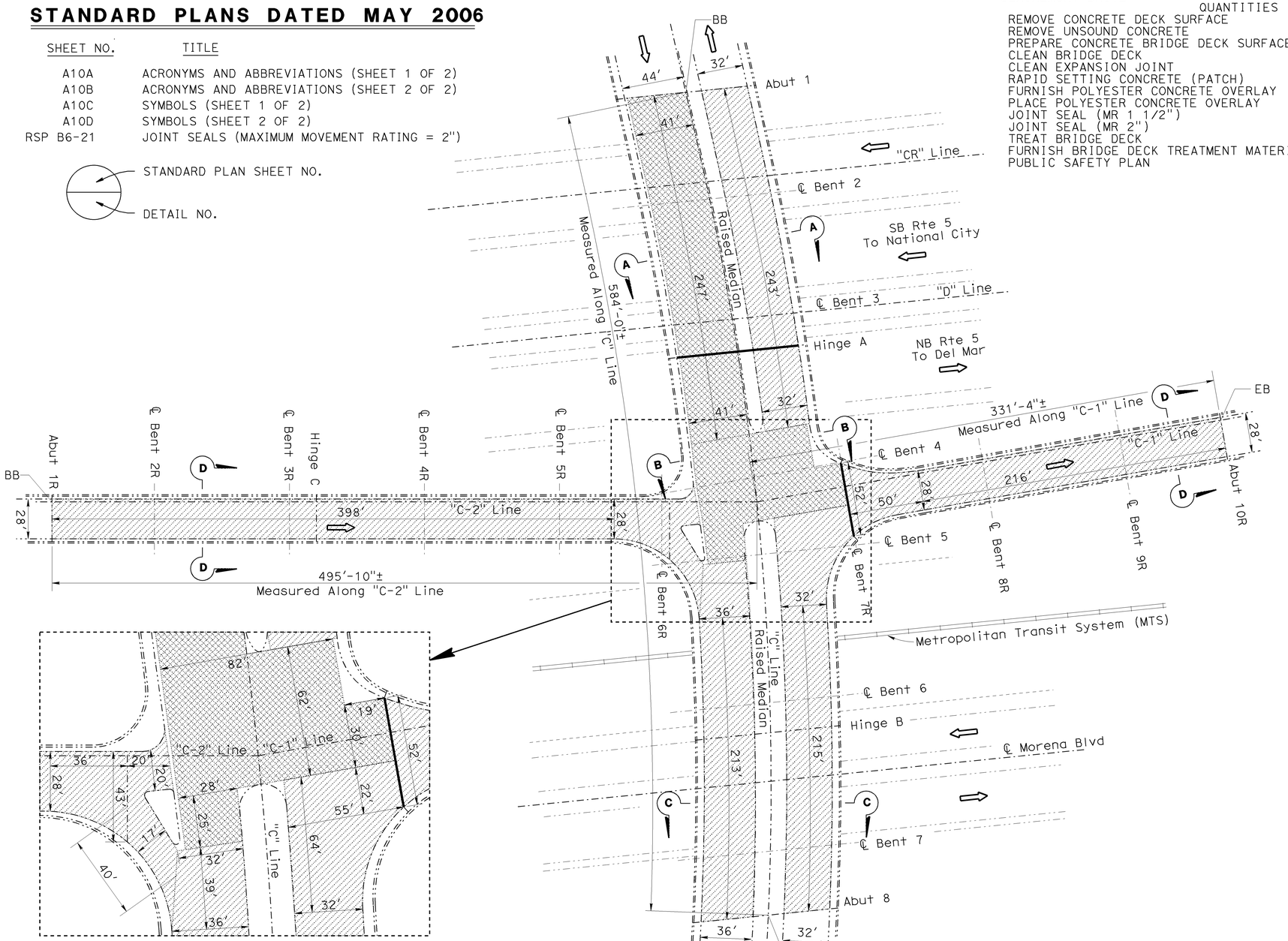


## INDEX TO PLANS


| SHEET NO. | TITLE |
|---|---|
| 1 | GENERAL PLAN |
| 2 | MISCELLANEOUS DETAILS NO. 1 |
| 3 | MISCELLANEOUS DETAILS NO. 2 |


## LEGEND:

Indicates existing.

Indicates direction of traffic.

Indicates limits of clean and treat existing bridge deck with high molecular weight methacrylate. Prior to bridge deck treatment, remove unsound concrete and patch with rapid setting concrete.

Indicates limits of remove existing 2" concrete deck surface, prepare concrete bridge deck surface, and place new 2" depth polyester concrete.

Indicates location of existing joint seal removal and placement of new joint seal.

NOTE: For SECTION A-A, B-B, C-C, and D-D, see "MISCELLANEOUS DETAILS NO. 1" sheet.

NOTE:
THE CONTRACTOR SHALL VERIFY ALL CONTROLLING FIELD DIMENSIONS BEFORE ORDERING OR FABRICATING ANY MATERIAL. EXISTING UTILITY HAVE NOT BEEN PLOTTED ON THESE PLANS. EXISTING UTILITIES WILL BE PROTECTED IN PLACE.

## CLAIREMONT DRIVE OC

Br No. 57-0429, Rte 5, PM R22.26
1" = 40'

TONY D. BRAKE
DESIGN ENGINEER

| | BY | CHECKED | | |
|---|---|---|---|---|
| DESIGN | Vinh Dang | Edward Li | LOAD FACTOR DESIGN | LIVE LOADING: HS20-44 AND ALTERNATIVE AND PERMIT DESIGN LOAD |
| DETAILS | Tom Dang | Edward Li | LAYOUT | BY Tom Dang / CHECKED Vinh Dang |
| QUANTITIES | Vinh Dang | Edward Li | SPECIFICATIONS | BY Tanya Kershell / PLANS AND SPECS COMPARED Tanya Kershell |

STATE OF CALIFORNIA
DEPARTMENT OF TRANSPORTATION

DIVISION OF MAINTENANCE
STRUCTURE MAINTENANCE DESIGN

CU 11235
EA 403301

BRIDGE NO. 57-0429
POST MILE R22.26

# CLAIREMONT DRIVE OC
# GENERAL PLAN

STRUCTURES MAINTENANCE GENERAL PLAN SHEET (ENGLISH) (REV. 10/25/05)

ORIGINAL SCALE IN INCHES FOR REDUCED PLANS 0 1 2 3

DISREGARD PRINTS BEARING EARLIER REVISION DATES

REVISION DATES: 5/20/10 6/10/10 7/14/10 7-16-10 8-12-10 8-18-10 10-11-10

SHEET 1 OF 3

FILE => 11-403301-a-gp.dgn

USERNAME => S1293239 DATE PLOTTED => 05-MAY-2011 TIME PLOTTED => 07:39

| DIST | COUNTY | ROUTE | POST MILES TOTAL PROJECT | SHEET No | TOTAL SHEETS |
|---|---|---|---|---|---|
| 11 | SD | 5 | R22.3 | 29 | 30 |

REGISTERED CIVIL ENGINEER 10/12/10 DATE

07-25-11
PLANS APPROVAL DATE

REGISTERED PROFESSIONAL ENGINEER VINH DUC L. DANG No. C65096 Exp. 09/30/11 CIVIL STATE OF CALIFORNIA

*The State of California or its officers or agents shall not be responsible for the accuracy or completeness of electronic copies of this plan sheet.*

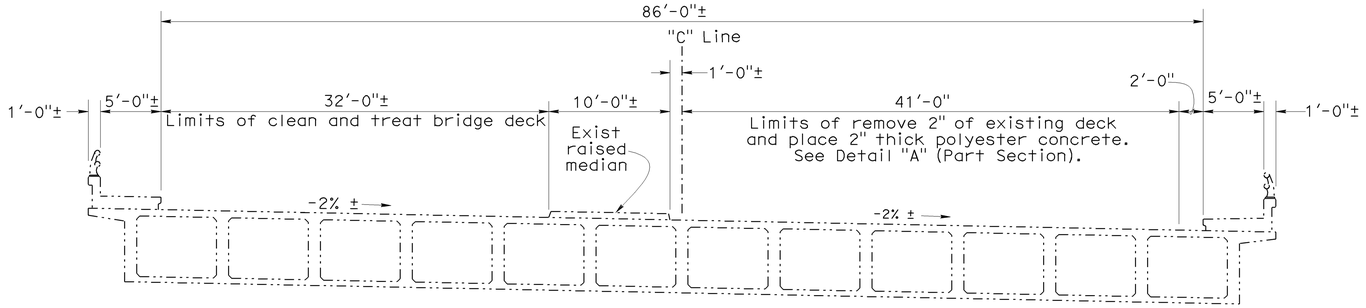


## SECTION A-A

NO SCALE

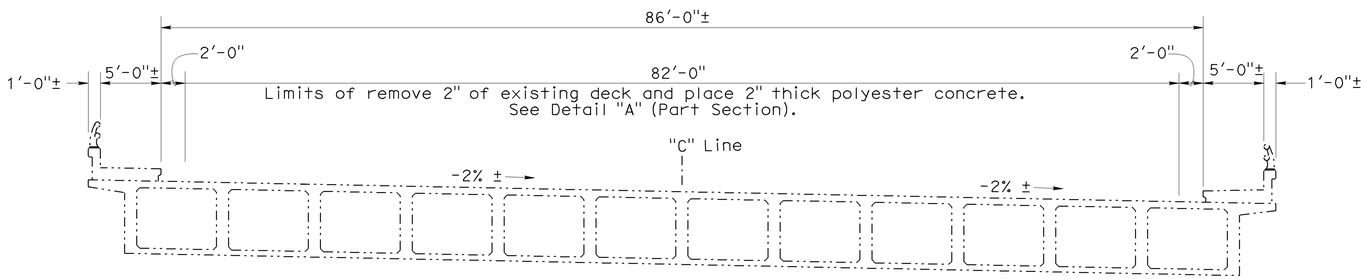


## SECTION B-B

NO SCALE

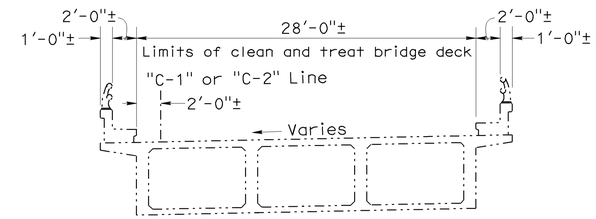


## SECTION D-D

NO SCALE

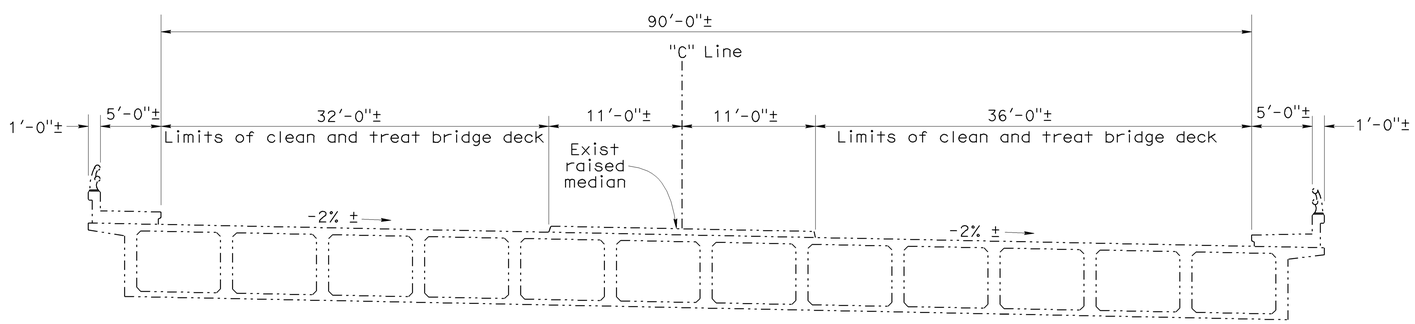


## SECTION C-C

NO SCALE

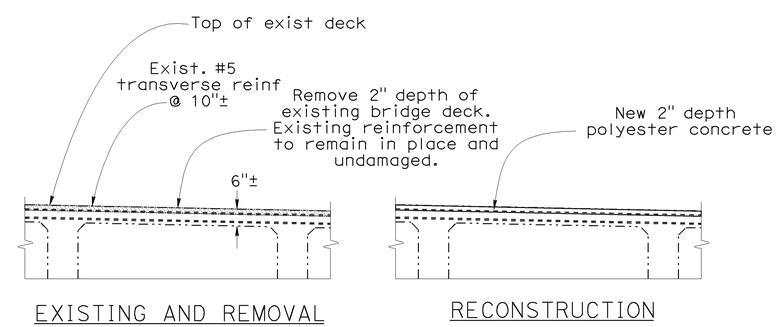


## DETAIL "A" (PART SECTION)

NO SCALE

NOTE:
THE CONTRACTOR SHALL VERIFY ALL CONTROLLING FIELD DIMENSIONS BEFORE ORDERING OR FABRICATING ANY MATERIAL. EXISTING UTILITY HAVE NOT BEEN PLOTTED ON THESE PLANS. EXISTING UTILITIES WILL BE PROTECTED IN PLACE.

| | BY | CHECKED |
|---|---|---|
| DESIGN | Vinh Dang | Edward Li |
| DETAILS | Tom Dang | Edward Li |
| QUANTITIES | Vinh Dang | Edward Li |

STATE OF CALIFORNIA
DEPARTMENT OF TRANSPORTATION

DIVISION OF MAINTENANCE
STRUCTURE MAINTENANCE DESIGN

BRIDGE NO. 57-0429
POST MILE R22.26

# CLAIREMONT DRIVE OC
# MISCELLANEOUS DETAILS NO. 1

STRUCTURES MAINTENANCE DETAIL SHEET (ENGLISH) (REV. 10/25/05)

ORIGINAL SCALE IN INCHES FOR REDUCED PLANS 0 1 2 3

CU 11235
EA 403301

DISREGARD PRINTS BEARING EARLIER REVISION DATES → 5/20/10 6/10/10 7/14/10 7-16-10

REVISION DATES

SHEET 2 OF 3

FILE => 11-403301-b-miscdt101.dgn

USERNAME => s129239 DATE PLOTTED => 13-OCT-2010 TIME PLOTTED => 08:03

| DIST | COUNTY | ROUTE | POST MILES TOTAL PROJECT | SHEET No | TOTAL SHEETS |
|---|---|---|---|---|---|
| 11 | SD | 5 | R22.3 | 30 | 30 |

REGISTERED CIVIL ENGINEER 10/12/10 DATE

07-25-11
PLANS APPROVAL DATE

REGISTERED PROFESSIONAL ENGINEER VINH DUC L. DANG No. C65096 Exp. 09/30/11 CIVIL STATE OF CALIFORNIA

*The State of California or its officers or agents shall not be responsible for the accuracy or completeness of electronic copies of this plan sheet.*

## JOINT SEAL TABLE

| BRIDGE NAME | BRIDGE NUMBER | LOCATION | MINIMUM "MR" (INCHES) | APPROX LENGTH (FT) | EXISTING WATERSTOP | APPROX DEPTH TO CLEAN EXP JOINT (INCHES) |
|---|---|---|---|---|---|---|
| Clairemont Drive OC | 57-0429 | Hinge A | 2 | 86 | Yes | 12 |
| | | Bent 7R | 1½ | 52 | No | 6 |

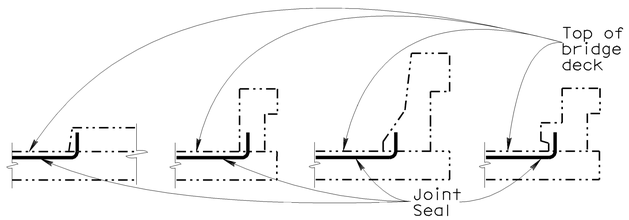


BARRIER RAIL

## JOINT SEAL AT LOW SIDE OF DECK

Note: Details shown for illustration purposes only.

For use only where deck joint matches the sidewalk, curb or barrier rail joint.

## NOTES:

The following notes apply to JOINT SEAL TYPE A:

Install Joint Seal (MR = ½") or Silicone Joint Seal 3" up into curb or barrier rail on the low side of the deck where deck joint aligns with curb or barrier rail joint.

For details not shown see RSP B6-21 sheet.

The following notes apply to JOINT SEAL TYPE B:

1) Seal must satisfy both minimum Movement Rating (MR) and minimum W1 requirements.

2) Minimum W1 is the calculated maximum width of the joint based on field measurements. After the joints have been cleaned, minimum W1 is to be recalculated by the Engineer.

3) W1 shall be the smaller of the values determined as follows:
   A) 0.85 times the manufacturer's designed minimum uncompressed width of the seal.
   B) The width of the seal on the third successive test cycle of the pressure deflection test, when compressed to an average pressure of 3.0 PSI.

4) Bend Type B joint seal 6 inches up into curb or rail on the low side of the deck where deck joint matches curb or rail joint.

For details not shown see RSP B6-21 sheet.

## DECK REPAIR TABLE
## REMOVE UNSOUND CONCRETE AND RAPID SETTING CONCRETE (PATCH)

| BRIDGE NAME | BRIDGE NUMBER | APPROXIMATE AREA DAMAGED (%) | APPROXIMATE DEPTH (INCHES) |
|---|---|---|---|
| Clairemont Drive OC | 57-0429 | 1 | 3 |

Note: Deck Repair Table applies to area of clean and treat bridge deck with methacrylate

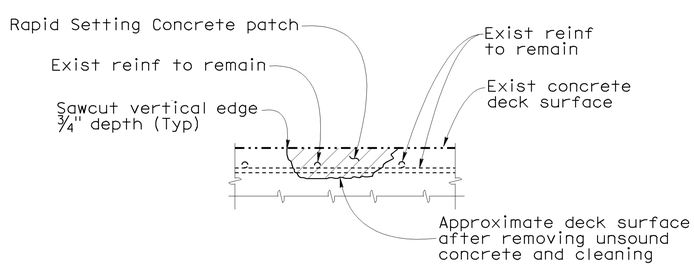


## DECK DAMAGE REPAIR DETAIL

Location will be determined by the Engineer. Reinforcement may be encountered during deck concrete removal and is to remain undamaged.

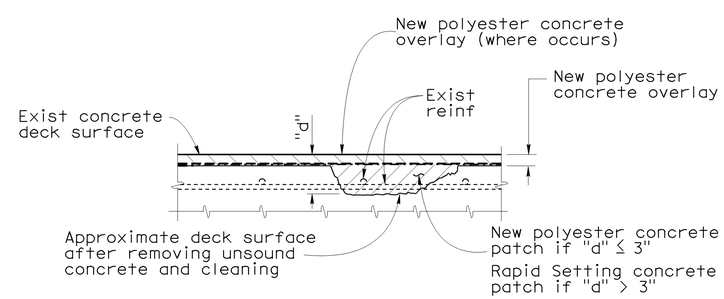


## DECK OVERLAY DETAIL

Location will be determined by the Engineer. Reinforcement may be encountered during deck concrete removal and is to remain undamaged.

DECK REPAIR NOTES:

1. Existing reinforcement shall be protected in place during unsound concrete removal and patching operations.
2. It is responsibility of the Contractor to repair any reinforcement that is accidently cut by saw cutting operations.
3. When existing transverse reinforcement is exposed in the deck surface, saw cutting may be waived with the approval of the Engineer.
4. The saw cut depth shall not exceed ¾ inch or the concrete cover over the top steel reinforcing bars, whichever is less.
5. Remove unsound Portland Cement concrete and unsound concrete patches to expose sound, hard concrete substrate. Replace original deck surface with rapid setting concrete patch.

NOTE:
THE CONTRACTOR SHALL VERIFY ALL CONTROLLING FIELD DIMENSIONS BEFORE ORDERING OR FABRICATING ANY MATERIAL. EXISTING UTILITY HAVE NOT BEEN PLOTTED ON THESE PLANS. EXISTING UTILITIES WILL BE PROTECTED IN PLACE.

| | BY | CHECKED |
|---|---|---|
| DESIGN | Vinh Dang | Edward Li |
| DETAILS | Tom Dang | Edward Li |
| QUANTITIES | Vinh Dang | Edward Li |

STATE OF CALIFORNIA
DEPARTMENT OF TRANSPORTATION

DIVISION OF MAINTENANCE
STRUCTURE MAINTENANCE DESIGN

BRIDGE NO. 57-0429
POST MILE R22.26

# CLAIREMONT DRIVE OC
# MISCELLANEOUS DETAILS NO. 2

STRUCTURES MAINTENANCE DETAIL SHEET (ENGLISH) (REV. 10/25/05)

ORIGINAL SCALE IN INCHES FOR REDUCED PLANS 0 1 2 3

CU 11235
EA 403301

DISREGARD PRINTS BEARING EARLIER REVISION DATES

REVISION DATES: 5/20/10 6/10/10 7/14/10 7-16-10 8-09-10 10-13-10

SHEET 3 OF 3

FILE => 11-403301-b-miscdt102.dgn

USERNAME => s129239 DATE PLOTTED => 13-OCT-2010 TIME PLOTTED => 11:18