Dist	COUNTY	ROUTE	POST MILES TOTAL PROJECT	SHEET No.	TOTAL SHEETS
11	SD	5	R38.5/R38.9	1	43

STATE OF CALIFORNIA

DEPARTMENT OF TRANSPORTATION

ACIM-005-1(621)E

PROJECT PLANS FOR CONSTRUCTION ON

STATE HIGHWAY

IN SAN DIEGO COUNTY
IN ENCINITAS
FROM SAN ELIJO LAGOON BRIDGE
TO 0.4 MILE NORTH OF SAN ELIJO LAGOON BRIDGE

TO BE SUPPLEMENTED BY STANDARD PLANS DATED MAY 2006

INDEX OF PLANS

Sheet No.	Description
1	Title and Location Map
2-4	Typical Cross Sections
5-6	Layout
7-9	Construction Details
10-12	Temporary Water Pollution Control Plan and Quantities
13	Construction Area Signs
14-17	Pavement Delineation Plan, Details and Quantities
18-23	Sign Plans, Details and Quantities
24	Summary of Quantities
25-29	Electrical Plans
30-43	Revised and New Standard Plans

THE STANDARD PLANS LIST APPLICABLE TO THIS CONTRACT IS INCLUDED IN THE NOTICE TO BIDDERS AND SPECIAL PROVISIONS BOOK.

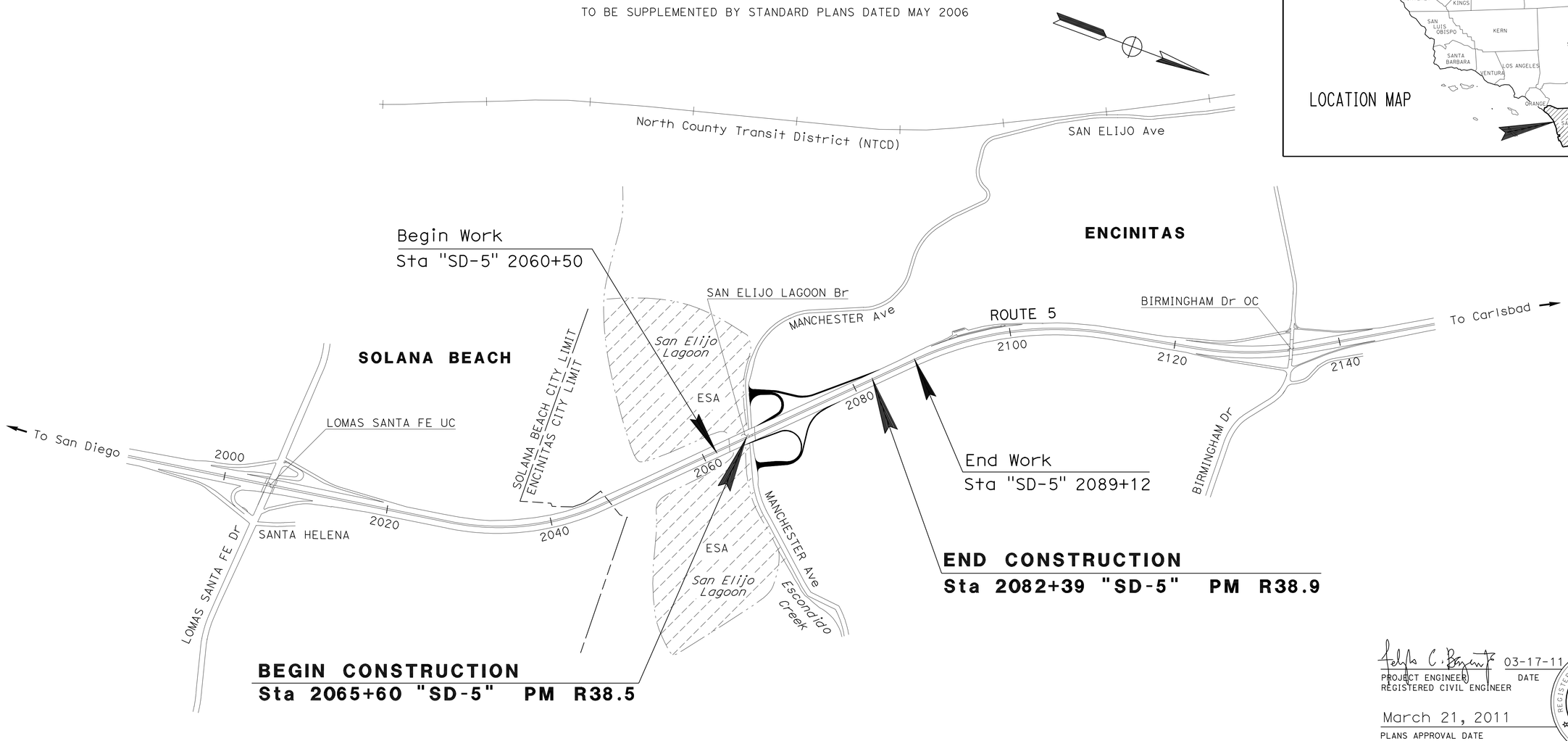

ESA ENVIRONMENTALLY SENSITIVE AREA

THE CONTRACTOR SHALL POSSESS THE CLASS (OR CLASSES) OF LICENSE AS SPECIFIED IN THE "NOTICE TO BIDDERS."

NO SCALE

PROJECT ENGINEER / REGISTERED CIVIL ENGINEER — DATE 03-17-11

REGISTERED PROFESSIONAL ENGINEER — FELIZARDO BAGCUS — No. 63551 — Exp. 09-30-12 — CIVIL — STATE OF CALIFORNIA

March 21, 2011
PLANS APPROVAL DATE

THE STATE OF CALIFORNIA OR ITS OFFICERS OR AGENTS SHALL NOT BE RESPONSIBLE FOR THE ACCURACY OR COMPLETENESS OF SCANNED COPIES OF THIS PLAN SHEET.

CONTRACT No.	11-401904
PROJECT ID	1100000535

PROJECT MANAGER: CHRIS M. THOMAS
DESIGN ENGINEER: FELIZARDO BAGCUS

LAST REVISION 03-18-11 — DATE PLOTTED => 21-MAR-2011 — TIME PLOTTED => 15:25

Dist	COUNTY	ROUTE	POST MILES TOTAL PROJECT	SHEET No.	TOTAL SHEETS
11	SD	5	R38.5/R38.9	2	43

REGISTERED CIVIL ENGINEER 03-17-11 DATE

03-21-11
PLANS APPROVAL DATE

REGISTERED PROFESSIONAL ENGINEER FELIZARDO BAGCUS No. C63551 Exp. 09-30-12 CIVIL STATE OF CALIFORNIA

THE STATE OF CALIFORNIA OR ITS OFFICERS OR AGENTS SHALL NOT BE RESPONSIBLE FOR THE ACCURACY OR COMPLETENESS OF SCANNED COPIES OF THIS PLAN SHEET.

NOTES:

1. DIMENSIONS OF THE PAVEMENT STRUCTURES (STRUCTURAL SECTIONS) ARE SUBJECT TO TOLERANCES SPECIFIED IN THE STANDARD SPECIFICATIONS.
2. FOR LOCATION OF MBGR AND LOCATION AND TYPE OF DIKES SEE LAYOUT SHEETS AND SUMMARY OF QUANTITIES SHEET.
3. FOG SEAL COAT SHALL BE APPLIED TO ALL HMA SURFACES EXCEPT TRAVELED WAYS.

*: MATCH Exist CROSS SLOPE

DESIGN DESIGNATION

LOCATION	ADT 2010	ADT 2030	DHV 2010	DHV 2030	D(%)	T(%)	TRAFFIC INDEX	V (MPH)
NB ON-RAMP from MANCHESTER Ave	1,800	2,300	200	300	N/A	6	11.5	N/A
SB OFF-RAMP TO MANCHESTER Ave	1,800	2,300	200	300	N/A	6	11.5	N/A
SB ON-RAMP FROM MANCHESTER Ave	14,800	17,800	1,600	1,800	N/A	6	11.5	N/A
NB OFF-RAMP TO MANCHESTER Ave	14,800	17,800	1,600	1,800	N/A	6	11.5	N/A

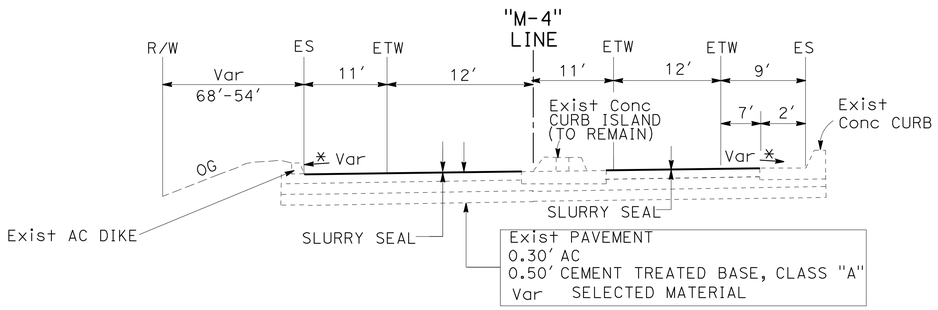

SB OFF & ON RAMP TO & FROM MANCHESTER Ave

Sta 2068+18.41 TO 2068+88.46 "M-4"

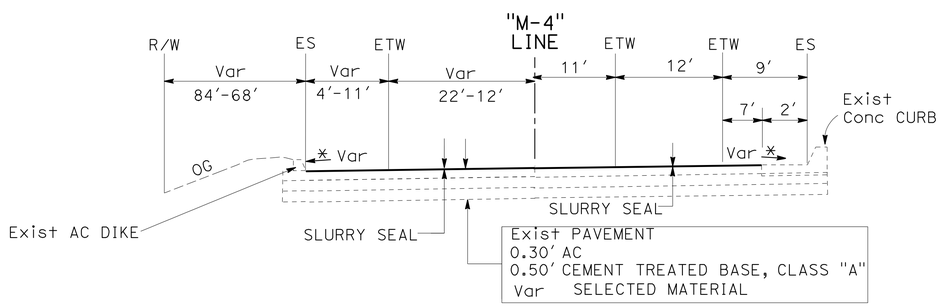

SB OFF & ON RAMP TO & FROM MANCHESTER Ave

Sta 2067+58.49 TO 2068+18.41 "M-4"

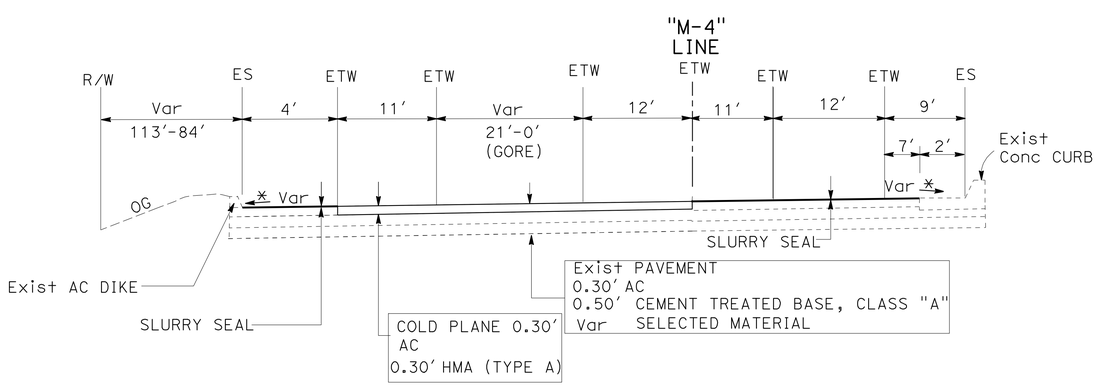

SB OFF & ON RAMP TO & FROM MANCHESTER Ave

Sta 2067+28.25 TO 2067+58.49 "M-4"

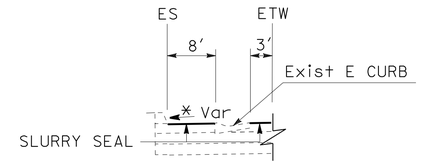

Sta 2077+56.35 TO 2082+38.35 "M-4"

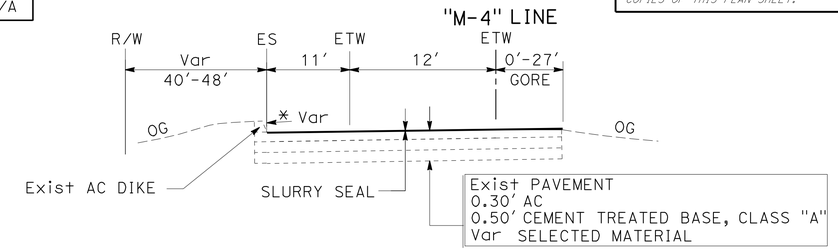

SB OFF RAMP TO MANCHESTER Ave

Sta 2076+93.91 TO 2082+38.35 "M-4"

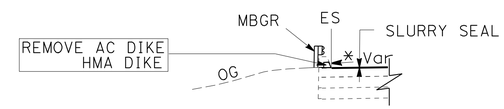

Sta 2074+35.37 TO 2076+74.74 "M-4"

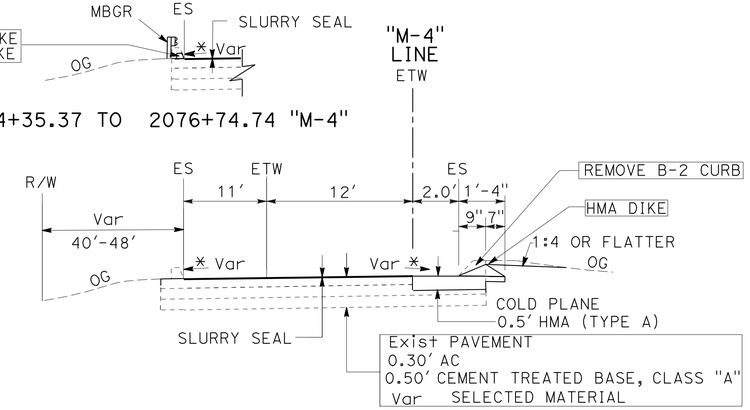

SB OFF RAMP TO MANCHESTER Ave

Sta 2071+28.54 TO 2076+93.91 "M-4"

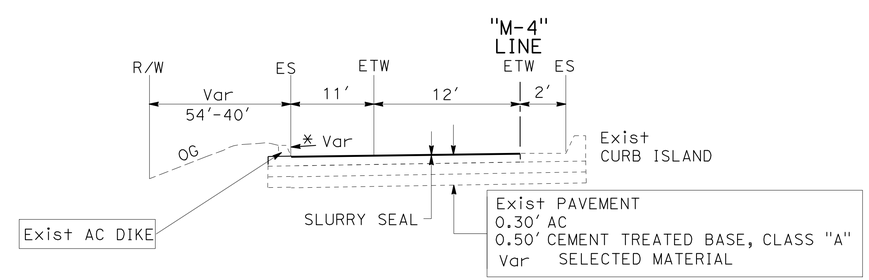

SB OFF RAMP TO MANCHESTER Ave

Sta 2068+88.46 TO 2071+28.54 "M-4"

TYPICAL CROSS SECTIONS

NO SCALE

X-1

STATE OF CALIFORNIA - DEPARTMENT OF TRANSPORTATION
Caltrans® MINOR PROJECTS

FUNCTIONAL SUPERVISOR: CHRIS M. THOMAS
CALCULATED-DESIGNED BY: FELIZARDO BAGCUS
CHECKED BY: RICARDO PADILLA
REVISED BY
DATE REVISED

LAST REVISION 03-18-11
DATE PLOTTED => 21-MAR-2011
TIME PLOTTED => 14:47

Dist	COUNTY	ROUTE	POST MILES TOTAL PROJECT	SHEET No.	TOTAL SHEETS
11	SD	5	R38.5/R38.9	3	43

REGISTERED CIVIL ENGINEER 03-17-11 DATE

03-21-11
PLANS APPROVAL DATE

REGISTERED PROFESSIONAL ENGINEER FELIZARDO BAGCUS No. C63551 Exp. 09-30-12 CIVIL STATE OF CALIFORNIA

THE STATE OF CALIFORNIA OR ITS OFFICERS OR AGENTS SHALL NOT BE RESPONSIBLE FOR THE ACCURACY OR COMPLETENESS OF SCANNED COPIES OF THIS PLAN SHEET.

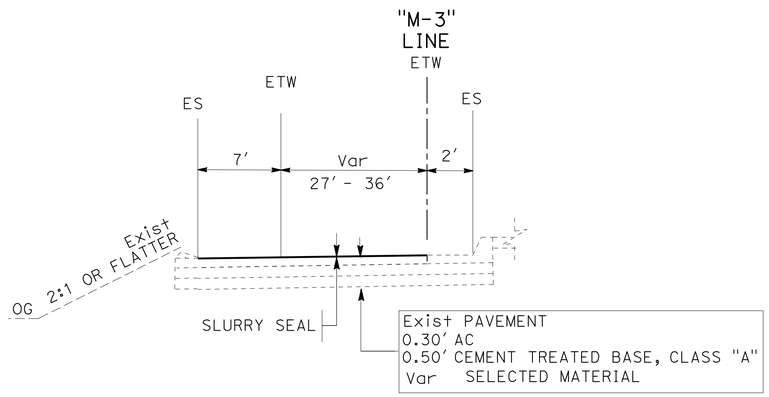

SB ON RAMP FROM MANCHESTER Ave

Sta 2070+21.00 TO 2075+57.53 "M-3"

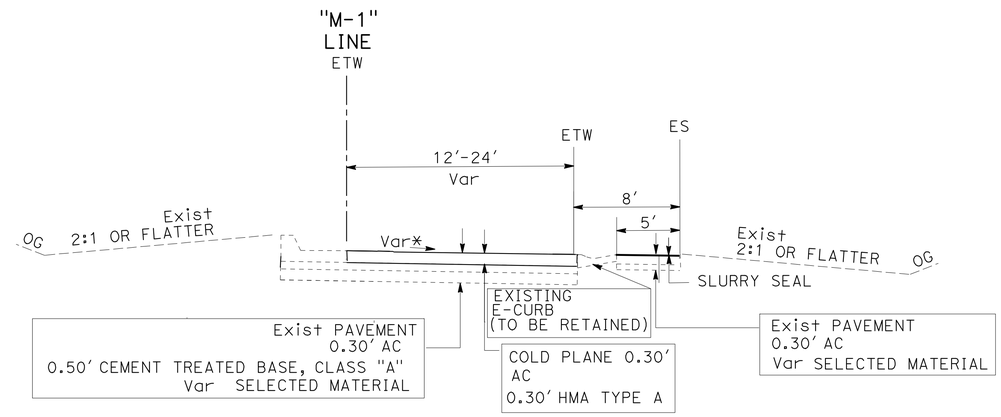

NB OFF RAMP TO MANCHESTER Ave

Sta 2068+78.23 TO 2076+54.00 "M-1"

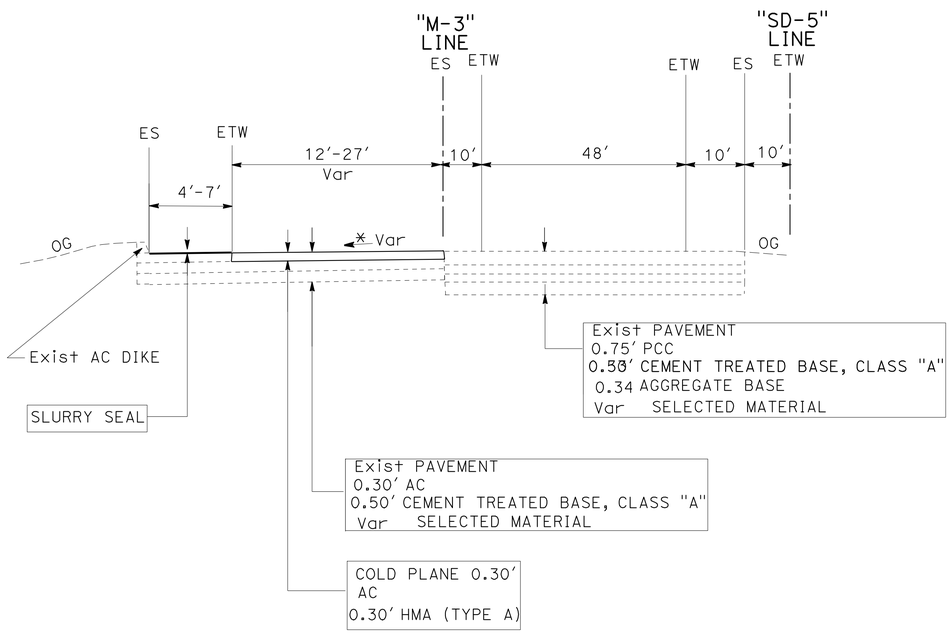

SB ON RAMP FROM MANCHESTER Ave

Sta 2067+10.35 TO 2070+21.39 "SD-5" LINE

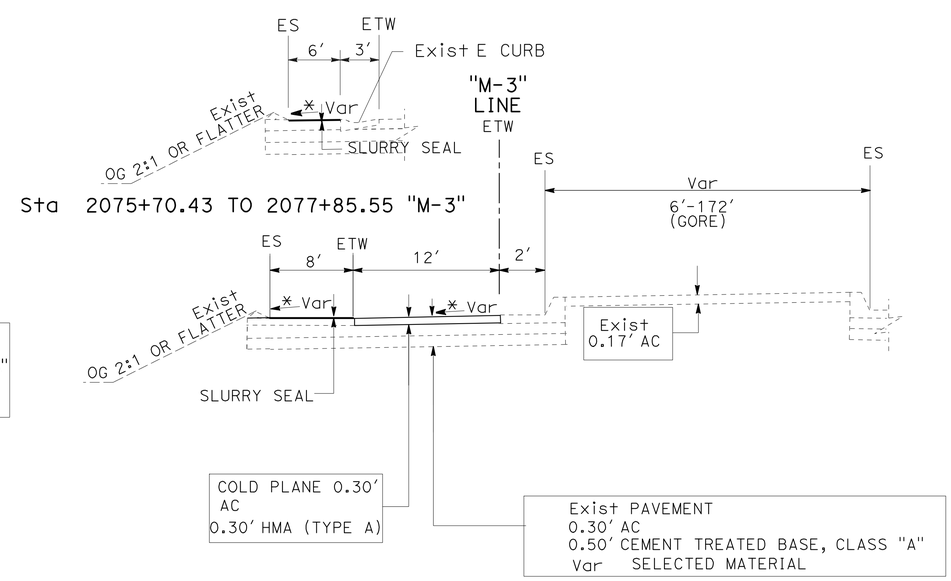

Sta 2075+70.43 TO 2077+85.55 "M-3"

SB ON RAMP FROM MANCHESTER Ave

Sta 2075+57.53 TO 2077+85.55 "M-3"

TYPICAL CROSS SECTIONS

NO SCALE

X-2

STATE OF CALIFORNIA - DEPARTMENT OF TRANSPORTATION
Caltrans MINOR PROJECTS

FUNCTIONAL SUPERVISOR: CHRIS M. THOMAS
CALCULATED-DESIGNED BY: FELIZARDO BAGCUS
CHECKED BY: RICARDO PADILLA
REVISED BY
DATE REVISED

LAST REVISION 03-18-11
DATE PLOTTED => 21-MAR-2011
TIME PLOTTED => 14:47

Dist	COUNTY	ROUTE	POST MILES TOTAL PROJECT	SHEET No.	TOTAL SHEETS
11	SD	5	R38.5/R38.9	4	43

REGISTERED CIVIL ENGINEER DATE 03-17-11

03-21-11
PLANS APPROVAL DATE

REGISTERED PROFESSIONAL ENGINEER FELIZARDO BAGCUS No. C63551 Exp. 09-30-12 CIVIL STATE OF CALIFORNIA

THE STATE OF CALIFORNIA OR ITS OFFICERS OR AGENTS SHALL NOT BE RESPONSIBLE FOR THE ACCURACY OR COMPLETENESS OF SCANNED COPIES OF THIS PLAN SHEET.

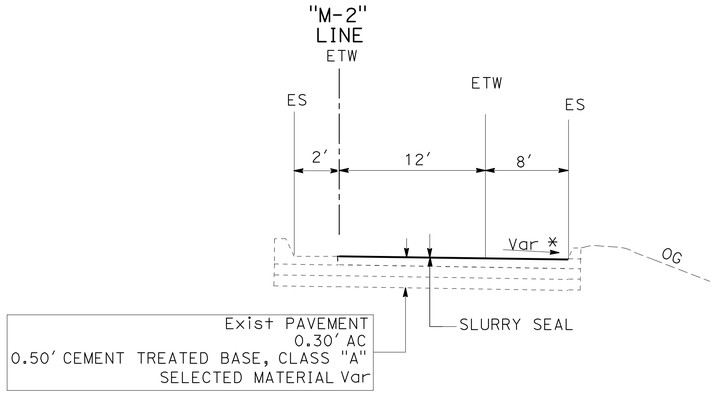

NB ON RAMP FROM MANCHESTER Ave

Sta 2064+16.34 TO 2072+16.70 "M-2"

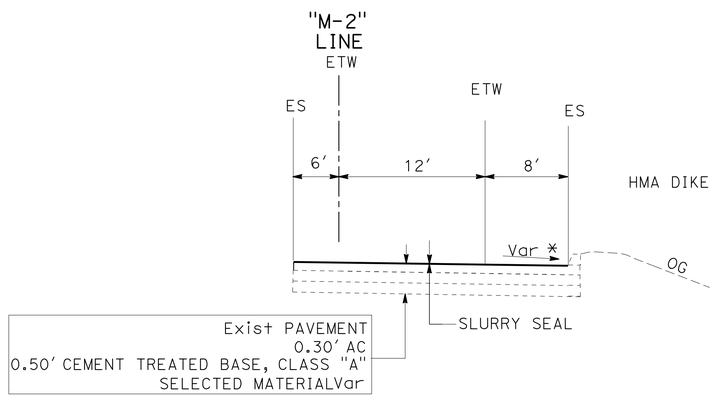

NB ON RAMP FROM MANCHESTER Ave

Sta 2063+83.34 TO 2064+16.34 "M-2"

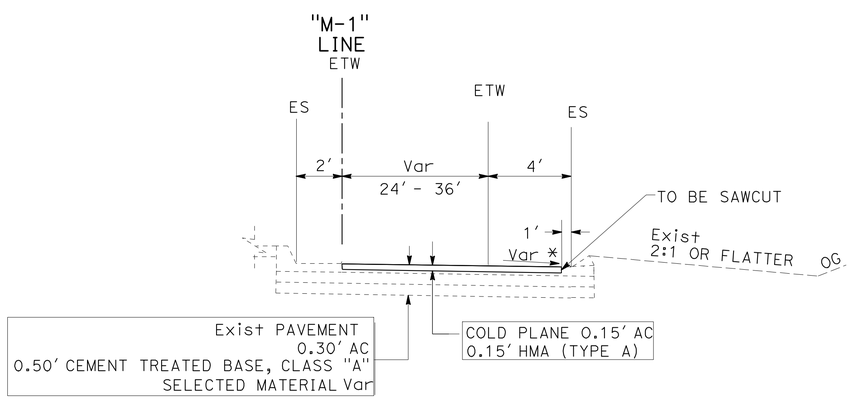

NB OFF RAMP TO MANCHESTER Ave

STA 2076+54.00 TO 2079+87.92 "M-1"

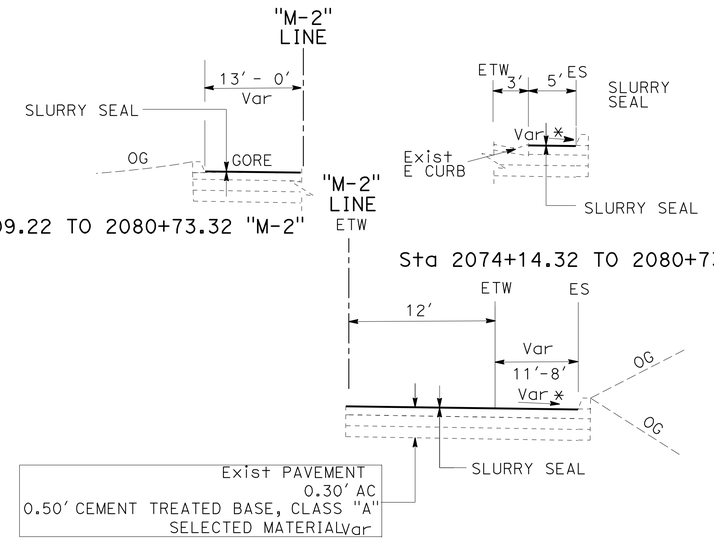

Sta 2076+09.22 TO 2080+73.32 "M-2"

Sta 2074+14.32 TO 2080+73.32 "M-2"

NB ON RAMP FROM MANCHESTER Ave

Sta 2072+16.70 TO 2080+73.32 "M-2"

TYPICAL CROSS SECTIONS

NO SCALE

X-3

STATE OF CALIFORNIA - DEPARTMENT OF TRANSPORTATION
Caltrans® MINOR PROJECTS

FUNCTIONAL SUPERVISOR: CHRIS M. THOMAS
CALCULATED-DESIGNED BY: FELIZARDO BAGCUS
CHECKED BY: RICARDO PADILLA
REVISED BY
DATE REVISED

LAST REVISION 03-18-11
DATE PLOTTED => 21-MAR-2011
TIME PLOTTED => 14:47

Dist	COUNTY	ROUTE	POST MILES TOTAL PROJECT	SHEET No.	TOTAL SHEETS
11	SD	5	R38.5/R38.9	5	43

REGISTERED CIVIL ENGINEER 03-17-11 DATE

03-21-11
PLANS APPROVAL DATE

REGISTERED PROFESSIONAL ENGINEER FELIZARDO BAGCUS No. C63551 Exp. 09-30-12 CIVIL STATE OF CALIFORNIA

THE STATE OF CALIFORNIA OR ITS OFFICERS OR AGENTS SHALL NOT BE RESPONSIBLE FOR THE ACCURACY OR COMPLETENESS OF SCANNED COPIES OF THIS PLAN SHEET.

NOTES:

1. FOR COMPLETE RIGHT OF WAY AND ACCURATE ACCESS DATA, SEE RIGHT OF WAY RECORD MAPS AT DISTRICT OFFICE
2. COORDINATES, BEARINGS AND GRID DISTANCES ARE BASED ON CCS83(1991.35) ZONE 6.
3. LOCATION OF UTILITY FACILITES WERE OBTAINED EITHER FROM OWNERS RECORDS AND/OR STATE SURVEYS.
4. IF IT IS NECESSARY TO SKIP AN MBGR POST AT EXISTING OVERSIDE DRAIN, REFER TO CONSTRUCTION DETAILS.

LEGEND

- EXISTING TREE
- COLD PLANE AC (0.30') HMA (TYPE A) (0.30')
- SLURRY SEAL
- COLD PLANE AC (0.15') HMA TYPE A (0.15')
- REMOVE B-2 CURB CONSTRUCT 2' HMA SHOULDER HMA DIKE (TYPE E)
- X METAL BEAM GUARDRAIL
- EXISTING CROSSOVER
- EXISTING DITCH

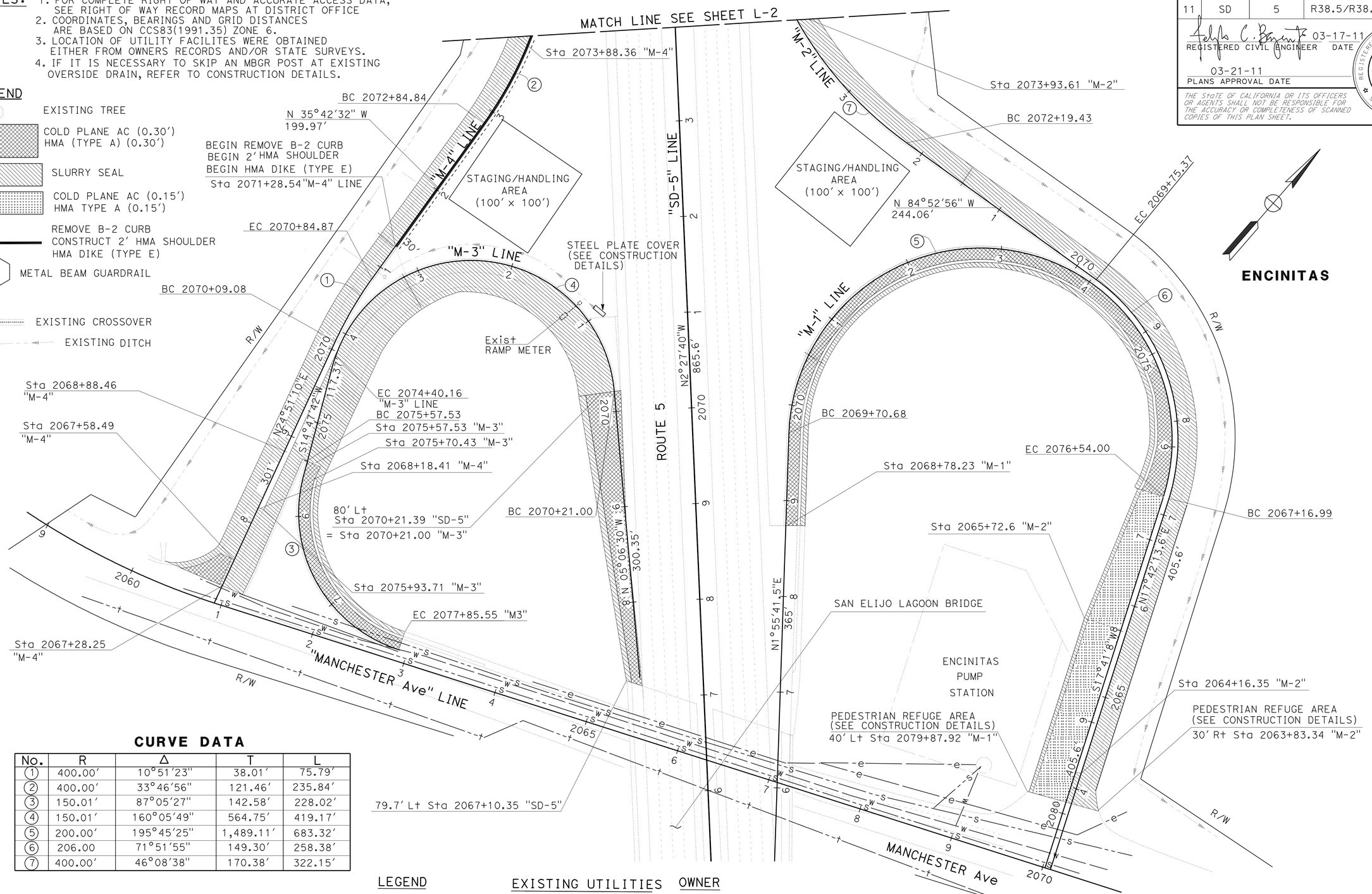

CURVE DATA

No.	R	Δ	T	L
1	400.00'	10°51'23"	38.01'	75.79'
2	400.00'	33°46'56"	121.46'	235.84'
3	150.01'	87°05'27"	142.58'	228.02'
4	150.01'	160°05'49"	564.75'	419.17'
5	200.00'	195°45'25"	1,489.11'	683.32'
6	206.00	71°51'55"	149.30'	258.38'
7	400.00'	46°08'38"	170.38'	322.15'

LEGEND	EXISTING UTILITIES	OWNER
—s—	SEWER LINE	CITY OF ENCINITAS
—e—	ELECTRICAL LINE	SAN DIEGO GAS AND ELECTRIC
—w—	WATER LINE	CITY OF ENCINITAS
—t—	TELEPHONE LINE	AT&T TELEPHONE

LAYOUT L-1

SCALE: 1"=50'

STATE OF CALIFORNIA - DEPARTMENT OF TRANSPORTATION
Caltrans MINOR PROJECTS

FUNCTIONAL SUPERVISOR: CHRIS M. THOMAS
CALCULATED-DESIGNED BY: FELIZARDO BAGCUS
CHECKED BY: RICARDO PADILLA
REVISED BY / DATE REVISED

LAST REVISION 03-18-11
DATE PLOTTED => 21-MAR-2011
TIME PLOTTED => 14:47

Dist	COUNTY	ROUTE	POST MILES TOTAL PROJECT	SHEET No.	TOTAL SHEETS
11	SD	5	R38.5/R38.9	6	43

REGISTERED CIVIL ENGINEER 03-17-11 DATE

03-21-11
PLANS APPROVAL DATE

REGISTERED PROFESSIONAL ENGINEER FELIZARDO BAGCUS No. C63551 Exp. 09-30-12 CIVIL STATE OF CALIFORNIA

THE STATE OF CALIFORNIA OR ITS OFFICERS OR AGENTS SHALL NOT BE RESPONSIBLE FOR THE ACCURACY OR COMPLETENESS OF SCANNED COPIES OF THIS PLAN SHEET.

NOTE:

1. FOR COMPLETE RIGHT OF WAY AND ACCURATE ACCESS DATA, SEE RIGHT OF WAY RECORD MAPS AT DISTRICT OFFICE

CURVE DATA

No.	R	Δ	T	L
2	400.00′	33°46′53"	121.46′	235.84′
7	400.00′	46°08′38"	170.38′	322.15′
8	3000.00′	04°25′45"	116.01′	231.91′

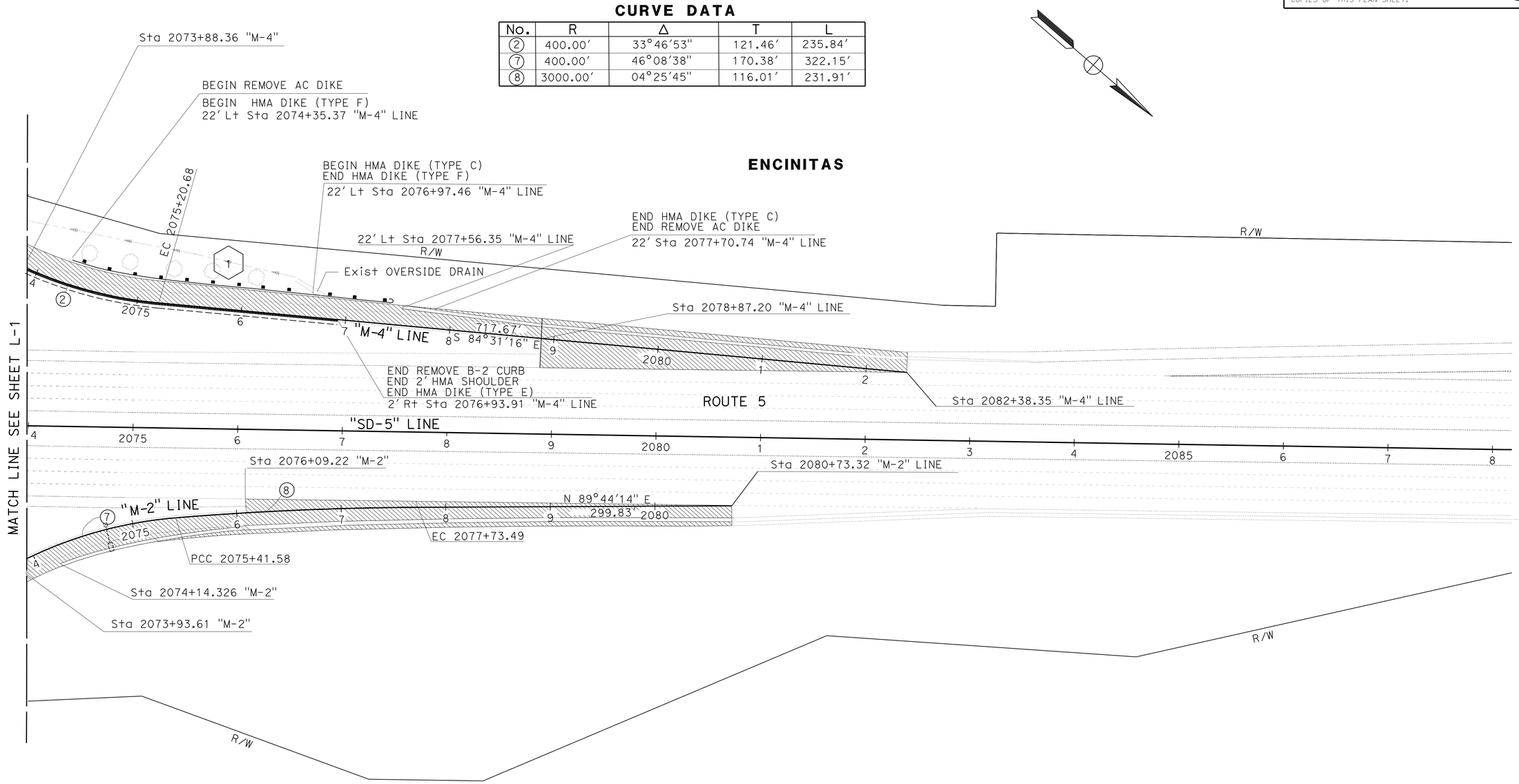

LAYOUT L-2

SCALE: 1"=50′

STATE OF CALIFORNIA - DEPARTMENT OF TRANSPORTATION
Caltrans MINOR PROJECTS

FUNCTIONAL SUPERVISOR: CHRIS M. THOMAS
CALCULATED-DESIGNED BY: FELIZARDO BAGCUS
CHECKED BY: RICARDO PADILLA
REVISED BY / DATE REVISED

LAST REVISION 03-18-11
DATE PLOTTED => 21-MAR-2011
TIME PLOTTED => 14:47

Dist	COUNTY	ROUTE	POST MILES TOTAL PROJECT	SHEET No.	TOTAL SHEETS
11	SD	5	R38.5/R38.9	7	43

REGISTERED CIVIL ENGINEER 03-17-11 DATE

03-21-11
PLANS APPROVAL DATE

REGISTERED PROFESSIONAL ENGINEER FELIZARDO BAGCUS No. C63551 Exp. 09-30-12 CIVIL STATE OF CALIFORNIA

THE State OF CALIFORNIA OR ITS OFFICERS OR AGENTS SHALL NOT BE RESPONSIBLE FOR THE ACCURACY OR COMPLETENESS OF SCANNED COPIES OF THIS PLAN SHEET.

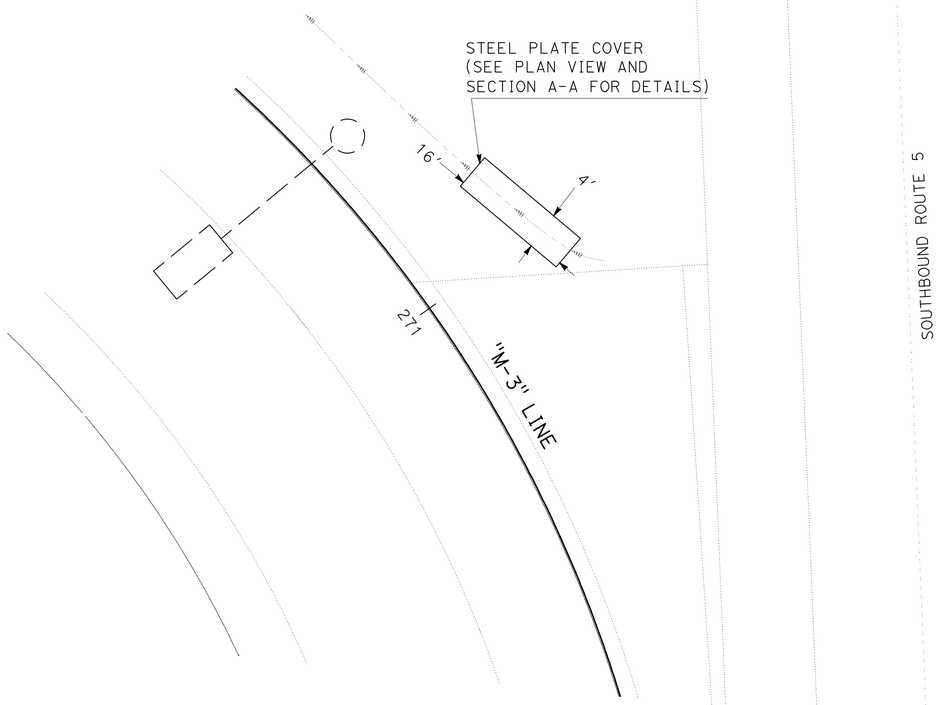

PLAN VIEW

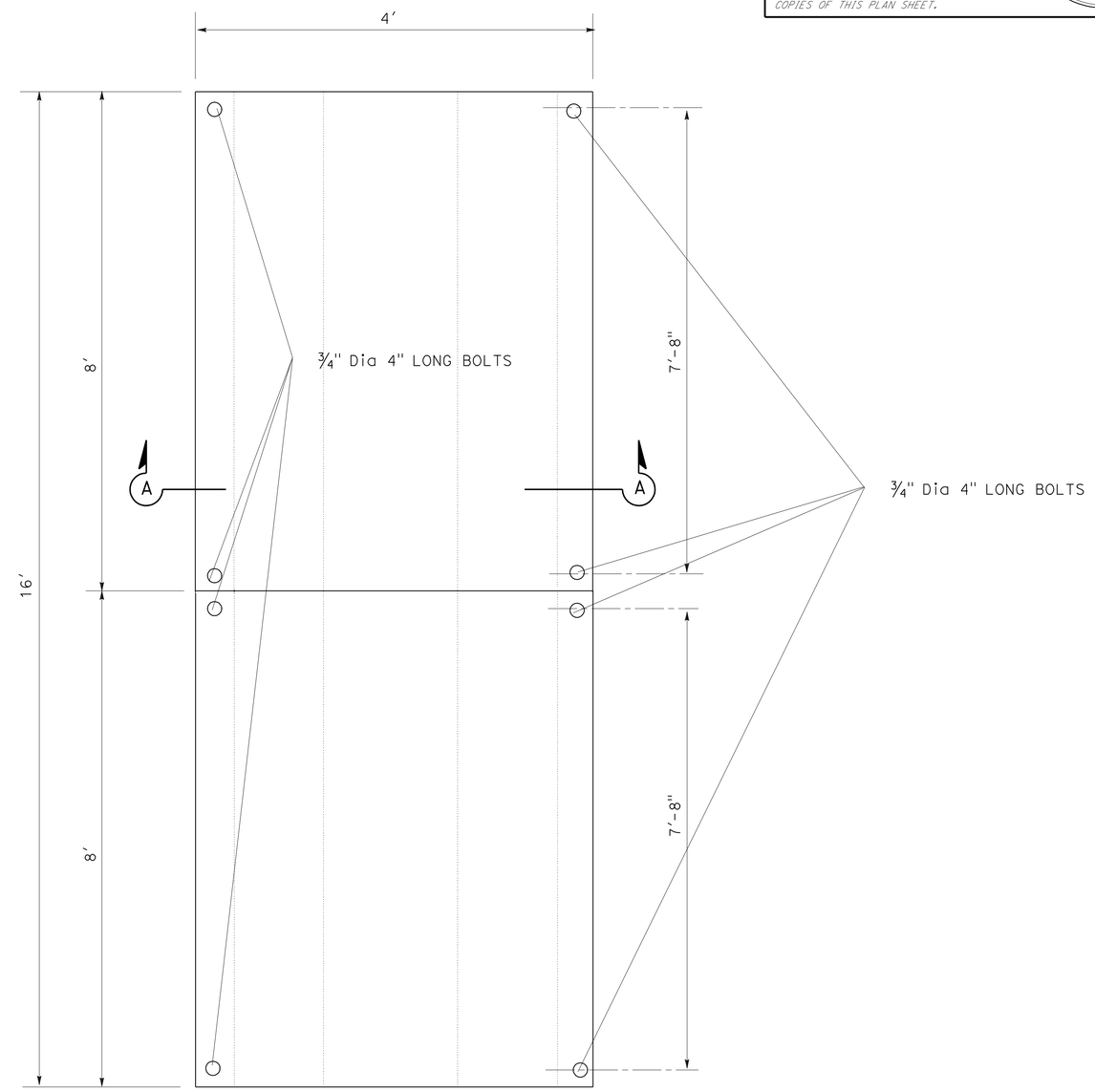

PLAN VIEW

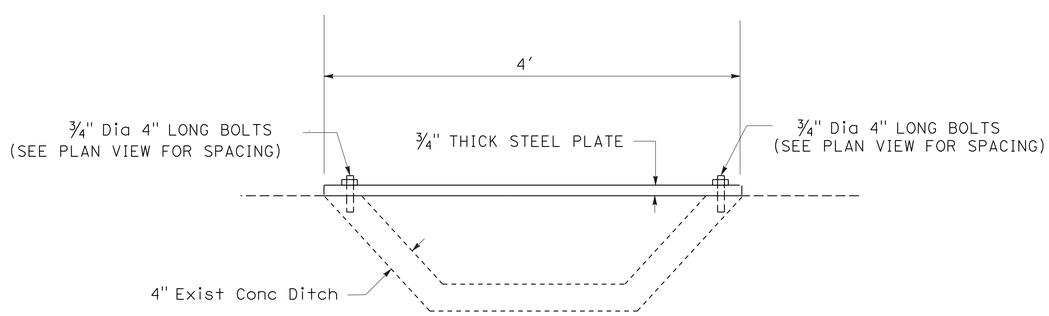

SECTION A-A

STEEL PLATE COVER

CONSTRUCTION DETAILS

NO SCALE

C-1

REVISED BY	DATE REVISED

CALCULATED-DESIGNED BY	FELIZARDO BAGCUS
CHECKED BY	RICARDO PADILLA
FUNCTIONAL SUPERVISOR	CHRIS M. THOMAS

STATE OF CALIFORNIA - DEPARTMENT OF TRANSPORTATION
Caltrans MINOR PROJECTS

LAST REVISION 03-18-11 | DATE PLOTTED => 21-MAR-2011 | TIME PLOTTED => 14:47

Dist	COUNTY	ROUTE	POST MILES TOTAL PROJECT	SHEET No.	TOTAL SHEETS
11	SD	5	R38.5/R38.9	8	43

REGISTERED CIVIL ENGINEER 03-17-11 DATE

03-21-11
PLANS APPROVAL DATE

REGISTERED PROFESSIONAL ENGINEER FELIZARDO BAGCUS No. C63551 Exp. 09-30-12 CIVIL STATE OF CALIFORNIA

THE STATE OF CALIFORNIA OR ITS OFFICERS OR AGENTS SHALL NOT BE RESPONSIBLE FOR THE ACCURACY OR COMPLETENESS OF SCANNED COPIES OF THIS PLAN SHEET.

NOTE:

1. SEE STANDARD PLAN A88A FOR ADDITIONAL INFORMATION.

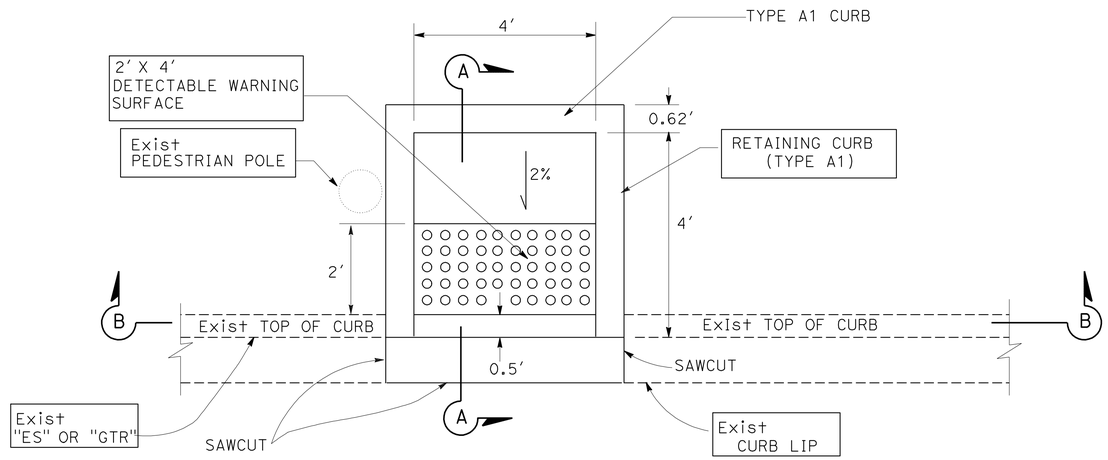

PLAN VIEW

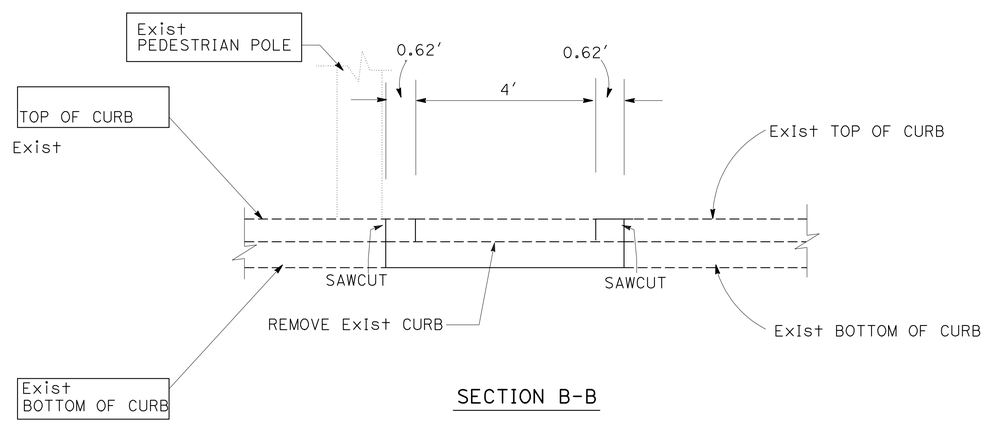

SECTION B-B

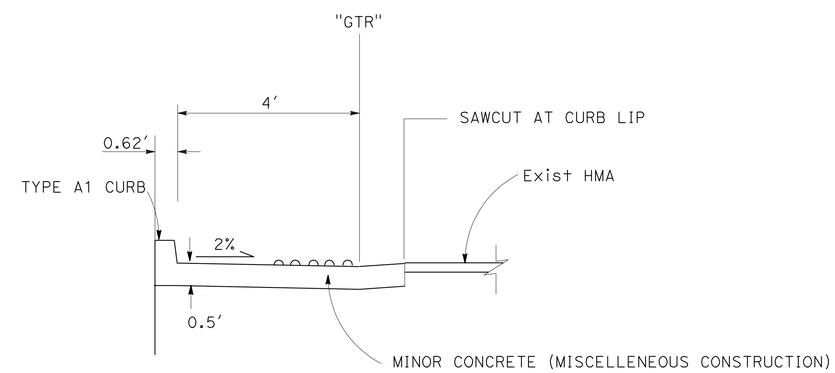

SECTION A-A

PEDESTRIAN REFUGE AREA

CONSTRUCTION DETAILS

NO SCALE

C-2

STATE OF CALIFORNIA - DEPARTMENT OF TRANSPORTATION
Caltrans MINOR PROJECTS

FUNCTIONAL SUPERVISOR: CHRIS M. THOMAS
CALCULATED-DESIGNED BY: FELIZARDO BAGCUS
CHECKED BY: RICARDO PADILLA
REVISED BY
DATE REVISED

LAST REVISION 03-18-11 DATE PLOTTED => 21-MAR-2011 TIME PLOTTED => 14:48

Dist	COUNTY	ROUTE	POST MILES TOTAL PROJECT	SHEET No.	TOTAL SHEETS
11	SD	5	R38.5/R38.9	9	43

REGISTERED CIVIL ENGINEER 03-17-11 DATE

03-21-11
PLANS APPROVAL DATE

REGISTERED PROFESSIONAL ENGINEER FELIZARDO BAGCUS No. C63551 Exp. 09-30-12 CIVIL STATE OF CALIFORNIA

THE STATE OF CALIFORNIA OR ITS OFFICERS OR AGENTS SHALL NOT BE RESPONSIBLE FOR THE ACCURACY OR COMPLETENESS OF SCANNED COPIES OF THIS PLAN SHEET.

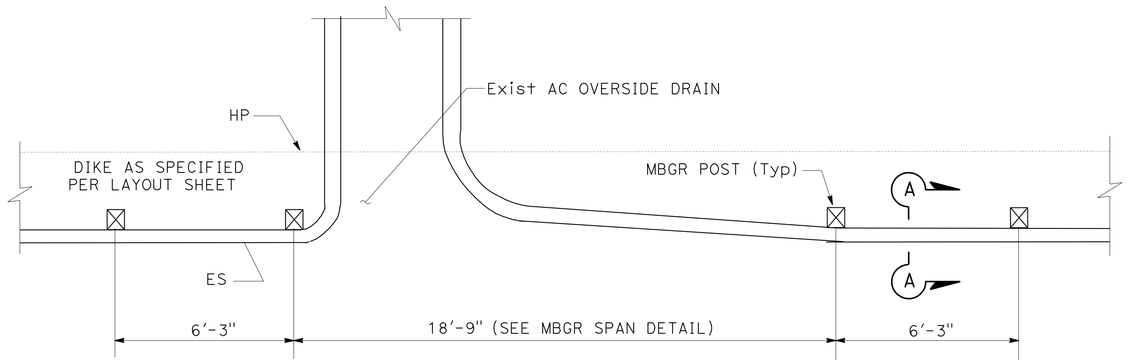

OVERSIDE DRAIN

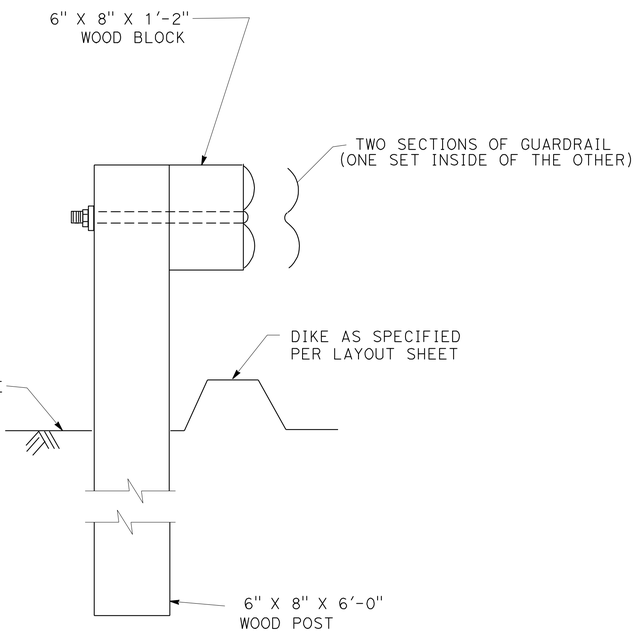

SECTION A-A

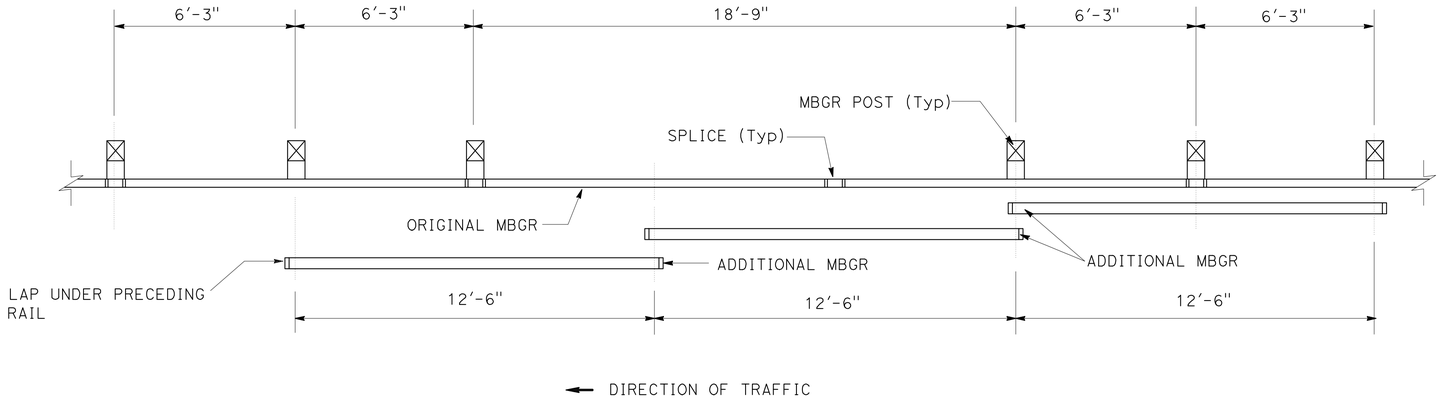

MBGR SPAN

CONSTRUCTION DETAILS

NO SCALE

C-3

STATE OF CALIFORNIA - DEPARTMENT OF TRANSPORTATION
Caltrans® MINOR PROJECTS

FUNCTIONAL SUPERVISOR: CHRIS M. THOMAS
CALCULATED-DESIGNED BY: FELIZARDO BAGCUS
CHECKED BY: RICARDO PADILLA
REVISED BY
DATE REVISED

LAST REVISION 03-18-11
DATE PLOTTED => 21-MAR-2011
TIME PLOTTED => 14:48

Dist	COUNTY	ROUTE	POST MILES TOTAL PROJECT	SHEET No.	TOTAL SHEETS
11	SD	5	R38.5/R38.9	10	43

REGISTERED CIVIL ENGINEER DATE 03-17-11

03-21-11
PLANS APPROVAL DATE

REGISTERED PROFESSIONAL ENGINEER FELIZARDO BAGCUS No. C63551 Exp. 09-30-12 CIVIL STATE OF CALIFORNIA

THE State OF CALIFORNIA OR ITS OFFICERS OR AGENTS SHALL NOT BE RESPONSIBLE FOR THE ACCURACY OR COMPLETENESS OF SCANNED COPIES OF THIS PLAN SHEET.

NOTE:

1. FOR COMPLETE RIGHT OF WAY AND ACCURATE ACCESS DATA, SEE RIGHT OF WAY RECORD MAPS AT DISTRICT OFFICE

LEGEND:

- TEMPORARY DRAINAGE INLET PROTECTION (TYPE 5)
- TEMPORARY COVER (10' WIDE)
- TEMPORARY CONSTRUCTION ENTRANCE
- EXISTING IRRIGATION CROSSOVER
- SURFACE FLOW DIRECTION (2:1 SLOPE OR FLATTER UNLESS NOTED OTHERWISE)
- TEMPORARY CHECK DAM

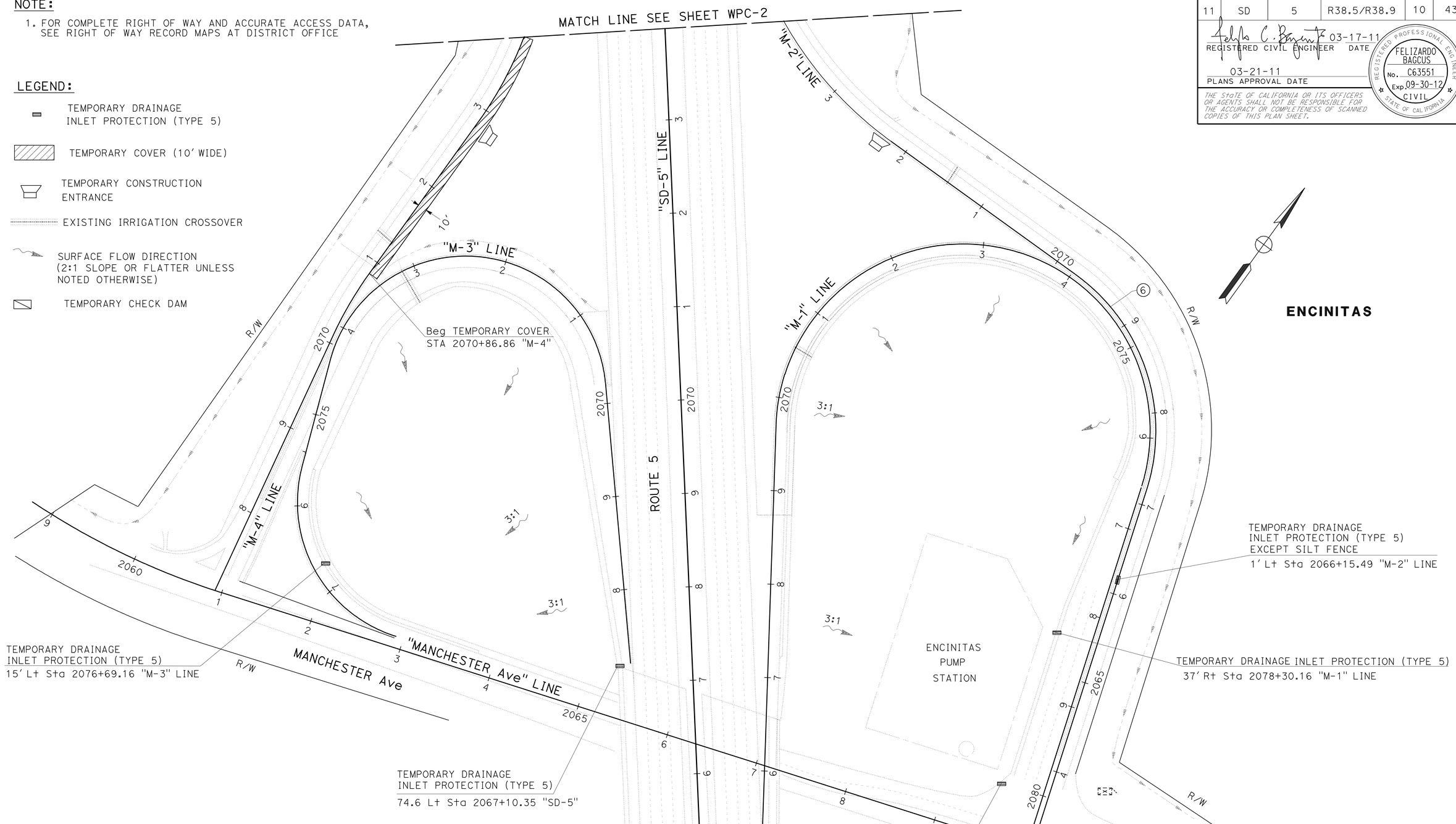

ENCINITAS

TEMPORARY WATER POLLUTION CONTROL PLAN

SCALE: 1"=50'

WPC-1

THIS PLAN ACCURATE FOR TEMPORARY WATER POLLUTION CONTROL WORK ONLY

REVISED BY | DATE REVISED

FELIZARDO BAGCUS | CALCULATED-DESIGNED BY

RICARDO PADILLA | CHECKED BY

CHRIS M. THOMAS | FUNCTIONAL SUPERVISOR

StaTe OF CALIFORNIA - DEPARTMENT OF TRANSPORTATION

Caltrans® MINOR PROJECTS

LAST REVISION | DATE PLOTTED => 21-MAR-2011 | TIME PLOTTED => 14:48

03-18-11

Dist	COUNTY	ROUTE	POST MILES TOTAL PROJECT	SHEET No.	TOTAL SHEETS
11	SD	5	R38.5/R38.9	11	43

REGISTERED CIVIL ENGINEER 03-17-11 DATE

03-21-11
PLANS APPROVAL DATE

REGISTERED PROFESSIONAL ENGINEER FELIZARDO BAGCUS No. C63551 Exp. 09-30-12 CIVIL STATE OF CALIFORNIA

THE STATE OF CALIFORNIA OR ITS OFFICERS OR AGENTS SHALL NOT BE RESPONSIBLE FOR THE ACCURACY OR COMPLETENESS OF SCANNED COPIES OF THIS PLAN SHEET.

NOTE:

1. FOR COMPLETE RIGHT OF WAY AND ACCURATE ACCESS DATA, SEE RIGHT OF WAY RECORD MAPS AT DISTRICT OFFICE

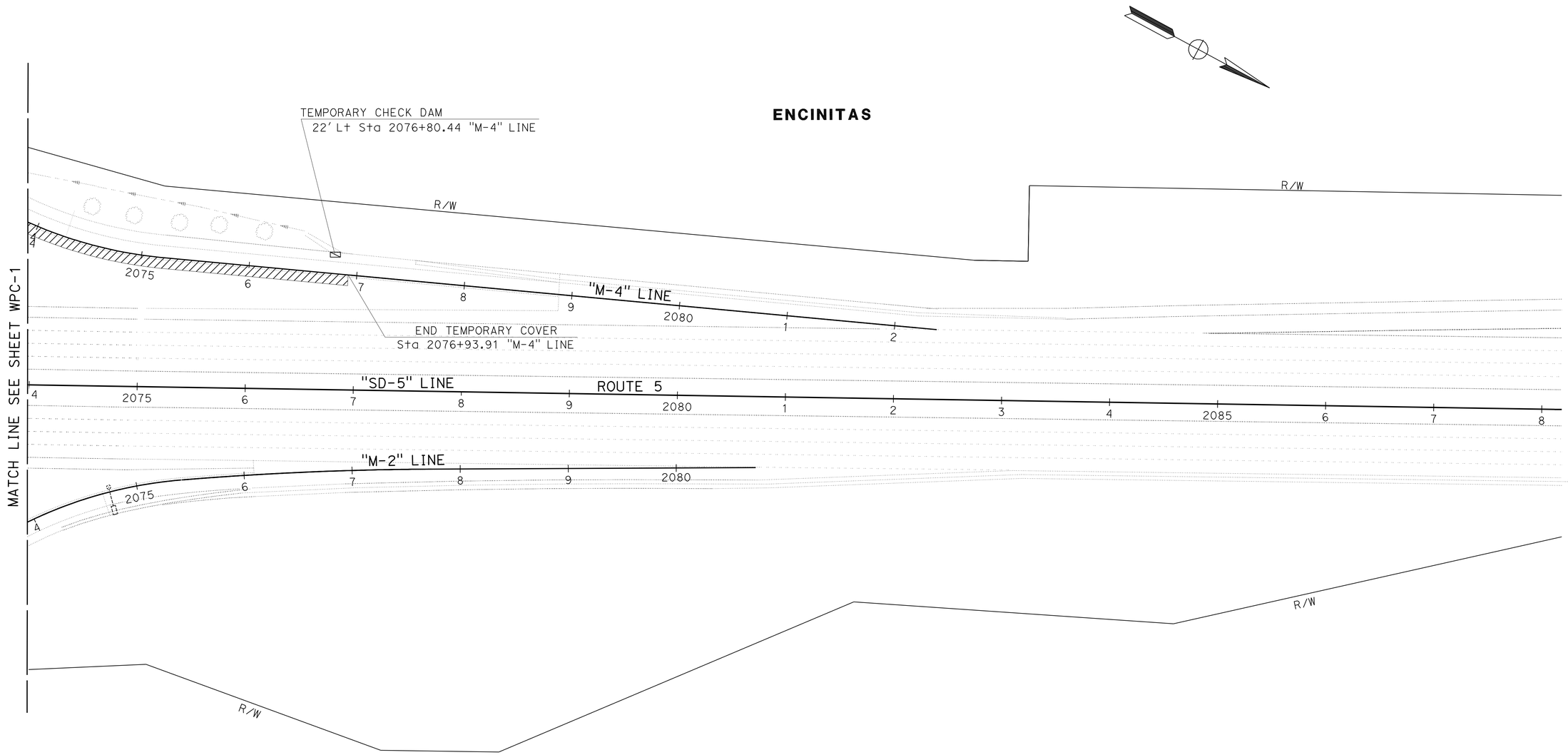

THIS PLAN ACCURATE FOR TEMPORARY WATER POLLUTION CONTROL WORK ONLY

TEMPORARY WATER POLLUTION CONTROL PLAN

SCALE: 1"=50'

WPC- 2

STATE OF CALIFORNIA - DEPARTMENT OF TRANSPORTATION
Caltrans® MINOR PROJECTS

FUNCTIONAL SUPERVISOR: CHRIS M. THOMAS
CALCULATED-DESIGNED BY: FELIZARDO BAGCUS
CHECKED BY: RICARDO PADILLA
REVISED BY
DATE REVISED

LAST REVISION 03-18-11
DATE PLOTTED => 21-MAR-2011
TIME PLOTTED => 14:48

Dist	COUNTY	ROUTE	POST MILES TOTAL PROJECT	SHEET No.	TOTAL SHEETS
11	SD	5	R38.5/R38.9	12	43

REGISTERED CIVIL ENGINEER 03-17-11 DATE

03-21-11
PLANS APPROVAL DATE

REGISTERED PROFESSIONAL ENGINEER FELIZARDO BAGCUS No. C63551 Exp. 09-30-12 CIVIL STATE OF CALIFORNIA

THE STATE OF CALIFORNIA OR ITS OFFICERS OR AGENTS SHALL NOT BE RESPONSIBLE FOR THE ACCURACY OR COMPLETENESS OF SCANNED COPIES OF THIS PLAN SHEET.

TEMPORARY DRAINAGE INLET PROTECTION

STATION	SIZE OF INLET	(TYPE 5) (EA)
Sta 2076+69.16 "M-3"	18" X 24"	1
Sta 2078+30.16 "M-1"	42" X 36"	1
Sta 2080+00.00 "M-1"	42" X 36"	1
Sta 2066+15.49 "M-2"	18" X 24"	1
Sta 2067+10.35 "SD-5"	42" X 36"	1
	TOTAL	5

TEMPORARY COVER

BEGIN STATION	END STATION	WIDTH (N)	(SQYD)
Sta 2070+86.86 "M-4"	Sta 2076+93.91 "M-4"	10'	674.50
	TOTAL		674.50

(N) = NOT A SEPARATE PAY ITEM, FOR INFORMATION ONLY.

TEMPORARY CHECK DAM

STATION	(LF)
Sta 2076+80.44 "M-4"	20
TOTAL	20

TEMPORARY CONSTRUCTION ENTRANCE

STATION	(EA)
Sta 2072+84.84 "M-4"	1
Sta 2072+26.47 "M-2"	1
TOTAL	2

TEMPORARY WATER POLLUTION CONTROL QUANTITIES

WPCQ-1

REVISED BY | DATE REVISED
FELIZARDO BAGCUS | RICARDO PADILLA
CALCULATED-DESIGNED BY | CHECKED BY
FUNCTIONAL SUPERVISOR
CHRIS M. THOMAS

STATE OF CALIFORNIA - DEPARTMENT OF TRANSPORTATION
Caltrans MINOR PROJECTS

LAST REVISION 03-18-11 | DATE PLOTTED => 21-MAR-2011 | TIME PLOTTED => 14:55

Dist	COUNTY	ROUTE	POST MILES TOTAL PROJECT	SHEET No.	TOTAL SHEETS
11	SD	5	R38.5/R38.9	13	43

REGISTERED CIVIL ENGINEER 03-18-11 DATE

03-21-11
PLANS APPROVAL DATE

REGISTERED PROFESSIONAL ENGINEER SHAHIN T ADIBI No. 54839 Exp. 06/30/12 CIVIL STATE OF CALIFORNIA

THE STATE OF CALIFORNIA OR ITS OFFICERS OR AGENTS SHALL NOT BE RESPONSIBLE FOR THE ACCURACY OR COMPLETENESS OF SCANNED COPIES OF THIS PLAN SHEET.

LEGEND:

XX = CONSTRUCTION AREA SIGN

→ = DIRECTION OF TRAFFIC

NOTES:

1. EXACT LOCATION OF CONSTRUCTION AREA SIGNS SHALL BE DETERMINED BY THE ENGINEER.
2. FEDERAL MANUAL OF UNIFORM TRAFFIC CONTROL DEVICES SIGN CODES ARE SHOWN UNLESS DESIGNATED (CA) INDICATING STANDARD CALIFORNIA SIGN SPECIFICATIONS ARE USED.
3. EXISTING UTILITY FACILITIES HAVE NOT BEEN SHOWN ON THESE PLAN SHEETS. THE CONTRACTOR SHALL VERIFY LOCATIONS OF EXISTING UTILITIES AND ADJUST THE FIELD LOCATION OF SIGN POSTS IN CONSULTATION WITH THE ENGINEER.

TYPICAL PLACEMENT OF TRAFFIC PLASTIC DRUM

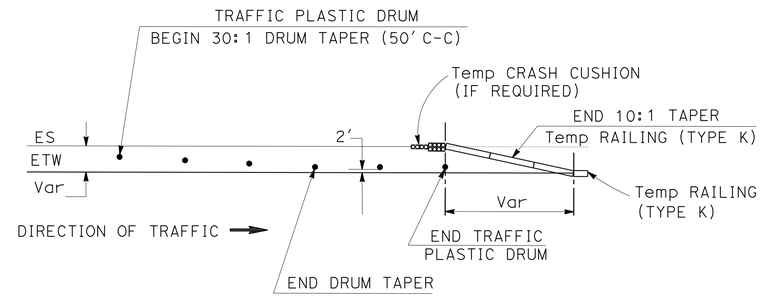

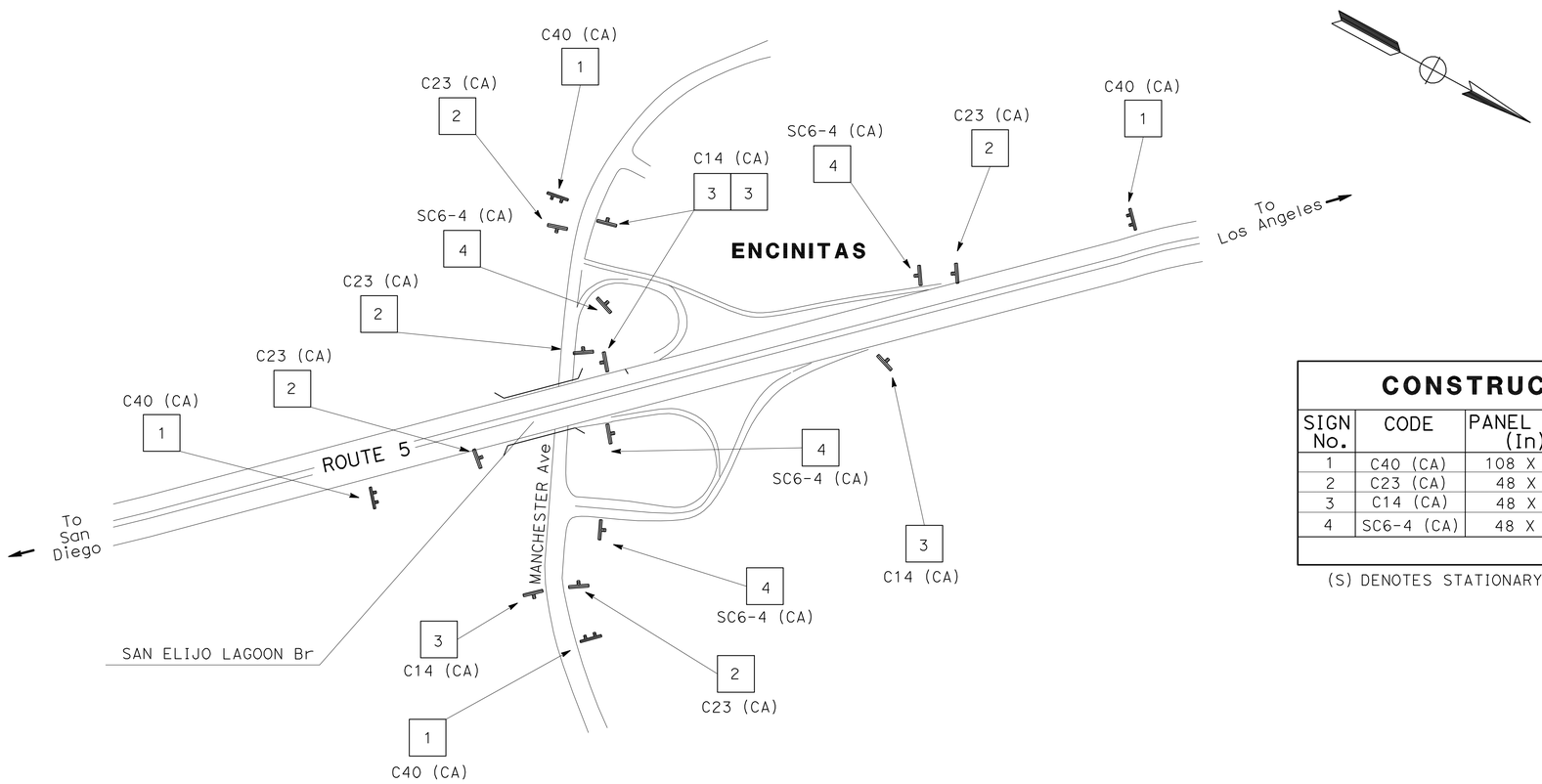

CONSTRUCTION AREA SIGNS

SIGN No.	CODE	PANEL SIZE (In)	No. OF POST AND SIZE (In)	No. OF SIGNS
1	C40 (CA)	108 X 42	2-4 X 6 (S)	4
2	C23 (CA)	48 X 48	1-4 X 6 (S)	5
3	C14 (CA)	48 X 24	1-4 X 4 (S)	4
4	SC6-4 (CA)	48 X 60	PORTABLE	4
			TOTAL	17

(S) DENOTES STATIONARY MOUNTED SIGN

THIS PLAN ACCURATE FOR CONSTRUCTION AREA SIGN WORK ONLY

CONSTRUCTION AREA SIGNS

NO SCALE

CS-1

REVISED BY | DATE REVISED
NOEL TAPIA | SHAHIN ADIBI
CALCULATED-DESIGNED BY | CHECKED BY
FUNCTIONAL SUPERVISOR
CAMILLE ABOUFADEL

STATE OF CALIFORNIA - DEPARTMENT OF TRANSPORTATION
Caltrans® TRAFFIC DESIGN

LAST REVISION 03-18-11 | DATE PLOTTED => 21-MAR-2011 | TIME PLOTTED => 14:48

Dist	COUNTY	ROUTE	POST MILES TOTAL PROJECT	SHEET No.	TOTAL SHEETS
11	SD	5	R38.5/R38.9	14	43

REGISTERED CIVIL ENGINEER 03-18-11 DATE

03-21-11
PLANS APPROVAL DATE

REGISTERED PROFESSIONAL ENGINEER
SHAHIN T ADIBI
No. 54839
Exp. 06/30/12
CIVIL
STATE OF CALIFORNIA

THE STATE OF CALIFORNIA OR ITS OFFICERS OR AGENTS SHALL NOT BE RESPONSIBLE FOR THE ACCURACY OR COMPLETENESS OF SCANNED COPIES OF THIS PLAN SHEET.

NOTE:

FOR ACCURATE RIGHT OF WAY AND ACCESS DATA, CONTACT RIGHT OF WAY ENGINEERING AT THE DISTRICT OFFICE.

LEGEND:

- = CHANGE OF PAVEMENT DELINEATION DETAIL
- (XXX) = PAVEMENT DELINEATION DETAIL
- R (XXX) = REMOVE PAVEMENT DELINEATION DETAIL
- F = DELINEATOR (CLASS 1) TYPE F
- G = DELINEATOR (CLASS 1) TYPE G
- G,G = DELINEATOR (CLASS 1) TYPE (G,G) (BACK TO BACK)

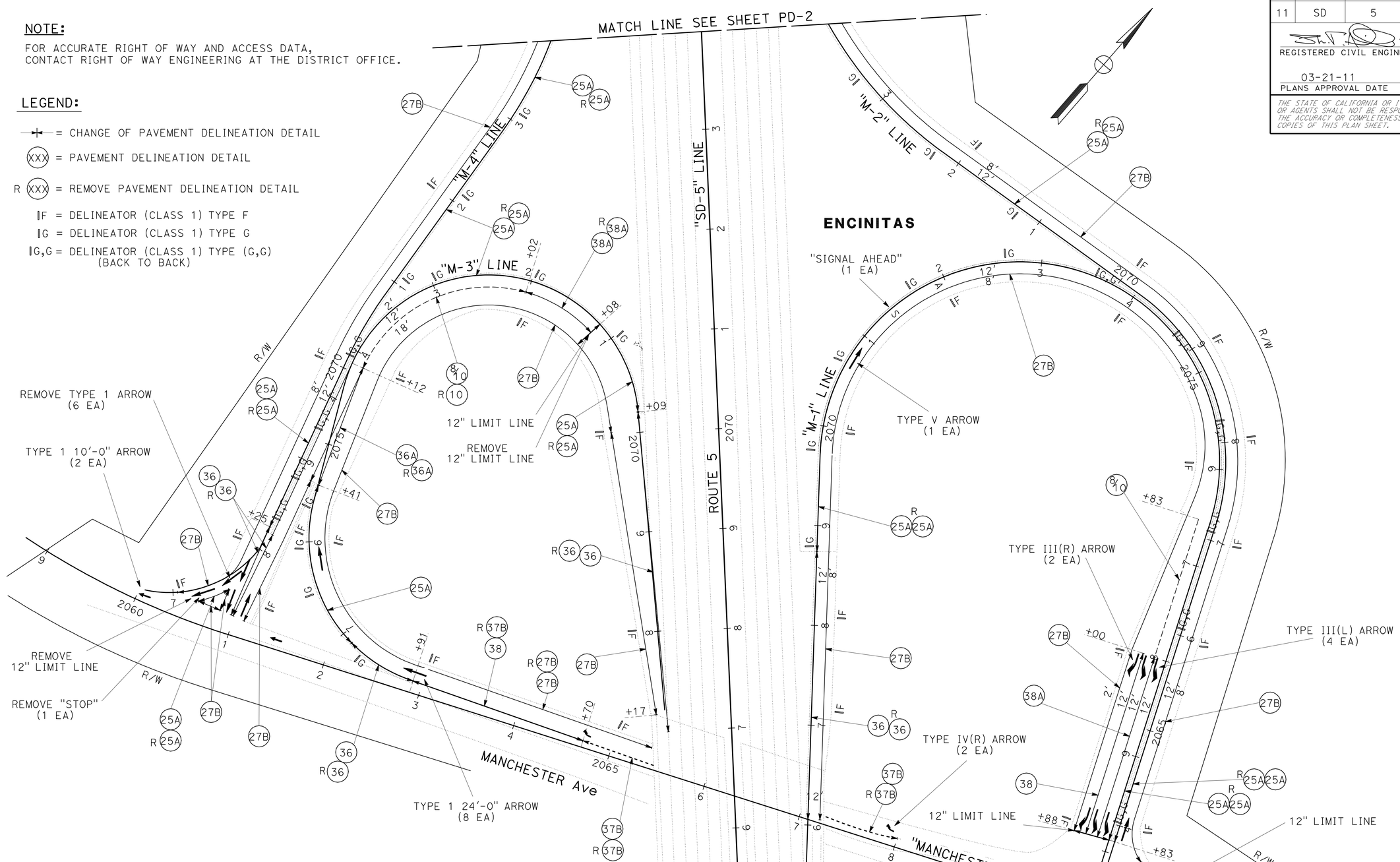

THIS PLAN ACCURATE FOR PAVEMENT DELINEATION WORK ONLY

PAVEMENT DELINEATION PLAN

SCALE: 1"=50'

PD-1

STATE OF CALIFORNIA - DEPARTMENT OF TRANSPORTATION
Caltrans® TRAFFIC DESIGN

FUNCTIONAL SUPERVISOR: CAMILLE ABOUFADEL
CALCULATED-DESIGNED BY: NOEL TAPIA
CHECKED BY: SHAHIN ADIBI
REVISED BY / DATE REVISED

LAST REVISION 03-18-11
DATE PLOTTED => 21-MAR-2011
TIME PLOTTED => 14:48

Dist	COUNTY	ROUTE	POST MILES TOTAL PROJECT	SHEET No.	TOTAL SHEETS
11	SD	5	R38.5/R38.9	15	43

REGISTERED CIVIL ENGINEER 03-18-11 DATE

03-21-11
PLANS APPROVAL DATE

REGISTERED PROFESSIONAL ENGINEER
SHAHIN T ADIBI
No. 54839
Exp. 06/30/12
CIVIL
STATE OF CALIFORNIA

THE STATE OF CALIFORNIA OR ITS OFFICERS OR AGENTS SHALL NOT BE RESPONSIBLE FOR THE ACCURACY OR COMPLETENESS OF SCANNED COPIES OF THIS PLAN SHEET.

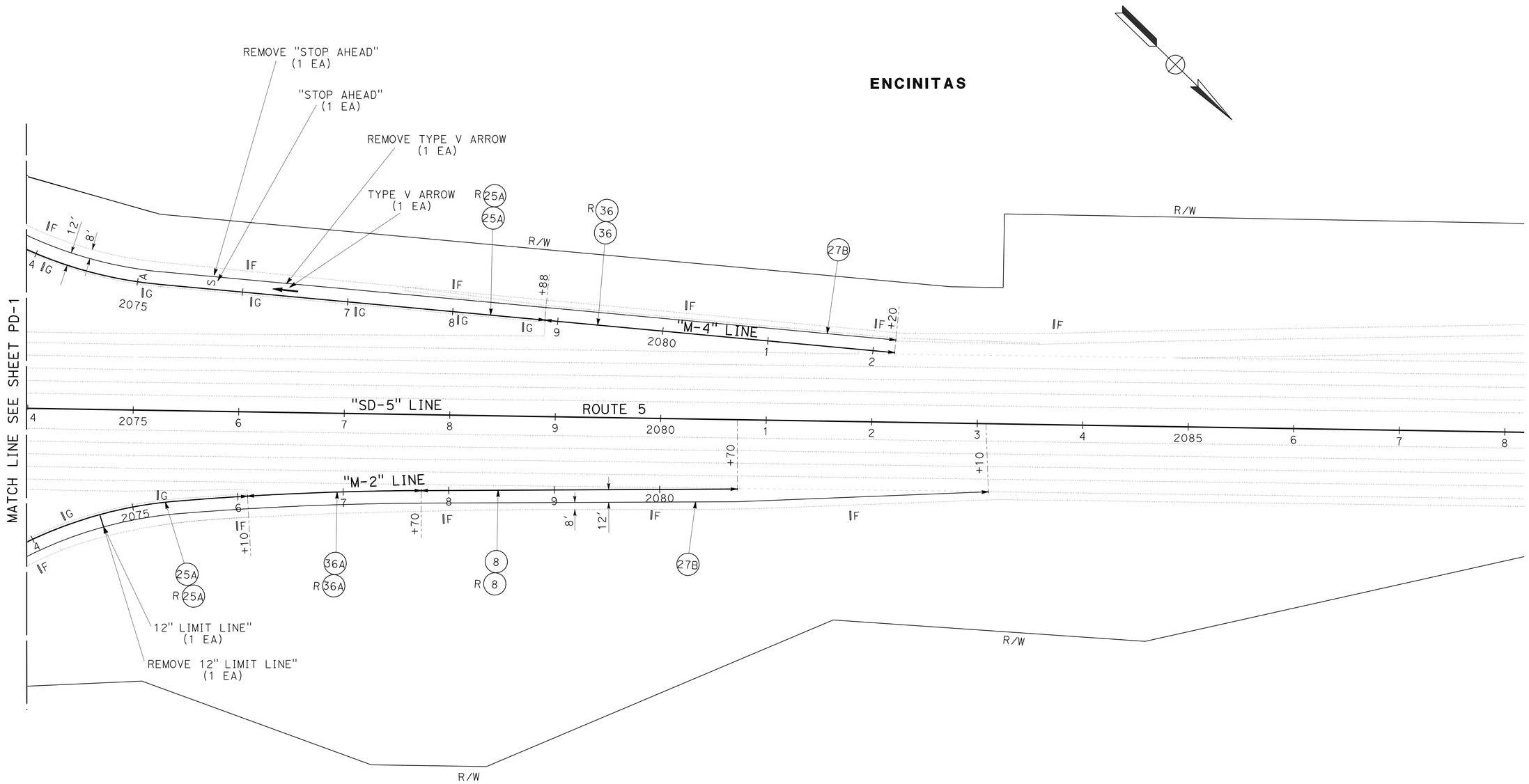

THIS PLAN ACCURATE FOR PAVEMENT DELINEATION WORK ONLY

PAVEMENT DELINEATION PLAN

SCALE: 1"=50'

PD-2

STATE OF CALIFORNIA - DEPARTMENT OF TRANSPORTATION
Caltrans® **TRAFFIC DESIGN**

FUNCTIONAL SUPERVISOR: CAMILLE ABOUFADEL
CALCULATED-DESIGNED BY: NOEL TAPIA
CHECKED BY: SHAHIN ADIBI
REVISED BY / DATE REVISED

LAST REVISION 03-18-11
DATE PLOTTED => 21-MAR-2011
TIME PLOTTED => 14:48

Dist	COUNTY	ROUTE	POST MILES TOTAL PROJECT	SHEET No.	TOTAL SHEETS
11	SD	5	R38.5/R38.9	16	43

03-18-11
REGISTERED CIVIL ENGINEER DATE

03-21-11
PLANS APPROVAL DATE

REGISTERED PROFESSIONAL ENGINEER
SHAHIN T ADIBI
No. 54839
Exp. 06/30/12
CIVIL
STATE OF CALIFORNIA

THE STATE OF CALIFORNIA OR ITS OFFICERS OR AGENTS SHALL NOT BE RESPONSIBLE FOR THE ACCURACY OR COMPLETENESS OF SCANNED COPIES OF THIS PLAN SHEET.

DETAIL 8/10 COMBINATION

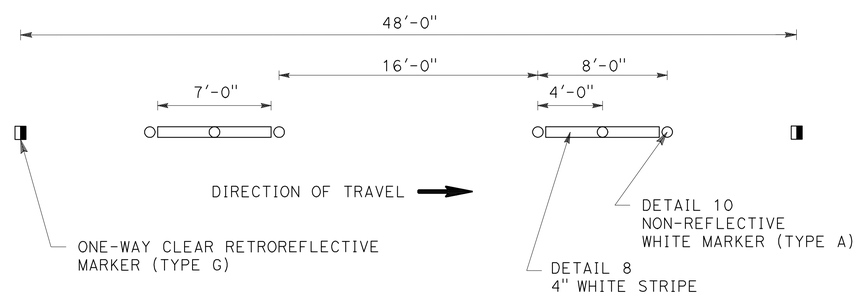

PAVEMENT DELINEATION DETAIL

NO SCALE

PDD-1

REVISED BY	DATE REVISED

NOEL TAPIA	SHAHIN ADIBI
CALCULATED-DESIGNED BY	CHECKED BY

FUNCTIONAL SUPERVISOR: CAMILLE ABOUFADEL

STATE OF CALIFORNIA - DEPARTMENT OF TRANSPORTATION
Caltrans® TRAFFIC DESIGN

LAST REVISION 03-18-11 | DATE PLOTTED => 21-MAR-2011 | TIME PLOTTED => 14:48

Dist	COUNTY	ROUTE	POST MILES TOTAL PROJECT	SHEET No.	TOTAL SHEETS
11	SD	5	R38.5/R38.9	17	43

REGISTERED CIVIL ENGINEER 03-18-11 DATE

03-21-11
PLANS APPROVAL DATE

REGISTERED PROFESSIONAL ENGINEER SHAHIN T ADIBI No. 54839 Exp. 06/30/12 CIVIL STATE OF CALIFORNIA

THE STATE OF CALIFORNIA OR ITS OFFICERS OR AGENTS SHALL NOT BE RESPONSIBLE FOR THE ACCURACY OR COMPLETENESS OF SCANNED COPIES OF THIS PLAN SHEET.

PAVEMENT MARKER AND TRAFFIC STRIPE SUMMARY

ROUTE	SHEET	DETAIL No.	PAVEMENT MARKER (EA) NON-REFLECTIVE TYPE A WHITE	RETROREFLECTIVE TYPE G CLEAR	RETROREFLECTIVE TYPE H YELLOW	THERMOPLASTIC TRAFFIC STRIPE (LF) 4" SOLID	4" 17'-7' BROKEN	8" SOLID	8" 12'-3' BROKEN	REMARKS
5	PD-1	25A			141	3212				
		27B				3778				
		36		31				800		
		36A		7				140		
		37B		24					320	
		38		19				380		
		38A						280		
		8/10	52	12			410			
	PD-2	25A			29	620				
		27B				1700				
		36		18				332		
		36A		8				160		
		8					280			
	-	-	8							AT EXISTING IRRIGATION CROSSOVERS
TOTAL			60	289		9310	690	2092	320	

DELINEATOR (CLASS 1)

SHEET	TYPE	QUANTITY (EA)
PD-1	G,G, F, G	54
PD-2	F, G	19
	TOTAL	73

REMOVE PAVEMENT MARKER (N)

ROUTE	SHEET	TYPE	QUANTITY (EA)
5	PD-1	A, G, H	171
5	PD-2	G, H	57

(N) = NOT A SEPARATE PAY ITEM, FOR INFORMATION ONLY.

THERMOPLASTIC PAVEMENT MARKING

ROUTE	LOCATION	LIMIT LINE 12 In SQFT	ARROW TYPE I (24') SQFT	ARROW TYPE I (10') SQFT	ARROW TYPE III(R) SQFT	ARROW TYPE IV(R) SQFT	ARROW TYPE III(L) SQFT	ARROW TYPE V SQFT	SIGNAL SQFT	AHEAD SQFT	STOP SQFT
5	PD-I	66.0	248.0	28.0	84.0	30.0	168.0	33.0	32.0	31.0	
5	PD-2	12.0						33.0		31.0	22.0
TOTAL		818.0									

REMOVE YELLOW PAINTED TRAFFIC STRIPE (HAZARDOUS WASTE)

SHEET	DETAIL No.	LENGTH (LF)
PD-1	25A	2000
PD-2	25A	620
	TOTAL	2620

REMOVE TRAFFIC STRIPE

SHEET	DETAIL No.	REMOVE PAINTED TRAFFIC STRIPE (LF)	REMOVE THERMOPLASTIC TRAFFIC STRIPE (LF) 4" STRIPE	8" STRIPE	REMARKS
PD-1	27B	400			
	36			240	L=120
	36A			280	L=140
	37B			200	L=820
	38A			160	L= 80
PD-2	36			664	L=332
	8		82		L=280
	36A			320	L=160
TOTAL		400	82	1864	

REMOVE THERMOPLASTIC PAVEMENT MARKING

ROUTE	SHEET	AREA (SQFT)	REMARKS
5	PD-1	307.0	
5	PD-2	98.0	
TOTAL		405.0	

PAVEMENT DELINEATION QUANTITIES

PDQ-1

REVISED BY | DATE REVISED
NOEL TAPIA | SHAHIN ADIBI
CALCULATED-DESIGNED BY | CHECKED BY
FUNCTIONAL SUPERVISOR
CAMILLE ABOUFADEL

STATE OF CALIFORNIA - DEPARTMENT OF TRANSPORTATION
Caltrans TRAFFIC DESIGN

LAST REVISION 03-18-11 | DATE PLOTTED => 21-MAR-2011 | TIME PLOTTED => 14:48

Dist	COUNTY	ROUTE	POST MILES TOTAL PROJECT	SHEET No.	TOTAL SHEETS
11	SD	5	R38.5/R38.9	18	43

REGISTERED CIVIL ENGINEER 03-18-11 DATE

03-21-11
PLANS APPROVAL DATE

REGISTERED PROFESSIONAL ENGINEER
SHAHIN T ADIBI
No. 54839
Exp. 06/30/12
CIVIL
STATE OF CALIFORNIA

THE STATE OF CALIFORNIA OR ITS OFFICERS OR AGENTS SHALL NOT BE RESPONSIBLE FOR THE ACCURACY OR COMPLETENESS OF SCANNED COPIES OF THIS PLAN SHEET.

LEGEND:

- (XXX) = ROADSIDE SIGN
- RL (XXX) = RELOCATE ROADSIDE SIGN
- RM (XXX) = REMOVE ROADSIDE SIGN
- RS (XXX) = RESET ROADSIDE SIGN
- S/S (XXX) = STRAP AND SADDLE BRACKET METHOD ROADSIDE SIGN
- = ROADSIDE SIGN (1-POST)
- = STRAP AND SADDLE SIGN POST
- = ROADSIDE SIGN (2-POST)

NOTE:

FOR ACCURATE RIGHT OF WAY AND ACCESS DATA, CONTACT RIGHT OF WAY ENGINEERING AT THE DISTRICT OFFICE.

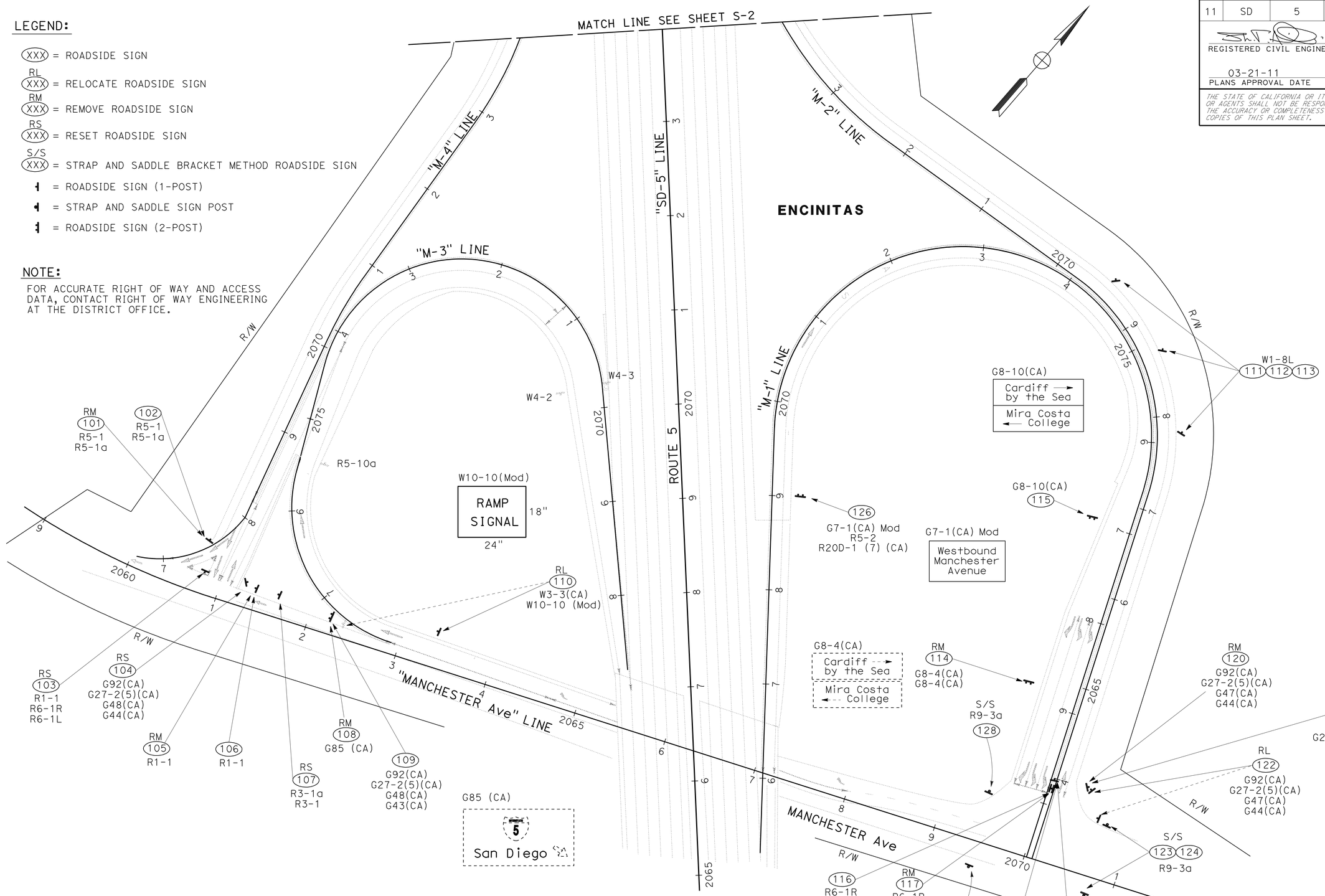

THIS PLAN ACCURATE FOR SIGN WORK ONLY

SIGN PLAN

SCALE: 1"=50'

S-1

STATE OF CALIFORNIA - DEPARTMENT OF TRANSPORTATION
Caltrans® TRAFFIC DESIGN

FUNCTIONAL SUPERVISOR: CAMILLE ABOUFADEL
CALCULATED-DESIGNED BY: NOEL TAPIA
CHECKED BY: SHAHIN ADIBI
REVISED BY / DATE REVISED

LAST REVISION 03-21-11 | DATE PLOTTED => 21-MAR-2011 | TIME PLOTTED => 15:12

Dist	COUNTY	ROUTE	POST MILES TOTAL PROJECT	SHEET No.	TOTAL SHEETS
11	SD	5	R38.5/R38.9	19	43

03-18-11
REGISTERED CIVIL ENGINEER DATE

03-21-11
PLANS APPROVAL DATE

REGISTERED PROFESSIONAL ENGINEER
SHAHIN T ADIBI
No. 54839
Exp. 06/30/12
CIVIL
STATE OF CALIFORNIA

THE STATE OF CALIFORNIA OR ITS OFFICERS OR AGENTS SHALL NOT BE RESPONSIBLE FOR THE ACCURACY OR COMPLETENESS OF SCANNED COPIES OF THIS PLAN SHEET.

NOTE:

FOR ACCURATE RIGHT OF WAY AND ACCESS DATA,
CONTACT RIGHT OF WAY ENGINEERING AT THE DISTRICT OFFICE.

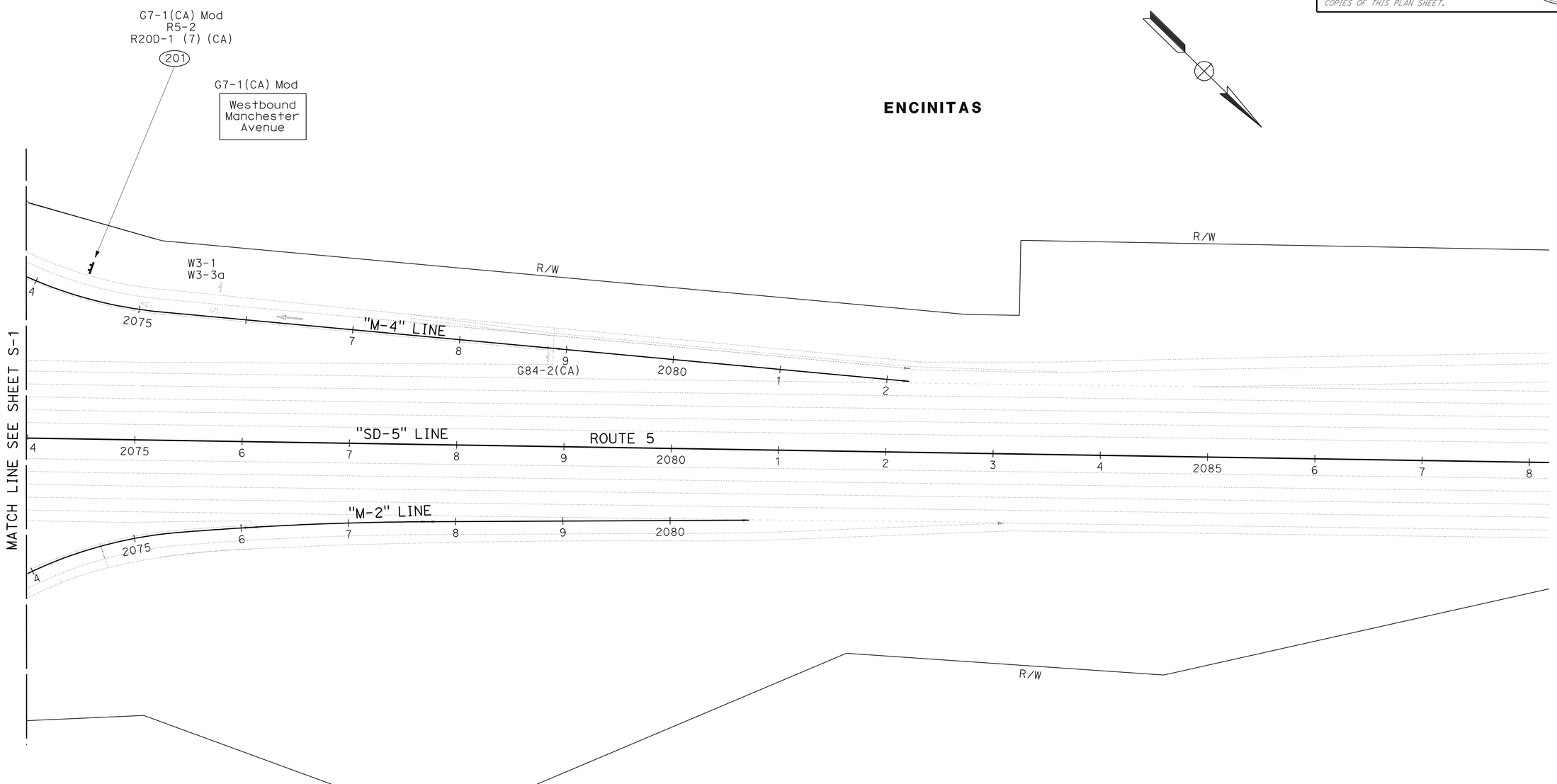

THIS PLAN ACCURATE FOR SIGN WORK ONLY

SIGN PLAN

SCALE: 1"=50'

S-2

STATE OF CALIFORNIA - DEPARTMENT OF TRANSPORTATION
Caltrans® **TRAFFIC DESIGN**

FUNCTIONAL SUPERVISOR: CAMILLE ABOUFADEL
CALCULATED-DESIGNED BY: SHAHIN ADIBI
CHECKED BY
REVISED BY: NOEL TAPIA
DATE REVISED

LAST REVISION 03-21-11
DATE PLOTTED => 21-MAR-2011
TIME PLOTTED => 15:00

Dist	COUNTY	ROUTE	POST MILES TOTAL PROJECT	SHEET No.	TOTAL SHEETS
11	SD	5	R38.5/R38.9	20	43

03-18-11
REGISTERED CIVIL ENGINEER DATE

03-21-11
PLANS APPROVAL DATE

REGISTERED PROFESSIONAL ENGINEER
SHAHIN T ADIBI
No. 54839
Exp. 06/30/12
CIVIL
STATE OF CALIFORNIA

THE STATE OF CALIFORNIA OR ITS OFFICERS OR AGENTS SHALL NOT BE RESPONSIBLE FOR THE ACCURACY OR COMPLETENESS OF SCANNED COPIES OF THIS PLAN SHEET.

LEGEND

Caps - CAPITAL
Num - NUMBER
U/L - UPPER AND LOWER CASE

G8-10(CA) 115

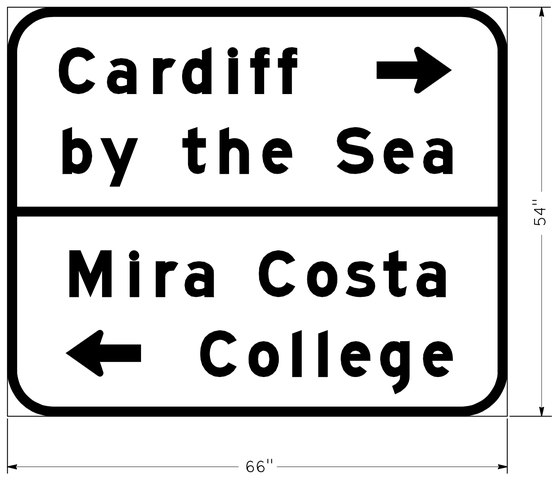

G7-1(CA) Mod 201 126

LEGEND				ARROW	
LINE No.	U/L	Caps	Num	Deg	LENGTH
1	6" & 4-1/2" E (M)			0	10"
2	6" & 4-1/2" E (M)				
3	6" & 4-1/2" E (M)				
4	6" & 4-1/2" E (M)			180	10"

LEGEND				ARROW	
LINE No.	U/L	Caps	Num	Deg	LENGTH
1	6" & 4-1/2" E (M)				
2	6" & 4-1/2" E (M)				
3	6" & 4-1/2" E (M)				

SIGN DETAIL

NO SCALE **SD-1**

REVISED BY	DATE REVISED
NOEL TAPIA	SHAHIN ADIBI

CALCULATED-DESIGNED BY	CHECKED BY

FUNCTIONAL SUPERVISOR: CAMILLE ABOUFADEL

STATE OF CALIFORNIA - DEPARTMENT OF TRANSPORTATION
Caltrans® TRAFFIC DESIGN

LAST REVISION 03-21-11 | DATE PLOTTED => 21-MAR-2011 | TIME PLOTTED => 14:49

Dist	COUNTY	ROUTE	POST MILES TOTAL PROJECT	SHEET No.	TOTAL SHEETS
11	SD	5	R38.5/R38.9	21	43

REGISTERED CIVIL ENGINEER 03-18-11 DATE

03-21-11
PLANS APPROVAL DATE

REGISTERED PROFESSIONAL ENGINEER SHAHIN T ADIBI No. 54839 Exp. 06/30/12 CIVIL STATE OF CALIFORNIA

THE STATE OF CALIFORNIA OR ITS OFFICERS OR AGENTS SHALL NOT BE RESPONSIBLE FOR THE ACCURACY OR COMPLETENESS OF SCANNED COPIES OF THIS PLAN SHEET.

ROADSIDE SIGN QUANTITIES

NOTES:

1. FEDERAL MANUAL ON UNIFORM TRAFFIC CONTROL DEVICES SIGN CODES ARE SHOWN UNLESS DESIGNATED BY (CA) INDICATING STANDARD CALIFORNIA SIGN SPECIFICATIONS.
2. MINIMUM POST LENGTHS WERE CALCULATED ASSUMING A LEVEL GROUND SURFACE FROM THE EP. ENSURE "C" DIMENSION IS MET. POST LENGTHS MAY VARY DUE TO SITE CONDITIONS.
3. EXACT LOCATIONS OF SIGNS AND POSTS SHALL BE DETERMINED BY THE ENGINEER.
4. REFER TO "FURNISH ROADSIDE SIGN PANEL" CHART FOR FURTHER INFORMATION.

*TO BOTTOM OF LOWER PANEL ON MULTIPLE SIGN INSTALLATIONS.

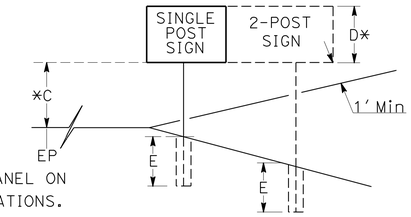

SIGN No.	SHEET	CODE	PANEL SIZE Horiz	PANEL SIZE Vert	D	C	E	Min POST LENGTH	POST SIZE 4X4	POST SIZE 4X6	POST SIZE 6X6	POST SIZE 6X8	ROADSIDE SIGN ONE POST	ROADSIDE SIGN TWO POST	RESET ROADSIDE SIGN	RELO-CATE ROADSIDE SIGN	REMOVE ROADSIDE SIGN	INSTALL SIGN (STRAP& SADDLE BRACKET METHOD)	REMARKS
			In X In		LF	LF	LF	LF	In X In				EA	EA	EA	EA	EA	EA	
101	S-1	R5-1	36x36														1		
		R5-1a	36x24																
102		R5-1	36x36		5.00	7.0	4.5	16.50		X			1						
		R5-1a	36x24																
103		R1-1	30x30												1				
		R6-1R	36x12																
		R6-1L	36x12																
104		G92 (CA)	48x30												1				
		G27-2 (5) (CA)	24x24																
		G48 (CA)	21x9																
		G44 (CA)	21x15																
105		R1-1	30x30														1		
106		R1-1	30x30		2.50	7.0	4.5	14.00	X				1						
107		R3-1a	36x24												1				
		R3-1	24x24																
108		G85 (CA)	102x54														1		
109		G92 (CA)	48x30		7.50	2.0	4.5	14.00		X				1					
		G27-2 (5) (CA)	24x24																
		G48 (CA)	21x9																
		G43 (CA)	21x15																
110		W3-3 (CA)	30x30													1			
		W10-10 (Mod)	24x18																
111		W1-8L	18x24		2.00	7.0	3.3	12.50	X				1						
112		W1-8L	18x24		2.00	7.0	3.5	12.50	X				1						
113		W1-8L	18x24		2.00	7.0	3.5	12.50	X				1						
114		G8-4(CA)	114x36														1		
		G8-4(CA)	102x36																
115		G8-10 (CA)	66x54		4.50	7.0	4.5	16.00			X			1					
116		R6-1R	36x12		1.00	2.00	3.5	6.5		X			1						
		R6-1L	36x12																
117		R6-1R	36x12														1		
		R6-1L	36x12																
118		R4-7	24x30		5.00	7.0	4.5	16.50		X			1						
		R4-7b	24x30																
		Type N (CA)	24x24																
119		R4-7	24x30														1		
		R4-7b	24x30																
		Type N (CA)	24x24																
120		G92 (CA)	48x30														1		
		G27-2 (5) (CA)	24x24																
		G47 (CA)	21x9																
		G44 (CA)	21x15																
121		G92 (CA)	48x30		7.50	2.0	4.5	14.00		X			1						
		G27-2 (5) (CA)	24x24																
		G47 (CA)	21x9																
		G44 (CA)	21x15																
122		G92 (CA)	48x30													1			
		G27-2 (5) (CA)	24x24																
		G47 (CA)	21x9																
		G44 (CA)	21x15																
123		R9-3a	18x18															1	
124		R9-3a	18x18															1	
								SUB-TOTAL	1				8	2	3	2	7	2	

SIGN QUANTITIES

SQ-1

STATE OF CALIFORNIA - DEPARTMENT OF TRANSPORTATION
Caltrans TRAFFIC DESIGN

FUNCTIONAL SUPERVISOR: CAMILLE ABOUFADEL
CALCULATED-DESIGNED BY: NOEL TAPIA
CHECKED BY: SHAHIN ADIBI
REVISED BY
DATE REVISED

LAST REVISION 03-21-11
DATE PLOTTED => 21-MAR-2011
TIME PLOTTED => 14:49

Dist	COUNTY	ROUTE	POST MILES TOTAL PROJECT	SHEET No.	TOTAL SHEETS
11	SD	5	R38.5/R38.9	22	43

REGISTERED CIVIL ENGINEER 03-18-11 DATE

03-21-11
PLANS APPROVAL DATE

REGISTERED PROFESSIONAL ENGINEER
SHAHIN T ADIBI
No. 54839
Exp. 06/30/12
CIVIL
STATE OF CALIFORNIA

THE STATE OF CALIFORNIA OR ITS OFFICERS OR AGENTS SHALL NOT BE RESPONSIBLE FOR THE ACCURACY OR COMPLETENESS OF SCANNED COPIES OF THIS PLAN SHEET.

ROADSIDE SIGN QUANTITIES

NOTES:

1. FEDERAL MANUAL ON UNIFORM TRAFFIC CONTROL DEVICES SIGN CODES ARE SHOWN UNLESS DESIGNATED BY (CA) INDICATING STANDARD CALIFORNIA SIGN SPECIFICATIONS.
2. MINIMUM POST LENGTHS WERE CALCULATED ASSUMING A LEVEL GROUND SURFACE FROM THE EP. ENSURE "C" DIMENSION IS MET. POST LENGTHS MAY VARY DUE TO SITE CONDITIONS.
3. EXACT LOCATIONS OF SIGNS AND POSTS SHALL BE DETERMINED BY THE ENGINEER.
4. REFER TO "FURNISH ROADSIDE SIGN PANEL" CHART FOR FURTHER INFORMATION.

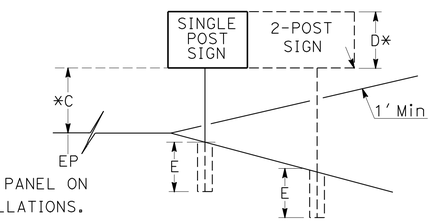

*TO BOTTOM OF LOWER PANEL ON MULTIPLE SIGN INSTALLATIONS.

SIGN No.	SHEET	CODE	PANEL SIZE Horiz	PANEL SIZE Vert	D	C	E	Min POST LENGTH	POST SIZE 4X4	POST SIZE 4X6	POST SIZE 6X6	POST SIZE 6X8	ROADSIDE SIGN ONE POST	ROADSIDE SIGN TWO POST	RESET ROADSIDE SIGN	RELO-CATE ROADSIDE SIGN	REMOVE ROADSIDE SIGN	INSTALL SIGN (STRAP& SADDLE BRACKET METHOD)	REMARKS
			In X In		LF	LF	LF	LF	In X In				EA	EA	EA	EA	EA	EA	
126	S-1	G7-1 (CA) Mod	54x30		6.50	7.0	4.5	18.00			X			1					
		R5-2	36x36																
		R20D-1 (7) (CA)	36x12																
201	S-2	G7-1 (CA) Mod	54x30		6.50	7.0	4.5	18.00			X			1					
		R5-2	36x36																
		R20D-1 (7) (CA)	36x12																
128	S-1	R9-3a	18x18															1	
130	S-1	R9-3a	18x18															1	
												SUB-TOTAL 2		2				2	
												TOTAL	8	4	3	2	7	4	

SIGN QUANTITIES
SQ-2

STATE OF CALIFORNIA - DEPARTMENT OF TRANSPORTATION
Caltrans TRAFFIC DESIGN

FUNCTIONAL SUPERVISOR: CAMILLE ABOUFADEL
CALCULATED-DESIGNED BY: NOEL TAPIA
CHECKED BY: SHAHIN ADIBI
REVISED BY
DATE REVISED

LAST REVISION 03-21-11
DATE PLOTTED => 21-MAR-2011
TIME PLOTTED => 14:49

Dist	COUNTY	ROUTE	POST MILES TOTAL PROJECT	SHEET No.	TOTAL SHEETS
11	SD	5	R38.5/R38.9	23	43

REGISTERED CIVIL ENGINEER 03-18-11 DATE

03-21-11
PLANS APPROVAL DATE

REGISTERED PROFESSIONAL ENGINEER
SHAHIN T ADIBI
No. 54839
Exp. 06/30/12
CIVIL
STATE OF CALIFORNIA

THE STATE OF CALIFORNIA OR ITS OFFICERS OR AGENTS SHALL NOT BE RESPONSIBLE FOR THE ACCURACY OR COMPLETENESS OF SCANNED COPIES OF THIS PLAN SHEET.

NOTES:

1. FEDERAL MANUAL ON UNIFORM TRAFFIC CONTROL DEVICES SIGN CODES ARE SHOWN UNLESS DESIGNATED BY (CA) INDICATING STANDARD CALIFORNIA SIGN SPECIFICATIONS.
2. PROTECTIVE OVERLAY DESIGNATIONS ARE AS FOLLOWS: SOC-SPRAY-ON COATING, SF-STANDARD FILM, AND PF-PREMIUM FILM.
3. REFER TO "ROADSIDE SIGN QUANTITIES" CHART FOR FURTHER INFORMATION.
4. GREEN - Grn, WHITE - Wht, BLACK - Blk, BLUE - Blu, YELLOW - Ylw, BROWN - Brn, RED - Red, ORANGE - Org

FURNISH ROADSIDE SIGN PANEL

SIGN No.	CODE	PANEL SIZE Horiz (INCHES X INCHES)	PANEL SIZE Vert (INCHES X INCHES)	BACKGROUND SHEETING COLOR	BACKGROUND RETRO-REFLECTIVE ASTM TYPE	LEGEND SHEETING COLOR	LEGEND REFLECTIVE ASTM TYPE	LEGEND BLACK (NON-REFLECTIVE)	SIGN PANEL SINGLE SHEET ALUMINUM (SQFT) UNFRAMED 0.063 INCHES	SIGN PANEL PREMIUM PROTECTIVE OVERLAY FILM	REMARKS
102	R5-1	36x36		Wht	VII	Red	VII		9.00	x	
	R5-1a	36x24		Red	VII	Wht	VII		6.00	x	
106	R1-1	30x30		Red	VII	Wht	VII		6.25	x	
109	G92 (CA)	48x30		Grn	IV	Wht	IV		10.00	x	
	G27-2 (5) (CA)	24x24		Grn	IV	Wht	IV		4.00	x	
	G48 (CA)	21x9		Grn	IV	Wht	IV		1.32	x	
	G43 (CA)	21x15		Grn	IV	Wht	IV		2.19	x	
110	W3-3 (CA)	30x30		Ylw	VII	Red/Grn/Blk	VII	X	6.25	x	
	W10-10 (Mod)	24x18		Ylw	VII	Blk		X	3.00	x	
111	W1-8L	18x24		Ylw	VII	Blk		X	3.00	x	
112	W1-8L	18x24		Ylw	VII	Blk		X	3.00	x	
113	W1-8L	18x24		Ylw	VII	Blk		X	3.00	x	
115	G8-10 (CA)	66x54		Grn	IV	Wht	IV		24.75	x	
116	R6-1R	36x12		Wht	IV	Blk		X	3.00	x	
	R6-1L	36x12		Wht	IV	Blk		X	3.00	x	
118	R4-7	24x30		Wht	IV	Blk		X	5.00	x	
	R4-7b	24x30		Wht	IV	Blk		X	5.00	x	
	Type N (CA)	24x24		Ylw	VII				4.00	x	
121	G92 (CA)	48x30		Grn	IV	Wht	IV		10.00	x	
	G27-2 (5) (CA)	24x24		Grn	IV	Wht	IV		4.00	x	
	G47 (CA)	21x9		Grn	IV	Wht	IV		1.32	x	
	G44 (CA)	21x15		Grn	IV	Wht	IV		2.19	x	
123	R9-3a	18x18		Wht	VII	Red/Blk	VII	X	2.25	x	
124	R9-3a	18x18		Wht	VII	Red/Blk	VII	X	2.25	x	
126	G7-1 (CA) Mod	54x30		Grn	IV	Wht	IV		11.25	x	
	R5-2	36x36		Wht	VII	Red/Blk	VII	X	9.00	x	
	R20D-1(7) (CA)	36x12		Wht	VII	Blk	VII	X	3.00	x	
201	G7-1 (CA) Mod	54x30		Grn	IV	Wht	IV		11.25	x	
	R5-2	36x36		Wht	VII	Red/Blk	VII	X	9.00	x	
	R20D-1(7) (CA)	36x12		Wht	VII	Blk	VII	X	3.00	x	
128	R9-3a	18x18		Wht	VII	Red/Blk	VII	X	2.25	x	
130	R9-3a	18x18		Wht	VII	Red/Blk	VII	X	2.25	x	
							TOTAL		174.77		

SIGN QUANTITIES

SQ-3

STATE OF CALIFORNIA - DEPARTMENT OF TRANSPORTATION
Caltrans TRAFFIC DESIGN

FUNCTIONAL SUPERVISOR: CAMILLE ABOUFADEL
CALCULATED-DESIGNED BY: NOEL TAPIA
CHECKED BY: SHAHIN ADIBI
REVISED BY
DATE REVISED

LAST REVISION 03-21-11
DATE PLOTTED => 21-MAR-2011
TIME PLOTTED => 14:49

Dist	COUNTY	ROUTE	POST MILES TOTAL PROJECT	SHEET No.	TOTAL SHEETS
11	SD	5	R38.5/R38.9	24	43

REGISTERED CIVIL ENGINEER 03-17-11 DATE

03-21-11
PLANS APPROVAL DATE

REGISTERED PROFESSIONAL ENGINEER FELIZARDO BAGCUS No. C63551 Exp. 09-30-12 CIVIL STATE OF CALIFORNIA

THE STATE OF CALIFORNIA OR ITS OFFICERS OR AGENTS SHALL NOT BE RESPONSIBLE FOR THE ACCURACY OR COMPLETENESS OF SCANNED COPIES OF THIS PLAN SHEET.

NOTES:

* SEE ROADWAY QUANTITIES FOR ITEM TOTAL

ROADWAY QUANTITIES

SHEET	BEGIN STATION	BEGIN LINE	END STATION	END LINE	COLD PLANE AC PAVEMENT 0.30' (SQYD)	COLD PLANE AC PAVEMENT 0.15' (SQYD)	SLURRY SEAL (TON)	HMA (TYPE A) (TON)	ASPHALTIC EMULSION (FOG SEAL COAT) (TON)	TACK COAT (TON)	ROADWAY EXCAVATION (CY)
L-1	2067+28.25	M-4	2067+58.49	M-4	84.44		1.53	16.04	.04	.03	
	2067+58.49	M-4	2068+18.41	M-4			3.70		.03		
	2068+18.41	M-4	2068+88.46	M-4			3.32		.02		
	2068+88.46	M-4	2071+28.54	M-4			7.40		.19		
	2071+28.54	M-4	2073+88.36	M-4			8.13	19.25	.10	.04	3.40
	2067+10.35	SD-5	2070+21.39	SD-5	915.00		3.34	138.17	.06	.21	
	2070+21.00	M-3	2075+57.53	M-3			25.78		.33		
	2075+57.53	M-3	2077+85.55	M-3	314.44		1.02	59.84	.06	.09	
	2068+78.23	M-1	2076+54.00	M-1	1,034.68		4.32	196.59	.14	.31	
	2076+54.00	M-1	2079+87.92	M-1		1,312.22		124.66	.05	0.31	
	2063+83.34	M-2	2064+16.34	M-2			1.01		.01		
	2064+16.34	M-2	2073+93.61	M-2			29.85		.36		
L-2	2073+88.36	M-4	2076+93.91	M-4			10.57	22.59	.10	.05	4.15
	2076+93.91	M-4	2082+38.35	M-4			18.65		.20		
	2073+93.61	M-2	2080+73.32	M-2			23.24		.25		
	* HMA QUANTITIES UNDER DIKE							5.90	.05		
			SUB-TOTALS		2,348.56	1,312.22	141.86	583.04	1.99	1.04	7.55
			TOTALS		3660.78		141.86	583.04	1.99	1.04	7.55

MINOR CONCRETE (MISCELLANEOUS CONSTRUCTION)

SHEET	LOCATION	CY	REMARKS
L-1	Sta 2079+87.93 "M-1"	0.8	PEDESTRIAN REFUGE AREA
L-1	Sta 2063+83.34 "M-2"	0.8	PEDESTRIAN REFUGE AREA
	TOTAL	1.6	

MISCELLANEOUS IRON AND STEEL

SHEET	ITEM	SIZE	LB	REMARKS
L-1	STEEL PLATE COVER	4' WIDE x 16' LONG X 3/4" THICK	1,840	AT EXISTING CONCRETE DITCH
		TOTAL	1,840	

DIKE QUANTITIES

SHEET	STATION BEGIN	LINE	SIDE	END	LINE	SIDE	PLACE HMA DIKE TYPE F LENGTH (LF)	TYPE C LENGTH (LF)	TYPE E LENGTH (LF)	MINOR HMA (TON)	REMOVE AC DIKE LENGTH (LF)	HMA (TYPE A) SHOULDER PAD UNDER DIKE (TON)	ASPHALTIC EMULSION (FOG SEAL COAT) DIKE (TON)
L-1	2071+28.54	M-4	R+	2073+88.36	M-4	R+			260	6.76		2.60	.02
L-2	2073+88.36	M-4	R+	2076+93.91	M-4	R+			306	7.96		3.30	.03
↓	2074+35.37	M-4	L+	2076+97.46	M-4	L+	262			3.45	262		
↓	2076+97.46	M-4	L+	2077+70.74	M-4	L+		74		0.56	74		
						SUBTOTALS	262	74	566	18.73	336		
						TOTAL		902		18.73	336	5.90 *	.05 *

METAL BEAM GUARD RAILING

MBGR No. ⬡	SHEET	LINE	LAYOUT TYPE	ALTERNATIVE IN-LINE TERMINAL SYSTEM (EA)	METAL BEAM GUARD RAILING (LF)	END ANCHOR ASSEMBLY (TYPE SFT) (EA)	GUARD RAILING DELINEATOR (TYPE F) (EA)
1	L-2	"M-4" LINE	16A	1	262	1	20
		TOTAL		1	262	1	20

REMOVE CONCRETE CURB

SHEET	STATION BEGIN	LINE	SIDE	END	LINE	SIDE	B-2 CURB LENGTH (LF)
L-1	2071+28.54	M-4	R+	2073+88.36	M-4	R+	260
L-2	2073+88.36	M-4	R+	2076+93.91	M-4	R+	306
						TOTAL LENGTH	566

SUMMARY OF QUANTITIES
Q-1

STATE OF CALIFORNIA - DEPARTMENT OF TRANSPORTATION
Caltrans MINOR PROJECTS

FUNCTIONAL SUPERVISOR: CHRIS M. THOMAS
CALCULATED-DESIGNED BY: FELIZARDO BAGCUS
CHECKED BY: RICARDO PADILLA
REVISED BY / DATE REVISED

LAST REVISION 03-18-11 | DATE PLOTTED => 21-MAR-2011 | TIME PLOTTED => 14:49

Dist	COUNTY	ROUTE	POST MILES TOTAL PROJECT	SHEET No.	TOTAL SHEETS
11	SD	5	R38.5/R38.9	25	43

REGISTERED ELECTRICAL ENGINEER — DATE 03-17-11

03-21-11
PLANS APPROVAL DATE

REGISTERED PROFESSIONAL ENGINEER — DANNY MCCLURE — No. 16074 — Exp. 12-31-11 — ELECTRICAL — STATE OF CALIFORNIA

THE STATE OF CALIFORNIA OR ITS OFFICERS OR AGENTS SHALL NOT BE RESPONSIBLE FOR THE ACCURACY OR COMPLETENESS OF SCANNED COPIES OF THIS PLAN SHEET.

NOTE:

FOR ACCURATE RIGHT OF WAY AND ACCESS DATA, CONTACT RIGHT OF WAY ENGINEERING AT THE DISTRICT OFFICE.

NOTES:

1 - Exist SIGNAL, LIGHTING STANDARD AND ASSOCIATED EQUIPMENT TO REMAIN UNLESS OTHERWISE NOTED.

2 - Exist CONDUIT, PULL BOXES AND DETECTOR LOOPS TO REMAIN UNLESS OTHERWISE NOTED.

3 - RS Exist 170 CONTROLLER ASSEMBLY.

4 - RC Exist PULL BOX, SEE SHEET E-2.

5 - AB Exist CONDUIT, REUSE sic AS NOTED. SEE SHEET E-2.

6 - AB Exist LOOPS. RC CORRESPONDING dlc

7 - RC Exist PEDESTRIAN BARRICADE AND SIGN PANEL.

8 - RC 180 W lps LUMINAIRE.

9 - RC Exist 1 dlc.

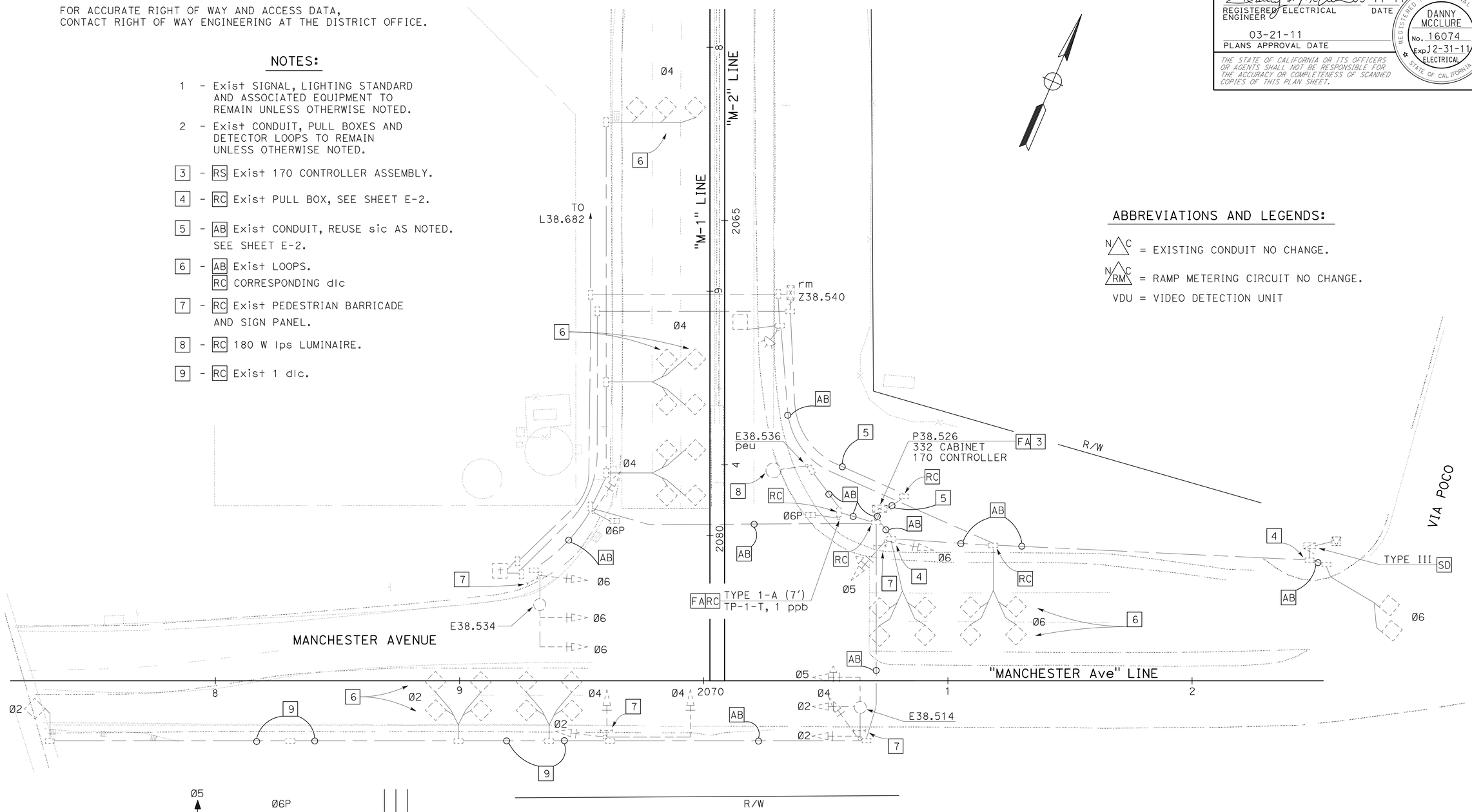

ABBREVIATIONS AND LEGENDS:

N C = EXISTING CONDUIT NO CHANGE.

N C RM = RAMP METERING CIRCUIT NO CHANGE.

VDU = VIDEO DETECTION UNIT

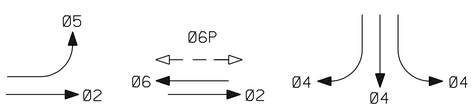

TRAFFIC PHASE DIAGRAM

STEADY DEMAND SEQUENCE →

THIS PLAN IS ACCURATE FOR ELECTRICAL WORK ONLY.

ROUTE 5 NB ON/OFF RAMP AT MANCHESTER AVENUE

SIGNAL AND LIGHTING (EXISTING AND REMOVE)

SCALE: 1" = 20'

E-1

STATE OF CALIFORNIA - DEPARTMENT OF TRANSPORTATION
Caltrans® TRAFFIC ELECTRICAL

FUNCTIONAL SUPERVISOR: DALE WILSON
CALCULATED-DESIGNED BY: HUA SAWAYA
CHECKED BY: ENRIQUE P. BERNAL
REVISED BY / DATE REVISED

LAST REVISION 03-18-11 | DATE PLOTTED => 21-MAR-2011 | TIME PLOTTED => 14:49

Dist	COUNTY	ROUTE	POST MILES TOTAL PROJECT	SHEET No.	TOTAL SHEETS
11	SD	5	R38.5/R38.9	26	43

REGISTERED ELECTRICAL ENGINEER — DATE 03-17-11

03-21-11
PLANS APPROVAL DATE

REGISTERED PROFESSIONAL ENGINEER — DANNY MCCLURE — No. 16074 — Exp. 12-31-11 — ELECTRICAL — STATE OF CALIFORNIA

THE STATE OF CALIFORNIA OR ITS OFFICERS OR AGENTS SHALL NOT BE RESPONSIBLE FOR THE ACCURACY OR COMPLETENESS OF SCANNED COPIES OF THIS PLAN SHEET.

NOTE:

FOR ACCURATE RIGHT OF WAY AND ACCESS DATA,
CONTACT RIGHT OF WAY ENGINEERING AT THE DISTRICT OFFICE.

CONDUIT NOTES(E-2 AND E-3):

10 - 3"C, 3#14(PEU)
2#14(TDC)
2#8 (LTG)
2#8 (RM)
2#6 (SIG)
2 DLC

11 - Exist 2"C,
RC Exist CONDUCTORS
ADD: 3#14(PEU)
2#14(TDC)
2#8 (LTG)
2#8 (RM)
2#6 (SIG)

12 - 2"C, 2 DLC

13 - Exist 1½"C,
ADD: 1 DLC

14 - Exist 1½"C,
ADD: 3 DLC

N/C 15 - Exist 2"C, 1 dlc
2#14(fb)
2#14(tdc)
2#8 (ltg)
2#8 (rm)

N/C 16 - Exist 1½"C, 1 sic

17 - 2"C, REUSED 1 sic

N/C 18 - Exist 2"C, 2 sic

NOTES(E-2 AND E-3):

1 - Exist EQUIPMENT TO REMAIN UNLESS OTHERWISE NOTED.

2 - TERMINATE EVC IN RED SECTION OF MAS SIGNAL HEAD. LEAVE 3 FEET OF SLACK.

3 - INSTALL VIDEO IMAGE SENSOR.

4 - INSTALL NEW CONDUCTORS AND CABLES AS SHOWN IN SCHEDULE AND NOTES UNLESS OTHERWISE NOTED.

5 - Exist RAMP METERING SYSTEM PARTIALLY SHOWN ONLY.

6 - SEE E-3 FOR EQUIPMENT AND POLE SCHEDULE.

7 - INSTALL 200 W HPS LUMINAIRE.

8 - ALL NEW PULL BOXES SHALL BE THE NON-PCC TYPE.

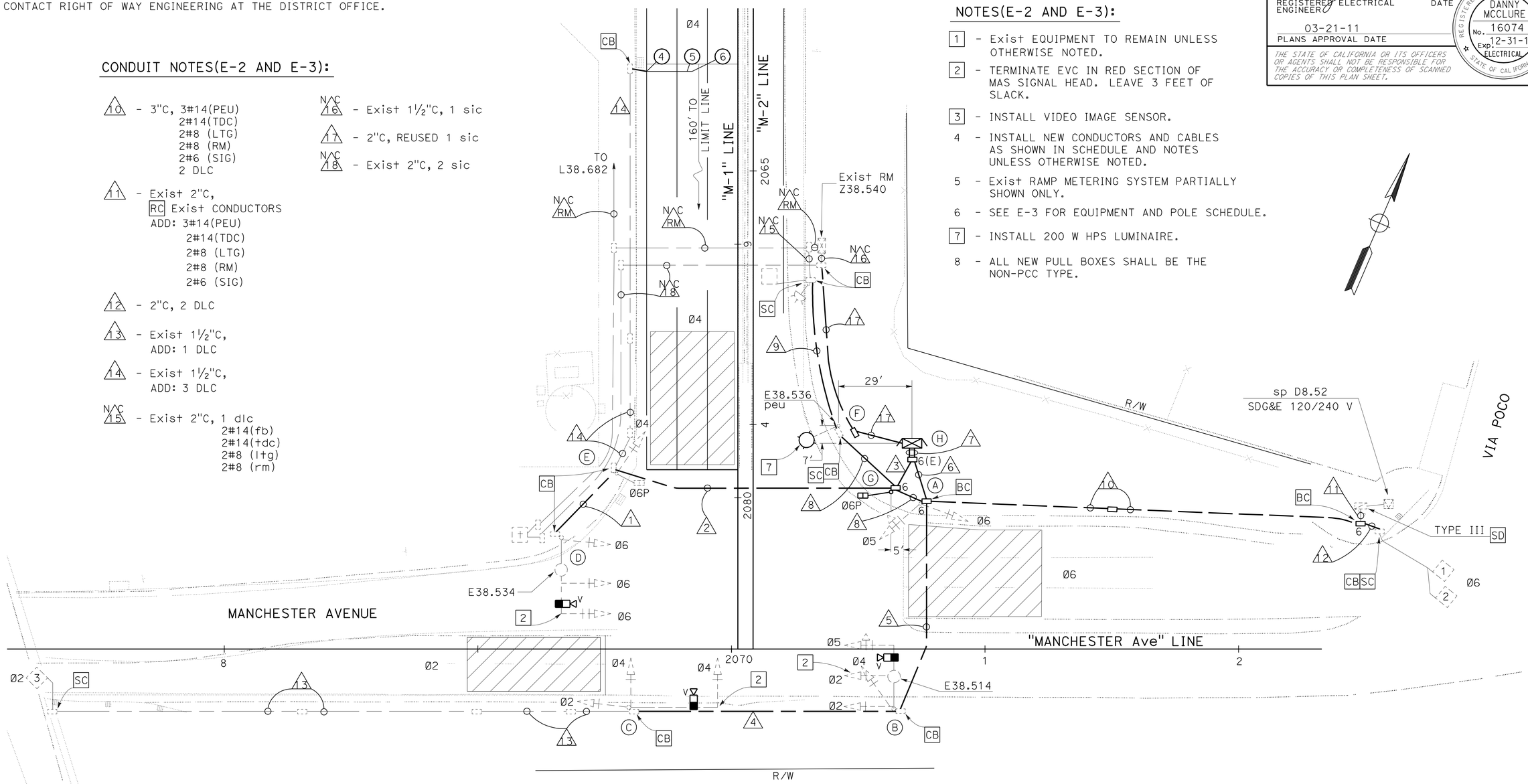

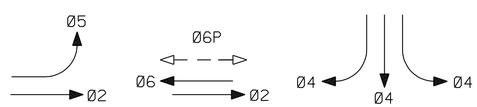

TRAFFIC PHASE DIAGRAM

STEADY DEMAND SEQUENCE

THIS PLAN IS ACCURATE FOR ELECTRICAL WORK ONLY.

P38.530
ROUTE 5 NB ON/OFF RAMP
AT MANCHESTER AVENUE

SIGNAL AND LIGHTING

SCALE: 1" = 20'

E-2

STATE OF CALIFORNIA - DEPARTMENT OF TRANSPORTATION
Caltrans® TRAFFIC ELECTRICAL

FUNCTIONAL SUPERVISOR: DALE WILSON
CALCULATED-DESIGNED BY: HUA SAWAYA
CHECKED BY: ENRIQUE P. BERNAL
REVISED BY / DATE REVISED

LAST REVISION 03-21-11
DATE PLOTTED => 21-MAR-2011
TIME PLOTTED => 14:49

Dist	COUNTY	ROUTE	POST MILES TOTAL PROJECT	SHEET No.	TOTAL SHEETS
11	SD	5	R38.5/R38.9	27	43

REGISTERED ELECTRICAL ENGINEER — DATE 03-17-11

03-21-11
PLANS APPROVAL DATE

REGISTERED PROFESSIONAL ENGINEER — DANNY MCCLURE — No. 16074 — Exp. 12-31-11 — ELECTRICAL — STATE OF CALIFORNIA

THE STATE OF CALIFORNIA OR ITS OFFICERS OR AGENTS SHALL NOT BE RESPONSIBLE FOR THE ACCURACY OR COMPLETENESS OF SCANNED COPIES OF THIS PLAN SHEET.

CONDUIT AND CONDUCTOR SCHEDULE

AWG SIZE OR CABLE TYPE	PHASE	POLE OR CIRCUIT	CONDUIT SIZE AND RUN 3" (1)	3" (2)	3" (3)	3" (4)	3" (5)	3" (6)	2-3" (7)	2" (8)	2" (9)
3CSC / 12CSC		POLE - A						1	1		
		B					2	2	2		
		C				1	1	1	1		
		D	1	1	1				1		
		E		1	1 1	1			1 1		
		F									
		G			1	1			1 1		
TOTAL 3CSC / 12CSC			1	1 2	2 3	1	3	4	2 7		
14		PEU								3	
		TDC								2	2
8		LIGHTING	2	2			2			2	2
		RM								2	2
6		SIGNAL						2	2		
TYPE B DLC	Ø2					1	1	1	1		
	Ø4			3	3				3		
	Ø6							2	2		
VIDEO CABLE HARNESS	Ø2 / Ø5	POLE - B					1	1	1		
	Ø4	C				1	1	1	1		
	Ø6	D	1	1	1				1		
EVC			1	1	1	1	2	2	3		
TOTAL CONDUCTORS / CABLES			5	10	10	4	10	13	23	9	6

EQUIPMENT AND POLE SCHEDULE [1]

Loc	STANDARD TYPE	SMA FT	LMA FT	PLACEMENT DIMENSIONS A FT	B FT	SIGNAL MOUNTING AND PLACEMENT VEHICLE POLE	VEHICLE MASTARM	PEDESTRIAN SIGNAL	PEDESTRIAN PPB	REMARKS
A	TYPE 1-A (10')	—	—	Exist		TV-2-T	—	—	—	
B	19-4-80	25	12	Exist		SV-2-TD	MAT MAS [3]	—	—	200 W hps
C	24-4-80	35	—	Exist		SV-2-TB	MAS [3]	—	—	
D	19-4-80	30	12	Exist		SV-1-T	2 MAS [3]	—	—	200 W hps
E	TYPE 1-A (10')	—	—	Exist		TV-1-T	—	SP-1-T	Ø6P Exist	
F	15	—	12	Exist		—	—	—	—	200 W HPS [7]
G	TYPE 1-A (7')	—	—	PER PLAN	5	—	—	TP-1-T	Ø6P →	NEW STANDARD AND APPURTENANCES
H	STATE FURNISHED MODEL 170 CONTROLLER ASSEMBLY. INSTALL VDU, VIDEO DISPLAY AND COMMUNICATION CARD IN TYPE 332 CABINET. FURNISH AND INSTALL EXTERNAL BBS CABINET AND BATTERIES. FOUNDATION PER E-4.									NEW

P38.530
ROUTE 5 NB ON/OFF RAMP
AT MANCHESTER AVENUE

SIGNAL AND LIGHTING

NO SCALE

E-3

STATE OF CALIFORNIA - DEPARTMENT OF TRANSPORTATION
Caltrans® TRAFFIC ELECTRICAL

FUNCTIONAL SUPERVISOR: DALE WILSON
CALCULATED-DESIGNED BY: HUA SAWAYA
CHECKED BY: ENRIQUE P. BERNAL
REVISED BY
DATE REVISED

LAST REVISION 03-21-11 | DATE PLOTTED => 21-MAR-2011 | TIME PLOTTED => 14:49

Dist	COUNTY	ROUTE	POST MILES TOTAL PROJECT	SHEET No.	TOTAL SHEETS
11	SD	5	R38.5/R38.9	28	43

REGISTERED ELECTRICAL ENGINEER — DATE 03-17-11

03-21-11
PLANS APPROVAL DATE

REGISTERED PROFESSIONAL ENGINEER — DANNY MCCLURE No. 16074 Exp. 12-31-11 ELECTRICAL — STATE OF CALIFORNIA

THE STATE OF CALIFORNIA OR ITS OFFICERS OR AGENTS SHALL NOT BE RESPONSIBLE FOR THE ACCURACY OR COMPLETENESS OF SCANNED COPIES OF THIS PLAN SHEET.

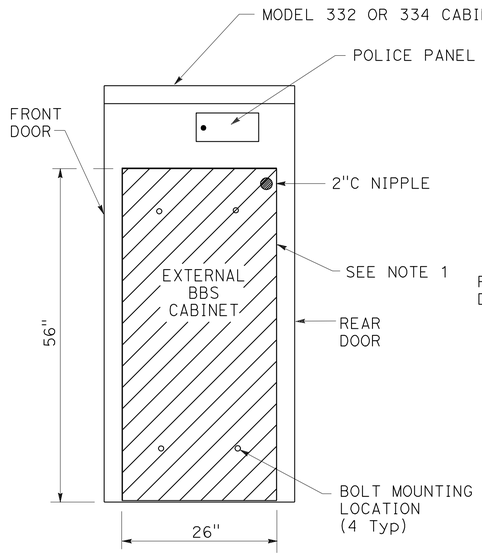

SIDE VIEW

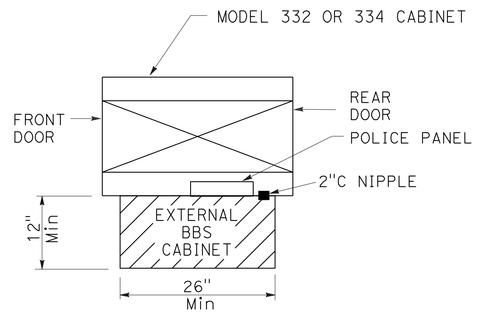

TOP VIEW

EXTERNAL BBS CABINET MOUNTED TO THE MODEL 332 OR 334 CABINET

NOTES:

1. THE EXTERNAL BBS CABINET SHALL BE MOUNTED TO THE MODEL 332 OR 334 CABINET WITH FOUR 18-8 STAINLESS STEEL HEX HEAD, FULLY-THREADED, ⅜"-16 X 1" BOLTS; TWO WASHERS PER BOLT, DESIGNED FOR ⅜" BOLTS AND ARE 18-8 STAINLESS STEEL, 1" OUTSIDE DIAMETER, ROUND, AND FLAT; AND ONE K-LOCK NUT PER BOLT THAT IS 18-8 STAINLESS STEEL AND A HEX-NUT. THE ENGINEER WILL HAVE TO APPROVE THE BOLT MOUNTING LOCATION PRIOR TO INSTALLATION.
2. THE ANCHOR BOLTS SHALL BE ¾" Dia X 15" WITH A 2"-90° BEND. THE CABINET MANUFACTURER'S SPECIFICATION SHALL DETERMINE THE LOCATION OF THE ANCHOR BOLTS IN THE FOUNDATION. THE ENGINEER WILL HAVE TO APPROVE THE ANCHOR BOLTS AND ITS LOCATION IN THE FOUNDATION PRIOR TO CONSTRUCTION.
3. THE CONTRACTOR SHALL VERIFY THE DIMENSIONS OF THE BBS CABINET PRIOR TO CONSTRUCTING THE FOUNDATION OF THE MODIFIED PORTION OF THE Std MODEL 332 AND 334 CABINET FOUNDATION. THE ENGINEER WILL HAVE TO APPROVE ANY NECESSARY DEVIATIONS PRIOR TO CONSTRUCTION.
4. ALL DIMENSIONS ARE NOMINAL.

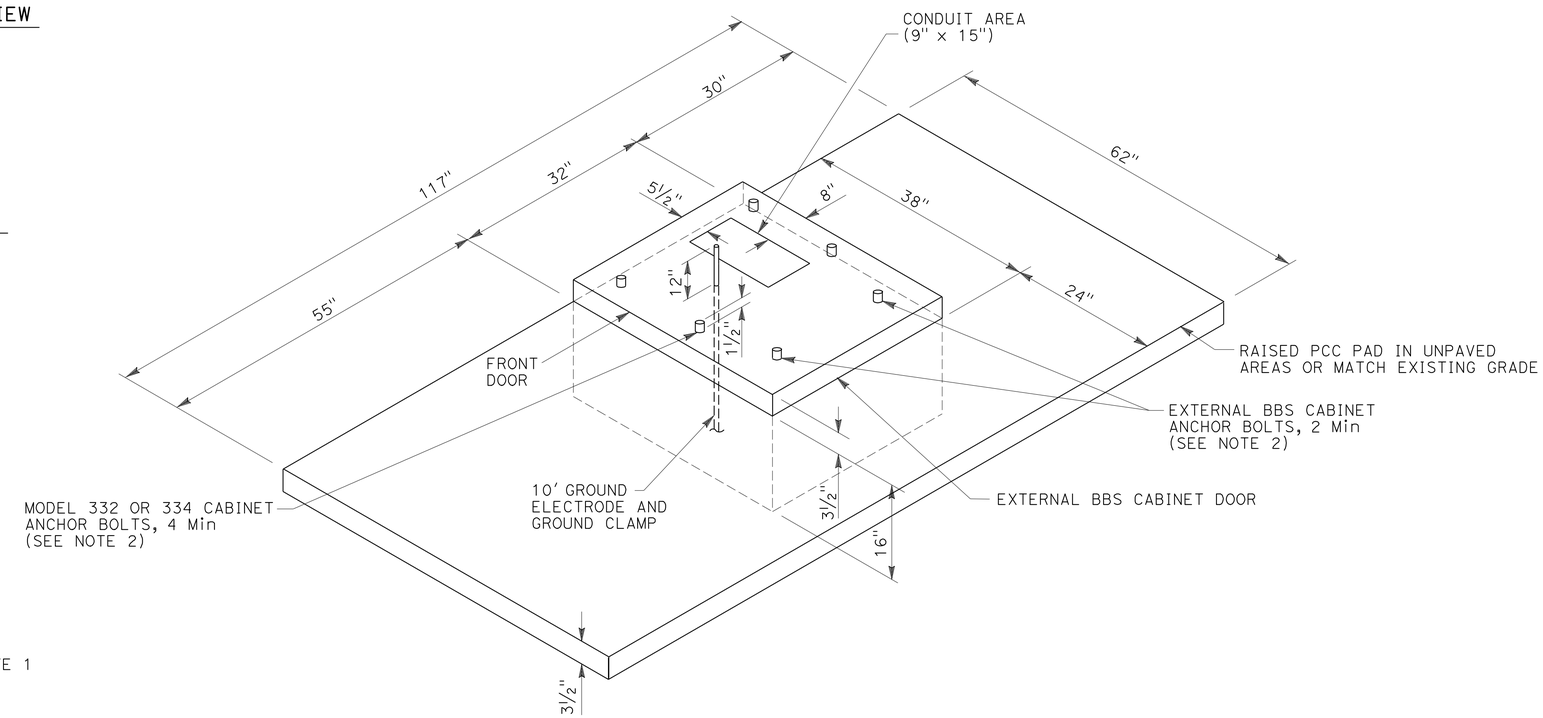

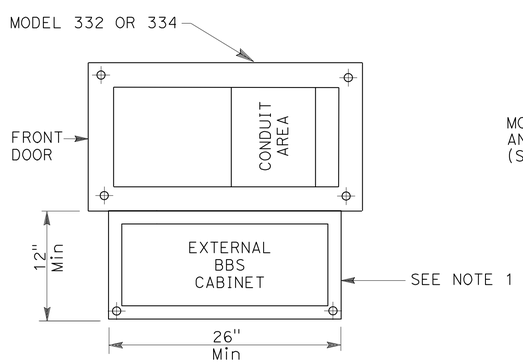

BASE PLAN FOR BBS MOUNTED TO THE MODEL 332 OR 334 CABINET

(FOR DIMENSIONS AND DETAILS NOT SHOWN, SEE SHEET A6-1 TO A6-4, CABINET HOUSING DETAILS OF THE TRANSPORTATION ELECTRICAL EQUIPMENT SPECIFICATION (TEES))

MODIFIED MODEL 332 AND 334 CABINET FOUNDATION DETAIL FOR BATTERY BACKUP SYSTEM (BBS)

(FOR DIMENSIONS AND DETAILS NOT SHOWN AND ADDITIONAL NOTES, SEE SHEET ES-3C OF THE STANDARD PLANS FOR MODEL 332 AND 334 CABINES)

SIGNAL AND LIGHTING (BBS FOUNDATION DETAILS)

NO SCALE

E-4

STATE OF CALIFORNIA - DEPARTMENT OF TRANSPORTATION
Caltrans® TRAFFIC ELECTRICAL

FUNCTIONAL SUPERVISOR: DALE WILSON
CALCULATED-DESIGNED BY: ENRIQUE P. BERNAL
CHECKED BY: HUA SAWAYA
REVISED BY / DATE REVISED

LAST REVISION 03-21-11 | DATE PLOTTED => 21-MAR-2011 | TIME PLOTTED => 14:49

Dist	COUNTY	ROUTE	POST MILES TOTAL PROJECT	SHEET No.	TOTAL SHEETS
11	SD	5	R38.5/R38.9	29	43

REGISTERED ELECTRICAL ENGINEER — DATE 03-17-11

03-21-11
PLANS APPROVAL DATE

REGISTERED PROFESSIONAL ENGINEER — DANNY MCCLURE — No. 16074 — Exp. 12-31-11 — ELECTRICAL — STATE OF CALIFORNIA

THE STATE OF CALIFORNIA OR ITS OFFICERS OR AGENTS SHALL NOT BE RESPONSIBLE FOR THE ACCURACY OR COMPLETENESS OF SCANNED COPIES OF THIS PLAN SHEET.

NOTE:

FOR ACCURATE RIGHT OF WAY AND ACCESS DATA, CONTACT RIGHT OF WAY ENGINEERING AT THE DISTRICT OFFICE.

CONDUIT NOTES:

NAC 1 - Exist 2"C, 1 dlc
2#12(fb)
3#14(peu)

NAC 2 - Exist 3"C, 2 9CSC
13 dlc
2#8(l+g)

NAC 3 - Exist 3"C, 2 9CSC
15 dlc
2#8(l+g)
2#12(fb)
3#14(peu)

NAC 4 - Exist 2"C, 1 dlc

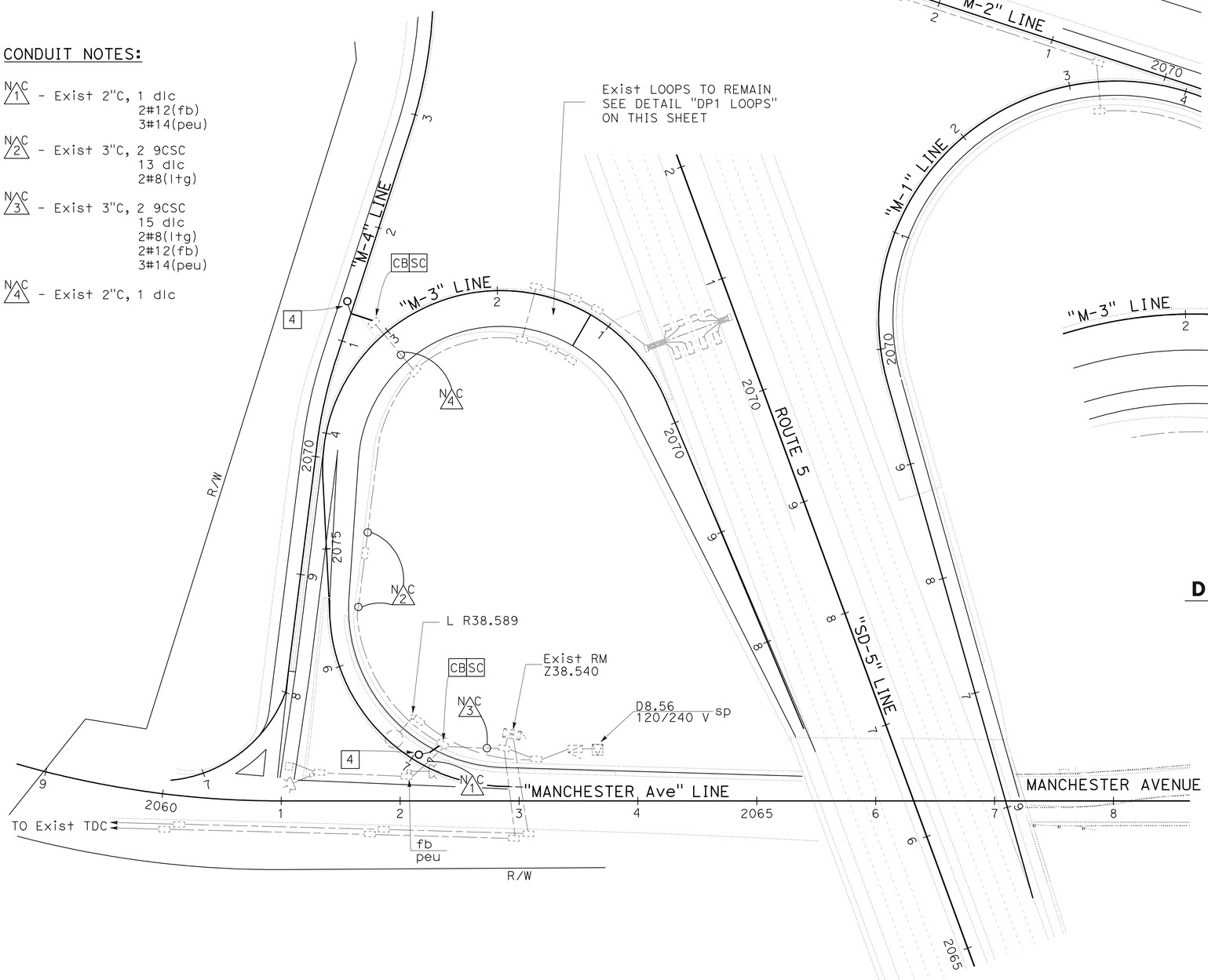

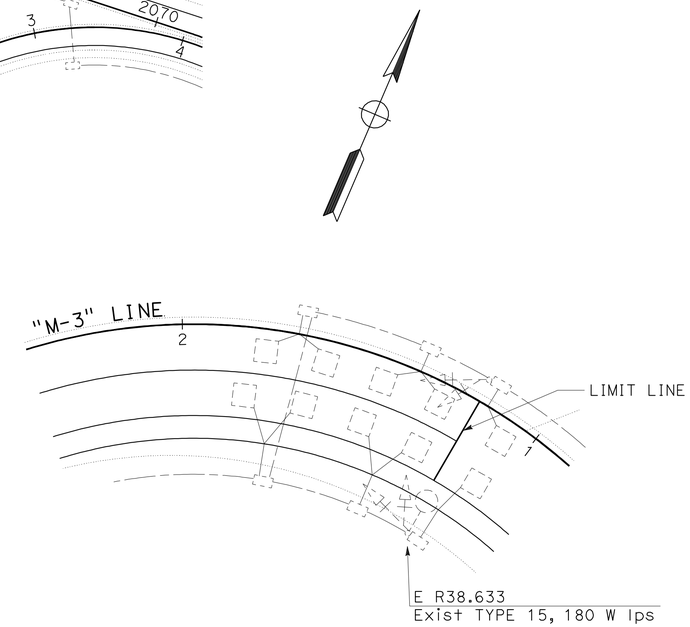

DETAIL "DP1 LOOPS"

NO SCALE

Z38.581
ROUTE 5 SB ON/OFF RAMP
AT MANCHESTER AVENUE

NOTES:

1 - Exist RAMP METERING SYSTEM PARTIALLY SHOWN ONLY.

2 - Exist SIGNAL, LIGHTING STANDARD AND ASSOCIATED EQUIPMENT TO REMAIN UNLESS OTHERWISE NOTED.

3 - Exist CONDUIT, PULL BOXES AND DETECTOR LOOPS TO REMAIN UNLESS OTHERWISE NOTED.

4 - AB Exist LOOP. INSTALL TYPE E LOOP CENTER IN LANE.

THIS PLAN IS ACCURATE FOR ELECTRICAL WORK ONLY.

INDUCTIVE LOOP DETECTOR

SCALE: 1" = 50'

E-5

STATE OF CALIFORNIA - DEPARTMENT OF TRANSPORTATION
Caltrans® TRAFFIC ELECTRICAL

FUNCTIONAL SUPERVISOR: DALE WILSON
CALCULATED-DESIGNED BY: HUA SAWAYA
CHECKED BY: ENRIQUE P. BERNAL
REVISED BY / DATE REVISED

LAST REVISION 03-02-11 | DATE PLOTTED => 21-MAR-2011 | TIME PLOTTED => 14:50

DIST	COUNTY	ROUTE	POST MILES TOTAL PROJECT	SHEET NO.	TOTAL SHEETS
11	SD	5	R38.5/R38.9	30	43

LICENSED LANDSCAPE ARCHITECT

August 15, 2008
PLANS APPROVAL DATE

The State of California or its officers or agents shall not be responsible for the accuracy or completeness of electronic copies of this plan sheet.

LICENSED LANDSCAPE ARCHITECT Robert B. Schott 3635 Signature 11-04-08 Renewal Date 08-11-08 Date STATE OF CALIFORNIA

To accompany plans dated 03-21-11

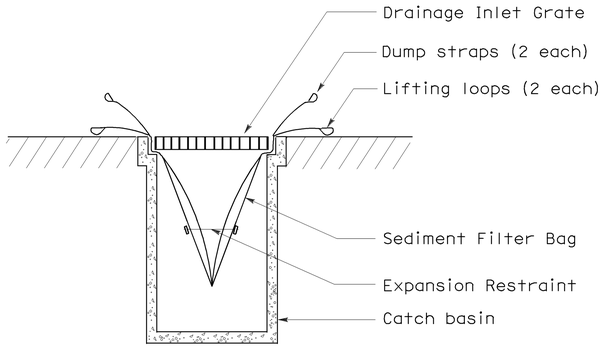

SECTION B-B

SEDIMENT FILTER BAG DETAIL

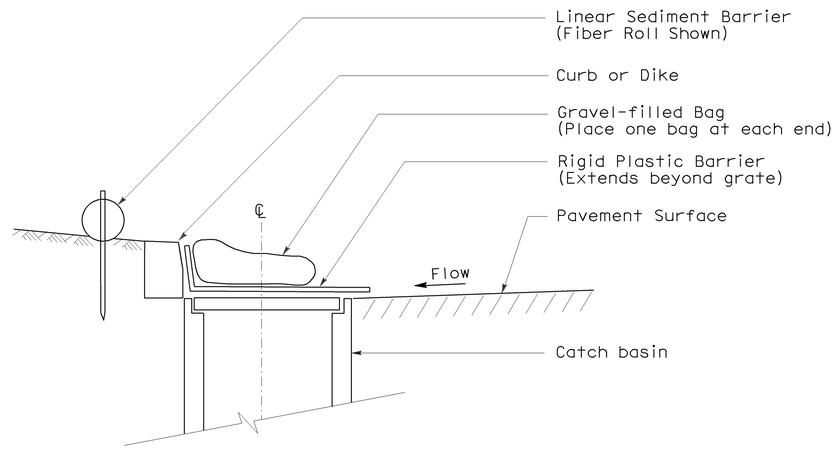

SECTION

TEMPORARY DRAINAGE INLET PROTECTION (TYPE 6A) (CATCH BASIN WITH GRATE)

NOTES:

1. See Standard Plan T51 for Temporary Silt Fence.
2. Dimensions may vary to fit field conditions.

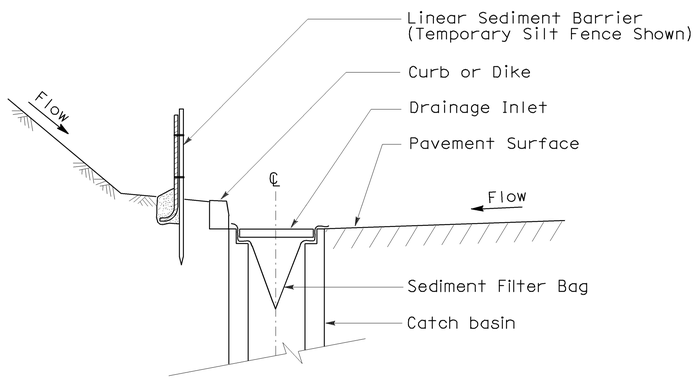

SECTION A-A

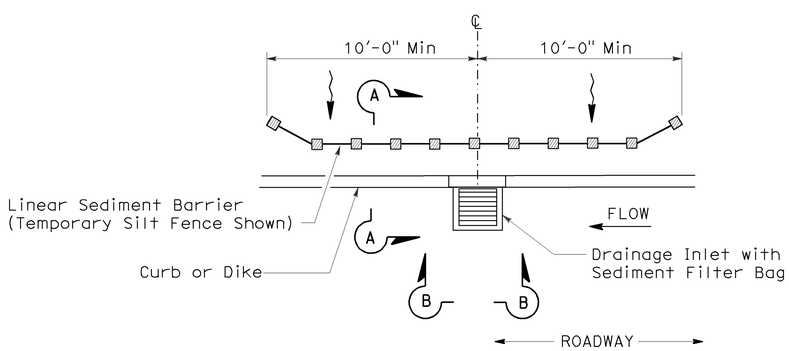

PLAN

TEMPORARY DRAINAGE INLET PROTECTION (TYPE 5) (SEDIMENT FILTER BAG)

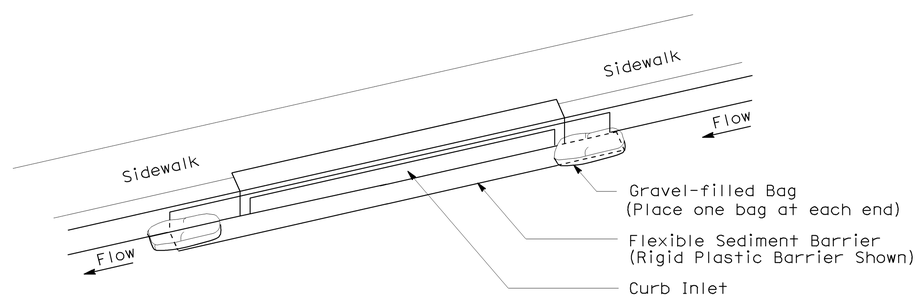

PERSPECTIVE

TEMPORARY DRAINAGE INLET PROTECTION (TYPE 6B) (CURB INLET WITHOUT GRATE)

STATE OF CALIFORNIA
DEPARTMENT OF TRANSPORTATION

TEMPORARY WATER POLLUTION CONTROL DETAILS (TEMPORARY DRAINAGE INLET PROTECTION)

NO SCALE

NSP T64 DATED AUGUST 15, 2008 SUPPLEMENTS THE STANDARD PLANS BOOK DATED MAY 2006.

NEW STANDARD PLAN NSP T64

2006 NEW STANDARD PLAN NSP T64

7-11-08

DIST	COUNTY	ROUTE	POST MILES TOTAL PROJECT	SHEET NO.	TOTAL SHEETS
11	SD	5	R38.5/R38.9	31	43

Randell D. Hiatt
REGISTERED CIVIL ENGINEER

June 6, 2008
PLANS APPROVAL DATE

REGISTERED PROFESSIONAL ENGINEER
Randell D. Hiatt
No. C50200
Exp. 6-30-09
CIVIL
STATE OF CALIFORNIA

The State of California or its officers or agents shall not be responsible for the accuracy or completeness of electronic copies of this plan sheet.

To accompany plans dated 03-21-11

NOTES:

1. When necessary to place dike in front of face of guard railing, only Type C dike may be used. For dike details, see Standard Plan A87B.
2. For standard railing post embedment, see Standard Plans A77C3.
3. Guard railing delineation to be used where shown on the Project Plans.
4. When dike or curb is placed under guard railing, the maximum height of the dike or curb shall be 4". Mountable dike should not be used. For dike and curb details, see Revised Standard Plans RSP A87A and Standard Plan A87B.
5. For details of typical distance between the face of rail and hinge point, see Standard Plan A77C3.

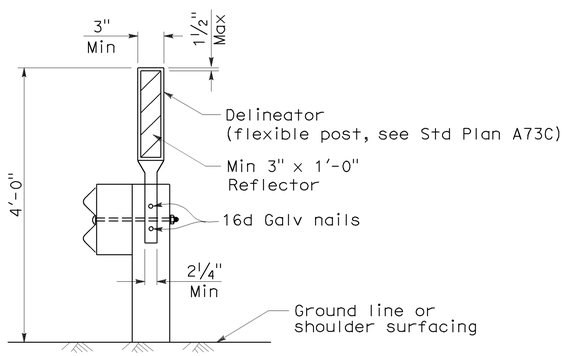

GUARD RAILING DELINEATION

See Note 3

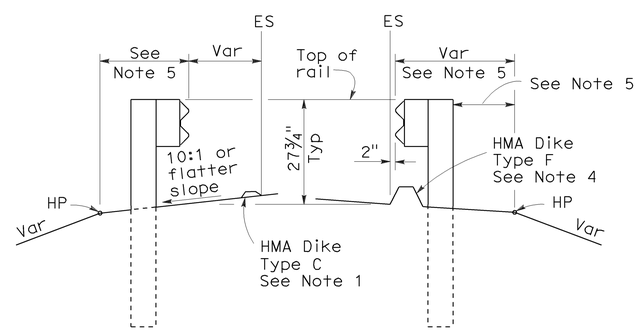

DIKE POSITIONING

See Note 1

STATE OF CALIFORNIA
DEPARTMENT OF TRANSPORTATION

METAL BEAM GUARD RAILING TYPICAL RAILING DELINEATION AND DIKE POSITIONING DETAILS

NO SCALE

RSP A77C4 DATED JUNE 6, 2008 SUPERSEDES STANDARD PLAN A77C4
DATED MAY 1, 2006 - PAGE 47 OF THE STANDARD PLANS BOOK DATED MAY 2006.

REVISED STANDARD PLAN RSP A77C4

2006 REVISED STANDARD PLAN RSP A77C4

12-10-07

DIST	COUNTY	ROUTE	POST MILES TOTAL PROJECT	SHEET NO.	TOTAL SHEETS
11	SD	5	R38.5/R38.9	32	43

Randell D. Hiatt
REGISTERED CIVIL ENGINEER

June 6, 2008
PLANS APPROVAL DATE

REGISTERED PROFESSIONAL ENGINEER
Randell D. Hiatt
No. C50200
Exp. 6-30-09
CIVIL
STATE OF CALIFORNIA

The State of California or its officers or agents shall not be responsible for the accuracy or completeness of electronic copies of this plan sheet.

To accompany plans dated 03-21-11

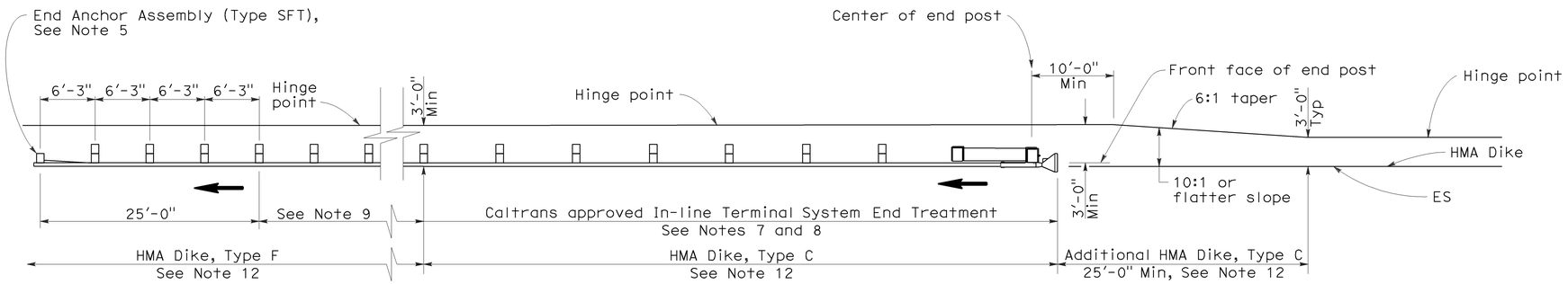

TYPE 11A LAYOUT

(EMBANKMENT GUARD INSTALLATION WITH IN-LINE END TREATMENT AT TRAFFIC APPROACH END OF RAILING)
See Note 6

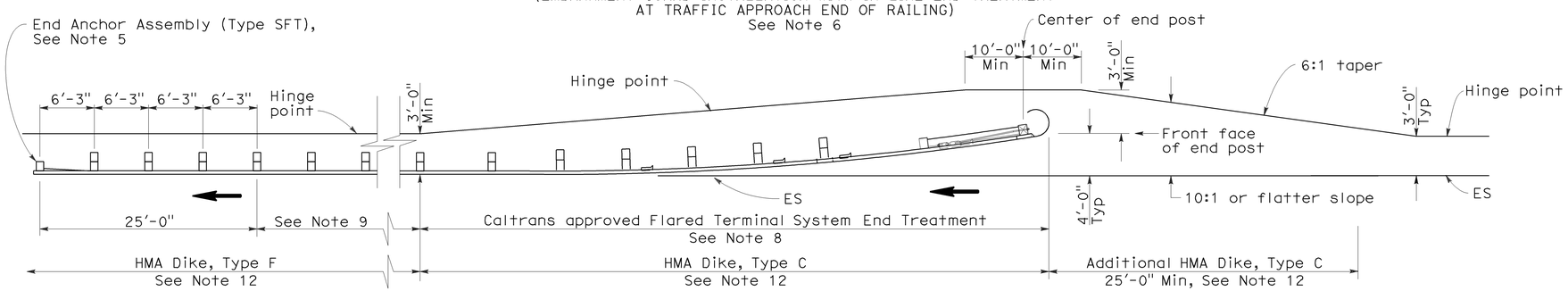

TYPE 11B LAYOUT

(EMBANKMENT GUARD RAILING INSTALLATION WITH FLARED END TREATMENT AT TRAFFIC APPROACH END OF RAILING)
See Note 6

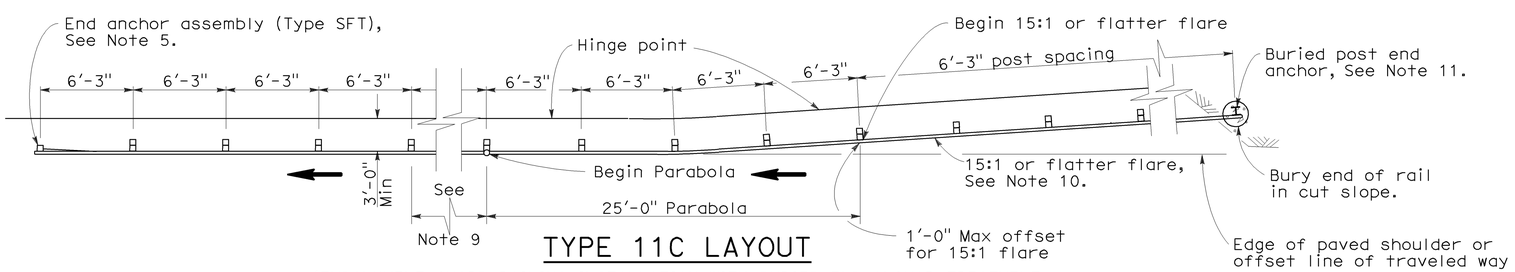

TYPE 11C LAYOUT

(EMBANKMENT GUARD RAILING INSTALLATION WITH BURIED END ANCHOR TREATMENT AT TRAFFIC APPROACH END OF RAILING)
See Notes 6 and 12

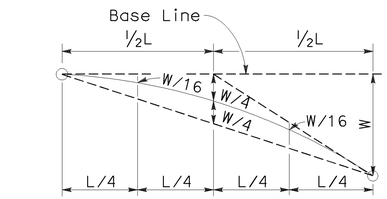

TYPICAL PARABOLIC LAYOUT

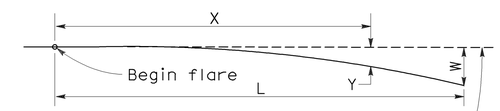

Base Line (Edge of paved shoulder or offset line of edge of traveled way)

$$Y = \frac{WX^2}{L^2}$$

Y = Offset from base line
W = Maximum offset
X = Distance along base line
L = Length of flare

PARABOLIC FLARE OFFSETS

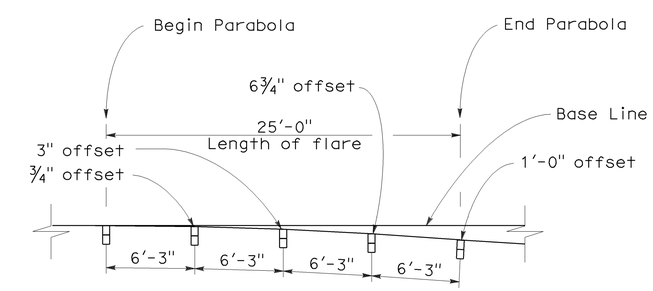

TYPICAL FLARE OFFSETS FOR 1 FOOT MAX END OFFSET

NOTES:

1. Line post, blocks and hardware to be used are shown on Standard Plans A77A1, A77A2, A77B1, A77C1, and A77C2.
2. Guard rail post spacing to be 6'-3" center to center, except as otherwise noted.
3. Except as noted, line posts are 6" x 8" x 6'-0" wood with 6" x 8" x 1'-2" wood blocks. W6 x 9 steel posts, 6'-0" in length, with 6" x 8" x 1'-2" notched wood blocks or recycled plastic blocks may be used for 6" x 8" x 6'-0" wood post with 6" x 8" x 1'-2" wood blocks where applicable and when specified.
4. Direction of adjacent traffic indicated by ⟶.
5. For End Anchor Assembly (Type SFT) details, see Standard Plan A77H1.
6. Layout Types 11A, 11B or 11C are typically used where guard railing is recommended to shield embankment slopes and a crashworthy end treatment is required for only one direction of traffic.
7. In-line Terminal System End Treatments are used where site conditions will not accommodate a flared end treatment.
8. The type of terminal system end treatment to be used will be shown on the Project Plans.
9. Dependent on site conditions (embankment height and side slope), construction of additional guard railing (length equal to multiples of 12'-6" with 6'-3" post spacing) may be advisable.
10. The 15:1 or flatter flare used with buried end anchors is based on the edge of the paved shoulder or offset line of edge of the traveled way. The length of guard railing within the 15:1 or flatter flare is based on site conditions and should be a length equal to multiples of 12'-6".
11. For details of the buried post end anchor used with Type 11C Layout, see Standard Plan A77I2.
12. Where placement of dike is required with guard railing installations, see Revised Standard Plan RSP A77C4 for dike positioning details.

STATE OF CALIFORNIA
DEPARTMENT OF TRANSPORTATION

METAL BEAM GUARD RAILING TYPICAL LAYOUTS FOR EMBANKMENTS

NO SCALE

RSP A77E1 DATED JUNE 6, 2008 SUPERSEDES STANDARD PLAN A77E1 DATED MAY 1, 2006 - PAGE 48 OF THE STANDARD PLANS BOOK DATED MAY 2006.

REVISED STANDARD PLAN RSP A77E1

2006 REVISED STANDARD PLAN RSP A77E1

12-10-07

DIST	COUNTY	ROUTE	POST MILES TOTAL PROJECT	SHEET NO.	TOTAL SHEETS
11	SD	5	R38.5/R38.9	33	43

REGISTERED CIVIL ENGINEER

September 1, 2006
PLANS APPROVAL DATE

REGISTERED PROFESSIONAL ENGINEER Hector David Cordova No. C41957 Exp. 3-31-08 CIVIL STATE OF CALIFORNIA

The State of California or its officers or agents shall not be responsible for the accuracy or completeness of electronic copies of this plan sheet.

To accompany plans dated 03-21-11

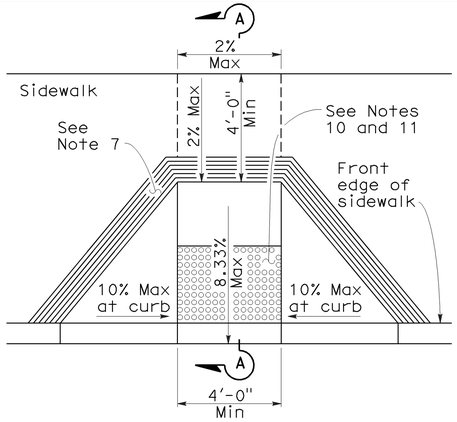

CASE A

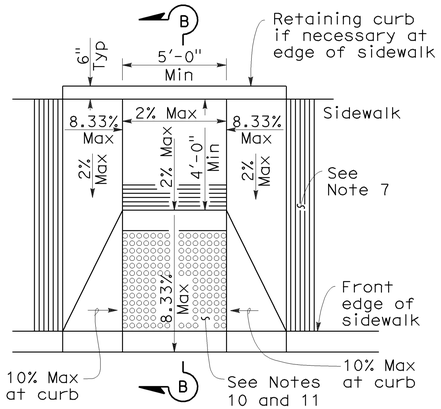

CASE B

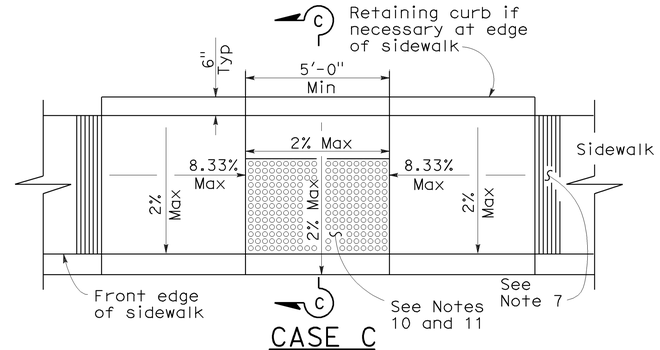

CASE C

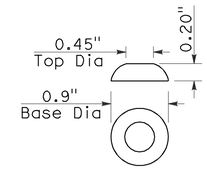

RAISED TRUNCATED DOME

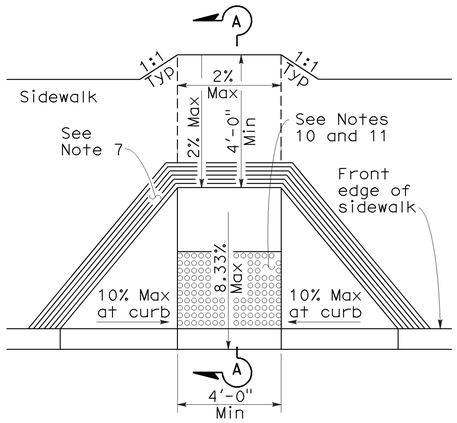

CASE D

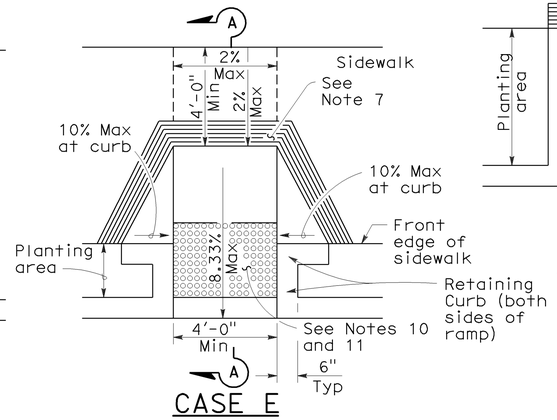

CASE E

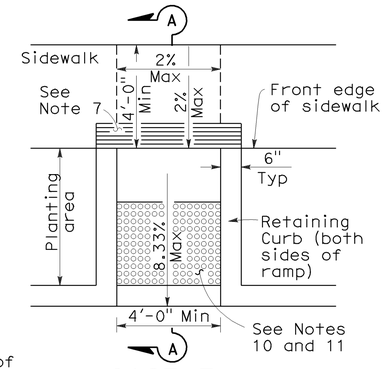

CASE F

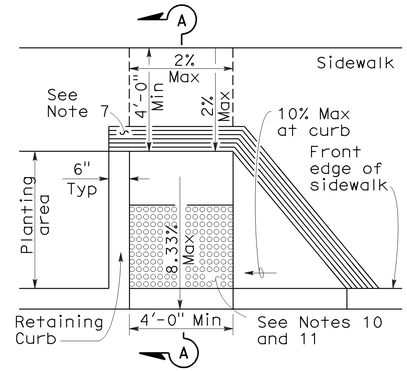

CASE G
See Note 4

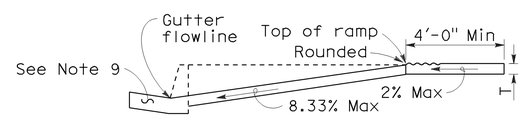

SECTION A-A

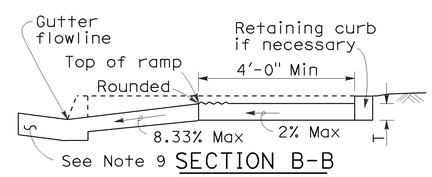

SECTION B-B
Depress entire sidewalk as required

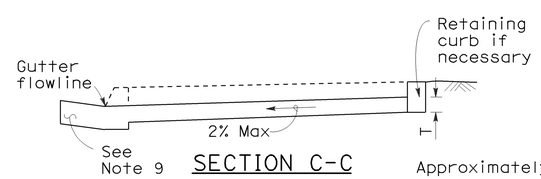

SECTION C-C

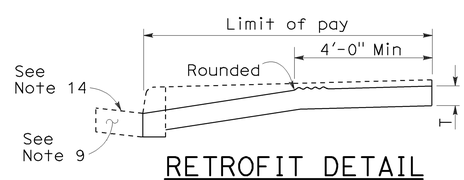

RETROFIT DETAIL
Existing curb and sidewalk

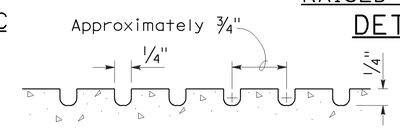

GROOVING DETAIL

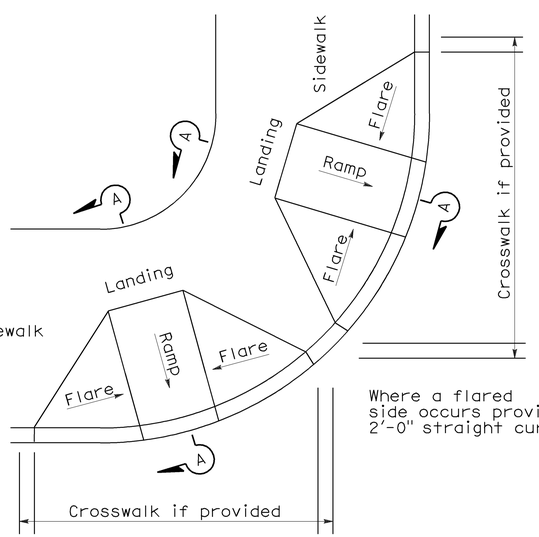

DETAIL A
TYPICAL TWO-RAMP CORNER INSTALLATION
See Note 1

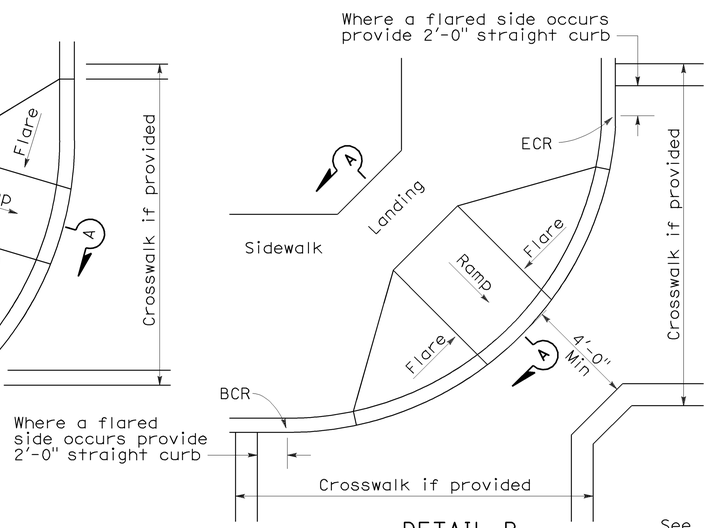

DETAIL B
TYPICAL ONE-RAMP CORNER INSTALLATION
See Notes 1 and 3

NOTES:

1. As site conditions dictate, Case A through Case G curb ramps may be used for corner installations similar to those shown in Detail A and Detail B. The case of curb ramps used in Detail A do not have to be the same. Case A through Case G curb ramps also may be used at mid block locations, as site conditions dictate.
2. If distance from curb to back of sidewalk is too short to accommodate ramp and 4'-0" platform (landing) as shown in Case A, the sidewalk may be depressed longitudinally as in Case B, or C or may be widened as in Case D.
3. When ramp is located in center of curb return, crosswalk configuration must be similar to that shown for Detail B.
4. As site conditions dictate, the retaining curb side and the flared side of the Case G ramp shall be constructed in reversed position.
5. If located on a curve, the sides of the ramp need not be parallel, but the minimum width of the ramp shall be 4'-0".
6. Side slope of ramp flares vary uniformly from a maximum of 10% at curb to conform with longitudinal sidewalk slope adjacent to top of the ramp, except in Case C and Case F.
7. The curb ramp shall be outlined, as shown, with a 1'-0" wide border with 1/4" grooves approximately 3/4" on center. See grooving detail.
8. Transitions from ramps and landing to walks, gutters or streets shall be flush and free of abrupt changes.
9. Maximum slopes of adjoining gutters, the road surface immediately adjacent to the curb ramp or accessible route shall not exceed 5 percent within 4'-0" of the top and bottom of the curb ramp.
10. Curb ramps shall have a detectable warning surface that extends the full width and 3'-0" depth of the ramp. Detectable Warning Surfaces shall conform to the details on this plan and the requirements in the Special Provisions.
11. The edge of the detectable warning surface nearest the street shall be between 6" and 8" from the gutter flowline.
12. Sidewalk and ramp thickness, "T", shall be 3½" minimum.
13. Utility pull boxes, manholes, vaults and all other utility facilities within the boundaries of the curb ramp will be relocated or adjusted to grade by the owner prior to, or in conjunction with, curb ramp construction.
14. For retrofit conditions, removal and replacement of curb apron will be at the Contractor's option, unless otherwise shown on project plans.

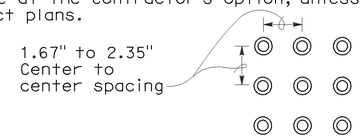

RAISED TRUNCATED DOME PATTERN (IN-LINE)
DETECTABLE WARNING SURFACE
See Note 10

STATE OF CALIFORNIA
DEPARTMENT OF TRANSPORTATION

CURB RAMP DETAILS

NO SCALE

RSP A88A DATED SEPTEMBER 1, 2006 SUPERSEDES STANDARD PLAN A88A DATED MAY 1, 2006 - PAGE 115 OF THE STANDARD PLANS BOOK DATED MAY 2006.

REVISED STANDARD PLAN RSP A88A

2006 REVISED STANDARD PLAN RSP A88A

8-3-06

DIST	COUNTY	ROUTE	POST MILES TOTAL PROJECT	SHEET NO.	TOTAL SHEETS
11	SD	5	R38.5/R38.9	34	43

REGISTERED ELECTRICAL ENGINEER

October 5, 2007
PLANS APPROVAL DATE

REGISTERED PROFESSIONAL ENGINEER Jeffery G. McRae No. E14512 Exp. 6-30-08 ELECTRICAL STATE OF CALIFORNIA

The State of California or its officers or agents shall not be responsible for the accuracy or completeness of electronic copies of this plan sheet.

To accompany plans dated 03-21-11

ELECTROLIERS

STANDARD TYPES
15, 15D
15 STRUCTURE
21, 21D STRUCTURE
30
31
32
35
36-20A

High mast light pole

Double Arm lighting standard

Existing electrolier

Electrolier foundation (Future installation)

NOTES:

1. Luminaires shall be 310 W HPS when installed on Type 21, 21D, 30, 31, 32, 35 and 36-20A Standards, unless otherwise specified. Luminaires shall be 200 W HPS when installed on other type standards or poles, unless otherwise specified.
2. Luminaires shall be the cutoff type, ANSI Type III medium cutoff lighting distribution, unless otherwise specified.
3. Variations noted adjacent to symbol on project plans.

Electrolier (see project notes or project plans)

Luminaire on wood pole

STANDARD NOTES:

- AB — Abandon. If applied to conduit, remove conductors.
- BC — Install pull box in existing conduit run.
- BP — Pedestrian barricade, type as indicated on plan.
- CB — Install conduit into existing pull box.
- CC — Connect new and existing conduit. Remove existing conductors and install conductors as indicated.
- CF — Conduit to remain for future use. Remove conductors. Install pull wire or rope.
- DH — Detector handhole.
- FA — Foundation to be abandoned.
- IS — Install sign on signal mast arm.
- NS — No slip base on standard.
- PEC — Photoelectric control.
- PEU — Photoelectric unit.
- RC — Equipment or material to be removed and become the property of the Contractor.
- RE — Remove electrolier, fuses and ballast. Tape ends of conductors.
- RL — Relocate equipment.
- RR — Remove and reuse equipment.
- RS — Remove and salvage equipment.
- SC — Splice new to existing conductors.
- SD — Service disconnect.
- SF — Standard to remain for future use. Remove luminaire, pole conductors, fuses and ballast.
- TSP — Telephone service point.

ABBREVIATIONS AND EQUIPMENT DESIGNATIONS

PROPOSED	EXISTING	
BBS	bbs	Battery backup system
BC	bc	Bolt circle
C	C	Conduit
CCTV	cctv	Closed circuit television
CKT	ckt	Circuit
CMS	cms	Changeable message sign
DLC	dlc	Loop detector lead-in cable
EMS	ems	Extinguishable message sign
EVC	evc	Emergency vehicle cable
EVD	evd	Emergency vehicle detector
FB	fb	Flashing beacon
FBCA	fbca	Flashing beacon control assembly
FBS	fbs	Flashing beacon with slip base
FO	fo	Fiber optic
G	G	Ground (Equipment Grounding Conductor)
GFCI	GFCI	Ground fault circuit interrupt
HAR	har	Highway advisory radio
HEX	hex	Hexagonal
HPS	hps	High pressure sodium
IISNS	iisns	Internally illuminated street name sign
ISL	isl	Induction sign lighting
LED	led	Light emitting diode
LMA	lma	Luminaire mast arm
LPS	lps	Low pressure sodium
LTG	ltg	Lighting
LUM	lum	Luminaire
MAT	mat	Mast arm mounting vehicle signal faces, top attachment
MAS	mas	Mast arm mounting vehicle signal faces, side attachment
MAS-4A	mas-4A	Mast arm mounting vehicle signal faces, side attachment - 4 signal section
MAS-4B	mas-4B	
MAS-4C	mas-4C	
MAS-5A	mas-5A	Mast arm mounting vehicle signal faces, side attachment - 5 signal section
MAS-5B	mas-5B	
MC	mc	Mercury contactor
M/M	m/m	Multiple to multiple transformer
MT	mt	Conduit with pull wire or rope only
MTG	mtg	Mounting
	mv	Mercury vapor lighting fixture
N	N	Neutral (Grounded Conductor)
NC	NC	Normally closed
NO	NO	Normally open
PB	pb	Pull box
PEC	pec	Photoelectric control (Type I, II, III, IV or V as shown)
PED	ped	Pedestrian
PEU	peu	Photoelectric unit
PPB	ppb	Pedestrian push button
RL		Relocated equipment
RM	rm	Ramp metering
SB	sb	Slip base
SIC	sic	Signal interconnect cable
SIG	sig	Signal
SMA	sma	Signal mast arm
SNS	sns	Street name sign
SP	sp	Service point
TDC	tdc	Telephone demarcation cabinet
TMS	tms	Traffic monitoring station
TOS	tos	Traffic Operations System
VEH	veh	Vehicle
XFMR	xfmr	Transformer
COMM	comm	Communication
RWIS	rwis	Roadway weather information system

SOFFIT AND WALL MOUNTED LUMINAIRES

Pendant, 70 W HPS unless otherwise specified.

Flush, 70 W HPS unless otherwise specified.

Wall surface, 70 W HPS unless otherwise specified.

Existing soffit or wall luminaire to remain unmodified.

Existing soffit or wall luminaire to be modified as specified.

NOTE:

Arrow indicates "street side" of luminaire.

STATE OF CALIFORNIA
DEPARTMENT OF TRANSPORTATION

ELECTRICAL SYSTEMS (SYMBOLS AND ABBREVIATIONS)

NO SCALE

RSP ES-1A DATED OCTOBER 5, 2007 SUPERSEDES STANDARD PLAN ES-1A DATED MAY 1, 2006 - PAGE 400 OF THE STANDARD PLANS BOOK DATED MAY 2006.

REVISED STANDARD PLAN RSP ES-1A

2006 REVISED STANDARD PLAN RSP ES-1A

DIST	COUNTY	ROUTE	POST MILES TOTAL PROJECT	SHEET NO.	TOTAL SHEETS
11	SD	5	R38.5/R38.9	35	43

REGISTERED ELECTRICAL ENGINEER

October 5, 2007
PLANS APPROVAL DATE

REGISTERED PROFESSIONAL ENGINEER Jeffery G. McRae No. E14512 Exp. 6-30-08 ELECTRICAL STATE OF CALIFORNIA

The State of California or its officers or agents shall not be responsible for the accuracy or completeness of electronic copies of this plan sheet.

To accompany plans dated 03-21-11

CONDUIT

PROPOSED	EXISTING	
		Lighting Conduit, unless otherwise indicated or noted
		Traffic signal conduit
C	c	Communication conduit
T	t	Telephone conduit
F	f	Fire alarm conduit
FO	fo	Fiber optic conduit
		Conduit termination (RSP ES-9A C)
R	r	Conduit riser in/on structure or service pole

SERVICE EQUIPMENT

PROPOSED	EXISTING	
OH	oh	Overhead lines
U	U	Wood pole "U" indicates utility owned
		Pole guy with anchor
		Utility transformer - ground mounted
III		Service equipment enclosure type
		Service equipment enclosure door indicates front of enclosure
T	t	Telephone demarcation cabinet

POLE-MOUNTED SERVICE DESIGNATION

Type of installation

TYPE H SERVICE - 28'-10" ← Pole height above grade

ILLUMINATED OVERHEAD SIGN

PROPOSED	EXISTING	
		Overhead sign - Single post
		Overhead sign - Two post
		Overhead sign - Mounted on structure
		Overhead sign with electrolier

SIGNAL EQUIPMENT

PROPOSED	EXISTING	
		Pedestrian signal face
		Pedestrian push button post
		Pedestrian barricade
		Vehicle signal face (with backplate, 3-Section: red, yellow and green)
		Vehicle signal face with angle visors
PV	PV	Modifications of basic symbols: "L" Indicates all non-arrow sections louvered "LG" Indicates louvered green section only "PV" indicates 12" programmed visibility sections "8" indicates all 8" sections (only when specified)
		Type 15TS and Vehicle signal face
		Vehicle signal face with red, yellow and green left arrow sections
		Vehicle signal face with red and yellow sections and up green arrow
		Vehicle signal face (5 Section) with red, yellow and green sections and yellow and green right arrows
		Type 1 Standard and attached vehicle signal faces
		Standard with signal mast arm only and attached vehicle signal faces and internally illuminated street name sign
		Type 33 Standard, Left-turn vehicle signal face and sign
		Standard with luminaire and signal mast arms and attached vehicle signal faces
		Cantilever flashing beacon Type 9 Frame, with a sign unless otherwise specified or indicated
		Type 15-FBS Standard with two vehicle signal face sections with lens, backplate and visor with a sign
R	Y	Flashing beacon. One vehicle signal face section with lens, backplate and visor. "R" indicates red indication, "Y" indicates yellow indication
		Controller assembly. Door indicates front of cabinet

SIGNAL EQUIPMENT Cont

PROPOSED	EXISTING	
		Guard post
		Type 1 Standard with "Meter On" sign
		Emergency Vehicle detector

NOTES:

1. All signal sections shall be 12" unless shown otherwise.
2. Signal heads shall be provided with backplates unless shown otherwise.
3. Signal indication shall be LED.

STATE OF CALIFORNIA
DEPARTMENT OF TRANSPORTATION

ELECTRICAL SYSTEMS (SYMBOLS AND ABBREVIATIONS)

NO SCALE

RSP ES-1B DATED OCTOBER 5, 2007 SUPERCEDES STANDARD PLAN ES-1B DATED MAY 1, 2006 - PAGE 401 OF THE STANDARD PLANS BOOK DATED MAY 2006.

REVISED STANDARD PLAN RSP ES-1B

2006 REVISED STANDARD PLAN RSP ES-1B

7-10-07

DIST	COUNTY	ROUTE	POST MILES TOTAL PROJECT	SHEET NO.	TOTAL SHEETS
11	SD	5	R38.5/R38.9	36	43

REGISTERED ELECTRICAL ENGINEER

October 5, 2007
PLANS APPROVAL DATE

REGISTERED PROFESSIONAL ENGINEER Jeffery G. McRae No. E14512 Exp. 6-30-08 ELECTRICAL STATE OF CALIFORNIA

The State of California or its officers or agents shall not be responsible for the accuracy or completeness of electronic copies of this plan sheet.

To accompany plans dated 03-21-11

EQUIPMENT IDENTIFICATION

ILLUMINATED SIGN IDENTIFICATION NUMBER:

Sign No. 12345 — Sign number - Place on post or structure

10 ISL SCI 1.0

- 1.0 — Transformer rating (kVA)
- SCI — Lighting control type
- ISL — Number and type of fixtures

Do NOT place on standard or structure

ELECTROLIER OR EQUIPMENT IDENTIFICATION NUMBER:

12345 - 15'-0"

- 15'-0" — Mast arm length, if shown. Do not place on standard or structure.
- 12345 — Equipment number - Place on standard or structure. Existing equipment numbers are shown in parenthesis

CONDUIT AND CONDUCTOR IDENTIFICATION:

1½"C, 2#10, 15#14, 2 DLC

- 2#10, 15#14, 2 DLC — Number and size of conductors and cables
- 1½"C — Size of conduit in inches

Ø1, Ø2, Ø2P, etc.	Traffic phase identification for signal faces, detectors and phase diagrams
1 2 3	Project note numbers
A B C	Equipment description, installation or item numbers
1 2 3	Conduit run numbers

SIGNAL AND LIGHTING STANDARD (TYPICAL DESIGNATION):

19A - 3 - 100

- 100 — Wind velocity = 100 mph
- 3 — Case 3 arm loading
- 19A — Standard type
- Standard Plan sheet number
- Detail number or letter

MISCELLANEOUS EQUIPMENT

PROPOSED	EXISTING	
CMS	cms	Changeable message sign
		Closed circuit television camera
		Highway advisory radio pole and antenna
EMS	ems	Extinguishable message sign
M V	m v	Detection device M = Microwave sensor V = Video image sensor

WIRING DIAGRAM LEGEND

P	Pole
CB	Circuit breaker
A	Ampere
V	Volt
M	Metered
UM	Unmetered
NB	Neutral bus
GB	Ground bus
G	Equipment grounding conductor
N	Grounded conductor (Neutral)

- External conductor
- Conductor or bus
- Tie point
- Contactor coil
- Contactor, Contact NO
- Terminal blocks
- Contactor, Contact NC
- Enclosure bond
- Grounding electrode
- Circuit breaker
- Receptacle

PULL BOXES

PROPOSED EXISTING

Pull box-No. 5 unless otherwise indicated or noted.

3 — 9A(21)

Pull box-Additional designations or descriptions

3 = No. 3½ pull box
5 = No. 5 pull box
6 = No. 6 pull box
7 = No. 7 (Ceiling pull box)
8 = No. 8 (Pendant soffit pull box)
9 = No. 9 pull box
9A = No. 9A pull box

(C) = Communications pull box
(E) = Pull box with extension
(S) = Sprinkler control pull box
(21) = Anchor bolts and conduit for future installation of Type 21 Standard
(T) = Traffic pull box

VEHICLE DETECTORS

5 J 9 U

- U — U = Upper, L = Lower
- 9 — Slot number in input file
- J — Input file (I or J)
- 5 — Phase

PROPOSED	EXISTING	
		Type A detector loop. Outline of sawcut shown.
		Type B detector loop. Outline of sawcut shown.
		Type C detector loop. Outline of sawcut shown.
		Type D detector loop. Outline of sawcut shown.
		Type E detector loop. Outline of sawcut shown.
		Type Q detector loop. Outline of sawcut shown.
		Magnetic detector
DH	dh	Detector handhole
		Microwave or video detection zone

STATE OF CALIFORNIA
DEPARTMENT OF TRANSPORTATION

ELECTRICAL SYSTEMS (SYMBOLS AND ABBREVIATIONS)

NO SCALE

RSP ES-1C DATED OCTOBER 5, 2007 SUPERCEDES STANDARD PLAN ES-1C DATED MAY 1, 2006 - PAGE 402 OF THE STANDARD PLANS BOOK DATED MAY 2006.

REVISED STANDARD PLAN RSP ES-1C

2006 REVISED STANDARD PLAN RSP ES-1C

7-10-07

DIST	COUNTY	ROUTE	POST MILES TOTAL PROJECT	SHEET NO.	TOTAL SHEETS
11	SD	5	R38.5/R38.9	37	43

REGISTERED ELECTRICAL ENGINEER

June 6, 2008
PLANS APPROVAL DATE

REGISTERED PROFESSIONAL ENGINEER
Jeffery G. McRae
No. E14512
Exp. 6-30-10
ELECTRICAL
STATE OF CALIFORNIA

The State of California or its officers or agents shall not be responsible for the accuracy or completeness of electronic copies of this plan sheet.

To accompany plans dated 03-21-11

2006 REVISED STANDARD PLAN RSP ES-4C

VISORS

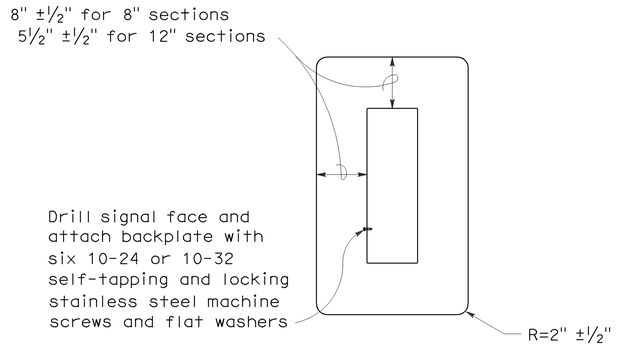

8" AND 12" SECTIONS

BACKPLATE

1/16" minimum thickness
3001-14 aluminum, or plastic when specified

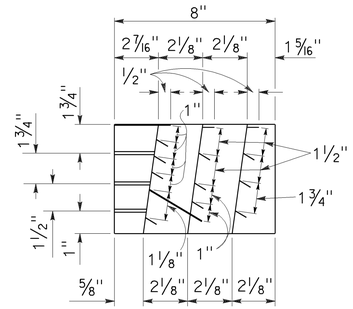

SECTION A-A

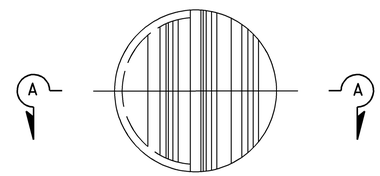

FRONT VIEW

DIRECTIONAL LOUVER

Directional louvers shall be oriented as directed by the Engineer and secured in place with one plated brass machine screw and nut.

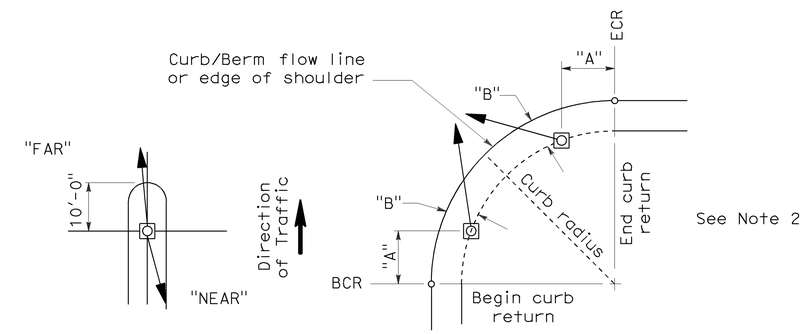

NOTES:

1. Typical signal pole placement unless dimensioned on plans.
2. For "A" and "B" dimensions, see Pole Schedule, or as directed by the Engineer.

SIGNAL STANDARD PLACEMENT DIMENSIONS AND EQUIPMENT LOCATIONS

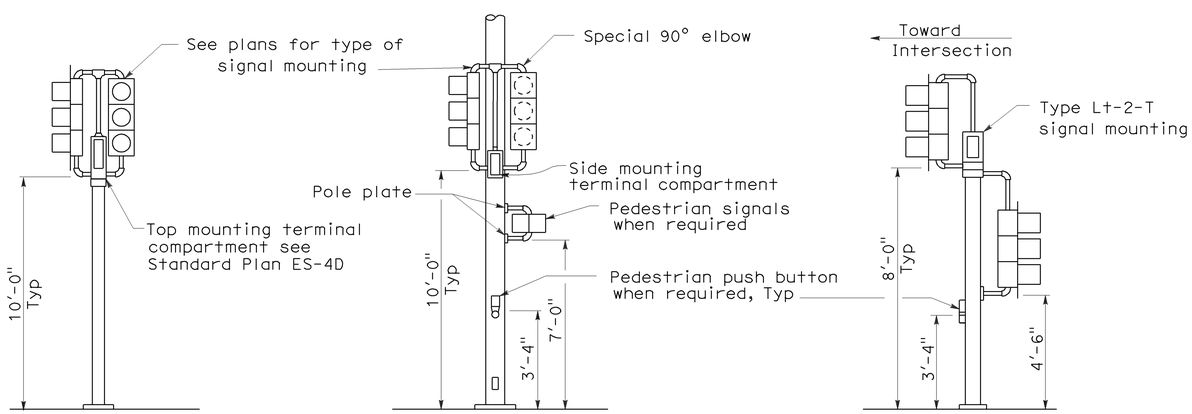

TOP MOUNTED SIGNALS (TV)

Type 1-A, 1-B, 1-C and 1-D standard as indicated on the plans

SIDE MOUNTED SIGNALS (SV AND SP)

Normally used on standards with luminaire or signal mast arm

LEFT TURN LANE SIGNAL

Type 1-A, 1-B, 1-C and 1-D standard as indicated on plans

TYPICAL SIGNAL INSTALLATIONS

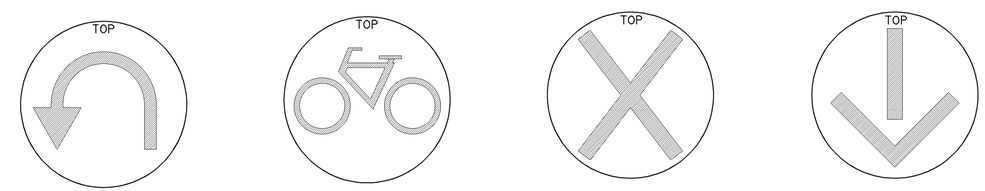

U-TURN SIGNAL FACE

BICYCLE SIGNAL FACE

LANE CONTROL SIGNAL FACE

LANE CONTROL SIGNAL FACE

STATE OF CALIFORNIA
DEPARTMENT OF TRANSPORTATION

ELECTRICAL SYSTEMS (SIGNAL HEADS AND MOUNTINGS)

NO SCALE

RSP ES-4C DATED JUNE 6, 2008 SUPERSEDES STANDARD PLAN ES-4C DATED MAY 1, 2006 - PAGE 420 OF THE STANDARD PLANS BOOK DATED MAY 2006.

REVISED STANDARD PLAN RSP ES-4C

5-19-08

DIST	COUNTY	ROUTE	POST MILES TOTAL PROJECT	SHEET NO.	TOTAL SHEETS
11	SD	5	R38.5/R38.9	38	43

REGISTERED ELECTRICAL ENGINEER

June 6, 2008
PLANS APPROVAL DATE

REGISTERED PROFESSIONAL ENGINEER Jeffery G. McRae No. E14512 Exp. 6-30-10 ELECTRICAL STATE OF CALIFORNIA

The State of California or its officers or agents shall not be responsible for the accuracy or completeness of electronic copies of this plan sheet.

To accompany plans dated 03-21-11

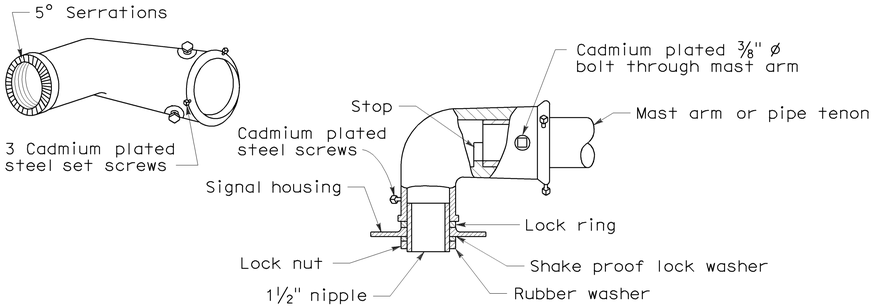

MAST ARM MOUNTING - TYPE "MAT"

For 2 NPS pipe, see Note 1.

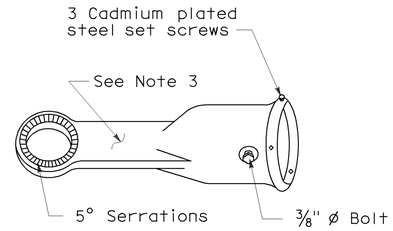

MAST ARM MOUNTING - TYPE "MAS"

For 2 NPS pipe. See Note 1.

SIGNAL SLIP FITTERS

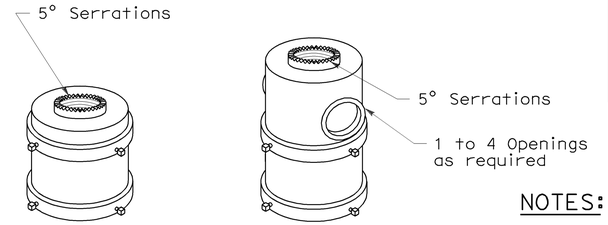

For one mounting For mulitiple mountings

TOP MOUNTINGS

For 4 NPS pipe, see Note 2.

NOTES:

1. After mast arm signal has been plumbed and secured, drill 7/16" hole through mast arm tenon in line with slip fitter hole. Place a cadmium plated ⅜" ø galvanized bolt with washer under bolt head through hole and secure with washer, nut, and locknut. Seal openings between mast arm mountings and mast arm with mastic.
2. (a) Threaded top mounted slip fitter openings shall be 1½ NPS.
   (b) Serrations in fittings shall match those on bottom of signal heads or in lock ring.
   (c) Top opening shall be offset when backplate is used.
3. Wireway shall have a cross section area of 0.95 square inch minimum. Minimum width of ½".

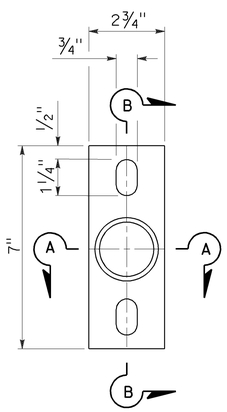

POLE PLATE

For side mountings

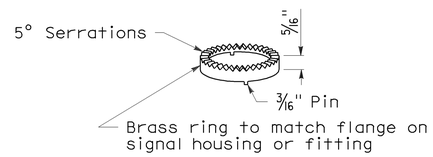

LOCK RING

Use where locking ring is not integral with signal housing or fitting.

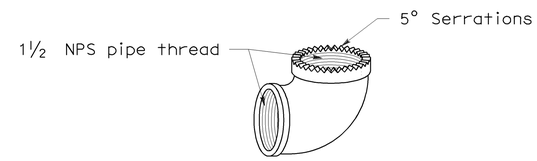

SPECIAL 90° ELBOW

One for each signal head, except those with special slip fitter mounting

MISCELLANEOUS MOUNTING HARDWARE

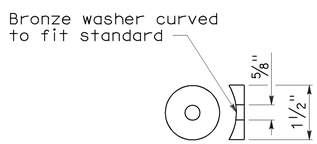

DETAIL "C"

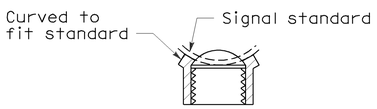

SECTION A-A

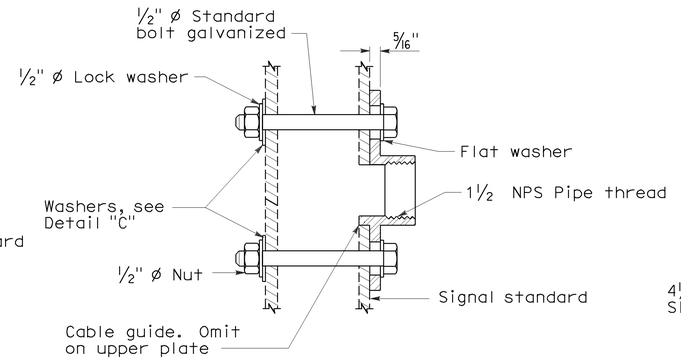

SECTION B-B

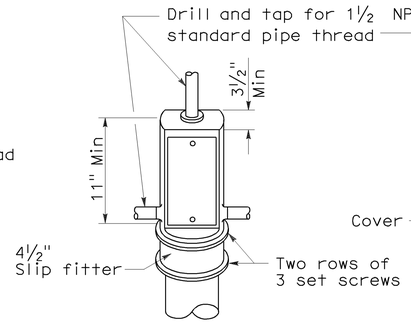

TOP MOUNTING

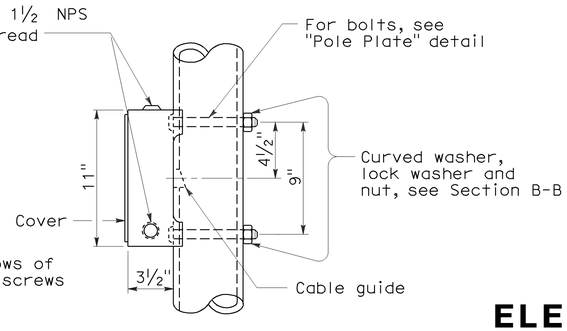

SIDE MOUNTING

TERMINAL COMPARTMENTS

STATE OF CALIFORNIA
DEPARTMENT OF TRANSPORTATION

ELECTRICAL SYSTEMS (SIGNAL HEADS AND MOUNTINGS)

NO SCALE

RSP ES-4D DATED June 6, 2008 SUPERSEDES STANDARD PLAN ES-4D
DATED MAY 1, 2006 - PAGE 421 OF THE STANDARD PLANS BOOK DATED MAY 2006.

REVISED STANDARD PLAN RSP ES-4D

2006 REVISED STANDARD PLAN RSP ES-4D

5-19-08

DIST	COUNTY	ROUTE	POST MILES TOTAL PROJECT	SHEET NO.	TOTAL SHEETS
11	SD	5	R38.5/R38.9	39	43

REGISTERED ELECTRICAL ENGINEER

October 5, 2007
PLANS APPROVAL DATE

REGISTERED PROFESSIONAL ENGINEER Jeffery G. McRae No. E14512 Exp. 6-30-08 ELECTRICAL STATE OF CALIFORNIA

The State of California or its officers or agents shall not be responsible for the accuracy or completeness of electronic copies of this plan sheet.

To accompany plans dated 03-21-11

2006 REVISED STANDARD PLAN RSP ES-5A

LOOP INSTALLATION PROCEDURE

1. Loops shall be centered in lanes.
2. Saw slots in pavement for loop conductors as shown in details.
3. Distance between side of loop and a lead-in saw cut from adjacent detectors shall be 2'-0" minimum. Distance between lead-in saw cuts shall be 6" minimum.
4. Bottom of saw slot shall be smooth with no sharp edges.
5. Slots shall be washed until clean, blown out and thoroughly dried before installing loop conductors.
6. Adjacent loops on the same sensor unit channel shall be wound in opposite directions.
7. Identify and tag loop circuit pairs in the pull box with loop number, start (S) and finish (F) of conductor. Identify and tag lead-in-cable with sensor number and phase.
8. Install loop conductor in slot using a 3/16" to 1/4" thick wood paddle. Hold loop conductors with wood paddles (at the bottom of the sawed slot) during sealant placement.
9. No more than 2 twisted pairs shall be installed in one sawed slot.
10. Allow additional 5'-0" of slack length of conductor for the lead-in run to pull box.
11. The additional length of each conductor for each loop shall be twisted together into a pair (6 turns per 3'-4" minimum) before being placed in the slot and conduit leading to pull box.
12. Test each loop circuit for continuity, circuit resistance and insulation resistance at the pull box before filling slots.
13. Fill slots as shown in details.
14. Splice loop conductors to lead-in-cable. Splices shall be soldered.
15. End of lead-in-cable and Type 2 loop conductor shall be waterproofed prior to installing in conduit to prevent moisture from entering the cable.
16. Lead-in-cable shall not be spliced between the pull box and the controller cabinet terminals.
17. Test each loop circuit for continuity, circuit resistance and insulation resistance at the controller cabinet location.
18. Where loop conductors are not to be spliced to a lead-in-cable, the ends of the conductors shall be taped and waterproofed with electrical insulating coating.

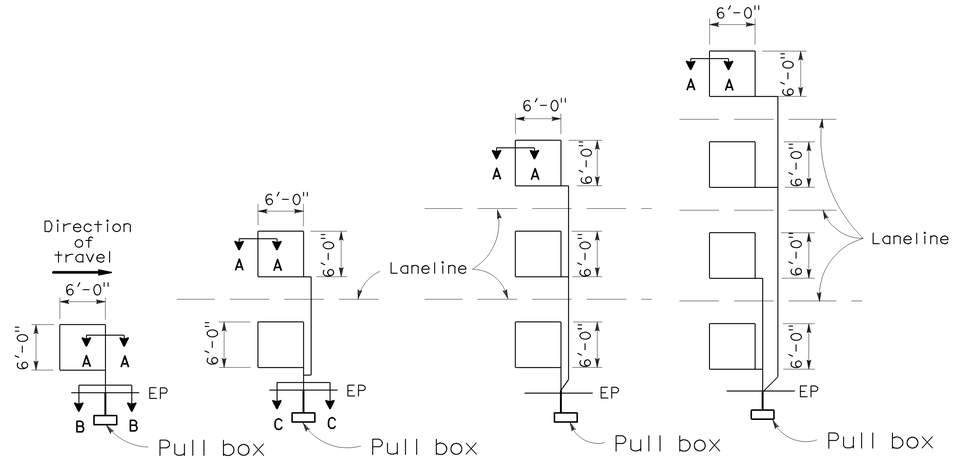

TYPE 1A INSTALLATION | TYPE 2A INSTALLATION | TYPE 3A INSTALLATION | TYPE 4A INSTALLATION

SAWCUT DETAILS

(Type A loop detector configurations illustrated)

1. 1A thru 4A = 1 Type A loop configuration in each lane.
2. 1B thru 4B = 1 Type B loop configuration in each lane.
3. 1C = 1 Type C loop configuration entering lanes as required.
4. 1D thru 4D = 1 Type D loop configuration in each lane.
5. 1E thru 4E = 1 Type E loop configuration in each lane.
6. 1Q thru 4Q = 1 Type Q loop configuration in each lane. (Use Type A, B, C, D, E or Q loop detector configurations only when specified or shown on plans)

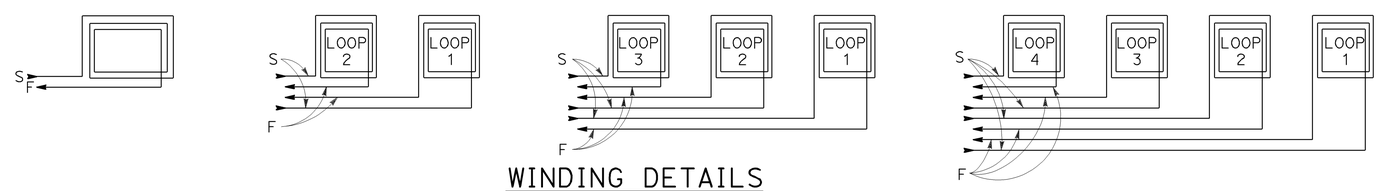

WINDING DETAILS

See Notes 6 and 7

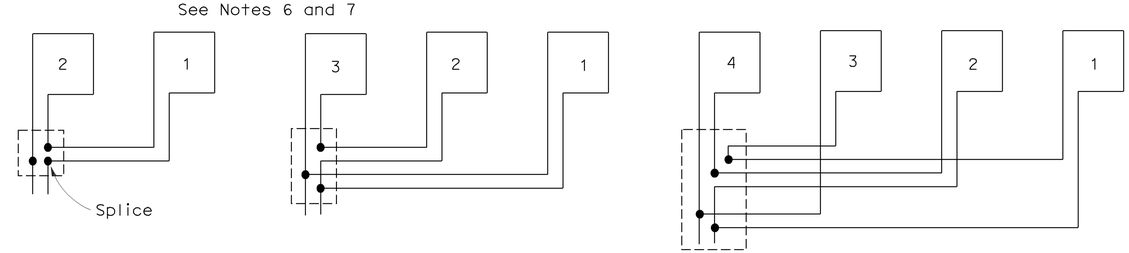

TYPICAL LOOP CONNECTIONS

(Dashed lines represent the pull box)

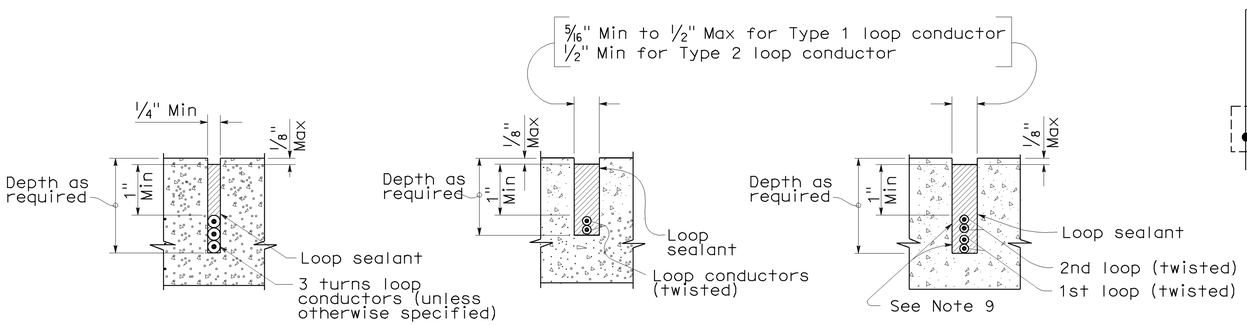

SECTION A-A | SECTION B-B | SECTION C-C

SLOT DETAILS - TYPE 1 AND TYPE 2 LOOP CONDUCTOR

STATE OF CALIFORNIA
DEPARTMENT OF TRANSPORTATION

ELECTRICAL SYSTEMS (DETECTORS)

NO SCALE

RSP ES-5A DATED OCTOBER 5, 2007 SUPERCEDES STANDARD PLAN ES-5A DATED MAY 1, 2006 - PAGE 423 OF THE STANDARD PLANS BOOK DATED MAY 2006.

REVISED STANDARD PLAN RSP ES-5A

8-17-07

DIST	COUNTY	ROUTE	POST MILES TOTAL PROJECT	SHEET NO.	TOTAL SHEETS
11	SD	5	R38.5/R38.9	40	43

REGISTERED CIVIL ENGINEER

October 5, 2007
PLANS APPROVAL DATE

REGISTERED PROFESSIONAL ENGINEER Stanley P. Johnson No. C57793 Exp. 3-31-08 CIVIL STATE OF CALIFORNIA

The State of California or its officers or agents shall not be responsible for the accuracy or completeness of electronic copies of this plan sheet.

To accompany plans dated 03-21-11

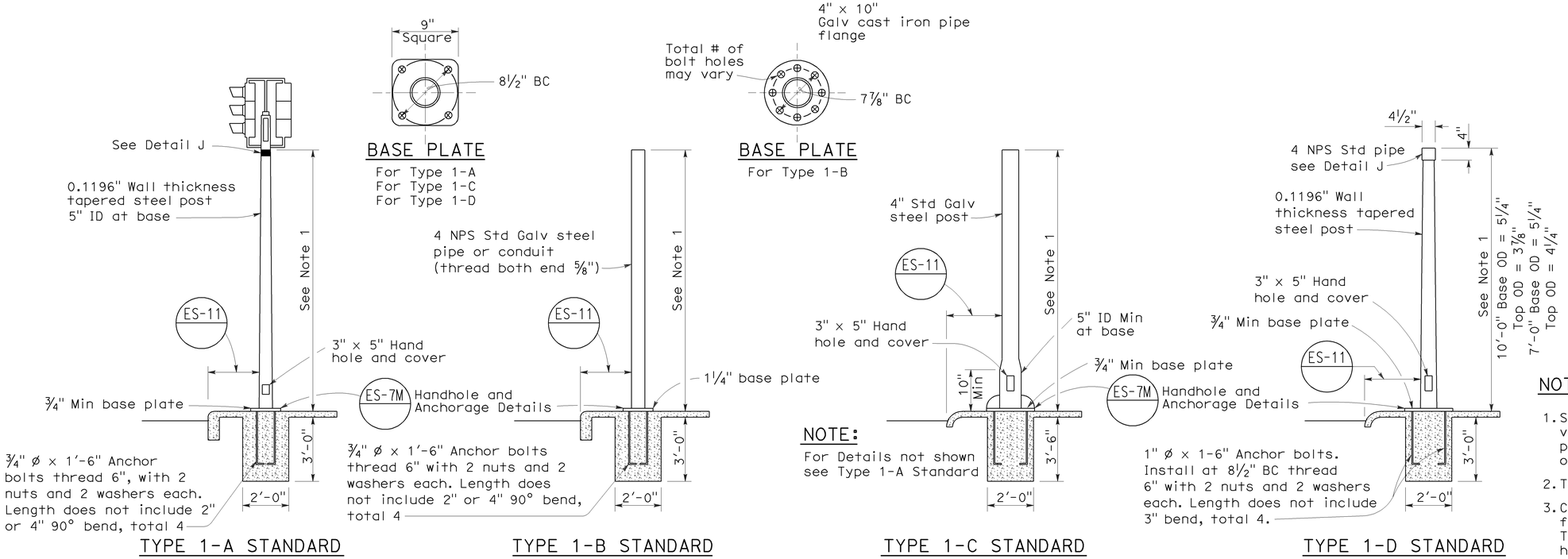

TYPE 1 SIGNAL STANDARDS

NOTES:

1. Standards shall be 10'-0" ± 2" for vehicle signals and 7'-0" ± 2" for pedestrian signals unless otherwise noted on plans.
2. Top of standards shall be 4½" OD.
3. Conduits shall extend 2" maximum above finished surface of foundation and for Types 1-A, 1-C and 1-D shall be sloped toward handhole.
4. Anchor bolts shall be bonded to conduit or grounding conductor.
5. Conduit between standard and adjacent pull box shall be 2" minimum.
6. Paint numbers on roadway side facing traffic when electrolier or post is left of direction of traffic.

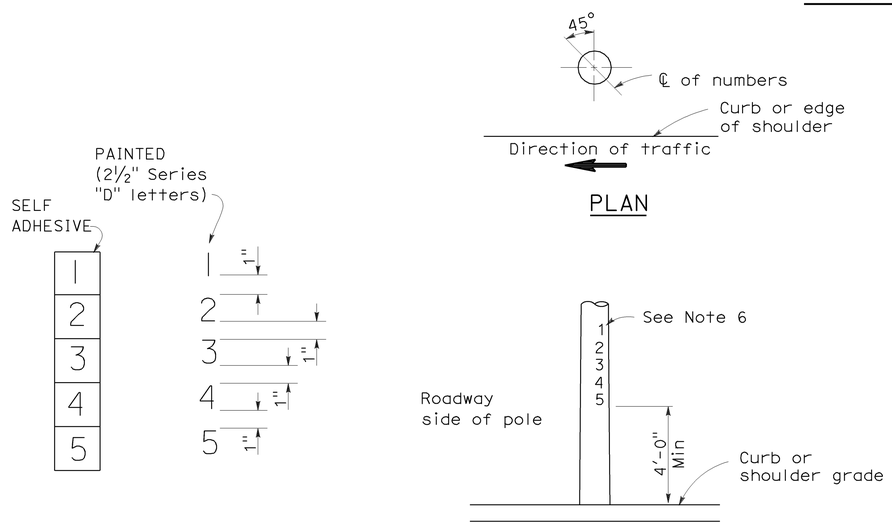

LOCATION OF EQUIPMENT NUMBERS ON STANDARDS AND POSTS

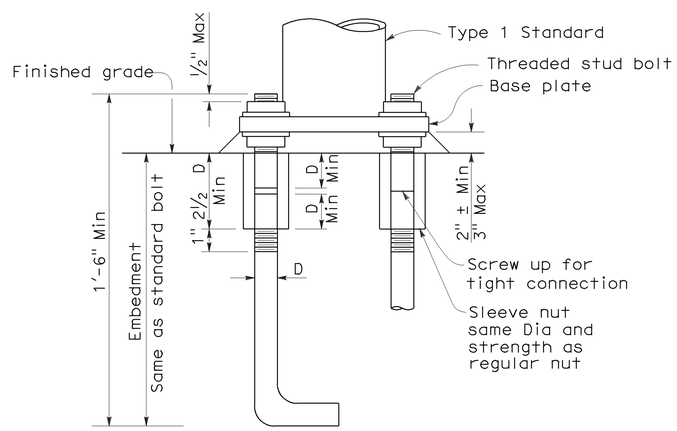

ANCHOR BOLTS WITH SLEEVE NUTS

Sleeve nuts to be used only when shown or specified on Project Plans

D = Diameter of anchor bolt

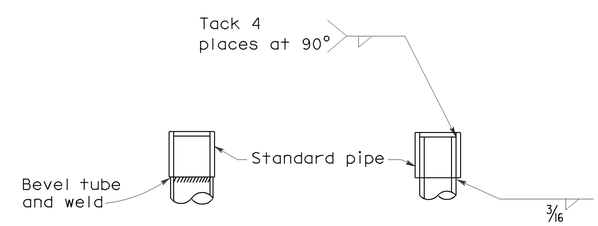

DETAIL J

Tube may be inserted into pipe or butted as required

STATE OF CALIFORNIA
DEPARTMENT OF TRANSPORTATION

ELECTRICAL SYSTEMS (SIGNAL AND LIGHTING STANDARD TYPE 1 STANDARD AND EQUIPMENT NUMBERING)

NO SCALE

RSP ES-7B DATED OCTOBER 5, 2007 SUPERCEDES STANDARD PLAN ES-7B DATED MAY 1, 2006 - PAGE 438 OF THE STANDARD PLANS BOOK DATED MAY 2006.

REVISED STANDARD PLAN RSP ES-7B

2006 REVISED STANDARD PLAN RSP ES-7B

7-10-07

DIST	COUNTY	ROUTE	POST MILES TOTAL PROJECT	SHEET NO.	TOTAL SHEETS
11	SD	5	R38.5/R38.9	41	43

Randell D. Hiatt
REGISTERED CIVIL ENGINEER

June 6, 2008
PLANS APPROVAL DATE

REGISTERED PROFESSIONAL ENGINEER
Randell D. Hiatt
No. C50200
Exp. 6-30-09
CIVIL
STATE OF CALIFORNIA

The State of California or its officers or agents shall not be responsible for the accuracy or completeness of electronic copies of this plan sheet.

To accompany plans dated 03-21-11

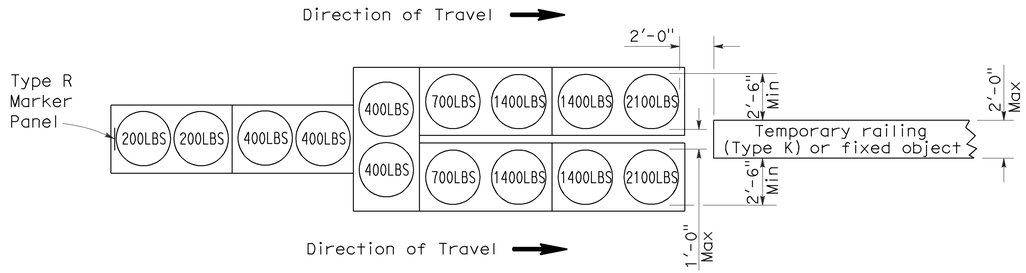

ARRAY 'TU14'

Approach speed 45 mph or more

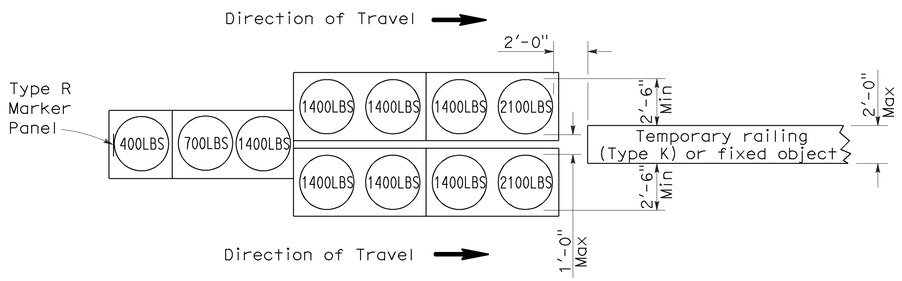

ARRAY 'TU11'

Approach speed less than 45 mph

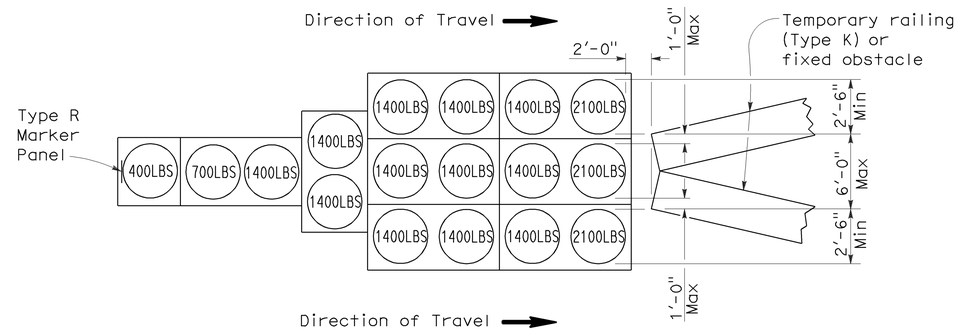

ARRAY 'TU17'

Approach speed less than 45 mph

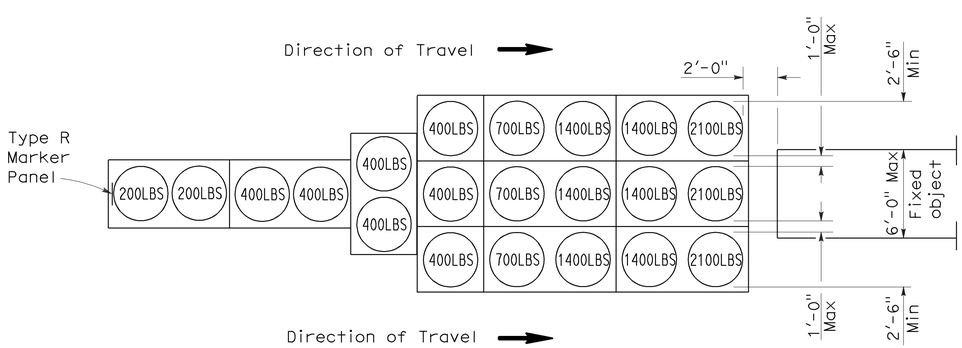

ARRAY 'TU21'

Approach speed 45 mph or more

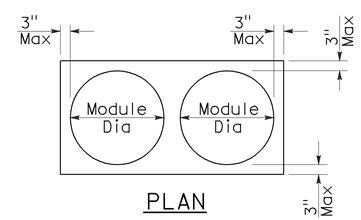

PLAN

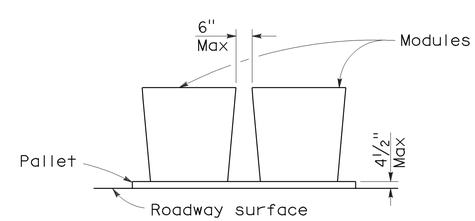

ELEVATION

CRASH CUSHION PALLET DETAIL

See Note 7

NOTES:

1. (XXX) Indicates sand filled module location and weight of sand in pounds for each module. Module spacing is based on the greater diameter of the module.
2. All sand weights are nominal.
3. Temporary crash cushion arrays shall not encroach on the traveled way.
4. Place the top of Type R marker panel 1" below the module lid.
5. Refer to Standard Plan A73B for marker details.
6. Approach speeds indicated conform to NCHRP 350 Report criteria.
7. Use of pallets is optional.

STATE OF CALIFORNIA
DEPARTMENT OF TRANSPORTATION

TEMPORARY CRASH CUSHION, SAND FILLED (UNIDIRECTIONAL)

NO SCALE

RSP T1A DATED JUNE 6, 2008 SUPERSEDES STANDARD PLAN T1A
DATED MAY 1, 2006 - PAGE 211 OF THE STANDARD PLANS BOOK DATED MAY 2006.

REVISED STANDARD PLAN RSP T1A

2006 REVISED STANDARD PLAN RSP T1A

DIST	COUNTY	ROUTE	POST MILES TOTAL PROJECT	SHEET NO.	TOTAL SHEETS
11	SD	5	R38.5/R38.9	42	43

Randell D. Hiatt
REGISTERED CIVIL ENGINEER

June 6, 2008
PLANS APPROVAL DATE

REGISTERED PROFESSIONAL ENGINEER
Randell D. Hiatt
No. C50200
Exp. 6-30-09
CIVIL
STATE OF CALIFORNIA

The State of California or its officers or agents shall not be responsible for the accuracy or completeness of electronic copies of this plan sheet.

To accompany plans dated 03-21-11

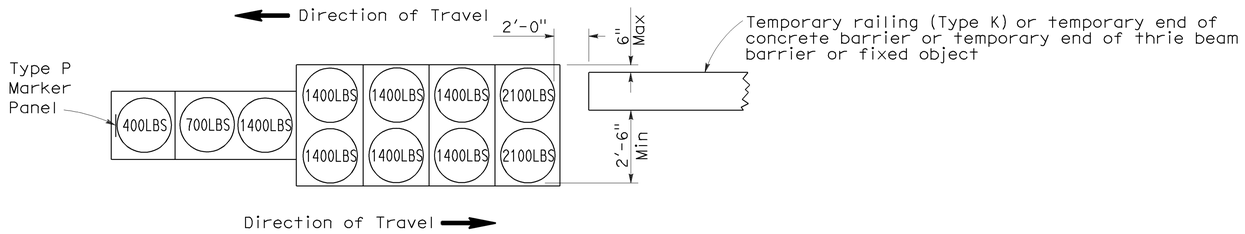

ARRAY 'TB11'

Approach speed less than 45 mph

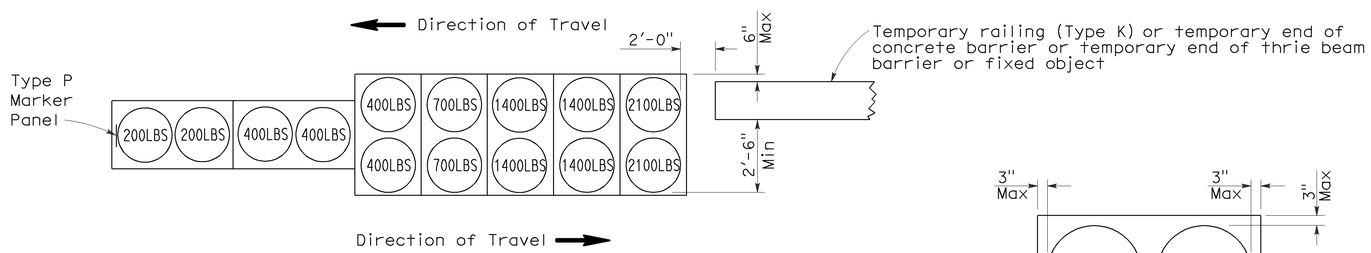

ARRAY 'TB14'

Approach speed 45 mph or more

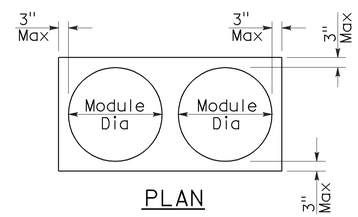

PLAN

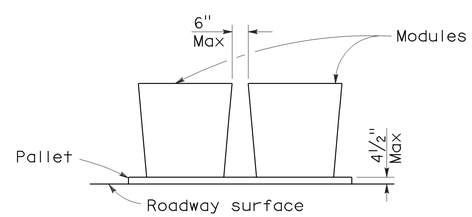

ELEVATION

CRASH CUSHION PALLET DETAIL

See Note 7

NOTES:

1. (XXX) Indicates sand filled module location and weight of sand in pounds for each module. Module spacing is based on the greater diameter of the module.
2. All sand weights are nominal.
3. Temporary crash cushion arrays shall not encroach on the traveled way.
4. Place the Type P marker panel so that the bottom of the panel rests upon the pallet.
5. Refer to Standard Plan A73B for marker details.
6. Approach speeds indicated conform to NCHRP 350 Report criteria.
7. Use of pallets is optional.

STATE OF CALIFORNIA
DEPARTMENT OF TRANSPORTATION

TEMPORARY CRASH CUSHION, SAND FILLED (BIDIRECTIONAL)

NO SCALE

RSP T1B DATED JUNE 6, 2008 SUPERSEDES STANDARD PLAN T1B
DATED MAY 1, 2006 - PAGE 212 OF THE STANDARD PLANS BOOK DATED MAY 2006.

REVISED STANDARD PLAN RSP T1B

2006 REVISED STANDARD PLAN RSP T1B

5-15-08

DIST	COUNTY	ROUTE	POST MILES TOTAL PROJECT	SHEET NO.	TOTAL SHEETS
11	SD	5	R38.5/R38.9	43	43

Randell D. Hiatt
REGISTERED CIVIL ENGINEER

June 6, 2008
PLANS APPROVAL DATE

REGISTERED PROFESSIONAL ENGINEER
Randell D. Hiatt
No. C50200
Exp. 6-30-09
CIVIL
STATE OF CALIFORNIA

The State of California or its officers or agents shall not be responsible for the accuracy or completeness of electronic copies of this plan sheet.

To accompany plans dated 03-21-11

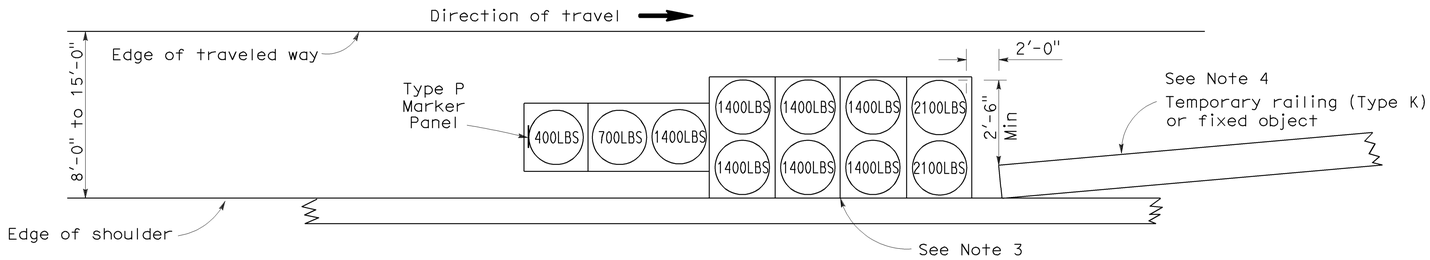

ARRAY 'TS11'

Approach speed less than 45 mph
See Note 9

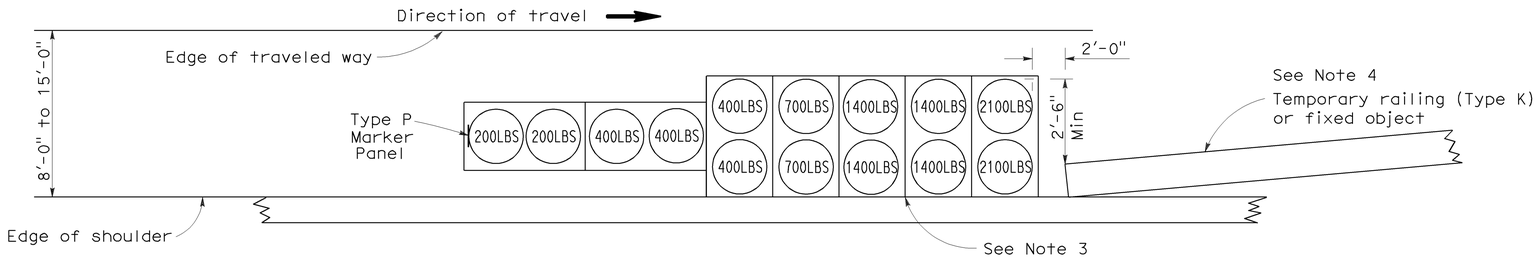

ARRAY 'TS14'

Approach speed 45 mph or more
See Note 9

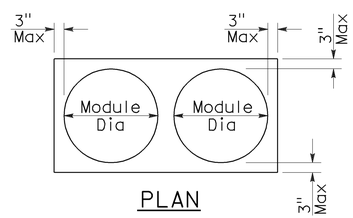

PLAN

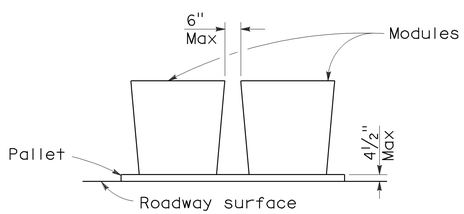

ELEVATION

CRASH CUSHION PALLET DETAIL

See Note 11

NOTES:

1. (XXX) Indicates sand filled module location and weight of sand in pounds for each module. Module spacing is based on the greater diameter of the module.
2. All sand weights are nominal.
3. The temporary crash cushion arrays shown on this plan shall be used only in locations where there will be traffic on one side of the temporary crash cushion array.
4. If the fixed object or approach end of the temporary railing is less than 15'-0" from the edge of traveled way, a temporary crash cushion is required in a construction or work zone.
5. Temporary crash cushion arrays shall not encroach on the traveled way.
6. Arrays for median shoulders shall conform to details shown on this plan for outside shoulders.
7. Place the Type P marker panel so that the bottom of the panel rests upon the pallet and faces traffic.
8. Refer to Standard Plan A73B for marker details.
9. For shoulder widths less than 8'-0", appropriate approved crash cushion protection, other than sand filled modules, shall be provided at fixed objects and at approach ends of temporary railing. The specific type of crash cushion shall be as shown on the project plans or as specified in the Special Provisions, or if not shown on the project plans or specified in the Special Provisions, shall be as approved by the Engineer.
10. Approach speeds indicated conform to NCHRP 350 Report criteria.
11. Use of pallets is optional.

STATE OF CALIFORNIA
DEPARTMENT OF TRANSPORTATION

TEMPORARY CRASH CUSHION, SAND FILLED (SHOULDER INSTALLATIONS)

NO SCALE

RSP T2 DATED JUNE 6, 2008 SUPERSEDES STANDARD PLAN T2
DATED MAY 1, 2006 - PAGE 213 OF THE STANDARD PLANS BOOK DATED MAY 2006.

REVISED STANDARD PLAN RSP T2

2006 REVISED STANDARD PLAN RSP T2

5-15-08