Dist	COUNTY	ROUTE	POST MILES TOTAL PROJECT	SHEET No.	TOTAL SHEETS
11	SD	5	R61.8/R62.1	1	54

STATE OF CALIFORNIA

DEPARTMENT OF TRANSPORTATION

ACIM-005-1(620)E

PROJECT PLANS FOR CONSTRUCTION ON

STATE HIGHWAY

IN SAN DIEGO COUNTY NEAR OCEANSIDE FROM 0.3 MILE SOUTH OF LAS PULGAS ROAD UNDERCROSSING TO LAS PULGAS ROAD UNDERCROSSING

TO BE SUPPLEMENTED BY STANDARD PLANS DATED MAY 2006

INDEX OF PLANS

Sheet No.	Description
1	Title and Location Map
2-3	Typical Cross Sections
4	Project Control
5	Layout
6-7	Profile and Superelevation Diagram
8	Construction Details
9-10	Temporary Water Pollution Control Plan and Quantities
11-13	Erosion Control Plan, Details and Quantities
14-20	Contour Grading and Drainage Plan, Profile, Details, and Quantities
21	Utility Plan
22	Construction Area Signs
23-27	Stage Construction and Traffic Handling Plans and Quantities
28	Traffic Handling Plan
29-31	Pavement Delineation and Sign Plan, Details and Quantities
32-34	Sign Details and Quantities
35	Summary of Quantities
36	Electrical Plans
37-54	Revised and New Standard Plans

THE STANDARD PLANS LIST APPLICABLE TO THIS CONTRACT IS INCLUDED IN THE NOTICE TO BIDDERS AND SPECIAL PROVISIONS BOOK.

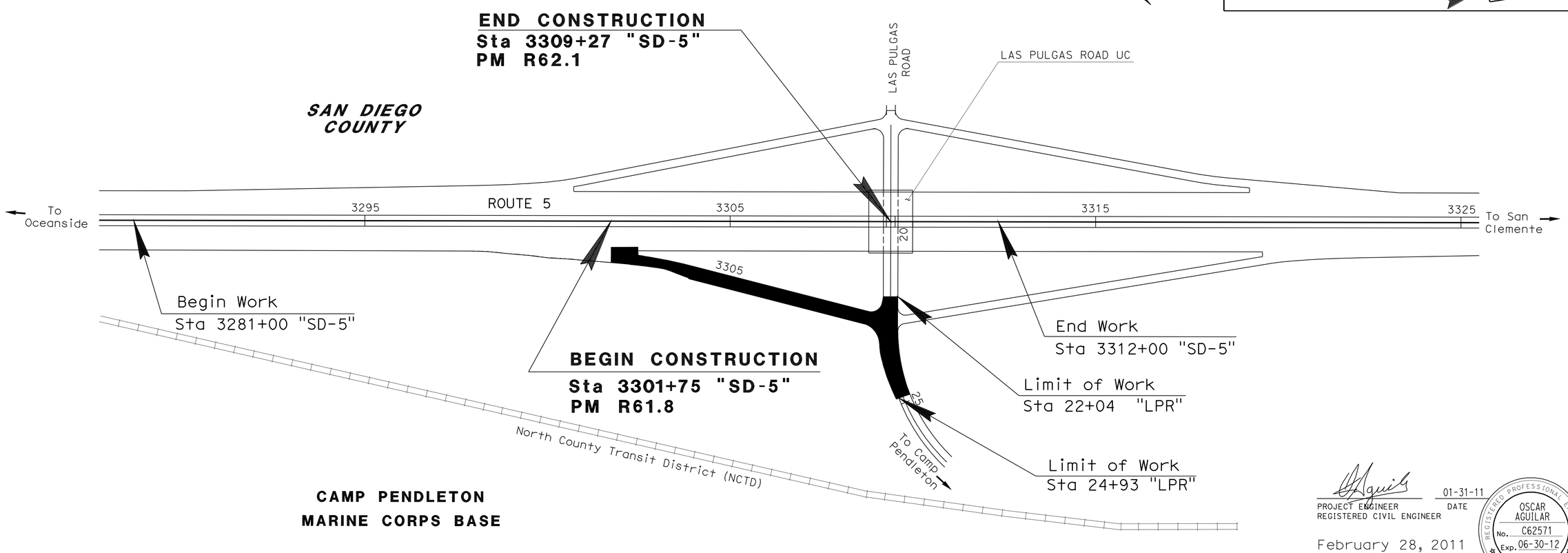

PROJECT ENGINEER REGISTERED CIVIL ENGINEER — DATE 01-31-11

February 28, 2011
PLANS APPROVAL DATE

REGISTERED PROFESSIONAL ENGINEER — OSCAR AGUILAR — No. C62571 — Exp. 06-30-12 — CIVIL — STATE OF CALIFORNIA

THE STATE OF CALIFORNIA OR ITS OFFICERS OR AGENTS SHALL NOT BE RESPONSIBLE FOR THE ACCURACY OR COMPLETENESS OF SCANNED COPIES OF THIS PLAN SHEET.

PROJECT MANAGER: ED HAJJ

DESIGN ENGINEER: OSCAR M AGUILAR

THE CONTRACTOR SHALL POSSESS THE CLASS (OR CLASSES) OF LICENSE AS SPECIFIED IN THE "NOTICE TO BIDDERS."

NO SCALE

CONTRACT No.	11-401804
PROJECT ID	1100000534

LAST REVISION 02-17-11 — DATE PLOTTED => 09-MAR-2011 — TIME PLOTTED => 09:18

Dist	COUNTY	ROUTE	POST MILES TOTAL PROJECT	SHEET No.	TOTAL SHEETS
11	SD	5	R61.8/R62.1	2	54

REGISTERED CIVIL ENGINEER 01-31-11 DATE

02-28-11
PLANS APPROVAL DATE

REGISTERED PROFESSIONAL ENGINEER OSCAR AGUILAR No. C62571 Exp. 06-30-12 CIVIL STATE OF CALIFORNIA

THE STATE OF CALIFORNIA OR ITS OFFICERS OR AGENTS SHALL NOT BE RESPONSIBLE FOR THE ACCURACY OR COMPLETENESS OF SCANNED COPIES OF THIS PLAN SHEET.

DESIGN DESIGNATION

ADT (2009)=65,400 D=46%
DHV=11,700 V=65 MPH
T=7.23%

NOTES:

1. DIMENSIONS OF THE STRUCTURAL SECTIONS ARE SUBJECT TO TOLERANCES SPECIFIED IN THE STANDARD SPECIFICATIONS.
2. SUPERELEVATION AS SHOWN OR AS DIRECTED BY THE ENGINEER.
3. FOG SEAL COAT SHALL BE APPLIED TO ALL HMA SURFACES EXCEPT TRAVELED WAY.

LEGEND:

CPT = CATCH POINT
(*) = MATCH EXISTING

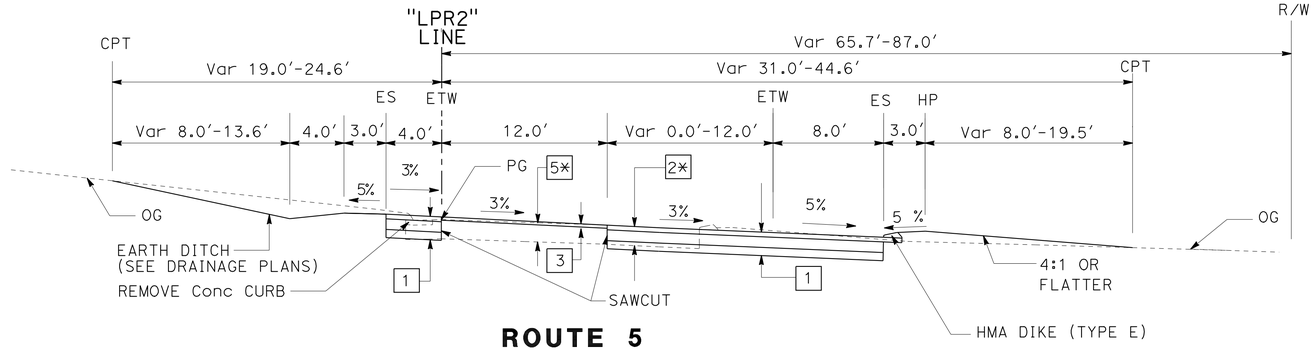

ROUTE 5
"LPR2" Sta 3303+00.00 TO 3309+04.39

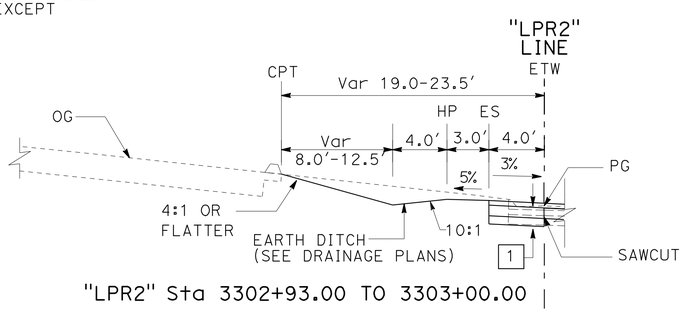

"LPR2" Sta 3302+93.00 TO 3303+00.00

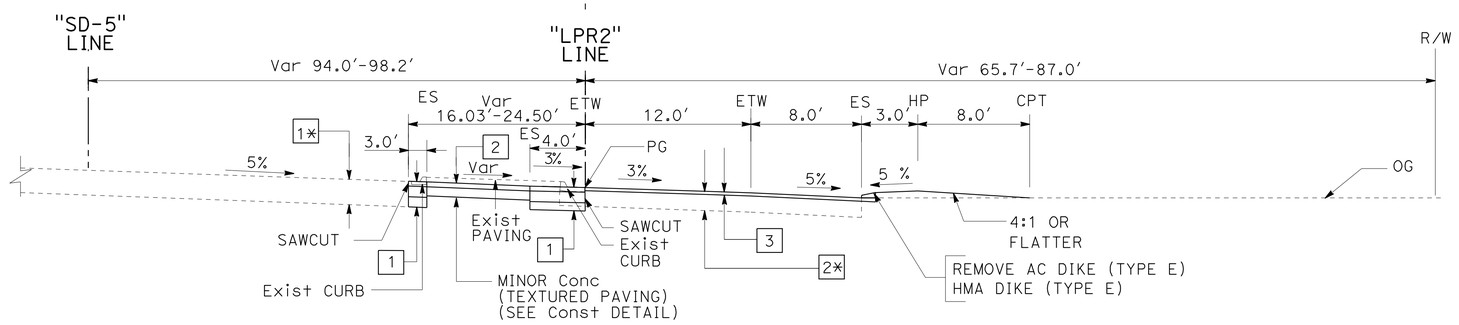

"LPR2" Sta 3301+84.76 TO 3302+93.00

ROUTE 5
"LPR2" Sta 3301+84.76 TO 3303+00.00

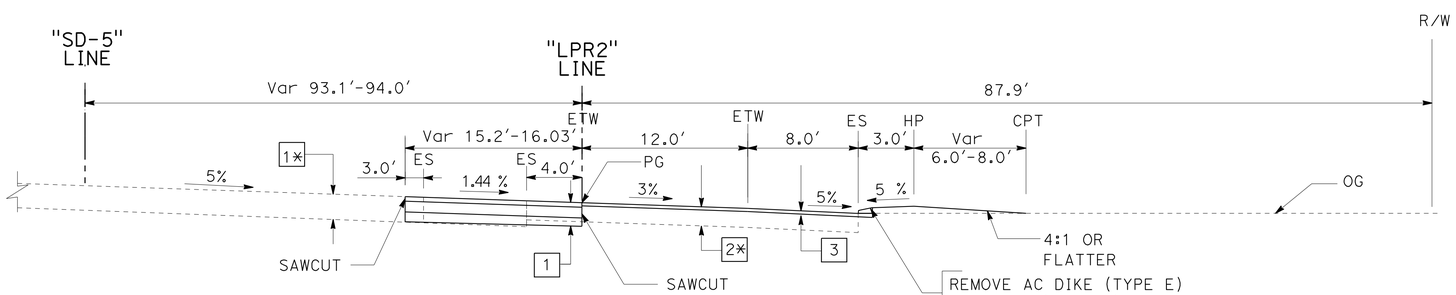

ROUTE 5
"LPR2" Sta 3301+75.00 TO 3301+84.76

STRUCTURAL SECTIONS

	Exist STRUCTURE
1*	- 0.75' AC - 0.50' CTB (TYPE A) - 0.25' AB (CI-2) - 0.50' AS (CI-4)
2*	- 0.35' AC (TYPE B) - 0.50' & Var CTB (TYPE B) - 1.00' AS (CI-4)
3*	- 0.67' PCC - 0.35' CTB (TYPE A) - 0.30' AB (CI-2) - 0.68' AS (CI-4)
4*	- 0.20' AC (TYPE B) - 1.11' & Var CTB (TYPE B) - 0.68' AS (CI-4)
5*	- 0.35' AC (TYPE B) - 0.50' CTB (TYPE B) - 1.00' AS (CI-4)

STRUCTURAL SECTIONS

	NEW STRUCTURE
1	- 0.50' HMA (TYPE A) - 1.15' AB (CI-2) - 0.90' AS (CI-4)
2	- 0.50' MINOR CONCRETE (TEXTURED PAVING) (EXPOSED AGGREGATE) - 1.00' AB (CI-2)
3	- 0.35' COLD PLANE AC PAVEMENT - 0.35' HMA (TYPE A)
4	- 0.30' HMA (TYPE A) - 0.75' AB (CI-2) - 0.55' AS (CI-4)
5	- GRIND Exist Conc PAVEMENT
6	- 0.20' COLD PLANE AC PAVEMENT - 0.20' HMA (TYPE A)

TYPICAL CROSS SECTIONS

NO SCALE

X-1

REVISED BY | DATE REVISED
OSCAR M AGUILAR | THIN BUI
CALCULATED-DESIGNED BY | CHECKED BY
FUNCTIONAL SUPERVISOR | ED HAJJ

STATE OF CALIFORNIA - DEPARTMENT OF TRANSPORTATION
Caltrans
DESIGN

LAST REVISION 02-17-11 | DATE PLOTTED => 03-MAR-2011 | TIME PLOTTED => 11:53

Dist	COUNTY	ROUTE	POST MILES TOTAL PROJECT	SHEET No.	TOTAL SHEETS
11	SD	5	R61.8/R62.1	3	54

REGISTERED CIVIL ENGINEER 01-31-11 DATE

02-28-11
PLANS APPROVAL DATE

REGISTERED PROFESSIONAL ENGINEER OSCAR AGUILAR No. C62571 Exp. 06-30-12 CIVIL STATE OF CALIFORNIA

THE STATE OF CALIFORNIA OR ITS OFFICERS OR AGENTS SHALL NOT BE RESPONSIBLE FOR THE ACCURACY OR COMPLETENESS OF SCANNED COPIES OF THIS PLAN SHEET.

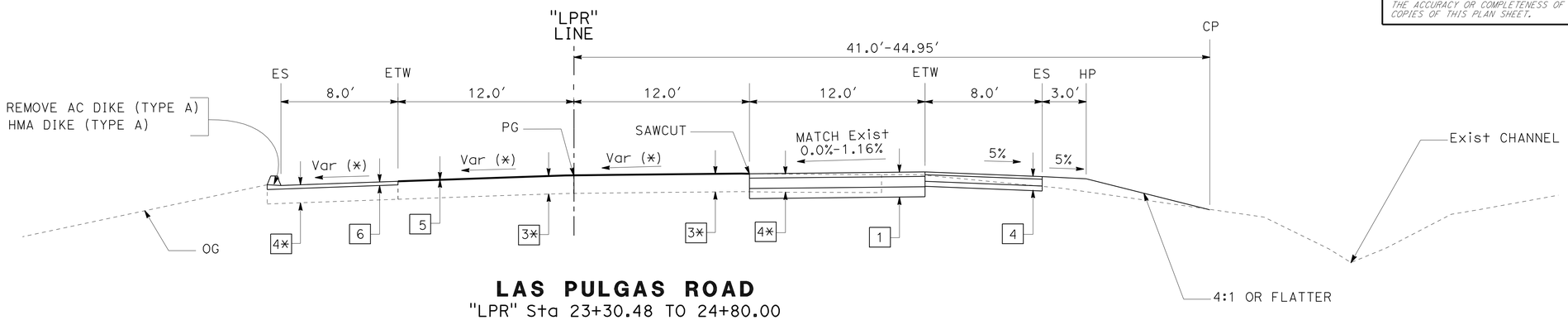

LAS PULGAS ROAD
"LPR" Sta 23+30.48 TO 24+80.00

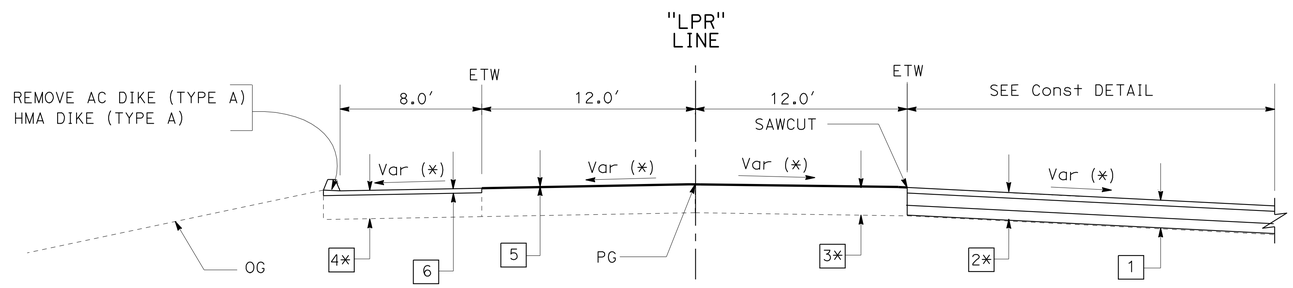

LAS PULGAS ROAD
"LPR" Sta 22+23.94 TO 23+30.48

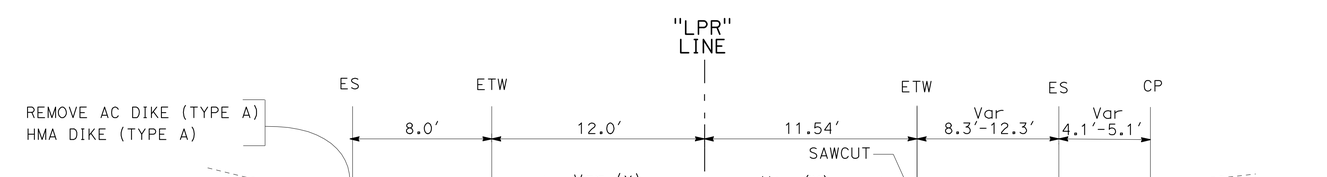

LAS PULGAS ROAD
"LPR" Sta 22+04.90 TO 22+23.94

TYPICAL CROSS SECTIONS

NO SCALE

X-2

STATE OF CALIFORNIA - DEPARTMENT OF TRANSPORTATION
Caltrans
DESIGN

FUNCTIONAL SUPERVISOR: ED HAJJ
CALCULATED-DESIGNED BY: OSCAR M AGUILAR
CHECKED BY: THIN BUI
REVISED BY
DATE REVISED

LAST REVISION 02-17-11
DATE PLOTTED => 03-MAR-2011
TIME PLOTTED => 11:53

Dist	COUNTY	ROUTE	POST MILES TOTAL PROJECT	SHEET No.	TOTAL SHEETS
11	SD	5	R61.8/R62.1	4	54

Wayne G. Strong
PROFESSIONAL LAND SURVEYOR DATE

02-28-11
PLANS APPROVAL DATE

PROFESSIONAL LAND SURVEYOR WAYNE GLEN STRONG L.S. 5024 Exp. 12/31/2011 STATE OF CALIFORNIA

THE STATE OF CALIFORNIA OR ITS OFFICERS OR AGENTS SHALL NOT BE RESPONSIBLE FOR THE ACCURACY OR COMPLETENESS OF SCANNED COPIES OF THIS PLAN SHEET.

NOTES:

1. CONTACT DISTRICT 11 OFFICE OF LAND SURVEYS, PHONE (858)467-4305, FOR ADDITIONAL INFORMATION OR QUERIES REGARDING THIS SURVEY PROJECT CONTROL.
2. BASIS OF BEARINGS AND COORDINATES

   FOR THIS PROJECT IS THE CALIFORNIA COORDINATE SYSTEM OF 1983, HPGN EPOCH ADJUSTMENT [CCS 83 (1991.35)], ZONE 6. 3RD ORDER PROJECT CONTROL STATIONS WERE ESTABLISHED IN AUGUST 2000 BASED ON THE CRITERIA SET FORTH IN THE FEDERAL GEODETIC CONTROL SUBCOMMITTEE'S "GEOMETRIC GEODETIC ACCURACY STANDARDS AND SPECIFICATIONS FOR USING GPS RELATIVE POSITIONING TECHNIQUES" REPRINTED AUGUST 1, 1989.

   THIS GPS FAST STATIC SURVEY WAS CONSTRAINED TO 2ND ORDER STATION 5-54.39 AND "A" ORDER STATION "SDGPS 01" PER THE ABOVE-REFERENCED STANDARDS.
3. BASIS OF ELEVATIONS

   FOR THIS PROJECT IS THE NORTH AMERICAN VERTICAL DATUM OF 1988 (NAVD88). ELEVATIONS WERE ESTABLISHED BY GPS FAST STATIC SURVEY CONSTRAINING TO 2ND ORDER VERTICAL STATION 5-62.26. BEING ELEVATION 94.08'. (SEE CALTRIG LEVELS TO NGS BM MP15)
4. IN THE EVENT GPS MACHINE CONTROL/GUIDANCE IS USED FOR THIS PROJECT, THE CONTRACTOR SHALL CONTACT OR MEET WITH DISTRICT 11'S LAND SURVEY DIVISION TO OBTAIN THE CONTROL NECESSARY TO ESTABLISH A PROJECT CALIBRATION COMPATIBLE FOR ALL USERS.

ABBREVIATIONS:

CADT	CALIFORNIA DEPARTMENT OF TRANSPORTATION
CDH	CALIFORNIA DIVISION OF HIGHWAYS
HPGN	HIGH PRECISION GEODETIC NETWORK
IP	IRON PIPE
NGS	NATIONAL GEODETIC SURVEY
PK	PARKER KALON NAIL
SDCE	SAN DIEGO COUNTY ENGINEER
WP	WORK POINT
WSHR	WASHER

LEGEND:

- (A) "A" ORDER STATION
- (2) 2ND ORDER STATION
- (3) 3RD ORDER STATION

CONTROL FOR DESIGN AND CONSTRUCTION

STATION DESIGNATION	ORDER	NORTHING	EASTING	ELEVATION	DESCRIPTION
SDGPS 01	A	2,082,713.05	6,160,180.88	96.88	SDCE DISK IN ROD
5-54.39	2ND	2,022,031.69	6,213,723.05	75.05	2 1/4" CADT BRASS DISK IN BRIDGE
5-62.26	2ND	2,055,211.55	6,189,987.70	94.08	2 1/4" CDH BRASS DISK IN 2" IP
WP 5 61.9L	3RD	2,053,796.80	6,191,142.54	53.26	PK & WSHR ON AC DIKE
WP 5 61.95R	3RD	2,054,046.13	6,191,132.57	58.68	PK & WSHR ON PULGAS GORE
WP 5 62.15R	3RD	2,054,770.95	6,190,406.57	88.28	PK & WSHR AC DIKE

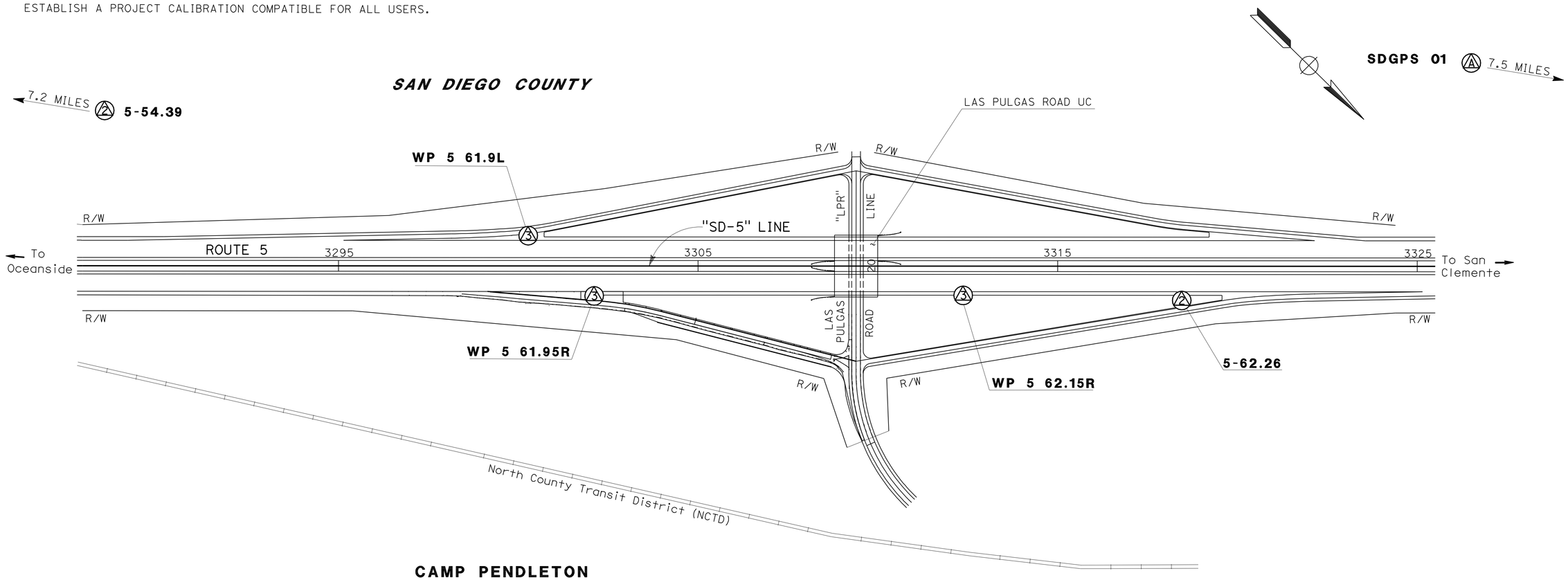

PROJECT CONTROL

NO SCALE

PC-1

STATE OF CALIFORNIA - DEPARTMENT OF TRANSPORTATION
Caltrans® OFFICE OF LAND SURVEYS

FUNCTIONAL SUPERVISOR: BRUCE URQUHART
CALCULATED-DESIGNED BY: WAYNE STRONG
CHECKED BY: NED SALMAN
REVISED BY
DATE REVISED

LAST REVISION 02-17-11
DATE PLOTTED => 03-MAR-2011
TIME PLOTTED => 11:53

Dist	COUNTY	ROUTE	POST MILES TOTAL PROJECT	SHEET No.	TOTAL SHEETS
11	SD	5	R61.8/R62.1	5	54

REGISTERED CIVIL ENGINEER 01-31-11 DATE

02-28-11
PLANS APPROVAL DATE

REGISTERED PROFESSIONAL ENGINEER OSCAR AGUILAR No. C62571 Exp. 06-30-12 CIVIL STATE OF CALIFORNIA

THE STATE OF CALIFORNIA OR ITS OFFICERS OR AGENTS SHALL NOT BE RESPONSIBLE FOR THE ACCURACY OR COMPLETENESS OF SCANNED COPIES OF THIS PLAN SHEET.

NOTE:

1. FOR ACCURATE RIGHT OF WAY AND ACCESS DATA, CONTACT RIGHT OF WAY ENGINEERING AT DISTRICT OFFICE.

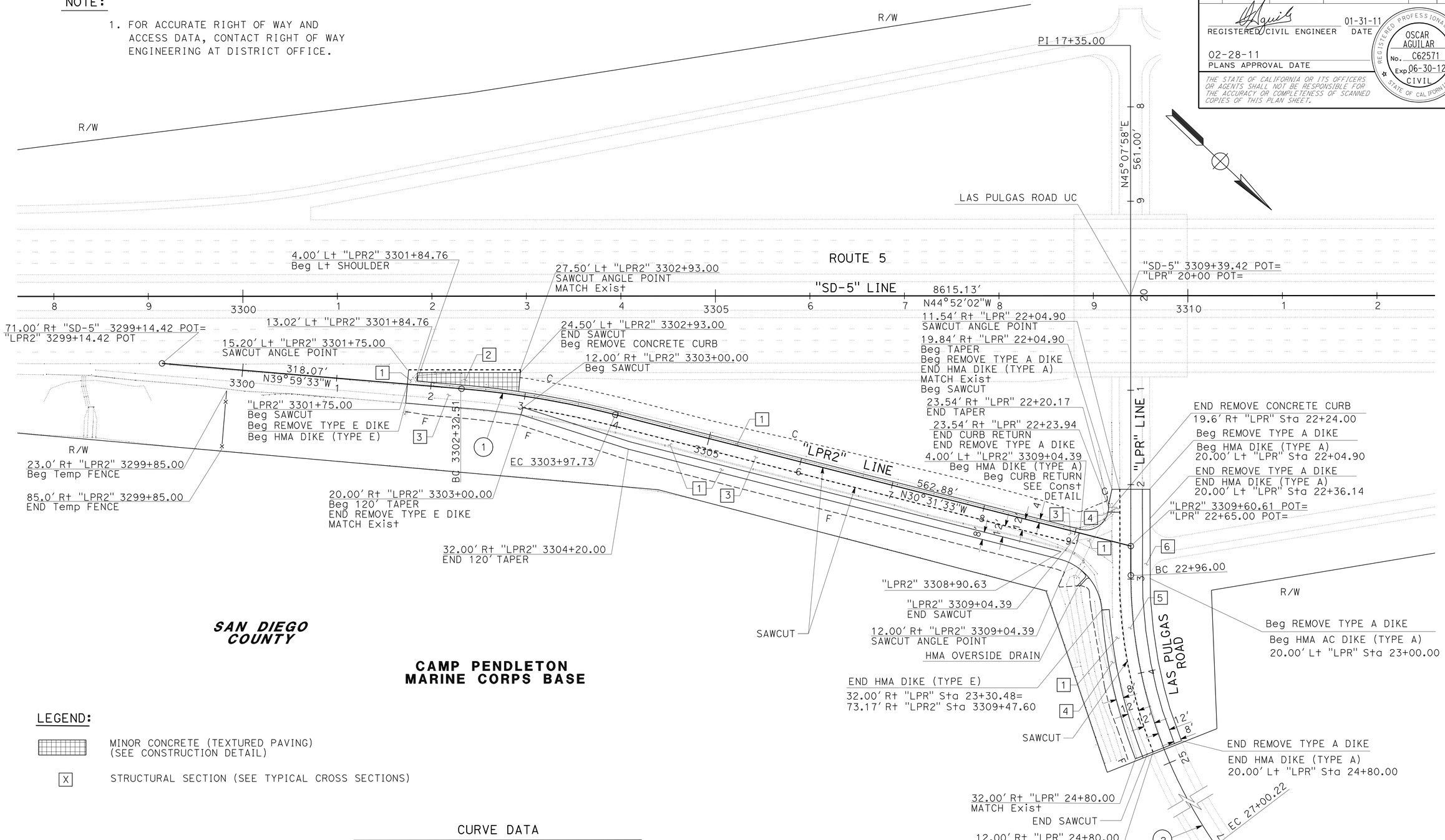

SAN DIEGO COUNTY

CAMP PENDLETON MARINE CORPS BASE

LEGEND:

MINOR CONCRETE (TEXTURED PAVING) (SEE CONSTRUCTION DETAIL)

[X] STRUCTURAL SECTION (SEE TYPICAL CROSS SECTIONS)

CURVE DATA

No.	R	Δ	T	L
1	1000.00'	9°28'00"	82.80'	165.23'
2	500.00'	46°19'12"	213.89'	404.22'

LAYOUT L-1

SCALE: 1"=50'

STATE OF CALIFORNIA - DEPARTMENT OF TRANSPORTATION
DESIGN
Caltrans

FUNCTIONAL SUPERVISOR: ED HAJJ
CALCULATED-DESIGNED BY: OSCAR M AGUILAR
CHECKED BY: SEAN HOANG
REVISED BY
DATE REVISED

LAST REVISION 02-17-11
DATE PLOTTED => 03-MAR-2011
TIME PLOTTED => 11:53

Dist	COUNTY	ROUTE	POST MILES TOTAL PROJECT	SHEET No.	TOTAL SHEETS
11	SD	5	R61.8/R62.1	6	54

REGISTERED CIVIL ENGINEER 01-31-11 DATE

02-28-11
PLANS APPROVAL DATE

REGISTERED PROFESSIONAL ENGINEER OSCAR AGUILAR No. C62571 Exp. 06-30-12 CIVIL STATE OF CALIFORNIA

THE STATE OF CALIFORNIA OR ITS OFFICERS OR AGENTS SHALL NOT BE RESPONSIBLE FOR THE ACCURACY OR COMPLETENESS OF SCANNED COPIES OF THIS PLAN SHEET.

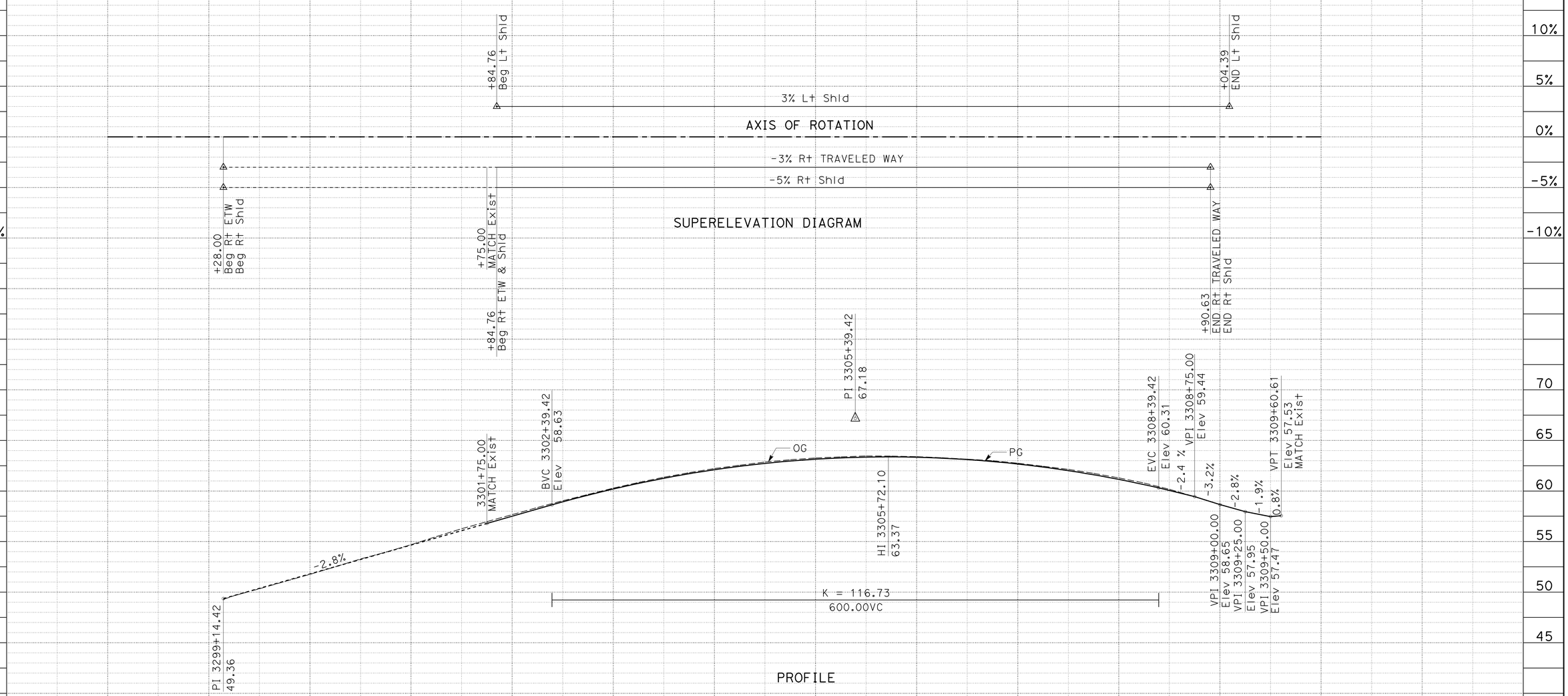

ROUTE 5
"LPR2" LINE

PROFILE AND SUPERELEVATION DIAGRAM

SCALE: Horiz 1"=50'
Vert 1"=5'

PS-1

STATION		9	3300+00	1	2	3	4	3305+00	6	7	8	9	3310+00	TOTAL
CY	Exc				1950.0									1950.0
	Emb				83.0									83.0

STATE OF CALIFORNIA - DEPARTMENT OF TRANSPORTATION
Caltrans
DESIGN

FUNCTIONAL SUPERVISOR: ED HAJJ
CALCULATED-DESIGNED BY: OSCAR M AGUILAR
CHECKED BY: SEAN HOANG
REVISED BY
DATE REVISED

LAST REVISION 02-17-11
DATE PLOTTED => 10-MAR-2011
TIME PLOTTED => 09:09

Dist	COUNTY	ROUTE	POST MILES TOTAL PROJECT	SHEET No.	TOTAL SHEETS
11	SD	5	R61.8/R62.1	7	54

REGISTERED CIVIL ENGINEER 01-31-11 DATE

02-28-11
PLANS APPROVAL DATE

REGISTERED PROFESSIONAL ENGINEER OSCAR AGUILAR No. C62571 Exp. 06-30-12 CIVIL STATE OF CALIFORNIA

THE STATE OF CALIFORNIA OR ITS OFFICERS OR AGENTS SHALL NOT BE RESPONSIBLE FOR THE ACCURACY OR COMPLETENESS OF SCANNED COPIES OF THIS PLAN SHEET.

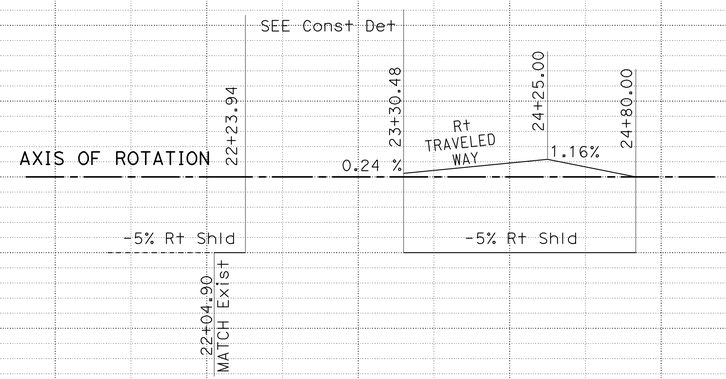

SUPERELEVATION DIAGRAM

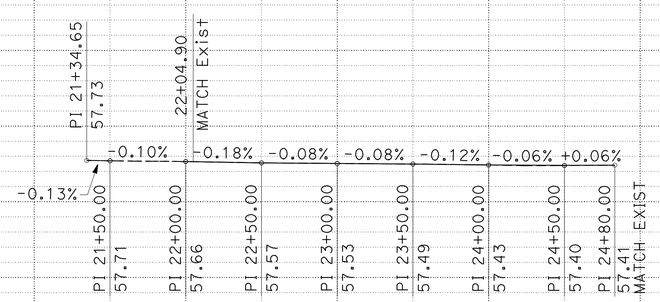

PROFILE

ROUTE 5
"LPR" LINE

PROFILE AND SUPERELEVATION DIAGRAM

SCALE: Horiz 1"=50'
Vert 1"=5'

PS-2

STATION		20+00	1	2	3	4	25+00	6	TOTAL
CY	Exc			629.0					629.0
	Emb			26.0					26.0

STATE OF CALIFORNIA - DEPARTMENT OF TRANSPORTATION
Caltrans DESIGN

FUNCTIONAL SUPERVISOR: ED HAJJ
CALCULATED-DESIGNED BY: OSCAR M AGUILAR
CHECKED BY: SEAN HOANG
REVISED BY / DATE REVISED

LAST REVISION 02-17-11
DATE PLOTTED => 03-MAR-2011
TIME PLOTTED => 11:53

Dist	COUNTY	ROUTE	POST MILES TOTAL PROJECT	SHEET No.	TOTAL SHEETS
11	SD	5	R61.8/R62.1	8	54

REGISTERED CIVIL ENGINEER 01-31-11 DATE

02-28-11
PLANS APPROVAL DATE

REGISTERED PROFESSIONAL ENGINEER OSCAR AGUILAR No. C62571 Exp. 06-30-12 CIVIL STATE OF CALIFORNIA

THE STATE OF CALIFORNIA OR ITS OFFICERS OR AGENTS SHALL NOT BE RESPONSIBLE FOR THE ACCURACY OR COMPLETENESS OF SCANNED COPIES OF THIS PLAN SHEET.

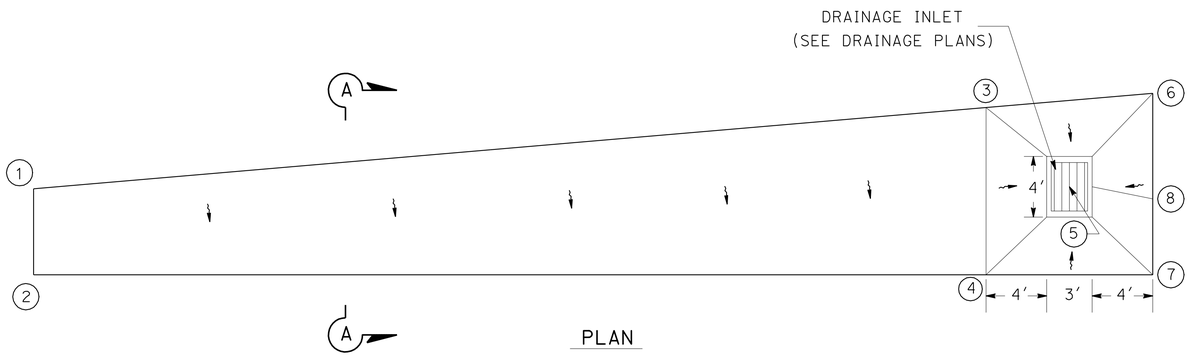

PLAN

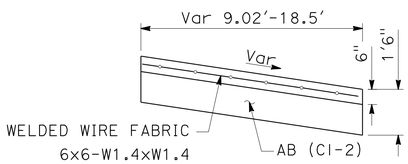

SECTION A-A

No.	STATION	OFFSET (LEFT)	Elev
1	"LPR2" 3301+84.76	13.02'	57.38'
2	"LPR2" 3301+84.76	4.00'	57.36'
3	"LPR2" 3302+82.00	22.50'	60.66'
4	"LPR2" 3302+82.00	4.00'	59.87'
5	"LPR2" 3302+87.50	13.60'	59.00'
6	"LPR2" 3302+93.00	24.50'	60.89'
7	"LPR2" 3302+93.00	4.00'	60.15'
8	"LPR2" 3302+93.00	11.00'	59.60'

MINOR CONCRETE
(TEXTURED PAVING) (EXPOSED AGGREGATE)

NO SCALE

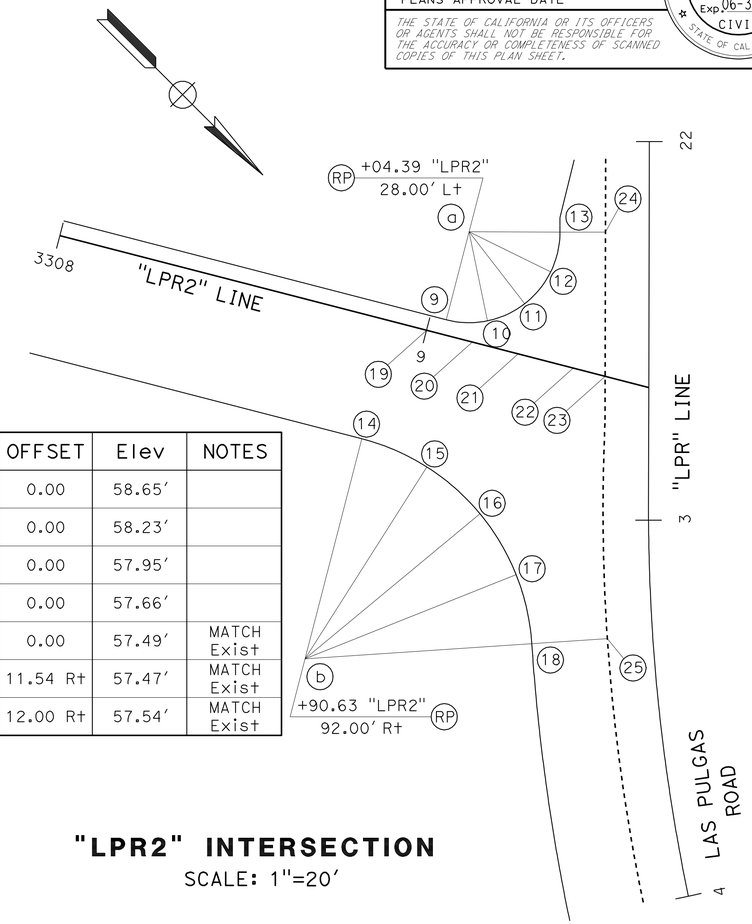

No.	STATION	OFFSET	Elev	NOTES
19	"LPR2" 3309+00.00	0.00	58.65'	
20	"LPR2" 3309+15.00	0.00	58.23'	
21	"LPR2" 3309+25.00	0.00	57.95'	
22	"LPR2" 3309+40.00	0.00	57.66'	
23	"LPR2" 3309+48.70	0.00	57.49'	MATCH Exist
24	"LPR" 22+23.94	11.54 R+	57.47'	MATCH Exist
25	"LPR" 23+30.48	12.00 R+	57.54'	MATCH Exist

"LPR2" INTERSECTION

SCALE: 1"=20'

CURVE DATA

No.	R	Δ	T	L
a	24.00'	104°20'29"	30.91'	43.71'
b	60.00'	71°42'26"	43.36'	75.09'

TYPE "A" DIKE

No.	STATION	OFFSET	FL
9	"LPR2" 3309+04.39	4.00 L+	58.65'
10	1/4	6.45 L+	58.21'
11	1/2	13.28 L+	57.76'
12	3/4	23.12 L+	57.32'
13	"LPR" 22+23.94	23.54 R+	56.87'

TYPE "E" DIKE

No.	STATION	OFFSET	FL
14	"LPR2" 3308+90.63	32.00 R+	58.10'
15	1/4	34.91 R+	57.87'
16	1/2	43.37 R+	57.64'
17	3/4	56.55 R+	57.41'
18	"LPR" 23+30.48	32.00 R+	57.17'

CONSTRUCTION DETAILS

SCALE AS SHOWN

C-1

REVISED BY | DATE REVISED
OSCAR M AGUILAR | QUAN TON
CALCULATED-DESIGNED BY | CHECKED BY
FUNCTIONAL SUPERVISOR: ED HAJJ
STATE OF CALIFORNIA - DEPARTMENT OF TRANSPORTATION
Caltrans® DESIGN

LAST REVISION 02-17-11 | DATE PLOTTED => 03-MAR-2011 | TIME PLOTTED => 11:53

Dist	COUNTY	ROUTE	POST MILES TOTAL PROJECT	SHEET No.	TOTAL SHEETS
11	SD	5	R61.8/R62.1	9	54

REGISTERED CIVIL ENGINEER 01-31-11 DATE

02-28-11
PLANS APPROVAL DATE

REGISTERED PROFESSIONAL ENGINEER OSCAR AGUILAR No. C62571 Exp. 06-30-12 CIVIL STATE OF CALIFORNIA

THE STATE OF CALIFORNIA OR ITS OFFICERS OR AGENTS SHALL NOT BE RESPONSIBLE FOR THE ACCURACY OR COMPLETENESS OF SCANNED COPIES OF THIS PLAN SHEET.

NOTES: FOR ACCURATE RIGHT OF WAY AND ACCESS DATA, CONTACT RIGHT OF WAY ENGINEERING AT DISTRICT OFFICE.

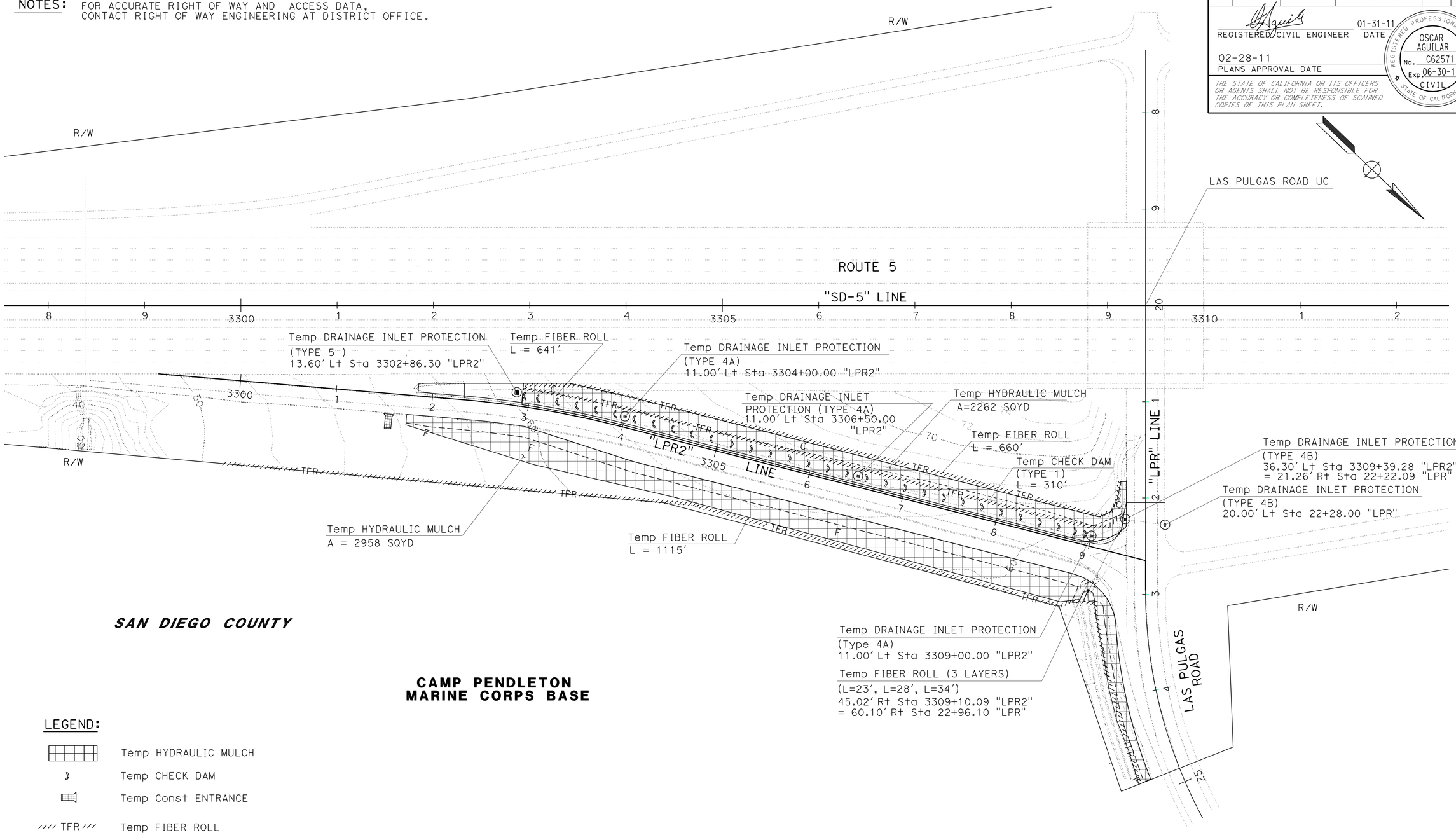

SAN DIEGO COUNTY

CAMP PENDLETON MARINE CORPS BASE

LEGEND:

- Temp HYDRAULIC MULCH
- Temp CHECK DAM
- Temp Const ENTRANCE
- TFR — Temp FIBER ROLL
- Temp DRAINAGE INLET PROTECTION

TEMPORARY WATER POLLUTION CONTROL PLAN

SCALE: 1"=50'

WPC-1

THIS PLAN ACCURATE FOR TEMPORARY WATER POLLUTION CONTROL WORK ONLY.

STATE OF CALIFORNIA - DEPARTMENT OF TRANSPORTATION
Caltrans
DESIGN

FUNCTIONAL SUPERVISOR: ED HAJJ
CALCULATED-DESIGNED BY: OSCAR M AGUILAR
CHECKED BY: THIN BUI
REVISED BY
DATE REVISED

LAST REVISION 02-17-11
DATE PLOTTED => 03-MAR-2011
TIME PLOTTED => 11:53

Dist	COUNTY	ROUTE	POST MILES TOTAL PROJECT	SHEET No.	TOTAL SHEETS
11	SD	5	R61.8/R62.1	10	54

REGISTERED CIVIL ENGINEER 01-31-11 DATE

02-28-11
PLANS APPROVAL DATE

REGISTERED PROFESSIONAL ENGINEER OSCAR AGUILAR No. C62571 Exp. 06-30-12 CIVIL STATE OF CALIFORNIA

THE STATE OF CALIFORNIA OR ITS OFFICERS OR AGENTS SHALL NOT BE RESPONSIBLE FOR THE ACCURACY OR COMPLETENESS OF SCANNED COPIES OF THIS PLAN SHEET.

Temp WATER POLLUTION CONTROL QUANTITIES

ROUTE	SHEET	LINE	STATION BEGIN	STATION END	Temp WATER POLLUTION CONTROL TEMPORARY FIBER ROLL (LF)	CHECK DAM (TYPE 1) (LF)	CONSTRUCTION ENTRANCE (EA)	HYDRAULIC MULCH (SQYD)	Temp DRAINAGE INLET PROTECTION (TYPE 4A) (EA)	(TYPE 4B) (EA)	(TYPE 5) (EA)
5	WPC-1	"LPR2"-"LPR"	3302+92.75	21+82.82	660						
			3302+92.75	22+23.94	641						
			3309+10.09	3309+10.09	23						
			3309+10.09	3309+10.09	28						
			3309+10.09	3309+10.09	34						
			3299+88.96	24+85.22	1115						
		"LPR2"	3302+93.00	3309+00.00		310					
			3301+50.86	3301+50.86			1				
			3302+86.30	3302+86.30							1
			3304+00.00	3304+00.00					1		
			3306+50.00	3306+50.00					1		
			3309+00.00	3309+00.00					1		
			3309+39.28	3309+39.28						1	
		"LPR"	22+28.00	22+28.00						1	
		"LPR2"-"LPR"	3302+33.00	21+82.81				2262			
			3301+74.96	24+83.13				2958			
		"LPR2"	3299+88.96	3299+88.96							
SUBTOTAL					2501	310	1	5220	3	2	1
TOTAL					2501	310	1	5220	6		

TEMPORARY WATER POLLUTION CONTROL QUANTITIES

WPCQ-1

STATE OF CALIFORNIA - DEPARTMENT OF TRANSPORTATION
Caltrans DESIGN

FUNCTIONAL SUPERVISOR: ED HAJJ
CALCULATED-DESIGNED BY: OSCAR M AGUILAR
CHECKED BY: THIN BUI
REVISED BY
DATE REVISED

LAST REVISION 02-17-11
DATE PLOTTED => 03-MAR-2011
TIME PLOTTED => 11:54

Dist	COUNTY	ROUTE	POST MILES TOTAL PROJECT	SHEET No.	TOTAL SHEETS
11	SD	5	R61.8/R62.1	11	54

REGISTERED CIVIL ENGINEER 01-31-11 DATE

02-28-11
PLANS APPROVAL DATE

REGISTERED PROFESSIONAL ENGINEER OSCAR AGUILAR No. C62571 Exp. 06-30-12 CIVIL STATE OF CALIFORNIA

THE STATE OF CALIFORNIA OR ITS OFFICERS OR AGENTS SHALL NOT BE RESPONSIBLE FOR THE ACCURACY OR COMPLETENESS OF SCANNED COPIES OF THIS PLAN SHEET.

NOTES: 1. FOR ACCURATE RIGHT OF WAY AND ACCESS DATA, CONTACT RIGHT OF WAY ENGINEERING AT DISTRICT OFFICE.
2. PSFM = POLYMER STABILIZED FIBER MATRIX

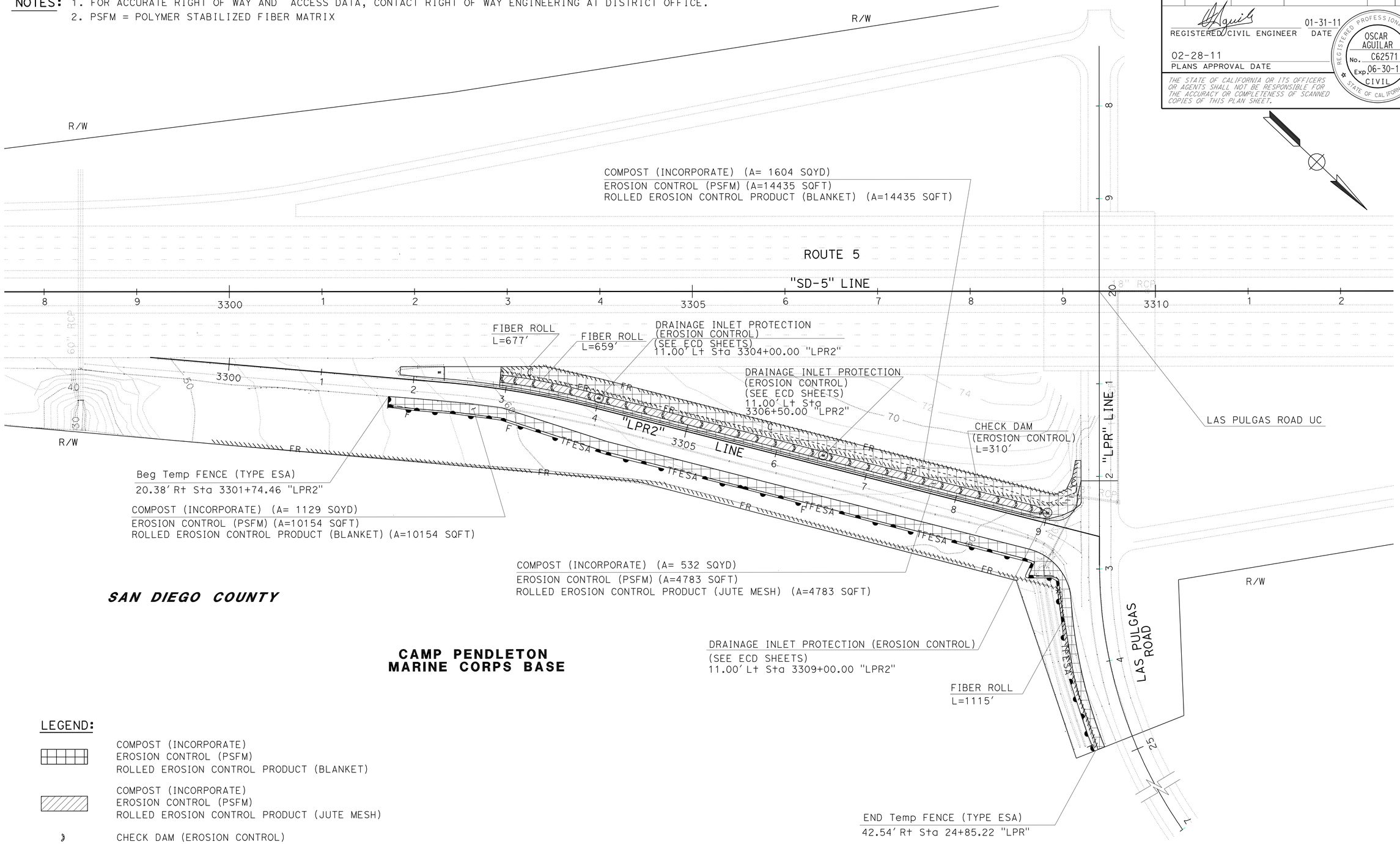

LEGEND:

- COMPOST (INCORPORATE) EROSION CONTROL (PSFM) ROLLED EROSION CONTROL PRODUCT (BLANKET)
- COMPOST (INCORPORATE) EROSION CONTROL (PSFM) ROLLED EROSION CONTROL PRODUCT (JUTE MESH)
- CHECK DAM (EROSION CONTROL)
- FR — FIBER ROLL
- DRAINAGE INLET PROTECTION (EROSION CONTROL)
- TFESA — Temp FENCE (TYPE ESA)

THIS PLAN ACCURATE FOR EROSION CONTROL WORK ONLY.

EROSION CONTROL PLAN

SCALE: 1"=50'

EC-1

STATE OF CALIFORNIA - DEPARTMENT OF TRANSPORTATION
Caltrans
DESIGN
FUNCTIONAL SUPERVISOR: ED HAJJ
OSCAR M AGUILAR
THIN BUI
CALCULATED-DESIGNED BY
CHECKED BY
REVISED BY
DATE REVISED

LAST REVISION 02-17-11
DATE PLOTTED => 03-MAR-2011
TIME PLOTTED => 11:54

Dist	COUNTY	ROUTE	POST MILES TOTAL PROJECT	SHEET No.	TOTAL SHEETS
11	SD	5	R61.8/R62.1	12	54

REGISTERED CIVIL ENGINEER 01-31-11 DATE

02-28-11
PLANS APPROVAL DATE

REGISTERED PROFESSIONAL ENGINEER OSCAR AGUILAR No. C62571 Exp. 06-30-12 CIVIL STATE OF CALIFORNIA

THE STATE OF CALIFORNIA OR ITS OFFICERS OR AGENTS SHALL NOT BE RESPONSIBLE FOR THE ACCURACY OR COMPLETENESS OF SCANNED COPIES OF THIS PLAN SHEET.

NOTES:

1. DIMENSIONS MAY VARY TO FIT FIELD CONDITIONS.
2. INSTALL A MINIMUM OF 3 FLEXIBLE SEDIMENT BARRIERS UPSTREAM OF EACH DRAINAGE INLET TO BE PROTECTED.
3. POSITION EROSION CONTROL BLANKET OR GEOSYNTHETIC FABRIC AT EDGE OF Conc APRON AND SECURE IN TRENCH.
4. EROSION CONTROL BLANKET OR GEOSYNTHETIC FABRIC IS NOT REQUIRED IF THE AREA ADJACENT TO THE DRAINAGE INLET IS VEGETATED.
5. SPILLWAY DEPTH "D" SHALL BE MAINTAINED TO PREVENT FLANKING OF CONCENTRATED FLOW AROUND THE ENDS OF EACH CHECK DAM.

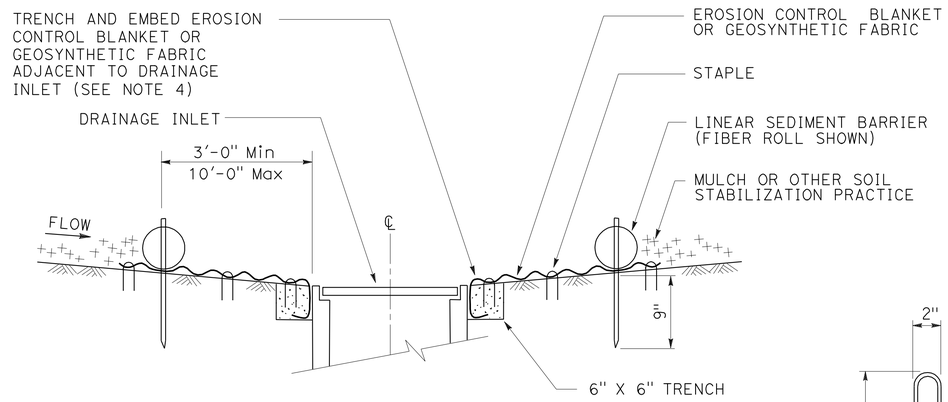

SECTION A-A

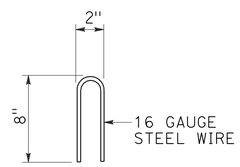

STAPLE DETAIL

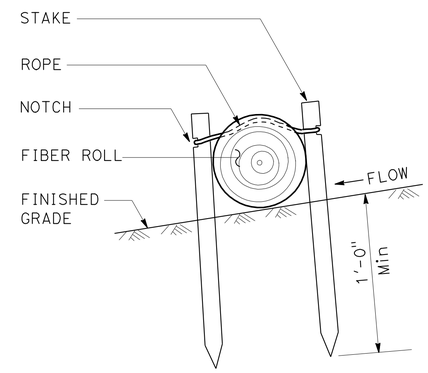

SPILLWAY (SEE NOTE)

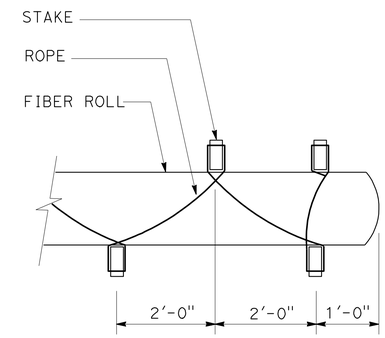

PLAN

STAKING AND LASHING DETAIL

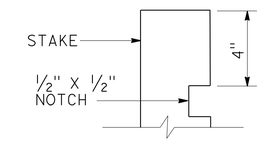

ELEVATION

STAKE NOTCH DETAIL

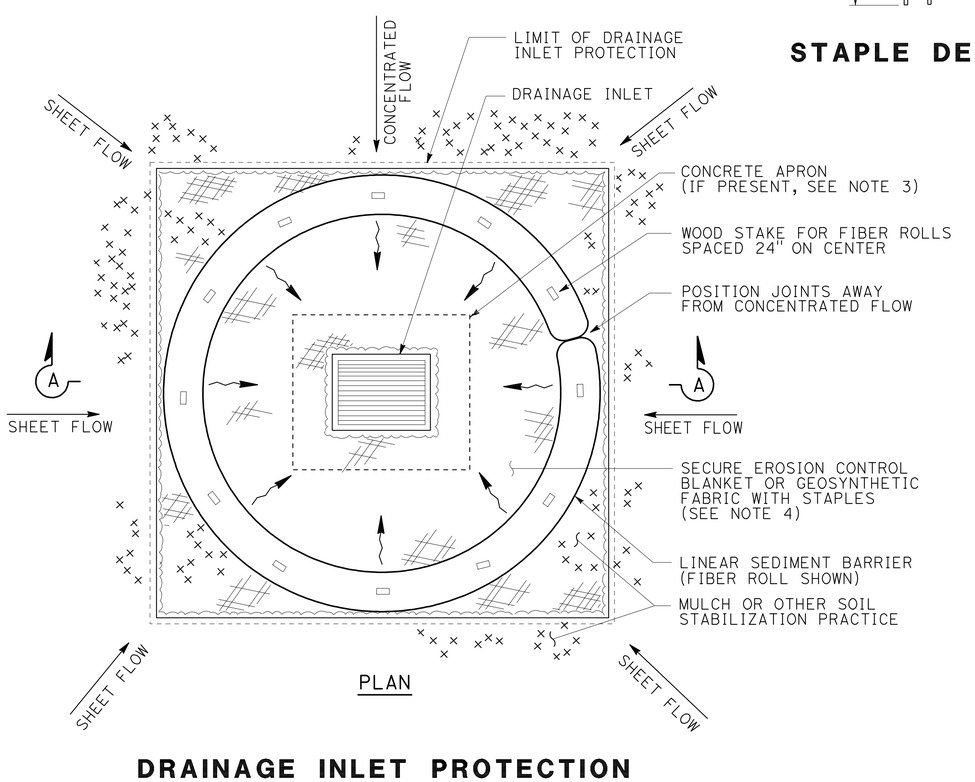

PLAN

DRAINAGE INLET PROTECTION (EROSION CONTROL)

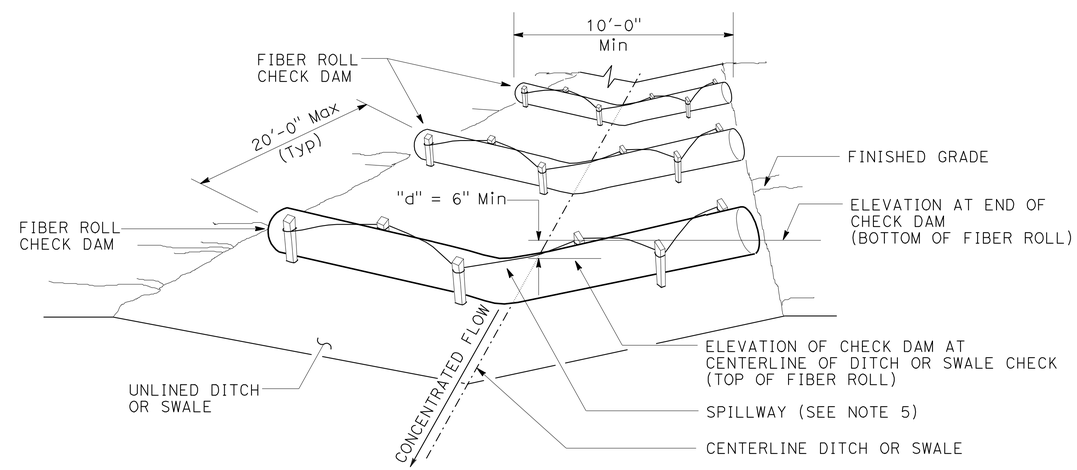

PERSPECTIVE

CHECK DAM (TYPE 1) (EROSION CONTROL)
(TOTAL OF 3 CHECK DAMS SHOWN)

EROSION CONTROL DETAILS

NO SCALE

ECD-1

STATE OF CALIFORNIA - DEPARTMENT OF TRANSPORTATION
Caltrans®
DESIGN
FUNCTIONAL SUPERVISOR: ED HAJJ
CALCULATED-DESIGNED BY: OSCAR M AGUILAR
CHECKED BY: THIN BUI
REVISED BY
DATE REVISED

LAST REVISION 02-17-11
DATE PLOTTED => 03-MAR-2011
TIME PLOTTED => 11:54

Dist	COUNTY	ROUTE	POST MILES TOTAL PROJECT	SHEET No.	TOTAL SHEETS
11	SD	5	R61.8/R62.1	13	54

REGISTERED CIVIL ENGINEER 01-31-11 DATE

02-28-11
PLANS APPROVAL DATE

REGISTERED PROFESSIONAL ENGINEER OSCAR AGUILAR No. C62571 Exp. 06-30-12 CIVIL STATE OF CALIFORNIA

THE STATE OF CALIFORNIA OR ITS OFFICERS OR AGENTS SHALL NOT BE RESPONSIBLE FOR THE ACCURACY OR COMPLETENESS OF SCANNED COPIES OF THIS PLAN SHEET.

EROSION CONTROL QUANTITIES

ROUTE	SHEET	LINE	STATION BEGIN	STATION END	EROSION CONTROL: FIBER ROLLS (LF)	CHECK DAM (EROSION CONTROL) (LF)	ROLLED EROSION CONTROL PRODUCT (JUTE MESH) (SQFT)	COMPOST (INCORPORATE) (SQYD)	EROSION CONTROL (PSFM) (SQFT)	ROLLED EROSION CONTROL PRODUCT (BLANKET) (SQFT)	Temp FENCE (TYPE ESA) (LF)	DRAINAGE INLET PROTECTION (EROSION CONTROL) (EA)
5	EC-1	"LPR2"-"LPR"	3302+80.41	3309+22.09	659							
			3302+78.34	3309+17.23	677							
			3299+88.96	24+85.22	1115							
		"LPR2"	3302+33.00	3309+00.00		310						
		"LPR2"-"LPR"	3301+74.46	24+85.22							968	
			3301+75.00	24+85.00				1129	10154	10154		
			3302+92.66	21+82.80				1604	14435	14435		
			3302+92.66	22+39.45			4783	532	4783			
		"LPR2"	3304+00.00	3304+00.00								1
			3306+50.00	3306+50.00								1
			3309+00.00	3309+00.00								1
				TOTAL	2451	310	4783	3265	29372	24589	968	3

EROSION CONTROL QUANTITIES
ECQ-1

STATE OF CALIFORNIA - DEPARTMENT OF TRANSPORTATION
Caltrans DESIGN

FUNCTIONAL SUPERVISOR: ED HAJJ
CALCULATED-DESIGNED BY: OSCAR M AGUILAR
CHECKED BY: THIN BUI
REVISED BY
DATE REVISED

LAST REVISION 02-17-11
DATE PLOTTED => 03-MAR-2011
TIME PLOTTED => 11:54

Dist	COUNTY	ROUTE	POST MILES TOTAL PROJECT	SHEET No.	TOTAL SHEETS
11	SD	5	R61.8/R62.1	14	54

REGISTERED CIVIL ENGINEER 01-31-11 DATE

02-28-11
PLANS APPROVAL DATE

REGISTERED PROFESSIONAL ENGINEER OSCAR AGUILAR No. C62571 Exp. 06-30-12 CIVIL STATE OF CALIFORNIA

THE STATE OF CALIFORNIA OR ITS OFFICERS OR AGENTS SHALL NOT BE RESPONSIBLE FOR THE ACCURACY OR COMPLETENESS OF SCANNED COPIES OF THIS PLAN SHEET.

NOTE:

1. FOR ACCURATE RIGHT OF WAY AND ACCESS DATA, CONTACT RIGHT OF WAY ENGINEERING AT DISTRICT OFFICE.

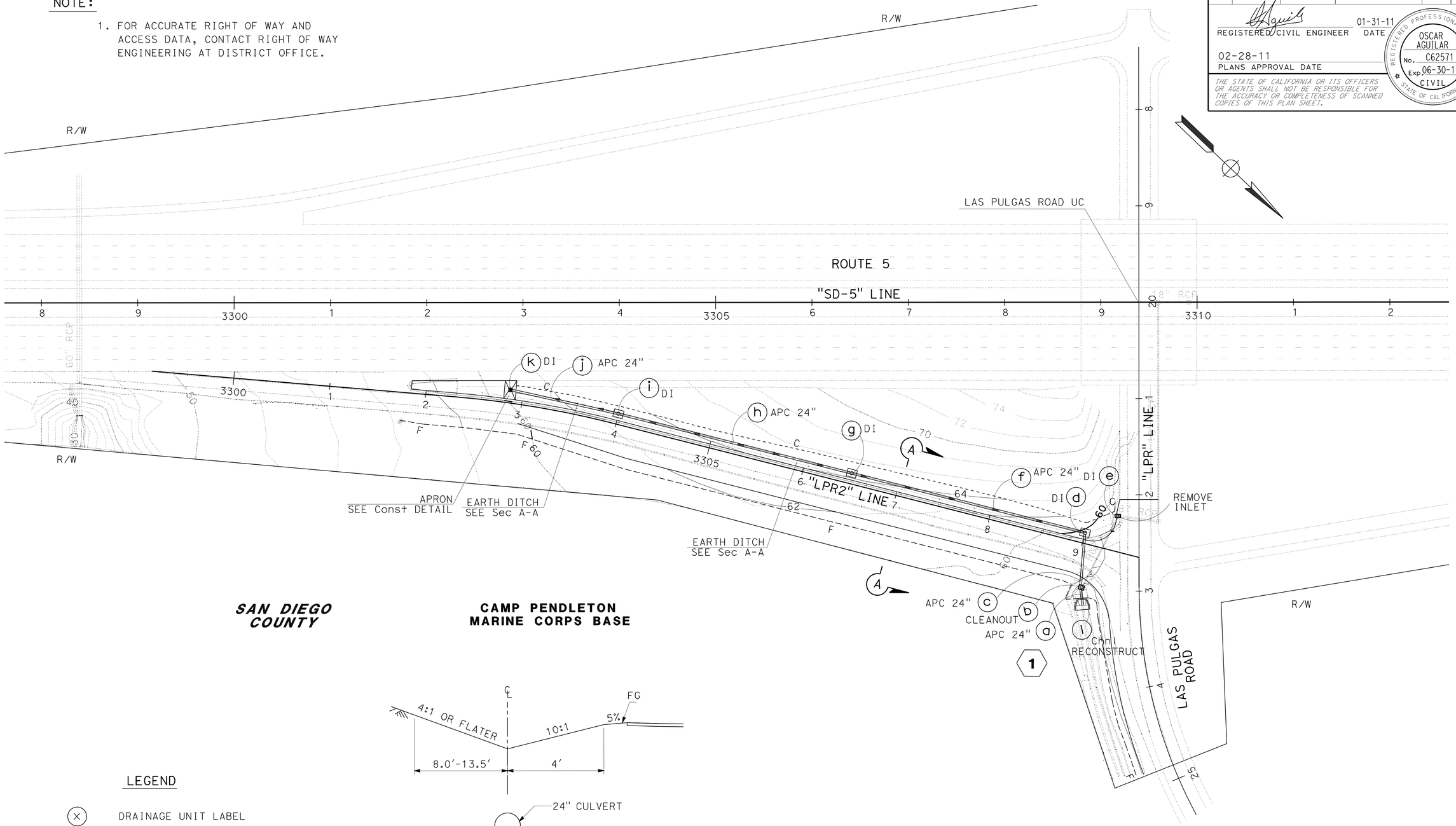

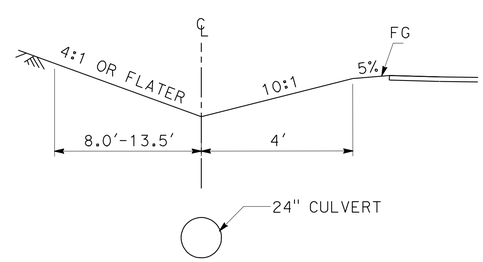

SECTION A-A
EARTH DITCH
NO SCALE

LEGEND

- DRAINAGE UNIT LABEL
- DRAINAGE SYSTEM NUMBER
- DIRECTION OF FLOW

THIS PLAN ACCURATE FOR CONTOUR GRADING AND DRAINAGE WORK ONLY

CONTOUR GRADING AND DRAINAGE PLAN

SCALE: 1"=50'

G-1

STATE OF CALIFORNIA - DEPARTMENT OF TRANSPORTATION
DESIGN
FUNCTIONAL SUPERVISOR: ED HAJJ
CALCULATED-DESIGNED BY: OSCAR M AGUILAR
CHECKED BY: THIN BUI
REVISED BY
DATE REVISED

LAST REVISION 02-17-11
DATE PLOTTED => 03-MAR-2011
TIME PLOTTED => 11:54

Dist	COUNTY	ROUTE	POST MILES TOTAL PROJECT	SHEET No.	TOTAL SHEETS
11	SD	5	R61.8/R62.1	15	54

REGISTERED CIVIL ENGINEER 01-31-11 DATE

02-28-11
PLANS APPROVAL DATE

REGISTERED PROFESSIONAL ENGINEER OSCAR AGUILAR No. C62571 Exp. 06-30-12 CIVIL STATE OF CALIFORNIA

THE STATE OF CALIFORNIA OR ITS OFFICERS OR AGENTS SHALL NOT BE RESPONSIBLE FOR THE ACCURACY OR COMPLETENESS OF SCANNED COPIES OF THIS PLAN SHEET.

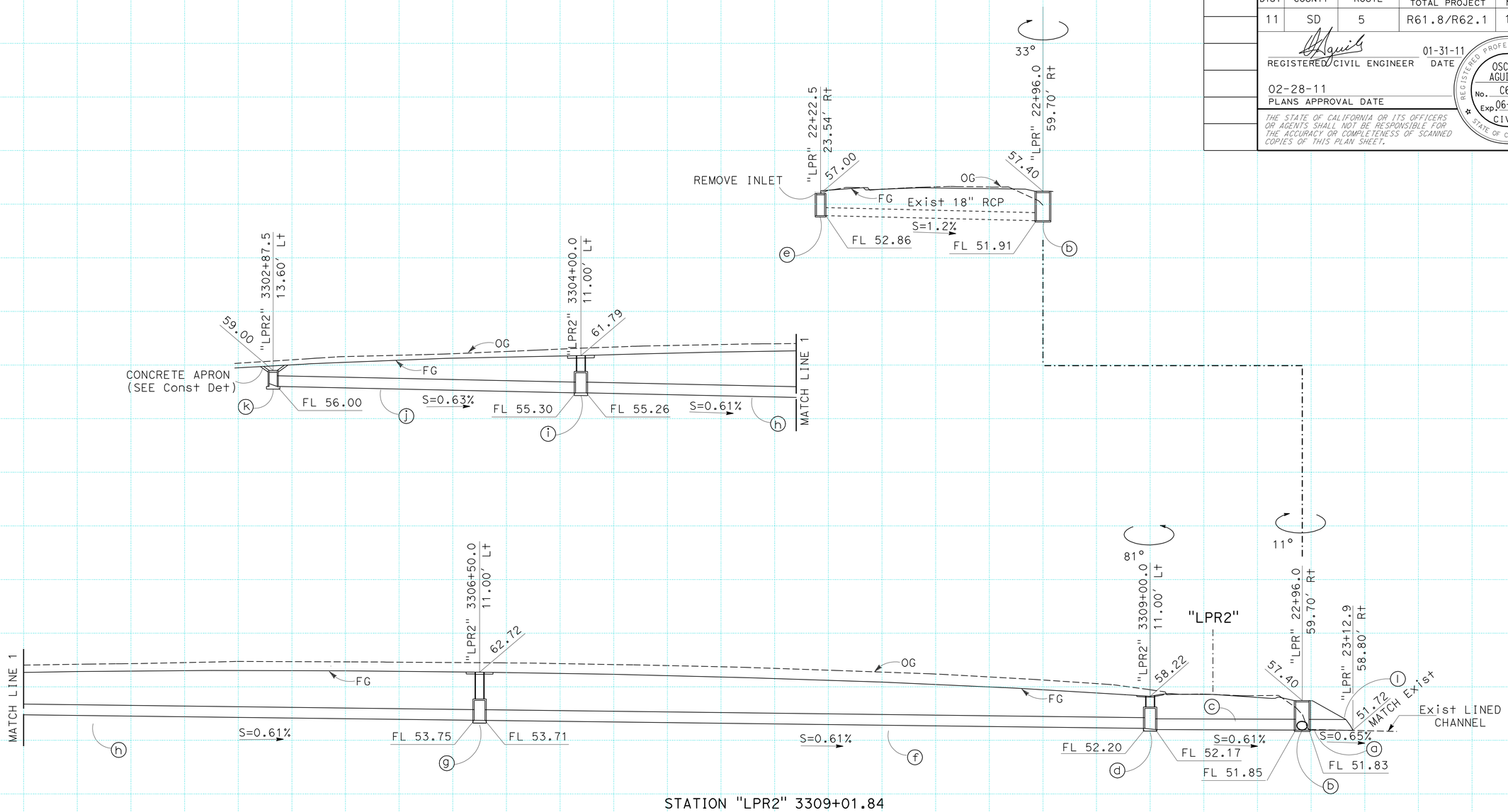

STATION "LPR2" 3309+01.84

DRAINAGE SYSTEM 1

(a) 24" x 17.0' APC

(b) STORM DRAIN CLEANOUT TYPE A (H=5.5') W/MANHOLE FRAME AND COVER (SEE DRAINAGE DETAIL)

(c) 24" x 52.8' APC

(d) JUNCTION STRUCTURE (Hb=3.3', L=5'8") W/GCP INLET (H=2.0') W/Conc APRON (SEE DRAINAGE DETAIL)

(e) GDO INLET (H=4.2') W/2-24-12X GRATE BICYCLE PROOF

(f) 24" x 246' APC

(g) JUNCTION STRUCTURE (Hb=3.3, L=5'8") W/GCP INLET (H=5.0') W/Conc APRON (SEE DRAINAGE DETAIL)

(h) 24" x 246' APC

(i) JUNCTION STRUCTURE (Hb=3.3', L=5'8") W/GCP INLET (H=3.0') W/Conc APRON (SEE DRAINAGE DETAIL)

(j) 24" x 111' APC

(k) G1 INLET (H=3.0'), W/24-12X GRATE

(l) CHANNEL END RECONSTRUCTION (SEE DRAINAGE DETAIL)

1

DRAINAGE PROFILE

SCALE: Horiz: 1"=20' Vert: 1"=10'

DP-1

REVISED BY | DATE REVISED

OSCAR M. AGUILAR | THIN BUI

CALCULATED-DESIGNED BY | CHECKED BY

FUNCTIONAL SUPERVISOR | ED HAJJ

STATE OF CALIFORNIA - DEPARTMENT OF TRANSPORTATION

DESIGN

Caltrans

LAST REVISION 02-17-11 | DATE PLOTTED => 03-MAR-2011 | TIME PLOTTED => 11:54

Dist	COUNTY	ROUTE	POST MILES TOTAL PROJECT	SHEET No.	TOTAL SHEETS
11	SD	5	R61.8/R62.1	16	54

REGISTERED CIVIL ENGINEER 01-31-11 DATE

02-28-11
PLANS APPROVAL DATE

REGISTERED PROFESSIONAL ENGINEER OSCAR AGUILAR No. C62571 Exp. 06-30-12 CIVIL STATE OF CALIFORNIA

THE STATE OF CALIFORNIA OR ITS OFFICERS OR AGENTS SHALL NOT BE RESPONSIBLE FOR THE ACCURACY OR COMPLETENESS OF SCANNED COPIES OF THIS PLAN SHEET.

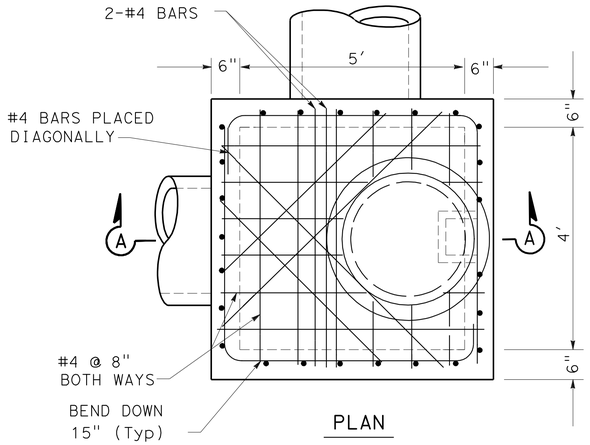

PLAN

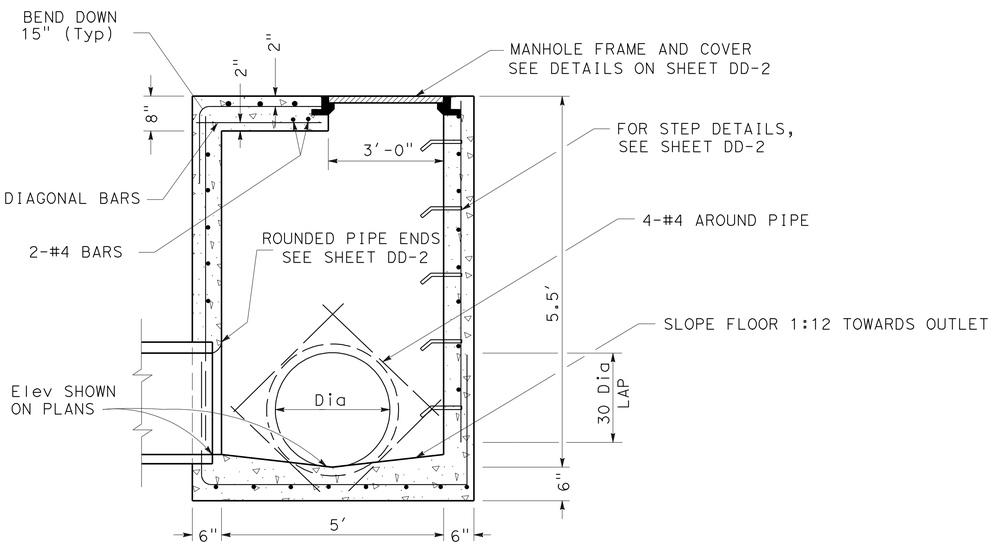

SECTION A-A

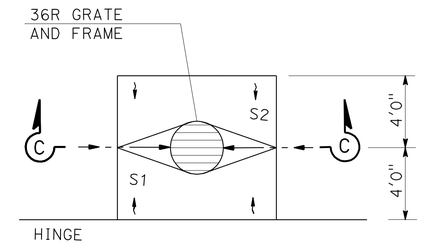

PLAN

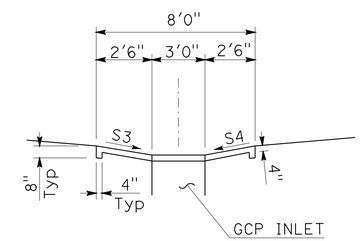

SECTION C-C

CONCRETE APRON SLOPES

DRAINAGE SYSTEM	DRAINAGE UNIT	SLOPE S1	SLOPE S2	SLOPE S3	SLOPE S4
1	d	16%	30%	3.2%	2.7%
	g	16%	28%	0.5%	-0.9%
	i	16%	27%	-1.7%	1.4%

STORM DRAIN CLEANOUT - TYPE A 1 b

CONCRETE APRON DETAIL 1 d g i

NOTES:

1. ALL PRECAST COMPONENTS SHALL BE REINFORCED WITH 1/4" DIAMETER STEEL, WOUND SPIRALLY ON 4" CENTERS.
2. ALL JOINTS SHALL BE SET IN MORTAR.
3. MAINTAIN 1 1/2" CLEAR SPACING BETWEEN REINFORCING AND SURFACE UNLESS OTHERWISE NOTED.
4. EXPOSED EDGES OF CONCRETE SHALL BE ROUNDED WITH A RADIUS OF 1/2".
5. NO DEDUCTION IN STRUCTURE CONCRETE QUANTITIES WILL BE MADE FOR PIPE OPENINGS AND PIPE RISER OPENING.

DRAINAGE DETAILS
NO SCALE
DD-1

STATE OF CALIFORNIA - DEPARTMENT OF TRANSPORTATION
Caltrans® DESIGN
FUNCTIONAL SUPERVISOR: ED HAJJ
CALCULATED-DESIGNED BY: OSCAR M. AGUILAR
CHECKED BY: THIN BUI
REVISED BY
DATE REVISED

LAST REVISION 02-17-11
DATE PLOTTED => 03-MAR-2011
TIME PLOTTED => 11:54

Dist	COUNTY	ROUTE	POST MILES TOTAL PROJECT	SHEET No.	TOTAL SHEETS
11	SD	5	R61.8/R62.1	17	54

REGISTERED CIVIL ENGINEER 01-31-11 DATE

02-28-11
PLANS APPROVAL DATE

REGISTERED PROFESSIONAL ENGINEER OSCAR AGUILAR No. C62571 Exp. 06-30-12 CIVIL STATE OF CALIFORNIA

THE STATE OF CALIFORNIA OR ITS OFFICERS OR AGENTS SHALL NOT BE RESPONSIBLE FOR THE ACCURACY OR COMPLETENESS OF SCANNED COPIES OF THIS PLAN SHEET.

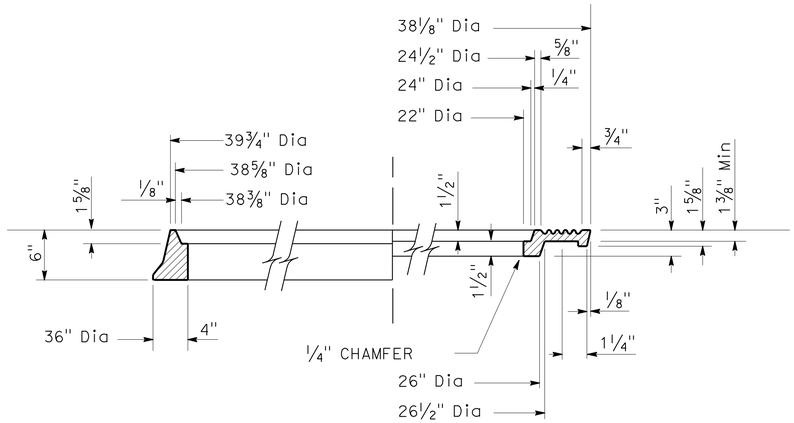

HALF SECTION FRAME AND COVER

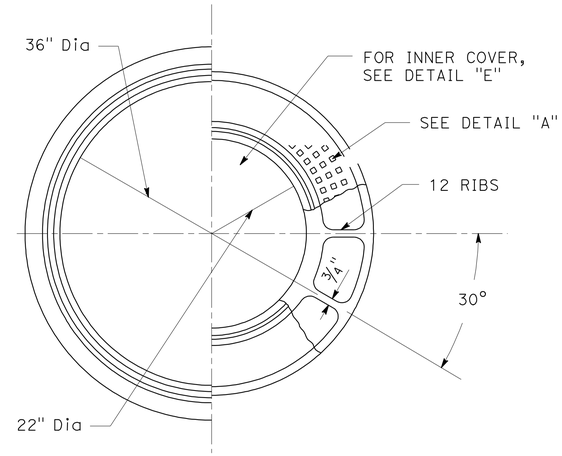

HALF PLAN FRAME AND COVER

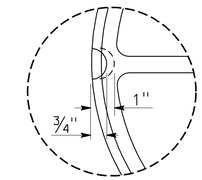

DETAIL F

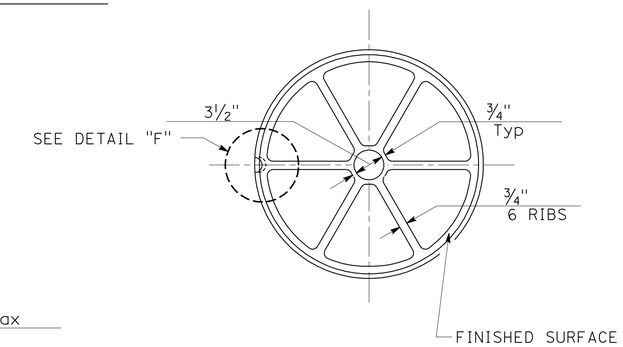

DETAIL E

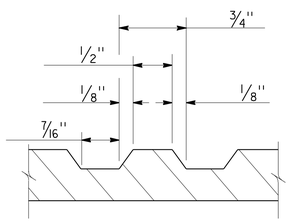

DETAIL B

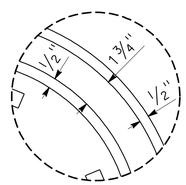

DETAIL C

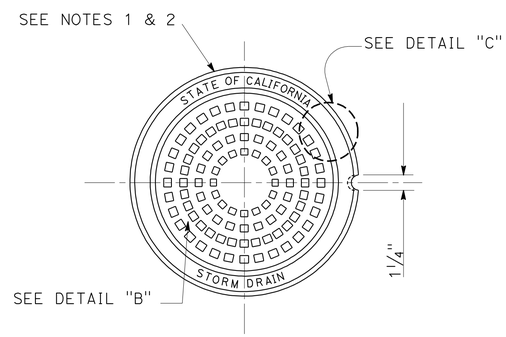

(TYPE A SHOWN)

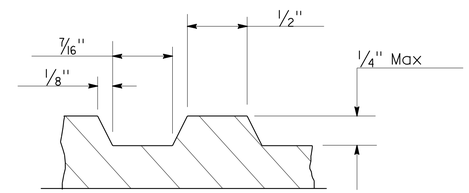

DETAIL A

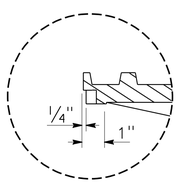

DETAIL D

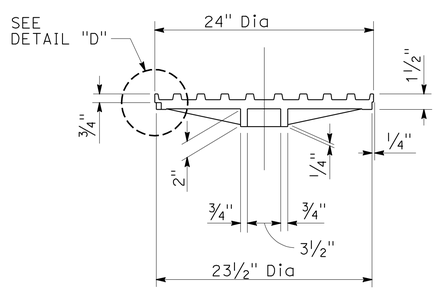

NOTES:

1. COVER SHALL BE MARKED "STATE OF CALIFORNIA" AND "STORM DRAIN".
2. THE ROUNDED AREAS MAY BE BUILT UP WITH CEMENT MORTAR OR POURED IN PLACE WITH THE DRAINAGE STRUCTURE.

36" MANHOLE FRAME AND TWO CONCENTRIC COVERS HEAVY DUTY

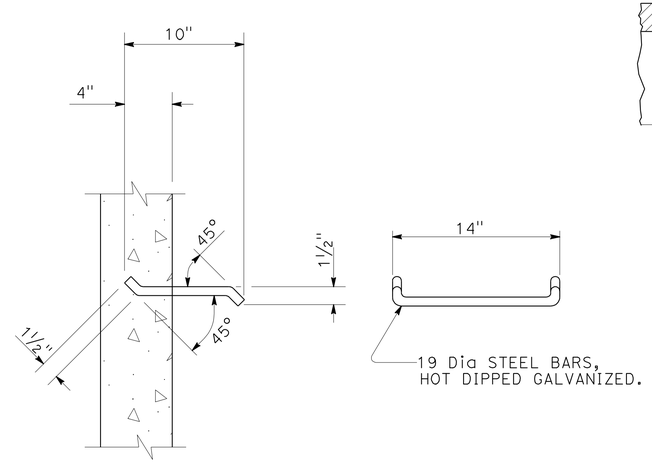

STEP DETAIL

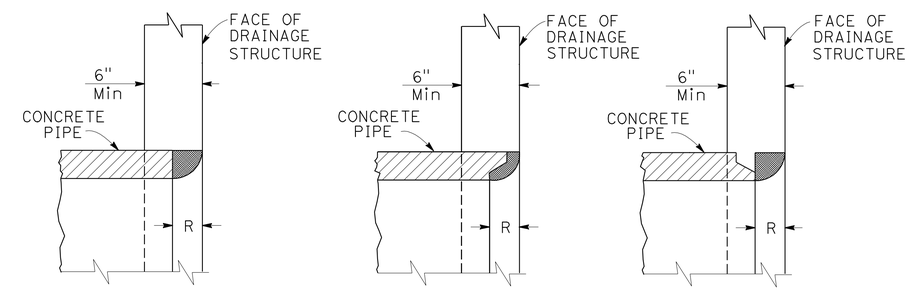

CUT END | BELL END | SPIGOT END

$R = \frac{\text{INSIDE DIAMETER OF PIPE}}{10}$

R = THICKNESS OF PIPE

ROUNDED PIPE ENDS

DRAINAGE DETAILS

NO SCALE

DD-2

STATE OF CALIFORNIA - DEPARTMENT OF TRANSPORTATION
Caltrans®
DESIGN

FUNCTIONAL SUPERVISOR: ED HAJJ
CALCULATED-DESIGNED BY: OSCAR M AGUILAR
CHECKED BY: QUAN TON
REVISED BY
DATE REVISED

LAST REVISION 02-17-11
DATE PLOTTED => 03-MAR-2011
TIME PLOTTED => 11:54

Dist	COUNTY	ROUTE	POST MILES TOTAL PROJECT	SHEET No.	TOTAL SHEETS
11	SD	5	R61.8/R62.1	18	54

REGISTERED CIVIL ENGINEER 01-31-11 DATE

02-28-11
PLANS APPROVAL DATE

REGISTERED PROFESSIONAL ENGINEER OSCAR AGUILAR No. C62571 Exp. 06-30-12 CIVIL STATE OF CALIFORNIA

THE STATE OF CALIFORNIA OR ITS OFFICERS OR AGENTS SHALL NOT BE RESPONSIBLE FOR THE ACCURACY OR COMPLETENESS OF SCANNED COPIES OF THIS PLAN SHEET.

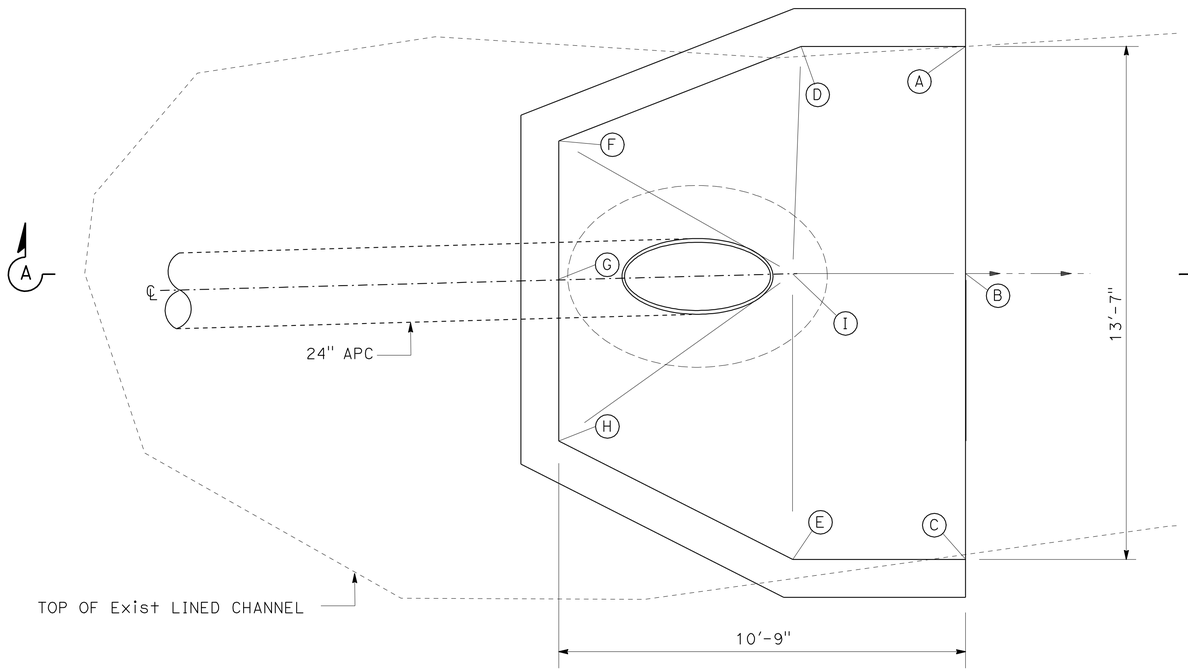

PLAN VIEW

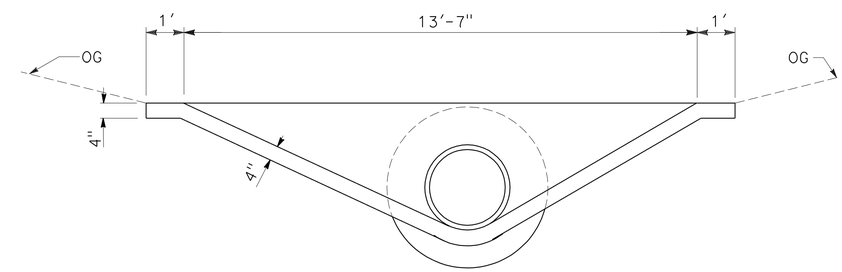

FRONT VIEW

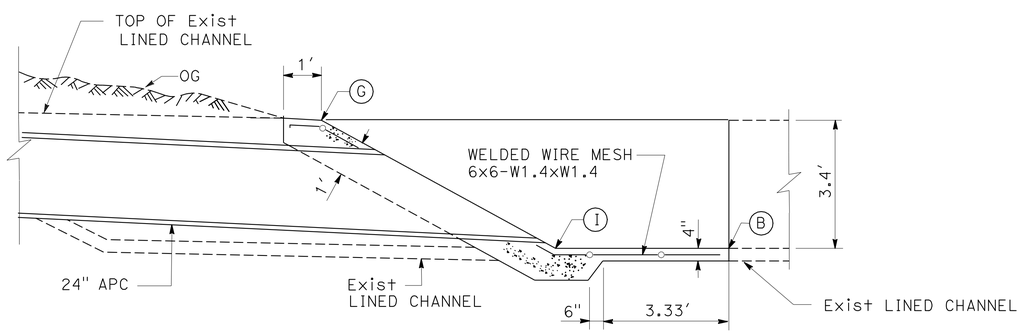

SECTION A-A

No.	STATION	OFFSET	TOP DITCH ELEVATION	FLOWLINE ELEVATION	NOTES
A	"LPR" 23+16.52	52.53 Rt	55.00'		
B	"LPR" 23+16.80	58.52 Rt		51.60'	MATCH Exist
C	"LPR" 23+17.14	66.06 Rt	55.00'		
D	"LPR" 23+12.60	52.78 Rt	55.00'		
E	"LPR" 23+13.12	66.32 Rt	55.00'		
F	"LPR" 23+06.98	55.69 Rt	55.00'		
G	"LPR" 23+07.22	59.35 Rt	55.00'		
H	"LPR" 23+07.49	63.59 Rt	55.00'		
I	"LPR" 23+12.90	58.80 Rt	51.72'		

NOTE:

1' CONCRETE THICKNESS AROUND PIPE AS SHOWN

CHANNEL END RECONSTRUCTION (1) (I)

DRAINAGE DETAILS

NO SCALE

DD-3

STATE OF CALIFORNIA - DEPARTMENT OF TRANSPORTATION
Caltrans®
DESIGN

FUNCTIONAL SUPERVISOR: ED HAJJ
CALCULATED-DESIGNED BY: OSCAR M AGUILAR
CHECKED BY: QUAN TON
REVISED BY
DATE REVISED

LAST REVISION 02-17-11
DATE PLOTTED => 03-MAR-2011
TIME PLOTTED => 11:54

Dist	COUNTY	ROUTE	POST MILES TOTAL PROJECT	SHEET No.	TOTAL SHEETS
11	SD	5	R61.8/R62.1	19	54

REGISTERED CIVIL ENGINEER 01-31-11 DATE

02-28-11
PLANS APPROVAL DATE

REGISTERED PROFESSIONAL ENGINEER OSCAR AGUILAR No. C62571 Exp. 06-30-12 CIVIL STATE OF CALIFORNIA

THE STATE OF CALIFORNIA OR ITS OFFICERS OR AGENTS SHALL NOT BE RESPONSIBLE FOR THE ACCURACY OR COMPLETENESS OF SCANNED COPIES OF THIS PLAN SHEET.

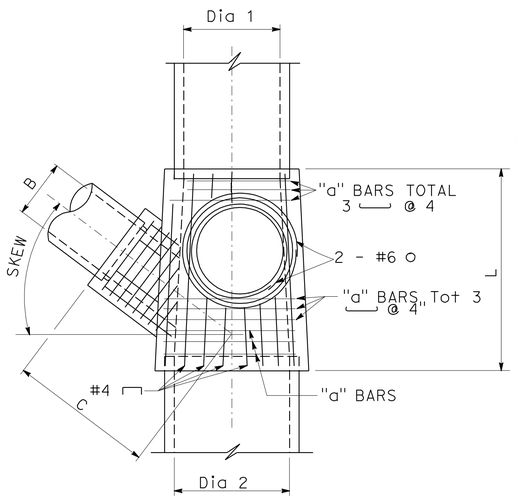

PLAN

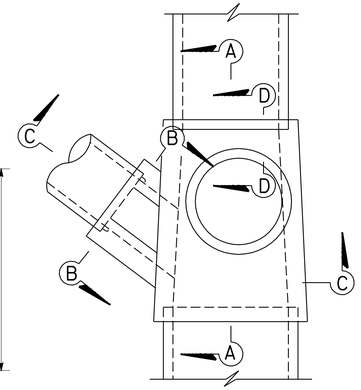

PLAN

SPAN	"a" BARS	TOP AND BOTTOM SLAB THICKNESS (TS, BS)*
3.5′	#4 @ 4"	8"
4.0′	#4 @ 4"	8"
4.5′	#5 @ 5"	8"
5.0′	#5 @ 4.5"	8"
5.5′	#6 @ 5.5"	8"
6.0′	#6 @ 5.5"	9"
6.5′	#6 @ 4.5"	9"
7.0′	#6 @ 4"	9.5"

* WHEN FILL OVER JUNCTION STRUCTURE IS 2′-0" OR LESS, TS SHALL BE INCREASED BY 2"

B	"b" BARS TOP & BOTTOM
2.5′	#5 TOTAL 4
3.0′	#5 TOTAL 4
3.5′	#5 TOTAL 4
4.0′	#5 TOTAL 4
4.5′	#5 TOTAL 4
5.0′	#6 TOTAL 4

H_b	"c" BARS	SIDEWALL THICKNESS(T)
5.5′ OR LESS	#4 @ 4"	8"
6.5′	#5 @ 4"	8.5"
7.0′	#5 @ 4"	9"
8.0′	#6 @ 4"	9.5"

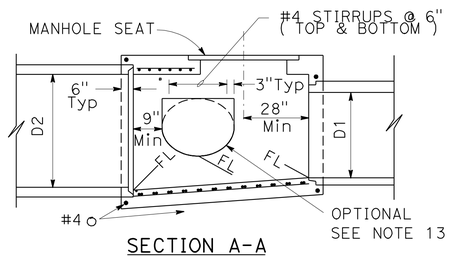

SECTION A-A

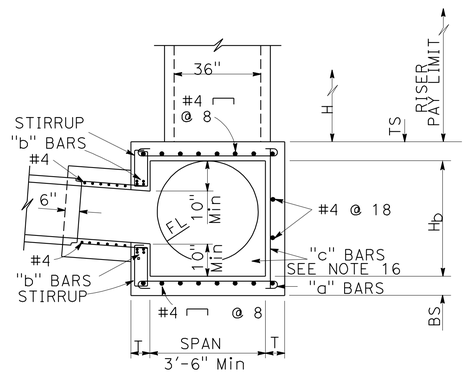

SECTION C-C

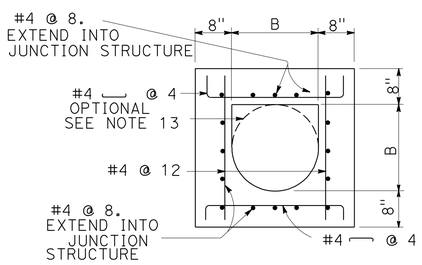

SECTION B-B

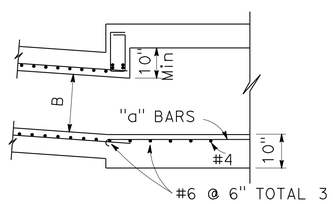

SECTION C-C (OPTIONAL)

MAXIMUM FILL HEIGHT = 8′-0"

FOR REINFORCEMENT AND DETAILS NOT SHOWN, SEE SECTION C-C

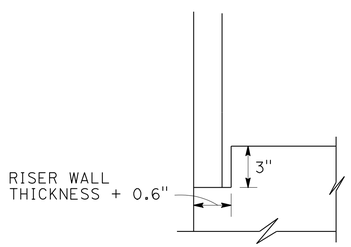

SECTION D-D
(FOR PIPE RISER)

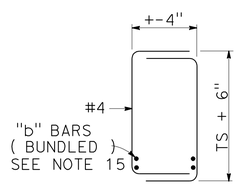

STIRRUPS

DESIGN NOTES:

1. DESIGNED IN CONFORMANCE WITH BRIDGE DESIGN SPECIFICATIONS (1983 AASHTO SPECIFICATIONS WITH REVISIONS BY CALTRANS).
2. LIVE LOAD: HS20-44 TRUCK. EARTH PRESSURES: 140 lb/ft³ VERTICAL, 100 lb/ft³ HORIZONTAL.
3. UNIT STRESSES: $_cf'$ = 3600 psi; $_yf$ = 60,000 psi
4. MAXIMUM FILL HEIGHT = 20′.

GENERAL NOTES:

1. PLANS SHALL DESIGNATE: INLET AND OUTLET PIPE DIAMETERS UPPER STRUCTURE OR MANHOLE (IF REQUIRED), LATERAL PIPE DIAMETER AND SKEW (IF REQUIRED), C, H, AND H_b . MANHOLE OR LATERAL MAY BE OMITTED.
2. UPPER STRUCTURE, WHEN REQUIRED, MAY BE ANY DESIGNATED INLET TYPE AS SHOWN ON STANDARD PLAN D72, D73, D74, D75 OR THIS SHEET.
3. RISER SHALL BE POSITIONED TO EITHER SIDE OF THE STRUCTURE AS SHOWN.
4. EACH RISER SHALL HAVE A LADDER. FOR DETAILS SEE STANDARD PLANS D93.
5. THICKNESS OF DECK SHALL VARY AS NECESSARY TO PROVIDE A LEVEL MANHOLE SEAT.
6. REINFORCING STEEL SHALL BE PLACED 2" CLEAR. EXCEPT AS SHOWN.
7. MAXIMUM SKEW OF LATERAL PIPE B IS 45° .
8. LATERAL MAY BE PLACED IN EITHER SIDE WALL.
9. WHERE DIA 1 AND/OR DIA 2 ARE LESS THAN 3.5′, CLEAR DISTANCE BETWEEN SIDES WALLS SHALL BE 3.5′. END WALLS SHALL BE 6" THICK WITH #4 @ 12" PLACED BOTH WAYS
10. SIDE WALLS SHALL BE FLUSH WITH THE INSIDE OF THE INLET AND OUTLET PIPES WHEN PIPE DIAMETER ARE 3.5′ OR MORE
11. L IS 5′-8" IF A RISER IS REQUIRED. IF NO RISER THEN L IS 5′-0".
12. WHEN C IS NOT SPECIFIED, BRING THE LATERAL DIRECTLY INTO THE WALL OF THE STRUCTURE
13. WHEN C IS SPECIFIED, CONTRACTOR MAY, AT HIS OPTION, BRING THE LATERAL DIRECTLY INTO THE WALL FOR USE AS AN INSIDE FORM. A COLLAR CONFORMING WITH THE WALL THICKNESS AND REINFORCEMENT AS SHOWN IN SECTION B-B SHALL BE POURED AROUND THE PIPE.
14. WHEN LATERAL IS EXTENDED DIRECTLY INTO THE WALL. IT SHALL BE MITERED AS NECESSARY TO BE FLUSH WITH WALL
15. "b" BARS SHALL EXTEND A MINIMUM OF 8" ON EITHER SIDE OF THE OPENING
16. ADJACENT TO EACH SIDE OF THE OPENING, PLACE ADDITIONAL REINFORCEMENT. EQUIVALENT TO HALF THE INTERRUPTED MAIN REINFORCEMENT.

DRAINAGE DETAILS
DD-4

STATE OF CALIFORNIA - DEPARTMENT OF TRANSPORTATION
Caltrans®
DESIGN
FUNCTIONAL SUPERVISOR: ED HAJJ
CALCULATED-DESIGNED BY: OSCAR M AGUILAR
CHECKED BY: QUAN TON
REVISED BY
DATE REVISED

LAST REVISION 02-17-11
DATE PLOTTED => 03-MAR-2011
TIME PLOTTED => 11:54

Dist	COUNTY	ROUTE	POST MILES TOTAL PROJECT	SHEET No.	TOTAL SHEETS
11	SD	5	R61.8/R62.1	20	54

REGISTERED CIVIL ENGINEER 01-31-11 DATE

02-28-11
PLANS APPROVAL DATE

REGISTERED PROFESSIONAL ENGINEER OSCAR AGUILAR No. C62571 Exp. 06-30-12 CIVIL STATE OF CALIFORNIA

THE STATE OF CALIFORNIA OR ITS OFFICERS OR AGENTS SHALL NOT BE RESPONSIBLE FOR THE ACCURACY OR COMPLETENESS OF SCANNED COPIES OF THIS PLAN SHEET.

NOTE:

ALL JOINTS ARE STANDARD JOINT TYPE

APC ALLOWABLE PIPE MATERIAL

24" SMOOTH INTERIOR CORRUGATED PIPE (HDPE)
24" REINFORCED CONCRETE PIPE (RCP)

DRAINAGE QUANTITIES

SHEET #	DRAINAGE SYSTEM No. ⬡	DRAINAGE UNIT No. ◯	24" ALTERNATIVE PIPE CULVERT	36" REINFORCED CONCRETE PIPE RISER	MISCELLANEOUS IRON AND STEEL	MANHOLE FRAME AND COVER (N)	24-12X GRATE (N)	24-12 GRATE (N)	36 R GRATE (N)	MAXIMUM HEIGHT OF COVER (N)	HEIGHT OF INLET (N)	MINOR CONCRETE (MINOR STRUCTURE)	CONCRETE (SLOPE PROTECTION)	DESCRIPTION	STATION	DRAINAGE SYSTEM No. ⬡	DRAINAGE UNIT No. ◯	SHEET #
			LF	LF	LB	EA	EA	EA	EA	LF	LF	CY	CY					
	1	a	17.0							3.5				24" x 17.0' APC		1	a	
		b			805	1					5.5	3.1		STORM DRAIN CLEANOUT TYPE A	"LPR" 22+96		b	
		c	52.8							4.0				24" x 52.8' APC	"LPR2" 3309+05		c	
		d		2.0	236				1		2.0	1.9	0.9	JUNCTION Str W/GCP INLET (H=2.0') W/Conc APRON	"LPR2" 3309+00		d	
		e			473		2				4.2	2.0		GDO INLET (H=4.2') W/2-24-12X GRATE BICYCLE PROOF	"LPR" 22+22.5		e	
		f	246.0							7.0				24" x 246' APC			f	
D-1		g		5.0	236				1		5.0	1.9	0.9	JUNCTION Str W/GCP INLET (H=5.0') W/Conc APRON	"LPR2" 3306+50		g	D-1
		h	246.0							7.0				24" x 246' APC			h	
		i		3.0	236				1		3.0	1.9	0.9	JUNCTION Str W/GCP INLET (H=3.0') W/Conc APRON	"LPR2" 3304+00		i	
		j	111.0							5.0				24" x 111' APC			j	
		k			326			1			3.0	0.95		G1 INLET (H=3.0'), W/24-12 GRATE	"LPR2" 3302+27		k	
		l											2.2	CHANNEL END RECONSTRUCTION	"LPR" 23+05		l	
	TOTAL		672.8	10.0	2312							11.75	4.9					

(N) NOT A SEPARATE ITEM, FOR INFORMATION ONLY

DRAINAGE QUANTITIES
DQ-1

STATE OF CALIFORNIA - DEPARTMENT OF TRANSPORTATION
Caltrans® DESIGN

FUNCTIONAL SUPERVISOR: ED HAJJ
CALCULATED-DESIGNED BY: OSCAR M. AGUILAR
CHECKED BY: THIN BUI
REVISED BY
DATE REVISED

LAST REVISION 02-17-11
DATE PLOTTED => 03-MAR-2011
TIME PLOTTED => 11:55

Dist	COUNTY	ROUTE	POST MILES TOTAL PROJECT	SHEET No.	TOTAL SHEETS
11	SD	5	R61.8/R62.1	21	54

REGISTERED CIVIL ENGINEER 01-26-11 DATE

02-28-11
PLANS APPROVAL DATE

REGISTERED PROFESSIONAL ENGINEER ARTURO A.REYES No. C75491 Exp. 06-30-12 CIVIL STATE OF CALIFORNIA

THE STATE OF CALIFORNIA OR ITS OFFICERS OR AGENTS SHALL NOT BE RESPONSIBLE FOR THE ACCURACY OR COMPLETENESS OF SCANNED COPIES OF THIS PLAN SHEET.

NOTES:

1. FOR ACCURATE RIGHT OF WAY AND ACCESS DATA, CONTACT RIGHT OF WAY ENGINEERING AT DISTRICT OFFICE.
2. LOCATION OF UTILITY FACILITIES SHOWN ON THESE PLANS WERE OBTAINED FROM OWNERS AND/OR FIELD SURVEYS
3. ALL UTILITIES TO BE FIELD VERIFIED PRIOR TO CONSTRUCTION

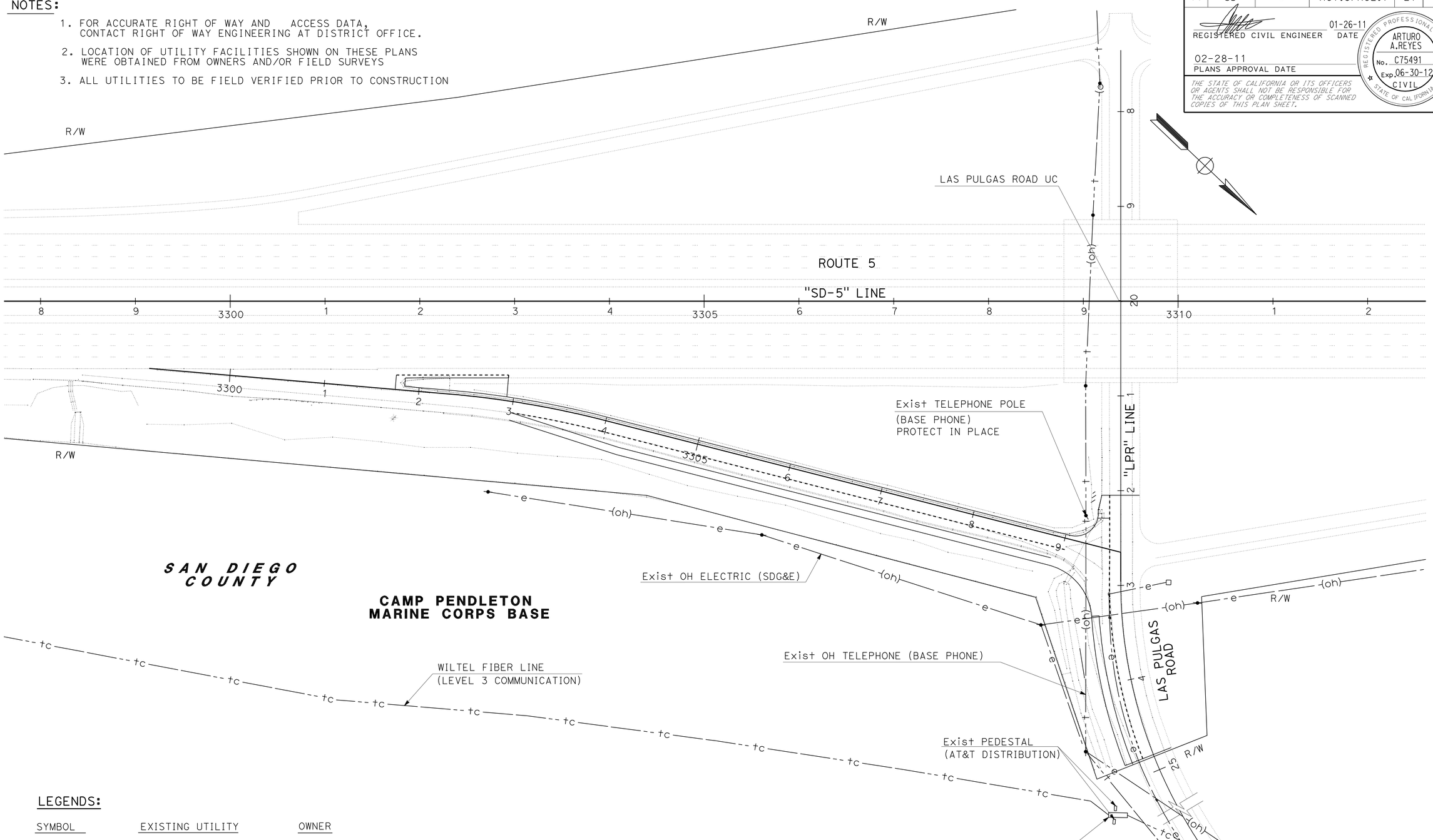

LEGENDS:

SYMBOL	EXISTING UTILITY	OWNER
—— t —— (oh) —	OVERHEAD TELEPHONE	AT&T
—— tc ———	TELEMETER CABLE	LEVEL 3 COMMUNICATION
—— e —— (oh) —	OVERHEAD ELECTRIC	SAN DIEGO GAS & ELECTRIC (SDGE)
—— e ———	ELECTRIC	MARINE CORPS CAMP PENDLETON

THIS PLAN ACCURATE FOR UTILITY INFORMATION ONLY

UTILITY PLAN

SCALE: 1"=50'

U-1

STATE OF CALIFORNIA - DEPARTMENT OF TRANSPORTATION
Caltrans®
DESIGN

FUNCTIONAL SUPERVISOR: ED HAJJ
CALCULATED-DESIGNED BY: VASANT KALE
CHECKED BY: A.RTURO REYES
REVISED BY
DATE REVISED

LAST REVISION 02-17-11
DATE PLOTTED => 10-MAR-2011
TIME PLOTTED => 09:11

Dist	COUNTY	ROUTE	POST MILES TOTAL PROJECT	SHEET No.	TOTAL SHEETS
11	SD	5	R61.8/R62.1	22	54

REGISTERED CIVIL ENGINEER 01-31-11 DATE

02-28-11
PLANS APPROVAL DATE

REGISTERED PROFESSIONAL ENGINEER OSCAR AGUILAR No. C62571 Exp. 06-30-12 CIVIL STATE OF CALIFORNIA

THE STATE OF CALIFORNIA OR ITS OFFICERS OR AGENTS SHALL NOT BE RESPONSIBLE FOR THE ACCURACY OR COMPLETENESS OF SCANNED COPIES OF THIS PLAN SHEET.

NOTES:

1. EXACT LOCATION OF CONSTRUCTION AREA SIGNS SHALL BE DETERMINED BY THE ENGINEER.
2. FEDERAL MANUAL ON UNIFORM TRAFFIC CONTROL DEVICES (MUTCD) SIGN CODES ARE SHOWN UNLESS DESIGNATED BY (CA), INDICATING CALIFORNIA MUTCD.
3. EXISTING UTILITIES ARE NOT SHOWN ON THESE PLAN SHEETS. THE CONTRACTOR SHALL VERIFY LOCATIONS OF EXISTING UTILITIES AND ADJUST THE FIELD LOCATION OF THE SIGN POSTS IN CONSULTATION WITH THE ENGINEER.
4. FOR ACCURATE RIGHT OF WAY AND ACCESS DATA, CONTACT RIGHT OF WAY ENGINEERING AT THE DISTRICT OFFICE.

LEGEND

X = CONSTRUCTION AREA SIGNS

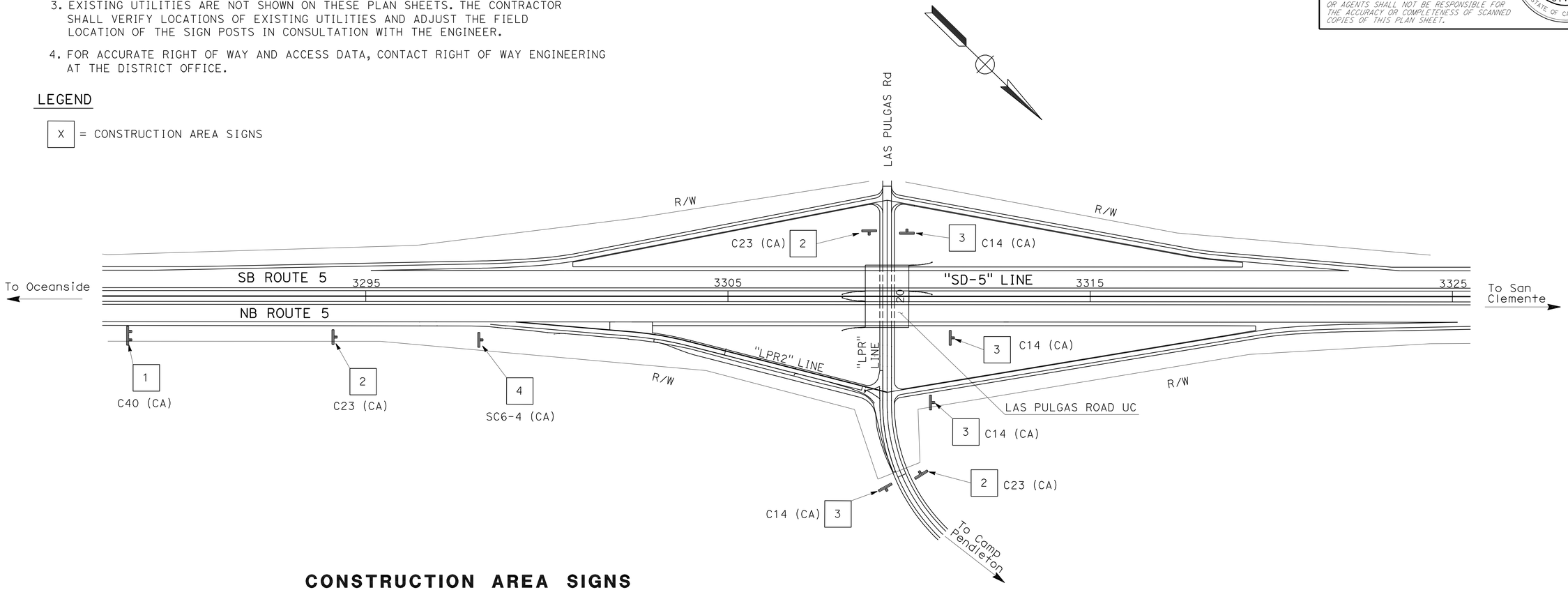

CONSTRUCTION AREA SIGNS

SIGN No.	CODE	PANEL SIZE (In)	No. OF POST AND SIZE (In)	No. OF SIGNS	STAGE CONSTRUCTION I	STAGE CONSTRUCTION II	STAGE CONSTRUCTION III	REMARK
1	C40 (CA)	108 X 42	2-4 X 6 (S)	1				
2	C23 (CA)	48 X 48	1-4 X 6 (S)	3				
3	C14 (CA)	48 X 24	1-4 X 4 (S)	4				
4	SC6-4 (CA)	48 X 60	PORTABLE	1				
A	G84-2 (CA)	54 X 48	1-4 X 6 (S)		1	1	1	SEE STAGE CONSTRUCTION SHEETS FOR LOCATION
B	R11 (CA)	36 X 36	1-4 X 6 (S)		5	5	5	
	R11A-1 (CA)	36 X 21			5	5	5	
C	R1-1	30 X 30	1-4 X 6 (S)		2	2	2	
D	R6-1R	54 X 18	1-4 X 6 (S)		1	1	1	
	R6-1L	54 X 18	1-4 X 6 (S)		1	1	1	
E	G10 SPCL	30 X 108	2-4 X 6 (S)		1	1	1	
F	M4-9C	30 X 24	1-4 X 6 (S)			1	1	
G	W11-1	24 X 24	1-4 X 6 (S)			1	1	
	W16-1	18 X 24						
SUBTOTAL				9	16	18	18	
TOTAL				61				

(S) DENOTES STATIONARY MOUNTED SIGN

THIS PLAN ACCURATE FOR CONSTRUCTION AREA SIGN WORK ONLY

CONSTRUCTION AREA SIGNS

NO SCALE

CS-1

REVISED BY | DATE REVISED
OSCAR M AGUILAR | SEAN D. HOANG
CALCULATED-DESIGNED BY | CHECKED BY
FUNCTIONAL SUPERVISOR: ED HAJJ
STATE OF CALIFORNIA - DEPARTMENT OF TRANSPORTATION
Caltrans
DESIGN

LAST REVISION 02-17-11 | DATE PLOTTED => 03-MAR-2011 | TIME PLOTTED => 11:55

Dist	COUNTY	ROUTE	POST MILES TOTAL PROJECT	SHEET No.	TOTAL SHEETS
11	SD	5	R61.8/R62.1	23	54

REGISTERED CIVIL ENGINEER 01-31-11 DATE

02-28-11
PLANS APPROVAL DATE

REGISTERED PROFESSIONAL ENGINEER OSCAR AGUILAR No. C62571 Exp. 06-30-12 CIVIL STATE OF CALIFORNIA

THE STATE OF CALIFORNIA OR ITS OFFICERS OR AGENTS SHALL NOT BE RESPONSIBLE FOR THE ACCURACY OR COMPLETENESS OF SCANNED COPIES OF THIS PLAN SHEET.

LEGEND:

- = WORK AREA
- = DIRECTION OF TRAVEL
- ER(XX) = END REMOVE PAVEMENT DELINEATION DETAIL
- BT(XX) = BEGIN Temp PAVEMENT DELINEATION DETAIL
- ET(XX) = END Temp PAVEMENT DELINEATION DETAIL
- BR(XX) = BEGIN REMOVE PAVEMENT DELINEATION DETAIL
- = AREA FOR CONTRACTOR USE
- BRT(XX) = BEGIN REMOVE Temp PAVEMENT DELINEATION DETAIL
- ERT(XX) = END REMOVE Temp PAVEMENT DELINEATION DETAIL
- # = CONSTRUCTION AREA SIGNS (SEE CS SHEET) FOR QUANTITIES

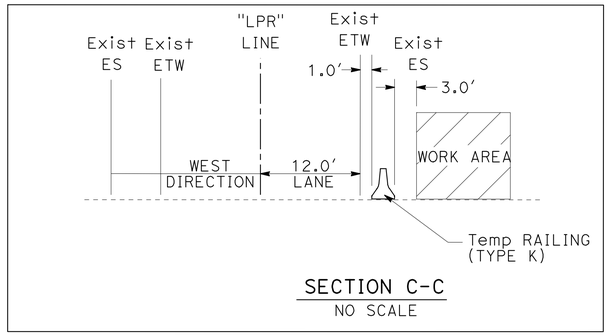

SECTION C-C
NO SCALE

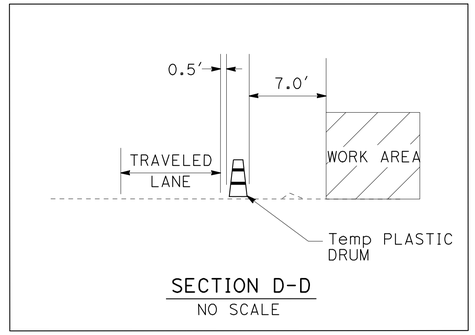

SECTION D-D
NO SCALE

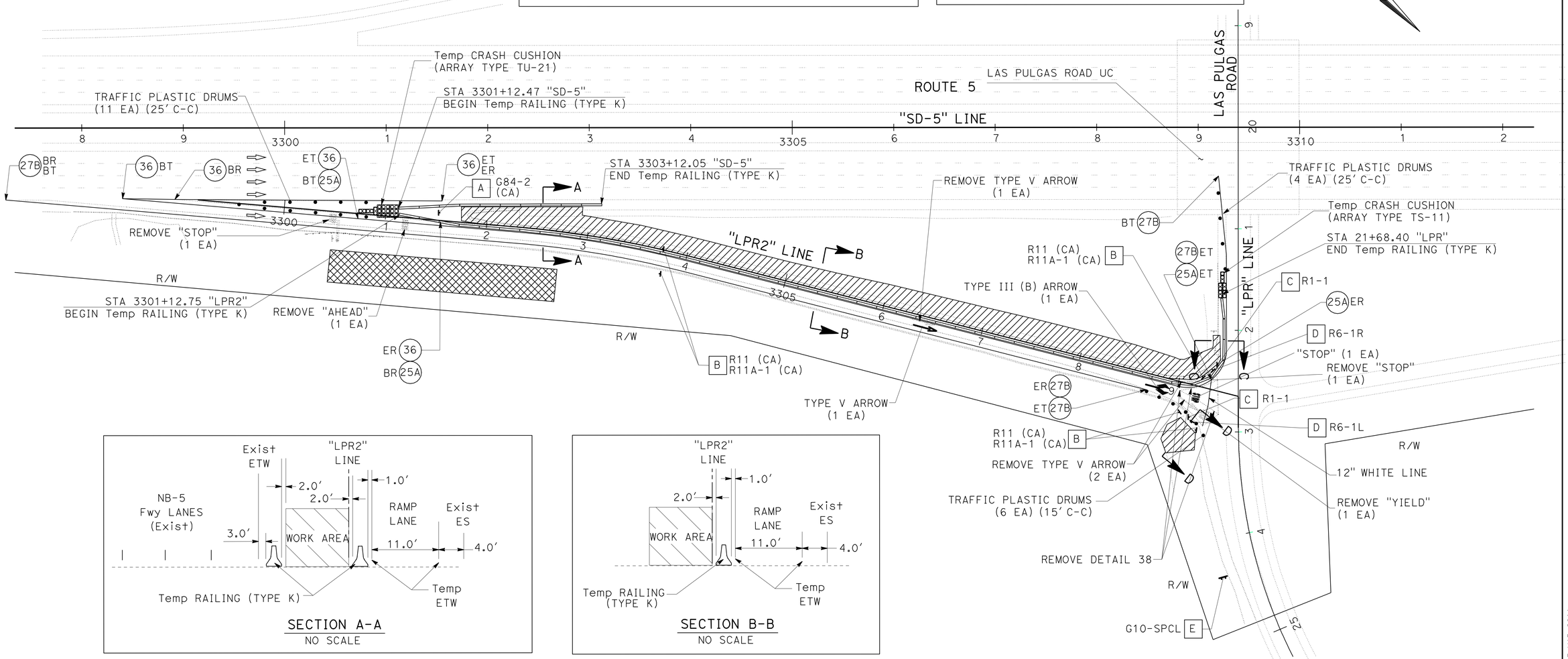

SECTION A-A
NO SCALE

SECTION B-B
NO SCALE

NOTE: FOR ACCURATE RIGHT OF WAY AND ACCESS DATA, CONTACT RIGHT OF WAY ENGINEERING AT THE DISTRICT OFFICE.

THIS PLAN ACCURATE FOR STAGE CONSTRUCTION AND TRAFFIC HANDLING WORK ONLY

STAGE CONSTRUCTION AND TRAFFIC HANDLING PLAN (STAGE 1)

SCALE: 1"=50'

SC-1

REVISED BY | DATE REVISED
OSCAR M AGUILAR | SEAN D. HOANG
CALCULATED-DESIGNED BY | CHECKED BY
FUNCTIONAL SUPERVISOR: ED HAJJ
STATE OF CALIFORNIA - DEPARTMENT OF TRANSPORTATION
Caltrans DESIGN

LAST REVISION 02-17-11 | DATE PLOTTED => 03-MAR-2011 | TIME PLOTTED => 11:55

Dist	COUNTY	ROUTE	POST MILES TOTAL PROJECT	SHEET No.	TOTAL SHEETS
11	SD	5	R61.8/R62.1	24	54

REGISTERED CIVIL ENGINEER 01-31-11 DATE

02-28-11
PLANS APPROVAL DATE

REGISTERED PROFESSIONAL ENGINEER OSCAR AGUILAR No. C62571 Exp. 06-30-12 CIVIL STATE OF CALIFORNIA

THE STATE OF CALIFORNIA OR ITS OFFICERS OR AGENTS SHALL NOT BE RESPONSIBLE FOR THE ACCURACY OR COMPLETENESS OF SCANNED COPIES OF THIS PLAN SHEET.

NOTE: FOR ACCURATE RIGHT OF WAY AND ACCESS DATA, CONTACT RIGHT OF WAY ENGINEERING AT THE DISTRICT OFFICE.

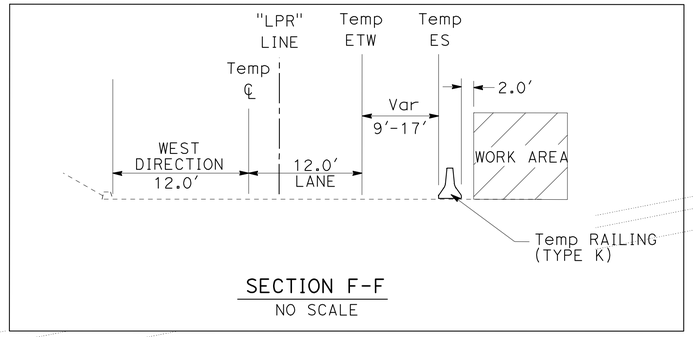

SECTION F-F
NO SCALE

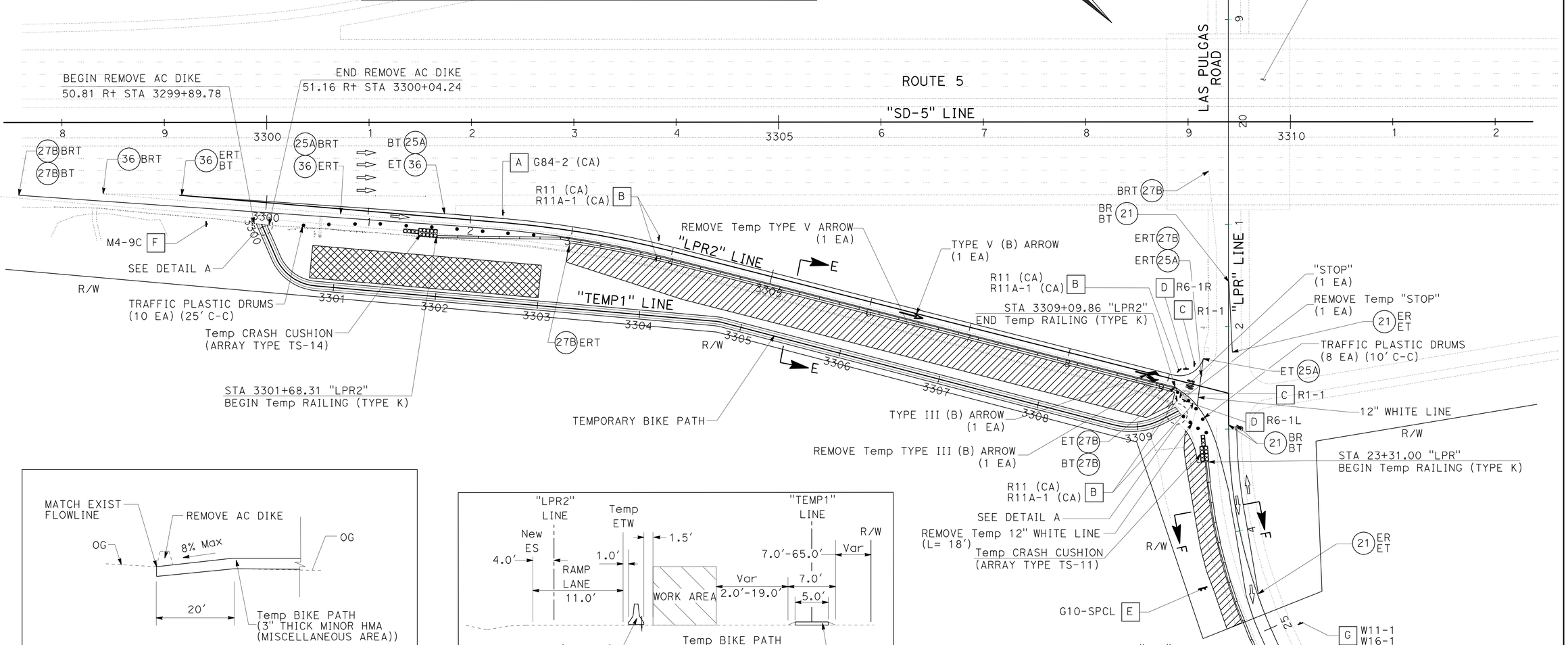

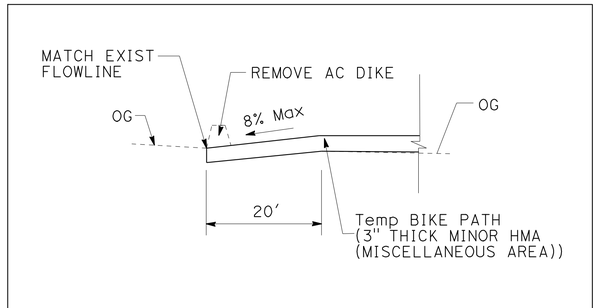

DETAIL A
NO SCALE

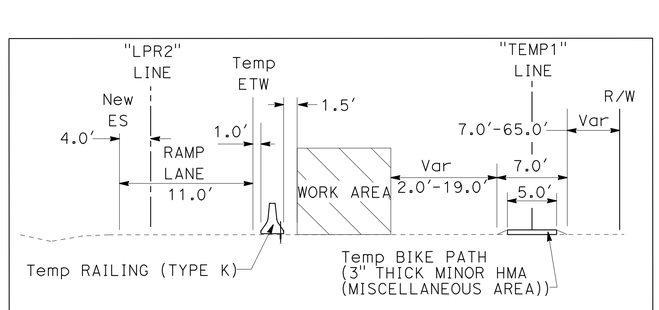

SECTION E-E
NO SCALE

THIS PLAN ACCURATE FOR STAGE CONSTRUCTION AND TRAFFIC HANDLING WORK ONLY

STAGE CONSTRUCTION AND TRAFFIC HANDLING PLAN (STAGE 2)

SCALE: 1"=50′

SC-2

STATE OF CALIFORNIA - DEPARTMENT OF TRANSPORTATION
Caltrans® DESIGN
FUNCTIONAL SUPERVISOR: ED HAJJ
CALCULATED-DESIGNED BY: OSCAR M AGUILAR
CHECKED BY: SEAN D. HOANG
REVISED BY
DATE REVISED

LAST REVISION 02-17-11
DATE PLOTTED => 03-MAR-2011
TIME PLOTTED => 11:55

Dist	COUNTY	ROUTE	POST MILES TOTAL PROJECT	SHEET No.	TOTAL SHEETS
11	SD	5	R61.8/R62.1	25	54

REGISTERED CIVIL ENGINEER 01-31-11 DATE

02-28-11
PLANS APPROVAL DATE

REGISTERED PROFESSIONAL ENGINEER OSCAR AGUILAR No. C62571 Exp. 06-30-12 CIVIL STATE OF CALIFORNIA

THE STATE OF CALIFORNIA OR ITS OFFICERS OR AGENTS SHALL NOT BE RESPONSIBLE FOR THE ACCURACY OR COMPLETENESS OF SCANNED COPIES OF THIS PLAN SHEET.

LEGEND:

= FULL STRUCTURAL REPLACEMENT DURING 56-HRS CLOSURE

NOTE:
1. FOR ACCURATE RIGHT OF WAY AND ACCESS DATA, CONTACT RIGHT OF WAY ENGINEERING AT THE DISTRICT OFFICE.
2. FOR ADDITION TRAFFIC HANDLING FOR STAGE 3, SEE TH-1.

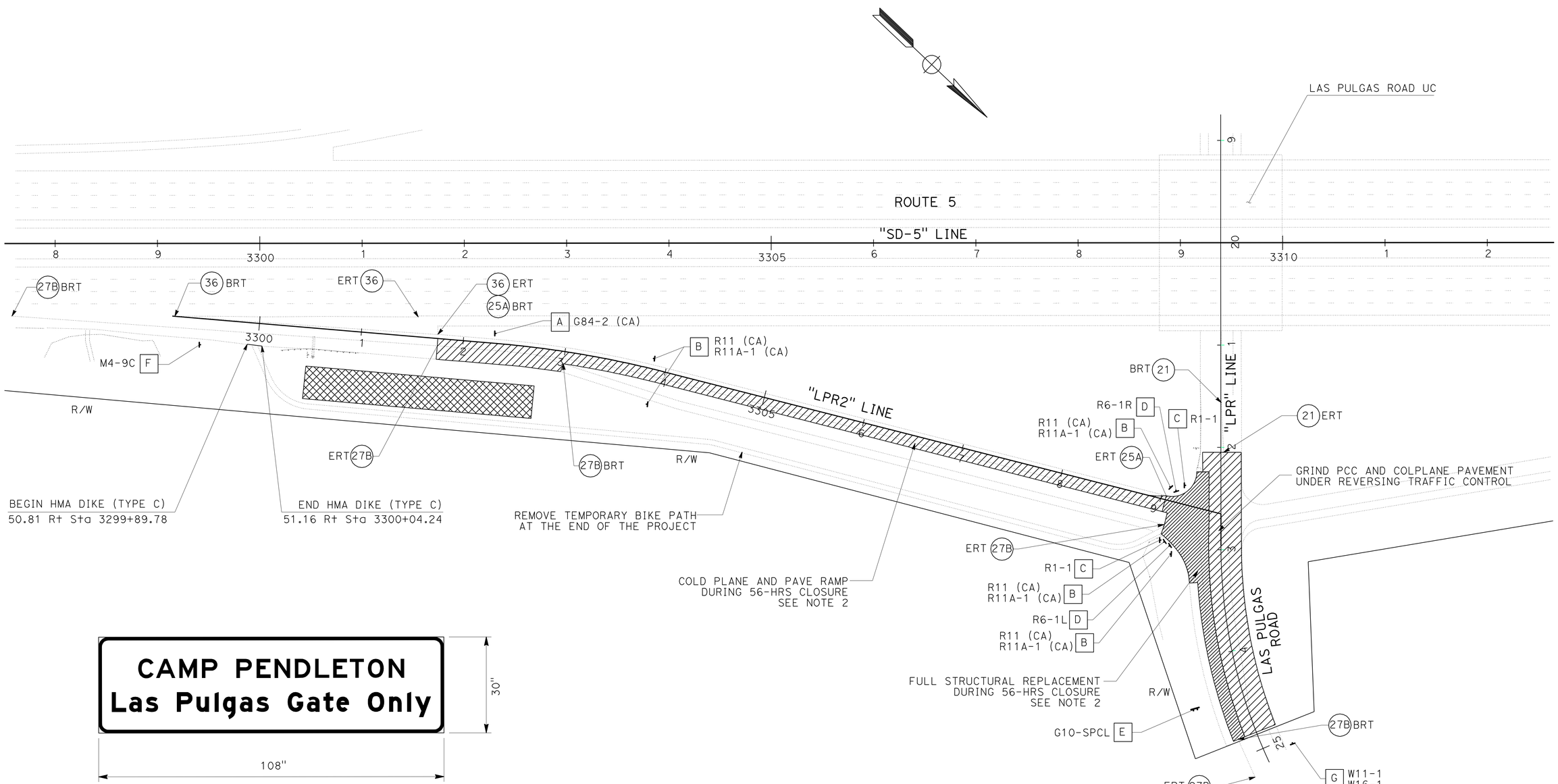

STAGE CONSTRUCTION AND TRAFFIC HANDLING PLAN (STAGE 3)

SCALE: 1"=50'

SC-3

THIS PLAN ACCURATE FOR STAGE CONSTRUCTION AND TRAFFIC HANDLING WORK ONLY

STATE OF CALIFORNIA - DEPARTMENT OF TRANSPORTATION
Caltrans
DESIGN

FUNCTIONAL SUPERVISOR: ED HAJJ

CALCULATED-DESIGNED BY: OSCAR M AGUILAR
CHECKED BY: SEAN D. HOANG

REVISED BY
DATE REVISED

LAST REVISION 02-17-11
DATE PLOTTED => 03-MAR-2011
TIME PLOTTED => 11:55

Dist	COUNTY	ROUTE	POST MILES TOTAL PROJECT	SHEET No.	TOTAL SHEETS
11	SD	5	R61.8/R62.1	26	54

REGISTERED CIVIL ENGINEER 01-31-11 DATE

02-28-11
PLANS APPROVAL DATE

REGISTERED PROFESSIONAL ENGINEER OSCAR AGUILAR No. C62571 Exp. 06-30-12 CIVIL STATE OF CALIFORNIA

THE STATE OF CALIFORNIA OR ITS OFFICERS OR AGENTS SHALL NOT BE RESPONSIBLE FOR THE ACCURACY OR COMPLETENESS OF SCANNED COPIES OF THIS PLAN SHEET.

EXISTING PAVEMENT DELINEATION REMOVAL

STAGE	SHEET	DETAIL No.	LINE	BEGIN STATION	END STATION	REMOVE PAVEMENT MARKER (N)	REMOVE PAINTED TRAFFIC STRIPE	REMOVE YELLOW PAINTED TRAFFIC STRIPE (HAZARDOUS WASTE)
						(EA)	(LF)	(LF)
1	SC-1	25A	LPR2	3301+55.78	3309+30.83	33		775.05
		27B	SD-5	3297+25.14	3299+14.42		189.28	
		27B	LPR2	3299+14.42	3308+70.96		956.54	
		36	SD-5	3298+91.79	3301+54.91	12	526.24	
		36	LPR2	3299+14.42	3301+55.78	11	482.72	
		38	LPR2	3309+03.30	3309+45.82	6	153.04	
2	SC-2	21	LPR	21+56.15	22+24.86			137.40
		21	LPR	22+96.00	24+63.42			334.84
TOTAL						62	2,307.82 ***	1,247.29

EXISTING PAVEMENT MARKING REMOVAL

STAGE	SHEET	TYPES	REMOVE THERMOPLASTIC PAVEMENT MARKING
			SQFT
1	SC-1	V	99
		"YIELD"	24
		"AHEAD"	31
		"STOP"	44
		LIMIT LINE	24
TOTAL			222

TEMPORARY PAVEMENT MARKING (PAINT)

STAGE	SHEET	LIMIT LINE 12"	"STOP"	ARROW TYPE III (B)	ARROW TYPE V
		(SQFT)	(SQFT)	(SQFT)	(SQFT)
1	SC-1	49	22	73	33
2	SC-2		22	73	33
SUBTOTAL		49	44	146	66
TOTAL		305			

TEMPORARY BIKE PATH

STAGE	SHEET	PLACE HOT MIX ASPHALT (MISCELLANEOUS AREA)	MINOR HOT MIX ASPHALT	REMOVE ASPHALT CONCRETE DIKE	PLACE HOT MIX ASPHALT DIKE TYPE C
		SQYD	TON	LF	LF
2	SC-2	525.24	87.59	14.60	
3	SC-3		0.11		14.60
TOTAL		525.24 **	87.70 **	14.60 **	14.60 **

REMOVE PAINTED PAVEMENT MARKING

STAGE	SHEET	LIMIT LINE 12"	"STOP"	"AHEAD"	"YIELD"	ARROW TYPE III (B)	ARROW TYPE V
		(SQFT)	(SQFT)	(SQFT)	(SQFT)	(SQFT)	(SQFT)
2	SC-2	18	22			73	33
SUBTOTAL		18	22			73	33
TOTAL		146					

REMOVE SURFACING

STAGE	SHEET	ROADWAY EXCAVATION	DESCRIPTION
		CY	
3	SC-3	43.79	TEMPORARY BIKE PATH
TOTAL		43.79 **	

(N) = NOT A SEPARATE PAY ITEM, FOR INFORMATION ONLY.

** SEE "Q-1" SHEET FOR ADDITIONAL QUANTITIES.

*** SEE TEMPORARY PAVEMENT DELINEATION REMOVAL TABLE FOR ADDITIONAL QUANTITIES.

STAGE CONSTRUCTION QUANTITIES
SCQ-1

REVISED BY | DATE REVISED
OSCAR M AGUILAR | SEAN D. HOANG
CALCULATED-DESIGNED BY | CHECKED BY
FUNCTIONAL SUPERVISOR: ED HAJJ
STATE OF CALIFORNIA - DEPARTMENT OF TRANSPORTATION
Caltrans DESIGN

LAST REVISION 02-17-11 | DATE PLOTTED => 03-MAR-2011 | TIME PLOTTED => 11:55

Dist	COUNTY	ROUTE	POST MILES TOTAL PROJECT	SHEET No.	TOTAL SHEETS
11	SD	5	R61.8/R62.1	27	54

REGISTERED CIVIL ENGINEER 01-31-11 DATE

02-28-11
PLANS APPROVAL DATE

REGISTERED PROFESSIONAL ENGINEER OSCAR AGUILAR No. C62571 Exp. 06-30-12 CIVIL STATE OF CALIFORNIA

THE STATE OF CALIFORNIA OR ITS OFFICERS OR AGENTS SHALL NOT BE RESPONSIBLE FOR THE ACCURACY OR COMPLETENESS OF SCANNED COPIES OF THIS PLAN SHEET.

TEMPORARY PAVEMENT DELINEATION

LOCATION				DETAIL No.	TEMPORARY PAVEMENT MARKER RETROREFLECTIVE			TEMPORARY TRAFFIC STRIPE (PAINT)	
STAGE	LINE	STATION BEGIN	STATION END		TYPE C RED-CLEAR (EA)	TYPE G CLEAR (EA)	TYPE H YELLOW (EA)	4" (LF)	8" (LF)
1	LPR2	3300+73.17	3309+30.85	25A			37	857.68	
	SD-5	3297+25.14	3299+14.42	27B				189.28	
	LPR	20+48.07	22+48.49	27B				200.42	
	LPR2	3299+14.42	3308+70.96	27B				956.54	
	SD-5	3298+40.22	3301+54.91	36		14			314.69
	SD-5	3298+40.22	3299+14.00	36		4			73.78
	LPR2	3299+14.42	3300+73.17	36		8			158.75
2	LPR	21+56.16	22+24.86	21				68.70	
	LPR	22+96.00	24+63.42	21				167.42	
	LPR2	3301+74.28	3309+28.35	25A			32	754.07	
	SD-5	3297+57.81	3299+14.42	27B				156.61	
	LPR	22+59.85	25+21.82	27B				261.97	
	LPR2	3299+14.42	3309+09.86	27B				995.44	
	LPR2	3299+14.42	3301+74.28	36		12			259.86
SUB TOTAL						38	69	4,608.13	807.08
TOTAL						107		5,415.21	

TEMPORARY PAVEMENT DELINEATION REMOVAL

LOCATION				DETAIL No.	REMOVE PAVEMENT MARKER (N)	REMOVE PAINTED TRAFFIC STRIPE
STAGE	LINE	STATION BEGIN	STATION END		(EA)	(LF)
2	LPR2	3300+73.17	3309+30.85	25A	37	857.68
	SD-5	3297+25.14	3299+14.42	27B		189.28
	LPR	20+48.07	22+48.49	27B		200.42
	LPR2	3299+14.42	3308+70.96	27B		956.54
	SD-5	3298+40.22	3299+14.00	36	4	147.56
	LPR2	3299+14.42	3300+73.17	36	8	317.50
3	LPR	21+56.16	22+04.84	21		97.38
	LPR2	3301+74.28	3309+04.39	25A	31	730.11
	SD-5	3297+57.81	3299+14.42	27B		156.61
	LPR	24+82.79	25+21.82	27B		39.03
	LPR2	3299+14.42	3301+75.026	27B		260.61
	LPR2	3299+14.42	3301+74.28	36	12	259.86
	SD-5	3299+14.42	3301+54.91	36	11	240.49
TOTAL					103	4,453.07 *

(N) = NOT A SEPARATE PAY ITEM, FOR INFORMATION ONLY.

* SEE EXISTING PAVEMENT DELINEATION REMOVAL TABLE FOR ADDITIONAL QUANTITIES.

STAGE	LINE	STATION BEGIN	STATION END	TEMPORARY RAILING (TYPE K) (LF)	TRAFFIC PLASTIC DRUM (EA)
1	SD-5	3301+12.47	3303+12.05	199.58	6
	LPR2	3301+12.75	3309+30.94	818.19	11
	LPR	21+68.40	22+46.51	78.11	4
2	LPR2	3301+68.31	3309+09.86	741.55	10
	LPR	23+31.00	25+21.31	9.51	8
TOTAL				1,846.94	39

STAGE	SHEET	TEMPORARY CRASH CUSHION MODULE (EA)		
		ARRAY TS11	ARRAY TS14	ARRAY TU21
1	SC-1	11		21
2	SC-2	11	14	
TOTAL		57		

STAGE CONSTRUCTION QUANTITIES
SCQ-2

REVISED BY | DATE REVISED
OSCAR M AGUILAR | SEAN D. HOANG
CALCULATED-DESIGNED BY | CHECKED BY
FUNCTIONAL SUPERVISOR: ED HAJJ

STATE OF CALIFORNIA - DEPARTMENT OF TRANSPORTATION
Caltrans® DESIGN

LAST REVISION 02-17-11 | DATE PLOTTED => 03-MAR-2011 | TIME PLOTTED => 11:55

Dist	COUNTY	ROUTE	POST MILES TOTAL PROJECT	SHEET No.	TOTAL SHEETS
11	SD	5	R61.8/R62.1	28	54

REGISTERED CIVIL ENGINEER 02-01-11 DATE

02-28-11
PLANS APPROVAL DATE

REGISTERED PROFESSIONAL ENGINEER SHAHIN T. ADIBI No. 54839 Exp. 06-30-12 CIVIL STATE OF CALIFORNIA

THE STATE OF CALIFORNIA OR ITS OFFICERS OR AGENTS SHALL NOT BE RESPONSIBLE FOR THE ACCURACY OR COMPLETENESS OF SCANNED COPIES OF THIS PLAN SHEET.

LEGEND:

[X] = CONSTRUCTION AREA SIGN

SPCL = SPECIAL CONSTRUCTION AREA SIGN

CAPS = CAPITAL LETTERING

→ = DETOUR DIRECTION OF TRAVEL

NOTES:

1). EXACT LOCATION OF CONSTRUCTION AREA SIGNS TO BE DETERMINED BY THE ENGINEER.

2). FEDERAL MANUAL ON UNIFORM TRAFFIC CONTROL DEVICES (MUTCD) SIGN CODES ARE SHOWN UNLESS DESIGNATED BY (CA), INDICATING CALIFORNIA MUTCD.

3). SEE CONSTRUCTION AREA SIGN PLAN FOR ADDITIONAL CONSTRUCTION AREA SIGNS.

4). EXISTING UTILITIES ARE NOT SHOWN ON THESE PLAN SHEETS. THE CONTRACTOR SHALL VERIFY LOCATIONS OF EXISTING UTILITIES AND AVOID IMPACTING THESE EXISTING UTILITIES BY ADJUSTING THE FIELD LOCATION OF THE SIGN POST IN CONSULTATION WITH THE ENGINEER.

CONSTRUCTION AREA SIGNS

SIGN No.	TYPE	PANEL SIZE (In)	No. OF POST AND SIZE (In)	EACH	PORTABLE SIGN
5	SPCL-1	72 X 72			1
6	SC9 (CA)	36 X 36			12
7	M4-8a	24 X 18			1
			TOTAL		14

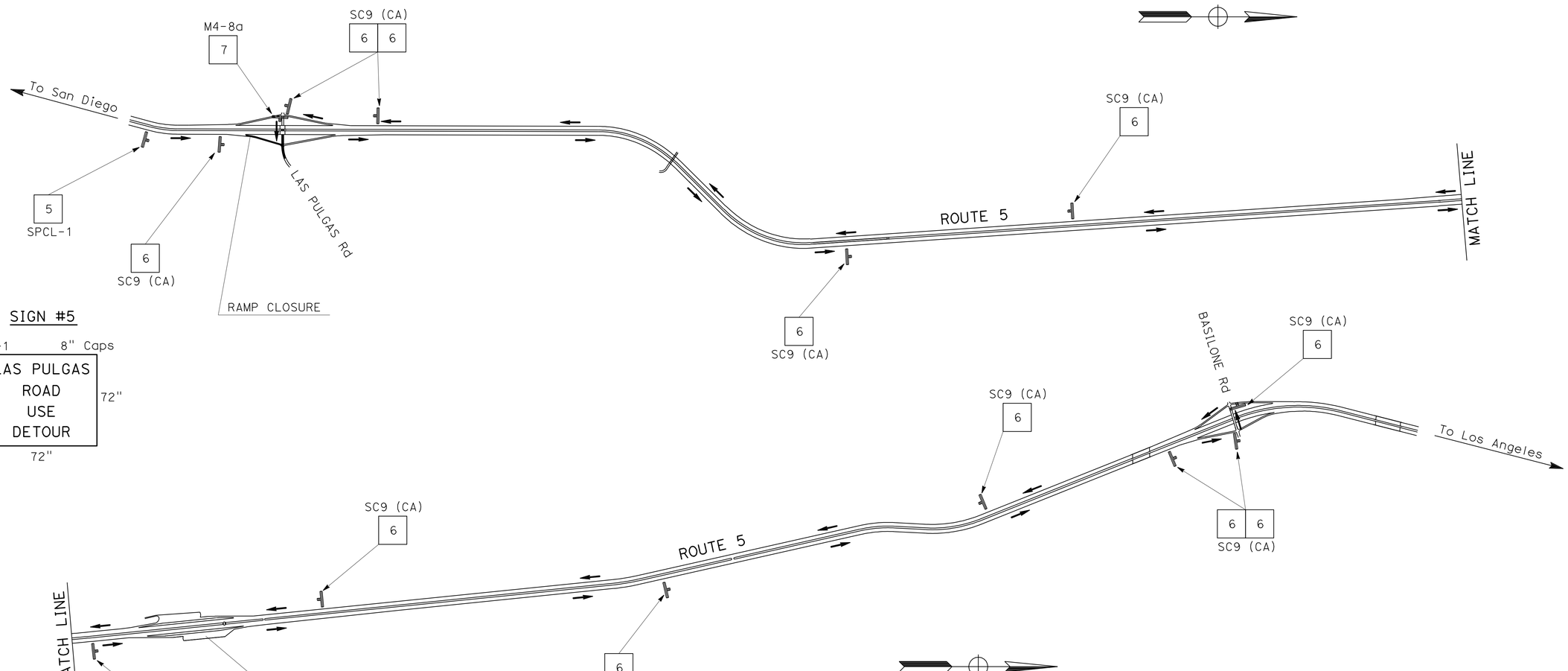

SIGN #5

SPCL-1 8" Caps

LAS PULGAS
ROAD
USE
DETOUR

72" × 72"

THIS PLAN ACCURATE FOR TRAFFIC HANDLING WORK ONLY

TRAFFIC HANDLING PLAN (STAGE 3)

NO SCALE

TH-1

STATE OF CALIFORNIA - DEPARTMENT OF TRANSPORTATION
Caltrans TRAFFIC DESIGN

FUNCTIONAL SUPERVISOR: CAMILLE ABOUFADEL
CALCULATED-DESIGNED BY: DON LUONG
CHECKED BY: SHAHIN ADIBI
REVISED BY
DATE REVISED

LAST REVISION 02-17-11
DATE PLOTTED => 03-MAR-2011
TIME PLOTTED => 11:55

Dist	COUNTY	ROUTE	POST MILES TOTAL PROJECT	SHEET No.	TOTAL SHEETS
11	SD	5	R61.8/R62.1	29	54

REGISTERED CIVIL ENGINEER 02-01-11 DATE

02-28-11
PLANS APPROVAL DATE

REGISTERED PROFESSIONAL ENGINEER SHAHIN T. ADIBI No. 54839 Exp. 06-30-12 CIVIL STATE OF CALIFORNIA

THE STATE OF CALIFORNIA OR ITS OFFICERS OR AGENTS SHALL NOT BE RESPONSIBLE FOR THE ACCURACY OR COMPLETENESS OF SCANNED COPIES OF THIS PLAN SHEET.

NOTE: FOR ACCURATE RIGHT OF WAY AND ACCESS DATA, CONTACT RIGHT OF WAY ENGINEERING AT THE DISTRICT OFFICE

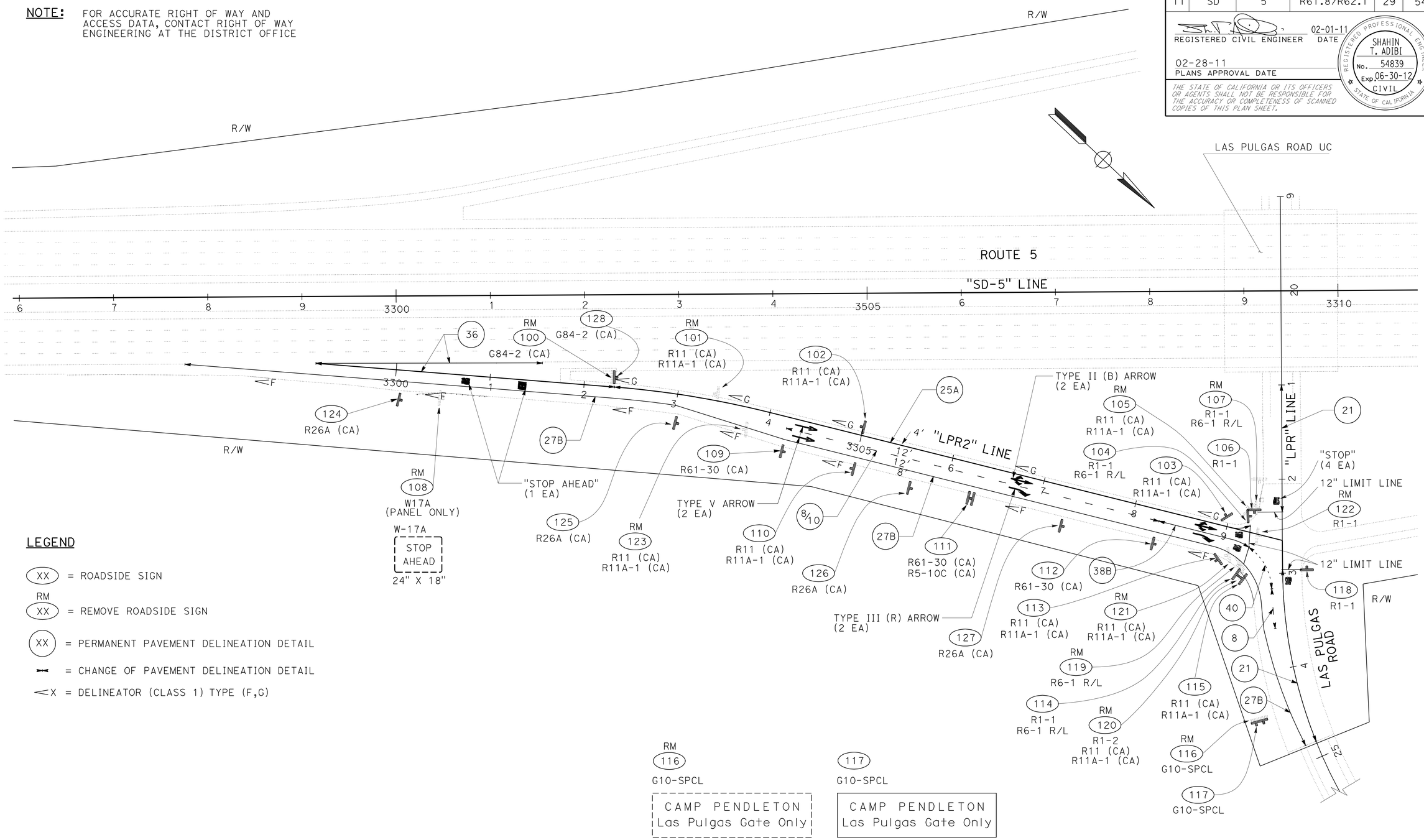

LEGEND

(XX) = ROADSIDE SIGN

RM (XX) = REMOVE ROADSIDE SIGN

(XX) = PERMANENT PAVEMENT DELINEATION DETAIL

= CHANGE OF PAVEMENT DELINEATION DETAIL

X = DELINEATOR (CLASS 1) TYPE (F,G)

THIS PLAN ACCURATE FOR PAVEMENT DELINEATION AND SIGN WORK ONLY

PAVEMENT DELINEATION AND SIGN PLAN

SCALE: 1" = 50'

PD-1

REVISED BY	DATE REVISED	DON LUONG	SHAHIN ADIBI	CALCULATED-DESIGNED BY	CHECKED BY	FUNCTIONAL SUPERVISOR	CAMILLE ABOUFADEL

STATE OF CALIFORNIA - DEPARTMENT OF TRANSPORTATION

Caltrans® **TRAFFIC DESIGN**

LAST REVISION 02-17-11 | DATE PLOTTED => 03-MAR-2011 | TIME PLOTTED => 11:56

Dist	COUNTY	ROUTE	POST MILES TOTAL PROJECT	SHEET No.	TOTAL SHEETS
11	SD	5	R61.8/R62.1	30	54

REGISTERED CIVIL ENGINEER 02-01-11 DATE

02-28-11
PLANS APPROVAL DATE

REGISTERED PROFESSIONAL ENGINEER
SHAHIN T. ADIBI
No. 54839
Exp. 06-30-12
CIVIL
STATE OF CALIFORNIA

THE STATE OF CALIFORNIA OR ITS OFFICERS OR AGENTS SHALL NOT BE RESPONSIBLE FOR THE ACCURACY OR COMPLETENESS OF SCANNED COPIES OF THIS PLAN SHEET.

DETAIL 8/10 COMBINATION

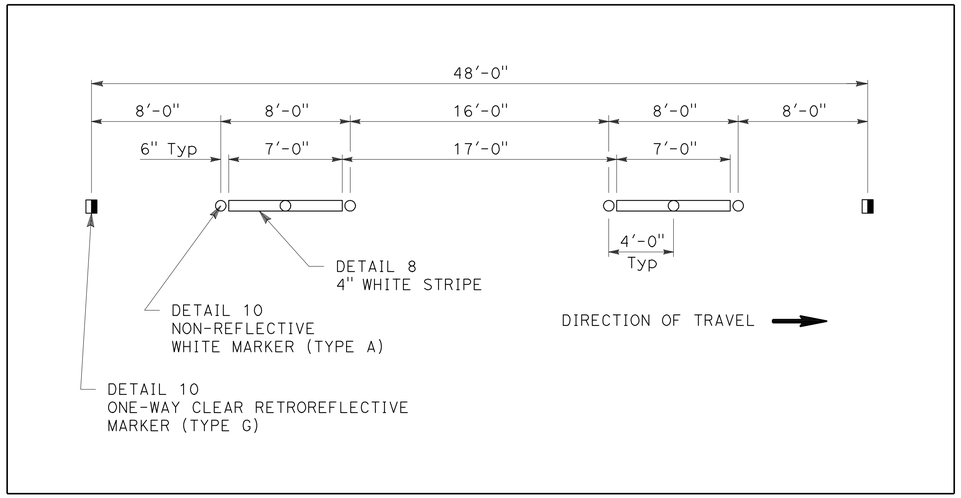

PAVEMENT DELINEATION DETAILS

NO SCALE

PDD-1

STATE OF CALIFORNIA - DEPARTMENT OF TRANSPORTATION
Caltrans
TRAFFIC DESIGN

FUNCTIONAL SUPERVISOR: CAMILLE ABOUFADEL
CALCULATED-DESIGNED BY: DON LUONG
CHECKED BY: SHAHIN ADIBI
REVISED BY
DATE REVISED

LAST REVISION 02-17-11
DATE PLOTTED => 03-MAR-2011
TIME PLOTTED => 11:56

Dist	COUNTY	ROUTE	POST MILES TOTAL PROJECT	SHEET No.	TOTAL SHEETS
11	SD	5	R61.8/R62.1	31	54

REGISTERED CIVIL ENGINEER 02-01-11 DATE

02-28-11
PLANS APPROVAL DATE

REGISTERED PROFESSIONAL ENGINEER SHAHIN T. ADIBI No. 54839 Exp. 06-30-12 CIVIL STATE OF CALIFORNIA

THE STATE OF CALIFORNIA OR ITS OFFICERS OR AGENTS SHALL NOT BE RESPONSIBLE FOR THE ACCURACY OR COMPLETENESS OF SCANNED COPIES OF THIS PLAN SHEET.

DELINEATOR (CLASS 1)

ROUTE	"LPR2" LINE BEGIN	"LPR2" LINE END	TYPE	EA
5	3285+00	3509+00	G	5
			F	7
			TOTAL	12

THERMOPLASTIC PAVEMENT MARKING

ROUTE	LOCATION	LIMIT LINE 12" SQFT	ARROW TYPE V SQFT	ARROW TYPE II (B) SQFT	ARROW TYPE III (R) SQFT	STOP SQFT	AHEAD SQFT	REMARKS
5	LAS PULGAS ROAD OFF RAMP	41.9	66.0	118	84.0	66.0	31.0	
	LAS PULGAS ROAD WB	20.4				22.0		
	LAS PULGAS ROAD EB	26.2				22.0		
	SUB-TOTAL	88.5	66.0	118	84.0	110.0	31.0	
	TOTAL	497.5						

ROUTE	LOCATION	DETAIL No.	PAVEMENT MARKER SUMMARY: NON-REFLECTIVE (EA) TYPE A WHITE	RETROREFLECTIVE (EA) TYPE C RED & CLEAR	TYPE D YELLOW	TYPE G CLEAR	TYPE H YELLOW	TRAFFIC STRIPE SUMMARY: PAINT (1-COAT) (LF) 3" SOLID BLACK	THERMOPLASTIC (LF) 4" SOLID	4" BROKEN 6-1	4" BROKEN 36-12	4" BROKEN 17-7	8" SOLID	8" BROKEN 12-3	REMARKS
5	PD-1	8										449			
		10	51			10									L = 408
		21						322	644						REPLACE IN KIND
		25A					30		693						
		27B							1356						
		36				26							559		
		38B				12							100		
		40								52					
	TOTAL		51	78				322	2693	52		449	659		

PAVEMENT DELINEATION QUANTITIES

PDQ-1

REVISED BY | DATE REVISED
DON LUONG | SHAHIN ADIBI
CALCULATED-DESIGNED BY | CHECKED BY
FUNCTIONAL SUPERVISOR | CAMILLE ABOUFADEL

STATE OF CALIFORNIA - DEPARTMENT OF TRANSPORTATION
Caltrans® TRAFFIC DESIGN

LAST REVISION 02-17-11 | DATE PLOTTED => 03-MAR-2011 | TIME PLOTTED => 11:56

Dist	COUNTY	ROUTE	POST MILES TOTAL PROJECT	SHEET No.	TOTAL SHEETS
11	SD	5	R61.8/R62.1	32	54

REGISTERED CIVIL ENGINEER 02-01-11 DATE

02-28-11
PLANS APPROVAL DATE

REGISTERED PROFESSIONAL ENGINEER SHAHIN T. ADIBI No. 54839 Exp. 06-30-12 CIVIL STATE OF CALIFORNIA

THE STATE OF CALIFORNIA OR ITS OFFICERS OR AGENTS SHALL NOT BE RESPONSIBLE FOR THE ACCURACY OR COMPLETENESS OF SCANNED COPIES OF THIS PLAN SHEET.

117

G10-SPCL

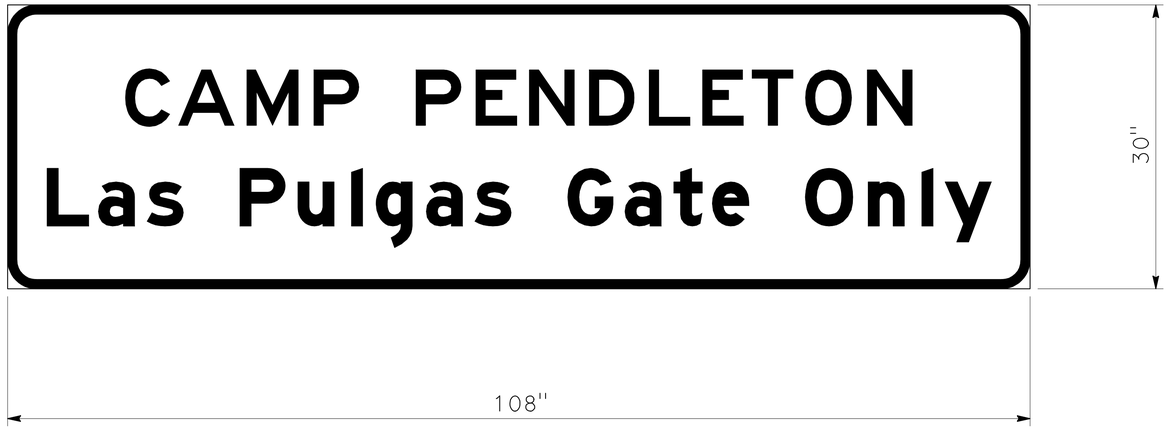

LEGEND				ARROW	
LINE No.	U/L	Caps	Num	Deg	Length
1		6"E			
2	6"E(M)/4.5"E(M)				

CONTRACTOR FURNISHED SIGN PANEL

SIGN DETAILS

NO SCALE

SD-1

REVISED BY | DATE REVISED

DON LUONG | SHAHIN ADIBI

CALCULATED-DESIGNED BY | CHECKED BY

FUNCTIONAL SUPERVISOR: CAMILLE ABOUFADEL

STATE OF CALIFORNIA - DEPARTMENT OF TRANSPORTATION

Caltrans TRAFFIC DESIGN

LAST REVISION 02-17-11 | DATE PLOTTED => 03-MAR-2011 | TIME PLOTTED => 11:56

Dist	COUNTY	ROUTE	POST MILES TOTAL PROJECT	SHEET No.	TOTAL SHEETS
11	SD	5	R61.8/R62.1	33	54

REGISTERED CIVIL ENGINEER 02-01-11 DATE

02-28-11
PLANS APPROVAL DATE

REGISTERED PROFESSIONAL ENGINEER SHAHIN T. ADIBI No. 54839 Exp. 06-30-12 CIVIL STATE OF CALIFORNIA

THE STATE OF CALIFORNIA OR ITS OFFICERS OR AGENTS SHALL NOT BE RESPONSIBLE FOR THE ACCURACY OR COMPLETENESS OF SCANNED COPIES OF THIS PLAN SHEET.

ROADSIDE SIGN QUANTITIES

SIGN No.	CODE	SHEET No.	PANEL SIZE HORIZONTAL	PANEL SIZE VERICAL	D	C	E	Min POST LENGTH	POST SIZE (N) 4X4	4X6	6X6	6X8	ROADSIDE SIGN ONE POST	2-POST	REMOVE ROADSIDE SIGN	REMOVE ROADSIDE SIDE PANEL	REMARKS
			In X In		Ft	Ft	Ft	Ft	In X In				EA	EA	EA	EA	
100	G84-2 (CA)	PD-1													1		
101	R11 (CA)																
	R11A-1 (CA)														1		
102	R11 (CA)		36	36													
	R11A-1 (CA)		36	21	4.8	7	4.5	11.5		X			1				
103	R11 (CA)		36	36													
	R11A-1 (CA)		36	21	4.8	7	4.5	11.5		X			1				
104	R1-1		30	30													
	R6-1 R		54	18													
	R6-1 L		54	18	2.5	7	3.5	13	X				1				BACK TO BACK
105	R11 (CA)																
	R11A-1 (CA)														1		
106	R1-1		30	30	2.5	7	3.5	13	X				1				
107	R1-1																
	R6-1 R																
	R6-1 L														1		
108	W17A															1	REMOVE EXISTING W17A PANEL ONLY
109	R61-30 (CA)		36	30	2.5	7	3.5	13	X				1				
110	R11 (CA)		36	36													
	R11A-1 (CA)		36	21	4.8	7	4.5	11.5		X			1				
111	R61-30 (CA)		36	30													
	R5-10C (CA)		24	12	2.5	7	3.5	13	X				1				BACK TO BACK
112	R61-30 (CA)		36	30	2.5	7	3.5	13	X				1				
113	R11 (CA)		36	36	2.5	7	3.5	13									
	R11A-1 (CA)		36	21	4.8	7	4.5	11.5		X			1				
114	R1-1		30	30													
	R6-1 R		54	18													
	R6-1 L		54	18	2.5	7	3.5	13	X				1				BACK TO BACK
115	R11 (CA)		36	36													
	R11A-1 (CA)		36	21	4.8	7	4.5	11.5		X			1				
116	G10-SPCL														1		
117	G10-SPCL		108	30	2.5	7	4.5	14		X				1			
118	R1-1		30	30	2.5	7	3.5	13	X				1				
119	R6-1 R																
	R6-1 L														1		
120	R1-2																
	R11 (CA)																
	R11A-1 (CA)														1		
121	R11 (CA)																
	R11A-1 (CA)														1		
122	R1-1														1		
121	R11 (CA)																
	R11A-1 (CA)														1		
124	R26A (CA)		24	30	2.5	7	3.5	13	X				1				
125	R26A (CA)		24	30	2.5	7	3.5	13	X				1				
126	R26A (CA)		24	30	2.5	7	3.5	13	X				1				
127	R26A (CA)		24	30	2.5	7	3.5	13	X				1				
128	G84-2(Rt) (62) (CA)		54	48	4.0	7	4.5	15.5		X			1				
												TOTAL	17	1	10	1	

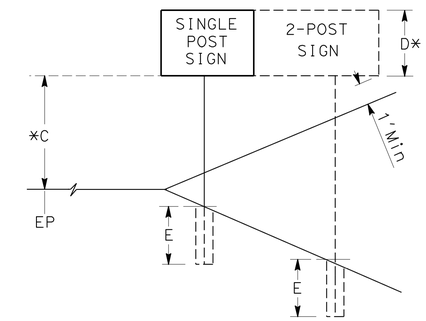

*TO BOTTOM OF LOWER PANEL ON MULTIPLE SIGN INSTALLATIONS.

NOTES:

1. CALIFORNIA SIGN QUANTITIES ARE DESIGNATED BY (CA) OTHERWISE FEDERAL (MUTCD) SIGN CODES ARE SHOWN.
2. EXACT LOCATION OF SIGNS AND POSTS TO BE DETERMINED BY THE ENGINEER.
3. MINIMUM POST LENGTHS WERE CALCULATED ASSUMING LEVEL GROUND SURFACE FROM THE EP. ENSURE "C" DIMENSIONS ARE MET. POST LENGTHS MAY VARY DUE TO SITE CONDITIONS.
4. REFER TO "FURNISH ROADSIDE SIGN PANEL" CHART FOR FURTHER INFORMATION.

SIGN QUANTITIES
SQ-1

REVISED BY | DATE REVISED
DON LUONG | SHAHIN ADIBI
CALCULATED-DESIGNED BY | CHECKED BY
FUNCTIONAL SUPERVISOR | CAMILLE ABOUFADEL
STATE OF CALIFORNIA - DEPARTMENT OF TRANSPORTATION
Caltrans® TRAFFIC DESIGN

LAST REVISION 02-17-11 | DATE PLOTTED => 03-MAR-2011 | TIME PLOTTED => 11:56

Dist	COUNTY	ROUTE	POST MILES TOTAL PROJECT	SHEET No.	TOTAL SHEETS
11	SD	5	R61.8/R62.1	34	54

REGISTERED CIVIL ENGINEER 02-01-11 DATE

02-28-11
PLANS APPROVAL DATE

REGISTERED PROFESSIONAL ENGINEER SHAHIN T. ADIBI No. 54839 Exp. 06-30-12 CIVIL STATE OF CALIFORNIA

THE STATE OF CALIFORNIA OR ITS OFFICERS OR AGENTS SHALL NOT BE RESPONSIBLE FOR THE ACCURACY OR COMPLETENESS OF SCANNED COPIES OF THIS PLAN SHEET.

FURNISH ROADSIDE SIGN PANEL

SIGN No.	CODE	PANEL SIZE Horiz (INCHES X INCHES)	PANEL SIZE Vert (INCHES X INCHES)	BACKGROUND SHEETING COLOR	BACKGROUND RETRO-REFLECTIVE ASTM TYPE	LEGEND SHEETING COLOR	LEGEND REFLECTIVE ASTM TYPE	LEGEND BLACK (NON-REFLECTIVE)	SIGN PANEL SINGLE SHEET ALUMINUM (SQFT) UNFRAMED 0.063 INCHES	SIGN PANEL SINGLE SHEET ALUMINUM (SQFT) UNFRAMED 0.080 INCHES	SIGN PANEL SINGLE SHEET ALUMINUM (SQFT) FRAMED 0.063 INCHES	SIGN PANEL SINGLE SHEET ALUMINUM (SQFT) FRAMED 0.080 INCHES	SIGN PANEL PROTECTIVE OVERLAY PREMIUM FILM	REMARKS
102	R11 (CA)	36	36	Wht	VII	Red	VII		9.0				X	
	R11A-1 (CA)	36	21	Red	VII	Wht	VII		5.25				X	
103	R11 (CA)	36	36	Wht	VII	Red	VII		9.0				X	
	R11A-1 (CA)	36	21	Red	VII	Wht	VII		5.25				X	
104	R1-1	30	30	Red	VII	Wht	VII		6.25				X	
	R6-1R	54	18	Blk	III	Blk/Wht		X		6.75			X	
	R6-1L	54	18	Blk	III	Blk/Wht		X		6.75			X	
106	R1-1	30	30	Red	VII	Wht	VII		6.25				X	
109	R61-30 (CA)	36	30	Wht	III	Blk		X	6.25				X	
110	R11 (CA)	36	36	Wht	VII	Red	VII		9.0				X	
	R11A-1 (CA)	36	21	Red	VII	Wht	VII		5.25				X	
111	R61-30 (CA)	36	30	Wht	III	Blk		X	7.5				X	
	R5-10C (CA)	24	12	Wht	III	Blk		X	2.0				X	
112	R61-30 (CA)	36	30	Wht	III	Blk		X	7.5				X	
113	R11 (CA)	36	36	Wht	VII	Red	VII		9.0				X	
	R11A-1 (CA)	36	21	Red	VII	Wht	VII		5.25				X	
114	R1-1	30	30	Red	VII	Wht	VII		6.25				X	
	R6-1R	54	18	Blk	III	Blk/Wht		X		6.75			X	
	R6-1L	54	18	Blk	III	Blk/Wht		X		6.75			X	
115	R11 (CA)	36	36	Wht	VII	Red	VII		9.0				X	
	R11A-1 (CA)	36	21	Red	VII	Wht	VII		5.25				X	
117	G10-SPCL	108	30	Grn	IV	Wht	IV					22.5	X	
118	R1-1	30	30	Red	VII	Wht	VII		6.25				X	
124	R26A (CA)	24	30	Wht	VII	Red	VII		5.0				X	
125	R26A (CA)	24	30	Wht	VII	Red	VII		5.0				X	
126	R26A (CA)	24	30	Wht	VII	Red	VII		5.0				X	
127	R26A (CA)	24	30	Wht	VII	Red	VII		5.0				X	
128	G84-2(R+) (62) (CA)	54	48	Wht	IV	Wht	IV			18.0			X	
							TOTAL		139.5	45.0		22.5		

SIGN QUANTITIES
SQ-2

REVISED BY | DATE REVISED
DON LUONG | SHAHIN ADIBI
CALCULATED-DESIGNED BY | CHECKED BY
FUNCTIONAL SUPERVISOR | CAMILLE ABOUFADEL
STATE OF CALIFORNIA - DEPARTMENT OF TRANSPORTATION
Caltrans TRAFFIC DESIGN

LAST REVISION 02-17-11 | DATE PLOTTED => 03-MAR-2011 | TIME PLOTTED => 11:56

Dist	COUNTY	ROUTE	POST MILES TOTAL PROJECT	SHEET No.	TOTAL SHEETS
11	SD	5	R61.8/R62.1	35	54

REGISTERED CIVIL ENGINEER 01-31-11 DATE

02-28-11
PLANS APPROVAL DATE

REGISTERED PROFESSIONAL ENGINEER OSCAR AGUILAR No. C62571 Exp. 06-30-12 CIVIL STATE OF CALIFORNIA

THE STATE OF CALIFORNIA OR ITS OFFICERS OR AGENTS SHALL NOT BE RESPONSIBLE FOR THE ACCURACY OR COMPLETENESS OF SCANNED COPIES OF THIS PLAN SHEET.

HOT MIX ASPHALT DIKE

LOCATION	STATION	SIDE	PLACE HOT MIX ASPHALT DIKE TYPE E	PLACE HOT MIX ASPHALT DIKE TYPE A	MINOR HMA	REMOVE ASPHALT CONCRETE DIKE
			LF	LF	TON	LF
"LPR2" LINE	3301+75.00 TO 3309+47.60	R+	794.0		20.6	122.4
"LPR" LINE	22+04.90 TO 22+36.14	L+		31.3	0.8	31.3
"LPR" LINE	23+00.00 TO 24+80.00	L+		175.9	4.8	175.9
"LPR" LINE	"LPR2" 3309+04.39 TO 22+04.90	R+/L+		63.3	1.8	
SUB TOTAL			794.0	270.5	28.0	329.6
TOTAL			1064.5**		28.0*	329.6**

EARTHWORK QUANTITIES

LINE DESIGNATION	STATION	ROADWAY EXCAVATION	EMBANKMENT (N)
		CY	CY
"LPR2"	3301+75.00 TO 3301+84.76	21	
"LPR2"	3301+84.76 TO 3303+00.00	130	17
"LPR2"	3303+00.00 TO 3309+04.39	1799	51
"LPR2"	3310+00		15
"LPR"	22+04.90 TO 22+23.94	14	
"LPR"	22+23.94 TO 23+30.48	343	
"LPR"	23+30.48 TO 24+80.00	272	6
"LPR"	25+00		20
TOTAL		2579**	109

PAVEMENT STRUCTURE QUANTITIES

LINE DESIGNATION	STATION	DIRECTION	HOT MIX ASPHALT (TYPE A)	CLASS 2 AGGREGATE BASE	CLASS 4 AGGREGATE SUBBASE	COLD PLANE ASPHALT CONCRETE PAVEMENT 0.35′	COLD PLANE ASPHALT CONCRETE PAVEMENT 0.20′	GRIND Exist CONCRETE PAVEMENT	ASPHALTIC EMULSION (FOG SEAL COAT)	TACK COAT	MINOR CONCRETE (TEXTURED PAVING) (EXPOSED AGGREGATE)	PLACE HMA (Misc AREA)	MINOR HMA	REMARKS
			TON	CY	CY	SQYD	SQYD	SQYD	TON	TON	SQFT	SQYD	TON	
"LPR2"	3301+75.00 TO 3301+84.76	NB	11.1	6.9	5.4	21.8			0.01	0.03				
"LPR2"	3301+84.76 TO 3303+00.00	NB	81.7	81.8	20.2	254.1			0.05	0.23	1512.7			
"LPR2"	3303+00.00 TO 3309+04.39	NB	702.1	591.4	462.8	804.9			0.28	1.67				
"LPR"	22+04.90 TO 22+23.94	WB/EB	6.6	5.6	4.1		16.3	50.6	0.02	0.03				
"LPR"	22+23.94 TO 23+30.48	WB/EB	140.9	148.3	116.1		89.5	285.4	0.01	0.34		4.1	0.9	PLACE HMA for OVERSIDE DRAIN
"LPR"	23+30.48 TO 24+80.00	WB/EB	115.2	116.5	89.4		122.9	412.6	0.08	0.34				
TOTAL			1057.6	950.5	698.0	1309.5		748.6	0.45	2.64	1512.7	4.1**	0.9***	

TEMPORARY FENCE

STATION	LF
"LPR2" 3299+88.96 TO 3299+88.96	65.5
TOTAL	65.5

REMOVE CONCRETE CURB

STATION	CY
"LPR2" 3302+93.00 TO "LPR" 22+24.00	52
TOTAL	52

* FOR ADDITIONAL QUANTITIES, SEE TABLE FOR PAVEMENT STRUCTURE QUANTITIES AND STAGE CONSTRUCTION QUANTITIES.
** FOR ADDITIONAL QUANTITIES, SEE STAGE CONSTRUCTION QUANTITIES SHEET SCQ-1.
*** FOR ADDITIONAL QUANTITIES, SEE TABLE FOR HOT MIX ASPHALT DIKE AND STAGE CONSTRUCTION QUANTITIES.
(N) NOT A SEPARATE PAY ITEM. FOR INFORMATION ONLY.

SUMMARY OF QUANTITIES
Q-1

STATE OF CALIFORNIA - DEPARTMENT OF TRANSPORTATION
Caltrans DESIGN
FUNCTIONAL SUPERVISOR: ED HAJJ
CALCULATED-DESIGNED BY: OSCAR M AGUILAR
CHECKED BY: QUAN TON
REVISED BY / DATE REVISED

LAST REVISION 02-17-11 | DATE PLOTTED => 03-MAR-2011 | TIME PLOTTED => 11:56

Dist	COUNTY	ROUTE	POST MILES TOTAL PROJECT	SHEET No.	TOTAL SHEETS
11	SD	5	R61.8/R62.1	36	54

REGISTERED ELECTRICAL ENGINEER 02-02-11 DATE

02-28-11
PLANS APPROVAL DATE

REGISTERED PROFESSIONAL ENGINEER FARIBA RAMOS No. E15619 Exp. 12-31-11 ELECTRICAL STATE OF CALIFORNIA

THE STATE OF CALIFORNIA OR ITS OFFICERS OR AGENTS SHALL NOT BE RESPONSIBLE FOR THE ACCURACY OR COMPLETENESS OF SCANNED COPIES OF THIS PLAN SHEET.

NOTES:

1 - EXISTING USMC ELECTRICAL FACILITIES ARE PARTIALLY SHOWN.

2 - PULL BOX SHALL BE MARKED "ELECTRICAL USMC".

3 - CONDUIT SHALL BE INSTALLED BY JACK/DRILLING METHOD.

LEGEND:

N C = EXISTING CONDUIT, NO CHANGE

USMC= UNITED STATES MARINE CORPS

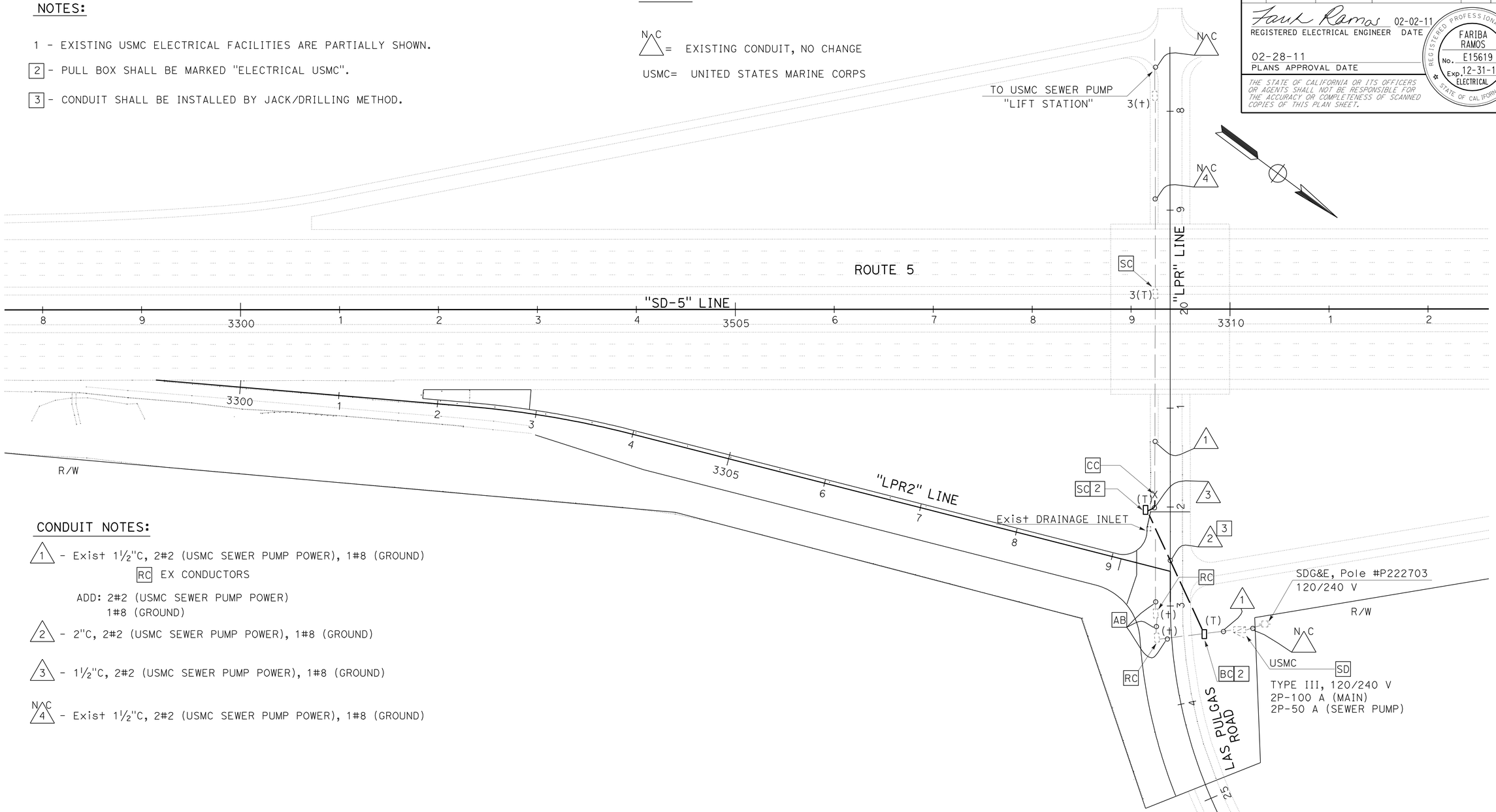

CONDUIT NOTES:

1 - Exist 1½"C, 2#2 (USMC SEWER PUMP POWER), 1#8 (GROUND)
RC EX CONDUCTORS
ADD: 2#2 (USMC SEWER PUMP POWER)
1#8 (GROUND)

2 - 2"C, 2#2 (USMC SEWER PUMP POWER), 1#8 (GROUND)

3 - 1½"C, 2#2 (USMC SEWER PUMP POWER), 1#8 (GROUND)

N C 4 - Exist 1½"C, 2#2 (USMC SEWER PUMP POWER), 1#8 (GROUND)

THIS PLAN IS ACCURATE FOR ELECTRICAL WORK ONLY

MISCELLANEOUS ELECTRICAL

SCALE: 1"=50'

E-1

STATE OF CALIFORNIA - DEPARTMENT OF TRANSPORTATION
Caltrans® TRAFFIC ELECTRICAL

FUNCTIONAL SUPERVISOR: DALE WILSON
CALCULATED-DESIGNED BY: ENRIQUE BERNAL
CHECKED BY: FARIBA RAMOS
REVISED BY
DATE REVISED

LAST REVISION 02-17-11
DATE PLOTTED => 03-MAR-2011
TIME PLOTTED => 11:56

DIST	COUNTY	ROUTE	POST MILES TOTAL PROJECT	SHEET NO.	TOTAL SHEETS
11	SD	5	R61.8/R62.1	37	54

Raymond Don Tsztoo
REGISTERED CIVIL ENGINEER

March 7, 2008
PLANS APPROVAL DATE

REGISTERED PROFESSIONAL ENGINEER
Raymond Don Tsztoo
No. C37332
Exp. 6-30-08
CIVIL
STATE OF CALIFORNIA

The State of California or its officers or agents shall not be responsible for the accuracy or completeness of electronic copies of this plan sheet.

To accompany plans dated 02-28-11

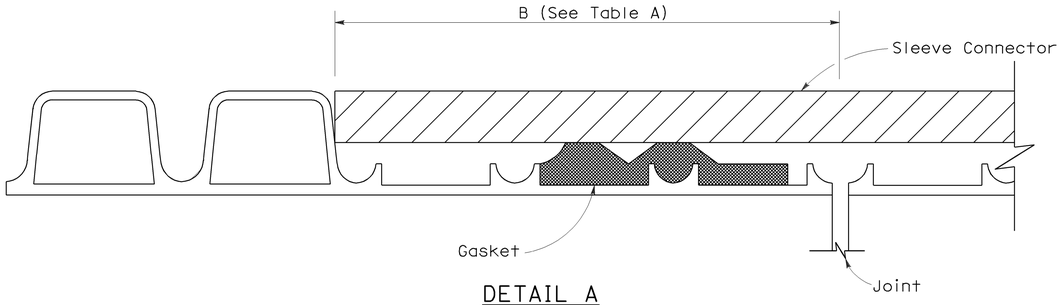

DETAIL A

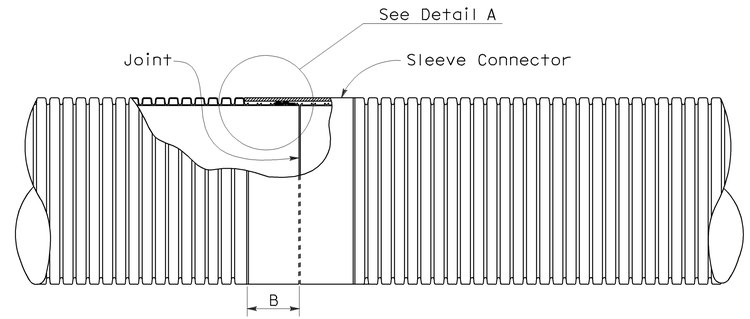

PLAN VIEW
Liner Insert
See Note 4

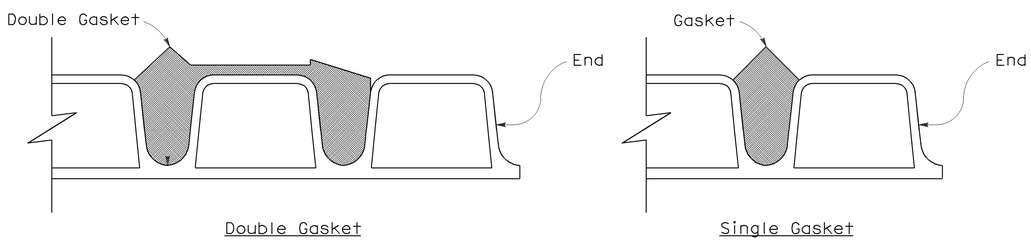

DETAIL B

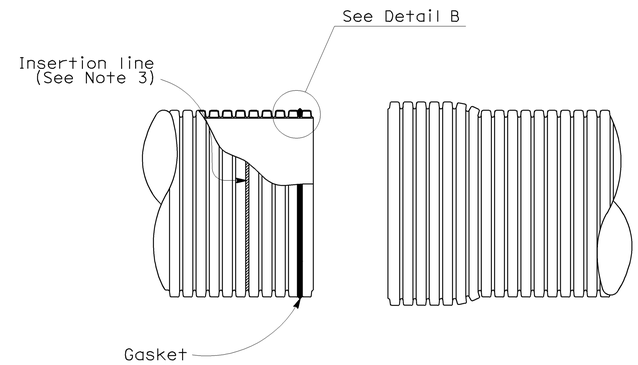

SPIGOT BELL

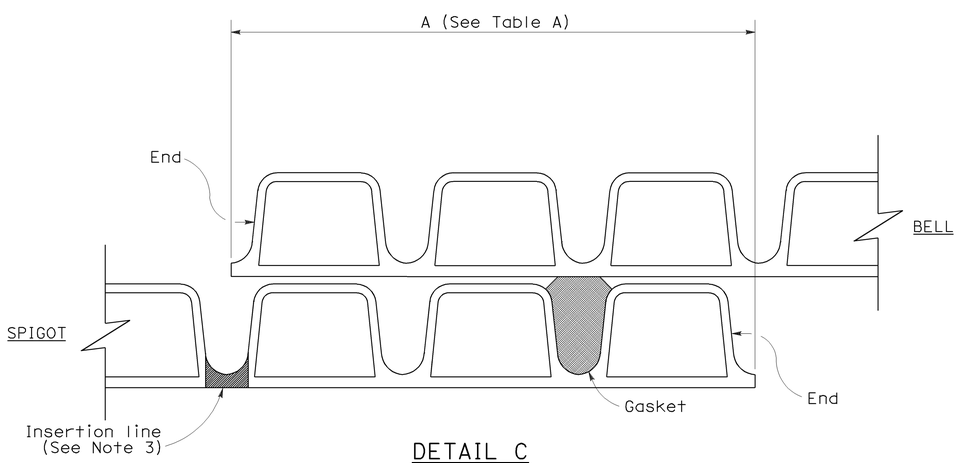

DETAIL C
(Single gasket shown)

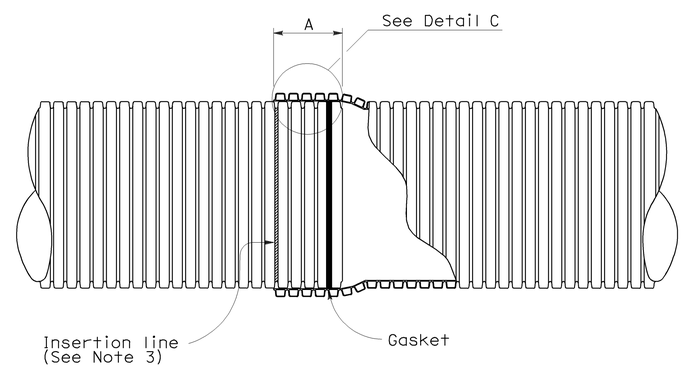

BELL AND SPIGOT JOINT

NOTES:

1. For pipe sections installed on straight alignment, the pipe sections shall be joined to achieve maxium joint overlap at all points on the periphery as indicated in Table A where the plans call for positive or watertight joints. Maxium joint overlap is recommended where the plans call for standard joints, but in no case shall the joint overlap be less than 3½".
2. For pipe sections installed on curved alignment, the maxium angle of deflection from straight alignment at any joint shall not exceed two degrees. Where the plans call for watertightness, field testing for compliance is required. Where plans call for positive joints, the pipe sections shall be joined to achieve Table A Dimensions on one side of the joint. Joints classified as standard shall have no less than 3½" joint overlap at any point on the periphery.
3. Factory applied insertion line limit shall be placed on spigot.
4. Liner insert to be used inside of existing pipe.

TABLE A

JOINT OVERLAP DIMENSIONS		
PIPE Dia (NOMINAL)	A	B
12"	5¾"	4¼"
15"	6¾"	5⅝"
18"	6¾"	5⅝"
21"	8½"	5⅝"
24"	8½"	6⅛"
30"	8½"	7⅛"
36"	8½"	8⅛"

STATE OF CALIFORNIA
DEPARTMENT OF TRANSPORTATION

CORRUGATED POLYVINYL CHLORIDE PIPE WITH SMOOTH INTERIOR STANDARD AND POSITIVE JOINTS

NO SCALE

NSP D97I DATED MARCH 7, 2008 SUPPLEMENTS THE STANDARD PLANS BOOK DATED MAY 2006.

NEW STANDARD PLAN NSP D97I

2006 NEW STANDARD PLAN NSP D97I

190A

2-13-08

DIST	COUNTY	ROUTE	POST MILES TOTAL PROJECT	SHEET NO.	TOTAL SHEETS
11	SD	5	R61.8/R62.1	38	54

LICENSED LANDSCAPE ARCHITECT

June 5, 2009
PLANS APPROVAL DATE

LICENSED LANDSCAPE ARCHITECT Gregory A. Balzer 2878 STATE OF CALIFORNIA
Gregory A. Balzer
Renewal Date 2-28-11
Renewal Date 5-14-09
Date

The State of California or its officers or agents shall not be responsible for the accuracy or completeness of electronic copies of this plan sheet.

To accompany plans dated 02-28-11

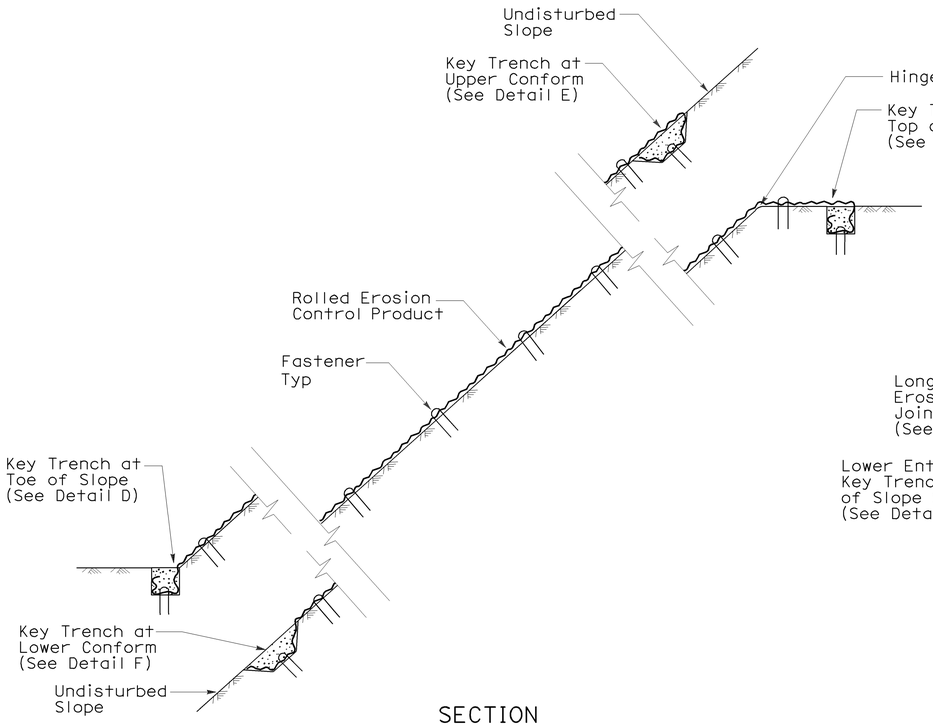

SECTION

ROLLED EROSION CONTROL PRODUCT ON SLOPE WITH VARIOUS KEY ENTRENCHMENTS

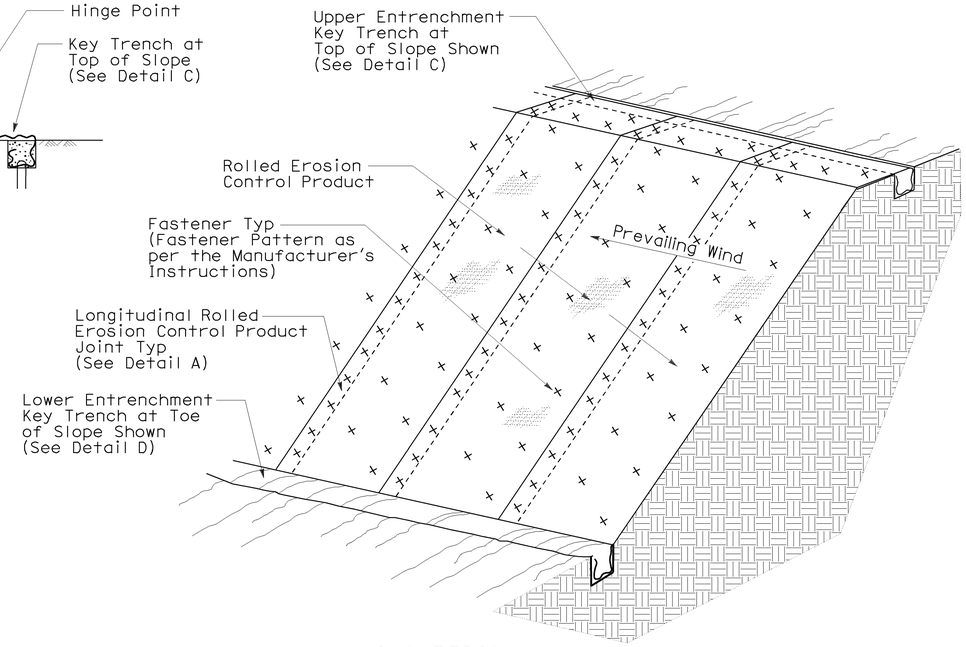

ISOMETRIC

ROLLED EROSION CONTROL PRODUCT ON SLOPE

NOTE:

1. Fiber Roll/Compost Sock shown for reference purposes only.
2. If transverse rolled erosion control product joints are required on slopes, see Detail B.

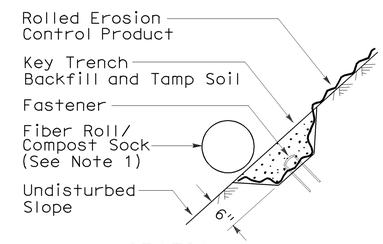

SECTION

DETAIL F
KEY TRENCH AT LOWER CONFORM

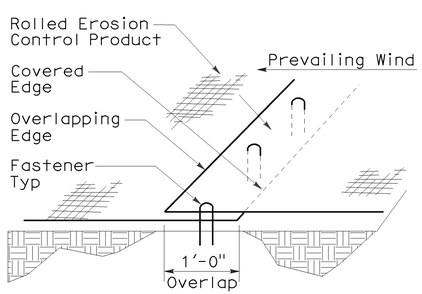

PERSPECTIVE

DETAIL A
LONGITUDINAL ROLLED EROSION CONTROL PRODUCT JOINT

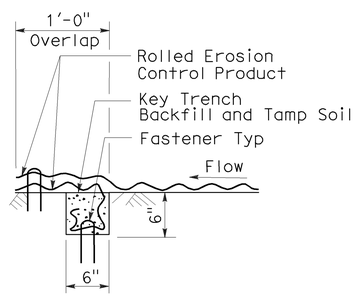

SECTION

DETAIL B
TRANSVERSE ROLLED EROSION CONTROL PRODUCT JOINT

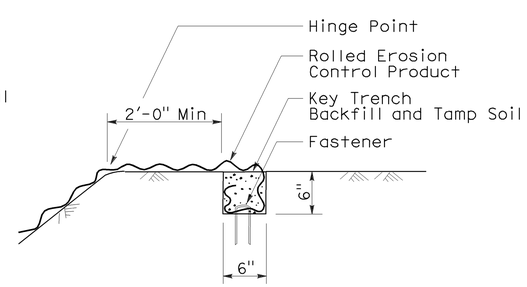

SECTION

DETAIL C
KEY TRENCH AT TOP OF SLOPE

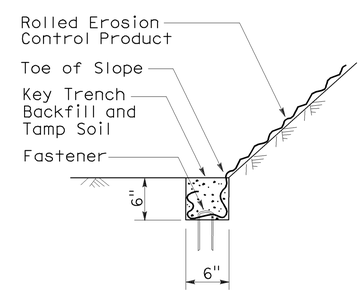

SECTION

DETAIL D
KEY TRENCH AT TOE OF SLOPE

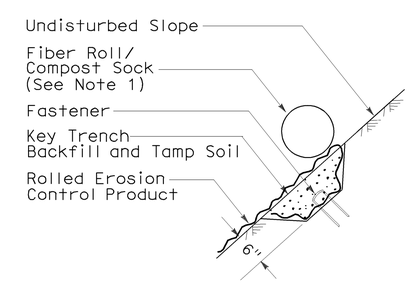

SECTION

DETAIL E
KEY TRENCH AT UPPER CONFORM

STATE OF CALIFORNIA
DEPARTMENT OF TRANSPORTATION

ROLLED EROSION CONTROL PRODUCT

NO SCALE

NSP H53 DATED JUNE 5, 2009 SUPPLEMENTS THE STANDARD PLANS BOOK DATED MAY 2006.

NEW STANDARD PLAN NSP H53

2006 NEW STANDARD PLAN NSP H53

3-4-09

DIST	COUNTY	ROUTE	POST MILES TOTAL PROJECT	SHEET NO.	TOTAL SHEETS
11	SD	5	R61.8/R62.1	39	54

LICENSED LANDSCAPE ARCHITECT

August 15, 2008
PLANS APPROVAL DATE

The State of California or its officers or agents shall not be responsible for the accuracy or completeness of electronic copies of this plan sheet.

LICENSED LANDSCAPE ARCHITECT — Robert B. Schott — 3635 — Signature — 11-04-08 Renewal Date — 08-11-08 Date — STATE OF CALIFORNIA

To accompany plans dated 02-28-11

FLEXIBLE SEDIMENT BARRIER SPACING TABLE

SLOPE OF ROADWAY (PERCENT)	0 to 0.9	1 to 1.9	2 to 2.9	3 to 4	5+
INTERVAL BETWEEN BARRIERS	50′	35′	30′	25′	20′
ANGLE FROM FACE OF CURB	70°	70°	70°	45°	45°
SUGGESTED BARRIER LENGTH	6′	6′	6′	6′	6′

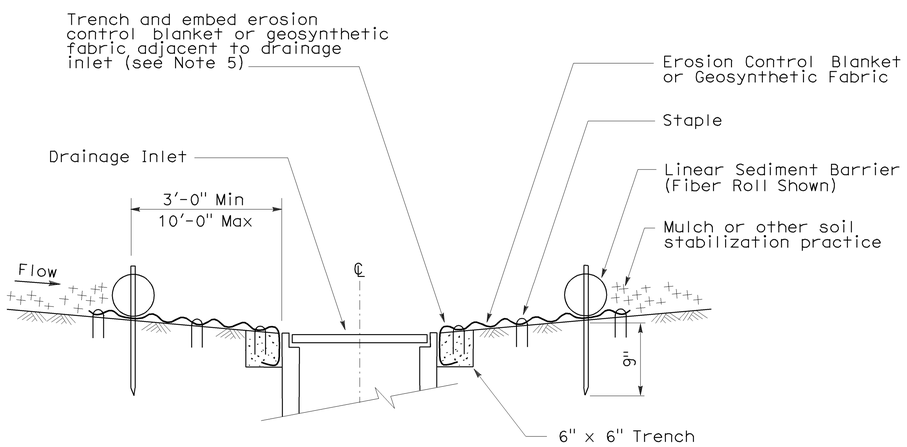

SECTION A-A

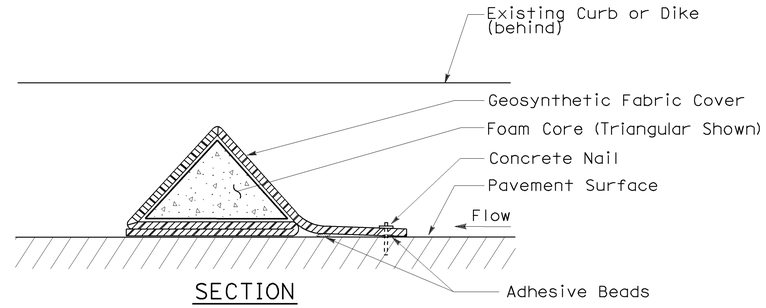

SECTION

FLEXIBLE SEDIMENT BARRIER DETAIL (FOAM BARRIER SHOWN)

NOTES:

1. See Standard Plan T51 for Temporary Silt Fence.
2. Dimensions may vary to fit field conditions.
3. Install a minimum of 3 flexible sediment barriers upstream of each drainage inlet to be protected.
4. Position erosion control blanket or geosynthetic fabric at edge of concrete apron and secure in trench.
5. Erosion control blanket or geosynthetic fabric is not required if the area adjacent to the drainage inlet is vegetated.

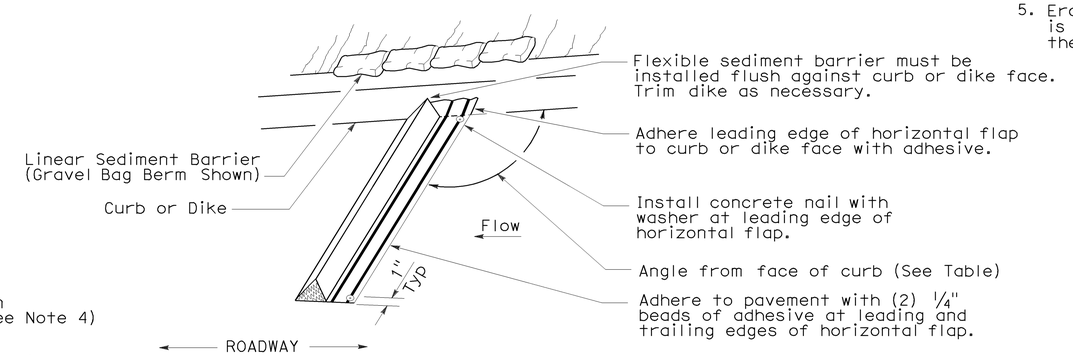

PERSPECTIVE

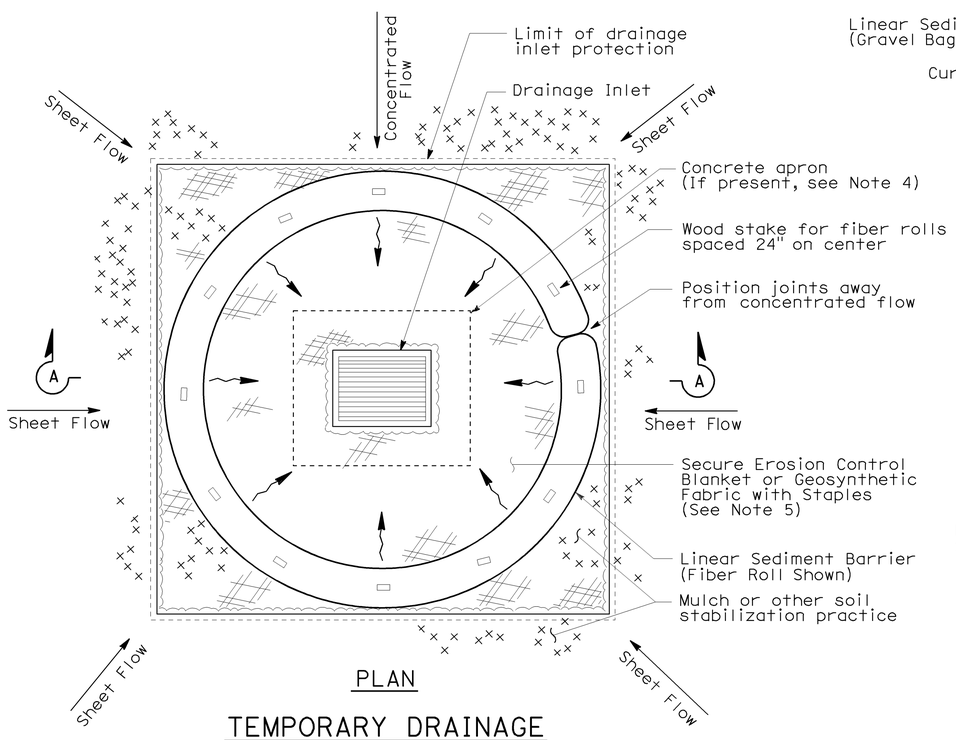

PLAN

TEMPORARY DRAINAGE INLET PROTECTION (TYPE 4A)

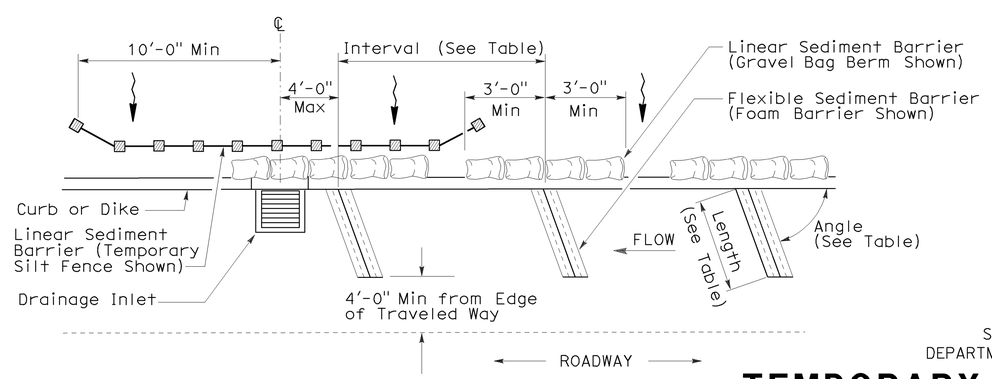

PLAN

TEMPORARY DRAINAGE INLET PROTECTION (TYPE 4B) FLEXIBLE SEDIMENT BARRIER

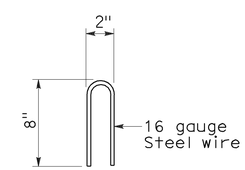

STAPLE DETAIL

STATE OF CALIFORNIA
DEPARTMENT OF TRANSPORTATION

TEMPORARY WATER POLLUTION CONTROL DETAILS (TEMPORARY DRAINAGE INLET PROTECTION)

NO SCALE

NSP T63 DATED AUGUST 15, 2008 SUPPLEMENTS THE STANDARD PLANS BOOK DATED MAY 2006.

NEW STANDARD PLAN NSP T63

2006 NEW STANDARD PLAN NSP T63

7-11-08

DIST	COUNTY	ROUTE	POST MILES TOTAL PROJECT	SHEET NO.	TOTAL SHEETS
11	SD	5	R61.8/R62.1	40	54

LICENSED LANDSCAPE ARCHITECT

August 15, 2008
PLANS APPROVAL DATE

The State of California or its officers or agents shall not be responsible for the accuracy or completeness of electronic copies of this plan sheet.

LICENSED LANDSCAPE ARCHITECT — Robert B. Schott — 3635 — Signature — 11-04-08 Renewal Date — 08-11-08 Date — STATE OF CALIFORNIA

To accompany plans dated 02-28-11

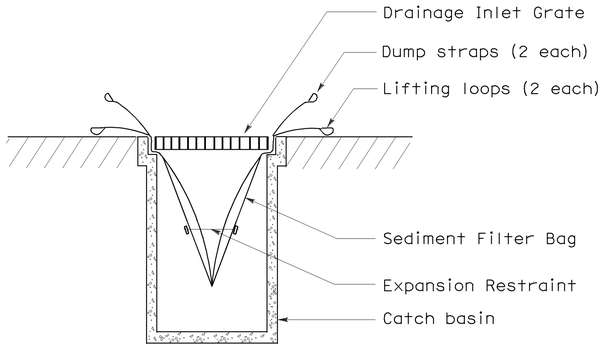

SECTION B-B

SEDIMENT FILTER BAG DETAIL

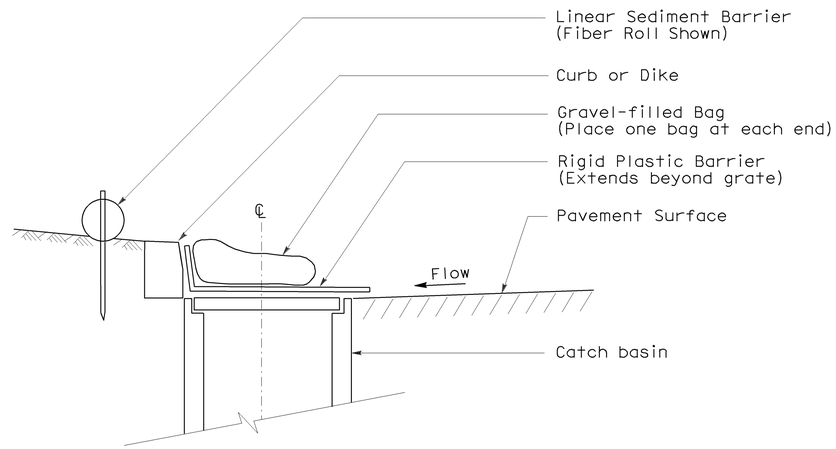

SECTION

TEMPORARY DRAINAGE INLET PROTECTION (TYPE 6A) (CATCH BASIN WITH GRATE)

NOTES:

1. See Standard Plan T51 for Temporary Silt Fence.
2. Dimensions may vary to fit field conditions.

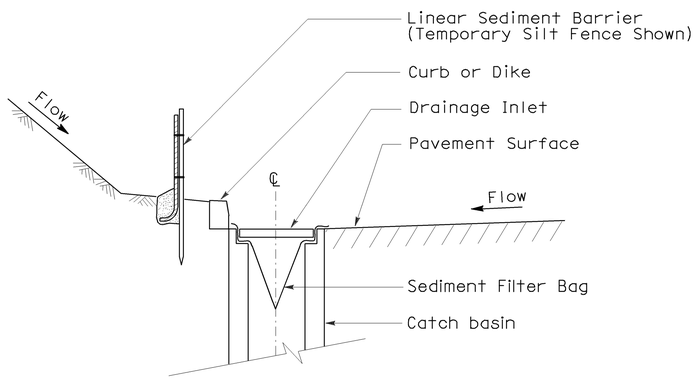

SECTION A-A

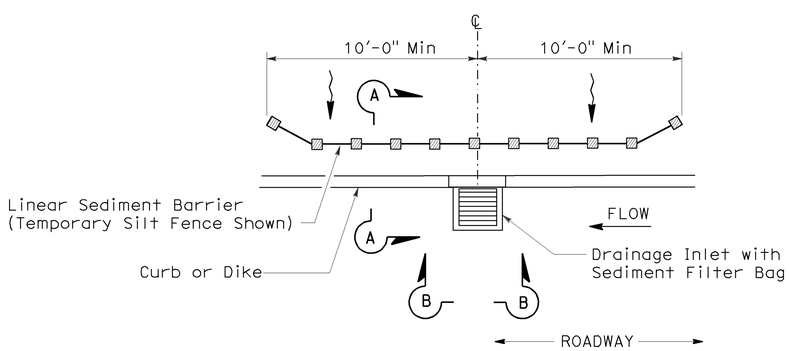

PLAN

TEMPORARY DRAINAGE INLET PROTECTION (TYPE 5) (SEDIMENT FILTER BAG)

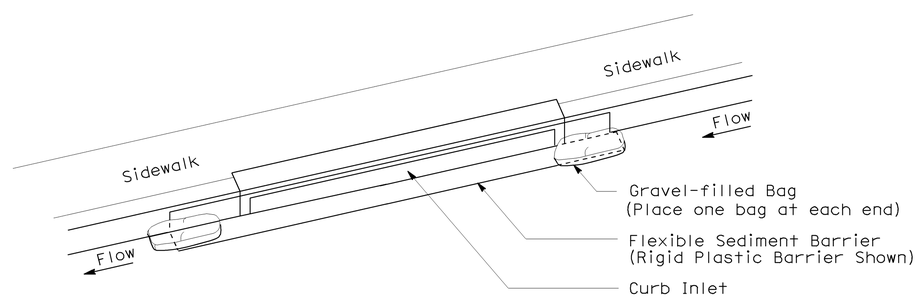

PERSPECTIVE

TEMPORARY DRAINAGE INLET PROTECTION (TYPE 6B) (CURB INLET WITHOUT GRATE)

STATE OF CALIFORNIA
DEPARTMENT OF TRANSPORTATION

TEMPORARY WATER POLLUTION CONTROL DETAILS (TEMPORARY DRAINAGE INLET PROTECTION)

NO SCALE

NSP T64 DATED AUGUST 15, 2008 SUPPLEMENTS THE STANDARD PLANS BOOK DATED MAY 2006.

NEW STANDARD PLAN NSP T64

2006 NEW STANDARD PLAN NSP T64

7-11-08

DIST	COUNTY	ROUTE	POST MILES TOTAL PROJECT	SHEET NO.	TOTAL SHEETS
11	SD	5	R61.8/R62.1	41	54

LICENSED LANDSCAPE ARCHITECT

April 3, 2009
PLANS APPROVAL DATE

LICENSED LANDSCAPE ARCHITECT — Robert B. Schott 3635 — Signature — 11-30-10 Renewal Date — 2-25-09 Date — STATE OF CALIFORNIA

The State of California or its officers or agents shall not be responsible for the accuracy or completeness of electronic copies of this plan sheet.

To accompany plans dated 02-28-11

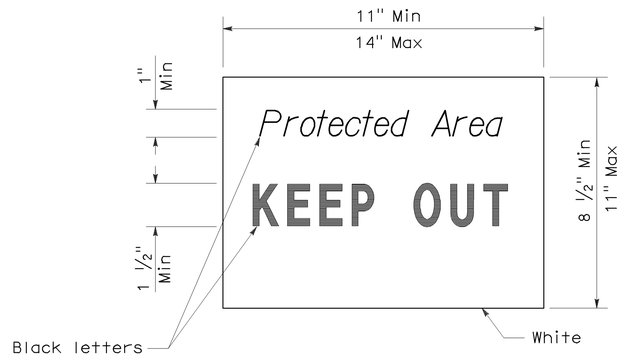

SIGN DETAIL

NOTE:

1. Temporary silt fence and temporary straw bale barrier shown for reference purposes only.

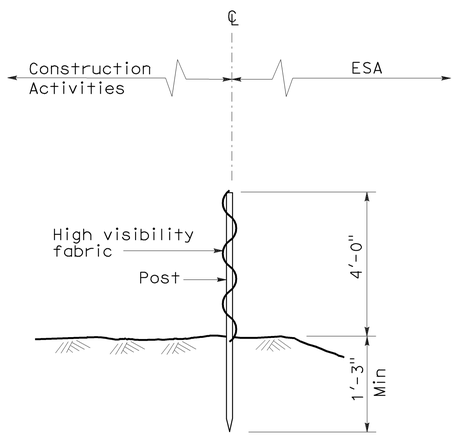

SECTION
TEMPORARY FENCE (TYPE ESA)

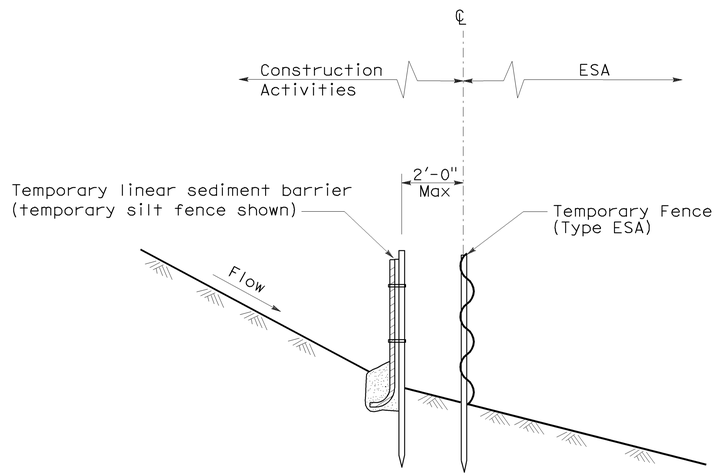

SECTION
PLACEMENT DETAIL
FOR TEMPORARY LINEAR SEDIMENT BARRIER
USED WITH TEMPORARY
FENCE (TYPE ESA)
(See Note 1)

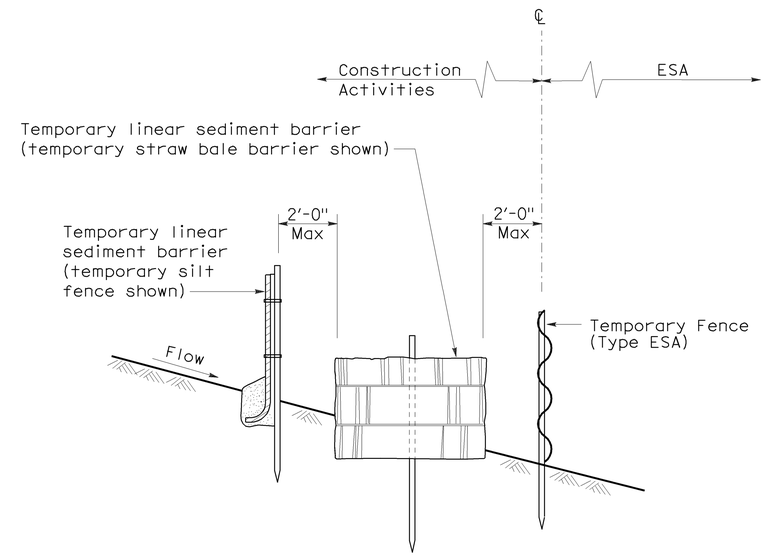

SECTION
PLACEMENT DETAIL
FOR TEMPORARY SILT FENCE
AND TEMPORARY STRAW BALE BARRIER
USED WITH TEMPORARY FENCE (TYPE ESA)
(See Note 1)

STATE OF CALIFORNIA
DEPARTMENT OF TRANSPORTATION

TEMPORARY WATER POLLUTION CONTROL DETAILS [TEMPORARY FENCE (TYPE ESA)]

NO SCALE

NSP T65 DATED APRIL 3, 2009 SUPPLEMENTS
THE STANDARD PLANS BOOK DATED MAY 2006.

NEW STANDARD PLAN NSP T65

2006 NEW STANDARD PLAN NSP T65

1-7-09

DIST	COUNTY	ROUTE	POST MILES TOTAL PROJECT	SHEET NO.	TOTAL SHEETS
11	SD	5	R61.8/R62.1	42	54

LICENSED LANDSCAPE ARCHITECT

April 3, 2009
PLANS APPROVAL DATE

The State of California or its officers or agents shall not be responsible for the accuracy or completeness of electronic copies of this plan sheet.

LICENSED LANDSCAPE ARCHITECT — Gregory A. Balzer — 02-28-11 — Renewal Date 03-04-09 — Date — STATE OF CALIFORNIA

To accompany plans dated 02-28-11

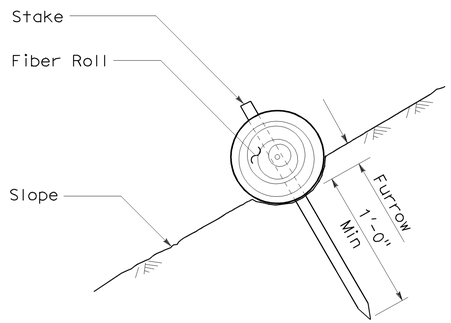

SECTION

FIBER ROLL (TYPE 1)

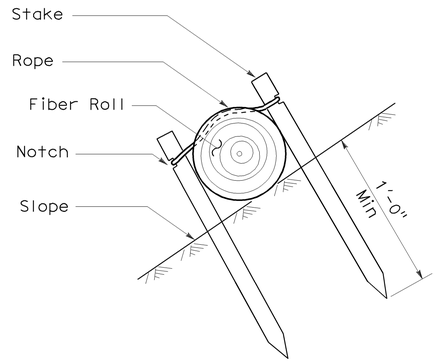

SECTION

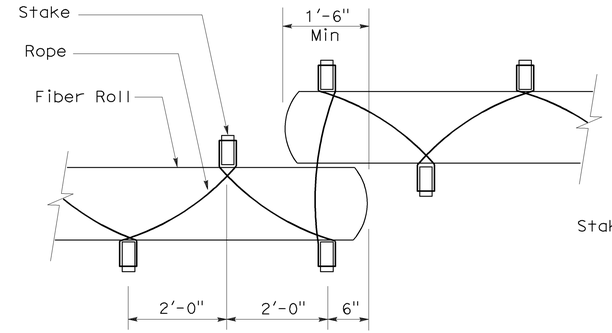

PLAN

FIBER ROLL (TYPE 2)

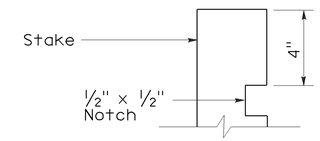

ELEVATION

STAKE NOTCH DETAIL

NOTES:

1. Fiber roll spacing varies depending upon slope inclination.
2. Installations shown in the perspectives are for slope inclination of 10:1 and steeper.

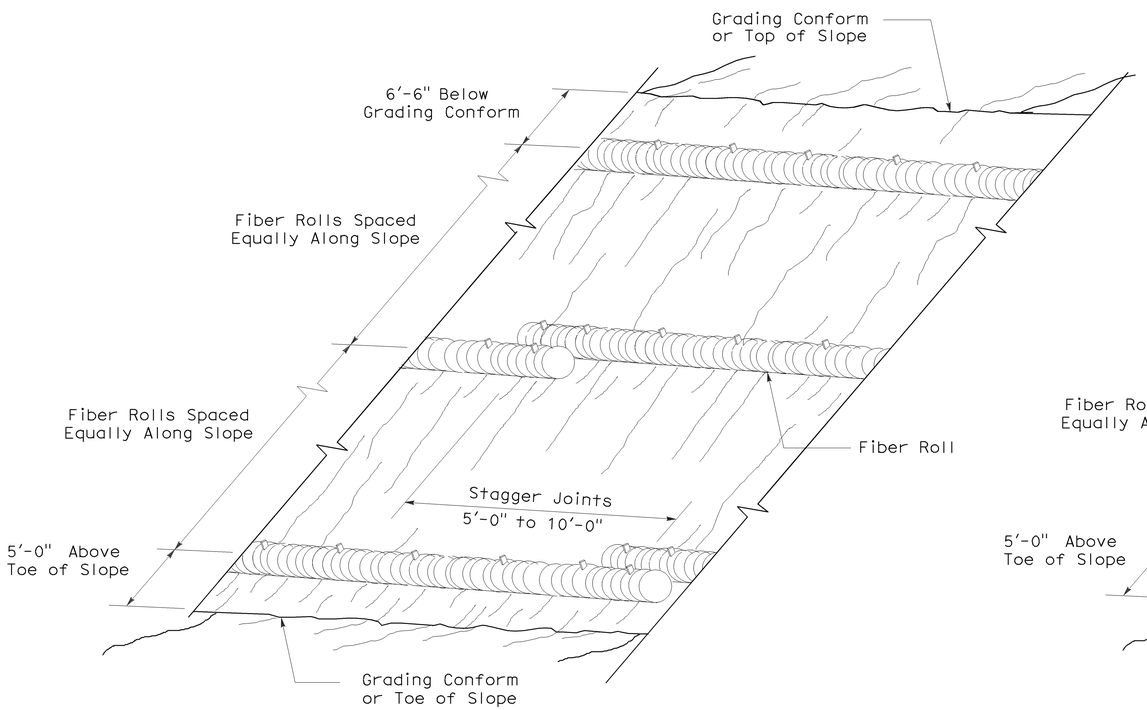

PERSPECTIVE

FIBER ROLL (TYPE 1)

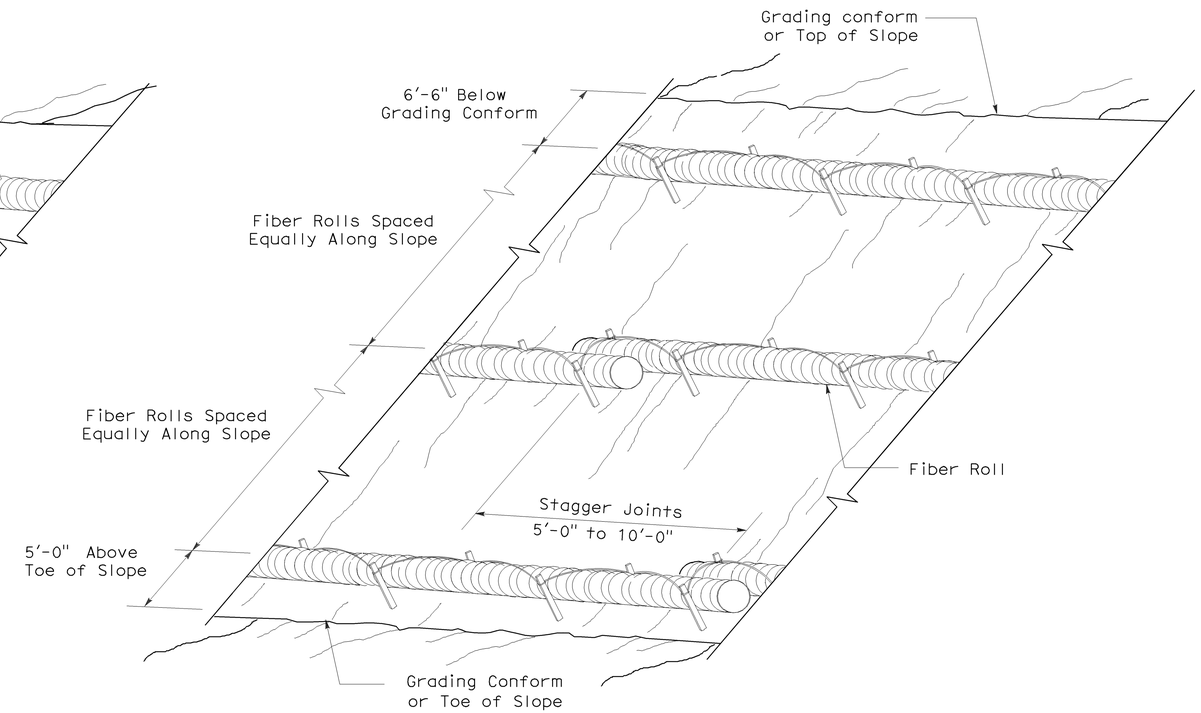

PERSPECTIVE

FIBER ROLL (TYPE 2)

STATE OF CALIFORNIA
DEPARTMENT OF TRANSPORTATION

EROSION CONTROL DETAILS (FIBER ROLL)

NO SCALE

RNSP H51 DATED APRIL 3, 2009 SUPERSEDES NSP H51 DATED DECEMBER 1, 2006 THAT SUPPLEMENTS THE STANDARD PLANS BOOK DATED MAY 2006.

REVISED NEW STANDARD PLAN RNSP H51

2006 REVISED NEW STANDARD PLAN RNSP H51

3-4-09

DIST	COUNTY	ROUTE	POST MILES TOTAL PROJECT	SHEET NO.	TOTAL SHEETS
11	SD	5	R61.8/R62.1	43	54

REGISTERED CIVIL ENGINEER

November 17, 2006
PLANS APPROVAL DATE

REGISTERED PROFESSIONAL ENGINEER Dallas Forester No. C37765 Exp. 12-31-06 CIVIL STATE OF CALIFORNIA

The State of California or its officers or agents shall not be responsible for the accuracy or completeness of electronic copies of this plan sheet.

To accompany plans dated 02-28-11

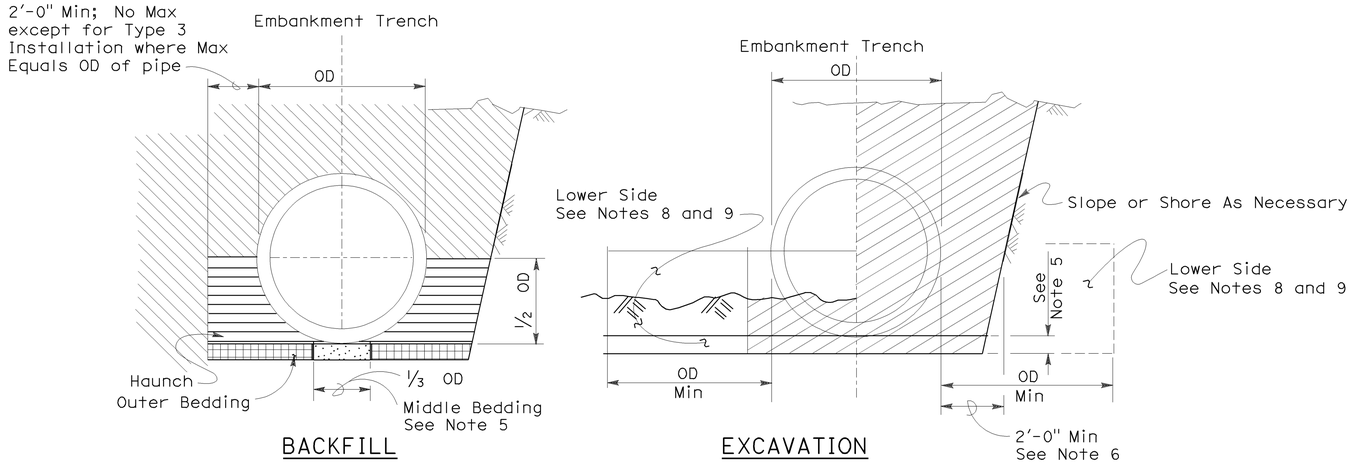

Roadway Embankment

Structure Backfill (Culvert) See Note 6

Structure Backfill (Culvert) See Note 6

Loose Backfill

Excavation Structure (Culvert)

TYPE 1 INSTALLATION:

The haunch and outer bedding shall be compacted to a minimum 90 percent relative compaction. In addition, the minimum sand equivalent in these areas shall be 30 and the maximum percentage passing the 75 μm sieve size shall be 12.

TYPE 2 INSTALLATION:

The haunch and outer bedding shall be compacted to a minimum 90 percent relative compaction. In addition, the minimum sand equivalent in these areas shall be 25.

TYPE 3 INSTALLATION:

The haunch and outer bedding shall be compacted to a minimum 85 percent relative compaction. 90 percent relative compaction will be required where the fill over the pipe is less than 4'-0" or 1/2 OD.

NOTES:

1. Unless otherwise shown on the plans or specified in the special provision, the Contractor shall have the option of selecting the class of RCP and the type of installation to be used, provided the height of cover does not exceed the value shown for the RCP selected.
   Example: 24" RCP culvert with maximum cover of 19'-0" the options are:
   a) Class II or stronger with Installation Type 1.
   b) Class III Special or stronger with Installation Type 2.
   c) Class IV Special or stronger with Installation Type 3.
   Cover is defined as the maximum vertical distance from top of the pipe to finished grade within the length of any given culvert.
2. The class of RCP and Installation Type selected shall be the same throughout the length of any given culvert.
3. The "length of any culvert" is defined as the culvert between:
   a) Successive drainage structure (inlets, junction boxes, headwalls, etc.).
   b) A drainage structure and the inlet or outlet end of the culvert.
   c) The inlet and outlet end of the culvert when there are no intervening drainage structures.
4. Oval and arch shaped RCP shall not be used.
5. 1/25 OD Min, not less than 3".
6. Slurry cement backfill may be substituted for backfill in the outer bedding and haunch areas. If slurry is used the outer and middle beddings shall be omitted. Prior to installation the soil under the middle 1/3 of the outside diameter of the pipe shall be softened by scarifying or other means to a minimum depth of 1/25 OD, but not less than 3". Where slurry cement backfill is used clear distance to trench wall may be reduced as set forth in Section 19-3.062 of the Standard Specifications.
7. Backfill shall be placed full width of excavation except where dimensions are shown for backfill width or thickness. Dimensions shown are minimums.
8. Lower side shall be suitable material as determined by the Engineer. Otherwise it shall be considered unsuitable as set forth in Section 19-2.02 of the Standard Specifications. See Note 9.
9. Where the pipe is placed in a trench, if the trench walls are sloped at 5 vertical to 1 horizontal or steeper for at least 90 percent of the trench height or up to not less than 12" from the grading plane, the firmness of the soil in the lower side need not be considered.
10. Non-reinforced precast concrete pipe sizes 3'-0" or smaller may be placed under installation Types 1, 2 or 3.

INSTALLATION TYPE 1

MINIMUM CLASS AND D-LOAD	COVER	
	108" Dia AND SMALLER	OVER 108" Dia
Class II 1000D	14.9'	12.9'
Class III 1350D	15.0' - 20.9'	13.0' - 18.9'
Class III Special 1700D	21.0' - 26.9'	19.0' - 24.9'
Class IV 2000D	27.0' - 31.9'	25.0' - 29.9'
Class IV Special 2500D	32.0' - 40.9'	30.0' - 38.9'
Class V 3000D	41.0' - 49.9'	39.0' - 46.9'
Class V Special 3600D	50.0' - 59.0'	47.0' - 58.0'

INSTALLATION TYPE 2

MINIMUM CLASS AND D-LOAD	COVER
Class II 1000D	9.9'
Class III 1350D	10.0'- 14.9'
Class III Special 1700D	15.0' - 19.9'
Class IV 2000D	20.0' - 24.9'
Class IV Special 2500D	25.0' - 31.9'
Class V 3000D	32.0' - 38.9'
Class V Special 3600D	39.0' - 47.0'

INSTALLATION TYPE 3

MINIMUM CLASS AND D-LOAD	COVER	
	48" Dia AND SMALLER	OVER 48" Dia
Class II 1000D	7.9'	5.9'
Class III 1350D	8.0' - 10.9'	6.0' - 8.9'
Class III Special 1700D	11.0' - 14.9'	9.0' - 12.9'
Class IV 2000D	15.0' - 17.9'	13.0' - 15.9'
Class IV Special 2500D	18.0' - 21.9'	16.0' - 19.9'
Class V 3000D	22.0' - 26.9'	20.0' - 24.9'
Class V Special 3600D	30.0' - 33.0'	25.0' - 31.0'

STATE OF CALIFORNIA
DEPARTMENT OF TRANSPORTATION

EXCAVATION AND BACKFILL CONCRETE PIPE CULVERTS

NO SCALE

RSP A62DA DATED NOVEMBER 17, 2006 SUPERSEDES STANDARD PLAN A62DA DATED MAY 1, 2006 - PAGE 20 OF THE STANDARD PLANS BOOK DATED MAY 2006.

REVISED STANDARD PLAN RSP A62DA

2006 REVISED STANDARD PLAN RSP A62DA

10-26-06

DIST	COUNTY	ROUTE	POST MILES TOTAL PROJECT	SHEET NO.	TOTAL SHEETS
11	SD	5	R61.8/R62.1	44	54

REGISTERED CIVIL ENGINEER

June 15, 2007
PLANS APPROVAL DATE

REGISTERED PROFESSIONAL ENGINEER Glenn DeCou No. C34547 Exp. 9-30-07 CIVIL STATE OF CALIFORNIA

The State of California or its officers or agents shall not be responsible for the accuracy or completeness of electronic copies of this plan sheet.

To accompany plans dated 02-28-11

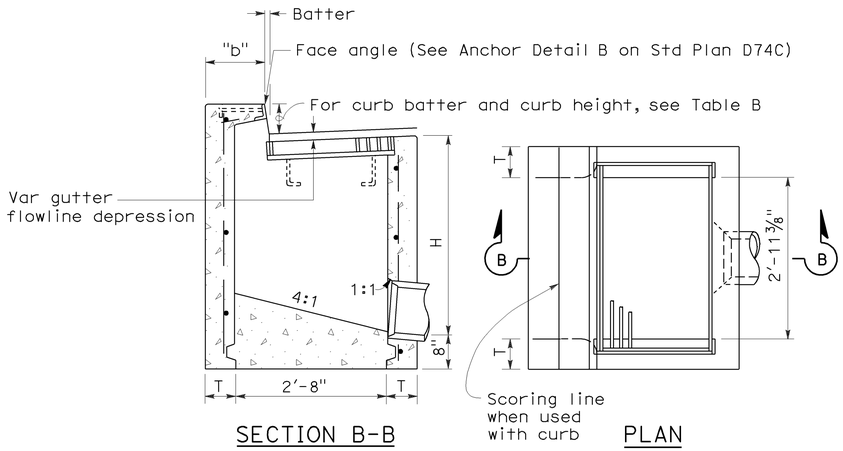

SECTION B-B PLAN

TYPE GO

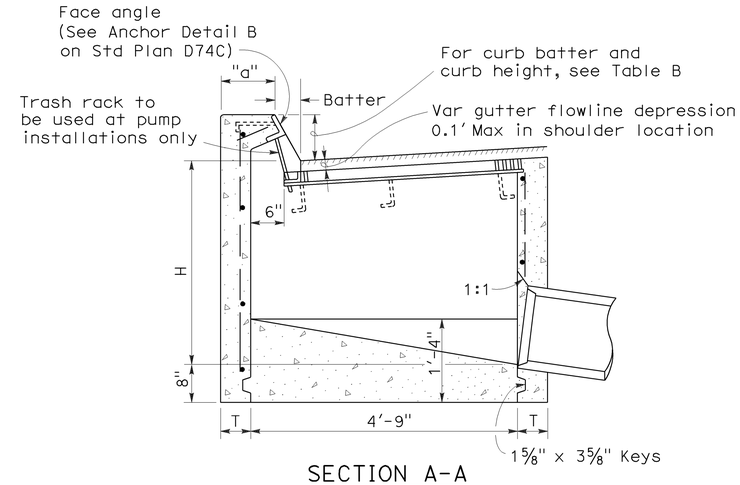

SECTION A-A

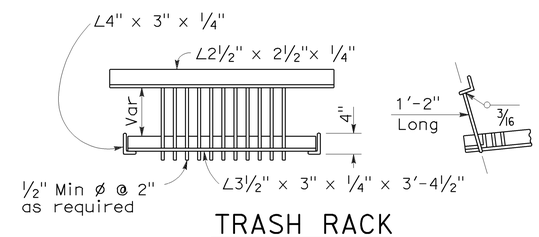

TRASH RACK

(For use with pump installation)

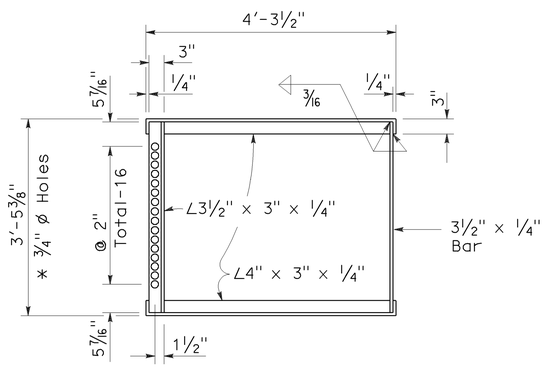

* 3/4" ø Holes required only with trash rack

GRATE FRAME FOR TYPE GDO INLET

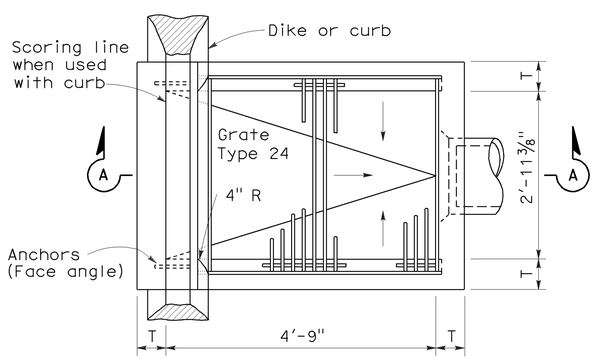

PLAN

TYPE GDO

TABLE A

CONCRETE QUANTITIES				
	H=3'-0" TO 8'-0" (T=6")		H=8'-1" TO 20'-0" (T=8")	
TYPE	H=3'-0" (CY)	ADDITIONAL PCC PER FOOT (CY)	H=8'-1" (CY)	ADDITIONAL PCC PER FOOT (CY)
GO	1.24	0.245	3.39	0.346
GDO	1.62	0.322	4.36	0.446

Table based on 8" floor slab, no deduction for pipe openings, and curb type giving highest quantity of concrete. No deductions or adjustments are to be made to these quantities because of pipe openings, different floor alternatives or different curb type.

TABLE B

CURB TYPE	NORMAL CURB HEIGHT	CURB BATTER	"a" DIMENSION	"b" DIMENSION
A1-6	6"	1 1/2"	T+7 1/2"	T+6 1/2"
A1-8	8"	2"	T+7"	T+6"
B1-6	6"	4"	T+5"	T+4"
Type A Dike	6"	3"	T+6"	T+5"

NOTES:

1. "H" is the difference in elevation between the outlet pipe flow line and the normal gutter grade line undepressed.
2. For "T" wall thickness, see Table A below.
3. Wall reinforcing not required when "H" is 8'-0" or less and the unsupported width or length is 7'-0" or less. Walls exceeding these limits shall be reinforced with #4 @ 18"± centers placed 1 1/2" clear to inside of box unless otherwise shown.
4. Inlet bottom reinforcing not required. See Standard Plan D74C for alternative reinforced bottom.
5. Steps - None required where "H" is less than 2'-6" Where "H" is 2'-6" or more, install steps with lowest rung 1'-0" above the floor and highest rung not more than 6" below top of inlet. The distance between steps shall not exceed 1'-0" and shall be uniform throughout the length of the wall. Place steps in the wall without an opening. Step inserts may be substituted for the bar steps. Step Inserts shall comply with State Industrial Safety requirements. See Standard Plan D74C for step details.
6. When shown on the project plans, place a 3/4" plain round protection bar horizontally across the length of the opening and bend back 4" into the inlet wall on each side.
7. Pipe(s) can be placed in any wall.
8. Curb section shall match adjacent curb.
9. Basin floors shall have wood trowel finish and shall slope toward the outlet pipe as shown.
10. Galvanizing - See Standard Specifications or Special Provisions.
11. See Standard Plan D77A and D77B for grate and frame details and weights of miscellaneous iron and Steel.
12. See Standard Plan D78A for gutter depression details.
13. Full penetration butt welds may be substituted for the fillet welds on all anchors.
14. Standard square, hexagon, round or equivalent headed anchors may be substituted for the right angle hooks on the anchors shown on this plan.
15. Cast-in-place or precast alternative is optional with contractor. See Standard Specifications.
16. Cast-in-place inlets to be formed around all pipes/stubs intersecing the inlet and concrete poured in one continuous operation. Precast inlets shall have mortared pipe connections conforming to details for Type GCP inlets on Standard Plan D75B. See Standard Specifications for mortar composition.

STATE OF CALIFORNIA
DEPARTMENT OF TRANSPORTATION

DRAINAGE INLETS

NO SCALE

RSP D74B DATED JUNE 15, 2007 SUPERSEDES STANDARD PLAN D74B DATED MAY 1, 2006 - PAGE 150 OF THE STANDARD PLANS BOOK DATED MAY 2006.

REVISED STANDARD PLAN RSP D74B

2006 REVISED STANDARD PLAN RSP D74B

4-16-07

DIST	COUNTY	ROUTE	POST MILES TOTAL PROJECT	SHEET NO.	TOTAL SHEETS
11	SD	5	R61.8/R62.1	45	54

REGISTERED CIVIL ENGINEER

June 6, 2008
PLANS APPROVAL DATE

REGISTERED PROFESSIONAL ENGINEER Raymond Don Tsztoo No. C37332 Exp. 6-30-08 CIVIL STATE OF CALIFORNIA

The State of California or its officers or agents shall not be responsible for the accuracy or completeness of electronic copies of this plan sheet.

To accompany plans dated 02-28-11

2006 REVISED STANDARD PLAN RSP D75B

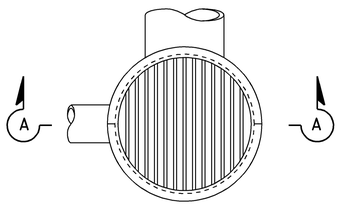

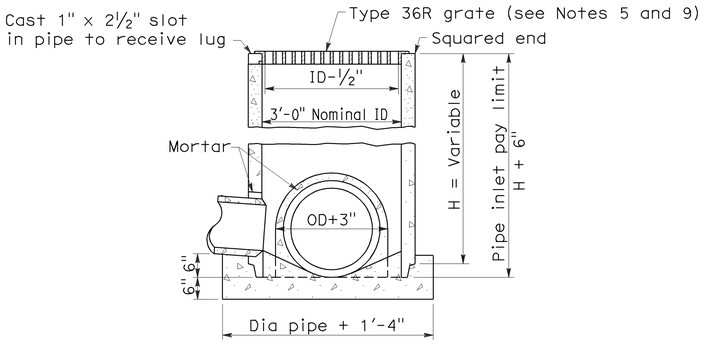

SECTION A-A

TYPE GCP

CONCRETE PIPE INLET WITH GRATE

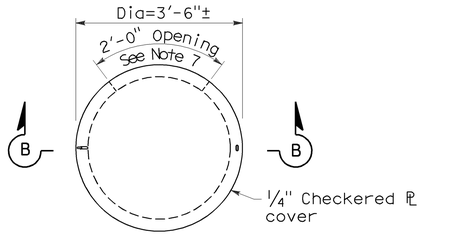

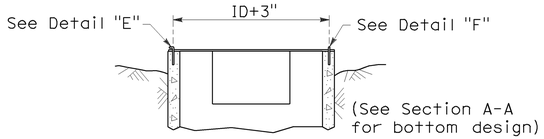

SECTION B-B

TYPE OCP or OCPI

CONCRETE PIPE INLET WITH STEEL COVER
(See Note 6)

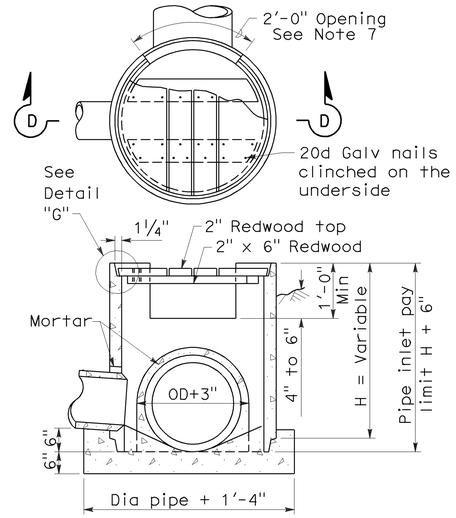

SECTION D-D

TYPE OCP or OCPI

CONCRETE PIPE INLET WITH REDWOOD COVER
(See Notes 6 and 10)

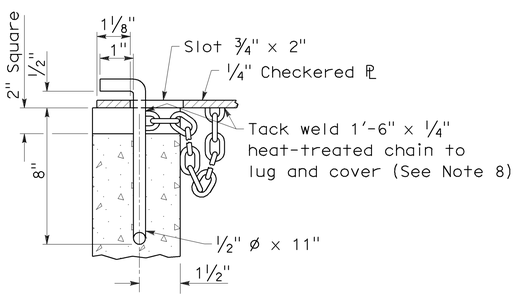

DETAIL "E"

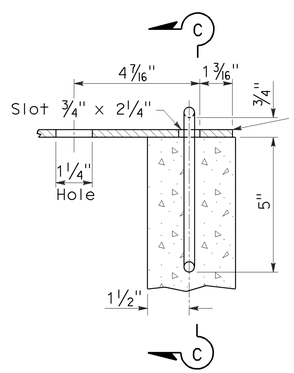

DETAIL "F"

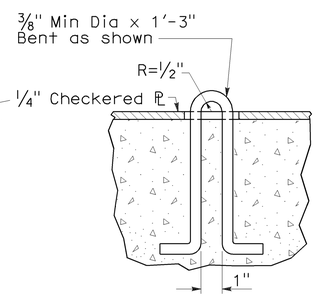

SECTION C-C

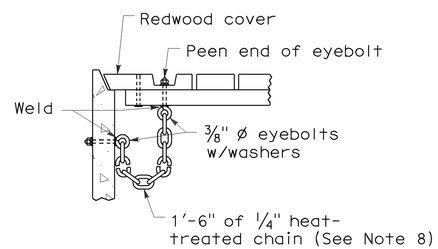

DETAIL "G"

NOTES:

1. For details of steel pipe inlets, see Standard Plan D75A.
2. For details of ladder and steps and when ladder or steps are required, see Standard Plan D75C.
3. Inlet pipes shall not protrude into basin.
4. Except for inlets used for junction boxes, basin floors shall have minimum slope of 4:1 from all directions toward outlet pipe, and a wood trowel finish.
5. See Revised Standard Plan RSP D77A and Standard Plan D77B for Grate and Frame Details and Weights of Miscellaneous Iron and Steel.
6. Designation of Type OCPI pipe inlets on plans indicates trash racks are to be furnished and installed on all side openings. See Standard Plan D75C for Trash Rack details.
7. More than one side opening may be required. Location and number as ordered by the Engineer. Opening may be cast in pipe.
8. Chain to be provided when specified.
9. Place pipe so bars of grate will be parallel with main surface flow.
10. Redwood covers shall only be placed at locations designated on the plans.

STATE OF CALIFORNIA
DEPARTMENT OF TRANSPORTATION

CONCRETE PIPE INLETS

NO SCALE

RSP D75B DATED JUNE 6, 2008 SUPERSEDES STANDARD PLAN D75B
DATED MAY 1, 2006 - PAGE 153 OF THE STANDARD PLANS BOOK DATED MAY 2006.

REVISED STANDARD PLAN RSP D75B

5-20-08

DIST	COUNTY	ROUTE	POST MILES TOTAL PROJECT	SHEET NO.	TOTAL SHEETS
11	SD	5	R61.8/R62.1	46	54

Raymond Don Tsztoo
REGISTERED CIVIL ENGINEER

January 18, 2008
PLANS APPROVAL DATE

REGISTERED PROFESSIONAL ENGINEER Raymond Don Tsztoo No. C37332 Exp. 6-30-08 CIVIL STATE OF CALIFORNIA

The State of California or its officers or agents shall not be responsible for the accuracy or completeness of electronic copies of this plan sheet.

To accompany plans dated 02-28-11

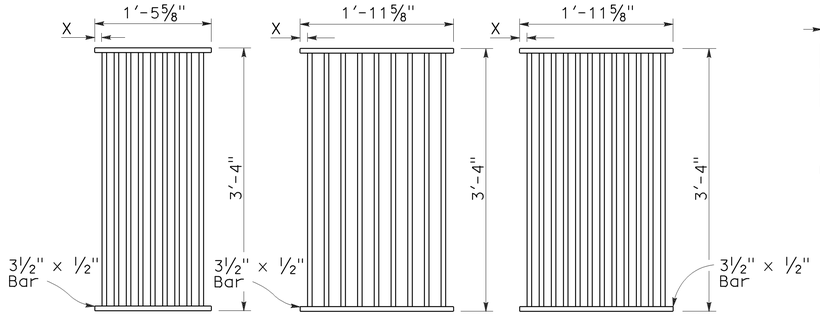

TYPE 18-9

1⅜" Clear spacing. Use within the roadbed on highways where bicycles and pedestrians are excluded.

TYPE 24-9

2" Clear spacing. Use in locations off the roadbed on all types of highways.

TYPE 24-12

1⅜" Clear spacing. Use within the roadbed on highways where bicycles and pedestrians are excluded.

RECTANGULAR GRATE DETAILS

(See table below)

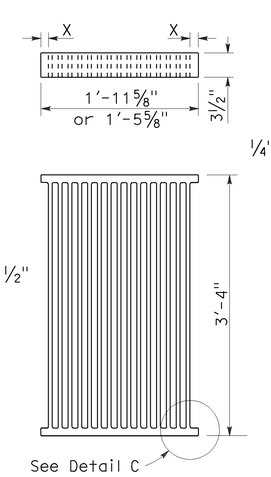

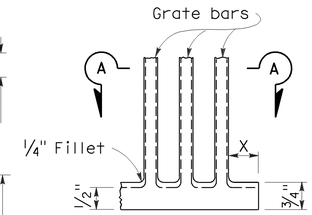

DETAIL C

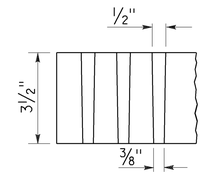

SECTION A-A

ALTERNATIVE CAST NODULAR IRON GRATE OR CAST STEEL GRATE

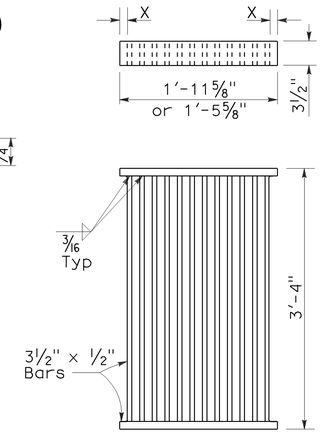

ALTERNATIVE WELDED GRATE

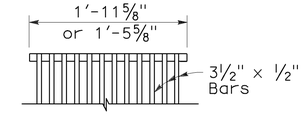

CAST END BLOCK

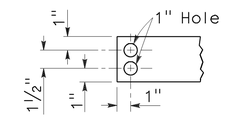

END OF BAR

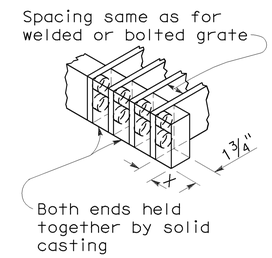

ALTERNATIVE CAST NODULAR IRON OR CAST STEEL END BLOCK GRATE

NOTES:

1. Grate type numbers refer to approximate width of grate in inches and number of bars, respectively.
2. Contractor has the option of using cast nodular iron, cast steel, welded, bolted, or cast end block grate.
3. See Special Provisions for requirements pertaining to galvanizing or asphalt dipping of grates and frames.
4. Rounded top of bars optional on all grates.
5. Pipe inlets with a grate shall be placed so that bars parallel direction of principle surface flow.
6. Full penetration butt welds may be substituted for the fillet welds on all anchors.
7. Standard square, hexagon, round or equivalent headed anchors may be substituted for the right angle hooks on the anchors shown on this plan.
8. Grate and frame weights are based on welded grates (weights of face angles, steps, protection bars, etc. are not included).

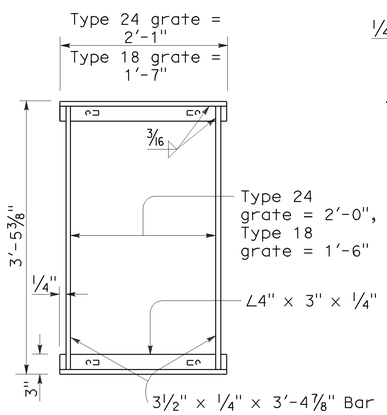

TYPICAL FRAME

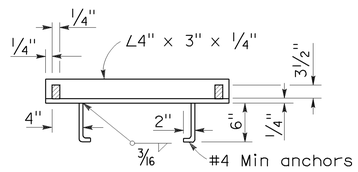

CROSS SECTION

(Thru frame)

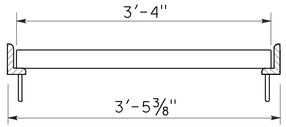

LONGITUDINAL SECTION

(Thru frame and grate)

RECTANGULAR FRAME DETAILS

(For all rectangular grates)

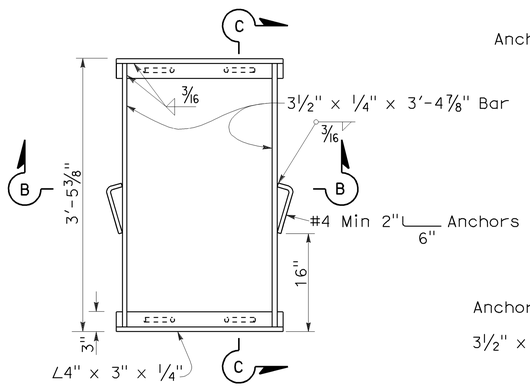

TYPICAL FRAME

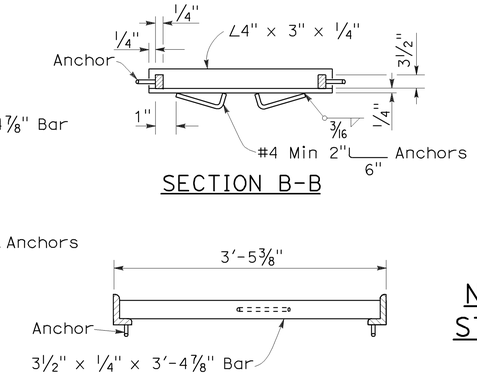

SECTION B-B

SECTION C-C

ALTERNATIVE ANCHOR FOR RECTANGULAR FRAME

(For details not shown, See Rectangular Frame Details)

INLET TYPE	GRATE TYPE	No. OF GRATES	WEIGHT LB
GDO	24-12	2	634
GOL-7	24-12	1	326
GOL-10	24-12	1	326
GO,G1,G2,G3,G4 (TYPE 24)	24-9	1	263
	24-12	1	326
G4 (TYPE 18),G5,G6	18-9	1	249
GT1	18-9	2	498
GT2	18-9	2	498
GT3	24-12	2	652
GT4	24-12	2	652
TRASH RACK			22

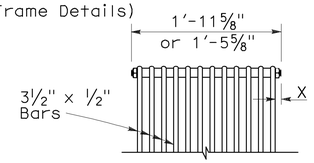

BOLTED END BLOCK

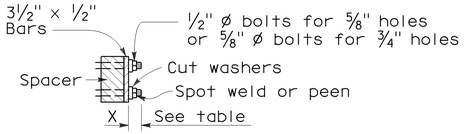

BOLTING DETAIL

ALTERNATIVE BOLTED GRATE

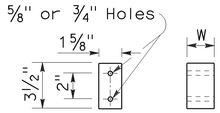

BAR SPACER

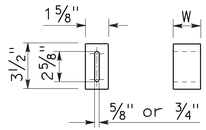

ALTERNATIVE SPACER

W = 1⅜" or 2"

GRATE BAR SPACING TABLE

TYPE	No. OF BARS	CLEAR BAR SPACING	X
18-9	9	1⅜"	1 1/16"
24-9	9	2"	1 9/16"
24-12	12	1⅜"	1¼"

INLET TYPE	COVER TYPE	WEIGHT LB
OS	PLATE	174
OL-7	PLATE	170
OL-10	PLATE	170
OL-14	PLATE	170
OL-21	PLATE	170
OCP	PLATE	112
OCPI	PLATE	112
OCPI	REDWOOD	42
OMP	PLATE	177
OMPI	PLATE	177

BASIS FOR MISC IRON & STEEL FINAL PAY WEIGHTS FOR DRAINAGE INLETS

(See General Notes, No 8)

STATE OF CALIFORNIA
DEPARTMENT OF TRANSPORTATION

GRATE DETAILS

NO SCALE

RSP D77A DATED JANUARY 18, 2008 SUPERSEDES STANDARD PLAN D77A DATED MAY 1, 2006 - PAGE 155 OF THE STANDARD PLANS BOOK DATED MAY 2006.

REVISED STANDARD PLAN RSP D77A

2006 REVISED STANDARD PLAN RSP D77A

12-14-07

DIST	COUNTY	ROUTE	POST MILES TOTAL PROJECT	SHEET NO.	TOTAL SHEETS
11	SD	5	R61.8/R62.1	47	54

REGISTERED ELECTRICAL ENGINEER

October 5, 2007
PLANS APPROVAL DATE

REGISTERED PROFESSIONAL ENGINEER Jeffery G. McRae No. E14512 Exp. 6-30-08 ELECTRICAL STATE OF CALIFORNIA

The State of California or its officers or agents shall not be responsible for the accuracy or completeness of electronic copies of this plan sheet.

To accompany plans dated 02-28-11

2006 REVISED STANDARD PLAN RSP ES-1A

ELECTROLIERS

STANDARD TYPES
15, 15D
15 STRUCTURE
21, 21D STRUCTURE
30
31
32
35
36-20A

High mast light pole

Double Arm lighting standard

Existing electrolier

Electrolier foundation (Future installation)

NOTES:

1. Luminaires shall be 310 W HPS when installed on Type 21, 21D, 30, 31, 32, 35 and 36-20A Standards, unless otherwise specified. Luminaires shall be 200 W HPS when installed on other type standards or poles, unless otherwise specified.
2. Luminaires shall be the cutoff type, ANSI Type Ⅲ medium cutoff lighting distribution, unless otherwise specified.
3. Variations noted adjacent to symbol on project plans.

Electrolier (see project notes or project plans)

Luminaire on wood pole

STANDARD NOTES:

- AB — Abandon. If applied to conduit, remove conductors.
- BC — Install pull box in existing conduit run.
- BP — Pedestrian barricade, type as indicated on plan.
- CB — Install conduit into existing pull box.
- CC — Connect new and existing conduit. Remove existing conductors and install conductors as indicated.
- CF — Conduit to remain for future use. Remove conductors. Install pull wire or rope.
- DH — Detector handhole.
- FA — Foundation to be abandoned.
- IS — Install sign on signal mast arm.
- NS — No slip base on standard.
- PEC — Photoelectric control.
- PEU — Photoelectric unit.
- RC — Equipment or material to be removed and become the property of the Contractor.
- RE — Remove electrolier, fuses and ballast. Tape ends of conductors.
- RL — Relocate equipment.
- RR — Remove and reuse equipment.
- RS — Remove and salvage equipment.
- SC — Splice new to existing conductors.
- SD — Service disconnect.
- SF — Standard to remain for future use. Remove luminaire, pole conductors, fuses and ballast.
- TSP — Telephone service point.

ABBREVIATIONS AND EQUIPMENT DESIGNATIONS

PROPOSED	EXISTING	
BBS	bbs	Battery backup system
BC	bc	Bolt circle
C	C	Conduit
CCTV	cctv	Closed circuit television
CKT	ckt	Circuit
CMS	cms	Changeable message sign
DLC	dlc	Loop detector lead-in cable
EMS	ems	Extinguishable message sign
EVC	evc	Emergency vehicle cable
EVD	evd	Emergency vehicle detector
FB	fb	Flashing beacon
FBCA	fbca	Flashing beacon control assembly
FBS	fbs	Flashing beacon with slip base
FO	fo	Fiber optic
G	G	Ground (Equipment Grounding Conductor)
GFCI	GFCI	Ground fault circuit interrupt
HAR	har	Highway advisory radio
HEX	hex	Hexagonal
HPS	hps	High pressure sodium
IISNS	iisns	Internally illuminated street name sign
ISL	isl	Induction sign lighting
LED	led	Light emitting diode
LMA	lma	Luminaire mast arm
LPS	lps	Low pressure sodium
LTG	ltg	Lighting
LUM	lum	Luminaire
MAT	mat	Mast arm mounting vehicle signal faces, top attachment
MAS	mas	Mast arm mounting vehicle signal faces, side attachment
MAS-4A	mas-4A	Mast arm mounting vehicle signal faces, side attachment - 4 signal section
MAS-4B	mas-4B	
MAS-4C	mas-4C	
MAS-5A	mas-5A	Mast arm mounting vehicle signal faces, side attachment - 5 signal section
MAS-5B	mas-5B	
MC	mc	Mercury contactor
M/M	m/m	Multiple to multiple transformer
MT	mt	Conduit with pull wire or rope only
MTG	mtg	Mounting
	mv	Mercury vapor lighting fixture
N	N	Neutral (Grounded Conductor)
NC	NC	Normally closed
NO	NO	Normally open
PB	pb	Pull box
PEC	pec	Photoelectric control (Type Ⅰ, Ⅱ, Ⅲ, Ⅳ or Ⅴ as shown)
PED	ped	Pedestrian
PEU	peu	Photoelectric unit
PPB	ppb	Pedestrian push button
RL		Relocated equipment
RM	rm	Ramp metering
SB	sb	Slip base
SIC	sic	Signal interconnect cable
SIG	sig	Signal
SMA	sma	Signal mast arm
SNS	sns	Street name sign
SP	sp	Service point
TDC	tdc	Telephone demarcation cabinet
TMS	tms	Traffic monitoring station
TOS	tos	Traffic Operations System
VEH	veh	Vehicle
XFMR	xfmr	Transformer
COMM	comm	Communication
RWIS	rwis	Roadway weather information system

SOFFIT AND WALL MOUNTED LUMINAIRES

Pendant, 70 W HPS unless otherwise specified.

Flush, 70 W HPS unless otherwise specified.

Wall surface, 70 W HPS unless otherwise specified.

Existing soffit or wall luminaire to remain unmodified.

Existing soffit or wall luminaire to be modified as specified.

NOTE:

Arrow indicates "street side" of luminaire.

STATE OF CALIFORNIA
DEPARTMENT OF TRANSPORTATION

ELECTRICAL SYSTEMS (SYMBOLS AND ABBREVIATIONS)

NO SCALE

RSP ES-1A DATED OCTOBER 5, 2007 SUPERSEDES STANDARD PLAN ES-1A DATED MAY 1, 2006 - PAGE 400 OF THE STANDARD PLANS BOOK DATED MAY 2006.

REVISED STANDARD PLAN RSP ES-1A

DIST	COUNTY	ROUTE	POST MILES TOTAL PROJECT	SHEET NO.	TOTAL SHEETS
11	SD	5	R61.8/R62.1	48	54

REGISTERED ELECTRICAL ENGINEER

October 5, 2007
PLANS APPROVAL DATE

REGISTERED PROFESSIONAL ENGINEER Jeffery G. McRae No. E14512 Exp. 6-30-08 ELECTRICAL STATE OF CALIFORNIA

The State of California or its officers or agents shall not be responsible for the accuracy or completeness of electronic copies of this plan sheet.

To accompany plans dated 02-28-11

CONDUIT

PROPOSED	EXISTING	
		Lighting Conduit, unless otherwise indicated or noted
		Traffic signal conduit
C	c	Communication conduit
T	t	Telephone conduit
F	f	Fire alarm conduit
FO	fo	Fiber optic conduit
		Conduit termination (RSP ES-9A C)
R	r	Conduit riser in/on structure or service pole

SERVICE EQUIPMENT

PROPOSED	EXISTING	
OH	oh	Overhead lines
U	U	Wood pole "U" indicates utility owned
		Pole guy with anchor
		Utility transformer - ground mounted
III		Service equipment enclosure type
		Service equipment enclosure door indicates front of enclosure
T	t	Telephone demarcation cabinet

POLE-MOUNTED SERVICE DESIGNATION

Type of installation

TYPE H SERVICE - 28'-10" ← Pole height above grade

ILLUMINATED OVERHEAD SIGN

PROPOSED	EXISTING	
		Overhead sign - Single post
		Overhead sign - Two post
		Overhead sign - Mounted on structure
		Overhead sign with electrolier

SIGNAL EQUIPMENT

PROPOSED	EXISTING	
		Pedestrian signal face
		Pedestrian push button post
		Pedestrian barricade
		Vehicle signal face (with backplate, 3-Section: red, yellow and green)
		Vehicle signal face with angle visors
PV	PV	Modifications of basic symbols: "L" Indicates all non-arrow sections louvered "LG" Indicates louvered green section only "PV" indicates 12" programmed visibility sections "8" indicates all 8" sections (only when specified)
		Type 15TS and Vehicle signal face
		Vehicle signal face with red, yellow and green left arrow sections
		Vehicle signal face with red and yellow sections and up green arrow
		Vehicle signal face (5 Section) with red, yellow and green sections and yellow and green right arrows
		Type 1 Standard and attached vehicle signal faces
		Standard with signal mast arm only and attached vehicle signal faces and internally illuminated street name sign
		Type 33 Standard, Left-turn vehicle signal face and sign
		Standard with luminaire and signal mast arms and attached vehicle signal faces
		Cantilever flashing beacon Type 9 Frame, with a sign unless otherwise specified or indicated
		Type 15-FBS Standard with two vehicle signal face sections with lens, backplate and visor with a sign
R	Y	Flashing beacon. One vehicle signal face section with lens, backplate and visor. "R" indicates red indication, "Y" indicates yellow indication
		Controller assembly. Door indicates front of cabinet

SIGNAL EQUIPMENT Cont

PROPOSED	EXISTING	
		Guard post
		Type 1 Standard with "Meter On" sign
		Emergency Vehicle detector

NOTES:

1. All signal sections shall be 12" unless shown otherwise.
2. Signal heads shall be provided with backplates unless shown otherwise.
3. Signal indication shall be LED.

STATE OF CALIFORNIA
DEPARTMENT OF TRANSPORTATION

ELECTRICAL SYSTEMS (SYMBOLS AND ABBREVIATIONS)

NO SCALE

RSP ES-1B DATED OCTOBER 5, 2007 SUPERCEDES STANDARD PLAN ES-1B DATED MAY 1, 2006 - PAGE 401 OF THE STANDARD PLANS BOOK DATED MAY 2006.

REVISED STANDARD PLAN RSP ES-1B

2006 REVISED STANDARD PLAN RSP ES-1B

7-10-07

DIST	COUNTY	ROUTE	POST MILES TOTAL PROJECT	SHEET NO.	TOTAL SHEETS
11	SD	5	R61.8/R62.1	49	54

REGISTERED ELECTRICAL ENGINEER

October 5, 2007
PLANS APPROVAL DATE

REGISTERED PROFESSIONAL ENGINEER Jeffery G. McRae No. E14512 Exp. 6-30-08 ELECTRICAL STATE OF CALIFORNIA

The State of California or its officers or agents shall not be responsible for the accuracy or completeness of electronic copies of this plan sheet.

To accompany plans dated 02-28-11

EQUIPMENT IDENTIFICATION

ILLUMINATED SIGN IDENTIFICATION NUMBER:

Sign No. 12345 — Sign number - Place on post or structure

10 ISL SCI 1.0

- 1.0 — Transformer rating (kVA)
- SCI — Lighting control type
- ISL — Number and type of fixtures

Do NOT place on standard or structure

ELECTROLIER OR EQUIPMENT IDENTIFICATION NUMBER:

12345 - 15'-0"

- 15'-0" — Mast arm length, if shown. Do not place on standard or structure.
- 12345 — Equipment number - Place on standard or structure. Existing equipment numbers are shown in parenthesis

CONDUIT AND CONDUCTOR IDENTIFICATION:

1½"C, 2#10, 15#14, 2 DLC

- 2#10, 15#14, 2 DLC — Number and size of conductors and cables
- 1½"C — Size of conduit in inches

Ø1, Ø2, Ø2P, etc.	Traffic phase identification for signal faces, detectors and phase diagrams
1 2 3	Project note numbers
A B C	Equipment description, installation or item numbers
1 2 3	Conduit run numbers

SIGNAL AND LIGHTING STANDARD (TYPICAL DESIGNATION):

19A - 3 - 100

- 100 — Wind velocity = 100 mph
- 3 — Case 3 arm loading
- 19A — Standard type
- Standard Plan sheet number
- Detail number or letter

MISCELLANEOUS EQUIPMENT

PROPOSED	EXISTING	
CMS	cms	Changeable message sign
		Closed circuit television camera
		Highway advisory radio pole and antenna
EMS	ems	Extinguishable message sign
M V	m v	Detection device M = Microwave sensor V = Video image sensor

WIRING DIAGRAM LEGEND

P	Pole
CB	Circuit breaker
A	Ampere
V	Volt
M	Metered
UM	Unmetered
NB	Neutral bus
GB	Ground bus
G	Equipment grounding conductor
N	Grounded conductor (Neutral)

- External conductor
- Conductor or bus
- Tie point
- Contactor coil
- Contactor, Contact NO
- Terminal blocks
- Contactor, Contact NC
- Enclosure bond
- Grounding electrode
- Circuit breaker
- Receptacle

PULL BOXES

PROPOSED EXISTING

Pull box-No. 5 unless otherwise indicated or noted.

3 — 9A(21)

Pull box-Additional designations or descriptions

3 = No. 3½ pull box
5 = No. 5 pull box
6 = No. 6 pull box
7 = No. 7 (Ceiling pull box)
8 = No. 8 (Pendant soffit pull box)
9 = No. 9 pull box
9A = No. 9A pull box

(C) = Communications pull box
(E) = Pull box with extension
(S) = Sprinkler control pull box
(21) = Anchor bolts and conduit for future installation of Type 21 Standard
(T) = Traffic pull box

VEHICLE DETECTORS

5 J 9 U

- U = Upper
- L = Lower
- Slot number in input file
- Input file (I or J)
- Phase

PROPOSED	EXISTING	
		Type A detector loop. Outline of sawcut shown.
		Type B detector loop. Outline of sawcut shown.
		Type C detector loop. Outline of sawcut shown.
		Type D detector loop. Outline of sawcut shown.
		Type E detector loop. Outline of sawcut shown.
		Type Q detector loop. Outline of sawcut shown.
		Magnetic detector
DH	dh	Detector handhole
		Microwave or video detection zone

STATE OF CALIFORNIA
DEPARTMENT OF TRANSPORTATION

ELECTRICAL SYSTEMS (SYMBOLS AND ABBREVIATIONS)

NO SCALE

RSP ES-1C DATED OCTOBER 5, 2007 SUPERCEDES STANDARD PLAN ES-1C DATED MAY 1, 2006 - PAGE 402 OF THE STANDARD PLANS BOOK DATED MAY 2006.

REVISED STANDARD PLAN RSP ES-1C

2006 REVISED STANDARD PLAN RSP ES-1C

DIST	COUNTY	ROUTE	POST MILES TOTAL PROJECT	SHEET NO.	TOTAL SHEETS
11	SD	5	R61.8/R62.1	50	54

Randell D. Hiatt
REGISTERED CIVIL ENGINEER

June 6, 2008
PLANS APPROVAL DATE

REGISTERED PROFESSIONAL ENGINEER
Randell D. Hiatt
No. C50200
Exp. 6-30-09
CIVIL
STATE OF CALIFORNIA

The State of California or its officers or agents shall not be responsible for the accuracy or completeness of electronic copies of this plan sheet.

To accompany plans dated 02-28-11

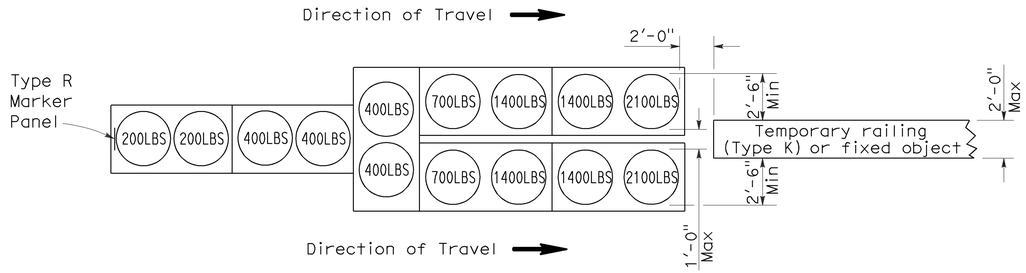

ARRAY 'TU14'

Approach speed 45 mph or more

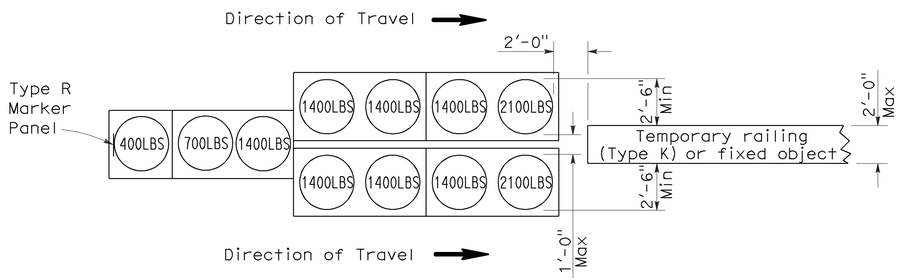

ARRAY 'TU11'

Approach speed less than 45 mph

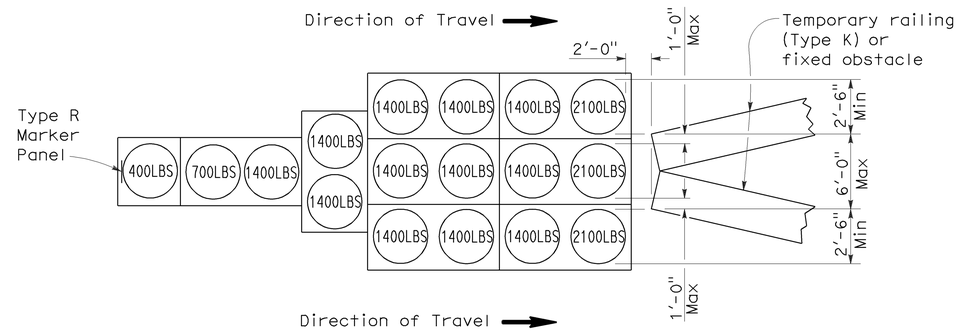

ARRAY 'TU17'

Approach speed less than 45 mph

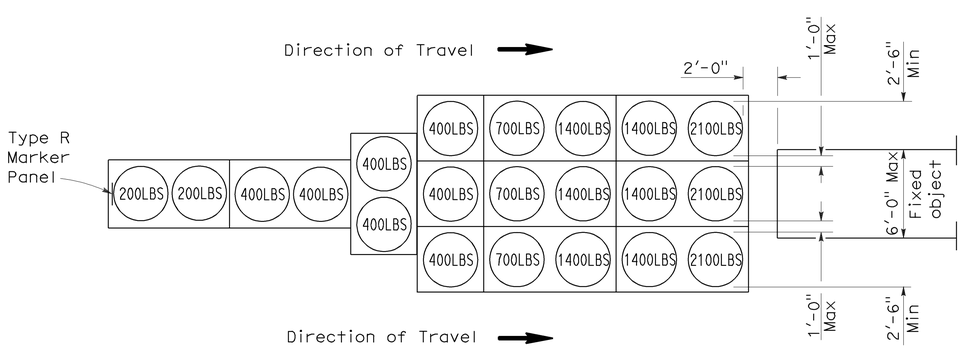

ARRAY 'TU21'

Approach speed 45 mph or more

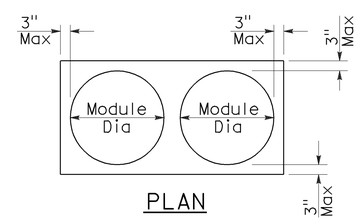

PLAN

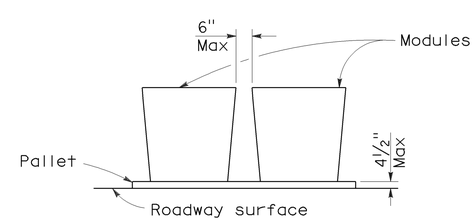

ELEVATION

CRASH CUSHION PALLET DETAIL

See Note 7

NOTES:

1. (XXX) Indicates sand filled module location and weight of sand in pounds for each module. Module spacing is based on the greater diameter of the module.
2. All sand weights are nominal.
3. Temporary crash cushion arrays shall not encroach on the traveled way.
4. Place the top of Type R marker panel 1" below the module lid.
5. Refer to Standard Plan A73B for marker details.
6. Approach speeds indicated conform to NCHRP 350 Report criteria.
7. Use of pallets is optional.

STATE OF CALIFORNIA
DEPARTMENT OF TRANSPORTATION

TEMPORARY CRASH CUSHION, SAND FILLED (UNIDIRECTIONAL)

NO SCALE

RSP T1A DATED JUNE 6, 2008 SUPERSEDES STANDARD PLAN T1A
DATED MAY 1, 2006 - PAGE 211 OF THE STANDARD PLANS BOOK DATED MAY 2006.

REVISED STANDARD PLAN RSP T1A

2006 REVISED STANDARD PLAN RSP T1A

DIST	COUNTY	ROUTE	POST MILES TOTAL PROJECT	SHEET NO.	TOTAL SHEETS
11	SD	5	R61.8/R62.1	51	54

Randell D. Hiatt
REGISTERED CIVIL ENGINEER

June 6, 2008
PLANS APPROVAL DATE

REGISTERED PROFESSIONAL ENGINEER
Randell D. Hiatt
No. C50200
Exp. 6-30-09
CIVIL
STATE OF CALIFORNIA

The State of California or its officers or agents shall not be responsible for the accuracy or completeness of electronic copies of this plan sheet.

To accompany plans dated 02-28-11

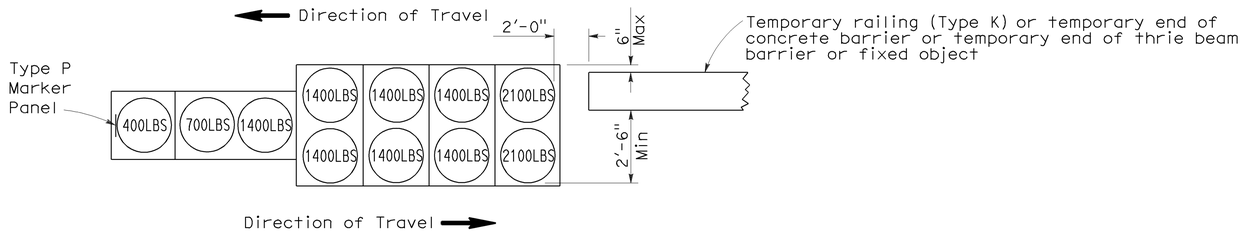

ARRAY 'TB11'

Approach speed less than 45 mph

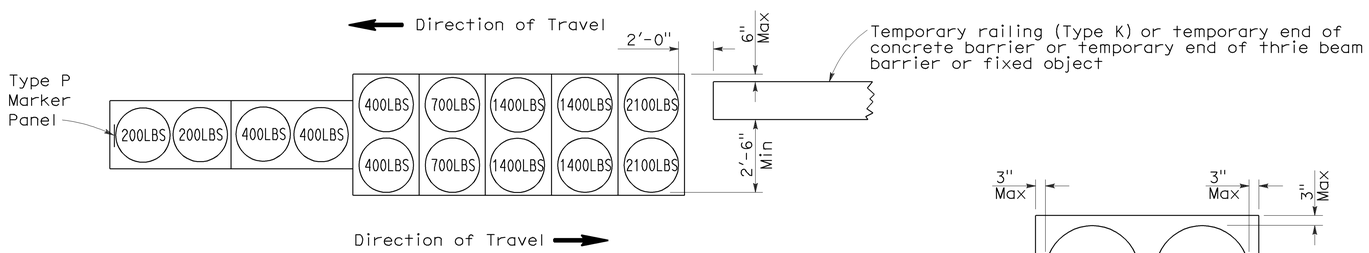

ARRAY 'TB14'

Approach speed 45 mph or more

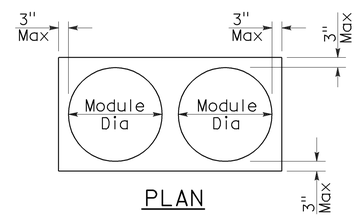

PLAN

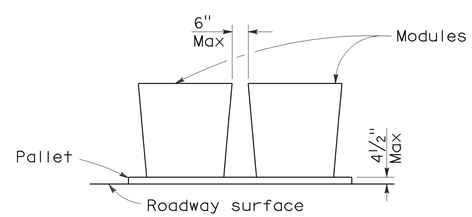

ELEVATION

CRASH CUSHION PALLET DETAIL

See Note 7

NOTES:

1. (XXX) Indicates sand filled module location and weight of sand in pounds for each module. Module spacing is based on the greater diameter of the module.
2. All sand weights are nominal.
3. Temporary crash cushion arrays shall not encroach on the traveled way.
4. Place the Type P marker panel so that the bottom of the panel rests upon the pallet.
5. Refer to Standard Plan A73B for marker details.
6. Approach speeds indicated conform to NCHRP 350 Report criteria.
7. Use of pallets is optional.

STATE OF CALIFORNIA
DEPARTMENT OF TRANSPORTATION

TEMPORARY CRASH CUSHION, SAND FILLED (BIDIRECTIONAL)

NO SCALE

RSP T1B DATED JUNE 6, 2008 SUPERSEDES STANDARD PLAN T1B
DATED MAY 1, 2006 - PAGE 212 OF THE STANDARD PLANS BOOK DATED MAY 2006.

REVISED STANDARD PLAN RSP T1B

2006 REVISED STANDARD PLAN RSP T1B

5-15-08

DIST	COUNTY	ROUTE	POST MILES TOTAL PROJECT	SHEET NO.	TOTAL SHEETS
11	SD	5	R61.8/R62.1	52	54

Randell D. Hiatt
REGISTERED CIVIL ENGINEER

June 6, 2008
PLANS APPROVAL DATE

REGISTERED PROFESSIONAL ENGINEER
Randell D. Hiatt
No. C50200
Exp. 6-30-09
CIVIL
STATE OF CALIFORNIA

The State of California or its officers or agents shall not be responsible for the accuracy or completeness of electronic copies of this plan sheet.

To accompany plans dated 02-28-11

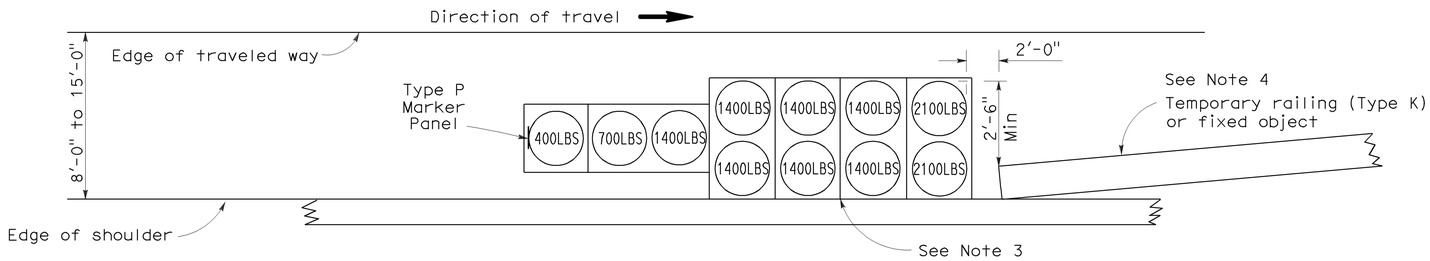

ARRAY 'TS11'

Approach speed less than 45 mph
See Note 9

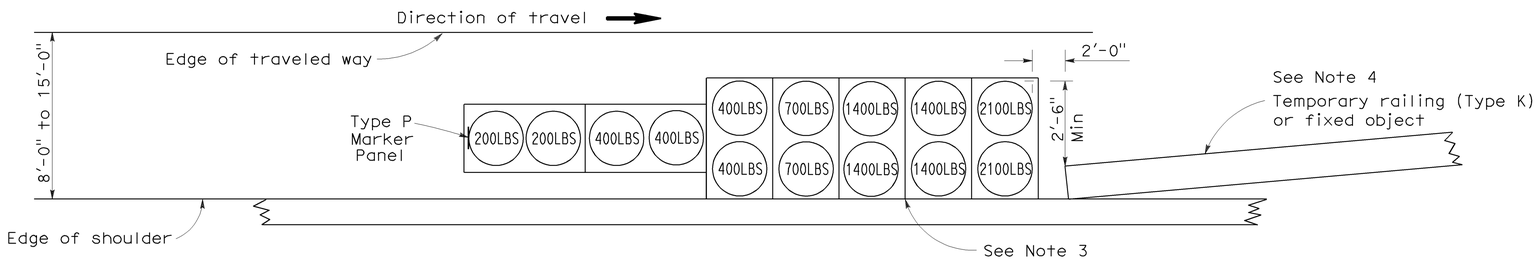

ARRAY 'TS14'

Approach speed 45 mph or more
See Note 9

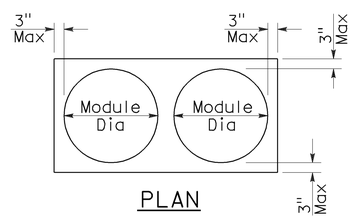

PLAN

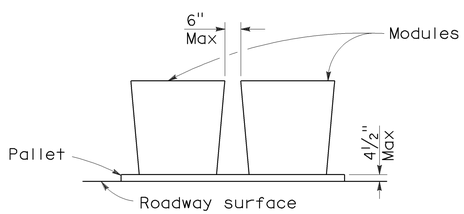

ELEVATION

CRASH CUSHION PALLET DETAIL

See Note 11

NOTES:

1. (XXX) Indicates sand filled module location and weight of sand in pounds for each module. Module spacing is based on the greater diameter of the module.
2. All sand weights are nominal.
3. The temporary crash cushion arrays shown on this plan shall be used only in locations where there will be traffic on one side of the temporary crash cushion array.
4. If the fixed object or approach end of the temporary railing is less than 15'-0" from the edge of traveled way, a temporary crash cushion is required in a construction or work zone.
5. Temporary crash cushion arrays shall not encroach on the traveled way.
6. Arrays for median shoulders shall conform to details shown on this plan for outside shoulders.
7. Place the Type P marker panel so that the bottom of the panel rests upon the pallet and faces traffic.
8. Refer to Standard Plan A73B for marker details.
9. For shoulder widths less than 8'-0", appropriate approved crash cushion protection, other than sand filled modules, shall be provided at fixed objects and at approach ends of temporary railing. The specific type of crash cushion shall be as shown on the project plans or as specified in the Special Provisions, or if not shown on the project plans or specified in the Special Provisions, shall be as approved by the Engineer.
10. Approach speeds indicated conform to NCHRP 350 Report criteria.
11. Use of pallets is optional.

STATE OF CALIFORNIA
DEPARTMENT OF TRANSPORTATION

TEMPORARY CRASH CUSHION, SAND FILLED (SHOULDER INSTALLATIONS)

NO SCALE

RSP T2 DATED JUNE 6, 2008 SUPERSEDES STANDARD PLAN T2
DATED MAY 1, 2006 - PAGE 213 OF THE STANDARD PLANS BOOK DATED MAY 2006.

REVISED STANDARD PLAN RSP T2

2006 REVISED STANDARD PLAN RSP T2

5-15-08

DIST	COUNTY	ROUTE	POST MILES TOTAL PROJECT	SHEET NO.	TOTAL SHEETS
11	SD	5	R61.8/R62.1	53	54

REGISTERED CIVIL ENGINEER

November 17, 2006
PLANS APPROVAL DATE

REGISTERED PROFESSIONAL ENGINEER — Greg W. Edwards — No. C36386 — Exp. 6-30-08 — CIVIL — STATE OF CALIFORNIA

The State of California or its officers or agents shall not be responsible for the accuracy or completeness of electronic copies of this plan sheet.

To accompany plans dated 02-28-11

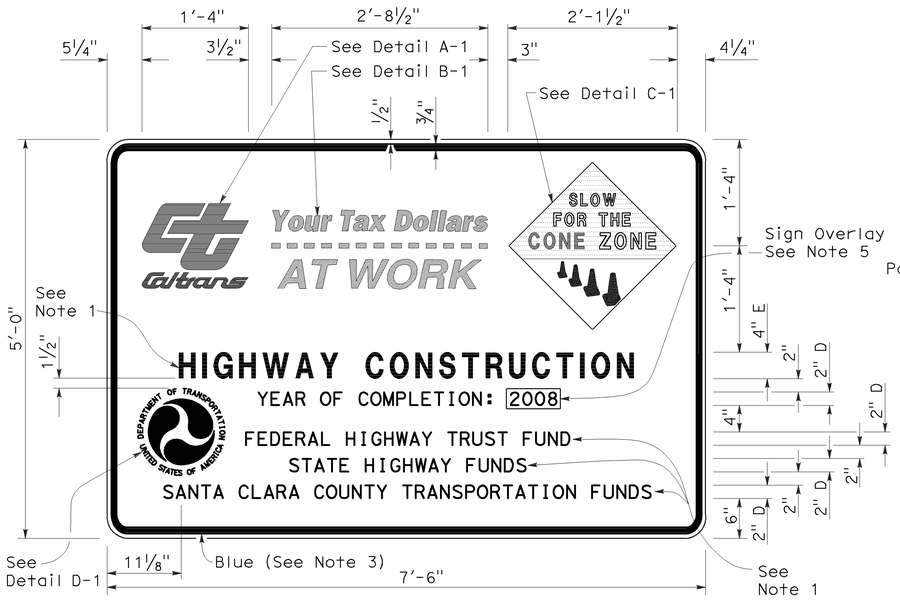

TYPE 1

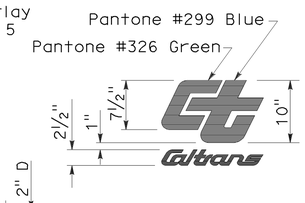

DETAIL A-1

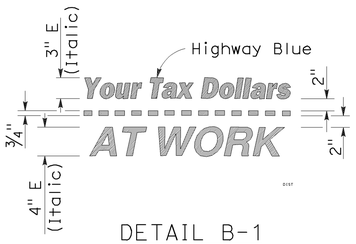

DETAIL B-1
(See Note 3)

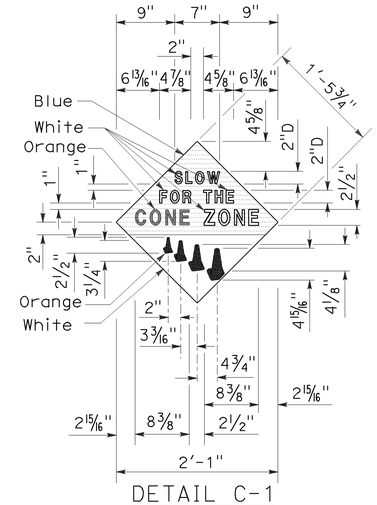

DETAIL C-1
(See Note 4)

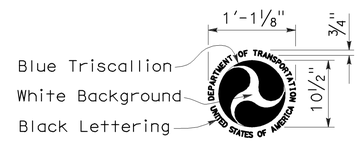

DETAIL D-1
(See Note 6)

NOTES:

1. The sign messages shown for type of project and fund types are examples only. See the Special Provisions for the applicable type of project and fund type messages to be used.
2. Except as otherwise shown, the legend of sign shall be black on a white background (non-reflective).
3. The border of the signs and details "B-1" and "B-2" shall be blue (non-reflective).
4. The diamond in details "C-1" and "C-2" shall be blue for the background of message, " SLOW FOR THE CONE ZONE", and white background for the orange cones. The color and type of font for the "SLOW FOR THE CONE ZONE" message shall be: "SLOW" white D; "FOR THE" white D; "CONE" orange Arial font; "ZONE" white Arial font.
5. Year of completion of project construction shown on the overlay is an example only. See the Special Provisions.
6. Use when the Project involves Federal Highway Trust Fund.

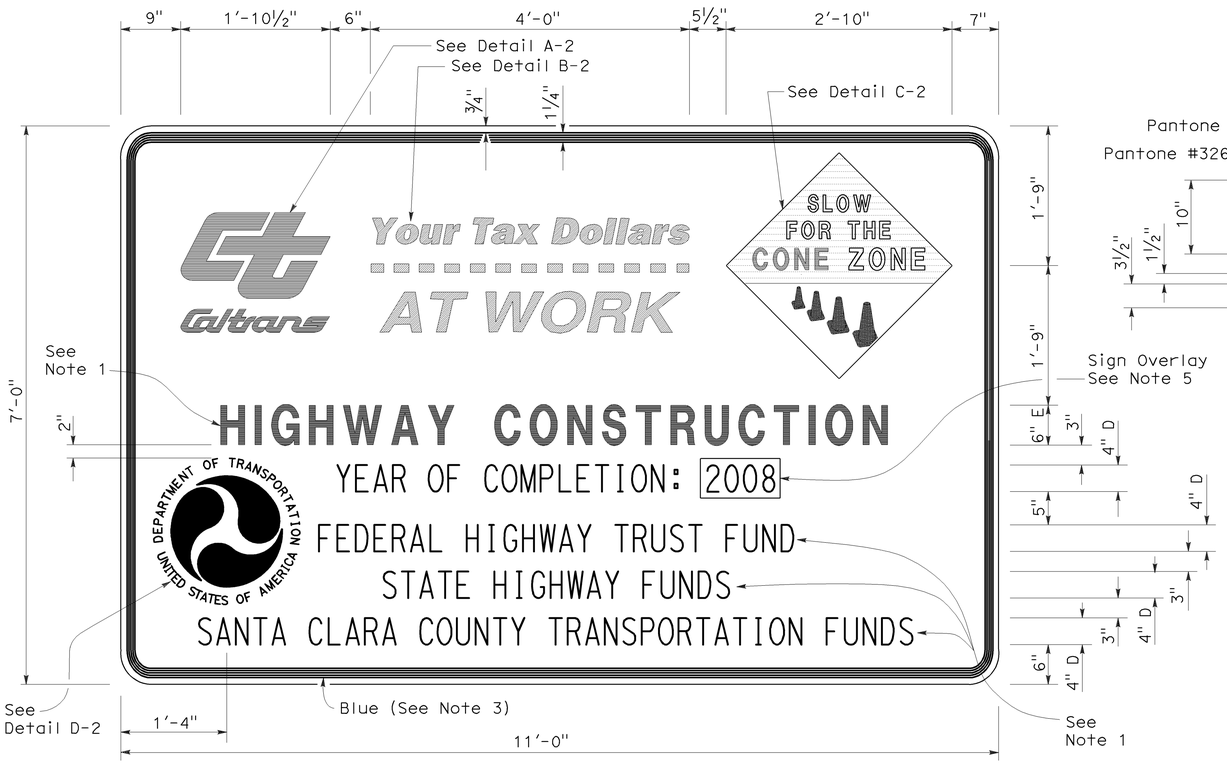

TYPE 2

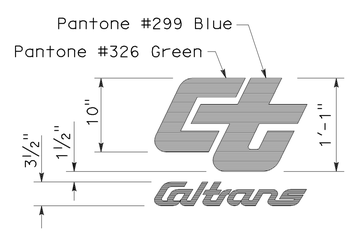

DETAIL A-2

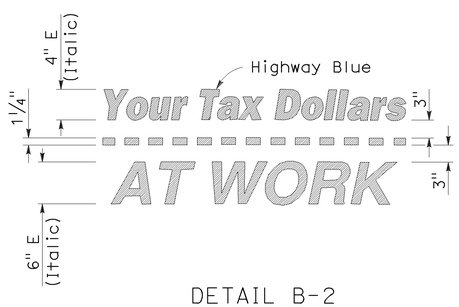

DETAIL B-2
(See Note 3)

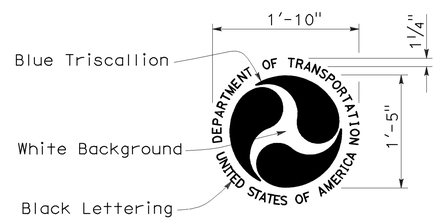

DETAIL D-2
(See Note 6)

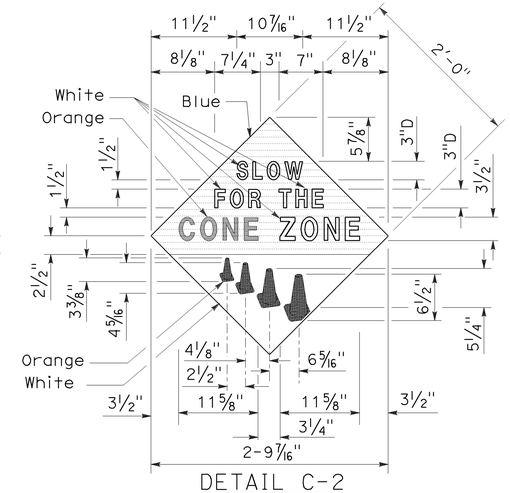

DETAIL C-2
(See Note 4)

STATE OF CALIFORNIA
DEPARTMENT OF TRANSPORTATION

CONSTRUCTION PROJECT FUNDING IDENTIFICATION SIGNS

NO SCALE

RSP T7 DATED NOVEMBER 17, 2006 SUPERSEDES STANDARD PLAN T7
DATED MAY 1, 2006 - PAGE 217 OF THE STANDARD PLANS BOOK DATED MAY 2006.

REVISED STANDARD PLAN RSP T7

2006 REVISED STANDARD PLAN RSP T7

9-7-06

DIST	COUNTY	ROUTE	POST MILES TOTAL PROJECT	SHEET NO.	TOTAL SHEETS
11	SD	5	R61.8/R62.1	54	54

LICENSED LANDSCAPE ARCHITECT

April 3, 2009
PLANS APPROVAL DATE

The State of California or its officers or agents shall not be responsible for the accuracy or completeness of electronic copies of this plan sheet.

LICENSED LANDSCAPE ARCHITECT — Robert B. Schott — 3635 — Renewal Date 11-30-10 — 2-25-09 Date — STATE OF CALIFORNIA

To accompany plans dated 02-28-11

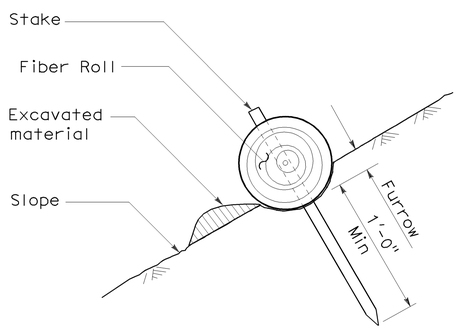

SECTION

TEMPORARY FIBER ROLL (TYPE 1)

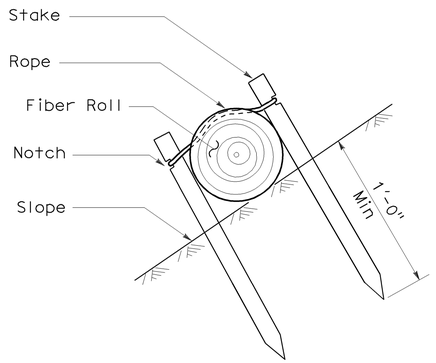

SECTION

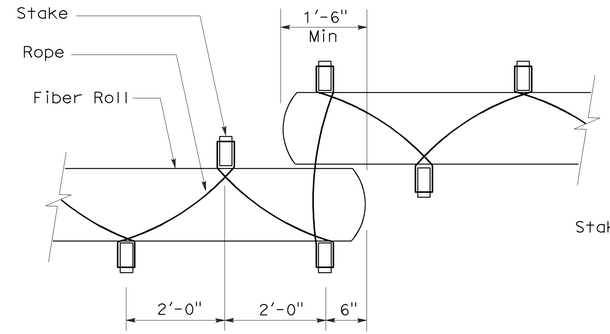

PLAN

TEMPORARY FIBER ROLL (TYPE 2)

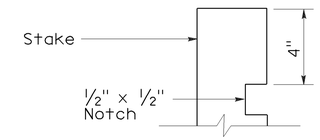

ELEVATION

STAKE NOTCH DETAIL

NOTES:

1. Temporary fiber roll spacing varies depending upon slope inclination.
2. Installations shown in the perspectives are for slope inclination of 10:1 and steeper.

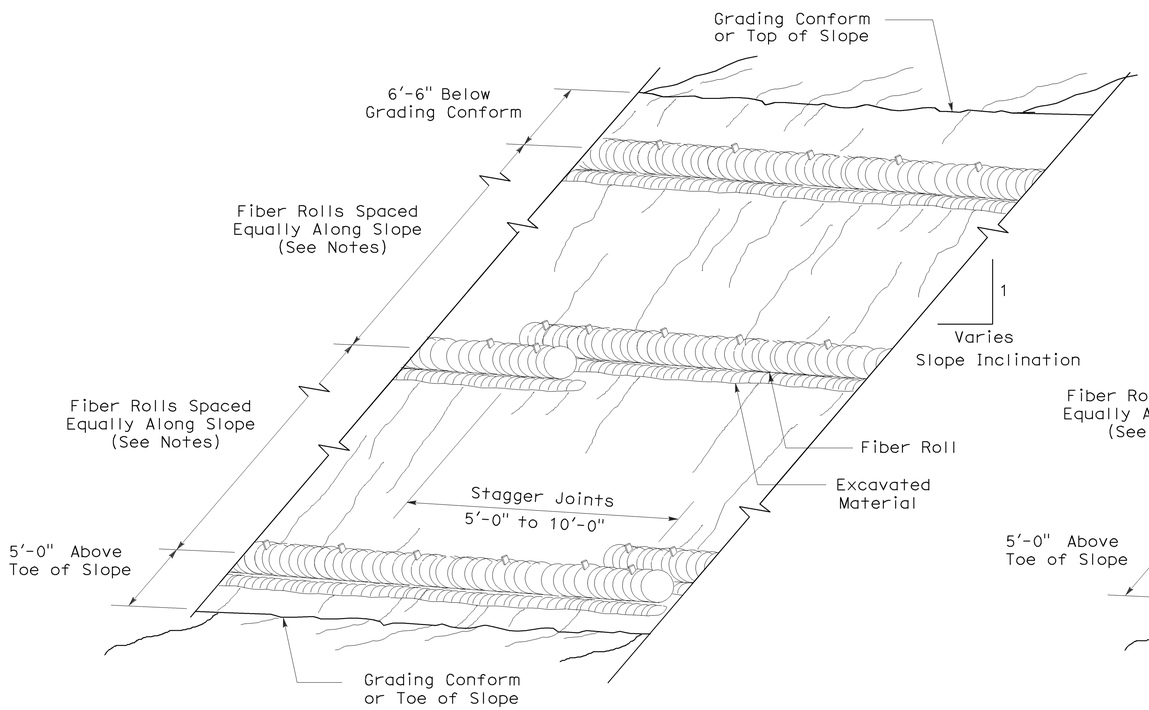

PERSPECTIVE

TEMPORARY FIBER ROLL (TYPE 1)

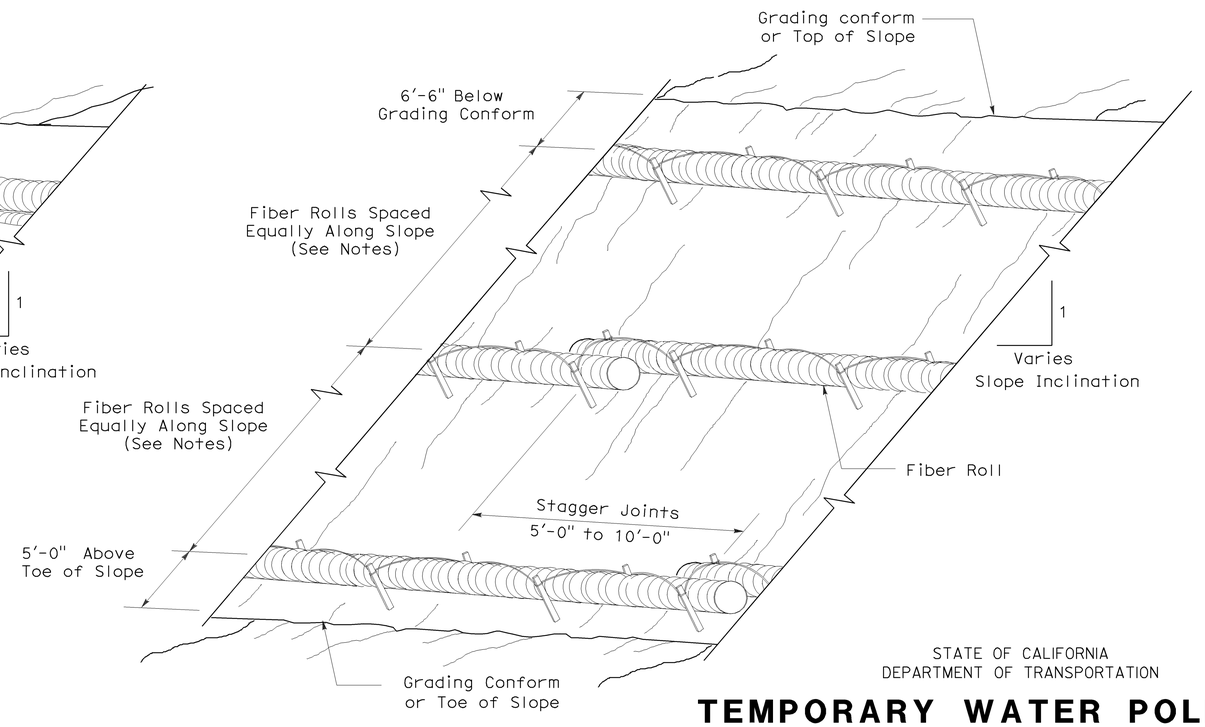

PERSPECTIVE

TEMPORARY FIBER ROLL (TYPE 2)

STATE OF CALIFORNIA
DEPARTMENT OF TRANSPORTATION

TEMPORARY WATER POLLUTION CONTROL DETAILS (TEMPORARY FIBER ROLL)

NO SCALE

RSP T56 DATED APRIL 3, 2009 SUPERSEDES STANDARD PLAN T56
DATED MAY 1, 2006 - PAGE 232 OF THE STANDARD PLANS BOOK DATED MAY 2006.

REVISED STANDARD PLAN RSP T56

2006 REVISED STANDARD PLAN RSP T56