Dist	COUNTY	ROUTE	POST MILES TOTAL PROJECT	SHEET No.	TOTAL SHEETS
11	SD	805	4.7/5.6	301	650

REGISTERED CIVIL ENGINEER 05-30-12 DATE

06-25-12
PLANS APPROVAL DATE

REGISTERED PROFESSIONAL ENGINEER MATTHEW P. MAECHLER No. C78172 Exp. 09-30-13 CIVIL STATE OF CALIFORNIA

THE STATE OF CALIFORNIA OR ITS OFFICERS OR AGENTS SHALL NOT BE RESPONSIBLE FOR THE ACCURACY OR COMPLETENESS OF SCANNED COPIES OF THIS PLAN SHEET.

DOKKEN ENGINEERING
5675 RUFFIN Rd
SUITE 250
SAN DIEGO, CA 92123

SANDAG
401 B St
SUITE 800
SAN DIEGO, CA 92101

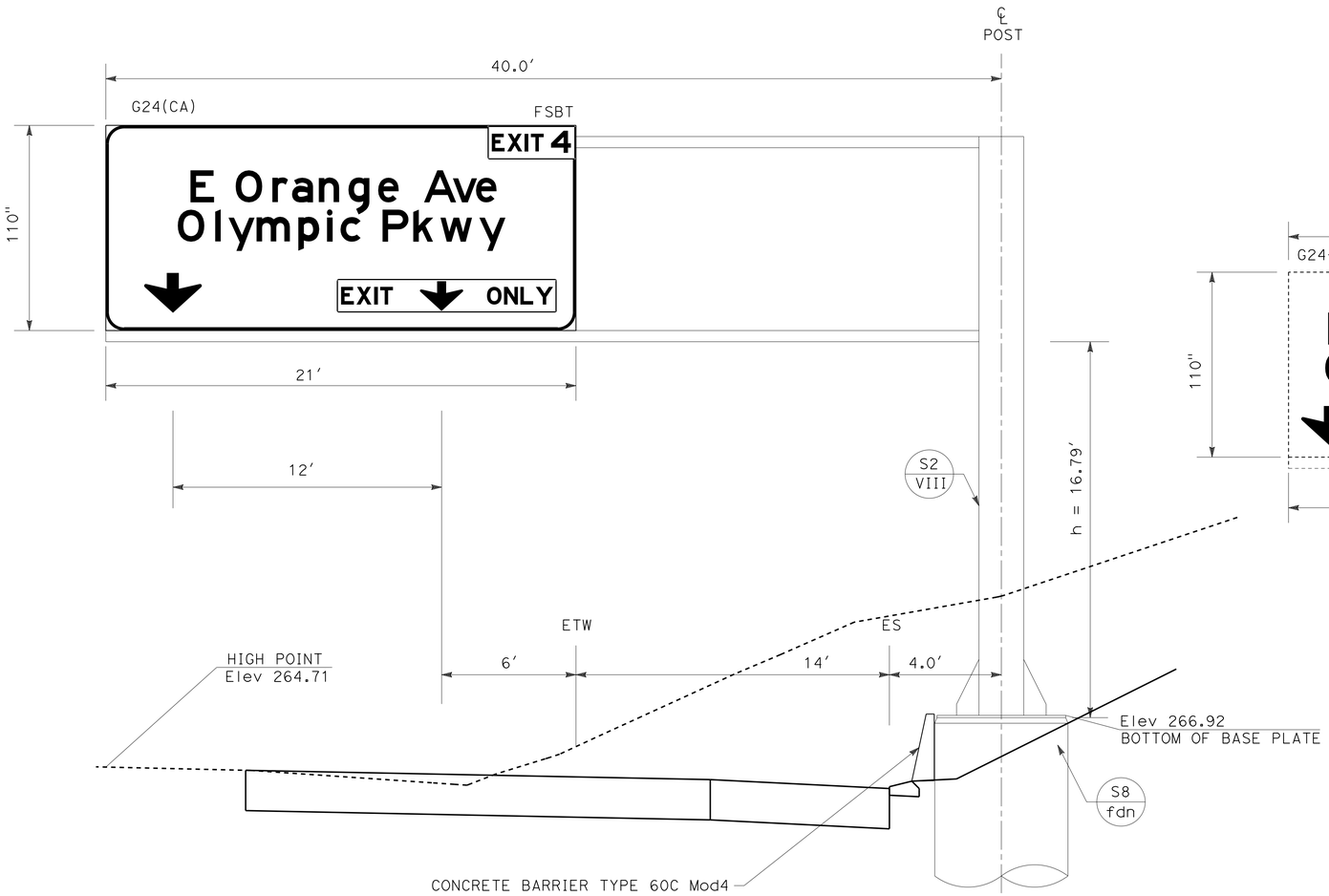

1 INSTALL SIGN STRUCTURE

Sta 293+75 "A1" LINE - FSBT
TRUSS SINGLE POST
(WITH WALKWAY)
TYPE A LAMINATED PANEL
ILLUMINATION REQUIRED

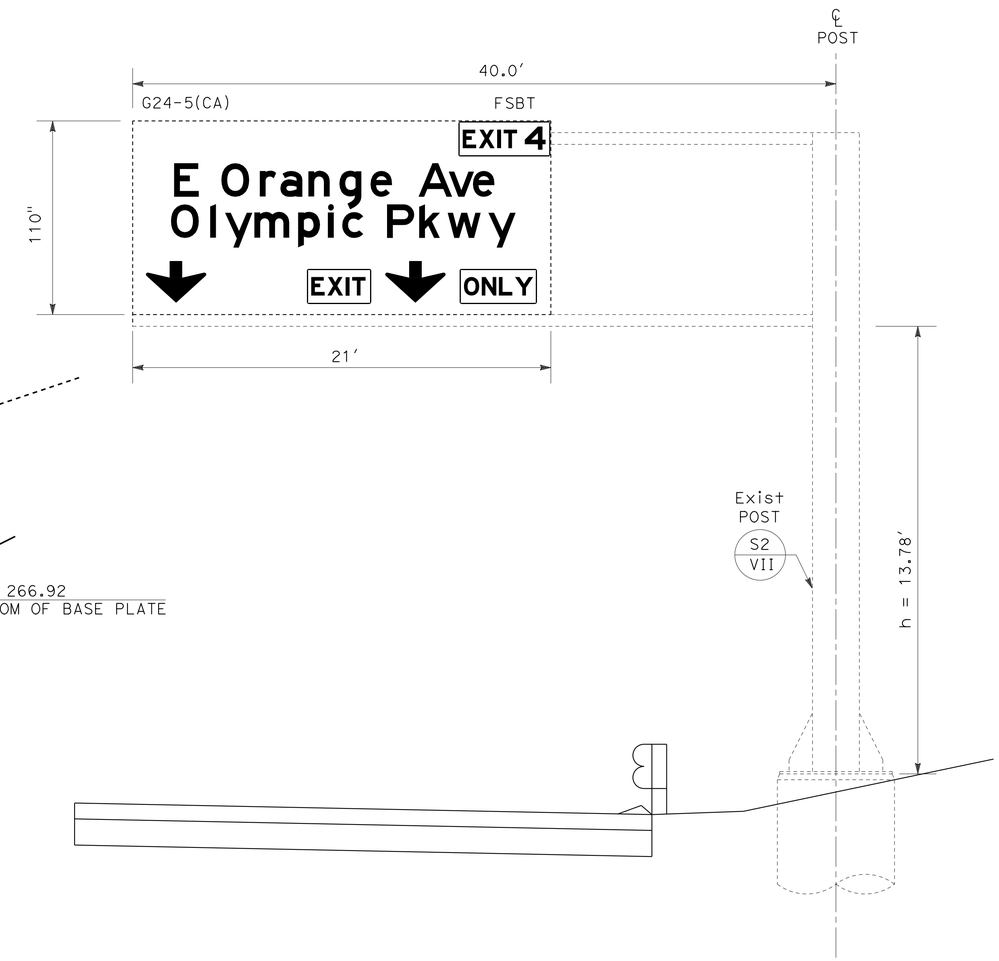

2 REMOVE SIGN STRUCTURE

Sta 294+20 "A1" LINE - FSBT
TRUSS SINGLE POST
(WITH WALKWAY)

APPROXIMATE WEIGHT = 8,510 lbs

SIGN DETAILS

NO SCALE

SD-1

APPROVED FOR SIGN WORK ONLY

STATE OF CALIFORNIA - DEPARTMENT OF TRANSPORTATION
Caltrans

CONSULTANT FUNCTIONAL SUPERVISOR: GERARD LUMABAS
CALCULATED-DESIGNED BY: MATTHEW P. MAECHLER
CHECKED BY: PAUL KOSINSKI
REVISED BY
DATE REVISED

LAST REVISION 06-06-12
DATE PLOTTED => 12-SEP-2012
TIME PLOTTED => 16:19

Dist	COUNTY	ROUTE	POST MILES TOTAL PROJECT	SHEET No.	TOTAL SHEETS
11	SD	805	4.7/5.6	302	650

REGISTERED CIVIL ENGINEER 05-30-12 DATE

06-25-12
PLANS APPROVAL DATE

REGISTERED PROFESSIONAL ENGINEER MATTHEW P. MAECHLER No. C78172 Exp. 09-30-13 CIVIL STATE OF CALIFORNIA

THE STATE OF CALIFORNIA OR ITS OFFICERS OR AGENTS SHALL NOT BE RESPONSIBLE FOR THE ACCURACY OR COMPLETENESS OF SCANNED COPIES OF THIS PLAN SHEET.

DOKKEN ENGINEERING
5675 RUFFIN Rd
SUITE 250
SAN DIEGO, CA 92123

SANDAG
401 B St
SUITE 800
SAN DIEGO, CA 92101

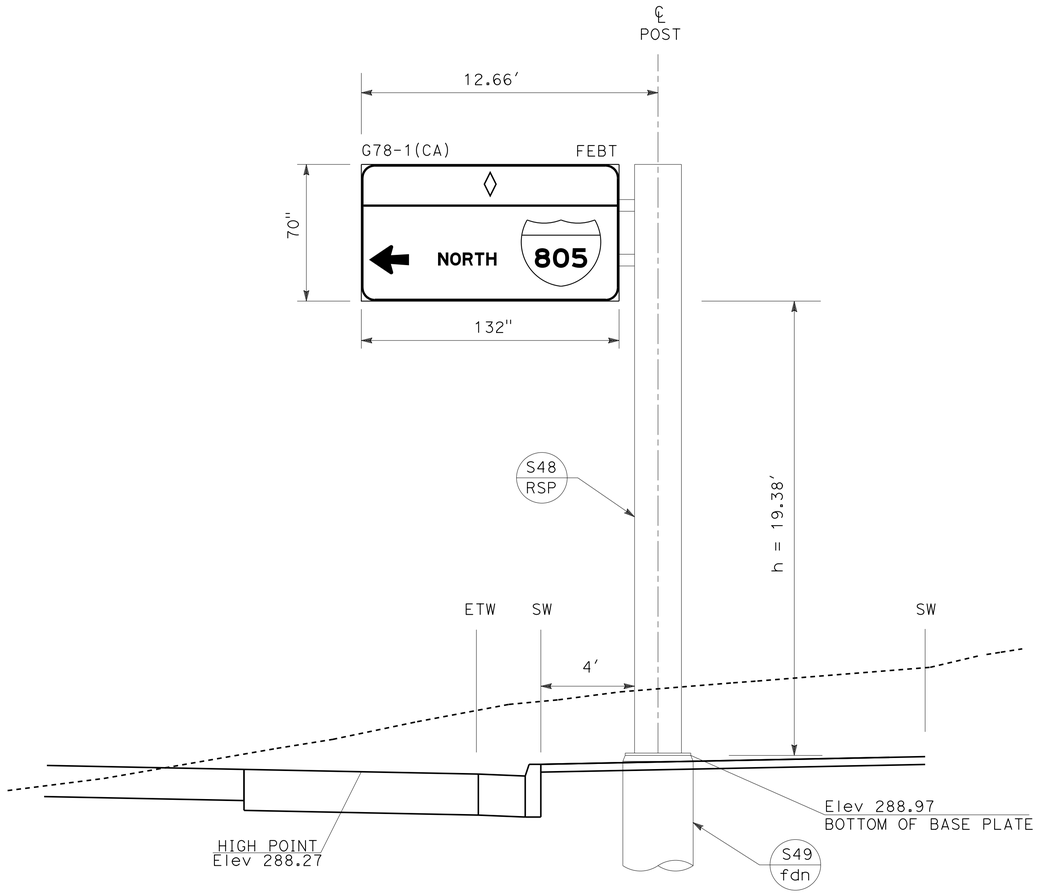

3 INSTALL SIGN STRUCTURE
Sta 18+50 "PL" LINE - FEBT
LIGHTWEIGHT
POST: 8" NPS; "t" = ½"
MAST ARM: TS 4 x 4 x ¼
SIGN TYPE C-1
TYPE A LAMINATED PANEL
ILLUMINATION REQUIRED

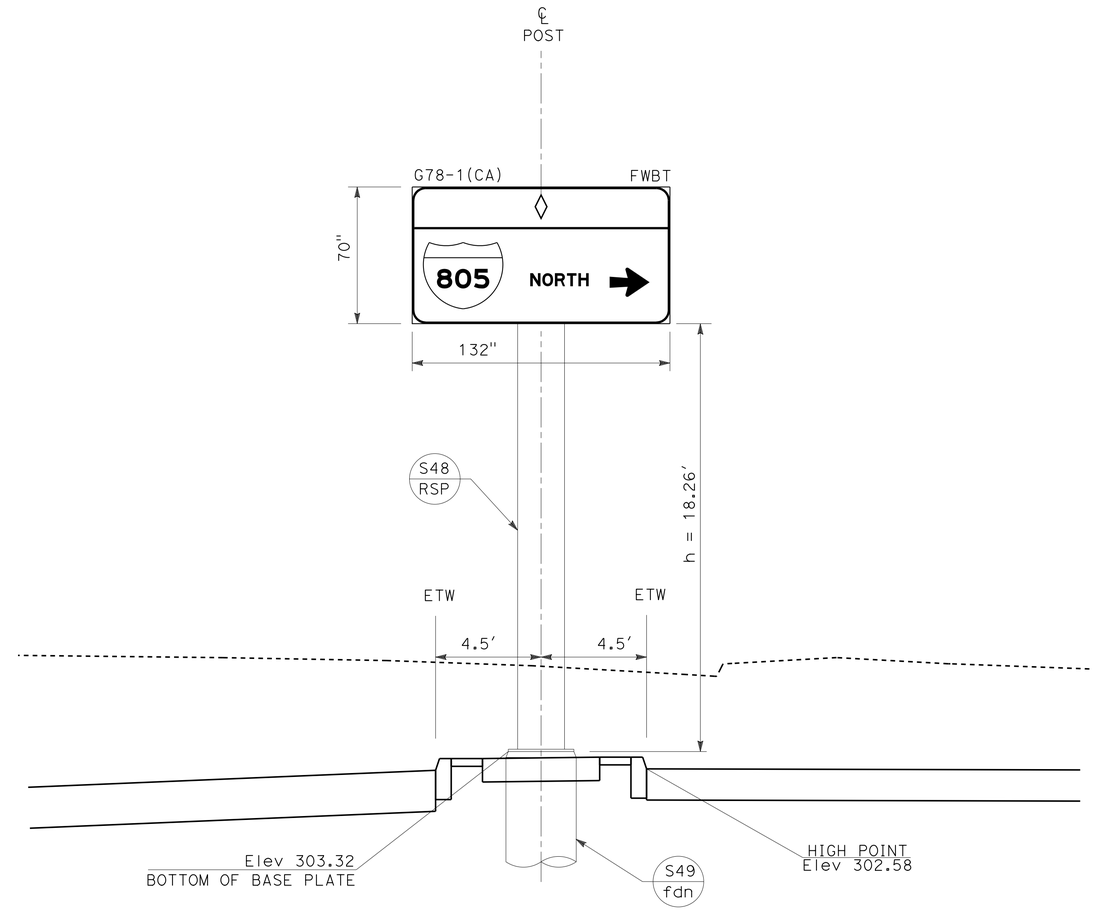

4 INSTALL SIGN STRUCTURE
Sta 22+29 "PL" LINE - FWBT
LIGHTWEIGHT BUTTERFLY
POST: 8" NPS; "t" = ½"
SIGN TYPE BALANCED
TYPE A LAMINATED PANEL
ILLUMINATION REQUIRED

APPROVED FOR SIGN WORK ONLY

NO SCALE

SIGN DETAILS
SD-2

STATE OF CALIFORNIA - DEPARTMENT OF TRANSPORTATION
Caltrans

CONSULTANT FUNCTIONAL SUPERVISOR: GERARD LUMABAS
CALCULATED-DESIGNED BY: MATTHEW P. MAECHLER
CHECKED BY: PAUL KOSINSKI
REVISED BY
DATE REVISED

LAST REVISION 06-06-12
DATE PLOTTED => 12-SEP-2012
TIME PLOTTED => 16:20

Dist	COUNTY	ROUTE	POST MILES TOTAL PROJECT	SHEET No.	TOTAL SHEETS
11	SD	805	4.7/5.6	303	650

REGISTERED CIVIL ENGINEER 05-30-12 DATE

06-25-12
PLANS APPROVAL DATE

REGISTERED PROFESSIONAL ENGINEER MATTHEW P. MAECHLER No. C78172 Exp. 09-30-13 CIVIL STATE OF CALIFORNIA

THE STATE OF CALIFORNIA OR ITS OFFICERS OR AGENTS SHALL NOT BE RESPONSIBLE FOR THE ACCURACY OR COMPLETENESS OF SCANNED COPIES OF THIS PLAN SHEET.

DOKKEN ENGINEERING
5675 RUFFIN Rd
SUITE 250
SAN DIEGO, CA 92123

SANDAG
401 B St
SUITE 800
SAN DIEGO, CA 92101

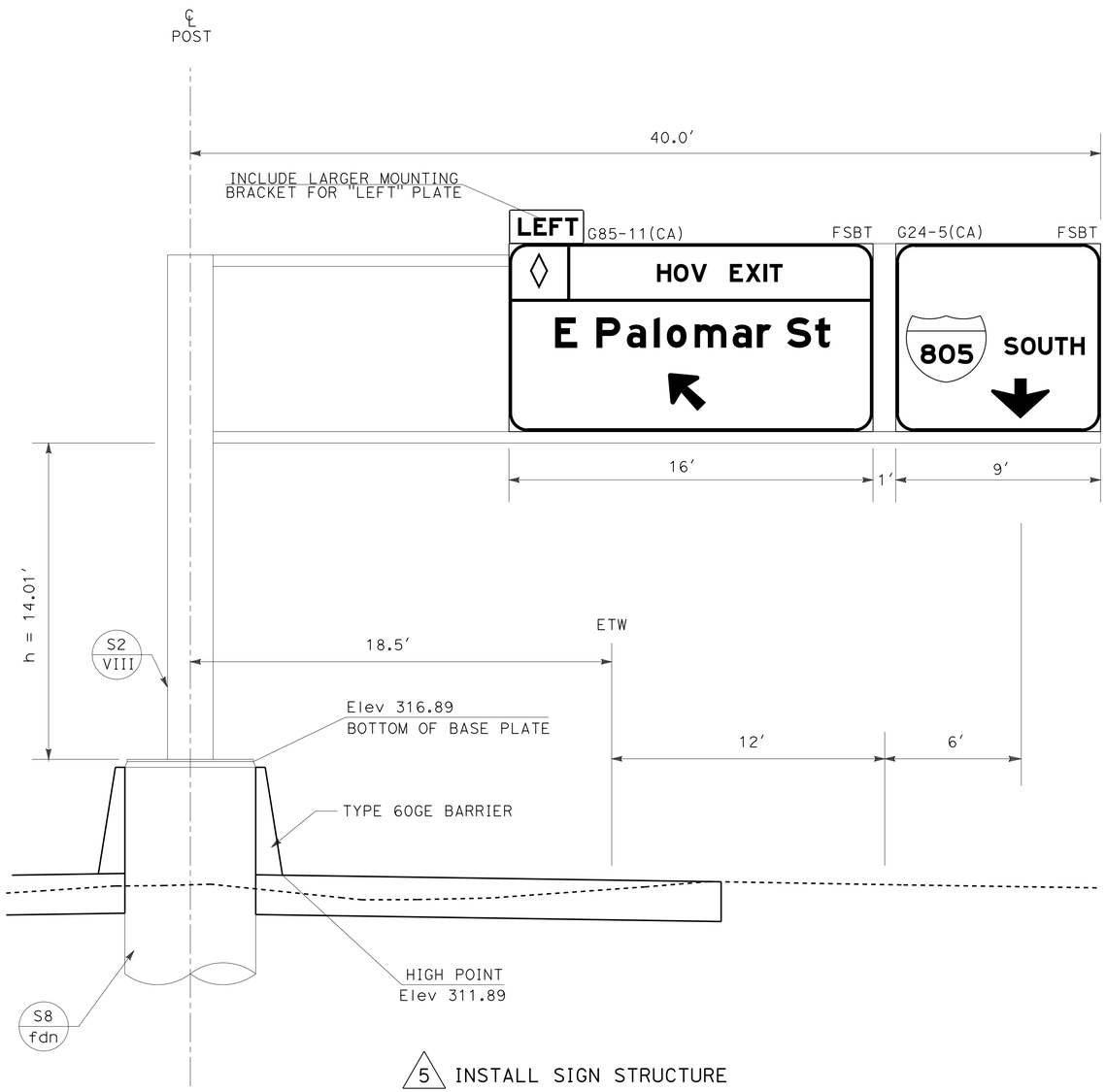

5 INSTALL SIGN STRUCTURE
Sta 314+00 "A1" LINE - FSBT
TRUSS SINGLE POST
(WITH WALKWAY)
TYPE A LAMINATED PANEL
ILLUMINATION REQUIRED

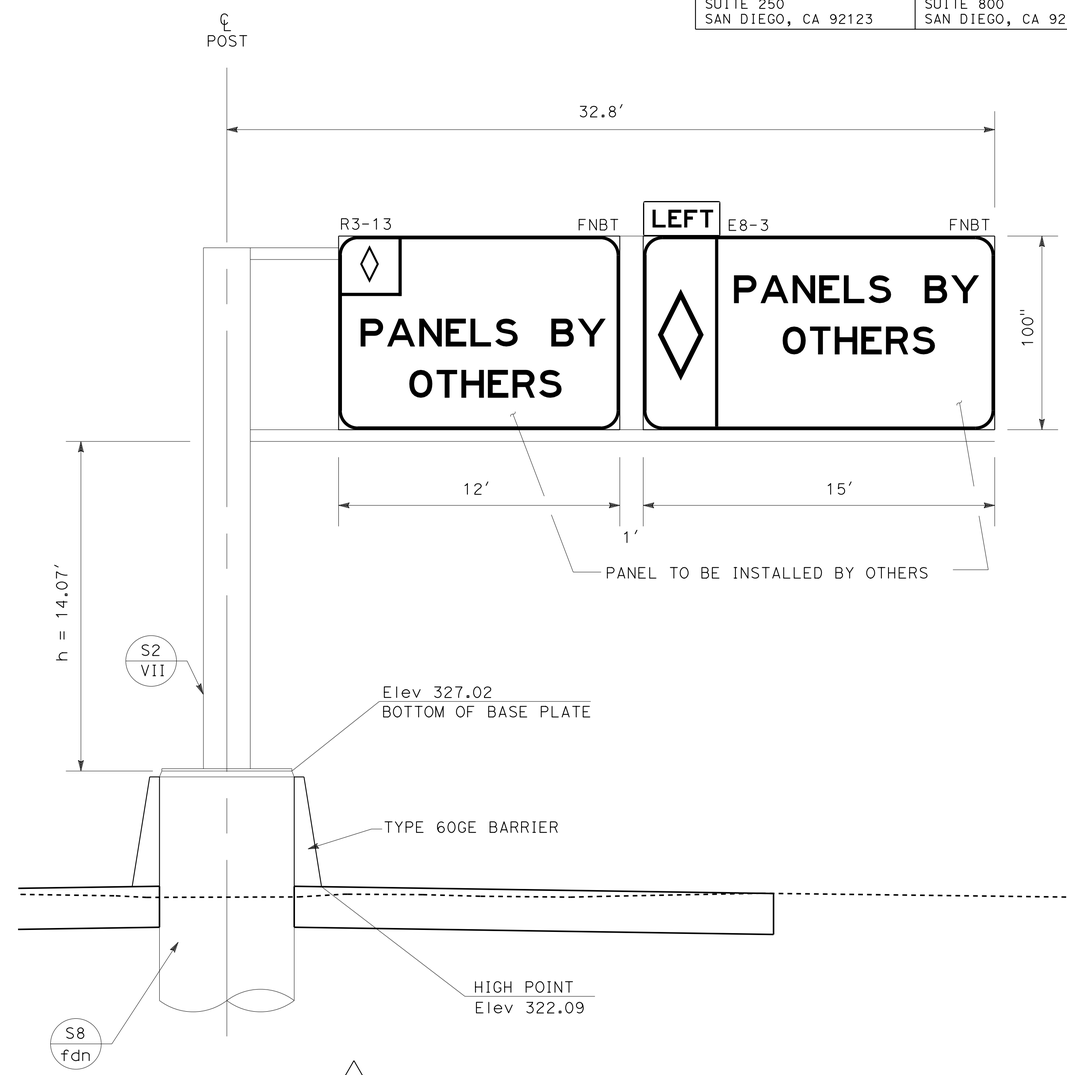

6 INSTALL SIGN STRUCTURE
Sta 322+50 "A1" LINE - FNBT
TRUSS SINGLE POST
(WITH WALKWAY)
TYPE A LAMINATED PANEL
ILLUMINATION REQUIRED
PANELS BY OTHERS

APPROVED FOR SIGN WORK ONLY

NO SCALE

SIGN DETAILS

SD-3

STATE OF CALIFORNIA - DEPARTMENT OF TRANSPORTATION
Caltrans

CONSULTANT FUNCTIONAL SUPERVISOR: GERARD LUMABAS
CALCULATED-DESIGNED BY: MATTHEW P. MAECHLER
CHECKED BY: PAUL KOSINSKI
REVISED BY
DATE REVISED

LAST REVISION 06-06-12
DATE PLOTTED => 12-SEP-2012
TIME PLOTTED => 16:20

Dist	COUNTY	ROUTE	POST MILES TOTAL PROJECT	SHEET No.	TOTAL SHEETS
11	SD	805	4.7/5.6	304	650

REGISTERED CIVIL ENGINEER 05-30-12 DATE

06-25-12
PLANS APPROVAL DATE

REGISTERED PROFESSIONAL ENGINEER MATTHEW P. MAECHLER No. C78172 Exp. 09-30-13 CIVIL STATE OF CALIFORNIA

THE STATE OF CALIFORNIA OR ITS OFFICERS OR AGENTS SHALL NOT BE RESPONSIBLE FOR THE ACCURACY OR COMPLETENESS OF SCANNED COPIES OF THIS PLAN SHEET.

DOKKEN ENGINEERING
5675 RUFFIN Rd
SUITE 250
SAN DIEGO, CA 92123

SANDAG
401 B St
SUITE 800
SAN DIEGO, CA 92101

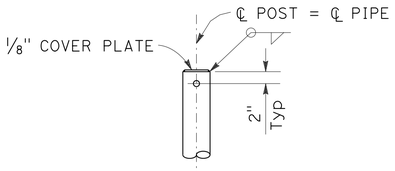

TOP OF POST DETAIL

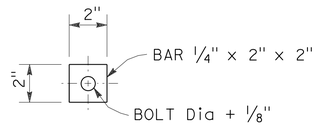

PLATE WASHER
(FOR ALL SLOTTED HOLE)

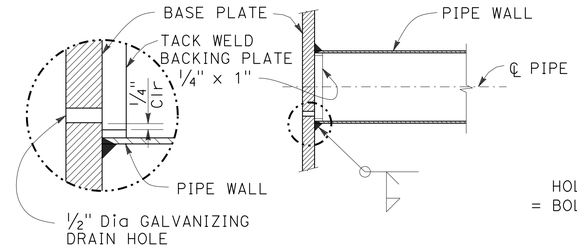

SECTION B-B

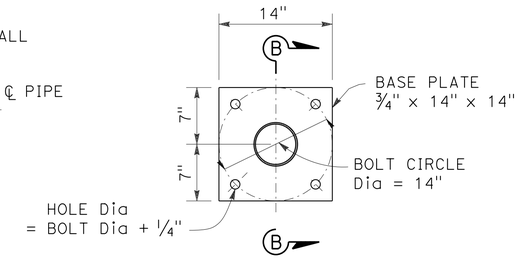

PLAN VIEW

BASE PLATE DETAILS

NOTE:
RESIN CAPSULE ANCHORAGE IS SUBJECT TO APPROVAL OF ENGINEER. INSTALLATION PROCEDURES SHALL COMPLY WITH MANUFACTURER'S INSTRUCTIONS.

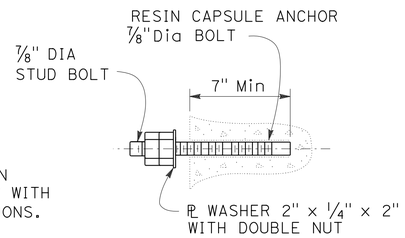

RESIN CAPSULE BOLT ANCHORAGE

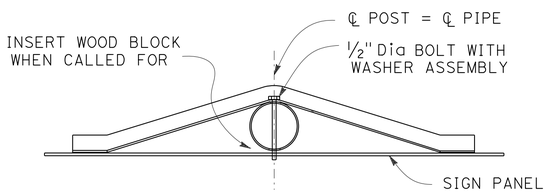

PLAN

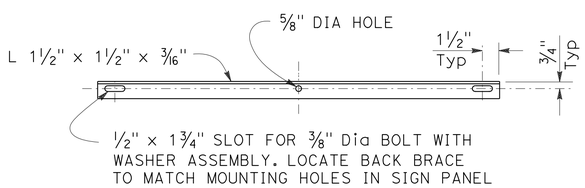

ELEVATION

BACK BRACE DETAILS

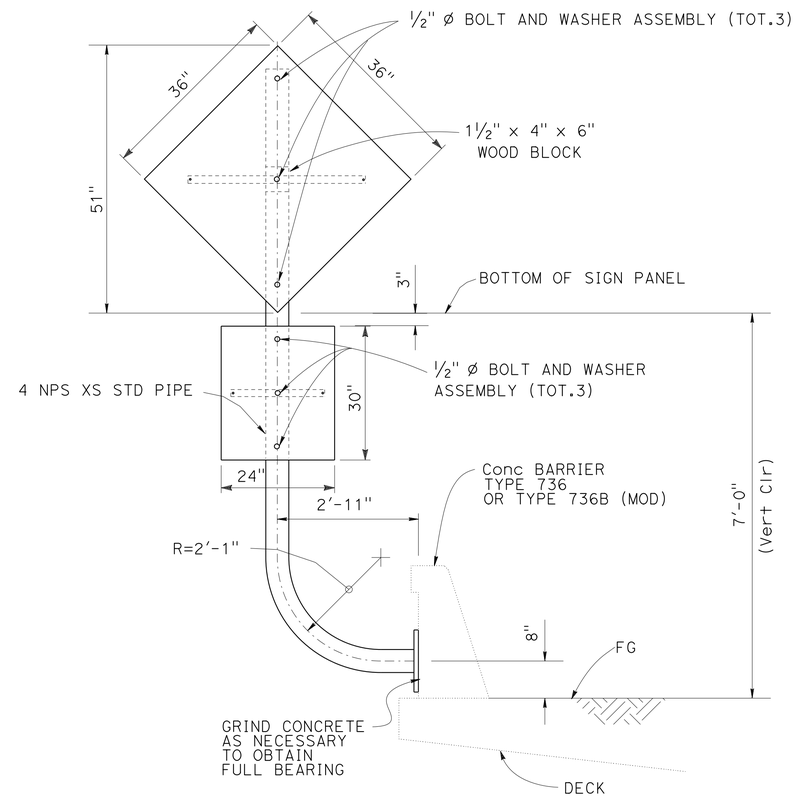

J-POLE BARRIER MOUNTED DETAILS

NOTES:

1. FOR DETAILS NOT SHOWN SEE "STANDARD PLANS".
2. ALL BOLTS SHALL HAVE A WASHER UNDER THE NUT. BOLTS THROUGH POST SHALL BE 1/2" DIAMETER. BOLTS THROUGH SIGN PANEL AND BACK BRACE SHALL BE 3/8" DIAMETER. REAM HOLES IN SIGN AS REQUIRED.
3. ALL STEEL SHALL BE GALVANIZED AFTER FABRICATION.
4. WASHER ASSEMBLY CONSISTS OF TWO OVERSIZE WASHERS, NUT AND JAM NUT.
5. 4 NPS XS PIPE SHALL BE "ASTM A53 TYPE E, GRADE B" STEEL.

APPROVED FOR SIGN WORK ONLY

NO SCALE

SIGN DETAILS

SD-4

STATE OF CALIFORNIA - DEPARTMENT OF TRANSPORTATION
Caltrans
CONSULTANT FUNCTIONAL SUPERVISOR: GERARD LUMABAS
CALCULATED-DESIGNED BY: MATTHEW P. MAECHLER
CHECKED BY: PAUL KOSINSKI
REVISED BY
DATE REVISED

LAST REVISION 08-20-12
DATE PLOTTED => 12-SEP-2012
TIME PLOTTED => 16:20

Dist	COUNTY	ROUTE	POST MILES TOTAL PROJECT	SHEET No.	TOTAL SHEETS
11	SD	805	4.7/5.6	305	650

REGISTERED CIVIL ENGINEER 05-30-12 DATE

06-25-12
PLANS APPROVAL DATE

REGISTERED PROFESSIONAL ENGINEER
MATTHEW P. MAECHLER
No. C78172
Exp. 09-30-13
CIVIL
STATE OF CALIFORNIA

THE STATE OF CALIFORNIA OR ITS OFFICERS OR AGENTS SHALL NOT BE RESPONSIBLE FOR THE ACCURACY OR COMPLETENESS OF SCANNED COPIES OF THIS PLAN SHEET.

DOKKEN ENGINEERING
5675 RUFFIN Rd
SUITE 250
SAN DIEGO, CA 92123

SANDAG
401 B St
SUITE 800
SAN DIEGO, CA 92101

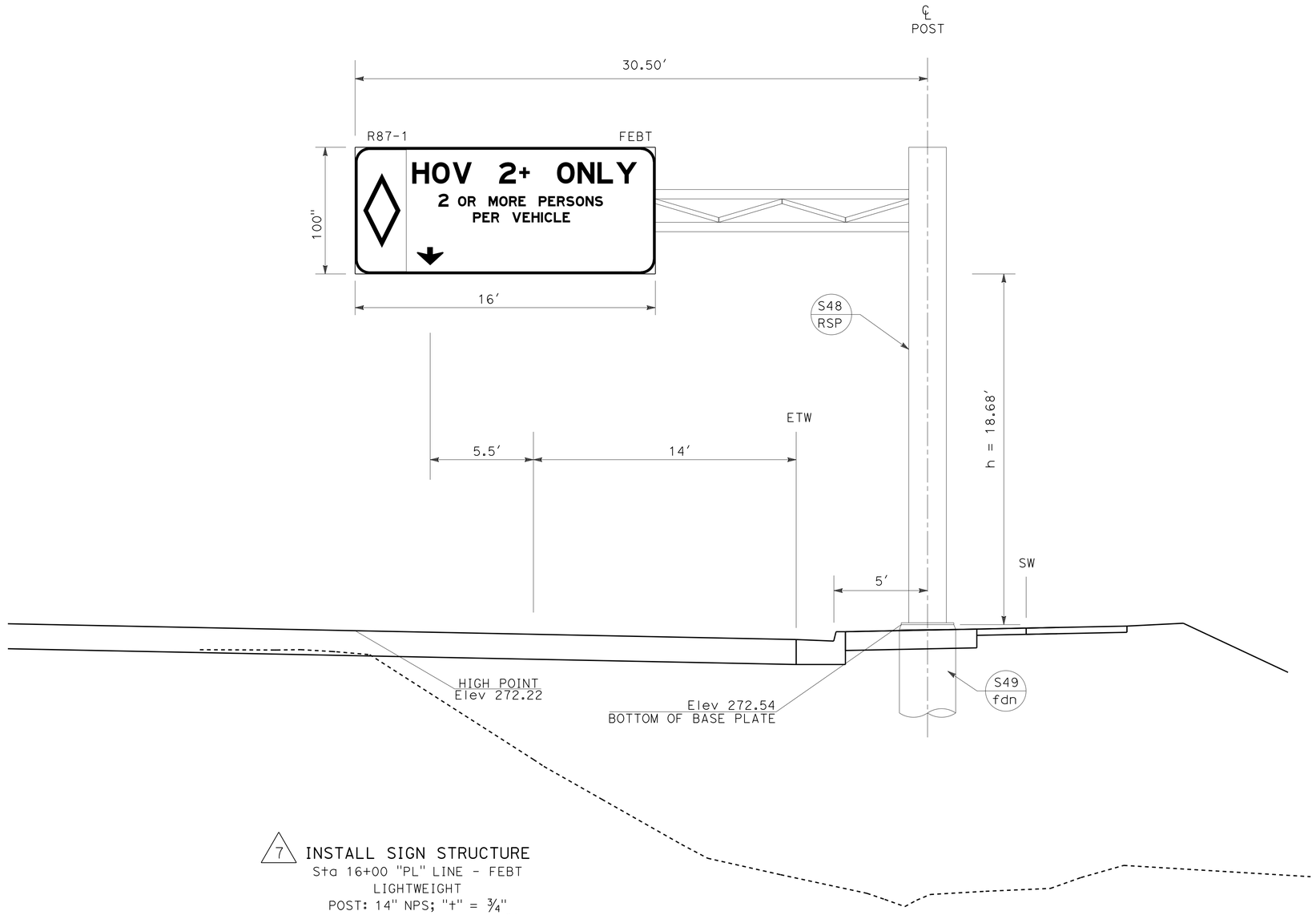

7 INSTALL SIGN STRUCTURE
Sta 16+00 "PL" LINE - FEBT
LIGHTWEIGHT
POST: 14" NPS; "t" = ¾"
MAST ARM: TS 10 x 6 x ⅜
SIGN TYPE C-2
TYPE A LAMINATED PANEL
ILLUMINATION REQUIRED

APPROVED FOR SIGN WORK ONLY

NO SCALE

SIGN DETAILS

SD-5

STATE OF CALIFORNIA - DEPARTMENT OF TRANSPORTATION
Caltrans

CONSULTANT FUNCTIONAL SUPERVISOR: GERARD LUMABAS
CALCULATED-DESIGNED BY: MATTHEW P. MAECHLER
CHECKED BY: PAUL KOSINSKI
REVISED BY
DATE REVISED

LAST REVISION 06-06-12
DATE PLOTTED => 12-SEP-2012
TIME PLOTTED => 16:20

Dist	COUNTY	ROUTE	POST MILES TOTAL PROJECT	SHEET No.	TOTAL SHEETS
11	SD	805	4.7/5.6	306	650

REGISTERED CIVIL ENGINEER 05-30-12 DATE

06-25-12
PLANS APPROVAL DATE

REGISTERED PROFESSIONAL ENGINEER MATTHEW P. MAECHLER No. C78172 Exp. 09-30-13 CIVIL STATE OF CALIFORNIA

THE STATE OF CALIFORNIA OR ITS OFFICERS OR AGENTS SHALL NOT BE RESPONSIBLE FOR THE ACCURACY OR COMPLETENESS OF SCANNED COPIES OF THIS PLAN SHEET.

DOKKEN ENGINEERING
5675 RUFFIN Rd
SUITE 250
SAN DIEGO, CA 92123

SANDAG
401 B St
SUITE 800
SAN DIEGO, CA 92101

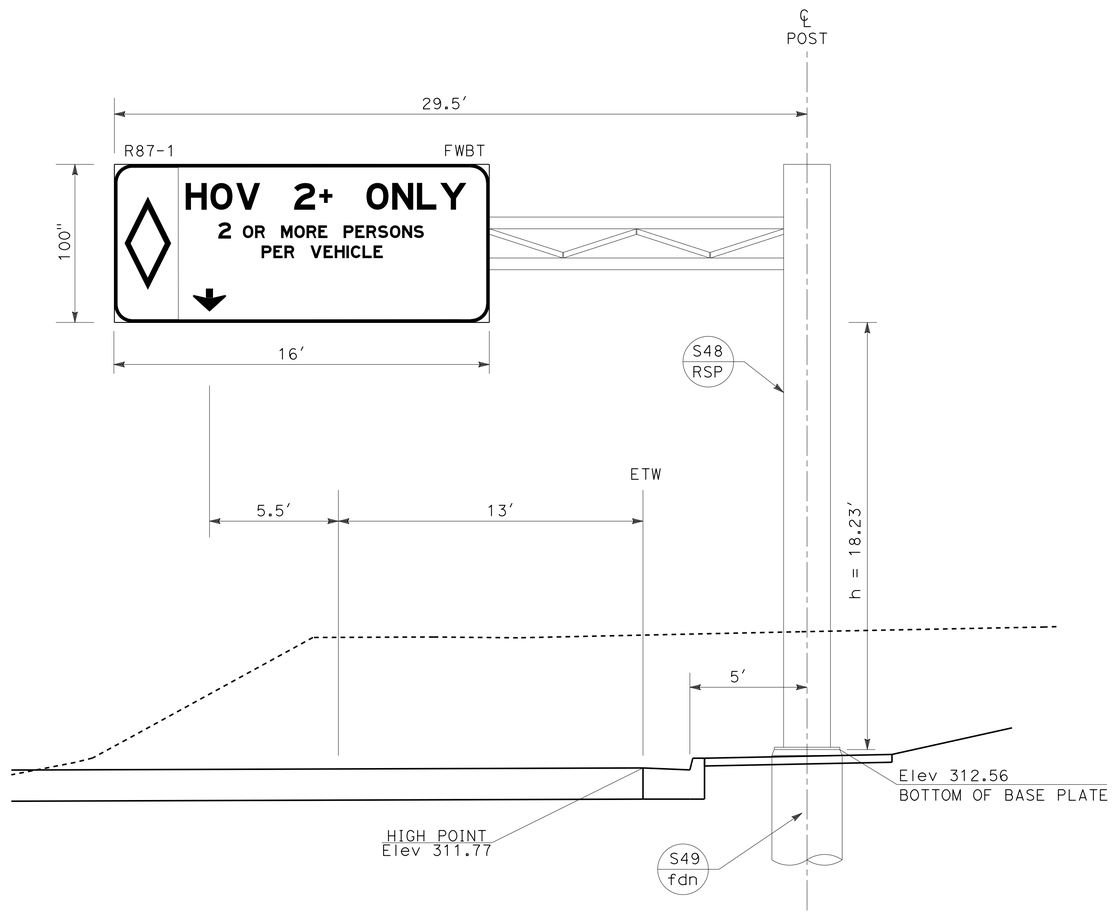

8 INSTALL SIGN STRUCTURE

Sta 25+67 "PL" LINE - FWBT
LIGHTWEIGHT
POST: 14" NPS; "t" = ¾"
MAST ARM: TS 10 x 6 x ⅜
SIGN TYPE C-2
TYPE A LAMINATED PANEL
ILLUMINATION REQUIRED

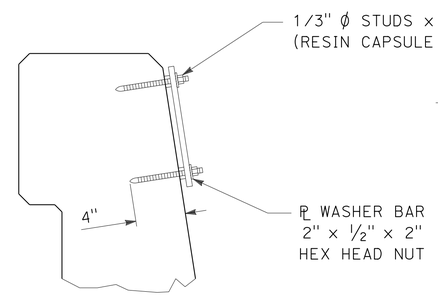

ANCHORAGE DETAIL

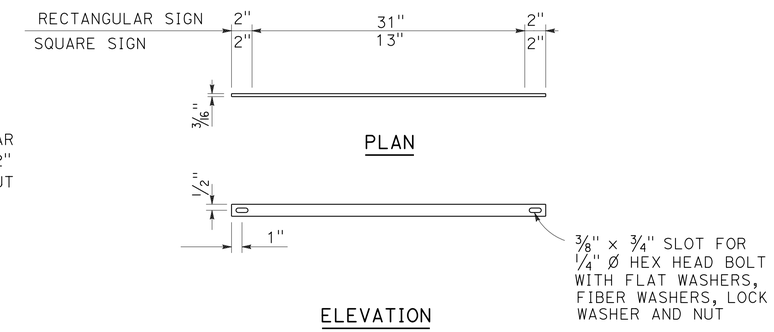

BACK BRACE DETAILS

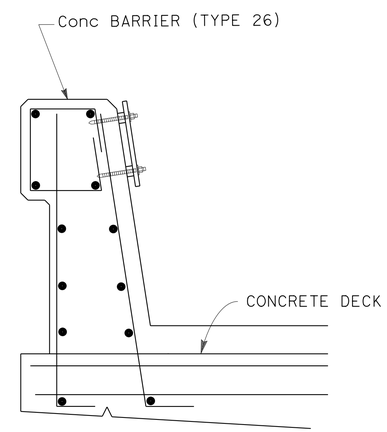

SECTION

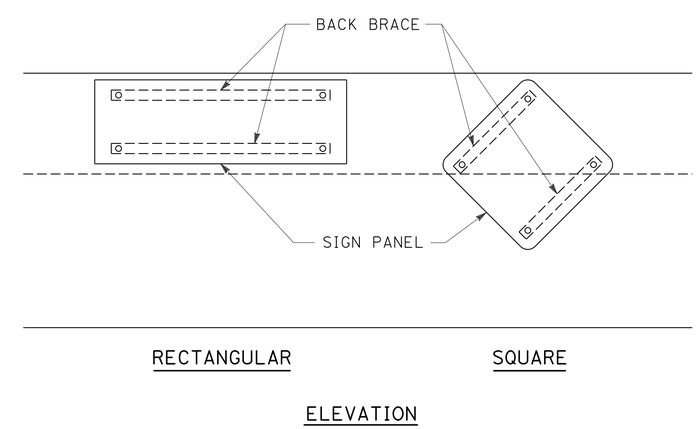

ELEVATION

FLUSH MOUNTED SIGN

SIGN 203

SIGN DETAILS

APPROVED FOR SIGN WORK ONLY

NO SCALE

SD-6

STATE OF CALIFORNIA - DEPARTMENT OF TRANSPORTATION
Caltrans

CONSULTANT FUNCTIONAL SUPERVISOR: GERARD LUMABAS
CALCULATED-DESIGNED BY: MATTHEW P. MAECHLER
CHECKED BY: PAUL KOSINSKI
REVISED BY
DATE REVISED

LAST REVISION 06-07-12
DATE PLOTTED => 12-SEP-2012
TIME PLOTTED => 16:20

Dist	COUNTY	ROUTE	POST MILES TOTAL PROJECT	SHEET No.	TOTAL SHEETS
11	SD	805	4.7/5.6	307	650

REGISTERED CIVIL ENGINEER 05-30-12 DATE

06-25-12
PLANS APPROVAL DATE

REGISTERED PROFESSIONAL ENGINEER MATTHEW P. MAECHLER No. C78172 Exp. 09-30-13 CIVIL STATE OF CALIFORNIA

THE STATE OF CALIFORNIA OR ITS OFFICERS OR AGENTS SHALL NOT BE RESPONSIBLE FOR THE ACCURACY OR COMPLETENESS OF SCANNED COPIES OF THIS PLAN SHEET.

DOKKEN ENGINEERING
5675 RUFFIN Rd
SUITE 250
SAN DIEGO, CA 92123

SANDAG
401 B St
SUITE 800
SAN DIEGO, CA 92101

1 Sta 293+75 "A1" LINE - FSBT

LEGEND				ARROW	
LINE No.	U/L	Caps	Num	Deg	LENGTH
1		8E	12E		
2	16/12E(M)				
3	16/12E(M)				
4				270	16.5

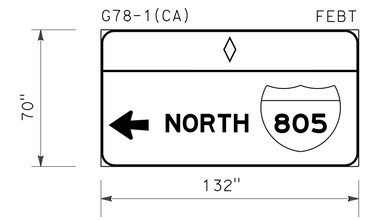

3 Sta 18+50 "PL" LINE - FEBT

LEGEND				ARROW	
LINE No.	U/L	Caps	Num	Deg	LENGTH
1		12E	15	180	16.5
2					
3					

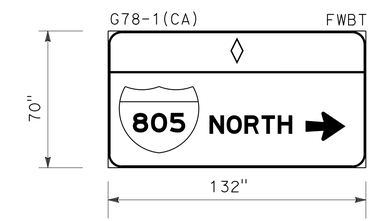

4 Sta 22+29 "PL" LINE - FWBT

LEGEND				ARROW	
LINE No.	U/L	Caps	Num	Deg	LENGTH
1		12E	15	0	16.5
2					
3					

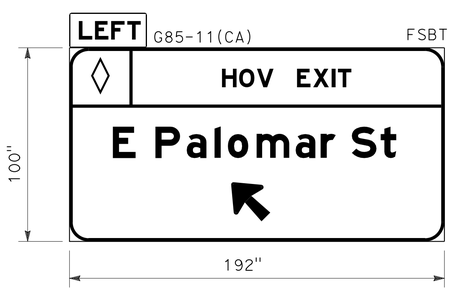

5A Sta 314+00 "A1" LINE - FSBT

LEGEND				ARROW	
LINE No.	U/L	Caps	Num	Deg	LENGTH
1		12E			
2	16/12E(M)			135	25

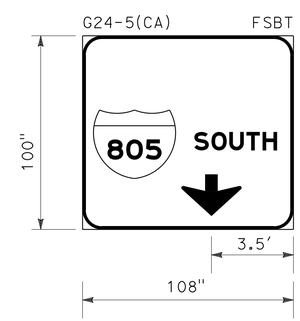

5B Sta 314+00 "A1" LINE - FSBT

LEGEND				ARROW	
LINE No.	U/L	Caps	Num	Deg	LENGTH
1		12E	15		
2				270	25

APPROVED FOR SIGN WORK ONLY

NO SCALE

SIGN DETAILS

SD-7

STATE OF CALIFORNIA - DEPARTMENT OF TRANSPORTATION
Caltrans

CONSULTANT FUNCTIONAL SUPERVISOR: GERARD LUMABAS
CALCULATED-DESIGNED BY: MATTHEW P. MAECHLER
CHECKED BY: PAUL KOSINSKI
REVISED BY / DATE REVISED

LAST REVISION 06-07-12
DATE PLOTTED => 12-SEP-2012
TIME PLOTTED => 16:20

Dist	COUNTY	ROUTE	POST MILES TOTAL PROJECT	SHEET No.	TOTAL SHEETS
11	SD	805	4.7/5.6	308	650

REGISTERED CIVIL ENGINEER 05-30-12 DATE

06-25-12
PLANS APPROVAL DATE

REGISTERED PROFESSIONAL ENGINEER MATTHEW P. MAECHLER No. C78172 Exp. 09-30-13 CIVIL STATE OF CALIFORNIA

THE STATE OF CALIFORNIA OR ITS OFFICERS OR AGENTS SHALL NOT BE RESPONSIBLE FOR THE ACCURACY OR COMPLETENESS OF SCANNED COPIES OF THIS PLAN SHEET.

DOKKEN ENGINEERING
5675 RUFFIN Rd
SUITE 250
SAN DIEGO, CA 92123

SANDAG
401 B St
SUITE 800
SAN DIEGO, CA 92101

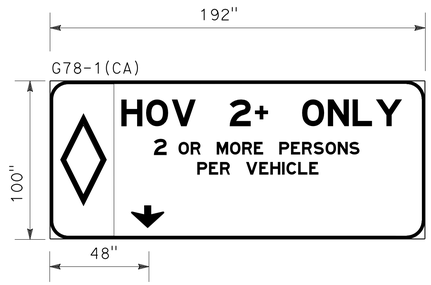

8 Sta 25+67 "PL" LINE - FWBT

LEGEND				ARROW	
LINE No.	U/L	Caps	Num	Deg	LENGTH
1		12D			
2		8E	10E		
3				270	16½

SDGE Mod

SDGE ACCESS ONLY

NO PARKING

VIOLATORS WILL BE TOWED

V.C. _____

24"

30"

LEGEND				ARROW	
LINE No.	U/L	Caps	Num	Deg	LENGTH
1		3E			
2		3E			
3		3E			
4		3E			

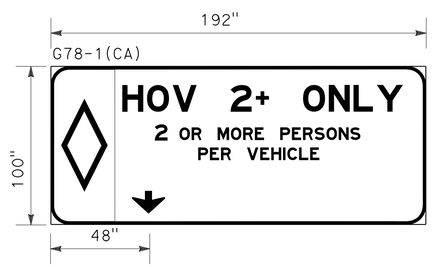

7 Sta 16+00 "PL" LINE - FEBT

LEGEND				ARROW	
LINE No.	U/L	Caps	Num	Deg	LENGTH
1		12D			
2		8E	10E		
3				270	16½

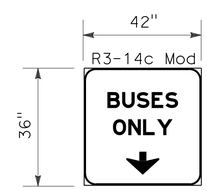

R3-14c Mod

LEGEND				ARROW	
LINE No.	U/L	Caps	Num	Deg	LENGTH
1		8E			
2		8E			
3				270	8

SIGN DETAILS

APPROVED FOR SIGN WORK ONLY

NO SCALE

SD-8

STATE OF CALIFORNIA - DEPARTMENT OF TRANSPORTATION
Caltrans

CONSULTANT FUNCTIONAL SUPERVISOR: GERARD LUMABAS
CALCULATED-DESIGNED BY: MATTHEW P. MAECHLER
CHECKED BY: PAUL KOSINSKI
REVISED BY
DATE REVISED

LAST REVISION 06-07-12
DATE PLOTTED => 12-SEP-2012
TIME PLOTTED => 16:20

Dist	COUNTY	ROUTE	POST MILES TOTAL PROJECT	SHEET No.	TOTAL SHEETS
11	SD	805	4.7/5.6	309	650

REGISTERED CIVIL ENGINEER 05-30-12 DATE

06-25-12
PLANS APPROVAL DATE

REGISTERED PROFESSIONAL ENGINEER MATTHEW P. MAECHLER No. C78172 Exp 09-30-13 CIVIL STATE OF CALIFORNIA

THE STATE OF CALIFORNIA OR ITS OFFICERS OR AGENTS SHALL NOT BE RESPONSIBLE FOR THE ACCURACY OR COMPLETENESS OF SCANNED COPIES OF THIS PLAN SHEET.

DOKKEN ENGINEERING
5675 RUFFIN Rd
SUITE 250
SAN DIEGO, CA 92123

SANDAG
401 B St
SUITE 800
SAN DIEGO, CA 92101

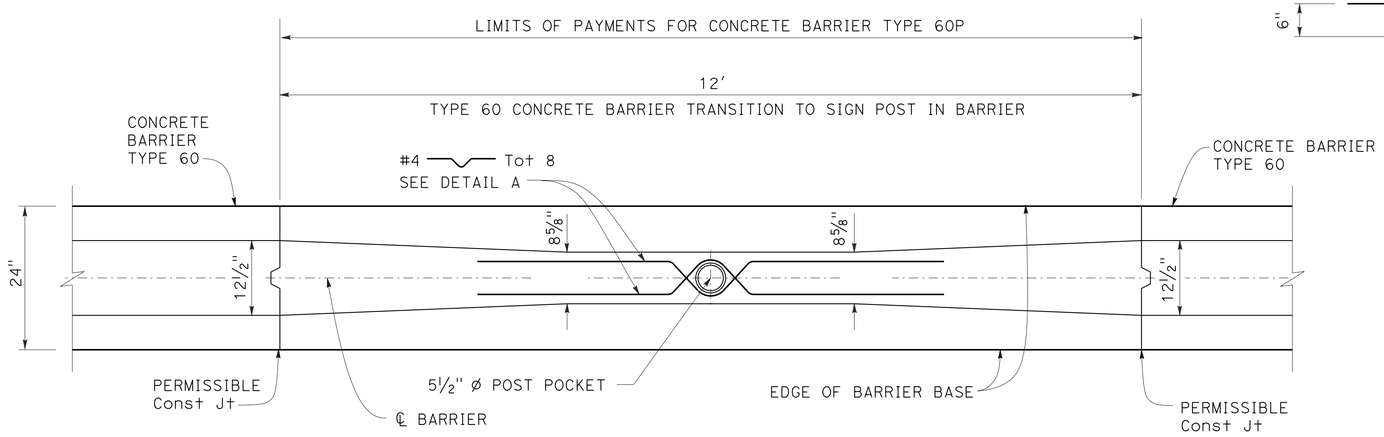

PLAN

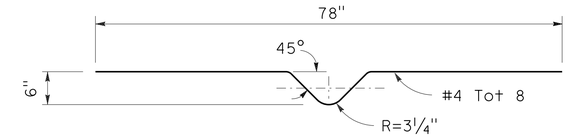

DETAIL A

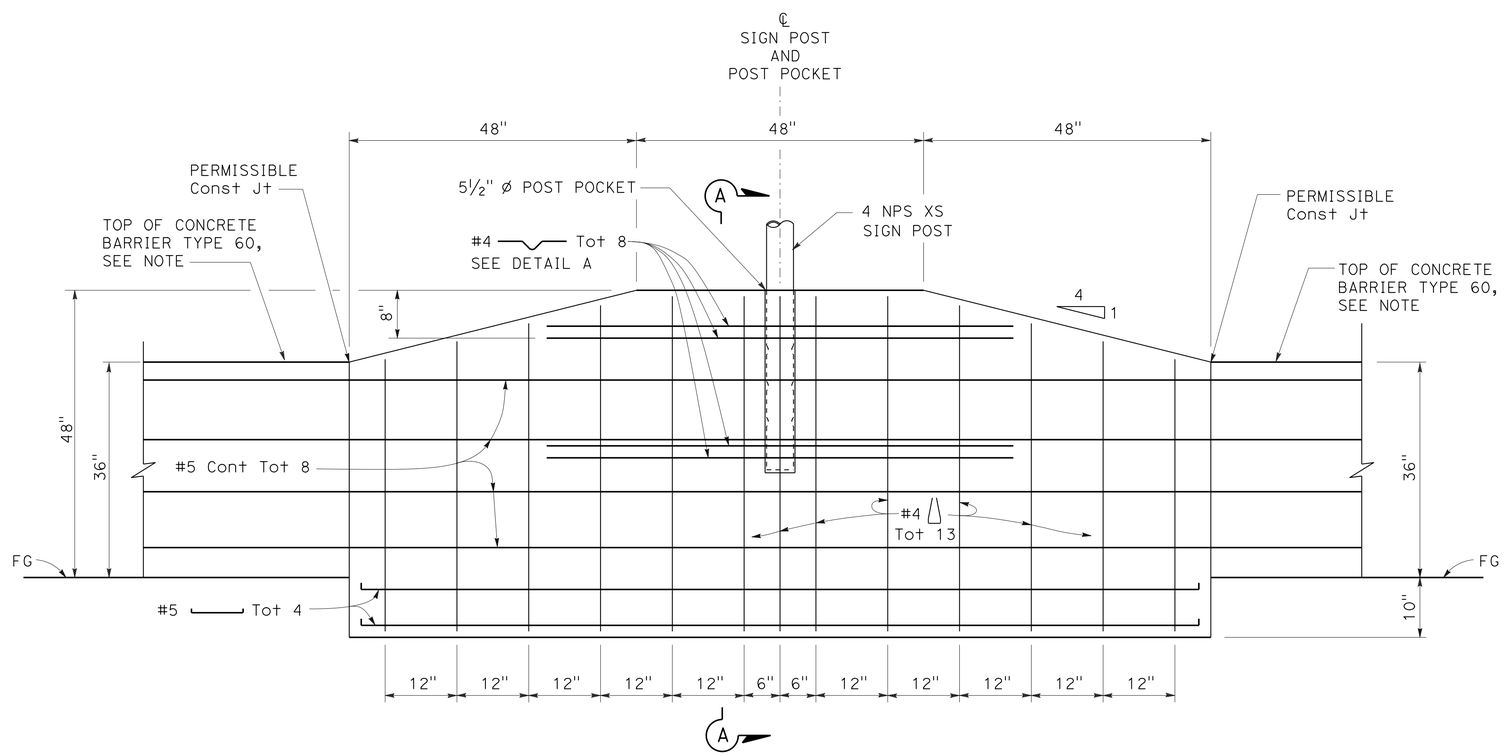

ELEVATION

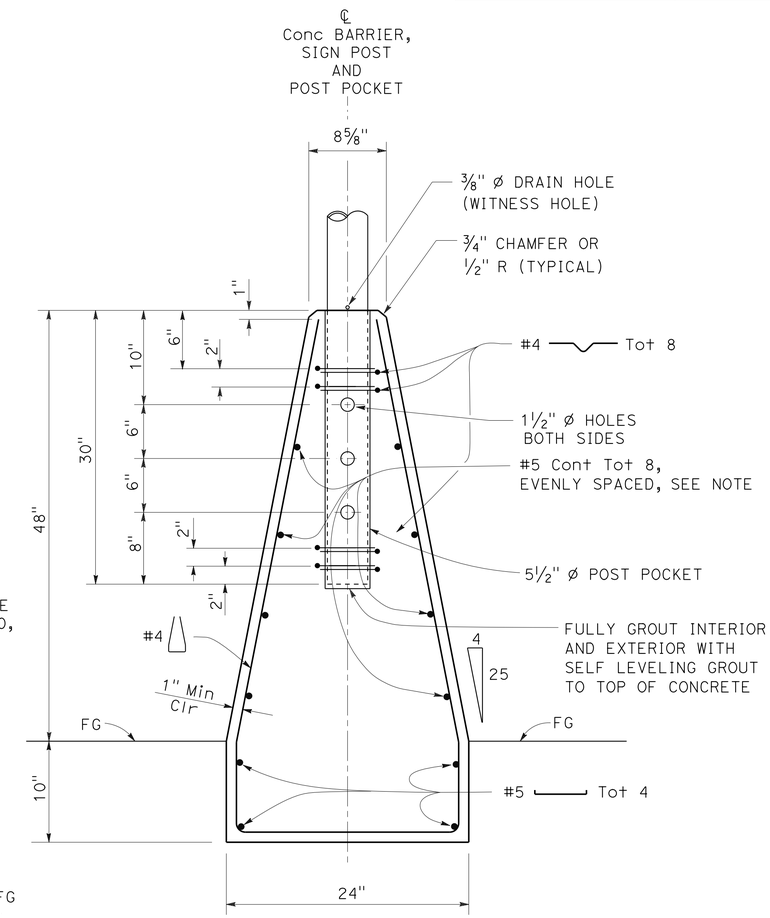

SECTION A-A

NOTES:

1. SEE STANDARD PLAN A76A FOR TYPE 60 CONCRETE BARRIER DETAIL.
2. THE CONTRACTOR SHALL VERIFY ALL CONTROLLING FIELD DIMENSIONS BEFORE ORDERING OR FABRICATING ANY MATERIAL.

APPROVED FOR SIGN WORK ONLY

CONCRETE BARRIER TYPE 60P
RAIL MOUNTED SIGN (BARRIER MOUNTED)
SIGN DETAILS

NO SCALE

SD-9

STATE OF CALIFORNIA - DEPARTMENT OF TRANSPORTATION
Caltrans

CONSULTANT FUNCTIONAL SUPERVISOR: GERARD LUMABAS
CALCULATED-DESIGNED BY: MATTHEW P. MAECHLER
CHECKED BY: PAUL KOSINSKI
REVISED BY
DATE REVISED

LAST REVISION 06-07-12
DATE PLOTTED => 12-SEP-2012
TIME PLOTTED => 16:20

Dist	COUNTY	ROUTE	POST MILES TOTAL PROJECT	SHEET No.	TOTAL SHEETS
11	SD	805	4.7/5.6	310	650

REGISTERED CIVIL ENGINEER 05-30-12 DATE

06-25-12
PLANS APPROVAL DATE

REGISTERED PROFESSIONAL ENGINEER MATTHEW P. MAECHLER No. C78172 Exp. 09-30-13 CIVIL STATE OF CALIFORNIA

THE STATE OF CALIFORNIA OR ITS OFFICERS OR AGENTS SHALL NOT BE RESPONSIBLE FOR THE ACCURACY OR COMPLETENESS OF SCANNED COPIES OF THIS PLAN SHEET.

DOKKEN ENGINEERING
5675 RUFFIN Rd
SUITE 250
SAN DIEGO, CA 92123

SANDAG
401 B St
SUITE 800
SAN DIEGO, CA 92101

NOTES:

1. FEDERAL MANUAL ON TRAFFIC CONTROL DEVICES (MUTCD) SIGN CODES ARE SHOWN UNLESS DESIGNATED (CA) INDICATING STANDARD CALIFORNIA SIGN SPECIFICATIONS.
2. MINIMUM POST LENGTHS WERE CALCULATED ASSUMING A LEVEL GROUND SURFACE FROM THE EP. ENSURE C DIMENSION IS MET. POST LENGTHS MAY VARY DUE TO SITE CONDITIONS.
3. EXACT LOCATIONS OF SIGNS AND POSTS SHALL BE DETERMINED BY THE ENGINEER.
4. REFER TO "FURNISH ROADSIDE SIGN PANEL" CHART FOR FURTHER INFORMATION.

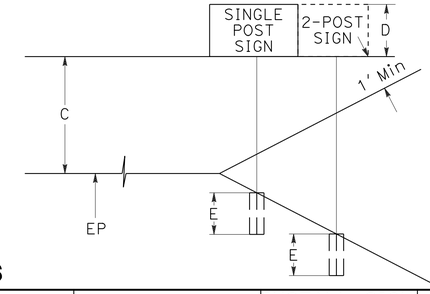

ROADSIDE SIGN QUANTITIES

SIGN No.	CODE	Sht No.	PANEL SIZE Horiz	PANEL SIZE Vert	D	C	E	MINIMUM POST LENGTH	POST SIZE 2" Galv STEEL	POST SIZE 4x4	POST SIZE 4x6	POST SIZE 6x6	POST SIZE 6x8	ONE POST	TWO POST	RELOCATE	REMOVE	INSTALL SIGN (MAST-ARM HANGER METHOD)	INSTALL SIGN (STRAP & SADDLE BRACKET METHOD)	METAL (ROADSIDE SIGN)	METAL (BARRIER MOUNTED SIGN)	REMARKS
			INCHES	INCHES	FEET	FEET	FEET	FEET						EA	EA	EA	EA	EA	EA	lb	lb	
101	R3-7	S1	-	-													1					
102	W9-2L		-	-													1					
103	R18A(CA)		66	48	4	7	4.5	15.5			X				1							
104	W4-7		60	60	7	7	4.5	18.5			X				1							
105	W4-7																1					
106	W4-2																1					
107	W4-2		36	36	4	7	4.5	15.5						1								
108	W4-7		36	36	4	7	4.5	15.5						1								
201	D11-1	S2	-	-													1					
202	R4-7		24	30																		
	TYPE N		18	18	4	2	4.5	10.5			X			1								
203	W1-7		48	24																		
	TYPE N		18	18																	20	FLUSH MOUNTED
204	R4-7		24	30																		
	TYPE N		18	18	4	2	4.5	10.5			X			1								
205	R3-7		30	30	2.5	7	3.5	13		X				1								
206	R9-3a		18	18						X									1			
207	R4-7		24	30																		
	TYPE N		18	18	4	2	4.5	10.5			X			1								
208	G92-1(CA)		36	36																		
	G27-1(CA)(805)		16	14																		
	M3-1		24	12																		
	M6-2		16	11	6	3	4.5	13.5			X			1								
209	G92-1(CA)		36	36																		
	G27-1(CA)(805)		16	14																		
	M3-1		24	12																		
	M6-2		16	11	6	3	4.5	13.5			X			1								
210	R5-10a		30	36	3																80	J-POLE MOUNTED
211	R61-9(CA)		36	30	2.5																60	60 P BARRIER MOUNTED
212	MTS		-	-												1						
213	R61-9(CA)		36	30																	80	J-POLE MOUNTED
214	R5-10c		24	12																	80	J-POLE MOUNTED
215	R5-1		30	30																		
	R5-1a		36	24	4.5	7	4.5	16			X			1								
216	R5-1		30	30																		
	R5-1a		36	24																		
	R6-1R		36	12																		
	R6-1L		36	12																60		4 NPS XS
217	G86-5(CA)		-	-												1						
218	R1-1		-	-																		
	R1-4		-	-													1					
219	LOCAL		24	30													1					
220	R4-7		18	18																		
	TYPE N		36	30	4	2	4.5	10.5			X			1								
221	R61-3(CA)		36	30														1				
222	R61-9(CA)																	1				
													SUBTOTAL SQ-1	10	2	2	7	2	1	60	320	

SIGN QUANTITIES

SQ-1

STATE OF CALIFORNIA - DEPARTMENT OF TRANSPORTATION
Caltrans

CONSULTANT FUNCTIONAL SUPERVISOR: GERARD LUMABAS
CALCULATED-DESIGNED BY: MATTHEW P. MAECHLER
CHECKED BY: PAUL KOSINSKI
REVISED BY
DATE REVISED

LAST REVISION 06-07-12
DATE PLOTTED => 12-SEP-2012
TIME PLOTTED => 16:20

Dist	COUNTY	ROUTE	POST MILES TOTAL PROJECT	SHEET No.	TOTAL SHEETS
11	SD	805	4.7/5.6	311	650

REGISTERED CIVIL ENGINEER 05-30-12 DATE

06-25-12
PLANS APPROVAL DATE

REGISTERED PROFESSIONAL ENGINEER MATTHEW P. MAECHLER No. C78172 Exp. 09-30-13 CIVIL STATE OF CALIFORNIA

THE STATE OF CALIFORNIA OR ITS OFFICERS OR AGENTS SHALL NOT BE RESPONSIBLE FOR THE ACCURACY OR COMPLETENESS OF SCANNED COPIES OF THIS PLAN SHEET.

DOKKEN ENGINEERING
5675 RUFFIN Rd
SUITE 250
SAN DIEGO, CA 92123

SANDAG
401 B St
SUITE 800
SAN DIEGO, CA 92101

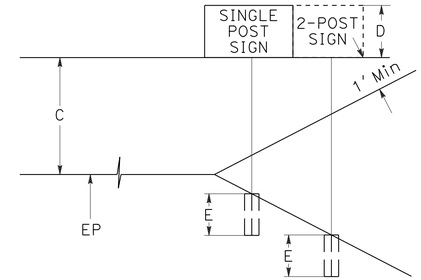

ROADSIDE SIGN QUANTITIES

SIGN No.	CODE	Sht No.	PANEL SIZE Horiz	PANEL SIZE Vert	D	C	E	MINIMUM POST LENGTH	POST SIZE 2" Galv STEEL	POST SIZE 4x4	POST SIZE 4x6	POST SIZE 6x6	POST SIZE 6x8	ONE POST	TWO POST	RELOCATE	REMOVE	INSTALL SIGN (MAST-ARM HANGER METHOD)	INSTALL SIGN (STRAP & SADDLE BRACKET METHOD)	METAL (ROADSIDE SIGN)	METAL (BARRIER MOUNTED SIGN)	REMARKS
			INCHES	INCHES	FEET	FEET	FEET	FEET						EA	EA	EA	EA	EA	EA	lb	lb	
223	R73-6(CA)	S-2	24	24														1				
224	R3-18		24	24														1				
225	G7-1(CA)		36	18														1				NACION St
226	R94(CA)Mod		36	30															1			
227	G7-1(CA)		36	18														1				E PALOMAR St
228	SDGE Mod		36	36															1			
229	R3-11c		12	18	4	2	3.5	9.5		X				1								
230	R9-3a		12	18	4	2	3.5	9.5		X				1								
231	R9-3a		12	18	4	2	3.5	9.5		X				1								
232	R9-3a		12	18	4	2	3.5	9.5		X				1								
233	R6-1R		36	12																		
	R6-1R		36	12																	60	60 P BARRIER MOUNTED
301	W3-3	S-3	36	36																	60	60 C Mod BARRIER MOUNTED
302	W4-2R		36	36																		
	R4-1		24	30																	80	J-POLE MOUNTED
303	R61-9(CA)		36	30																	60	60 P BARRIER MOUNTED
304	W4-3		36	36																	60	60 C Mod BARRIER MOUNTED
305	R61-9		36	30																	80	J-POLE MOUNTED
306	G84-1(CA)		36	54																	60	60 C Mod BARRIER MOUNTED
307	TYPE R		24	30															1			
401	G86-5(CA)	S-4	120	90																		
	D9-2		18	18	9	7	6	22					X		1							
402	G86-5(CA)		-	-																		
	D9-2		-	-													1					
501	R4-7		24	30																		
	TYPE N	S-5	18	18					1					1								
502	R4-7		24	30																		
	TYPE N		18	18					1					1								
503	LOCAL 1		36	12																		
	R1-1		24	24																		
	R1-4		18	6					1								1					
504	R81(CA)		-	-													1					
505	LOCAL 2		-	-																		
	R1-1		-	-													1					
506	LOCAL 2		36	12																		
	R1-1		24	24					1					1								
507	R81(CA)		12	8					1					1								
508	W4-2R		12	8																		
	R4-1		12	30					1					1								
509	LOCAL 3		36	12																		
	W14-2		30	30					1					1								
510	LOCAL 3		-	-																		
	W14-2		-	-													1					
511	R2-1(30)		18	24																		
	D11-1		18	18					1					1								
512	R2-1(30)		-	-																		
	D11-1		-	-													1					
													SUBTOTAL SQ-2	11	1	0	6	4	3	0	460	

SIGN QUANTITIES

SQ-2

STATE OF CALIFORNIA - DEPARTMENT OF TRANSPORTATION
Caltrans

CONSULTANT FUNCTIONAL SUPERVISOR: GERARD LUMABAS
CALCULATED-DESIGNED BY: MATTHEW P. MAECHLER
CHECKED BY: PAUL KOSINSKI
REVISED BY
DATE REVISED

LAST REVISION 06-07-12
DATE PLOTTED => 12-SEP-2012
TIME PLOTTED => 16:20

Dist	COUNTY	ROUTE	POST MILES TOTAL PROJECT	SHEET No.	TOTAL SHEETS
11	SD	805	4.7/5.6	312	650

REGISTERED CIVIL ENGINEER 05-30-12 DATE

06-25-12
PLANS APPROVAL DATE

REGISTERED PROFESSIONAL ENGINEER MATTHEW P. MAECHLER No. C78172 Exp. 09-30-13 CIVIL STATE OF CALIFORNIA

THE STATE OF CALIFORNIA OR ITS OFFICERS OR AGENTS SHALL NOT BE RESPONSIBLE FOR THE ACCURACY OR COMPLETENESS OF SCANNED COPIES OF THIS PLAN SHEET.

DOKKEN ENGINEERING
5675 RUFFIN Rd
SUITE 250
SAN DIEGO, CA 92123

SANDAG
401 B St
SUITE 800
SAN DIEGO, CA 92101

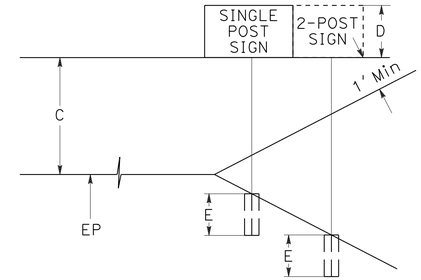

ROADSIDE SIGN QUANTITIES

SIGN No.	CODE	Sht No.	PANEL SIZE Horiz	PANEL SIZE Vert	D	C	E	MINIMUM POST LENGTH	POST SIZE 2" Galv STEEL	POST SIZE 4x4	POST SIZE 4x6	POST SIZE 6x6	POST SIZE 6x8	ONE POST	TWO POST	RELOCATE	REMOVE	INSTALL SIGN (MAST-ARM HANGER METHOD)	INSTALL SIGN (STRAP & SADDLE BRACKET METHOD)	METAL (ROADSIDE SIGN)	METAL (BARRIER MOUNTED SIGN)	REMARKS
			INCHES	INCHES	FEET	FEET	FEET	FEET						EA	EA	EA	EA	EA	EA	lb	lb	
513	W4-2R	S-5	30	30																		
	R4-1		12	30					1					1								
514	W4-2		-	-													1					
515	MTS		-	-													1					
516	R1-1		-	-																		
	R1-4		-	-													1					
517	R61-5(CA)Mod		36	30														1				E PALOMAR St
518	G7-1(CA)		36	18														1				NACION St
519	G7-1(CA)		36	18														1				
601	R6-1R	S-6	30	24					1					1								
602	R6-1R		30	24					1					1								
603	R1-2		36	36					1					1								
604	R1-2		36	36					1					1								
605	W11-2		30	30																		
	W16-7P		24	12					1					1								
606	W2-6		24	24					1					1								
607	W3-1		-	-													1					
608	R3-7R		30	30					1					1								
609	R4-7		24	30																		
	TYPE N		18	18					1					1								
610	R4-7		24	30																		
	TYPE N		18	18					1					1								
611	G7-1(CA)		36	18														1				
612	R3-7R		30	30					1					1								
613	W2-6		24	24					1					1								
614	W11-2		30	30																		
	W16-7p		24	12					1					1								
615	R1-2		36	36					1					1								
616	W2-6		24	24					1					1								
617	W11-2		30	30																		
	W16-7p		24	12					1					1								
618	R1-2		36	36					1					1								
619	R1-2		36	36					1					1								
620	R6-1R		30	24					1					1								
621	R1-2		36	36					1					1								
622	W2-6		24	24					1					1								
623	W11-2		30	30																		
	W16-7p		24	12					1					1								
624	R1-2		36	36					1					1								
625	R6-4R		30	24					1					1								
626	R1-2		36	36					1					1								
627	R100B(CA)		24	24					1					1								
													SUBTOTAL SQ-3	26	0	0	4	4	0	0	0	

SIGN QUANTITIES

SQ-3

STATE OF CALIFORNIA - DEPARTMENT OF TRANSPORTATION
Caltrans

CONSULTANT FUNCTIONAL SUPERVISOR: GERARD LUMABAS
CALCULATED-DESIGNED BY: MATTHEW P. MAECHLER
CHECKED BY: PAUL KOSINSKI
REVISED BY
DATE REVISED

LAST REVISION 06-07-12
DATE PLOTTED => 12-SEP-2012
TIME PLOTTED => 16:20

Dist	COUNTY	ROUTE	POST MILES TOTAL PROJECT	SHEET No.	TOTAL SHEETS
11	SD	805	4.7/5.6	313	650

REGISTERED CIVIL ENGINEER 05-30-12 DATE

06-25-12
PLANS APPROVAL DATE

REGISTERED PROFESSIONAL ENGINEER MATTHEW P. MAECHLER No. C78172 Exp. 09-30-13 CIVIL STATE OF CALIFORNIA

THE STATE OF CALIFORNIA OR ITS OFFICERS OR AGENTS SHALL NOT BE RESPONSIBLE FOR THE ACCURACY OR COMPLETENESS OF SCANNED COPIES OF THIS PLAN SHEET.

DOKKEN ENGINEERING
5675 RUFFIN Rd
SUITE 250
SAN DIEGO, CA 92123

SANDAG
401 B St
SUITE 800
SAN DIEGO, CA 92101

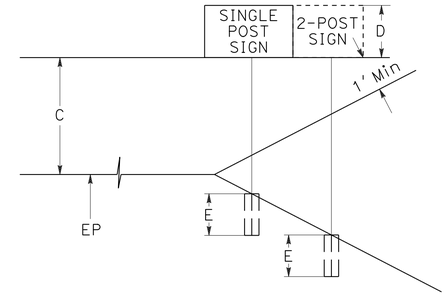

ROADSIDE SIGN QUANTITIES

SIGN No.	CODE	Sht No.	PANEL SIZE Horiz	PANEL SIZE Vert	D	C	E	MINIMUM POST LENGTH	POST SIZE 2" Galv STEEL	4x4	4x6	6x6	6x8	ONE POST	TWO POST	RELOCATE	REMOVE	INSTALL SIGN (MAST-ARM HANGER METHOD)	INSTALL SIGN (STRAP & SADDLE BRACKET METHOD)	METAL (ROADSIDE SIGN)	METAL (BARRIER MOUNTED SIGN)	REMARKS
			INCHES	INCHES	FEET	FEET	FEET	FEET						EA	EA	EA	EA	EA	EA	lb	lb	
628	G7-1(CA)	S-6	36	18														1				
629	G7-1(CA)		36	12															1			
630	SDGE Mod		36	36															1			
631	R61-22(CA)Mod		36	30														1				
632	R61-26(CA)Mod		36	30														1				
633	R1-1		24	24																		
	R1-4		18	6													1					
634	R3-7R		30	30					1					1								
635	G7-1(CA)		36	18														1				
636	R99(CA)		12	18					1					1								
637	R99(CA)		12	18					1					1								
638	R99(CA)		12	18					1					1								
639	R99(CA)		12	18					1					1								
640	R99(CA)		12	18					1					1								
641	LOCAL 4		36	12																		
	R1-1		24	24													1					
642	R1-1		-	-																		
	R1-4		-	-													1					
643	W3-1		-	-													1					
644	R3-7		30	30															1			
645	R4-7		24	30																		
	TYPE N		18	18					1					1								
646	N-HOOD WATCH		-	-													1					
647	LOCAL 4		-	-																		
	R1-1		-	-													1					
648	R99(CA)		12	18					1					1								
650	R99(CA)		12	18					1					1								
650	R99(CA)		12	18					1					1								
651	R99(CA)		12	18					1					1								
652	R99(CA)		12	18					1					1								
653	R3-14c Mod		42	36														1				
654	R9-3a		12	18					1					1								
655	R9-3a		12	18					1					1								
656	MTS																					PROVIDED BY METROPOLITAN TRANSIT SYSTEM
657	MTS																					
701	R1-1	S-7	24	24					1					1								
702	SDGE		36	36					1					1								
703	SDGE		36	36					1					1								
704	SDGE		36	36					1					1								
705	SDGE		36	36					1					1								
706	SDGE		36	36					1					1								
SUBTOTAL SQ-1														10	2	2	7	2	1	60	320	
SUBTOTAL SQ-2														11	1	0	6	4	3	0	460	
SUBTOTAL SQ-3														26	0	0	4	4	0	0	0	
SUBTOTAL SQ-4														20	0	0	6	5	3	0	0	
TOTALS														67	3	2	23	15	7	60	780	

SIGN QUANTITIES

SQ-4

REVISED BY | DATE REVISED
MATTHEW P. MAECHLER | PAUL KOSINSKI
CALCULATED-DESIGNED BY | CHECKED BY
CONSULTANT FUNCTIONAL SUPERVISOR
GERARD LUMABAS
STATE OF CALIFORNIA - DEPARTMENT OF TRANSPORTATION
Caltrans

LAST REVISION 08-22-12 | DATE PLOTTED => 12-SEP-2012 | TIME PLOTTED => 16:20

Dist	COUNTY	ROUTE	POST MILES TOTAL PROJECT	SHEET No.	TOTAL SHEETS
11	SD	805	4.7/5.6	314	650

REGISTERED CIVIL ENGINEER 05-30-12 DATE

06-25-12
PLANS APPROVAL DATE

REGISTERED PROFESSIONAL ENGINEER MATTHEW P. MAECHLER No. C78172 Exp. 09-30-13 CIVIL STATE OF CALIFORNIA

THE STATE OF CALIFORNIA OR ITS OFFICERS OR AGENTS SHALL NOT BE RESPONSIBLE FOR THE ACCURACY OR COMPLETENESS OF SCANNED COPIES OF THIS PLAN SHEET.

DOKKEN ENGINEERING
5675 RUFFIN Rd
SUITE 250
SAN DIEGO, CA 92123

SANDAG
401 B St
SUITE 800
SAN DIEGO, CA 92101

NOTES:

1. FEDERAL MANUAL ON TRAFFIC CONTROL DEVICES (MUTCD) SIGN CODES ARE SHOWN UNLESS DESIGNATED BY (CA) INDICATING STANDARD CALIFORNIA SIGN SPECIFICATIONS.
2. BACKGROUND SHEETING IS DESIGNATED BY TYPE II, TYPE III, OR TYPE IV .
3. LEGEND IS DESIGNATED BY TYPE II, TYPE III, OR TYPE IV SHEETING.
4. REFER TO "ROADSIDE SIGN QUANTITIES" CHART FOR FURTHER INFORMATION.

FURNISH ROADSIDE SIGN PANEL

SIGN No.	CODE	Sht No.	PANEL SIZE Horiz (INCHES)	PANEL SIZE Vert (INCHES)	BACKGROUND SHEETING COLOR	BACKGROUND RETRO-REFLECTIVE ASTM TYPE	LEGEND SHEETING COLOR	LEGEND REFLECTIVE ASTM TYPE	LEGEND BLACK (NON-REFLECTIVE)	SIGN PANEL SINGLE SHEET ALUMINUM SQFT UNFRAMED 0.063 INCHES	SIGN PANEL SINGLE SHEET ALUMINUM SQFT UNFRAMED 0.080 INCHES	SIGN PANEL SINGLE SHEET ALUMINUM SQFT FRAMED 0.063 INCHES	SIGN PANEL PROTECTIVE OVERLAY PREMIUM FILM	REMARKS
103	R18A(CA)	S-1	66	48	WHITE	IV	BLACK		X			22	X	
104	W4-7		60	60	YELLOW	IV	BLACK		X			25	X	
107	W4-2		36	36	YELLOW	IV	BLACK		X	9.0			X	
108	W4-7		36	36	YELLOW	IV	BLACK		X	9.0			X	
202	R4-7	S-2	24	30	WHITE	IV	BLACK		X	5.0			X	
	TYPE N		18	18	YELLOW	IV				2.3			X	
203	W1-7		48	24	YELLOW	IV	BLACK		X		8		X	
	TYPE N		18	18	YELLOW	IV				2.3			X	
204	R4-7		24	30	WHITE	IV	BLACK		X	5.0			X	
	TYPE N		18	18	YELLOW	IV	YELLOW	IV		2.3			X	
205	R3-7		30	30	WHITE	IV	BLACK		X	6.3			X	
206	R3-9a		36	30	WHITE	IV	BLACK		X	7.5			X	
207	R4-7		24	30	WHITE	IV	BLACK		X	5.0			X	
	TYPE N		18	18	YELLOW	IV				2.3			X	
208	G92-1(CA)		36	36	GREEN	IV	WHITE/BLACK	IV	X	9.0			X	
	G27-1(CA)(805)		16	14	BLUE/RED	IV	WHITE	IV		1.6			X	
	M3-1		24	12	BLUE	IV	WHITE	IV		2.0			X	
	M6-2		16	11	BLUE	IV	WHITE	IV		1.2			X	
209	G92-1(CA)		36	36	GREEN	IV	WHITE/BLACK	IV	X	9.0			X	
	G27-1(CA)(805)		16	14	BLUE/RED	IV	WHITE	IV		1.6			X	
	M3-1		24	12	BLUE	IV	WHITE	IV		2.0			X	
	M6-2		16	11	BLUE	IV	WHITE	IV		1.2			X	
210	R5-10a		30	36	WHITE	IV	BLACK		X	7.5			X	
211	R61-9(CA)		36	30	WHITE	IV	BLACK		X	7.5			X	
213	R61-9(CA)		36	30	WHITE	IV	BLACK		X	7.5			X	
214	R5-10c		24	12	WHITE	IV	BLACK		X	2.0			X	
215	R5-1		30	30	RED	IV	WHITE	IV		6.3			X	
	R5-1a		36	24	RED	IV	WHITE	IV		6.0			X	
216	R5-1		30	30	RED	IV	WHITE	IV		6.3			X	
	R5-1a		36	24	RED	IV	WHITE	IV		6.0			X	
	R6-1R		36	12	WHITE	IV	BLACK		X	3.0			X	
	R6-1L		36	12	WHITE	IV	BLACK		X	3.0			X	
220	R4-7		24	30	WHITE	IV	BLACK		X	5.0			X	
	TYPE N		18	18	YELLOW	IV				2.3			X	
									SUBTOTAL SQ-5	146	8.0	47.0		

SIGN QUANTITIES

SQ-5

STATE OF CALIFORNIA - DEPARTMENT OF TRANSPORTATION
Caltrans

CONSULTANT FUNCTIONAL SUPERVISOR: GERARD LUMABAS
CALCULATED-DESIGNED BY: MATTHEW P. MAECHLER
CHECKED BY: PAUL KOSINSKI
REVISED BY
DATE REVISED

LAST REVISION 06-07-12
DATE PLOTTED => 12-SEP-2012
TIME PLOTTED => 16:20

Dist	COUNTY	ROUTE	POST MILES TOTAL PROJECT	SHEET No.	TOTAL SHEETS
11	SD	805	4.7/5.6	315	650

REGISTERED CIVIL ENGINEER 05-30-12 DATE

06-25-12
PLANS APPROVAL DATE

REGISTERED PROFESSIONAL ENGINEER MATTHEW P. MAECHLER No. C78172 Exp. 09-30-13 CIVIL STATE OF CALIFORNIA

THE STATE OF CALIFORNIA OR ITS OFFICERS OR AGENTS SHALL NOT BE RESPONSIBLE FOR THE ACCURACY OR COMPLETENESS OF SCANNED COPIES OF THIS PLAN SHEET.

DOKKEN ENGINEERING
5675 RUFFIN Rd
SUITE 250
SAN DIEGO, CA 92123

SANDAG
401 B St
SUITE 800
SAN DIEGO, CA 92101

NOTES:

1. FEDERAL MANUAL ON TRAFFIC CONTROL DEVICES (MUTCD) SIGN CODES ARE SHOWN UNLESS DESIGNATED BY (CA) INDICATING STANDARD CALIFORNIA SIGN SPECIFICATIONS.
2. BACKGROUND SHEETING IS DESIGNATED BY TYPE II, TYPE III, OR TYPE IV .
3. LEGEND IS DESIGNATED BY TYPE II, TYPE III, OR TYPE IV SHEETING.
4. REFER TO "ROADSIDE SIGN QUANTITIES" CHART FOR FURTHER INFORMATION.

FURNISH ROADSIDE SIGN PANEL

SIGN No.	CODE	Sht No.	PANEL SIZE Horiz INCHES	PANEL SIZE Vert INCHES	BACKGROUND SHEETING COLOR	BACKGROUND RETRO-REFLECTIVE ASTM TYPE	LEGEND SHEETING COLOR	LEGEND REFLECTIVE ASTM TYPE	LEGEND BLACK (NON-REFLECTIVE)	SIGN PANEL SINGLE SHEET ALUMINUM SQFT UNFRAMED 0.063 INCHES	SIGN PANEL SINGLE SHEET ALUMINUM SQFT UNFRAMED 0.080 INCHES	SIGN PANEL SINGLE SHEET ALUMINUM SQFT FRAMED 0.063 INCHES	SIGN PANEL PROTECTIVE OVERLAY PREMIUM FILM	REMARKS
221	R61-3(CA)	S-2	36	30	WHITE	IV	BLACK		X	7.5			X	
222	R61-9(CA)		36	30	WHITE	IV	BLACK		X	7.5			X	
223	R73-6(CA)		24	24	WHITE	IV	BLACK		X	4.0			X	
224	R3-18		24	24	WHITE	IX	BLACK/RED	IX	X	4.0			X	
225	G7-1(CA)		36	18	GREEN	IV	WHITE	IV		4.5			X	
226	R94(CA)Mod		36	30	WHITE	IV	BLACK		X	7.5			X	
227	G7-1(CA)		36	18	GREEN	IV	WHITE	IV		4.5			X	
228	SDGE Mod		36	36	WHITE	IV	BLACK		X	1.5			X	
229	R3-11c		12	18	WHITE	IV	BLACK		X	1.5			X	
230	R9-3a		12	18	WHITE	IV	BLACK		X	1.5			X	
231	R9-3a		12	18	WHITE	IV	BLACK		X	1.5			X	
232	R9-3a	↓	12	18	WHITE	IV	BLACK		X	9.0			X	
301	W3-3	S-3	36	36	YELLOW	IX	BLACK		X	9.0			X	
302	W4-2R		36	36	YELLOW	IV	BLACK		X	9.0			X	
	R4-1		24	32	WHITE	IV	BLACK		X	5.0			X	
303	R61-9(CA)		36	30	WHITE	IV	BLACK		X	7.5			X	
304	W4-3		36	36	YELLOW	IV	BLACK		X	9.0			X	
305	R61-9(CA)		36	30	WHITE	IV	BLACK		X	7.5			X	
306	G84-1(CA)		36	54	GREEN	IV	WHITE	IV		13.5			X	
307	TYPE R	↓	24	30	YELLOW	IV	BLACK		X	5.0			X	
401	G86-5(CA)	S-4	120	90	GREEN	IV	WHITE	IV				75	X	
	D9-2	↓	18	18	BLUE	IV	WHITE	IV		2.3			X	
501	R4-7	S-5	24	30	WHITE	IV	BLACK		X	5.0			X	
	TYPE N		18	18	YELLOW	IV	YELLOW	IV		2.3			X	
502	R4-7		24	30	WHITE	IV	BLACK		X	5.0			X	
	TYPE N		18	18	YELLOW	IV	YELLOW	IV		2.3			X	
503	LOCAL 1		36	12	GREEN	IV	WHITE	IV		3.0			X	
	R1-1		24	24	RED	IX	WHITE	IX		4.0			X	
	R1-4		18	6	RED	IX	WHITE	IX		0.8			X	
506	LOCAL 2		36	12	GREEN	IV	WHITE	IV		3.0			X	
	R1-1		24	24	RED	IX	WHITE	IX		4.0			X	
507	R81(CA)		12	8	WHITE	IV	BLACK		X	0.7			X	
508	W4-2R		12	8	YELLOW	IV	BLACK		X	0.7			X	
	R4-1		24	32	WHITE	IV	BLACK		X	3.0			X	
509	LOCAL 3		36	12	GREEN	IV	WHITE	IV		5.0			X	
	W14-2		30	30	YELLOW	IV	BLACK		X	6.3			X	
511	R2-1(30)		18	24	WHITE	IV	BLACK		X	3.0			X	
	D11-1	↓	18	18	BLUE	IV	WHITE	IV		2.3				
							SUBTOTAL SQ-6			172.7		75		

SIGN QUANTITIES

SQ-6

STATE OF CALIFORNIA - DEPARTMENT OF TRANSPORTATION
Caltrans

CONSULTANT FUNCTIONAL SUPERVISOR: GERARD LUMABAS
CALCULATED-DESIGNED BY: MATTHEW P. MAECHLER
CHECKED BY: PAUL KOSINSKI
REVISED BY
DATE REVISED

LAST REVISION 06-07-12
DATE PLOTTED => 12-SEP-2012
TIME PLOTTED => 16:20

Dist	COUNTY	ROUTE	POST MILES TOTAL PROJECT	SHEET No.	TOTAL SHEETS
11	SD	805	4.7/5.6	316	650

REGISTERED CIVIL ENGINEER 05-30-12 DATE

06-25-12
PLANS APPROVAL DATE

REGISTERED PROFESSIONAL ENGINEER MATTHEW P. MAECHLER No. C78172 Exp. 09-30-13 CIVIL STATE OF CALIFORNIA

THE STATE OF CALIFORNIA OR ITS OFFICERS OR AGENTS SHALL NOT BE RESPONSIBLE FOR THE ACCURACY OR COMPLETENESS OF SCANNED COPIES OF THIS PLAN SHEET.

DOKKEN ENGINEERING
5675 RUFFIN Rd
SUITE 250
SAN DIEGO, CA 92123

SANDAG
401 B St
SUITE 800
SAN DIEGO, CA 92101

NOTES:

1. FEDERAL MANUAL ON TRAFFIC CONTROL DEVICES (MUTCD) SIGN CODES ARE SHOWN UNLESS DESIGNATED BY (CA) INDICATING STANDARD CALIFORNIA SIGN SPECIFICATIONS.
2. BACKGROUND SHEETING IS DESIGNATED BY TYPE II, TYPE III, OR TYPE IV .
3. LEGEND IS DESIGNATED BY TYPE II, TYPE III, OR TYPE IV SHEETING.
4. REFER TO "ROADSIDE SIGN QUANTITIES" CHART FOR FURTHER INFORMATION.

FURNISH ROADSIDE SIGN PANEL

SIGN No.	CODE	Sht No.	PANEL SIZE Horiz INCHES	PANEL SIZE Vert INCHES	BACKGROUND SHEETING COLOR	BACKGROUND RETRO-REFLECTIVE ASTM TYPE	LEGEND SHEETING COLOR	LEGEND REFLECTIVE ASTM TYPE	LEGEND BLACK (NON-REFLECTIVE)	SIGN PANEL SINGLE SHEET ALUMINUM SQFT UNFRAMED 0.063 INCHES	SIGN PANEL SINGLE SHEET ALUMINUM SQFT UNFRAMED 0.080 INCHES	SIGN PANEL SINGLE SHEET ALUMINUM SQFT FRAMED 0.063 INCHES	SIGN PANEL PROTECTIVE OVERLAY PREMIUM FILM	REMARKS
513	W4-2R	S-5	30	30	YELLOW	IV	BLACK		X	6.3			X	
	R4-1		24	32	WHITE	IV	BLACK		X	5.0			X	
517	R61-5(CA)Mod		36	30	WHITE	IV	BLACK		X	7.5			X	
518	G7-1(CA)		36	18	GREEN	IV	WHITE	IV		4.5			X	
519	G7-1(CA)		36	18	GREEN	IV	WHITE	IV		4.5			X	
601	R6-1R	S-6	30	24	WHITE	IV	BLACK		X	5.0			X	
602	R6-1R		30	24	WHITE	IV	BLACK		X	5.0			X	
603	R1-2		36	36	WHITE	IX	RED	IX		9.0			X	
604	R1-2		36	36	WHITE	IX	RED	IX		9.0			X	
605	W11-2		30	30	YELLOW	IV	BLACK		X	6.3			X	
	W16-7P		24	12	YELLOW	IV	BLACK		X	2.0			X	
606	W2-6		24	24	YELLOW	IV	BLACK		X	4.0			X	
608	R3-7R		30	30	WHITE	IV	BLACK		X	6.3			X	
609	R4-7		24	30	WHITE	IV	BLACK		X	5.0			X	
	TYPE N		18	18	YELLOW	IV	YELLOW	IV		2.3			X	
610	R4-7		24	30	WHITE	IV	BLACK		X	5.0			X	
	TYPE N		18	18	YELLOW	IV	YELLOW	IV		2.3			X	
611	G7-1(CA)		36	18	GREEN	IV	WHITE	IV		4.5			X	
612	R3-7R		30	30	WHITE	IV	BLACK		X	6.3			X	
613	W2-6		24	24	YELLOW	IV	BLACK		X	4.0			X	
614	W11-2		30	30	YELLOW	IV	BLACK		X	6.3			X	
	W16-7p		24	12	YELLOW	IV	BLACK		X	2.0			X	
615	R1-2		36	36	WHITE	IX	BLACK		X	9.0			X	
616	W2-6		24	24	YELLOW	IV	BLACK		X	4.0			X	
617	W11-2		30	30	YELLOW	IV	BLACK		X	6.3			X	
	W16-7p		24	12	YELLOW	IV	BLACK		X	2.0			X	
618	R1-2		36	36	WHITE	IX	BLACK		X	9.0			X	
619	R1-2		36	36	WHITE	IX	BLACK		X	9.0			X	
620	R6-1R		30	24	WHITE	IV	BLACK		X	5.0			X	
621	R1-2		36	36	WHITE	IX	BLACK		X	9.0			X	
622	W2-6		24	24	YELLOW	IV	BLACK		X	4.0			X	
623	W11-2		30	30	YELLOW	IV	BLACK		X	6.3			X	
	W16-7p		24	12	YELLOW	IV	BLACK		X	2.0			X	
624	R1-2		36	36	WHITE	IX	BLACK		X	9.0			X	
625	R6-1R		30	24	WHITE	IV	BLACK		X	5.0			X	
626	R1-2		36	36	WHITE	IX	BLACK		X	9.0			X	
									SUBTOTAL SQ-7	200.7				

SIGN QUANTITIES
SQ-7

REVISED BY | DATE REVISED
MATTHEW P. MAECHLER | PAUL KOSINSKI
CALCULATED-DESIGNED BY | CHECKED BY
CONSULTANT FUNCTIONAL SUPERVISOR: GERARD LUMABAS
STATE OF CALIFORNIA - DEPARTMENT OF TRANSPORTATION
Caltrans

LAST REVISION 06-07-12 | DATE PLOTTED => 12-SEP-2012 | TIME PLOTTED => 16:20

Dist	COUNTY	ROUTE	POST MILES TOTAL PROJECT	SHEET No.	TOTAL SHEETS
11	SD	805	4.7/5.6	317	650

REGISTERED CIVIL ENGINEER 05-30-12 DATE

06-25-12
PLANS APPROVAL DATE

REGISTERED PROFESSIONAL ENGINEER MATTHEW P. MAECHLER No. C78172 Exp. 09-30-13 CIVIL STATE OF CALIFORNIA

THE STATE OF CALIFORNIA OR ITS OFFICERS OR AGENTS SHALL NOT BE RESPONSIBLE FOR THE ACCURACY OR COMPLETENESS OF SCANNED COPIES OF THIS PLAN SHEET.

DOKKEN ENGINEERING
5675 RUFFIN Rd
SUITE 250
SAN DIEGO, CA 92123

SANDAG
401 B St
SUITE 800
SAN DIEGO, CA 92101

NOTES:

1. FEDERAL MANUAL ON TRAFFIC CONTROL DEVICES (MUTCD) SIGN CODES ARE SHOWN UNLESS DESIGNATED BY (CA) INDICATING STANDARD CALIFORNIA SIGN SPECIFICATIONS.
2. BACKGROUND SHEETING IS DESIGNATED BY TYPE II, TYPE III, OR TYPE IV .
3. LEGEND IS DESIGNATED BY TYPE II, TYPE III, OR TYPE IV SHEETING.
4. REFER TO "ROADSIDE SIGN QUANTITIES" CHART FOR FURTHER INFORMATION.

FURNISH ROADSIDE SIGN PANEL

SIGN No.	CODE	Sht No.	PANEL SIZE Horiz INCHES	PANEL SIZE Vert INCHES	BACKGROUND SHEETING COLOR	BACKGROUND RETRO-REFLECTIVE ASTM TYPE	LEGEND SHEETING COLOR	LEGEND REFLECTIVE ASTM TYPE	LEGEND BLACK (NON-REFLECTIVE)	SIGN PANEL SINGLE SHEET ALUMINUM SQFT UNFRAMED 0.063 INCHES	SIGN PANEL SINGLE SHEET ALUMINUM SQFT UNFRAMED 0.080 INCHES	SIGN PANEL SINGLE SHEET ALUMINUM SQFT FRAMED 0.063 INCHES	SIGN PANEL PROTECTIVE OVERLAY PREMIUM FILM	REMARKS
627	R100B(CA)	S-6	24	24	WHITE	IV	BLACK		X	4.0			X	
628	G7-1(CA)		36	18	GREEN	IV	WHITE	IV		4.5			X	
629	G7-1(CA)		36	12	GREEN	IV	WHITE	IV		3.0			X	
630	SDGE Mod		36	36	WHITE	IV	BLACK		X	9.0			X	
631	R61-22(CA)Mod		36	30	WHITE	IV	BLACK		X	7.5			X	
632	R61-26(CA)Mod		36	30	WHITE	IV	BLACK		X	7.5			X	
633	R1-1		24	24	RED	IX	WHITE	IX		4.0			X	
	R1-4		18	6	RED	IX	WHITE	IX		0.8			X	
634	R3-7R		30	30	WHITE	IV	BLACK		X	6.3			X	
635	G7-1(CA)		36	1	GREEN	IV	WHITE	IV		0.3			X	
636	R99(CA)		12	18	BLUE	IV	WHITE	IV		1.5			X	
637	R99(CA)		12	18	BLUE	IV	WHITE	IV		1.5			X	
638	R99(CA)		12	18	BLUE	IV	WHITE	IV		1.5			X	
639	R99(CA)		12	18	BLUE	IV	WHITE	IV		1.5			X	
640	R99(CA)		12	18	BLUE	IV	WHITE	IV		1.5			X	
641	LOCAL 4		36	12	GREEN	IV	WHITE	IV		3.0			X	
	R1-1		24	24	RED	IX	WHITE	IX		4.0			X	
644	R3-7		30	30	WHITE	IV	BLACK		X	6.3			X	
645	R4-7		24	30	WHITE	IV	BLACK		X	5.0			X	
	TYPE N		18	18	YELLOW	IV	YELLOW	IV		2.3			X	
648	R99(CA)		12	18	BLUE	IV	WHITE	IV		1.5			X	
650	R99(CA)		12	18	BLUE	IV	WHITE	IV		1.5			X	
650	R99(CA)		12	18	BLUE	IV	WHITE	IV		1.5			X	
651	R99(CA)		12	18	BLUE	IV	WHITE	IV		1.5			X	
652	R99(CA)		12	18	BLUE	IV	WHITE	IV		1.5			X	
653	R3-14c Mod		42	36	WHITE	IV	BLACK	IV	X	10.5			X	
654	R9-3a		12	18	WHITE	IV	BLACK	IV		1.5			X	
655	R9-3a		12	18	WHITE	IV	BLACK	IV		1.5			X	
701	R1-1	S-7	24	24	RED	IX	WHITE	IX		4.0			X	
702	SDGE		36	36	WHITE	IV	BLACK		X	9.0			X	
703	SDGE		36	36	WHITE	IV	BLACK		X	9.0			X	
704	SDGE		36	36	WHITE	IV	BLACK		X	9.0			X	
705	SDGE		36	36	WHITE	IV	BLACK		X	9.0			X	
706	SDGE		36	36	WHITE	IV	BLACK		X	9.0			X	
									SUBTOTAL SQ-8	145.0	0	0		
									SUBTOTAL SQ-7	200.7	0	0		
									SUBTOTAL SQ-6	172.7	0	75.0		
									SUBTOTAL SQ-5	146.0	8.0	47.0		
									TOTALS	664.4	8.0	122.0		

SIGN QUANTITIES

SQ-8

STATE OF CALIFORNIA - DEPARTMENT OF TRANSPORTATION
Caltrans

CONSULTANT FUNCTIONAL SUPERVISOR: GERARD LUMABAS
CALCULATED-DESIGNED BY: MATTHEW P. MAECHLER
CHECKED BY: PAUL KOSINSKI
REVISED BY
DATE REVISED

LAST REVISION 06-07-12
DATE PLOTTED => 12-SEP-2012
TIME PLOTTED => 16:20

Dist	COUNTY	ROUTE	POST MILES TOTAL PROJECT	SHEET No.	TOTAL SHEETS
11	SD	805	4.7/5.6	318	650

REGISTERED CIVIL ENGINEER 05-30-12 DATE

06-25-12
PLANS APPROVAL DATE

REGISTERED PROFESSIONAL ENGINEER MATTHEW P. MAECHLER No. C78172 Exp. 09-30-13 CIVIL STATE OF CALIFORNIA

THE STATE OF CALIFORNIA OR ITS OFFICERS OR AGENTS SHALL NOT BE RESPONSIBLE FOR THE ACCURACY OR COMPLETENESS OF SCANNED COPIES OF THIS PLAN SHEET.

DOKKEN ENGINEERING
5675 RUFFIN Rd
SUITE 250
SAN DIEGO, CA 92123

SANDAG
401 B St
SUITE 800
SAN DIEGO, CA 92101

NOTES:

1. FEDERAL MANUAL ON TRAFFIC CONTROL DEVICES (MUTCD) SIGN CODES ARE SHOWN UNLESS DESIGNATED BY (CA) INDICATING STANDARD CALIFORNIA SIGN SPECIFICATIONS.
2. BACKGROUND SHEETING IS DESIGNATED BY TYPE II, TYPE III, OR TYPE IV .
3. LEGEND IS DESIGNATED BY TYPE II, TYPE III, OR TYPE IV SHEETING.

OVERHEAD SIGN STRUCTURES

SIGN No. △	LOCATION	Sht No.	FURNISH SIGN STRUCTURE			INSTALL SIGN STRUCTURE			SIGN STRUCTURE (BRIDGE MOUNTED WITHOUT WALKWAY)		REMOVE SIGN STRUCTURE	CIDH CONCRETE PILE (SIGN FOUNDATION)				REMARKS
			TUBULAR	LIGHT-WEIGHT	TRUSS	TUBULAR	LIGHT-WEIGHT	TRUSS	FURNISH	INSTALL		36" L†	36" R†	60" L†	60" R†	
			lb	lb	lb	lb	lb	lb	lb	lb	EA	LF	LF	LF	LF	
1	293+75 "A1"	2			33,210			33,210							25	
2	294+20 "A1"	2									1					
3	18+50 "PL"	2		2,516			2,516						11			
4	22+29 "PL"	2		2,457			2,457						11			
5	314+00 "A1"	3			31,394			31,394						25		
6	322+50 "A1"	4			26,023			26,023						23		
7	16+00 "PL"	5		7,866			7,866						16			
8	25+67 "PL"	6		7,758			7,758						16			
		TOTALS	0	20,597	90,627	0	20,597	90,627	0	0	1	0	54	48	25	

SIGN QUANTITIES
SQ-9

STATE OF CALIFORNIA - DEPARTMENT OF TRANSPORTATION
Caltrans

CONSULTANT FUNCTIONAL SUPERVISOR: GERARD LUMABAS
CALCULATED-DESIGNED BY: MATTHEW P. MAECHLER
CHECKED BY: PAUL KOSINSKI
REVISED BY
DATE REVISED

LAST REVISION 06-07-12
DATE PLOTTED => 12-SEP-2012
TIME PLOTTED => 16:20

Dist	COUNTY	ROUTE	POST MILES TOTAL PROJECT	SHEET No.	TOTAL SHEETS
11	SD	805	4.7/5.6	319	650

REGISTERED CIVIL ENGINEER 05-30-12 DATE

06-25-12
PLANS APPROVAL DATE

REGISTERED PROFESSIONAL ENGINEER MATTHEW P. MAECHLER No. C78172 Exp. 09-30-13 CIVIL STATE OF CALIFORNIA

THE STATE OF CALIFORNIA OR ITS OFFICERS OR AGENTS SHALL NOT BE RESPONSIBLE FOR THE ACCURACY OR COMPLETENESS OF SCANNED COPIES OF THIS PLAN SHEET.

DOKKEN ENGINEERING
5675 RUFFIN Rd
SUITE 250
SAN DIEGO, CA 92123

SANDAG
401 B St
SUITE 800
SAN DIEGO, CA 92101

NOTES:

1. FEDERAL MANUAL ON TRAFFIC CONTROL DEVICES (MUTCD) SIGN CODES ARE SHOWN UNLESS DESIGNATED BY (CA) INDICATING STANDARD CALIFORNIA SIGN SPECIFICATIONS.
2. BACKGROUND SHEETING IS DESIGNATED BY TYPE II, TYPE III, OR TYPE IV .
3. LEGEND IS DESIGNATED BY TYPE II, TYPE III, OR TYPE IV SHEETING.

FURNISH OVERHEAD SIGN PANEL

SIGN No. △	CODE	Sht No.	PANEL SIZE HORIZONTAL (In X In)	PANEL SIZE VERTICAL (In X In)	BACKGROUND SHEETING COLOR	BACKGROUND RETRO-REFLECTIVE ASTM TYPE	LEGEND SHEETING COLOR	LEGEND REFLECTIVE ASTM TYPE	SIGN PANEL BLACK (NON-REFLECTIVE)	SIGN PANEL LAMINATED (1"-TYPE A) SQFT	SIGN PANEL HARDWARE TYPE	SIGN PANEL PROTECTIVE OVERLAY PREMIUM	REMARKS
1	G24-5(CA)	2	252	110	GREEN	XI	WHITE	XI		192.5	A1	X	
3	G78-1(CA)	2	132	70	GREEN	XI	WHITE	XI		64.2	A1	X	
4	G78-1(CA)	2	132	70	GREEN	XI	WHITE	XI		64.2	A1	X	
5A	G85-11(CA)	3	192	100	GREEN	XI	WHITE	XI		133.3	A1	X	
5B	G24-5(CA)	3	108	100	GREEN	XI	WHITE	XI		75.0	A1	X	
7	R87-1	5	72	60	WHITE	XI	BLACK		X	133.3	A1	X	
8	R87-1	6	72	60	WHITE	XI	BLACK		X	133.3	A1	X	
									TOTAL	795.8			

SIGN QUANTITIES

SQ-10

STATE OF CALIFORNIA - DEPARTMENT OF TRANSPORTATION
Caltrans

CONSULTANT FUNCTIONAL SUPERVISOR: GERARD LUMABAS
CALCULATED-DESIGNED BY: MATTHEW P. MAECHLER
CHECKED BY: PAUL KOSINSKI
REVISED BY
DATE REVISED

LAST REVISION 06-07-12
DATE PLOTTED => 12-SEP-2012
TIME PLOTTED => 16:20

Dist	COUNTY	ROUTE	POST MILES TOTAL PROJECT	SHEET No.	TOTAL SHEETS
11	SD	805	4.7/5.6	320	650

REGISTERED CIVIL ENGINEER 6/1/12 DATE

06-25-12
PLANS APPROVAL DATE

REGISTERED PROFESSIONAL ENGINEER PAUL E. KOSINSKI No. C73254 Exp. 12/31/12 CIVIL STATE OF CALIFORNIA

THE STATE OF CALIFORNIA OR ITS OFFICERS OR AGENTS SHALL NOT BE RESPONSIBLE FOR THE ACCURACY OR COMPLETENESS OF SCANNED COPIES OF THIS PLAN SHEET.

DOKKEN ENGINEERING
5675 RUFFIN Rd
SUITE 250
SAN DIEGO, CA 92123

SANDAG
401 B St
SUITE 800
SAN DIEGO, CA 92101

JOINTED PLAIN CONCRETE PAVEMENT

SHEET NUMBER	LINE	R+/L+	STRUCTURAL SECTION NUMBER	STATION	SQFT (N)	CY
L-1, L-2, L-3, L-4	"A1"	R+	1	283+40.00 TO 323+00.00	123,501.31	4,116.80
L-1, L-2, L-3, L-4	"A1"	L+	1	280+60.00 TO 323+00.00	155,327.23	5,177.60
L-1, L-2	"A1"	R+	2	289+81.29 TO 296+57.90	5,763.23	181.50
L-3	"DAR"	-	2	301+95.00 TO 309+00.00	43,299.88	1,363.20
L-3, L-4	"A1"	-	2	301+72.50 TO 323+00.00	74,376.73	2,341.50
L-2, L-6	"PL"	L+	5	21+78.09 TO 24+35.48	4,039.10	127.20
L-2	"PL"	R+	5	17+86.89 TO 18+57.05	874.39	27.60
L-2, L-6	"PL"	R+	5	22+47.14 TO 23+87.14	1,603.15	50.50
L-5	"PL"	L+	5	16+05.00 TO 16+65.00	960.00	30.30
L-6	"PL"	L+	5	26+05.69 TO 26+75.28	840.47	26.50
					TOTAL	13,442.70

COLD PLANE ASPHALT Conc PAVEMENT

SHEET NUMBER	LINE	SQYD
L-2, L-5	"NC"	82.2
L-2, L-5	"NC"	82.7
L-5	"PL"	777.9
L-5	"PC"	73.2
L-6	"RV"	73.4
L-6	"PL"	1,127.4
L-6	"RV"	496.1
L-6	"RW"	74.2
	TOTAL	2,787.10

MINOR HOT MIX ASPHALT

DESCRIPTION	TON
PLACE HOT MIX ASPHALT (Misc AREA)	89.80
PLACE HOT MIX ASPHALT DIKE	64.50
TOTAL	154.30

PERVIOUS CONCRETE

SHEET NUMBER	LOCATION	SQFT (N)	CY
L-2,L-6	PARKING LOT 1	45,731.05	1,134.90
L-7	PARKING LOT 2	87,443.86	2,170.00
		TOTAL	3,304.90

HOT MIX ASPHALT (TYPE A)

SHEET NUMBER	STRUCTURAL SECTION NUMBER	R+/L+	LINE	STATION	SQFT (N)	CF (N)	TON	ASPHALTIC EMULSION (FOG SEAL COAT) TON	TACK COAT TON
1	1	R+	"A1"	283+40.00 TO 323+00.00	123,501.31	30,875.40	2,315.70	3.2	3.2
L-1, L-2, L-3, L-4	1	L+	"A1"	280+60.00 TO 323+00.00	155,327.23	38,831.90	2,912.40	4.1	4.1
L-1, L-2	2	R+	"A1"	289+81.29 TO 296+57.90	5,763.23	1,440.90	108.10	0.2	0.2
L-3	2	-	"DAR"	301+95.00 TO 309+00.00	43,299.88	10,825.00	811.90	1.2	1.2
L-3, L-4	2	-	"A1"	301+72.50 TO 323+00.00	74,376.73	18,594.20	1,394.60	2.0	2.0
L-1	3	R+	"A1"	285+00.00 TO 288+01.30	2,018.71	1,211.30	90.90	0.1	0.1
L-1	3	L+	"A1"	289+15.00 TO 290+01.13	779.76	467.90	35.10	0.1	0.1
L-1	3	L+	"A1"	283+40.00 TO 286+20.02	1,957.09	1,174.30	88.10	0.1	0.1
L-1	3	R+	"A1"	283+40.00 TO 287+60.86	2,161.08	1,296.70	97.30	0.1	0.1
L-3	3	R+	"A1"	308+05.30 TO 308+90.30	780.00	468.00	35.10	0.1	0.1
L-2	4	R+	"NC"	48+95.00 TO 49+43.00	878.30	292.50	22.00	0.1	0.1
L-2	4	R+	"PL"/"NC"	INTERSECTION	1,721.33	573.30	43.00	0.1	0.1
L-2	4	R+	"NC"	50+59.62 TO 51+01.88	824.07	274.50	20.60	0.1	0.1
L-2	4	-	"PL"	17+72.27 TO 18+69.81	7,080.35	2,357.80	176.90	0.2	0.2
L-2, L-6	4	-	"PL"	21+80.01 TO 24+36.47	19,980.75	6,653.60	499.10	0.6	0.6
L-5	4	-	"PL"	12+40.39 TO 17+05.68	27,716.56	9,229.70	692.30	0.8	0.8
L-5	4	-	"PC"	40+52.78 TO 41+45.04	3,038.11	1,011.70	75.90	0.1	0.1
L-5	4	L+	"NC"	48+95.00 TO 49+44.35	906.88	302.00	22.70	0.1	0.1
L-5	4	L+	"PL"/"NC"	INTERSECTION	1,690.75	563.10	42.30	0.1	0.1
L-5	4	L+	"NC"	50+59.62 TO 51+01.88	746.63	248.70	18.70	0.1	0.1
L-6	4	-	"RV"	58+99.15 TO 59+38.95	1,306.97	435.30	32.70	0.1	0.1
L-6	4	-	"PL"	24+65.53 TO 29+29.02	24,396.75	8,124.20	609.40	0.7	0.7
L-6	4	-	"RV"	60+93.63 TO 63+17.90	4,443.69	1,479.80	111.00	0.2	0.2
L-6	4	-	"RV"	63+42.32 TO 64+45.94	2,375.07	790.90	59.40	0.1	0.1
L-6	4	-	"RV"/"RV1"	ROUNDABOUT	3,678.54	1,225.00	91.90	0.1	0.1
L-6	4	-	"RV"	65+80.96 TO 66+36.88	1,783.01	593.80	44.60	0.1	0.1
L-6	4	-	"RV1"	9+87.47 TO 12+56.15	7,818.92	2,603.80	195.30	0.3	0.3
L-6, L-7	4	-	"RV2"	10+66.75 TO 12+29.75	4,383.12	1,459.60	109.50	0.2	0.2
L-2, L-6	5	L+	"PL"	21+78.09 TO 24+35.48	4,039.10	1,009.80	75.80	0.2	0.2
L-2	5	R+	"PL"	17+86.89 TO 18+57.05	874.39	218.60	16.40	0.1	0.1
L-2, L-6	5	R+	"PL"	22+47.14 TO 23+87.14	1,603.15	400.80	30.10	0.1	0.1
L-5	5	L+	"PL"	16+05.00 TO 16+65.00	960.00	240.00	18.00	0.1	0.1
L-6	5	L+	"PL"	26+05.69 TO 26+75.29	840.47	210.20	15.80	0.1	0.1
				SUBTOTAL	533,051.94	145,484.30	10,912.60	15.9	15.9
				OVERLAY AREAS (COLD PLANE)	25,083.70	8,277.62	620.90	0.0	1.2
						TOTAL	11,533.50*	15.9	17.1

* SEE UTILITY QUANTITIES SHEETS, FOR ADDITIONAL QUANTITIES.
(N) NOT A SEPARATE PAY ITEM FOR INFORMATION ONLY

GRIND EXISTING CONCRETE PAVEMENT

SHEET NUMBER	LINE	L+/R+	STATION/ LOCATION	SQYD
L-1,L-2	"A1"	L+	280+60.00 TO 295+51.20	1,916.18
L-1	"A1"	R+	283+40.00 TO 288+78.08	704.41
L-1,L-2,L-3,L-4	"A1"	R+	288+78.08 TO 323+00.00	4,443.18
L-2,L-3,L-4	"A1"	L+	295+51.20 TO 323+00.00	3,564.27
L-3	"DAR"/"A1"	L+	301+72.50 TO 309+04.00	568.94
L-3	"DAR"/"A1"	R+	301+65.00 TO 309+04.00	568.94
L-3,L-4	"A1"	L+	309+04.00 TO 323+00.00	1,809.68
L-3,L-4	"A1"	R+	309+04.00 TO 323+00.00	1,809.68
			TOTAL	15,385.27

PERMEABLE INTERLOCKING CONCRETE PAVEMENT

SHEET NUMBER	LINE	L+/R+	STATION/ LOCATION	SQFT
C-34	"PL"	L+	22+83.56 TO 22+90.94	121.27
C-34	"PL"	L+	23+08.47 TO 23+15.85	135.36
C-34	"PL"	L+	23+33.61 TO 23+41.00	156.24
C-34	"PL"	L+	23+58.44 TO 23+65.83	128.29
C-34	"PL"	L+	23+83.92 TO 23+91.31	114.29
C-35	"PL"	R+	23+11.59 TO 23+18.38	59.78
C-35	"PL"	R+	23+23.42 TO 23+30.20	59.78
C-35	"PL"	R+	23+35.24 TO 23+42.02	59.78
C-35	"PL"	R+	23+47.06 TO 23+53.85	59.78
C-35	"PL"	R+	23+85.76 TO 23+92.54	60.15
C-35	"PL"	R+	23+97.58 TO 24+04.36	60.03
C-43	"WL1"	R+	10+60.22 TO 10+67.69	2,129.66
C-44	"WL1"	R+	12+50.00 TO 13+03.00	44.31
			TOTAL	3,188.72

SUMMARY OF QUANTITIES

Q-1

STATE OF CALIFORNIA - DEPARTMENT OF TRANSPORTATION
Caltrans
CONSULTANT FUNCTIONAL SUPERVISOR: GERARD LUMABAS
CALCULATED-DESIGNED BY: DARWIN CRUZ
CHECKED BY: PAUL KOSINSKI
REVISED BY / DATE REVISED

LAST REVISION 6-18-12
DATE PLOTTED => 12-SEP-2012
TIME PLOTTED => 16:20

Dist	COUNTY	ROUTE	POST MILES TOTAL PROJECT	SHEET No.	TOTAL SHEETS
11	SD	805	4.7/5.6	321	650

REGISTERED CIVIL ENGINEER 6/1/12 DATE

06-25-12
PLANS APPROVAL DATE

REGISTERED PROFESSIONAL ENGINEER PAUL E. KOSINSKI No. C73254 Exp. 12/31/12 CIVIL STATE OF CALIFORNIA

THE STATE OF CALIFORNIA OR ITS OFFICERS OR AGENTS SHALL NOT BE RESPONSIBLE FOR THE ACCURACY OR COMPLETENESS OF SCANNED COPIES OF THIS PLAN SHEET.

DOKKEN ENGINEERING
5675 RUFFIN Rd
SUITE 250
SAN DIEGO, CA 92123

SANDAG
401 B St
SUITE 800
SAN DIEGO, CA 92101

MINOR CONCRETE (MISCELLANEOUS CONSTRUCTION)

SHEET NUMBER	LINE	L+/R+	STATION	LF (N)	SQFT (N)	CY	DESCRIPTION
L-2	"NC"	R+	48+95.00 TO 49+20.50	-	123.61	1.60	SIDEWALK
L-2	"PL"	L+	17+95.17 TO 18+64.19	-	532.60	6.60	SIDEWALK
L-2	"PL"	R+	17+86.89 TO 18+74.96	-	1,008.34	12.50	SIDEWALK
L-2	"PL"	L+	21+78.09 TO 22+21.90	-	908.09	11.20	SIDEWALK
L-2	"DW1"	-	10+18.76 TO 10+25.35	-	196.58	2.50	SIDEWALK
L-2, L-6	"PL"	R+	21+81.17 TO 23+11.59	-	1,534.43	19.00	SIDEWALK
L-5	"PL"	R+	12+52.37 TO 12+58.48	-	24.48	0.40	SIDEWALK
L-5	"PL"	R+	12+59.22 TO 16+81.74	-	3,185.28	39.30	SIDEWALK
L-5	"PL"	L+	13+08.48 TO 14+54.72	-	1,398.60	17.30	SIDEWALK
L-5	"PL"	L+	14+79.51 TO 16+79.07	-	2,314.43	28.60	SIDEWALK
L-5	"NC"	L+	48+95.00 TO 49+20.50	-	132.61	1.70	SIDEWALK
L-6	"PL"	R+	25+19.95 TO 27+44.10	-	1,104.49	13.70	SIDEWALK
L-6	"PL"	L+	25+30.04 TO 26+08.02	-	694.60	8.60	SIDEWALK
L-6	"PL"	R+	28+17.67 TO 28+29.09	-	53.28	0.70	SIDEWALK
L-6	"OR"	L+	69+37.63 TO 69+50.75	-	61.82	0.80	SIDEWALK
L-6	"OR"	R+	69+38.27 TO 69+49.69	-	53.28	0.70	SIDEWALK
L-6	"RV"	L+	58+99.15 TO 59+25.75	-	131.88	1.70	SIDEWALK
L-6	"RV"	R+	59+03.75 TO 59+38.82	-	171.64	2.20	SIDEWALK
L-6	"RV"	L+	60+97.06 TO 62+91.56	-	1,533.85	19.00	SIDEWALK
L-6	"RV"	R+	61+18.41 TO 62+86.95	-	1,108.56	13.70	SIDEWALK
L-6	"RV"	L+	65+43.32 TO 66+36.88	-	720.18	8.90	SIDEWALK
L-6	"RV"	R+	65+20.01 TO 66+36.88	-	995.24	12.30	SIDEWALK
L-6	"PL"	L+	26+45.00 TO 29+29.02	-	1,427.03	17.70	SIDEWALK
L-6	"WL1"	-	PARKING LOT	-	187.79	2.40	SIDEWALK
L-6	"PL"	R+	24+04.36 TO 24+30.79	-	248.35	3.10	SIDEWALK
L-6, L-7	"RV2"	R+	10+66.75 TO 17+29.92	-	9,904.70	122.20	SIDEWALK
L-7	"OL"	L+	92+92.62 TO 93+27.00	-	196.89	2.50	SIDEWALK
L-7	"OL"	L+	91+06.86 TO 92+67.37	-	1,572.96	19.40	SIDEWALK
			SIDEWALK SUBTOTAL	0.00	31,525.59	390.30	
L-5	"PL"	R+	11+82.38 TO 12+10.82	-	146.42	1.81	CASE C
L-5	"PL"	L+	12+38.87 TO 12+55.37	-	92.00	1.14	CASE C
L-5	"PL"	R+	12+57.90 TO 12+63.47	-	126.32	1.56	CASE C
L-5	"PL"	L+	14+36.40 TO 14+48.60	-	69.71	0.86	CASE A
L-5	"PL"	L+	14+98.21 TO 15+09.91	-	69.51	0.86	CASE A
L-6	"PL"	R+	25+09.32 TO 25+23.58	-	111.90	1.37	CASE C
L-6	"PL"	R+	27+42.11 TO 27+60.61	-	126.40	1.56	CASE C
L-6	"PL"	R+	28+01.57 TO 28+19.79	-	127.16	1.57	CASE C
L-6	"RV"	R+	62+76.97 TO 62+86.33	-	69.89	0.86	CASE A
L-7	"RV2"	R+	12+58.24 TO 12+65.24	-	53.69	0.66	CASE F
L-7	"RV2"	R+	13+98.91 TO 14+05.91	-	53.69	0.66	CASE F
L-7	"RV2"	R+	15+39.57 TO 15+46.57	-	53.69	0.66	CASE F
L-7	"RV2"	R+	16+80.23 TO 16+87.23	-	53.69	0.66	CASE F
L-7	"OL"	L+	92+58.37 TO 92+67.95	-	61.68	0.76	CASE A
L-7	"OL"	L+	92+92.04 TO 93+02.00	-	61.68	0.76	CASE A
			CURB RAMP SUBTOTAL	0.00	1,277.43	15.75	
L-5	"PC"	R+	40+93.98 TO 41+15.35	-	193.38	3.28	DRIVEWAY
L-5	"PC"	R+	41+18.86 TO 41+29.97	-	99.45	1.69	DRIVEWAY
L-5	"PC"	L+	41+10.86 TO 41+40.08	-	308.28	5.23	DRIVEWAY
			DRIVEWAY SUBTOTAL	0.00	601.11	10.20	
L-6	"RV"	L+	63+58.87 TO 64+33.95	-	580.21	10.74	SS #8
L-6	"RV"	R+	63+58.87 TO 64+33.95	-	637.15	11.80	SS #8
			Misc CONSTRUCTION SUBTOTAL	0.00	1,217.36	22.54	

SS = STRUCTURAL SECTION

MINOR CONCRETE (MISCELLANEOUS CONSTRUCTION) Cont

SHEET NUMBER	LINE	R+/L+	STATION	LF (N)	SQFT (N)	CY	DESCRIPTION
C-34	-	-	-	186.00	-	1.72	Conc BAND
C-39	"RV"/"RV2"	L+	-	135.44	-	1.25	Conc BAND
C-40, C-42, C-45	"RV2"/"OL"	L+	-	870.25	-	8.06	Conc BAND
C-43	-	-	-	80.00	-	0.74	Conc BAND
C-44	-	-	-	44.00	-	0.41	Conc BAND
			CONCRETE BAND SUBTOTAL	1,315.69	-	12.18	
L-5	"PL"	L+	14+25.61 TO 15+22.12	-	895.44	19.40	CROSS GUTTER
L-7	"OL"	L+	92+53.00 TO 93+07.07	-	342.47	4.30	GUTTER
			GUTTER SUBTOTAL	0.00	1,237.91	23.70	
C-34	"PL"	L+	22+83.64 TO 23+91.24	-	128.04	5.55	STAIRS
			STAIRS SUBTOTAL	0.00	128.04	5.55	
C-38	"RV"	L+	63+72.87 TO 64+14.07	-	12.12	2.69	CUBE SEAT
C-38, C-39	"RV"	R+	63+87.13 TO 64+23.02	-	12.12	2.69	CUBE SEAT
			CUBE SEAT SUBTOTAL	0.00	24.24	5.39	
C-32	"PL"	R+	18+17.14 TO 18+45.58	-	45.00	5.00	SEAT WALL
C-32	"PL"	L+	16+00.00 TO 16+45.00	-	52.53	5.84	SEAT WALL
C-35	"PL"	R+	23+11.58 TO 24+04.36	-	174.40	19.38	SEAT WALL
C-37	"PL"	L+	26+04.83 TO 26.48.75	-	85.58	9.51	SEAT WALL
			SEAT WALL SUBTOTAL	0.00	357.51	39.72	
C-61	"PL"	L+	22+76.81 TO 22+83.63	19.41	-	1.44	STEM WALL
C-61	"PL"	L+	22+90.90 TO 23+08.52	28.80	-	2.31	STEM WALL
C-61	"PL"	L+	23+15.79 TO 23+33.67	29.07	-	2.37	STEM WALL
C-61	"PL"	L+	23+40.94 TO 23+58.50	28.73	-	2.70	STEM WALL
C-61	"PL"	L+	23+65.77 TO 23+83.98	29.44	-	3.05	STEM WALL
C-61	"PL"	L+	23+91.25 TO 24+09.03	31.47	-	3.27	STEM WALL
			STEM WALL SUBTOTAL	166.92	0.00	15.14	
			SHEET Q-2 SUBTOTAL	1,482.61	36,369.19	540.47	

(N) NOT A SEPARATE PAY ITEM FOR INFORMATION ONLY

SUMMARY OF QUANTITIES

Q-2

REVISED BY | DATE REVISED
DARWIN CRUZ | PAUL KOSINSKI
CALCULATED-DESIGNED BY | CHECKED BY
CONSULTANT FUNCTIONAL SUPERVISOR | GERARD LUMABAS
STATE OF CALIFORNIA - DEPARTMENT OF TRANSPORTATION
Caltrans

LAST REVISION 6-18-12 | DATE PLOTTED => 12-SEP-2012 | TIME PLOTTED => 16:21

Dist	COUNTY	ROUTE	POST MILES TOTAL PROJECT	SHEET No.	TOTAL SHEETS
11	SD	805	4.7/5.6	322	650

REGISTERED CIVIL ENGINEER 6/1/12 DATE

06-25-12
PLANS APPROVAL DATE

REGISTERED PROFESSIONAL ENGINEER PAUL E. KOSINSKI No. C73254 Exp. 12/31/12 CIVIL STATE OF CALIFORNIA

THE STATE OF CALIFORNIA OR ITS OFFICERS OR AGENTS SHALL NOT BE RESPONSIBLE FOR THE ACCURACY OR COMPLETENESS OF SCANNED COPIES OF THIS PLAN SHEET.

DOKKEN ENGINEERING
5675 RUFFIN Rd
SUITE 250
SAN DIEGO, CA 92123

SANDAG
401 B St
SUITE 800
SAN DIEGO, CA 92101

MINOR CONCRETE (MISCELLANEOUS CONSTRUCTION) Cont

SHEET NUMBER	LINE	L+/R+	STATION	LF (N)	SQFT (N)	CY	DESCRIPTION
L-2	"PL"	RT	17+86.89 TO 18+57.06	73.29	-	3.10	A1-6 Mod
L-2	"NC"/"PL"	-	50+73.25 TO 18+95.74	153.54	-	9.10	A2-6
L-2	"NC"/"PL"	RT	49+20.50 TO 17+86.89	51.79	-	3.10	A2-6
L-2	"PL"	RT	18+57.05 TO 19+03.74	49.04	-	2.90	A2-6
L-2	"PL"	LT	21+48.26 TO 21+78.09	30.01	-	1.80	A2-6
L-2	"PL"	RT	21+50.93 TO 22+47.14	93.81	-	5.60	A2-6
L-2	"NC"	RT	48+95.00 TO 49+20.50	24.69	-	1.30	A2-6 Mod
L-2	"NC"	RT	50+73.25 TO 51+01.88	29.75	-	1.50	A2-6 Mod
L-2, L-6	"PL"	RT	22+47.14 TO 23+87.14	132.55	-	5.60	A1-6 Mod
L-2, L-6	"PL"	LT	21+78.09 TO 24+34.94	278.21	-	11.60	A1-6 Mod
L-5	"PL"	LT	16+05.00 TO 16+65.00	60.00	-	2.60	A1-6 Mod
L-5	"PL"/"NC"	-	12+52.37 TO 49+27.40	514.49	-	30.40	A2-6
L-5	"PL"/"NC"	LT	16+65.00 TO 50+91.22	84.08	-	5.00	A2-6
L-5	"NC"	LT	50+91.22 TO 51+01.88	10.23	-	0.60	A2-6 Mod
L-5	"PL"	LT	12+39.22 TO 12+55.38	17.00	-	0.90	A2-6 Mod
L-5	"NC"	LT	48+95.00 TO 49+27.37	33.18	-	1.70	A2-6 Mod
L-5	"PC"/"PL"	LT	41+45.04 TO 15+05.00	206.44	-	10.20	A2-6 Mod
L-5	"PL"/"PC"	LT	13+08.48 TO 41+45.04	231.89	-	11.50	A2-6 Mod
L-6	"PL"	LT	26+05.69 TO 26+75.69	70.04	-	3.00	A1-6 Mod
L-6	"RV"	RT	63+58.87 TO 64+33.94	83.98	-	2.20	A1-6 Mod2
L-6	"RV"	LT	63+58.87 TO 64+33.94	77.63	-	2.00	A1-6 Mod2
L-6	"PL"/"RV"	-	23+87.14 TO 59+24.52	42.76	-	2.60	A2-6
L-6	"PL"/"RV"	-	24+35.48 TO 60+90.67	99.06	-	5.90	A2-6
L-6	"RV"/"PL"	-	61+01.42 TO 26+05.69	144.75	-	8.60	A2-6
L-6	"RV"/"OR"	-	59+28.00 TO 69+37.63	295.45	-	17.50	A2-6
L-6	"PL"	LT	26+75.69 TO 29+29.02	255.04	-	15.10	A2-6
L-6	"RV"	RT	59+03.75 TO 59+28.00	24.24	-	1.20	A2-6 Mod
L-6	"RV"	LT	58+99.15 TO 59+24.52	25.37	-	1.30	A2-6 Mod
L-6	"OR"/"PL"	RT	69+38.27 TO 28+29.09	46.99	-	2.40	A2-6 Mod
L-6	"RW"/"RV"	LT	100+44.61 TO 63+58.87	77.44	-	3.90	A2-6 Mod
L-6	"RV"	LT	60+90.67 TO 63+58.87	212.71	-	10.50	A2-6 Mod
L-6	"RV"/"RW"	RT	61+01.42 TO 100+44.61	267.43	-	13.20	A2-6 Mod
L-6	"RV"/"RV1"	-	64+33.95 TO 9+89.43	321.81	-	15.90	A2-6 Mod
L-6	"RV1"/"RV"	LT	9+87.43 TO 66+36.88	428.65	-	21.20	A2-6 Mod
L-6, L-7	"RV"/"RV2"	RT	64+33.95 TO 12+29.75	258.87	-	12.80	A2-6 Mod
L-6, L-7	"RV"/"RV2"	-	66+36.88 TO 12+29.75	306.03	-	15.10	A2-6 Mod
L-6	"RV"	-	64+91.45 TO 65+35.46	138.23	-	3.10	B1-4 Mod
L-7	"RV2"/"DW3"	RT	12+29.75 TO 11+62.72	703.84	-	29.40	A1-6 Mod
L-7	"RV2"/"DW3"	LT	12+29.75 TO 11+62.72	813.60	-	34.00	A1-6 Mod
L-7	"OL"	LT	90+76.27 TO 92+68.00	203.91	-	10.10	A2-6 Mod
L-7	"OL"	LT	92+92.00 TO 93+27.00	47.18	-	2.40	A2-6 Mod
C-1, C-2	"PL"	-	15+17.85 TO 16+87.11	356.53	-	9.30	A1-6
C-2	"PL"	LT	17+87.39 TO 18+69.24	166.09	-	9.90	A2-6
C-3, C-4	"PL"	LT	21+79.91 TO 24+20.27	522.11	-	13.50	A1-6
C-3, C-4	"PL"	LT	21+83.39 TO 24+07.70	230.85	-	9.70	A1-6 Mod
C-4	"PL"	-	25+34.35 TO 27+33.27	412.96	-	10.70	A1-6
C-6	"RV"	-	65+04.45 TO 65+22.45	56.55	-	1.50	A1-6
C-8	"WL1"	RT	11+17.71 TO 12+69.84	367.51	-	15.40	A1-6 Mod
C-8	"WL1"	RT	10+45.32 TO 11+84.67	404.02	-	16.90	A1-6 Mod
C-8	"WL1"	RT	12+15.33 TO 13+58.08	412.28	-	17.20	A1-6 Mod
C-8	"WL1"	-	11+84.67 TO 12+15.33	1,118.86	-	46.70	A1-6 Mod
C-9	"RV2"	LT	12+73.75 TO 13+20.08	377.59	-	15.80	A1-6 Mod
C-9	"RV2"	LT	13+20.08 TO 13+90.41	377.59	-	15.80	A1-6 Mod
C-9	"RV2"	LT	14+14.41 TO 14+60.74	377.59	-	15.80	A1-6 Mod
C-9	"RV2"	LT	14+84.80 TO 15+31.07	393.45	-	16.40	A1-6 Mod
C-10	"RV2"	LT	15+55.07 TO 16+01.40	400.82	-	16.80	A1-6 Mod
C-10	"RV2"	LT	16+25.40 TO 16+71.73	400.82	-	16.80	A1-6 Mod
C-10	"RV2"	LT	16+95.73 TO 17+77.31	434.94	-	18.20	A1-6 Mod
C-14	"RV1"	-	12+44.15 TO 12+56.14	39.58	-	0.90	B1-4 Mod
C-14	"RV1"	-	12+66.14 TO 12+84.47	62.16	-	1.40	B1-4 Mod
C-14	"RV"	-	65+53.02 TO 65+70.96	58.14	-	1.30	B1-4 Mod
C-14	"RV"	-	65+80.96 TO 65+92.96	37.51	-	0.90	B1-4 Mod
C-14	"RV2"	-	10+38.90 TO 10+56.75	49.45	-	1.10	B1-4 Mod
C-14	"RV2"	-	10+66.75 TO 10+78.46	32.15	-	0.80	B1-4 Mod
C-14	"RV"	-	10+55.94 TO 10+73.83	55.37	-	1.30	B1-4 Mod

(N) NOT A SEPARATE PAY ITEM FOR INFORMATION ONLY

MINOR CONCRETE (MISCELLANEOUS CONSTRUCTION) Cont

SHEET NUMBER	LINE	L+/R+	STATION	LF (N)	SQFT (N)	CY	DESCRIPTION
C-14	"RV"	-	64+33.95 TO 64+45.94	29.08	-	0.70	B1-4 Mod
C-58	"PL"	LT	21+83.39 TO 24+07.70	229.32	-	5.70	A1-8 Mod
C-58	"RV"	LT	60+90.68 TO 63+03.27	216.34	-	5.40	A1-8 Mod
C-58	"RV2"	RT	10+66.75 TO 12+58.25	220.53	-	5.50	A1-8 Mod
CURB AND GUTTER SUBTOTAL (Q-3)				14,859.17	0.00	633.30	
SHEET Q-2 SUBTOTAL				1,482.61	36,369.19	540.47	
TOTAL						1,173.77	

PLACE HOT MIX ASPHALT DIKE

NUMBER	SHEET NUMBER	LINE	L+/R+	STATION	TYPE C	TYPE D	TYPE E	TYPE F	CY (N)	MINOR HOT MIX ASPHALT
					LF	LF	LF	LF		TON *
1	L-1	"A1"	L+	280+60.00 TO 280+94.57	34.17	-	-	-	0.20	0.50
2	L-1	"A1"	L+	280+94.57 TO 284+75.00	-	-	375.97	-	4.90	10.00
3	L-1,L-2	"A1"	L+	288+50.58 TO 293+70.00	-	-	512.33	-	6.70	13.60
4	L-1	"A1"	R+	283+02.19 TO 283+66.45	65.06	-	-	-	0.30	0.70
5	L-1	"A1"	R+	283+66.45 TO 284+02.01	-	-	-	36.00	0.30	0.70
6	L-1	"A1"	R+	284+02.01 TO 284+98.75	-	98.11	-	-	2.90	5.90
7	L-2,L-3	"A1"	R+	298+88.03 TO 311+38.00	-	-	1,250.32	-	16.30	33.10
TOTAL					99.23	98.11	2,138.62	36.00	31.60	64.50 *

*: QUANTITY ADDED TO MINOR HMA QUANTITY TABLE.

PLACE HOT MIX ASPHALT (Misc AREA)

SHEET NUMBER	LINE	R+/L+	STATION	PLACE HOT MIX ASPHALT (Misc AREA)	MINOR HOT MIX ASPHALT
				SQYD	TON *
L-1	"A1"	L+	284+75.00 TO 285+14.90	11.15	1.9
L-1	"A1"	R+	283+40.00 TO 285+00.00	75.76	12.8
L-1	"A1"	L+	286+90.02 TO 288+50.58	47.21	8.0
L-2	"A1"	R+	297+52.23 TO 298+87.87	325.10	54.9
L-3	"A1"	R+	309+78.27 TO 311+39.17	71.73	12.2
TOTAL				530.95	89.8 *

*: QUANTITY ADDED TO MINOR HMA QUANTITY TABLE.

SUMMARY OF QUANTITIES
Q-3

STATE OF CALIFORNIA - DEPARTMENT OF TRANSPORTATION
Caltrans

CONSULTANT FUNCTIONAL SUPERVISOR: GERARD LUMABAS
CALCULATED-DESIGNED BY: DARWIN CRUZ
CHECKED BY: PAUL KOSINSKI
REVISED BY
DATE REVISED

LAST REVISION 6-27-12
DATE PLOTTED => 12-SEP-2012
TIME PLOTTED => 16:21

Dist	COUNTY	ROUTE	POST MILES TOTAL PROJECT	SHEET No.	TOTAL SHEETS
11	SD	805	4.7/5.6	323	650

REGISTERED CIVIL ENGINEER 6/1/12 DATE

06-25-12
PLANS APPROVAL DATE

REGISTERED PROFESSIONAL ENGINEER PAUL E. KOSINSKI No. C73254 Exp. 12/31/12 CIVIL STATE OF CALIFORNIA

THE STATE OF CALIFORNIA OR ITS OFFICERS OR AGENTS SHALL NOT BE RESPONSIBLE FOR THE ACCURACY OR COMPLETENESS OF SCANNED COPIES OF THIS PLAN SHEET.

DOKKEN ENGINEERING
5675 RUFFIN Rd
SUITE 250
SAN DIEGO, CA 92123

SANDAG
401 B St
SUITE 800
SAN DIEGO, CA 92101

CLASS 2 AGGREGATE BASE

SHEET NUMBER	Str Sec No./ DESCRIPTION	LINE	Lt/Rt	STATION	SQFT (N)	CY
L-1, L-2, L-3, L-4	1	"A1"	Rt	283+40.00 TO 323+00.00	123,501.31	2,973.20
L-1, L-2, L-3, L-4	1	"A1"	Lt	280+60.00 TO 323+00.00	155,327.23	3,739.40
L-1, L-2	2	"A1"	Rt	289+81.29 TO 296+57.90	5,763.23	138.80
L-3	2	"DAR"	-	301+95.00 TO 309+00.00	43,299.88	1,042.50
L-3, L-4	2	"A1"	-	301+72.50 TO 323+00.00	74,376.73	1,790.60
L-1	3	"A1"	Rt	285+00.00 TO 288+01.30	2,018.71	130.90
L-1	3	"A1"	Lt	289+15.00 TO 290+01.13	779.76	50.60
L-1	3	"A1"	Lt	283+40.00 TO 286+20.02	1,957.09	126.90
L-1	3	"A1"	Rt	283+40.00 TO 287+60.86	2,161.08	140.10
L-3	3	"A1"	Rt	308+05.30 TO 308+90.30	780.00	50.60
L-2	4	"NC"	Rt	48+95.00 TO 49+43.00	878.30	32.60
L-2	4	"PL"/"NC"	Rt	INTERSECTION	1,721.33	63.80
L-2	4	"NC"	Rt	50+59.62 TO 51+01.88	824.07	30.60
L-2	4	"PL"	-	17+72.27 TO 18+69.81	7,080.35	262.30
L-2, L-6	4	"PL"	-	21+80.01 TO 24+36.47	19,980.75	740.10
L-5	4	"PL"	-	12+40.39 TO 17+05.68	27,716.56	1,026.60
L-5	4	"PC"	-	40+52.78 TO 41+45.04	3,038.11	112.60
L-5	4	"NC"	Lt	48+95.00 TO 49+44.35	906.88	33.60
L-5	4	"PL"/"NC"	Lt	INTERSECTION	1,690.75	62.70
L-5	4	"NC"	Lt	50+59.62 TO 51+01.88	746.63	27.70
L-6	4	"RV"	-	58+99.15 TO 59+38.95	1,306.97	48.50
L-6	4	"PL"	-	24+65.53 TO 29+29.02	24,396.75	903.60
L-6	4	"RV"	-	60+93.63 TO 63+17.90	4,443.69	164.60
L-6	4	"RV"	-	63+45.44 TO 64+45.94	2,375.07	88.00
L-6	4	"RV"/"RV1"	-	ROUNDABOUT	5,932.06	219.80
L-6	4	"RV"	-	65+80.96 TO 66+36.88	1,783.01	66.10
L-6	4	"RV1"	-	9+87.47 TO 12+56.15	7,818.92	289.60
L-6, L-7	4	"RV2"	-	10+66.75 TO 12+29.75	4,383.12	162.40
L-2	5	"PL"	Rt	17+86.89 TO 18+57.05	874.39	16.20
L-2, L-6	5	"PL"	Lt	21+78.09 TO 24+35.48	4,039.10	74.80
L-2, L-6	5	"PL"	Rt	22+47.14 TO 23+87.14	1,603.15	29.70
L-5	5	"PL"	Lt	16+05.00 TO 16+65.00	960.00	17.80
L-6	5	"PL"	Lt	26+05.69 TO 26+75.29	840.47	15.60
L-2	6	"DW1"	-	10+25.10 TO 11+49.79	2,536.05	47.00
L-6	6	"DW2"	-	10+26.35 TO 10+80.96	1,092.30	20.30
L-6	8	"RV"	Lt	63+58.87 TO 64+33.94	580.21	21.50
L-6	8	"RV"	Rt	63+58.87 TO 64+33.94	637.15	23.60
C-32	MINOR Conc TYPE 2	"PL"	Lt	17+05.68 TO 17+72.27	3,943.87	73.10
C-36	MINOR Conc TYPE 2	"RV"	Rt	59+37.66 TO 60+95.45	4,820.77	89.30
C-38	MINOR Conc TYPE 2	"RV"	-	63+17.90 TO 63+45.44	731.70	13.60
C-39	MINOR Conc TYPE 2	"RV"	-	64+45.94 TO 64+55.94	309.94	5.80
C-39	MINOR Conc TYPE 2	"RV"	-	65+70.96 TO 65+80.96	363.72	6.80
C-39	MINOR Conc TYPE 2	"RV1"	-	12+56.14 TO 12+66.14	364.66	6.80
C-39	MINOR Conc TYPE 2	"RV2"	-	10+56.75 TO 65+80.96	311.26	5.80
C-39	MINOR Conc TYPE 2	-	-	INTERSECTION	1,185.29	22.00
C-39	MINOR Conc TYPE 3	-	-	INTERSECTION	2,253.51	41.80
				TOTAL		15,050.30**

CRASH CUSHION

SHEET NUMBER	LINE	STATION	REACT 9CBB	SAND FILLED	SCI100GM
			EA	EA	EA
L-2	"A1"	299+08			1
L-3	"A1"	309+00	1		
L-3	"A1"	311+00		14	
		TOTAL	1	14	1

Temp FENCE (TYPE ESA)

SHEET NUMBER	LINE	STATION	LF
L-5	"PL"	13+96.00 TO 17+12.06	373.2
		TOTAL	373.2

PIPE HANDRAILING

SHEET NUMBER	LF	REMARKS
C-8	56.0	ALONG STAIRS TO PARKING LOT 1
TOTAL	56.0	

STEEL BENCH

SHEET NUMBER	LINE	EACH
C-34	"PL"	8
	TOTAL	8

4" PERFORATED PLASTIC PIPE UNDERDRAIN

SHEET NUMBER	LOCATION	LF
C-58	"RV2"	201.4
C-58	"RV"	203.2
C-58	"PL"	178.1
	TOTAL	582.7

PARKING BUMPER (PRECAST CONCRETE)

SHEET NUMBER	LINE	EACH
C-8	"WL1"	17
	TOTAL	17

FILTER FABRIC

SHEET NUMBER	LOCATION/ LINE	SQYD (N)
C-8	PARKING LOT 1	4,985.1
C-58	"RV2"	277.0
C-58	"RV"	278.1
C-58	"PL"	203.2
C-9, C-10	PARKING LOT 2	9,716.0

DECOMPOSED GRANITE (MISCELLANEOUS AREAS)

SHEET NUMBER	LINE	STATION	SQFT
L-6,L-7	-	"RV2" 10+05.19 TO "OL" 93+57.28	28,546.06
		TOTAL	28,546.06

CLASS 4 AGGREGATE BASE

SHEET NUMBER	LOCATION	SQFT (N)	CY
C-8	PARKING LOT 1	51,286.85	3,509.40*
C-9,C-10	PARKING LOT 2	87,443.86	12,005.80*
-	PALOMAR SIDEWALK	1,294.24	11.98
		TOTAL	15,527.18

* VARIABLE DEPTH, USE AVERAGE DEPTH TO CALCULATE.

METAL BEAM GUARD RAILING

MBGR No.	SHEET No.	LINE	STATION	LAYOUT TYPE (N)	MBGR	END ANCHOR ASSEMBLY (TYPE SFT)	ALTERNATIVE FLARED TERMINAL SYSTEM
					LF	EA	EA
1	L-1	"A1"	283+36.88TO 284+02.00	16B	76.3	1.0	1.0
				TOTAL	76.3	1.0	1.0

DETECTABLE WARNING SURFACE

SHEET	(N) EA	SQFT
C-34	5	105
		-
	TOTAL	105

** SEE UTILITY QUANTITIES SHEETS FOR ADDITIONAL QUANTITIES

(N) NOT A SEPARATE PAY ITEM FOR INFORMATION ONLY

SUMMARY OF QUANTITIES

Q-4

STATE OF CALIFORNIA - DEPARTMENT OF TRANSPORTATION

Caltrans

CONSULTANT FUNCTIONAL SUPERVISOR: GERARD LUMABAS

CALCULATED-DESIGNED BY: DARWIN CRUZ

CHECKED BY: PAUL KOSINSKI

REVISED BY / DATE REVISED

LAST REVISION 6-22-12

DATE PLOTTED => 14-SEP-2012
TIME PLOTTED => 14:24

Dist	COUNTY	ROUTE	POST MILES TOTAL PROJECT	SHEET No.	TOTAL SHEETS
11	SD	805	4.7/5.6	324	650

REGISTERED CIVIL ENGINEER 6/1/12 DATE

06-25-12
PLANS APPROVAL DATE

REGISTERED PROFESSIONAL ENGINEER PAUL E. KOSINSKI No. C73254 Exp. 12/31/12 CIVIL STATE OF CALIFORNIA

THE STATE OF CALIFORNIA OR ITS OFFICERS OR AGENTS SHALL NOT BE RESPONSIBLE FOR THE ACCURACY OR COMPLETENESS OF SCANNED COPIES OF THIS PLAN SHEET.

DOKKEN ENGINEERING
5675 RUFFIN Rd
SUITE 250
SAN DIEGO, CA 92123

SANDAG
401 B St
SUITE 800
SAN DIEGO, CA 92101

RETAINING WALLS

RETAINING WALL No.	STRUCTURE EXCAVATION (Ret WALL)	STRUCTURE BACKFILL (Ret WALL)	PERVIOUS BACKFILL MATERIAL (Ret WALL)	STRUCTURAL CONCRETE, Ret WALL	BAR REINFORCING STEEL (Ret WALL)	CONCRETE BARRIER (TYPE 736B MOD)	CONCRETE BARRIER (TYPE 26 MOD)	CONCRETE BARRIER (TYPE 26 MOD2)	MASONRY BLOCK WALL	ARCHITECTURAL TREATMENT (DRY STACK TEXTURE)	PREPARE AND STAIN CONCRETE	ARCHITECTURAL TREATMENT (LOUVER TEXTURE)	ARCHITECTURAL TREATMENT (ASHLAR TILE TEXTURE)	ARCHITECTURAL TREATMENT (ASHLAR TILE TEXTURE) (SMALL)	ANTI-GRAFFITI COATING	TUBULAR HANDRAILING (Mod)	TUBULAR HANDRAILING (Mod 2)	MINOR CONCRETE (GUTTER)	WEATHERING STEEL PLATE
	CY	CY	CY	CY	LB	LF	LF	LF	SQFT	SQFT	SQFT	SQFT	SQFT	SQFT	SQFT	LF	LF	LF	EA
RW10L	590	600	28	230	24,500	-	258	-	-	-	-	475	-	1,380	-	-	260	-	-
RW12R	830	1,300	81	480	91,000	-	-	376	1,130	3,180	3,180	690	-	-	4,665	-	-	-	-
RW18L	290	230	15	100	10,000	-	118	-	-	-	-	-	670	-	-	120	-	-	-
RW22L	310	240	-	150	25,900	-	-	-	-	-	-	-	-	1,350	-	-	-	-	22
RW27L	722	308	-	255	25,386	-	226	-	-	-	-	414	-	1,739	-	-	-	-	-
RW61L	4,680	3,630	220	1,120	210,900	-	563	-	-	-	-	1,035	-	6,715	-	-	564	-	-
RW285L	880	780	45	330	37,600	-	368	-	-	-	-	675	1,665	-	-	-	-	368	-
RW296L	1,300	1,010	50	320	65,100	-	226	-	-	-	-	415	1,985	-	-	-	-	-	-
RW302ML	800	1,270	67	440	48,800	378	-	-	-	-	-	-	1,855	-	-	-	-	-	-
RW302MR	800	1,270	67	440	48,800	378	-	-	-	-	-	-	1,855	-	-	-	-	-	-
TOTAL	11,202	10,638	573	3,865	587,986	756	1,759	376	1,130	3,180	3,180	3,704	8,030	11,184	4,665	120	824	368	22

CONCRETE BARRIER

SHEET NUMBER	LINE	R+/L+	STATION	TYPE 60	TYPE 60 Mod	TYPE 60 Mod2	TYPE 60C Mod	TYPE 60C Mod2	TYPE 60C Mod3	TYPE 60C Mod4	TYPE 60GE	TYPE 60GA Mod	TYPE 60P	PORTABLE TYPE 60K	NOTES
				LF	LF	LF	LF	LF	LF	LF	LF	LF	LF	LF	
L-1	"A1"	L+	283+65.00 TO 289+30.04	-	-	-	-	564.52	-	-	-	-	-	-	CB 1
L-1	"A1"	L+	284+75.00 TO 288+50.58	-	372.10	-	-	-	-	-	-	-	-	-	CB 4
L-1, L-2	"A1"	R+	283+25.00 TO 301+50.00	-	-	-	-	1,827.63	-	-	-	-	-	-	CB 2
L-1, L-2	"A1"	R+	284+50.00 TO 297+57.22	-	-	-	-	-	-	1,320.48	-	-	-	-	CB 3
L-1, L-2	"A1"	L+	289+30.04 TO 297+50.00	-	-	-	-	-	818.45	-	-	-	-	-	CB 5
L-2	"A1"	L+	297+50.00 TO 301+50.00	-	-	-	-	400.03	-	-	-	-	-	-	CB 6
L-2	"A1"	L+	293+70.00 TO 297+42.12	-	-	-	-	-	-	370.93	-	-	-	-	CB 7
L-2	"A1"	R+	297+57.22 TO 298+88.03	130.83	-	-	-	-	-	-	-	-	-	-	CB 9
L-2, L-3	"DAR"/"A1"	-	300+67.00 TO 305+19.00	452.00	-	-	-	-	-	-	-	-	-	-	CB 10
L-2, L-3	"A1"	R+	301+50.00 TO 304+86.88	-	336.88	-	-	-	-	-	-	-	-	-	CB 11
L-2, L-3	"A1"	L+	301+50.00 TO 304+86.88	-	336.88	-	-	-	-	-	-	-	-	-	CB 12
L-2, L-4	"A1"	L+	297+42.12 TO 319+31.50	-	-	-	-	2,189.46	-	-	-	-	-	-	CB 8
L-3	"DAR"/"A1"	R+	304+86.88 TO 305+50.04	-	-	63.16	-	-	-	-	-	-	-	-	CB 13
L-3	"DAR"/"A1"	L+	304+86.88 TO 305+50.04	-	-	63.16	-	-	-	-	-	-	-	-	CB 14
L-3	"DAR"/"A1"	R+	305+50.04 TO 309+00.00	-	-	-	350.18	-	-	-	-	-	-	-	CB 15
L-3	"DAR"/"A1"	L+	305+50.04 TO 309+00.00	-	-	-	350.18	-	-	-	-	-	-	-	CB 16
L-3, L-4	"A1"	L+	308+84.13 TO 323+23.48	-	-	-	-	-	-	-	-	-	-	1,439.35	CB 17
L-3	"A1"	R+	309+78.00 TO 311+38.00	160.02	-	-	-	-	-	-	-	-	-	-	CB 18
L-3	"A1"	-	310+24.00 TO 310+56.00	-	-	-	-	-	-	-	-	32.00	-	-	CB 19
L-3	"A1"	-	310+56.00 TO 312+04.00	147.99	-	-	-	-	-	-	-	-	-	-	CB 20
L-3, L-4	"A1"	R+	311+06.10 TO 323+23.08	-	-	-	-	-	-	-	-	-	-	1,216.98	CB 21
L-3, L-4	"A1"	R+	311+38.00 TO 323+34.14	-	-	-	-	1,196.13	-	-	-	-	-	-	CB 22
L-3	"A1"	-	312+04.00 TO 312+36.00	-	-	-	-	-	-	-	-	32.00	-	-	CB 23
L-3	"A1"	-	312+36.00 TO 313+36.20	100.20	-	-	-	-	-	-	-	-	-	-	CB 24
L-3, L-4	"A1"	-	313+36.20 TO 314+63.80	-	-	-	-	-	-	-	127.75	-	-	-	CB 25
L-4	"A1"	-	314+63.80 TO 315+64.00	100.20	-	-	-	-	-	-	-	-	-	-	CB 26
L-4	"A1"	-	315+64.00 TO 315+96.00	-	-	-	-	-	-	-	-	32.00	-	-	CB 27
L-4	"A1"	-	315+96.00 TO 317+43.00	148.00	-	-	-	-	-	-	-	-	-	-	CB 28
L-4	"A1"	L+	317+43.00 TO 317+77.00	-	-	-	-	-	-	-	-	32.00	-	-	CB 29
L-4	"A1"	-	317+77.00 TO 321+86.20	410.20	-	-	-	-	-	-	-	-	-	-	CB 30
L-4	"A1"	-	319+31.50 TO 323+34.14	402.66	-	-	-	-	-	-	-	-	-	-	CB 31
L-4	"A1"	-	321+86.20 TO 323+13.80		-	-	-	-	-	-	127.75	-	-	-	CB 32
L-4	"A1"	R+	323+23.08 TO 323+83.08	60.00	-	-	-	-	-	-	-	-	-	-	CB 33
L-4	"A1"	L+	323+23.48 TO 323+83.48	60.00	-	-	-	-	-	-	-	-	-	-	CB 34
L-2	"DAR"	-	299+28.72 TO 299+40.72		-	-	-	-	-	-	-	-	12.00	-	CB 35
L-2	"DAR"	-	299+40.72 TO 300+55.00	114.28	-	-	-	-	-	-	-	-	-	-	CB 36
L-2	"DAR"	-	300+55.00 TO 300+67.00		-	-	-	-	-	-	-	-	12.00	-	CB 37
L-3	"A1"	-	305+19.00 TO 305+31.00										12.00		CB 38
L-3	"A1"	-	305+31.00 TO 310+24.00	493.00	-	-	-	-	-	-	-	-		-	CB 39
			TOTAL	2,779.38	1,045.86	126.32	700.36	6,177.77	818.45	1,691.41	255.50	128.00	36.00	2,656.33	

MASONRY BLOCK WALL (PRIVACY WALL)

PRIVACY WALL No.	MASONRY BLOCK WALL (PRIVACY WALL)	STRUCTURAL CONCRETE, PRIVACY WALL	16" CIDH CONCRETE PILING
	SQFT	CY	LF
PW10L	2,110	30	200
PW16R	1,397	20	80
PW64R	1,830	30	180
PW66R	6,402	80	570
TOTAL	11,739	160	1,030

SUMMARY OF QUANTITIES

Q-5

STATE OF CALIFORNIA - DEPARTMENT OF TRANSPORTATION
Caltrans

CONSULTANT FUNCTIONAL SUPERVISOR: GERARD LUMABAS
CALCULATED-DESIGNED BY: DARWIN CRUZ
CHECKED BY: PAUL KOSINSKI
REVISED BY
DATE REVISED

LAST REVISION 6-27-12
DATE PLOTTED => 12-SEP-2012
TIME PLOTTED => 16:21

Dist	COUNTY	ROUTE	POST MILES TOTAL PROJECT	SHEET No.	TOTAL SHEETS
11	SD	805	4.7/5.6	325	650

REGISTERED CIVIL ENGINEER 6/1/12 DATE

06-25-12
PLANS APPROVAL DATE

REGISTERED PROFESSIONAL ENGINEER PAUL E. KOSINSKI No. C73254 Exp. 12/31/12 CIVIL STATE OF CALIFORNIA

THE STATE OF CALIFORNIA OR ITS OFFICERS OR AGENTS SHALL NOT BE RESPONSIBLE FOR THE ACCURACY OR COMPLETENESS OF SCANNED COPIES OF THIS PLAN SHEET.

DOKKEN ENGINEERING
5675 RUFFIN Rd
SUITE 250
SAN DIEGO, CA 92123

SANDAG
401 B St
SUITE 800
SAN DIEGO, CA 92101

MINOR CONCRETE

SHEET NUMBER	DEPTH (FT)	(TYPE 1) (EXPOSED AGGREGATE)		(TYPE 2) (SEEDED AGGREGATE)		(TYPE 3) (COLORED)	
		SQFT (N)	CY	SQFT (N)	CY	SQFT (N)	CY
C-31	0.33	237.95	2.91	-	-	-	-
C-32	0.33	645.93	7.89	2,589.11	31.64	-	-
C-32	0.5	-	-	3,943.87	73.03	-	-
C-33	0.33	1,677.83	20.51	-	-	-	-
C-34	0.33	911.00	11.13	-	-	3,550.56	43.40
C-35	0.33	-	-	-	-	635.34	7.77
C-36	0.33	370.38	4.53	1,793.61	21.92	112.34	1.37
C-36	0.5	-	-	4,824.05	89.33	-	-
C-37	0.33	777.33	9.50	-	-	473.40	5.79
C-38	0.33	-	-	3,264.38	39.90	-	-
C-38	0.5	-	-	731.70	13.55	-	-
C-39	0.33	211.95	2.59	1,847.10	22.58	-	-
C-39	0.5	-	-	2,534.01	46.93	2,253.51	41.73
C-40	0.33	0.83	0.01	-	-	-	-
C-42	0.33	-	-	429.29	5.25	-	-
C-43	0.5	-	-	-	-	3,139.22	58.13
TOTAL		4,833.19	59.07	21,957.12	344.13	10,164.37	158.19

EARTHWORK

LINE	LOCATION	ROADWAY EXCAVATION	EMBANKMENT (N)
		CY	CY
"A1"	NB OUTSIDE WIDEN	32,279	14,852
"A1"	SB OUTSIDE WIDEN	19,973	7,360
"A1"	NB & SB INSIDE WIDEN	3,635	8,618
"PL"	LOCAL ROADWAY	13,008	10,191
"NC"	LOCAL ROADWAY	175	-
"PC"	LOCAL ROADWAY	98	-
"RV"	LOCAL ROADWAY	1,351	109
"RW"	LOCAL ROADWAY	45	4
"RV1"	PARKING LOT 1 DRIVEWAY	1,099	243
"RV2"	PARKING LOT 2 DRIVEWAY	5,827	123
"WL1"	PARKING LOT 1	30,924	608
"RV2"	PARKING LOT 2	15,179	1,708
"DAR"	NB & SB	974	5,112
"DW1"	SDG&E DRIVEWAY 1	608	708
"DW2"	SDG&E DRIVEWAY 2	191	-
	TOTAL	125,367	49,637

ROCK BLANKET

SHEET NUMBER	LINE	STATION	SQFT (N)	SQYD
L-1, L-2, L-3	"A1"	283+60.03 TO 301+65.00	78,528.79	8,725.42
C-39	"RV"	64+34.57 TO 64+45.32	21.62	2.40
C-39	"RV"	64+56.57 TO 64+74.71	144.54	16.06
C-39	"RV"	65+52.56 TO 65+70.34	177.33	19.70
C-39	"RV"	65+81.59 TO 65+92.34	74.96	8.33
C-39	"RV1"	12+44.77 TO 12+55.52	86.94	9.66
C-39	"RV1"	12+66.77 TO 12+84.88	209.65	23.29
C-39	"RV2"	10+39.24 TO 10+56.12	108.78	12.09
C-39	"RV2"	10+67.37 TO 10+77.83	47.75	5.31
		TOTAL	79,400.36	8,822.26

(N) NOT A SEPARATE PAY ITEM FOR INFORMATION ONLY

MINOR CONCRETE (MINOR STRUCTURE)

SHEET NUMBER	LINE	L+/R+	STATION	LF (N)	CY	DESCRIPTION
L-6, C-8	"PL"	100L+	24+21.70 TO 24+40.06	34	12.70	MONUMENT SIGN
				TOTAL	12.70*	

* FOR ADDITIONAL QUANTITIES, SEE DRAINAGE QUANTITIES.

SUMMARY OF QUANTITIES

Q-6

REVISED BY | DATE REVISED
DARWIN CRUZ | PAUL KOSINSKI
CALCULATED-DESIGNED BY | CHECKED BY
CONSULTANT FUNCTIONAL SUPERVISOR
GERARD LUMABAS
STATE OF CALIFORNIA - DEPARTMENT OF TRANSPORTATION
Caltrans

LAST REVISION 6-18-12 | DATE PLOTTED => 12-SEP-2012 | TIME PLOTTED => 16:21

Dist	COUNTY	ROUTE	POST MILES TOTAL PROJECT	SHEET No.	TOTAL SHEETS
11	SD	805	4.7/5.6	326	650

REGISTERED CIVIL ENGINEER 6/1/12 DATE

06-25-12
PLANS APPROVAL DATE

REGISTERED PROFESSIONAL ENGINEER PAUL E. KOSINSKI No. C73254 Exp. 12/31/12 CIVIL STATE OF CALIFORNIA

THE STATE OF CALIFORNIA OR ITS OFFICERS OR AGENTS SHALL NOT BE RESPONSIBLE FOR THE ACCURACY OR COMPLETENESS OF SCANNED COPIES OF THIS PLAN SHEET.

DOKKEN ENGINEERING
5675 RUFFIN Rd
SUITE 250
SAN DIEGO, CA 92123

SANDAG
401 B St
SUITE 800
SAN DIEGO, CA 92101

FENCE

SHEET NUMBER	LINE	Lt/Rt	STATION	TYPE 1	TYPE CL-4	TYPE CL-6	REMOVE FENCE	REMARKS
				LF	LF	LF	LF	
L-2	"A1"	Lt	299+60.98	15.2	-	-	10.0	WOOD
L-2	"A1"	Lt	300+23.05	15.0	-	-	10.0	WOOD
L-2	"A1"	Lt	300+87.38	14.3	-	-	10.0	WOOD
L-2	"A1"	Lt	301+47.34	8.9	-	-	5.0	WOOD
L-2	"A1"	Lt	295+00.00 TO 297+56.57	-	-	193.9	327.9	CHAIN LINK
L-2	"A1"	Rt	298+86.91 TO 301+02.42	-	-	216.9	216.9	CHAIN LINK
L-3	"A1"	Lt	302+06.98	7.8	-	-	5.0	WOOD
L-3	"A1"	Lt	302+67.93	10.4	-	-	5.0	WOOD
L-3	"A1"	Lt	303+27.88	10.0	-	-	5.0	WOOD
L-3	"A1"	Lt	305+07.75	8.9	-	-	5.0	WOOD
L-3	"A1"	Lt	305+67.70	10.7	-	-	5.0	WOOD
L-3	"A1"	Lt	307+51.56	11.0	-	-	5.0	WOOD
L-3	"A1"	Lt	308+17.06	8.1	-	-	5.0	WOOD
L-3	"A1"	Lt	309+42.83	8.2	-	-	5.0	WOOD
L-3	"A1"	Lt	310+10.83	8.0	-	-	5.0	WOOD
L-3	"A1"	Lt	310+78.82	10.0	-	-	5.0	WOOD
L-3	"A1"	Lt	311+46.97	9.8	-	-	5.0	WOOD
L-3	"A1"	Lt	312+14.97	9.3	-	-	5.0	WOOD
L-3	"A1"	Lt	312+82.96	10.8	-	-	5.0	WOOD
L-3	"A1"	Lt	313+50.96	10.3	-	-	5.0	WOOD
L-3	"A1"	Lt	314+18.96	9.7	-	-	5.0	WOOD
L-4	"A1"	Lt	314+86.96	11.3	-	-	5.0	WOOD
L-4	"A1"	Lt	315+54.95	10.7	-	-	5.0	WOOD
L-4	"A1"	Lt	316+22.95	10.2	-	-	5.0	WOOD
L-4	"A1"	Lt	316+91.25	11.3	-	-	5.0	WOOD
L-4	"A1"	Lt	317+59.25	10.5	-	-	5.0	WOOD
L-4	"A1"	Lt	318+27.25	8.8	-	-	5.0	WOOD
L-4	"A1"	Lt	318+95.24	11.1	-	-	5.0	WOOD
L-4	"A1"	Lt	319+63.24	10.3	-	-	5.0	WOOD
L-4	"A1"	Lt	320+31.24	8.7	-	-	5.0	WOOD
L-4	"A1"	Lt	320+99.24	10.9	-	-	5.0	WOOD
L-4	"A1"	Lt	321+61.23	10.4	-	-	5.0	WOOD
L-6	"PL"	Rt	24+00.00	-	-	-	13.2	WOOD GATE
L-3	"A1"	Rt	303+18.79	11.2	-	-	10.0	WOOD
L-3	"A1"	Rt	303+87.95	11.2	-	-	10.0	WOOD
L-3	"A1"	Rt	304+53.99	11.2	-	-	10.0	WOOD
L-3	"A1"	Rt	305+16.51	11.2	-	-	10.0	WOOD
L-3	"A1"	Rt	305+81.96	11.2	-	-	10.0	WOOD
L-3	"A1"	Rt	306+48.38	11.2	-	-	10.0	WOOD
L-3	"A1"	Rt	307+16.75	-	-	11.2	10.0	CHAIN LINK
L-3	"A1"	Rt	307+82.05	11.2	-	-	10.0	WOOD
L-3	"A1"	Rt	308+50.39	-	-	11.2	10.0	CHAIN LINK
L-3	"A1"	Rt	309+20.32	-	-	11.2	10.0	CHAIN LINK
L-3	"A1"	Rt	311+39.34	10.0	-	-	10.0	WOOD
L-3	"A1"	Rt	311+39.34	14.8	-	-	14.8	WOOD
L-5	"PL"	Rt	13+75.53 TO 17+11.70	-	-	363.1	-	CHAIN LINK
L-3,L-4	"A1"	Rt	311+39.17 TO 323+44.32	-	-	1,172.9	1,172.9	CHAIN LINK
L-2	"NC"/"PL"	Rt	47+34.62 TO 18+19.81	-	252.8	-	413.0	CHAIN LINK
L-2	"PL"/"NC"	Rt	17+69.00 TO 18+08.89	-	-	-	532.9	CHAIN LINK
L-2	"PL"	Lt	17+76.45 TO 19+02.25	-	-	-	116.7	CHAIN LINK
L-2	"PL"	Rt	21+82.81 TO 22+29.27	-	-	-	49.2	CHAIN LINK
L-5	"PL"	Rt	13+75.50 TO 17+14.47	-	-	-	450.3	CHAIN LINK
L-6	"RV"	Lt	60+34.78 TO 62+46.64	-	-	-	537.9	CHAIN LINK
L-6	"RV"	Rt	64+70.21 TO 66+25.46	-	-	-	206.9	CHAIN LINK
L-6	"RV2"	Lt	10+59.28 TO 10+79.71	-	-	-	60.5	CHAIN LINK
L-6,L-7	"RV2"/"OL"	-	11+38.20 TO 93+62.96	-	-	-	467.1	CHAIN LINK
			TOTAL	413.8	252.8	1,980.4	4,855.2	

GATE

SHEET NUMBER	LINE	RT/LT	STATION	4' CHAIN LINK (TYPE CL-6)	PIPE GATE
				EA	EA
L-2	"A1"	Lt	296+00	1.0	-
L-2	"NC"	Rt	47+32	-	2.0
L-6	"RV2"	Lt	11+10	-	2.0
L-5	"PL"	RT	15+00	1.0	-
L-4	"A1"	RT	314+65	1.0	-
L-4	"A1"	RT	317+80	1.0	-
L-4	"A1"	RT	321+00	1.0	-
L-4	"A1"	RT	323+49	1.0	-
L-7	"RV2"	RT	13+46	1.0	-
			TOTAL	7.0	4.0

MASONRY BLOCK WALL (TYPE 1)

SHEET NUMBER	LINE	Lt/Rt	STATION	LF (N)	MASONRY BLOCK WALL (TYPE 1)	STRUCTURAL CONCRETE, MASONRY BLOCK WALL (TYPE 1)
					SQFT	CY
L-3	"A1"	Lt	303+87.84	9.6	57.6	1.2
L-3	"A1"	Lt	304+47.79	9.3	55.8	1.2
L-3	"A1"	Lt	306+27.66	10.9	65.4	1.4
L-3	"A1"	Lt	306+87.61	11.0	66	1.4
L-3	"A1"	Lt	308+77.34	8.2	49.2	1.1
L-2	"A1"	Rt	296+89.64	24.3	145.8	3.2
L-2	"A1"	Rt	301+17.00	33.5	201	4.3
L-3	"A1"	Rt	301+97.00	11.2	67.2	1.5
L-3	"A1"	Rt	302+57.65	11.2	67.2	1.5
L-3	"A1"	Rt	310+00.99	11.2	67.2	1.5
			TOTAL		842.4	18.2

NOTE: WALL HEIGHT IS 6' AND TRENCH FOOTING DEPTH IS 3.5' FOR ALL MASONRY BLOCK WALL (TYPE 1).

(N) NOT A SEPARATE PAY ITEM FOR INFORMATION ONLY

PAVEMENT JOINTS

LINE	STATION	SEAL PAVEMENT JOINT		SEAL ISOLATION JOINT
		LONGITUDINAL JOINT	TRANSVERSE JOINT	
		LF	LF	LF
"A1"	283+40.00 TO 323+00.00	9,377.13	9,154.38	4,031.33
"A1"	280+60.00 TO 323+00.00	11,777.78	11,488.76	4,272.75
DAR	301+95.00 TO 309+00.00	3,287.97	4,160.00	58.17
"A1"	301+55.00 TO 323+00.00	3,624.97	4,759.93	4,368.99
	SUBTOTAL	28,067.85	29,563.07	12,731.24
	TOTAL	57,630.92		12,731.24

SUMMARY OF QUANTITIES

Q-7

STATE OF CALIFORNIA - DEPARTMENT OF TRANSPORTATION
Caltrans

CONSULTANT FUNCTIONAL SUPERVISOR: GERARD LUMABAS
CALCULATED-DESIGNED BY: DARWIN CRUZ
CHECKED BY: PAUL KOSINSKI
REVISED BY
DATE REVISED

LAST REVISION 6-18-12
DATE PLOTTED => 12-SEP-2012
TIME PLOTTED => 16:21

Dist	COUNTY	ROUTE	POST MILES TOTAL PROJECT	SHEET No.	TOTAL SHEETS
11	SD	805	4.7/5.6	327	650

REGISTERED CIVIL ENGINEER 6/1/12 DATE

06-25-12
PLANS APPROVAL DATE

REGISTERED PROFESSIONAL ENGINEER PAUL E. KOSINSKI No. C73254 Exp. 12/31/12 CIVIL STATE OF CALIFORNIA

THE STATE OF CALIFORNIA OR ITS OFFICERS OR AGENTS SHALL NOT BE RESPONSIBLE FOR THE ACCURACY OR COMPLETENESS OF SCANNED COPIES OF THIS PLAN SHEET.

DOKKEN ENGINEERING
5675 RUFFIN Rd
SUITE 250
SAN DIEGO, CA 92123

SANDAG
401 B St
SUITE 800
SAN DIEGO, CA 92101

IRRIGATION CROSSOVERS

LOCATION			SIDE	CONDUIT TYPE (3)	(N) WATER LINE CROSSOVER	(N) SPRINKLER CONTROL CROSSOVER
SHEET NUMBER	LINE	STATION	L+/R+	SIZE 10" LENGTH (LF)	SIZE (INCH)	SIZE (INCH)
L-2	"PL"	18+45.54	-	113.5	2	2
L-2	"PL"	22+25.23	L+	79.5	2	2
L-2	"PL"	22+40.71	R+	69.3	2	2
L-2,L-5	"NA"	50+46.01	-	117.4	2	2
L-2,L-6	"PL"	22+50.00	L+	60.5	2	2
L-5	"PL"	15+96.35	-	50.0	2	2
L-5	"PL"	15+96.90	L+	33.0	2	2
L-6	"PL"	22+81.34 TO 22+92.96	L+	16.8	2	2
L-6	"PL"	23+06.39 TO 23+17.93	L+	16.8	2	2
L-6	"PL"	23+31.36 TO 23+43.09	L+	17.0	2	2
L-6	"PL"	23+56.53 TO 23+68.20	L+	16.9	2	2
L-6	"PL"	23+81.43 TO 23+93.45	L+	17.3	2	2
L-6	"PL"	24+07.85 TO 24+21.93	L+	33.8	2	2
L-6	"PL"	25+74.66 TO 25+75.25	L+	78.0	2	2
L-6	"PL"	26+63.02	-	45.1	2	2
L-6	"PL"	26+79.60	L+	53.4	2	2
L-6	"PL"	29+10.75	-	83.7	2	2
L-6	"WL1"	10+56.55	-	49.0	2	2
L-6	"WL1"	10+85.30 TO 11+19.52	R+	56.0	2	2
L-6	"RV"	65+17.91 TO 65+46.26	L+	43.0	2	2
L-6	"RV"	65+97.69	-	55.3	2	2
L-6	"RV2"	10+85.38	-	38.9	2	2
L-6	"RV2"	11+08.23 TO 11+32.14	L+	27.9	2	2
L-7	"RV2"	12+92.75	-	32.0	2	2
L-7	"RV2"	12+92.94	L+	52.0	2	2
L-7	"RV2"	13+63.32	L+	52.0	2	2
L-7	"RV2"	14+33.97	L+	52.0	2	2
L-7	"RV2"	15+04.42	L+	52.0	2	2
L-7	"RV2"	15+73.65	L+	52.0	2	2
L-7	"RV2"	16+44.63	L+	52.0	2	2
L-7	"RV2"	16+44.99	-	32.8	2	2
L-7	"RV2"	17+09.77 TO 17+33.85	-	32.3	2	2
L-7	"DW2"	11+03.56 TO 11+34.73	R+	32.0	2	2
L-7	"DW2"	11+62.72	-	32.0	2	2
L-8	"RV"	10+05.20 TO 10+18.93	L+	26.5	2	2
L-8	"WL1"	10+85.09 TO 11+20.36	R+	52.0	2	2
L-8	"WL1"	11+89.35 TO 12+12.53	R+	23.2	2	2
L-8	"WL1"	10+56.55	L+	34.3	2	2
L-8	"WL1"	11+86.93 TO 12+16.15	L+	27.0	2	2
L-9	"RV2"	12+47.46	-	35.0	2	2
L-9	"RV"	65+04.93 TO 65+32.21	L+	34.5	2	2
L-9	"RV"	66+12.54	-	48.3	2	2
L-9	"RV"	66+12.54	-	48.3	2	2
L-9	"RV2"	11+10.49 TO 11+30.51	L+	20.0	2	2
L-9	"RV2"	12+92.84	L+	38.4	2	2
L-9	"RV2"	13+64.06	L+	38.4	2	2
L-9	"RV2"	12+92.84	L+	38.4	2	2
L-10	"RV2"	14+32.4	L+	33.5	2	2
L-10	"RV2"	15+02.68	L+	34.3	2	2
L-10	"RV2"	15+73.65	L+	34.3	2	2
L-10	"RV2"	16+43.90	L+	34.5	2	2
L-10	"RV2"	16+43.91	R+	25.6	2	2
L-10	"RV2"	17+10.84 TO 17+32.95	L+	24.1	2	2
L-10	"RV2"	20+69.39 TO 20+90.64	L+	21.6	2	2
			TOTAL	2317.4		

(N) - NOT A SEPARATE PAY ITEM FOR INFORMATION ONLY
X - DENOTES REQUIREMENT

CONDUIT TYPE
(APPLICABLE WHEN CIRCLED BELOW AND SHOWN UNDER THE 'CONDUIT TYPE' COLUMN HEADING)

1 BITUMINOUS COATED CORRUGATED STEEL PIPE (0.064 INCH THICK)
2 CORRUGATED STEEL PIPE (0.064 INCH THICK)
(3) CORRUGATED HIGH DENSITY POLYETHYLENE PIPE
4 ALTERNATIVE CONDUIT

(N) NOT A SEPARATE PAY ITEM FOR INFORMATION ONLY

PRECAST CONCRETE PLANTER

SHEET NUMBER	LINE	STATION	EA
C-33	-	-	10
C-35	-	-	1
		TOTAL	11

TREE GRATE AND FRAME

SHEET NUMBER	EA
C-32	2
C-34	3
C-35	4
C-36	1
C-37	1
TOTAL	11

IMPORTED TOPSOIL

SHEET NUMBER	DEPTH (N)	SQFT (N)	CY	REMARKS
C-31	1.00	1,869.31	69.2	
C-32	1.00	1,657.20	61.4	
C-32	2.50	50.00	4.6	TREE GRATE
C-34	1.00	988.38	36.6	
C-34	2.50	75.00	6.9	TREE GRATE
C-34	3.00	1,130.79	125.6	BIORETENTION CELL
C-35	1.00	482.50	17.9	
C-35	2.50	100.00	9.3	TREE GRATE
C-37	1.00	1,235.78	45.8	
C-37	2.50	24.00	2.2	TREE GRATE
C-36	1.00	1,482.48	54.9	
C-36	2.50	24.00	2.2	TREE GRATE
C-36	3.00	698.40	77.6	BIORETENTION CELL
C-38	1.00	5,865.05	217.2	
C-38	3.00	728.07	80.9	BIORETENTION CELL
C-39	1.00	9,743.37	360.9	
C-39	3.00	376.57	41.8	BIORETENTION CELL
C-40	1.00	7,298.34	270.3	
C-40	3.00	1,052.68	117.0	BIORETENTION CELL
C-41	1.00	7,368.95	272.9	
C-42	1.00	7,732.87	286.4	
C-43	1.00	6,055.04	224.3	
C-44	1.00	1,507.76	55.8	
C-45	1.00	3,448.80	127.7	
C-46	1.00	5,849.30	216.6	
L-2,L-3,L-4	1.50	10,179.58	565.5	PLANTING POCKET
L-3,L-4	1.50	2,264.11	125.8	PLANTING POCKET
	TOTAL	79,288.34	3,477.3	

IRRIGATION SLEEVE

SLEEVE IDENTIFICATION	SHEET NUMBER	SIZE (INCH)	LENGTH (LF)
S1	IP-4	3	8.0
S2	IP-4	3	8.6
S3	IP-5	3	7.6
S4	IP-5	3	11.6
S5	IP-5	3	9.2
S6	IP-6	3	5.2
S7	IP-6	3	5.9
S8	IP-6	3	5.3
S9	IP-6	3	3.7
S10	IP-6	3	3.5
S11	IP-6	3	3.1
S12	IP-8	3	24.4
S13	IP-8	3	13.0
S14	IP-8	3	39.1
S15	IP-8	3	13.2
S16	IP-8	3	12.8
S17	IP-8	3	13.0
S18	IP-8	3	12.9
S19	IP-8	3	12.9
S20	IP-8	3	4.2
S21	IP-8	3	11.5
S22	IP-8	3	6.3
S23	IP-9	3	14.7
S24	IP-9	3	10.0
S25	IP-9	3	18.3
S26	IP-9	3	10.1
S27	IP-9	3	10.0
S28	IP-9	3	9.2
S29	IP-9	3	8.0
S30	IP-9	3	6.4
S31	IP-9	3	8.0
S32	IP-9	3	12.4
S33	IP-9	3	15.0
S34	IP-9	3	8.6
S35	IP-9	3	5.0
S36	IP-9	3	20.3
S37	IP-9	3	20.3
S38	IP-10	3	6.1
S39	IP-10	3	11.1
S40	IP-10	3	12.0
S41	IP-10	3	11.9
S42	IP-10	3	20.3
S43	IP-9	4	10.0
		TOTAL	482.7

SUMMARY OF QUANTITIES

Q-8

STATE OF CALIFORNIA - DEPARTMENT OF TRANSPORTATION
Caltrans

CONSULTANT FUNCTIONAL SUPERVISOR: GERARD LUMABAS
CALCULATED-DESIGNED BY: DARWIN CRUZ
CHECKED BY: PAUL KOSINSKI
REVISED BY
DATE REVISED

LAST REVISION 6-18-12
DATE PLOTTED => 12-SEP-2012
TIME PLOTTED => 16:21

Dist	COUNTY	ROUTE	POST MILES TOTAL PROJECT	SHEET No.	TOTAL SHEETS
11	SD	805	4.7/5.6	328	650

REGISTERED CIVIL ENGINEER 6/1/12 DATE

06-25-12
PLANS APPROVAL DATE

REGISTERED PROFESSIONAL ENGINEER PAUL E. KOSINSKI No. C73254 Exp. 12/31/12 CIVIL STATE OF CALIFORNIA

THE STATE OF CALIFORNIA OR ITS OFFICERS OR AGENTS SHALL NOT BE RESPONSIBLE FOR THE ACCURACY OR COMPLETENESS OF SCANNED COPIES OF THIS PLAN SHEET.

DOKKEN ENGINEERING
5675 RUFFIN Rd
SUITE 250
SAN DIEGO, CA 92123

SANDAG
401 B St
SUITE 800
SAN DIEGO, CA 92101

REMOVE CONCRETE

SHEET NUMBER	LINE	R†/L†	STATION	CY	REMARKS
L-2	-	RT	"NC" 48+95.00 TO "PL" 19+09.31	15.4	SIDEWALK
L-2	-	LT	"NC" 51+01.88 TO "PL" 19+03.03	10.2	SIDEWALK
L-2	"PL"	RT	21+72.52 TO 22+50.00	4.6	SIDEWALK
L-2	"PL"	LT	21+70.60 TO 22+50.00	5.2	SIDEWALK
L-5	-	LT	"PL" 13+08.47 TO "PC" 41+12.55	11.7	SIDEWALK
L-5	"PL"	LT	14+26.99 TO 15+18.23	8.9	SIDEWALK
L-5	-	LT	"PC" 40+86.44 TO "PL" 17+12.30	15.5	SIDEWALK
L-5	-	RT	"PL" 12+50.00 TO "NC" 48+95.00	36.7	SIDEWALK
L-6	-	-	" PL" 22+50.00 TO "RV" 57+97.62	27.8	SIDEWALK
L-6	-	-	"PL" 22+50.00 TO "RV" 66+36.88	54.7	SIDEWALK
L-6	-	-	"RV" 57+97.62 TO "PL" 27+63.00	27.4	SIDEWALK
L-6	-	-	"PL" 28+13.74 TO "RW" 101+22.00	41.6	SIDEWALK
L-6	-	-	"RW" 101+22.00 TO "PL" 66+36.88	25.8	SIDEWALK
L-7	-	LT	"OL" 90+76.27 TO "OL" 93+40.00	14.4	SIDEWALK
L-2	-	RT	"NC" 48+95.00 TO "PL" 19+09.31	0.5	CURB
L-2	-	LT	"NC" 51+01.88 TO "PL" 19+03.03	0.4	CURB
L-2	"PL"	RT	21+72.52 TO 22+50.00	0.2	CURB
L-2	"PL"	LT	21+70.60 TO 22+50.00	0.2	CURB
L-5	-	LT	"PL" 13+08.47 TO "PC" 41+12.55	0.5	CURB
L-5	-	RT	"PC" 40+86.44 TO "PL" 17+12.30	1.1	CURB
L-5	-	LT	"PL" 12+50.00 TO "NC" 18+95.00	0.6	CURB
L-6	-	-	" PL" 22+50.00 TO "RV" 58+99.15	1.5	CURB
L-6	-	-	"PL" 22+50.00 TO "RV" 66+36.88	0.5	CURB
L-6	-	-	"RV" 58+99.15 TO "PL" 27+64.30	0.6	CURB
L-6	"PL"	-	27+99.16 TO 28+29.09	0.1	CURB
L-6	-	-	"PL" 29+29.02 TO 62+88.46	1.3	CURB
L-6	"RV"	-	63+17.52 TO 66+36.88	0.7	CURB
L-3	"A1"	L†	303+87.84	0.8	MASONRY BLOCK WALL
L-3	"A1"	L†	304+47.79	0.8	MASONRY BLOCK WALL
L-3	"A1"	L†	306+27.66	0.8	MASONRY BLOCK WALL
L-3	"A1"	L†	306+87.61	0.8	MASONRY BLOCK WALL
L-3	"A1"	L†	308+77.34	0.8	MASONRY BLOCK WALL
L-2	"A1"	R†	296+89.64	3.4	MASONRY BLOCK WALL
L-2	"A1"	R†	301+17.00	4.8	MASONRY BLOCK WALL
L-3	"A1"	R†	301+97.00	1.5	MASONRY BLOCK WALL
L-3	"A1"	R†	302+57.65	1.5	MASONRY BLOCK WALL
L-3	"A1"	R†	310+00.99	1.5	MASONRY BLOCK WALL
L-2	"A1"	L†	300+50.00	3.0	PARCEL No. 34837 - Conc SLAB
L-3	"A1"	L†	303+00.00	5.0	PARCEL No. 34833 - Conc SLAB
L-3	"A1"	L†	304+50.00	1.5	PARCEL No. 34831 - WATER FOUNTAIN
L-3	"A1"	L†	305+50.00	1.5	PARCEL No. 34829 - Conc SLAB
L-3	"A1"	L†	309+00.00	1.5	PARCEL No. 34857 - Conc SLAB
			TOTAL	337.3	

REMOVE SOUND WALL

SHEET NUMBER	LINE	R†/L†	STATION	LF
L-2	"WL1"	L†	10+32.71 TO 10+47.49	31.4
L-6	"RV" & "RV2"	R†	63+52.46 TO 65+02.70	216.2
L-6	"RV2"	R†	10+59.01 TO 11+46.52	170.5
			TOTAL	418.1

REMOVE METAL BEAM GUARD RAILING

SHEET NUMBER	LINE	L†/R†	STATION	LF
L-1	"A1"	R†	283+32.51 TO 283+98.11	69.0
L-2	"A1"	L†	294+08.52 TO 294+92.45	84.4
L-2,L-3,L-4	"A1"	L†	300+47.03 TO 323+83.29	2,339.0
			TOTAL	2,492.4

REMOVE CONCRETE BARRIER (TYPE 50)

SHEET NUMBER	LINE	R†/L†	STATION	LF	REMARKS
L-1	"A1"	-	283+25.00 TO 293+50.00	1025.0	TYPE 50 CONC BARRIER
L-2	"A1"	-	293+50.00 TO 301+50.00	800.0	TYPE 50 CONC BARRIER
L-3	"A1"	-	301+50.00 TO 314+50.00	1300.0	TYPE 50 CONC BARRIER
L-4	"A1"	-	314+50.00 TO 323+13.80	863.8	TYPE 50 CONC BARRIER
			TOTAL	3,988.8	

SUMMARY OF QUANTITIES

Q-9

STATE OF CALIFORNIA - DEPARTMENT OF TRANSPORTATION
Caltrans

CONSULTANT FUNCTIONAL SUPERVISOR: GERARD LUMABAS
CALCULATED-DESIGNED BY: DARWIN CRUZ
CHECKED BY: PAUL KOSINSKI
REVISED BY
DATE REVISED

LAST REVISION 6-18-12
DATE PLOTTED => 12-SEP-2012
TIME PLOTTED => 16:21

Dist	COUNTY	ROUTE	POST MILES TOTAL PROJECT	SHEET No.	TOTAL SHEETS
11	SD	805	4.7/5.6	329	650

REGISTERED CIVIL ENGINEER 05-24-12 DATE

06-25-12
PLANS APPROVAL DATE

REGISTERED PROFESSIONAL ENGINEER DAVID LAYNE No. C74349 Exp. 06-30-13 CIVIL STATE OF CALIFORNIA

THE STATE OF CALIFORNIA OR ITS OFFICERS OR AGENTS SHALL NOT BE RESPONSIBLE FOR THE ACCURACY OR COMPLETENESS OF SCANNED COPIES OF THIS PLAN SHEET.

DOKKEN ENGINEERING
5675 RUFFIN Rd
SUITE 250
SAN DIEGO, CA 92123

SANDAG
401 B St
SUITE 800
SAN DIEGO, CA 92101

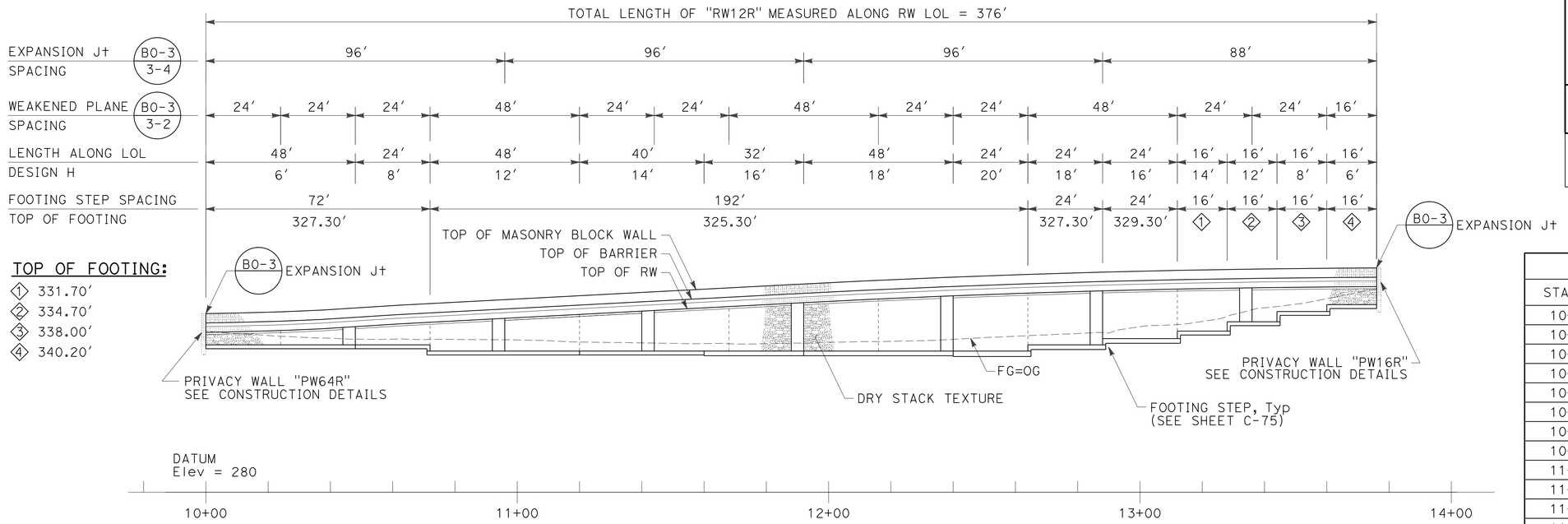

TOP OF FOOTING:

1. 331.70'
2. 334.70'
3. 338.00'
4. 340.20'

DEVELOPED ELEVATION

"RW12R" LINE
SCALE: 1" = 20'

TOP OF RW			
STATION	ELEVATION	STATION	ELEVATION
10+00	331.32	12+40	343.03
10+16	331.67	12+56	343.62
10+32	332.23	12+64	343.91
10+48	333.13	12+72	344.15
10+64	334.13	12+88	344.64
10+72	334.55	13+04	345.12
10+80	334.97	13+12	345.20
10+96	335.81	13+20	345.34
11+12	336.65	13+28	345.47
11+28	337.49	13+36	345.60
11+44	338.33	13+44	345.73x
11+60	339.17	13+52	345.79
11+76	340.01	13+60	345.88
11+92	340.84	13+68	345.95
12+08	341.63	13+76	345.99
12+24	342.36		

RW QUANTITIES ("RW12R")

ITEM	TOTAL
STRUCTURE EXCAVATION (RETAINING WALL)	830 CY
STRUCTURE BACKFILL (RETAINING WALL)	1,300 CY
PERVIOUS BACKFILL MATERIAL (RETAINING WALL)	81 CY
STRUCTURAL CONCRETE (RETAINING WALL)	480 CY
BAR REINFORCING STEEL (RETAINING WALL)	91,000 LB
Conc BARRIER (TYPE 26 Mod2)	376 LF
MASONRY BLOCK WALL	1,130 SQFT
ARCHITECTURAL TREATMENT (DRY STACK TEXTURE)	3,180 SQFT
PREPARE AND STAIN CONCRETE	3,180 SQFT
ARCHITECTURAL TREATMENT (LOUVER TEXTURE)	690 SQFT
ANTI-GRAFFITI COATING	4,665 SQFT

NOTES:

1. TOP OF WALL ELEVATIONS CONTROLLED BY BACK SW ELEVATIONS. BACK SW ELEVATIONS SHALL GOVERN OVER THOSE LISTED IN TOP OF WALL TABLE AS LONG AS THE DESIGN HEIGHT DOES NOT EXCEED THAT SHOWN ON ELEVATION.

LEGEND:

STANDARD PLAN SHEET No.
DETAIL No.

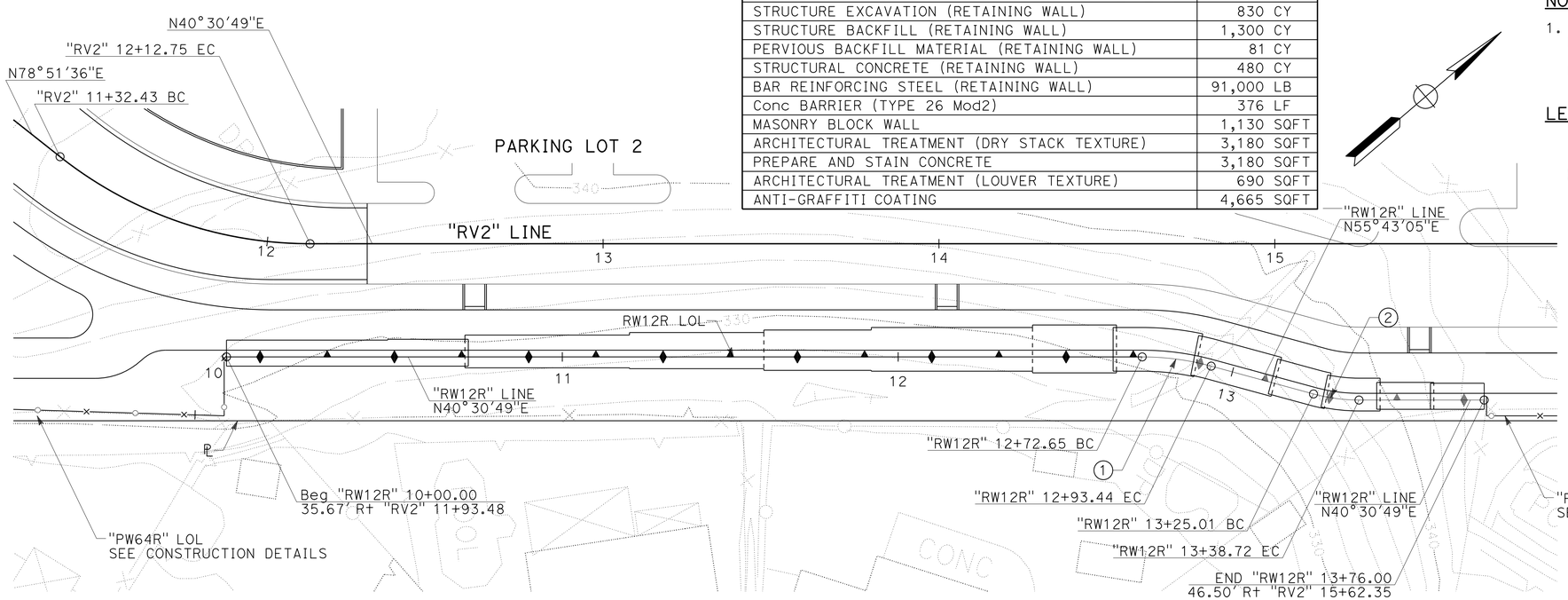

CURVE DATA TABLE				
No.	R	Δ	T	L
1	78.33'	15°12'15"	10.45'	20.79'
2	51.67'	15°12'15"	6.90'	13.71'

PLAN

SCALE: 1" = 20'

APPROVED FOR RETAINING WALL WORK ONLY

RETAINING WALL PLAN RW No.12R

SCALE AS SHOWN

R1-1

STATE OF CALIFORNIA - DEPARTMENT OF TRANSPORTATION
Caltrans
CONSULTANT FUNCTIONAL SUPERVISOR: GERARD LUMABAS
CALCULATED-DESIGNED BY: DAVID LAYNE
CHECKED BY: PAUL KOSINSKI
REVISED BY
DATE REVISED

LAST REVISION 06-12-12
DATE PLOTTED => 12-SEP-2012
TIME PLOTTED => 16:21

Dist	COUNTY	ROUTE	POST MILES TOTAL PROJECT	SHEET No.	TOTAL SHEETS
11	SD	805	4.7/5.6	330	650

REGISTERED CIVIL ENGINEER 05-24-12 DATE

06-25-12
PLANS APPROVAL DATE

REGISTERED PROFESSIONAL ENGINEER DAVID LAYNE No. C74349 Exp. 06-30-13 CIVIL STATE OF CALIFORNIA

THE STATE OF CALIFORNIA OR ITS OFFICERS OR AGENTS SHALL NOT BE RESPONSIBLE FOR THE ACCURACY OR COMPLETENESS OF SCANNED COPIES OF THIS PLAN SHEET.

DOKKEN ENGINEERING
5675 RUFFIN Rd
SUITE 250
SAN DIEGO, CA 92123

SANDAG
401 B St
SUITE 800
SAN DIEGO, CA 92101

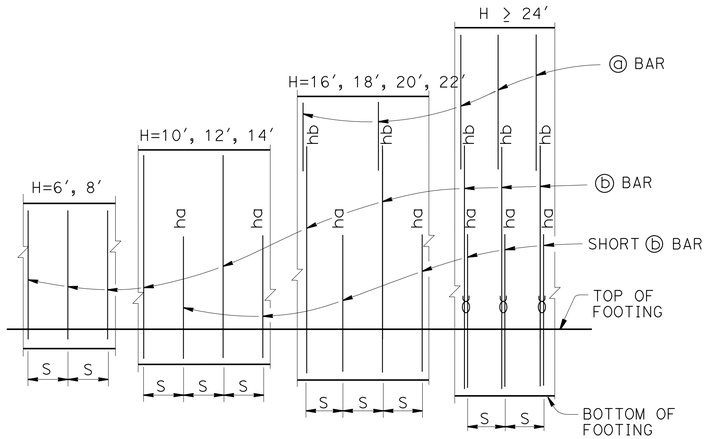

ELEVATION

NOTE:
"ha" AND "hb" ABOVE Ⓑ BARS INDICATE DISTANCE FROM TOP OF FOOTING TO UPPER END OF Ⓑ BARS, SEE TABLE.
"S" IS Ⓑ BAR SPACING, SEE TABLE.
℧ : 2 BAR BUNDLE

DESIGN DATA

DESIGN: AASHTO LRFD BRIDGE DESIGN SPECIFICATIONS, 4th EDITION WITH CALIFORNIA AMENDMENTS

WS: 33 psf ON SOUND WALL AND BARRIER

LS: VARIED SURCHARGE ON LEVEL GROUND SURFACE

CT: 54 kip MAXIMUM TRAFFIC IMPACT LOADING EVENLY DISTRIBUTED OVER 10 FEET AT TOP OF BARRIER AND 1:1 DISTRIBUTION DOWN AND OUTWARD

EQE: MONOABE-OKABE METHOD
K_h = 0.3
K_v = 0.0

SOIL: ϕ = 34°
γ = 120 pcf

REINFORCED CONCRETE: f′c = 3600 psi
fy = 60,000 psi

LOAD COMBINATIONS AND LIMIT STATES

SERVICE I	Q=1.00DC+1.00EV+1.00EH+1.00LS+0.30WS
SERVICE II	Q=1.00DC+1.00EV+1.00EH+1.00WS
STRENGTH I	Q=αDC+βEV+1.50EH+1.75LS
STRENGTH III	Q=αDC+βEV+1.50EH+1.40WS
STRENGTH V	Q=αDC+βEV+1.50EH+1.35LS+0.40WS
EXTREME I	Q=1.00DC+1.00EV+1.00EH+1.00EQD+1.00EQE
EXTREME II	Q=1.00DC+1.00EV+1.00EH+1.00CT

WHERE:
Q: FORCE EFFECTS
α: 1.25 OR 0.90, WHICH EVER CONTROLS DESIGN
β: 1.35 OR 1.00, WHICH EVER CONTROLS DESIGN
DC: DEAD LOAD OF STRUCTURE COMPONENTS
EV: VERTICAL EARTH FILL PRESSURE
LS: LIVE LOAD SURCHARGE
EQE: SEISMIC EARTH PRESSURE
EQD: SOIL AND STRUCTURE COMPONENTS INERTIA. SOIL INERTIA IGNORED FOR STEM DESIGN
WS: WIND LOAD ON SOUND WALL AND BARRIER
CT: VEHICULAR COLLISION FORCE

NOTES:

1. FOR MASONRY BLOCK WALL AND RETAINING WALL ARCHITECTURAL FINISH OR TEXTURE SEE DETAILS ELSEWHERE IN PROJECT PLANS
2. FOR DETAILS NOT SHOWN AND DRAINAGE NOTES SEE SHEET C-75
3. FOOTING COVER, 1′-6" MINIMUM.
4. FOR MASONRY BLOCK WALL AND BARRIER REINFORCEMENT DETAILS, SEE "MASONRY DETAILS" SHEET.
5. FOR H = 6′ THROUGH 14′, EXTEND Ⓑ BARS INTO BARRIER FOR STEM WITH HAUNCH.
6. FOR H ≥ 16′, EXTEND Ⓐ BARS INTO BARRIER FOR STEM WITH HAUNCH.

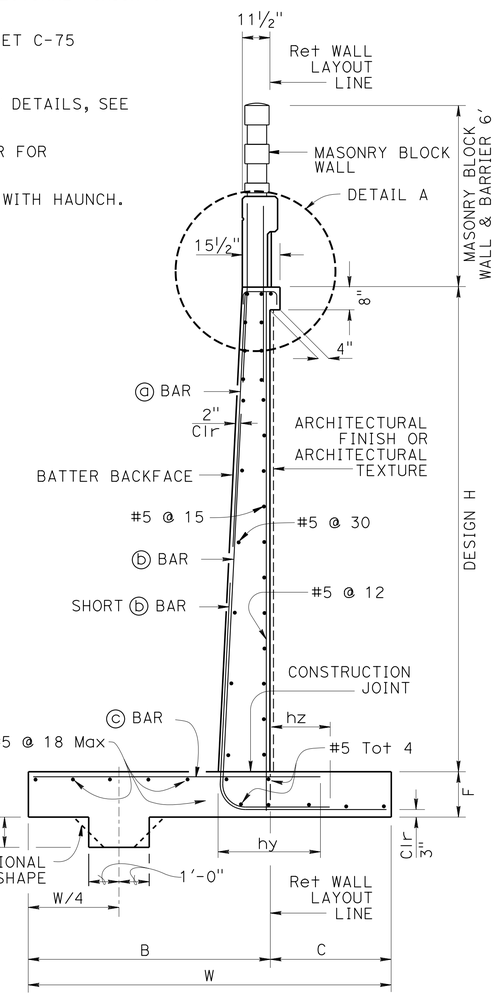

SPREAD FOOTING SECTION

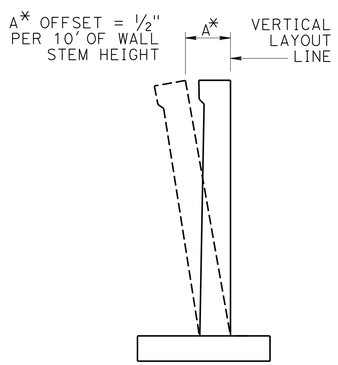

WALL OFFSET

VALUES FOR OFFSETTING FORMS TO BE DETERMINED BY THE ENGINEER

TABLE OF REINFORCING STEEL DIMENSIONS AND DATA

DESIGN H	6′	8′	10′	12′	14′	16′	18′	20′
W	6′-9"	7′-3"	8′-0"	8′-9"	10′-0"	11′-6"	12′-9"	14′-0"
C	2′-3"	2′-5"	2′-8"	2′-11"	3′-4"	3′-10"	4′-3"	4′-8"
B	4′-6"	4′-10"	5′-4"	5′-10"	6′-8"	7′-8"	8′-6"	9′-4"
F SPREAD FOOTING	1′-3"	1′-3"	1′-3"	1′-3"	1′-6"	1′-9"	1′-9"	2′-3"
STEM WITH HAUNCH, BATTER	½:12	½:12	½:12	½:12	½:12	½:12	½:12	½:12
ⓐ BARS						#7 @ 15	#7 @ 12	#7 @ 12
ⓑ BARS	#8 @ 12	#8 @ 12	#7 @ 6	#7 @ 6	#7 @ 6	#9 @ 7.5	#9 @ 6	#10 @ 6
ha			5′-0"	6′-0"	7′-0"	7′-0"	6′-0"	7′-0"
hb						11′-6"	12′-0"	13′-3"
hy	2′-0"	2′-4"	1′-8"	2′-0"	2′-4"	2′-10"	2′-10"	3′-7"
hz			0	0	3′-6"	4′-0"	4′-6"	5′-6"
ⓒ BARS	#6 @ 12	#7 @ 12	#5 @ 6	#6 @ 6	#7 @ 6	#8 @ 7.5	#8 @ 6	#9 @ 6
SER I: B′(ft), q_0'(ksf)	5.9, 1.2	6.0, 1.4	6.5, 1.6	7.0, 1.8	8.1, 1.9	9.7, 2.0	11.0, 2.1	12.1, 2.3
STR Ia: B′(ft), q_0(ksf)	6.3, 1.9	6.3, 2.3	6.7, 2.5	7.0, 2.9	8.1, 3.1	9.5, 3.2	10.8, 3.4	11.8, 3.7
STR, Ib: B′(ft), q_0(ksf)	4.3, 1.6	4.3, 2.0	4.3, 2.4	4.3, 2.8	4.3, 2.9	4.3, 2.9	4.3, 3.0	4.3, 3.4
STR, IIIa: B′(ft), q_0(ksf)	4.3, 2.1	4.3, 2.4	4.3, 2.5	4.3, 2.8	4.3, 2.9	4.3, 3.0	4.3, 3.2	4.3, 3.7
STR, IIIb: B′(ft), q_0(ksf)	3.2, 2.1	3.2, 2.3	3.2, 2.4	3.2, 2.6	3.2, 2.7	3.2, 2.7	3.2, 2.8	3.2, 3.1
STR, Va: B′(ft), q_0(ksf)	5.9, 2.0	5.9, 2.3	5.9, 2.6	5.9, 2.9	5.9, 3.1	5.9, 3.2	5.9, 3.4	5.9, 3.9
STR, Vb: B′(ft), q_0(ksf)	3.8, 1.7	3.8, 2.1	3.8, 2.5	3.8, 2.8	3.8, 2.9	3.8, 2.9	3.8, 3.0	3.8, 3.3
Ext I: B′(ft), q_0(ksf)	2.5, 2.8	2.5, 4.3	2.5, 6.4	2.5, 10.9	2.5, 13.3	2.5, 12.4	2.5, 13.2	2.5, 17.6
Ext II: B′(ft), q_0(ksf)	1.4, 4.9	1.4, 3.5	1.4, 2.8	1.4, 2.7	1.4, 2.5	1.4, 2.5	1.4, 2.5	1.4, 2.6

LEGEND:
SER: SERVICE LIMIT STATE
STR: STRENGTH LIMIT STATE
EXT: EXTREME EVENT LIMIT STATE
B′: EFFECTIVE FOOTING WIDTH (ft)

q_0' : NET BEARING STRESS (ksf)
q_0 : GROSS UNIFORM BEARING STRESS (ksf)
℧ : 2 BAR BUNDLE

APPROVED FOR RETAINING WALL WORK ONLY

RETAINING WALL DETAILS
RW No. 12R

NO SCALE

R1-2

STATE OF CALIFORNIA - DEPARTMENT OF TRANSPORTATION
Caltrans
CONSULTANT FUNCTIONAL SUPERVISOR: GERARD LUMABAS
CALCULATED-DESIGNED BY: DAVID LAYNE
CHECKED BY: PAUL KOSINSKI
REVISED BY
DATE REVISED

LAST REVISION 06-12-12
DATE PLOTTED => 12-SEP-2012
TIME PLOTTED => 16:21

Dist	COUNTY	ROUTE	POST MILES TOTAL PROJECT	SHEET No.	TOTAL SHEETS
11	SD	805	4.7/5.6	331	650

David Layne 05-24-12
REGISTERED CIVIL ENGINEER DATE

06-25-12
PLANS APPROVAL DATE

REGISTERED PROFESSIONAL ENGINEER
DAVID LAYNE
No. C74349
Exp. 06-30-13
CIVIL
STATE OF CALIFORNIA

THE STATE OF CALIFORNIA OR ITS OFFICERS OR AGENTS SHALL NOT BE RESPONSIBLE FOR THE ACCURACY OR COMPLETENESS OF SCANNED COPIES OF THIS PLAN SHEET.

DOKKEN ENGINEERING
5675 RUFFIN Rd
SUITE 250
SAN DIEGO, CA 92123

SANDAG
401 B St
SUITE 800
SAN DIEGO, CA 92101

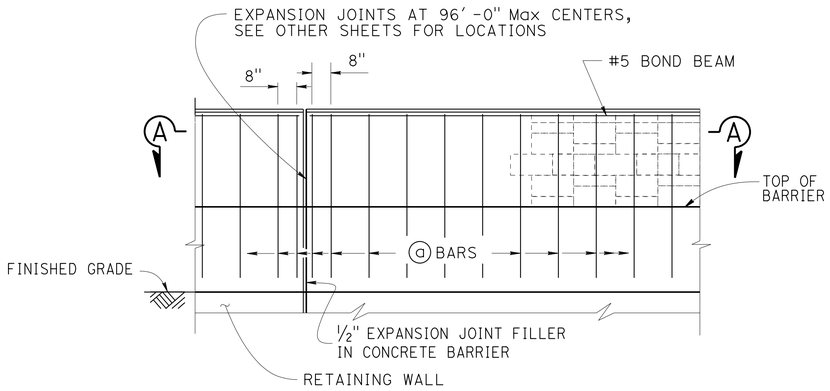

PART ELEVATION

DESIGN NOTES

DESIGN
UNIFORM BUILDING CODE, 1997 EDITION AND THE BRIDGE DESIGN SPECIFICATIONS

DESIGN WIND LOAD
33 psf

DESIGN SEISMIC LOAD
0.57 DEAD LOAD

REINFORCED CONCRETE
f'c = 3600 psi
fy = 60 ksi

CONCRETE MASONRY

REGULAR STRENGTH	HIGH STRENGTH	
f'm = 1500 psi	f'm = 2000 psi	f'm = 2500 psi
fb = 495 psi	fb = 660 psi	fb = 830 psi
fs = 24,000 psi	fs = 24,000 psi	fs = 24,000 psi
n = 25.8	n = 19.3	n = 15.5

NOTES:

1. FOR DETAILS NOT SHOWN, SEE STANDARD PLAN B15-6
2. HORIZONTAL JOINTS SHALL BE TOOLED CONCAVE OR MAY BE WEATHERED. VERTICAL JOINTS SHALL BE TOOLED CONCAVE OR MAY BE RAKED
3. FOR TYPE OF BLOCK AND JOINT FINISH AND ARCHITECTURAL DETAILS. SEE "ARCHITECTURAL DETAILS ("R12")" SHEET

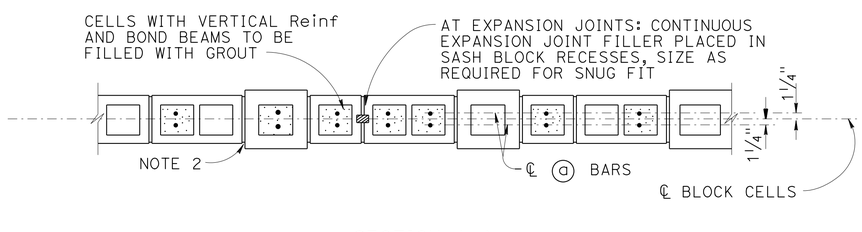

SECTION A-A

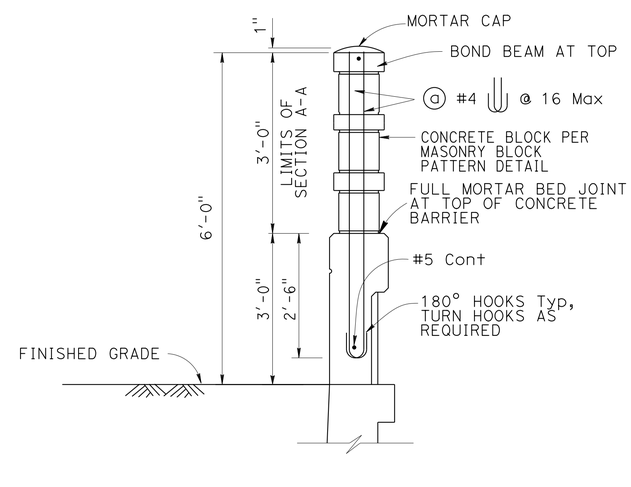

TYPICAL SECTION

APPROVED FOR RETAINING WALL WORK ONLY

RETAINING WALL DETAILS
RW No. 12R

NO SCALE

R1-3

STATE OF CALIFORNIA - DEPARTMENT OF TRANSPORTATION
Caltrans

CONSULTANT FUNCTIONAL SUPERVISOR: GERARD LUMABAS
CALCULATED-DESIGNED BY: DAVID LAYNE
CHECKED BY: PAUL KOSINSKI
REVISED BY
DATE REVISED

LAST REVISION 06-12-12
DATE PLOTTED => 12-SEP-2012
TIME PLOTTED => 16:21

Dist	COUNTY	ROUTE	POST MILES TOTAL PROJECT	SHEET No.	TOTAL SHEETS
11	SD	805	4.7/5.6	332	650

David Layne 05-24-12
REGISTERED CIVIL ENGINEER DATE

06-25-12
PLANS APPROVAL DATE

REGISTERED PROFESSIONAL ENGINEER
DAVID LAYNE
No. C74349
Exp. 06-30-13
CIVIL
STATE OF CALIFORNIA

THE STATE OF CALIFORNIA OR ITS OFFICERS OR AGENTS SHALL NOT BE RESPONSIBLE FOR THE ACCURACY OR COMPLETENESS OF SCANNED COPIES OF THIS PLAN SHEET.

DOKKEN ENGINEERING
5675 RUFFIN Rd
SUITE 250
SAN DIEGO, CA 92123

SANDAG
401 B St
SUITE 800
SAN DIEGO, CA 92101

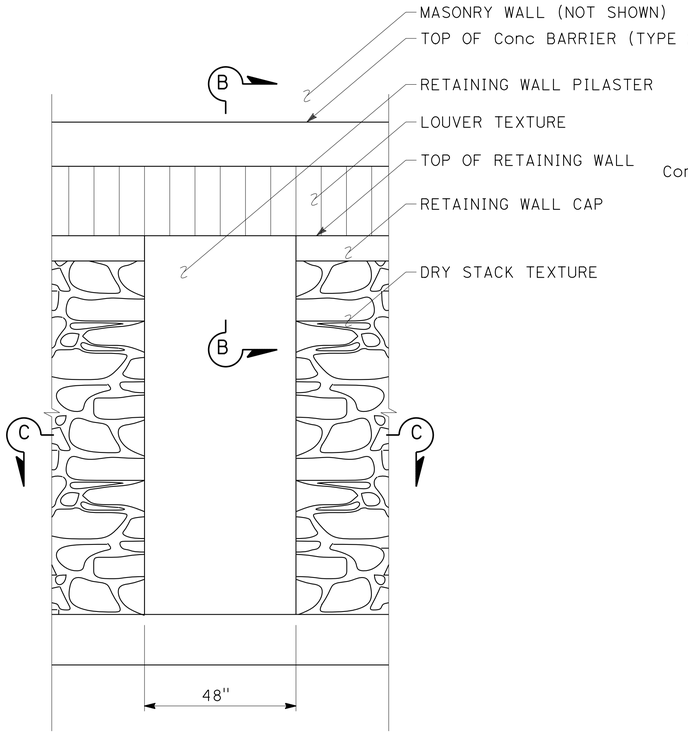

PILASTER DETAIL
SCALE: ½" = 1'

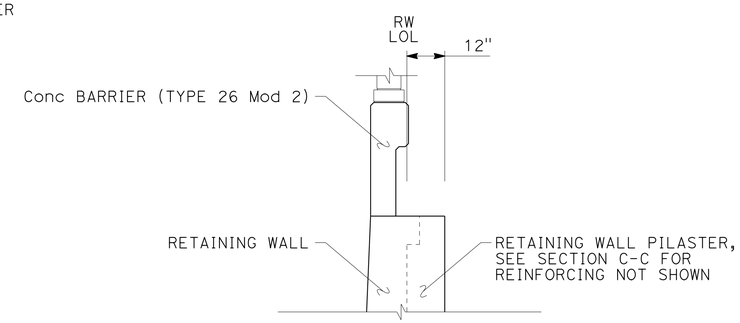

SECTION B-B
SCALE: ½" = 1'

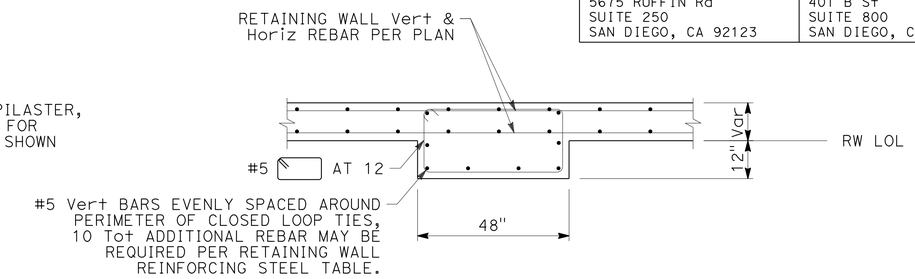

SECTION C-C
SCALE: ½" = 1'

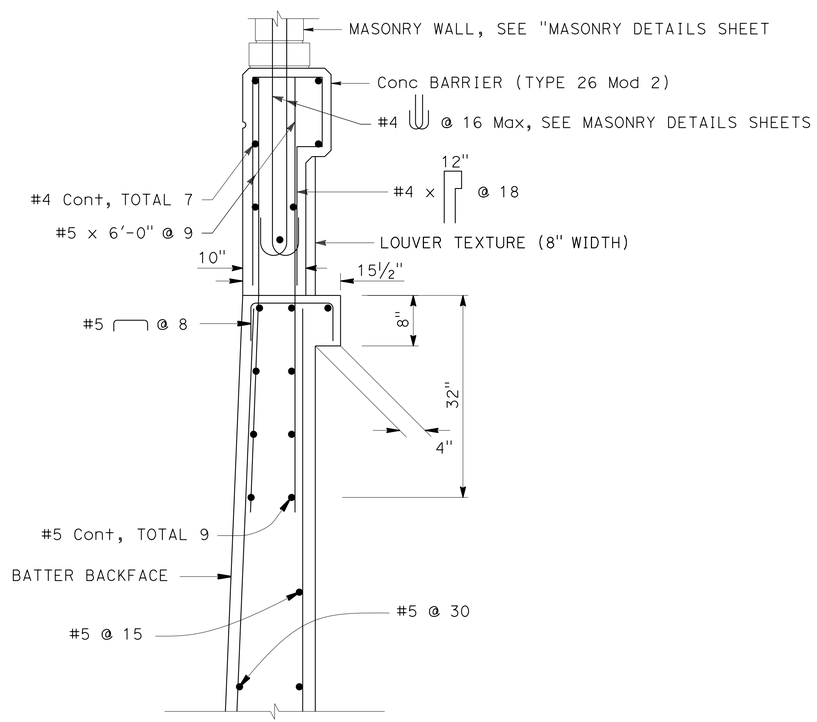

FOR DETAILS NOT SHOWN, SEE STANDARD PLAN B11-54

DETAIL A
SCALE: 1" = 1'

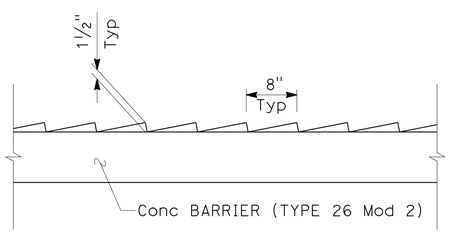

LOUVER TEXTURE DETAIL
SCALE: 1" = 1'

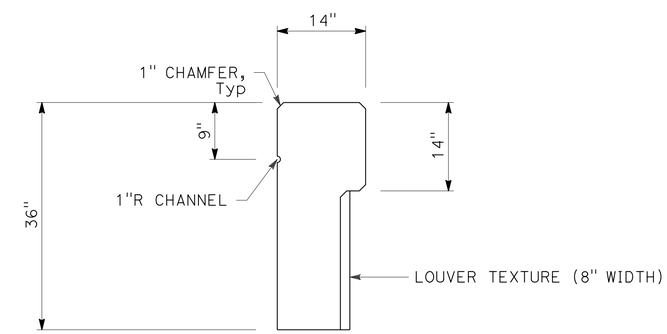

SEE DETAIL A FOR REINFORCEMENT
FOR DETAILS NOT SHOWN, SEE STANDARD PLAN B11-54

Conc BARRIER (TYPE 26 Mod 2)
SCALE 1" = 1'

APPROVED FOR RETAINING WALL WORK ONLY

RETAINING WALL DETAILS
RW No. 12R

SCALE AS SHOWN

R1-4

STATE OF CALIFORNIA - DEPARTMENT OF TRANSPORTATION
Caltrans

CONSULTANT FUNCTIONAL SUPERVISOR: GERARD LUMABAS
CALCULATED-DESIGNED BY: DAVID LAYNE
CHECKED BY: PAUL KOSINSKI
REVISED BY
DATE REVISED

LAST REVISION 06-12-12
DATE PLOTTED => 12-SEP-2012
TIME PLOTTED => 16:21

Dist	COUNTY	ROUTE	POST MILES TOTAL PROJECT	SHEET No.	TOTAL SHEETS
11	SD	805	4.7/5.6	333	650

REGISTERED CIVIL ENGINEER DATE 05-24-12

PLANS APPROVAL DATE 06-25-12

REGISTERED PROFESSIONAL ENGINEER DAVID LAYNE No. C74349 Exp. 06-30-13 CIVIL STATE OF CALIFORNIA

THE STATE OF CALIFORNIA OR ITS OFFICERS OR AGENTS SHALL NOT BE RESPONSIBLE FOR THE ACCURACY OR COMPLETENESS OF SCANNED COPIES OF THIS PLAN SHEET.

DOKKEN ENGINEERING
5675 RUFFIN Rd
SUITE 250
SAN DIEGO, CA 92123

SANDAG
401 B St
SUITE 800
SAN DIEGO, CA 92101

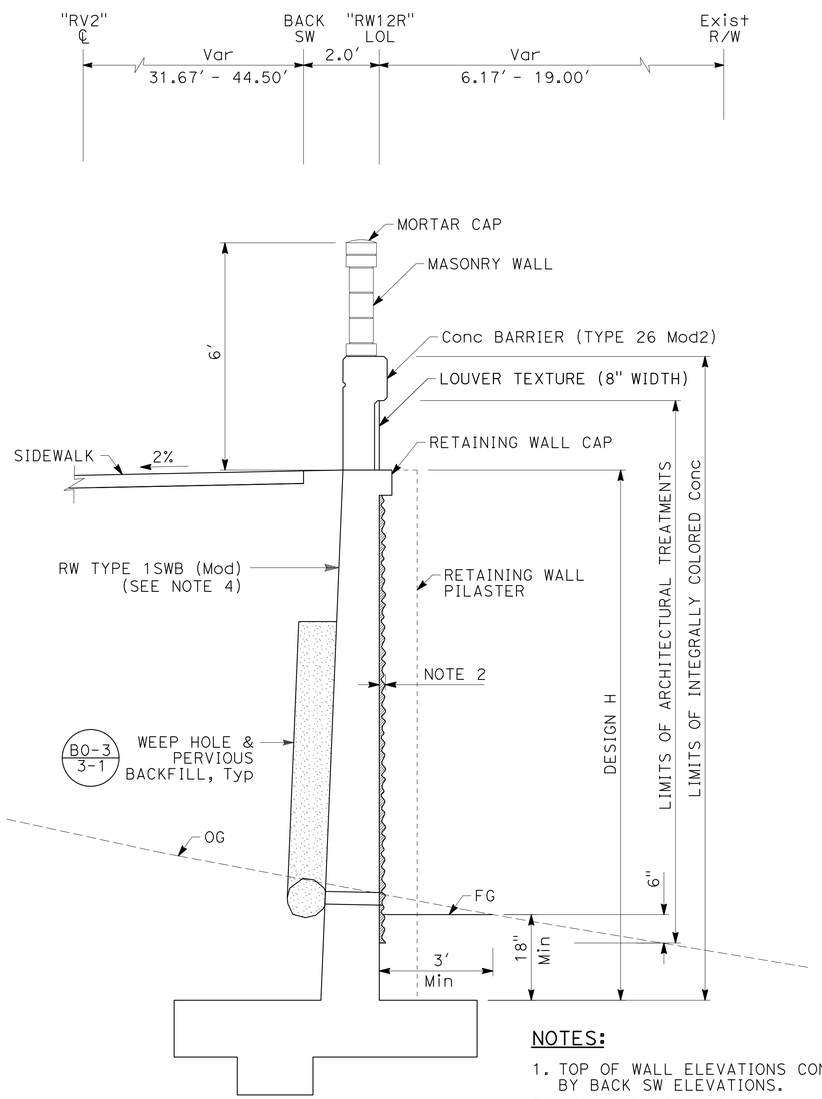

TYPICAL SECTION

NO SCALE

"RW12R" 10+00.00 TO 13+76.00

NOTES:

1. TOP OF WALL ELEVATIONS CONTROLLED BY BACK SW ELEVATIONS.
2. ARCHITECTURAL TREATMENT DRY STACK TEXTURE (PREPARE AND STAIN Conc).
3. RW STEM, RW CAP, RW PILASTERS, AND CONCRETE BARRIER SHALL BE INTEGRALLY COLORED CONCRETE.
4. RW MODIFIED FROM RW TYPE 1SWB AS SHOWN IN THE BRIDGE STANDARD DETAILS SHEETS XS14-220-1 AND XS14-220-2.

NOTES:

1. CORE SIZE FOR 10" WIDE BLOCK SHALL MATCH THE CORE SIZE FOR 8" WIDE BLOCKS.

MASONRY BLOCK LEGEND:

- BLOCK 'A' : 10" x 8" x 8" SMOOTH FACE ALL EXPOSED SIDES. BLOCK WILL PROJECT 1" ON BOTH SIDES OF WALL.
- BLOCK 'B' : 8" x 8" x 8" SPLIT FACE ALL EXPOSED SIDES.
- BLOCK 'C': 10" x 4" x 16" SPLIT FACE ALL EXPOSED SIDES. BLOCK WILL PROJECT 1" ON BOTH SIDES OF WALL.
- BLOCK 'D': 8" x 8" x 16" SPLIT FACE ALL EXPOSED SIDES.
- BLOCK 'E' : 16" x 8" x 16" SPLIT FACE ALL EXPOSED SIDES EXCEPT WHERE FACE MEETS FIELD WALL.
- CAP BLOCK: 8" x 4" x 16" PRECISION BLOCK

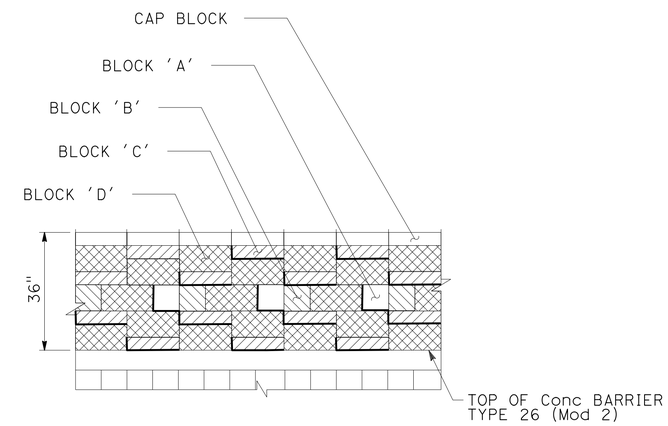

MASONRY BLOCK PATTERN

NO SCALE

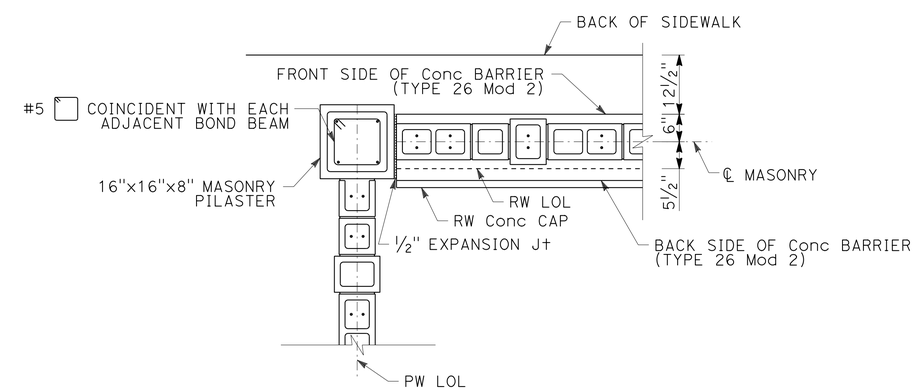

RETAINING WALL/MASONRY WALL JOINT

SCALE: ¾" = 1′

APPROVED FOR RETAINING WALL WORK ONLY

RETAINING WALL DETAILS RW No. 12R

SCALE AS SHOWN

R1-5

STATE OF CALIFORNIA - DEPARTMENT OF TRANSPORTATION

Caltrans

CONSULTANT FUNCTIONAL SUPERVISOR: GERARD LUMABAS

CALCULATED-DESIGNED BY: PAUL KOSINSKI

CHECKED BY: DAVID LAYNE

REVISED BY

DATE REVISED

LAST REVISION 06-12-12

DATE PLOTTED => 12-SEP-2012
TIME PLOTTED => 16:21

Dist	COUNTY	ROUTE	POST MILES TOTAL PROJECT	SHEET No.	TOTAL SHEETS
11	SD	805	4.7/5.6	334	650

David Layne 05-24-12
REGISTERED CIVIL ENGINEER DATE

06-25-12
PLANS APPROVAL DATE

REGISTERED PROFESSIONAL ENGINEER
DAVID LAYNE
No. C74349
Exp. 06-30-13
CIVIL
STATE OF CALIFORNIA

THE STATE OF CALIFORNIA OR ITS OFFICERS OR AGENTS SHALL NOT BE RESPONSIBLE FOR THE ACCURACY OR COMPLETENESS OF SCANNED COPIES OF THIS PLAN SHEET.

DOKKEN ENGINEERING
5675 RUFFIN Rd
SUITE 250
SAN DIEGO, CA 92123

SANDAG
401 B St
SUITE 800
SAN DIEGO, CA 92101

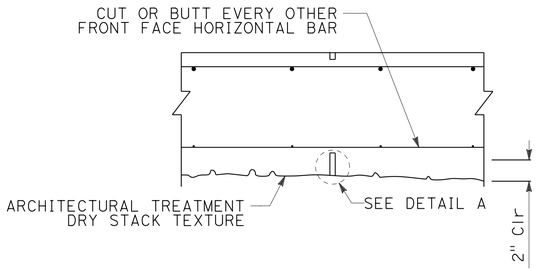

WEAKENED PLANE JOINT
NO SCALE

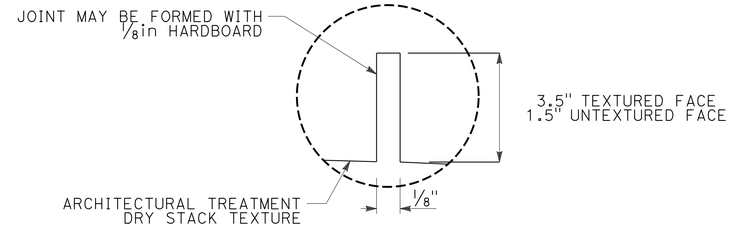

DETAIL A
NO SCALE

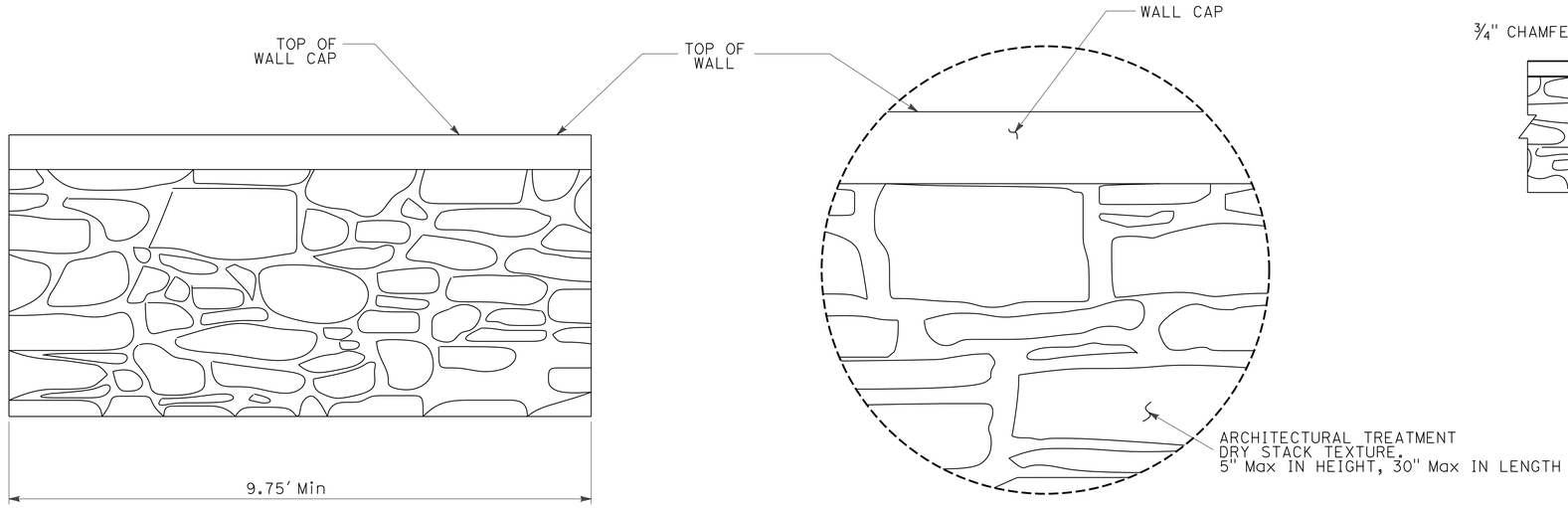

ARCHITECTURAL TREATMENT DETAIL (DRY STACK TEXTURE)
NO SCALE

DETAIL B
NO SCALE

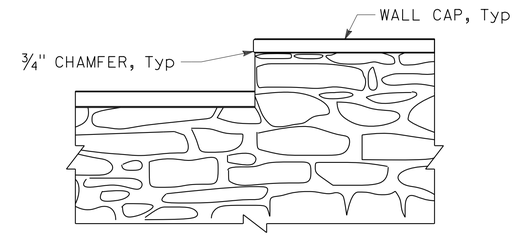

WALL STEP
NO SCALE

NOTE: WALL Reinf NOT SHOWN FOR CLARITY.

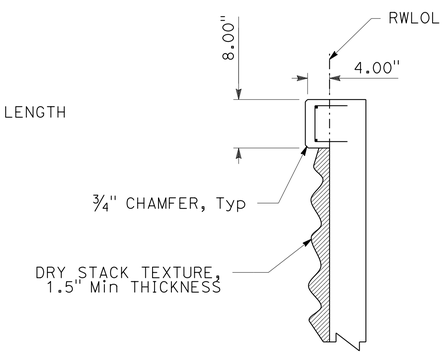

CAP DETAIL
NO SCALE

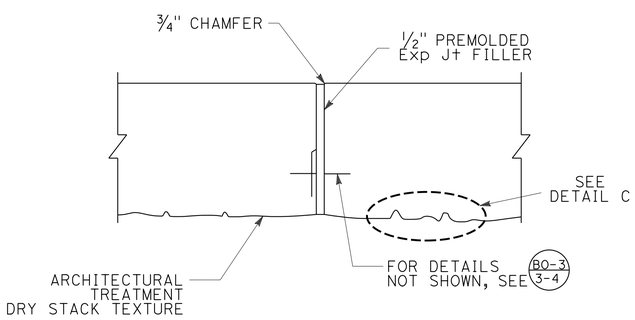

EXPANSION JOINT DETAIL
NO SCALE

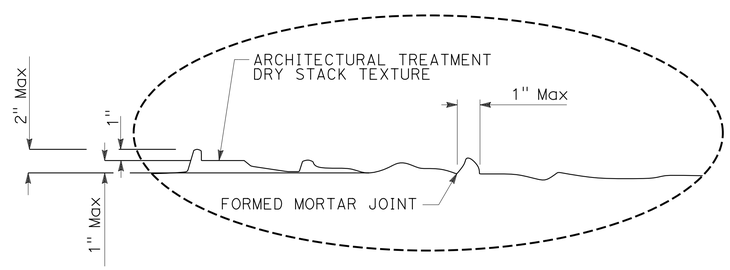

DETAIL C
NO SCALE

NOTES:

1. ARCHITECTURAL TREATMENT SHALL EXTEND A MINIMUM OF 6" BELOW FINISHED GRADE.
2. LIMITS OF ANTI-GRAFFITI COATING SHALL MATCH LIMITS INTERGRALLY COLORED CONCRETE.
3. PREPARE AND STAIN DRY STACK TEXTURE.

APPROVED FOR RETAINING WALL WORK ONLY

RETAINING WALL DETAILS
RW No. 12R
NO SCALE

R1-6

STATE OF CALIFORNIA - DEPARTMENT OF TRANSPORTATION
Caltrans
CONSULTANT FUNCTIONAL SUPERVISOR: GERARD LUMABAS
CALCULATED-DESIGNED BY: DAVID LAYNE
CHECKED BY: PAUL KOSINSKI
REVISED BY
DATE REVISED

LAST REVISION 06-12-12
DATE PLOTTED => 12-SEP-2012
TIME PLOTTED => 16:21

DIST	COUNTY	ROUTE	POST MILES TOTAL PROJECT	SHEET No.	TOTAL SHEETS
11	SD	805	4.7/5.6	335	650

06-12-12
REGISTERED CIVIL ENGINEER

06-25-12
PLANS APPROVAL DATE

REGISTERED PROFESSIONAL ENGINEER
Brian Gutierrez
No. C66258
Exp. 06-30-14
CIVIL
STATE OF CALIFORNIA

The State of California or its officers or agents shall not be responsible for the accuracy or completeness of electronic copies of this plan sheet.

This LOTB sheet was prepared in accordance with the Caltrans Soil & Rock Logging, Classification, & Presentation Manual (2007 Edition).

BENCH MARK

BM 805-5.00, 2¼" CADT DISK IN SIDEWALK NORTH SIDE OF E. PALOMAR St OC BRIDGE, AT STATION 298+46.0, RIGHT 60 FEET OF "A1" LINE.
ELEVATION 300.93 FEET
NAVD88

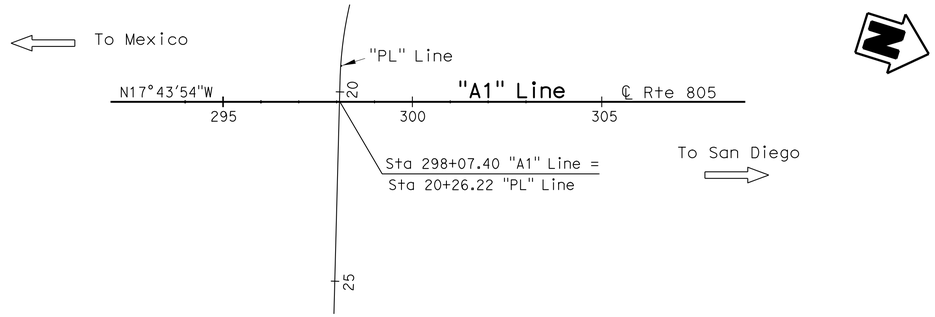

A-11-104
8"
8"
A-11-102

A-11-103
8"

PLAN
1" = 200'

NOTES:
NO GROUND WATER ENCOUNTERED DURING DURING FIELD INVESTIGATION

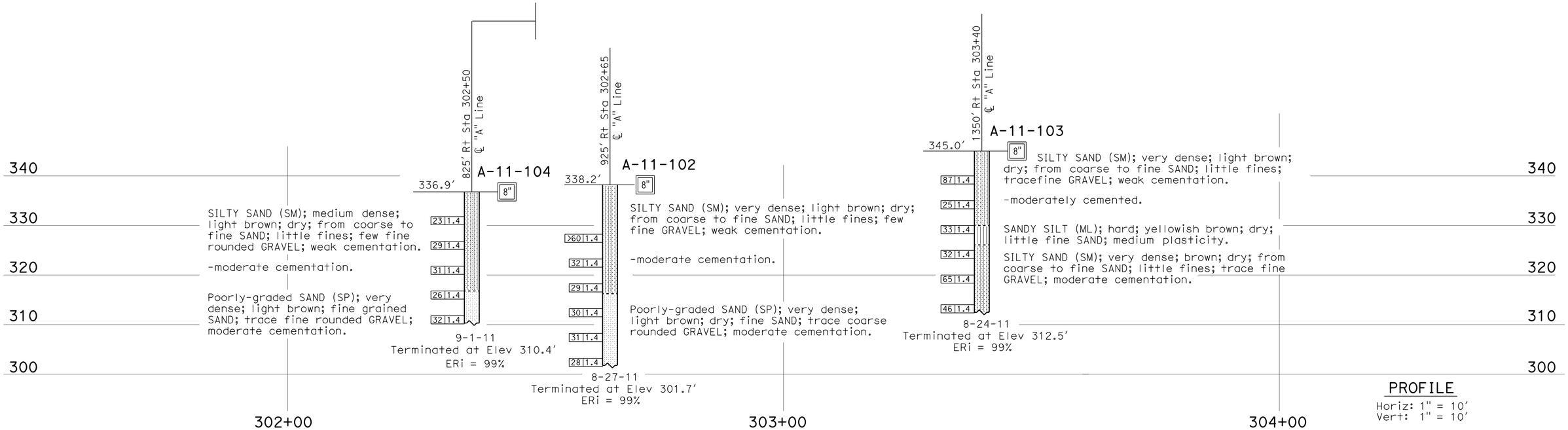

PROFILE
Horiz: 1" = 10'
Vert: 1" = 10'

ENGINEERING SERVICES	GEOTECHNICAL SERVICES	STATE OF CALIFORNIA DEPARTMENT OF TRANSPORTATION	DIVISION OF ENGINEERING SERVICES STRUCTURE DESIGN	BRIDGE NO.	RETAINING WALL No. 12R
FUNCTIONAL SUPERVISOR	DRAWN BY: I.G-Remmen	FIELD INVESTIGATION BY:	DESIGN BRANCH X	POST MILE 5.0	LOG OF TEST BORINGS 1 OF 3
NAME: S. Wei	CHECKED BY: XX	B. Gutierrez			

OGS CIVIL LOG OF TEST BORINGS SHEET

ORIGINAL SCALE IN INCHES FOR REDUCED PLANS 0 1 2 3

UNIT: 3643
PROJECT NUMBER & PHASE: 11000200511
CONTRACT NO.: 11-2T1821

DISREGARD PRINTS BEARING EARLIER REVISION DATES

REVISION DATES: 10-07-11 10-20-11

SHEET R1-7

FILE => 1100020051qa007.dgn

USERNAME => s12400 DATE PLOTTED => 12-SEP-2012 TIME PLOTTED => 16:21

REFERENCE: CALTRANS SOIL & ROCK LOGGING, CLASSIFICATION, AND PRESENTATION MANUAL (2010)

DIST	COUNTY	ROUTE	POST MILES TOTAL PROJECT	SHEET No.	TOTAL SHEETS
11	SD	805	4.7/5.6	336	650

06-12-12
REGISTERED CIVIL ENGINEER

06-25-12
PLANS APPROVAL DATE

REGISTERED PROFESSIONAL ENGINEER
Brian Gutierrez
No. C66258
Exp. 06-30-14
CIVIL
STATE OF CALIFORNIA

The State of California or its officers or agents shall not be responsible for the accuracy or completeness of electronic copies of this plan sheet.

CEMENTATION

Description	Criteria
Weak	Crumbles or breaks with handling or little finger pressure.
Moderate	Crumbles or breaks with considerable finger pressure.
Strong	Will not crumble or break with finger pressure.

BOREHOLE IDENTIFICATION

Symbol	Hole Type	Description
Size	A	Auger Boring (hollow or solid stem bucket)
Size	R RW RC P	Rotary drilled boring (conventional) Rotary drilled with self-casing wire-line Rotary core with continuously-sampled, self-casing wire-line Rotary percussion boring (air)
Size	R	Rotary drilled diamond core
Size	HD HA	Hand driven (1-inch soil tube) Hand Auger
●	D	Dynamic Cone Penetration Boring
▲	CPT	Cone Penetration Test (ASTM D 5778)
⬚	O	Other (note on LOTB)

Note: Size in inches.

CONSISTENCY OF COHESIVE SOILS

Description	Shear Strength (tsf)	Pocket Penetrometer Measurement, PP, (tsf)	Torvane Measurement, TV, (tsf)	Vane Shear Measurement, VS, (tsf)
Very Soft	Less than 0.12	Less than 0.25	Less than 0.12	Less than 0.12
Soft	0.12 - 0.25	0.25 - 0.5	0.12 - 0.25	0.12 - 0.25
Medium Stiff	0.25 - 0.5	0.5 - 1	0.25 - 0.5	0.25 - 0.5
Stiff	0.5 - 1	1 - 2	0.5 - 1	0.5 - 1
Very Stiff	1 - 2	2 - 4	1 - 2	1 - 2
Hard	Greater than 2	Greater than 4	Greater than 2	Greater than 2

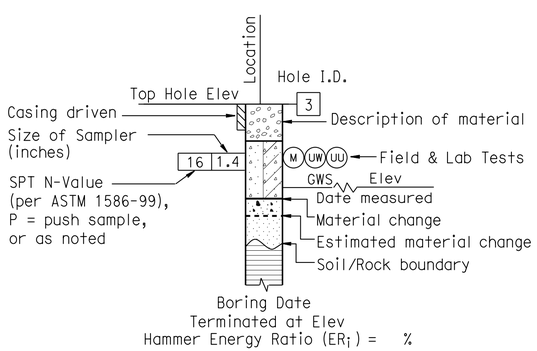

ROTARY BORING

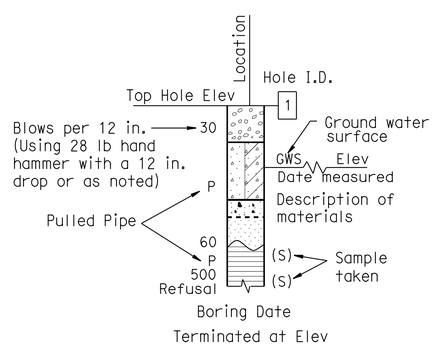

HAND BORING

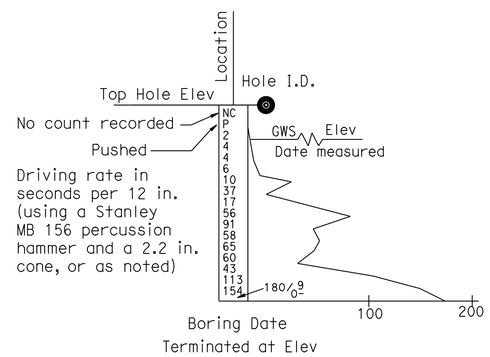

DYNAMIC CONE PENETRATION BORING

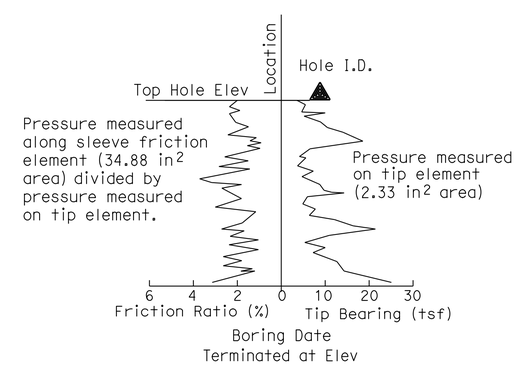

CONE PENETRATION TEST (CPT) BORING

ENGINEERING SERVICES	GEOTECHNICAL SERVICES	STATE OF CALIFORNIA DEPARTMENT OF TRANSPORTATION	DIVISION OF ENGINEERING SERVICES STRUCTURE DESIGN DESIGN BRANCH X	BRIDGE NO. / POST MILE 5.0	RETAINING WALL No. 12R LOG OF TEST BORINGS 2 OF 3
	PREPARED BY: I.G-Remmen				

GS LOTB SOIL LEGEND

ORIGINAL SCALE IN INCHES FOR REDUCED PLANS 0 1 2 3

UNIT: 3643
PROJECT NUMBER & PHASE: 11000200511
CONTRACT NO.: 11-2T1821

DISREGARD PRINTS BEARING EARLIER REVISION DATES

REVISION DATES

SHEET R1-8

FILE => 1100020051qa008.dgn

USERNAME => s12400 DATE PLOTTED => 12-SEP-2012 TIME PLOTTED => 16:21

REFERENCE: CALTRANS SOIL & ROCK LOGGING, CLASSIFICATION, AND PRESENTATION MANUAL (2010)

DIST	COUNTY	ROUTE	POST MILES TOTAL PROJECT	SHEET No.	TOTAL SHEETS
11	SD	805	4.7/5.6	337	650

06-12-12
REGISTERED CIVIL ENGINEER

06-25-12
PLANS APPROVAL DATE

REGISTERED PROFESSIONAL ENGINEER Brian Gutierrez No. C66258 Exp. 06-30-14 CIVIL STATE OF CALIFORNIA

The State of California or its officers or agents shall not be responsible for the accuracy or completeness of electronic copies of this plan sheet.

GROUP SYMBOLS AND NAMES

Graphic/Symbol	Group Names	Graphic/Symbol	Group Names
GW	Well-graded GRAVEL Well-graded GRAVEL with SAND	CL	Lean CLAY Lean CLAY with SAND Lean CLAY with GRAVEL SANDY lean CLAY SANDY lean CLAY with GRAVEL GRAVELLY lean CLAY GRAVELLY lean CLAY with SAND
GP	Poorly-graded GRAVEL Poorly-graded GRAVEL with SAND		
GW-GM	Well-graded GRAVEL with SILT Well-graded GRAVEL with SILT and SAND	CL-ML	SILTY CLAY SILTY CLAY with SAND SILTY CLAY with GRAVEL SANDY SILTY CLAY SANDY SILTY CLAY with GRAVEL GRAVELLY SILTY CLAY GRAVELLY SILTY CLAY with SAND
GW-GC	Well-graded GRAVEL with CLAY (or SILTY CLAY) Well-graded GRAVEL with CLAY and SAND (or SILTY CLAY and SAND)		
GP-GM	Poorly-graded GRAVEL with SILT Poorly-graded GRAVEL with SILT and SAND	ML	SILT SILT with SAND SILT with GRAVEL SANDY SILT SANDY SILT with GRAVEL GRAVELLY SILT GRAVELLY SILT with SAND
GP-GC	Poorly-graded GRAVEL with CLAY (or SILTY CLAY) Poorly-graded GRAVEL with CLAY and SAND (or SILTY CLAY and SAND)		
GM	SILTY GRAVEL SILTY GRAVEL with SAND	OL	ORGANIC lean CLAY ORGANIC lean CLAY with SAND ORGANIC lean CLAY with GRAVEL SANDY ORGANIC lean CLAY SANDY ORGANIC lean CLAY with GRAVEL GRAVELLY ORGANIC lean CLAY GRAVELLY ORGANIC lean CLAY with SAND
GC	CLAYEY GRAVEL CLAYEY GRAVEL with SAND		
GC-GM	SILTY, CLAYEY GRAVEL SILTY, CLAYEY GRAVEL with SAND	OL	ORGANIC SILT ORGANIC SILT with SAND ORGANIC SILT with GRAVEL SANDY ORGANIC SILT SANDY ORGANIC SILT with GRAVEL GRAVELLY ORGANIC SILT GRAVELLY ORGANIC SILT with SAND
SW	Well-graded SAND Well-graded SAND with GRAVEL		
SP	Poorly-graded SAND Poorly-graded SAND with GRAVEL	CH	Fat CLAY Fat CLAY with SAND Fat CLAY with GRAVEL SANDY fat CLAY SANDY fat CLAY with GRAVEL GRAVELLY fat CLAY GRAVELLY fat CLAY with SAND
SW-SM	Well-graded SAND with SILT Well-graded SAND with SILT and GRAVEL		
SW-SC	Well-graded SAND with CLAY (or SILTY CLAY) Well-graded SAND with CLAY and GRAVEL (or SILTY CLAY and GRAVEL)	MH	Elastic SILT Elastic SILT with SAND Elastic SILT with GRAVEL SANDY elastic SILT SANDY elastic SILT with GRAVEL GRAVELLY elastic SILT GRAVELLY elastic SILT with SAND
SP-SM	Poorly-graded SAND with SILT Poorly-graded SAND with SILT and GRAVEL		
SP-SC	Poorly-graded SAND with CLAY (or SILTY CLAY) Poorly-graded SAND with CLAY and GRAVEL (or SILTY CLAY and GRAVEL)	OH	ORGANIC fat CLAY ORGANIC fat CLAY with SAND ORGANIC fat CLAY with GRAVEL SANDY ORGANIC fat CLAY SANDY ORGANIC fat CLAY with GRAVEL GRAVELLY ORGANIC fat CLAY GRAVELLY ORGANIC fat CLAY with SAND
SM	SILTY SAND SILTY SAND with GRAVEL		
SC	CLAYEY SAND CLAYEY SAND with GRAVEL	OH	ORGANIC elastic SILT ORGANIC elastic SILT with SAND ORGANIC elastic SILT with GRAVEL SANDY ORGANIC elastic SILT SANDY ORGANIC elastic SILT with GRAVEL GRAVELLY ORGANIC elastic SILT GRAVELLY ORGANIC elastic SILT with SAND
SC-SM	SILTY, CLAYEY SAND SILTY, CLAYEY SAND with GRAVEL		
PT	PEAT	OL/OH	ORGANIC SOIL ORGANIC SOIL with SAND ORGANIC SOIL with GRAVEL SANDY ORGANIC SOIL SANDY ORGANIC SOIL with GRAVEL GRAVELLY ORGANIC SOIL GRAVELLY ORGANIC SOIL with SAND
	COBBLES COBBLES and BOULDERS BOULDERS		

FIELD AND LABORATORY TESTING

- (C) Consolidation (ASTM D 2435)
- (CL) Collapse Potential (ASTM D 5333)
- (CP) Compaction Curve (CTM 216)
- (CR) Corrosivity Testing (CTM 643, CTM 422, CTM 417)
- (CU) Consolidated Undrained Triaxial (ASTM D 4767)
- (DS) Direct Shear (ASTM D 3080)
- (EI) Expansion Index (ASTM D 4829)
- (M) Moisture Content (ASTM D 2216)
- (OC) Organic Content-% (ASTM D 2974)
- (P) Permeability (CTM 220)
- (PA) Particle Size Analysis (ASTM D 422)
- (PI) Plasticity Index (AASHTO T 90) Liquid Limit (AASHTO T 89)
- (PL) Point Load Index (ASTM D 5731)
- (PM) Pressure Meter
- (R) R-Value (CTM 301)
- (SE) Sand Equivalent (CTM 217)
- (SG) Specific Gravity (AASHTO T 100)
- (SL) Shrinkage Limit (ASTM D 427)
- (SW) Swell Potential (ASTM D 4546)
- (UC) Unconfined Compression-Soil (ASTM D 2166) Unconfined Compression-Rock (ASTM D 2938)
- (UU) Unconsolidated Undrained Triaxial (ASTM D 2850)
- (UW) Unit Weight (ASTM D 4767)

APPARENT DENSITY OF COHESIONLESS SOILS

Description	SPT N_{60} (Blows / 12 in.)
Very Loose	0 - 5
Loose	5 - 10
Medium Dense	10 - 30
Dense	30 - 50
Very Dense	Greater than 50

MOISTURE

Description	Criteria
Dry	No discernable moisture
Moist	Moisture present, but no free water
Wet	Visible free water

PERCENT OR PROPORTION OF SOILS

Description	Criteria
Trace	Particles are present but estimated to be less than 5%
Few	5% - 10%
Little	15% - 25%
Some	30% - 45%
Mostly	50% - 100%

PARTICLE SIZE

Description		Size (in.)
Boulder		Greater than 12
Cobble		3 - 12
Gravel	Coarse	3/4 - 3
	Fine	1/5 - 3/4
Sand	Coarse	1/16 - 1/5
	Medium	1/64 - 1/16
	Fine	1/300 - 1/64
Silt and Clay		Less than 1/300

ENGINEERING SERVICES

GEOTECHNICAL SERVICES

PREPARED BY: I.G-Remmen

STATE OF CALIFORNIA DEPARTMENT OF TRANSPORTATION

DIVISION OF ENGINEERING SERVICES STRUCTURE DESIGN DESIGN BRANCH X

BRIDGE NO.

POST MILE 5.0

RETAINING WALL No. 12R

LOG OF TEST BORINGS 3 OF 3

GS LOTB SOIL LEGEND

ORIGINAL SCALE IN INCHES FOR REDUCED PLANS 0 1 2 3

UNIT: 3643
PROJECT NUMBER & PHASE: 11000200511
CONTRACT NO.: 11-2T1821

DISREGARD PRINTS BEARING EARLIER REVISION DATES

REVISION DATES

SHEET R1-9

FILE => 1100020051ga009.dgn

USERNAME => s127400 DATE PLOTTED => 12-SEP-2012 TIME PLOTTED => 16:21

Dist	COUNTY	ROUTE	POST MILES TOTAL PROJECT	SHEET No.	TOTAL SHEETS
11	SD	805	4.7/5.6	338	650

David Layne 05-24-12
REGISTERED CIVIL ENGINEER DATE

06-25-12
PLANS APPROVAL DATE

REGISTERED PROFESSIONAL ENGINEER DAVID LAYNE No. C74349 Exp. 06-30-13 CIVIL STATE OF CALIFORNIA

THE STATE OF CALIFORNIA OR ITS OFFICERS OR AGENTS SHALL NOT BE RESPONSIBLE FOR THE ACCURACY OR COMPLETENESS OF SCANNED COPIES OF THIS PLAN SHEET.

DOKKEN ENGINEERING
5675 RUFFIN Rd
SUITE 250
SAN DIEGO, CA 92123

SANDAG
401 B St
SUITE 800
SAN DIEGO, CA 92101

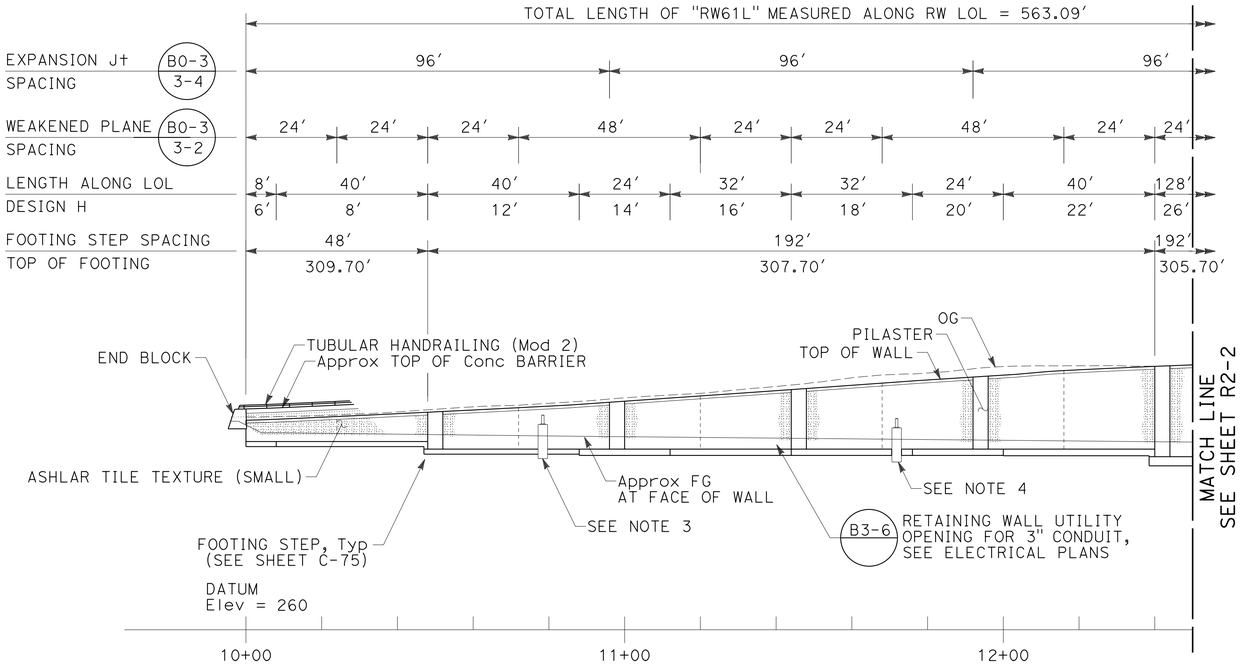

DEVELOPED MIRROR ELEVATION

"RW61L" LINE
SCALE: 1" = 20'

TOP OF WALL			
STATION	ELEVATION	STATION	ELEVATION
10+00	315.31	13+36	331.43
10+08(2)	315.58	13+52	330.81
10+16	315.93	13+55 (EVC)(4)	330.56
10+32	316.67	13+68(2)	329.37
10+48(2,3)	317.45	13+84	327.91
10+64	318.23	13+92(2)	327.19
10+80	319.05	14+00	326.46
10+88(2)	319.52	14+08(2)	325.63
10+96	320.07	14+16	324.47
11+12(2)	321.19	14+32(3)	322.24
11+28	322.29	14+48	320.34
11+44(2)	323.42	14+56(2)	319.44
11+60	324.55	14+64	318.53
11+76(2)	325.70	14+80(2)	316.69
11+92	326.73	14+96(2)	314.85
12+00(2)	327.24	15+12(2)	313.02
12+08	327.85	15+28(2)	311.33
12+24	328.84	15+44	309.91
12+40(2,3)	329.55	15+52(2)	309.15
12+56	330.24	15+60	308.25
12+72	330.69	15+63.09	307.97
12+88	331.03		
13+04	331.27		
13+20	331.33		
13+35 (BVC)(4)	331.43		

(1) ELEVATIONS PROVIDED AT 16' INTERVALS AND AT LOCATIONS NOTED.
(2) CHANGE IN DESIGN HEIGHT
(3) FOOTING STEP
(4) 20' VERTICAL CURVE, SEE SHEET C-75.

LEGEND:

STANDARD PLAN SHEET No.
DETAIL No.

CURVE DATA TABLE				
No.	R	Δ	T	L
1	262.96'	18°28'04"	42.75'	84.76'
2	262.05'	39°39'36"	94.50'	181.49'

RW QUANTITIES ("RW61L")	
ITEM	TOTAL
STRUCTURE EXCAVATION (RETAINING WALL)	4,680 CY
STRUCTURE BACKFILL (RETAINING WALL)	3,630 CY
PERVIOUS BACKFILL MATERIAL (RETAINING WALL)	220 CY
STRUCTURAL CONCRETE (RETAINING WALL)	1,120 CY
BAR REINFORCING STEEL (RETAINING WALL)	210,900 LB
Conc BARRIER (TYPE 26 Mod)	563 LF
ARCHITECTURAL TREATMENT (LOUVER TEXTURE)	1,035 SQFT
ARCHITECTURAL TREATMENT (ASHLAR TILE TEXTURE (SMALL))	6,715 SQFT
TUBULAR HANDRAILING (Mod 2)	564 LF

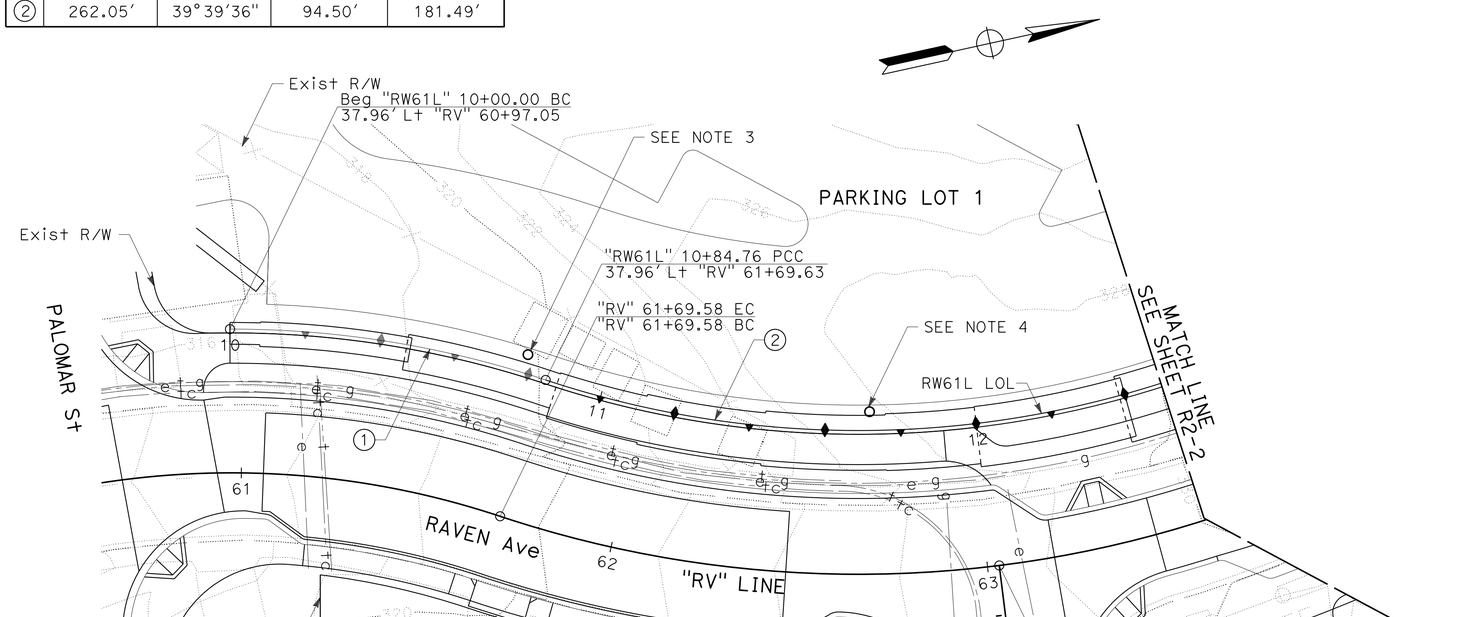

PLAN

SCALE: 1" = 20'

NOTES:

1. TOP OF WALL ELEVATIONS CONTROLLED BY LEFT BACK SW ELEVATIONS OF "RV" LINE. LEFT BACK SW ELEVATIONS SHALL GOVERN OVER THOSE LISTED IN TOP OF WALL TABLE AS LONG AS THE DESIGN HEIGHT DOES NOT EXCEED THAT SHOWN ON ELEVATION.
2. NOT ALL UTILITIES SHOWN ON RETAINING WALL PLAN SHEETS. SEE UTILITY PLAN SHEETS
3. LIGHT POLE FOUNDATION TO BE OUTSIDE OF RW FOOTING. SEE ELECTRICAL PLANS FOR Approx LOCATION OF POLE.
4. LIGHT POLE FOUNDATION. SEE "RW FOOTING CUTOUT" DETAIL. SEE ELECTRICAL PLANS FOR Approx LOCATION OF POLE.

APPROVED FOR RETAINING WALL WORK ONLY

RETAINING WALL PLAN
RW No. 61L

SCALE AS SHOWN

R2-1

REVISED BY | DATE REVISED
DAVID LAYNE | PAUL KOSINSKI
CALCULATED-DESIGNED BY | CHECKED BY
CONSULTANT FUNCTIONAL SUPERVISOR | GERARD LUMABAS
STATE OF CALIFORNIA - DEPARTMENT OF TRANSPORTATION
Caltrans

LAST REVISION 06-12-12 | DATE PLOTTED => 12-SEP-2012 | TIME PLOTTED => 16:21

Dist	COUNTY	ROUTE	POST MILES TOTAL PROJECT	SHEET No.	TOTAL SHEETS
11	SD	805	4.7/5.6	339	650

REGISTERED CIVIL ENGINEER 05-24-12 DATE

06-25-12
PLANS APPROVAL DATE

REGISTERED PROFESSIONAL ENGINEER DAVID LAYNE No. C74349 Exp. 06-30-13 CIVIL STATE OF CALIFORNIA

THE STATE OF CALIFORNIA OR ITS OFFICERS OR AGENTS SHALL NOT BE RESPONSIBLE FOR THE ACCURACY OR COMPLETENESS OF SCANNED COPIES OF THIS PLAN SHEET.

DOKKEN ENGINEERING
5675 RUFFIN Rd
SUITE 250
SAN DIEGO, CA 92123

SANDAG
401 B St
SUITE 800
SAN DIEGO, CA 92101

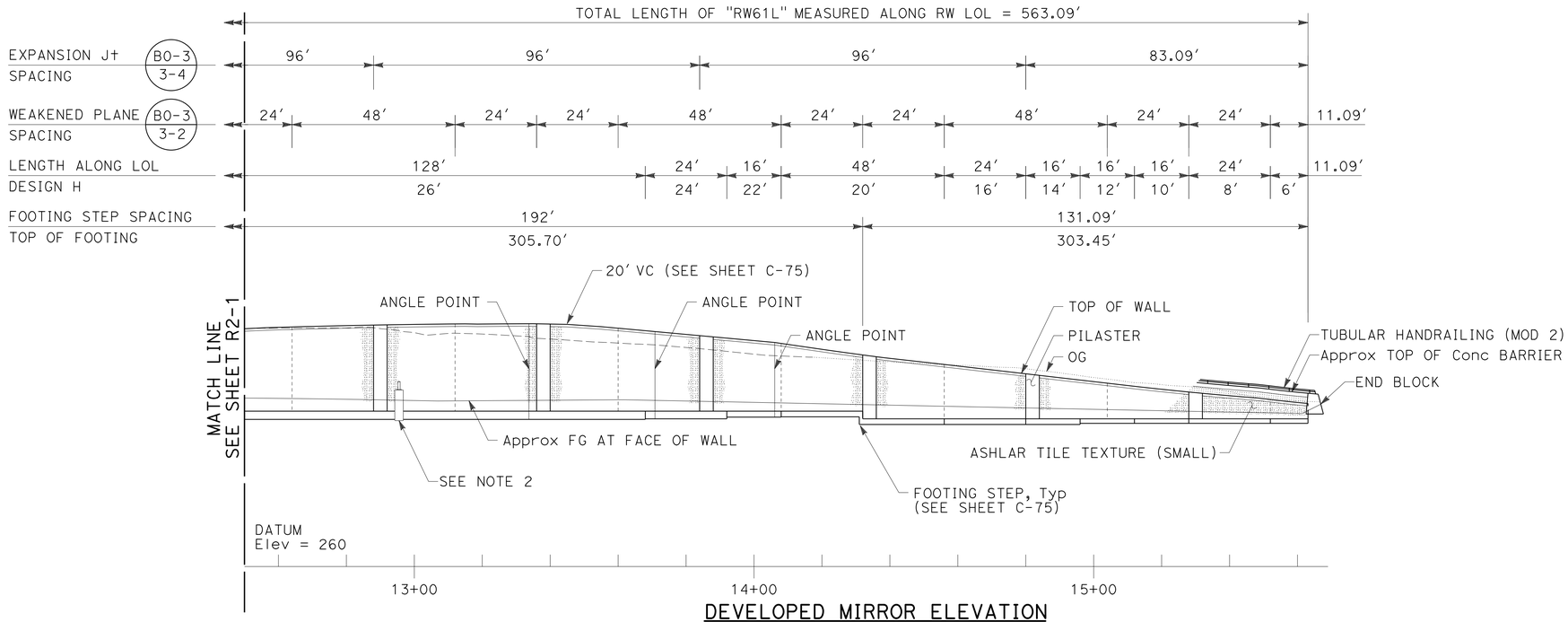

DEVELOPED MIRROR ELEVATION

"RW61L" LINE
SCALE: 1" = 20'

CURVE DATA TABLE				
No.	R	Δ	T	L
2	262.05'	39°39'36"	94.50'	181.39'
3	462.05'	8°22'59"	33.86'	67.60'
4	228.31'	16°48'39"	33.74'	66.99'
5	23.00'	34°20'13"	7.11'	13.78'

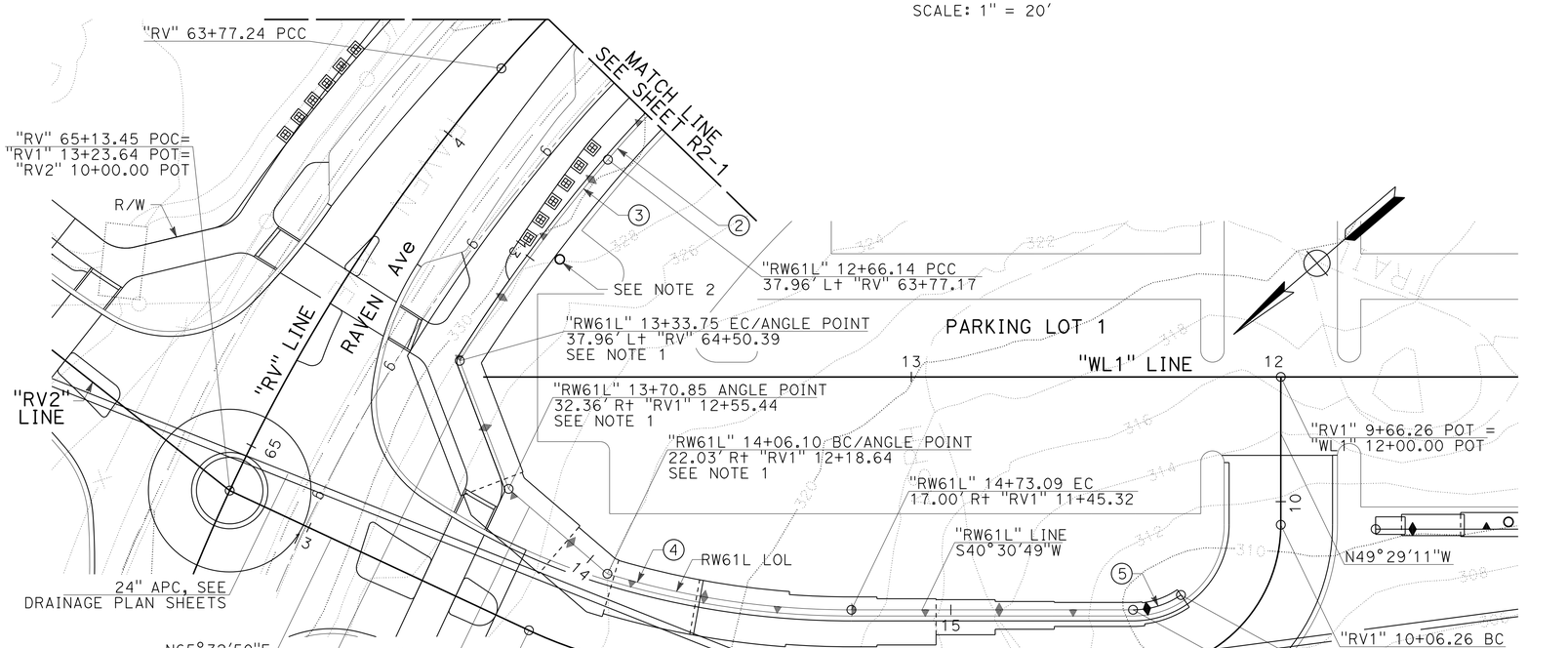

PLAN

SCALE: 1" = 20'

NOTES:

1. SEE RETAINING WALL DETAILS FOR ADDITIONAL REINFORCEMENT REQUIRED AT ANGLE POINT.
2. LIGHT POLE FOUNDATION TO BE OUTSIDE OF RW FOOTING. SEE ELECTRICAL PLANS FOR Approx LOCATION OF POLE.

APPROVED FOR RETAINING WALL WORK ONLY

RETAINING WALL PLAN
RW No. 61L

SCALE AS SHOWN

R2-2

REVISED BY | DATE REVISED
DAVID LAYNE | PAUL KOSINSKI
CALCULATED-DESIGNED BY | CHECKED BY
CONSULTANT FUNCTIONAL SUPERVISOR | GERARD LUMABAS
STATE OF CALIFORNIA - DEPARTMENT OF TRANSPORTATION
Caltrans

LAST REVISION 06-12-12 | DATE PLOTTED => 12-SEP-2012 | TIME PLOTTED => 16:21

Dist	COUNTY	ROUTE	POST MILES TOTAL PROJECT	SHEET No.	TOTAL SHEETS
11	SD	805	4.7/5.6	340	650

REGISTERED CIVIL ENGINEER 05-24-12 DATE

06-25-12
PLANS APPROVAL DATE

REGISTERED PROFESSIONAL ENGINEER DAVID LAYNE No. C74349 Exp. 06-30-13 CIVIL STATE OF CALIFORNIA

THE STATE OF CALIFORNIA OR ITS OFFICERS OR AGENTS SHALL NOT BE RESPONSIBLE FOR THE ACCURACY OR COMPLETENESS OF SCANNED COPIES OF THIS PLAN SHEET.

DOKKEN ENGINEERING
5675 RUFFIN Rd
SUITE 250
SAN DIEGO, CA 92123

SANDAG
401 B St
SUITE 800
SAN DIEGO, CA 92101

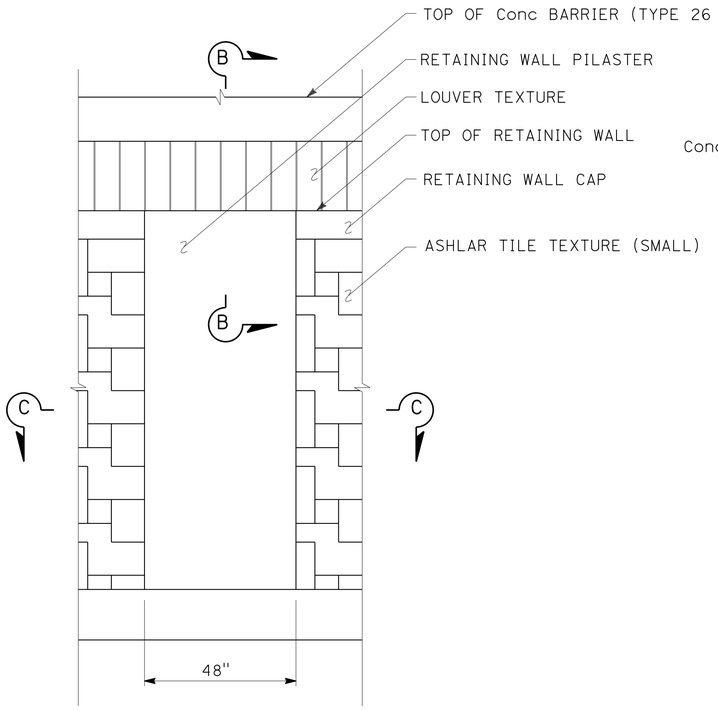

PILASTER DETAIL
SCALE: ½" = 1'

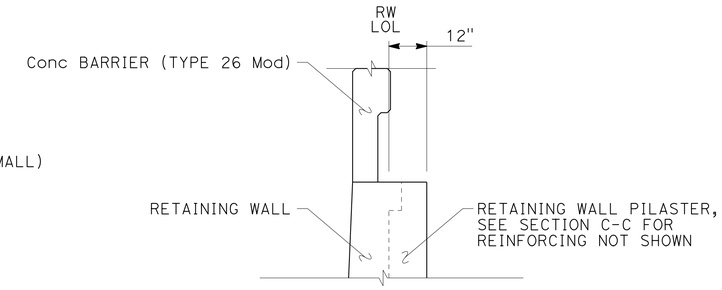

SECTION B-B
SCALE: ½" = 1'

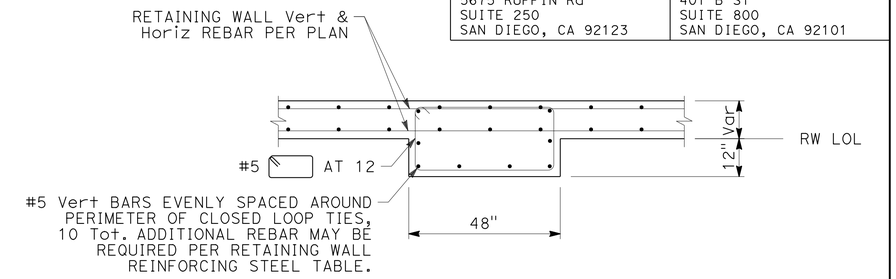

SECTION C-C
SCALE: ½" = 1'

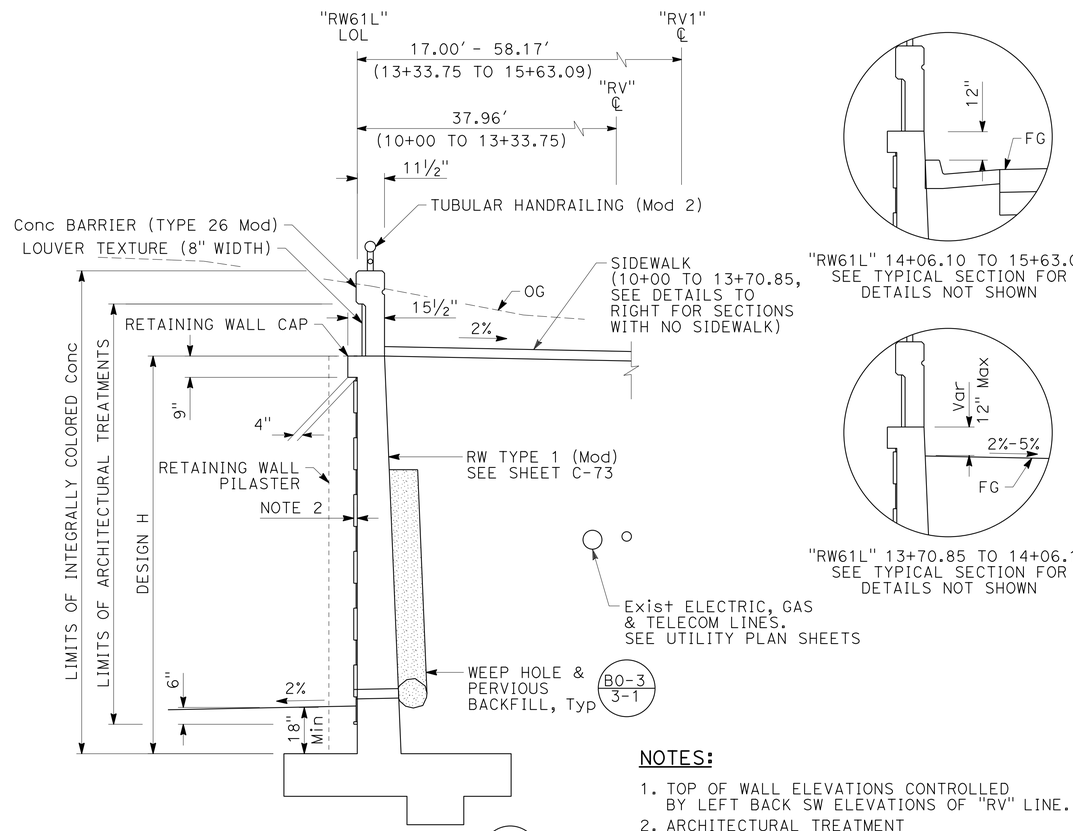

TYPICAL SECTION
NO SCALE
"RW61L" 10+00.00 TO 15+63.09

"RW61L" 14+06.10 TO 15+63.09
SEE TYPICAL SECTION FOR DETAILS NOT SHOWN

"RW61L" 13+70.85 TO 14+06.10
SEE TYPICAL SECTION FOR DETAILS NOT SHOWN

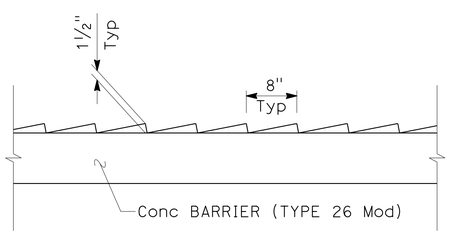

LOUVER TEXTURE DETAIL
SCALE: 1" = 1'

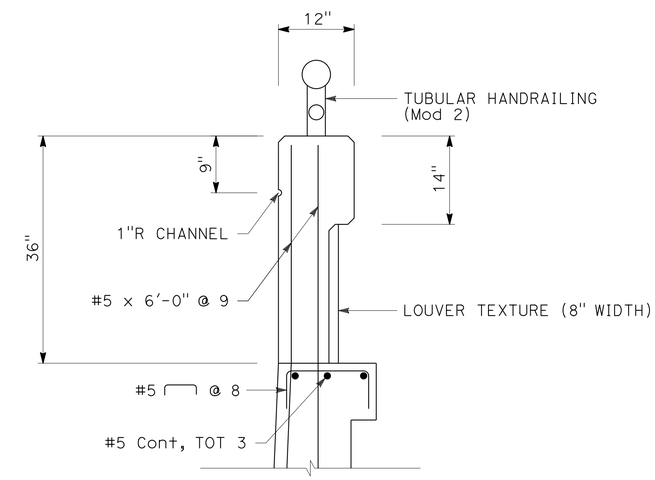

FOR DETAILS NOT SHOWN, SEE STANDARD PLAN B11-54

Conc BARRIER (TYPE 26 Mod)
SCALE: 1" = 1'

NOTES:

1. TOP OF WALL ELEVATIONS CONTROLLED BY LEFT BACK SW ELEVATIONS OF "RV" LINE.
2. ARCHITECTURAL TREATMENT (ASHLAR TILE TEXTURE (SMALL))
3. RW STEM, RW CAP, RW PILASTER, RW END BLOCK, AND CONCRETE BARRIER SHALL BE INTEGRALLY COLORED CONCRETE.
4. SEE ADDITIONAL RETAINING WALL DETAILS ON SHEET C-75

APPROVED FOR RETAINING WALL WORK ONLY

RETAINING WALL DETAILS
RW No. 61L

SCALE AS SHOWN

R2-3

STATE OF CALIFORNIA - DEPARTMENT OF TRANSPORTATION
Caltrans

CONSULTANT FUNCTIONAL SUPERVISOR: GERARD LUMABAS
DAVID LAYNE — PAUL KOSINSKI
REVISED BY — DATE REVISED
CALCULATED-DESIGNED BY — CHECKED BY

LAST REVISION 06-12-12 | DATE PLOTTED => 12-SEP-2012 | TIME PLOTTED => 16:21

Dist	COUNTY	ROUTE	POST MILES TOTAL PROJECT	SHEET No.	TOTAL SHEETS
11	SD	805	4.7/5.6	341	650

REGISTERED CIVIL ENGINEER 05-24-12 DATE

06-25-12
PLANS APPROVAL DATE

REGISTERED PROFESSIONAL ENGINEER DAVID LAYNE No. C74349 Exp. 06-30-13 CIVIL STATE OF CALIFORNIA

THE STATE OF CALIFORNIA OR ITS OFFICERS OR AGENTS SHALL NOT BE RESPONSIBLE FOR THE ACCURACY OR COMPLETENESS OF SCANNED COPIES OF THIS PLAN SHEET.

DOKKEN ENGINEERING
5675 RUFFIN Rd
SUITE 250
SAN DIEGO, CA 92123

SANDAG
401 B St
SUITE 800
SAN DIEGO, CA 92101

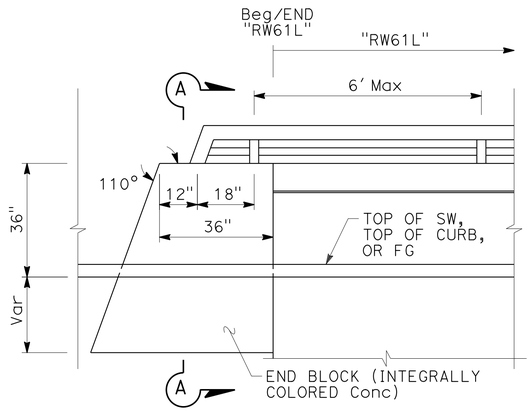

"RW61" END WALL DETAIL
SCALE: 1/2" = 1'

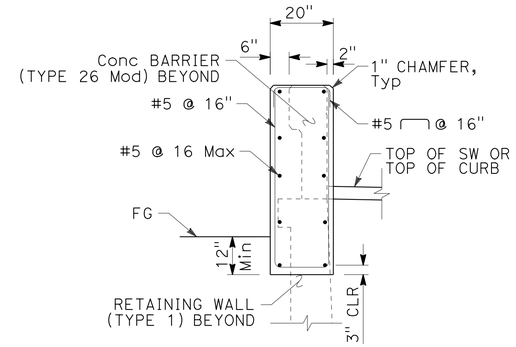

SECTION A-A
SCALE: 1/2" = 1'

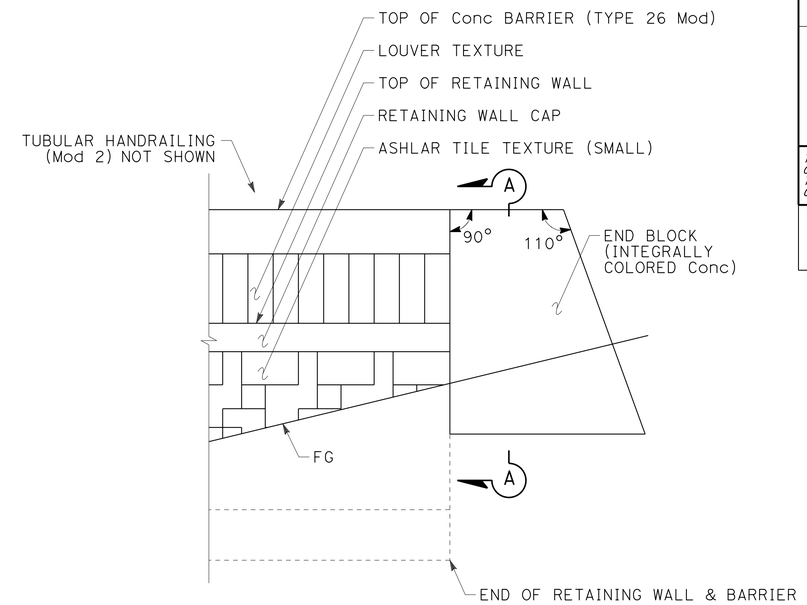

END BLOCK ELEVATION
SCALE: 1/2" = 1'

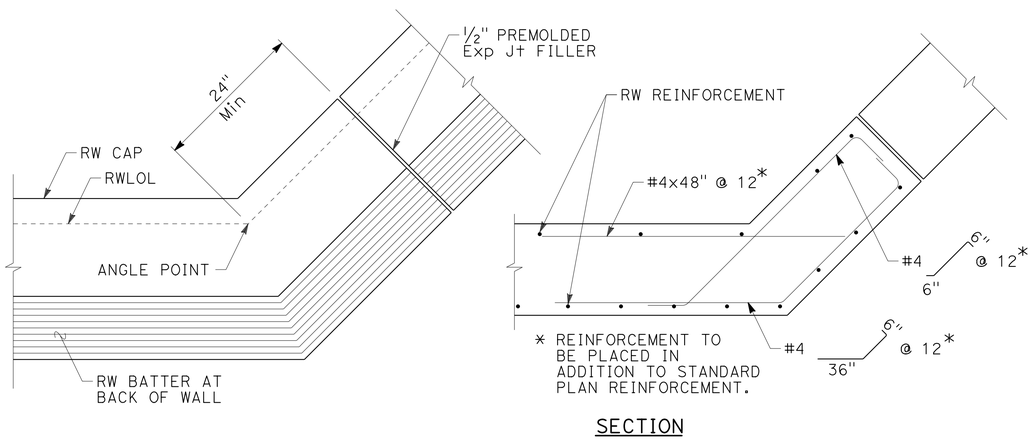

SECTION

ADDITIONAL REINFORCEMENT AT RETAINING WALL ANGLE POINTS
SCALE: 1" = 1'

NOTES:

1. PROVIDE STANDARD FOOTING AND STEM REINFORCEMENT PER STANDARD PLAN B3-1 IN ADDITION TO REINFORCEMENT SHOWN.
2. EXTEND FOOTING ⓓ BARS AND LEG OF ⓒ OR SHORT ⓒ BARS TO 3" FROM FOOTING TOE FOR 30" FROM CUTOUT

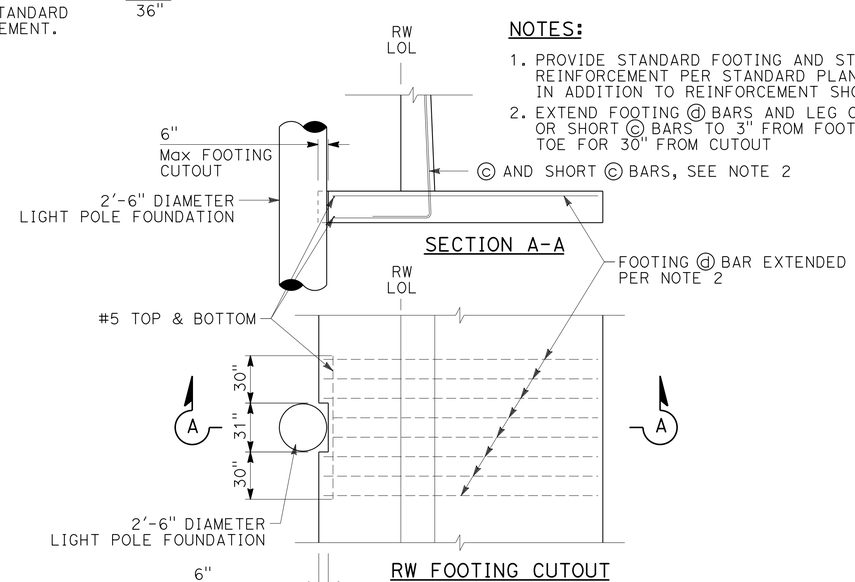

SECTION A-A

RW FOOTING CUTOUT
SCALE: 1/4" = 1'

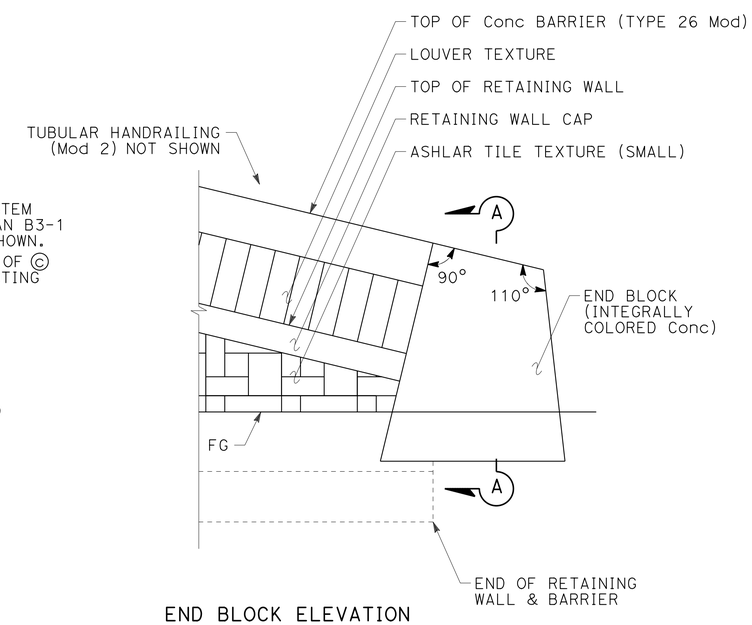

END BLOCK ELEVATION
- SLOPED WALL PROFILE
SCALE: 1/2" = 1'

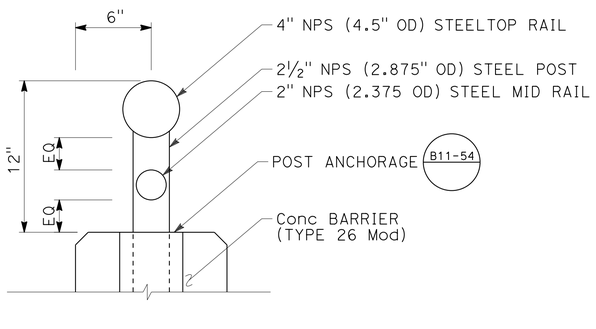

TUBULAR HANDRAILING (Mod 2)
SCALE: 2" = 1'

APPROVED FOR RETAINING WALL WORK ONLY

RETAINING WALL DETAILS
RW No. 61L

SCALE AS SHOWN

R2-4

STATE OF CALIFORNIA - DEPARTMENT OF TRANSPORTATION
Caltrans®

CONSULTANT FUNCTIONAL SUPERVISOR: GERARD LUMABAS
CALCULATED-DESIGNED BY: DAVID LAYNE
CHECKED BY: PAUL KOSINSKI
REVISED BY
DATE REVISED

LAST REVISION 06-12-12
DATE PLOTTED => 12-SEP-2012
TIME PLOTTED => 16:21

Dist	COUNTY	ROUTE	POST MILES TOTAL PROJECT	SHEET No.	TOTAL SHEETS
11	SD	805	4.7/5.6	342	650

David Layne 05-24-12
REGISTERED CIVIL ENGINEER DATE

06-25-12
PLANS APPROVAL DATE

REGISTERED PROFESSIONAL ENGINEER
DAVID LAYNE
No. C74349
Exp. 06-30-13
CIVIL
STATE OF CALIFORNIA

THE STATE OF CALIFORNIA OR ITS OFFICERS OR AGENTS SHALL NOT BE RESPONSIBLE FOR THE ACCURACY OR COMPLETENESS OF SCANNED COPIES OF THIS PLAN SHEET.

DOKKEN ENGINEERING
5675 RUFFIN Rd
SUITE 250
SAN DIEGO, CA 92123

SANDAG
401 B St
SUITE 800
SAN DIEGO, CA 92101

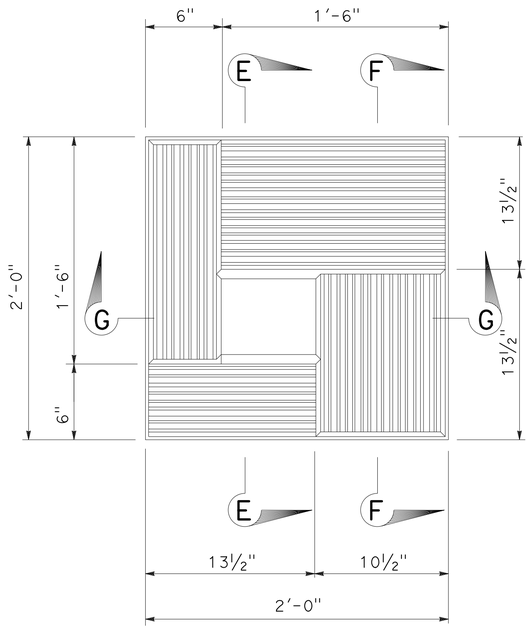

ASHLAR TILE TEXTURE (SMALL) DETAIL

SCALE: 2" = 1'-0"

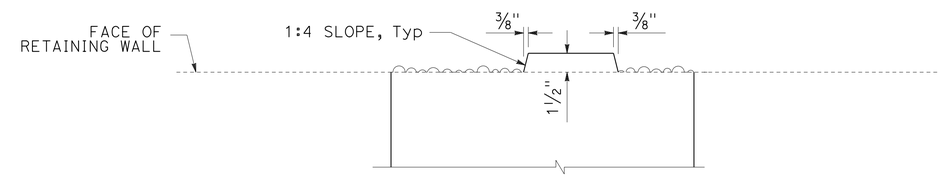

SECTION E-E

SCALE: 2" = 1'-0"

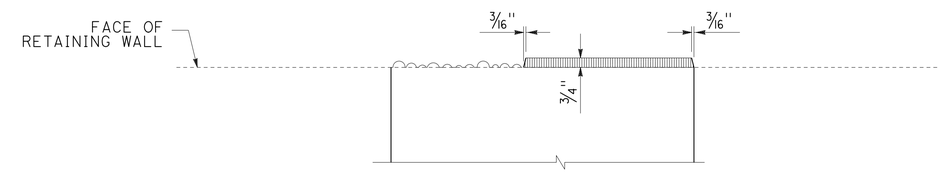

SECTION F-F

SCALE: 2" = 1'-0"

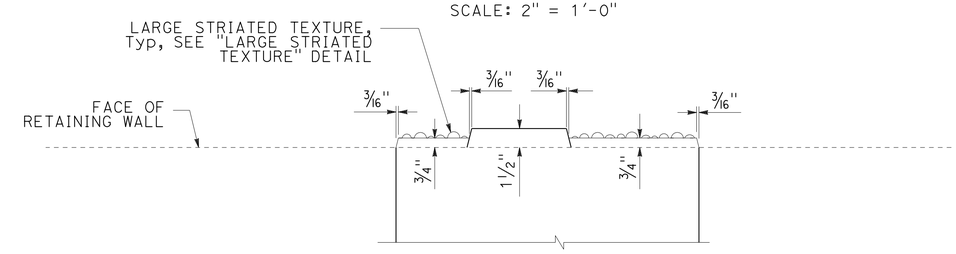

SECTION G-G

SCALE: 2" = 1'-0"

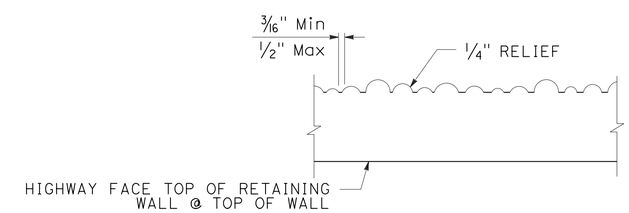

LARGE STRIATED TEXTURE DETAIL

SCALE: 4" = 1'-0"

RETAINING WALL DETAILS
RW No. 61L

R2-5

SCALE AS SHOWN

APPROVED FOR RETAINING WALL WORK ONLY

STATE OF CALIFORNIA - DEPARTMENT OF TRANSPORTATION
Caltrans

CONSULTANT FUNCTIONAL SUPERVISOR: GERARD LUMABAS
CALCULATED-DESIGNED BY: DAVID LAYNE
CHECKED BY: PAUL KOSINSKI
REVISED BY
DATE REVISED

LAST REVISION 06-12-12
DATE PLOTTED => 12-SEP-2012
TIME PLOTTED => 16:21

DIST	COUNTY	ROUTE	POST MILES TOTAL PROJECT	SHEET No.	TOTAL SHEETS
11	SD	805	4.7/5.6	343	650

REGISTERED CIVIL ENGINEER 06-12-12

06-25-12
PLANS APPROVAL DATE

The State of California or its officers or agents shall not be responsible for the accuracy or completeness of electronic copies of this plan sheet.

REGISTERED PROFESSIONAL ENGINEER Brian Gutierrez No. C66258 Exp. 06-30-14 CIVIL STATE OF CALIFORNIA

This LOTB sheet was prepared in accordance with the Caltrans Soil & Rock Logging, Classification, & Presentation Manual (2007 Edition).

BENCH MARK

BM 805-5.00, 2¼" CADT DISK IN SIDEWALK NORTH SIDE OF E. PALOMAR St OC BRIDGE, AT STATION 298+46.0, RIGHT 60 FEET OF "A1" LINE.
ELEVATION 300.93 FEET
NAVD88

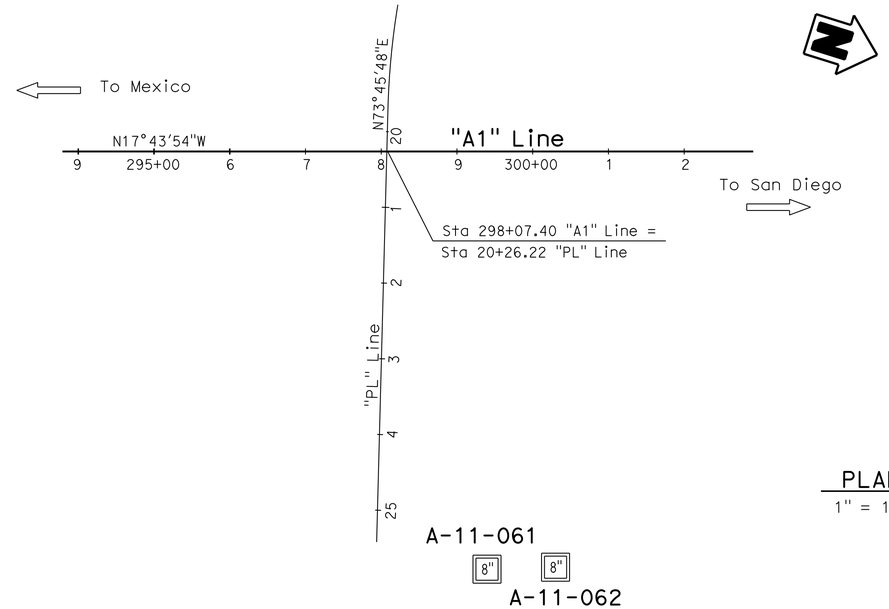

PLAN

1" = 100'

Note: NO GROUND WATER ENCOUNTERED DURING FIELD INVESTIGATION.

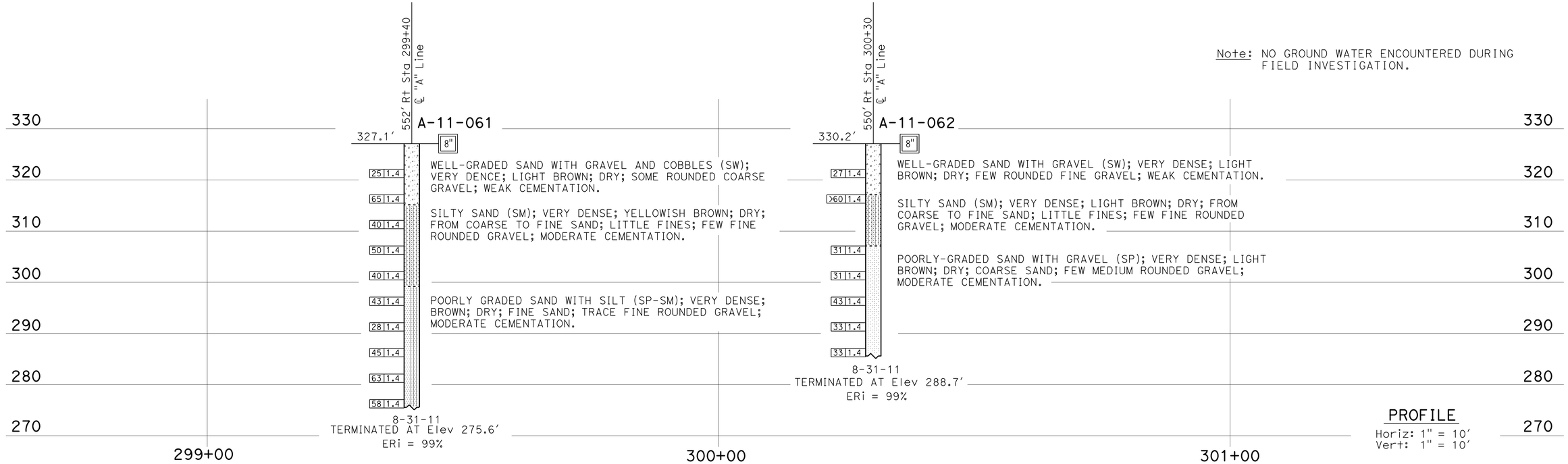

PROFILE

Horiz: 1" = 10'
Vert: 1" = 10'

ENGINEERING SERVICES	GEOTECHNICAL SERVICES	STATE OF CALIFORNIA DEPARTMENT OF TRANSPORTATION	DIVISION OF ENGINEERING SERVICES STRUCTURE DESIGN DESIGN BRANCH X	BRIDGE NO. / POST MILE 5.0	RETAINING WALL No. 61L LOG OF TEST BORINGS 1 OF 3
FUNCTIONAL SUPERVISOR NAME: S. Wei	DRAWN BY: I.G-Remmen CHECKED BY: XX	FIELD INVESTIGATION BY: B. Gutierrez			

OGS CIVIL LOG OF TEST BORINGS SHEET

ORIGINAL SCALE IN INCHES FOR REDUCED PLANS 0 1 2 3

UNIT: 3643
PROJECT NUMBER & PHASE: 11000200511 CONTRACT NO.: 11-2T1821

DISREGARD PRINTS BEARING EARLIER REVISION DATES

REVISION DATES: 10-07-11 10-20-11

SHEET R2-6

FILE => 1100020051qb006.dgn

USERNAME => s127400 DATE PLOTTED => 12-SEP-2012 TIME PLOTTED => 16:21

REFERENCE: CALTRANS SOIL & ROCK LOGGING, CLASSIFICATION, AND PRESENTATION MANUAL (2010)

DIST	COUNTY	ROUTE	POST MILES TOTAL PROJECT	SHEET No.	TOTAL SHEETS
11	SD	805	4.7/5.6	344	650

06-12-12
REGISTERED CIVIL ENGINEER

06-25-12
PLANS APPROVAL DATE

REGISTERED PROFESSIONAL ENGINEER
Brian Gutierrez
No. C66258
Exp. 06-30-14
CIVIL
STATE OF CALIFORNIA

The State of California or its officers or agents shall not be responsible for the accuracy or completeness of electronic copies of this plan sheet.

CEMENTATION

Description	Criteria
Weak	Crumbles or breaks with handling or little finger pressure.
Moderate	Crumbles or breaks with considerable finger pressure.
Strong	Will not crumble or break with finger pressure.

BOREHOLE IDENTIFICATION

Symbol	Hole Type	Description
Size	A	Auger Boring (hollow or solid stem bucket)
Size	R RW RC P	Rotary drilled boring (conventional) Rotary drilled with self-casing wire-line Rotary core with continuously-sampled, self-casing wire-line Rotary percussion boring (air)
Size	R	Rotary drilled diamond core
Size	HD HA	Hand driven (1-inch soil tube) Hand Auger
●	D	Dynamic Cone Penetration Boring
▲	CPT	Cone Penetration Test (ASTM D 5778)
⬚	O	Other (note on LOTB)

Note: Size in inches.

CONSISTENCY OF COHESIVE SOILS

Description	Shear Strength (tsf)	Pocket Penetrometer Measurement, PP, (tsf)	Torvane Measurement, TV, (tsf)	Vane Shear Measurement, VS, (tsf)
Very Soft	Less than 0.12	Less than 0.25	Less than 0.12	Less than 0.12
Soft	0.12 - 0.25	0.25 - 0.5	0.12 - 0.25	0.12 - 0.25
Medium Stiff	0.25 - 0.5	0.5 - 1	0.25 - 0.5	0.25 - 0.5
Stiff	0.5 - 1	1 - 2	0.5 - 1	0.5 - 1
Very Stiff	1 - 2	2 - 4	1 - 2	1 - 2
Hard	Greater than 2	Greater than 4	Greater than 2	Greater than 2

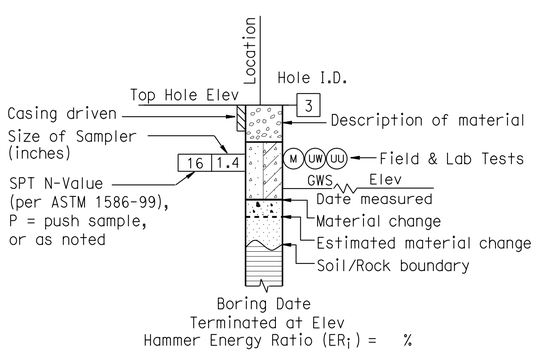

ROTARY BORING

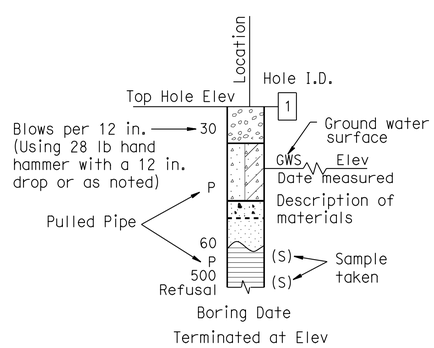

HAND BORING

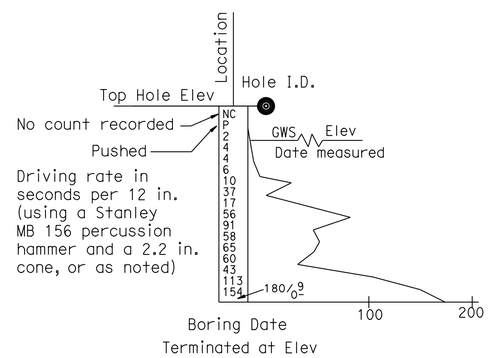

DYNAMIC CONE PENETRATION BORING

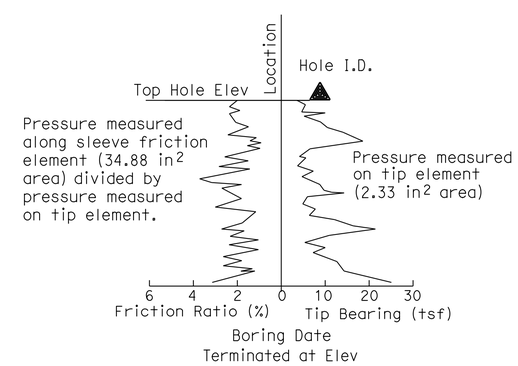

CONE PENETRATION TEST (CPT) BORING

ENGINEERING SERVICES	GEOTECHNICAL SERVICES	STATE OF CALIFORNIA DEPARTMENT OF TRANSPORTATION	DIVISION OF ENGINEERING SERVICES STRUCTURE DESIGN DESIGN BRANCH X	BRIDGE NO. / POST MILE 5.0	RETAINING WALL NO. 61L LOG OF TEST BORINGS 2 OF 3
	PREPARED BY: I.G-Remmen				

GS LOTB SOIL LEGEND

ORIGINAL SCALE IN INCHES FOR REDUCED PLANS 0 1 2 3

UNIT: 3643
PROJECT NUMBER & PHASE: 11000200511
CONTRACT NO.: 11-2T1821

DISREGARD PRINTS BEARING EARLIER REVISION DATES

REVISION DATES

SHEET R2-7

FILE => 11000200511qb007.dgn

USERNAME => s12400 DATE PLOTTED => 12-SEP-2012 TIME PLOTTED => 16:21

REFERENCE: CALTRANS SOIL & ROCK LOGGING, CLASSIFICATION, AND PRESENTATION MANUAL (2010)

DIST	COUNTY	ROUTE	POST MILES TOTAL PROJECT	SHEET No.	TOTAL SHEETS
11	SD	805	4.7/5.6	345	650

Brian Gutierrez 06-12-12
REGISTERED CIVIL ENGINEER

06-25-12
PLANS APPROVAL DATE

REGISTERED PROFESSIONAL ENGINEER Brian Gutierrez No. C66258 Exp. 06-30-14 CIVIL STATE OF CALIFORNIA

The State of California or its officers or agents shall not be responsible for the accuracy or completeness of electronic copies of this plan sheet.

GROUP SYMBOLS AND NAMES

Graphic/Symbol	Group Names	Graphic/Symbol	Group Names
GW	Well-graded GRAVEL Well-graded GRAVEL with SAND	CL	Lean CLAY Lean CLAY with SAND Lean CLAY with GRAVEL SANDY lean CLAY SANDY lean CLAY with GRAVEL GRAVELLY lean CLAY GRAVELLY lean CLAY with SAND
GP	Poorly-graded GRAVEL Poorly-graded GRAVEL with SAND		
GW-GM	Well-graded GRAVEL with SILT Well-graded GRAVEL with SILT and SAND	CL-ML	SILTY CLAY SILTY CLAY with SAND SILTY CLAY with GRAVEL SANDY SILTY CLAY SANDY SILTY CLAY with GRAVEL GRAVELLY SILTY CLAY GRAVELLY SILTY CLAY with SAND
GW-GC	Well-graded GRAVEL with CLAY (or SILTY CLAY) Well-graded GRAVEL with CLAY and SAND (or SILTY CLAY and SAND)		
GP-GM	Poorly-graded GRAVEL with SILT Poorly-graded GRAVEL with SILT and SAND	ML	SILT SILT with SAND SILT with GRAVEL SANDY SILT SANDY SILT with GRAVEL GRAVELLY SILT GRAVELLY SILT with SAND
GP-GC	Poorly-graded GRAVEL with CLAY (or SILTY CLAY) Poorly-graded GRAVEL with CLAY and SAND (or SILTY CLAY and SAND)		
GM	SILTY GRAVEL SILTY GRAVEL with SAND	OL	ORGANIC lean CLAY ORGANIC lean CLAY with SAND ORGANIC lean CLAY with GRAVEL SANDY ORGANIC lean CLAY SANDY ORGANIC lean CLAY with GRAVEL GRAVELLY ORGANIC lean CLAY GRAVELLY ORGANIC lean CLAY with SAND
GC	CLAYEY GRAVEL CLAYEY GRAVEL with SAND		
GC-GM	SILTY, CLAYEY GRAVEL SILTY, CLAYEY GRAVEL with SAND	OL	ORGANIC SILT ORGANIC SILT with SAND ORGANIC SILT with GRAVEL SANDY ORGANIC SILT SANDY ORGANIC SILT with GRAVEL GRAVELLY ORGANIC SILT GRAVELLY ORGANIC SILT with SAND
SW	Well-graded SAND Well-graded SAND with GRAVEL		
SP	Poorly-graded SAND Poorly-graded SAND with GRAVEL	CH	Fat CLAY Fat CLAY with SAND Fat CLAY with GRAVEL SANDY fat CLAY SANDY fat CLAY with GRAVEL GRAVELLY fat CLAY GRAVELLY fat CLAY with SAND
SW-SM	Well-graded SAND with SILT Well-graded SAND with SILT and GRAVEL		
SW-SC	Well-graded SAND with CLAY (or SILTY CLAY) Well-graded SAND with CLAY and GRAVEL (or SILTY CLAY and GRAVEL)	MH	Elastic SILT Elastic SILT with SAND Elastic SILT with GRAVEL SANDY elastic SILT SANDY elastic SILT with GRAVEL GRAVELLY elastic SILT GRAVELLY elastic SILT with SAND
SP-SM	Poorly-graded SAND with SILT Poorly-graded SAND with SILT and GRAVEL		
SP-SC	Poorly-graded SAND with CLAY (or SILTY CLAY) Poorly-graded SAND with CLAY and GRAVEL (or SILTY CLAY and GRAVEL)	OH	ORGANIC fat CLAY ORGANIC fat CLAY with SAND ORGANIC fat CLAY with GRAVEL SANDY ORGANIC fat CLAY SANDY ORGANIC fat CLAY with GRAVEL GRAVELLY ORGANIC fat CLAY GRAVELLY ORGANIC fat CLAY with SAND
SM	SILTY SAND SILTY SAND with GRAVEL		
SC	CLAYEY SAND CLAYEY SAND with GRAVEL	OH	ORGANIC elastic SILT ORGANIC elastic SILT with SAND ORGANIC elastic SILT with GRAVEL SANDY ORGANIC elastic SILT SANDY ORGANIC elastic SILT with GRAVEL GRAVELLY ORGANIC elastic SILT GRAVELLY ORGANIC elastic SILT with SAND
SC-SM	SILTY, CLAYEY SAND SILTY, CLAYEY SAND with GRAVEL		
PT	PEAT	OL/OH	ORGANIC SOIL ORGANIC SOIL with SAND ORGANIC SOIL with GRAVEL SANDY ORGANIC SOIL SANDY ORGANIC SOIL with GRAVEL GRAVELLY ORGANIC SOIL GRAVELLY ORGANIC SOIL with SAND
	COBBLES COBBLES and BOULDERS BOULDERS		

FIELD AND LABORATORY TESTING

- (C) Consolidation (ASTM D 2435)
- (CL) Collapse Potential (ASTM D 5333)
- (CP) Compaction Curve (CTM 216)
- (CR) Corrosivity Testing (CTM 643, CTM 422, CTM 417)
- (CU) Consolidated Undrained Triaxial (ASTM D 4767)
- (DS) Direct Shear (ASTM D 3080)
- (EI) Expansion Index (ASTM D 4829)
- (M) Moisture Content (ASTM D 2216)
- (OC) Organic Content-% (ASTM D 2974)
- (P) Permeability (CTM 220)
- (PA) Particle Size Analysis (ASTM D 422)
- (PI) Plasticity Index (AASHTO T 90) Liquid Limit (AASHTO T 89)
- (PL) Point Load Index (ASTM D 5731)
- (PM) Pressure Meter
- (R) R-Value (CTM 301)
- (SE) Sand Equivalent (CTM 217)
- (SG) Specific Gravity (AASHTO T 100)
- (SL) Shrinkage Limit (ASTM D 427)
- (SW) Swell Potential (ASTM D 4546)
- (UC) Unconfined Compression-Soil (ASTM D 2166) Unconfined Compression-Rock (ASTM D 2938)
- (UU) Unconsolidated Undrained Triaxial (ASTM D 2850)
- (UW) Unit Weight (ASTM D 4767)

APPARENT DENSITY OF COHESIONLESS SOILS

Description	SPT N_{60} (Blows / 12 in.)
Very Loose	0 - 5
Loose	5 - 10
Medium Dense	10 - 30
Dense	30 - 50
Very Dense	Greater than 50

MOISTURE

Description	Criteria
Dry	No discernable moisture
Moist	Moisture present, but no free water
Wet	Visible free water

PERCENT OR PROPORTION OF SOILS

Description	Criteria
Trace	Particles are present but estimated to be less than 5%
Few	5% - 10%
Little	15% - 25%
Some	30% - 45%
Mostly	50% - 100%

PARTICLE SIZE

Description		Size (in.)
Boulder		Greater than 12
Cobble		3 - 12
Gravel	Coarse	3/4 - 3
	Fine	1/5 - 3/4
Sand	Coarse	1/16 - 1/5
	Medium	1/64 - 1/16
	Fine	1/300 - 1/64
Silt and Clay		Less than 1/300

ENGINEERING SERVICES

GEOTECHNICAL SERVICES
PREPARED BY: I.G-Remmen

STATE OF CALIFORNIA
DEPARTMENT OF TRANSPORTATION

DIVISION OF ENGINEERING SERVICES
STRUCTURE DESIGN
DESIGN BRANCH X

BRIDGE NO.
POST MILE 5.0

RETAINING WALL No. 61L
LOG OF TEST BORINGS 3 OF 3

GS LOTB SOIL LEGEND

ORIGINAL SCALE IN INCHES FOR REDUCED PLANS 0 1 2 3

UNIT: 3643
PROJECT NUMBER & PHASE: 11000200511
CONTRACT NO.: 11-2T1821

DISREGARD PRINTS BEARING EARLIER REVISION DATES

REVISION DATES

SHEET R2-8

FILE => 1100020051qb008.dgn

USERNAME => s127400 DATE PLOTTED => 12-SEP-2012 TIME PLOTTED => 16:22

Dist	COUNTY	ROUTE	POST MILES TOTAL PROJECT	SHEET No.	TOTAL SHEETS
11	SD	805	4.7/5.6	346	650

REGISTERED CIVIL ENGINEER 05-24-12 DATE

06-25-12
PLANS APPROVAL DATE

REGISTERED PROFESSIONAL ENGINEER DAVID LAYNE No. C74349 Exp. 06-30-13 CIVIL STATE OF CALIFORNIA

THE STATE OF CALIFORNIA OR ITS OFFICERS OR AGENTS SHALL NOT BE RESPONSIBLE FOR THE ACCURACY OR COMPLETENESS OF SCANNED COPIES OF THIS PLAN SHEET.

DOKKEN ENGINEERING
5675 RUFFIN Rd
SUITE 250
SAN DIEGO, CA 92123

SANDAG
401 B St
SUITE 800
SAN DIEGO, CA 92101

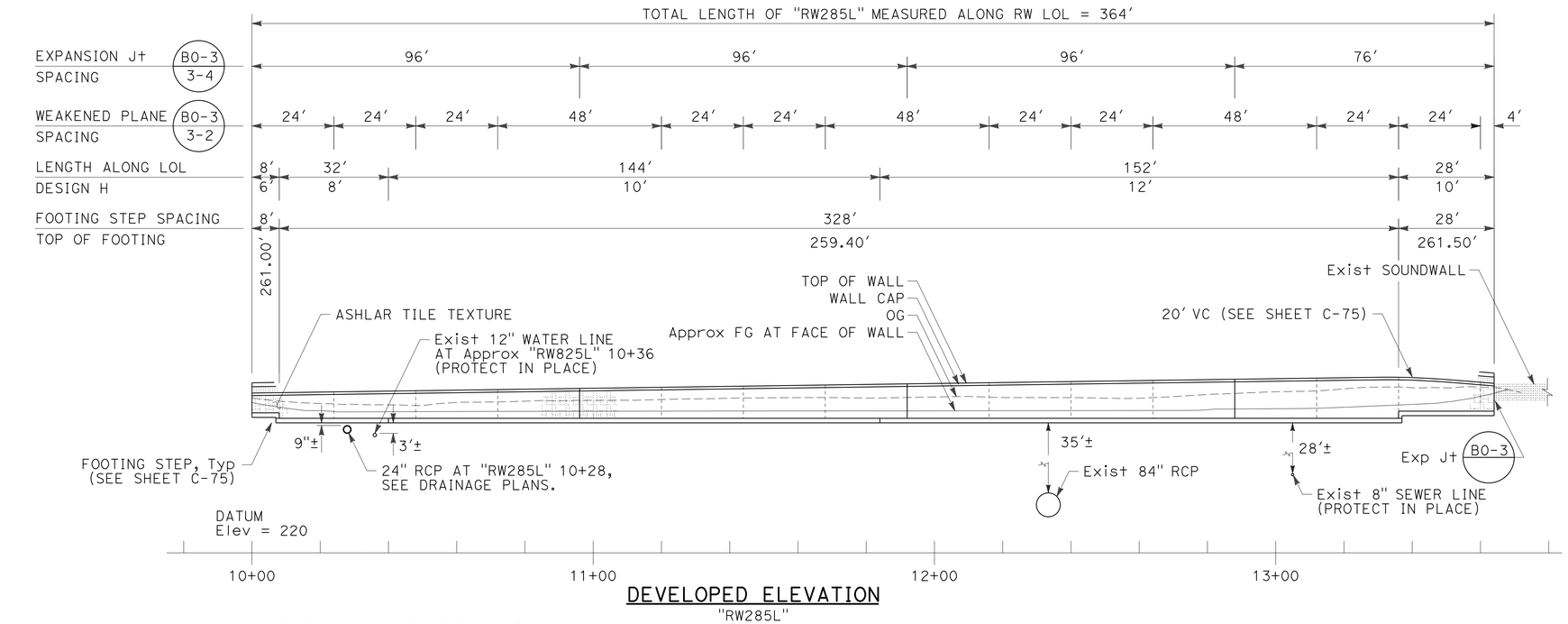

DEVELOPED ELEVATION

"RW285L"
SCALE: 1" = 20'

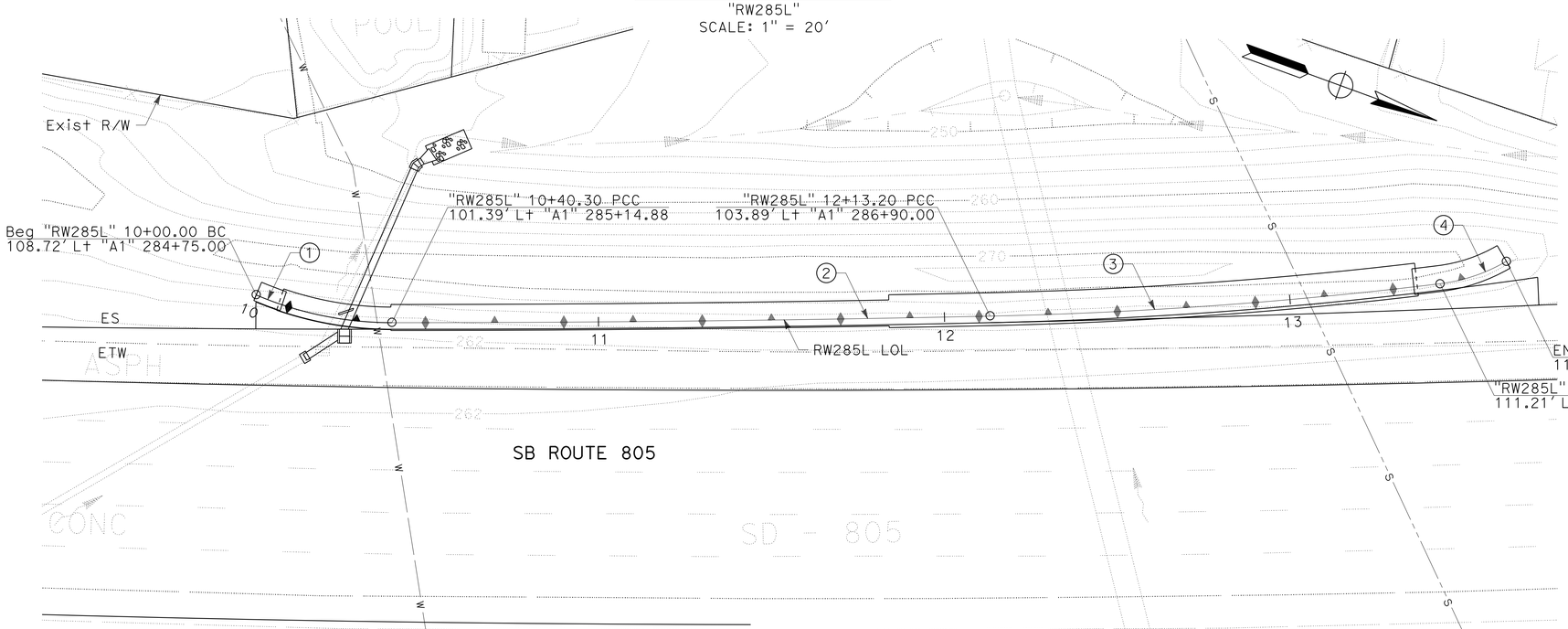

PLAN

SCALE: 1" = 20'

TOP OF WALL			
STATION	ELEVATION	STATION	ELEVATION
10+00.00	266.80	12+20.00	269.88
10+08.00	266.91	12+40.00	270.16
10+20.00	267.08	12+60.00	270.44
10+40.00	267.36	12+80.00	270.72
10+60.00	267.64	13+00.00	271.00
10+80.00	267.92	13+20.00	271.28
11+00.00	268.20	13+30.00 (BVC)	271.42
11+20.00	268.48	13+36.00	271.43
11+40.00	268.76	13+40.00	271.32
11+60.00	269.04	13+50.00 (EVC)	270.76
11+80.00	269.32	13+60.00	269.96
11+84.00	269.38	13+64.00	269.32
12+00.00	269.60		

CURVE DATA TABLE				
No.	R	Δ	T	L
1	100.10'	23°04'02"	20.43'	40.30'
2	7894.30'	01°15'18"	86.45'	172.90'
3	1305.61'	05°43'24"	65.26'	130.42'
4	50.00'	23°21'24"	10.33'	20.38'

NOTES:

1. FINISH GRADE ELEVATION AT FACE OF WALL CONTROLLED BY SB ROUTE-805 LEFT ES ELEVATIONS.
2. SEE UTILITY PLAN SHEETS FOR ADDITIONAL UTILITY INFORMATION.

LEGEND:

STANDARD PLAN SHEET No.

DETAIL No.

RW QUANTITIES ("RW285L")	
ITEM	TOTAL
STRUCTURE EXCAVATION (RETAINING WALL)	880 CY
STRUCTURE BACKFILL (RETAINING WALL)	780 CY
PERVIOUS BACKFILL MATERIAL (RETAINING WALL)	45 CY
STRUCTURAL CONCRETE (RETAINING WALL)	330 CY
BAR REINFORCING STEEL (RETAINING WALL)	37,600 LB
Conc BARRIER (TYPE 26 Mod)	368 LF
ARCHITECTURAL TREATMENT (LOUVER TEXTURE)	675 SQFT
ARCHITECTURAL TREATMENT (ASHLAR TILE TEXTURE)	1,665 SQFT
MINOR CONCRETE (GUTTER)	368 LF

RETAINING WALL PLAN
RW No. 285L

SCALE AS SHOWN

R3-1

APPROVED FOR RETAINING WALL WORK ONLY

STATE OF CALIFORNIA - DEPARTMENT OF TRANSPORTATION
Caltrans

CONSULTANT FUNCTIONAL SUPERVISOR: GERARD LUMABAS
CALCULATED-DESIGNED BY: DAVID LAYNE
CHECKED BY: PAUL KOSINSKI
REVISED BY
DATE REVISED

LAST REVISION 06-13-12
DATE PLOTTED => 12-SEP-2012
TIME PLOTTED => 6:22

Dist	COUNTY	ROUTE	POST MILES TOTAL PROJECT	SHEET No.	TOTAL SHEETS
11	SD	805	4.7/5.6	347	650

REGISTERED CIVIL ENGINEER 05-24-12 DATE

06-25-12
PLANS APPROVAL DATE

REGISTERED PROFESSIONAL ENGINEER DAVID LAYNE No. C74349 Exp. 06-30-13 CIVIL STATE OF CALIFORNIA

THE STATE OF CALIFORNIA OR ITS OFFICERS OR AGENTS SHALL NOT BE RESPONSIBLE FOR THE ACCURACY OR COMPLETENESS OF SCANNED COPIES OF THIS PLAN SHEET.

DOKKEN ENGINEERING
5675 RUFFIN Rd
SUITE 250
SAN DIEGO, CA 92123

SANDAG
401 B St
SUITE 800
SAN DIEGO, CA 92101

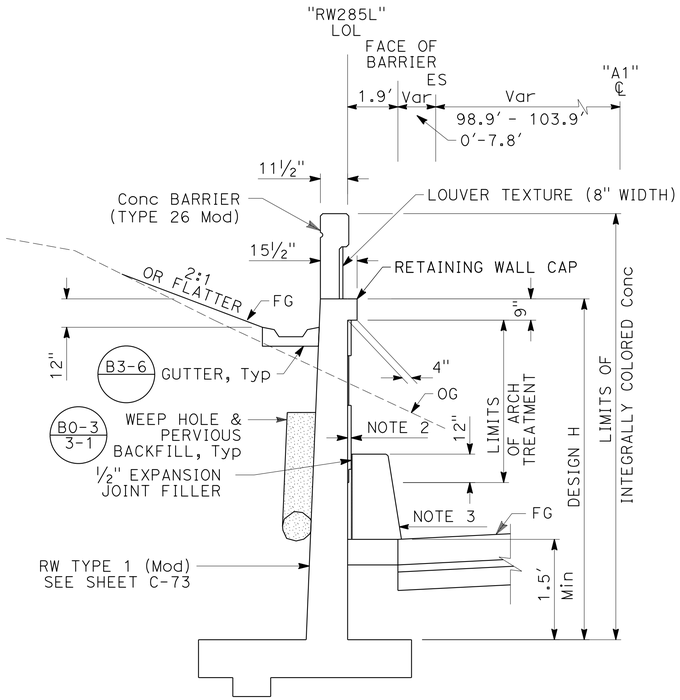

TYPICAL SECTION

B3-6

NO SCALE

"RW285L" 10+00.00 TO 13+43.62

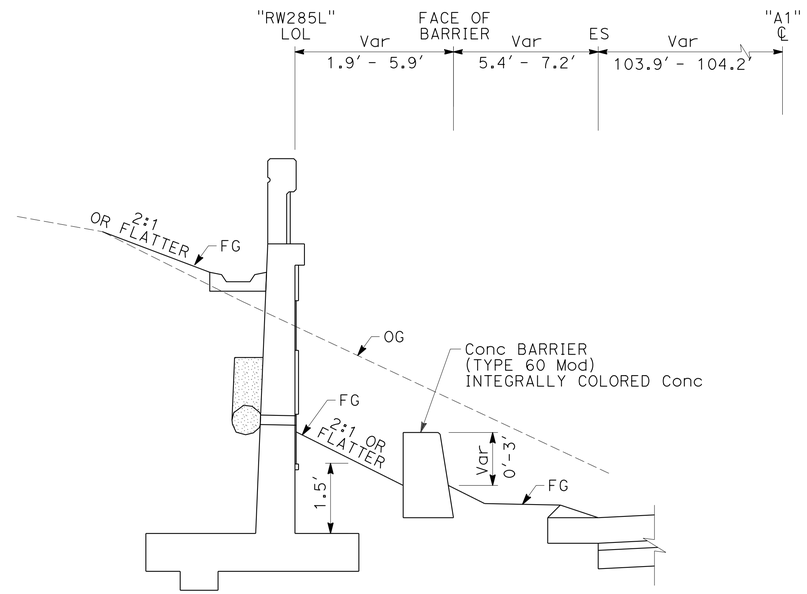

SEE TYPICAL SECTION "RW285L" 10+00.00 TO 13+42.34
FOR DETAILS NOT SHOWN

TYPICAL SECTION

B3-6

NO SCALE

"RW285L" 13+43.62 TO 13+64.00

NOTES:

1. FG Elev AT FACE OF WALL CONTROLLED BY SB ROUTE-805 LEFT ES Elev.
2. ARCHITECTURAL TREATMENT (ASHLAR TILE TEXTURE).
3. Conc BARRIER (TYPE 60 Mod) SEE CONSTRUCTION DETAILS SHEETS
4. RW STEM, RW CAP, AND CONCRETE BARRIERS (TYPE 60 Mod & TYPE 26 Mod) SHALL BE INTEGRALLY COLORED CONCRETE.
5. SEE ADDITIONAL RETAINING WALL DETAILS ON SHEET C-75

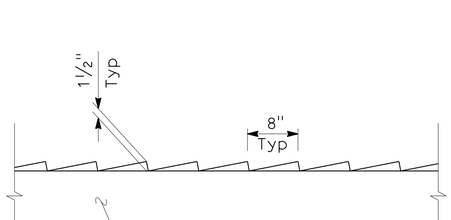

LOUVER TEXTURE DETAIL

SCALE: 1" = 1′

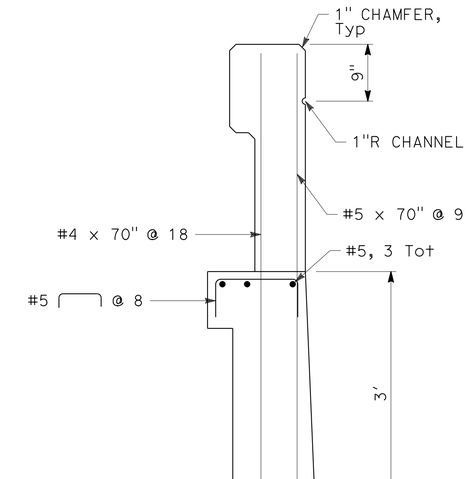

SEE STANDARD PLAN B11-54 FOR DETAILS NOT SHOWN.

Conc BARRIER (TYPE 26 Mod)

SCALE: 1" = 1′

RETAINING WALL DETAILS
RW No. 285L

R3-2

SCALE AS SHOWN

APPROVED FOR RETAINING WALL WORK ONLY

STATE OF CALIFORNIA - DEPARTMENT OF TRANSPORTATION

Caltrans

CONSULTANT FUNCTIONAL SUPERVISOR: GERARD LUMABAS

CALCULATED-DESIGNED BY: DAVID LAYNE

CHECKED BY: PAUL KOSINSKI

REVISED BY

DATE REVISED

LAST REVISION 06-13-12

DATE PLOTTED => 12-SEP-2012
TIME PLOTTED => 16:22

Dist	COUNTY	ROUTE	POST MILES TOTAL PROJECT	SHEET No.	TOTAL SHEETS
11	SD	805	4.7/5.6	348	650

David Layne 05-24-12
REGISTERED CIVIL ENGINEER DATE

06-25-12
PLANS APPROVAL DATE

REGISTERED PROFESSIONAL ENGINEER
DAVID LAYNE
No. C74349
Exp. 06-30-13
CIVIL
STATE OF CALIFORNIA

THE STATE OF CALIFORNIA OR ITS OFFICERS OR AGENTS SHALL NOT BE RESPONSIBLE FOR THE ACCURACY OR COMPLETENESS OF SCANNED COPIES OF THIS PLAN SHEET.

DOKKEN ENGINEERING
5675 RUFFIN Rd
SUITE 250
SAN DIEGO, CA 92123

SANDAG
401 B St
SUITE 800
SAN DIEGO, CA 92101

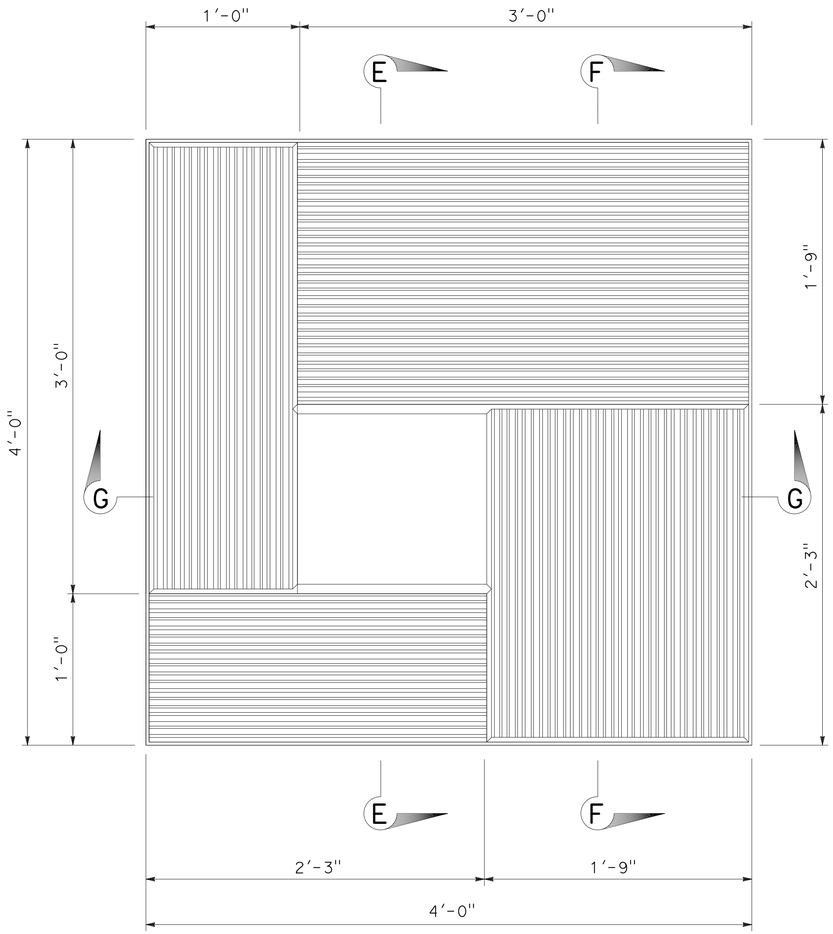

ASHLAR TILE TEXTURE DETAIL
SCALE: 2"=1'

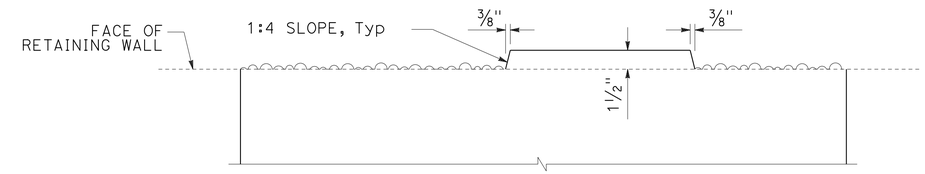

SECTION E-E
SCALE: 2"=1'

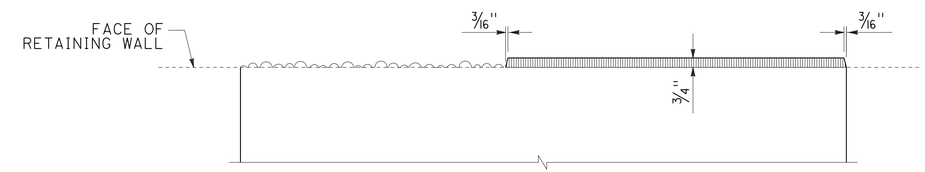

SECTION F-F
SCALE: 2"=1'

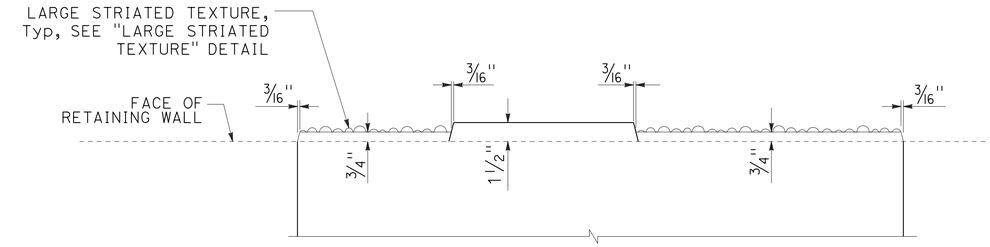

SECTION G-G
SCALE: 2"=1'

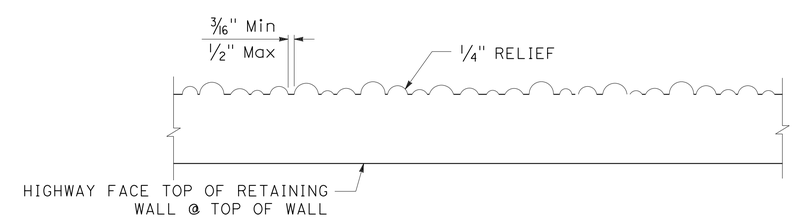

LARGE STRIATED TEXTURE DETAIL
SCALE: 4"=1'

RETAINING WALL DETAILS
RW No. 285L

R3-3

SCALE AS SHOWN

APPROVED FOR RETAINING WALL WORK ONLY

STATE OF CALIFORNIA - DEPARTMENT OF TRANSPORTATION
Caltrans

CONSULTANT FUNCTIONAL SUPERVISOR: GERARD LUMABAS
CALCULATED-DESIGNED BY: DAVID LAYNE
CHECKED BY: PAUL KOSINSKI
REVISED BY
DATE REVISED

LAST REVISION 06-13-12
DATE PLOTTED => 12-SEP-2012
TIME PLOTTED => 16:22

DIST	COUNTY	ROUTE	POST MILES TOTAL PROJECT	SHEET No.	TOTAL SHEETS
11	SD	805	4.7/5.6	349	650

06-12-12
REGISTERED CIVIL ENGINEER

06-25-12
PLANS APPROVAL DATE

The State of California or its officers or agents shall not be responsible for the accuracy or completeness of electronic copies of this plan sheet.

REGISTERED PROFESSIONAL ENGINEER
Brian Gutierrez
No. C66258
Exp. 06-30-14
CIVIL
STATE OF CALIFORNIA

This LOTB sheet was prepared in accordance with the Caltrans Soil & Rock Logging, Classification, & Presentation Manual (2007 Edition).

BENCH MARK

BM 805-5.00, Brass disk in sidewalk on north side of E. Palomar St. OC bridge, at Station 298+46.0, Right 60 feet of "DAR" Line/"A1" Line.
Elevation: 300.93 feet
NAVD 1988 (Vertical)
NAD83 (Horizontal)

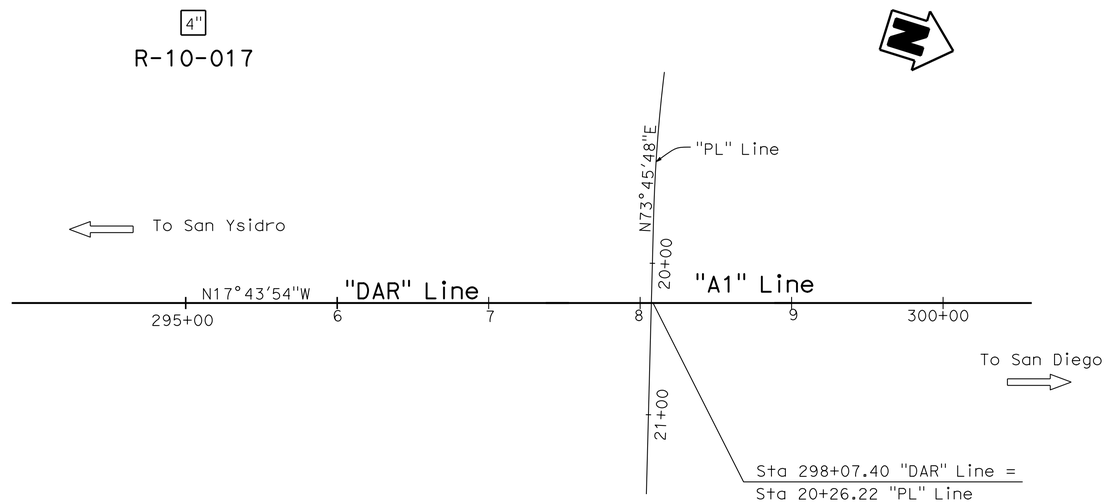

PLAN

1" = 50'

Notes:

1. Ground water was not encountered during the 2010 subsurface investigation.
2. RQD designated with "NA" (not applicable) indicates that the rock encountered within the drill interval was not sound rock, therefore RQD was not calculated.
3. Plan sheets provided by Design, show that "A1" Line = "DAR" Line.

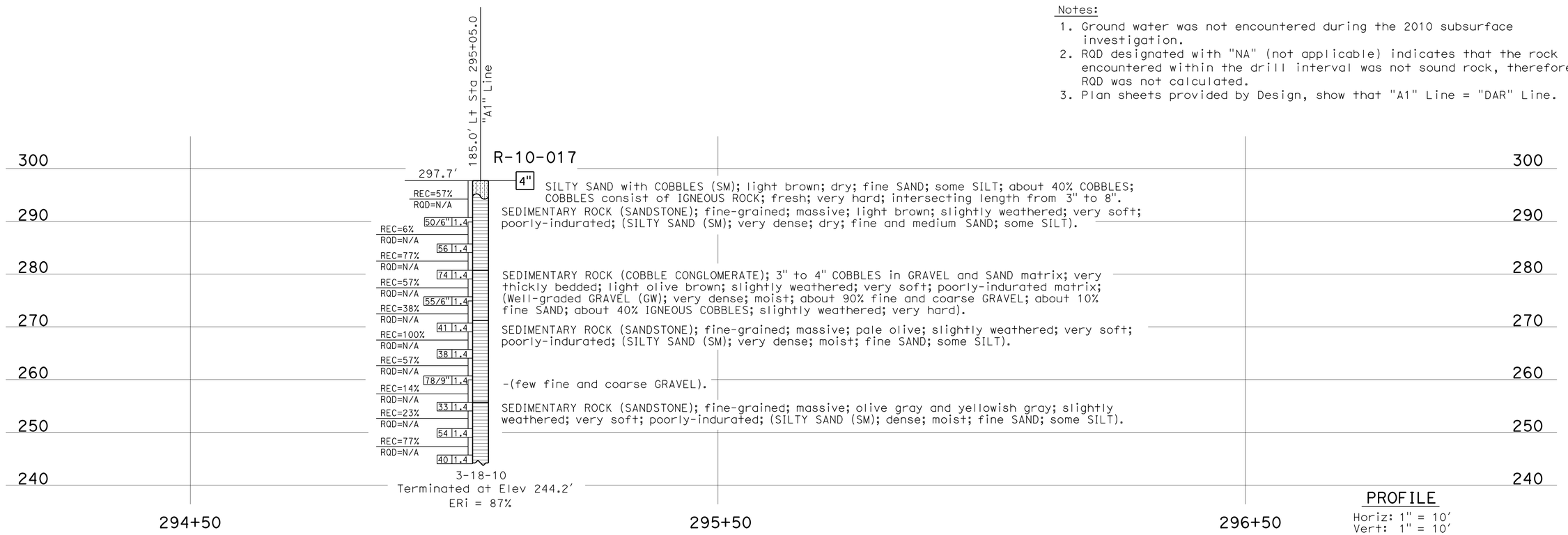

PROFILE

Horiz: 1" = 10'
Vert: 1" = 10'

ENGINEERING SERVICES	GEOTECHNICAL SERVICES	STATE OF CALIFORNIA DEPARTMENT OF TRANSPORTATION	DIVISION OF ENGINEERING SERVICES STRUCTURE DESIGN DESIGN BRANCH X	BRIDGE NO. / POST MILE 5.07	RETAINING WALL RW285L LOG OF TEST BORINGS 1 OF 4
FUNCTIONAL SUPERVISOR NAME: S. Wei	DRAWN BY: F. Nguyen 02/11 CHECKED BY: M. Wilson	FIELD INVESTIGATION BY: TM. Liao			

OGS CIVIL LOG OF TEST BORINGS SHEET

ORIGINAL SCALE IN INCHES FOR REDUCED PLANS 0 1 2 3

UNIT: 3643
PROJECT NUMBER & PHASE: 11000200511
CONTRACT NO.: 11-2T1821

DISREGARD PRINTS BEARING EARLIER REVISION DATES

REVISION DATES: 12-19-11

SHEET R3-4

FILE => 11000200511qc004.dgn

USERNAME => s127400 DATE PLOTTED => 12-SEP-2012 TIME PLOTTED => 16:22

REFERENCE: CALTRANS SOIL & ROCK LOGGING, CLASSIFICATION, AND PRESENTATION MANUAL (2010)

DIST	COUNTY	ROUTE	POST MILES TOTAL PROJECT	SHEET No.	TOTAL SHEETS
11	SD	805	4.7/5.6	350	650

06-12-12
REGISTERED CIVIL ENGINEER

06-25-12
PLANS APPROVAL DATE

REGISTERED PROFESSIONAL ENGINEER
Brian Gutierrez
No. C66258
Exp. 06-30-14
CIVIL
STATE OF CALIFORNIA

The State of California or its officers or agents shall not be responsible for the accuracy or completeness of electronic copies of this plan sheet.

This LOTB sheet was prepared in accordance with the Caltrans Soil & Rock Logging, Classification, & Presentation Manual (2007 Edition).

CEMENTATION

Description	Criteria
Weak	Crumbles or breaks with handling or little finger pressure.
Moderate	Crumbles or breaks with considerable finger pressure.
Strong	Will not crumble or break with finger pressure.

BOREHOLE IDENTIFICATION

Symbol	Hole Type	Description
Size	A	Auger Boring (hollow or solid stem bucket)
Size	R RW RC P	Rotary drilled boring (conventional) Rotary drilled with self-casing wire-line Rotary core with continuously-sampled, self-casing wire-line Rotary percussion boring (air)
Size	R	Rotary drilled diamond core
Size	HD HA	Hand driven (1-inch soil tube) Hand Auger
●	D	Dynamic Cone Penetration Boring
▲	CPT	Cone Penetration Test (ASTM D 5778)
⬚	O	Other (note on LOTB)

Note: Size in inches.

CONSISTENCY OF COHESIVE SOILS

Description	Shear Strength (tsf)	Pocket Penetrometer Measurement, PP, (tsf)	Torvane Measurement, TV, (tsf)	Vane Shear Measurement, VS, (tsf)
Very Soft	Less than 0.12	Less than 0.25	Less than 0.12	Less than 0.12
Soft	0.12 - 0.25	0.25 - 0.5	0.12 - 0.25	0.12 - 0.25
Medium Stiff	0.25 - 0.5	0.5 - 1	0.25 - 0.5	0.25 - 0.5
Stiff	0.5 - 1	1 - 2	0.5 - 1	0.5 - 1
Very Stiff	1 - 2	2 - 4	1 - 2	1 - 2
Hard	Greater than 2	Greater than 4	Greater than 2	Greater than 2

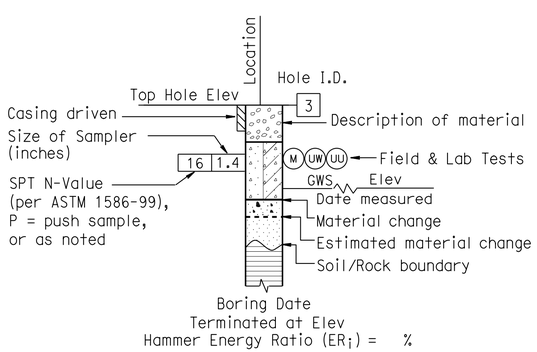

ROTARY BORING

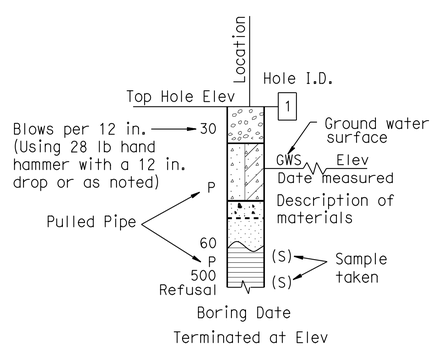

HAND BORING

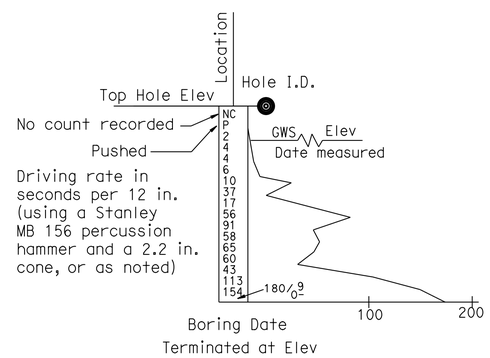

DYNAMIC CONE PENETRATION BORING

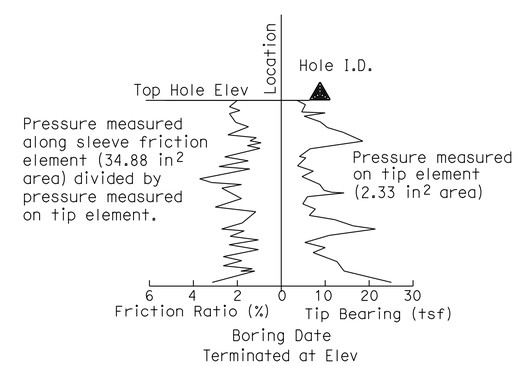

CONE PENETRATION TEST (CPT) BORING

ENGINEERING SERVICES	GEOTECHNICAL SERVICES	STATE OF CALIFORNIA DEPARTMENT OF TRANSPORTATION	DIVISION OF ENGINEERING SERVICES STRUCTURE DESIGN DESIGN BRANCH X	BRIDGE NO. / POST MILE 5.07	RETAINING WALL 285L LOG OF TEST BORINGS 2 OF 4
	PREPARED BY: I.G-Remmen				

GS LOTB SOIL LEGEND

ORIGINAL SCALE IN INCHES FOR REDUCED PLANS 0 1 2 3

UNIT: 3643
PROJECT NUMBER & PHASE: 11000200511
CONTRACT NO.: 11-2T1821

DISREGARD PRINTS BEARING EARLIER REVISION DATES

REVISION DATES: 12-19-11

SHEET R3-5

FILE => 11000200051qc005.dgn

USERNAME => s12400 DATE PLOTTED => 12-SEP-2012 TIME PLOTTED => 16:22

REFERENCE: CALTRANS SOIL & ROCK LOGGING, CLASSIFICATION, AND PRESENTATION MANUAL (2010)

DIST	COUNTY	ROUTE	POST MILES TOTAL PROJECT	SHEET No.	TOTAL SHEETS
11	SD	805	4.7/5.6	351	650

REGISTERED CIVIL ENGINEER 06-12-12

06-25-12
PLANS APPROVAL DATE

The State of California or its officers or agents shall not be responsible for the accuracy or completeness of electronic copies of this plan sheet.

REGISTERED PROFESSIONAL ENGINEER Brian Gutierrez No. C66258 Exp. 06-30-14 CIVIL STATE OF CALIFORNIA

This LOTB sheet was prepared in accordance with the Caltrans Soil & Rock Logging, Classification, & Presentation Manual (2007 Edition).

GROUP SYMBOLS AND NAMES

Graphic/Symbol	Group Names	Graphic/Symbol	Group Names
GW	Well-graded GRAVEL Well-graded GRAVEL with SAND	CL	Lean CLAY Lean CLAY with SAND Lean CLAY with GRAVEL SANDY lean CLAY SANDY lean CLAY with GRAVEL GRAVELLY lean CLAY GRAVELLY lean CLAY with SAND
GP	Poorly-graded GRAVEL Poorly-graded GRAVEL with SAND		
GW-GM	Well-graded GRAVEL with SILT Well-graded GRAVEL with SILT and SAND	CL-ML	SILTY CLAY SILTY CLAY with SAND SILTY CLAY with GRAVEL SANDY SILTY CLAY SANDY SILTY CLAY with GRAVEL GRAVELLY SILTY CLAY GRAVELLY SILTY CLAY with SAND
GW-GC	Well-graded GRAVEL with CLAY (or SILTY CLAY) Well-graded GRAVEL with CLAY and SAND (or SILTY CLAY and SAND)		
GP-GM	Poorly-graded GRAVEL with SILT Poorly-graded GRAVEL with SILT and SAND	ML	SILT SILT with SAND SILT with GRAVEL SANDY SILT SANDY SILT with GRAVEL GRAVELLY SILT GRAVELLY SILT with SAND
GP-GC	Poorly-graded GRAVEL with CLAY (or SILTY CLAY) Poorly-graded GRAVEL with CLAY and SAND (or SILTY CLAY and SAND)		
GM	SILTY GRAVEL SILTY GRAVEL with SAND	OL	ORGANIC lean CLAY ORGANIC lean CLAY with SAND ORGANIC lean CLAY with GRAVEL SANDY ORGANIC lean CLAY SANDY ORGANIC lean CLAY with GRAVEL GRAVELLY ORGANIC lean CLAY GRAVELLY ORGANIC lean CLAY with SAND
GC	CLAYEY GRAVEL CLAYEY GRAVEL with SAND		
GC-GM	SILTY, CLAYEY GRAVEL SILTY, CLAYEY GRAVEL with SAND	OL	ORGANIC SILT ORGANIC SILT with SAND ORGANIC SILT with GRAVEL SANDY ORGANIC SILT SANDY ORGANIC SILT with GRAVEL GRAVELLY ORGANIC SILT GRAVELLY ORGANIC SILT with SAND
SW	Well-graded SAND Well-graded SAND with GRAVEL		
SP	Poorly-graded SAND Poorly-graded SAND with GRAVEL	CH	Fat CLAY Fat CLAY with SAND Fat CLAY with GRAVEL SANDY fat CLAY SANDY fat CLAY with GRAVEL GRAVELLY fat CLAY GRAVELLY fat CLAY with SAND
SW-SM	Well-graded SAND with SILT Well-graded SAND with SILT and GRAVEL		
SW-SC	Well-graded SAND with CLAY (or SILTY CLAY) Well-graded SAND with CLAY and GRAVEL (or SILTY CLAY and GRAVEL)	MH	Elastic SILT Elastic SILT with SAND Elastic SILT with GRAVEL SANDY elastic SILT SANDY elastic SILT with GRAVEL GRAVELLY elastic SILT GRAVELLY elastic SILT with SAND
SP-SM	Poorly-graded SAND with SILT Poorly-graded SAND with SILT and GRAVEL		
SP-SC	Poorly-graded SAND with CLAY (or SILTY CLAY) Poorly-graded SAND with CLAY and GRAVEL (or SILTY CLAY and GRAVEL)	OH	ORGANIC fat CLAY ORGANIC fat CLAY with SAND ORGANIC fat CLAY with GRAVEL SANDY ORGANIC fat CLAY SANDY ORGANIC fat CLAY with GRAVEL GRAVELLY ORGANIC fat CLAY GRAVELLY ORGANIC fat CLAY with SAND
SM	SILTY SAND SILTY SAND with GRAVEL		
SC	CLAYEY SAND CLAYEY SAND with GRAVEL	OH	ORGANIC elastic SILT ORGANIC elastic SILT with SAND ORGANIC elastic SILT with GRAVEL SANDY ORGANIC elastic SILT SANDY ORGANIC elastic SILT with GRAVEL GRAVELLY ORGANIC elastic SILT GRAVELLY ORGANIC elastic SILT with SAND
SC-SM	SILTY, CLAYEY SAND SILTY, CLAYEY SAND with GRAVEL		
PT	PEAT	OL/OH	ORGANIC SOIL ORGANIC SOIL with SAND ORGANIC SOIL with GRAVEL SANDY ORGANIC SOIL SANDY ORGANIC SOIL with GRAVEL GRAVELLY ORGANIC SOIL GRAVELLY ORGANIC SOIL with SAND
	COBBLES COBBLES and BOULDERS BOULDERS		

FIELD AND LABORATORY TESTING

- (C) Consolidation (ASTM D 2435)
- (CL) Collapse Potential (ASTM D 5333)
- (CP) Compaction Curve (CTM 216)
- (CR) Corrosivity Testing (CTM 643, CTM 422, CTM 417)
- (CU) Consolidated Undrained Triaxial (ASTM D 4767)
- (DS) Direct Shear (ASTM D 3080)
- (EI) Expansion Index (ASTM D 4829)
- (M) Moisture Content (ASTM D 2216)
- (OC) Organic Content-% (ASTM D 2974)
- (P) Permeability (CTM 220)
- (PA) Particle Size Analysis (ASTM D 422)
- (PI) Plasticity Index (AASHTO T 90) Liquid Limit (AASHTO T 89)
- (PL) Point Load Index (ASTM D 5731)
- (PM) Pressure Meter
- (R) R-Value (CTM 301)
- (SE) Sand Equivalent (CTM 217)
- (SG) Specific Gravity (AASHTO T 100)
- (SL) Shrinkage Limit (ASTM D 427)
- (SW) Swell Potential (ASTM D 4546)
- (UC) Unconfined Compression-Soil (ASTM D 2166) Unconfined Compression-Rock (ASTM D 2938)
- (UU) Unconsolidated Undrained Triaxial (ASTM D 2850)
- (UW) Unit Weight (ASTM D 4767)

APPARENT DENSITY OF COHESIONLESS SOILS

Description	SPT N_{60} (Blows / 12 in.)
Very Loose	0 - 5
Loose	5 - 10
Medium Dense	10 - 30
Dense	30 - 50
Very Dense	Greater than 50

MOISTURE

Description	Criteria
Dry	No discernable moisture
Moist	Moisture present, but no free water
Wet	Visible free water

PERCENT OR PROPORTION OF SOILS

Description	Criteria
Trace	Particles are present but estimated to be less than 5%
Few	5% - 10%
Little	15% - 25%
Some	30% - 45%
Mostly	50% - 100%

PARTICLE SIZE

Description		Size (in.)
Boulder		Greater than 12
Cobble		3 - 12
Gravel	Coarse	3/4 - 3
	Fine	1/5 - 3/4
Sand	Coarse	1/16 - 1/5
	Medium	1/64 - 1/16
	Fine	1/300 - 1/64
Silt and Clay		Less than 1/300

ENGINEERING SERVICES

GEOTECHNICAL SERVICES

PREPARED BY: I.G-Remmen

STATE OF CALIFORNIA DEPARTMENT OF TRANSPORTATION

DIVISION OF ENGINEERING SERVICES STRUCTURE DESIGN DESIGN BRANCH X

BRIDGE NO.

POST MILE 5.07

RETAINING WALL 285L

LOG OF TEST BORINGS 3 OF 4

GS LOTB SOIL LEGEND

ORIGINAL SCALE IN INCHES FOR REDUCED PLANS 0 1 2 3

UNIT: 3643
PROJECT NUMBER & PHASE: 11000200511
CONTRACT NO.: 11-2T1821

DISREGARD PRINTS BEARING EARLIER REVISION DATES

REVISION DATES 12-19-11

SHEET R3-6

FILE => 1100020051gc006.dgn

USERNAME => s127400 DATE PLOTTED => 12-SEP-2012 TIME PLOTTED => 16:22

REFERENCE: CALTRANS SOIL & ROCK LOGGING, CLASSIFICATION, AND PRESENTATION MANUAL (2010)

DIST	COUNTY	ROUTE	POST MILES TOTAL PROJECT	SHEET No.	TOTAL SHEETS
11	SD	805	4.7/5.6	352	650

Brian Gutierrez 06-12-12
REGISTERED CIVIL ENGINEER

06-25-12
PLANS APPROVAL DATE

REGISTERED PROFESSIONAL ENGINEER Brian Gutierrez No. C66258 Exp. 06-30-14 CIVIL STATE OF CALIFORNIA

The State of California or its officers or agents shall not be responsible for the accuracy or completeness of electronic copies of this plan sheet.

This LOTB sheet was prepared in accordance with the Caltrans Soil & Rock Logging, Classification, & Presentation Manual (2007 Edition).

PERCENT CORE RECOVERY (REC) & ROCK QUALITY DESIGNATION (RQD)

$$REC = \frac{\sum \text{Length of the recovered core pieces (in.)}}{\text{Total length of core run (in.)}} \times 100\%$$

$$RQD = \frac{\sum \text{Length of intact core pieces} \geq 4 \text{ in.}}{\text{Total length of core run (in.)}} \times 100\%$$

RQD* Indicates soundness criteria not met.

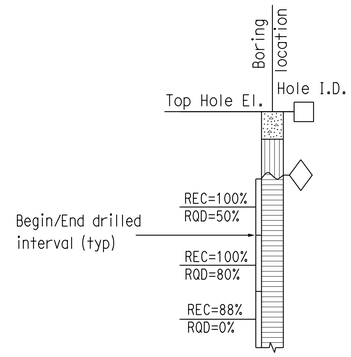

BEDDING SPACING

Description	Thickness / Spacing
Massive	Greater than 10 ft
Very Thickly Bedded	3 ft - 10 ft
Thickly Bedded	1 ft - 3 ft
Moderately Bedded	4 in. - 1 ft
Thinly Bedded	1 in. - 4 in.
Very Thinly Bedded	1/4 in. - 1 in.
Laminated	Less than 1/4 in.

LEGEND OF ROCK MATERIALS

- IGNEOUS ROCK
- SEDIMENTARY ROCK
- METAMORPHIC ROCK

ROCK HARDNESS

Description	Criteria
Extremely Hard	Cannot be scratched with a pocketknife or sharp pick. Can only be chipped with repeated heavy hammer blows.
Very Hard	Cannot be scratched with a pocketknife or sharp pick. Breaks with repeated heavy hammer blows.
Hard	Can be scratched with a pocketknife or sharp pick with difficulty (heavy pressure). Breaks with heavy hammer blows.
Moderately Hard	Can be scratched with pocketknife or sharp pick with light or moderate pressure. Breaks with moderate hammer blows.
Moderately Soft	Can be grooved 1/16 in. deep with a pocketknife or sharp pick with moderate or heavy pressure. Breaks with light hammer blow or heavy manual pressure.
Soft	Can be grooved or gouged easily by a pocketknife or sharp pick with light pressure, can be scratched with fingernail. Breaks with light to moderate manual pressure.
Very Soft	Can be readily indented, grooved or gouged with fingernail, or carved with a pocketknife. Breaks with light manual pressure.

FRACTURE DENSITY

Description	Observed Fracture Density
Unfractured	No fractures.
Very Slightly Fractured	Core lengths greater than 3 ft.
Slightly Fractured	Core lengths mostly from 1 to 3 ft.
Moderately Fractured	Core lengths mostly from 4 in. to 1 ft.
Intensely Fractured	Core lengths mostly from 1 to 4 in.
Very Intensely Fractured	Mostly chips and fragments.

WEATHERING DESCRIPTORS FOR INTACT ROCK

Description	Diagnostic Features					General Characteristics
	Chemical Weathering-Discoloration and/or Oxidation		Mechanical Weathering-Grain Boundary Conditions (Disaggregation) Primarily for Granitics and Some Coarse-Grained Sediments	Texture and Leaching		
	Body of Rock	Fracture Surfaces		Texture	Leaching	
Fresh	No discoloration, not oxidized.	No discoloration or oxidation.	No separation, intact (tight).	No change	No leaching	Hammer rings when crystalline rocks are struck.
Slightly Weathered	Discoloration or oxidation is limited to surface of, or short distance from, fractures; some feldspar crystals are dull.	Minor to complete discoloration or oxidation of most surfaces.	No visible separation, intact (tight).	Preserved	Minor leaching of some soluble minerals.	Hammer rings when crystalline rocks are struck. Body of rock not weakened.
Moderately Weathered	Discoloration or oxidation extends from fractures usually throughout; Fe-Mg minerals are "rusty," feldspar crystals are "cloudy."	All fracture surfaces are discolored or oxidized.	Partial separation of boundaries visible.	Generally preserved	Soluble minerals may be mostly leached.	Hammer does not ring when rock is struck. Body of rock is slightly weakened.
Intensely Weathered	Discoloration or oxidation throughout; all feldspars and Fe-Mg minerals are altered to clay to some extent; or chemical alteration produces in-situ disaggregation, see grain boundary conditions.	All fracture surfaces are discolored or oxidized, surfaces friable.	Partial separation, rock is friable; in semiarid conditions granitics are disaggregated.	Texture altered by chemical disintegration (hydration, argillation).	Leaching of soluble minerals may be complete.	Dull sound when struck with hammer, usually can be broken with moderate to heavy manual pressure or by light hammer blow without reference to planes of weakness such as incipient or hairline fractures, or veinlets. Rock is significantly weakened.
Decomposed	Discolored or oxidized throughout, but resistant minerals such as quartz may be unaltered; all feldspars and Fe-Mg minerals are completely altered to clay.		Complete separation of grain boundaries (disaggregated).	Resembles a soil, partial or complete remnant rock structure may be preserved; leaching of soluble minerals usually complete.		Can be granulated by hand. Resistant minerals such as quartz may be present as "stringers" or "dikes."

ENGINEERING SERVICES

GEOTECHNICAL SERVICES
PREPARED BY: I.G-Remmen

STATE OF CALIFORNIA
DEPARTMENT OF TRANSPORTATION

DIVISION OF ENGINEERING SERVICES
STRUCTURE DESIGN
DESIGN BRANCH X

BRIDGE NO.
POST MILE 5.07

RETAINING WALL 285L
LOG OF TEST BORINGS 4 OF 4

GS LOTB SOIL LEGEND

ORIGINAL SCALE IN INCHES FOR REDUCED PLANS 0 1 2 3

UNIT: 3643
PROJECT NUMBER & PHASE: 11000200511
CONTRACT NO.: 11-2T1821

DISREGARD PRINTS BEARING EARLIER REVISION DATES

REVISION DATES 12-19-11

SHEET R3-7

FILE => 1100020051gc007.dgn

USERNAME => s127400 DATE PLOTTED => 12-SEP-2012 TIME PLOTTED => 16:22

Dist	COUNTY	ROUTE	POST MILES TOTAL PROJECT	SHEET No.	TOTAL SHEETS
11	SD	805	4.7/5.6	353	650

David Layne 05-24-12
REGISTERED CIVIL ENGINEER DATE

06-25-12
PLANS APPROVAL DATE

REGISTERED PROFESSIONAL ENGINEER DAVID LAYNE No. C74349 Exp. 06-30-13 CIVIL STATE OF CALIFORNIA

THE STATE OF CALIFORNIA OR ITS OFFICERS OR AGENTS SHALL NOT BE RESPONSIBLE FOR THE ACCURACY OR COMPLETENESS OF SCANNED COPIES OF THIS PLAN SHEET.

DOKKEN ENGINEERING
5675 RUFFIN Rd
SUITE 250
SAN DIEGO, CA 92123

SANDAG
401 B St
SUITE 800
SAN DIEGO, CA 92101

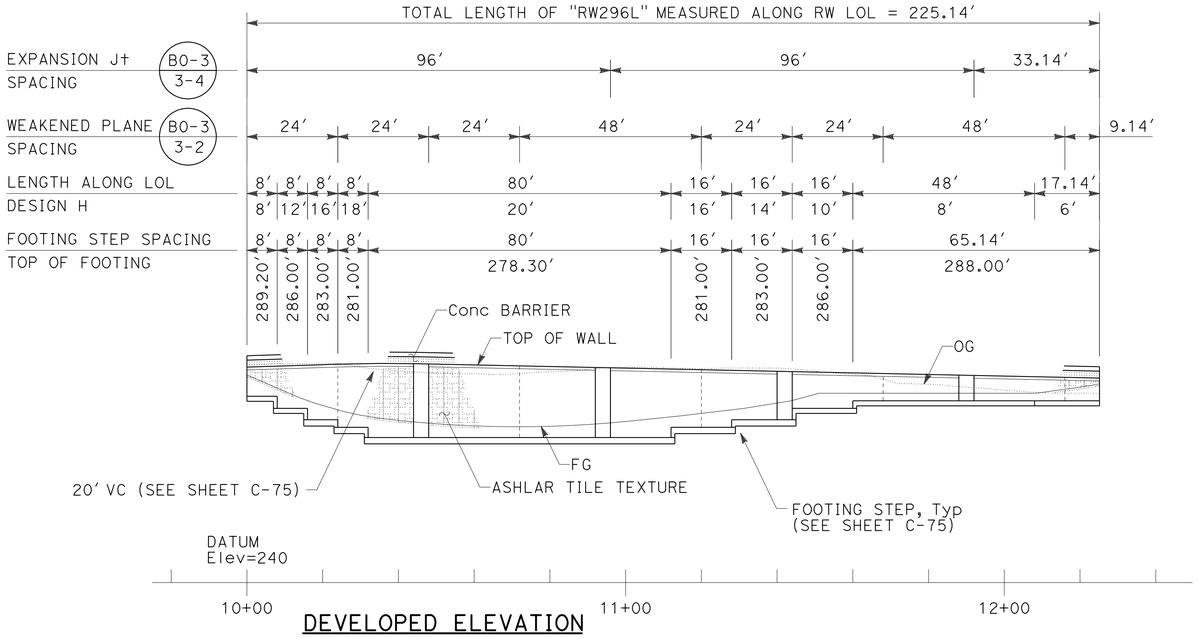

DEVELOPED ELEVATION

"RW296L" LINE
SCALE: 1" = 20'

TOP OF WALL	
STATION	ELEVATION
10+00.00	296.90
10+08.00	297.15
10+16.00	297.40
10+24.00	297.65
10+25.00 (BVC)	297.69
10+32.00	297.84
10+40.00	297.86
10+45.00 (EVC)	297.79
10+60.00	297.47
10+80.00	297.05
11+00.00	296.63
11+12.00	296.38
11+20.00	296.21
11+28.00	296.04
11+40.00	295.79
11+44.00	295.71
11+60.00	295.37
11+80.00	294.95
12+00.00	294.53
12+08.00	294.36
12+20.00	294.11
12+25.14	294.00

LEGEND:

EXCAVATION FOR RETAINING WALL CONSTRUCTION NOT PERMITTED IN AREAS INDICATED THUS. PROVIDE SHEET PILING OR SOLDIER PILE SHORING AS NEEDED.

---------- FOOTING EASEMENT

STANDARD PLAN SHEET No.

DETAIL No.

NOTES:

1. UTILITIES NOT SHOWN ON THIS RETAINING WALL PLAN SHEET. SEE UTILITY PLAN SHEETS FOR UTILITY INFORMATION.

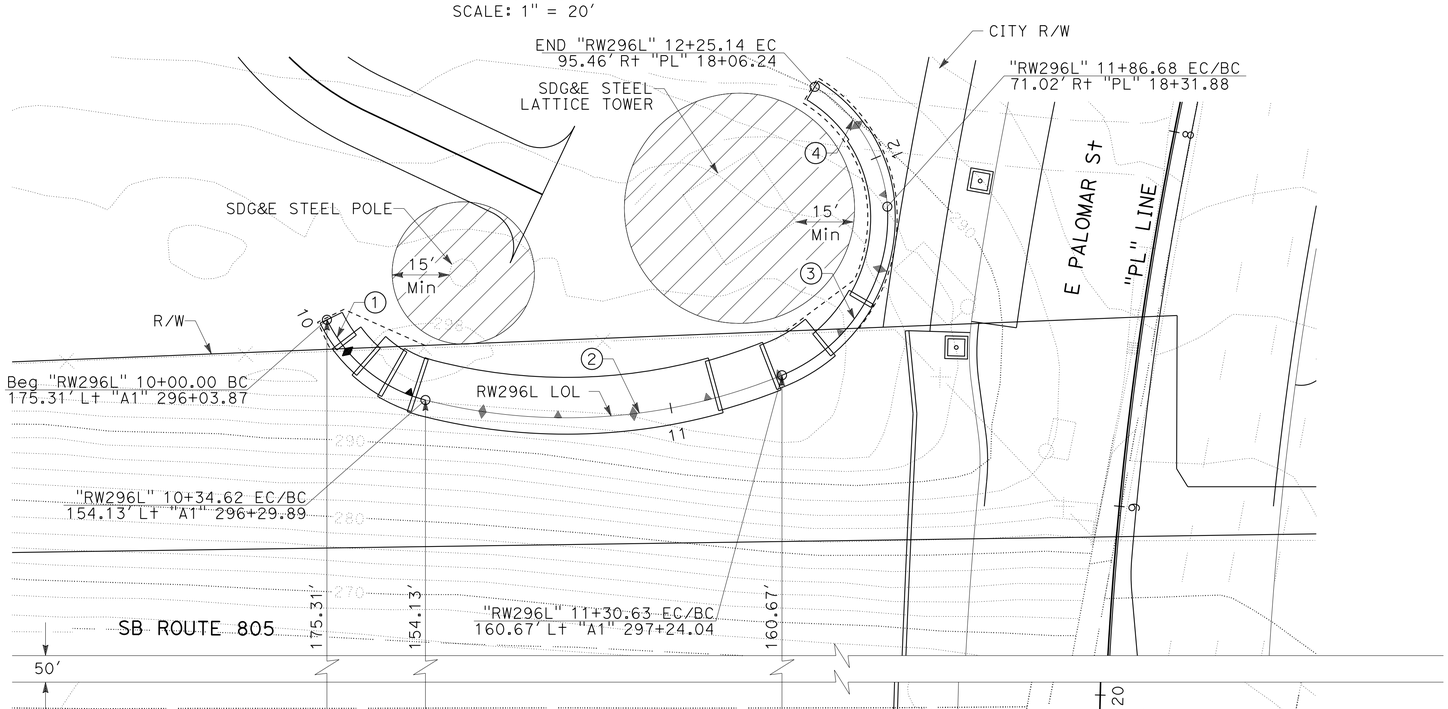

PLAN

SCALE: 1" = 20'

CURVE DATA TABLE				
No.	R	Δ	T	L
1	40.00'	49°35'46"	18.48'	34.63'
2	150.00'	36°40'21"	49.71'	96.01'
3	45.00'	71°21'34"	32.31'	56.05'
4	40.00'	55°05'19"	20.86'	38.46'

RW QUANTITIES ("RW296L")	
ITEM	TOTAL
STRUCTURE EXCAVATION (RETAINING WALL)	1,300 CY
STRUCTURE BACKFILL (RETAINING WALL)	1,010 CY
PERVIOUS BACKFILL MATERIAL (RETAINING WALL)	50 CY
STRUCTURAL CONCRETE (RETAINING WALL)	320 CY
BAR REINFORCING STEEL (RETAINING WALL)	65,100 LB
Conc BARRIER (TYPE 26 Mod)	226 LF
ARCHITECTURAL TREATMENT (LOUVER TEXTURE)	415 SQFT
ARCHITECTURAL TREATMENT (ASHLAR TILE TEXTURE)	1,985 SQFT

APPROVED FOR RETAINING WALL WORK ONLY

RETAINING WALL PLAN
RW No. 296L

SCALE AS SHOWN

R4-1

STATE OF CALIFORNIA - DEPARTMENT OF TRANSPORTATION
Caltrans

CONSULTANT FUNCTIONAL SUPERVISOR: GERARD LUMABAS
CALCULATED-DESIGNED BY: DAVID LAYNE
CHECKED BY: PAUL KOSINSKI
REVISED BY
DATE REVISED

LAST REVISION 06-13-12
DATE PLOTTED => 12-SEP-2012
TIME PLOTTED => 16:22

Dist	COUNTY	ROUTE	POST MILES TOTAL PROJECT	SHEET No.	TOTAL SHEETS
11	SD	805	4.7/5.6	354	650

REGISTERED CIVIL ENGINEER 05-24-12 DATE

06-25-12
PLANS APPROVAL DATE

REGISTERED PROFESSIONAL ENGINEER DAVID LAYNE No. C74349 Exp. 06-30-13 CIVIL STATE OF CALIFORNIA

THE STATE OF CALIFORNIA OR ITS OFFICERS OR AGENTS SHALL NOT BE RESPONSIBLE FOR THE ACCURACY OR COMPLETENESS OF SCANNED COPIES OF THIS PLAN SHEET.

DOKKEN ENGINEERING
5675 RUFFIN Rd
SUITE 250
SAN DIEGO, CA 92123

SANDAG
401 B St
SUITE 800
SAN DIEGO, CA 92101

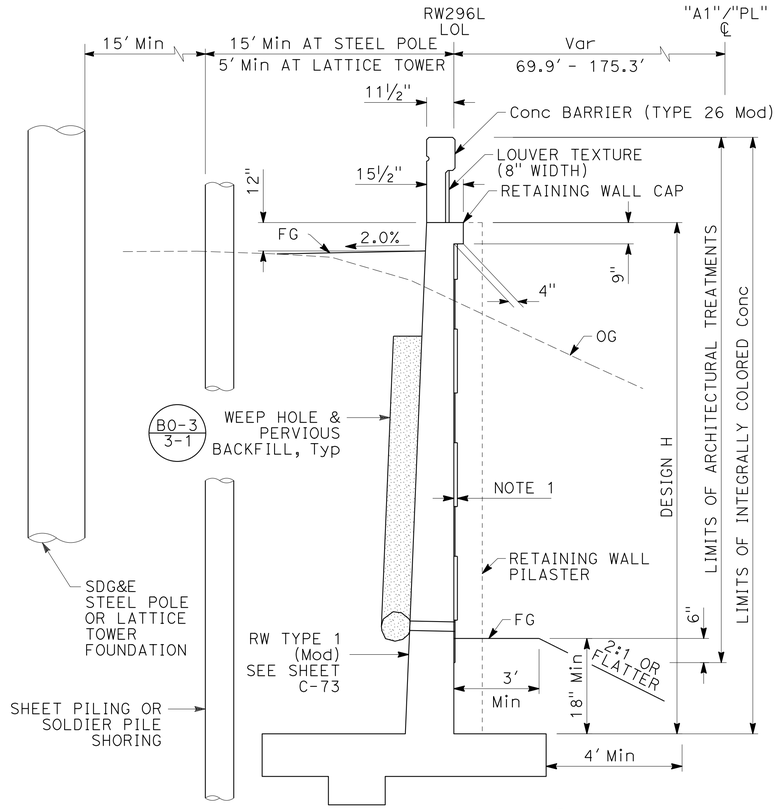

TYPICAL SECTION

NO SCALE

"RW296L" 10+00.00 TO 12+25+14

B3-6

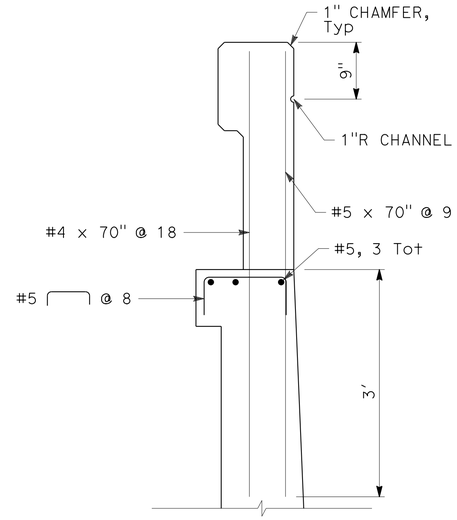

SEE B11-54 FOR DETAILS NOT SHOWN.

Conc BARRIER (TYPE 26 Mod)

SCALE: 1" = 1'

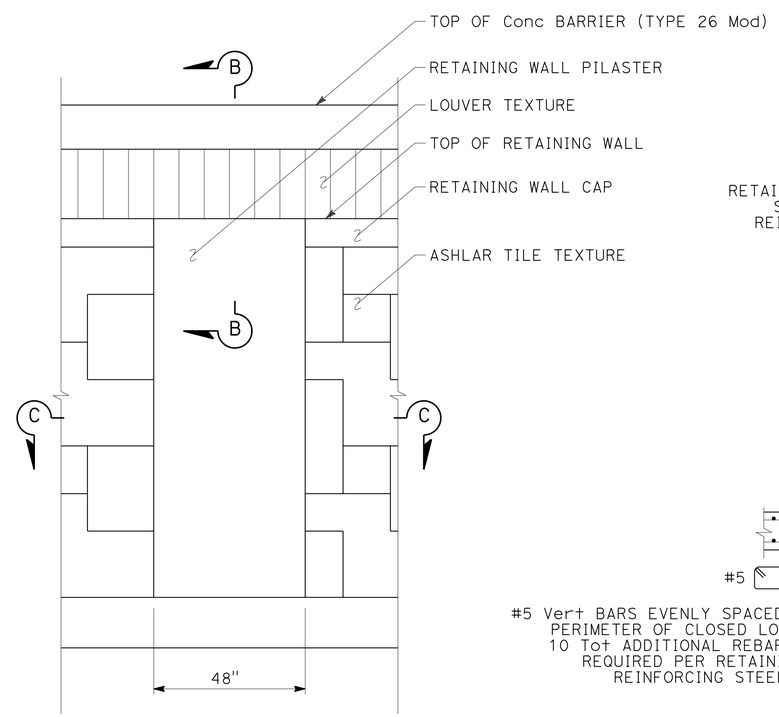

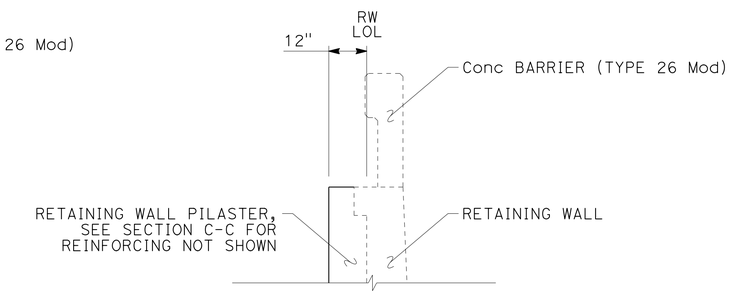

SECTION B-B

SCALE: ½" = 1'

NOTES:

1. ARCHITECTURAL TREATMENT (ASHLAR TILE TEXTURE)
2. RW STEM, RW CAP, RW PILASTER, AND CONCRETE BARRIER SHALL BE INTEGRALLY COLORED CONCRETE.
3. SEE ADDITIONAL RETAINING WALL DETAILS ON SHEET C-75

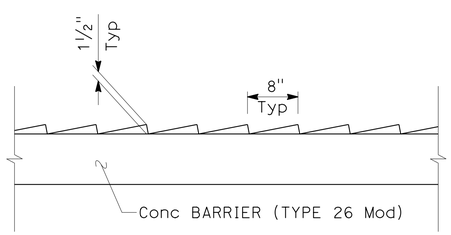

LOUVER TEXTURE DETAIL

SCALE: 1" = 1'

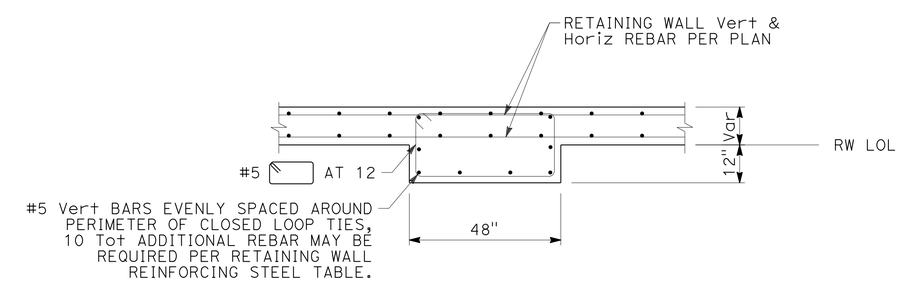

SECTION C-C

SCALE: ½" = 1'

PILASTER DETAIL

SCALE: ½" = 1'

RETAINING WALL DETAILS
RW No. 296L

R4-2

SCALE AS SHOWN

APPROVED FOR RETAINING WALL WORK ONLY

STATE OF CALIFORNIA - DEPARTMENT OF TRANSPORTATION

Caltrans

CONSULTANT FUNCTIONAL SUPERVISOR: GERARD LUMABAS

CALCULATED-DESIGNED BY: DAVID LAYNE

CHECKED BY: PAUL KOSINSKI

REVISED BY

DATE REVISED

LAST REVISION 06-13-12

DATE PLOTTED => 12-SEP-2012

TIME PLOTTED => 16:22

Dist	COUNTY	ROUTE	POST MILES TOTAL PROJECT	SHEET No.	TOTAL SHEETS
11	SD	805	4.7/5.6	355	650

David Layne 05-24-12
REGISTERED CIVIL ENGINEER DATE

06-25-12
PLANS APPROVAL DATE

REGISTERED PROFESSIONAL ENGINEER
DAVID LAYNE
No. C74349
Exp. 06-30-13
CIVIL
STATE OF CALIFORNIA

THE STATE OF CALIFORNIA OR ITS OFFICERS OR AGENTS SHALL NOT BE RESPONSIBLE FOR THE ACCURACY OR COMPLETENESS OF SCANNED COPIES OF THIS PLAN SHEET.

DOKKEN ENGINEERING
5675 RUFFIN Rd
SUITE 250
SAN DIEGO, CA 92123

SANDAG
401 B St
SUITE 800
SAN DIEGO, CA 92101

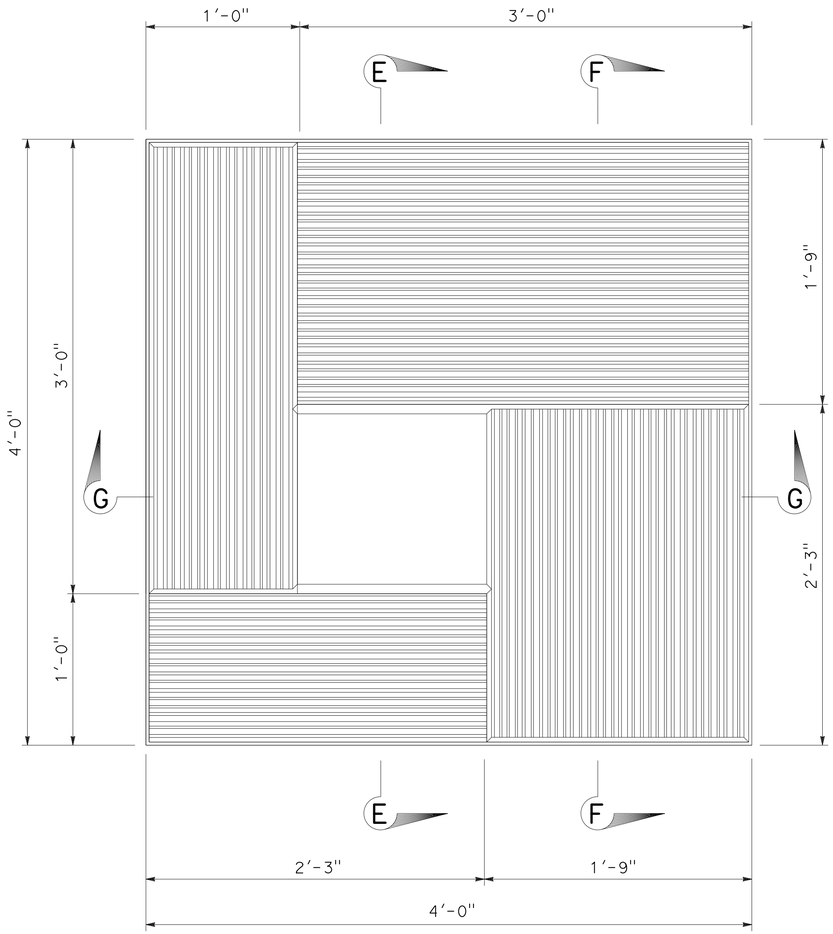

ASHLAR TILE TEXTURE DETAIL
SCALE: 2" = 1'

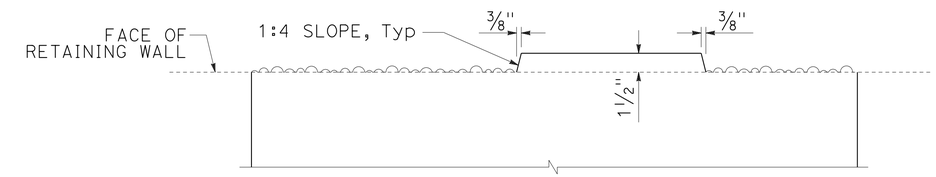

SECTION E-E
SCALE: 2" = 1'

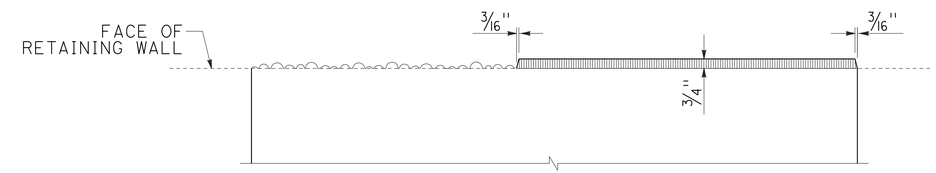

SECTION F-F
SCALE: 2" = 1'

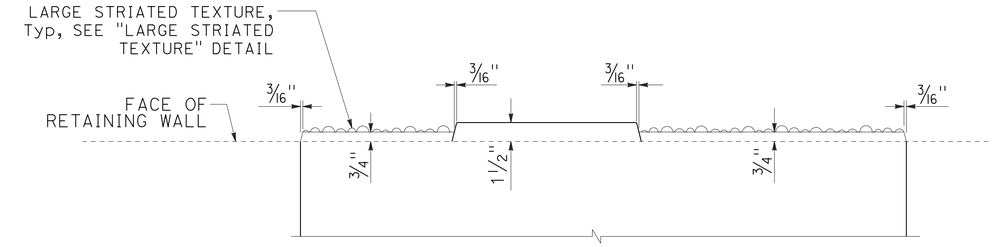

SECTION G-G
SCALE: 2" = 1'

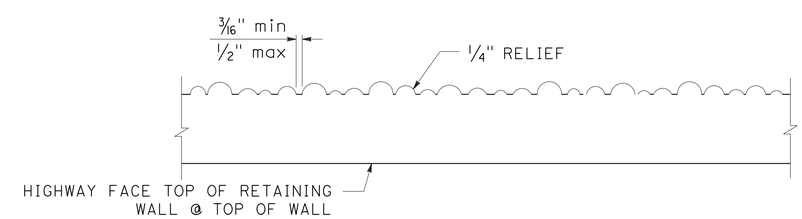

LARGE STRIATED TEXTURE DETAIL
SCALE: 4" = 1'

RETAINING WALL DETAILS
RW No. 296L

SCALE AS SHOWN

R4-3

APPROVED FOR RETAINING WALL WORK ONLY

STATE OF CALIFORNIA - DEPARTMENT OF TRANSPORTATION
Caltrans

CONSULTANT FUNCTIONAL SUPERVISOR: GERARD LUMABAS
CALCULATED-DESIGNED BY: DAVID LAYNE
CHECKED BY: PAUL KOSINSKI
REVISED BY
DATE REVISED

LAST REVISION 06-13-12
DATE PLOTTED => 12-SEP-2012
TIME PLOTTED => 16:22

DIST	COUNTY	ROUTE	POST MILES TOTAL PROJECT	SHEET No.	TOTAL SHEETS
11	SD	805	4.7/5.6	356	650

06-12-12
REGISTERED CIVIL ENGINEER

06-25-12
PLANS APPROVAL DATE

The State of California or its officers or agents shall not be responsible for the accuracy or completeness of electronic copies of this plan sheet.

REGISTERED PROFESSIONAL ENGINEER
Brian Gutierrez
No. C66258
Exp. 06-30-14
CIVIL
STATE OF CALIFORNIA

This LOTB sheet was prepared in accordance with the Caltrans Soil & Rock Logging, Classification, & Presentation Manual (2007 Edition).

BENCH MARK

BM 805-5.00, Brass disk in sidewalk on north side of E. Palomar St. OC bridge, at Station 298+46.0, Right 60 feet of "DAR" Line/"A1" Line.
Elevation: 300.93 feet
NAVD 1988 (Vertical)
NAD83 (Horizontal)

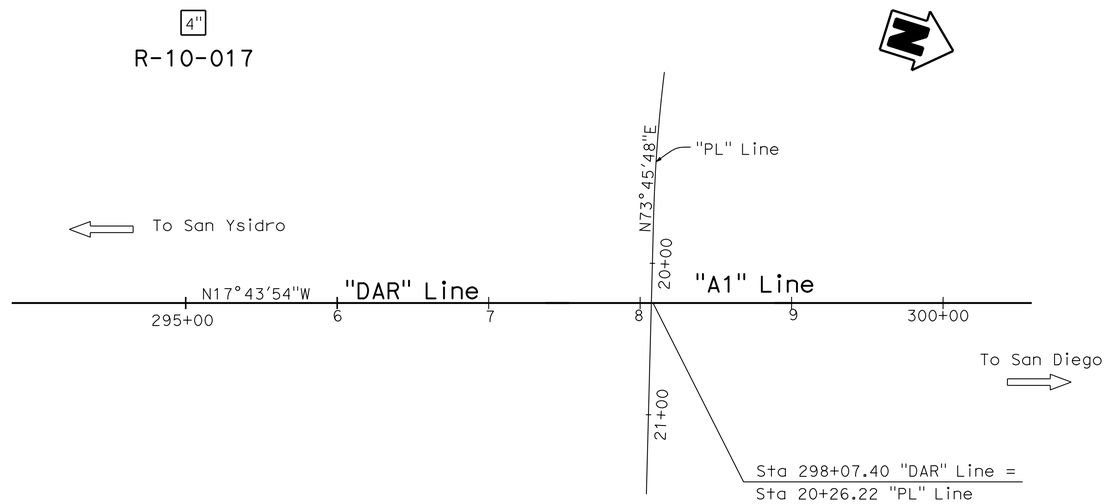

PLAN
1" = 50'

Notes:
1. Ground water was not encountered during the 2010 subsurface investigation.
2. RQD designated with "NA" (not applicable) indicates that the rock encountered within the drill interval was not sound rock, therefore RQD was not calculated.
3. Plan sheets provided by Design, show that "A1" Line = "DAR" Line.

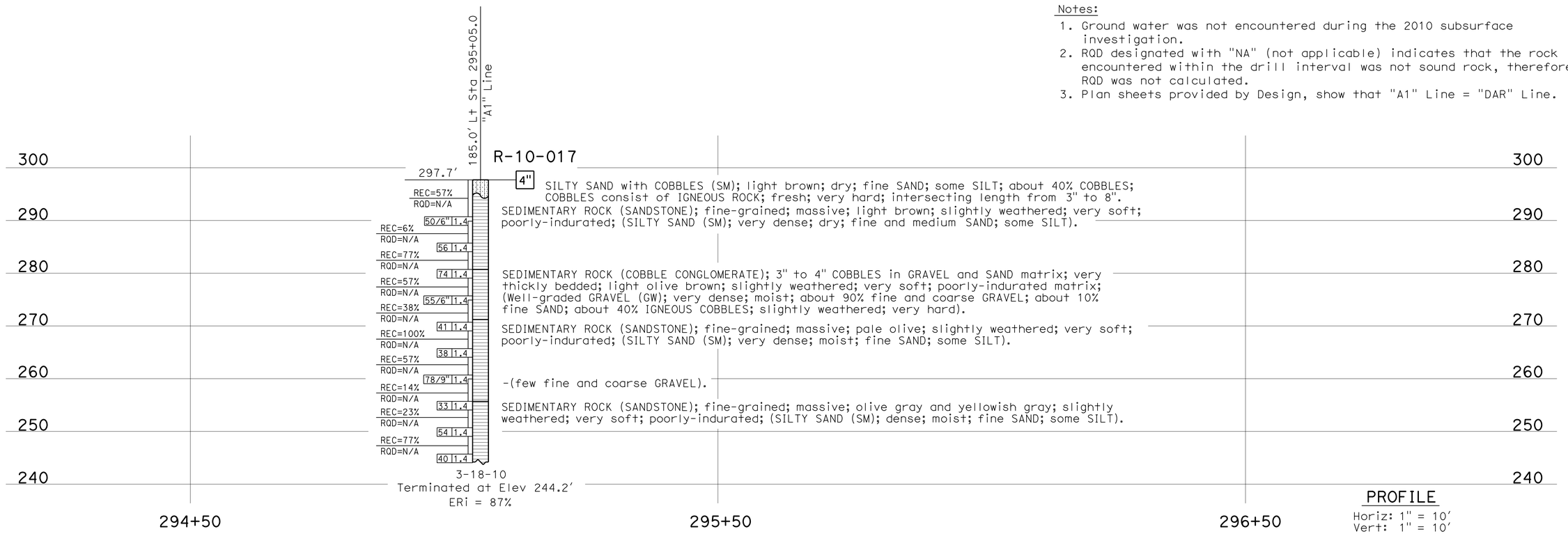

PROFILE
Horiz: 1" = 10'
Vert: 1" = 10'

ENGINEERING SERVICES	GEOTECHNICAL SERVICES	STATE OF CALIFORNIA DEPARTMENT OF TRANSPORTATION	DIVISION OF ENGINEERING SERVICES STRUCTURE DESIGN DESIGN BRANCH X	BRIDGE NO. / POST MILE 5.07	RETAINING WALL RW296L LOG OF TEST BORINGS 1 OF 4
FUNCTIONAL SUPERVISOR NAME: S. Wei	DRAWN BY: F. Nguyen 02/11 CHECKED BY: M. Wilson	FIELD INVESTIGATION BY: TM. Liao			

OGS CIVIL LOG OF TEST BORINGS SHEET

ORIGINAL SCALE IN INCHES FOR REDUCED PLANS 0 1 2 3

UNIT: 3643
PROJECT NUMBER & PHASE: 11000200511
CONTRACT NO.: 11-2T1821

DISREGARD PRINTS BEARING EARLIER REVISION DATES

REVISION DATES: 12-19-11

SHEET R4-4

FILE => 1100020051qd004.dgn

USERNAME => s127400 DATE PLOTTED => 12-SEP-2012 TIME PLOTTED => 16:22

REFERENCE: CALTRANS SOIL & ROCK LOGGING, CLASSIFICATION, AND PRESENTATION MANUAL (2010)

DIST	COUNTY	ROUTE	POST MILES TOTAL PROJECT	SHEET No.	TOTAL SHEETS
11	SD	805	4.7/5.6	357	650

06-12-12
REGISTERED CIVIL ENGINEER

06-25-12
PLANS APPROVAL DATE

REGISTERED PROFESSIONAL ENGINEER
Brian Gutierrez
No. C66258
Exp. 06-30-14
CIVIL
STATE OF CALIFORNIA

The State of California or its officers or agents shall not be responsible for the accuracy or completeness of electronic copies of this plan sheet.

This LOTB sheet was prepared in accordance with the Caltrans Soil & Rock Logging, Classification, & Presentation Manual (2007 Edition).

CEMENTATION

Description	Criteria
Weak	Crumbles or breaks with handling or little finger pressure.
Moderate	Crumbles or breaks with considerable finger pressure.
Strong	Will not crumble or break with finger pressure.

BOREHOLE IDENTIFICATION

Symbol	Hole Type	Description
Size	A	Auger Boring (hollow or solid stem bucket)
Size	R RW RC P	Rotary drilled boring (conventional) Rotary drilled with self-casing wire-line Rotary core with continuously-sampled, self-casing wire-line Rotary percussion boring (air)
Size	R	Rotary drilled diamond core
Size	HD HA	Hand driven (1-inch soil tube) Hand Auger
●	D	Dynamic Cone Penetration Boring
▲	CPT	Cone Penetration Test (ASTM D 5778)
⬚	O	Other (note on LOTB)

Note: Size in inches.

CONSISTENCY OF COHESIVE SOILS

Description	Shear Strength (tsf)	Pocket Penetrometer Measurement, PP, (tsf)	Torvane Measurement, TV, (tsf)	Vane Shear Measurement, VS, (tsf)
Very Soft	Less than 0.12	Less than 0.25	Less than 0.12	Less than 0.12
Soft	0.12 - 0.25	0.25 - 0.5	0.12 - 0.25	0.12 - 0.25
Medium Stiff	0.25 - 0.5	0.5 - 1	0.25 - 0.5	0.25 - 0.5
Stiff	0.5 - 1	1 - 2	0.5 - 1	0.5 - 1
Very Stiff	1 - 2	2 - 4	1 - 2	1 - 2
Hard	Greater than 2	Greater than 4	Greater than 2	Greater than 2

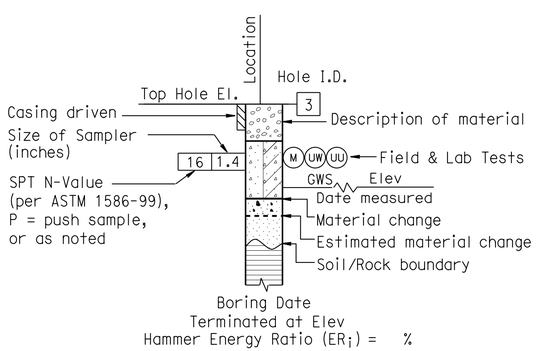

ROTARY BORING

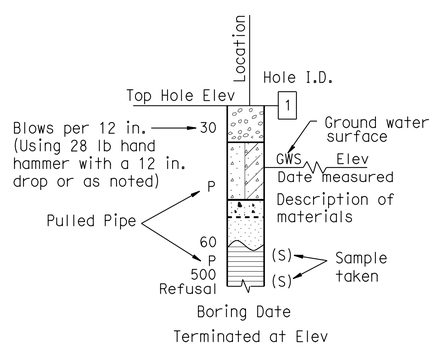

HAND BORING

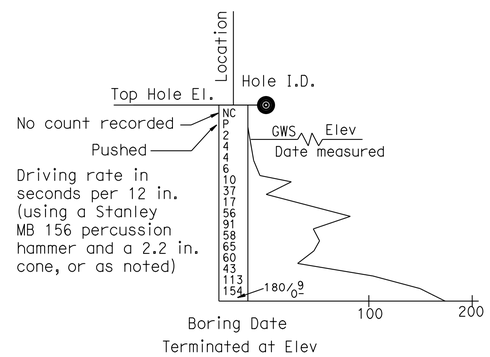

DYNAMIC CONE PENETRATION BORING

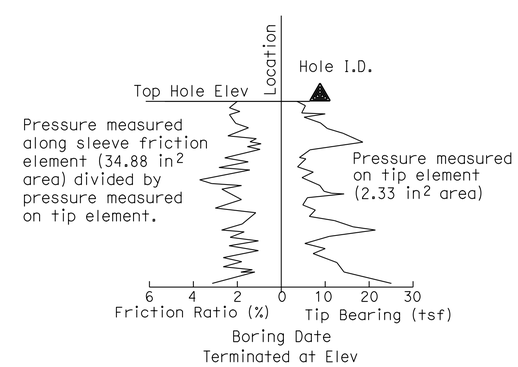

CONE PENETRATION TEST (CPT) BORING

ENGINEERING SERVICES	GEOTECHNICAL SERVICES	STATE OF CALIFORNIA DEPARTMENT OF TRANSPORTATION	DIVISION OF ENGINEERING SERVICES STRUCTURE DESIGN DESIGN BRANCH X	BRIDGE NO. / POST MILE 5.07	RETAINING WALL 296L LOG OF TEST BORINGS 2 OF 4
	PREPARED BY: I.G-Remmen				

GS LOTB SOIL LEGEND

ORIGINAL SCALE IN INCHES FOR REDUCED PLANS 0 1 2 3

UNIT: 3643
PROJECT NUMBER & PHASE: 11000200511
CONTRACT NO.: 11-2T1821

DISREGARD PRINTS BEARING EARLIER REVISION DATES 12-19-11

REVISION DATES | SHEET R4-5

FILE => 1100020051qd005.dgn

USERNAME => s12400 DATE PLOTTED => 12-SEP-2012 TIME PLOTTED => 16:22

REFERENCE: CALTRANS SOIL & ROCK LOGGING, CLASSIFICATION, AND PRESENTATION MANUAL (2010)

DIST	COUNTY	ROUTE	POST MILES TOTAL PROJECT	SHEET No.	TOTAL SHEETS
11	SD	805	4.7/5.6	358	650

Brian Gutierrez 06-12-12
REGISTERED CIVIL ENGINEER

06-25-12
PLANS APPROVAL DATE

REGISTERED PROFESSIONAL ENGINEER Brian Gutierrez No. C66258 Exp. 06-30-14 CIVIL STATE OF CALIFORNIA

The State of California or its officers or agents shall not be responsible for the accuracy or completeness of electronic copies of this plan sheet.

This LOTB sheet was prepared in accordance with the Caltrans Soil & Rock Logging, Classification, & Presentation Manual (2007 Edition).

GROUP SYMBOLS AND NAMES

Graphic/Symbol	Group Names	Graphic/Symbol	Group Names
GW	Well-graded GRAVEL Well-graded GRAVEL with SAND	CL	Lean CLAY Lean CLAY with SAND Lean CLAY with GRAVEL SANDY lean CLAY SANDY lean CLAY with GRAVEL GRAVELLY lean CLAY GRAVELLY lean CLAY with SAND
GP	Poorly-graded GRAVEL Poorly-graded GRAVEL with SAND		
GW-GM	Well-graded GRAVEL with SILT Well-graded GRAVEL with SILT and SAND	CL-ML	SILTY CLAY SILTY CLAY with SAND SILTY CLAY with GRAVEL SANDY SILTY CLAY SANDY SILTY CLAY with GRAVEL GRAVELLY SILTY CLAY GRAVELLY SILTY CLAY with SAND
GW-GC	Well-graded GRAVEL with CLAY (or SILTY CLAY) Well-graded GRAVEL with CLAY and SAND (or SILTY CLAY and SAND)		
GP-GM	Poorly-graded GRAVEL with SILT Poorly-graded GRAVEL with SILT and SAND	ML	SILT SILT with SAND SILT with GRAVEL SANDY SILT SANDY SILT with GRAVEL GRAVELLY SILT GRAVELLY SILT with SAND
GP-GC	Poorly-graded GRAVEL with CLAY (or SILTY CLAY) Poorly-graded GRAVEL with CLAY and SAND (or SILTY CLAY and SAND)		
GM	SILTY GRAVEL SILTY GRAVEL with SAND	OL	ORGANIC lean CLAY ORGANIC lean CLAY with SAND ORGANIC lean CLAY with GRAVEL SANDY ORGANIC lean CLAY SANDY ORGANIC lean CLAY with GRAVEL GRAVELLY ORGANIC lean CLAY GRAVELLY ORGANIC lean CLAY with SAND
GC	CLAYEY GRAVEL CLAYEY GRAVEL with SAND		
GC-GM	SILTY, CLAYEY GRAVEL SILTY, CLAYEY GRAVEL with SAND	OL	ORGANIC SILT ORGANIC SILT with SAND ORGANIC SILT with GRAVEL SANDY ORGANIC SILT SANDY ORGANIC SILT with GRAVEL GRAVELLY ORGANIC SILT GRAVELLY ORGANIC SILT with SAND
SW	Well-graded SAND Well-graded SAND with GRAVEL		
SP	Poorly-graded SAND Poorly-graded SAND with GRAVEL	CH	Fat CLAY Fat CLAY with SAND Fat CLAY with GRAVEL SANDY fat CLAY SANDY fat CLAY with GRAVEL GRAVELLY fat CLAY GRAVELLY fat CLAY with SAND
SW-SM	Well-graded SAND with SILT Well-graded SAND with SILT and GRAVEL		
SW-SC	Well-graded SAND with CLAY (or SILTY CLAY) Well-graded SAND with CLAY and GRAVEL (or SILTY CLAY and GRAVEL)	MH	Elastic SILT Elastic SILT with SAND Elastic SILT with GRAVEL SANDY elastic SILT SANDY elastic SILT with GRAVEL GRAVELLY elastic SILT GRAVELLY elastic SILT with SAND
SP-SM	Poorly-graded SAND with SILT Poorly-graded SAND with SILT and GRAVEL		
SP-SC	Poorly-graded SAND with CLAY (or SILTY CLAY) Poorly-graded SAND with CLAY and GRAVEL (or SILTY CLAY and GRAVEL)	OH	ORGANIC fat CLAY ORGANIC fat CLAY with SAND ORGANIC fat CLAY with GRAVEL SANDY ORGANIC fat CLAY SANDY ORGANIC fat CLAY with GRAVEL GRAVELLY ORGANIC fat CLAY GRAVELLY ORGANIC fat CLAY with SAND
SM	SILTY SAND SILTY SAND with GRAVEL		
SC	CLAYEY SAND CLAYEY SAND with GRAVEL	OH	ORGANIC elastic SILT ORGANIC elastic SILT with SAND ORGANIC elastic SILT with GRAVEL SANDY ORGANIC elastic SILT SANDY ORGANIC elastic SILT with GRAVEL GRAVELLY ORGANIC elastic SILT GRAVELLY ORGANIC elastic SILT with SAND
SC-SM	SILTY, CLAYEY SAND SILTY, CLAYEY SAND with GRAVEL		
PT	PEAT	OL/OH	ORGANIC SOIL ORGANIC SOIL with SAND ORGANIC SOIL with GRAVEL SANDY ORGANIC SOIL SANDY ORGANIC SOIL with GRAVEL GRAVELLY ORGANIC SOIL GRAVELLY ORGANIC SOIL with SAND
	COBBLES COBBLES and BOULDERS BOULDERS		

FIELD AND LABORATORY TESTING

- (C) Consolidation (ASTM D 2435)
- (CL) Collapse Potential (ASTM D 5333)
- (CP) Compaction Curve (CTM 216)
- (CR) Corrosivity Testing (CTM 643, CTM 422, CTM 417)
- (CU) Consolidated Undrained Triaxial (ASTM D 4767)
- (DS) Direct Shear (ASTM D 3080)
- (EI) Expansion Index (ASTM D 4829)
- (M) Moisture Content (ASTM D 2216)
- (OC) Organic Content-% (ASTM D 2974)
- (P) Permeability (CTM 220)
- (PA) Particle Size Analysis (ASTM D 422)
- (PI) Plasticity Index (AASHTO T 90) Liquid Limit (AASHTO T 89)
- (PL) Point Load Index (ASTM D 5731)
- (PM) Pressure Meter
- (R) R-Value (CTM 301)
- (SE) Sand Equivalent (CTM 217)
- (SG) Specific Gravity (AASHTO T 100)
- (SL) Shrinkage Limit (ASTM D 427)
- (SW) Swell Potential (ASTM D 4546)
- (UC) Unconfined Compression-Soil (ASTM D 2166) Unconfined Compression-Rock (ASTM D 2938)
- (UU) Unconsolidated Undrained Triaxial (ASTM D 2850)
- (UW) Unit Weight (ASTM D 4767)

APPARENT DENSITY OF COHESIONLESS SOILS

Description	SPT N_{60} (Blows / 12 in.)
Very Loose	0 - 5
Loose	5 - 10
Medium Dense	10 - 30
Dense	30 - 50
Very Dense	Greater than 50

MOISTURE

Description	Criteria
Dry	No discernable moisture
Moist	Moisture present, but no free water
Wet	Visible free water

PERCENT OR PROPORTION OF SOILS

Description	Criteria
Trace	Particles are present but estimated to be less than 5%
Few	5% - 10%
Little	15% - 25%
Some	30% - 45%
Mostly	50% - 100%

PARTICLE SIZE

Description		Size (in.)
Boulder		Greater than 12
Cobble		3 - 12
Gravel	Coarse	3/4 - 3
	Fine	1/5 - 3/4
Sand	Coarse	1/16 - 1/5
	Medium	1/64 - 1/16
	Fine	1/300 - 1/64
Silt and Clay		Less than 1/300

ENGINEERING SERVICES

GEOTECHNICAL SERVICES
PREPARED BY: I.G-Remmen

STATE OF CALIFORNIA
DEPARTMENT OF TRANSPORTATION

DIVISION OF ENGINEERING SERVICES
STRUCTURE DESIGN
DESIGN BRANCH X

BRIDGE NO.
POST MILE 5.07

RETAINING WALL 296L
LOG OF TEST BORINGS 3 OF 4

GS LOTB SOIL LEGEND

ORIGINAL SCALE IN INCHES FOR REDUCED PLANS 0 1 2 3

UNIT: 3643
PROJECT NUMBER & PHASE: 11000200511
CONTRACT NO.: 11-2T1821

DISREGARD PRINTS BEARING EARLIER REVISION DATES 12-19-11

REVISION DATES | SHEET R4-6

FILE => 1100020051gd006.dgn

USERNAME => s127400 DATE PLOTTED => 12-SEP-2012 TIME PLOTTED => 16:22

REFERENCE: CALTRANS SOIL & ROCK LOGGING, CLASSIFICATION, AND PRESENTATION MANUAL (2010)

DIST	COUNTY	ROUTE	POST MILES TOTAL PROJECT	SHEET No.	TOTAL SHEETS
11	SD	805	4.7/5.6	359	650

06-12-12
REGISTERED CIVIL ENGINEER

06-25-12
PLANS APPROVAL DATE

REGISTERED PROFESSIONAL ENGINEER Brian Gutierrez No. C66258 Exp. 06-30-14 CIVIL STATE OF CALIFORNIA

The State of California or its officers or agents shall not be responsible for the accuracy or completeness of electronic copies of this plan sheet.

This LOTB sheet was prepared in accordance with the Caltrans Soil & Rock Logging, Classification, & Presentation Manual (2007 Edition).

PERCENT CORE RECOVERY (REC) & ROCK QUALITY DESIGNATION (RQD)

$$REC = \frac{\sum \text{Length of the recovered core pieces (in.)}}{\text{Total length of core run (in.)}} \times 100\%$$

$$RQD = \frac{\sum \text{Length of intact core pieces} \geq 4 \text{ in.}}{\text{Total length of core run (in.)}} \times 100\%$$

RQD* Indicates soundness criteria not met.

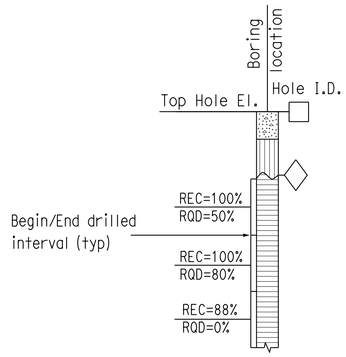

BEDDING SPACING

Description	Thickness / Spacing
Massive	Greater than 10 ft
Very Thickly Bedded	3 ft - 10 ft
Thickly Bedded	1 ft - 3 ft
Moderately Bedded	4 in. - 1 ft
Thinly Bedded	1 in. - 4 in.
Very Thinly Bedded	1/4 in. - 1 in.
Laminated	Less than 1/4 in.

LEGEND OF ROCK MATERIALS

- IGNEOUS ROCK
- SEDIMENTARY ROCK
- METAMORPHIC ROCK

ROCK HARDNESS

Description	Criteria
Extremely Hard	Cannot be scratched with a pocketknife or sharp pick. Can only be chipped with repeated heavy hammer blows.
Very Hard	Cannot be scratched with a pocketknife or sharp pick. Breaks with repeated heavy hammer blows.
Hard	Can be scratched with a pocketknife or sharp pick with difficulty (heavy pressure). Breaks with heavy hammer blows.
Moderately Hard	Can be scratched with pocketknife or sharp pick with light or moderate pressure. Breaks with moderate hammer blows.
Moderately Soft	Can be grooved 1/16 in. deep with a pocketknife or sharp pick with moderate or heavy pressure. Breaks with light hammer blow or heavy manual pressure.
Soft	Can be grooved or gouged easily by a pocketknife or sharp pick with light pressure, can be scratched with fingernail. Breaks with light to moderate manual pressure.
Very Soft	Can be readily indented, grooved or gouged with fingernail, or carved with a pocketknife. Breaks with light manual pressure.

FRACTURE DENSITY

Description	Observed Fracture Density
Unfractured	No fractures.
Very Slightly Fractured	Core lengths greater than 3 ft.
Slightly Fractured	Core lengths mostly from 1 to 3 ft.
Moderately Fractured	Core lengths mostly from 4 in. to 1 ft.
Intensely Fractured	Core lengths mostly from 1 to 4 in.
Very Intensely Fractured	Mostly chips and fragments.

WEATHERING DESCRIPTORS FOR INTACT ROCK

Description	Diagnostic Features					General Characteristics
	Chemical Weathering-Discoloration and/or Oxidation		Mechanical Weathering-Grain Boundary Conditions (Disaggregation) Primarily for Granitics and Some Coarse-Grained Sediments	Texture and Leaching		
	Body of Rock	Fracture Surfaces		Texture	Leaching	
Fresh	No discoloration, not oxidized.	No discoloration or oxidation.	No separation, intact (tight).	No change	No leaching	Hammer rings when crystalline rocks are struck.
Slightly Weathered	Discoloration or oxidation is limited to surface of, or short distance from, fractures; some feldspar crystals are dull.	Minor to complete discoloration or oxidation of most surfaces.	No visible separation, intact (tight).	Preserved	Minor leaching of some soluble minerals.	Hammer rings when crystalline rocks are struck. Body of rock not weakened.
Moderately Weathered	Discoloration or oxidation extends from fractures usually throughout; Fe-Mg minerals are "rusty," feldspar crystals are "cloudy."	All fracture surfaces are discolored or oxidized.	Partial separation of boundaries visible.	Generally preserved	Soluble minerals may be mostly leached.	Hammer does not ring when rock is struck. Body of rock is slightly weakened.
Intensely Weathered	Discoloration or oxidation throughout; all feldspars and Fe-Mg minerals are altered to clay to some extent; or chemical alteration produces in-situ disaggregation, see grain boundary conditions.	All fracture surfaces are discolored or oxidized, surfaces friable.	Partial separation, rock is friable; in semiarid conditions granitics are disaggregated.	Texture altered by chemical disintegration (hydration, argillation).	Leaching of soluble minerals may be complete.	Dull sound when struck with hammer, usually can be broken with moderate to heavy manual pressure or by light hammer blow without reference to planes of weakness such as incipient or hairline fractures, or veinlets. Rock is significantly weakened.
Decomposed	Discolored or oxidized throughout, but resistant minerals such as quartz may be unaltered; all feldspars and Fe-Mg minerals are completely altered to clay.		Complete separation of grain boundaries (disaggregated).	Resembles a soil, partial or complete remnant rock structure may be preserved; leaching of soluble minerals usually complete.		Can be granulated by hand. Resistant minerals such as quartz may be present as "stringers" or "dikes."

ENGINEERING SERVICES

GEOTECHNICAL SERVICES
PREPARED BY: I.G-Remmen

STATE OF CALIFORNIA
DEPARTMENT OF TRANSPORTATION

DIVISION OF ENGINEERING SERVICES
STRUCTURE DESIGN
DESIGN BRANCH X

BRIDGE NO.
POST MILE 5.07

RETAINING WALL 296L
LOG OF TEST BORINGS 4 OF 4

GS LOTB SOIL LEGEND

ORIGINAL SCALE IN INCHES FOR REDUCED PLANS 0 1 2 3

UNIT: 3643
PROJECT NUMBER & PHASE: 11000200511
CONTRACT NO.: 11-2T1821

DISREGARD PRINTS BEARING EARLIER REVISION DATES

REVISION DATES 12-19-11

SHEET R4-7

FILE => 1100020051qd007.dgn

USERNAME => s127400 DATE PLOTTED => 12-SEP-2012 TIME PLOTTED => 16:22

Dist	COUNTY	ROUTE	POST MILES TOTAL PROJECT	SHEET No.	TOTAL SHEETS
11	SD	805	4.7/5.6	360	650

REGISTERED CIVIL ENGINEER 05-24-12 DATE

06-25-12
PLANS APPROVAL DATE

REGISTERED PROFESSIONAL ENGINEER DAVID LAYNE No. C74349 Exp. 06-30-13 CIVIL STATE OF CALIFORNIA

THE STATE OF CALIFORNIA OR ITS OFFICERS OR AGENTS SHALL NOT BE RESPONSIBLE FOR THE ACCURACY OR COMPLETENESS OF SCANNED COPIES OF THIS PLAN SHEET.

DOKKEN ENGINEERING
5675 RUFFIN Rd
SUITE 250
SAN DIEGO, CA 92123

SANDAG
401 B St
SUITE 800
SAN DIEGO, CA 92101

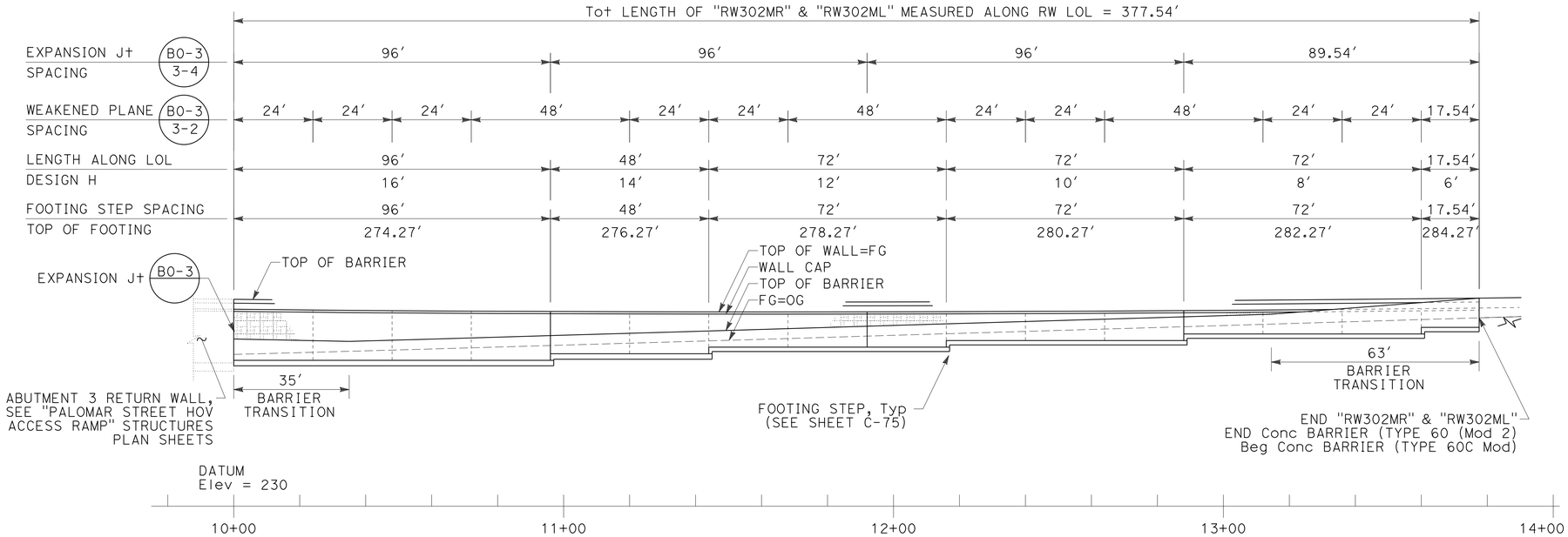

DEVELOPED ELEVATION

"RW302ML" & "RW302MR" LINES
SCALE: 1" = 20'

TOP OF WALL			
STATION	ELEVATION	STATION	ELEVATION
10+00.00	289.78	12+00.00	288.99
10+20.00	289.57	12+16.00	289.02
10+40.00	289.38	12+20.00	289.03
10+42.50	289.35	12+40.00	289.10
10+60.00	289.25	12+60.00	289.19
10+80.00	289.15	12+80.00	289.30
10+96.00	289.08	12+88.00	289.35
11+00.00	289.07	13+00.00	289.43
11+20.00	289.01	13+20.00	289.59
11+40.00	288.97	13+40.00	289.76
11+44.00	288.97	13+60.00	289.96
11+60.00	288.95	13+77.54	290.14
11+80.00	288.96	-	-

RW QUANTITIES ("RW302ML")

ITEM	TOTAL
STRUCTURE EXCAVATION (RETAINING WALL)	800 CY
STRUCTURE BACKFILL (RETAINING WALL)	1,270 CY
PERVIOUS BACKFILL MATERIAL (RETAINING WALL)	67 CY
STRUCTURAL CONCRETE (RETAINING WALL)	440 CY
BAR REINFORCING STEEL (RETAINING WALL)	48,800 LB
Conc BARRIER (TYPE 736B Mod)	378 LF
ARCHITECTURAL TREATMENT (ASHLAR TILE TEXTURE)	1,855 SQFT

RW QUANTITIES ("RW302MR")

ITEM	TOTAL
STRUCTURE EXCAVATION (RETAINING WALL)	800 CY
STRUCTURE BACKFILL (RETAINING WALL)	1,270 CY
PERVIOUS BACKFILL MATERIAL (RETAINING WALL)	67 CY
STRUCTURAL CONCRETE (RETAINING WALL)	440 CY
BAR REINFORCING STEEL (RETAINING WALL)	48,800 LB
Conc BARRIER (TYPE 736B Mod)	378 LF
ARCHITECTURAL TREATMENT (ASHLAR TILE TEXTURE)	1,855 SQFT

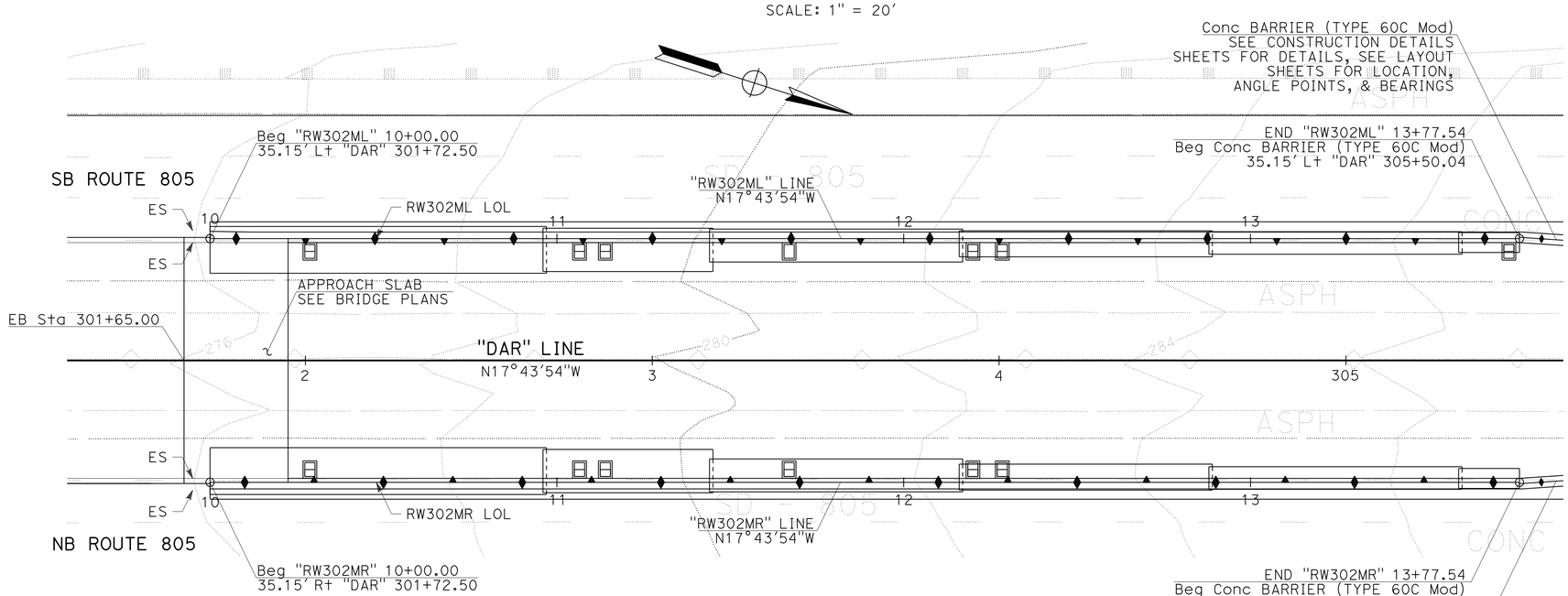

LEGEND:

DRAINAGE INLET, SEE DRAINAGE PLANS

PLAN

SCALE: 1" = 20'

NOTES:

1. ELEVATION SHOWN ARE FOR "RW302MR". MIRROR ELEVATION FOR "RW302ML".
2. TOP OF WALL ELEVATIONS CONTROLLED BY RAMP ES ELEVATIONS. FINISH GRADE ELEVATIONS AT FACE OF WALL CONTROLLED BY FREEWAY ES ELEVATIONS.

LEGEND:

STANDARD PLAN SHEET No.
DETAIL No.

APPROVED FOR RETAINING WALL WORK ONLY

RETAINING WALL PLAN
RW No. 302ML & 302MR

SCALE AS SHOWN **R5-1**

STATE OF CALIFORNIA - DEPARTMENT OF TRANSPORTATION
Caltrans
CONSULTANT FUNCTIONAL SUPERVISOR: GERARD LUMABAS
CALCULATED-DESIGNED BY: DAVID LAYNE
CHECKED BY: PAUL KOSINSKI
REVISED BY / DATE REVISED

LAST REVISION 06-13-12 | DATE PLOTTED => 12-SEP-2012 | TIME PLOTTED => 16:22

Dist	COUNTY	ROUTE	POST MILES TOTAL PROJECT	SHEET No.	TOTAL SHEETS
11	SD	805	4.7/5.6	361	650

David Layne 05-24-12
REGISTERED CIVIL ENGINEER DATE

06-25-12
PLANS APPROVAL DATE

REGISTERED PROFESSIONAL ENGINEER
DAVID LAYNE
No. C74349
Exp. 06-30-13
CIVIL
STATE OF CALIFORNIA

THE STATE OF CALIFORNIA OR ITS OFFICERS OR AGENTS SHALL NOT BE RESPONSIBLE FOR THE ACCURACY OR COMPLETENESS OF SCANNED COPIES OF THIS PLAN SHEET.

DOKKEN ENGINEERING
5675 RUFFIN Rd
SUITE 250
SAN DIEGO, CA 92123

SANDAG
401 B St
SUITE 800
SAN DIEGO, CA 92101

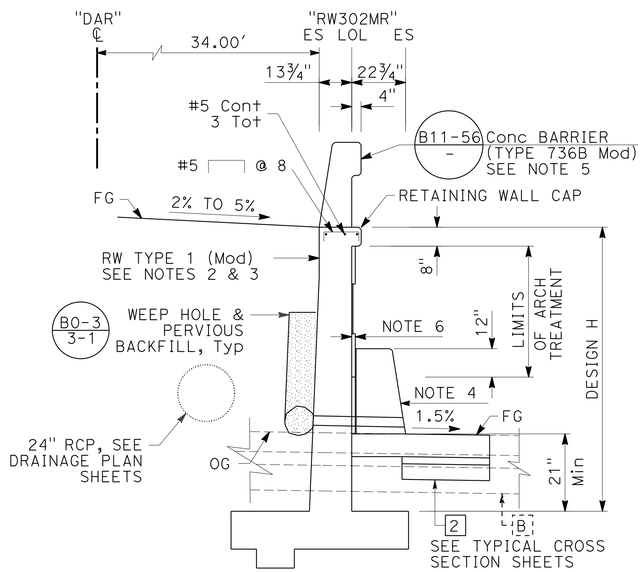

TYPICAL SECTION
NO SCALE
"RW302MR" 10+00.00 TO 13+14.54
B3-6

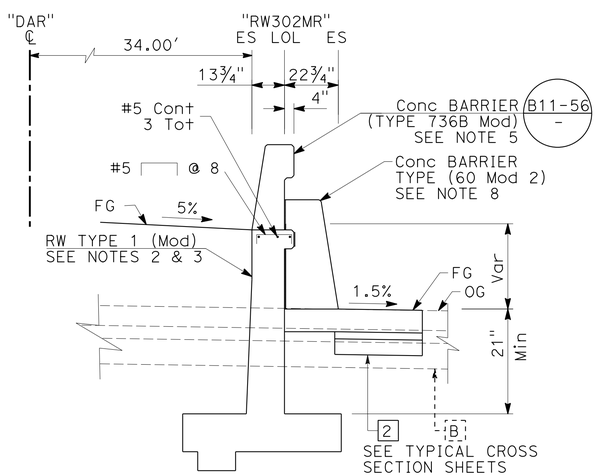

TYPICAL SECTION
NO SCALE
"RW302MR" 13+14.54 TO 13+77.54
B3-6

NOTES:

1. TYPICAL SECTIONS AND DETAILS SHOWN ARE FOR "RW302MR". MIRROR TYPICAL SECTIONS AND DETAILS FOR "RW302ML".
2. FOR RW REINFORCEMENT NOT SHOWN, SEE SHEET C-73.
3. BEGIN WALL BATTER 1-9" FROM TOP OF RETAINING WALL.
4. Conc BARRIER (TYPE 60 Mod). SEE CONSTRUCTION DETAILS SHEETS.
5. FOR BARRIER REINFORCEMENT NOT SHOWN, SEE Std PLAN B11-56.
6. ARCHITECTURAL TREATMENT. (ASHLAR TILE TEXTURE.)
7. TOP OF WALL ELEVATIONS CONTROLLED BY RAMP ES ELEVATIONS. FINISH GRADE ELEVATIONS AT FACE OF WALL CONTROLLED BY FREEWAY ES ELEVATIONS.
8. FOR DETAILS NOT SHOWN, SEE CONSTRUCTION DETAIL SHEETS AND SHEET R5-3.
9. SEE ADDITIONAL RETAINING WALL DETAILS ON SHEET C-75.

APPROVED FOR RETAINING WALL WORK ONLY

RETAINING WALL DETAILS
RW No. 302ML & 302MR

SCALE AS SHOWN

R5-2

STATE OF CALIFORNIA - DEPARTMENT OF TRANSPORTATION
Caltrans

CONSULTANT FUNCTIONAL SUPERVISOR: GERARD LUMABAS
CALCULATED-DESIGNED BY: DAVID LAYNE
CHECKED BY: PAUL KOSINSKI
REVISED BY
DATE REVISED

LAST REVISION 06-13-12
DATE PLOTTED => 12-SEP-2012
TIME PLOTTED => 16:22

Dist	COUNTY	ROUTE	POST MILES TOTAL PROJECT	SHEET No.	TOTAL SHEETS
11	SD	805	4.7/5.6	362	650

REGISTERED CIVIL ENGINEER 05-24-12 DATE

06-25-12
PLANS APPROVAL DATE

REGISTERED PROFESSIONAL ENGINEER DAVID LAYNE No. C74349 Exp. 06-30-13 CIVIL STATE OF CALIFORNIA

THE STATE OF CALIFORNIA OR ITS OFFICERS OR AGENTS SHALL NOT BE RESPONSIBLE FOR THE ACCURACY OR COMPLETENESS OF SCANNED COPIES OF THIS PLAN SHEET.

DOKKEN ENGINEERING
5675 RUFFIN Rd
SUITE 250
SAN DIEGO, CA 92123

SANDAG
401 B St
SUITE 800
SAN DIEGO, CA 92101

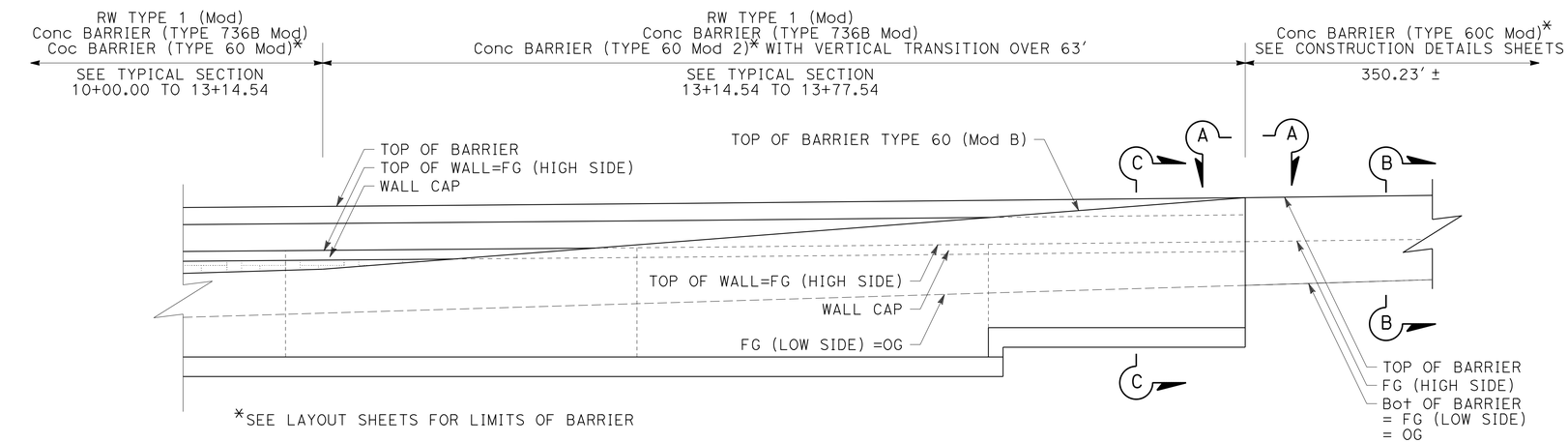

PARTIAL ELEVATION
SCALE: 1" = 5'

NOTES:

1. ELEVATION AND TYPICAL SECTIONS AND DETAILS SHOWN ARE FOR "RW302MR". MIRROR ELEVATION, TYPICAL SECTIONS, AND DETAILS FOR "RW302ML".
2. FOR LIMITS OF Conc BARRIER (TYPE 60 Mod), Conc BARRIER (TYPE 60 Mod 2), AND Conc BARRIER (TYPE 60C Mod) SEE LAYOUT SHEETS. QUANTITIES OF THESE THREE BARRIER TYPES INCLUDED IN SUMMARY OF QUANTITY SHEETS.

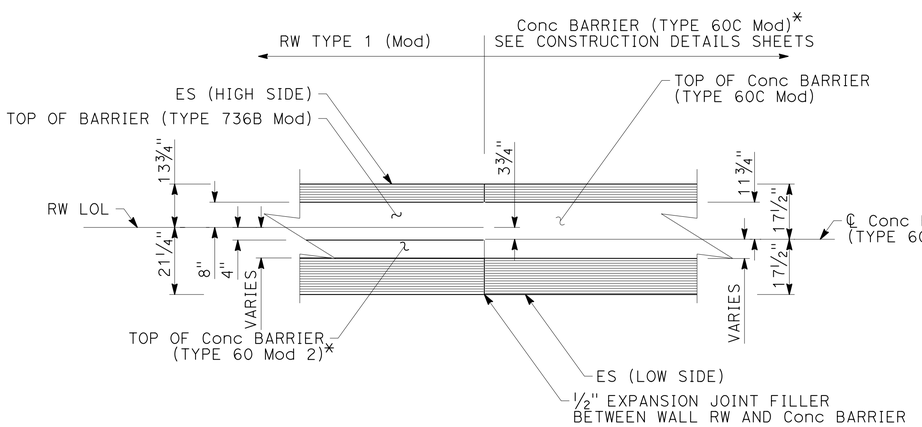

SECTION A-A
SCALE: ½" = 1'

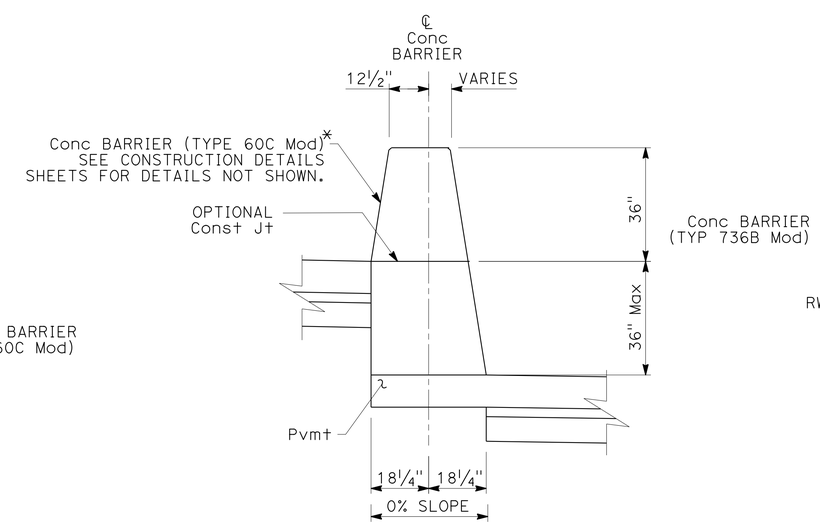

SECTION B-B
SCALE: ½" = 1'

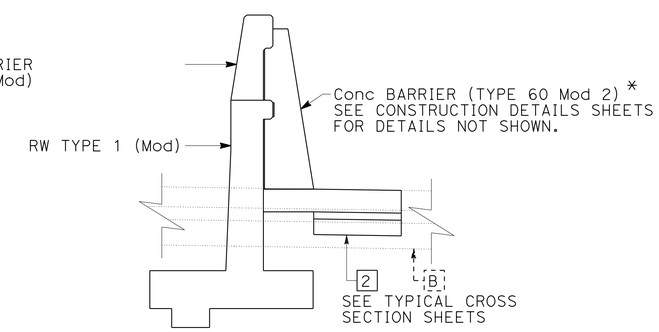

FOR DETAILS NOT SHOWN SEE
TYPICAL SECTION 13+14.54 TO 13+77.54

SECTION C-C
SCALE: ⅜" = 1'

RETAINING WALL DETAILS
RW No. 302ML & 302MR

SCALE AS SHOWN

R5-3

APPROVED FOR RETAINING WALL WORK ONLY

STATE OF CALIFORNIA - DEPARTMENT OF TRANSPORTATION
Caltrans

CONSULTANT FUNCTIONAL SUPERVISOR: GERARD LUMABAS
CALCULATED-DESIGNED BY: DAVID LAYNE
CHECKED BY: PAUL KOSINSKI
REVISED BY
DATE REVISED

LAST REVISION 06-13-12
DATE PLOTTED => 12-SEP-2012
TIME PLOTTED => 16:22

Dist	COUNTY	ROUTE	POST MILES TOTAL PROJECT	SHEET No.	TOTAL SHEETS
11	SD	805	4.7/5.6	363	650

David Layne 05-24-12
REGISTERED CIVIL ENGINEER DATE

06-25-12
PLANS APPROVAL DATE

REGISTERED PROFESSIONAL ENGINEER
DAVID LAYNE
No. C74349
Exp. 06-30-13
CIVIL
STATE OF CALIFORNIA

THE STATE OF CALIFORNIA OR ITS OFFICERS OR AGENTS SHALL NOT BE RESPONSIBLE FOR THE ACCURACY OR COMPLETENESS OF SCANNED COPIES OF THIS PLAN SHEET.

DOKKEN ENGINEERING
5675 RUFFIN Rd
SUITE 250
SAN DIEGO, CA 92123

SANDAG
401 B St
SUITE 800
SAN DIEGO, CA 92101

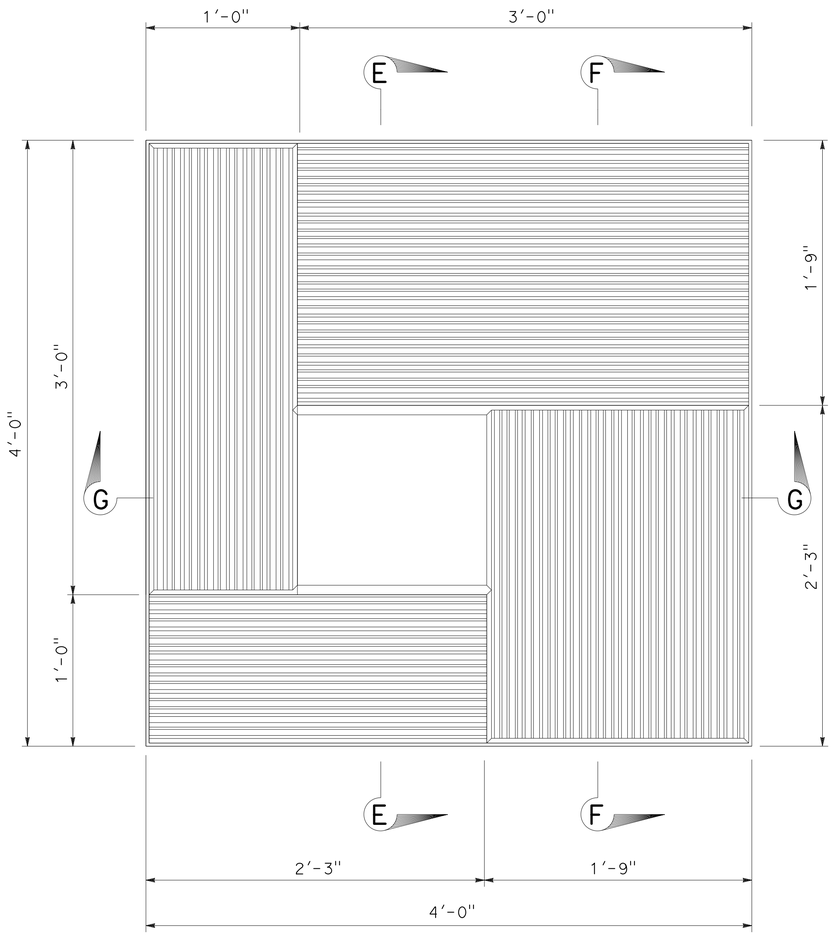

ASHLAR TILE TEXTURE DETAIL
SCALE: 2" = 1'

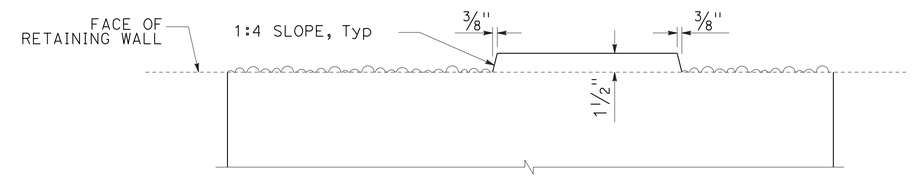

SECTION E-E
SCALE: 2" = 1'

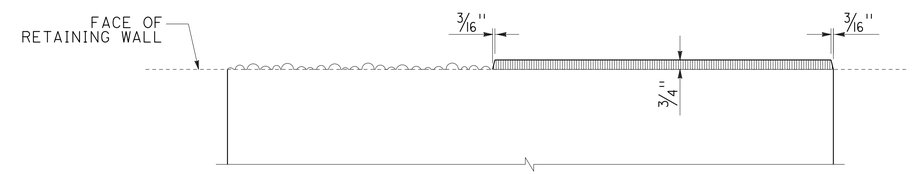

SECTION F-F
SCALE: 2" = 1'

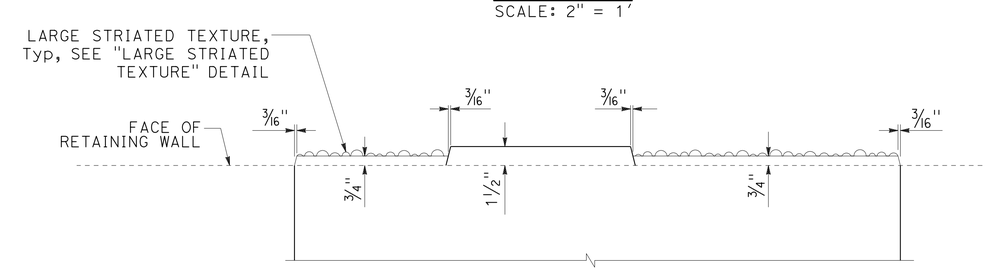

SECTION G-G
SCALE: 2" = 1'

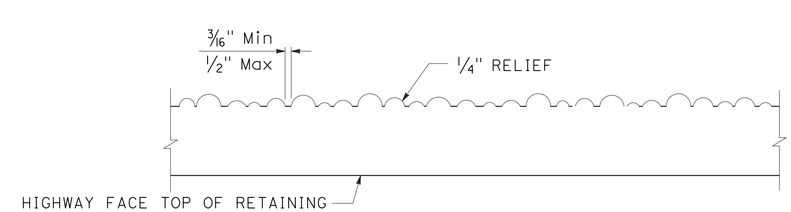

LARGE STRIATED TEXTURE DETAIL
SCALE: 4" = 1'

RETAINING WALL DETAILS
RW No. 302ML & 302MR
SCALE AS SHOWN

R5-4

APPROVED FOR RETAINING WALL WORK ONLY

STATE OF CALIFORNIA - DEPARTMENT OF TRANSPORTATION
Caltrans

CONSULTANT FUNCTIONAL SUPERVISOR: GERARD LUMABAS
CALCULATED-DESIGNED BY: DAVID LAYNE
CHECKED BY: PAUL KOSINSKI
REVISED BY
DATE REVISED

LAST REVISION 06-13-12
DATE PLOTTED => 12-SEP-2012
TIME PLOTTED => 16:22

DIST	COUNTY	ROUTE	POST MILES TOTAL PROJECT	SHEET No.	TOTAL SHEETS
11	SD	805	4.7/5.6	364	650

REGISTERED CIVIL ENGINEER 11-10-11

06-25-12
PLANS APPROVAL DATE

The State of California or its officers or agents shall not be responsible for the accuracy or completeness of electronic copies of this plan sheet.

REGISTERED PROFESSIONAL ENGINEER David T-M Liao No. C59838 Exp. 12-31-13 CIVIL STATE OF CALIFORNIA

This LOTB sheet was prepared in accordance with the Caltrans Soil & Rock Logging, Classification, & Presentation Manual (2007 Edition).

BENCH MARK

BM 805-5.00, Brass disk in sidewalk on north side of E. Palomar St. OC bridge, at Station 298+46.0, Right 60 feet of "DAR" Line/"A1" Line.
Elevation: 300.93 feet
NAVD 1988 (Vertical)
NAD83 (Horizontal)

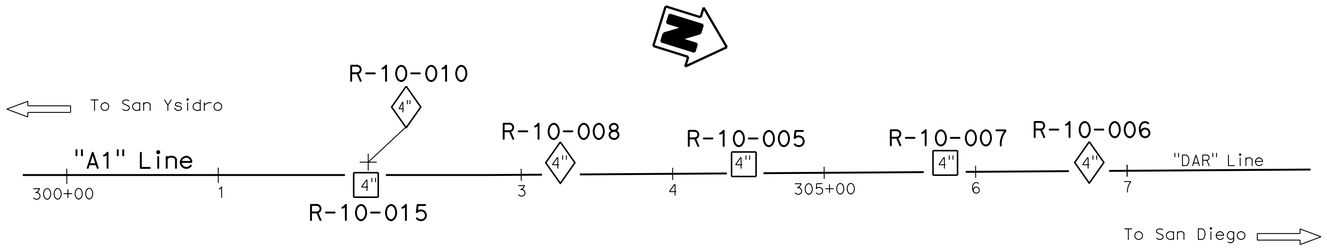

PLAN

1" = 50'

Notes:

1. Ground water was not encountered during the 2010 subsurface investigation.
2. RQD designated with "N/A" (not applicable) indicates that the rock encountered within the drill interval was not sound rock, therefore RQD was not calculated.
3. Plan sheets provided by Design, show that "A1" Line = "DAR" Line.

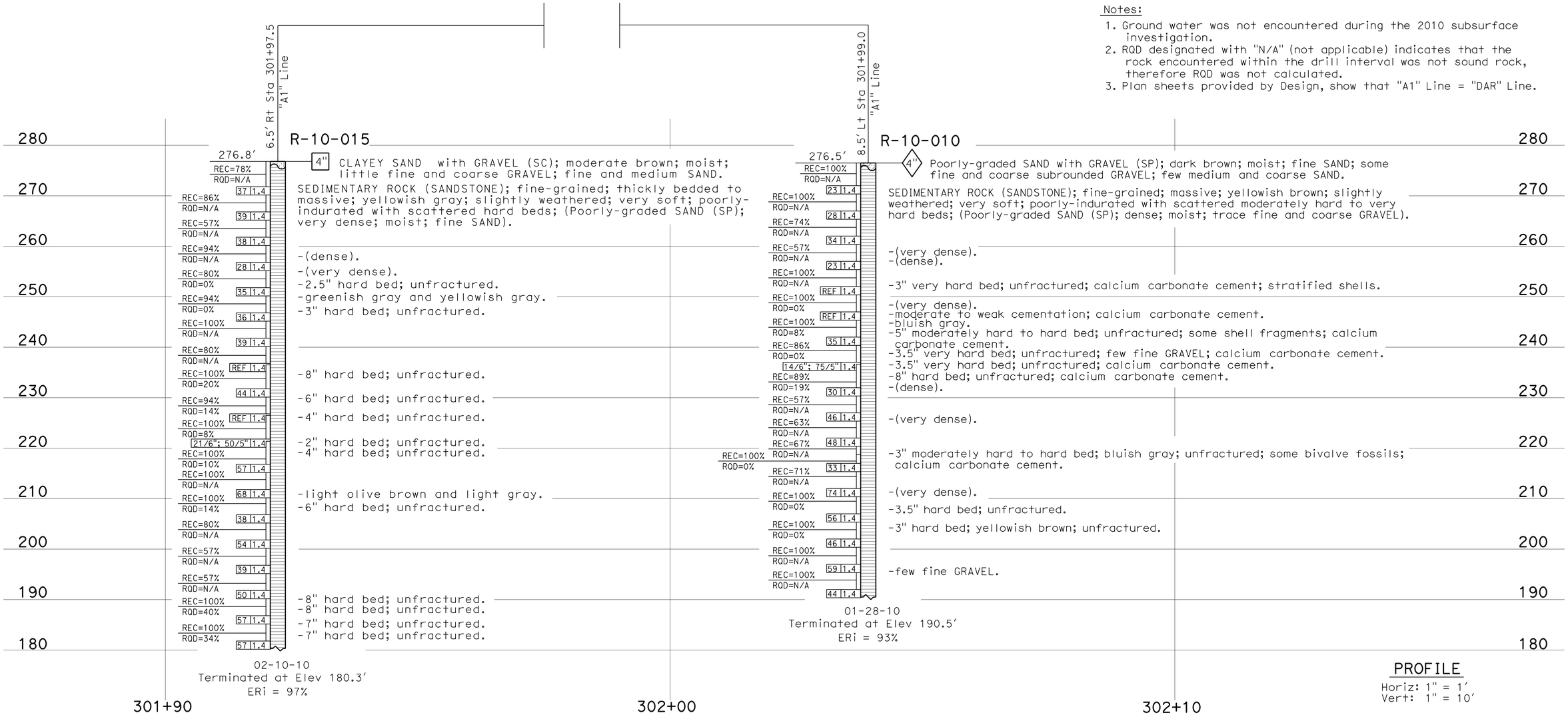

PROFILE

Horiz: 1" = 1'
Vert: 1" = 10'

ENGINEERING SERVICES	GEOTECHNICAL SERVICES	STATE OF CALIFORNIA DEPARTMENT OF TRANSPORTATION	DIVISION OF ENGINEERING SERVICES STRUCTURE DESIGN DESIGN BRANCH X	BRIDGE NO. / POST MILE 5.07	RETAINING WALLS 302ML AND 302MR LOG OF TEST BORINGS 1 OF 6
FUNCTIONAL SUPERVISOR NAME: M. DeSalvatore	DRAWN BY: F. Nguyen, I.G-Remmen CHECKED BY: E. Neupert	FIELD INVESTIGATION BY: TM Liao/J. Klamecki			

OGS CIVIL LOG OF TEST BORINGS SHEET

ORIGINAL SCALE IN INCHES FOR REDUCED PLANS 0 1 2 3

UNIT: 3643
PROJECT NUMBER & PHASE: 11000200511 CONTRACT NO.: 11-2T1821

DISREGARD PRINTS BEARING EARLIER REVISION DATES

REVISION DATES

SHEET R5-5

FILE => 1100020051qe005.dgn

USERNAME => s127400 DATE PLOTTED => 12-SEP-2012 TIME PLOTTED => 16:22

DIST	COUNTY	ROUTE	POST MILES TOTAL PROJECT	SHEET No.	TOTAL SHEETS
11	SD	805	4.7/5.6	365	650

REGISTERED CIVIL ENGINEER 11-10-11

06-25-12
PLANS APPROVAL DATE

REGISTERED PROFESSIONAL ENGINEER David T-M Liao No. C59838 Exp. 12-31-13 CIVIL STATE OF CALIFORNIA

The State of California or its officers or agents shall not be responsible for the accuracy or completeness of electronic copies of this plan sheet.

This LOTB sheet was prepared in accordance with the Caltrans Soil & Rock Logging, Classification, & Presentation Manual (2007 Edition).

FOR PLAN VIEW, SEE
"LOG OF TEST BORINGS 1 OF 6"

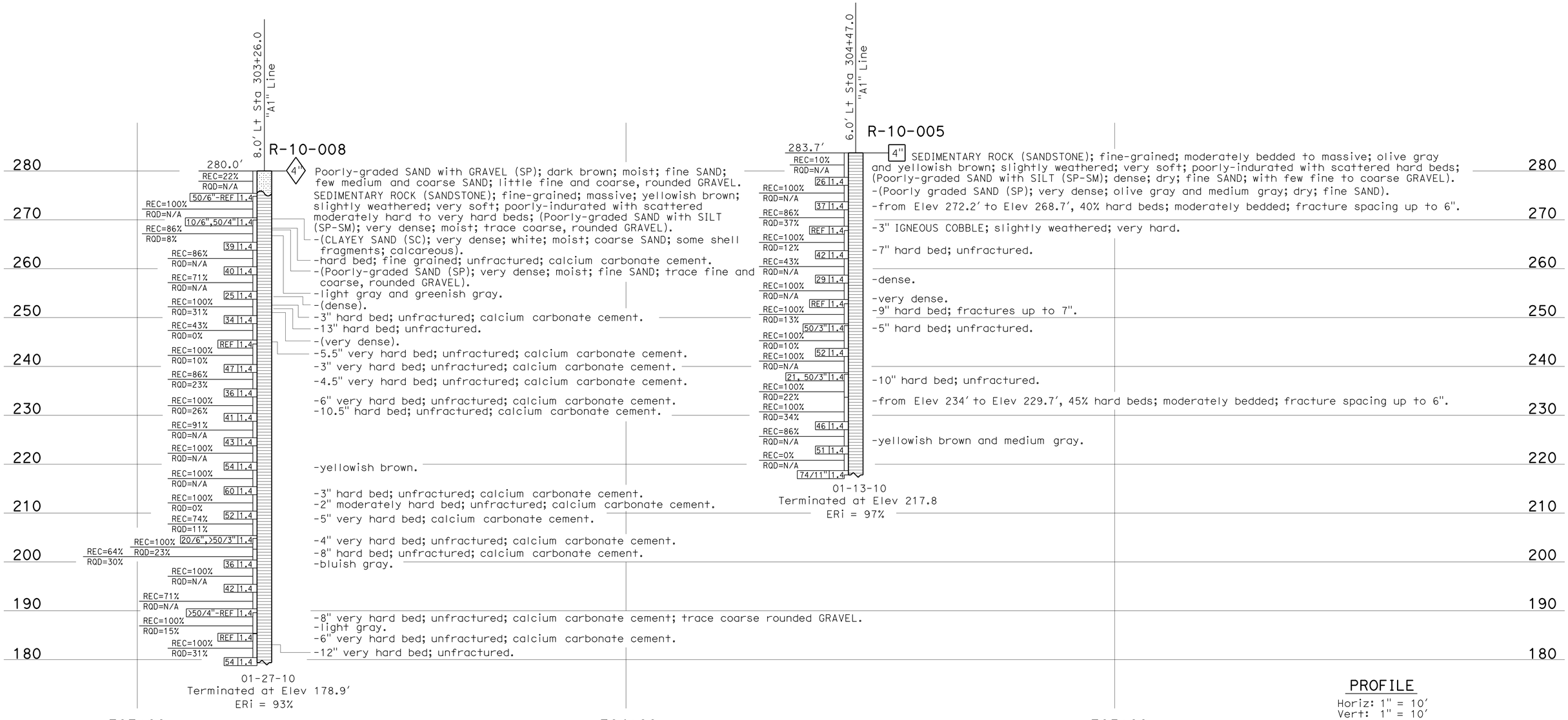

PROFILE
Horiz: 1" = 10'
Vert: 1" = 10'

ENGINEERING SERVICES	GEOTECHNICAL SERVICES	STATE OF CALIFORNIA DEPARTMENT OF TRANSPORTATION	DIVISION OF ENGINEERING SERVICES STRUCTURE DESIGN DESIGN BRANCH X	BRIDGE NO. / POST MILE 5.07	RETAINING WALLS 302ML AND 302MR LOG OF TEST BORINGS 2 OF 6
FUNCTIONAL SUPERVISOR NAME: M. DeSalvatore	DRAWN BY: F. Nguyen, I.G-Remmen CHECKED BY: E. Neupert	FIELD INVESTIGATION BY: TM Liao/J. Klamecki			

OGS CIVIL LOG OF TEST BORINGS SHEET

ORIGINAL SCALE IN INCHES FOR REDUCED PLANS 0 1 2 3

UNIT: 3643
PROJECT NUMBER & PHASE: 11000200511 CONTRACT NO.: 11-2T1821

DISREGARD PRINTS BEARING EARLIER REVISION DATES

REVISION DATES

SHEET R5-6

FILE => 1100020051qe006.dgn

USERNAME => s127400 DATE PLOTTED => 12-SEP-2012 TIME PLOTTED => 16:23

DIST	COUNTY	ROUTE	POST MILES TOTAL PROJECT	SHEET No.	TOTAL SHEETS
11	SD	805	4.7/5.6	366	650

REGISTERED CIVIL ENGINEER 11-10-11

06-25-12
PLANS APPROVAL DATE

REGISTERED PROFESSIONAL ENGINEER David T-M Liao No. C59838 Exp. 12-31-13 CIVIL STATE OF CALIFORNIA

The State of California or its officers or agents shall not be responsible for the accuracy or completeness of electronic copies of this plan sheet.

This LOTB sheet was prepared in accordance with the Caltrans Soil & Rock Logging, Classification, & Presentation Manual (2007 Edition).

FOR PLAN VIEW, SEE
"LOG OF TEST BORINGS 1 OF 6"

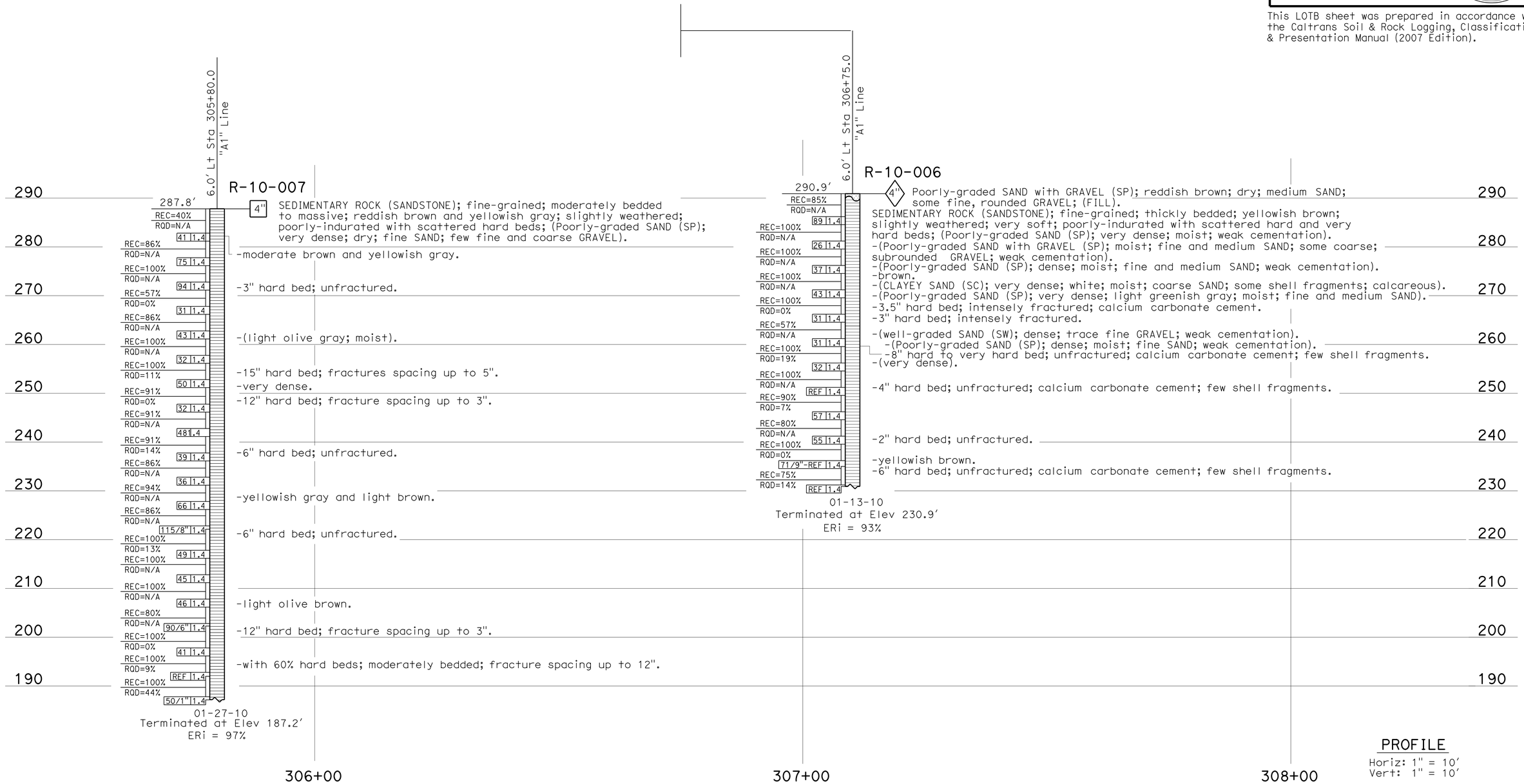

PROFILE
Horiz: 1" = 10'
Vert: 1" = 10'

ENGINEERING SERVICES	GEOTECHNICAL SERVICES	STATE OF CALIFORNIA DEPARTMENT OF TRANSPORTATION	DIVISION OF ENGINEERING SERVICES STRUCTURE DESIGN DESIGN BRANCH X	BRIDGE NO. / POST MILE 5.07	RETAINING WALLS 302ML AND 302MR LOG OF TEST BORINGS 3 OF 6
FUNCTIONAL SUPERVISOR NAME: M. DeSalvatore	DRAWN BY: F. Nguyen, I.G-Remmen CHECKED BY: E. Neupert	FIELD INVESTIGATION BY: TM Liao/J. Klamecki			

OGS CIVIL LOG OF TEST BORINGS SHEET

ORIGINAL SCALE IN INCHES FOR REDUCED PLANS 0 1 2 3

UNIT: 3643
PROJECT NUMBER & PHASE: 11000200511 CONTRACT NO.: 11-2T1821

DISREGARD PRINTS BEARING EARLIER REVISION DATES

REVISION DATES

SHEET R5-7

FILE => 1100020051ge007.dgn

USERNAME => s127400 DATE PLOTTED => 12-SEP-2012 TIME PLOTTED => 16:23

REFERENCE: CALTRANS SOIL & ROCK LOGGING, CLASSIFICATION, AND PRESENTATION MANUAL (JUNE 2007)

DIST	COUNTY	ROUTE	POST MILES TOTAL PROJECT	SHEET No.	TOTAL SHEETS
11	SD	805	4.7/5.6	367	650

REGISTERED CIVIL ENGINEER 11-10-11

06-25-12
PLANS APPROVAL DATE

The State of California or its officers or agents shall not be responsible for the accuracy or completeness of electronic copies of this plan sheet.

REGISTERED PROFESSIONAL ENGINEER
David T-M Liao
No. C59838
Exp. 12-31-13
CIVIL
STATE OF CALIFORNIA

CEMENTATION

Description	Criteria
Weak	Crumbles or breaks with handling or little finger pressure.
Moderate	Crumbles or breaks with considerable finger pressure.
Strong	Will not crumble or break with finger pressure.

CONSISTENCY OF COHESIVE SOILS

Description	Unconfined Compressive Strength (tsf)	Pocket Penetrometer Measurement (tsf)	Torvane Measurement (tsf)	Field Approximation
Very Soft	< 0.25	< 0.25	< 0.12	Easily penetrated several inches by fist
Soft	0.25 to 0.50	0.25 to 0.50	0.12 to 0.25	Easily penetrated several inches by thumb
Medium Stiff	0.50 to 1.0	0.50 to 1.0	0.25 to 0.50	Penetrated several inches by thumb with moderate effort
Stiff	1 to 2	1 to 2	0.50 to 1.0	Readily indented by thumb but penetrated only with great effort
Very Stiff	2 to 4	2 to 4	1.0 to 2.0	Readily indented by thumbnail
Hard	> 4.0	> 4.0	> 2.0	Indented by thumbnail with difficulty

BOREHOLE IDENTIFICATION

Symbol	Hole Type	Description
Size	A	Auger Boring
Size	R P	Rotary drilled boring Rotary percussion boring (air)
Size	R	Rotary drilled diamond core
Size	HD HA	Hand driven (1-inch soil tube) Hand Auger
●	D	Dynamic Cone Penetration Boring
▲	CPT	Cone Penetration Test (ASTM D 5778-95)
⬚	O	Other

Note: Size in inches.

PLASTICITY OF FINE-GRAINED SOILS

Description	Criteria
Nonplastic	A 1/8-inch thread cannot be rolled at any water content.
Low	The thread can barely be rolled and the lump cannot be formed when drier than the plastic limit.
Medium	The thread is easy to roll and not much time is required to reach the plastic limit. The thread cannot be rerolled after reaching the plastic limit. The lump crumbles when drier than the plastic limit.
High	It takes considerable time rolling and kneading to reach the plastic limit. The thread can be rerolled several times after reaching the plastic limit. The lump can be formed without crumbling when drier than the plastic limit.

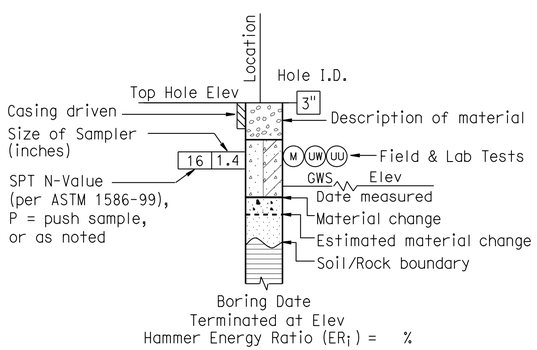

ROTARY BORING

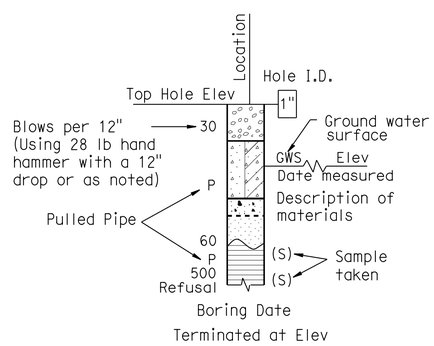

HAND BORING

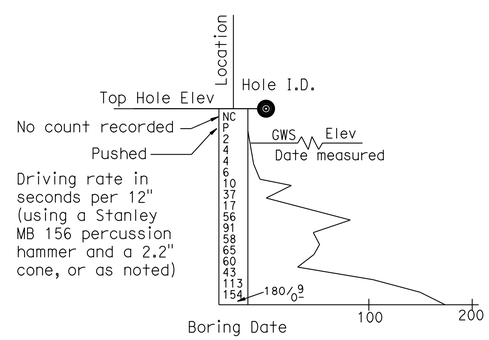

DYNAMIC CONE PENETRATION BORING

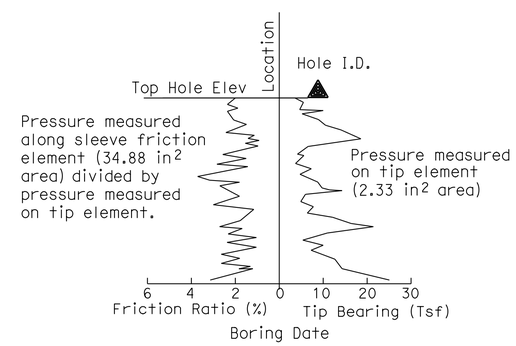

CONE PENETRATION TEST (CPT) SOUNDING

ENGINEERING SERVICES	MATERIALS AND GEOTECHNICAL SERVICES	STATE OF CALIFORNIA DEPARTMENT OF TRANSPORTATION	DIVISION OF ENGINEERING SERVICES STRUCTURE DESIGN DESIGN BRANCH X	BRIDGE NO. / POST MILE 5.07	RETAINING WALLS 302ML AND 302MR LOG OF TEST BORINGS 4 OF 6
	PREPARED BY: I.G-Remmen				

GS LOTB SOIL LEGEND

ORIGINAL SCALE IN INCHES FOR REDUCED PLANS 0 1 2 3

UNIT: 3643
PROJECT NUMBER & PHASE: 11000200511
CONTRACT NO.: 11-2T1821

DISREGARD PRINTS BEARING EARLIER REVISION DATES

REVISION DATES

SHEET R5-8

FILE => 1100020051qe008.dgn

USERNAME => s127400 DATE PLOTTED => 12-SEP-2012 TIME PLOTTED => 16:23

REFERENCE: CALTRANS SOIL & ROCK LOGGING, CLASSIFICATION, AND PRESENTATION MANUAL (JUNE 2007)

DIST	COUNTY	ROUTE	POST MILES TOTAL PROJECT	SHEET No.	TOTAL SHEETS
11	SD	805	4.7/5.6	368	650

REGISTERED CIVIL ENGINEER 11-10-11

06-25-12
PLANS APPROVAL DATE

The State of California or its officers or agents shall not be responsible for the accuracy or completeness of electronic copies of this plan sheet.

REGISTERED PROFESSIONAL ENGINEER David T-M Liao No. C59838 Exp. 12-31-13 CIVIL STATE OF CALIFORNIA

GROUP SYMBOLS AND NAMES

Graphic/Symbol	Group Names
GW	Well-graded GRAVEL Well-graded GRAVEL with SAND
GP	Poorly graded GRAVEL Poorly graded GRAVEL with SAND
GW-GM	Well-graded GRAVEL with SILT Well-graded GRAVEL with SILT and SAND
GW-GC	Well-graded GRAVEL with CLAY (or SILTY CLAY) Well-graded GRAVEL with CLAY and SAND (or SILTY CLAY and SAND)
GP-GM	Poorly graded GRAVEL with SILT Poorly graded GRAVEL with SILT and SAND
GP-GC	Poorly graded GRAVEL with CLAY (or SILTY CLAY) Poorly graded GRAVEL with CLAY and SAND (or SILTY CLAY and SAND)
GM	SILTY GRAVEL SILTY GRAVEL with SAND
GC	CLAYEY GRAVEL CLAYEY GRAVEL with SAND
GC-GM	SILTY, CLAYEY GRAVEL SILTY, CLAYEY GRAVEL with SAND
SW	Well-graded SAND Well-graded SAND with GRAVEL
SP	Poorly graded SAND Poorly graded SAND with GRAVEL
SW-SM	Well-graded SAND with SILT Well-graded SAND with SILT and GRAVEL
SW-SC	Well-graded SAND with CLAY (or SILTY CLAY) Well-graded SAND with CLAY and GRAVEL (or SILTY CLAY and GRAVEL)
SP-SM	Poorly graded SAND with SILT Poorly graded SAND with SILT and GRAVEL
SP-SC	Poorly graded SAND with CLAY (or SILTY CLAY) Poorly graded SAND with CLAY and GRAVEL (or SILTY CLAY and GRAVEL)
SM	SILTY SAND SILTY SAND with GRAVEL
SC	CLAYEY SAND CLAYEY SAND with GRAVEL
SC-SM	SILTY, CLAYEY SAND SILTY, CLAYEY SAND with GRAVEL
PT	PEAT
	COBBLES COBBLES and BOULDERS BOULDERS

Graphic/Symbol	Group Names
CL	Lean CLAY Lean CLAY with SAND Lean CLAY with GRAVEL SANDY lean CLAY SANDY lean CLAY with GRAVEL GRAVELLY lean CLAY GRAVELLY lean CLAY with SAND
CL-ML	SILTY CLAY SILTY CLAY with SAND SILTY CLAY with GRAVEL SANDY SILTY CLAY SANDY SILTY CLAY with GRAVEL GRAVELLY SILTY CLAY GRAVELLY SILTY CLAY with SAND
ML	SILT SILT with SAND SILT with GRAVEL SANDY SILT SANDY SILT with GRAVEL GRAVELLY SILT GRAVELLY SILT with SAND
OL	ORGANIC lean CLAY ORGANIC lean CLAY with SAND ORGANIC lean CLAY with GRAVEL SANDY ORGANIC lean CLAY SANDY ORGANIC lean CLAY with GRAVEL GRAVELLY ORGANIC lean CLAY GRAVELLY ORGANIC lean CLAY with SAND
OL	ORGANIC SILT ORGANIC SILT with SAND ORGANIC SILT with GRAVEL SANDY ORGANIC SILT SANDY ORGANIC SILT with GRAVEL GRAVELLY ORGANIC SILT GRAVELLY ORGANIC SILT with SAND
CH	Fat CLAY Fat CLAY with SAND Fat CLAY with GRAVEL SANDY fat CLAY SANDY fat CLAY with GRAVEL GRAVELLY fat CLAY GRAVELLY fat CLAY with SAND
MH	Elastic SILT Elastic SILT with SAND Elastic SILT with GRAVEL SANDY elastic SILT SANDY elastic SILT with GRAVEL GRAVELLY elastic SILT GRAVELLY elastic SILT with SAND
OH	ORGANIC fat CLAY ORGANIC fat CLAY with SAND ORGANIC fat CLAY with GRAVEL SANDY ORGANIC fat CLAY SANDY ORGANIC fat CLAY with GRAVEL GRAVELLY ORGANIC fat CLAY GRAVELLY ORGANIC fat CLAY with SAND
OH	ORGANIC elastic SILT ORGANIC elastic SILT with SAND ORGANIC elastic SILT with GRAVEL SANDY ORGANIC elastic SILT SANDY ORGANIC elastic SILT with GRAVEL GRAVELLY ORGANIC elastic SILT GRAVELLY ORGANIC elastic SILT with SAND
OL/OH	ORGANIC SOIL ORGANIC SOIL with SAND ORGANIC SOIL with GRAVEL SANDY ORGANIC SOIL SANDY ORGANIC SOIL with GRAVEL GRAVELLY ORGANIC SOIL GRAVELLY ORGANIC SOIL with SAND

FIELD AND LABORATORY TESTING

- (C) Consolidation (ASTM D 2435)
- (CL) Collapse Potential (ASTM D 5333)
- (CP) Compaction Curve (CTM 216)
- (CR) Corrosivity Testing (CTM 643, CTM 422, CTM 417)
- (CU) Consolidated Undrained Triaxial (ASTM D 4767)
- (DS) Direct Shear (ASTM D 3080)
- (EI) Expansion Index (ASTM D 4829)
- (M) Moisture Content (ASTM D 2216)
- (OC) Organic Content-% (ASTM D 2974)
- (P) Permeability (CTM 220)
- (PA) Particle Size Analysis (ASTM D 422)
- (PI) Plasticity Index (AASHTO T 90) Liquid Limit (AASHTO T 89)
- (PL) Point Load Index (ASTM D 5731)
- (PM) Pressure Meter
- (PP) Pocket Penetrometer
- (R) R-Value (CTM 301)
- (SE) Sand Equivalent (CTM 217)
- (SG) Specific Gravity (AASHTO T 100)
- (SL) Shrinkage Limit (ASTM D 427)
- (SW) Swell Potential (ASTM D 4546)
- (TV) Pocket Torvane
- (UC) Unconfined Compression-Soil (ASTM D 2166) Unconfined Compression-Rock (ASTM D 2938)
- (UU) Unconsolidated Undrained Triaxial (ASTM D 2850)
- (UW) Unit Weight (ASTM D 4767)
- (VS) Vane Shear (AASHTO T 223)

APPARENT DENSITY OF COHESIONLESS SOILS

Description	SPT N_{60} (Blows / 12 inches)
Very loose	0 - 4
Loose	5 - 10
Medium Dense	11 - 30
Dense	31 - 50
Very Dense	> 50

MOISTURE

Description	Criteria
Dry	Absence of moisture, dusty, dry to the touch
Moist	Damp but no visible water
Wet	Visible free water, usually soil is below water table

PERCENT OR PROPORTION OF SOILS

Description	Criteria
Trace	Particles are present but estimated to be less than 5%
Few	5 to 10%
Little	15 to 25%
Some	30 to 45%
Mostly	50 to 100%

PARTICLE SIZE

Description		Size
Boulder		> 12"
Cobble		3" to 12"
Gravel	Coarse	3/4" to 3"
	Fine	No. 4 to 3/4"
Sand	Coarse	No. 10 to No. 4
	Medium	No. 40 to No. 10
	Fine	No. 200 to No. 40

ENGINEERING SERVICES

MATERIALS AND GEOTECHNICAL SERVICES

PREPARED BY: I.G-Remmen

STATE OF CALIFORNIA DEPARTMENT OF TRANSPORTATION

DIVISION OF ENGINEERING SERVICES STRUCTURE DESIGN DESIGN BRANCH X

BRIDGE NO.

POST MILE 5.07

RETAINING WALLS 302ML AND 302MR

LOG OF TEST BORINGS 5 OF 6

GS LOTB SOIL LEGEND

ORIGINAL SCALE IN INCHES FOR REDUCED PLANS 0 1 2 3

UNIT: 3643
PROJECT NUMBER & PHASE: 11000200511
CONTRACT NO.: 11-2T1821

DISREGARD PRINTS BEARING EARLIER REVISION DATES

REVISION DATES

SHEET R5-9

FILE => 1100020051qe009.dgn

USERNAME => s127400 DATE PLOTTED => 12-SEP-2012 TIME PLOTTED => 16:23

DIST	COUNTY	ROUTE	POST MILES TOTAL PROJECT	SHEET No.	TOTAL SHEETS
11	SD	805	4.7/5.6	369	650

REGISTERED CIVIL ENGINEER 11-10-11

06-25-12
PLANS APPROVAL DATE

REGISTERED PROFESSIONAL ENGINEER David T-M Liao No. C59838 Exp. 12-31-13 CIVIL STATE OF CALIFORNIA

The State of California or its officers or agents shall not be responsible for the accuracy or completeness of electronic copies of this plan sheet.

REFERENCE: CALTRANS SOIL & ROCK LOGGING, CLASSIFICATION, AND PRESENTATION MANUAL (JUNE 2007)

PERCENT CORE RECOVERY (REC) & ROCK QUALITY DESIGNATION (RQD)

$$REC = \frac{\sum \text{Length of the recovered core pieces (inches)}}{\text{Total length of core run (inches)}} \times 100\%$$

$$RQD = \frac{\sum \text{Length of intact core pieces} \geq 4''}{\text{Total length of core run (inches)}} \times 100\%$$

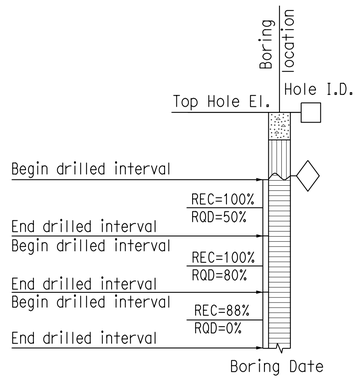

RELATIVE STRENGTH OF INTACT ROCK

Term	Uniaxial Compressive Strength (PSI)
Extremely Strong	> 30,000
Very Strong	14,500 - 30,000
Strong	7,000 - 14,500
Medium Strong	3,500 - 7,000
Weak	700 - 3,500
Very Weak	150 - 700
Extremely Weak	< 150

BEDDING SPACING

Description	Thickness / Spacing
Massive	Greater than 10 ft
Very thickly bedded	3 to 10 ft
Thickly bedded	1 to 3 ft
Moderately bedded	3-5/8" to 1 ft
Thinly bedded	1-1/4" to 3-5/8"
Very thinly bedded	3/8" to 1-1/4"
Laminated	Less than 3/8"

LEGEND OF ROCK MATERIALS

- IGNEOUS ROCK
- SEDIMENTARY ROCK
- METAMORPHIC ROCK

ROCK HARDNESS

Description	Criteria
Extremely Hard	Specimen cannot be scratched with a pocket knife or sharp pick; can only be chipped with repeated heavy hammer blows.
Very Hard	Specimen cannot be scratched with a pocket knife or sharp pick. Breaks with repeated heavy hammer blows.
Hard	Specimen can be scratched with a pocket knife or sharp pick with difficulty (heavy pressure). Heavy hammer blows required to break specimen.
Moderately Hard	Specimen can be scratched with pocket knife or sharp pick with light or moderate pressure. Core breaks with moderate hammer blows.
Moderately Soft	Specimen can be grooved 1/6" deep with a pocket knife or sharp pick with moderate or heavy pressure. Breaks with light hammer blow or heavy manual pressure.
Soft	Specimen can be grooved or gouged easily by a pocket knife or sharp pick with light pressure, can be scratched with fingernail. Breaks with light to moderate manual pressure.
Very Soft	Specimen can be readily indented, grooved or gouged with fingernail, or carved with a pocket knife. Breaks with light manual pressure.

FRACTURE DENSITY

Description	Observed Fracture Density
Unfractured	No fractures.
Very slightly fractured	Lengths greater than 3 feet.
Slightly fractured	Lengths from 1 to 3 feet with few lengths less than 1 foot or greater than 3 feet.
Moderately fractured	Lengths mostly in 4" to 1 foot range with most lengths about 8"
Intensely fractured	Lengths average from 1 to 4" with scattered fragmented intervals with lengths less than 4"
Very intensely fractured	Mostly chips and fragments with a few scattered short core lengths.

Combination descriptors (such as "Very intensely to intensely fractured") are used where equal distribution of both fracture density characteristics is present over a significant interval or exposure, or where characteristics are "in between" the descriptor definitions. Only two adjacent descriptors may be combined.

WEATHERING DESCRIPTORS FOR INTACT ROCK

Description	Diagnostic features					General Characteristics
	Chemical Weathering-Discoloration and/or oxidation		Mechanical Weathering-Grain boundary conditions (disaggregation) primarily for granitics and some coarse-grained sediments	Texture and Solutioning		
	Body of Rock	Fracture Surfaces		Texture	Solutioning	
Fresh	No discoloration, not oxidized.	No discoloration or oxidation.	No separation, intact (tight).	No change.	No solutioning.	Hammer rings when crystalline rocks are struck.
Slightly Weathered	Discoloration or oxidation is limited to surface of, or short distance from, fractures; some feldspar crystals are dull.	Minor to complete discoloration or oxidation of most surfaces.	No visible separation, intact (tight).	Preserved.	Minor leaching of some soluble minerals may be noted.	Hammer rings when crystalline rocks are struck. Body of rock not weakened.
Moderately Weathered	Discoloration or oxidation extends from fractures usually throughout; Fe-Mg minerals are "rusty," feldspar crystals are "cloudy."	All fracture surfaces are discolored or oxidized.	Partial separation of boundaries visible.	Generally preserved.	Soluble minerals may be mostly leached.	Hammer does not ring when rock is struck. Body of rock is slightly weakened.
Intensely Weathered	Discoloration or oxidation throughout; all feldspars and Fe-Mg minerals are altered to clay to some extent; or chemical alteration produces in-situ disaggregation, see grain boundary conditions.	All fracture surfaces are discolored or oxidized, surfaces friable.	Partial separation, rock is friable; in semiarid conditions granitics are disaggregated.	Texture altered by chemical disintegration (hydration, argillation).	Leaching of soluble minerals may be complete.	Dull sound when struck with hammer, usually can be broken with moderate to heavy manual pressure or by light hammer blow without reference to planes of weakness such as incipient or hairline fractures, or veinlets. Rock is significantly weakened.
Decomposed	Discolored or oxidized throughout, but resistant minerals such as quartz may be unaltered; all feldspars and Fe-Mg minerals are completely altered to clay.		Complete separation of grain boundaries (disaggregated).	Resembles a soil, partial or complete remnant rock structure may be preserved; leaching of soluble minerals usually complete.		Can be granulated by hand. Resistant minerals such as quartz may be present as "stringers" or "dikes."

Combination descriptors (such as "slightly weathered to fresh") are permissible where equal distribution of both weathering characteristics is present over significant intervals or where characteristics present are "in between" the diagnostic feature. However, combination descriptors should not be used where significant, identifiable zones can be delineated. Only two adjacent descriptors may be combined. "Very intensely weathered" is the combination descriptor for "intensely weathered to decomposed."

ENGINEERING SERVICES

MATERIALS AND GEOTECHNICAL SERVICES

PREPARED BY: I.G-Remmen

STATE OF CALIFORNIA DEPARTMENT OF TRANSPORTATION

DIVISION OF ENGINEERING SERVICES STRUCTURE DESIGN DESIGN BRANCH X

BRIDGE NO.

POST MILE 5.07

RETAINING WALLS 302ML AND 302MR

LOG OF TEST BORINGS 6 OF 6

GS LOTB SOIL LEGEND

ORIGINAL SCALE IN INCHES FOR REDUCED PLANS 0 1 2 3

UNIT: 3643
PROJECT NUMBER & PHASE: 11000200511 CONTRACT NO.: 11-2T1821

DISREGARD PRINTS BEARING EARLIER REVISION DATES

REVISION DATES

SHEET R5-10

FILE => 1100020051qe010.dgn

USERNAME => s127400 DATE PLOTTED => 12-SEP-2012 TIME PLOTTED => 16:23

Dist	COUNTY	ROUTE	POST MILES TOTAL PROJECT	SHEET No.	TOTAL SHEETS
11	SD	805	4.7/5.6	370	650

REGISTERED CIVIL ENGINEER 05-24-12 DATE

06-25-12
PLANS APPROVAL DATE

REGISTERED PROFESSIONAL ENGINEER DAVID LAYNE No. C74349 Exp. 06-30-13 CIVIL STATE OF CALIFORNIA

THE STATE OF CALIFORNIA OR ITS OFFICERS OR AGENTS SHALL NOT BE RESPONSIBLE FOR THE ACCURACY OR COMPLETENESS OF SCANNED COPIES OF THIS PLAN SHEET.

DOKKEN ENGINEERING
5675 RUFFIN Rd
SUITE 250
SAN DIEGO, CA 92123

SANDAG
401 B St
SUITE 800
SAN DIEGO, CA 92101

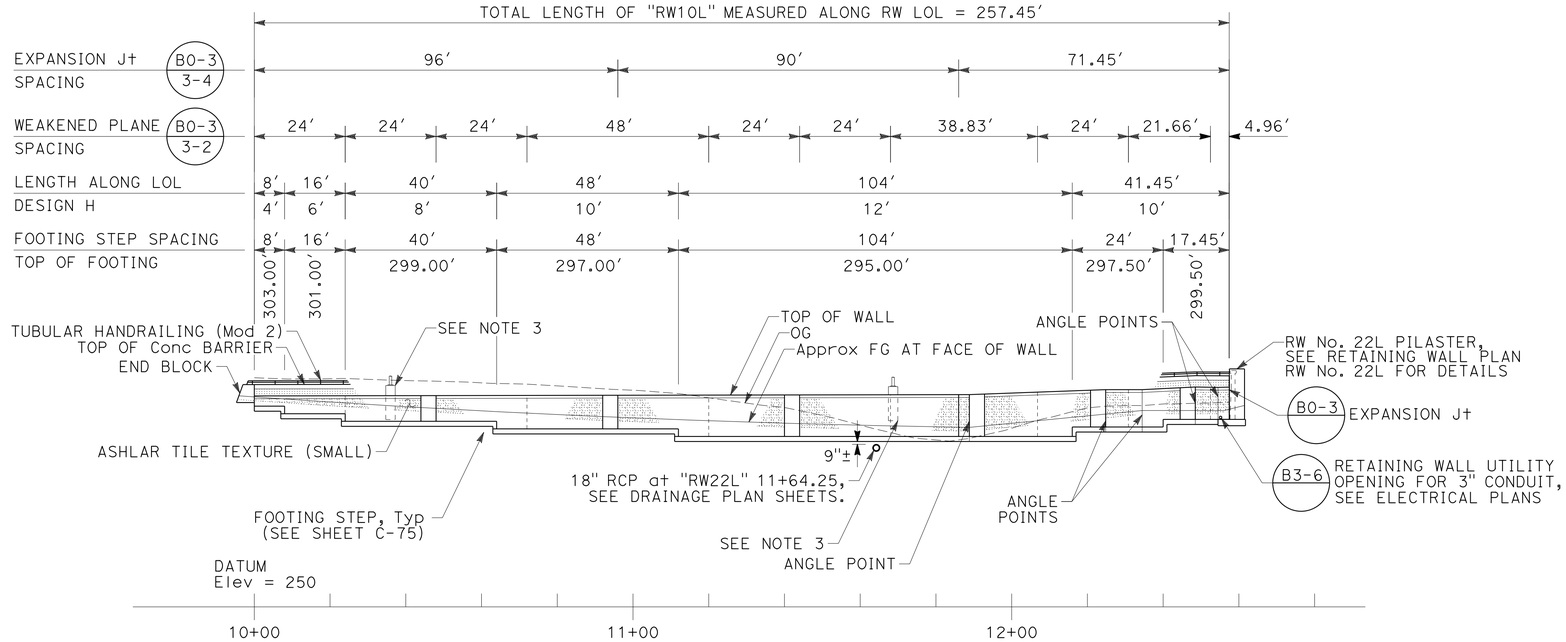

DEVELOPED ELEVATION

"RW10L" LINE
SCALE: 1" = 20'

TOP OF WALL	
STATION	ELEVATION
10+00	305.70
10+08 (2,3)	305.71
10+16	305.73
10+24 (2,3)	305.74
10+32	305.76
10+48	305.79
10+64 (2,3)	305.82
10+80	305.85
10+96	305.88
11+12 (2,3)	305.91
11+28	305.94
11+44	305.97
11+60	306.00
11+76	306.03
11+88.83 (4)	306.05
11+92	306.17
12+08	306.75
12+16 (2,3)	307.04
12+24	307.33
12+24.83 (4)	307.36
12+34.46 (4)	307.36
12+40 (3)	307.64
12+48.49 (4)	308.06
12+54.49 (4)	307.96
12+56	308.00
12+57.45	308.03

(1) ELEVATIONS PROVIDED AT 16' INTERVALS AND AT LOCATIONS NOTED.
(2) CHANGE IN DESIGN HEIGHT
(3) FOOTING STEP
(4) ANGLE POINT

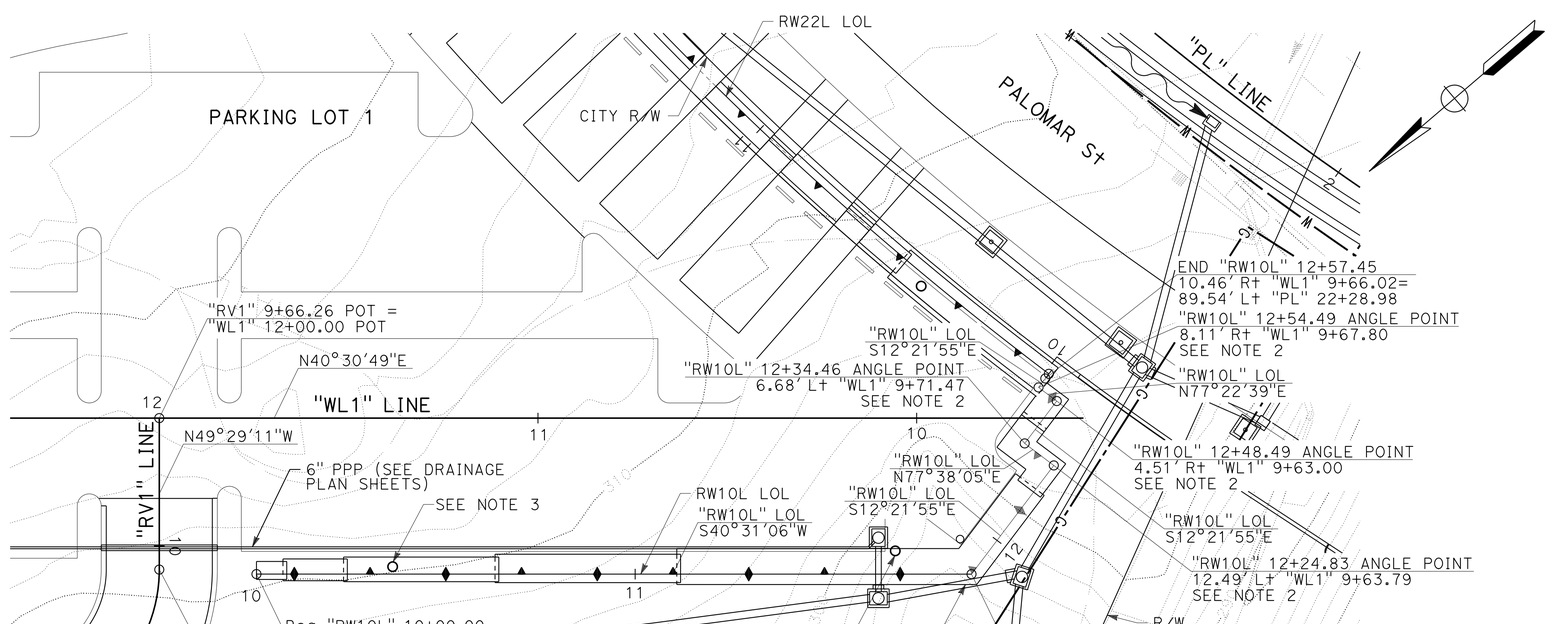

PLAN

SCALE: 1" = 20'

APPROVED FOR RETAINING WALL WORK ONLY

RW QUANTITIES ("RW10L")	
ITEM	TOTAL
STRUCTURE EXCAVATION (RETAINING WALL)	590 CY
STRUCTURE BACKFILL (RETAINING WALL)	600 CY
PERVIOUS BACKFILL MATERIAL (RETAINING WALL)	28 CY
STRUCTURAL CONCRETE (RETAINING WALL)	230 CY
BAR REINFORCING STEEL (RETAINING WALL)	24,500 LB
Conc BARRIER (TYPE 26 Mod)	258 LF
ARCHITECTURAL TREATMENT (LOUVER TEXTURE)	475 SQFT
ARCHITECTURAL TREATMENT (ASHLAR TILE TEXTURE (SMALL))	1,380 SQFT
TUBULAR HANDRAILING (Mod 2)	260 LF

NOTES:

1. NOT ALL UTILITIES SHOWN ON RETAINING WALL PLAN SHEETS. SEE UTILITY PLAN SHEETS
2. SEE RETAINING WALL DETAILS FOR ADDITIONAL REINFORCEMENT REQUIRED AT ANGLE POINT.
3. LIGHT POLE FOUNDATION TO BE ABOVE RW FOOTING, SEE ELECTRICAL PLANS FOR Approx LOCATION OF POLE

LEGEND:

STANDARD PLAN SHEET No.
DETAIL No.

RETAINING WALL PLAN
RW No. 10L

SCALE AS SHOWN

R6-1

STATE OF CALIFORNIA - DEPARTMENT OF TRANSPORTATION
Caltrans
CONSULTANT FUNCTIONAL SUPERVISOR: GERARD LUMABAS
CALCULATED-DESIGNED BY: DAVID LAYNE
CHECKED BY: PAUL KOSINSKI
REVISED BY
DATE REVISED

LAST REVISION 06-13-12
DATE PLOTTED => 12-SEP-2012
TIME PLOTTED => 16:23

Dist	COUNTY	ROUTE	POST MILES TOTAL PROJECT	SHEET No.	TOTAL SHEETS
11	SD	805	4.7/5.6	371	650

David Layne 05-24-12
REGISTERED CIVIL ENGINEER DATE

06-25-12
PLANS APPROVAL DATE

REGISTERED PROFESSIONAL ENGINEER
DAVID LAYNE
No. C74349
Exp. 06-30-13
CIVIL
STATE OF CALIFORNIA

THE STATE OF CALIFORNIA OR ITS OFFICERS OR AGENTS SHALL NOT BE RESPONSIBLE FOR THE ACCURACY OR COMPLETENESS OF SCANNED COPIES OF THIS PLAN SHEET.

DOKKEN ENGINEERING
5675 RUFFIN Rd
SUITE 250
SAN DIEGO, CA 92123

SANDAG
401 B St
SUITE 800
SAN DIEGO, CA 92101

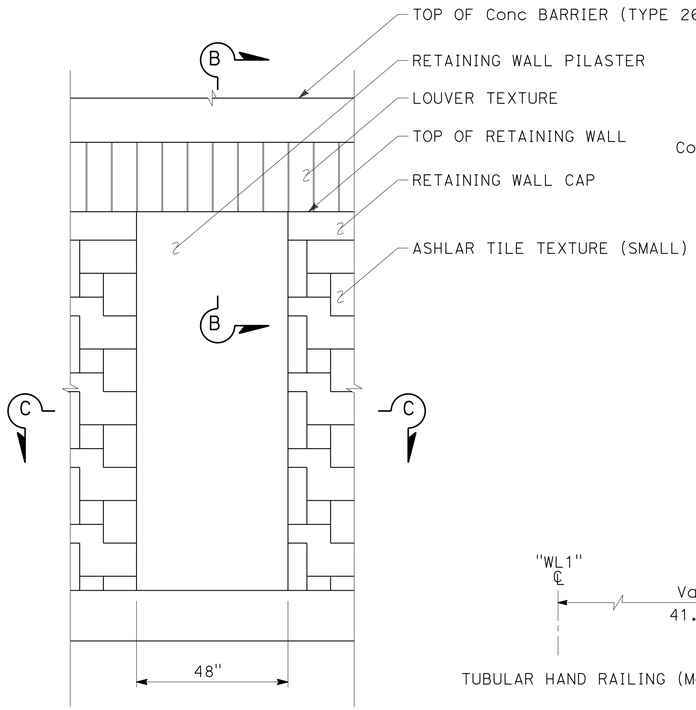

PILASTER DETAIL
SCALE: ½" = 1'

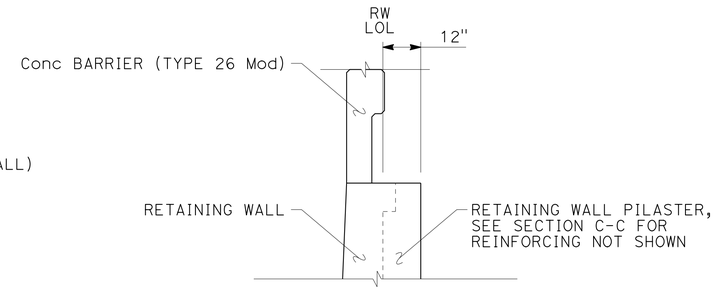

SECTION B-B
SCALE: ½" = 1'

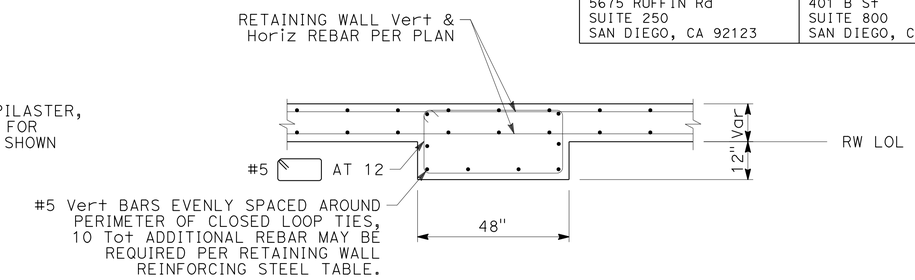

SECTION C-C
SCALE: ½" = 1'

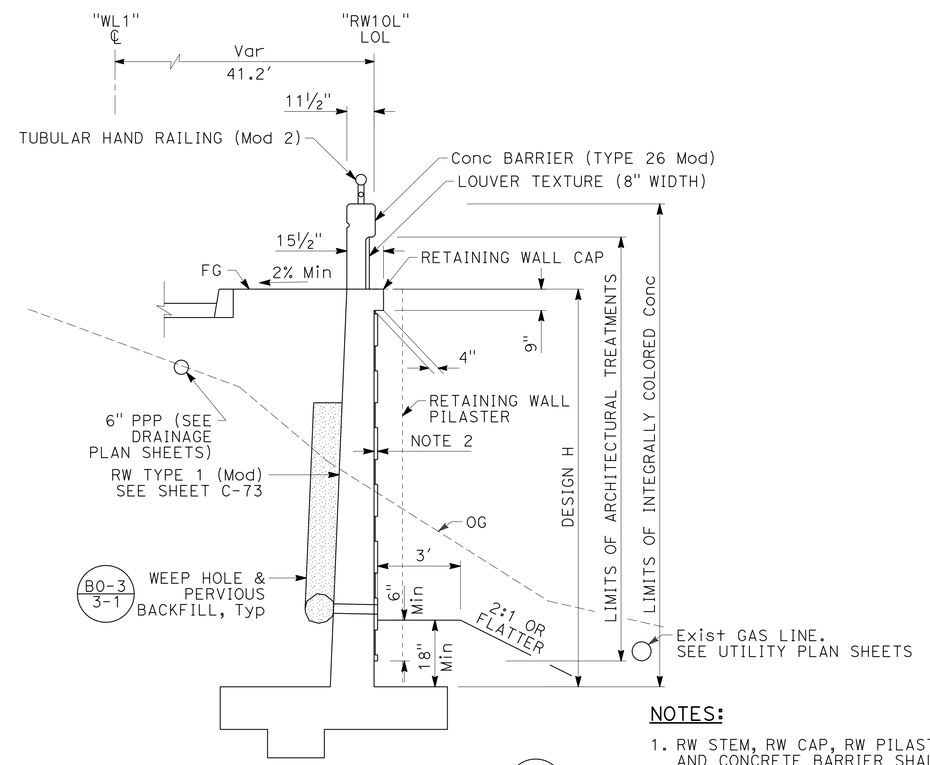

TYPICAL SECTION
NO SCALE
"RW10L" 10+00.00 TO 12+54.49
B3-6

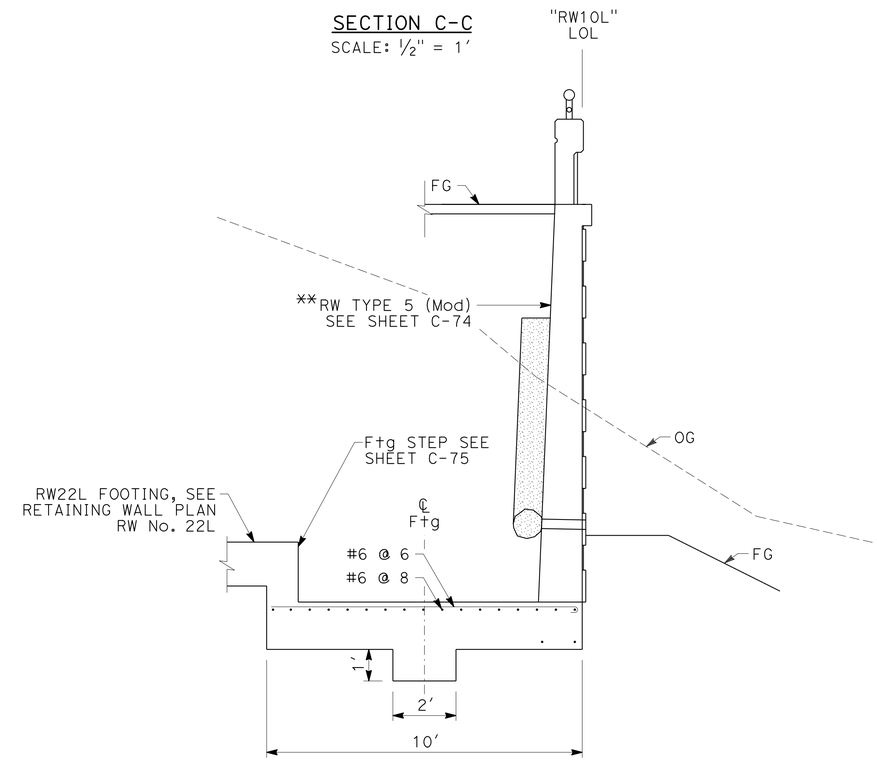

*TYPICAL SECTION
NO SCALE
"RW10L" 12+54.49 TO 12+57.45
B3-6

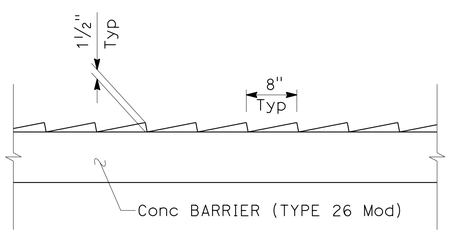

LOUVER TEXTURE DETAIL
SCALE: 1" = 1'

NOTES:

1. RW STEM, RW CAP, RW PILASTER, RW END WALL, AND CONCRETE BARRIER SHALL BE INTEGRALLY COLORED CONCRETE.
2. ARCHITECTURAL TREATMENT (ASHLAR TILE TEXTURE (SMALL))
3. SEE ADDITIONAL RETAINING WALL DETAILS ON SHEET C-75

*SEE TYPICAL SECTION "RW10L" 10+00 TO 11+58.49 FOR DETAILS NOT SHOWN
**SEE SHEET C-74 FOR STEM REINFORCEMENT NOT SHOWN
***SEE FOOTING OVERLAP DETAIL ON RW No. 22L DETAILS SHEETS

RETAINING WALL DETAILS
RW No. 10L

R6-2

SCALE AS SHOWN

APPROVED FOR RETAINING WALL WORK ONLY

STATE OF CALIFORNIA - DEPARTMENT OF TRANSPORTATION
Caltrans

CONSULTANT FUNCTIONAL SUPERVISOR: GERARD LUMABAS
CALCULATED-DESIGNED BY: DAVID LAYNE
CHECKED BY: PAUL KOSINSKI
REVISED BY
DATE REVISED

LAST REVISION 06-13-12
DATE PLOTTED => 12-SEP-2012
TIME PLOTTED => 16:23

Dist	COUNTY	ROUTE	POST MILES TOTAL PROJECT	SHEET No.	TOTAL SHEETS
11	SD	805	4.7/5.6	372	650

REGISTERED CIVIL ENGINEER 05-24-12 DATE

06-25-12
PLANS APPROVAL DATE

REGISTERED PROFESSIONAL ENGINEER DAVID LAYNE No. C74349 Exp. 06-30-13 CIVIL STATE OF CALIFORNIA

THE STATE OF CALIFORNIA OR ITS OFFICERS OR AGENTS SHALL NOT BE RESPONSIBLE FOR THE ACCURACY OR COMPLETENESS OF SCANNED COPIES OF THIS PLAN SHEET.

DOKKEN ENGINEERING
5675 RUFFIN Rd
SUITE 250
SAN DIEGO, CA 92123

SANDAG
401 B St
SUITE 800
SAN DIEGO, CA 92101

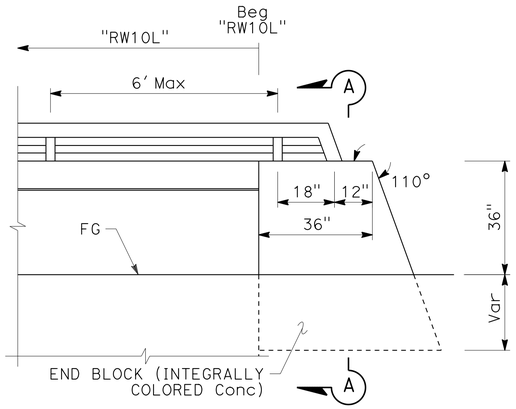

"RW61" END WALL DETAIL
SCALE: 1/2" = 1′

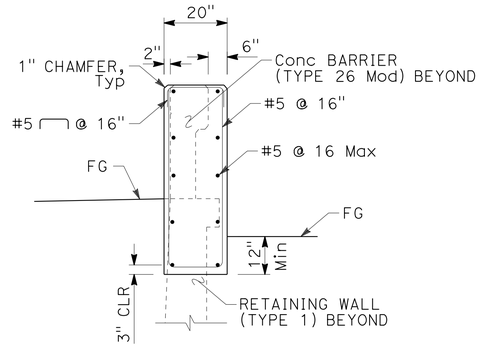

SECTION A-A
SCALE: 1/2" = 1′

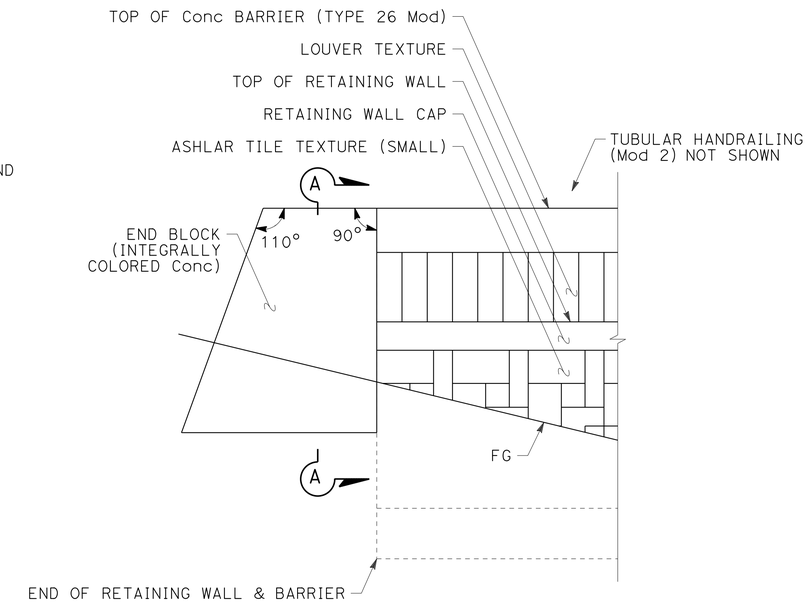

END BLOCK ELEVATION
SCALE: 1/2" = 1′

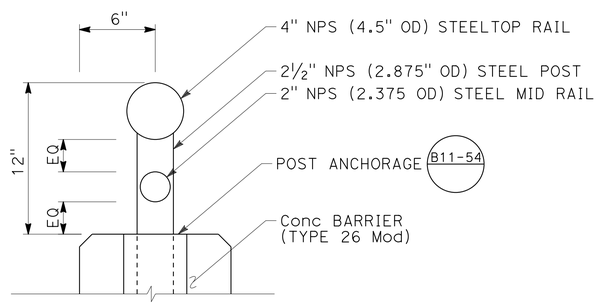

TUBULAR HANDRAILING (Mod 2)
SCALE: 2" = 1′

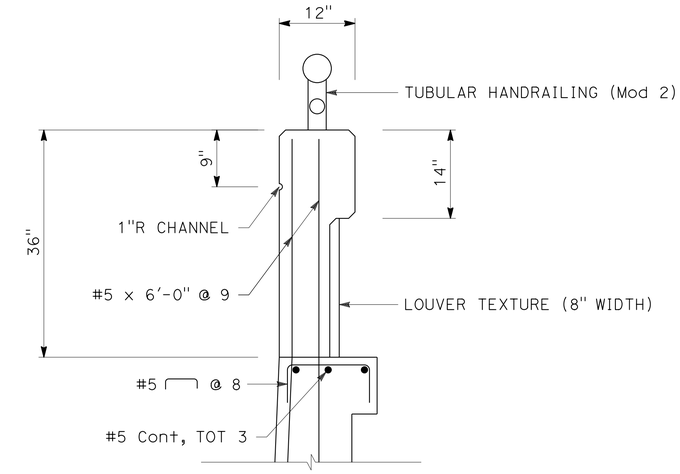

FOR DETAILS NOT SHOWN, SEE B11-54

Conc BARRIER (TYPE 26 Mod)
1" = 1′-0"

APPROVED FOR RETAINING WALL WORK ONLY

RETAINING WALL DETAILS
RW No. 10L

SCALE AS SHOWN

R6-3

STATE OF CALIFORNIA - DEPARTMENT OF TRANSPORTATION
Caltrans

CONSULTANT FUNCTIONAL SUPERVISOR: GERARD LUMABAS
CALCULATED-DESIGNED BY: DAVID LAYNE
CHECKED BY: PAUL KOSINSKI
REVISED BY
DATE REVISED

LAST REVISION 06-13-12
DATE PLOTTED => 12-SEP-2012
TIME PLOTTED => 16:23

Dist	COUNTY	ROUTE	POST MILES TOTAL PROJECT	SHEET No.	TOTAL SHEETS
11	SD	805	4.7/5.6	373	650

David Layne 05-24-12
REGISTERED CIVIL ENGINEER DATE

06-25-12
PLANS APPROVAL DATE

REGISTERED PROFESSIONAL ENGINEER
DAVID LAYNE
No. C74349
Exp. 06-30-13
CIVIL
STATE OF CALIFORNIA

THE STATE OF CALIFORNIA OR ITS OFFICERS OR AGENTS SHALL NOT BE RESPONSIBLE FOR THE ACCURACY OR COMPLETENESS OF SCANNED COPIES OF THIS PLAN SHEET.

DOKKEN ENGINEERING
5675 RUFFIN Rd
SUITE 250
SAN DIEGO, CA 92123

SANDAG
401 B St
SUITE 800
SAN DIEGO, CA 92101

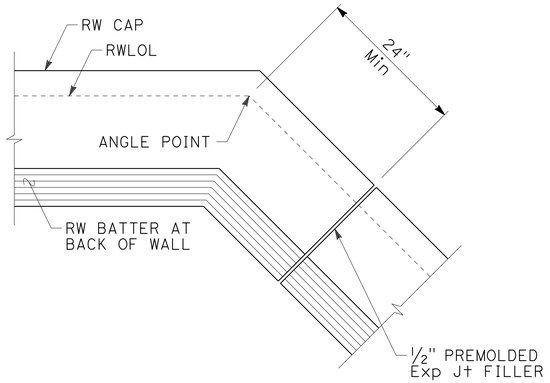

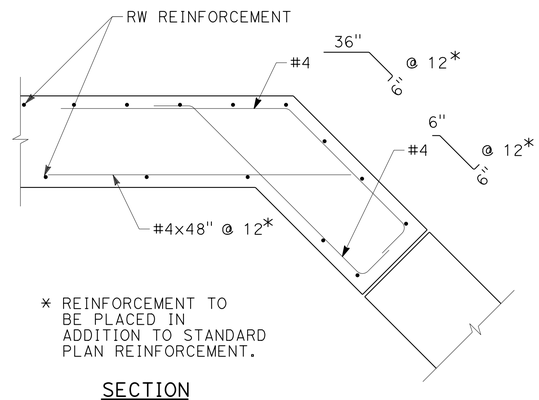

* REINFORCEMENT TO BE PLACED IN ADDITION TO STANDARD PLAN REINFORCEMENT.

SECTION

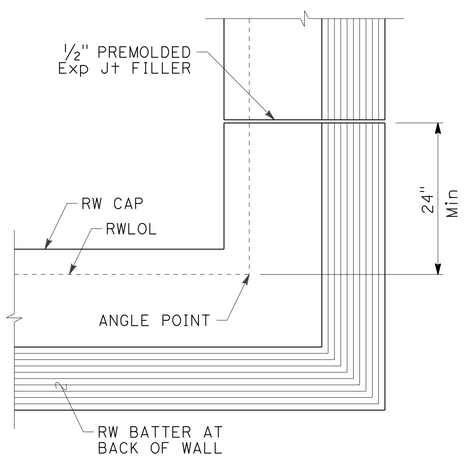

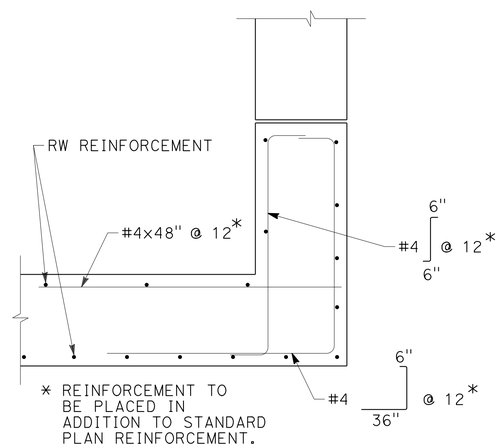

* REINFORCEMENT TO BE PLACED IN ADDITION TO STANDARD PLAN REINFORCEMENT.

SECTION

ADDITIONAL REINFORCEMENT AT RETAINING WALL ANGLE POINTS

SCALE: 1" = 1'

APPROVED FOR RETAINING WALL WORK ONLY

RETAINING WALL DETAILS
RW No. 10L

SCALE AS SHOWN

R6-4

REVISED BY	DATE REVISED

CALCULATED-DESIGNED BY	CHECKED BY
DAVID LAYNE	PAUL KOSINSKI

CONSULTANT FUNCTIONAL SUPERVISOR: GERARD LUMABAS

STATE OF CALIFORNIA - DEPARTMENT OF TRANSPORTATION

Caltrans

LAST REVISION 06-13-12

DATE PLOTTED => 12-SEP-2012
TIME PLOTTED => 16:23

Dist	COUNTY	ROUTE	POST MILES TOTAL PROJECT	SHEET No.	TOTAL SHEETS
11	SD	805	4.7/5.6	374	650

David Layne 05-24-12
REGISTERED CIVIL ENGINEER DATE

06-25-12
PLANS APPROVAL DATE

REGISTERED PROFESSIONAL ENGINEER
DAVID LAYNE
No. C74349
Exp. 06-30-13
CIVIL
STATE OF CALIFORNIA

THE STATE OF CALIFORNIA OR ITS OFFICERS OR AGENTS SHALL NOT BE RESPONSIBLE FOR THE ACCURACY OR COMPLETENESS OF SCANNED COPIES OF THIS PLAN SHEET.

DOKKEN ENGINEERING
5675 RUFFIN Rd
SUITE 250
SAN DIEGO, CA 92123

SANDAG
401 B St
SUITE 800
SAN DIEGO, CA 92101

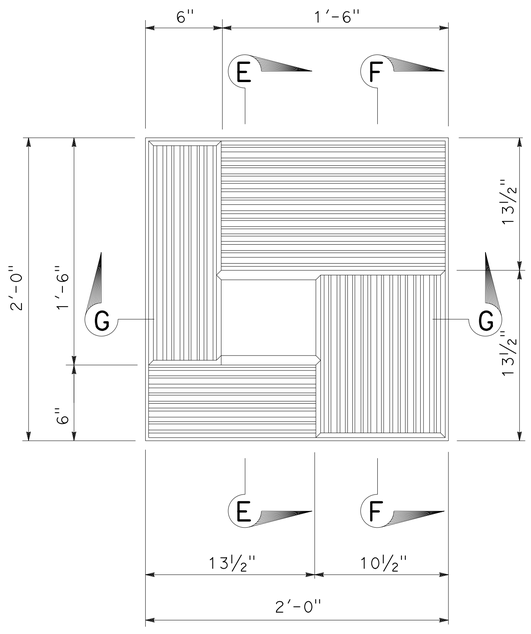

ASHLAR TILE TEXTURE (SMALL) DETAIL
SCALE: 2" = 1'

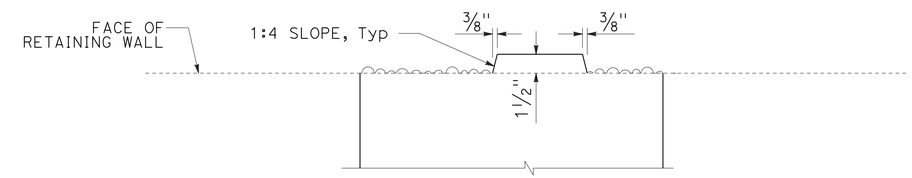

SECTION E-E
SCALE: 2" = 1'

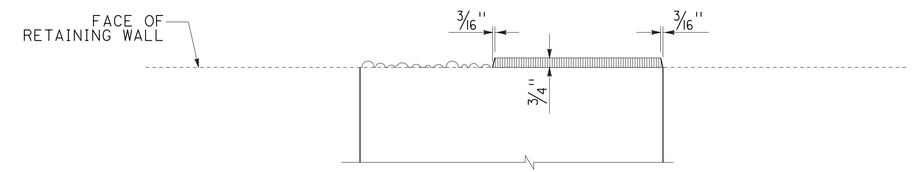

SECTION F-F
SCALE: 2" = 1'

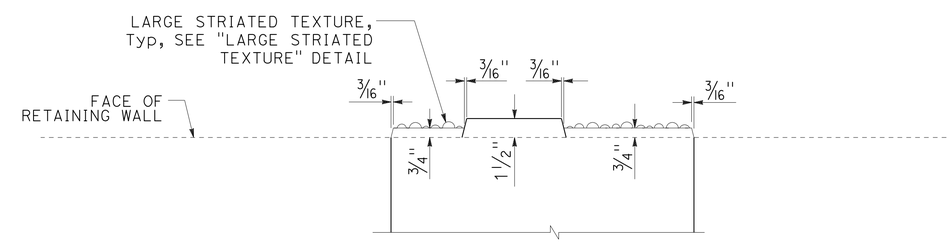

SECTION G-G
SCALE: 2" = 1'

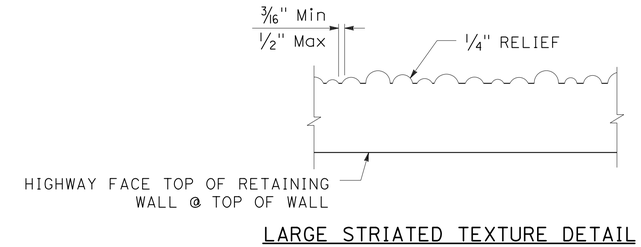

LARGE STRIATED TEXTURE DETAIL
SCALE: 4" = 1'

RETAINING WALL DETAILS
RW No. 10L

SCALE AS SHOWN

R6-5

APPROVED FOR RETAINING WALL WORK ONLY

STATE OF CALIFORNIA - DEPARTMENT OF TRANSPORTATION
Caltrans

CONSULTANT FUNCTIONAL SUPERVISOR: GERARD LUMABAS
CALCULATED-DESIGNED BY: DAVID LAYNE
CHECKED BY: PAUL KOSINSKI
REVISED BY
DATE REVISED

LAST REVISION 06-13-12
DATE PLOTTED => 12-SEP-2012
TIME PLOTTED => 16:23

DIST	COUNTY	ROUTE	POST MILES TOTAL PROJECT	SHEET No.	TOTAL SHEETS
11	SD	805	4.7/5.6	375	650

Brian Gutierrez 06-12-12
REGISTERED CIVIL ENGINEER

06-25-12
PLANS APPROVAL DATE

REGISTERED PROFESSIONAL ENGINEER Brian Gutierrez No. C66258 Exp. 06-30-14 CIVIL STATE OF CALIFORNIA

The State of California or its officers or agents shall not be responsible for the accuracy or completeness of electronic copies of this plan sheet.

This LOTB sheet was prepared in accordance with the Caltrans Soil & Rock Logging, Classification, & Presentation Manual (2007 Edition).

BENCH MARK

BM 805-5.00, Brass disk in sidewalk on north side of E. Palomar St. OC bridge, at Station 298+46.0, Right 60 feet of "DAR" Line/"A1" Line.
Elevation: 300.93 feet
NAVD 1988 (Vertical)
NAD83 (Horizontal)

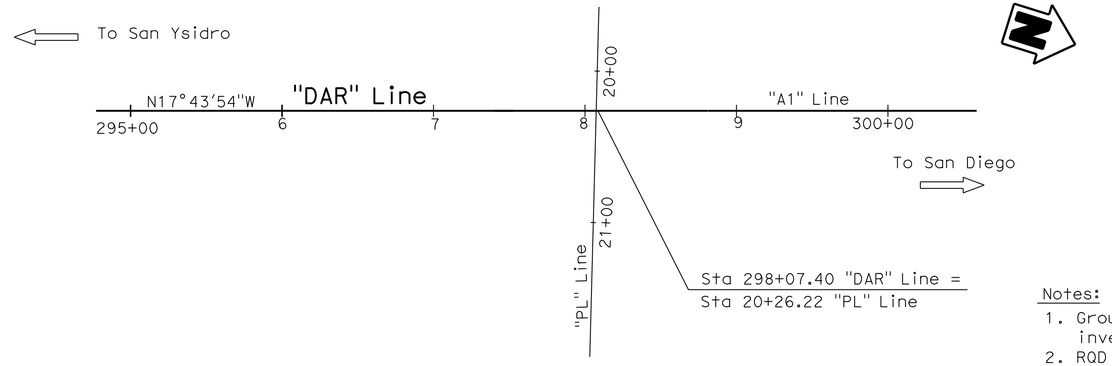

Notes:
1. Ground water was not encountered during the 2010 subsurface investigation.
2. RQD designated with "NA" (not applicable) indicates that the rock encountered within the drill interval was not sound rock, therefore RQD was not calculated.
3. Plan sheets provided by Design, show that "A1" Line = "DAR" Line.

198' Rt Sta 298+15.0
"A1" Line

R-10-002
4"

R-10-002

307.5'

4" Asphalt concrete (4") and aggregate base (7").

SEDIMENTARY ROCK (SANDSTONE); fine-grained; massive; reddish brown; slightly weathered; very soft; poorly-indurated; (Poorly-graded SAND with GRAVEL (SP); very dense; moist; fine SAND; little fine and coarse GRAVEL; subangular to rounded; weak cementation).

SEDIMENTARY ROCK (SANDSTONE); fine to coarse grained; massive; yellowish brown; slightly weathered; very soft; poorly-indurated; with scattered moderately hard to very hard beds; (Well-graded SAND (SW); very dense; moist; weak cementation).
-(Well-graded SAND with GRAVEL (SW); very dense; little coarse GRAVEL, rounded).
-(Poorly-graded SAND (SP); very dense; fine and medium SAND; trace coarse, rounded GRAVEL).
-dense; yellowish gray.

-light gray.
-(very dense).
-6" hard bed; unfractured; calcium carbonate cement.

-2" hard bed; unfractured; few shell fragments; calcium carbonate cement.
-5" hard bed; few shell fragments; calcium carbonate cement.

-3" hard bed; unfractured; calcium carbonate cement.

-1" hard bed; unfractured; calcium carbonate cement.

-1.2' hard bed; unfractured; calcium carbonate cement.

-2" moderately hard bed; unfractured; calcium carbonate cement.

01-05-10
Terminated at Elev 112.3'
ERi = 93%

PROFILE
Horiz: 1" = 5'
Vert: 1" = 10'

ENGINEERING SERVICES	GEOTECHNICAL SERVICES	STATE OF CALIFORNIA DEPARTMENT OF TRANSPORTATION	DIVISION OF ENGINEERING SERVICES STRUCTURE DESIGN DESIGN BRANCH X	BRIDGE NO. / POST MILE 5.07	RETAINING WALL 10L LOG OF TEST BORINGS 1 OF 4
FUNCTIONAL SUPERVISOR NAME: S. Wei	DRAWN BY: F. Nguyen 02/11 CHECKED BY: M. Wilson	FIELD INVESTIGATION BY: J. Klamecki			

OGS CIVIL LOG OF TEST BORINGS SHEET

ORIGINAL SCALE IN INCHES FOR REDUCED PLANS 0 1 2 3

UNIT: 3643
PROJECT NUMBER & PHASE: 11000200511
CONTRACT NO.: 11-2T1821

DISREGARD PRINTS BEARING EARLIER REVISION DATES 12-19-11

REVISION DATES

SHEET R6-6

FILE => 1100020051qf006.dgn

USERNAME => s127400 DATE PLOTTED =>

REFERENCE: CALTRANS SOIL & ROCK LOGGING, CLASSIFICATION, AND PRESENTATION MANUAL (2010)

DIST	COUNTY	ROUTE	POST MILES TOTAL PROJECT	SHEET No.	TOTAL SHEETS
11	SD	805	4.7/5.6	376	650

06-12-12
REGISTERED CIVIL ENGINEER

06-25-12
PLANS APPROVAL DATE

REGISTERED PROFESSIONAL ENGINEER
Brian Gutierrez
No. C66258
Exp. 06-30-14
CIVIL
STATE OF CALIFORNIA

The State of California or its officers or agents shall not be responsible for the accuracy or completeness of electronic copies of this plan sheet.

This LOTB sheet was prepared in accordance with the Caltrans Soil & Rock Logging, Classification, & Presentation Manual (2007 Edition).

CEMENTATION

Description	Criteria
Weak	Crumbles or breaks with handling or little finger pressure.
Moderate	Crumbles or breaks with considerable finger pressure.
Strong	Will not crumble or break with finger pressure.

BOREHOLE IDENTIFICATION

Symbol	Hole Type	Description
Size	A	Auger Boring (hollow or solid stem bucket)
Size	R RW RC P	Rotary drilled boring (conventional) Rotary drilled with self-casing wire-line Rotary core with continuously-sampled, self-casing wire-line Rotary percussion boring (air)
Size	R	Rotary drilled diamond core
Size	HD HA	Hand driven (1-inch soil tube) Hand Auger
●	D	Dynamic Cone Penetration Boring
▲	CPT	Cone Penetration Test (ASTM D 5778)
⬚	O	Other (note on LOTB)

Note: Size in inches.

CONSISTENCY OF COHESIVE SOILS

Description	Shear Strength (tsf)	Pocket Penetrometer Measurement, PP, (tsf)	Torvane Measurement, TV, (tsf)	Vane Shear Measurement, VS, (tsf)
Very Soft	Less than 0.12	Less than 0.25	Less than 0.12	Less than 0.12
Soft	0.12 - 0.25	0.25 - 0.5	0.12 - 0.25	0.12 - 0.25
Medium Stiff	0.25 - 0.5	0.5 - 1	0.25 - 0.5	0.25 - 0.5
Stiff	0.5 - 1	1 - 2	0.5 - 1	0.5 - 1
Very Stiff	1 - 2	2 - 4	1 - 2	1 - 2
Hard	Greater than 2	Greater than 4	Greater than 2	Greater than 2

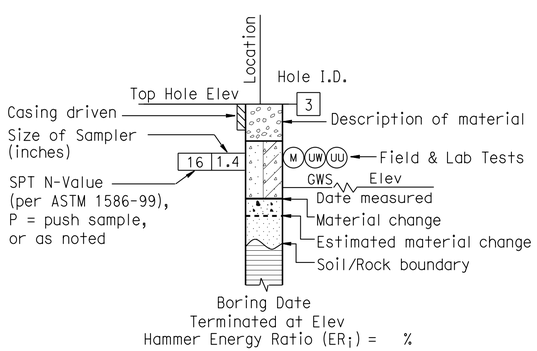

ROTARY BORING

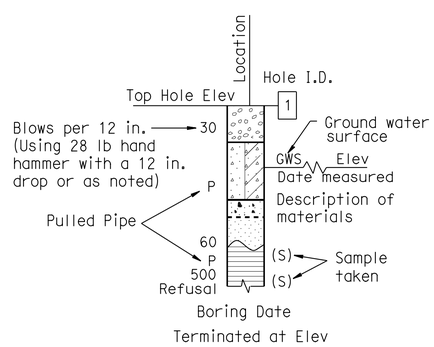

HAND BORING

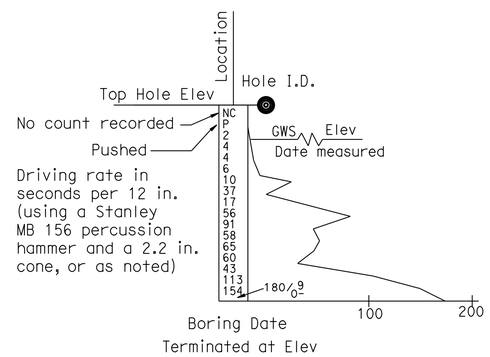

DYNAMIC CONE PENETRATION BORING

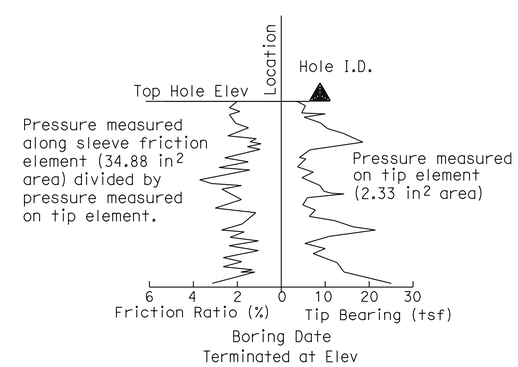

CONE PENETRATION TEST (CPT) BORING

ENGINEERING SERVICES	GEOTECHNICAL SERVICES	STATE OF CALIFORNIA DEPARTMENT OF TRANSPORTATION	DIVISION OF ENGINEERING SERVICES STRUCTURE DESIGN DESIGN BRANCH X	BRIDGE NO. / POST MILE 5.07	RETAINING WALL 10L LOG OF TEST BORINGS 2 OF 4
	PREPARED BY: I.G-Remmen				

GS LOTB SOIL LEGEND

ORIGINAL SCALE IN INCHES FOR REDUCED PLANS 0 1 2 3

UNIT: 3643
PROJECT NUMBER & PHASE: 11000200511
CONTRACT NO.: 11-2T1821

DISREGARD PRINTS BEARING EARLIER REVISION DATES

REVISION DATES: 12-19-11

SHEET R6-7

FILE => 1100020051qf007.dgn

USERNAME => s12400 DATE PLOTTED => 12-SEP-2012 TIME PLOTTED => 16:23

REFERENCE: CALTRANS SOIL & ROCK LOGGING, CLASSIFICATION, AND PRESENTATION MANUAL (2010)

DIST	COUNTY	ROUTE	POST MILES TOTAL PROJECT	SHEET No.	TOTAL SHEETS
11	SD	805	4.7/5.6	377	650

Brian Gutierrez 06-12-12
REGISTERED CIVIL ENGINEER

06-25-12
PLANS APPROVAL DATE

REGISTERED PROFESSIONAL ENGINEER Brian Gutierrez No. C66258 Exp. 06-30-14 CIVIL STATE OF CALIFORNIA

The State of California or its officers or agents shall not be responsible for the accuracy or completeness of electronic copies of this plan sheet.

This LOTB sheet was prepared in accordance with the Caltrans Soil & Rock Logging, Classification, & Presentation Manual (2007 Edition).

GROUP SYMBOLS AND NAMES

Graphic/Symbol	Group Names	Graphic/Symbol	Group Names
GW	Well-graded GRAVEL Well-graded GRAVEL with SAND	CL	Lean CLAY Lean CLAY with SAND Lean CLAY with GRAVEL SANDY lean CLAY SANDY lean CLAY with GRAVEL GRAVELLY lean CLAY GRAVELLY lean CLAY with SAND
GP	Poorly-graded GRAVEL Poorly-graded GRAVEL with SAND		
GW-GM	Well-graded GRAVEL with SILT Well-graded GRAVEL with SILT and SAND	CL-ML	SILTY CLAY SILTY CLAY with SAND SILTY CLAY with GRAVEL SANDY SILTY CLAY SANDY SILTY CLAY with GRAVEL GRAVELLY SILTY CLAY GRAVELLY SILTY CLAY with SAND
GW-GC	Well-graded GRAVEL with CLAY (or SILTY CLAY) Well-graded GRAVEL with CLAY and SAND (or SILTY CLAY and SAND)		
GP-GM	Poorly-graded GRAVEL with SILT Poorly-graded GRAVEL with SILT and SAND	ML	SILT SILT with SAND SILT with GRAVEL SANDY SILT SANDY SILT with GRAVEL GRAVELLY SILT GRAVELLY SILT with SAND
GP-GC	Poorly-graded GRAVEL with CLAY (or SILTY CLAY) Poorly-graded GRAVEL with CLAY and SAND (or SILTY CLAY and SAND)		
GM	SILTY GRAVEL SILTY GRAVEL with SAND	OL	ORGANIC lean CLAY ORGANIC lean CLAY with SAND ORGANIC lean CLAY with GRAVEL SANDY ORGANIC lean CLAY SANDY ORGANIC lean CLAY with GRAVEL GRAVELLY ORGANIC lean CLAY GRAVELLY ORGANIC lean CLAY with SAND
GC	CLAYEY GRAVEL CLAYEY GRAVEL with SAND		
GC-GM	SILTY, CLAYEY GRAVEL SILTY, CLAYEY GRAVEL with SAND	OL	ORGANIC SILT ORGANIC SILT with SAND ORGANIC SILT with GRAVEL SANDY ORGANIC SILT SANDY ORGANIC SILT with GRAVEL GRAVELLY ORGANIC SILT GRAVELLY ORGANIC SILT with SAND
SW	Well-graded SAND Well-graded SAND with GRAVEL		
SP	Poorly-graded SAND Poorly-graded SAND with GRAVEL	CH	Fat CLAY Fat CLAY with SAND Fat CLAY with GRAVEL SANDY fat CLAY SANDY fat CLAY with GRAVEL GRAVELLY fat CLAY GRAVELLY fat CLAY with SAND
SW-SM	Well-graded SAND with SILT Well-graded SAND with SILT and GRAVEL		
SW-SC	Well-graded SAND with CLAY (or SILTY CLAY) Well-graded SAND with CLAY and GRAVEL (or SILTY CLAY and GRAVEL)	MH	Elastic SILT Elastic SILT with SAND Elastic SILT with GRAVEL SANDY elastic SILT SANDY elastic SILT with GRAVEL GRAVELLY elastic SILT GRAVELLY elastic SILT with SAND
SP-SM	Poorly-graded SAND with SILT Poorly-graded SAND with SILT and GRAVEL		
SP-SC	Poorly-graded SAND with CLAY (or SILTY CLAY) Poorly-graded SAND with CLAY and GRAVEL (or SILTY CLAY and GRAVEL)	OH	ORGANIC fat CLAY ORGANIC fat CLAY with SAND ORGANIC fat CLAY with GRAVEL SANDY ORGANIC fat CLAY SANDY ORGANIC fat CLAY with GRAVEL GRAVELLY ORGANIC fat CLAY GRAVELLY ORGANIC fat CLAY with SAND
SM	SILTY SAND SILTY SAND with GRAVEL		
SC	CLAYEY SAND CLAYEY SAND with GRAVEL	OH	ORGANIC elastic SILT ORGANIC elastic SILT with SAND ORGANIC elastic SILT with GRAVEL SANDY ORGANIC elastic SILT SANDY ORGANIC elastic SILT with GRAVEL GRAVELLY ORGANIC elastic SILT GRAVELLY ORGANIC elastic SILT with SAND
SC-SM	SILTY, CLAYEY SAND SILTY, CLAYEY SAND with GRAVEL		
PT	PEAT	OL/OH	ORGANIC SOIL ORGANIC SOIL with SAND ORGANIC SOIL with GRAVEL SANDY ORGANIC SOIL SANDY ORGANIC SOIL with GRAVEL GRAVELLY ORGANIC SOIL GRAVELLY ORGANIC SOIL with SAND
	COBBLES COBBLES and BOULDERS BOULDERS		

FIELD AND LABORATORY TESTING

- (C) Consolidation (ASTM D 2435)
- (CL) Collapse Potential (ASTM D 5333)
- (CP) Compaction Curve (CTM 216)
- (CR) Corrosivity Testing (CTM 643, CTM 422, CTM 417)
- (CU) Consolidated Undrained Triaxial (ASTM D 4767)
- (DS) Direct Shear (ASTM D 3080)
- (EI) Expansion Index (ASTM D 4829)
- (M) Moisture Content (ASTM D 2216)
- (OC) Organic Content-% (ASTM D 2974)
- (P) Permeability (CTM 220)
- (PA) Particle Size Analysis (ASTM D 422)
- (PI) Plasticity Index (AASHTO T 90) Liquid Limit (AASHTO T 89)
- (PL) Point Load Index (ASTM D 5731)
- (PM) Pressure Meter
- (R) R-Value (CTM 301)
- (SE) Sand Equivalent (CTM 217)
- (SG) Specific Gravity (AASHTO T 100)
- (SL) Shrinkage Limit (ASTM D 427)
- (SW) Swell Potential (ASTM D 4546)
- (UC) Unconfined Compression-Soil (ASTM D 2166) Unconfined Compression-Rock (ASTM D 2938)
- (UU) Unconsolidated Undrained Triaxial (ASTM D 2850)
- (UW) Unit Weight (ASTM D 4767)

APPARENT DENSITY OF COHESIONLESS SOILS

Description	SPT N_{60} (Blows / 12 in.)
Very Loose	0 - 5
Loose	5 - 10
Medium Dense	10 - 30
Dense	30 - 50
Very Dense	Greater than 50

MOISTURE

Description	Criteria
Dry	No discernable moisture
Moist	Moisture present, but no free water
Wet	Visible free water

PERCENT OR PROPORTION OF SOILS

Description	Criteria
Trace	Particles are present but estimated to be less than 5%
Few	5% - 10%
Little	15% - 25%
Some	30% - 45%
Mostly	50% - 100%

PARTICLE SIZE

Description		Size (in.)
Boulder		Greater than 12
Cobble		3 - 12
Gravel	Coarse	3/4 - 3
	Fine	1/5 - 3/4
Sand	Coarse	1/16 - 1/5
	Medium	1/64 - 1/16
	Fine	1/300 - 1/64
Silt and Clay		Less than 1/300

ENGINEERING SERVICES

GEOTECHNICAL SERVICES
PREPARED BY: I.G-Remmen

STATE OF CALIFORNIA
DEPARTMENT OF TRANSPORTATION

DIVISION OF ENGINEERING SERVICES
STRUCTURE DESIGN
DESIGN BRANCH X

BRIDGE NO.
POST MILE 5.07

RETAINING WALL 10L
LOG OF TEST BORINGS 3 OF 4

GS LOTB SOIL LEGEND

ORIGINAL SCALE IN INCHES FOR REDUCED PLANS 0 1 2 3

UNIT: 3643
PROJECT NUMBER & PHASE: 11000200511
CONTRACT NO.: 11-2T1821

DISREGARD PRINTS BEARING EARLIER REVISION DATES

REVISION DATES 12-19-11

SHEET R6-8

FILE => 1100020051gf008.dgn

USERNAME => s127400 DATE PLOTTED => 12-SEP-2012 TIME PLOTTED => 16:23

REFERENCE: CALTRANS SOIL & ROCK LOGGING, CLASSIFICATION, AND PRESENTATION MANUAL (2010)

DIST	COUNTY	ROUTE	POST MILES TOTAL PROJECT	SHEET No.	TOTAL SHEETS
11	SD	805	4.7/5.6	378	650

06-12-12
REGISTERED CIVIL ENGINEER

06-25-12
PLANS APPROVAL DATE

The State of California or its officers or agents shall not be responsible for the accuracy or completeness of electronic copies of this plan sheet.

REGISTERED PROFESSIONAL ENGINEER Brian Gutierrez No. C66258 Exp. 06-30-14 CIVIL STATE OF CALIFORNIA

This LOTB sheet was prepared in accordance with the Caltrans Soil & Rock Logging, Classification, & Presentation Manual (2007 Edition).

PERCENT CORE RECOVERY (REC) & ROCK QUALITY DESIGNATION (RQD)

$$REC = \frac{\sum \text{Length of the recovered core pieces (in.)}}{\text{Total length of core run (in.)}} \times 100\%$$

$$RQD = \frac{\sum \text{Length of intact core pieces} \geq 4 \text{ in.}}{\text{Total length of core run (in.)}} \times 100\%$$

RQD* Indicates soundness criteria not met.

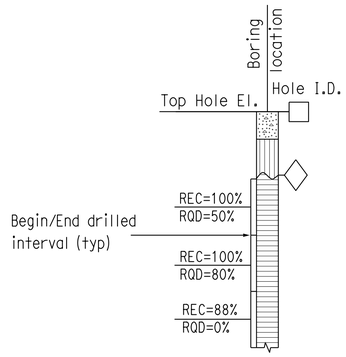

BEDDING SPACING

Description	Thickness / Spacing
Massive	Greater than 10 ft
Very Thickly Bedded	3 ft - 10 ft
Thickly Bedded	1 ft - 3 ft
Moderately Bedded	4 in. - 1 ft
Thinly Bedded	1 in. - 4 in.
Very Thinly Bedded	1/4 in. - 1 in.
Laminated	Less than 1/4 in.

LEGEND OF ROCK MATERIALS

- IGNEOUS ROCK
- SEDIMENTARY ROCK
- METAMORPHIC ROCK

ROCK HARDNESS

Description	Criteria
Extremely Hard	Cannot be scratched with a pocketknife or sharp pick. Can only be chipped with repeated heavy hammer blows.
Very Hard	Cannot be scratched with a pocketknife or sharp pick. Breaks with repeated heavy hammer blows.
Hard	Can be scratched with a pocketknife or sharp pick with difficulty (heavy pressure). Breaks with heavy hammer blows.
Moderately Hard	Can be scratched with pocketknife or sharp pick with light or moderate pressure. Breaks with moderate hammer blows.
Moderately Soft	Can be grooved 1/16 in. deep with a pocketknife or sharp pick with moderate or heavy pressure. Breaks with light hammer blow or heavy manual pressure.
Soft	Can be grooved or gouged easily by a pocketknife or sharp pick with light pressure, can be scratched with fingernail. Breaks with light to moderate manual pressure.
Very Soft	Can be readily indented, grooved or gouged with fingernail, or carved with a pocketknife. Breaks with light manual pressure.

FRACTURE DENSITY

Description	Observed Fracture Density
Unfractured	No fractures.
Very Slightly Fractured	Core lengths greater than 3 ft.
Slightly Fractured	Core lengths mostly from 1 to 3 ft.
Moderately Fractured	Core lengths mostly from 4 in. to 1 ft.
Intensely Fractured	Core lengths mostly from 1 to 4 in.
Very Intensely Fractured	Mostly chips and fragments.

WEATHERING DESCRIPTORS FOR INTACT ROCK

Description	Diagnostic Features					General Characteristics
	Chemical Weathering-Discoloration and/or Oxidation		Mechanical Weathering-Grain Boundary Conditions (Disaggregation) Primarily for Granitics and Some Coarse-Grained Sediments	Texture and Leaching		
	Body of Rock	Fracture Surfaces		Texture	Leaching	
Fresh	No discoloration, not oxidized.	No discoloration or oxidation.	No separation, intact (tight).	No change	No leaching	Hammer rings when crystalline rocks are struck.
Slightly Weathered	Discoloration or oxidation is limited to surface of, or short distance from, fractures; some feldspar crystals are dull.	Minor to complete discoloration or oxidation of most surfaces.	No visible separation, intact (tight).	Preserved	Minor leaching of some soluble minerals.	Hammer rings when crystalline rocks are struck. Body of rock not weakened.
Moderately Weathered	Discoloration or oxidation extends from fractures usually throughout; Fe-Mg minerals are "rusty," feldspar crystals are "cloudy."	All fracture surfaces are discolored or oxidized.	Partial separation of boundaries visible.	Generally preserved	Soluble minerals may be mostly leached.	Hammer does not ring when rock is struck. Body of rock is slightly weakened.
Intensely Weathered	Discoloration or oxidation throughout; all feldspars and Fe-Mg minerals are altered to clay to some extent; or chemical alteration produces in-situ disaggregation, see grain boundary conditions.	All fracture surfaces are discolored or oxidized, surfaces friable.	Partial separation, rock is friable; in semiarid conditions granitics are disaggregated.	Texture altered by chemical disintegration (hydration, argillation).	Leaching of soluble minerals may be complete.	Dull sound when struck with hammer, usually can be broken with moderate to heavy manual pressure or by light hammer blow without reference to planes of weakness such as incipient or hairline fractures, or veinlets. Rock is significantly weakened.
Decomposed	Discolored or oxidized throughout, but resistant minerals such as quartz may be unaltered; all feldspars and Fe-Mg minerals are completely altered to clay.		Complete separation of grain boundaries (disaggregated).	Resembles a soil, partial or complete remnant rock structure may be preserved; leaching of soluble minerals usually complete.		Can be granulated by hand. Resistant minerals such as quartz may be present as "stringers" or "dikes."

ENGINEERING SERVICES

GEOTECHNICAL SERVICES

PREPARED BY: I.G-Remmen

STATE OF CALIFORNIA
DEPARTMENT OF TRANSPORTATION

DIVISION OF ENGINEERING SERVICES
STRUCTURE DESIGN
DESIGN BRANCH X

BRIDGE NO.

POST MILE 5.07

RETAINING WALL 10L

LOG OF TEST BORINGS 4 OF 4

GS LOTB SOIL LEGEND

ORIGINAL SCALE IN INCHES FOR REDUCED PLANS 0 1 2 3

UNIT: 3643
PROJECT NUMBER & PHASE: 11000200511
CONTRACT NO.: 11-2T1821

DISREGARD PRINTS BEARING EARLIER REVISION DATES

REVISION DATES 12-19-11

SHEET R6-9

FILE => 1100020051qf009.dgn

USERNAME => s127400 DATE PLOTTED => 12-SEP-2012 TIME PLOTTED => 16:23

Dist	COUNTY	ROUTE	POST MILES TOTAL PROJECT	SHEET No.	TOTAL SHEETS
11	SD	805	4.7/5.6	379	650

REGISTERED CIVIL ENGINEER 05-24-12 DATE

06-25-12
PLANS APPROVAL DATE

REGISTERED PROFESSIONAL ENGINEER DAVID LAYNE No. C74349 Exp. 06-30-13 CIVIL STATE OF CALIFORNIA

THE STATE OF CALIFORNIA OR ITS OFFICERS OR AGENTS SHALL NOT BE RESPONSIBLE FOR THE ACCURACY OR COMPLETENESS OF SCANNED COPIES OF THIS PLAN SHEET.

DOKKEN ENGINEERING
5675 RUFFIN Rd
SUITE 250
SAN DIEGO, CA 92123

SANDAG
401 B St
SUITE 800
SAN DIEGO, CA 92101

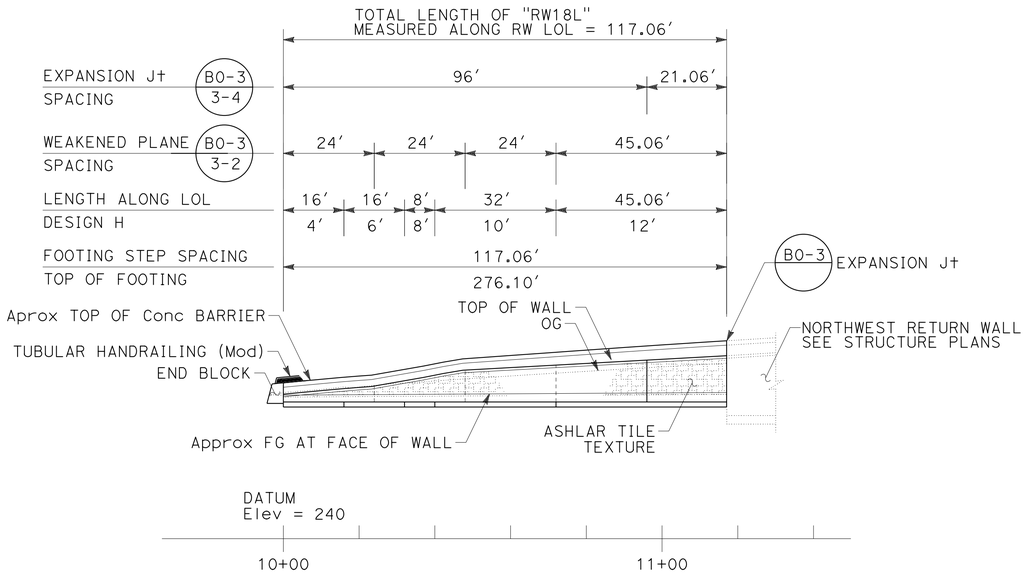

DEVELOPED MIRROR ELEVATION

SCALE: 1" = 20'

TOP OF WALL	
STATION	ELEVATION
10+00.00	278.15
10+16.00	279.63
10+32.00	281.71
10+40.00	283.17
10+48.00	284.52
10+64.00	285.39
10+72.00	285.83
10+80.00	286.27
10+96.00	287.15
11+12.00	288.03
11+17.06	288.31*

*MATCH TOP OF APPROACH SLAB Elev.

CURVE DATA TABLE				
No.	R	Δ	T	L
1	526.05'	00°54'50"	4.20'	8.39'
2	29.33''	84°41'57"	26.74'	43.36'
3	941.21'	03°58'31"	32.67'	65.30'

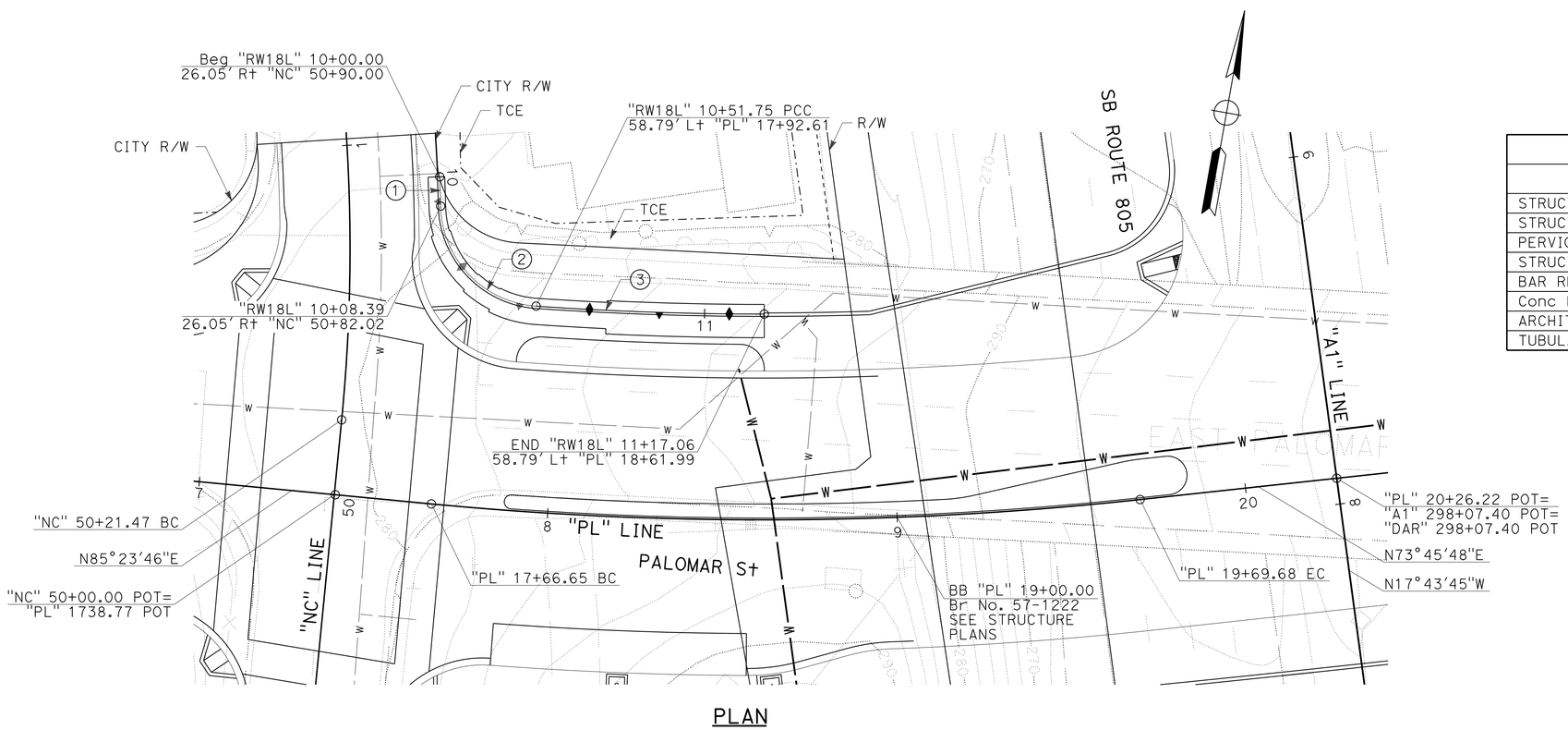

PLAN

SCALE: 1" = 20'

RW QUANTITIES ("RW18L")	
ITEM	TOTAL
STRUCTURE EXCAVATION (RETAINING WALL)	290 CY
STRUCTURE BACKFILL (RETAINING WALL)	230 CY
PERVIOUS BACKFILL MATERIAL (RETAINING WALL)	15 CY
STRUCTURAL CONCRETE (RETAINING WALL)	100 CY
BAR REINFORCING STEEL (RETAINING WALL)	10,000 LB
Conc BARRIER (TYPE 26 Mod)	118 LF
ARCHITECTURAL TREATMENT (ASHLAR TILE TEXTURE)	670 SQFT
TUBULAR HANDRAILING (Mod)	120 LF

NOTES:

1. BACK SIDEWALK THICKNESS VARIES WITHIN 12" FROM BACK OF WALL. SEE "RETAINING WALL AND BARRIER DETAILS" SHEET.
2. NOT ALL UTILITIES SHOWN ON RETAINING WALL PLAN SHEETS. SEE UTILITY PLAN SHEETS

LEGEND:

STANDARD PLAN SHEET No.

DETAIL No.

APPROVED FOR RETAINING WALL WORK ONLY

RETAINING WALL PLAN
RW No. 18L

SCALE AS SHOWN

R7-1

STATE OF CALIFORNIA - DEPARTMENT OF TRANSPORTATION
Caltrans

CONSULTANT FUNCTIONAL SUPERVISOR: GERARD LUMABAS
CALCULATED-DESIGNED BY: DAVID LAYNE
CHECKED BY: PAUL KOSINSKI
REVISED BY
DATE REVISED

LAST REVISION 06-14-12
DATE PLOTTED => 12-SEP-2012
TIME PLOTTED => 16:23

Dist	COUNTY	ROUTE	POST MILES TOTAL PROJECT	SHEET No.	TOTAL SHEETS
11	SD	805	4.7/5.6	380	650

REGISTERED CIVIL ENGINEER 05-24-12 DATE

06-25-12
PLANS APPROVAL DATE

REGISTERED PROFESSIONAL ENGINEER DAVID LAYNE No. C74349 Exp. 06-30-13 CIVIL STATE OF CALIFORNIA

THE STATE OF CALIFORNIA OR ITS OFFICERS OR AGENTS SHALL NOT BE RESPONSIBLE FOR THE ACCURACY OR COMPLETENESS OF SCANNED COPIES OF THIS PLAN SHEET.

DOKKEN ENGINEERING
5675 RUFFIN Rd
SUITE 250
SAN DIEGO, CA 92123

SANDAG
401 B St
SUITE 800
SAN DIEGO, CA 92101

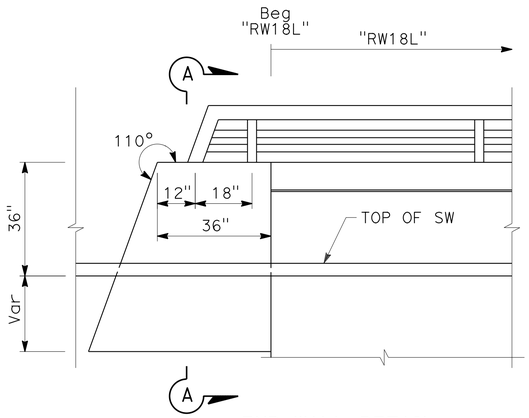

END WALL DETAIL
SCALE: 1" = 1'

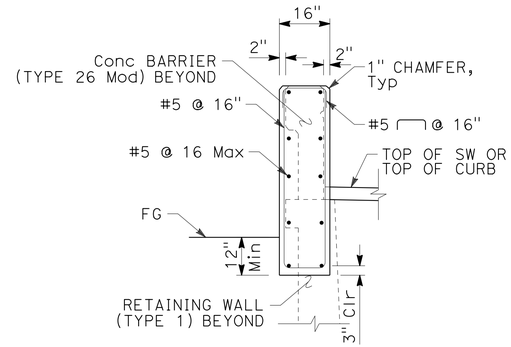

SECTION A-A
SCALE: 1" = 1'

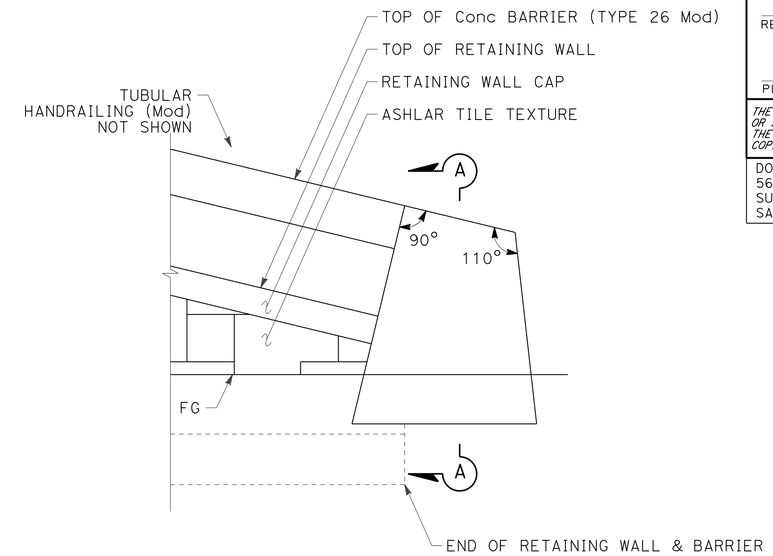

END BLOCK ELEVATION
- SLOPED WALL PROFILE
SCALE: 1" = 1'

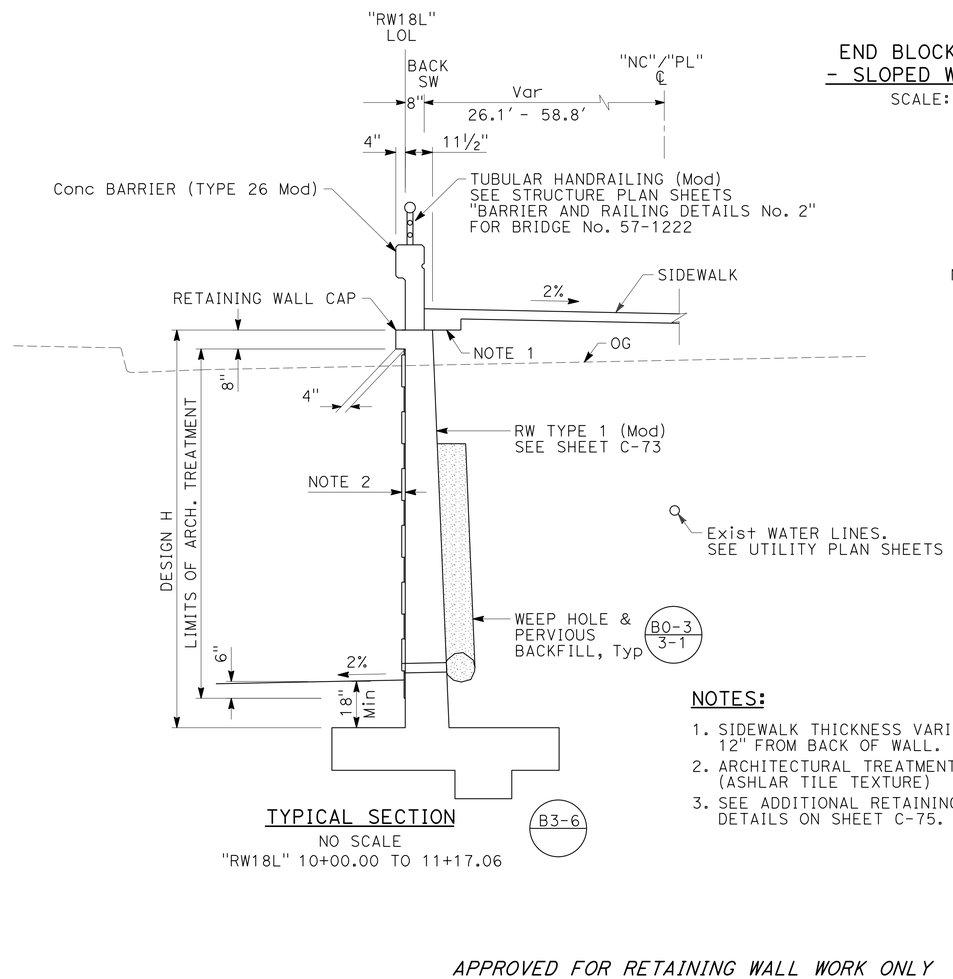

TYPICAL SECTION
NO SCALE
"RW18L" 10+00.00 TO 11+17.06

NOTES:

1. SIDEWALK THICKNESS VARIES WITHIN 12" FROM BACK OF WALL.
2. ARCHITECTURAL TREATMENT. (ASHLAR TILE TEXTURE)
3. SEE ADDITIONAL RETAINING WALL DETAILS ON SHEET C-75.

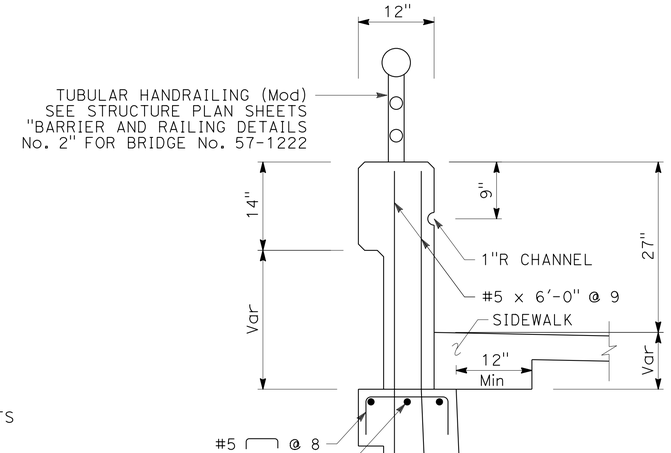

FOR DETAILS NOT SHOWN, SEE B11-54

Conc BARRIER (TYPE 26 Mod)
SCALE: 1" = 1'

RETAINING WALL DETAILS
RW No. 18L

SCALE AS SHOWN

R7-2

APPROVED FOR RETAINING WALL WORK ONLY

STATE OF CALIFORNIA - DEPARTMENT OF TRANSPORTATION
Caltrans

CONSULTANT FUNCTIONAL SUPERVISOR: GERARD LUMABAS
CALCULATED-DESIGNED BY: DAVID LAYNE
CHECKED BY: PAUL KOSINSKI
REVISED BY
DATE REVISED

LAST REVISION 06-14-12
DATE PLOTTED => 12-SEP-2012
TIME PLOTTED => 16:23

Dist	COUNTY	ROUTE	POST MILES TOTAL PROJECT	SHEET No.	TOTAL SHEETS
11	SD	805	4.7/5.6	381	650

David Layne 05-24-12
REGISTERED CIVIL ENGINEER DATE

06-25-12
PLANS APPROVAL DATE

REGISTERED PROFESSIONAL ENGINEER
DAVID LAYNE
No. C74349
Exp. 06-30-13
CIVIL
STATE OF CALIFORNIA

THE STATE OF CALIFORNIA OR ITS OFFICERS OR AGENTS SHALL NOT BE RESPONSIBLE FOR THE ACCURACY OR COMPLETENESS OF SCANNED COPIES OF THIS PLAN SHEET.

DOKKEN ENGINEERING
5675 RUFFIN Rd
SUITE 250
SAN DIEGO, CA 92123

SANDAG
401 B St
SUITE 800
SAN DIEGO, CA 92101

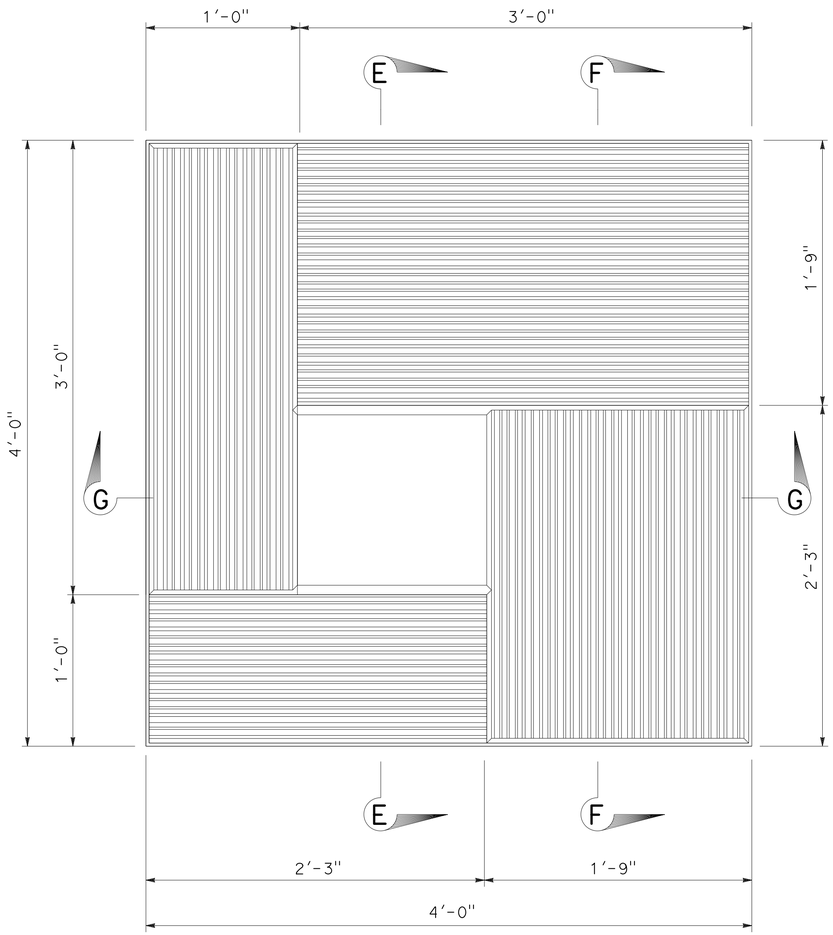

ASHLAR TILE TEXTURE DETAIL
SCALE: 2" = 1'

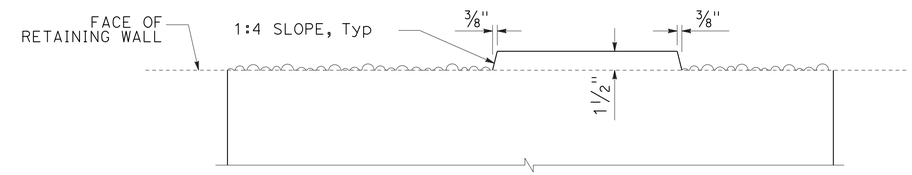

SECTION E-E
SCALE: 2" = 1'

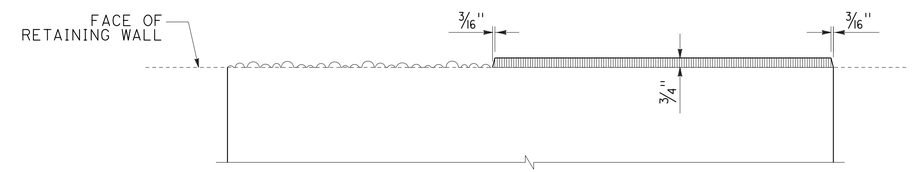

SECTION F-F
SCALE: 2" = 1'

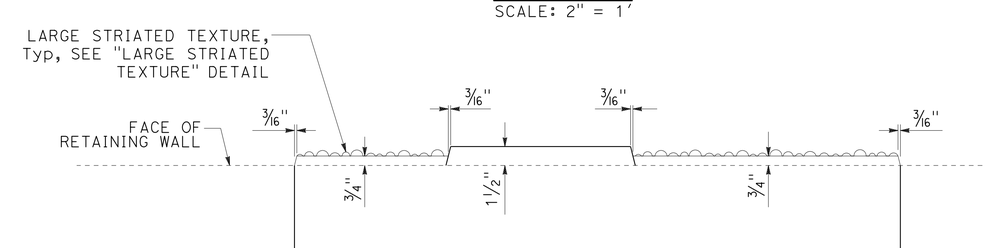

SECTION G-G
SCALE: 2" = 1'

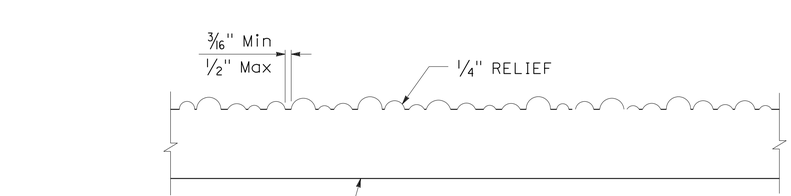

LARGE STRIATED TEXTURE DETAIL
SCALE: 4" = 1'

RETAINING WALL DETAILS
RW No. 18L

R7-3

APPROVED FOR RETAINING WALL WORK ONLY

SCALE AS SHOWN

REVISED BY	DATE REVISED
DAVID LAYNE	
PAUL KOSINSKI	
CALCULATED-DESIGNED BY	
CHECKED BY	
CONSULTANT FUNCTIONAL SUPERVISOR	
GERARD LUMABAS	

STATE OF CALIFORNIA - DEPARTMENT OF TRANSPORTATION
Caltrans

LAST REVISION 06-14-12
DATE PLOTTED => 12-SEP-2012
TIME PLOTTED => 16:23

DIST	COUNTY	ROUTE	POST MILES TOTAL PROJECT	SHEET No.	TOTAL SHEETS
11	SD	805	4.7/5.6	382	650

REGISTERED CIVIL ENGINEER 11-10-11

06-25-12
PLANS APPROVAL DATE

The State of California or its officers or agents shall not be responsible for the accuracy or completeness of electronic copies of this plan sheet.

REGISTERED PROFESSIONAL ENGINEER David T-M Liao No. C59838 Exp. 06-30-13 CIVIL STATE OF CALIFORNIA

This LOTB sheet was prepared in accordance with the Caltrans Soil & Rock Logging, Classification, & Presentation Manual (2007 Edition).

BENCH MARK

BM 805-5.00, Brass disk in sidewalk on north side of E. Palomar St. OC bridge, at Station 298+46.0, Right 60 feet of "DAR" Line/"A1" Line.
Elevation: 300.93 feet
NAVD 1988 (Vertical)
NAD83 (Horizontal)

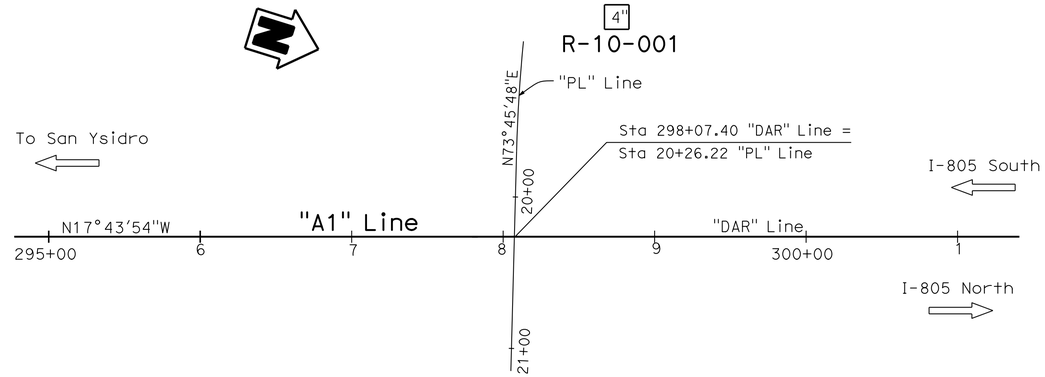

PLAN

1" = 50'

Notes:

1. Ground water was not encountered during the 2010 subsurface investigation.
2. RQD designated with "N/A" (not applicable) indicates that the rock encountered within the drill interval was not sound rock, therefore RQD was not calculated.
3. Plan sheets provided by Design, show that "A1" Line = "DAR" Line.

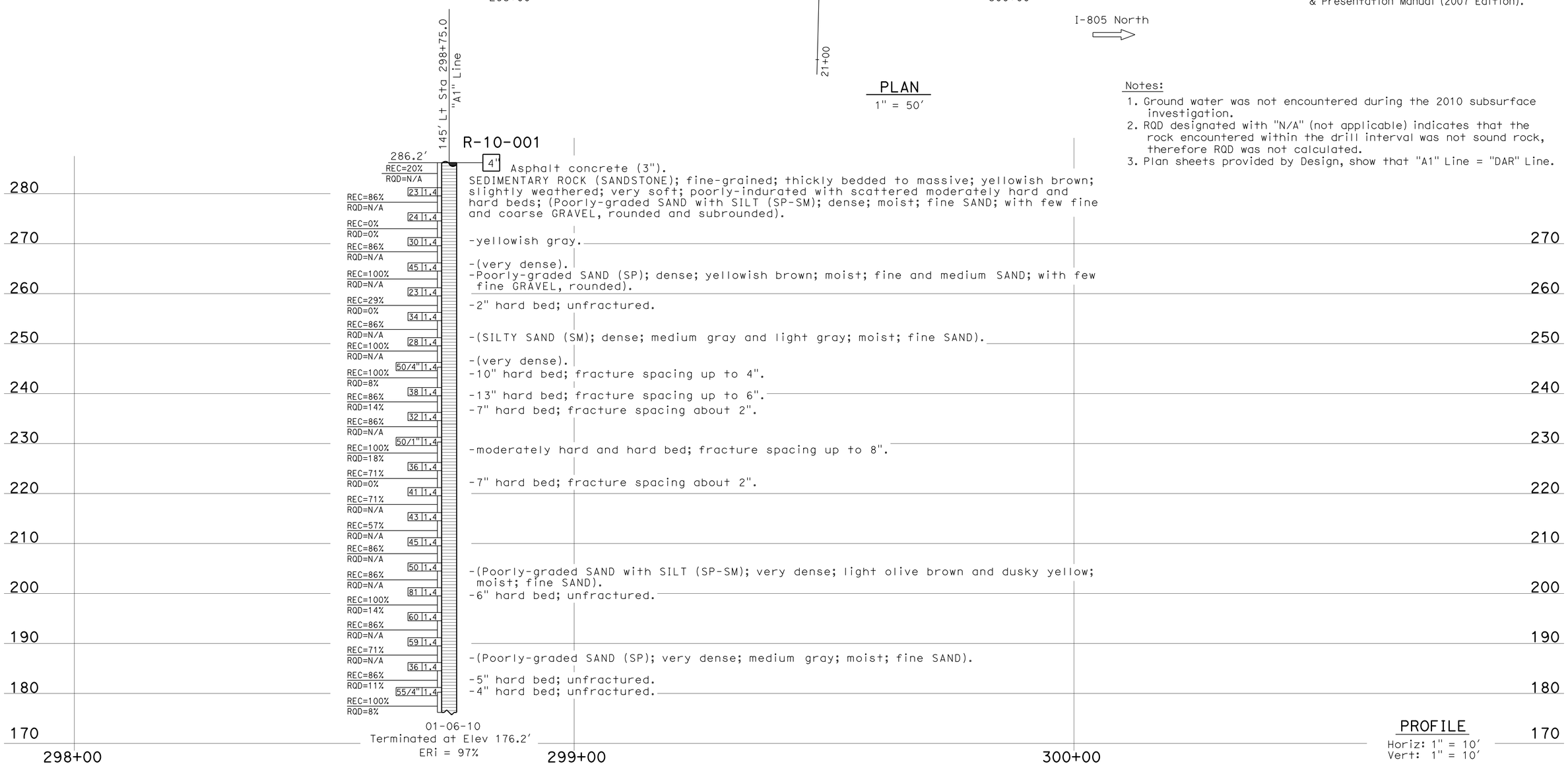

01-06-10
Terminated at Elev 176.2'
ERi = 97%

PROFILE

Horiz: 1" = 10'
Vert: 1" = 10'

ENGINEERING SERVICES	GEOTECHNICAL SERVICES	STATE OF CALIFORNIA DEPARTMENT OF TRANSPORTATION	DIVISION OF ENGINEERING SERVICES STRUCTURE DESIGN DESIGN BRANCH X	BRIDGE NO. / POST MILE 5.07	RETAINING WALL NO. 18L LOG OF TEST BORINGS 1 OF 4
FUNCTIONAL SUPERVISOR NAME: M. DeSalvatore	DRAWN BY: F. Nguyen, I.G-Remmen CHECKED BY: E. Neupert	FIELD INVESTIGATION BY: TM Liao/J. Klamecki			

OGS CIVIL LOG OF TEST BORINGS SHEET

ORIGINAL SCALE IN INCHES FOR REDUCED PLANS 0 1 2 3

UNIT: 3643
PROJECT NUMBER & PHASE: 11000200511 CONTRACT NO.: 11-2T1821

DISREGARD PRINTS BEARING EARLIER REVISION DATES → REVISION DATES 11-08-11 SHEET R7-4

FILE => 1100020051qg004.dgn

USERNAME => s127400 DATE PLOTTED => 12-SEP-2012 TIME PLOTTED => 16:23

REFERENCE: CALTRANS SOIL & ROCK LOGGING, CLASSIFICATION, AND PRESENTATION MANUAL (JUNE 2007)

DIST	COUNTY	ROUTE	POST MILES TOTAL PROJECT	SHEET No.	TOTAL SHEETS
11	SD	805	4.7/5.6	383	650

REGISTERED CIVIL ENGINEER 11-10-11

06-25-12
PLANS APPROVAL DATE

The State of California or its officers or agents shall not be responsible for the accuracy or completeness of electronic copies of this plan sheet.

REGISTERED PROFESSIONAL ENGINEER
David T-M Liao
No. C59838
Exp. 06-30-13
CIVIL
STATE OF CALIFORNIA

CEMENTATION

Description	Criteria
Weak	Crumbles or breaks with handling or little finger pressure.
Moderate	Crumbles or breaks with considerable finger pressure.
Strong	Will not crumble or break with finger pressure.

CONSISTENCY OF COHESIVE SOILS

Description	Unconfined Compressive Strength (tsf)	Pocket Penetrometer Measurement (tsf)	Torvane Measurement (tsf)	Field Approximation
Very Soft	< 0.25	< 0.25	< 0.12	Easily penetrated several inches by fist
Soft	0.25 to 0.50	0.25 to 0.50	0.12 to 0.25	Easily penetrated several inches by thumb
Medium Stiff	0.50 to 1.0	0.50 to 1.0	0.25 to 0.50	Penetrated several inches by thumb with moderate effort
Stiff	1 to 2	1 to 2	0.50 to 1.0	Readily indented by thumb but penetrated only with great effort
Very Stiff	2 to 4	2 to 4	1.0 to 2.0	Readily indented by thumbnail
Hard	> 4.0	> 4.0	> 2.0	Indented by thumbnail with difficulty

BOREHOLE IDENTIFICATION

Symbol	Hole Type	Description
Size	A	Auger Boring
Size	R P	Rotary drilled boring Rotary percussion boring (air)
Size	R	Rotary drilled diamond core
Size	HD HA	Hand driven (1-inch soil tube) Hand Auger
●	D	Dynamic Cone Penetration Boring
▲	CPT	Cone Penetration Test (ASTM D 5778-95)
⬚	O	Other

Note: Size in inches.

PLASTICITY OF FINE-GRAINED SOILS

Description	Criteria
Nonplastic	A 1/8-inch thread cannot be rolled at any water content.
Low	The thread can barely be rolled and the lump cannot be formed when drier than the plastic limit.
Medium	The thread is easy to roll and not much time is required to reach the plastic limit. The thread cannot be rerolled after reaching the plastic limit. The lump crumbles when drier than the plastic limit.
High	It takes considerable time rolling and kneading to reach the plastic limit. The thread can be rerolled several times after reaching the plastic limit. The lump can be formed without crumbling when drier than the plastic limit.

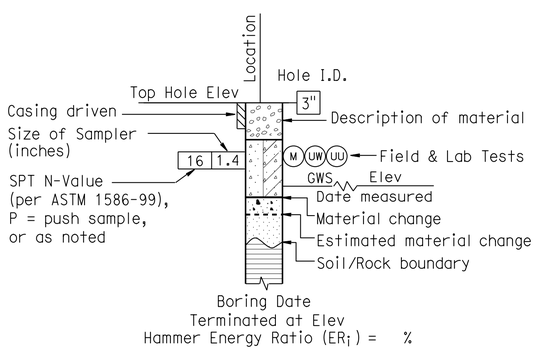

ROTARY BORING

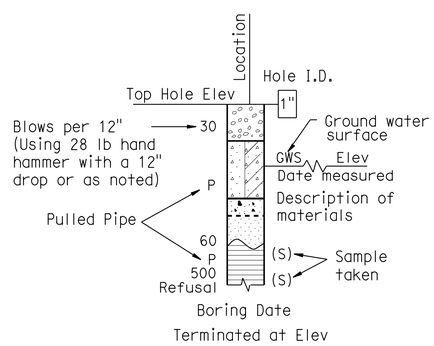

HAND BORING

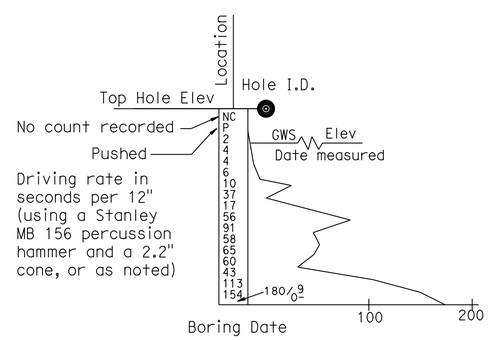

DYNAMIC CONE PENETRATION BORING

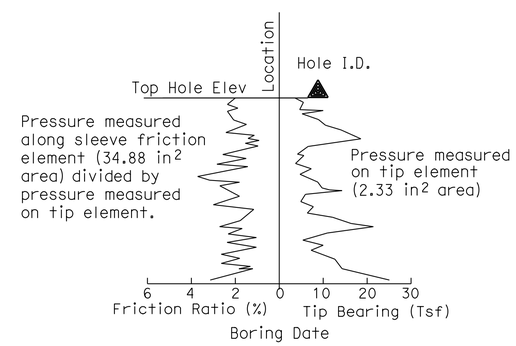

CONE PENETRATION TEST (CPT) SOUNDING

ENGINEERING SERVICES	MATERIALS AND GEOTECHNICAL SERVICES	STATE OF CALIFORNIA DEPARTMENT OF TRANSPORTATION	DIVISION OF ENGINEERING SERVICES STRUCTURE DESIGN DESIGN BRANCH X	BRIDGE NO. / POST MILE 5.07	RETAINING WALL NO. 18L LOG OF TEST BORINGS 2 OF 4
	PREPARED BY: I.G-Remmen				

GS LOTB SOIL LEGEND

ORIGINAL SCALE IN INCHES FOR REDUCED PLANS 0 1 2 3

UNIT: 3643
PROJECT NUMBER & PHASE: 11000200511
CONTRACT NO.: 11-2T1821

DISREGARD PRINTS BEARING EARLIER REVISION DATES

REVISION DATES

SHEET R7-5

FILE => 1100020051qg005.dgn

USERNAME => s127400 DATE PLOTTED => 12-SEP-2012 TIME PLOTTED => 16:23

REFERENCE: CALTRANS SOIL & ROCK LOGGING, CLASSIFICATION, AND PRESENTATION MANUAL (JUNE 2007)

DIST	COUNTY	ROUTE	POST MILES TOTAL PROJECT	SHEET No.	TOTAL SHEETS
11	SD	805	4.7/5.6	384	650

11-10-11
REGISTERED CIVIL ENGINEER

06-25-12
PLANS APPROVAL DATE

REGISTERED PROFESSIONAL ENGINEER David T-M Liao No. C59838 Exp. 06-30-13 CIVIL STATE OF CALIFORNIA

The State of California or its officers or agents shall not be responsible for the accuracy or completeness of electronic copies of this plan sheet.

GROUP SYMBOLS AND NAMES

Graphic/Symbol	Group Names	Graphic/Symbol	Group Names
GW	Well-graded GRAVEL Well-graded GRAVEL with SAND	CL	Lean CLAY Lean CLAY with SAND Lean CLAY with GRAVEL SANDY lean CLAY SANDY lean CLAY with GRAVEL GRAVELLY lean CLAY GRAVELLY lean CLAY with SAND
GP	Poorly graded GRAVEL Poorly graded GRAVEL with SAND		
GW-GM	Well-graded GRAVEL with SILT Well-graded GRAVEL with SILT and SAND	CL-ML	SILTY CLAY SILTY CLAY with SAND SILTY CLAY with GRAVEL SANDY SILTY CLAY SANDY SILTY CLAY with GRAVEL GRAVELLY SILTY CLAY GRAVELLY SILTY CLAY with SAND
GW-GC	Well-graded GRAVEL with CLAY (or SILTY CLAY) Well-graded GRAVEL with CLAY and SAND (or SILTY CLAY and SAND)		
GP-GM	Poorly graded GRAVEL with SILT Poorly graded GRAVEL with SILT and SAND	ML	SILT SILT with SAND SILT with GRAVEL SANDY SILT SANDY SILT with GRAVEL GRAVELLY SILT GRAVELLY SILT with SAND
GP-GC	Poorly graded GRAVEL with CLAY (or SILTY CLAY) Poorly graded GRAVEL with CLAY and SAND (or SILTY CLAY and SAND)		
GM	SILTY GRAVEL SILTY GRAVEL with SAND	OL	ORGANIC lean CLAY ORGANIC lean CLAY with SAND ORGANIC lean CLAY with GRAVEL SANDY ORGANIC lean CLAY SANDY ORGANIC lean CLAY with GRAVEL GRAVELLY ORGANIC lean CLAY GRAVELLY ORGANIC lean CLAY with SAND
GC	CLAYEY GRAVEL CLAYEY GRAVEL with SAND		
GC-GM	SILTY, CLAYEY GRAVEL SILTY, CLAYEY GRAVEL with SAND	OL	ORGANIC SILT ORGANIC SILT with SAND ORGANIC SILT with GRAVEL SANDY ORGANIC SILT SANDY ORGANIC SILT with GRAVEL GRAVELLY ORGANIC SILT GRAVELLY ORGANIC SILT with SAND
SW	Well-graded SAND Well-graded SAND with GRAVEL		
SP	Poorly graded SAND Poorly graded SAND with GRAVEL	CH	Fat CLAY Fat CLAY with SAND Fat CLAY with GRAVEL SANDY fat CLAY SANDY fat CLAY with GRAVEL GRAVELLY fat CLAY GRAVELLY fat CLAY with SAND
SW-SM	Well-graded SAND with SILT Well-graded SAND with SILT and GRAVEL		
SW-SC	Well-graded SAND with CLAY (or SILTY CLAY) Well-graded SAND with CLAY and GRAVEL (or SILTY CLAY and GRAVEL)	MH	Elastic SILT Elastic SILT with SAND Elastic SILT with GRAVEL SANDY elastic SILT SANDY elastic SILT with GRAVEL GRAVELLY elastic SILT GRAVELLY elastic SILT with SAND
SP-SM	Poorly graded SAND with SILT Poorly graded SAND with SILT and GRAVEL		
SP-SC	Poorly graded SAND with CLAY (or SILTY CLAY) Poorly graded SAND with CLAY and GRAVEL (or SILTY CLAY and GRAVEL)	OH	ORGANIC fat CLAY ORGANIC fat CLAY with SAND ORGANIC fat CLAY with GRAVEL SANDY ORGANIC fat CLAY SANDY ORGANIC fat CLAY with GRAVEL GRAVELLY ORGANIC fat CLAY GRAVELLY ORGANIC fat CLAY with SAND
SM	SILTY SAND SILTY SAND with GRAVEL		
SC	CLAYEY SAND CLAYEY SAND with GRAVEL	OH	ORGANIC elastic SILT ORGANIC elastic SILT with SAND ORGANIC elastic SILT with GRAVEL SANDY ORGANIC elastic SILT SANDY ORGANIC elastic SILT with GRAVEL GRAVELLY ORGANIC elastic SILT GRAVELLY ORGANIC elastic SILT with SAND
SC-SM	SILTY, CLAYEY SAND SILTY, CLAYEY SAND with GRAVEL		
PT	PEAT	OL/OH	ORGANIC SOIL ORGANIC SOIL with SAND ORGANIC SOIL with GRAVEL SANDY ORGANIC SOIL SANDY ORGANIC SOIL with GRAVEL GRAVELLY ORGANIC SOIL GRAVELLY ORGANIC SOIL with SAND
	COBBLES COBBLES and BOULDERS BOULDERS		

FIELD AND LABORATORY TESTING

- (C) Consolidation (ASTM D 2435)
- (CL) Collapse Potential (ASTM D 5333)
- (CP) Compaction Curve (CTM 216)
- (CR) Corrosivity Testing (CTM 643, CTM 422, CTM 417)
- (CU) Consolidated Undrained Triaxial (ASTM D 4767)
- (DS) Direct Shear (ASTM D 3080)
- (EI) Expansion Index (ASTM D 4829)
- (M) Moisture Content (ASTM D 2216)
- (OC) Organic Content-% (ASTM D 2974)
- (P) Permeability (CTM 220)
- (PA) Particle Size Analysis (ASTM D 422)
- (PI) Plasticity Index (AASHTO T 90) Liquid Limit (AASHTO T 89)
- (PL) Point Load Index (ASTM D 5731)
- (PM) Pressure Meter
- (PP) Pocket Penetrometer
- (R) R-Value (CTM 301)
- (SE) Sand Equivalent (CTM 217)
- (SG) Specific Gravity (AASHTO T 100)
- (SL) Shrinkage Limit (ASTM D 427)
- (SW) Swell Potential (ASTM D 4546)
- (TV) Pocket Torvane
- (UC) Unconfined Compression-Soil (ASTM D 2166) Unconfined Compression-Rock (ASTM D 2938)
- (UU) Unconsolidated Undrained Triaxial (ASTM D 2850)
- (UW) Unit Weight (ASTM D 4767)
- (VS) Vane Shear (AASHTO T 223)

APPARENT DENSITY OF COHESIONLESS SOILS

Description	SPT N_{60} (Blows / 12 inches)
Very loose	0 - 4
Loose	5 - 10
Medium Dense	11 - 30
Dense	31 - 50
Very Dense	> 50

MOISTURE

Description	Criteria
Dry	Absence of moisture, dusty, dry to the touch
Moist	Damp but no visible water
Wet	Visible free water, usually soil is below water table

PERCENT OR PROPORTION OF SOILS

Description	Criteria
Trace	Particles are present but estimated to be less than 5%
Few	5 to 10%
Little	15 to 25%
Some	30 to 45%
Mostly	50 to 100%

PARTICLE SIZE

Description		Size
Boulder		> 12"
Cobble		3" to 12"
Gravel	Coarse	3/4" to 3"
	Fine	No. 4 to 3/4"
Sand	Coarse	No. 10 to No. 4
	Medium	No. 40 to No. 10
	Fine	No. 200 to No. 40

ENGINEERING SERVICES

MATERIALS AND GEOTECHNICAL SERVICES

PREPARED BY: I.G-Remmen

STATE OF CALIFORNIA DEPARTMENT OF TRANSPORTATION

DIVISION OF ENGINEERING SERVICES STRUCTURE DESIGN DESIGN BRANCH X

BRIDGE NO.

POST MILE 5.07

RETAINING WALL NO. 18L

LOG OF TEST BORINGS 3 OF 4

GS LOTB SOIL LEGEND

ORIGINAL SCALE IN INCHES FOR REDUCED PLANS 0 1 2 3

UNIT: 3643
PROJECT NUMBER & PHASE: 11000200511
CONTRACT NO.: 11-2T1821

DISREGARD PRINTS BEARING EARLIER REVISION DATES

REVISION DATES

SHEET R7-6

FILE => 1100020051gg006.dgn

USERNAME => s127400 DATE PLOTTED => 12-SEP-2012 TIME PLOTTED => 16:23

DIST	COUNTY	ROUTE	POST MILES TOTAL PROJECT	SHEET No.	TOTAL SHEETS
11	SD	805	4.7/5.6	385	650

REGISTERED CIVIL ENGINEER 11-10-11

06-25-12
PLANS APPROVAL DATE

The State of California or its officers or agents shall not be responsible for the accuracy or completeness of electronic copies of this plan sheet.

REGISTERED PROFESSIONAL ENGINEER David T-M Liao No. C59838 Exp. 06-30-13 CIVIL STATE OF CALIFORNIA

REFERENCE: CALTRANS SOIL & ROCK LOGGING, CLASSIFICATION, AND PRESENTATION MANUAL (JUNE 2007)

PERCENT CORE RECOVERY (REC) & ROCK QUALITY DESIGNATION (RQD)

$$REC = \frac{\sum \text{Length of the recovered core pieces (inches)}}{\text{Total length of core run (inches)}} \times 100\%$$

$$RQD = \frac{\sum \text{Length of intact core pieces} \geq 4''}{\text{Total length of core run (inches)}} \times 100\%$$

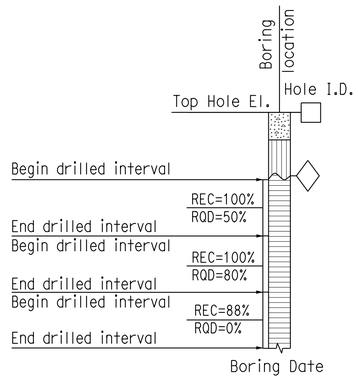

RELATIVE STRENGTH OF INTACT ROCK

Term	Uniaxial Compressive Strength (PSI)
Extremely Strong	> 30,000
Very Strong	14,500 - 30,000
Strong	7,000 - 14,500
Medium Strong	3,500 - 7,000
Weak	700 - 3,500
Very Weak	150 - 700
Extremely Weak	< 150

BEDDING SPACING

Description	Thickness / Spacing
Massive	Greater than 10 ft
Very thickly bedded	3 to 10 ft
Thickly bedded	1 to 3 ft
Moderately bedded	3-5/8" to 1 ft
Thinly bedded	1-1/4" to 3-5/8"
Very thinly bedded	3/8" to 1-1/4"
Laminated	Less than 3/8"

LEGEND OF ROCK MATERIALS

- IGNEOUS ROCK
- SEDIMENTARY ROCK
- METAMORPHIC ROCK

ROCK HARDNESS

Description	Criteria
Extremely Hard	Specimen cannot be scratched with a pocket knife or sharp pick; can only be chipped with repeated heavy hammer blows.
Very Hard	Specimen cannot be scratched with a pocket knife or sharp pick. Breaks with repeated heavy hammer blows.
Hard	Specimen can be scratched with a pocket knife or sharp pick with difficulty (heavy pressure). Heavy hammer blows required to break specimen.
Moderately Hard	Specimen can be scratched with pocket knife or sharp pick with light or moderate pressure. Core breaks with moderate hammer blows.
Moderately Soft	Specimen can be grooved 1/6" deep with a pocket knife or sharp pick with moderate or heavy pressure. Breaks with light hammer blow or heavy manual pressure.
Soft	Specimen can be grooved or gouged easily by a pocket knife or sharp pick with light pressure, can be scratched with fingernail. Breaks with light to moderate manual pressure.
Very Soft	Specimen can be readily indented, grooved or gouged with fingernail, or carved with a pocket knife. Breaks with light manual pressure.

FRACTURE DENSITY

Description	Observed Fracture Density
Unfractured	No fractures.
Very slightly fractured	Lengths greater than 3 feet.
Slightly fractured	Lengths from 1 to 3 feet with few lengths less than 1 foot or greater than 3 feet.
Moderately fractured	Lengths mostly in 4" to 1 foot range with most lengths about 8"
Intensely fractured	Lengths average from 1 to 4" with scattered fragmented intervals with lengths less than 4"
Very intensely fractured	Mostly chips and fragments with a few scattered short core lengths.

Combination descriptors (such as "Very intensely to intensely fractured") are used where equal distribution of both fracture density characteristics is present over a significant interval or exposure, or where characteristics are "in between" the descriptor definitions. Only two adjacent descriptors may be combined.

WEATHERING DESCRIPTORS FOR INTACT ROCK

Description	Diagnostic features					General Characteristics
	Chemical Weathering-Discoloration and/or oxidation		Mechanical Weathering-Grain boundary conditions (disaggregation) primarily for granitics and some coarse-grained sediments	Texture and Solutioning		
	Body of Rock	Fracture Surfaces		Texture	Solutioning	
Fresh	No discoloration, not oxidized.	No discoloration or oxidation.	No separation, intact (tight).	No change.	No solutioning.	Hammer rings when crystalline rocks are struck.
Slightly Weathered	Discoloration or oxidation is limited to surface of, or short distance from, fractures; some feldspar crystals are dull.	Minor to complete discoloration or oxidation of most surfaces.	No visible separation, intact (tight).	Preserved.	Minor leaching of some soluble minerals may be noted.	Hammer rings when crystalline rocks are struck. Body of rock not weakened.
Moderately Weathered	Discoloration or oxidation extends from fractures usually throughout; Fe-Mg minerals are "rusty," feldspar crystals are "cloudy."	All fracture surfaces are discolored or oxidized.	Partial separation of boundaries visible.	Generally preserved.	Soluble minerals may be mostly leached.	Hammer does not ring when rock is struck. Body of rock is slightly weakened.
Intensely Weathered	Discoloration or oxidation throughout; all feldspars and Fe-Mg minerals are altered to clay to some extent; or chemical alteration produces in-situ disaggregation, see grain boundary conditions.	All fracture surfaces are discolored or oxidized, surfaces friable.	Partial separation, rock is friable; in semiarid conditions granitics are disaggregated.	Texture altered by chemical disintegration (hydration, argillation).	Leaching of soluble minerals may be complete.	Dull sound when struck with hammer, usually can be broken with moderate to heavy manual pressure or by light hammer blow without reference to planes of weakness such as incipient or hairline fractures, or veinlets. Rock is significantly weakened.
Decomposed	Discolored or oxidized throughout, but resistant minerals such as quartz may be unaltered; all feldspars and Fe-Mg minerals are completely altered to clay.		Complete separation of grain boundaries (disaggregated).	Resembles a soil, partial or complete remnant rock structure may be preserved; leaching of soluble minerals usually complete.		Can be granulated by hand. Resistant minerals such as quartz may be present as "stringers" or "dikes."

Combination descriptors (such as "slightly weathered to fresh") are permissible where equal distribution of both weathering characteristics is present over significant intervals or where characteristics present are "in between" the diagnostic feature. However, combination descriptors should not be used where significant, identifiable zones can be delineated. Only two adjacent descriptors may be combined. "Very intensely weathered" is the combination descriptor for "intensely weathered to decomposed."

ENGINEERING SERVICES

MATERIALS AND GEOTECHNICAL SERVICES

PREPARED BY: I.G-Remmen

STATE OF CALIFORNIA DEPARTMENT OF TRANSPORTATION

DIVISION OF ENGINEERING SERVICES STRUCTURE DESIGN
DESIGN BRANCH X

BRIDGE NO.
POST MILE 5.07

RETAINING WALL NO. 18L
LOG OF TEST BORINGS 4 OF 4

GS LOTB SOIL LEGEND

ORIGINAL SCALE IN INCHES FOR REDUCED PLANS 0 1 2 3

UNIT: 3643
PROJECT NUMBER & PHASE: 11000200511
CONTRACT NO.: 11-2T1821

DISREGARD PRINTS BEARING EARLIER REVISION DATES

REVISION DATES

SHEET R7-7

FILE => 1100020051qg007.dgn

USERNAME => s127400 DATE PLOTTED => 12-SEP-2012 TIME PLOTTED => 16:23

Dist	COUNTY	ROUTE	POST MILES TOTAL PROJECT	SHEET No.	TOTAL SHEETS
11	SD	805	4.7/5.6	386	650

REGISTERED CIVIL ENGINEER DATE 05-24-12

06-25-12
PLANS APPROVAL DATE

REGISTERED PROFESSIONAL ENGINEER DAVID LAYNE No. C74349 Exp. 06-30-13 CIVIL STATE OF CALIFORNIA

THE STATE OF CALIFORNIA OR ITS OFFICERS OR AGENTS SHALL NOT BE RESPONSIBLE FOR THE ACCURACY OR COMPLETENESS OF SCANNED COPIES OF THIS PLAN SHEET.

DOKKEN ENGINEERING
5675 RUFFIN Rd
SUITE 250
SAN DIEGO, CA 92123

SANDAG
401 B St
SUITE 800
SAN DIEGO, CA 92101

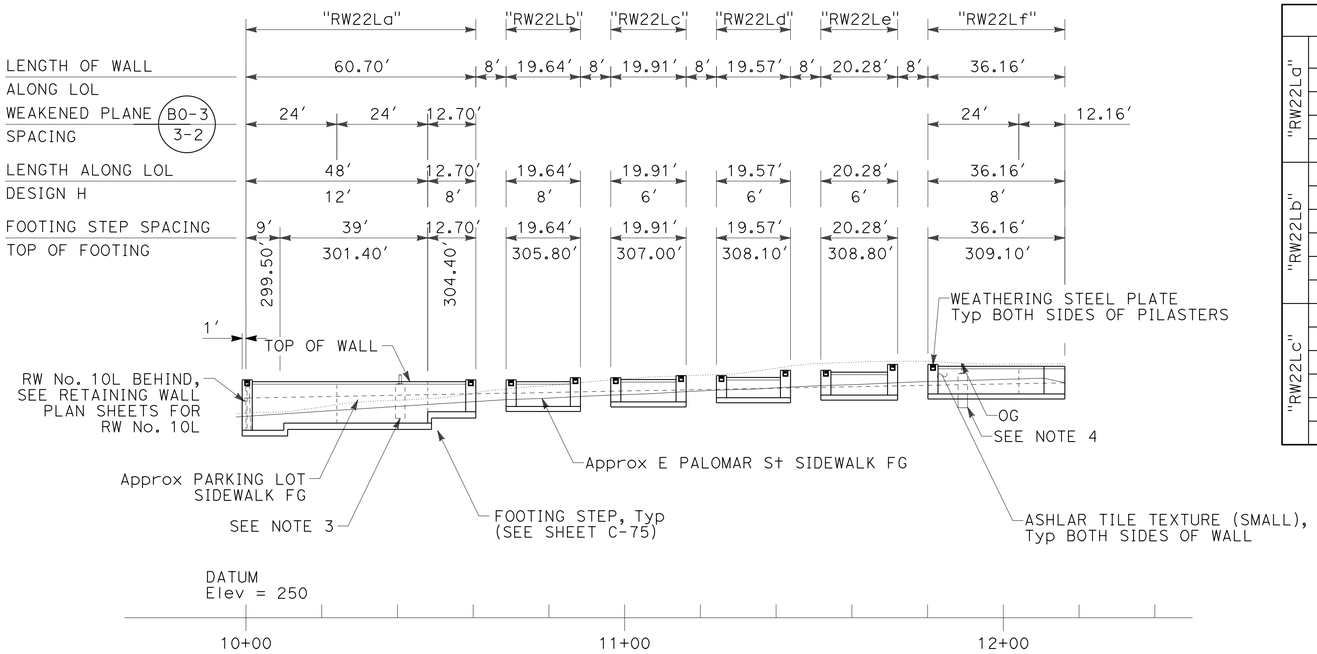

DEVELOPED ELEVATION

SCALE: 1" = 20′

TOP OF WALL

	STATION	ELEVATION		STATION	ELEVATION
"RW22La"	10+00.00	312.34	"RW22Ld"	11+24.24	313.95
	10+58.03	312.34		11+26.91	313.95
	10+58.03	312.84		11+26.91	313.45
	10+60.70	312.84		11+41.14	313.45
"RW22Lb"	10+68.70	312.84		11+41.14	315.35
	10+71.36	312.84		11+43.81	315.35
	10+71.36	312.34	"RW22Le"	11+51.81	315.35
	10+85.67	312.34		11+54.48	315.35
	10+85.67	313.40		11+54.48	314.85
	10+88.33	313.40		11+69.42	314.85
"RW22Lc"	10+96.33	313.40		11+69.42	316.90
	11+99.00	313.40		11+72.09	316.90
	11+99.00	312.90	"RW22Lf"	11+80.09	316.90
	11+13.58	312.90		11+82.76	316.90
	11+13.58	313.95		11+82.76	316.40
	11+16.24	313.95		12+16.25	316.40

CURVE DATA TABLE

No.	R	Δ	T	L
1	888.00′	13 35′53″	105.87′	210.75′

RW QUANTITIES ("RW22L")

ITEM	TOTAL
STRUCTURE EXCAVATION (RETAINING WALL)	310 CY
STRUCTURE BACKFILL (RETAINING WALL)	240 CY
STRUCTURAL CONCRETE (RETAINING WALL)	150 CY
BAR REINFORCING STEEL (RETAINING WALL)	25,900 LB
ARCHITECTURAL TREATMENT (ASHLAR TILE TEXTURE (SMALL))	1,350 SQFT
WEATHERING STEEL PLATE	22 EA

PLAN

SCALE: 1" = 20′

APPROVED FOR RETAINING WALL WORK ONLY

NOTES:

1. NOT ALL UTILITIES SHOWN ON RETAINING WALL PLAN SHEETS. SEE UTILITY PLAN SHEETS
2. LOL SHOWN IN PLAN VIEW FOR "RW22Ld", "RW22Le", AND "RW22Lf" IS OFFSET 12" FROM LOL SHOWN IN STANDARD PLAN B3-1. SEE CROSS SECTIONS ON NEXT SHEET.
3. LIGHT POLE FOUNDATION TO BE ABOVE RW FOOTING, SEE ELECTRICAL PLANS FOR Approx LOCATION OF POLE
4. LIGHT POLE FOUNDATION TO BE OUTSIDE OF RW FOOTING. SEE ELECTRICAL PLANS FOR Approx LOCATION

LEGEND:

STANDARD PLAN SHEET No.

DETAIL No.

RETAINING WALL PLAN
RW No. 22L

SCALE AS SHOWN

R8-1

REVISED BY | DATE REVISED
DAVID LAYNE | PAUL KOSINSKI
CALCULATED-DESIGNED BY | CHECKED BY
CONSULTANT FUNCTIONAL SUPERVISOR | GERARD LUMABAS
STATE OF CALIFORNIA - DEPARTMENT OF TRANSPORTATION
Caltrans

LAST REVISION 08-23-12 | DATE PLOTTED => 12-SEP-2012 | TIME PLOTTED => 16:23

Dist	COUNTY	ROUTE	POST MILES TOTAL PROJECT	SHEET No.	TOTAL SHEETS
11	SD	805	4.7/5.6	387	650

David Layne 05-24-12
REGISTERED CIVIL ENGINEER DATE

06-25-12
PLANS APPROVAL DATE

REGISTERED PROFESSIONAL ENGINEER DAVID LAYNE No. C74349 Exp. 06-30-13 CIVIL STATE OF CALIFORNIA

THE STATE OF CALIFORNIA OR ITS OFFICERS OR AGENTS SHALL NOT BE RESPONSIBLE FOR THE ACCURACY OR COMPLETENESS OF SCANNED COPIES OF THIS PLAN SHEET.

DOKKEN ENGINEERING
5675 RUFFIN Rd
SUITE 250
SAN DIEGO, CA 92123

SANDAG
401 B St
SUITE 800
SAN DIEGO, CA 92101

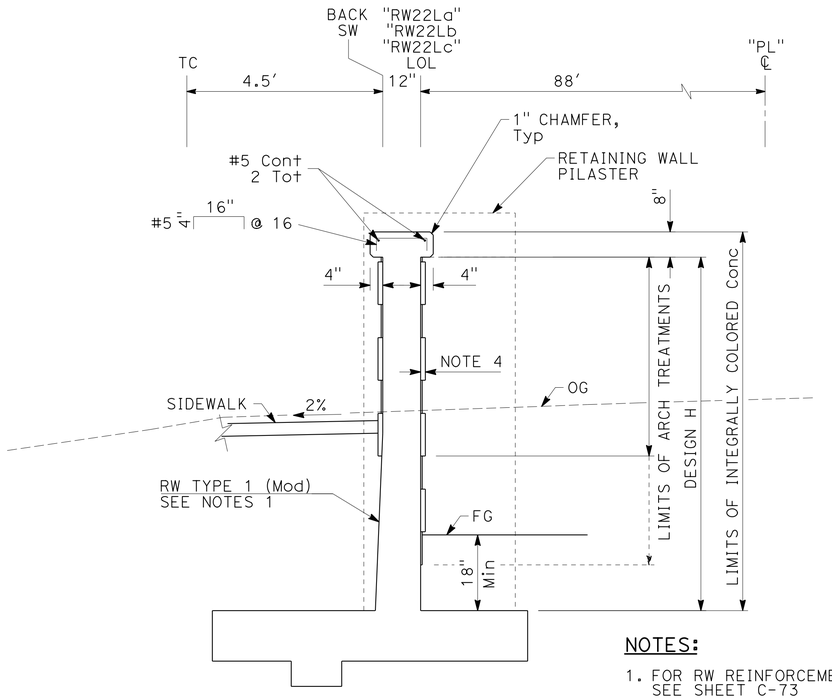

TYPICAL SECTION

NO SCALE
"RW22L" 10+00.00 TO 11+16.24

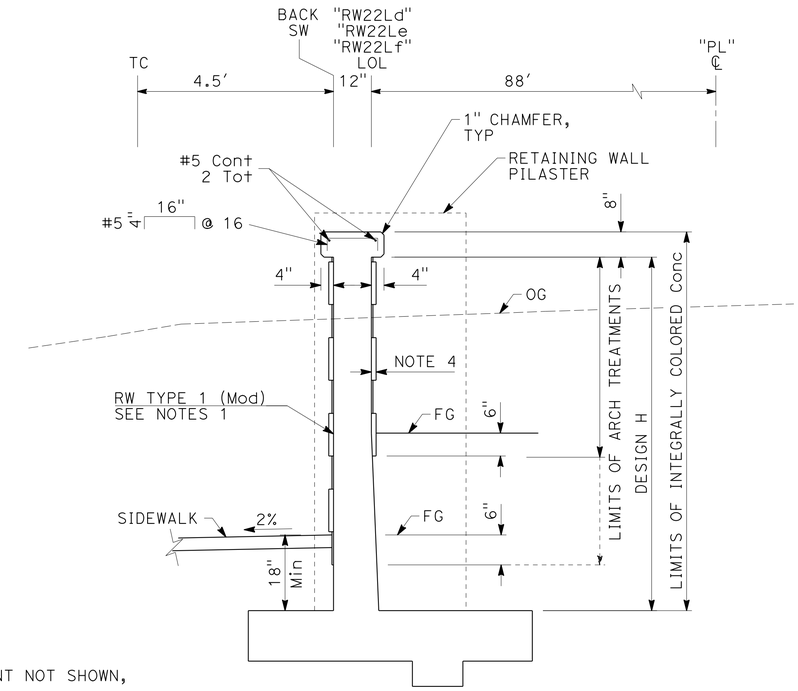

TYPICAL SECTION

NO SCALE
"RW22L" 11+16.24 TO 12+16.25

NOTES:

1. FOR RW REINFORCEMENT NOT SHOWN, SEE SHEET C-73
2. BEGIN WALL BATTER 4" BELOW FINISHED GRADE
3. RW STEM, RW CAP AND RW PILASTERS SHALL BE INTEGRALLY COLORED CONCRETE
4. ARCHITECTURAL TREATMENT (ASHLAR TILE TEXTURE (SMALL)) ON BOTH SIDES OF WALL
5. SEE ADDITIONAL RETAINING WALL DETAILS ON SHEET C-75

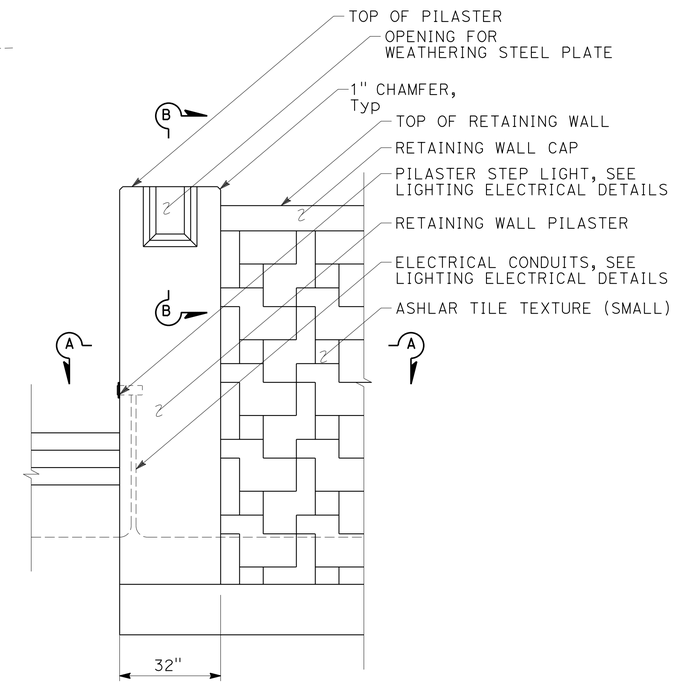

PILASTER DETAIL

SCALE: ½" = 1'

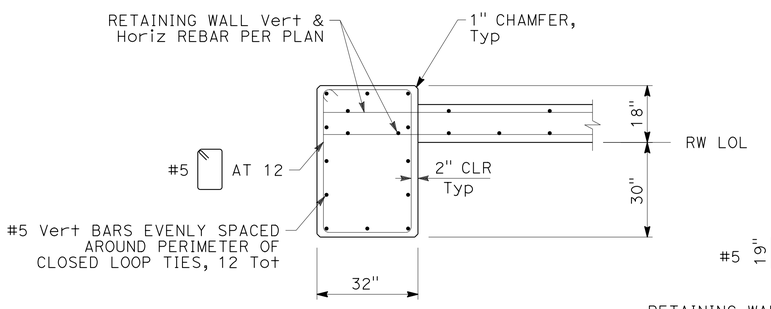

SECTION A-A

SCALE: ½" = 1'

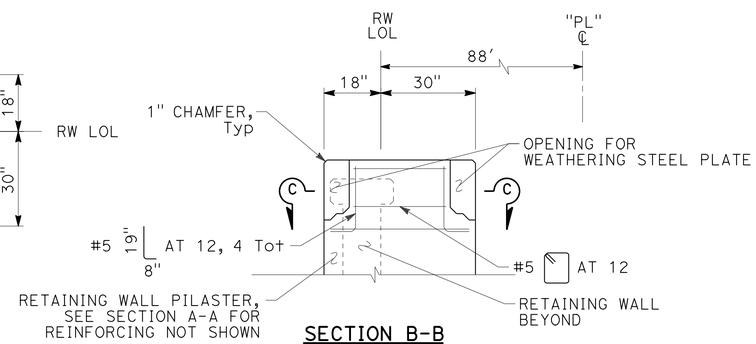

SECTION B-B

SCALE: ½" = 1'

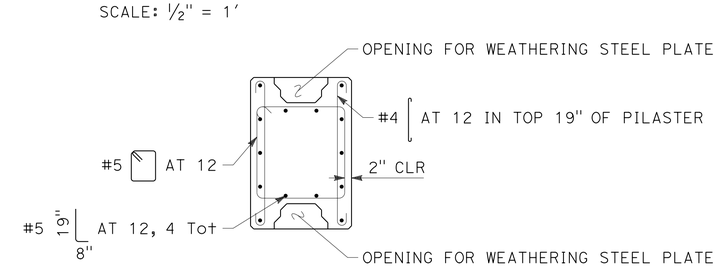

SECTION C-C

SCALE: ½" = 1'

RETAINING WALL DETAILS
RW No. 22L

SCALE AS SHOWN

R8-2

APPROVED FOR RETAINING WALL WORK ONLY

STATE OF CALIFORNIA - DEPARTMENT OF TRANSPORTATION
Caltrans®
CONSULTANT FUNCTIONAL SUPERVISOR: GERARD LUMABAS
CALCULATED-DESIGNED BY: PAUL KOSINSKI
CHECKED BY: DAVID LAYNE
REVISED BY
DATE REVISED

LAST REVISION 08-23-12 | DATE PLOTTED => 12-SEP-2012 | TIME PLOTTED => 16:24

Dist	COUNTY	ROUTE	POST MILES TOTAL PROJECT	SHEET No.	TOTAL SHEETS
11	SD	805	4.7/5.6	388	650

David Layne 05-24-12
REGISTERED CIVIL ENGINEER DATE

06-25-12
PLANS APPROVAL DATE

REGISTERED PROFESSIONAL ENGINEER
DAVID LAYNE
No. C74349
Exp. 06-30-13
CIVIL
STATE OF CALIFORNIA

THE STATE OF CALIFORNIA OR ITS OFFICERS OR AGENTS SHALL NOT BE RESPONSIBLE FOR THE ACCURACY OR COMPLETENESS OF SCANNED COPIES OF THIS PLAN SHEET.

DOKKEN ENGINEERING
5675 RUFFIN Rd
SUITE 250
SAN DIEGO, CA 92123

SANDAG
401 B St
SUITE 800
SAN DIEGO, CA 92101

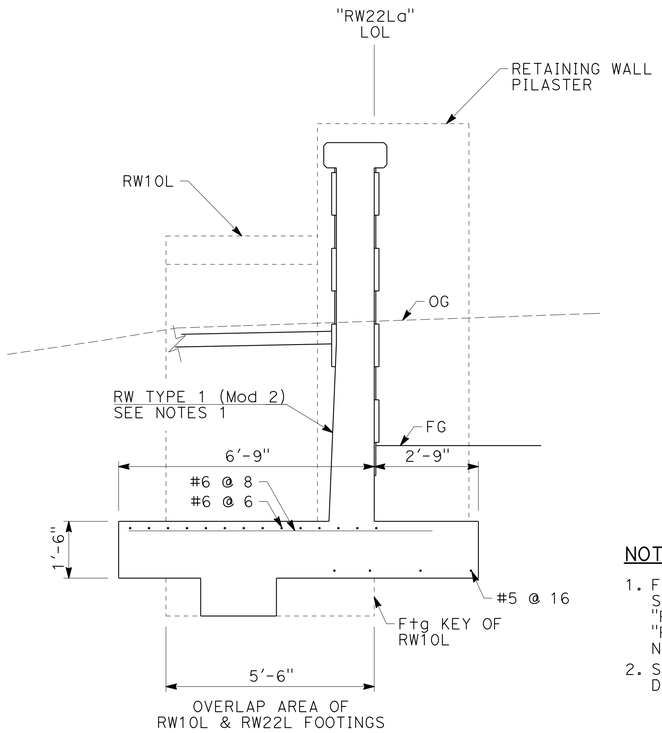

FOOTING OVERLAP DETAIL
NO SCALE
"RW22L" 9+99.00 TO 10+11.00

NOTES:

1. FOR RW REINFORCEMENT NOT SHOWN, SEE SHEET C-73. SEE TYPICAL SECTION "RW22L" 10+00.00 TO 11+16.24 AND "RW10L" 11+58.49 TO 11+61.95 FOR DETAILS NOT SHOWN.
2. SEE ADDITIONAL RETAINING WALL DETAILS ON SHEET C-75

APPROVED FOR RETAINING WALL WORK ONLY

RETAINING WALL DETAILS
RW No. 22L

SCALE AS SHOWN

R8-3

STATE OF CALIFORNIA - DEPARTMENT OF TRANSPORTATION
Caltrans

CONSULTANT FUNCTIONAL SUPERVISOR: GERARD LUMABAS
CALCULATED-DESIGNED BY: PAUL KOSINSKI
CHECKED BY: DAVID LAYNE
REVISED BY
DATE REVISED

LAST REVISION 06-14-12
DATE PLOTTED => 12-SEP-2012
TIME PLOTTED => 16:24

NOTES:
1. SEE SHEET R8-1 FOR PILASTER HEIGHT AND ELEVATION.
2. SEE SHEET C-59 AND C-60 FOR Conc STAIRS AND PIPE HANDRAILING DETAILS.
3. SEE SHEET C-61 FOR PLANTER STEM WALL HEIGHT AND ELEVATION.

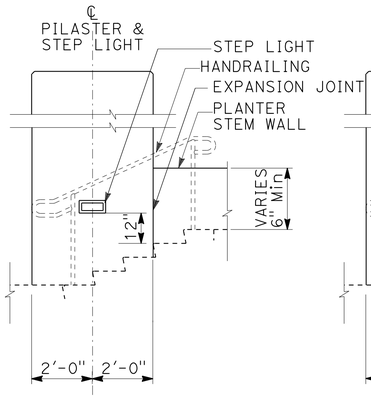

SECTION B-B

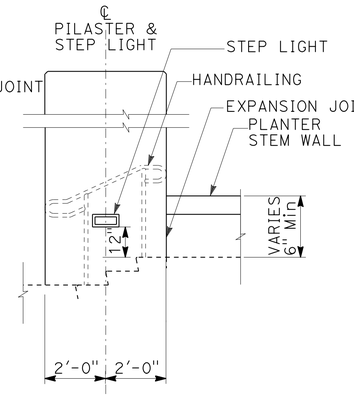

SECTION B-B

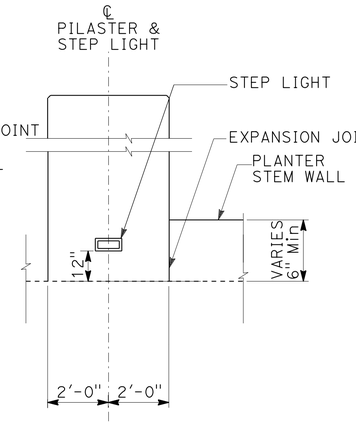

SECTION B-B

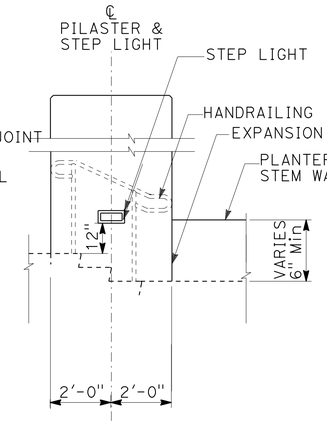

SECTION B-B

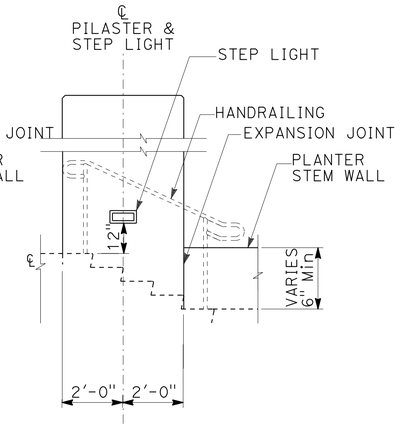

SECTION B-B

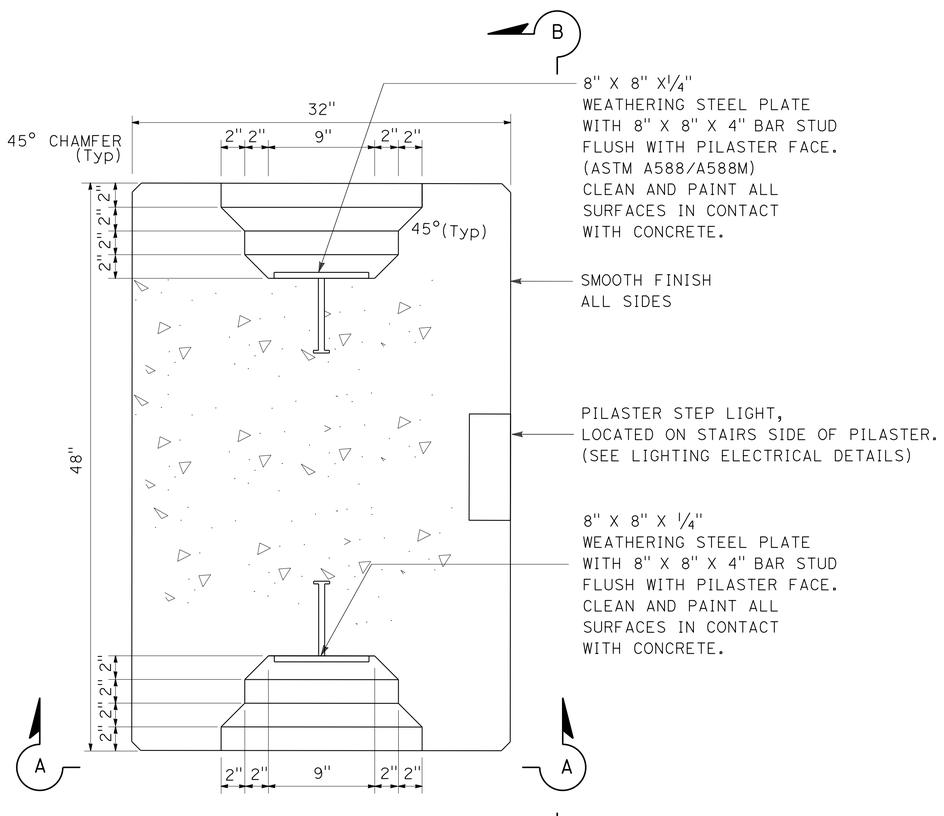

PILASTER AT STAIRS

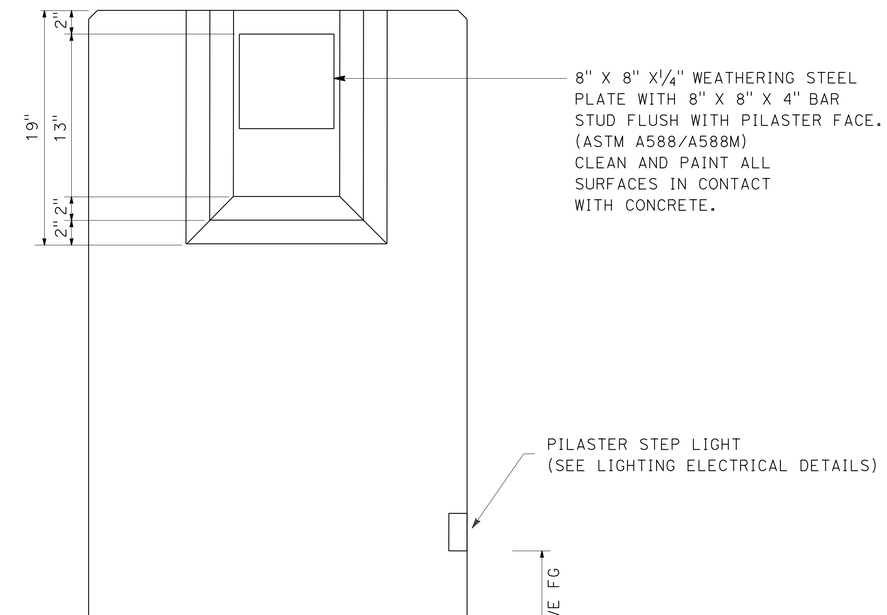

SECTION A-A

APPROVED FOR RETAINING WALL WORK ONLY

RETAINING WALL DETAILS RW No. 22L

NO SCALE

R8-4

Dist	COUNTY	ROUTE	POST MILES TOTAL PROJECT	SHEET No.	TOTAL SHEETS
11	SD	805	4.7/5.6	389	650

REGISTERED CIVIL ENGINEER 06-01-12 DATE

06-25-12
PLANS APPROVAL DATE

REGISTERED PROFESSIONAL ENGINEER PAUL E. KOSINSKI No. C73254 Exp. 12-31-12 CIVIL STATE OF CALIFORNIA

THE STATE OF CALIFORNIA OR ITS OFFICERS OR AGENTS SHALL NOT BE RESPONSIBLE FOR THE ACCURACY OR COMPLETENESS OF SCANNED COPIES OF THIS PLAN SHEET.

DOKKEN ENGINEERING
5675 RUFFIN Rd
SUITE 250
SAN DIEGO, CA 92123

SANDAG
401 B St
SUITE 800
SAN DIEGO, CA 92101

STATE OF CALIFORNIA - DEPARTMENT OF TRANSPORTATION
Caltrans

CONSULTANT FUNCTIONAL SUPERVISOR: GERARD LUMABAS
CALCULATED-DESIGNED BY: DAVID LAYNE
CHECKED BY: PAUL KOSINSKI
REVISED BY
DATE REVISED

LAST REVISION 06-14-12
DATE PLOTTED => 12-SEP-2012
TIME PLOTTED => 16:24

Dist	COUNTY	ROUTE	POST MILES TOTAL PROJECT	SHEET No.	TOTAL SHEETS
11	SD	805	4.7/5.6	390	650

REGISTERED CIVIL ENGINEER DATE 05-24-12

PLANS APPROVAL DATE 06-25-12

REGISTERED PROFESSIONAL ENGINEER DAVID LAYNE No. C74349 Exp. 06-30-13 CIVIL STATE OF CALIFORNIA

THE STATE OF CALIFORNIA OR ITS OFFICERS OR AGENTS SHALL NOT BE RESPONSIBLE FOR THE ACCURACY OR COMPLETENESS OF SCANNED COPIES OF THIS PLAN SHEET.

DOKKEN ENGINEERING
5675 RUFFIN Rd
SUITE 250
SAN DIEGO, CA 92123

SANDAG
401 B St
SUITE 800
SAN DIEGO, CA 92101

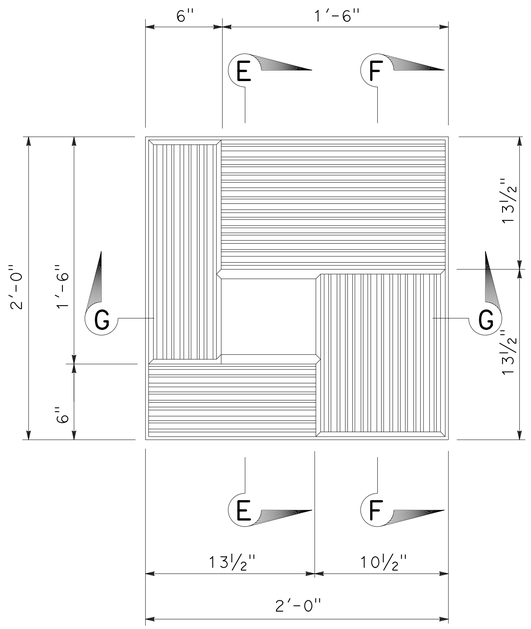

ASHLAR TILE TEXTURE (SMALL) DETAIL
SCALE: 2" = 1'

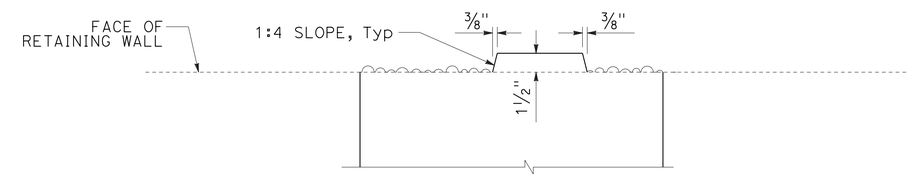

SECTION E-E
SCALE: 2" = 1'

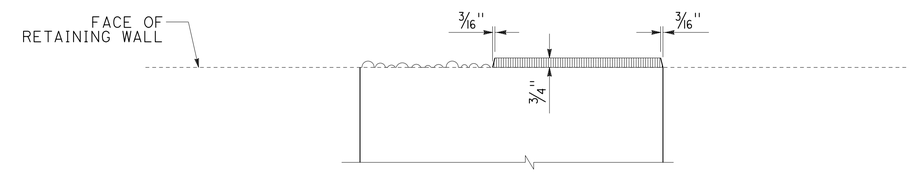

SECTION F-F
SCALE: 2" = 1'

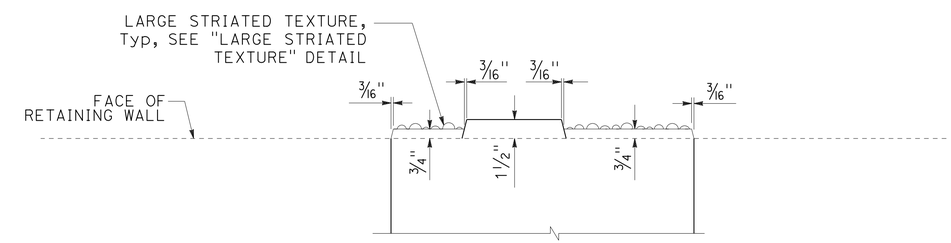

SECTION G-G
SCALE: 2" = 1'

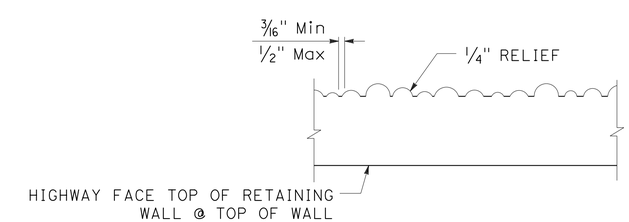

LARGE STRIATED TEXTURE DETAIL
SCALE: 4" = 1'

RETAINING WALL DETAILS
RW No. 22L

SCALE AS SHOWN

R8-5

APPROVED FOR RETAINING WALL WORK ONLY

STATE OF CALIFORNIA - DEPARTMENT OF TRANSPORTATION
Caltrans

CONSULTANT FUNCTIONAL SUPERVISOR: GERARD LUMABAS
CALCULATED-DESIGNED BY: DAVID LAYNE
CHECKED BY: PAUL KOSINSKI
REVISED BY
DATE REVISED

LAST REVISION 06-14-12
DATE PLOTTED => 12-SEP-2012
TIME PLOTTED => 16:24

DIST	COUNTY	ROUTE	POST MILES TOTAL PROJECT	SHEET No.	TOTAL SHEETS
11	SD	805	4.7/5.6	391	650

REGISTERED CIVIL ENGINEER 06-12-12

06-25-12
PLANS APPROVAL DATE

The State of California or its officers or agents shall not be responsible for the accuracy or completeness of electronic copies of this plan sheet.

REGISTERED PROFESSIONAL ENGINEER Brian Gutierrez No. C66258 Exp. 06-30-14 CIVIL STATE OF CALIFORNIA

This LOTB sheet was prepared in accordance with the Caltrans Soil & Rock Logging, Classification, & Presentation Manual (2007 Edition).

BENCH MARK

BM 805-5.00, Brass disk in sidewalk on north side of E. Palomar St. OC bridge, at Station 298+46.0, Right 60 feet of "DAR" Line/"A1" Line.
Elevation: 300.93 feet
NAVD 1988 (Vertical)
NAD83 (Horizontal)

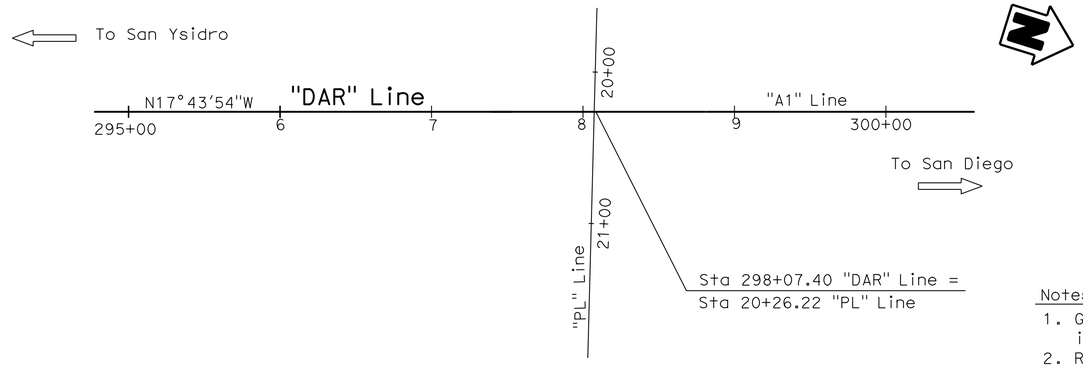

Notes:
1. Ground water was not encountered during the 2010 subsurface investigation.
2. RQD designated with "NA" (not applicable) indicates that the rock encountered within the drill interval was not sound rock, therefore RQD was not calculated.
3. Plan sheets provided by Design, show that "A1" Line = "DAR" Line.

PROFILE

Horiz: 1" = 5'
Vert: 1" = 10'

ENGINEERING SERVICES	GEOTECHNICAL SERVICES	STATE OF CALIFORNIA DEPARTMENT OF TRANSPORTATION	DIVISION OF ENGINEERING SERVICES STRUCTURE DESIGN DESIGN BRANCH X	BRIDGE NO. / POST MILE 5.07	RETAINING WALL 22L LOG OF TEST BORINGS 1 OF 4
FUNCTIONAL SUPERVISOR NAME: S. Wei	DRAWN BY: F. Nguyen 02/11 CHECKED BY: M. Wilson	FIELD INVESTIGATION BY: J. Klamecki			

OGS CIVIL LOG OF TEST BORINGS SHEET

ORIGINAL SCALE IN INCHES FOR REDUCED PLANS 0 1 2 3

UNIT: 3643
PROJECT NUMBER & PHASE: 11000200511 CONTRACT NO.: 11-2T1821

DISREGARD PRINTS BEARING EARLIER REVISION DATES 12-19-11

REVISION DATES | SHEET R8-6

FILE => 1100020051qh006.dgn

USERNAME => s127400 DATE PLOTTED =>

REFERENCE: CALTRANS SOIL & ROCK LOGGING, CLASSIFICATION, AND PRESENTATION MANUAL (2010)

DIST	COUNTY	ROUTE	POST MILES TOTAL PROJECT	SHEET No.	TOTAL SHEETS
11	SD	805	4.7/5.6	392	650

06-12-12
REGISTERED CIVIL ENGINEER

06-25-12
PLANS APPROVAL DATE

REGISTERED PROFESSIONAL ENGINEER
Brian Gutierrez
No. C66258
Exp. 06-30-14
CIVIL
STATE OF CALIFORNIA

The State of California or its officers or agents shall not be responsible for the accuracy or completeness of electronic copies of this plan sheet.

This LOTB sheet was prepared in accordance with the Caltrans Soil & Rock Logging, Classification, & Presentation Manual (2007 Edition).

CEMENTATION

Description	Criteria
Weak	Crumbles or breaks with handling or little finger pressure.
Moderate	Crumbles or breaks with considerable finger pressure.
Strong	Will not crumble or break with finger pressure.

BOREHOLE IDENTIFICATION

Symbol	Hole Type	Description
Size	A	Auger Boring (hollow or solid stem bucket)
Size	R RW RC P	Rotary drilled boring (conventional) Rotary drilled with self-casing wire-line Rotary core with continuously-sampled, self-casing wire-line Rotary percussion boring (air)
Size	R	Rotary drilled diamond core
Size	HD HA	Hand driven (1-inch soil tube) Hand Auger
●	D	Dynamic Cone Penetration Boring
▲	CPT	Cone Penetration Test (ASTM D 5778)
⬚	O	Other (note on LOTB)

Note: Size in inches.

CONSISTENCY OF COHESIVE SOILS

Description	Shear Strength (tsf)	Pocket Penetrometer Measurement, PP, (tsf)	Torvane Measurement, TV, (tsf)	Vane Shear Measurement, VS, (tsf)
Very Soft	Less than 0.12	Less than 0.25	Less than 0.12	Less than 0.12
Soft	0.12 - 0.25	0.25 - 0.5	0.12 - 0.25	0.12 - 0.25
Medium Stiff	0.25 - 0.5	0.5 - 1	0.25 - 0.5	0.25 - 0.5
Stiff	0.5 - 1	1 - 2	0.5 - 1	0.5 - 1
Very Stiff	1 - 2	2 - 4	1 - 2	1 - 2
Hard	Greater than 2	Greater than 4	Greater than 2	Greater than 2

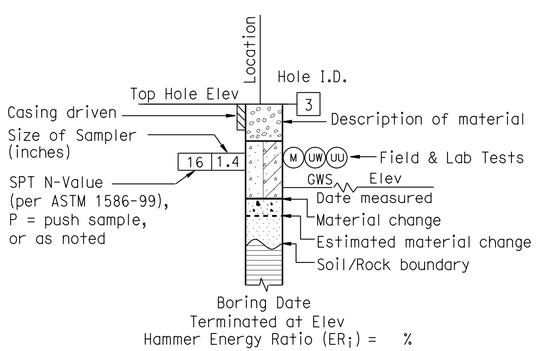

ROTARY BORING

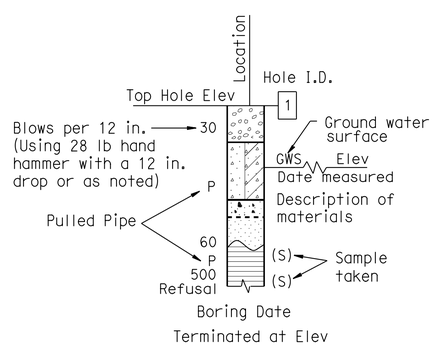

HAND BORING

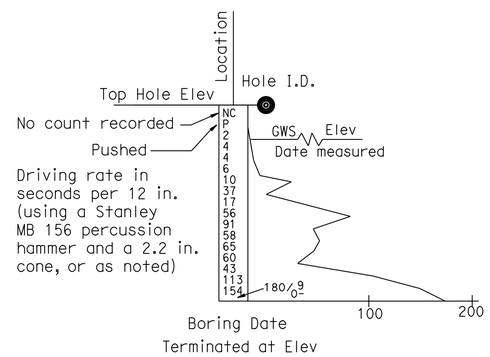

DYNAMIC CONE PENETRATION BORING

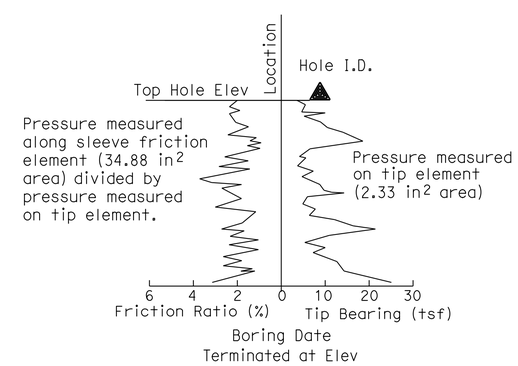

CONE PENETRATION TEST (CPT) BORING

ENGINEERING SERVICES	GEOTECHNICAL SERVICES	STATE OF CALIFORNIA DEPARTMENT OF TRANSPORTATION	DIVISION OF ENGINEERING SERVICES STRUCTURE DESIGN DESIGN BRANCH X	BRIDGE NO. / POST MILE 5.07	RETAINING WALL 22L LOG OF TEST BORINGS 2 OF 4
	PREPARED BY: I.G-Remmen				

GS LOTB SOIL LEGEND

ORIGINAL SCALE IN INCHES FOR REDUCED PLANS 0 1 2 3

UNIT: 3643
PROJECT NUMBER & PHASE: 11000200511
CONTRACT NO.: 11-2T1821

DISREGARD PRINTS BEARING EARLIER REVISION DATES

REVISION DATES: 12-19-11

SHEET R8-7

FILE => 11000200051qh007.dgn

USERNAME => s12400 DATE PLOTTED => 12-SEP-2012 TIME PLOTTED => 16:24

REFERENCE: CALTRANS SOIL & ROCK LOGGING, CLASSIFICATION, AND PRESENTATION MANUAL (2010)

DIST	COUNTY	ROUTE	POST MILES TOTAL PROJECT	SHEET No.	TOTAL SHEETS
11	SD	805	4.7/5.6	393	650

Brian Gutierrez 06-12-12
REGISTERED CIVIL ENGINEER

06-25-12
PLANS APPROVAL DATE

REGISTERED PROFESSIONAL ENGINEER Brian Gutierrez No. C66258 Exp. 06-30-14 CIVIL STATE OF CALIFORNIA

The State of California or its officers or agents shall not be responsible for the accuracy or completeness of electronic copies of this plan sheet.

This LOTB sheet was prepared in accordance with the Caltrans Soil & Rock Logging, Classification, & Presentation Manual (2007 Edition).

GROUP SYMBOLS AND NAMES

Graphic/Symbol	Group Names	Graphic/Symbol	Group Names
GW	Well-graded GRAVEL Well-graded GRAVEL with SAND	CL	Lean CLAY Lean CLAY with SAND Lean CLAY with GRAVEL SANDY lean CLAY SANDY lean CLAY with GRAVEL GRAVELLY lean CLAY GRAVELLY lean CLAY with SAND
GP	Poorly-graded GRAVEL Poorly-graded GRAVEL with SAND		
GW-GM	Well-graded GRAVEL with SILT Well-graded GRAVEL with SILT and SAND	CL-ML	SILTY CLAY SILTY CLAY with SAND SILTY CLAY with GRAVEL SANDY SILTY CLAY SANDY SILTY CLAY with GRAVEL GRAVELLY SILTY CLAY GRAVELLY SILTY CLAY with SAND
GW-GC	Well-graded GRAVEL with CLAY (or SILTY CLAY) Well-graded GRAVEL with CLAY and SAND (or SILTY CLAY and SAND)		
GP-GM	Poorly-graded GRAVEL with SILT Poorly-graded GRAVEL with SILT and SAND	ML	SILT SILT with SAND SILT with GRAVEL SANDY SILT SANDY SILT with GRAVEL GRAVELLY SILT GRAVELLY SILT with SAND
GP-GC	Poorly-graded GRAVEL with CLAY (or SILTY CLAY) Poorly-graded GRAVEL with CLAY and SAND (or SILTY CLAY and SAND)		
GM	SILTY GRAVEL SILTY GRAVEL with SAND	OL	ORGANIC lean CLAY ORGANIC lean CLAY with SAND ORGANIC lean CLAY with GRAVEL SANDY ORGANIC lean CLAY SANDY ORGANIC lean CLAY with GRAVEL GRAVELLY ORGANIC lean CLAY GRAVELLY ORGANIC lean CLAY with SAND
GC	CLAYEY GRAVEL CLAYEY GRAVEL with SAND		
GC-GM	SILTY, CLAYEY GRAVEL SILTY, CLAYEY GRAVEL with SAND	OL	ORGANIC SILT ORGANIC SILT with SAND ORGANIC SILT with GRAVEL SANDY ORGANIC SILT SANDY ORGANIC SILT with GRAVEL GRAVELLY ORGANIC SILT GRAVELLY ORGANIC SILT with SAND
SW	Well-graded SAND Well-graded SAND with GRAVEL		
SP	Poorly-graded SAND Poorly-graded SAND with GRAVEL	CH	Fat CLAY Fat CLAY with SAND Fat CLAY with GRAVEL SANDY fat CLAY SANDY fat CLAY with GRAVEL GRAVELLY fat CLAY GRAVELLY fat CLAY with SAND
SW-SM	Well-graded SAND with SILT Well-graded SAND with SILT and GRAVEL		
SW-SC	Well-graded SAND with CLAY (or SILTY CLAY) Well-graded SAND with CLAY and GRAVEL (or SILTY CLAY and GRAVEL)	MH	Elastic SILT Elastic SILT with SAND Elastic SILT with GRAVEL SANDY elastic SILT SANDY elastic SILT with GRAVEL GRAVELLY elastic SILT GRAVELLY elastic SILT with SAND
SP-SM	Poorly-graded SAND with SILT Poorly-graded SAND with SILT and GRAVEL		
SP-SC	Poorly-graded SAND with CLAY (or SILTY CLAY) Poorly-graded SAND with CLAY and GRAVEL (or SILTY CLAY and GRAVEL)	OH	ORGANIC fat CLAY ORGANIC fat CLAY with SAND ORGANIC fat CLAY with GRAVEL SANDY ORGANIC fat CLAY SANDY ORGANIC fat CLAY with GRAVEL GRAVELLY ORGANIC fat CLAY GRAVELLY ORGANIC fat CLAY with SAND
SM	SILTY SAND SILTY SAND with GRAVEL		
SC	CLAYEY SAND CLAYEY SAND with GRAVEL	OH	ORGANIC elastic SILT ORGANIC elastic SILT with SAND ORGANIC elastic SILT with GRAVEL SANDY ORGANIC elastic SILT SANDY ORGANIC elastic SILT with GRAVEL GRAVELLY ORGANIC elastic SILT GRAVELLY ORGANIC elastic SILT with SAND
SC-SM	SILTY, CLAYEY SAND SILTY, CLAYEY SAND with GRAVEL		
PT	PEAT	OL/OH	ORGANIC SOIL ORGANIC SOIL with SAND ORGANIC SOIL with GRAVEL SANDY ORGANIC SOIL SANDY ORGANIC SOIL with GRAVEL GRAVELLY ORGANIC SOIL GRAVELLY ORGANIC SOIL with SAND
	COBBLES COBBLES and BOULDERS BOULDERS		

FIELD AND LABORATORY TESTING

- (C) Consolidation (ASTM D 2435)
- (CL) Collapse Potential (ASTM D 5333)
- (CP) Compaction Curve (CTM 216)
- (CR) Corrosivity Testing (CTM 643, CTM 422, CTM 417)
- (CU) Consolidated Undrained Triaxial (ASTM D 4767)
- (DS) Direct Shear (ASTM D 3080)
- (EI) Expansion Index (ASTM D 4829)
- (M) Moisture Content (ASTM D 2216)
- (OC) Organic Content-% (ASTM D 2974)
- (P) Permeability (CTM 220)
- (PA) Particle Size Analysis (ASTM D 422)
- (PI) Plasticity Index (AASHTO T 90) Liquid Limit (AASHTO T 89)
- (PL) Point Load Index (ASTM D 5731)
- (PM) Pressure Meter
- (R) R-Value (CTM 301)
- (SE) Sand Equivalent (CTM 217)
- (SG) Specific Gravity (AASHTO T 100)
- (SL) Shrinkage Limit (ASTM D 427)
- (SW) Swell Potential (ASTM D 4546)
- (UC) Unconfined Compression-Soil (ASTM D 2166) Unconfined Compression-Rock (ASTM D 2938)
- (UU) Unconsolidated Undrained Triaxial (ASTM D 2850)
- (UW) Unit Weight (ASTM D 4767)

APPARENT DENSITY OF COHESIONLESS SOILS

Description	SPT N_{60} (Blows / 12 in.)
Very Loose	0 - 5
Loose	5 - 10
Medium Dense	10 - 30
Dense	30 - 50
Very Dense	Greater than 50

MOISTURE

Description	Criteria
Dry	No discernable moisture
Moist	Moisture present, but no free water
Wet	Visible free water

PERCENT OR PROPORTION OF SOILS

Description	Criteria
Trace	Particles are present but estimated to be less than 5%
Few	5% - 10%
Little	15% - 25%
Some	30% - 45%
Mostly	50% - 100%

PARTICLE SIZE

Description		Size (in.)
Boulder		Greater than 12
Cobble		3 - 12
Gravel	Coarse	3/4 - 3
	Fine	1/5 - 3/4
Sand	Coarse	1/16 - 1/5
	Medium	1/64 - 1/16
	Fine	1/300 - 1/64
Silt and Clay		Less than 1/300

ENGINEERING SERVICES

GEOTECHNICAL SERVICES
PREPARED BY: I.G-Remmen

STATE OF CALIFORNIA
DEPARTMENT OF TRANSPORTATION

DIVISION OF ENGINEERING SERVICES
STRUCTURE DESIGN
DESIGN BRANCH X

BRIDGE NO.
POST MILE 5.07

RETAINING WALL 22L
LOG OF TEST BORINGS 3 OF 4

GS LOTB SOIL LEGEND

ORIGINAL SCALE IN INCHES FOR REDUCED PLANS 0 1 2 3

UNIT: 3643
PROJECT NUMBER & PHASE: 11000200511
CONTRACT NO.: 11-2T1821

DISREGARD PRINTS BEARING EARLIER REVISION DATES

REVISION DATES 12-19-11

SHEET R8-8

FILE => 1100020051gn008.gdn

USERNAME => s127400 DATE PLOTTED => 12-SEP-2012 TIME PLOTTED => 16:24

REFERENCE: CALTRANS SOIL & ROCK LOGGING, CLASSIFICATION, AND PRESENTATION MANUAL (2010)

DIST	COUNTY	ROUTE	POST MILES TOTAL PROJECT	SHEET No.	TOTAL SHEETS
11	SD	805	4.7/5.6	394	650

Brian Gutierrez 06-12-12
REGISTERED CIVIL ENGINEER

06-25-12
PLANS APPROVAL DATE

REGISTERED PROFESSIONAL ENGINEER Brian Gutierrez No. C66258 Exp. 06-30-14 CIVIL STATE OF CALIFORNIA

The State of California or its officers or agents shall not be responsible for the accuracy or completeness of electronic copies of this plan sheet.

This LOTB sheet was prepared in accordance with the Caltrans Soil & Rock Logging, Classification, & Presentation Manual (2007 Edition).

PERCENT CORE RECOVERY (REC) & ROCK QUALITY DESIGNATION (RQD)

$$REC = \frac{\sum \text{Length of the recovered core pieces (in.)}}{\text{Total length of core run (in.)}} \times 100\%$$

$$RQD = \frac{\sum \text{Length of intact core pieces} \geq 4 \text{ in.}}{\text{Total length of core run (in.)}} \times 100\%$$

RQD* Indicates soundness criteria not met.

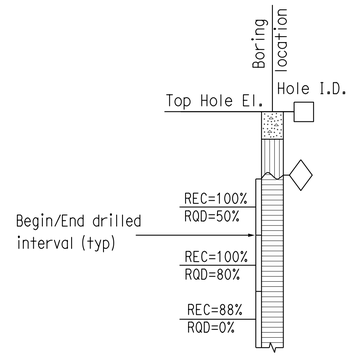

BEDDING SPACING

Description	Thickness / Spacing
Massive	Greater than 10 ft
Very Thickly Bedded	3 ft - 10 ft
Thickly Bedded	1 ft - 3 ft
Moderately Bedded	4 in. - 1 ft
Thinly Bedded	1 in. - 4 in.
Very Thinly Bedded	1/4 in. - 1 in.
Laminated	Less than 1/4 in.

LEGEND OF ROCK MATERIALS

- IGNEOUS ROCK
- SEDIMENTARY ROCK
- METAMORPHIC ROCK

ROCK HARDNESS

Description	Criteria
Extremely Hard	Cannot be scratched with a pocketknife or sharp pick. Can only be chipped with repeated heavy hammer blows.
Very Hard	Cannot be scratched with a pocketknife or sharp pick. Breaks with repeated heavy hammer blows.
Hard	Can be scratched with a pocketknife or sharp pick with difficulty (heavy pressure). Breaks with heavy hammer blows.
Moderately Hard	Can be scratched with pocketknife or sharp pick with light or moderate pressure. Breaks with moderate hammer blows.
Moderately Soft	Can be grooved 1/16 in. deep with a pocketknife or sharp pick with moderate or heavy pressure. Breaks with light hammer blow or heavy manual pressure.
Soft	Can be grooved or gouged easily by a pocketknife or sharp pick with light pressure, can be scratched with fingernail. Breaks with light to moderate manual pressure.
Very Soft	Can be readily indented, grooved or gouged with fingernail, or carved with a pocketknife. Breaks with light manual pressure.

FRACTURE DENSITY

Description	Observed Fracture Density
Unfractured	No fractures.
Very Slightly Fractured	Core lengths greater than 3 ft.
Slightly Fractured	Core lengths mostly from 1 to 3 ft.
Moderately Fractured	Core lengths mostly from 4 in. to 1 ft.
Intensely Fractured	Core lengths mostly from 1 to 4 in.
Very Intensely Fractured	Mostly chips and fragments.

WEATHERING DESCRIPTORS FOR INTACT ROCK

Description	Diagnostic Features					General Characteristics
	Chemical Weathering-Discoloration and/or Oxidation		Mechanical Weathering-Grain Boundary Conditions (Disaggregation) Primarily for Granitics and Some Coarse-Grained Sediments	Texture and Leaching		
	Body of Rock	Fracture Surfaces		Texture	Leaching	
Fresh	No discoloration, not oxidized.	No discoloration or oxidation.	No separation, intact (tight).	No change	No leaching	Hammer rings when crystalline rocks are struck.
Slightly Weathered	Discoloration or oxidation is limited to surface of, or short distance from, fractures; some feldspar crystals are dull.	Minor to complete discoloration or oxidation of most surfaces.	No visible separation, intact (tight).	Preserved	Minor leaching of some soluble minerals.	Hammer rings when crystalline rocks are struck. Body of rock not weakened.
Moderately Weathered	Discoloration or oxidation extends from fractures usually throughout; Fe-Mg minerals are "rusty," feldspar crystals are "cloudy."	All fracture surfaces are discolored or oxidized.	Partial separation of boundaries visible.	Generally preserved	Soluble minerals may be mostly leached.	Hammer does not ring when rock is struck. Body of rock is slightly weakened.
Intensely Weathered	Discoloration or oxidation throughout; all feldspars and Fe-Mg minerals are altered to clay to some extent; or chemical alteration produces in-situ disaggregation, see grain boundary conditions.	All fracture surfaces are discolored or oxidized, surfaces friable.	Partial separation, rock is friable; in semiarid conditions granitics are disaggregated.	Texture altered by chemical disintegration (hydration, argillation).	Leaching of soluble minerals may be complete.	Dull sound when struck with hammer, usually can be broken with moderate to heavy manual pressure or by light hammer blow without reference to planes of weakness such as incipient or hairline fractures, or veinlets. Rock is significantly weakened.
Decomposed	Discolored or oxidized throughout, but resistant minerals such as quartz may be unaltered; all feldspars and Fe-Mg minerals are completely altered to clay.		Complete separation of grain boundaries (disaggregated).	Resembles a soil, partial or complete remnant rock structure may be preserved; leaching of soluble minerals usually complete.		Can be granulated by hand. Resistant minerals such as quartz may be present as "stringers" or "dikes."

ENGINEERING SERVICES

GEOTECHNICAL SERVICES

PREPARED BY: I.G-Remmen

STATE OF CALIFORNIA DEPARTMENT OF TRANSPORTATION

DIVISION OF ENGINEERING SERVICES STRUCTURE DESIGN
DESIGN BRANCH X

BRIDGE NO.

POST MILE 5.07

RETAINING WALL 22L

LOG OF TEST BORINGS 4 OF 4

GS LOTB SOIL LEGEND

ORIGINAL SCALE IN INCHES FOR REDUCED PLANS 0 1 2 3

UNIT: 3643
PROJECT NUMBER & PHASE: 11000200511
CONTRACT NO.: 11-2T1821

DISREGARD PRINTS BEARING EARLIER REVISION DATES

REVISION DATES 12-19-11

SHEET R8-9

FILE => 1100020051gh009.dgn

USERNAME => s127400 DATE PLOTTED => 12-SEP-2012 TIME PLOTTED => 16:24

Dist	COUNTY	ROUTE	POST MILES TOTAL PROJECT	SHEET No.	TOTAL SHEETS
11	SD	805	4.7/5.6	395	650

REGISTERED CIVIL ENGINEER DATE 05-30-12

06-25-12
PLANS APPROVAL DATE

REGISTERED PROFESSIONAL ENGINEER MASON LEE HANCOCK No. 75048 Exp. 12-31-13 CIVIL STATE OF CALIFORNIA

THE STATE OF CALIFORNIA OR ITS OFFICERS OR AGENTS SHALL NOT BE RESPONSIBLE FOR THE ACCURACY OR COMPLETENESS OF SCANNED COPIES OF THIS PLAN SHEET.

DOKKEN ENGINEERING
5675 RUFFIN Rd
SUITE 250
SAN DIEGO, CA 92123

SANDAG
401 B St
SUITE 800
SAN DIEGO, CA 92101

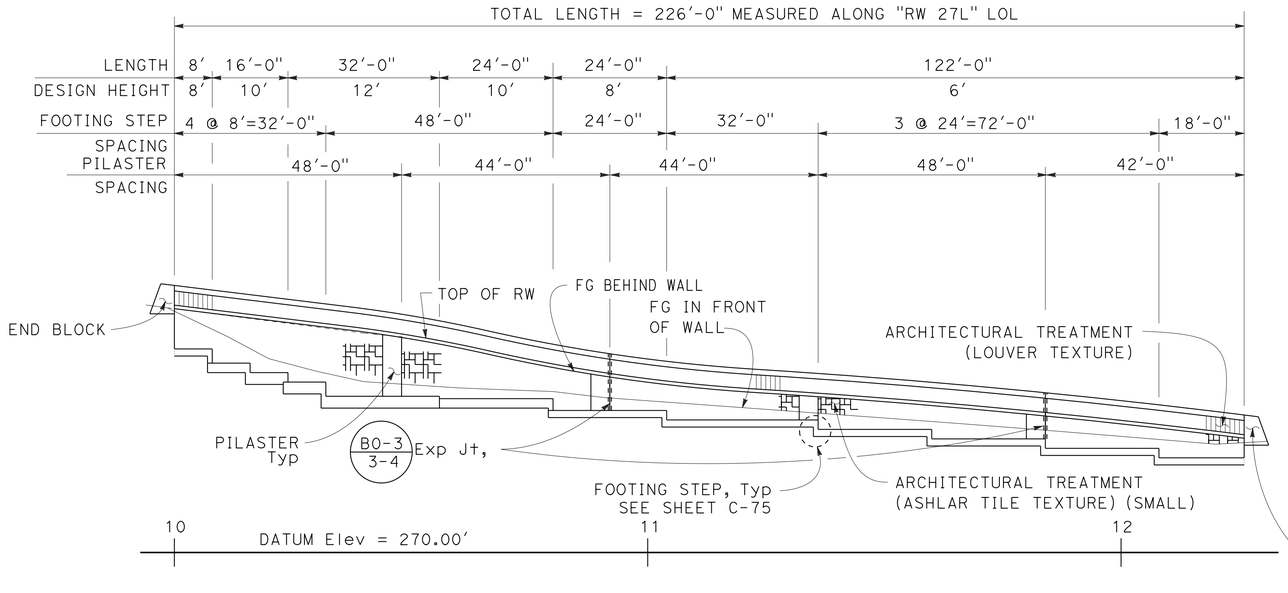

DEVELOPED ELEVATION

SCALE: 1/16" = 1'-0"

TOP OF RETAINING WALL ELEVATIONS

STATION	ELEVATION	STATION	ELEVATION
10+00	322.25	11+20	304.72
10+08	321.27	11+28	304.20
10+16	320.29	11+36	303.66
10+24	319.32	11+44	303.07
10+32	318.34	11+52	302.45
10+40	317.35	11+60	301.79
10+48	316.17	11+68	301.09
10+56	314.77	11+76	300.36
10+64	313.15	11+84	299.58
10+72	311.40	11+92	298.77
10+80	309.83	12+00	297.92
10+88	308.44	12+08	297.03
10+96	307.24	12+16	296.10
11+04	306.22	12+24	295.13
11+12	305.38	12+26	294.88

NOTE:

FOR MAXIMUM SPACING OF WEAKENED PLANE JOINTS AND DRAINAGE OUTLETS, SEE B0-3

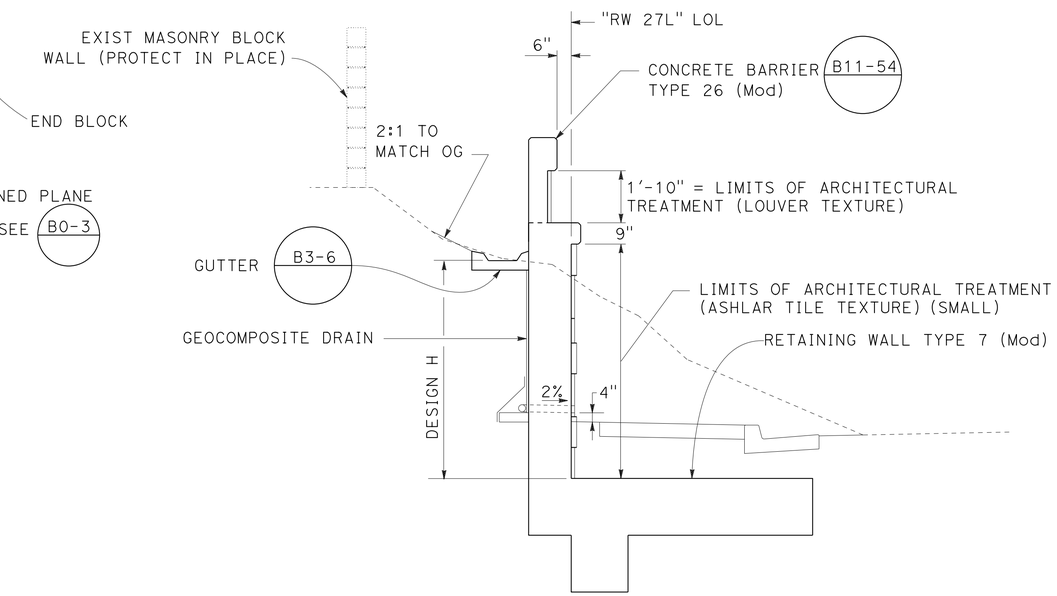

TYPICAL SECTION

SCALE: 3/8" = 1'-0"

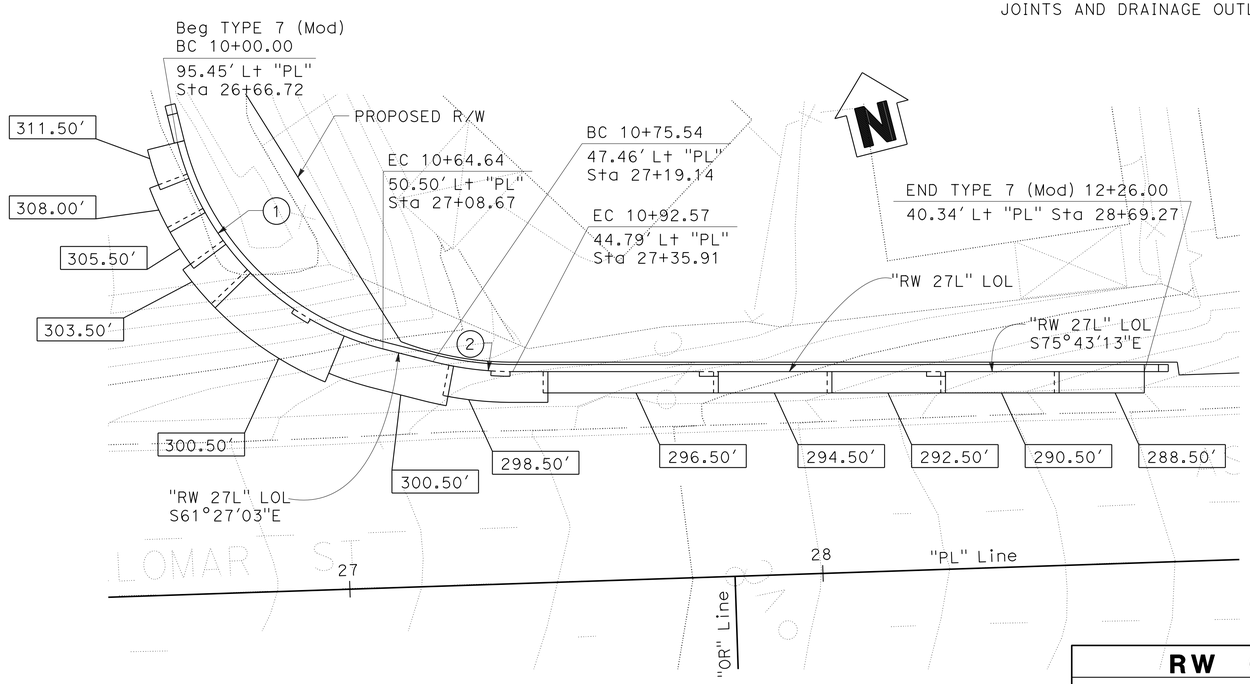

PLAN

SCALE: 1/16" = 1'-0"

LEGEND:

DENOTES BOTTOM OF FOOTING Elev

EXIST MASONRY BLOCK WALL (PROTECT IN PLACE)

STANDARD PLAN SHEET No.

DETAIL No.

CURVE DATA TABLE				
No.	R	Δ	T	L
1	60.00'	61°43'24"	35.86'	64.64'
2	68.38'	14°16'09"	8.56'	17.03'

RW QUANTITIES ("RW27L")	
ITEM	TOTAL
STRUCTURE EXCAVATION (RETAINING WALL)	722 CY
STRUCTURE BACKFILL (RETAINING WALL)	308 CY
STRUCTURAL CONCRETE (RETAINING WALL)	255 CY
CONCRETE BARRIER (TYPE 26 MODIFIED)	226 LF
BAR REINFORCING STEEL (RETAINING WALL)	25,386 LB
ARCHITECTURAL TREATMENT (ASHALAR TEXTURE (SMALL))	1,739 SQFT
ARCHITECTURAL TREATMENT (LOUVER TEXTURE)	414 SQFT

RETAINING WALL PLAN
RW No. 27L

SCALE AS SHOWN

R9-1

STATE OF CALIFORNIA - DEPARTMENT OF TRANSPORTATION
Caltrans

CONSULTANT FUNCTIONAL SUPERVISOR: GERARD LUMABAS
MASON HANCOCK — ROB BURNS
CALCULATED-DESIGNED BY — CHECKED BY
REVISED BY — DATE REVISED

LAST REVISION 08-20-12 | DATE PLOTTED => 12-SEP-2012 | TIME PLOTTED => 16:24

Dist	COUNTY	ROUTE	POST MILES TOTAL PROJECT	SHEET No.	TOTAL SHEETS
11	SD	805	4.7/5.6	396	650

REGISTERED CIVIL ENGINEER 05-30-12 DATE

06-25-12
PLANS APPROVAL DATE

REGISTERED PROFESSIONAL ENGINEER MASON LEE HANCOCK No. 75048 Exp. 12-31-13 CIVIL STATE OF CALIFORNIA

THE STATE OF CALIFORNIA OR ITS OFFICERS OR AGENTS SHALL NOT BE RESPONSIBLE FOR THE ACCURACY OR COMPLETENESS OF SCANNED COPIES OF THIS PLAN SHEET.

DOKKEN ENGINEERING
5675 RUFFIN Rd
SUITE 250
SAN DIEGO, CA 92123

SANDAG
401 B St
SUITE 800
SAN DIEGO, CA 92101

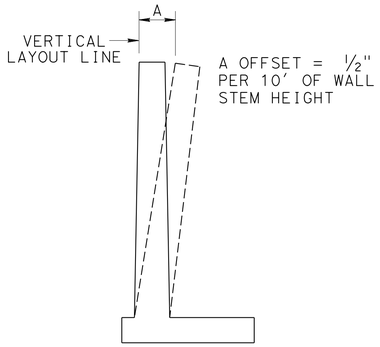

WALL OFFSET

NO SCALE

Values for offsetting forms to be determined by the Engineer

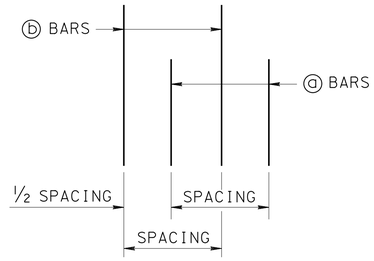

REBAR SPACING

NO SCALE

TABLE OF REINFORCING STEEL DIMENSIONS AND DATA

Design H	6'		8'		10'		12'	
W	6'-0"		8'-0"		10'-0"		12'-0"	
F	1'-6"		2'-0"		2'-0"		2'-6"	
K	-		1'-0"		2'-0"		2'-6"	
FOOTING COVER	1'-6"		1'-6"		2'-0"		2'-0"	
ⓐ BARS	#6 @ 9		#7 @ 18		#8 @ 12		#9 @ 12	
X	Cont		Cont		Cont		Cont	
Y	Cont		Cont		5'-0"		5'-0"	
ⓑ BARS	-		#7 @ 18		#8 @ 12		#9 @ 12	
X	-		Cont		5'-0"		7'-6"	
Y	-		Cont		Cont		Cont	
ⓓ BARS	#5 @ 12		#5 @ 12		#5 @ 12		#5 @ 12	
ⓔ BARS	-		#5 @ 12		#5 @ 12		#5 @ 12	
SER I: B' (ft), q'_o (ksf)	6.0	0.7	7.3	0.9	8.5	1.0	9.6	1.2
STR I: B'(ft), q_o (ksf)	5.5	1.1	6.3	1.4	6.8	1.8	7.5	2.1
STR III: B'(ft), q_o (ksf)	5.4	1.2	6.1	1.4	6.7	1.8	7.4	2.1
STR V: B'(ft), q_o (ksf)	5.9	1.2	6.6	1.4	7.1	1.8	7.8	2.1
EXT I: B'(ft), q_o (ksf)	6.0	0.9	7.7	1.0	8.8	1.2	10.1	1.5

SYMBOLS:
SER: service limit state
STR: strength limit state
EXT: extreme event limit state
B' : effective footing width (ft)
q'_o : net bearing stress (ksf)
q_o : gross uniform bearing stress (ksf)

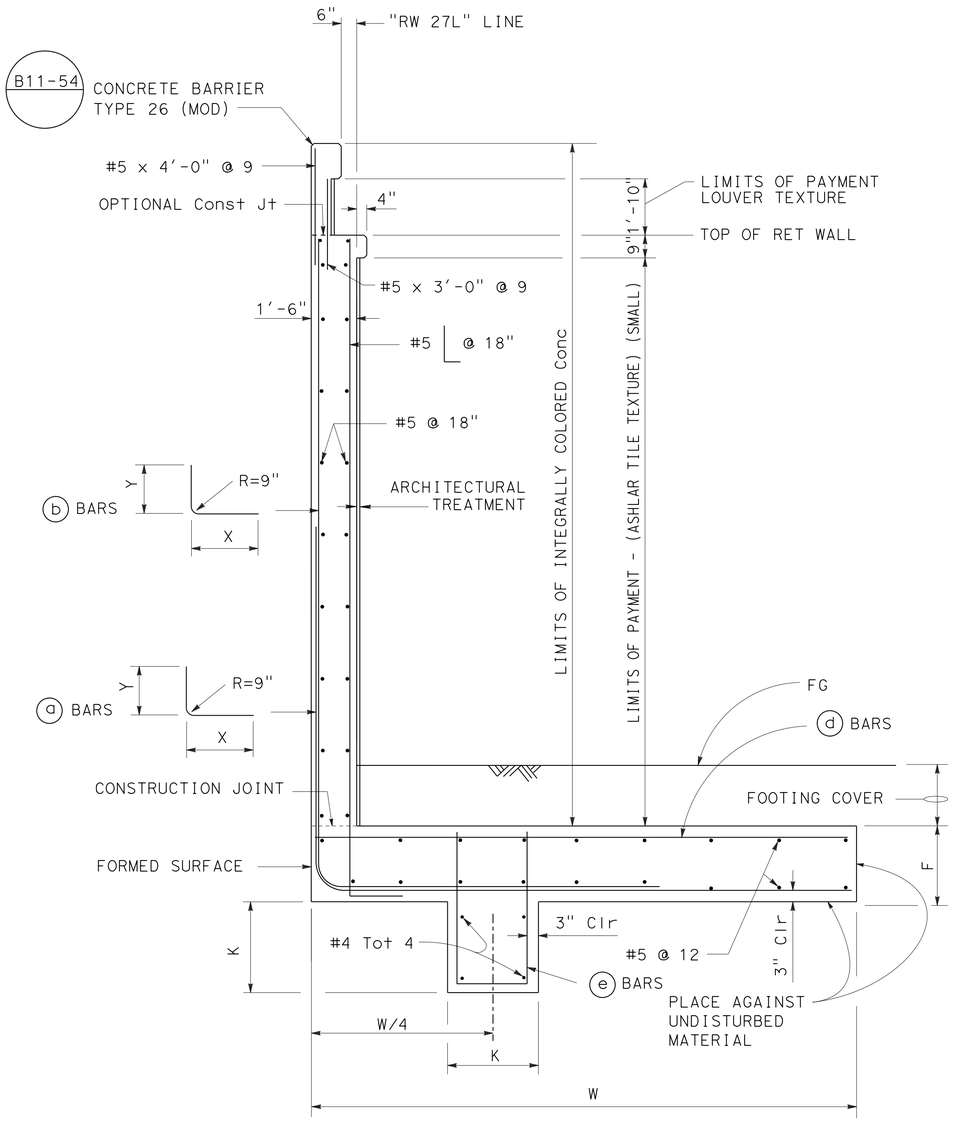

TYPICAL SECTION

NO SCALE

NOTE: For details not shown, see sheet C-75

DESIGN DATA

DESIGN: AASHTO LRFD Bridge Design Specification, 4th Edition with California Amendments

WS: 33 psf on sound wall

LS: Varied surcharge on level ground surface
EQE: Mononabe-okabe Method
$K_h = 0.3$
$K_v = 0.0$

Soil: $\emptyset = 34°$ $\gamma = 125$ pcf

Reinforced Concrete, f'c = 3.6 ksi
fy = 60 ksi

Load Combinations and Limit States

Service I Q=1.00DC+1.00EV+1.00LS+0.30WS

Service II Q=1.00DC+1.00EV+1.00LS+1.00WS

Strength I Q=aDC+βEV+1.50EH+1.75LS

Strength III Q=aDC+βEV+1.50EH+1.40WS

Strength V Q=aDC+βEV+1.50EH+1.35LS+0.40WS

Extreme I Q=1.00DC+1.00EV+1.00EH+1.00EQE+1.00EQD

Where:
Q: Force effects
a: 1.25 or 0.90, Which ever Controls Design
β 1.35 or 1.00, Which ever Controls Design
DC: Dead Load of Structure Components
EV: Vertical Earth Fill Pressure
LS: Live Load Surcharge
EQE: Seismic Earth Pressure
EQD: Soil and Structure Components Inertia. Soil Intertia ignored for stem design
WS: Wind Load on Sound Wall and Barrier

NOTE:

1. Retaining wall and barrier to be constructed with integrally colored concrete. Color shall conform to Davis color "Mesa Bluff".

RETAINING WALL DETAILS
RW No. 27L

SCALE AS SHOWN

R9-2

REVISED BY | DATE REVISED
MASON HANCOCK | ROB BURNS
CALCULATED-DESIGNED BY | CHECKED BY
CONSULTANT FUNCTIONAL SUPERVISOR | GERARD LUMABAS
STATE OF CALIFORNIA - DEPARTMENT OF TRANSPORTATION
Caltrans

LAST REVISION 08-20-12 | DATE PLOTTED => 12-SEP-2012 | TIME PLOTTED => 16:24

Dist	COUNTY	ROUTE	POST MILES TOTAL PROJECT	SHEET No.	TOTAL SHEETS
11	SD	805	4.7/5.6	397	650

REGISTERED CIVIL ENGINEER 05-30-12 DATE

06-25-12
PLANS APPROVAL DATE

REGISTERED PROFESSIONAL ENGINEER MASON LEE HANCOCK No. 75048 Exp. 12-31-13 CIVIL STATE OF CALIFORNIA

THE STATE OF CALIFORNIA OR ITS OFFICERS OR AGENTS SHALL NOT BE RESPONSIBLE FOR THE ACCURACY OR COMPLETENESS OF SCANNED COPIES OF THIS PLAN SHEET.

DOKKEN ENGINEERING
5675 RUFFIN Rd
SUITE 250
SAN DIEGO, CA 92123

SANDAG
401 B St
SUITE 800
SAN DIEGO, CA 92101

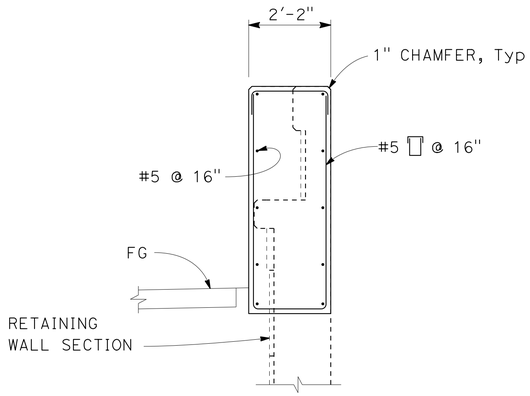

SECTION A-A

NO SCALE

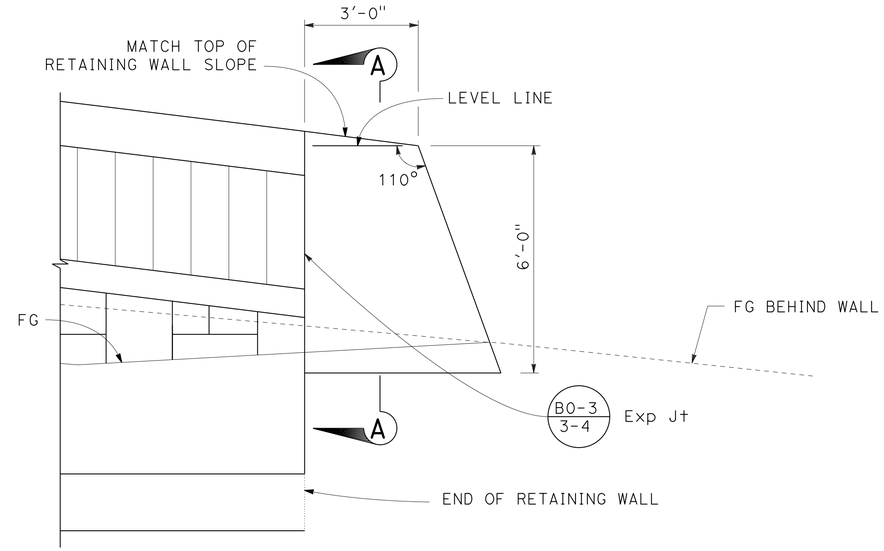

END BLOCK ELEVATION

SCALE: ½"=1'-0"

(DETAILS SHOWN FOR END OF RETAINING WALL
BEGINING OF RETAINING WALL SIMILAR)

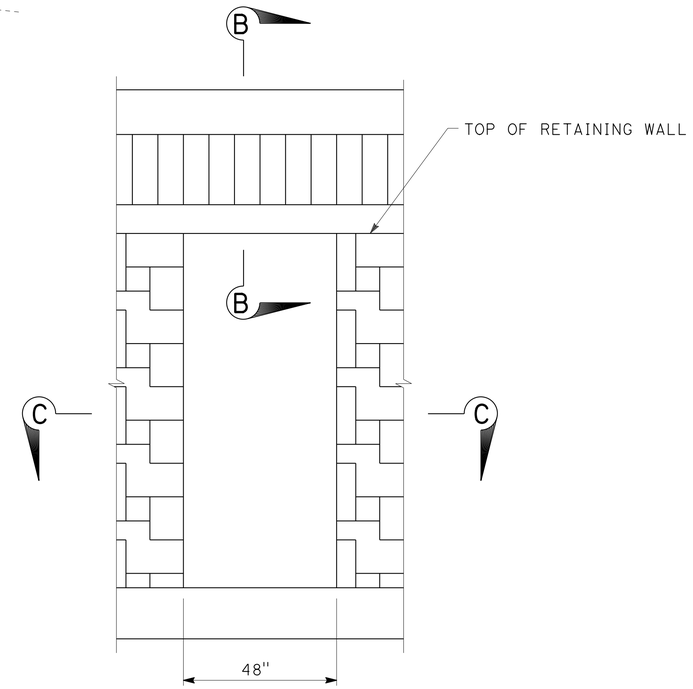

PILASTER DETAIL

NO SCALE

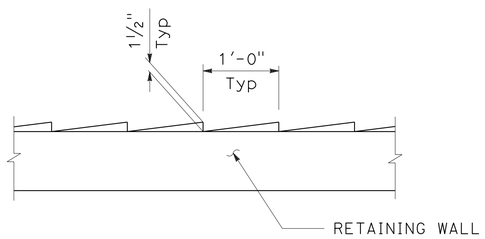

LOUVER TEXTURE DETAIL

NO SCALE

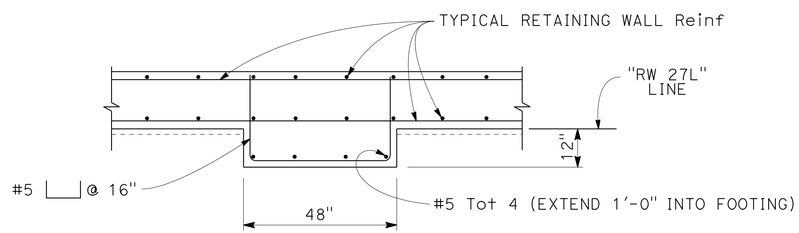

SECTION C-C

NO SCALE

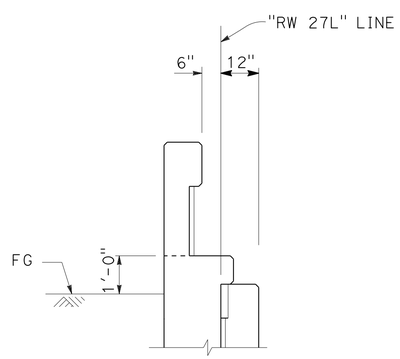

SECTION B-B

SCALE: ½"=1'-0"

RETAINING WALL DETAILS
RW No. 27L

SCALE AS SHOWN

R9-3

STATE OF CALIFORNIA - DEPARTMENT OF TRANSPORTATION
Caltrans

CONSULTANT FUNCTIONAL SUPERVISOR: GERARD LUMABAS
CALCULATED-DESIGNED BY: MASON HANCOCK
CHECKED BY: ROB BURNS
REVISED BY
DATE REVISED

LAST REVISION 06-14-12
DATE PLOTTED => 12-SEP-2012
TIME PLOTTED => 16:24

Dist	COUNTY	ROUTE	POST MILES TOTAL PROJECT	SHEET No.	TOTAL SHEETS
11	SD	805	4.7/5.6	398	650

REGISTERED CIVIL ENGINEER 05-30-12 DATE

06-25-12
PLANS APPROVAL DATE

REGISTERED PROFESSIONAL ENGINEER
MASON LEE HANCOCK
No. 75048
Exp. 12-31-13
CIVIL
STATE OF CALIFORNIA

THE STATE OF CALIFORNIA OR ITS OFFICERS OR AGENTS SHALL NOT BE RESPONSIBLE FOR THE ACCURACY OR COMPLETENESS OF SCANNED COPIES OF THIS PLAN SHEET.

DOKKEN ENGINEERING
5675 RUFFIN Rd
SUITE 250
SAN DIEGO, CA 92123

SANDAG
401 B St
SUITE 800
SAN DIEGO, CA 92101

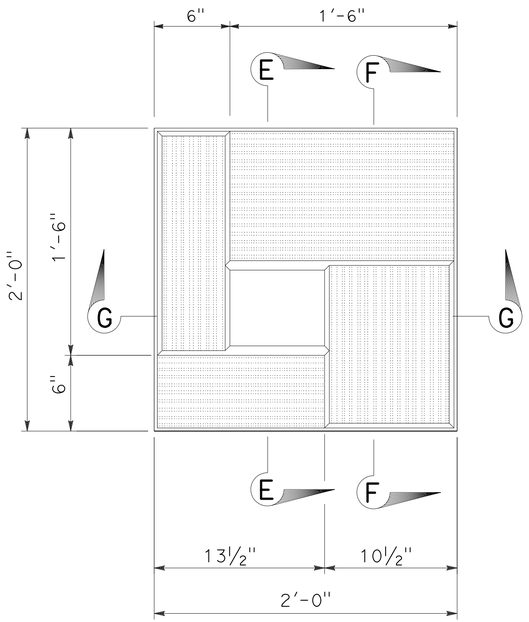

ASHLAR TILE TEXTURE (SMALL) DETAIL

SCALE: 2" = 1'-0"

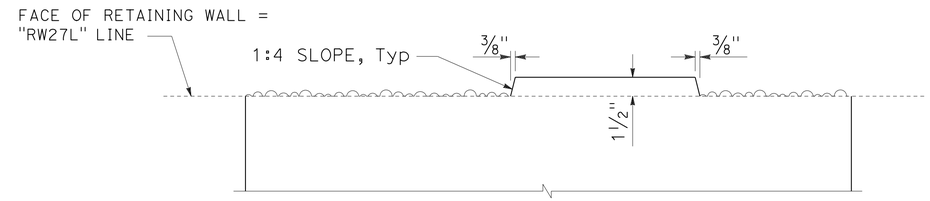

SECTION E-E

SCALE: 2" = 1'-0"

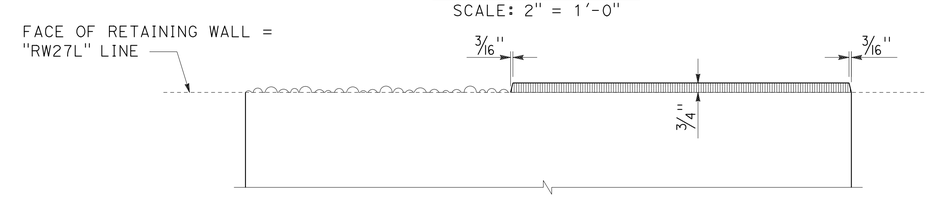

SECTION F-F

SCALE: 2" = 1'-0"

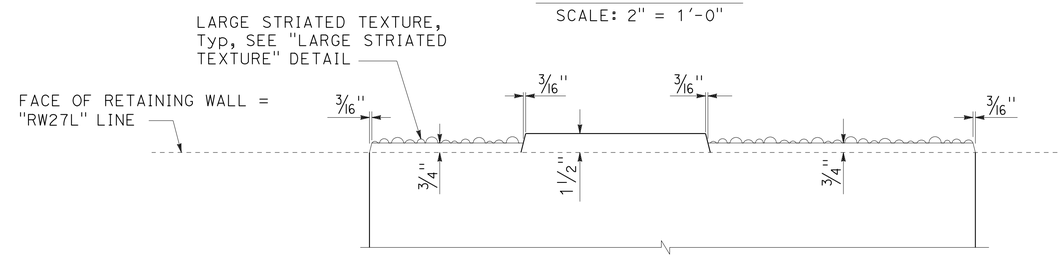

SECTION G-G

SCALE: 2" = 1'-0"

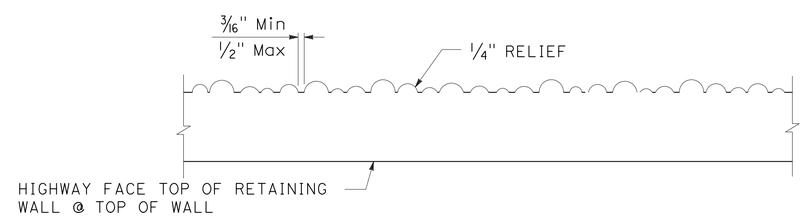

LARGE STRIATED TEXTURE DETAIL

SCALE: 4" = 1'-0"

RETAINING WALL DETAILS RW No. 27L

SCALE AS SHOWN

R9-4

REVISED BY	DATE REVISED
MASON HANCOCK	ROB BURNS

CALCULATED-DESIGNED BY	CHECKED BY

CONSULTANT FUNCTIONAL SUPERVISOR: GERARD LUMABAS

STATE OF CALIFORNIA - DEPARTMENT OF TRANSPORTATION

Caltrans

LAST REVISION 08-02-12 | DATE PLOTTED => 12-SEP-2012 | TIME PLOTTED => 16:24

DIST	COUNTY	ROUTE	POST MILES TOTAL PROJECT	SHEET No.	TOTAL SHEETS
11	SD	805	4.7/5.6	399	650

06-12-12
REGISTERED CIVIL ENGINEER

06-25-12
PLANS APPROVAL DATE

REGISTERED PROFESSIONAL ENGINEER
Brian Gutierrez
No. C66258
Exp. 06-30-14
CIVIL
STATE OF CALIFORNIA

The State of California or its officers or agents shall not be responsible for the accuracy or completeness of electronic copies of this plan sheet.

This LOTB sheet was prepared in accordance with the Caltrans Soil & Rock Logging, Classification, & Presentation Manual (2007 Edition).

BENCH MARK

BM 805-5.00, 2¼" CADT disk in sidewalk north side of E. Palomar St. OC bridge, at Station 298+46.0, Right 60 feet of "A1" Line.
Elevation 300.93 feet
NAVD88

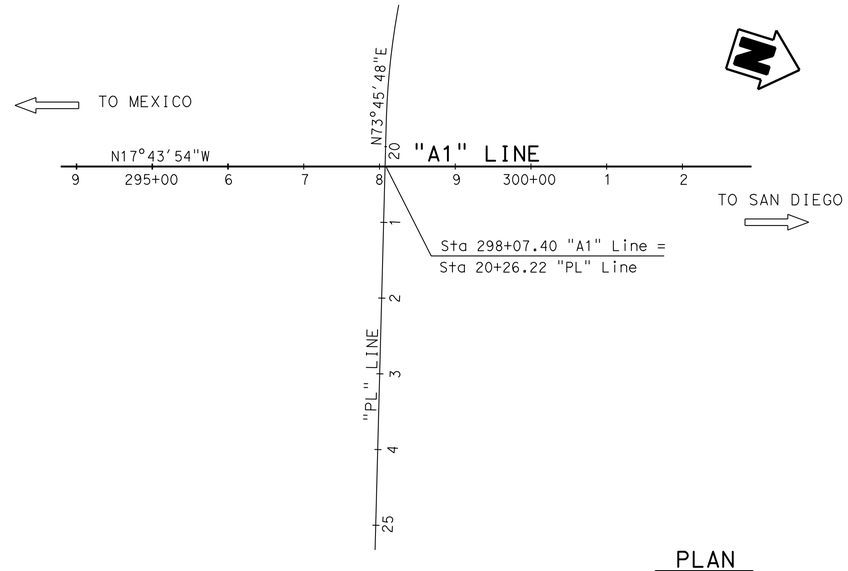

PLAN

1" = 100'

A-11-027

8"

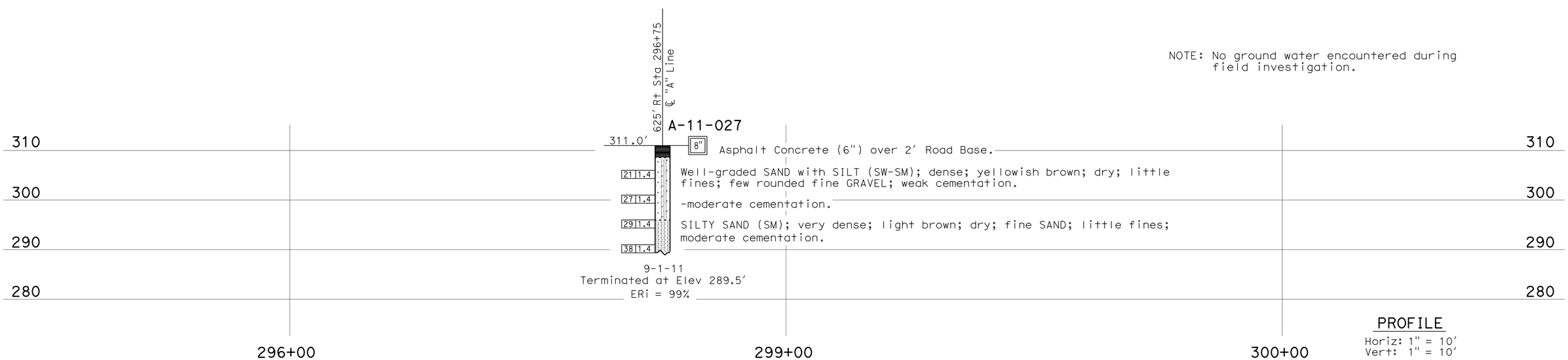

NOTE: No ground water encountered during field investigation.

PROFILE

Horiz: 1" = 10'
Vert: 1" = 10'

ENGINEERING SERVICES	GEOTECHNICAL SERVICES	STATE OF CALIFORNIA DEPARTMENT OF TRANSPORTATION	DIVISION OF ENGINEERING SERVICES STRUCTURE DESIGN DESIGN BRANCH X	BRIDGE NO. / POST MILE 5.0	RETAINING WALL No. 27L LOG OF TEST BORINGS 1 OF 3
FUNCTIONAL SUPERVISOR NAME: S. Wei	DRAWN BY: I.G-Remmen CHECKED BY: XX	FIELD INVESTIGATION BY: B. Gutierrez			

OGS CIVIL LOG OF TEST BORINGS SHEET

ORIGINAL SCALE IN INCHES FOR REDUCED PLANS 0 1 2 3

UNIT: 3643
PROJECT NUMBER & PHASE: 11000200511 CONTRACT NO.: 11-2T1821

DISREGARD PRINTS BEARING EARLIER REVISION DATES

REVISION DATES: 10-07-11 11-4-11 4-26-12

SHEET R9-5

FILE => 1100020051qi005.dgn

USERNAME => s12400 DATE PLOTTED => 12-SEP-2012 TIME PLOTTED => 16:24

REFERENCE: CALTRANS SOIL & ROCK LOGGING, CLASSIFICATION, AND PRESENTATION MANUAL (2010)

DIST	COUNTY	ROUTE	POST MILES TOTAL PROJECT	SHEET No.	TOTAL SHEETS
11	SD	805	4.7/5.6	400	650

06-12-12
REGISTERED CIVIL ENGINEER

06-25-12
PLANS APPROVAL DATE

REGISTERED PROFESSIONAL ENGINEER
Brian Gutierrez
No. C66258
Exp. 06-30-14
CIVIL
STATE OF CALIFORNIA

The State of California or its officers or agents shall not be responsible for the accuracy or completeness of electronic copies of this plan sheet.

CEMENTATION

Description	Criteria
Weak	Crumbles or breaks with handling or little finger pressure.
Moderate	Crumbles or breaks with considerable finger pressure.
Strong	Will not crumble or break with finger pressure.

BOREHOLE IDENTIFICATION

Symbol	Hole Type	Description
Size	A	Auger Boring (hollow or solid stem bucket)
Size	R RW RC P	Rotary drilled boring (conventional) Rotary drilled with self-casing wire-line Rotary core with continuously-sampled, self-casing wire-line Rotary percussion boring (air)
Size	R	Rotary drilled diamond core
Size	HD HA	Hand driven (1-inch soil tube) Hand Auger
●	D	Dynamic Cone Penetration Boring
▲	CPT	Cone Penetration Test (ASTM D 5778)
⬚	O	Other (note on LOTB)

Note: Size in inches.

CONSISTENCY OF COHESIVE SOILS

Description	Shear Strength (tsf)	Pocket Penetrometer Measurement, PP, (tsf)	Torvane Measurement, TV, (tsf)	Vane Shear Measurement, VS, (tsf)
Very Soft	Less than 0.12	Less than 0.25	Less than 0.12	Less than 0.12
Soft	0.12 - 0.25	0.25 - 0.5	0.12 - 0.25	0.12 - 0.25
Medium Stiff	0.25 - 0.5	0.5 - 1	0.25 - 0.5	0.25 - 0.5
Stiff	0.5 - 1	1 - 2	0.5 - 1	0.5 - 1
Very Stiff	1 - 2	2 - 4	1 - 2	1 - 2
Hard	Greater than 2	Greater than 4	Greater than 2	Greater than 2

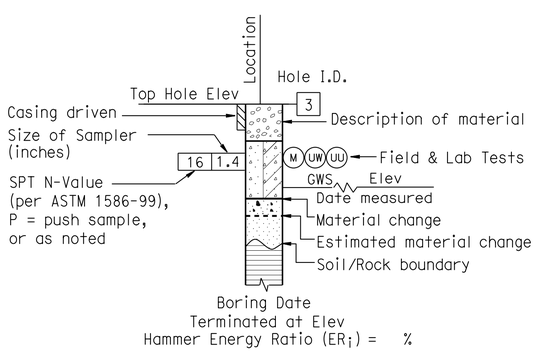

ROTARY BORING

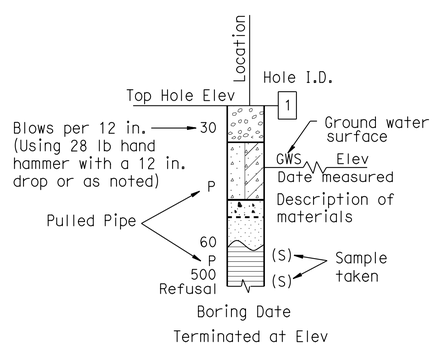

HAND BORING

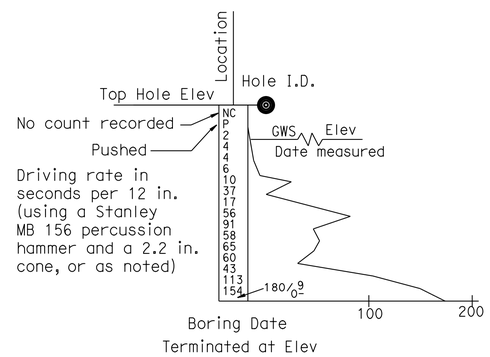

DYNAMIC CONE PENETRATION BORING

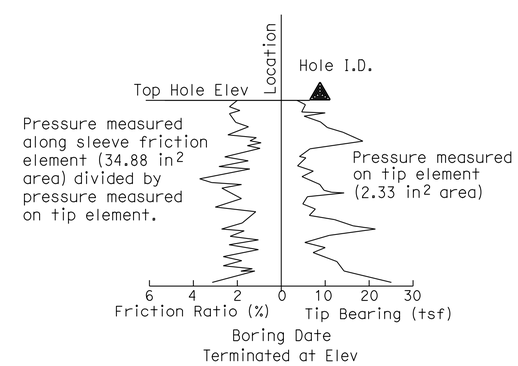

CONE PENETRATION TEST (CPT) BORING

ENGINEERING SERVICES	GEOTECHNICAL SERVICES	STATE OF CALIFORNIA DEPARTMENT OF TRANSPORTATION	DIVISION OF ENGINEERING SERVICES STRUCTURE DESIGN DESIGN BRANCH X	BRIDGE NO. / POST MILE 5.0	RETAINING WALL No. 27L LOG OF TEST BORINGS 2 OF 3
	PREPARED BY: I.G-Remmen				

GS LOTB SOIL LEGEND

ORIGINAL SCALE IN INCHES FOR REDUCED PLANS 0 1 2 3

UNIT: 3643
PROJECT NUMBER & PHASE: 11000200511
CONTRACT NO.: 11-2T1821

DISREGARD PRINTS BEARING EARLIER REVISION DATES

REVISION DATES: 11-4-11

SHEET R9-6

FILE => 1100020051gi006.dgn

USERNAME => s12400 DATE PLOTTED => 12-SEP-2012 TIME PLOTTED => 16:24