DIST	COUNTY	ROUTE	POST MILES TOTAL PROJECT	SHEET No.	TOTAL SHEETS
11	SD	54,805	1.8,5.5/9.4	601	635

Tony Skreslet 8-25-11
REGISTERED CIVIL ENGINEER DATE

12-5-11
PLANS APPROVAL DATE

REGISTERED PROFESSIONAL ENGINEER TONY SKRESLET No. C50676 Exp. 09-30-11 CIVIL STATE OF CALIFORNIA

The State of California or its officers or agents shall not be responsible for the accuracy or completeness of electronic copies of this plan sheet.

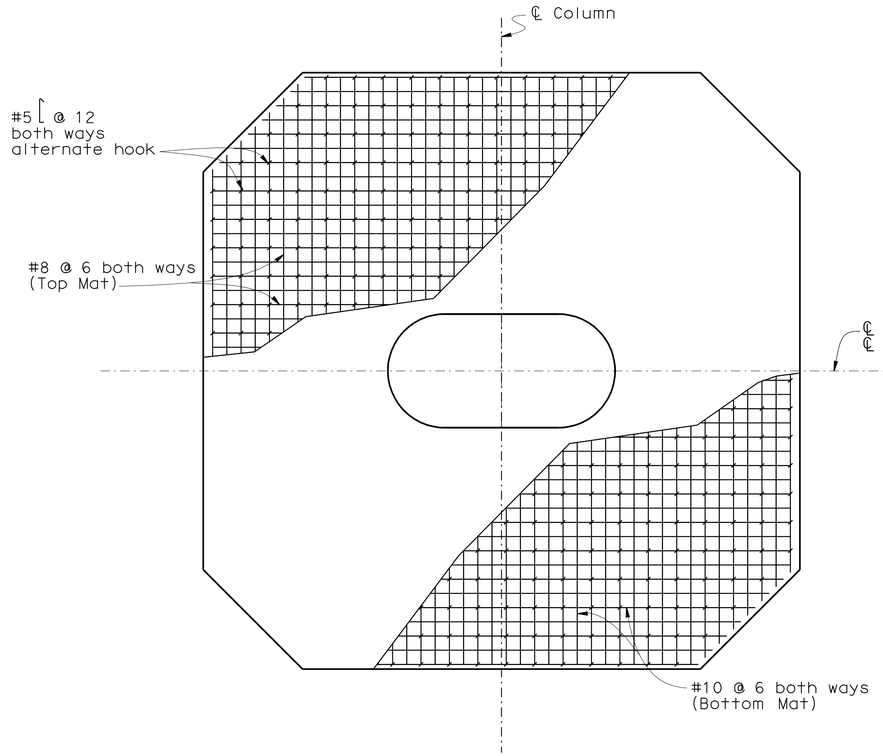

PLAN - REINFORCEMENT

3/8" = 1' - 0"

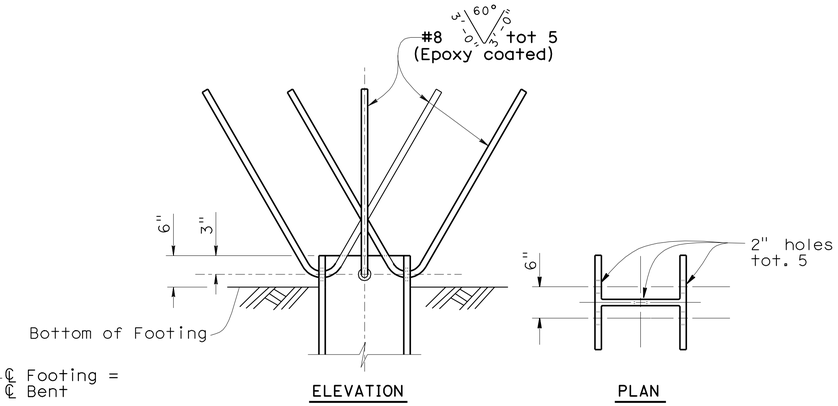

STEEL PILE ANCHOR

No Scale

NOTES:

1. Details are symmetrical about ℄ Bent and ℄ Footing
2. Stirrups are discontinued @ Column
3. Top Mat may be adjusted to clear Column reinforment, as directed by engineer
4. Continue Hoops to bottom of Column reinforment

Indicates HP 14x89 Piles

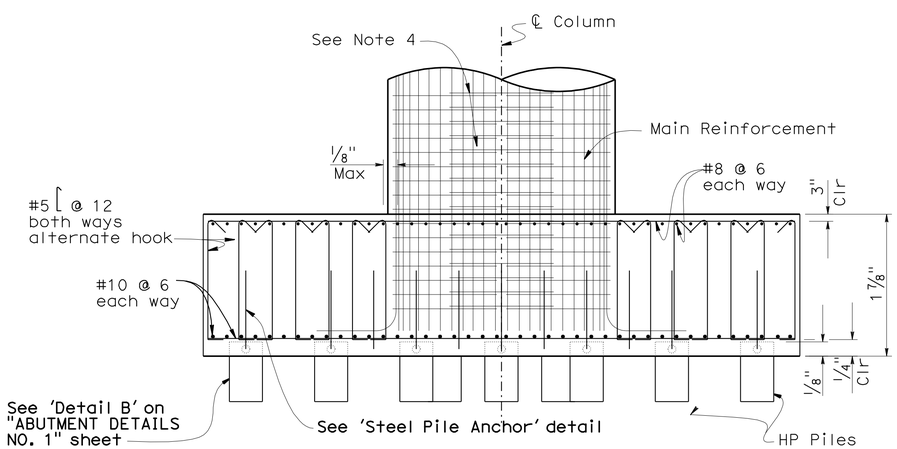

ELEVATION - REINFORCEMENT

3/8" = 1' - 0"

NOTE:
THE CONTRACTOR SHALL VERIFY ALL CONTROLLING FIELD DIMENSIONS BEFORE ORDERING OR FABRICATING ANY MATERIAL.

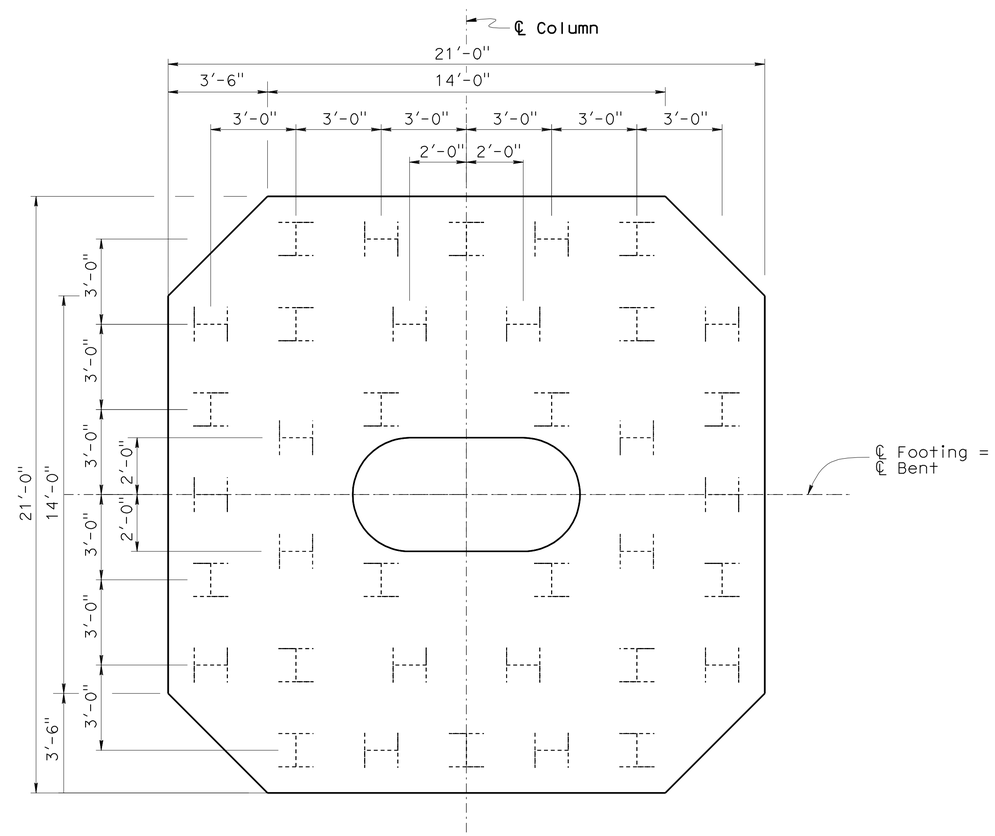

PLAN - PILE LAYOUT

3/8" = 1' - 0"

	BY	CHECKED
DESIGN	P. A. Peterson	J. M. Peterson
DETAILS	PAP / Tam Nguyen	P. A. Peterson
QUANTITIES	P. A. Peterson	J. M. Peterson

STATE OF CALIFORNIA
DEPARTMENT OF TRANSPORTATION

DIVISION OF ENGINEERING SERVICES
STRUCTURE DESIGN
DESIGN BRANCH 14

BRIDGE NO. 57-0639
POST MILE 9.07

SWEETWATER ROAD UC (WIDEN)
BENT FOOTING DETAILS

STRUCTURES DESIGN DETAIL SHEET (ENGLISH) (REV. 09-01-10)

ORIGINAL SCALE IN INCHES FOR REDUCED PLANS 0 1 2 3

UNIT: 3613
PROJECT NUMBER & PHASE: 11000200501
CONTRACT NO.: 11-2T1811

DISREGARD PRINTS BEARING EARLIER REVISION DATES

REVISION DATES: 04-12-11 06-17-11 01-26-11 02-22-11

SHEET 7 OF 20

FILE => f_57-0639-h-bent_fdt.dgn

USERNAME => s124496 DATE PLOTTED => 09-DEC-2011 TIME PLOTTED => 12:39

DIST	COUNTY	ROUTE	POST MILES TOTAL PROJECT	SHEET No.	TOTAL SHEETS
11	SD	54,805	1.8,5.5/9.4	602	635

Tony Skreslet 8-25-11
REGISTERED CIVIL ENGINEER DATE

12-5-11
PLANS APPROVAL DATE

REGISTERED PROFESSIONAL ENGINEER TONY SKRESLET No. C50676 Exp. 09-30-11 CIVIL STATE OF CALIFORNIA

The State of California or its officers or agents shall not be responsible for the accuracy or completeness of electronic copies of this plan sheet.

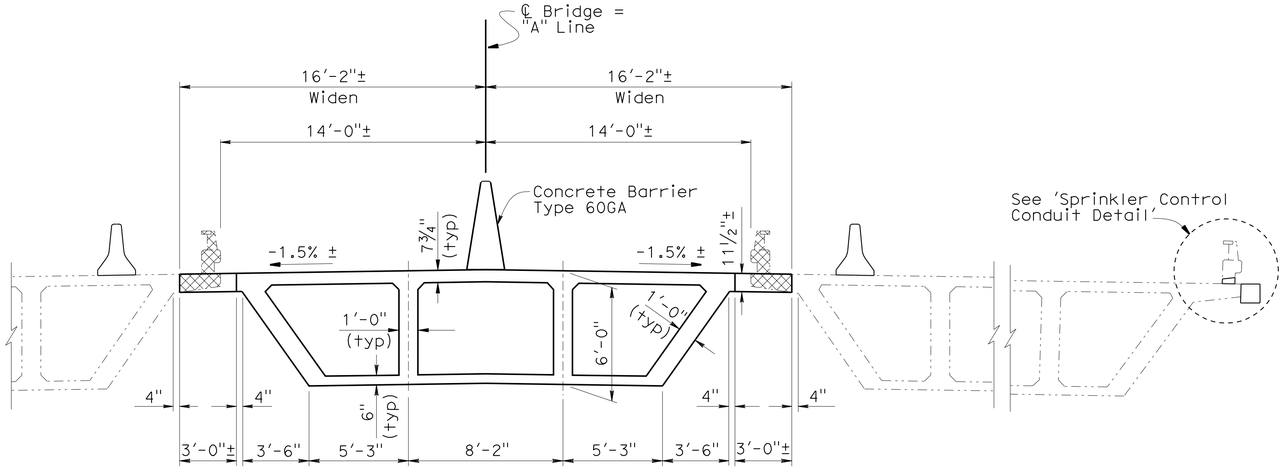

TYPICAL SECTION

¼"=1'-0"

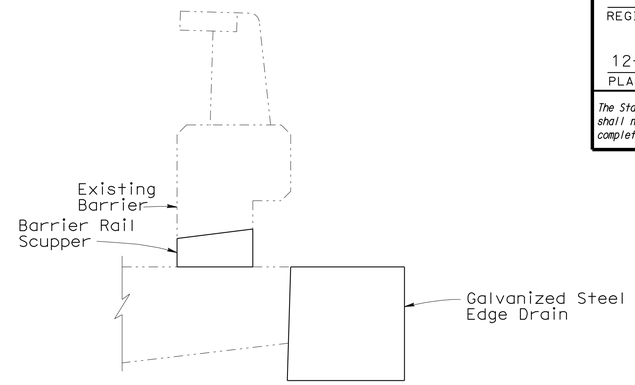

SPRINKLER CONTROL CONDUIT DETAIL

1½"=1'-0"

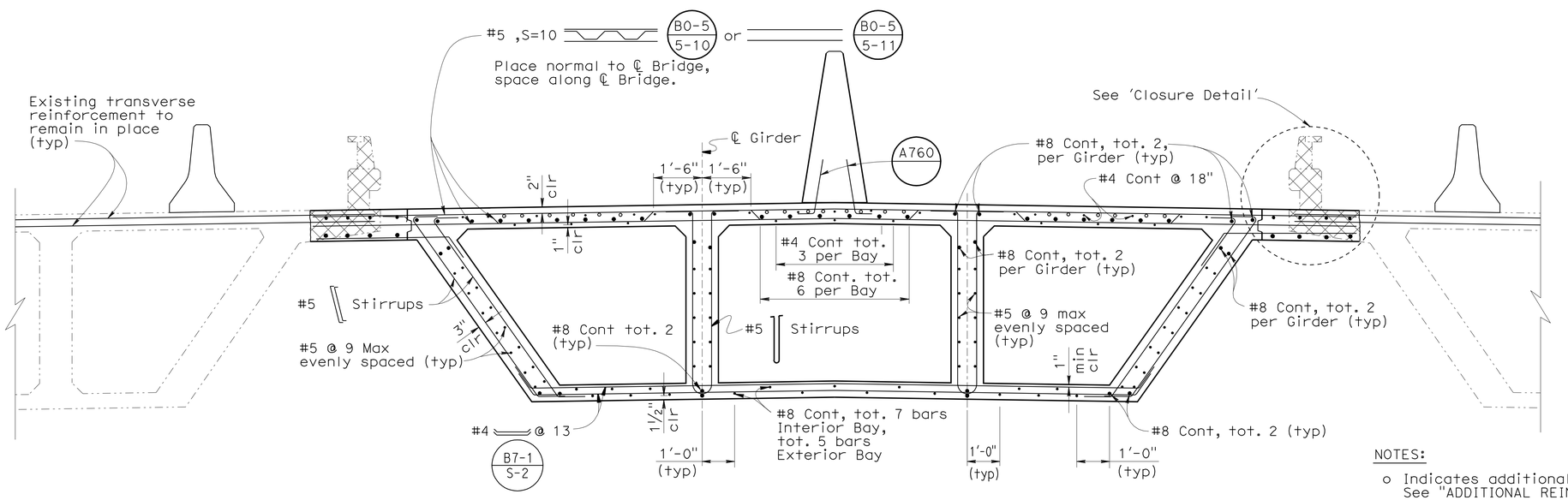

PART TYPICAL SECTION

A76D B0-5 B8-5 B7-1

½" = 1' - 0"

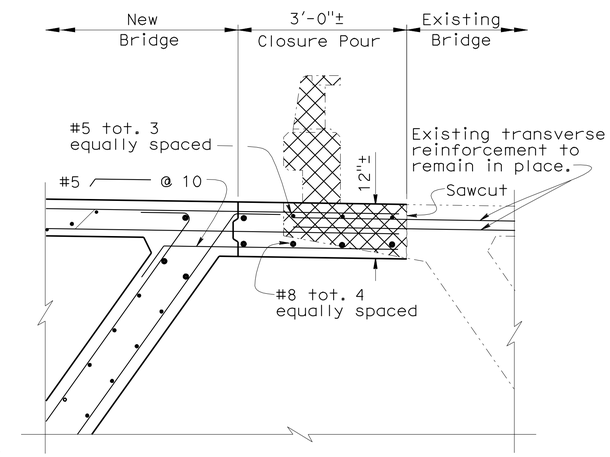

CLOSURE DETAIL

¾" = 1'-0"

NOTES:

o Indicates additional Girder Reinforcement. See "ADDITIONAL REINFORCEMENT" sheet

* Indicates distribution reinforcement

For Stirrup spacing, see "GIRDER LAYOUT" sheet.

LEGEND

Indicates Limits of Barrier Rail and Concrete Removal

NOTE:
THE CONTRACTOR SHALL VERIFY ALL CONTROLLING FIELD DIMENSIONS BEFORE ORDERING OR FABRICATING ANY MATERIAL.

	BY	CHECKED
DESIGN	P. A. Peterson	J. M. Peterson
DETAILS	PAP / T. Nguyen	P. A. Peterson
QUANTITIES	P. A. Peterson	J. M. Peterson

STATE OF CALIFORNIA
DEPARTMENT OF TRANSPORTATION

DIVISION OF ENGINEERING SERVICES
STRUCTURE DESIGN
DESIGN BRANCH 14

BRIDGE NO. 57-0639
POST MILE 9.07

SWEETWATER ROAD UC (WIDEN)
TYPICAL SECTION

STRUCTURES DESIGN DETAIL SHEET (ENGLISH) (REV. 09-01-10)

ORIGINAL SCALE IN INCHES FOR REDUCED PLANS 0 1 2 3

UNIT: 3613
PROJECT NUMBER & PHASE: 11000200501
CONTRACT NO.: 11-2T1811

DISREGARD PRINTS BEARING EARLIER REVISION DATES

REVISION DATES: 10-20-11 6-13-11 09-23-11 09-25-11

SHEET 8 OF 20

FILE => f_57-0639-1-ts.dgn

USERNAME => s124496 DATE PLOTTED => 09-DEC-2011 TIME PLOTTED => 12:39

DIST	COUNTY	ROUTE	POST MILES TOTAL PROJECT	SHEET No.	TOTAL SHEETS
11	SD	54,805	1.8,5.5/9.4	603	635

Tony Skreslet
REGISTERED CIVIL ENGINEER — DATE 8-25-11

12-5-11
PLANS APPROVAL DATE

REGISTERED PROFESSIONAL ENGINEER — TONY SKRESLET No. C50676 Exp. 09-30-11 CIVIL — STATE OF CALIFORNIA

The State of California or its officers or agents shall not be responsible for the accuracy or completeness of electronic copies of this plan sheet.

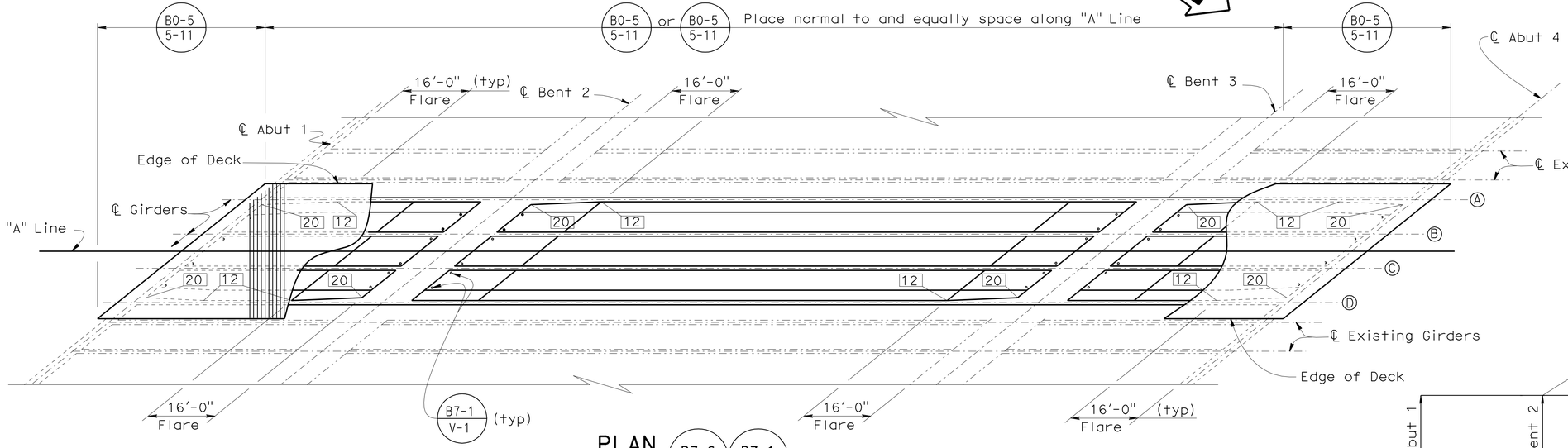

PLAN
1" = 15' B7-6 D-1 B7-1

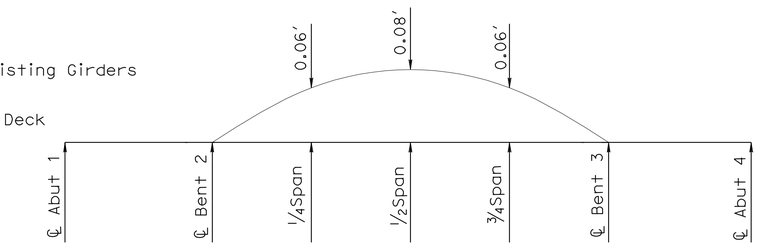

NOTE: Does not include allowance for falsework settlement.

CAMBER DIAGRAM
No Scale

NOTE:
"L" is the Girder length measured along ℄ Girder

LEGEND:
Indicates Theoretical Point of No Movement
Indicates Girder Stem width in inches measured at top of Girder, perpendicular to ℄ Girder
Indicates Point of Inflection

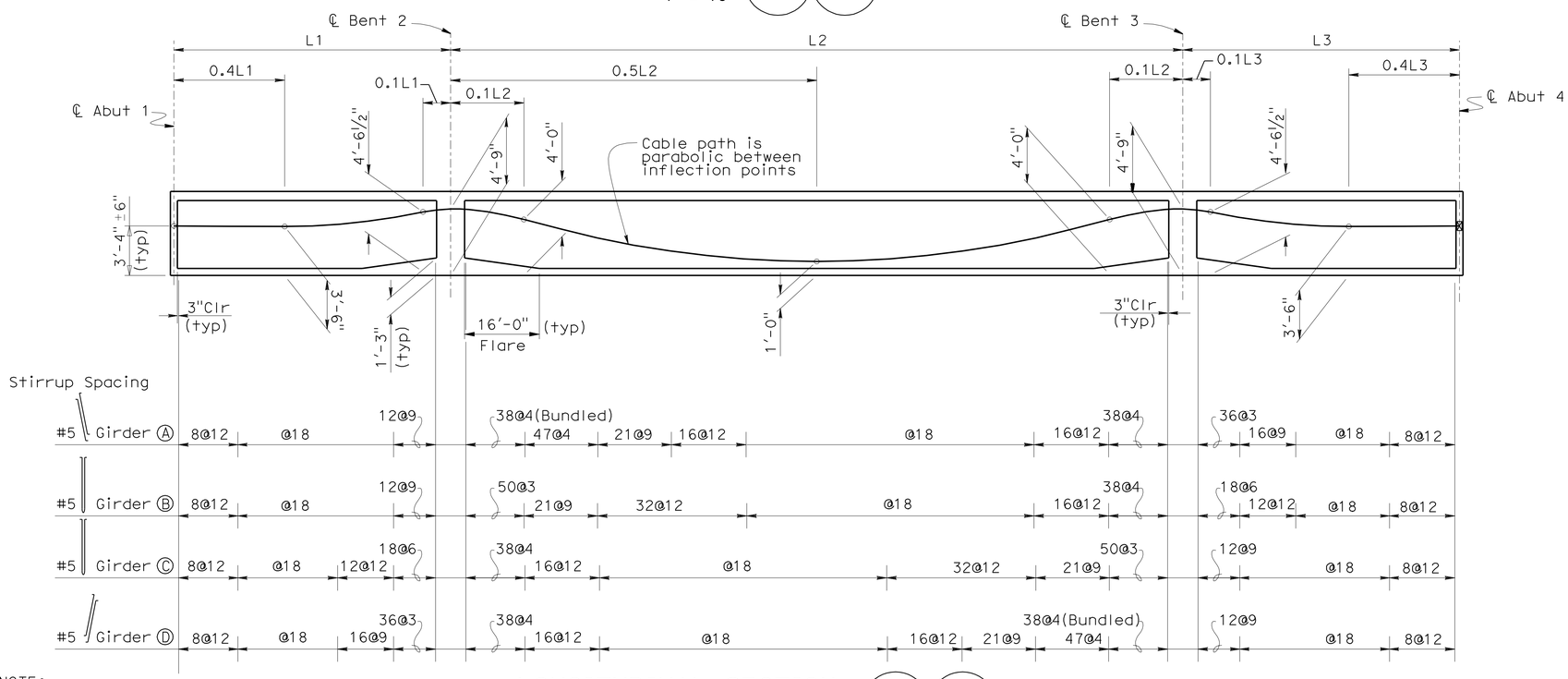

NOTE:
THE CONTRACTOR SHALL VERIFY ALL CONTROLLING FIELD DIMENSIONS BEFORE ORDERING OR FABRICATING ANY MATERIAL.

LONGITUDINAL SECTION
No Scale B7-1 B8-5

PRESTRESSING NOTES
270 KSI Low Relaxation Strand:

P_{jack} = 6800 kips

Anchor Set = 3/8 in

Total Number of Girders = 4

Distribution of prestress force (Pjack) between girders shall not exceed the ratio of 3:2. Maximum final force variation between girders shall not exceed 725 kips.

Concrete: f'_c = 5.0 ksi @ 28 days

f'_{ci} = 3.5 ksi @ time of stressing

Contractor shall submit elongation calculations based on initial stress at

☒ = 0.9260 times jacking stress.

Two end stressing shall be performed from the Abutments

	BY	CHECKED
DESIGN	P. A. Peterson	J. M. Peterson
DETAILS	PAP/ T. Nguyen	J. M. Peterson
QUANTITIES	P. A. Peterson	J. M. Peterson

STATE OF CALIFORNIA DEPARTMENT OF TRANSPORTATION

DIVISION OF ENGINEERING SERVICES STRUCTURE DESIGN DESIGN BRANCH 14

BRIDGE NO. 57-0639
POST MILE 9.07

SWEETWATER ROAD UC (WIDEN)
GIRDER LAYOUT

STRUCTURES DESIGN DETAIL SHEET (ENGLISH) (REV. 09-01-10)

ORIGINAL SCALE IN INCHES FOR REDUCED PLANS 0 1 2 3

UNIT: 3613
PROJECT NUMBER & PHASE: 11000200501
CONTRACT NO.: 11-2T1811

DISREGARD PRINTS BEARING EARLIER REVISION DATES

REVISION DATES 04-12-11 06-17-11 12-30-10 01-24-11

SHEET 9 OF 20

FILE => f_57-0639-1-gl.dgn

USERNAME => s124496 DATE PLOTTED => 09-DEC-2011 TIME PLOTTED => 12:39

DIST	COUNTY	ROUTE	POST MILES TOTAL PROJECT	SHEET No.	TOTAL SHEETS
11	SD	54,805	1.8,5.5/9.4	604	635

Tony Skreslet 8-25-11
REGISTERED CIVIL ENGINEER DATE

12-5-11
PLANS APPROVAL DATE

REGISTERED PROFESSIONAL ENGINEER TONY SKRESLET No. C50676 Exp. 09-30-11 CIVIL STATE OF CALIFORNIA

The State of California or its officers or agents shall not be responsible for the accuracy or completeness of electronic copies of this plan sheet.

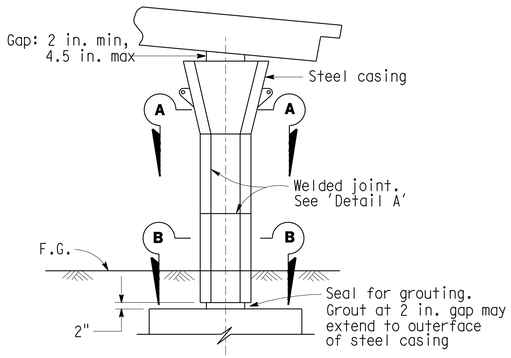

CLASS P/F COLUMN

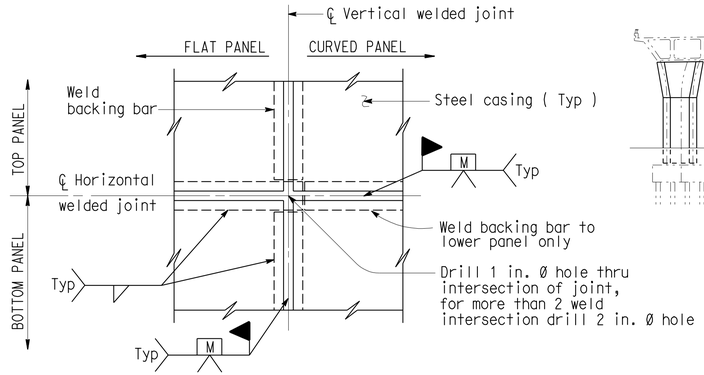

DETAIL A

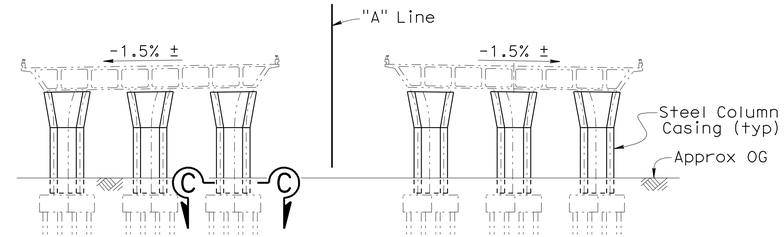

NOTE: Median widening not shown

TYPICAL ELEVATION

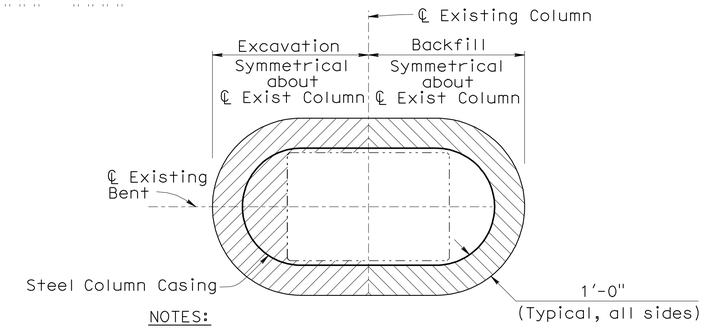

NOTES:

1. Section typical for all Existing Columns
2. Vertical Limits from Top of Footing to OG

SECTION C-C
EXCAVATION & BACKFILL LIMITS

Indicates Excavation Limits

Indicates Backfill Limits

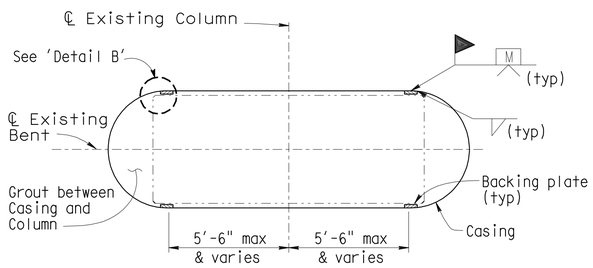

SECTION A-A
RECTANGULAR COLUMN

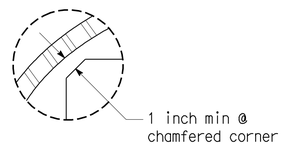

DETAIL B

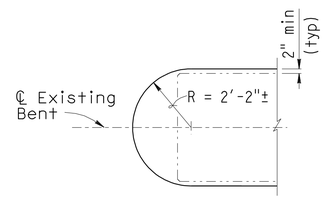

CASING DETAIL
CLASS F AND P/F COLUMN

Actual Radius to be determined by the Contractor subject to the approval of the Engineer

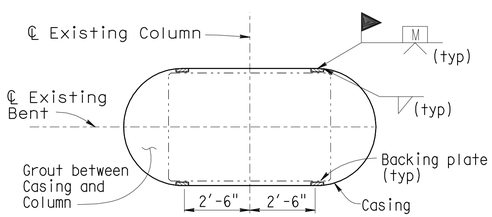

SECTION B-B
RECTANGULAR COLUMN

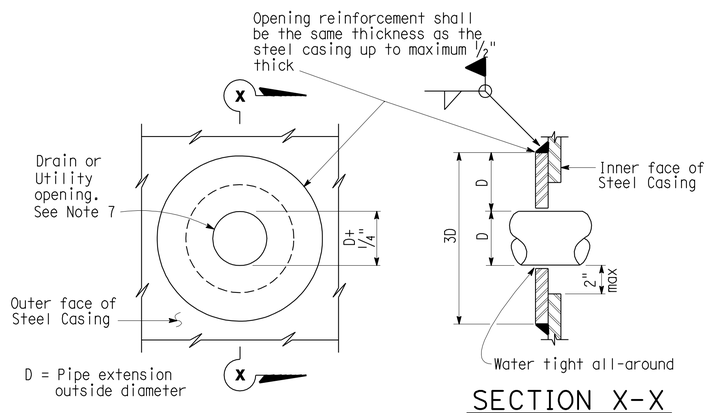

SECTION X-X

CASING OPENING

Note: Opening reinforcement required for drain or utility openings larger than 4 in.

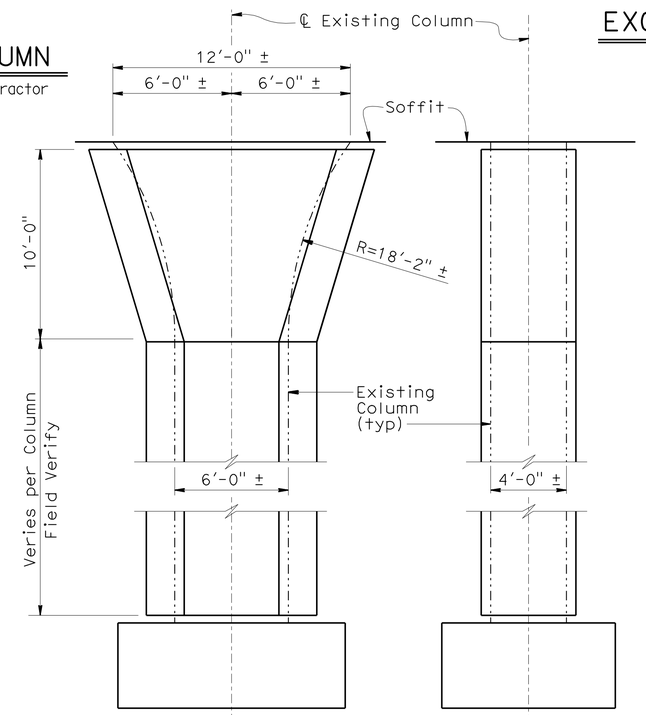

FRONT VIEW SIDE VIEW

EXISTING COLUMNS TO BE CASED

NOTES:

1) For varying thickness steel casing inside surface to remain flush. Minimum clearance from PCC column to casing shall be maintained.
2) Appropriate injection nozzles to be provided on casing, but removed and ground flush following completion of grouting operation.
3) All voids between steel casing and polyethylene (Class P/F), and steel casing and PCC column (Class F) to be filled with grout.
4) Location and number of vertical and horizontal welds to be determined by the Contractor, and subject to the approval of the Engineer. The location of casing welds are for illustration. No skip welds allowed.
5) Circular steel casing to be 1/4" thick minimum for casings with a 4'-4" diameter or less; all other steel casings to be 3/8" thick unless noted differently on contract plans. Backing plates to be the same thickness as casing up to maximum 1/2" thick.
6) Waterproof limits for steel casings. Typical for Classe "F" and "P/F".
7) For pipe extensions, opening shall be no more than 1/4" greater than the pipe extension diameter. For other openings, the opening diameter to be determined by the Engineer.

NOTE:
THE CONTRACTOR SHALL VERIFY ALL CONTROLLING FIELD DIMENSIONS BEFORE ORDERING OR FABRICATING ANY MATERIAL.

NO SCALE

	BY	CHECKED
DESIGN	P. A. Peterson	J. M. Peterson
DETAILS	JMP/T.Nguyen	J. M. Peterson
QUANTITIES	P. A. Peterson	J. M. Peterson

STATE OF CALIFORNIA
DEPARTMENT OF TRANSPORTATION

DIVISION OF ENGINEERING SERVICES
STRUCTURE DESIGN
DESIGN BRANCH 14

BRIDGE NO. 57-0639
POST MILE 9.07

SWEETWATER ROAD UC (WIDEN)
STEEL COLUMN CASING (SEISMIC RETROFIT)

STRUCTURES DESIGN DETAIL SHEET (ENGLISH) (REV. 09-01-10)

ORIGINAL SCALE IN INCHES FOR REDUCED PLANS 0 1 2 3

UNIT: 3613
PROJECT NUMBER & PHASE: 11000200501
CONTRACT NO.: 11-2T1811

DISREGARD PRINTS BEARING EARLIER REVISION DATES

REVISION DATES 07-15-11 07-20-11 08-25-11 01-14-11

SHEET 10 OF 20

FILE => f_57-0639-m-scc.dgn

USERNAME => s124496 DATE PLOTTED => 09-DEC-2011 TIME PLOTTED => 12:39

DIST	COUNTY	ROUTE	POST MILES TOTAL PROJECT	SHEET No.	TOTAL SHEETS
11	SD	54,805	1.8,5.5/9.4	605	635

Tony Skreslet 8-25-11
REGISTERED CIVIL ENGINEER DATE

12-5-11
PLANS APPROVAL DATE

REGISTERED PROFESSIONAL ENGINEER TONY SKRESLET No. C50676 Exp. 09-30-11 CIVIL STATE OF CALIFORNIA

The State of California or its officers or agents shall not be responsible for the accuracy or completeness of electronic copies of this plan sheet.

NOTE: Concrete Barrier not shown.

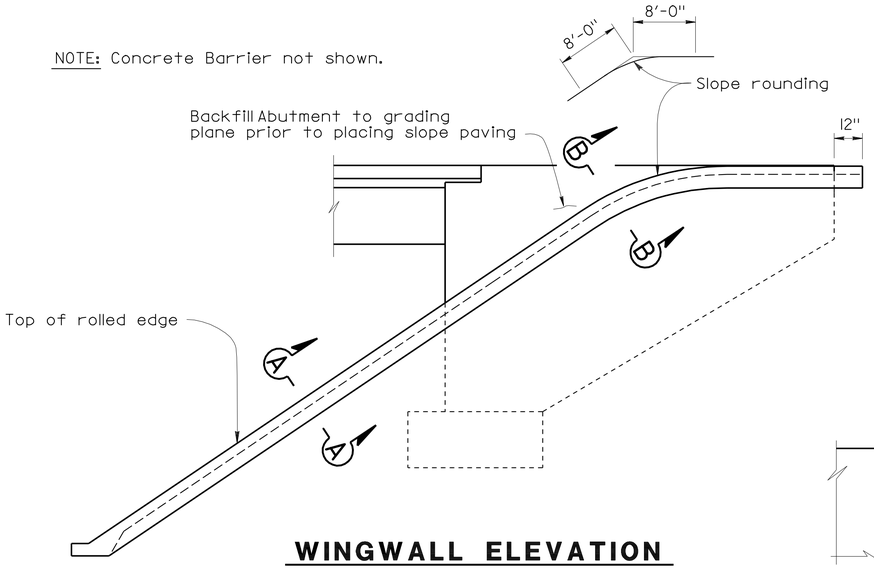

WINGWALL ELEVATION

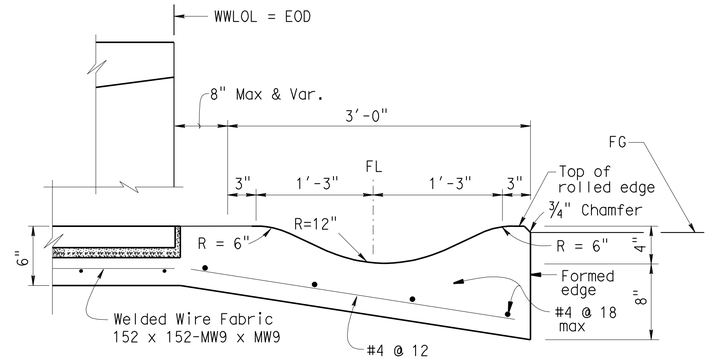

SECTION A-A

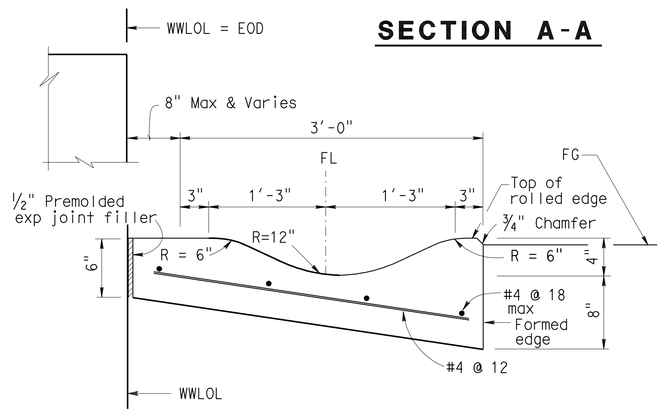

SECTION B-B

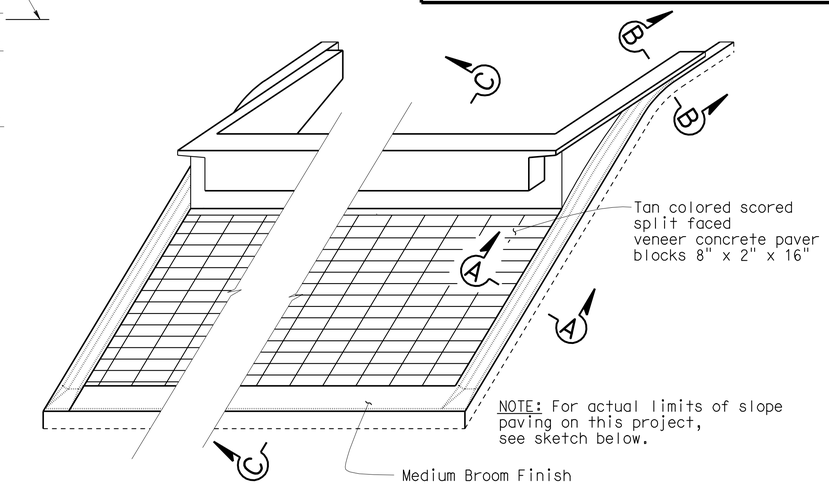

PICTORIAL VIEW OF TYPICAL INSTALLATION

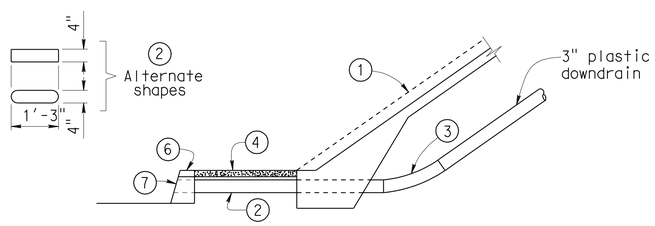

TYPICAL - WITH SIDEWALK

DRAINAGE DETAILS

NOTE: Drainage details are only applicable when BO-3/3-5 is indicated on detail sheets.

1. Top of rolled edge
2. Conduit: 1/16" galv corrugated steel or 1/8" smooth galv steel
3. Plastic pipe connector
4. Top of Sidewalk
5. See Approach Slab drainage detail
6. Top of Curb
7. Core cut through Curb

NOTE:
THE CONTRACTOR SHALL VERIFY ALL CONTROLLING FIELD DIMENSIONS BEFORE ORDERING OR FABRICATING ANY MATERIAL.

Indicates Slope Paving

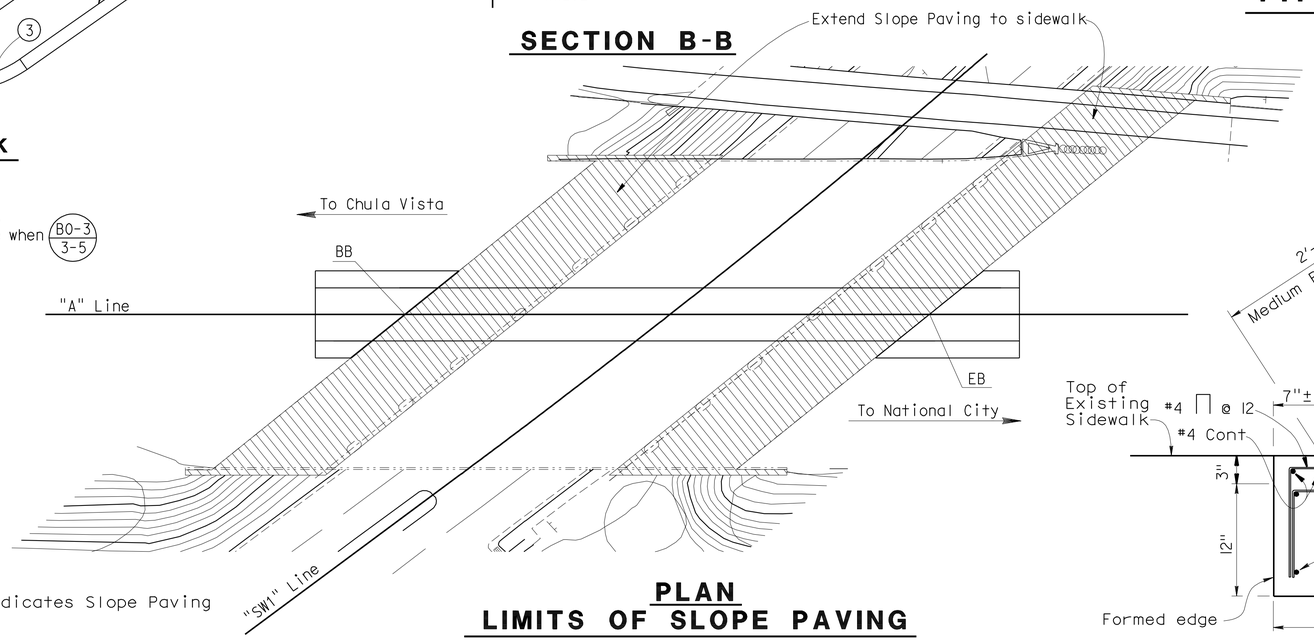

PLAN
LIMITS OF SLOPE PAVING

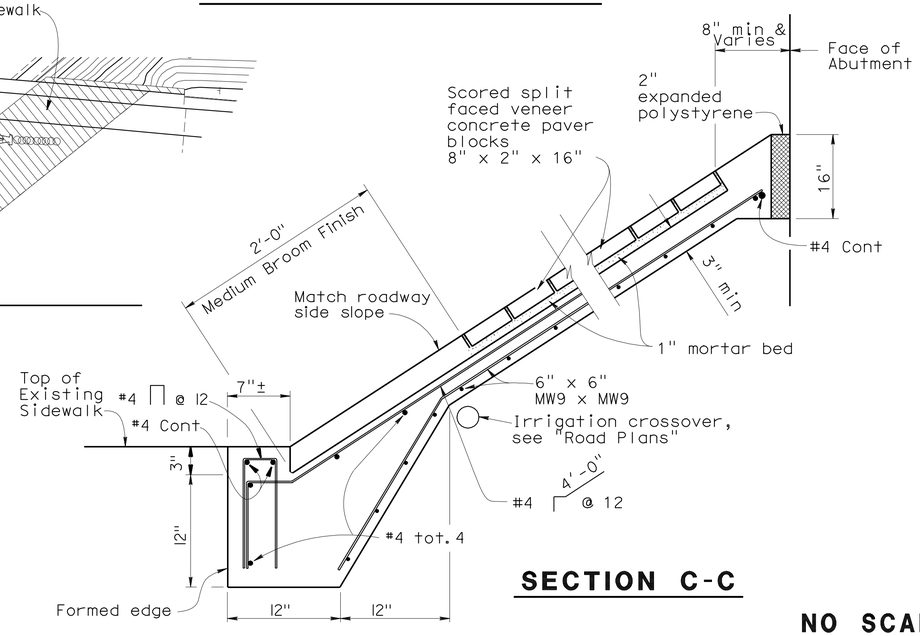

SECTION C-C

NO SCALE

DESIGN	BY P. A. Peterson	CHECKED J. M. Peterson	
DETAILS	BY C. Paclibar	CHECKED J. M. Peterson	
QUANTITIES	BY P. A. Peterson	CHECKED J. M. Peterson	

STATE OF CALIFORNIA
DEPARTMENT OF TRANSPORTATION

DIVISION OF ENGINEERING SERVICES
STRUCTURE DESIGN
DESIGN BRANCH 14

BRIDGE NO. 57-0639
POST MILE 9.07

SWEETWATER ROAD UC (WIDEN)
SLOPE PAVING (MASONRY BLOCK)

STRUCTURES DESIGN DETAIL SHEET (ENGLISH) (REV. 09-01-10)

ORIGINAL SCALE IN INCHES FOR REDUCED PLANS 0 1 2 3

UNIT: 3613
PROJECT NUMBER & PHASE: 11000200501
CONTRACT NO.: 11-2T1811

DISREGARD PRINTS BEARING EARLIER REVISION DATES

REVISION DATES 06-17-11 03-14-11 03-16-11 04-12-11

SHEET 11 OF 20

FILE => f_57-0639-n-sloppav.dgn

USERNAME => s124496 DATE PLOTTED => 09-DEC-2011 TIME PLOTTED => 12:39

DIST.	COUNTY	ROUTE	POST MILES TOTAL PROJECT	SHEET NO.	TOTAL SHEETS
11	SD	54,805	1.8,5.5/9.4	606	635

Tony Skreslet 8-25-11
REGISTERED ENGINEER - CIVIL

12-5-11
PLANS APPROVAL DATE

REGISTERED PROFESSIONAL ENGINEER TONY SKRESLET No. C50676 Exp. 09-30-11 CIVIL STATE OF CALIFORNIA

The State of California or its officers or agents shall not be responsible for the accuracy or completeness of electronic copies of this plan sheet.

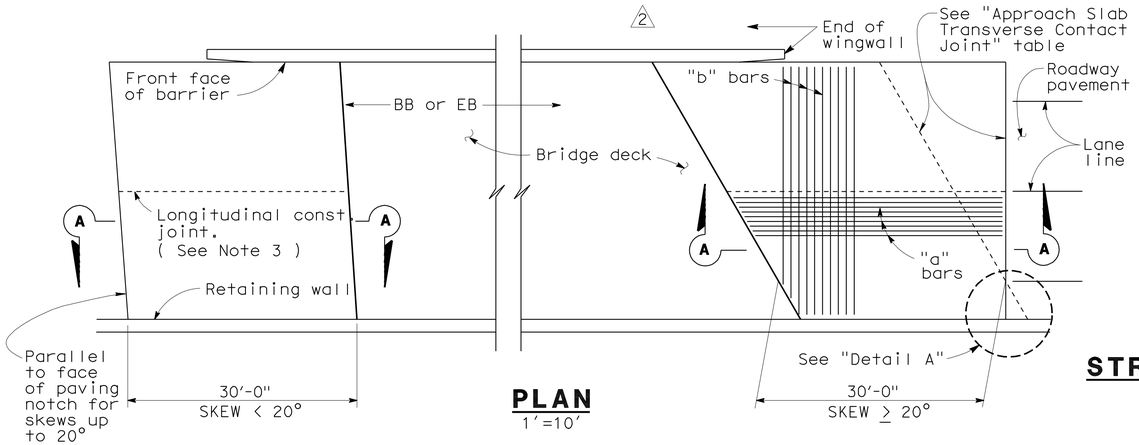

PLAN
1"=10'

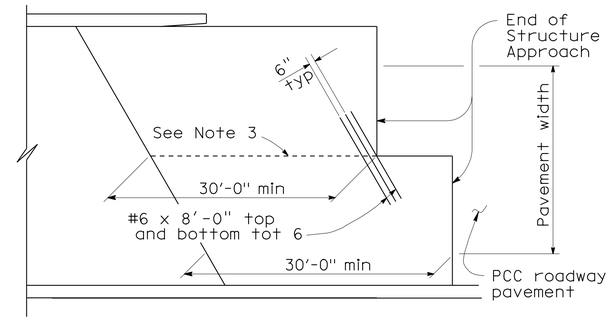

STRUCTURE APPROACH - END STAGGER DETAIL
No Scale

APPROACH SLAB TRANSVERSE CONTACT JOINT		
APPROACH SKEW	WITH AC ROADWAY PAVEMENT	WITH PCC ROADWAY PAVEMENT
< 20°	Parallel to face of paving notch	Parallel to face of paving notch
20°- 45°	Parallel to face of P N use (Detail A)	Stagger lines 24' to 36' apart
> 45°	Parallel to face of P N use (Detail A)	Stagger at each lane line

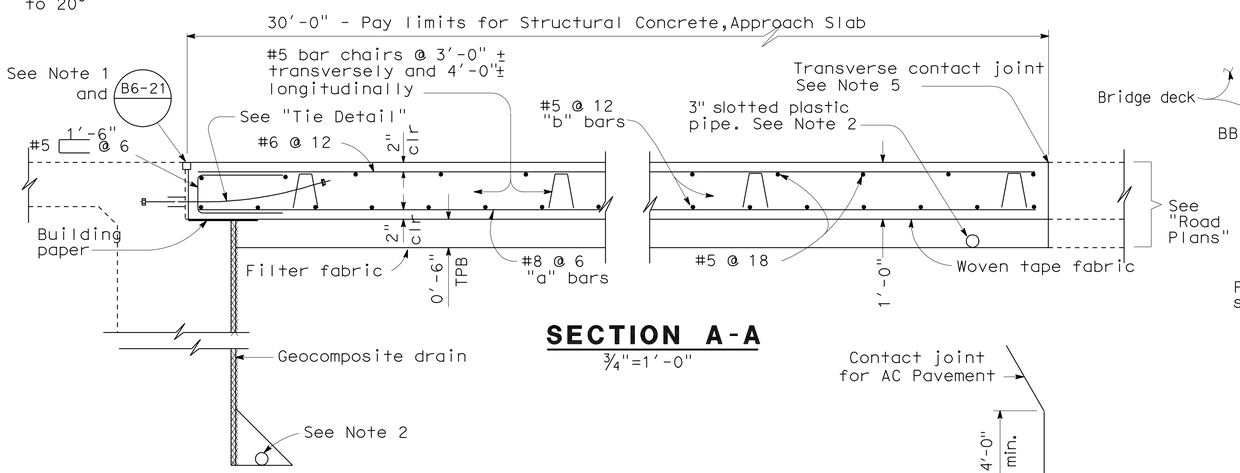

SECTION A-A
¾"=1'-0"

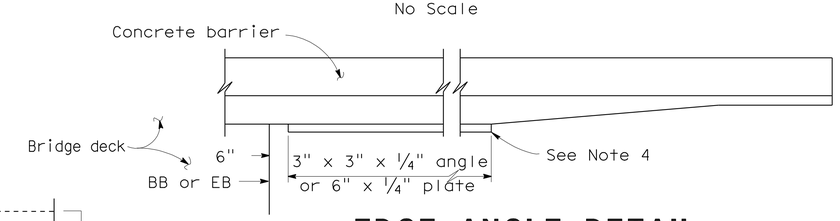

EDGE ANGLE DETAIL
½"=1'-0"

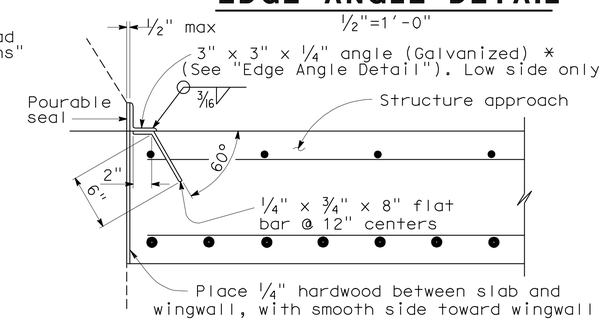

*(TO BE USED WITH TYPE 25 OR TYPE 27 CONCRETE BARRIER)

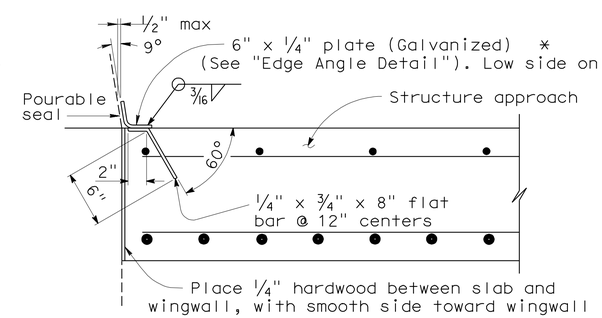

*(TO BE USED WITH TYPE 732 OR TYPE 736 CONCRETE BARRIER)

DETAIL B
1½"=1'-0"

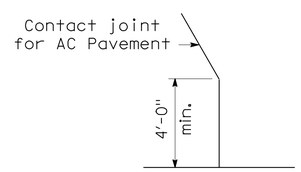

DETAIL A
No Scale

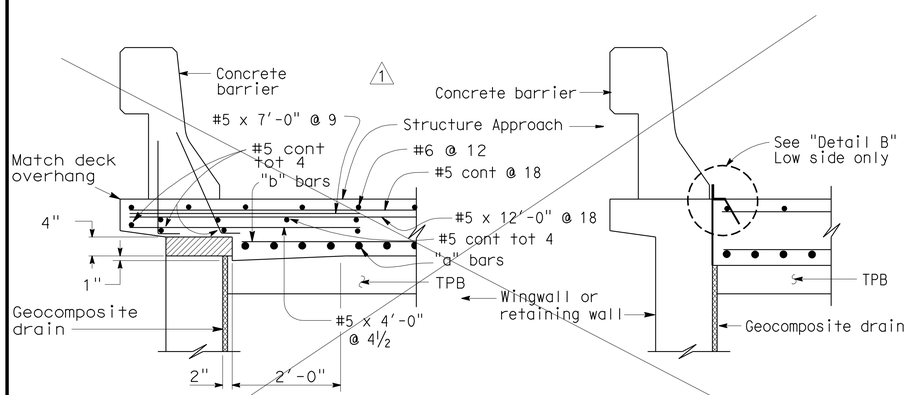

TYPE E-1 TYPE E-2

SECTION C-C
¾"=1'-0"

(Type E-1 to be used, unless otherwise shown on plans)

NOTE:
THE CONTRACTOR SHALL VERIFY ALL CONTROLLING FIELD DIMENSIONS BEFORE ORDERING OR FABRICATING ANY MATERIAL.

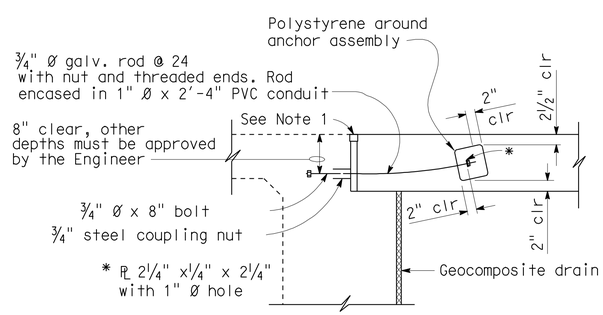

TIE DETAIL
¾"=1'-0"

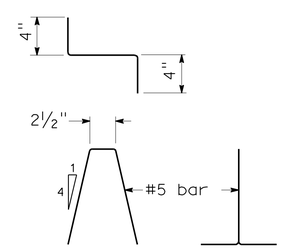

BAR CHAIR DETAIL
1½"=1'-0"

NOTES:

1. For details not noted or shown, see Structure Plans.
2. For drainage details, see "Structure Approach Drainage Details" sheet.
3. Longitudinal construction joints, when permitted by the Engineer, shall be located on lane lines.
4. End angle or plate at beginning of barrier transition, end of wingwall or end of structure approach, as applicable.
5. For transverse contact joint with new PCC paving, refer to Standard Plan P10.
6. At the contractor's option, approach slab transverse reinforcement may be placed parallel to paving notch. Spacing of transverse reinforcement is measured along ℄ roadway.

Polystyrene to be removed.

STANDARD DRAWING

FILE NO. xs3-180e

APPROVED BY M. Ha (RESPONSIBLE TECHNICAL SPECIALIST)
APPROVAL DATE 8-12-08

RELEASED BY O. Alcantara (RESPONSIBLE OFFICE CHIEF)
RELEASE DATE 8-12-08

1 Deleted Detail
2 Modified Detail

STATE OF CALIFORNIA DEPARTMENT OF TRANSPORTATION

DIVISION OF ENGINEERING SERVICES

BRIDGE NO. 57-0639
POST MILE 9.07

SWEETWATER ROAD UC (WIDEN)
STRUCTURE APPROACH TYPE N(30D)

DS OSD 2147A (ENGLISH STANDARD DRAWING "XS" BORDER REV. 01/11/08)

ORIGINAL SCALE IN INCHES FOR REDUCED PLANS 0 1 2 3

CU 3613
PN&Phase 11000200501

DISREGARD PRINTS BEARING EARLIER REVISION DATES

REVISION DATES (PRELIMINARY STAGE ONLY) 01-27-11 04-12-11

SHEET 12 OF 20

USERNAME => s124496

f_57-0639-s-sapptyp_n.dgn

DATE PLOTTED => 09-DEC-2011 TIME PLOTTED => 12:39

DIST.	COUNTY	ROUTE	MILE POST TOTAL PROJECT	SHEET NO.	TOTAL SHEETS
11	SD	54,805	1.8,5.5/9.4	607	635

Tony Skreslet 8-25-11
REGISTERED ENGINEER - CIVIL
12-5-11
PLANS APPROVAL DATE
The State of California or its officers or agents shall not be responsible for the accuracy or completeness of electronic copies of this plan sheet.

REGISTERED PROFESSIONAL ENGINEER TONY SKRESLET No. C50676 Exp. 09-30-11 CIVIL STATE OF CALIFORNIA

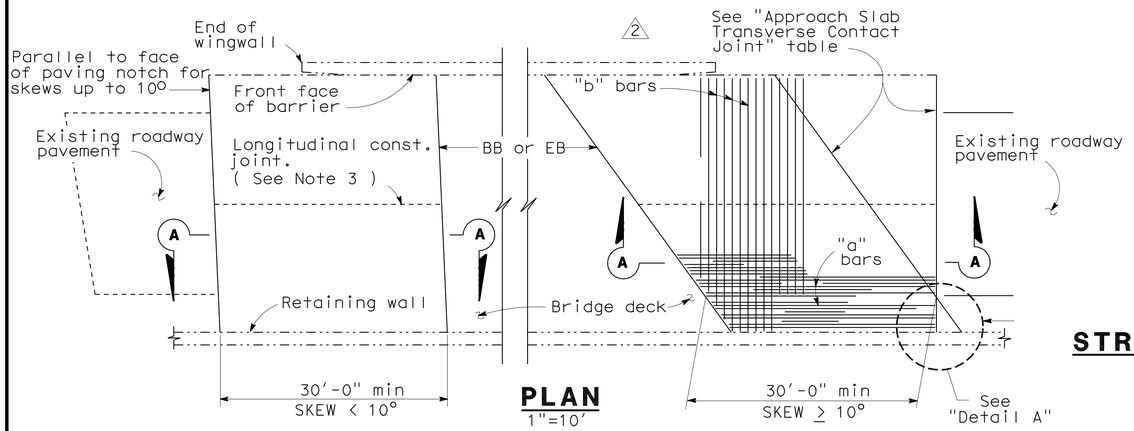

PLAN
1"=10'

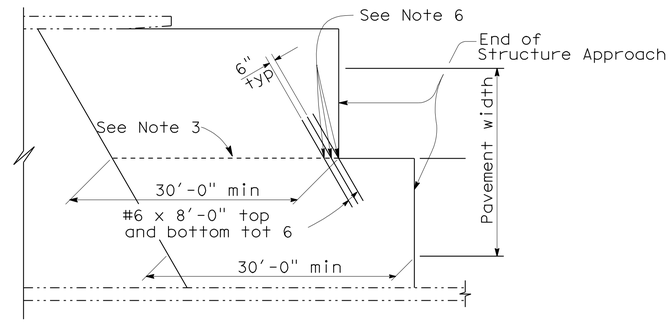

STRUCTURE APPROACH - END STAGGER DETAIL
No Scale

APPROACH SLAB TRANSVERSE CONTACT JOINT		
APPROACH SKEW	WITH AC ROADWAY PAVEMENT	WITH PCC ROADWAY PAVEMENT
< 10°	Parallel to face of paving notch	Parallel to face of paving notch
10° - 45°	Parallel to face of P N use (Detail A)	Stagger lines 24' to 36' apart
> 45°	Parallel to face of P N use (Detail A)	Stagger at each lane line

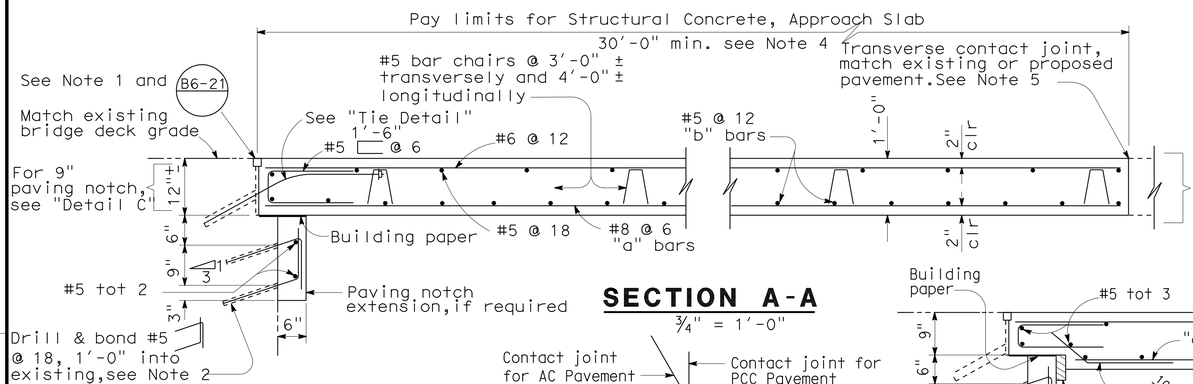

SECTION A-A
¾" = 1'-0"

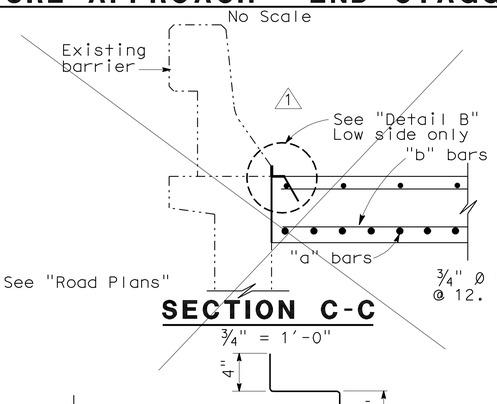

SECTION C-C
¾" = 1'-0"

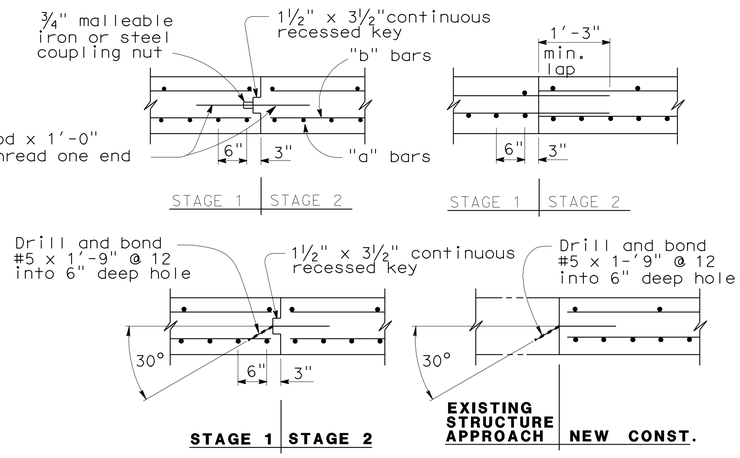

LONGITUDINAL CONSTRUCTION JOINT ALTERNATIVES
¾" = 1'-0"

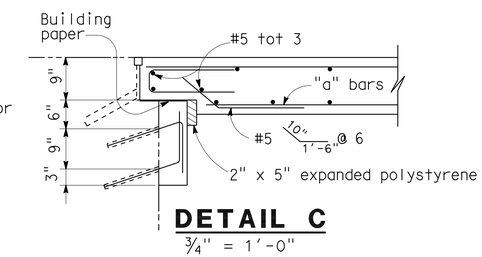

DETAIL C
¾" = 1'-0"

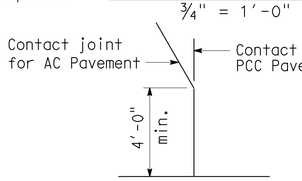

DETAIL A
No Scale

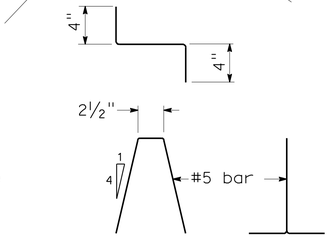

BAR CHAIR DETAIL
1½" = 1'-0"

NOTE: For details not shown, see "Section A-A".

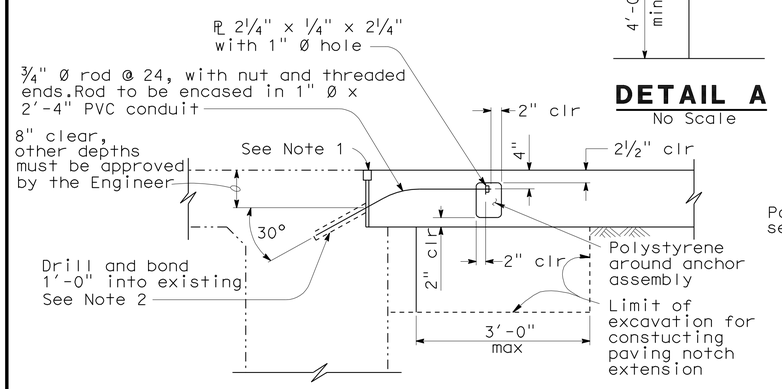

TIE DETAIL
¾" = 1'-0"

NOTE:
THE CONTRACTOR SHALL VERIFY ALL CONTROLLING FIELD DIMENSIONS BEFORE ORDERING OR FABRICATING ANY MATERIAL.

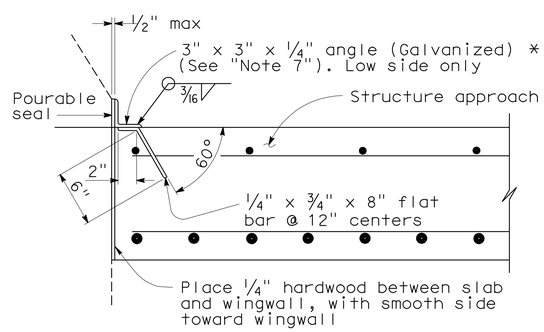

*(TO BE USED WITH TYPE 25 OR TYPE 27 CONCRETE BARRIER)

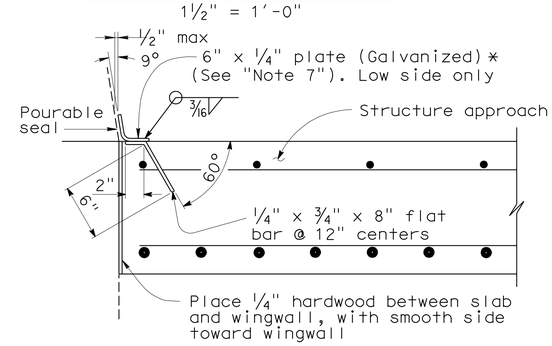

*(TO BE USED WITH TYPE 732 OR TYPE 736 CONCRETE BARRIER)

DETAIL B
1½" = 1'-0"

NOTES:

1. For details not shown or noted, see Structure Plans. Adjust bar reinforcement to clear a sawcut for sealed joint, when required.
2. Space to avoid existing prestress anchorages and main reinforcement.
3. Longitudinal construction joints, when permitted by the Engineer, shall be located on lane lines.
4. Transverse contact joint shall be a minimum of 5'-0" from an existing or constructed weakened plane joint.
5. For transverse contact joint with new PCC paving, refer to Standard Plan P10.
6. Couplers are required for stage construction.
7. End angle or plate at beginning of barrier transition, end of wingwall or end of structure approach as applicable.

STANDARD DRAWING

RELEASE DATE 3/14/05	DESIGN	BY M.TRAFFALIS	CHECKED E.THORKILDSEN	RELEASED BY
FILE NO. xs3-140e	DETAILS	BY R.YEE	CHECKED E.THORKILDSEN	
	SUBMITTED	BY M.HA	DRAWING DATE 8/92	OFFICE CHIEF

1 Deleted Detail
2 Modified Detail

STATE OF CALIFORNIA
DEPARTMENT OF TRANSPORTATION

DIVISION OF ENGINEERING SERVICES

BRIDGE NO. 57-0639
MILE POST 9.07

SWEETWATER ROAD UC (WIDEN)
STRUCTURE APPROACH TYPE R(30D)

DS OSD 2147A (ENGLISH) (REV. X/XX/XX)

ORIGINAL SCALE IN INCHES FOR REDUCED PLANS 0 1 2 3

CU 3613
PN&Phase 11000200501

DISREGARD PRINTS BEARING EARLIER REVISION DATES
REVISION DATES (PRELIMINARY STAGE ONLY) 1-27-11 4-12-11

SHEET 13 OF 20

USERNAME => s124496

DATE PLOTTED => 09-DEC-2011 TIME PLOTTED => 12:33

f_57-0639-s-sapptyp

DIST	COUNTY	ROUTE	POST MILES TOTAL PROJECT	SHEET No.	TOTAL SHEETS
11	SD	54,805	1.8,5.5/9.4	608	635

Tony Skreslet 8-25-11
REGISTERED CIVIL ENGINEER DATE

12-5-11
PLANS APPROVAL DATE

REGISTERED PROFESSIONAL ENGINEER TONY SKRESLET No. C50676 Exp. 09-30-11 CIVIL STATE OF CALIFORNIA

The State of California or its officers or agents shall not be responsible for the accuracy or completeness of electronic copies of this plan sheet.

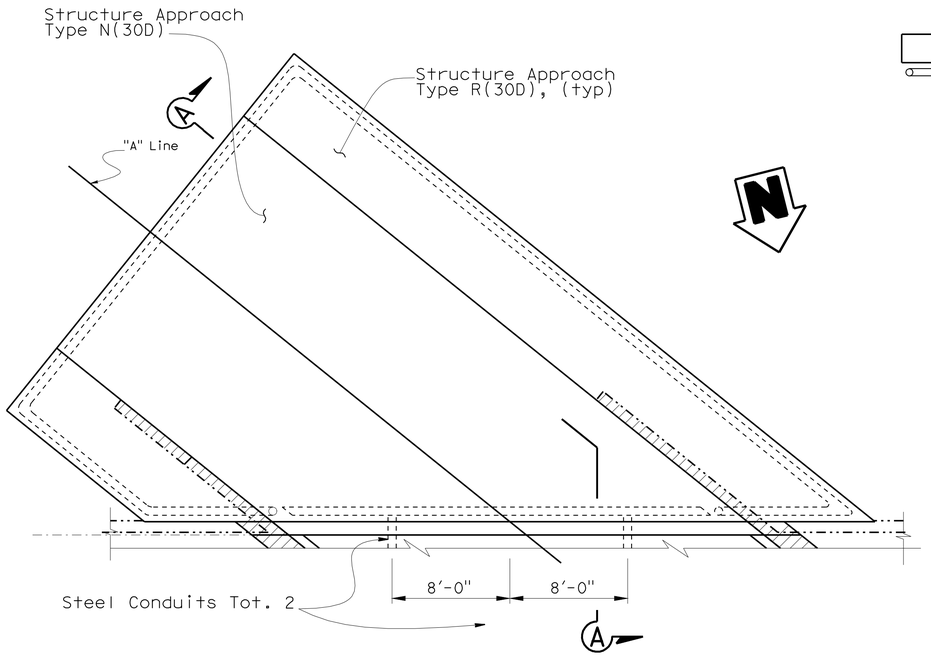

NOTE: Abutment 1 shown, Abutment 4 similar

PLAN
No Scale

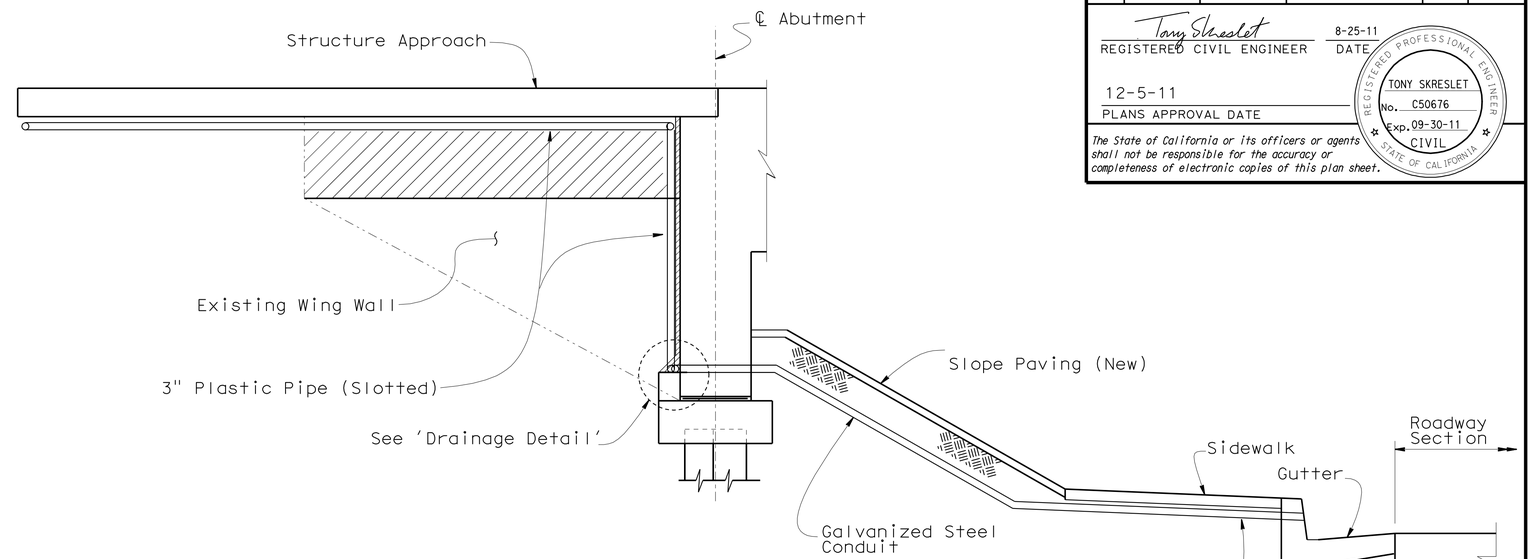

SECTION A-A
No Scale

1/16" galv corrugated steel or 1/8" smooth galv steel Conduit. Alternate Conduit shapes are as follows:

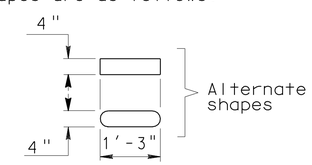

NOTE: Sidewalk and Gutter to be removed and replaced as directed by Engineer

LEGEND:

Indicates top 3' of Wing Wall and portion of Overhang to be removed

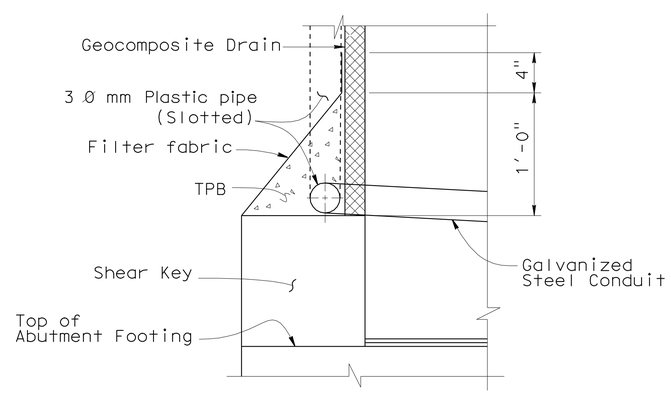

DRAINAGE DETAIL
No Scale

NOTE:
THE CONTRACTOR SHALL VERIFY ALL CONTROLLING FIELD DIMENSIONS BEFORE ORDERING OR FABRICATING ANY MATERIAL.

	BY	CHECKED
DESIGN	T. Skreslet	J. M. Peterson
DETAILS	T. Nguyen	J. M. Peterson
QUANTITIES	P. A. Peterson	J. M. Peterson

STATE OF CALIFORNIA
DEPARTMENT OF TRANSPORTATION

DIVISION OF ENGINEERING SERVICES
STRUCTURE DESIGN
DESIGN BRANCH 14

BRIDGE NO. 57-0639
POST MILE 5.54

SWEETWATER ROAD UC (WIDEN)
STRUCTURE APPROACH DRAINAGE DETAILS

STRUCTURES DESIGN DETAIL SHEET (ENGLISH) (REV. 09-01-10)

ORIGINAL SCALE IN INCHES FOR REDUCED PLANS 0 1 2 3

UNIT: 3613
PROJECT NUMBER & PHASE: 11000200501
CONTRACT NO.: 11-2T1811

DISREGARD PRINTS BEARING EARLIER REVISION DATES

REVISION DATES: 06-20-11 ~~03-28-11~~ ~~03-25-11~~ ~~04-18-11~~

SHEET 14 OF 20

FILE => f_57-0639-t-sadd.dgn

USERNAME => s124496 DATE PLOTTED => 09-DEC-2011 TIME PLOTTED => 12:39

DIST	COUNTY	ROUTE	POST MILES TOTAL PROJECT	SHEET No.	TOTAL SHEETS
11	SD	54,805	1.8,5.5/9.4	609	635

Tony Skreslet 8-25-11
REGISTERED CIVIL ENGINEER DATE

12-5-11
PLANS APPROVAL DATE

REGISTERED PROFESSIONAL ENGINEER TONY SKRESLET No. C50676 Exp. 09-30-11 CIVIL STATE OF CALIFORNIA

The State of California or its officers or agents shall not be responsible for the accuracy or completeness of electronic copies of this plan sheet.

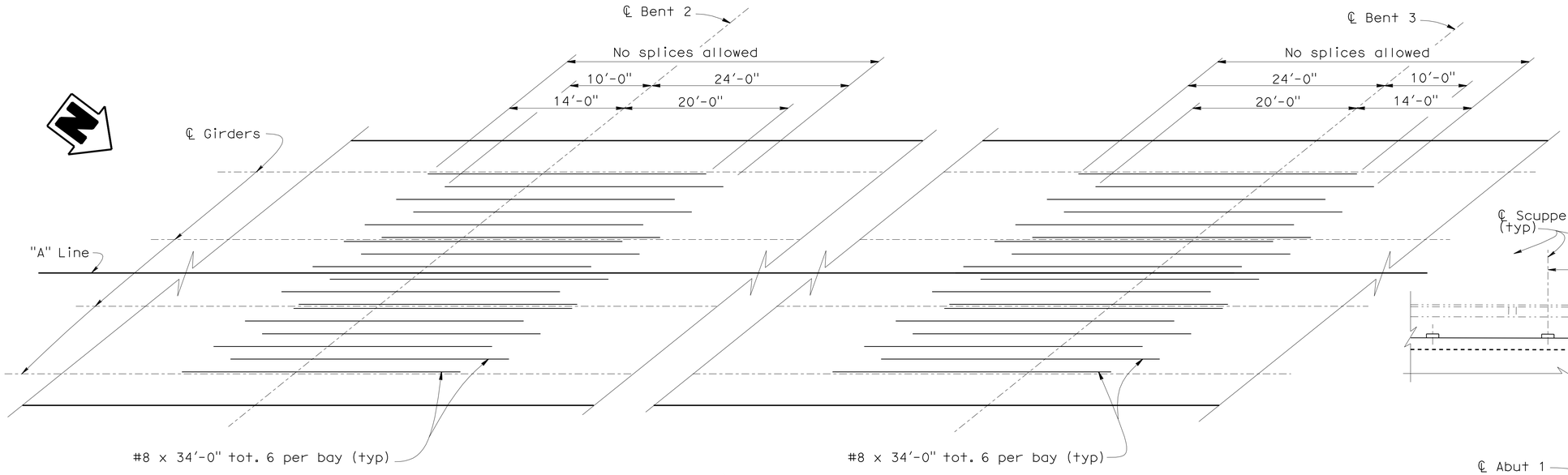

PLAN - (TOP SLAB)

No Scale

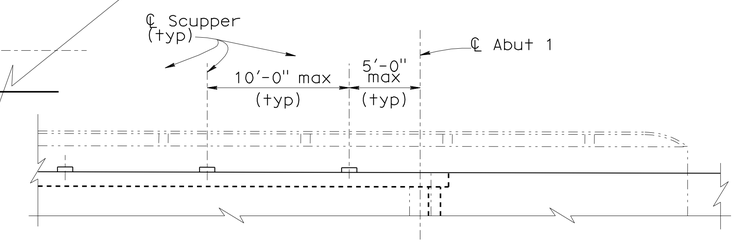

SECTION B-B

3/16" = 1'-0"

NOTES:

1. Drown Drains required at Abutment 1 only total 2 All steel pipe to be 10" x 0.134" wall thickness and shall be galvanized. Fittings and bends shall have a minimum wall thickness of 1/8". All joints or connections to be connected by a steel pipe sleeve and to be smooth throughout inside of pipe except as noted. All bends to be 2" radius measured along centerline of pipe. All bends to be smooth
2. For Drainage Details not shown see Standard Plan, DECK DRAINS TYPES D-1 AND D-2
3. All metal to be hot dipped galvanized after fabricating
4. For 'View E-E' and 'Detail A', see "MISCELLANEOUS DETAILS NO. 2" sheet

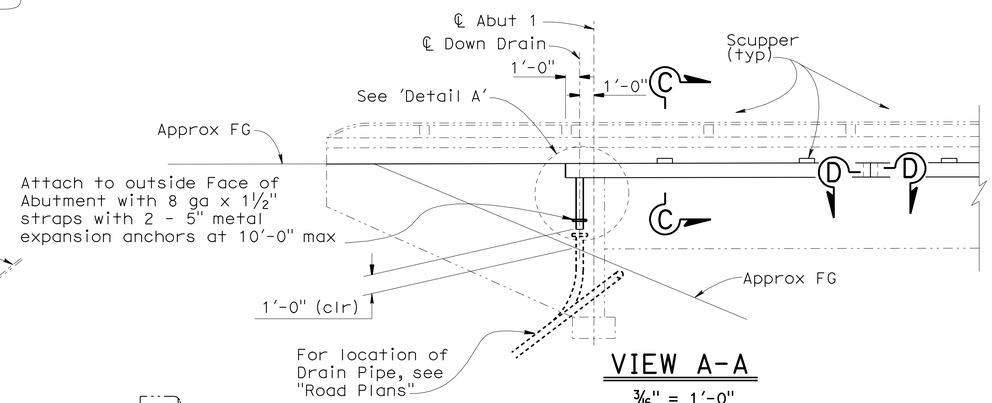

VIEW A-A

3/16" = 1'-0"

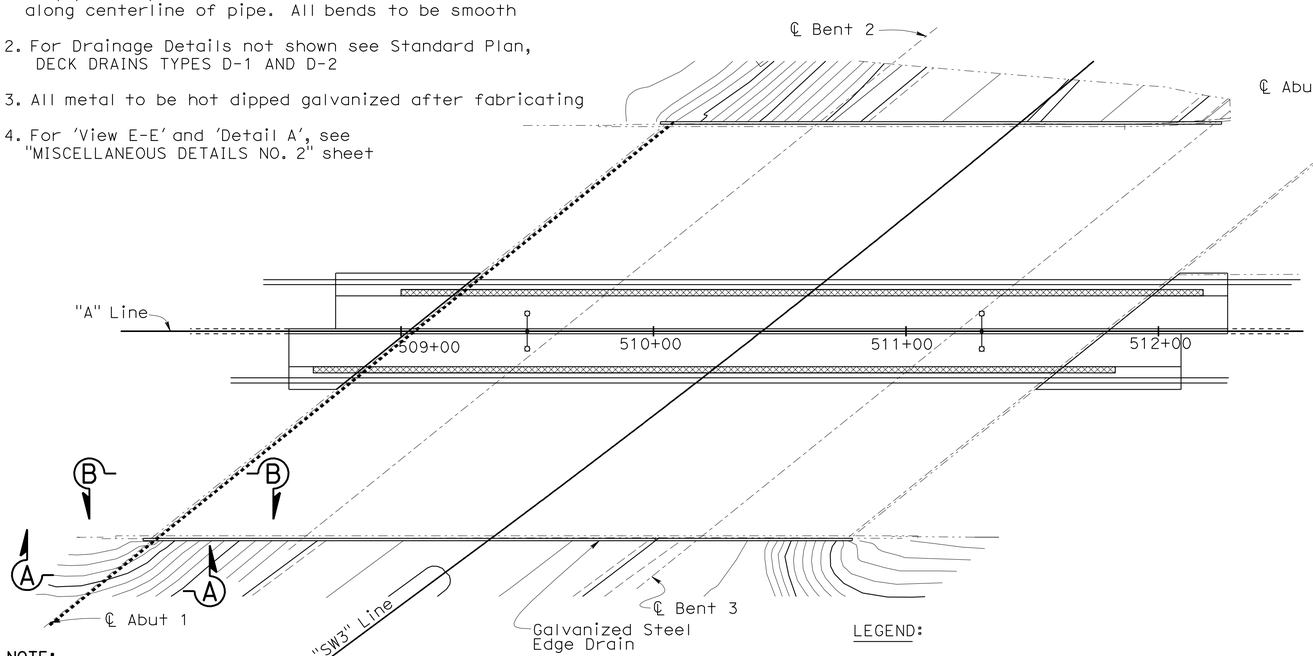

NOTE:
THE CONTRACTOR SHALL VERIFY ALL CONTROLLING FIELD DIMENSIONS BEFORE ORDERING OR FABRICATING ANY MATERIAL.

PLAN

1" = 30'-0"

LEGEND:

-·-·-·- Indicates Existing Structure

:::::::: Indicates Drain Pipe, see 'Road Plans'

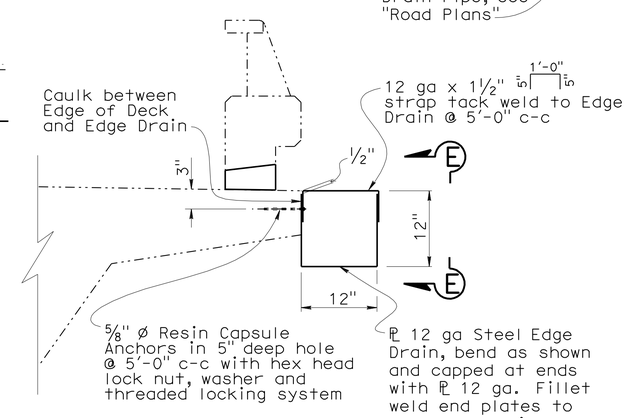

SECTION C-C

1½" = 1'-0"

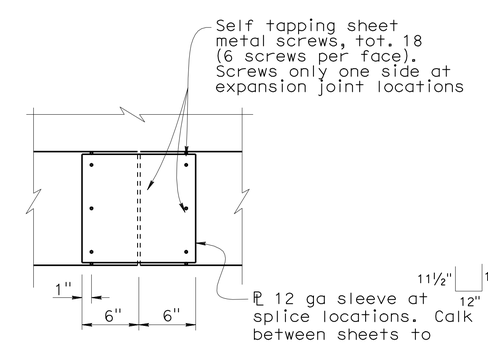

SECTION D-D

1½" = 1'-0"

DESIGN	BY P. A. Peterson	CHECKED J. M. Peterson	
DETAILS	BY L. Xiong	CHECKED J. M. Peterson	
QUANTITIES	BY P. A. Peterson	CHECKED J. M. Peterson	

STATE OF CALIFORNIA
DEPARTMENT OF TRANSPORTATION

DIVISION OF ENGINEERING SERVICES
STRUCTURE DESIGN
DESIGN BRANCH 14

BRIDGE NO. 57-0639
POST MILE 9.07

SWEETWATER ROAD UC (WIDEN)

MISCELLANEOUS DETAILS NO. 1

STRUCTURES DESIGN DETAIL SHEET (ENGLISH) (REV. 09-01-10)

ORIGINAL SCALE IN INCHES FOR REDUCED PLANS 0 1 2 3

UNIT: 3613
PROJECT NUMBER & PHASE: 11000200501
CONTRACT NO.: 11-2T1811

DISREGARD PRINTS BEARING EARLIER REVISION DATES

REVISION DATES 08-11-11 08-22-11 09-22-11 10-20-11

SHEET 15 OF 20

FILE => f_57-0639-v-miscdet_no1.dgn

USERNAME => s124496 DATE PLOTTED => 09-DEC-2011 TIME PLOTTED => 12:40

DIST	COUNTY	ROUTE	POST MILES TOTAL PROJECT	SHEET No.	TOTAL SHEETS
11	SD	54,805	1.8,5.5/9.4	610	635

Tony Skreslet 8-25-11
REGISTERED CIVIL ENGINEER DATE

12-5-11
PLANS APPROVAL DATE

REGISTERED PROFESSIONAL ENGINEER TONY SKRESLET No. C50676 Exp. 09-30-11 CIVIL STATE OF CALIFORNIA

The State of California or its officers or agents shall not be responsible for the accuracy or completeness of electronic copies of this plan sheet.

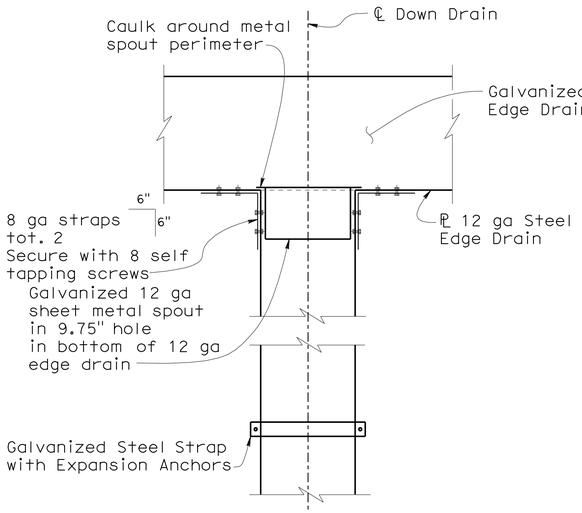

DETAIL A
1½" = 1'-0"

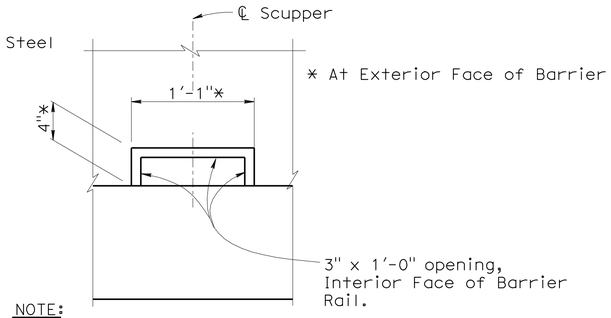

NOTE:
Sawcut and remove existing concrete and reinforcement within limits of Scupper Opening

VIEW E-E
1½" = 1'-0"

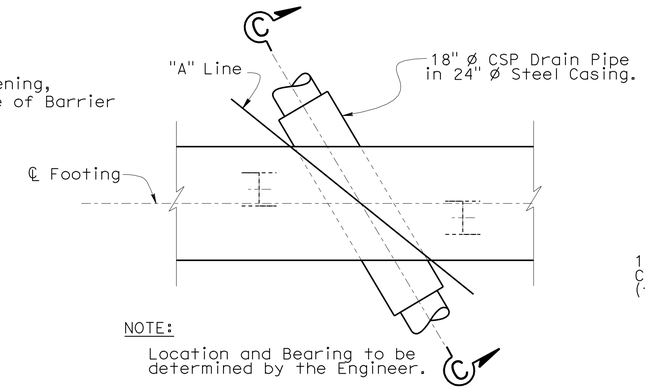

NOTE:
Location and Bearing to be determined by the Engineer.

FOOTING PLAN
⅜" = 1'-0"

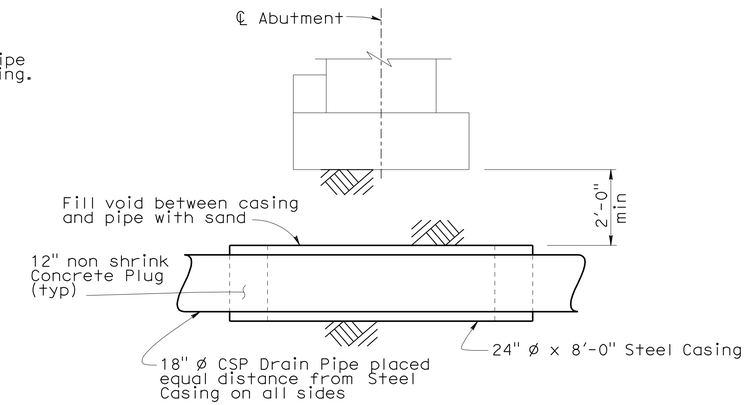

SECTION C-C
No Scale

ABUTMENT 4 DOWN DRAIN DETAILS

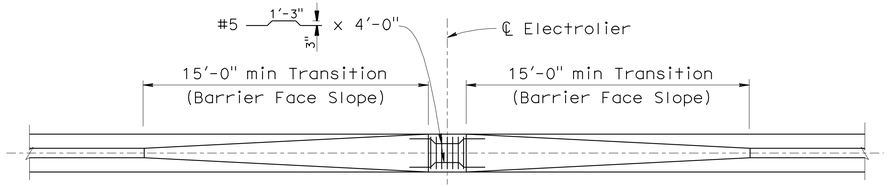

NOTE: Electrolier and Base Plate not shown

PLAN
¼" = 1'-0"

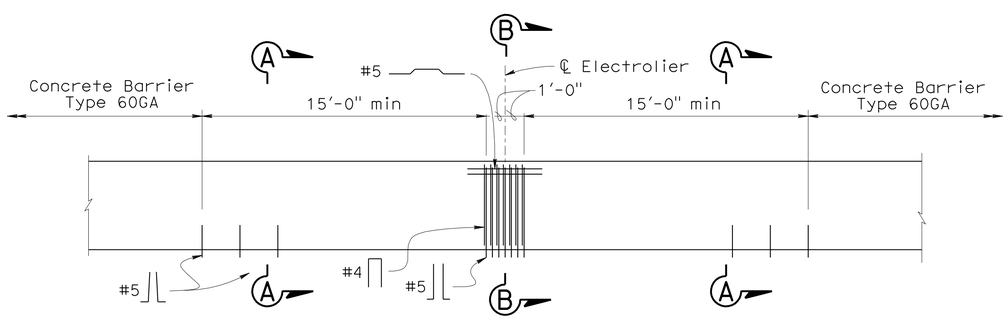

ELEVATION
A76D
¼" = 1'-0"

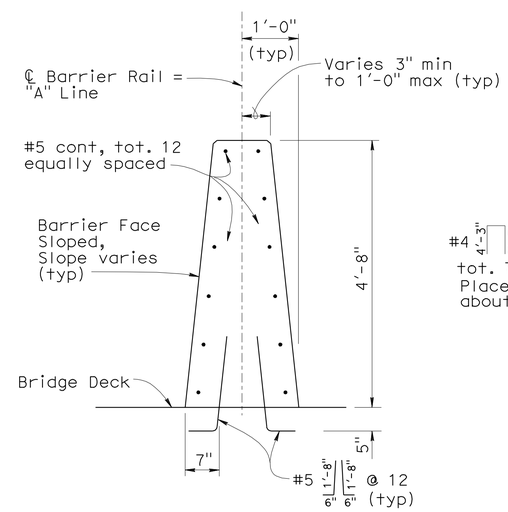

SECTION A-A
¾" = 1'-0"

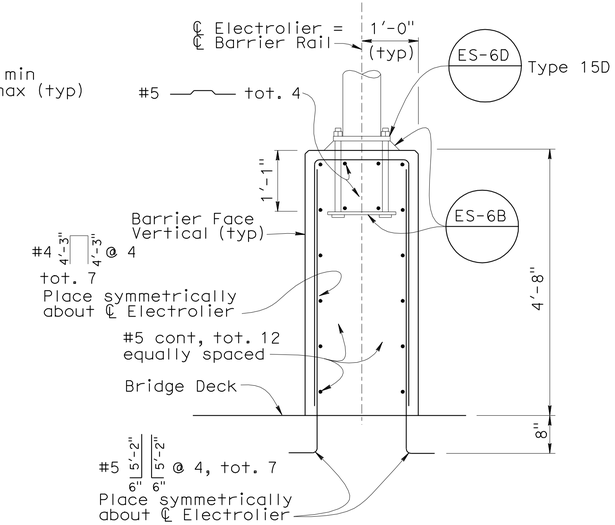

SECTION B-B
¾" = 1'-0"

NOTE:
THE CONTRACTOR SHALL VERIFY ALL CONTROLLING FIELD DIMENSIONS BEFORE ORDERING OR FABRICATING ANY MATERIAL.

ELECTROLIER/CONCRETE BARRIER TYPE 60GA MODIFIED DETAILS

NOTE:
For 'View E-E' and 'Detail A', see "MISCELLANEOUS DETAILS NO. 1" sheet

	BY	CHECKED
DESIGN	T. Skreslet	K. C. Liu
DETAILS	T. Nguyen	K. C. Liu
QUANTITIES	P. A. Peterson	J. M. Peterson

STATE OF CALIFORNIA
DEPARTMENT OF TRANSPORTATION

DIVISION OF ENGINEERING SERVICES
STRUCTURE DESIGN
DESIGN BRANCH 14

BRIDGE NO. 57-0639
POST MILE 9.07

SWEETWATER ROAD UC (WIDEN)
MISCELLANEOUS DETAILS NO. 2

STRUCTURES DESIGN DETAIL SHEET (ENGLISH) (REV. 09-01-10)

ORIGINAL SCALE IN INCHES FOR REDUCED PLANS 0 1 2 3

UNIT: 3613
PROJECT NUMBER & PHASE: 11000200501
CONTRACT NO.: 11-2T1811

DISREGARD PRINTS BEARING EARLIER REVISION DATES

REVISION DATES: 08-08-11 08-16-11 08-23-11 08-26-11

SHEET 16 OF 20

FILE => f_57-0639-v-miscdet_no2.dgn

USERNAME => s124496 DATE PLOTTED => 09-DEC-2011 TIME PLOTTED => 12:40

DIST	COUNTY	ROUTE	POST MILES TOTAL PROJECT	SHEET No	TOTAL SHEETS
11	SD	54,805	1.8,5.5/9.4	611	635

REGISTERED CIVIL ENGINEER 8-1-11

12-5-11
PLANS APPROVAL DATE

The State of California or its officers or agents shall not be responsible for the accuracy or completeness of electronic copies of this plan sheet.

REGISTERED PROFESSIONAL ENGINEER David T-M Liao No. C59838 Exp. 12-31-11 CIVIL STATE OF CALIFORNIA

This LOTB sheet was prepared in accordance with the Caltrans Soil & Rock Logging, Classification, & Presentation Manual (June 2007).

BENCH MARK

WP 495+00,point on centerline of I-805 in medium, at station 495+00 on "A1" Line
Elevation: 66.61′
NAVD88 (Vertical)
CCS83 (Horizontal)

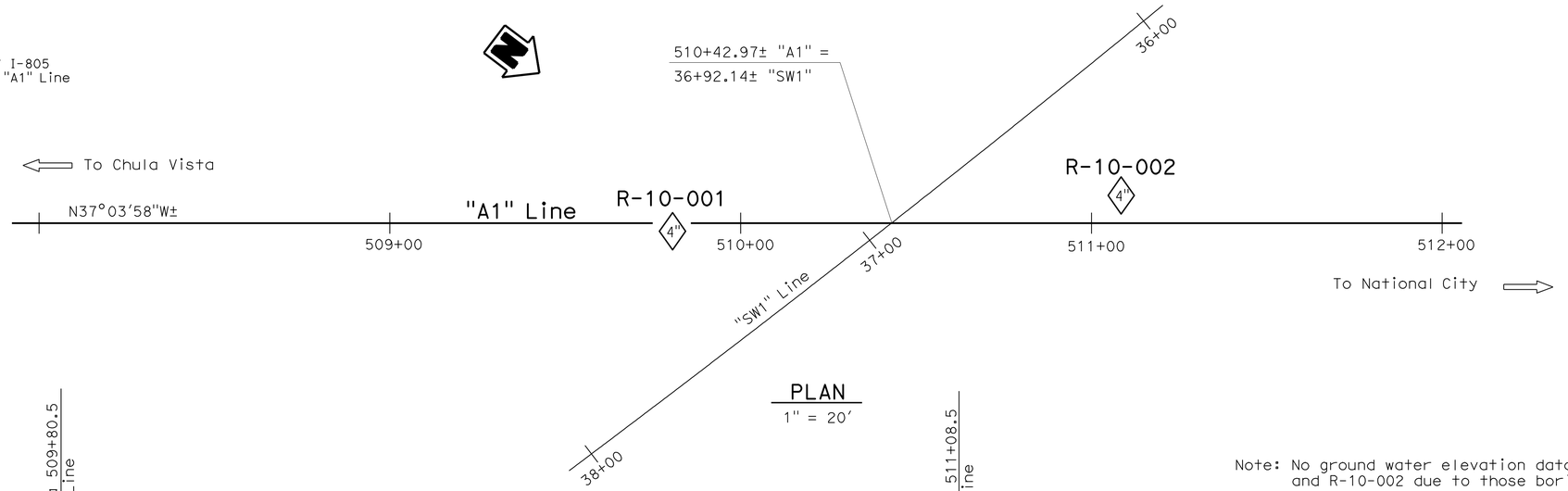

PLAN

1" = 20′

Note: No ground water elevation data was obtained from Borings R-10-001 and R-10-002 due to those borings located in active traffic lanes.

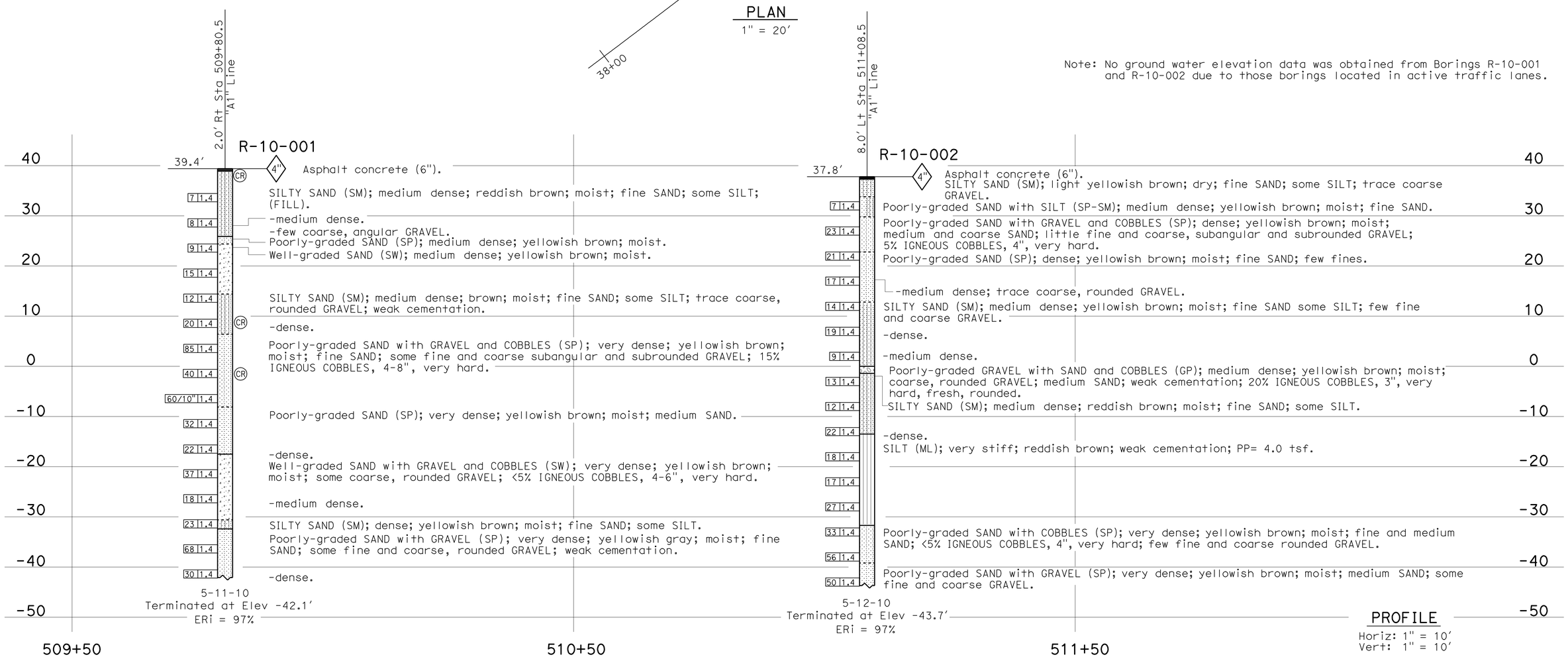

PROFILE

Horiz: 1" = 10′
Vert: 1" = 10′

ENGINEERING SERVICES	MATERIALS AND GEOTECHNICAL SERVICES	STATE OF CALIFORNIA DEPARTMENT OF TRANSPORTATION	DIVISION OF ENGINEERING SERVICES STRUCTURE DESIGN DESIGN BRANCH X	BRIDGE NO. 57-0639 POST MILE 9.0	SWEETWATER ROAD UC (WIDEN)
FUNCTIONAL SUPERVISOR NAME: M. DeSalvatore	DRAWN BY: W. Tang 11/10 CHECKED BY: E. Neupert	FIELD INVESTIGATION BY: J. Klamecki			LOG OF TEST BORINGS 1 OF 4

OGS CIVIL LOG OF TEST BORINGS SHEET

ORIGINAL SCALE IN INCHES FOR REDUCED PLANS 0 1 2 3

UNIT: 3643
PROJECT NUMBER & PHASE: 11000200501 CONTRACT NO.: 11-2T1811

DISREGARD PRINTS BEARING EARLIER REVISION DATES → 03-22-11 04-21-11 06-03-11 07-08-11

SHEET 17 OF 20

FILE => f_57-0639-z-lotb_1of4.dgn

USERNAME => s124496 DATE PLOTTED => 09-DEC-2011 TIME PLOTTED => 12:40

DIST	COUNTY	ROUTE	POST MILES TOTAL PROJECT	SHEET No	TOTAL SHEETS
11	SD	54,805	1.8,5.5/9.4	612	635

REGISTERED CIVIL ENGINEER 8-1-11

12-5-11
PLANS APPROVAL DATE

REGISTERED PROFESSIONAL ENGINEER David T-M Liao No. C59838 Exp. 12-31-11 CIVIL STATE OF CALIFORNIA

The State of California or its officers or agents shall not be responsible for the accuracy or completeness of electronic copies of this plan sheet.

REFERENCE: CALTRANS SOIL & ROCK LOGGING, CLASSIFICATION, AND PRESENTATION MANUAL (JUNE 2007)

CEMENTATION

Description	Criteria
Weak	Crumbles or breaks with handling or little finger pressure.
Moderate	Crumbles or breaks with considerable finger pressure.
Strong	Will not crumble or break with finger pressure.

CONSISTENCY OF COHESIVE SOILS

Description	Unconfined Compressive Strength (tsf)	Pocket Penetrometer Measurement (tsf)	Torvane Measurement (tsf)	Field Approximation
Very Soft	< 0.25	< 0.25	< 0.12	Easily penetrated several inches by fist
Soft	0.25 to 0.50	0.25 to 0.50	0.12 to 0.25	Easily penetrated several inches by thumb
Medium Stiff	0.50 to 1.0	0.50 to 1.0	0.25 to 0.50	Penetrated several inches by thumb with moderate effort
Stiff	1 to 2	1 to 2	0.50 to 1.0	Readily indented by thumb but penetrated only with great effort
Very Stiff	2 to 4	2 to 4	1.0 to 2.0	Readily indented by thumbnail
Hard	> 4.0	> 4.0	> 2.0	Indented by thumbnail with difficulty

BOREHOLE IDENTIFICATION

Symbol	Hole Type	Description
Size	A	Auger Boring
Size	R P	Rotary drilled boring Rotary percussion boring (air)
Size	R	Rotary drilled diamond core
Size	HD HA	Hand driven (1-inch soil tube) Hand Auger
●	D	Dynamic Cone Penetration Boring
▲	CPT	Cone Penetration Test (ASTM D 5778-95)
⬚	O	Other

Note: Size in inches.

PLASTICITY OF FINE-GRAINED SOILS

Description	Criteria
Nonplastic	A 1/8-inch thread cannot be rolled at any water content.
Low	The thread can barely be rolled and the lump cannot be formed when drier than the plastic limit.
Medium	The thread is easy to roll and not much time is required to reach the plastic limit. The thread cannot be rerolled after reaching the plastic limit. The lump crumbles when drier than the plastic limit.
High	It takes considerable time rolling and kneading to reach the plastic limit. The thread can be rerolled several times after reaching the plastic limit. The lump can be formed without crumbling when drier than the plastic limit.

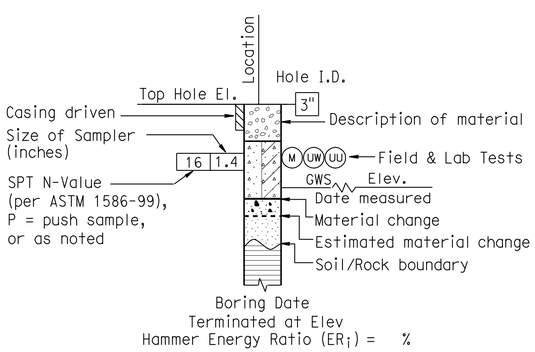

ROTARY BORING

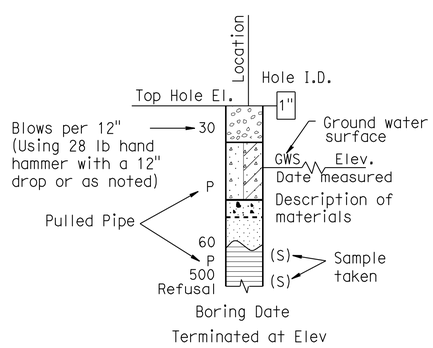

HAND BORING

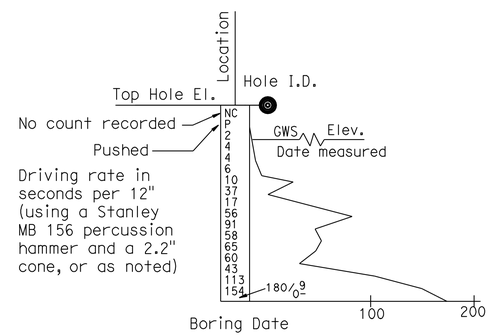

DYNAMIC CONE PENETRATION BORING

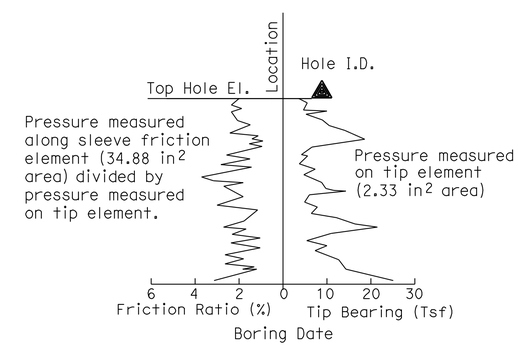

CONE PENETRATION TEST (CPT) SOUNDING

ENGINEERING SERVICES	MATERIALS AND GEOTECHNICAL SERVICES	STATE OF CALIFORNIA DEPARTMENT OF TRANSPORTATION	DIVISION OF ENGINEERING SERVICES STRUCTURE DESIGN DESIGN BRANCH X	BRIDGE NO. 57-0639 POST MILE 9.0	SWEETWATER ROAD UC (WIDEN) LOG OF TEST BORINGS 2 OF 4
	PREPARED BY: W. Tang 11/10				

GS LOTB SOIL LEGEND

ORIGINAL SCALE IN INCHES FOR REDUCED PLANS 0 1 2 3

UNIT: 3643
PROJECT NUMBER & PHASE: 11000200501 CONTRACT NO.: 11-2T1811

DISREGARD PRINTS BEARING EARLIER REVISION DATES

REVISION DATES | SHEET 18 OF 20

FILE => f_57-0639-z-lotb_2of4.dgn

USERNAME => s1244496 DATE PLOTTED => 09-DEC-2011 TIME PLOTTED => 12:40

REFERENCE: CALTRANS SOIL & ROCK LOGGING, CLASSIFICATION, AND PRESENTATION MANUAL (JUNE 2007)

DIST	COUNTY	ROUTE	POST MILES TOTAL PROJECT	SHEET No	TOTAL SHEETS
11	SD	54,805	1.8,5.5/9.4	613	635

REGISTERED CIVIL ENGINEER 8-1-11

12-5-11
PLANS APPROVAL DATE

REGISTERED PROFESSIONAL ENGINEER David T-M Liao No. C59838 Exp. 12-31-11 CIVIL STATE OF CALIFORNIA

The State of California or its officers or agents shall not be responsible for the accuracy or completeness of electronic copies of this plan sheet.

GROUP SYMBOLS AND NAMES

Graphic/Symbol	Group Names	Graphic/Symbol	Group Names
GW	Well-graded GRAVEL Well-graded GRAVEL with SAND	CL	Lean CLAY Lean CLAY with SAND Lean CLAY with GRAVEL SANDY lean CLAY SANDY lean CLAY with GRAVEL GRAVELLY lean CLAY GRAVELLY lean CLAY with SAND
GP	Poorly graded GRAVEL Poorly graded GRAVEL with SAND		
GW-GM	Well-graded GRAVEL with SILT Well-graded GRAVEL with SILT and SAND	CL-ML	SILTY CLAY SILTY CLAY with SAND SILTY CLAY with GRAVEL SANDY SILTY CLAY SANDY SILTY CLAY with GRAVEL GRAVELLY SILTY CLAY GRAVELLY SILTY CLAY with SAND
GW-GC	Well-graded GRAVEL with CLAY (or SILTY CLAY) Well-graded GRAVEL with CLAY and SAND (or SILTY CLAY and SAND)		
GP-GM	Poorly graded GRAVEL with SILT Poorly graded GRAVEL with SILT and SAND	ML	SILT SILT with SAND SILT with GRAVEL SANDY SILT SANDY SILT with GRAVEL GRAVELLY SILT GRAVELLY SILT with SAND
GP-GC	Poorly graded GRAVEL with CLAY (or SILTY CLAY) Poorly graded GRAVEL with CLAY and SAND (or SILTY CLAY and SAND)		
GM	SILTY GRAVEL SILTY GRAVEL with SAND	OL	ORGANIC lean CLAY ORGANIC lean CLAY with SAND ORGANIC lean CLAY with GRAVEL SANDY ORGANIC lean CLAY SANDY ORGANIC lean CLAY with GRAVEL GRAVELLY ORGANIC lean CLAY GRAVELLY ORGANIC lean CLAY with SAND
GC	CLAYEY GRAVEL CLAYEY GRAVEL with SAND		
GC-GM	SILTY, CLAYEY GRAVEL SILTY, CLAYEY GRAVEL with SAND	OL	ORGANIC SILT ORGANIC SILT with SAND ORGANIC SILT with GRAVEL SANDY ORGANIC SILT SANDY ORGANIC SILT with GRAVEL GRAVELLY ORGANIC SILT GRAVELLY ORGANIC SILT with SAND
SW	Well-graded SAND Well-graded SAND with GRAVEL		
SP	Poorly graded SAND Poorly graded SAND with GRAVEL	CH	Fat CLAY Fat CLAY with SAND Fat CLAY with GRAVEL SANDY fat CLAY SANDY fat CLAY with GRAVEL GRAVELLY fat CLAY GRAVELLY fat CLAY with SAND
SW-SM	Well-graded SAND with SILT Well-graded SAND with SILT and GRAVEL		
SW-SC	Well-graded SAND with CLAY (or SILTY CLAY) Well-graded SAND with CLAY and GRAVEL (or SILTY CLAY and GRAVEL)	MH	Elastic SILT Elastic SILT with SAND Elastic SILT with GRAVEL SANDY elastic SILT SANDY elastic SILT with GRAVEL GRAVELLY elastic SILT GRAVELLY elastic SILT with SAND
SP-SM	Poorly graded SAND with SILT Poorly graded SAND with SILT and GRAVEL		
SP-SC	Poorly graded SAND with CLAY (or SILTY CLAY) Poorly graded SAND with CLAY and GRAVEL (or SILTY CLAY and GRAVEL)	OH	ORGANIC fat CLAY ORGANIC fat CLAY with SAND ORGANIC fat CLAY with GRAVEL SANDY ORGANIC fat CLAY SANDY ORGANIC fat CLAY with GRAVEL GRAVELLY ORGANIC fat CLAY GRAVELLY ORGANIC fat CLAY with SAND
SM	SILTY SAND SILTY SAND with GRAVEL		
SC	CLAYEY SAND CLAYEY SAND with GRAVEL	OH	ORGANIC elastic SILT ORGANIC elastic SILT with SAND ORGANIC elastic SILT with GRAVEL SANDY ORGANIC elastic SILT SANDY ORGANIC elastic SILT with GRAVEL GRAVELLY ORGANIC elastic SILT GRAVELLY ORGANIC elastic SILT with SAND
SC-SM	SILTY, CLAYEY SAND SILTY, CLAYEY SAND with GRAVEL		
PT	PEAT	OL/OH	ORGANIC SOIL ORGANIC SOIL with SAND ORGANIC SOIL with GRAVEL SANDY ORGANIC SOIL SANDY ORGANIC SOIL with GRAVEL GRAVELLY ORGANIC SOIL GRAVELLY ORGANIC SOIL with SAND
	COBBLES COBBLES and BOULDERS BOULDERS		

FIELD AND LABORATORY TESTING

- (C) Consolidation (ASTM D 2435)
- (CL) Collapse Potential (ASTM D 5333)
- (CP) Compaction Curve (CTM 216)
- (CR) Corrosivity Testing (CTM 643, CTM 422, CTM 417)
- (CU) Consolidated Undrained Triaxial (ASTM D 4767)
- (DS) Direct Shear (ASTM D 3080)
- (EI) Expansion Index (ASTM D 4829)
- (M) Moisture Content (ASTM D 2216)
- (OC) Organic Content-% (ASTM D 2974)
- (P) Permeability (CTM 220)
- (PA) Particle Size Analysis (ASTM D 422)
- (PI) Plasticity Index (AASHTO T 90) Liquid Limit (AASHTO T 89)
- (PL) Point Load Index (ASTM D 5731)
- (PM) Pressure Meter
- (PP) Pocket Penetrometer
- (R) R-Value (CTM 301)
- (SE) Sand Equivalent (CTM 217)
- (SG) Specific Gravity (AASHTO T 100)
- (SL) Shrinkage Limit (ASTM D 427)
- (SW) Swell Potential (ASTM D 4546)
- (TV) Pocket Torvane
- (UC) Unconfined Compression-Soil (ASTM D 2166) Unconfined Compression-Rock (ASTM D 2938)
- (UU) Unconsolidated Undrained Triaxial (ASTM D 2850)
- (UW) Unit Weight (ASTM D 4767)
- (VS) Vane Shear (AASHTO T 223)

APPARENT DENSITY OF COHESIONLESS SOILS

Description	SPT N_{60} (Blows / 12 inches)
Very loose	0 - 4
Loose	5 - 10
Medium Dense	11 - 30
Dense	31 - 50
Very Dense	> 50

MOISTURE

Description	Criteria
Dry	Absence of moisture, dusty, dry to the touch
Moist	Damp but no visible water
Wet	Visible free water, usually soil is below water table

PERCENT OR PROPORTION OF SOILS

Description	Criteria
Trace	Particles are present but estimated to be less than 5%
Few	5 to 10%
Little	15 to 25%
Some	30 to 45%
Mostly	50 to 100%

PARTICLE SIZE

Description		Size
Boulder		> 12"
Cobble		3" to 12"
Gravel	Coarse	3/4" to 3"
	Fine	No. 4 to 3/4"
Sand	Coarse	No. 10 to No. 4
	Medium	No. 40 to No. 10
	Fine	No. 200 to No. 40

ENGINEERING SERVICES

MATERIALS AND GEOTECHNICAL SERVICES

PREPARED BY: W. Tang 11/10

STATE OF CALIFORNIA DEPARTMENT OF TRANSPORTATION

DIVISION OF ENGINEERING SERVICES STRUCTURE DESIGN DESIGN BRANCH X

BRIDGE NO. 57-0639
POST MILE 9.0

SWEETWATER ROAD UC (WIDEN)

LOG OF TEST BORINGS 3 OF 4

GS LOTB SOIL LEGEND

ORIGINAL SCALE IN INCHES FOR REDUCED PLANS 0 1 2 3

UNIT: 3643
PROJECT NUMBER & PHASE: 11000200501
CONTRACT NO.: 11-2T1811

DISREGARD PRINTS BEARING EARLIER REVISION DATES

REVISION DATES

SHEET 19 OF 20

FILE => f_57-0639-z-lotb_3of4.dgn

USERNAME => s124496 DATE PLOTTED => 09-DEC-2011 TIME PLOTTED => 12:40

DIST.	COUNTY	ROUTE	POST MILES-TOTAL PROJECT	SHEET NO.	TOTAL SHEETS
11	SD	805,54	8.9/12.2,1.8/5.5	207	895

November 8, 1971

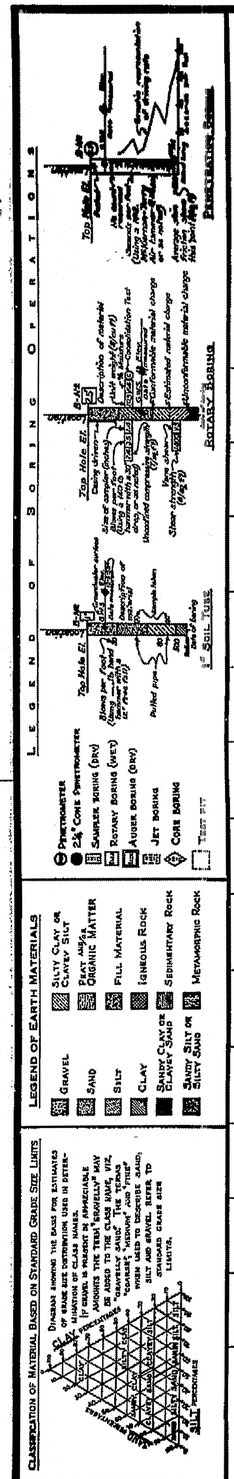

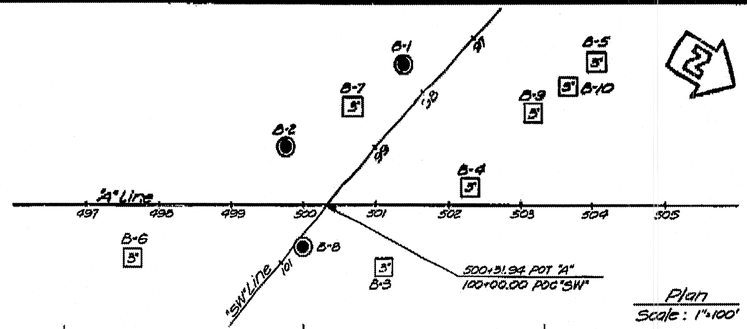

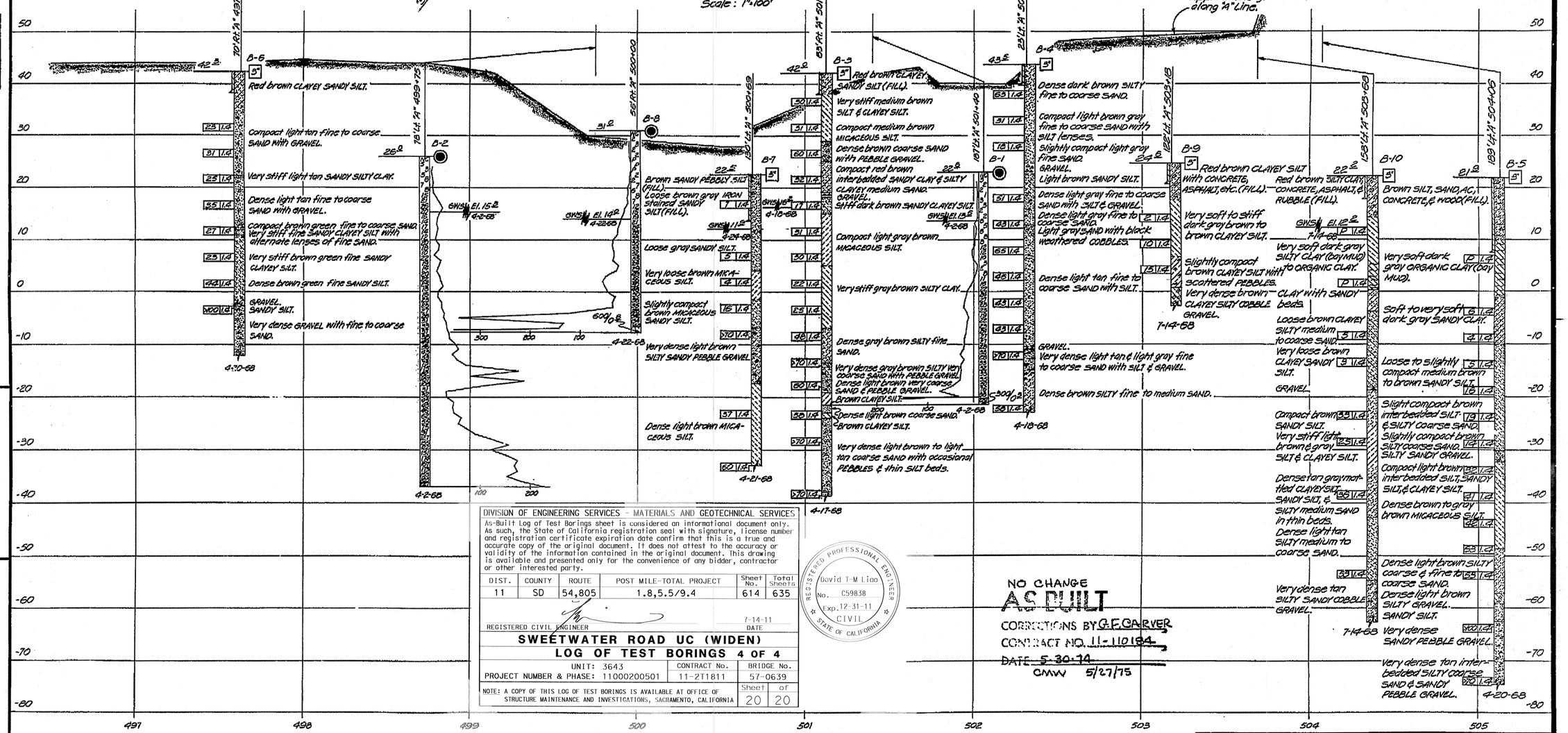

DIVISION OF ENGINEERING SERVICES - MATERIALS AND GEOTECHNICAL SERVICES

As-Built Log of Test Borings sheet is considered an informational document only. As such, the State of California registration seal with signature, license number and registration certificate expiration date confirm that this is a true and accurate copy of the original document. It does not attest to the accuracy or validity of the information contained in the original document. This drawing is available and presented only for the convenience of any bidder, contractor or other interested party.

DIST.	COUNTY	ROUTE	POST MILE-TOTAL PROJECT	Sheet No.	Total Sheets
11	SD	54,805	1.8,5.5/9.4	614	635

REGISTERED CIVIL ENGINEER — DATE 7-14-11

REGISTERED PROFESSIONAL ENGINEER — David T-M Liao — No. C59838 — Exp. 12-31-11 — CIVIL — STATE OF CALIFORNIA

SWEETWATER ROAD UC (WIDEN)

LOG OF TEST BORINGS 4 OF 4

UNIT: 3643	CONTRACT No.	BRIDGE No.
PROJECT NUMBER & PHASE: 11000200501	11-2T1811	57-0639

NOTE: A COPY OF THIS LOG OF TEST BORINGS IS AVAILABLE AT OFFICE OF STRUCTURE MAINTENANCE AND INVESTIGATIONS, SACRAMENTO, CALIFORNIA — Sheet 20 of 20

TO ACCOMPANY PLANS DATED 12-5-11

NO CHANGE
AS BUILT
CORRECTIONS BY G.E. CARVER
CONTRACT NO. 11-110184
DATE 5-30-74
CMW 5/27/75

AS BUILT PLANS
Contract No. 11-110184
Date Completed 4-30-75
Document No. A000 6264

Revised 7-24-68 by R. Wong. Added B-9 & B-10

STATE OF CALIFORNIA
TRANSPORTATION AGENCY
DEPARTMENT OF PUBLIC WORKS
DIVISION OF HIGHWAYS

SWEETWATER ROAD UNDERCROSSING

LOG OF TEST BORINGS

BRIDGE NO.	POST MILE	DRAWING NO.	SHEET	OF
57-639 R/L	8.07	57639-6	10	10

WO 110181
CU 11201
PR 57639-2

Disregard prior bearing earlier revision dates

REVISION DATES (PRELIMINARY STAGE ONLY)

FILENAME => f_57-0639-z_lotb_4of4.tif

DIST	COUNTY	ROUTE	POST MILES TOTAL PROJECT	SHEET No.	TOTAL SHEETS
11	SD	54,805	1.8,5.5/9.4	615	635

Tony Skreslet 8-25-11
REGISTERED CIVIL ENGINEER DATE

12-5-11
PLANS APPROVAL DATE

REGISTERED PROFESSIONAL ENGINEER TONY SKRESLET No. C50676 Exp. 09-30-11 CIVIL STATE OF CALIFORNIA

The State of California or its officers or agents shall not be responsible for the accuracy or completeness of electronic copies of this plan sheet.

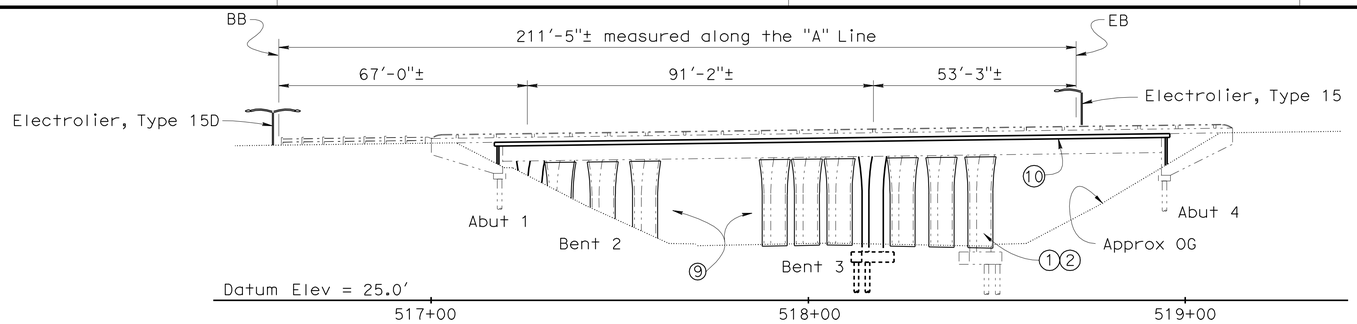

ELEVATION

1" = 20'

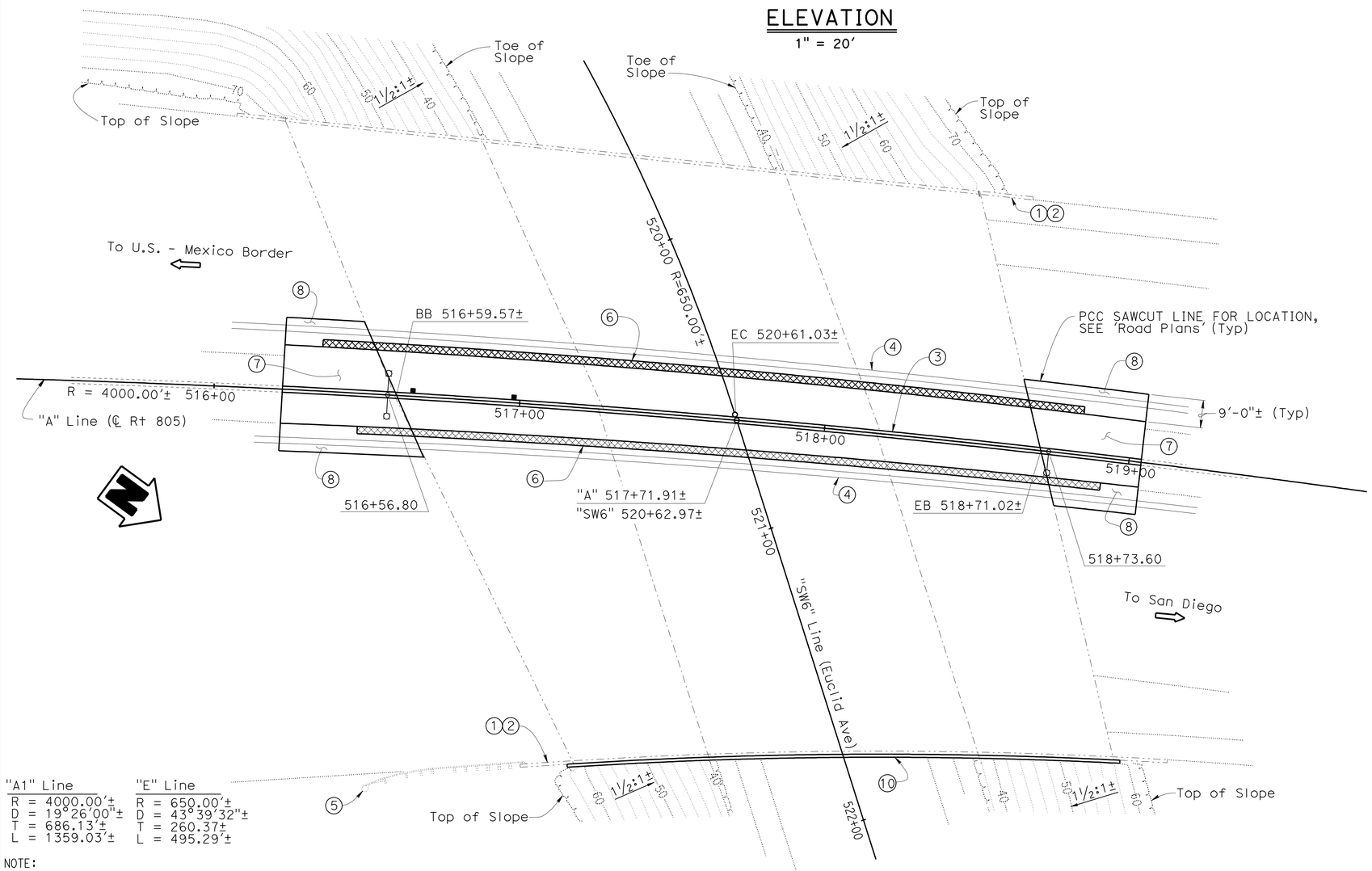

"A1" Line	"E" Line
R = 4000.00'±	R = 650.00'±
D = 19°26'00"±	D = 43°39'32"±
T = 686.13'±	T = 260.37'±
L = 1359.03'±	L = 495.29'±

NOTE:
THE CONTRACTOR SHALL VERIFY ALL CONTROLLING FIELD DIMENSIONS BEFORE ORDERING OR FABRICATING ANY MATERIAL.

PLAN

1" = 20'

QUANTITIES

BRIDGE REMOVAL (PORTION), LOCATION G	LUMP	SUM
STRUCTURE EXCAVATION (BRIDGE)	302	CY
STRUCTURE BACKFILL (BRIDGE)	223	CY
AGGREGATE BASE (APPROACH SLAB)	5	CY
FURNISH STEEL PILING (HP 14 X 89)	1,760	LF
DRIVE STEEL PILE (HP 14 X 89)	44	EA
24" CAST-IN-DRILLED-HOLE CONCRETE PILING	400	LF
PRESTRESSING CAST-IN-PLACE CONCRETE	LUMP	SUM
STRUCTURAL CONCRETE, BRIDGE FOOTING	94	CY
STRUCTURAL CONCRETE, BRIDGE	498	CY
STRUCTURAL CONCRETE, APPROACH SLAB (TYPE N)	54	CY
STRUCTURAL CONCRETE, APPROACH SLAB (TYPE R)	47	CY
PAVING NOTCH EXTENSION	27	CF
DRILL AND BOND DOWEL	16	LF
JOINT SEAL (MR 1½")	62	LF
BAR REINFORCING STEEL (BRIDGE)	149,705	LB
BAR REINFORCING STEEL (EPOXY COATED) (BRIDGE)	3,204	LB
COLUMN CASING	140,768	LB
BRIDGE DECK DRAINAGE SYSTEM	5,809	LB
CONCRETE BARRIER (TYPE 60GA MODIFIED)	282	LF

NOTES:

1. Paint "Br. No 57-0640"
2. Paint "Euclid Avenue UC"
3. Concrete Barrier Type 60GA Modified
4. Temporary Railing (Type K), see "Road Plans"
5. Exist. Metal Beam Guard Rail to be salvaged
6. Remove existing Barrier Rail, Overhang and Wingwall.
7. Structure Approach Type N(30D), transverse width to match widening
8. Structure Approach Type R (30D), transverse width from widening to roadway sawcut line, see "Road Plans"
9. Retrofit Existing Columns with Steel Column Casings
10. Galvanized Steel Edge Drain

Legends:

- Indicates Existing Structure
- Indicates new Construction
- Indicates remove Overhang, Concrete Barrier type 9, & top 3' of Wingwalls
- Indicates Point of Minimum Vertical Clearance
- Indicates direction of traffic
- Indicates Electrolier Type 15D, tot. 1
- Indicates Electrolier Type 15, tot. 1
- Indicates Deck Drain Type D-2 Modified, tot. 2

Douglas J. Wunnel
DESIGN ENGINEER

	BY	CHECKED
DESIGN	V. Ramakrishnan	J. Lane
DETAILS	D.W.Radley	J. Lane
QUANTITIES	V. Ramakrishnan	J. Lane

LOAD & RESISTANCE FACTOR DESIGN — LIVE LOADING: HL93 W/"LOW-BOY"; PERMIT DESIGN VEHICLE

	BY	CHECKED
LAYOUT	V. Ramakrishnan	J. Lane
SPECIFICATIONS	R. Franti	PLANS AND SPECS COMPARED X

ORIGINAL SCALE IN INCHES FOR REDUCED PLANS 0 1 2 3

STATE OF CALIFORNIA
DEPARTMENT OF TRANSPORTATION

DIVISION OF ENGINEERING SERVICES
STRUCTURE DESIGN
DESIGN BRANCH 14

UNIT: 3613
PROJECT NUMBER & PHASE: 11000200501
CONTRACT NO.: 11-2T1811

BRIDGE NO. 57-0640
POST MILE 9.21

EUCLID AVENUE UNDERCROSSING (WIDEN)
GENERAL PLAN NO. 1

DISREGARD PRINTS BEARING EARLIER REVISION DATES

REVISION DATES: 10-7-11 | 09-15-11 | 09-16-11

SHEET 1 OF 21

STRUCTURES DESIGN GENERAL PLAN SHEET (ENGLISH) (REV.09-01-10)

FILE => g_57-0640-a-gp01.dgn

USERNAME => s124496 DATE PLOTTED => 09-DEC-2011 TIME PLOTTED => 13:20

DIST	COUNTY	ROUTE	POST MILES TOTAL PROJECT	SHEET No.	TOTAL SHEETS
11	SD	54,805	1.8,5.5/9.4	616	635

Tony Skreslet 8-25-11
REGISTERED CIVIL ENGINEER DATE

12-5-11
PLANS APPROVAL DATE

REGISTERED PROFESSIONAL ENGINEER
TONY SKRESLET
No. C50676
Exp. 09-30-11
CIVIL
STATE OF CALIFORNIA

The State of California or its officers or agents shall not be responsible for the accuracy or completeness of electronic copies of this plan sheet.

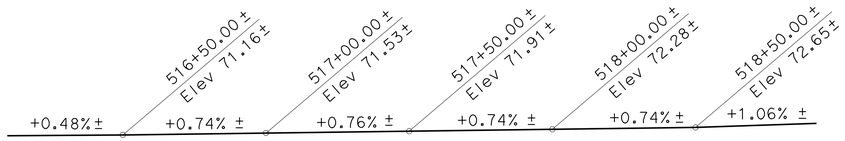

PROFILE GRADE (LEFT)

No Scale

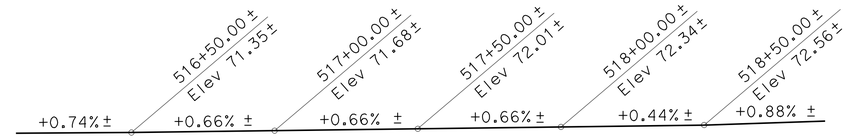

PROFILE GRADE (RIGHT)

No Scale

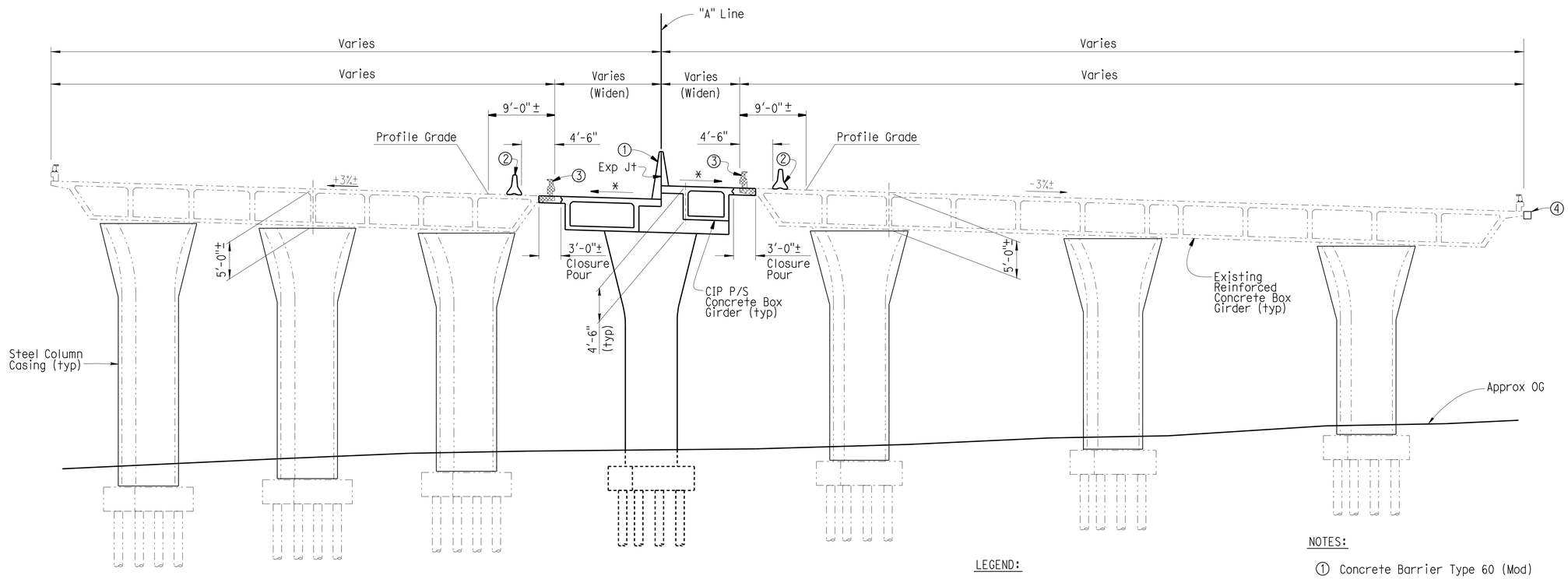

TYPICAL SECTION

1/8" = 1'-0"

NOTE:
THE CONTRACTOR SHALL VERIFY ALL CONTROLLING FIELD DIMENSIONS BEFORE ORDERING OR FABRICATING ANY MATERIAL.

LEGEND:

Indicates Limits of Concrete Removal

* Indicates match existing grade and cross slope

NOTES:

1. Concrete Barrier Type 60 (Mod)
2. Temporary Railing (Type K)
3. Remove existing Barrier Rail (Type 9) and portion of Overhang and Abutment
4. Galvanized Steel Edge Drain

Douglas P. Wancal
DESIGN ENGINEER

	BY	CHECKED
DESIGN	V. Ramakrishnan	J. Lane
DETAILS	D.W. Radley	J. Lane
QUANTITIES	V. Ramakrishnan	J. Lane

LOAD & RESISTANCE FACTOR DESIGN — LIVE LOADING: HL93 W/"LOW-BOY"; PERMIT DESIGN VEHICLE

LAYOUT — BY V. Ramakrishnan — CHECKED J. Lane

SPECIFICATIONS — BY R. Franti — PLANS AND SPECS COMPARED X

ORIGINAL SCALE IN INCHES FOR REDUCED PLANS 0 1 2 3

STATE OF CALIFORNIA
DEPARTMENT OF TRANSPORTATION

DIVISION OF ENGINEERING SERVICES
STRUCTURE DESIGN
DESIGN BRANCH 14

BRIDGE NO. 57-0640
POST MILE 9.21

EUCLID AVENUE UNDERCROSSING (WIDEN)
GENERAL PLAN NO. 2

UNIT: 3613
PROJECT NUMBER & PHASE: 11000200501
CONTRACT NO.: 11-2T1811

DISREGARD PRINTS BEARING EARLIER REVISION DATES

REVISION DATES: 08-15-11 09-13-11 08-30-11 08-22-11

SHEET 2 OF 21

USERNAME => s124196 DATE PLOTTED => 09-DEC-2011 TIME PLOTTED => 13:20

STRUCTURES DESIGN GENERAL PLAN SHEET (ENGLISH) (REV.09-01-10)

FILE => g_57-0640-a-gp02.dgn

DIST	COUNTY	ROUTE	POST MILES TOTAL PROJECT	SHEET No.	TOTAL SHEETS
11	SD	54,805	1.8,5.5/9.4	617	635

Tony Skreslet 8-25-11
REGISTERED CIVIL ENGINEER DATE

12-5-11
PLANS APPROVAL DATE

REGISTERED PROFESSIONAL ENGINEER TONY SKRESLET No. C50676 Exp. 09-30-11 CIVIL STATE OF CALIFORNIA

The State of California or its officers or agents shall not be responsible for the accuracy or completeness of electronic copies of this plan sheet.

GENERAL NOTES
LOAD RESISTANCE FACTOR DESIGN

DESIGN:	AASHTO LRFD Bridge Design Specifications - 4th Edition 2007, including California Amendments dated December 2008 and September 2010
SEISMIC DESIGN:	CALTRANS SEISMIC DESIGN CRITERIA (SDC), Version 1.5 September 2009
DEAD LOAD:	Includes 0.035 ksf for Future Wearing Surface
LIVE LOADING:	HL-93 and Low-Boy and Permit Design Load
SEISMIC LOADING	See 'Site Specific Acceleration Response Spectra'
REINFORCED CONCRETE:	f_y = 60 ksi f'_c = See "Concrete Strength and Type Limits"
PRESTRESSED CONCRETE:	See 'Prestressing Notes' on "GIRDER LAYOUT" sheet
STRUCTURAL STEEL:	f_y = ASTM A709 Grade 50

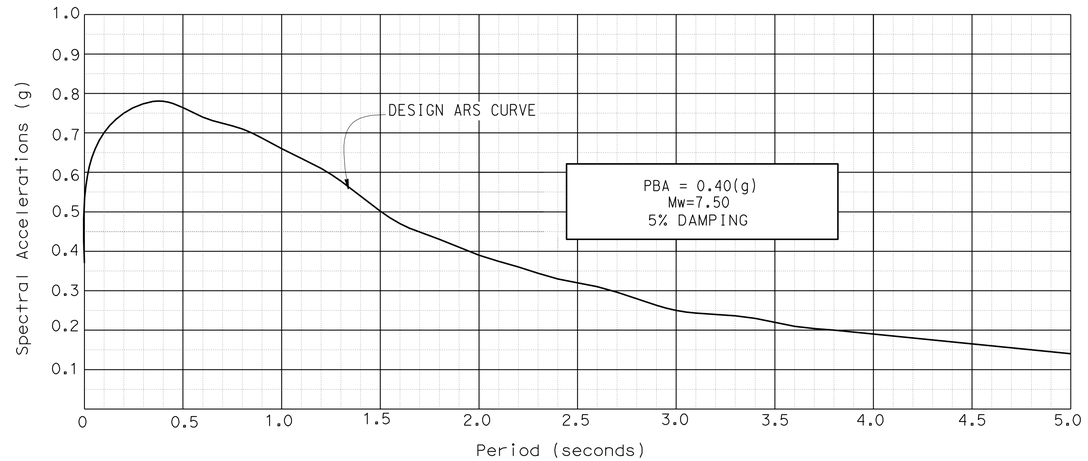

SITE SPECIFIC ACCELERATION RESPONSE SPECTRA

PILE DATA TABLE

LOCATION	PILE TYPE	NOMINAL RESISTANCE (Kips)		DESIGN TIP ELEVATION (Ft)	SPECIFIED TIP ELEVATION (Ft)
		Compression	Tension		
Abutment 1	24" CIDH	240	0	26.0 (a)	26.0
Bent 2	HP 14X89	310	200	-15.0 (a) -6.0 (b)	-15.0
Bent 3	HP 14X89	310	200	-20.0 (a) -14.5 (b)	-20.0
Abutment 4	24" CIDH	300	0	23.0 (a)	23.0

Design Tip controlled by (a) Compression (b) Tension

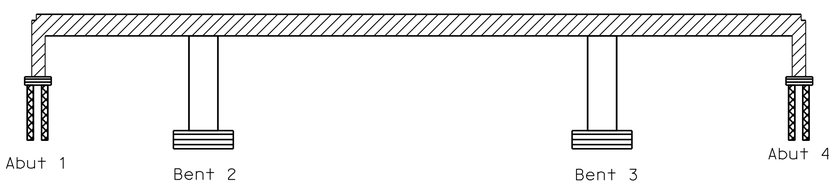

Structural Concrete, Bridge (f'_c = 3.6 ksi @ 28 days)

Structural Concrete, Bridge (f'_c = 5.0 ksi @ 28 days)

Structural Concrete, Bridge Footing (f'_c = 3.6 ksi @ 28 days)

Cast-In-Drilled-Hole Concrete Pile (f'_c = 4.0 ksi @ 28 days)

CONCRETE STRENGTH AND TYPE LIMITS

No Scale

NOTE:
THE CONTRACTOR SHALL VERIFY ALL CONTROLLING FIELD DIMENSIONS BEFORE ORDERING OR FABRICATING ANY MATERIAL.

INDEX TO PLANS

SHEET NO.	TITLE
1	GENERAL PLAN NO. 1
2	GENERAL PLAN NO. 2
3	INDEX TO PLANS
4	FOUNDATION PLAN
5	ABUTMENT LAYOUT
6	BENT LAYOUT
7	BENT DETAILS
8	TYPICAL SECTION
9	GIRDER LAYOUT
10	STEEL COLUMN CASING (SEISMIC RETROFIT)
11	STRUCTURE APPROACH TYPE N (30D)
12	STRUCTURE APPROACH TYPE R (30D)
13	STRUCTURE APPROACH DRAINAGE DETAILS
14	DECK DRAIN-TYPE D-2 MODIFIED
15	MISCELLANEOUS DETAILS NO. 1
16	MISCELLENEOUS DETAILS NO. 2
17	LOG OF TEST BORINGS 1 OF 5
18	LOG OF TEST BORINGS 2 OF 5
19	LOG OF TEST BORINGS 3 OF 5
20	LOG OF TEST BORINGS 4 OF 5
21	LOG OF TEST BORINGS 5 OF 5

STANDARD PLANS DATED MAY 2006

A10A	ABBREVIATIONS
A62C	LIMITS OF PAYMENT FOR EXCAVATION AND BACKFILL BRIDGE
B0-1	BRIDGE DETAILS
B0-3	BRIDGE DETAILS
B0-5	BRIDGE DETAILS
B0-13	BRIDGE DETAILS
B2-3	16" AND 24" CAST-IN-DRILLED-HOLE CONCRETE PILE
B6-21	JOINT SEALS (MAXIMUM MOVEMENT RATING = 2)
B7-1	BOX GIRDER DETAILS
B8-5	CAST-IN-PLACE PRESTRESSED GIRDER DETAILS

STANDARD PLAN SHEET NO.

DETAIL NO.

	BY	CHECKED
DESIGN	V. Ramakrishnan	J. Lane
DETAILS	L. Xiong	J. Lane
QUANTITIES	V. Ramakrishnan	J. Lane

STATE OF CALIFORNIA
DEPARTMENT OF TRANSPORTATION

DIVISION OF ENGINEERING SERVICES
STRUCTURE DESIGN
DESIGN BRANCH 14

BRIDGE NO. 57-0640
POST MILE 9.21

EUCLID AVENUE UNDERCROSSING (WIDEN)

INDEX TO PLANS

STRUCTURES DESIGN DETAIL SHEET (ENGLISH) (REV. 09-01-10)

ORIGINAL SCALE IN INCHES FOR REDUCED PLANS 0 1 2 3

UNIT: 3613
PROJECT NUMBER & PHASE: 11000200501
CONTRACT NO.: 11-2T1811

DISREGARD PRINTS BEARING EARLIER REVISION DATES

REVISION DATES 08-02-11 08-09-11 08-19-11 09-16-11

SHEET 3 OF 21

FILE => g_57-0640-a-itp.dgn

USERNAME => s124496 DATE PLOTTED => 09-DEC-2011 TIME PLOTTED => 13:20

DIST	COUNTY	ROUTE	POST MILES TOTAL PROJECT	SHEET No	TOTAL SHEETS
11	SD	54,805	1.8,5.5/9.4	618	635

Tony Skreslet 08-25-11
REGISTERED CIVIL ENGINEER DATE

12-5-11
PLANS APPROVAL DATE

REGISTERED PROFESSIONAL ENGINEER TONY SKRESLET No. C50676 Exp. 09-30-11 CIVIL STATE OF CALIFORNIA

The State of California or its officers or agents shall not be responsible for the accuracy or completeness of electronic copies of this plan sheet.

CURVE DATA

No.	R	Δ	T	L
Ⓐ	4000.00±	19°28'05"±	686.18±	1359.13±
Ⓑ	650.00±	107°7'44"±	880.49±	1215.33±

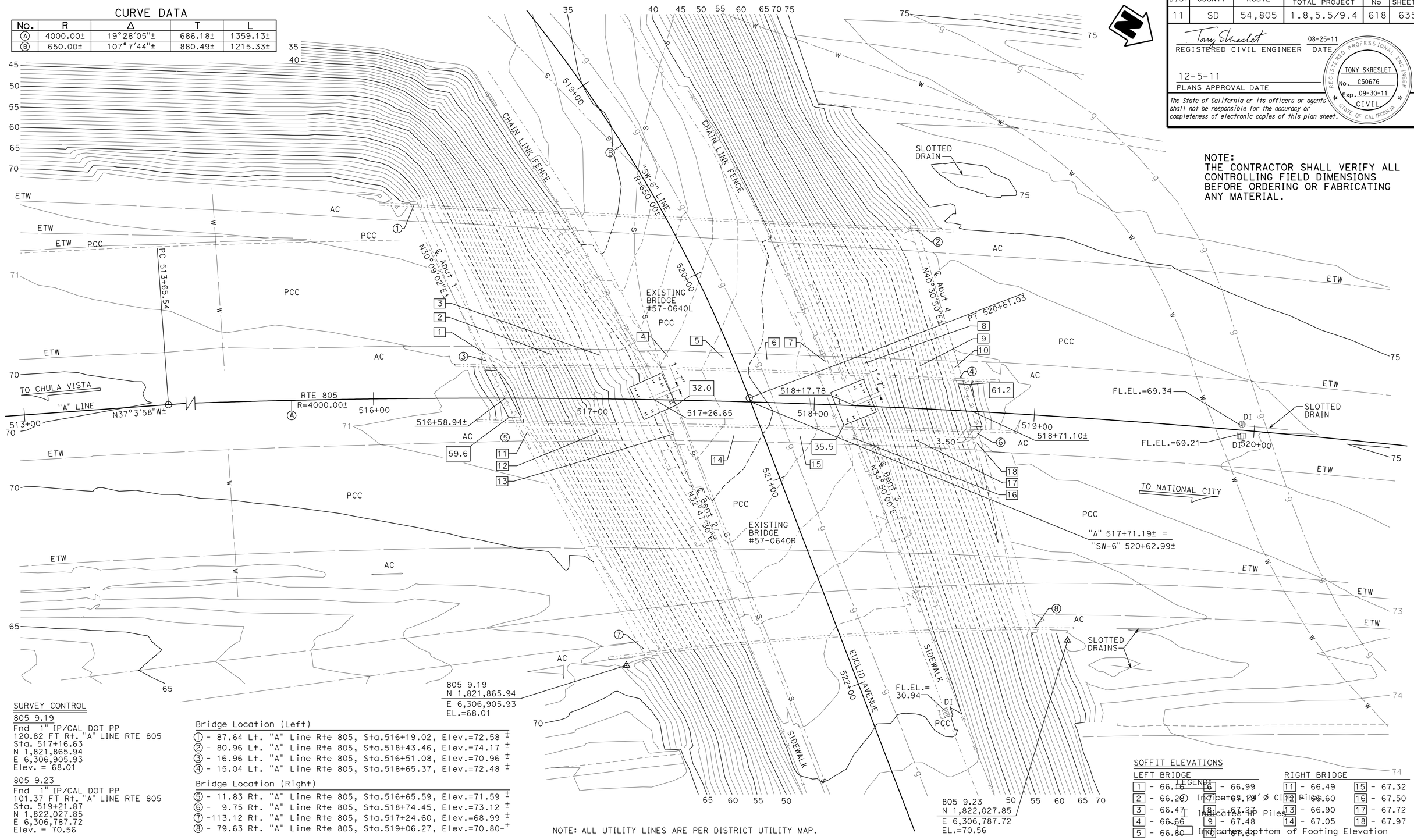

NOTE:
THE CONTRACTOR SHALL VERIFY ALL CONTROLLING FIELD DIMENSIONS BEFORE ORDERING OR FABRICATING ANY MATERIAL.

SURVEY CONTROL

805 9.19
Fnd 1" IP/CAL DOT PP
120.82 FT Rt. "A" LINE RTE 805
Sta. 517+16.63
N 1,821,865.94
E 6,306,905.93
Elev. = 68.01

805 9.23
Fnd 1" IP/CAL DOT PP
101.37 FT Rt. "A" LINE RTE 805
Sta. 519+21.87
N 1,822,027.85
E 6,306,787.72
Elev. = 70.56

Bridge Location (Left)

① - 87.64 Lt. "A" Line Rte 805, Sta.516+19.02, Elev.=72.58 ±
② - 80.96 Lt. "A" Line Rte 805, Sta.518+43.46, Elev.=74.17 ±
③ - 16.96 Lt. "A" Line Rte 805, Sta.516+51.08, Elev.=70.96 ±
④ - 15.04 Lt. "A" Line Rte 805, Sta.518+65.37, Elev.=72.48 ±

Bridge Location (Right)

⑤ - 11.83 Rt. "A" Line Rte 805, Sta.516+65.59, Elev.=71.59 ±
⑥ - 9.75 Rt. "A" Line Rte 805, Sta.518+74.45, Elev.=73.12 ±
⑦ -113.12 Rt. "A" Line Rte 805, Sta.517+24.60, Elev.=68.99 ±
⑧ - 79.63 Rt. "A" Line Rte 805, Sta.519+06.27, Elev.=70.80 ±

NOTE: ALL UTILITY LINES ARE PER DISTRICT UTILITY MAP.

SOFFIT ELEVATIONS

LEFT BRIDGE		RIGHT BRIDGE	
1 - 66.16	6 - 66.99	11 - 66.49	15 - 67.32
2 - 66.26	7 - 67.24	12 - 66.60	16 - 67.50
3 - 66.47	8 - 67.27	13 - 66.90	17 - 67.72
4 - 66.66	9 - 67.48	14 - 67.05	18 - 67.97
5 - 66.80	10 - 67.60		

LEGEND:
Indicates 24" ø CIDH Piles
Indicates HP Piles
Indicates bottom of Footing Elevation

PRELIMINARY INVESTIGATION SECTION

SCALE	VERT.DATUM NAVD88	PHOTOGRAMMETRY AS OF: X			
1"=20'	HORZ.DATUM NAD83 (2007)	SURVEYED	BY District	CHECKED	BY J.Pallares 09/2010
ALIGNMENT TIES Dist. Traverse Sheet		DRAFTED	BY T.Zolnikov 09/2010	CHECKED	BY T.Schmalz 09/2010

STRUCTURES FOUNDATION PLAN SHEET (ENGLISH) (REV. 10/25/05)

	BY	CHECKED
DESIGN	V. Ramakrishnan	J. Lane
DETAILS	L. Xiong	J. Lane
QUANTITIES	V. Ramakrishnan	J. Lane

ORIGINAL SCALE IN INCHES FOR REDUCED PLANS 0 1 2 3

STATE OF CALIFORNIA
DEPARTMENT OF TRANSPORTATION

DIVISION OF ENGINEERING SERVICES
STRUCTURE DESIGN
DESIGN BRANCH 14

CU 3613
PN&Phase 11000200501

BRIDGE NO. 57-0640
POST MILE 9.21

DISREGARD PRINTS BEARING EARLIER REVISION DATES

EUCLID AVENUE UNDERCROSSING (WIDEN)
FOUNDATION PLAN

REVISION DATES: 09-13-11 09-16-11 10-05-11 10-20-11 10-21-11 04-19-11 04-22-11 06-14-11 06-16-11 07-07-11

SHEET 4 OF 21

FILE => g_57-0640-b-fp.dgn

USERNAME => s121614 DATE PLOTTED => 12-DEC-2011 TIME PLOTTED => 07:43

DIST	COUNTY	ROUTE	POST MILES TOTAL PROJECT	SHEET No.	TOTAL SHEETS
11	SD	54,805	1.8,5.5/9.4	619	635

Tony Skreslet 8-25-11
REGISTERED CIVIL ENGINEER DATE

12-5-11
PLANS APPROVAL DATE

REGISTERED PROFESSIONAL ENGINEER TONY SKRESLET No. C50676 Exp. 09-30-11 CIVIL STATE OF CALIFORNIA

The State of California or its officers or agents shall not be responsible for the accuracy or completeness of electronic copies of this plan sheet.

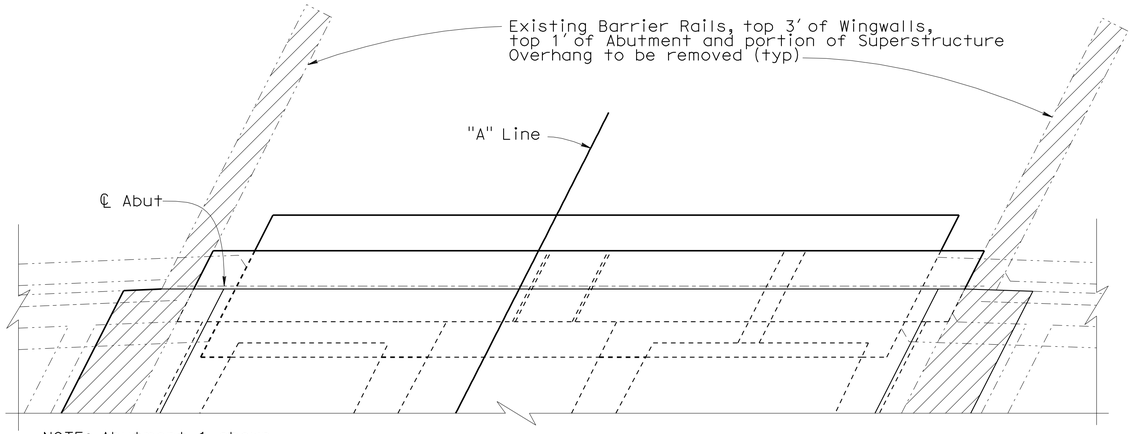

NOTE: Abutment 1 shown

PLAN

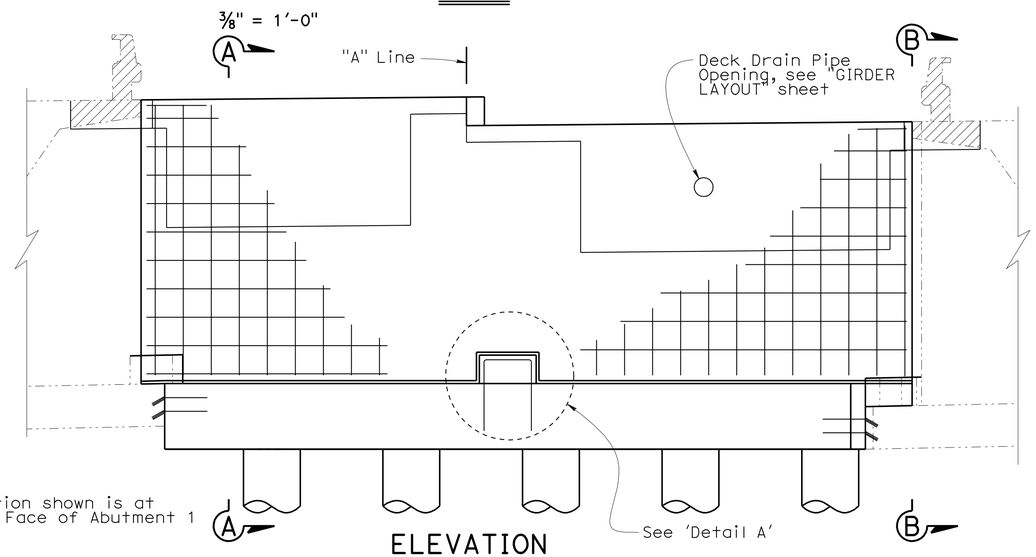

NOTE:
Elevation shown is at front Face of Abutment 1

ELEVATION
3/8" = 1'-0"

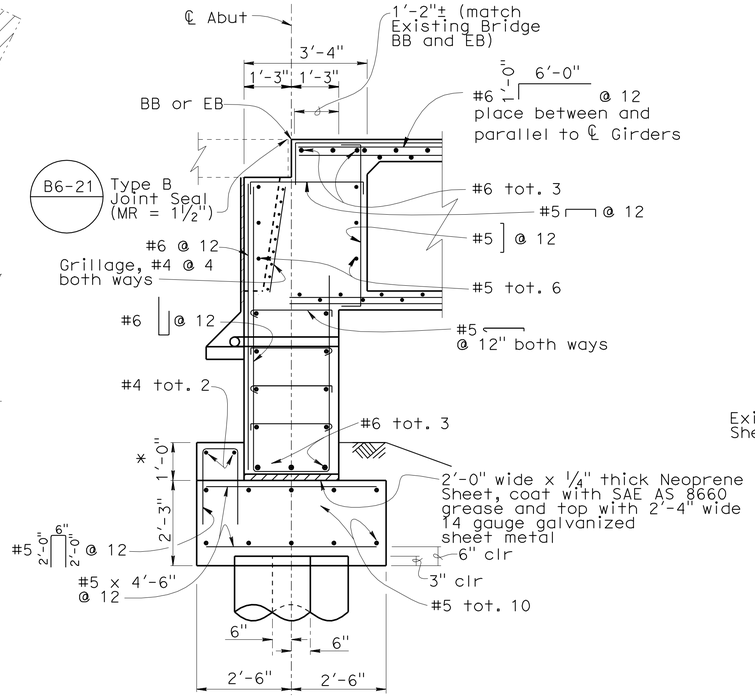

* Shear Key to be poured after Superstructure is Prestressed

SECTION A-A
B8-5
1/2" = 1'-0"

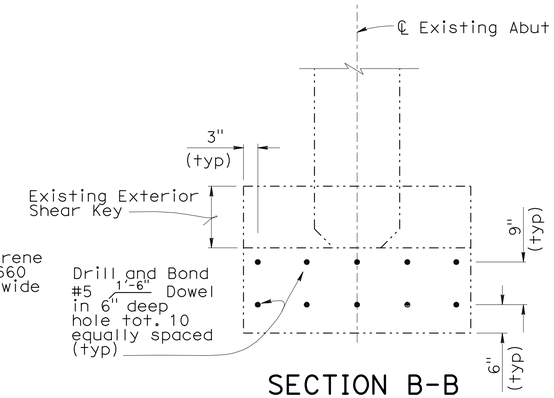

SECTION B-B
No Scale

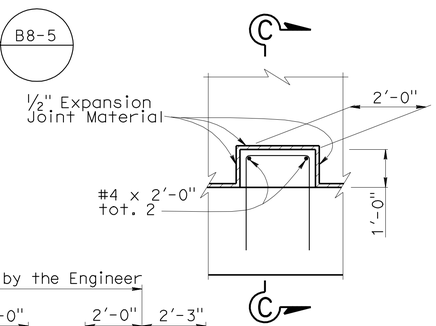

DETAIL A
1/2" = 1'-0"

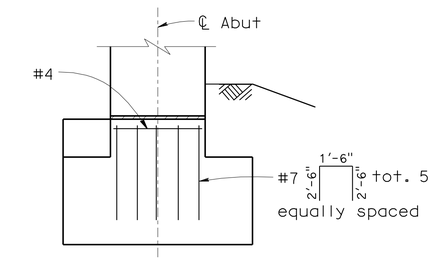

NOTE:
Reinforcement shown is in addition to that shown on 'Section A-A'.

SECTION C-C
1/2" = 1'-0"

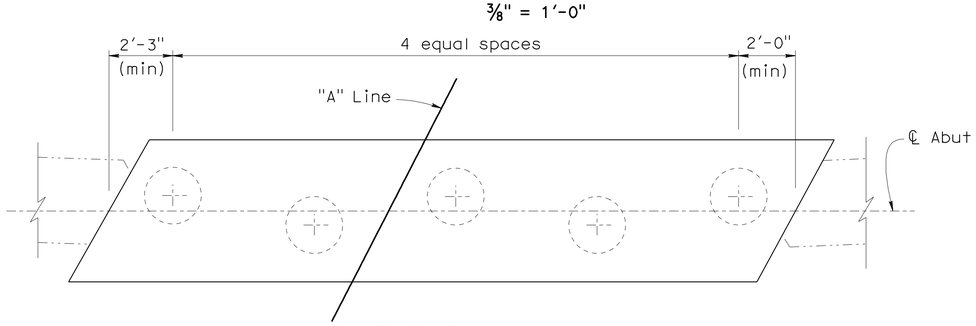

ABUTMENT 1

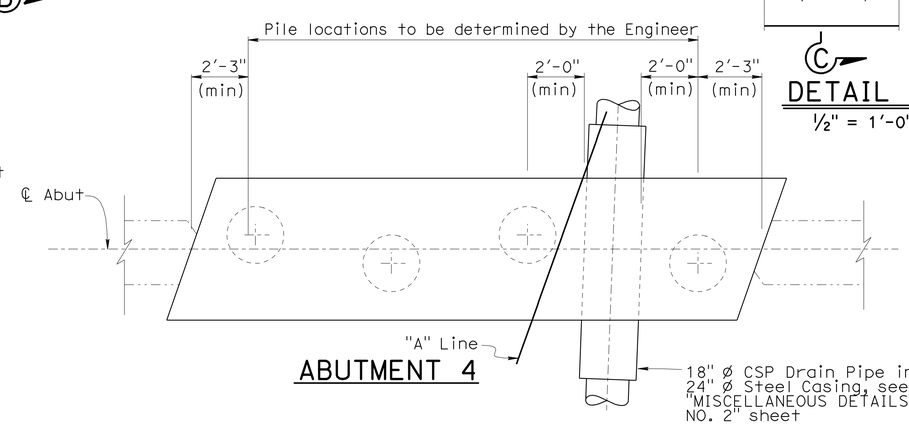

ABUTMENT 4

FOOTING PLAN
3/8" = 1'-0"

NOTE: New Approach Slabs and Barrier Rail not shown.

LEGEND:

Indicates 24" ø CIDH Piles

Indicates portion of Existing Abutment and Superstructure to be removed

NOTE:
THE CONTRACTOR SHALL VERIFY ALL CONTROLLING FIELD DIMENSIONS BEFORE ORDERING OR FABRICATING ANY MATERIAL.

	BY	CHECKED
DESIGN	J. Lane	V. Ramakrishnan
DETAILS	L. Xiong/C. Paclibar	V. Ramakrishnan
QUANTITIES	V. Ramakrishnan	J. Lane

STATE OF CALIFORNIA
DEPARTMENT OF TRANSPORTATION

DIVISION OF ENGINEERING SERVICES
STRUCTURE DESIGN
DESIGN BRANCH 14

BRIDGE NO. 57-0640
POST MILE 9.21

EUCLID AVENUE UNDERCROSSING (WIDEN)
ABUTMENT LAYOUT

STRUCTURES DESIGN DETAIL SHEET (ENGLISH) (REV. 09-01-10)

ORIGINAL SCALE IN INCHES FOR REDUCED PLANS 0 1 2 3

UNIT: 3613
PROJECT NUMBER & PHASE: 11000200501
CONTRACT NO.: 11-2T1811

DISREGARD PRINTS BEARING EARLIER REVISION DATES

REVISION DATES: 09-14-11 09-19-11 09-25-11 10-20-11

SHEET 5 OF 21

FILE => g_57-0640-c-abutlo.dgn

USERNAME => s124496 DATE PLOTTED => 09-DEC-2011 TIME PLOTTED => 13:20

DIST	COUNTY	ROUTE	POST MILES TOTAL PROJECT	SHEET No.	TOTAL SHEETS
11	SD	54,805	1.8,5.5/9.4	620	635

Tony Skreslet 8-25-11
REGISTERED CIVIL ENGINEER DATE

12-5-11
PLANS APPROVAL DATE

REGISTERED PROFESSIONAL ENGINEER TONY SKRESLET No. C50676 Exp. 09-30-11 CIVIL STATE OF CALIFORNIA

The State of California or its officers or agents shall not be responsible for the accuracy or completeness of electronic copies of this plan sheet.

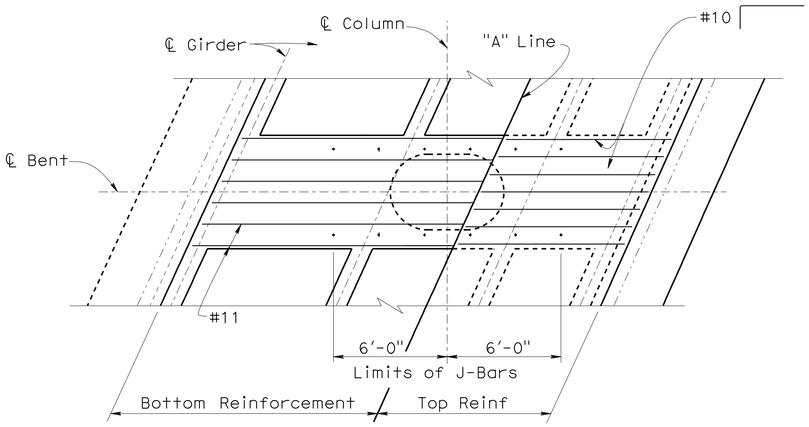

PLAN
1/4" = 1'

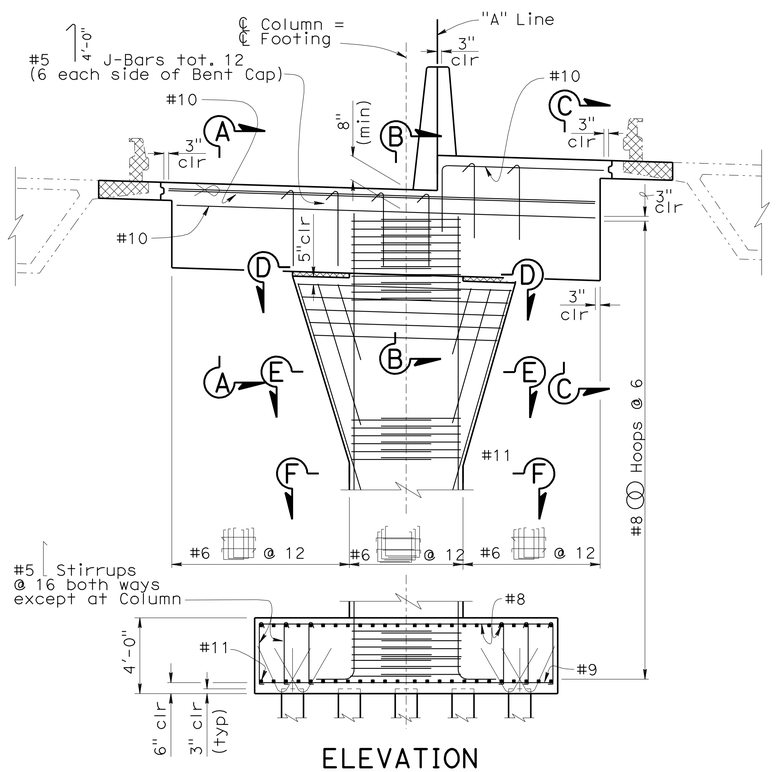

ELEVATION
1/4" = 1'

NOTE:
THE CONTRACTOR SHALL VERIFY ALL CONTROLLING FIELD DIMENSIONS BEFORE ORDERING OR FABRICATING ANY MATERIAL.

NOTE:

For 'Section A-A' thru 'Section E-E', see "BENT DETAILS" sheet

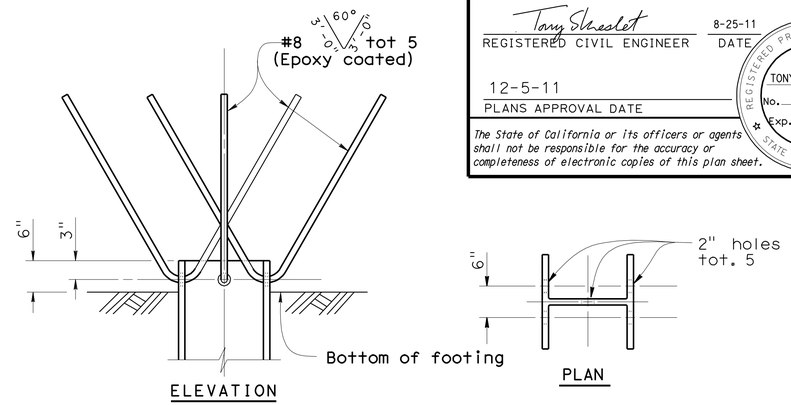

STEEL PILE ANCHOR
No Scale

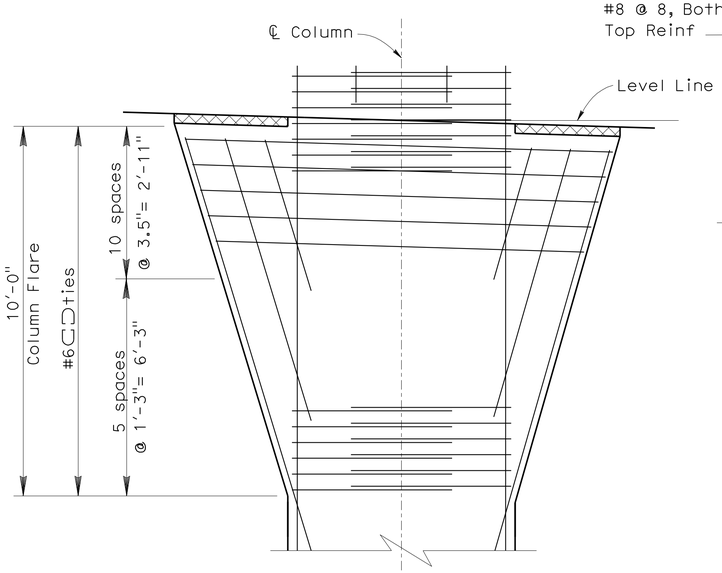

COLUMN FLARE DETAIL
1/2" = 1'-0"

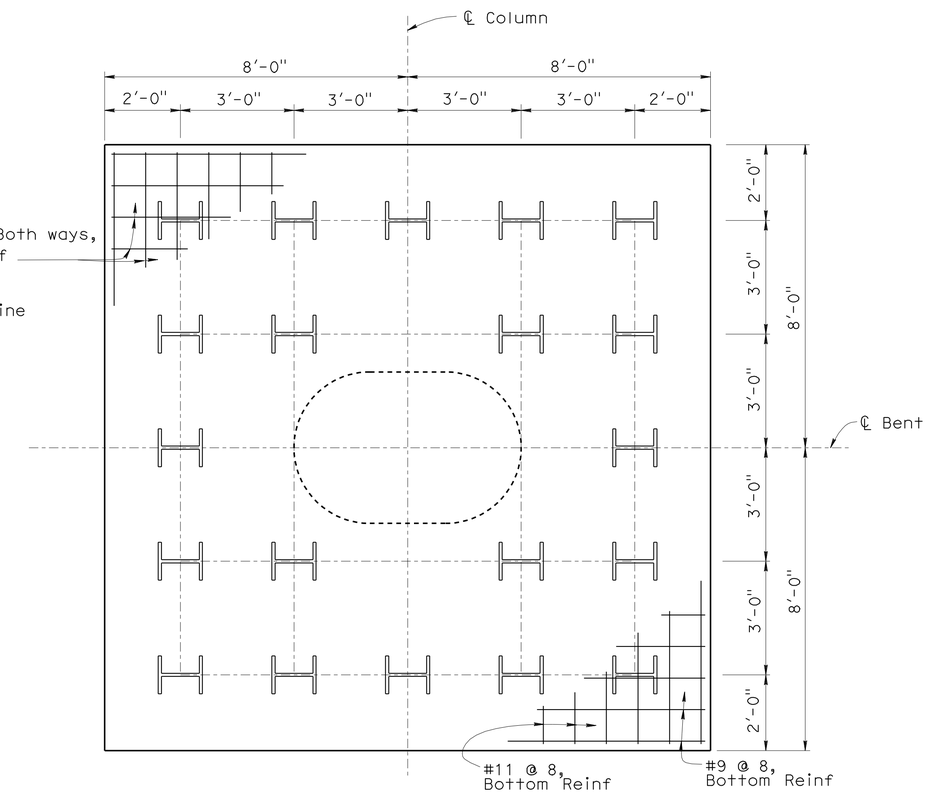

FOOTING PLAN
1/2" = 1'

	BY	CHECKED
DESIGN	V. Ramakrishnan	J. Lane
DETAILS	L. Xiong / W. Zhang	J. Lane
QUANTITIES	V. Ramakrishnan	J. Lane

STATE OF CALIFORNIA
DEPARTMENT OF TRANSPORTATION

DIVISION OF ENGINEERING SERVICES
STRUCTURE DESIGN
DESIGN BRANCH 14

BRIDGE NO. 57-0640
POST MILE 9.21

EUCLID AVENUE UNDERCROSSING (WIDEN)
BENT LAYOUT

STRUCTURES DESIGN DETAIL SHEET (ENGLISH) (REV. 09-01-10)

ORIGINAL SCALE IN INCHES FOR REDUCED PLANS 0 1 2 3

UNIT: 3613
PROJECT NUMBER & PHASE: 11000200501
CONTRACT NO.: 11-2T1811

DISREGARD PRINTS BEARING EARLIER REVISION DATES

REVISION DATES: 04-26-11 06-10-11 6-16-11 06-17-11

SHEET 6 OF 21

FILE => g_57-0640-c-bent_lo.dgn

USERNAME => s124496 DATE PLOTTED => 09-DEC-2011 TIME PLOTTED => 13:21

DIST	COUNTY	ROUTE	POST MILES TOTAL PROJECT	SHEET No.	TOTAL SHEETS
11	SD	54,805	1.8,5.5/9.4	621	635

Tony Skreslet 8-25-11
REGISTERED CIVIL ENGINEER DATE

12-5-11
PLANS APPROVAL DATE

REGISTERED PROFESSIONAL ENGINEER TONY SKRESLET No. C50676 Exp. 09-30-11 CIVIL STATE OF CALIFORNIA

The State of California or its officers or agents shall not be responsible for the accuracy or completeness of electronic copies of this plan sheet.

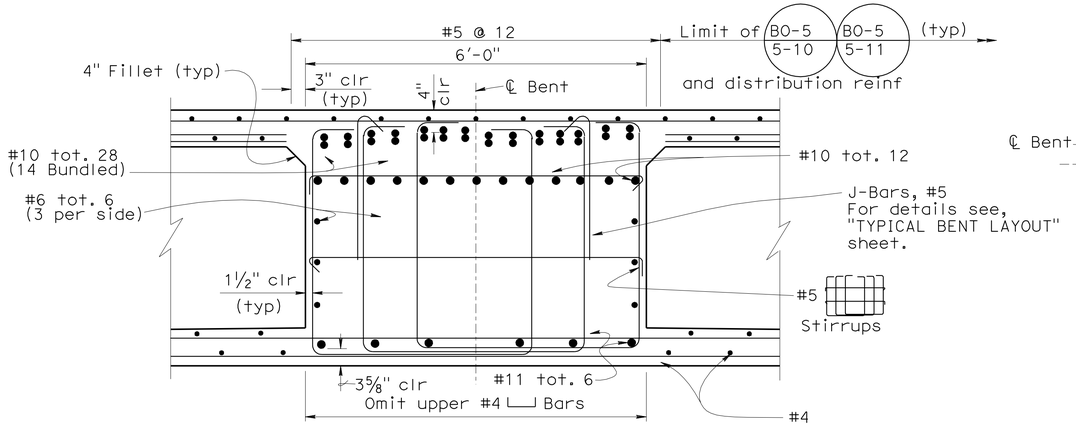

SECTION A-A
¾" = 1'-0"

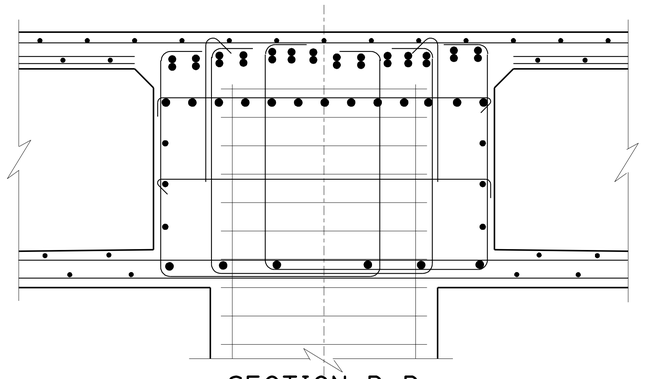

SECTION B-B
¾" = 1'-0"

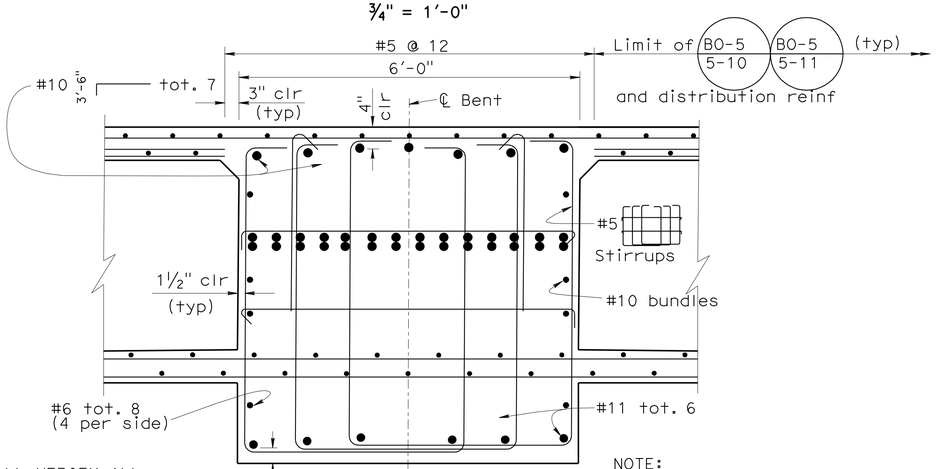

SECTION C-C
¾" = 1'-0"

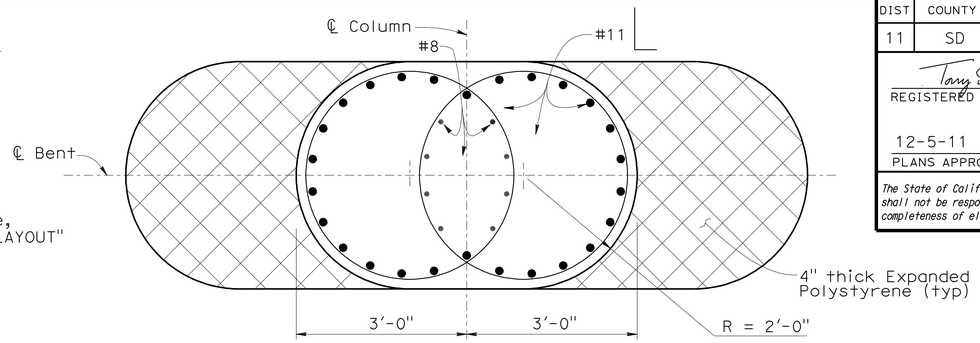

SECTION D-D
¾" = 1'-0"

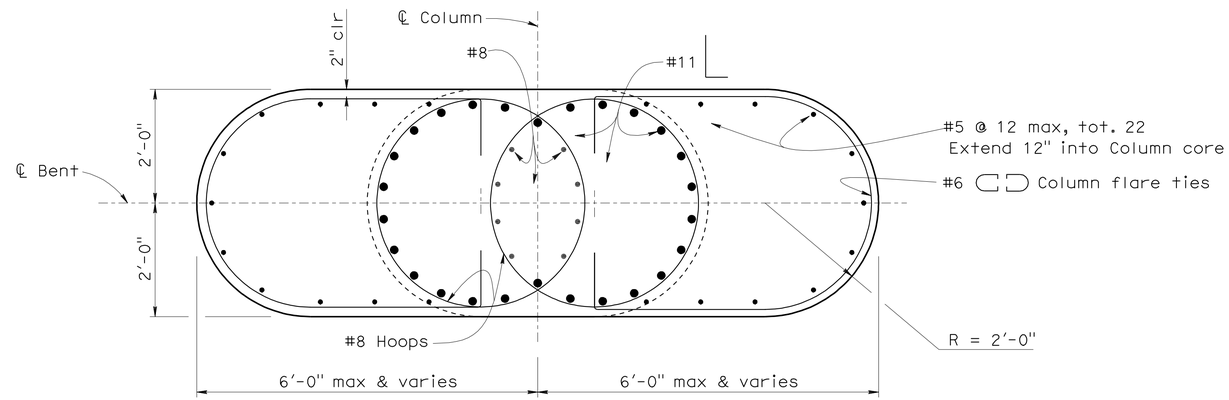

SECTION E-E
¾" = 1'-0"

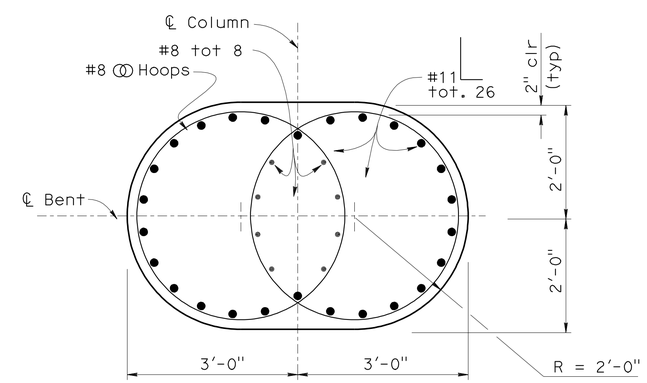

SECTION F-F
¾" = 1'-0"

NOTE:
THE CONTRACTOR SHALL VERIFY ALL CONTROLLING FIELD DIMENSIONS BEFORE ORDERING OR FABRICATING ANY MATERIAL.

NOTE:
For location of 'Section A-A', 'Section B-B', 'Section C-C', 'Section D-D', 'Section E-E' and 'Section F-F' see "BENT LAYOUT" sheet.

LEGEND:
Indicates limits of Expanded Polystyrene

	BY	CHECKED
DESIGN	V. Ramakrishnan	J. Lane
DETAILS	/ W. Zhang	J. Lane
QUANTITIES	V. Ramakrishnan	J. Lane

STATE OF CALIFORNIA
DEPARTMENT OF TRANSPORTATION

DIVISION OF ENGINEERING SERVICES
STRUCTURE DESIGN
DESIGN BRANCH 14

BRIDGE NO. 57-0640
POST MILE 9.21

EUCLID AVENUE UNDERCROSSING (WIDEN)
BENT DETAILS

STRUCTURES DESIGN DETAIL SHEET (ENGLISH) (REV. 09-01-10)

ORIGINAL SCALE IN INCHES FOR REDUCED PLANS 0 1 2 3

UNIT: 3613
PROJECT NUMBER & PHASE: 11000200501
CONTRACT NO.: 11-2T1811

DISREGARD PRINTS BEARING EARLIER REVISION DATES

REVISION DATES: 06-16-11 05-19-11 05-24-11 06-10-11

SHEET 7 OF 21

FILE => g_57-0640-d-bent_dt.dgn

USERNAME => s124496 DATE PLOTTED => 09-DEC-2011 TIME PLOTTED => 13:21

DIST	COUNTY	ROUTE	POST MILES TOTAL PROJECT	SHEET No.	TOTAL SHEETS
11	SD	54,805	1.8,5.5/9.4	622	635

Tony Skreslet 8-25-11
REGISTERED CIVIL ENGINEER DATE

12-5-11
PLANS APPROVAL DATE

REGISTERED PROFESSIONAL ENGINEER TONY SKRESLET No. C50676 Exp. 09-30-11 CIVIL STATE OF CALIFORNIA

The State of California or its officers or agents shall not be responsible for the accuracy or completeness of electronic copies of this plan sheet.

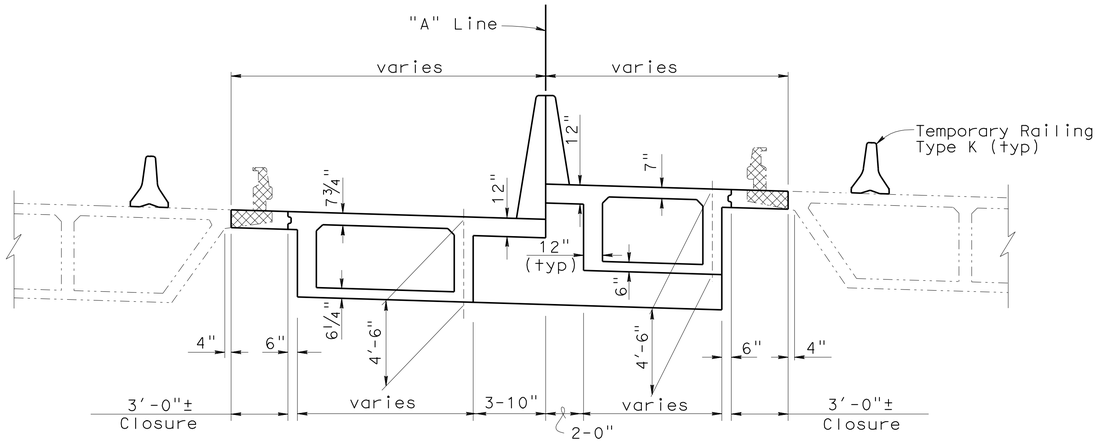

TYPICAL SECTION

¼" = 1'-0"

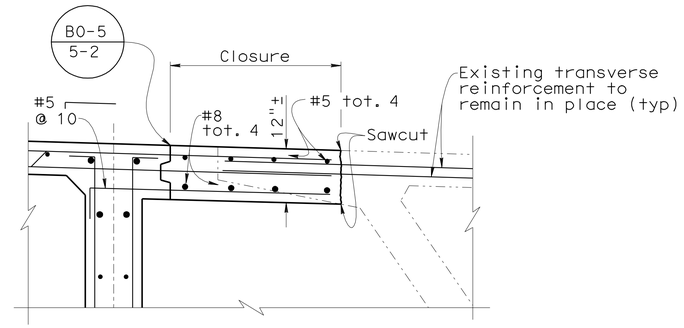

CLOSURE DETAIL

¼" = 1'-0"

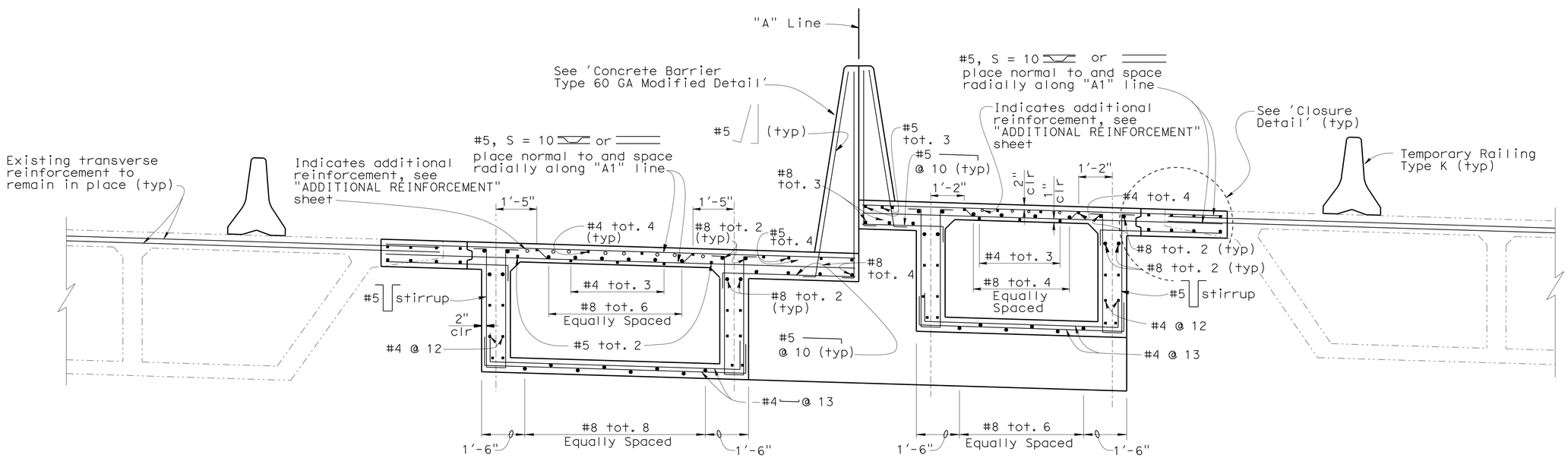

NOTE:
THE CONTRACTOR SHALL VERIFY ALL CONTROLLING FIELD DIMENSIONS BEFORE ORDERING OR FABRICATING ANY MATERIAL.

PART TYPICAL SECTION

½" = 1'-0"

	BY	CHECKED
DESIGN	V. Ramakrishnan	J. Lane
DETAILS	L. Xiong	J. Lane
QUANTITIES	V. Ramakrishnan	J. Lane

STATE OF CALIFORNIA
DEPARTMENT OF TRANSPORTATION

DIVISION OF ENGINEERING SERVICES
STRUCTURE DESIGN
DESIGN BRANCH 14

BRIDGE NO. 57-0640
POST MILE 9.21

EUCLID AVENUE UNDERCROSSING (WIDEN)
TYPICAL SECTION

STRUCTURES DESIGN DETAIL SHEET (ENGLISH) (REV. 09-01-10)

ORIGINAL SCALE IN INCHES FOR REDUCED PLANS 0 1 2 3

UNIT: 3613
PROJECT NUMBER & PHASE: 11000200501
CONTRACT NO.: 11-2T1811

DISREGARD PRINTS BEARING EARLIER REVISION DATES

REVISION DATES 06-14-11 04-22-11 05-13-11 5-18-11

SHEET 8 OF 21

FILE => g_57-0640-e-ts.dgn

USERNAME => s124496 DATE PLOTTED => 09-DEC-2011 TIME PLOTTED => 13:21

DIST	COUNTY	ROUTE	POST MILES TOTAL PROJECT	SHEET No.	TOTAL SHEETS
11	SD	54,805	1.8,5.5/9.4	623	635

Tony Skreslet 8-25-11
REGISTERED CIVIL ENGINEER DATE

12-5-11
PLANS APPROVAL DATE

REGISTERED PROFESSIONAL ENGINEER TONY SKRESLET No. C50676 Exp. 09-30-11 CIVIL STATE OF CALIFORNIA

The State of California or its officers or agents shall not be responsible for the accuracy or completeness of electronic copies of this plan sheet.

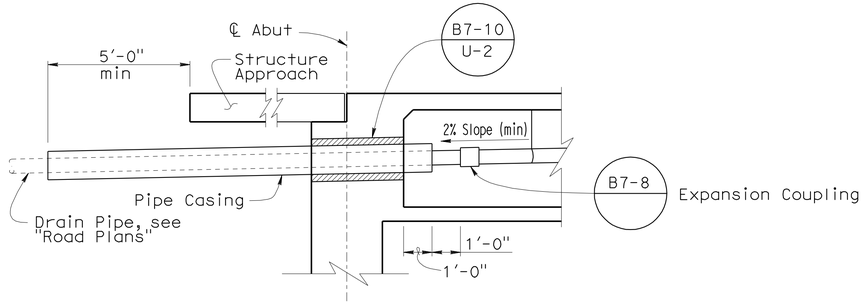

DECK DRAIN PIPE DETAIL

3/8" = 1'-0"

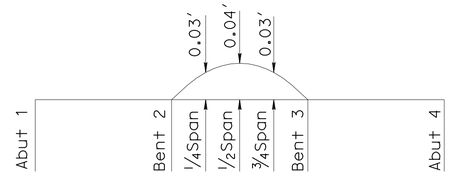

NOTE:
Does not include allowance for falsework settlement

CAMBER DIAGRAM (LEFT & RIGHT)

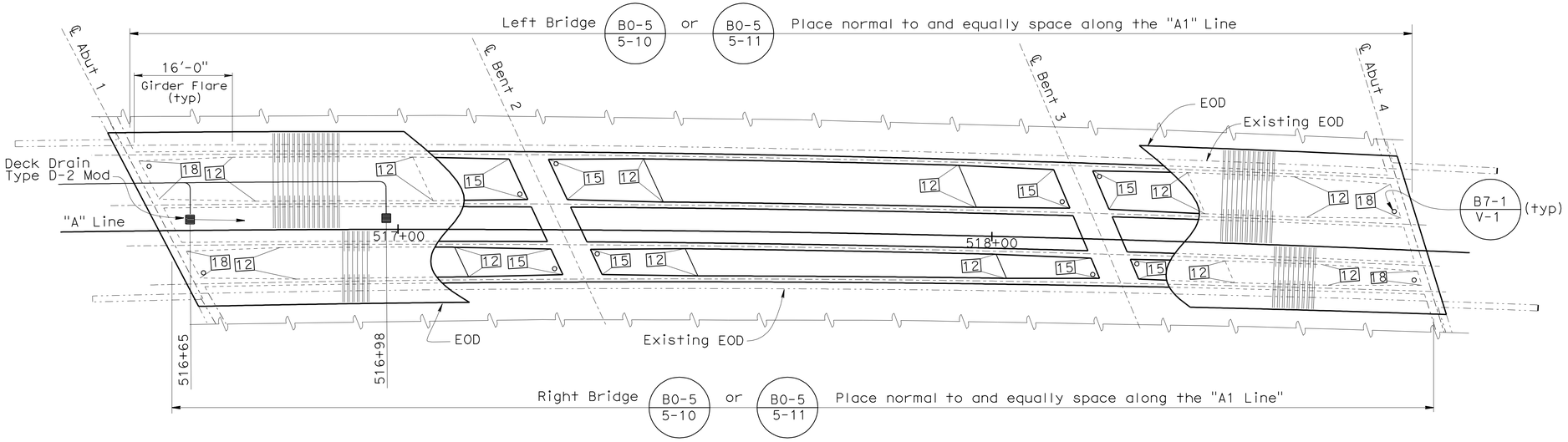

GIRDER LAYOUT

3/32" = 1'-0"

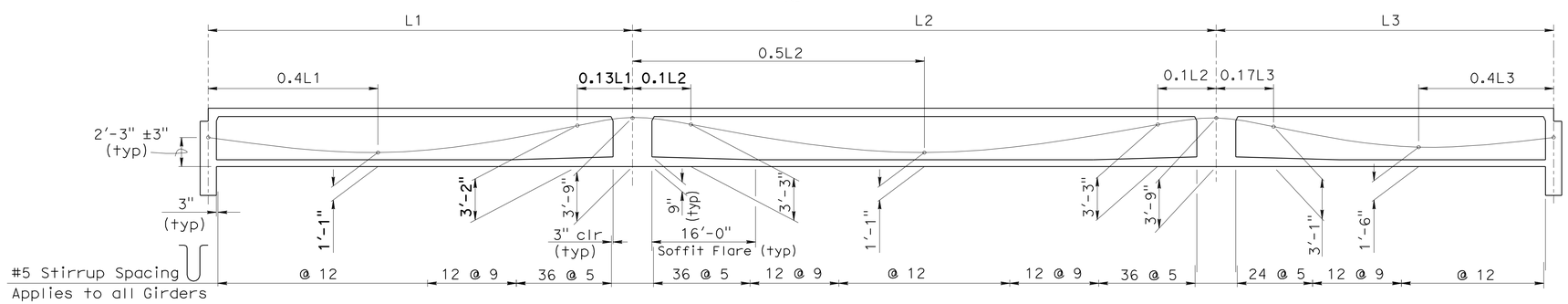

LONGITUDINAL SECTION (LEFT& RIGHT)

NO SCALE

NOTE:
THE CONTRACTOR SHALL VERIFY ALL CONTROLLING FIELD DIMENSIONS BEFORE ORDERING OR FABRICATING ANY MATERIAL.

PRESTRESSING NOTES (RIGHT)

270 KSI Low Relaxation Strand:

P_{jack} = 1490 kips

Anchor Set = 3/8 in

Total Number of Girders = 2

Distribution of prestress force (Pjack) between girders shall not exceed the ratio of 3:2. Maximum final force variation between girders shall not exceed 725 kips.

Concrete: f'_c = 5.0 psi @ 28 days

f'_{ci} = 3.5 psi @ time of stressing

Contractor shall submit elongation calculations based on initial stress at

⊠ = 0.898 times jacking stress.

One end stressing shall be performed from Abutment 1 only.

PRESTRESSING NOTES (LEFT)

270 KSI Low Relaxation Strand:

P_{jack} = 1650 kips

Anchor Set = 3/8 in

Total Number of Girders = 2

Distribution of prestress force (Pjack) between girders shall not exceed the ratio of 3:2. Maximum final force variation between girders shall not exceed 725 kips.

Concrete: f'_c = 5.0 psi @ 28 days

f'_{ci} = 3.5 psi @ time of stressing

Contractor shall submit elongation calculations based on initial stress at

⊠ = 0.808 times jacking stress.

One end stressing shall be performed from Abutment 1 only.

	BY	CHECKED
DESIGN	V. Ramakrishnan	J. Lane
DETAILS	L. Xiong	J. Lane
QUANTITIES	V. Ramakrishnan	J. Lane

STATE OF CALIFORNIA
DEPARTMENT OF TRANSPORTATION

DIVISION OF ENGINEERING SERVICES
STRUCTURE DESIGN
DESIGN BRANCH 14

BRIDGE NO. 57-0640
POST MILE 9.21

EUCLID AVENUE UNDERCROSSING (WIDEN)
GIRDER LAYOUT

STRUCTURES DESIGN DETAIL SHEET (ENGLISH) (REV. 09-01-10)

ORIGINAL SCALE IN INCHES FOR REDUCED PLANS 0 1 2 3

UNIT: 3613
PROJECT NUMBER & PHASE: 11000200501
CONTRACT NO.: 11-2T1811

DISREGARD PRINTS BEARING EARLIER REVISION DATES

REVISION DATES: 09-22-11 ~~2-17-11~~ ~~06-16-11~~ ~~09-21-11~~

SHEET 9 OF 21

FILE => g_57-0640-g-gl.dgn

USERNAME => s124496 DATE PLOTTED => 09-DEC-2011 TIME PLOTTED => 13:21

DIST	COUNTY	ROUTE	POST MILES TOTAL PROJECT	SHEET No.	TOTAL SHEETS
11	SD	54,805	1.8,5.5/9.4	624	635

Tony Skreslet 8-25-11
REGISTERED CIVIL ENGINEER DATE

12-5-11
PLANS APPROVAL DATE

REGISTERED PROFESSIONAL ENGINEER TONY SKRESLET No. C50676 Exp. 09-30-11 CIVIL STATE OF CALIFORNIA

The State of California or its officers or agents shall not be responsible for the accuracy or completeness of electronic copies of this plan sheet.

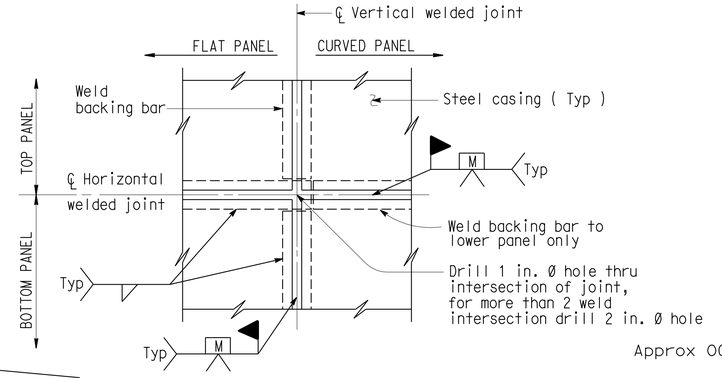

DETAIL A

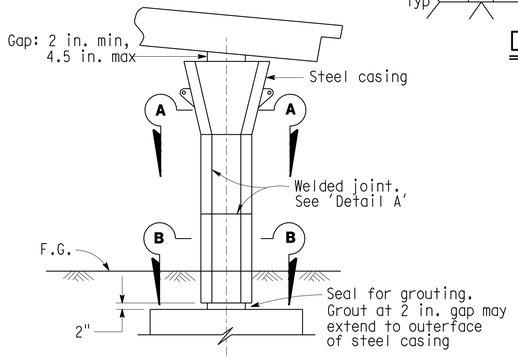

CLASS P/F COLUMN

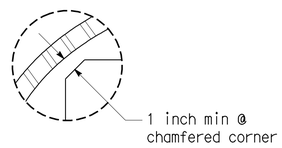

DETAIL B

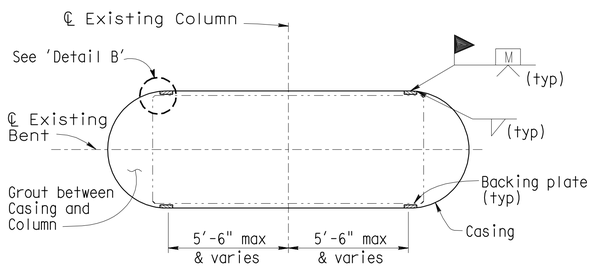

SECTION A-A
RECTANGULAR COLUMN

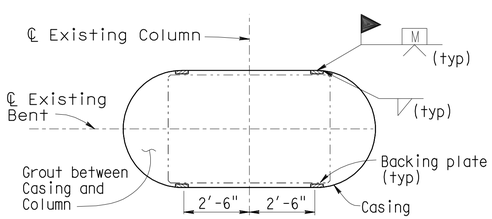

SECTION B-B
RECTANGULAR COLUMN

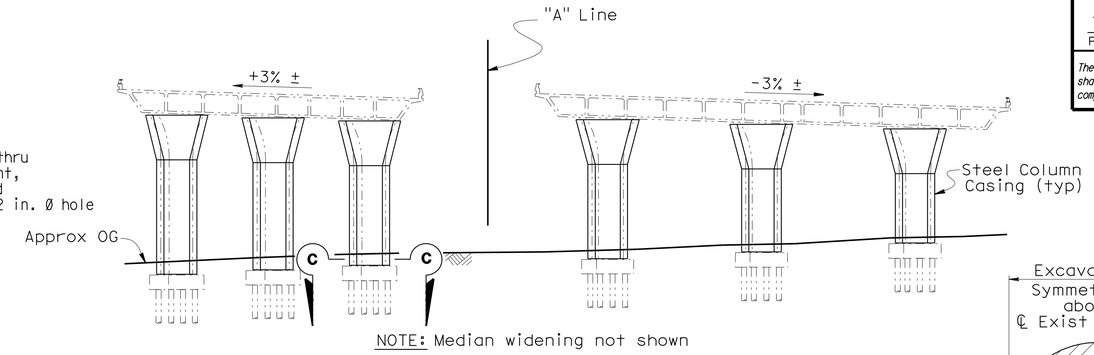

NOTE: Median widening not shown

TYPICAL ELEVATION

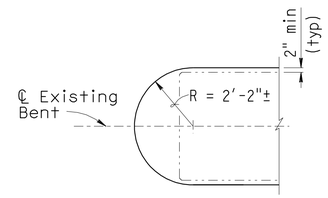

CASING DETAIL
CLASS F AND P/F COLUMN

Actual Radius to be determined by the Contractor subject to the approval of the Engineer

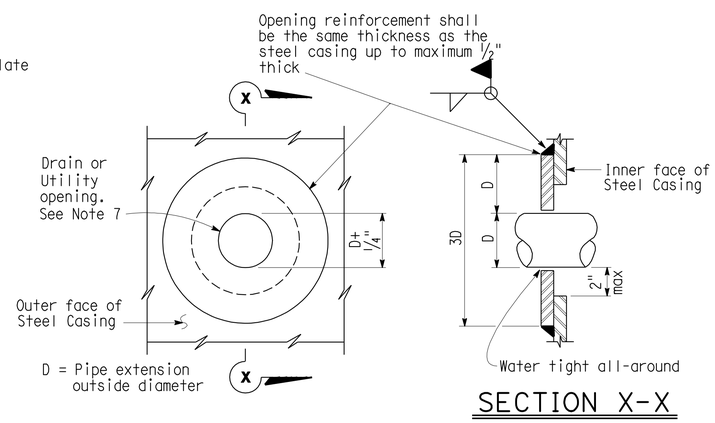

SECTION X-X

CASING OPENING

Note: Opening reinforcement required for drain or utility openings larger than 4 in.

NOTE:
THE CONTRACTOR SHALL VERIFY ALL CONTROLLING FIELD DIMENSIONS BEFORE ORDERING OR FABRICATING ANY MATERIAL.

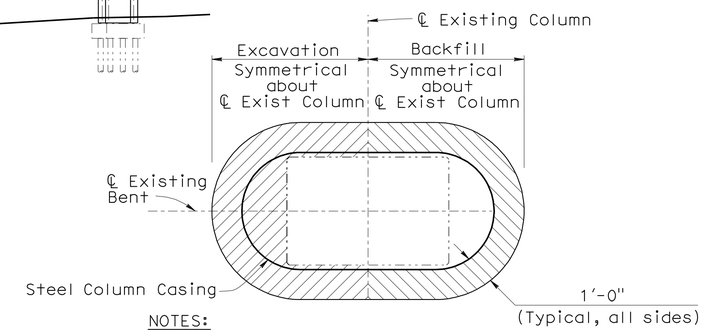

NOTES:

1. Section typical for all Existing Columns
2. Vertical Limits from Top of Footing to OG

SECTION C-C
EXCAVATION & BACKFILL LIMITS

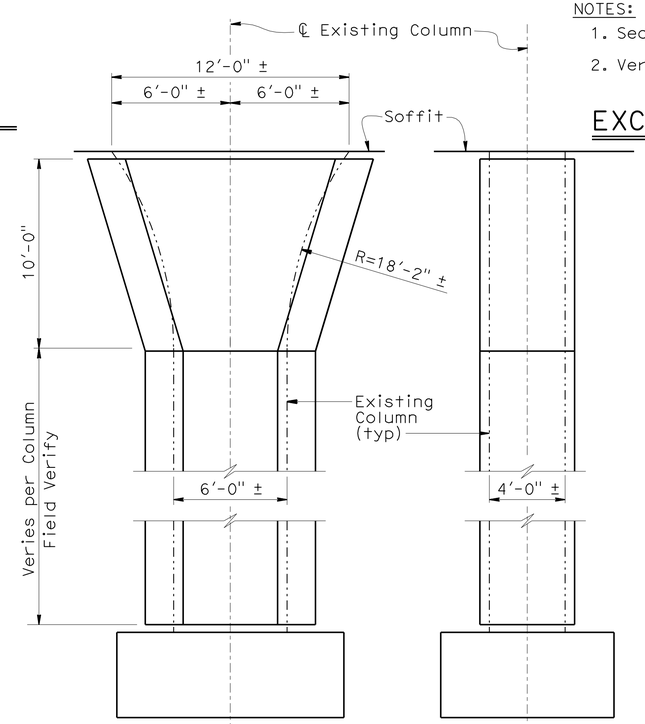

EXISTING COLUMNS TO BE CASED

Indicates Excavation Limits

Indicates Backfill Limits

NOTES:

1) For varying thickness steel casing inside surface to remain flush. Minimum clearance from PCC column to casing shall be maintained.
2) Appropriate injection nozzles to be provided on casing, but removed and ground flush following completion of grouting operation.
3) All voids between steel casing and polyethylene (Class P/F), and steel casing and PCC column (Class F) to be filled with grout.
4) Location and number of vertical and horizontal welds to be determined by the Contractor, and subject to the approval of the Engineer. The location of casing welds are for illustration. No skip welds allowed.
5) Circular steel casing to be 1/4" thick minimum for casings with a 4'-4" diameter or less; all other steel casings to be 3/8" thick unless noted differently on contract plans. Backing plates to be the same thickness as casing up to maximum 1/2" thick.
6) Waterproof limits for steel casings. Typical for Classe "F" and "P/F".
7) For pipe extensions, opening shall be no more than 1/4" greater than the pipe extension diameter. For other openings, the opening diameter to be determined by the Engineer.

NO SCALE

	BY	CHECKED
DESIGN	V. Ramakrishnan	J. Lane
DETAILS	T.Nguyen	J. Lane
QUANTITIES	V. Ramakrishnan	J. Lane

STATE OF CALIFORNIA
DEPARTMENT OF TRANSPORTATION

DIVISION OF ENGINEERING SERVICES
STRUCTURE DESIGN
DESIGN BRANCH 14

BRIDGE NO. 57-0640
POST MILE 9.21

EUCLID AVENUE UNDERCROSSING (WIDEN)
STEEL COLUMN CASING (SEISMIC RETROFIT)

STRUCTURES DESIGN DETAIL SHEET (ENGLISH) (REV. 09-01-10)

ORIGINAL SCALE IN INCHES FOR REDUCED PLANS 0 1 2 3

UNIT: 3613
PROJECT NUMBER & PHASE: 11000200501
CONTRACT NO.: 11-2T1811

DISREGARD PRINTS BEARING EARLIER REVISION DATES

REVISION DATES: 04-05-11 04-07-11 07-14-11 07-20-11

SHEET 10 OF 21

FILE => g_57-0640-r-scc.dgn

USERNAME => s124496 DATE PLOTTED => 09-DEC-2011 TIME PLOTTED => 13:21

DIST.	COUNTY	ROUTE	POST MILES TOTAL PROJECT	SHEET NO.	TOTAL SHEETS
11	SD	54,805	1.8,5.5/9.4	625	635

Tony Skreslet 8-25-11
REGISTERED ENGINEER - CIVIL

12-5-11
PLANS APPROVAL DATE

REGISTERED PROFESSIONAL ENGINEER TONY SKRESLET No. C50676 Exp. 09-30-11 CIVIL STATE OF CALIFORNIA

The State of California or its officers or agents shall not be responsible for the accuracy or completeness of electronic copies of this plan sheet.

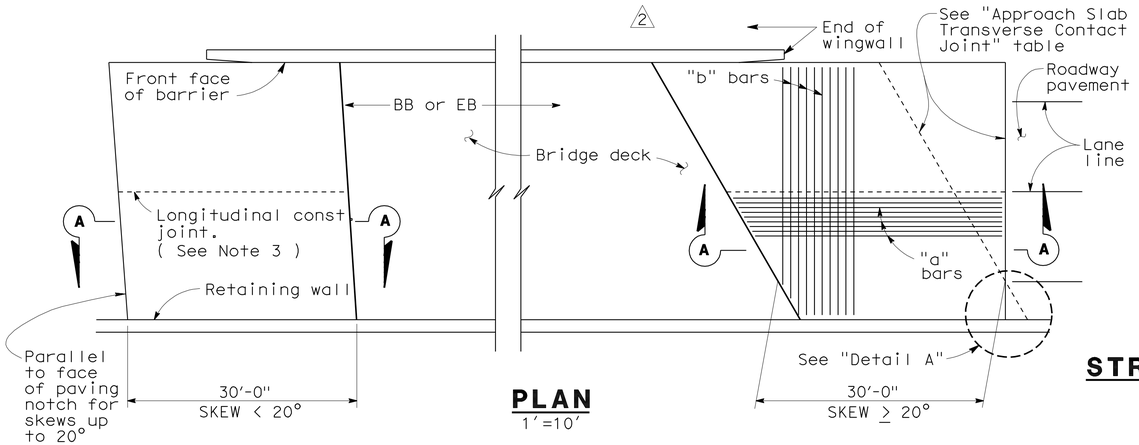

PLAN
1'=10'

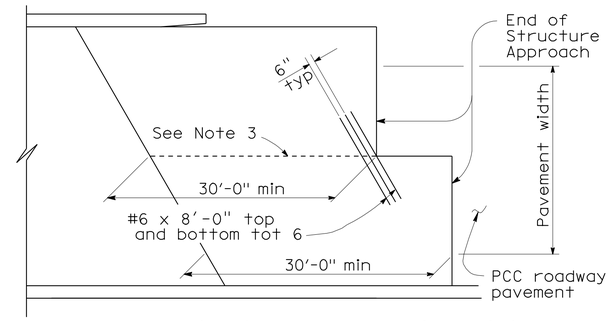

STRUCTURE APPROACH - END STAGGER DETAIL
No Scale

APPROACH SLAB TRANSVERSE CONTACT JOINT		
APPROACH SKEW	WITH AC ROADWAY PAVEMENT	WITH PCC ROADWAY PAVEMENT
< 20°	Parallel to face of paving notch	Parallel to face of paving notch
20°- 45°	Parallel to face of P N use (Detail A)	Stagger lines 24' to 36' apart
> 45°	Parallel to face of P N use (Detail A)	Stagger at each lane line

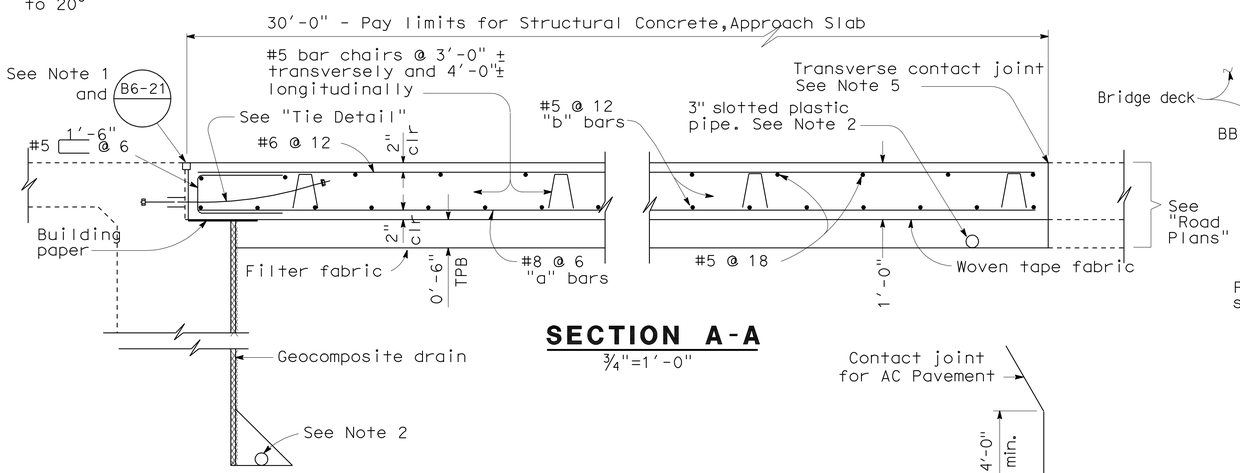

SECTION A-A
¾"=1'-0"

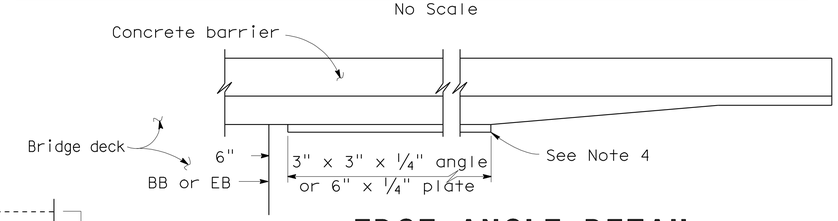

EDGE ANGLE DETAIL
½"=1'-0"

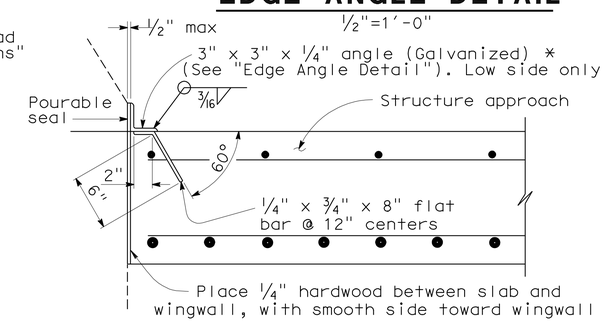

*(TO BE USED WITH TYPE 25 OR TYPE 27 CONCRETE BARRIER)

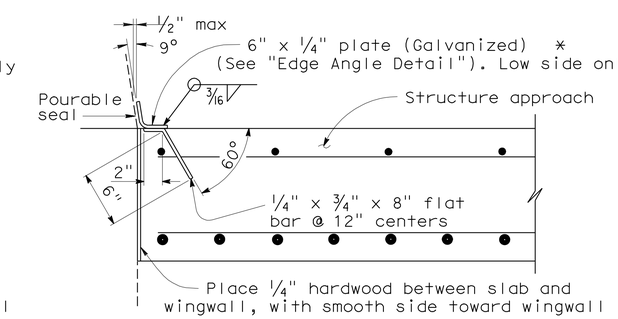

*(TO BE USED WITH TYPE 732 OR TYPE 736 CONCRETE BARRIER)

DETAIL B
1½"=1'-0"

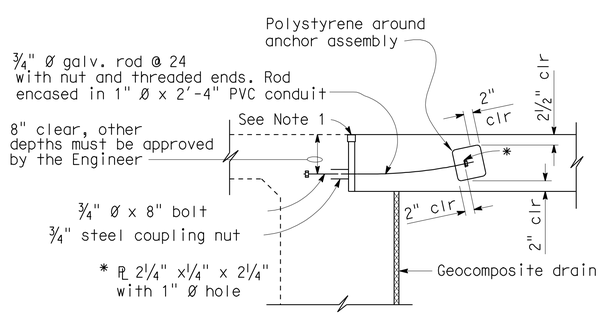

DETAIL A
No Scale

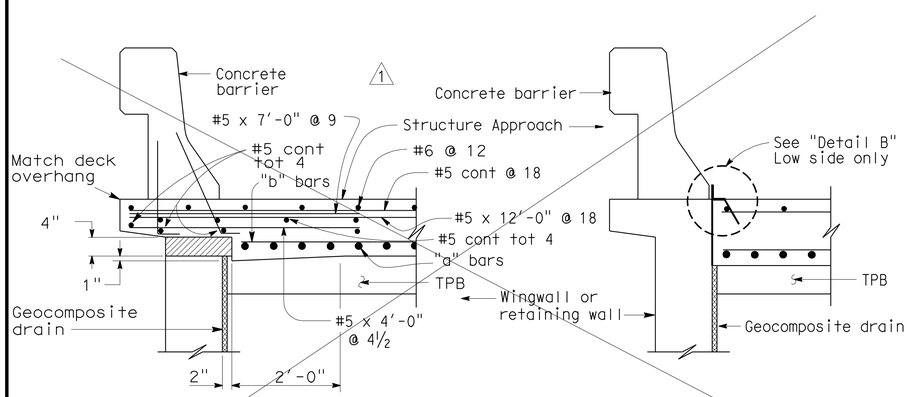

TYPE E-1 TYPE E-2

SECTION C-C
¾"=1'-0"

(Type E-1 to be used,unless otherwise shown on plans)

NOTE:
THE CONTRACTOR SHALL VERIFY ALL CONTROLLING FIELD DIMENSIONS BEFORE ORDERING OR FABRICATING ANY MATERIAL.

TIE DETAIL
¾"=1'-0"

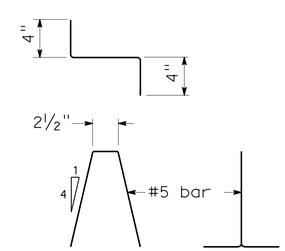

BAR CHAIR DETAIL
1½"=1'-0"

NOTES:

1. For details not noted or shown,see Structure Plans.
2. For drainage details,see "Structure Approach Drainage Details" sheet.
3. Longitudinal construction joints,when permitted by the Engineer,shall be located on lane lines.
4. End angle or plate at beginning of barrier transition, end of wingwall or end of structure approach, as applicable.
5. For transverse contact joint with new PCC paving, refer to Standard Plan P10.
6. At the contractor's option,approach slab transverse reinforcement may be placed parallel to paving notch. Spacing of transverse reinforcement is measured along ℄ roadway.

Polystyrene to be removed.

STANDARD DRAWING

FILE NO. xs3-180e

APPROVED BY M. Ha RESPONSIBLE TECHNICAL SPECIALIST
APPROVAL DATE 8-12-08
RELEASED BY O. Alcantara RESPONSIBLE OFFICE CHIEF
RELEASE DATE 8-12-08

1 Deleted Detail
2 Modified Detail

STATE OF CALIFORNIA DEPARTMENT OF TRANSPORTATION

DIVISION OF ENGINEERING SERVICES

BRIDGE NO. 57-0640
POST MILE 9.21

EUCLID AVENUE UNDERCROSSING (WIDEN)
STRUCTURE APPROACH TYPE N(30D)

DS OSD 2147A (ENGLISH STANDARD DRAWING "XS" BORDER REV. 01/11/08)

ORIGINAL SCALE IN INCHES FOR REDUCED PLANS 0 1 2 3

CU 3613
PN&Phase 11000200501

DISREGARD PRINTS BEARING EARLIER REVISION DATES 01-28-11

REVISION DATES (PRELIMINARY STAGE ONLY)

SHEET 11 OF 21

USERNAME => s124496

g_57-0640-s-sapptyp_n.dgn

DATE PLOTTED => 09-DEC-2011 TIME PLOTTED => 13:21

DIST.	COUNTY	ROUTE	MILE POST TOTAL PROJECT	SHEET NO.	TOTAL SHEETS
11	SD	54,805	1.8,5.5/9.4	626	635

Tony Skreslet 12-23-02
REGISTERED ENGINEER - CIVIL
12-5-11
PLANS APPROVAL DATE

REGISTERED PROFESSIONAL ENGINEER TONY SKRESLET No. C50676 Exp. 09-30-11 CIVIL STATE OF CALIFORNIA

The State of California or its officers or agents shall not be responsible for the accuracy or completeness of electronic copies of this plan sheet.

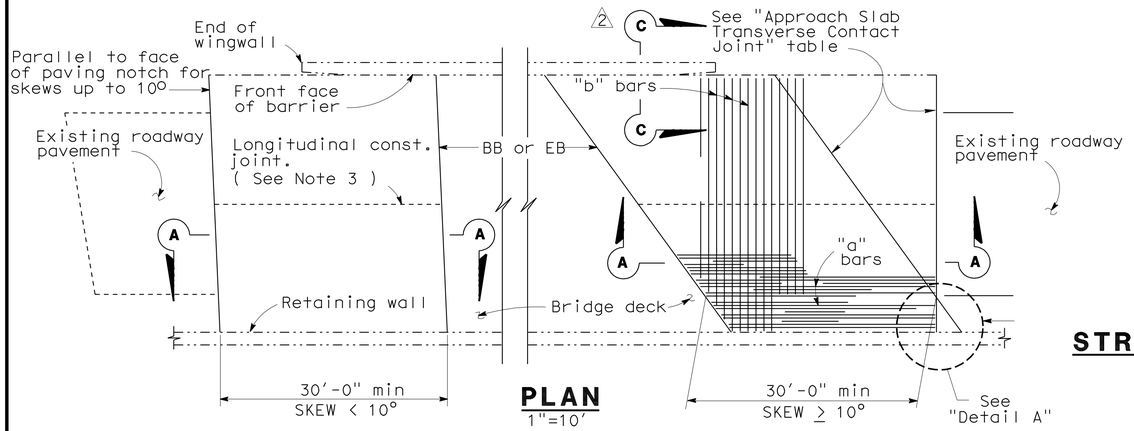

PLAN
1"=10'

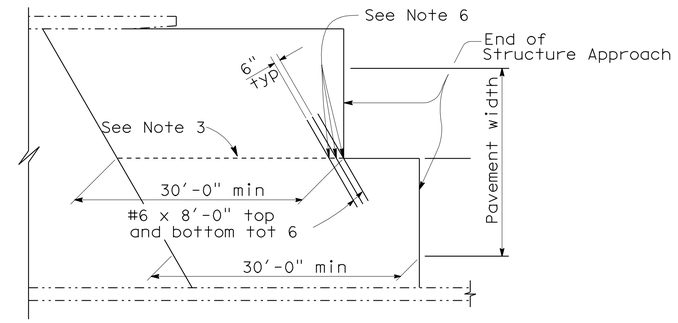

STRUCTURE APPROACH - END STAGGER DETAIL
No Scale

APPROACH SLAB TRANSVERSE CONTACT JOINT		
APPROACH SKEW	WITH AC ROADWAY PAVEMENT	WITH PCC ROADWAY PAVEMENT
< 10°	Parallel to face of paving notch	Parallel to face of paving notch
10° - 45°	Parallel to face of P N use (Detail A)	Stagger lines 24' to 36' apart
> 45°	Parallel to face of P N use (Detail A)	Stagger at each lane line

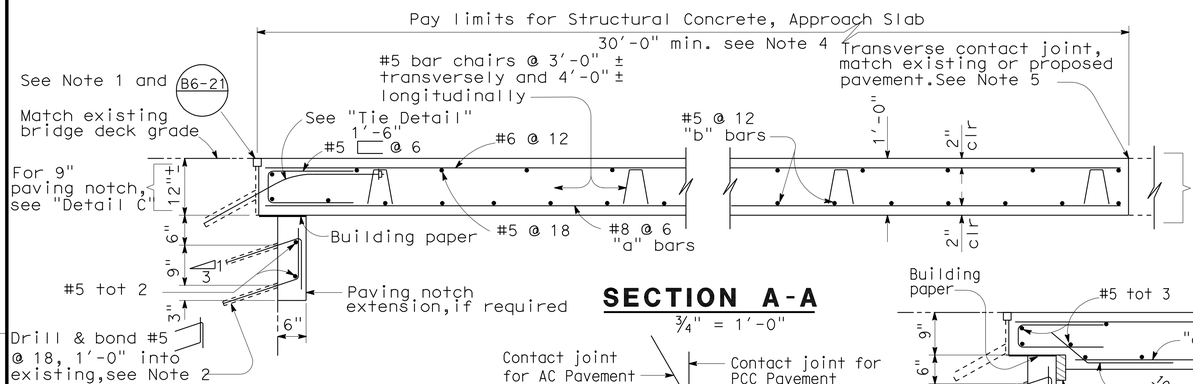

SECTION A-A
¾" = 1'-0"

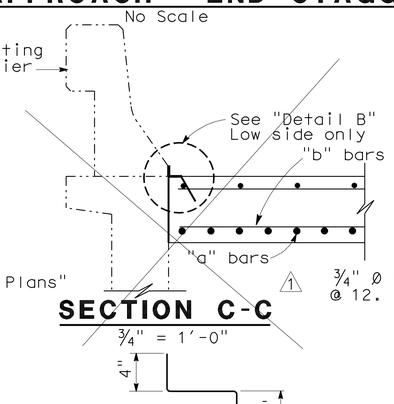

SECTION C-C
¾" = 1'-0"

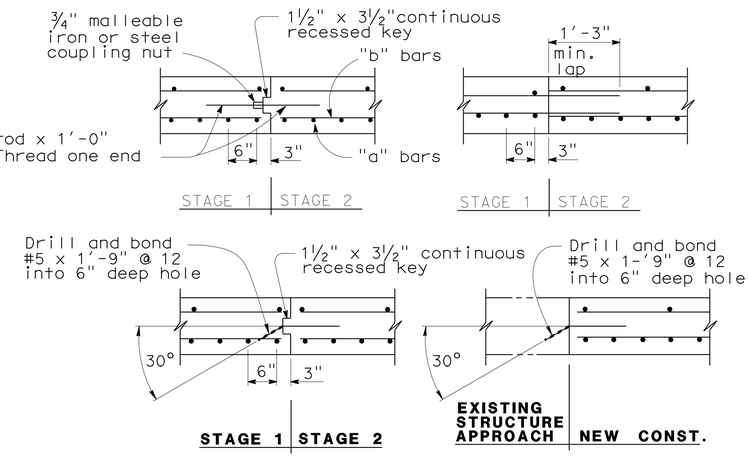

LONGITUDINAL CONSTRUCTION JOINT ALTERNATIVES
¾" = 1'-0"

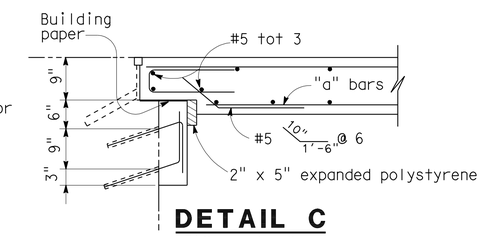

DETAIL C
¾" = 1'-0"

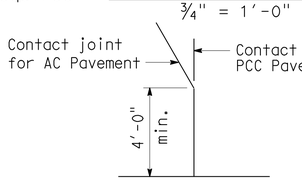

DETAIL A
No Scale

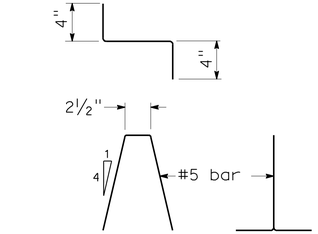

BAR CHAIR DETAIL
1½" = 1'-0"

NOTE: For details not shown, see "Section A-A".

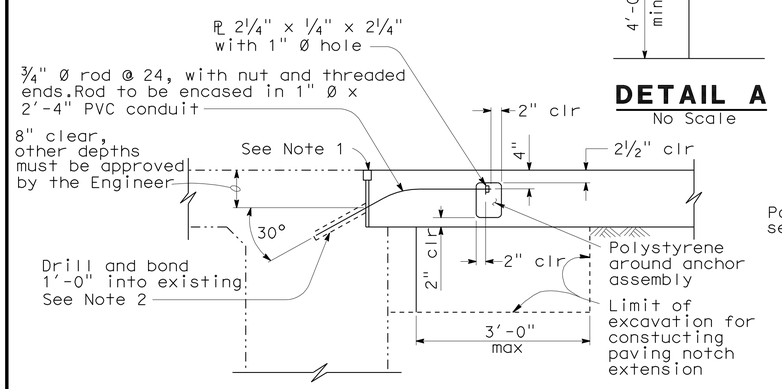

TIE DETAIL
¾" = 1'-0"

NOTE:
THE CONTRACTOR SHALL VERIFY ALL CONTROLLING FIELD DIMENSIONS BEFORE ORDERING OR FABRICATING ANY MATERIAL.

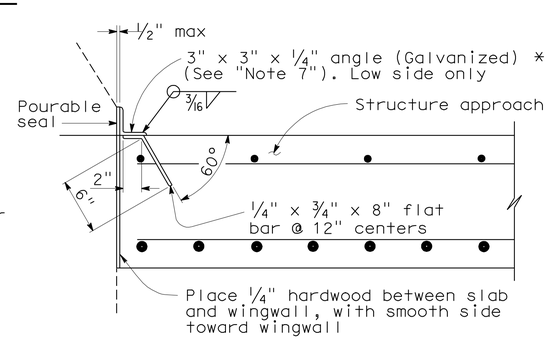

*(TO BE USED WITH TYPE 25 OR TYPE 27 CONCRETE BARRIER)

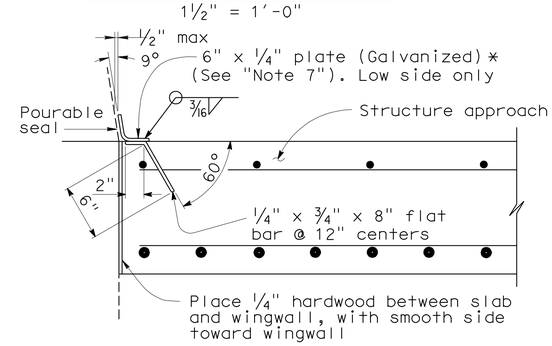

*(TO BE USED WITH TYPE 732 OR TYPE 736 CONCRETE BARRIER)

DETAIL B
1½" = 1'-0"

NOTES:

1. For details not shown or noted, see Structure Plans. Adjust bar reinforcement to clear a sawcut for sealed joint, when required.
2. Space to avoid existing prestress anchorages and main reinforcement.
3. Longitudinal construction joints, when permitted by the Engineer, shall be located on lane lines.
4. Transverse contact joint shall be a minimum of 5'-0" from an existing or constructed weakened plane joint.
5. For transverse contact joint with new PCC paving, refer to Standard Plan P10.
6. Couplers are required for stage construction.
7. End angle or plate at beginning of barrier transition, end of wingwall or end of structure approach as applicable.

STANDARD DRAWING

RELEASE DATE 3/14/05	DESIGN	BY M.TRAFFALIS	CHECKED E.THORKILDSEN	RELEASED BY
FILE NO. xs3-140e	DETAILS	BY R.YEE	CHECKED E.THORKILDSEN	
	SUBMITTED	BY M.HA	DRAWING DATE 8/92	OFFICE CHIEF

1 Deleted Detail
2 Modified Detail

STATE OF CALIFORNIA
DEPARTMENT OF TRANSPORTATION

DIVISION OF ENGINEERING SERVICES

BRIDGE NO. 57-0640
MILE POST

EUCLID AVENUE UNDERCROSSING (WIDEN)
STRUCTURE APPROACH TYPE R(30D)

DS OSD 2147A (ENGLISH) (REV. X/XX/XX)

ORIGINAL SCALE IN INCHES FOR REDUCED PLANS 0 1 2 3

CU 11
EA 081610

DISREGARD PRINTS BEARING EARLIER REVISION DATES

REVISION DATES (PRELIMINARY STAGE ONLY)

SHEET 12 OF 21

USERNAME => s124496

DATE PLOTTED => 09-DEC-2011 TIME PLOTTED => 13:21

g_57-0640-s-sapptx

DIST	COUNTY	ROUTE	POST MILES TOTAL PROJECT	SHEET No.	TOTAL SHEETS
11	SD	54,805	1.8,5.5/9.4	627	635

Tony Skreslet 8-25-11
REGISTERED CIVIL ENGINEER DATE

12-5-11
PLANS APPROVAL DATE

REGISTERED PROFESSIONAL ENGINEER TONY SKRESLET No. C50676 Exp. 09-30-11 CIVIL STATE OF CALIFORNIA

The State of California or its officers or agents shall not be responsible for the accuracy or completeness of electronic copies of this plan sheet.

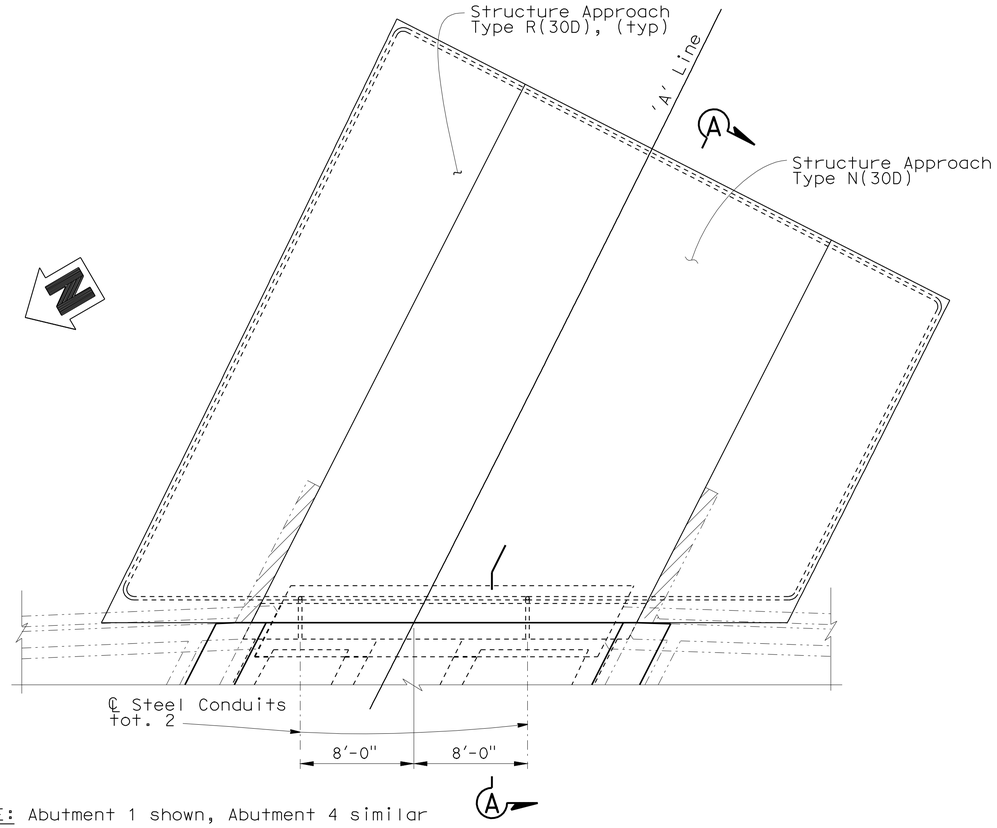

NOTE: Abutment 1 shown, Abutment 4 similar

PLAN
No Scale

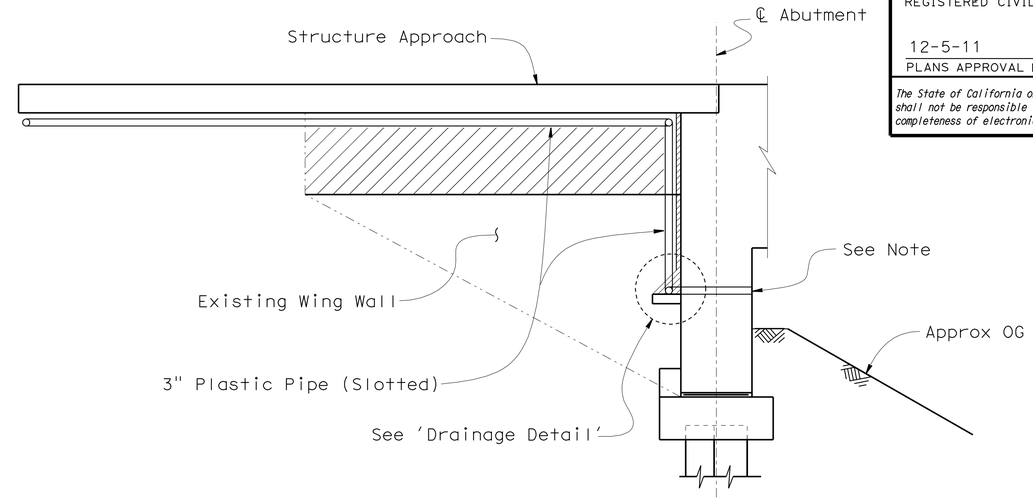

SECTION A-A
No Scale

NOTE: 6" square aluminum or galvanized steel wire ½" mesh hardware cloth, minimum wire diameter 0.025". Anchor firmly to Abutment face

LEGEND:

Indicates top 3' of Wing Wall and portion of Overhang to be removed

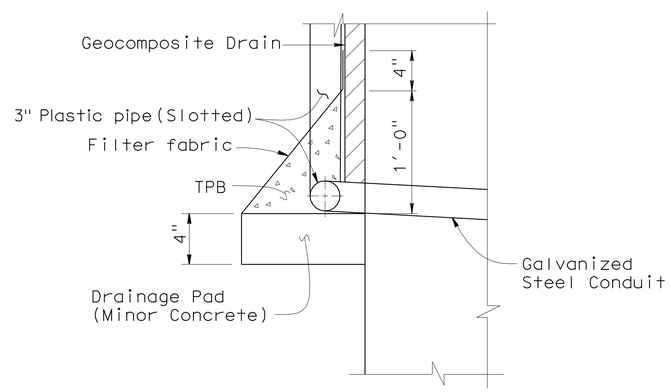

DRAINAGE DETAIL
No Scale

NOTE:
THE CONTRACTOR SHALL VERIFY ALL CONTROLLING FIELD DIMENSIONS BEFORE ORDERING OR FABRICATING ANY MATERIAL.

	BY	CHECKED
DESIGN	T. Skreslet	J. Lane
DETAILS	JMP/T. Nguyen	J. Lane
QUANTITIES	V. Ramakrishnan	J. Lane

STATE OF CALIFORNIA
DEPARTMENT OF TRANSPORTATION

DIVISION OF ENGINEERING SERVICES
STRUCTURE DESIGN
DESIGN BRANCH 14

BRIDGE NO. 57-0640
POST MILE 9.21

EUCLID AVENUE UNDERCROSSING (WIDEN)
STRUCTURE APPROACH DRAINAGE DETAILS

STRUCTURES DESIGN DETAIL SHEET (ENGLISH) (REV. 09-01-10)

ORIGINAL SCALE IN INCHES FOR REDUCED PLANS 0 1 2 3

UNIT: 3613
PROJECT NUMBER & PHASE: 11000200501
CONTRACT NO.: 11-2T1811

DISREGARD PRINTS BEARING EARLIER REVISION DATES → 07-13-11 07-14-11 08-25-11 07-12-11

SHEET 13 OF 21

FILE => g_57-0640-t-sadd.dgn

USERNAME => s124496 DATE PLOTTED => 09-DEC-2011 TIME PLOTTED => 13:21

DIST	COUNTY	ROUTE	POST MILES TOTAL PROJECT	SHEET No.	TOTAL SHEETS
11	SD	54,805	1.8,5.5/9.4	628	635

Tony Skreslet 8-25-11
REGISTERED CIVIL ENGINEER DATE

12-5-11
PLANS APPROVAL DATE

REGISTERED PROFESSIONAL ENGINEER TONY SKRESLET No. C50676 Exp. 09-30-11 CIVIL STATE OF CALIFORNIA

The State of California or its officers or agents shall not be responsible for the accuracy or completeness of electronic copies of this plan sheet.

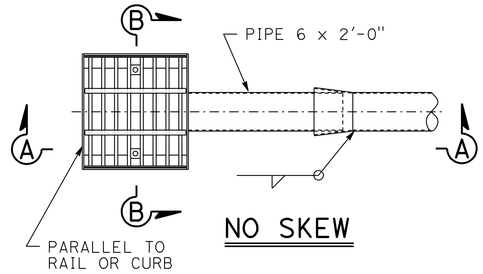

NO SKEW

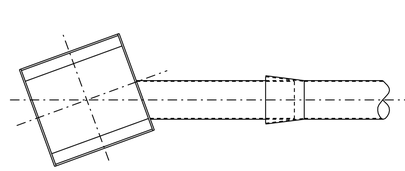

SKEW TO 20°

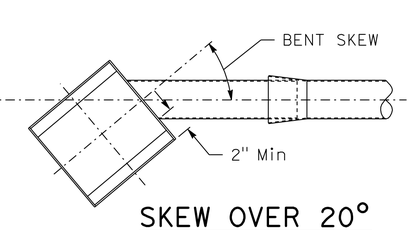

SKEW OVER 20°

PLAN-DECK DRAIN ASSEMBLY

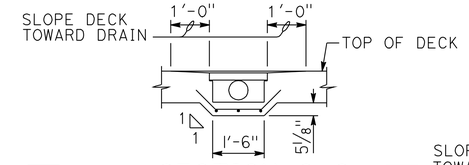

SECTION C-C

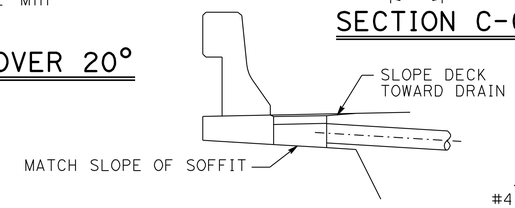

DRAIN FLUSH W/OVERHANG

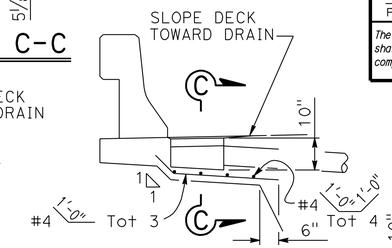

DRAIN W/HAUNCH OVERHANG

ELEVATION-DECK DRAIN LOCATIONS

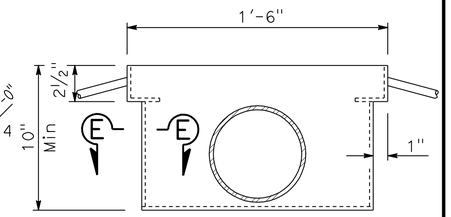

VIEW D-D

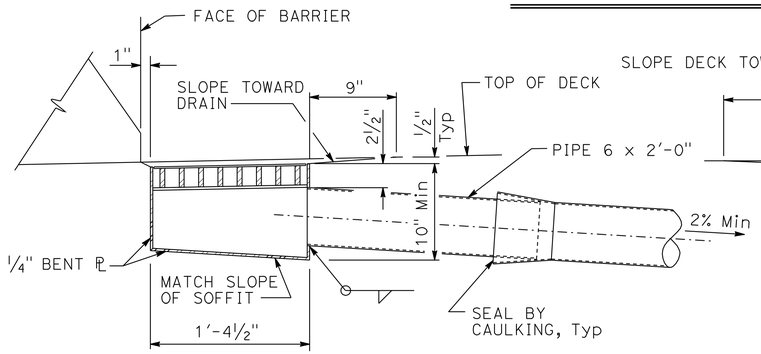

SECTION A-A

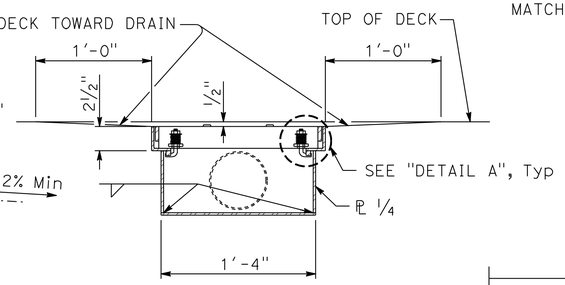

SECTION B-B

DECK DRAIN ASSEMBLY DETAIL

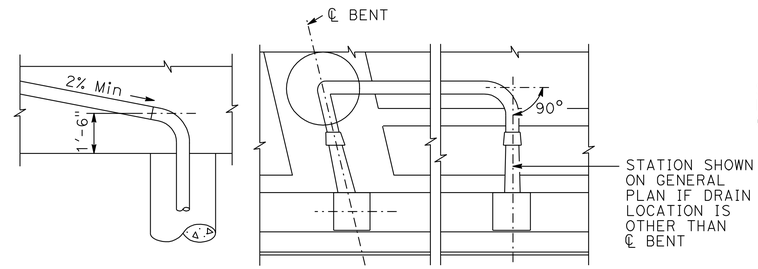

VERTICAL HORIZONTAL

DRAIN PIPE ALIGNMENT

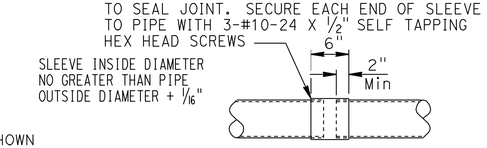

SLEEVE CONNECTION

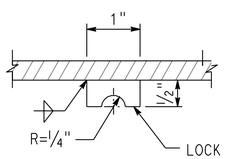

LOCK BAR

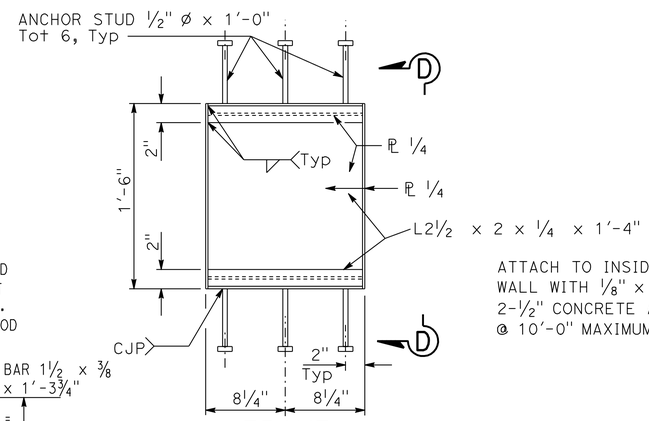

FRAME

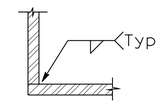

SECTION E-E

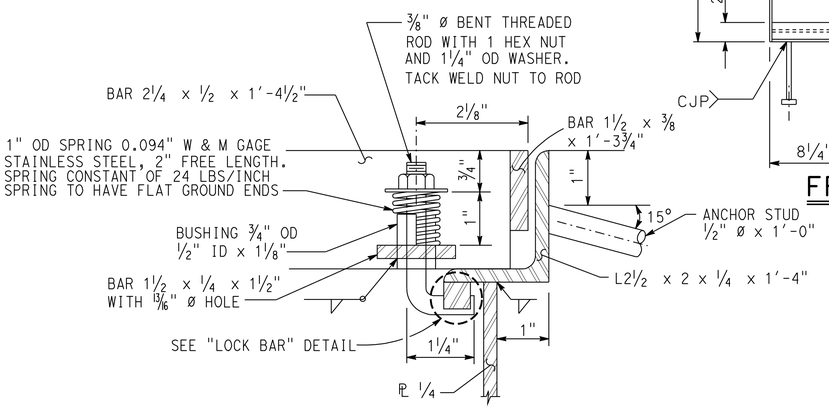

DETAIL A

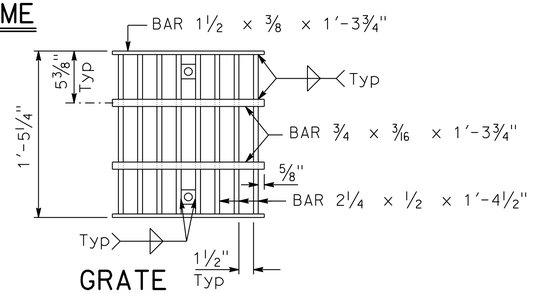

GRATE

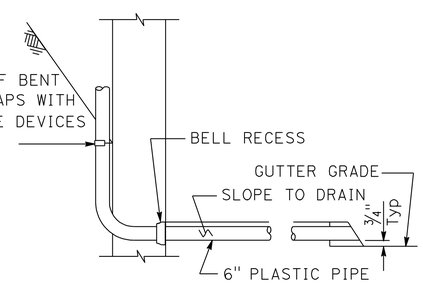

AT WALL TYPE BENT

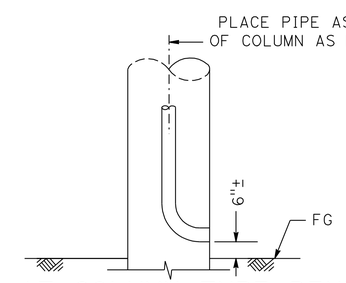

AT COLUMN TYPE BENT ABOVE GROUND

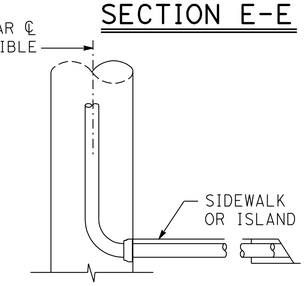

AT COLUMN TYPE BENT UNDER CURB

DRAIN OUTLET

NOTE:

All pipe to be NPS 6 x 0.135" welded steel pipe except as noted and galvanized if not encased in concrete. Fittings and bends shall have a minimum wall thickness of ⅛". All joints or connections to be butt welded or connected by a steel pipe sleeve and to be smooth throughout inside of pipe except as noted. All bends to be on 1'-6" minimum radius measured along ℄ pipe. All bends to be supported by suitable galvanized hangers @ 10'-0" maximum spacing throughout. Galvanize deck drain assembly after fabrication

NO SCALE

STANDARD DRAWING

FILE NO. xs10-020 APPROVAL DATE July 2011

STATE OF CALIFORNIA DEPARTMENT OF TRANSPORTATION

DIVISION OF ENGINEERING SERVICES

BRIDGE NO. 57-0640 POST MILE 9.21

EUCLID AVENUE UNDERCROSSING (WIDEN)

DECK DRAIN - TYPE D-2 MODIFIED

DS OSD 2147A (ENGLISH STANDARD DRAWING "XS" BORDER REV. (02-02-11)

ORIGINAL SCALE IN INCHES FOR REDUCED PLANS 0 1 2 3

UNIT: 3613
PROJECT NUMBER & PHASE: 11000200501 CONTRACT NO.: 11-2T1811

DISREGARD PRINTS BEARING EARLIER REVISION DATES

REVISION DATES 08-26-11

SHEET 14 OF 21

FILE => g_57-0640-u-deckdrain.dgn

USERNAME => s124496 DATE PLOTTED => 09-DEC-2011 TIME PLOTTED => 13:21

DIST	COUNTY	ROUTE	POST MILES TOTAL PROJECT	SHEET No.	TOTAL SHEETS
11	SD	54,805	1.8,5.5/9.4	629	635

Tony Skreslet 8-25-11
REGISTERED CIVIL ENGINEER DATE

12-5-11
PLANS APPROVAL DATE

REGISTERED PROFESSIONAL ENGINEER TONY SKRESLET No. C50676 Exp. 09-30-11 CIVIL STATE OF CALIFORNIA

The State of California or its officers or agents shall not be responsible for the accuracy or completeness of electronic copies of this plan sheet.

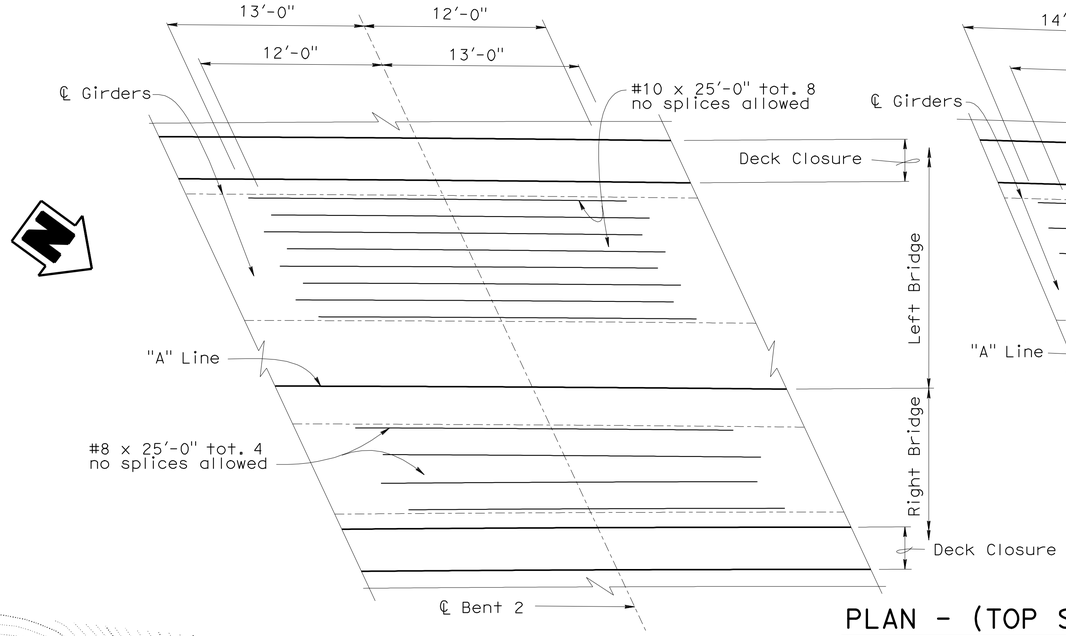

PLAN - (TOP SLAB)

No Scale

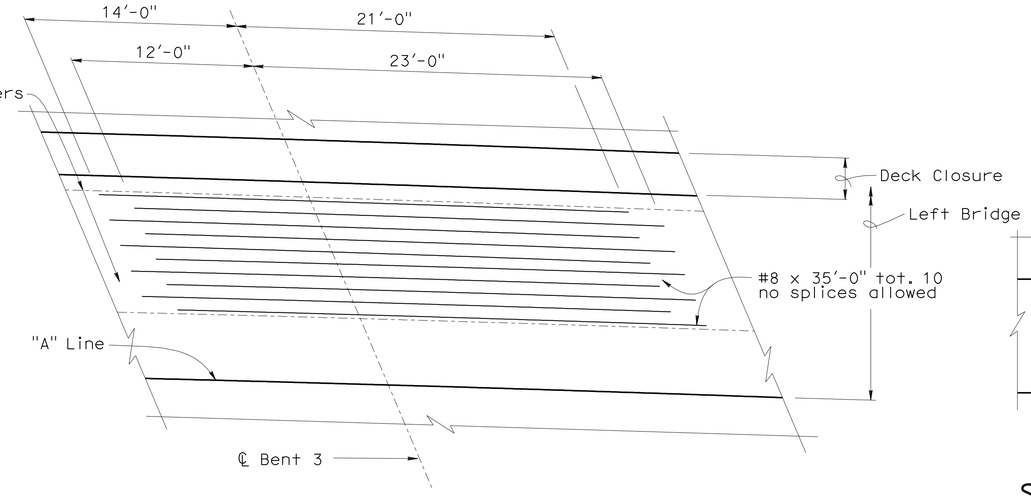

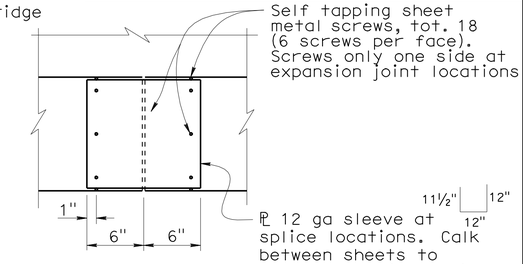

SECTION D-D

1½" = 1'-0"

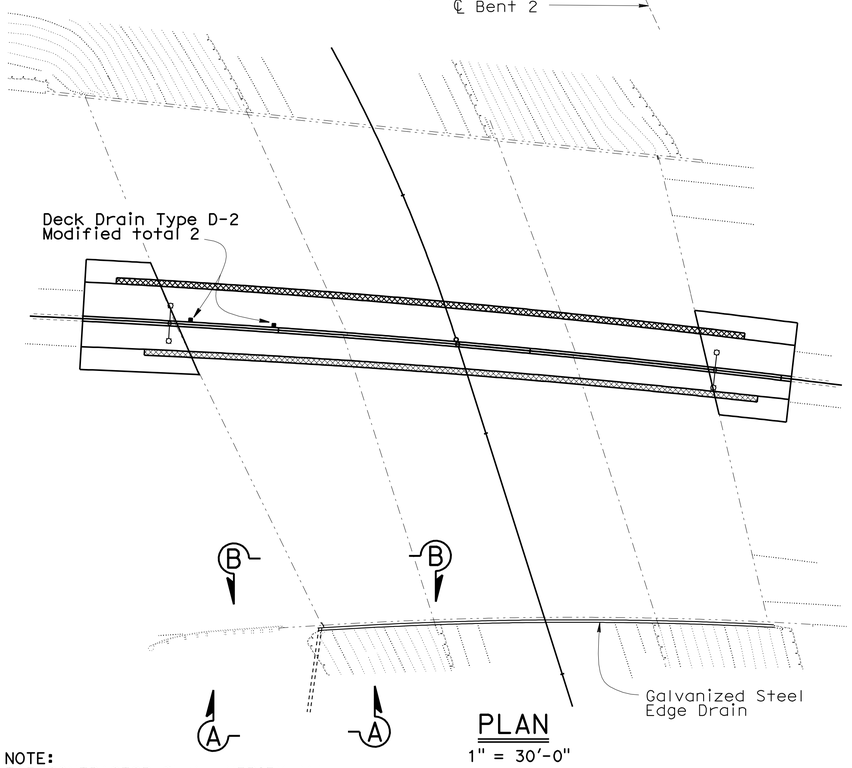

PLAN

1" = 30'-0"

NOTES:

1. Drown Drains required at Abutment 1 only, total 1
   All steel pipe to be 10" x 0.134" wall thickness and shall be galvanized. Fittings and bends shall have a minimum wall thickness of ⅛". All joints or connections to be connected by a steel pipe sleeve and to be smooth throughout inside of pipe except as noted. All bends to be 2" radius measured along centerline of pipe. All bends to be smooth
2. For Drainage Details not shown see Standard Plan, DECK DRAINS TYPES D-1 AND D-2
3. All metal to be hot dipped galvanized after fabricating
4. For 'View E-E' and 'Detail A', see "MISCELLANEOUS DETAILS NO. 2" sheet

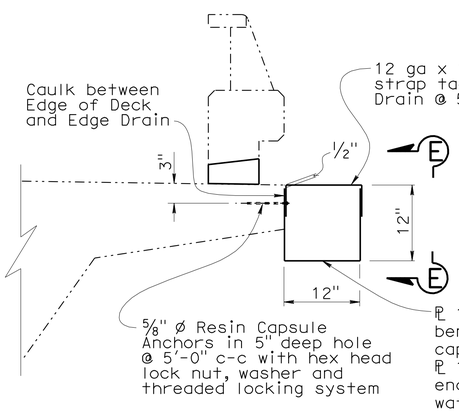

SECTION C-C

1" = 1'-0"

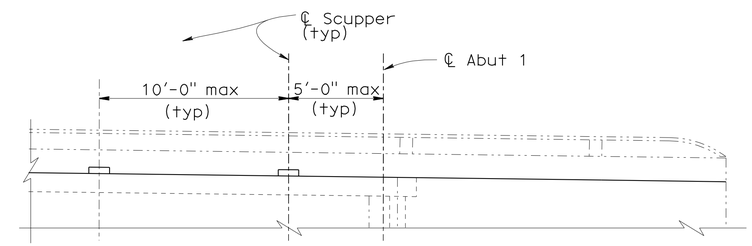

SECTION B-B

¼" = 1'-0"

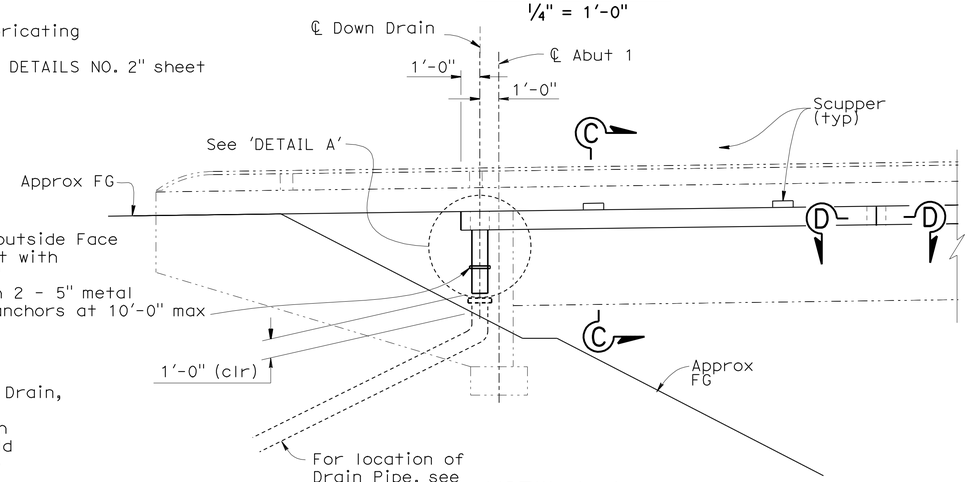

VIEW A-A

¼" = 1'-0"

NOTE:
THE CONTRACTOR SHALL VERIFY ALL CONTROLLING FIELD DIMENSIONS BEFORE ORDERING OR FABRICATING ANY MATERIAL.

	BY	CHECKED
DESIGN	V. Ramakrishnan	J. lane
DETAILS	L. Xiong	J. lane
QUANTITIES	V. Ramakrishnan	J. lane

STATE OF CALIFORNIA
DEPARTMENT OF TRANSPORTATION

DIVISION OF ENGINEERING SERVICES
STRUCTURE DESIGN
DESIGN BRANCH 14

BRIDGE NO. 57-0640
POST MILE 9.21

EUCLID AVENUE UNDERCROSSING (WIDEN)
MISCELLANEOUS DETAILS NO. 1

STRUCTURES DESIGN DETAIL SHEET (ENGLISH) (REV. 09-01-10)

ORIGINAL SCALE IN INCHES FOR REDUCED PLANS 0 1 2 3

UNIT: 3613
PROJECT NUMBER & PHASE: 11000200501
CONTRACT NO.: 11-2T1811

DISREGARD PRINTS BEARING EARLIER REVISION DATES

REVISION DATES: 08-16-11 08-19-11 10-20-11 08-31-11

SHEET 15 OF 21

FILE => g_57-0640-u-miscdetno1.dgn

USERNAME => s124496 DATE PLOTTED => 09-DEC-2011 TIME PLOTTED => 13:22

DIST	COUNTY	ROUTE	POST MILES TOTAL PROJECT	SHEET No.	TOTAL SHEETS
11	SD	54,805	1.8,5.5/9.4	630	635

Tony Skreslet
REGISTERED CIVIL ENGINEER 8-25-11 DATE

12-5-11
PLANS APPROVAL DATE

REGISTERED PROFESSIONAL ENGINEER TONY SKRESLET No. C50676 Exp. 09-30-11 CIVIL STATE OF CALIFORNIA

The State of California or its officers or agents shall not be responsible for the accuracy or completeness of electronic copies of this plan sheet.

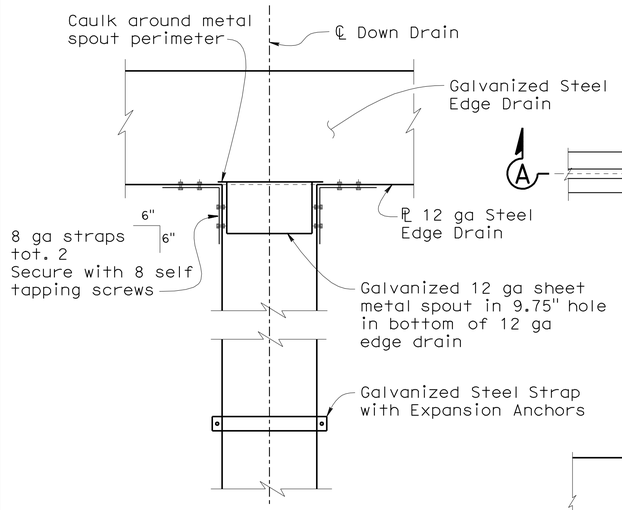

DETAIL A
1½" = 1'-0"

NOTE: For location of 'DETAILS A', see "MISCELLANEOUS DETAILS NO. 1" sheet

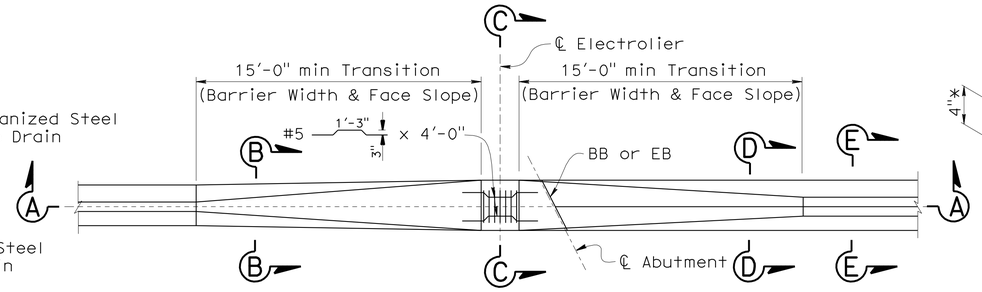

NOTE: Electrolier and Base Plate not shown

PLAN
¼" = 1'-0"

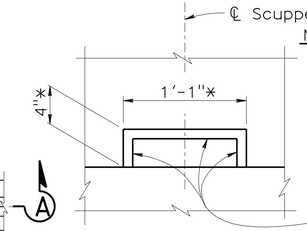

Note:
Sawcut and remove existing concrete and reinforcement within limits of Scupper Opening

* At Exterior Face of Barrier

VIEW E-E
1½" = 1'-0"

NOTE: for location of 'VIEW E-E', see "MISCELLANEOUS DETAILS NO. 1" sheet

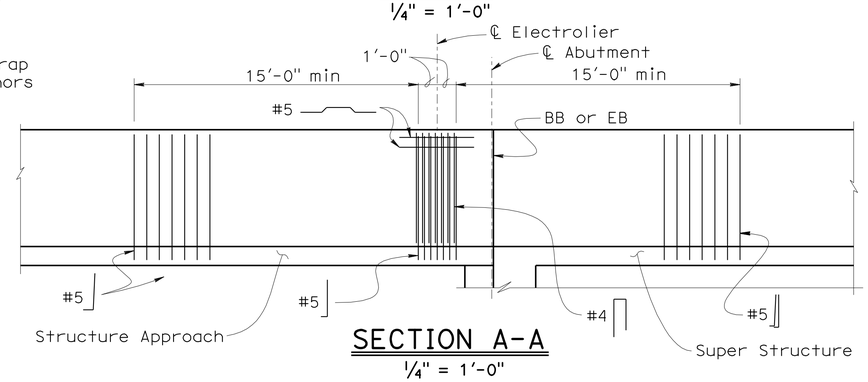

SECTION A-A
¼" = 1'-0"

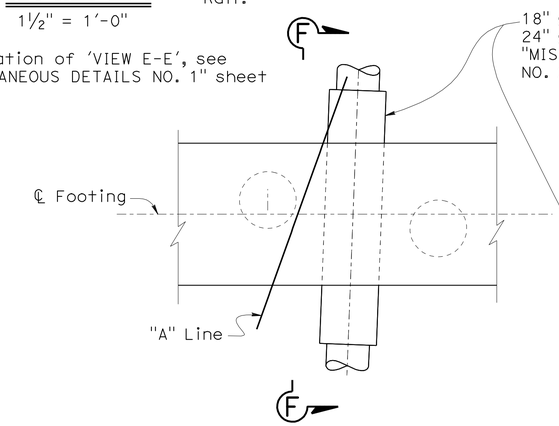

FOOTING PLAN
No Scale

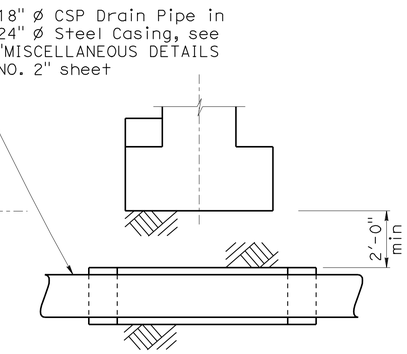

SECTION F-F
No Scale

ABUTMENT 4 DOWN DRAIN DETAILS

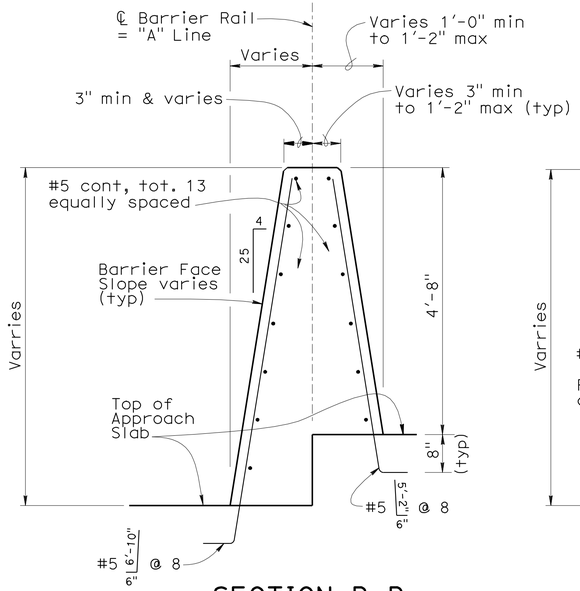

SECTION B-B
¾" = 1'-0"

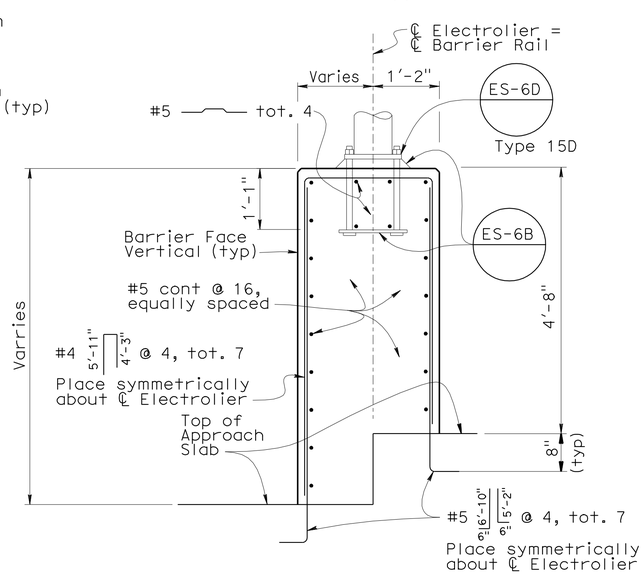

SECTION C-C
¾" = 1'-0"

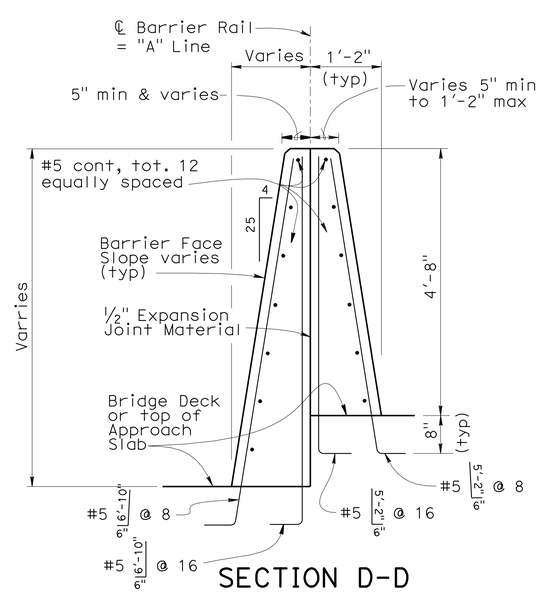

SECTION D-D
¾" = 1'-0"

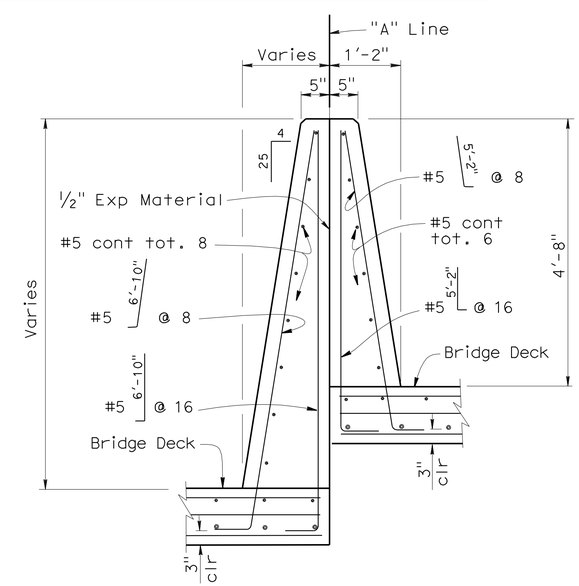

SECTION E-E
¾" = 1'-0"

NOTE:
THE CONTRACTOR SHALL VERIFY ALL CONTROLLING FIELD DIMENSIONS BEFORE ORDERING OR FABRICATING ANY MATERIAL.

ELECTROLIER/CONCRETE BARRIER TYPE 60GA MODIFIED DETAILS

	BY	CHECKED
DESIGN	T. Skreslet	K. C. Liu
DETAILS	L. Xiong	K. C. Liu
QUANTITIES	V. Ramakrishnan	J. Lane

STATE OF CALIFORNIA
DEPARTMENT OF TRANSPORTATION

DIVISION OF ENGINEERING SERVICES
STRUCTURE DESIGN
DESIGN BRANCH 14

BRIDGE NO. 57-0640
POST MILE 9.21

EUCLID AVENUE UNDERCROSSING (WIDEN)
MISCELLANEOUS DETAILS NO.2

STRUCTURES DESIGN DETAIL SHEET (ENGLISH) (REV. 09-01-10)

ORIGINAL SCALE IN INCHES FOR REDUCED PLANS 0 1 2 3

UNIT: 3613
PROJECT NUMBER & PHASE: 11000200501
CONTRACT NO.: 11-2T1811

DISREGARD PRINTS BEARING EARLIER REVISION DATES

REVISION DATES: 10-05-11 10-20-11 09-14-11 09-19-11

SHEET 16 OF 21

FILE => g_57-0640-u-miscdetno2.dgn

USERNAME => s124496 DATE PLOTTED => 09-DEC-2011 TIME PLOTTED => 13:22

DIST	COUNTY	ROUTE	POST MILES TOTAL PROJECT	SHEET No	TOTAL SHEETS
11	SD	54,805	1.8,5.5/9.4	631	635

REGISTERED CIVIL ENGINEER 8-1-11

12-5-11
PLANS APPROVAL DATE

REGISTERED PROFESSIONAL ENGINEER
David T-M Liao
No. C59838
Exp. 12-31-11
CIVIL
STATE OF CALIFORNIA

The State of California or its officers or agents shall not be responsible for the accuracy or completeness of electronic copies of this plan sheet.

This LOTB sheet was prepared in accordance with the Caltrans Soil & Rock Logging, Classification, & Presentation Manual (June 2007).

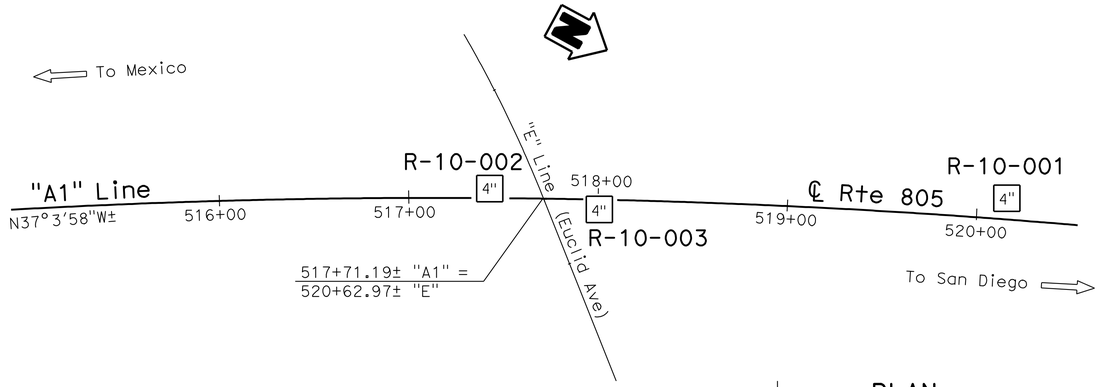

BENCH MARK

WP 495+00, point on centerline of I-805 at station 495+00 "A1 Line".

Elev: 66.61′
NAVD88 (vertical)
CCS83 (horizontal)

PLAN

1"=40′

Note:

Ground water was encountered during the 2010 subsurface investigation in boring R-10-001. No ground water elevation data was obtained from Borings R-10-002 and R-10-003 due to those borings being located in active traffic lanes.

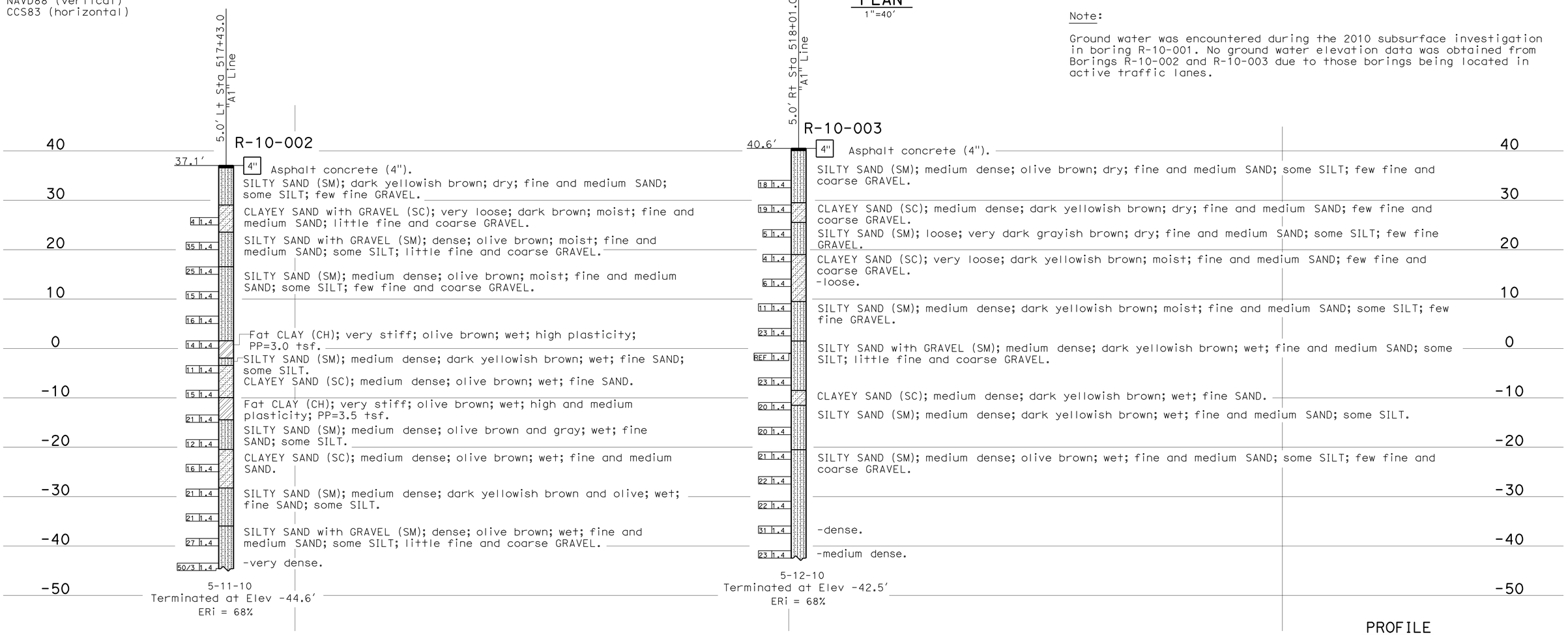

ENGINEERING SERVICES	MATERIALS AND GEOTECHNICAL SERVICES	STATE OF CALIFORNIA DEPARTMENT OF TRANSPORTATION	DIVISION OF ENGINEERING SERVICES STRUCTURE DESIGN DESIGN BRANCH X	BRIDGE NO. 57-0640 POST MILE 9.19	EUCLID AVE UC (WIDEN) LOG OF TEST BORINGS 1 OF 5
FUNCTIONAL SUPERVISOR NAME: M. DeSalvatore	DRAWN BY: W. Tang 12/10 CHECKED BY: E. Neupert	FIELD INVESTIGATION BY: T-M Liao			

OGS CIVIL LOG OF TEST BORINGS SHEET

ORIGINAL SCALE IN INCHES FOR REDUCED PLANS 0 1 2 3

UNIT: 3643
PROJECT NUMBER & PHASE: 11000200501 CONTRACT NO.: 11-2T1811

DISREGARD PRINTS BEARING EARLIER REVISION DATES 03-14-11 07-08-11

SHEET 17 OF 21

FILE => g_57-0640-z-lotb_1of5.dgn

USERNAME => s124496 DATE PLOTTED => 09-DEC-2011 TIME PLOTTED => 13:22

DIST	COUNTY	ROUTE	POST MILES TOTAL PROJECT	SHEET No	TOTAL SHEETS
11	SD	54,805	1.8,5.5/9.4	632	635

REGISTERED CIVIL ENGINEER 8-1-11

12-5-11
PLANS APPROVAL DATE

REGISTERED PROFESSIONAL ENGINEER David T-M Liao No. C59838 Exp. 12-31-11 CIVIL STATE OF CALIFORNIA

The State of California or its officers or agents shall not be responsible for the accuracy or completeness of electronic copies of this plan sheet.

This LOTB sheet was prepared in accordance with the Caltrans Soil & Rock Logging, Classification, & Presentation Manual (June 2007).

FOR PLAN VIEW, SEE
"LOG OF TEST BORINGS 1 OF 5"

9.4' Lt Sta 520+16.0
"A1" Line

R-10-001

73.8'

4" Asphalt concrete (4").

SILTY SAND with GRAVEL (SM); dense; moderate olive brown and olive gray; dry; medium SAND; some SILT; little fine and coarse GRAVEL (Fill).

-medium dense.

-2" Asphalt concrete fragment.
-loose.

SILTY SAND with GRAVEL (SM); dense; light brown; moist; medium SAND; some SILT; little fine and coarse GRAVEL.

-medium dense.

SILTY SAND (SM); medium dense; light olive brown and light brown; moist; fine SAND; some SILT.

SILTY SAND (SM); medium dense; light brown; moist; medium SAND; some SILT; trace fine GRAVEL.

-very dense.
-from Elev 16.5' to 12.3', about 10% IGNEOUS COBBLES; slightly weathered; very hard.
-medium dense.

SILTY SAND (SM); medium dense; pale oilve and olive gray; moist; fine and medium SAND; some SILT.

GWS Elev 4.3'
5-4-10

Well-graded GRAVEL with SAND (GW); dense; light brown and dark gray; wet; medium SAND; GRAVEL rounded and subrounded.

SILT with SAND (ML); medium dense; moderate brown; wet; fine SAND.

SILTY SAND with GRAVEL (SM); dense; dusky yellow; wet; fine and medium SAND; some SILT; little fine and coarse GRAVEL.

-dense.

SILT with SAND (ML); medium dense; moderate brown; wet; fine SAND.

SILTY SAND (SM); medium dense; moderate yellowish brown; wet; fine SAND; some SILT.

-dense.

4-14-10
Terminated at Elev -47.7'
ERi = 68%

70 60 50 40 30 20 10 0 -10 -20 -30 -40 -50 -60

520+00 521+00

ENGINEERING SERVICES	MATERIALS AND GEOTECHNICAL SERVICES	STATE OF CALIFORNIA DEPARTMENT OF TRANSPORTATION	DIVISION OF ENGINEERING SERVICES STRUCTURE DESIGN DESIGN BRANCH X	BRIDGE NO. 57-0640 POST MILE 9.19	EUCLID AVE UC (WIDEN) LOG OF TEST BORINGS 2 OF 5
FUNCTIONAL SUPERVISOR NAME: M. DeSalvatore	DRAWN BY: W. Tang 12/10 CHECKED BY: E. Neupert	FIELD INVESTIGATION BY: T-M Liao / J. Klamecki			

OGS CIVIL LOG OF TEST BORINGS SHEET

ORIGINAL SCALE IN INCHES FOR REDUCED PLANS 0 1 2 3

UNIT: 3643
PROJECT NUMBER & PHASE: 11000200501 CONTRACT NO.: 11-2T1811

DISREGARD PRINTS BEARING EARLIER REVISION DATES

REVISION DATES 03-14-11 07-08-11 07-20-11

SHEET 18 OF 21

FILE => g_57-0640-z-lotb_2of5.dgn

USERNAME => s124496 DATE PLOTTED => 09-DEC-2011 TIME PLOTTED => 13:22

DIST	COUNTY	ROUTE	POST MILES TOTAL PROJECT	SHEET No	TOTAL SHEETS
11	SD	54,805	1.8,5.5/9.4	633	635

REGISTERED CIVIL ENGINEER 8-1-11

12-5-11
PLANS APPROVAL DATE

The State of California or its officers or agents shall not be responsible for the accuracy or completeness of electronic copies of this plan sheet.

REGISTERED PROFESSIONAL ENGINEER
David T-M Liao
No. C59838
Exp. 12-31-11
CIVIL
STATE OF CALIFORNIA

REFERENCE: CALTRANS SOIL & ROCK LOGGING, CLASSIFICATION, AND PRESENTATION MANUAL (JUNE 2007)

CEMENTATION

Description	Criteria
Weak	Crumbles or breaks with handling or little finger pressure.
Moderate	Crumbles or breaks with considerable finger pressure.
Strong	Will not crumble or break with finger pressure.

CONSISTENCY OF COHESIVE SOILS

Description	Unconfined Compressive Strength (tsf)	Pocket Penetrometer Measurement (tsf)	Torvane Measurement (tsf)	Field Approximation
Very Soft	< 0.25	< 0.25	< 0.12	Easily penetrated several inches by fist
Soft	0.25 to 0.50	0.25 to 0.50	0.12 to 0.25	Easily penetrated several inches by thumb
Medium Stiff	0.50 to 1.0	0.50 to 1.0	0.25 to 0.50	Penetrated several inches by thumb with moderate effort
Stiff	1 to 2	1 to 2	0.50 to 1.0	Readily indented by thumb but penetrated only with great effort
Very Stiff	2 to 4	2 to 4	1.0 to 2.0	Readily indented by thumbnail
Hard	> 4.0	> 4.0	> 2.0	Indented by thumbnail with difficulty

BOREHOLE IDENTIFICATION

Symbol	Hole Type	Description
Size	A	Auger Boring
Size	R P	Rotary drilled boring Rotary percussion boring (air)
Size	R	Rotary drilled diamond core
Size	HD HA	Hand driven (1-inch soil tube) Hand Auger
●	D	Dynamic Cone Penetration Boring
▲	CPT	Cone Penetration Test (ASTM D 5778-95)
⬚	O	Other

Note: Size in inches.

PLASTICITY OF FINE-GRAINED SOILS

Description	Criteria
Nonplastic	A 1/8-inch thread cannot be rolled at any water content.
Low	The thread can barely be rolled and the lump cannot be formed when drier than the plastic limit.
Medium	The thread is easy to roll and not much time is required to reach the plastic limit. The thread cannot be rerolled after reaching the plastic limit. The lump crumbles when drier than the plastic limit.
High	It takes considerable time rolling and kneading to reach the plastic limit. The thread can be rerolled several times after reaching the plastic limit. The lump can be formed without crumbling when drier than the plastic limit.

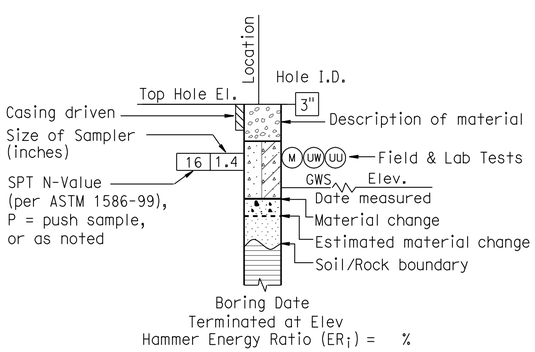

ROTARY BORING

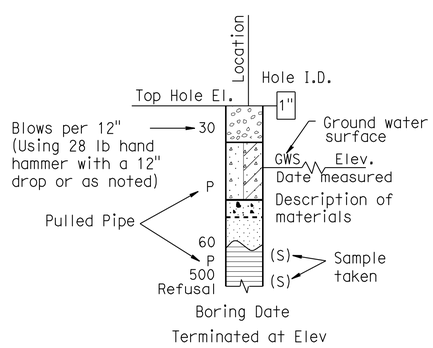

HAND BORING

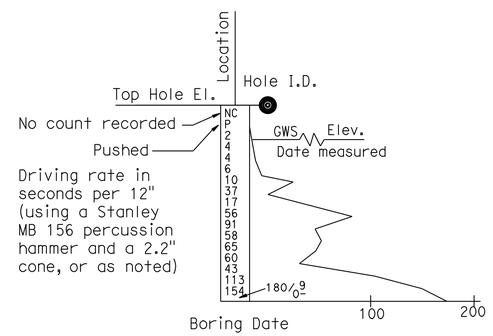

DYNAMIC CONE PENETRATION BORING

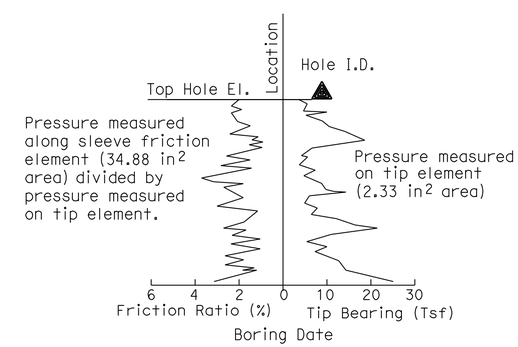

CONE PENETRATION TEST (CPT) SOUNDING

ENGINEERING SERVICES	MATERIALS AND GEOTECHNICAL SERVICES	STATE OF CALIFORNIA DEPARTMENT OF TRANSPORTATION	DIVISION OF ENGINEERING SERVICES STRUCTURE DESIGN DESIGN BRANCH X	BRIDGE NO. 57-0640 POST MILE 9.19	EUCLID AVE UC (WIDEN) LOG OF TEST BORINGS 3 OF 5
	PREPARED BY: W. Tang 12/10				

GS LOTB SOIL LEGEND

ORIGINAL SCALE IN INCHES FOR REDUCED PLANS 0 1 2 3

UNIT: 3643
PROJECT NUMBER & PHASE: 11000200501 CONTRACT NO.: 11-2T1811

DISREGARD PRINTS BEARING EARLIER REVISION DATES

REVISION DATES | SHEET 19 OF 21

FILE => g_57-0640-z-lotb_3of5.dgn

USERNAME => s1244196 DATE PLOTTED => 09-DEC-2011 TIME PLOTTED => 13:22

REFERENCE: CALTRANS SOIL & ROCK LOGGING, CLASSIFICATION, AND PRESENTATION MANUAL (JUNE 2007)

DIST	COUNTY	ROUTE	POST MILES TOTAL PROJECT	SHEET No	TOTAL SHEETS
11	SD	54,805	1.8,5.5/9.4	634	635

REGISTERED CIVIL ENGINEER 8-1-11

12-5-11
PLANS APPROVAL DATE

REGISTERED PROFESSIONAL ENGINEER David T-M Liao No. C59838 Exp. 12-31-11 CIVIL STATE OF CALIFORNIA

The State of California or its officers or agents shall not be responsible for the accuracy or completeness of electronic copies of this plan sheet.

GROUP SYMBOLS AND NAMES

Graphic/Symbol	Group Names	Graphic/Symbol	Group Names
GW	Well-graded GRAVEL Well-graded GRAVEL with SAND	CL	Lean CLAY Lean CLAY with SAND Lean CLAY with GRAVEL SANDY lean CLAY SANDY lean CLAY with GRAVEL GRAVELLY lean CLAY GRAVELLY lean CLAY with SAND
GP	Poorly graded GRAVEL Poorly graded GRAVEL with SAND		
GW-GM	Well-graded GRAVEL with SILT Well-graded GRAVEL with SILT and SAND	CL-ML	SILTY CLAY SILTY CLAY with SAND SILTY CLAY with GRAVEL SANDY SILTY CLAY SANDY SILTY CLAY with GRAVEL GRAVELLY SILTY CLAY GRAVELLY SILTY CLAY with SAND
GW-GC	Well-graded GRAVEL with CLAY (or SILTY CLAY) Well-graded GRAVEL with CLAY and SAND (or SILTY CLAY and SAND)		
GP-GM	Poorly graded GRAVEL with SILT Poorly graded GRAVEL with SILT and SAND	ML	SILT SILT with SAND SILT with GRAVEL SANDY SILT SANDY SILT with GRAVEL GRAVELLY SILT GRAVELLY SILT with SAND
GP-GC	Poorly graded GRAVEL with CLAY (or SILTY CLAY) Poorly graded GRAVEL with CLAY and SAND (or SILTY CLAY and SAND)		
GM	SILTY GRAVEL SILTY GRAVEL with SAND	OL	ORGANIC lean CLAY ORGANIC lean CLAY with SAND ORGANIC lean CLAY with GRAVEL SANDY ORGANIC lean CLAY SANDY ORGANIC lean CLAY with GRAVEL GRAVELLY ORGANIC lean CLAY GRAVELLY ORGANIC lean CLAY with SAND
GC	CLAYEY GRAVEL CLAYEY GRAVEL with SAND		
GC-GM	SILTY, CLAYEY GRAVEL SILTY, CLAYEY GRAVEL with SAND	OL	ORGANIC SILT ORGANIC SILT with SAND ORGANIC SILT with GRAVEL SANDY ORGANIC SILT SANDY ORGANIC SILT with GRAVEL GRAVELLY ORGANIC SILT GRAVELLY ORGANIC SILT with SAND
SW	Well-graded SAND Well-graded SAND with GRAVEL		
SP	Poorly graded SAND Poorly graded SAND with GRAVEL	CH	Fat CLAY Fat CLAY with SAND Fat CLAY with GRAVEL SANDY fat CLAY SANDY fat CLAY with GRAVEL GRAVELLY fat CLAY GRAVELLY fat CLAY with SAND
SW-SM	Well-graded SAND with SILT Well-graded SAND with SILT and GRAVEL		
SW-SC	Well-graded SAND with CLAY (or SILTY CLAY) Well-graded SAND with CLAY and GRAVEL (or SILTY CLAY and GRAVEL)	MH	Elastic SILT Elastic SILT with SAND Elastic SILT with GRAVEL SANDY elastic SILT SANDY elastic SILT with GRAVEL GRAVELLY elastic SILT GRAVELLY elastic SILT with SAND
SP-SM	Poorly graded SAND with SILT Poorly graded SAND with SILT and GRAVEL		
SP-SC	Poorly graded SAND with CLAY (or SILTY CLAY) Poorly graded SAND with CLAY and GRAVEL (or SILTY CLAY and GRAVEL)	OH	ORGANIC fat CLAY ORGANIC fat CLAY with SAND ORGANIC fat CLAY with GRAVEL SANDY ORGANIC fat CLAY SANDY ORGANIC fat CLAY with GRAVEL GRAVELLY ORGANIC fat CLAY GRAVELLY ORGANIC fat CLAY with SAND
SM	SILTY SAND SILTY SAND with GRAVEL		
SC	CLAYEY SAND CLAYEY SAND with GRAVEL	OH	ORGANIC elastic SILT ORGANIC elastic SILT with SAND ORGANIC elastic SILT with GRAVEL SANDY ORGANIC elastic SILT SANDY ORGANIC elastic SILT with GRAVEL GRAVELLY ORGANIC elastic SILT GRAVELLY ORGANIC elastic SILT with SAND
SC-SM	SILTY, CLAYEY SAND SILTY, CLAYEY SAND with GRAVEL		
PT	PEAT	OL/OH	ORGANIC SOIL ORGANIC SOIL with SAND ORGANIC SOIL with GRAVEL SANDY ORGANIC SOIL SANDY ORGANIC SOIL with GRAVEL GRAVELLY ORGANIC SOIL GRAVELLY ORGANIC SOIL with SAND
	COBBLES COBBLES and BOULDERS BOULDERS		

FIELD AND LABORATORY TESTING

- (C) Consolidation (ASTM D 2435)
- (CL) Collapse Potential (ASTM D 5333)
- (CP) Compaction Curve (CTM 216)
- (CR) Corrosivity Testing (CTM 643, CTM 422, CTM 417)
- (CU) Consolidated Undrained Triaxial (ASTM D 4767)
- (DS) Direct Shear (ASTM D 3080)
- (EI) Expansion Index (ASTM D 4829)
- (M) Moisture Content (ASTM D 2216)
- (OC) Organic Content-% (ASTM D 2974)
- (P) Permeability (CTM 220)
- (PA) Particle Size Analysis (ASTM D 422)
- (PI) Plasticity Index (AASHTO T 90) Liquid Limit (AASHTO T 89)
- (PL) Point Load Index (ASTM D 5731)
- (PM) Pressure Meter
- (PP) Pocket Penetrometer
- (R) R-Value (CTM 301)
- (SE) Sand Equivalent (CTM 217)
- (SG) Specific Gravity (AASHTO T 100)
- (SL) Shrinkage Limit (ASTM D 427)
- (SW) Swell Potential (ASTM D 4546)
- (TV) Pocket Torvane
- (UC) Unconfined Compression-Soil (ASTM D 2166) Unconfined Compression-Rock (ASTM D 2938)
- (UU) Unconsolidated Undrained Triaxial (ASTM D 2850)
- (UW) Unit Weight (ASTM D 4767)
- (VS) Vane Shear (AASHTO T 223)

APPARENT DENSITY OF COHESIONLESS SOILS

Description	SPT N_{60} (Blows / 12 inches)
Very loose	0 - 4
Loose	5 - 10
Medium Dense	11 - 30
Dense	31 - 50
Very Dense	> 50

MOISTURE

Description	Criteria
Dry	Absence of moisture, dusty, dry to the touch
Moist	Damp but no visible water
Wet	Visible free water, usually soil is below water table

PERCENT OR PROPORTION OF SOILS

Description	Criteria
Trace	Particles are present but estimated to be less than 5%
Few	5 to 10%
Little	15 to 25%
Some	30 to 45%
Mostly	50 to 100%

PARTICLE SIZE

Description		Size
Boulder		> 12"
Cobble		3" to 12"
Gravel	Coarse	3/4" to 3"
	Fine	No. 4 to 3/4"
Sand	Coarse	No. 10 to No. 4
	Medium	No. 40 to No. 10
	Fine	No. 200 to No. 40

ENGINEERING SERVICES

MATERIALS AND GEOTECHNICAL SERVICES

PREPARED BY: W. Tang 12/10

STATE OF CALIFORNIA DEPARTMENT OF TRANSPORTATION

DIVISION OF ENGINEERING SERVICES STRUCTURE DESIGN
DESIGN BRANCH X

BRIDGE NO. 57-0640
POST MILE 9.19

EUCLID AVE UC (WIDEN)
LOG OF TEST BORINGS 4 OF 5

GS LOTB SOIL LEGEND

ORIGINAL SCALE IN INCHES FOR REDUCED PLANS 0 1 2 3

UNIT: 3643
PROJECT NUMBER & PHASE: 11000200501
CONTRACT NO.: 11-2T1811

DISREGARD PRINTS BEARING EARLIER REVISION DATES

REVISION DATES

SHEET 20 OF 21

FILE => g_57-0640-z-lotb_4of5.dgn

USERNAME => s124496 DATE PLOTTED => 09-DEC-2011 TIME PLOTTED => 13:22

FED. ROAD DIV. NO.	STATE	F.A. PROJECT NO.	SHEET NO.	TOTAL SHEETS
7	CALIF.			

DIST.	COUNTY	ROUTE	SECTION	SHEET NO.	TOTAL SHEETS
11	SD.	[illegible]	[illegible]	331	395

DATE APPROVED: NOVEMBER 8, 1971

BENCH MARK

B.M. "B.L. 498-1" Elev. 38.85
2" I.P. with brass disc set on W. shoulder of Ridgeway Dr. at curve. Witness post set 119.35' Lt. 509 + 20.20 P.O.C. "A" 197.72' Lt. 510 + 17.86 P.O.C. "E".

B.M. "B.L. 898" Elev. 68.18
2" I.P. with brass disc. set on crest of ridge behind 2103 32nd St. may be reached from Sweetwater Rd. either on 32nd or Shelby. Set witness post 1' north of point 37.92 Rt. 504 + 24.58 P.O.C. "A" 317.29 Rt. 508 + 96.99 P.O.C. "E".

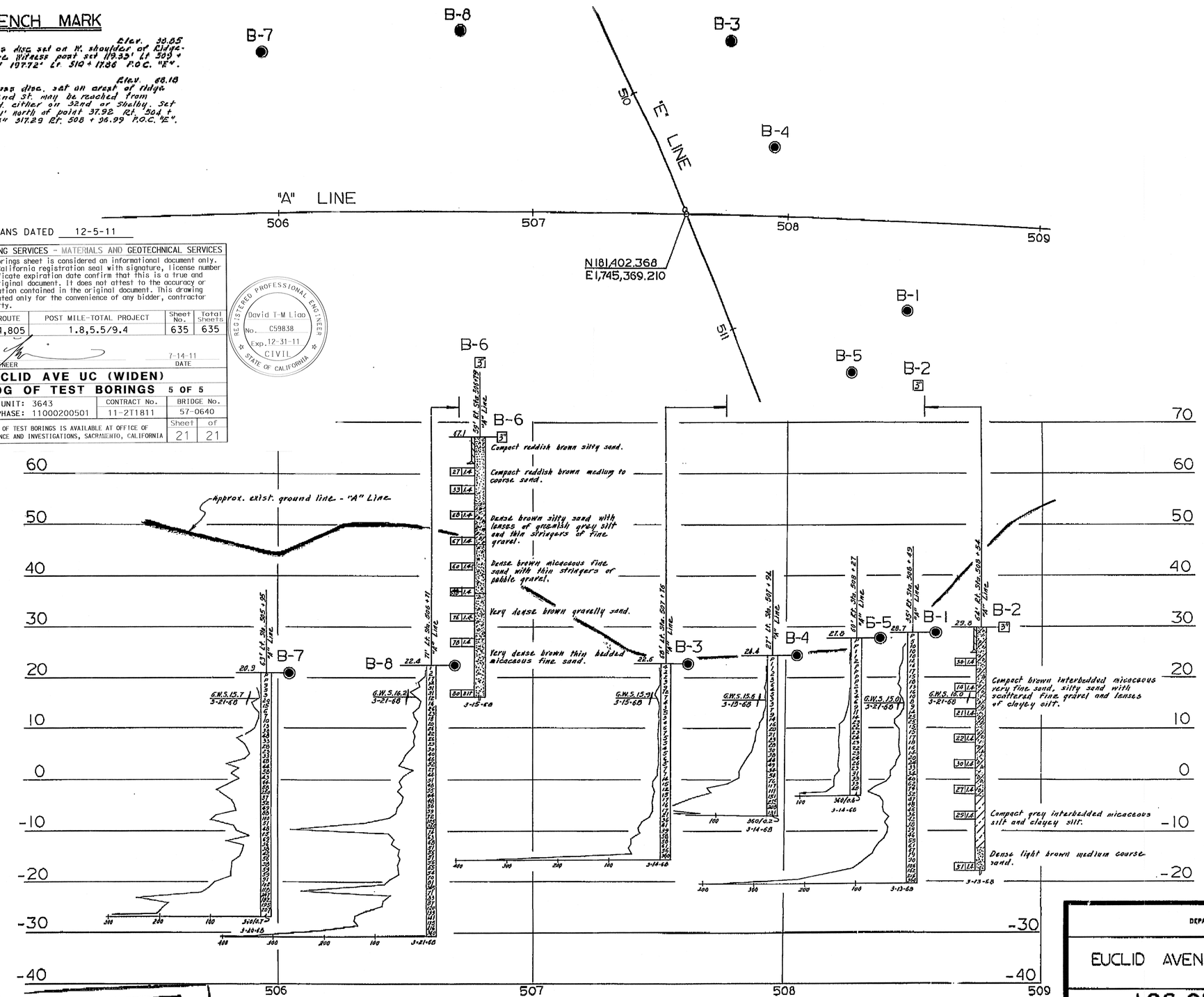

TO ACCOMPANY PLANS DATED 12-5-11

DIVISION OF ENGINEERING SERVICES - MATERIALS AND GEOTECHNICAL SERVICES

As-Built Log of Test Borings sheet is considered an informational document only. As such, the State of California registration seal with signature, license number and registration certificate expiration date confirm that this is a true and accurate copy of the original document. It does not attest to the accuracy or validity of the information contained in the original document. This drawing is available and presented only for the convenience of any bidder, contractor or other interested party.

DIST.	COUNTY	ROUTE	POST MILE-TOTAL PROJECT	Sheet No.	Total Sheets
11	SD	54,805	1.8,5.5/9.4	635	635

REGISTERED CIVIL ENGINEER — DATE 7-14-11

REGISTERED PROFESSIONAL ENGINEER — David T-M Liao — No. C59838 — Exp. 12-31-11 — CIVIL — STATE OF CALIFORNIA

EUCLID AVE UC (WIDEN)

LOG OF TEST BORINGS 5 OF 5

UNIT: 3643 — CONTRACT No. — BRIDGE No. 57-0640

PROJECT NUMBER & PHASE: 11000200501 — 11-2T1811

NOTE: A COPY OF THIS LOG OF TEST BORINGS IS AVAILABLE AT OFFICE OF STRUCTURE MAINTENANCE AND INVESTIGATIONS, SACRAMENTO, CALIFORNIA — Sheet 21 of 21

PLAN

Scale: 1" = 20'

PROFILE

Scale: Vert. 1" = 10'
Horiz. 1" = 20'

NO CHANGES
AS BUILT
CORRECTIONS BY G.F. CARVER
CONTRACT NO. 11-110184
DATE 5-30-74
CMW 5/29/75

LEGEND OF BORING OPERATIONS

Penetrometer; 2¼" Cone Penetrometer; Sampler Boring (Dry); Sampler Boring (Wet); Rotary Boring (Wet); Auger Boring (Dry); Jet Boring; Core Boring; Test Pit

Penetrometer (Dry); Penetrometer (Wet); Rotary Boring (Dry)

Penetrometer

Rotary Boring

1" Soil Tube

LEGEND OF EARTH MATERIALS

Gravel; Sand; Silt; Clay; Sandy Clay or Clayey Sand; Sandy Silt or Silty Sand; Silty Clay or Clayey Silt; Peat and/or Organic Matter; Fill Material; Igneous Rock; Sedimentary Rock; Metamorphic Rock

CLASSIFICATION OF MATERIAL BASED ON STANDARD GRADE SIZE LIMITS

Diagram showing the basis for estimates of grade size distribution and to determine classification of class names. If gravel is present in appreciable quantities (10% or more) the terms "gravelly" may be added to the class name, e.g. "gravelly sand". The terms "coarse", "medium" and "fine" modify the class name, e.g. "medium sand". For silt and gravel, refer to standard grade size limits.

NOTE: Classification of earth material as shown on this sheet is based upon field inspection and is not to be construed to imply mechanical analysis.

FIELD STUDY	by O. Mikes	3-20-68
DRAWN	by J. Law	3-26-68
CHECKED	by O. Mikes	5-9-68

Approval Recommended: Engineering Geologist

BRIDGE DEPARTMENT
ENGINEERING GEOLOGY SECTION

331

AS BUILT PLANS
Contract No. 11-110184
Date Completed 4-30-75
Document No. A000 6264

STATE OF CALIFORNIA
DEPARTMENT OF PUBLIC WORKS
DIVISION OF HIGHWAYS

EUCLID AVENUE UNDERCROSSING

LOG OF TEST BORINGS

SCALE As Noted	BRIDGE 57-0640R/L	FILE	DRAWING

SHT. 16 OF 16

Disregard prints bearing earlier numbers → PREL. DRAWING No. PR-

FILENAME => g_57-0640-z_lotb_5of5.tif