Dist	COUNTY	ROUTE	POST MILES TOTAL PROJECT	SHEET No.	TOTAL SHEETS
11	SD	52,67	17.3/17.5 R1.4/R2.4	1	48

STPLN-6211(103)

STATE OF CALIFORNIA

DEPARTMENT OF TRANSPORTATION

PROJECT PLANS FOR CONSTRUCTION ON

STATE HIGHWAY

IN SAN DIEGO COUNTY IN SANTEE ON ROUTE 52 FROM MAGNOLIA AVENUE UNDERCROSSING TO 0.2 MILE EAST AND ON ROUTE 67 FROM 0.6 MILE SOUTH TO 0.4 MILE NORTH OF PROSPECT AVENUE OVERCROSSING

TO BE SUPPLEMENTED BY STANDARD PLANS DATED MAY 2006

INDEX OF PLANS

Sheet No.	Description
1	Title and Location Map
2-8	Temporary Water Pollution Control Plan and Quantities
9-10	Plant List
11	Plant Removal Plan
12-17	Planting Plan
18-23	Irrigation Plan
24-27	Landscape Details
28-31	Irrigation Quantities
32-37	Existing Utilities Plan
38	Construction Area Signs
39-48	Revised and New Standard Plan

THE STANDARD PLANS LIST APPLICABLE TO THIS CONTRACT IS INCLUDED IN THE NOTICE TO BIDDERS AND SPECIAL PROVISIONS BOOK.

LOCATION MAP

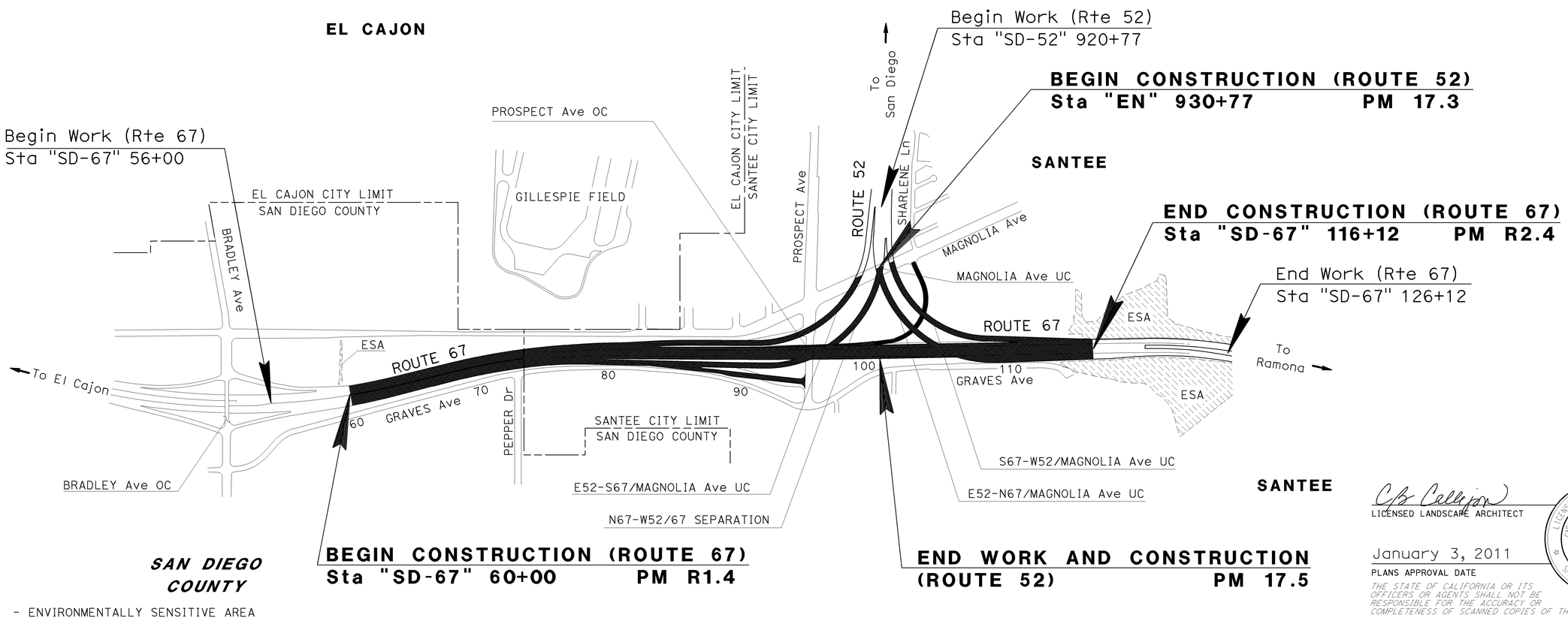

ESA - ENVIRONMENTALLY SENSITIVE AREA

THE CONTRACTOR SHALL POSSESS THE CLASS (OR CLASSES) OF LICENSE AS SPECIFIED IN THE "NOTICE TO BIDDERS."

NO SCALE

LICENSED LANDSCAPE ARCHITECT

January 3, 2011

PLANS APPROVAL DATE

THE STATE OF CALIFORNIA OR ITS OFFICERS OR AGENTS SHALL NOT BE RESPONSIBLE FOR THE ACCURACY OR COMPLETENESS OF SCANNED COPIES OF THIS PLAN SHEET.

LICENSED LANDSCAPE ARCHITECT CAROL B. CALLEJON No. 3859 11/30/12 Renewal Date 12-06-10 Date STATE OF CALIFORNIA

CONTRACT No.	11-2T0014
PROJECT ID	1100000443

PROJECT MANAGER RON CARAET

SENIOR LANDSCAPE ARCHITECT STEPHEN ALVAREZ

LAST REVISION 12-07-10 DATE PLOTTED => 12-JAN-2011 TIME PLOTTED => 12:16

Dist	COUNTY	ROUTE	POST MILES TOTAL PROJECT	SHEET No.	TOTAL SHEETS
11	SD	52,67	17.3/17.5, R1.4/R2.4	2	48

LICENSED LANDSCAPE ARCHITECT

01-03-11
PLANS APPROVAL DATE

LICENSED LANDSCAPE ARCHITECT
CAROL B. CALLEJON No. 3859
Signature
11/30/12
Renewal Date
12-06-10
Date
STATE OF CALIFORNIA

THE STATE OF CALIFORNIA OR ITS OFFICERS OR AGENTS SHALL NOT BE RESPONSIBLE FOR THE ACCURACY OR COMPLETENESS OF SCANNED COPIES OF THIS PLAN SHEET.

NOTE:

FOR ACCURATE RIGHT OF WAY DATA, CONTACT RIGHT OF WAY ENGINEERING AT THE DISTRICT OFFICE.

LEGEND:

- FR — FIBER ROLLS
- FR — MAINTAIN EXISTING FIBER ROLLS
- TEMPORARY CHECK DAM (TYPE 2) (10 LF EACH)
- EXISTING DRAINAGE INLET PROTECTION TO REMAIN
- EXISTING BIOSWALE
- ESA — ENVIRONMENTALLY SENSITIVE AREA
- TEMPORARY CONSTRUCTION ENTRANCE (TYPE 2)
- FLOW DIRECTION
- TCE — Temp CONSTRUCTION EASEMENT
- Temp FENCE (TYPE ESA)

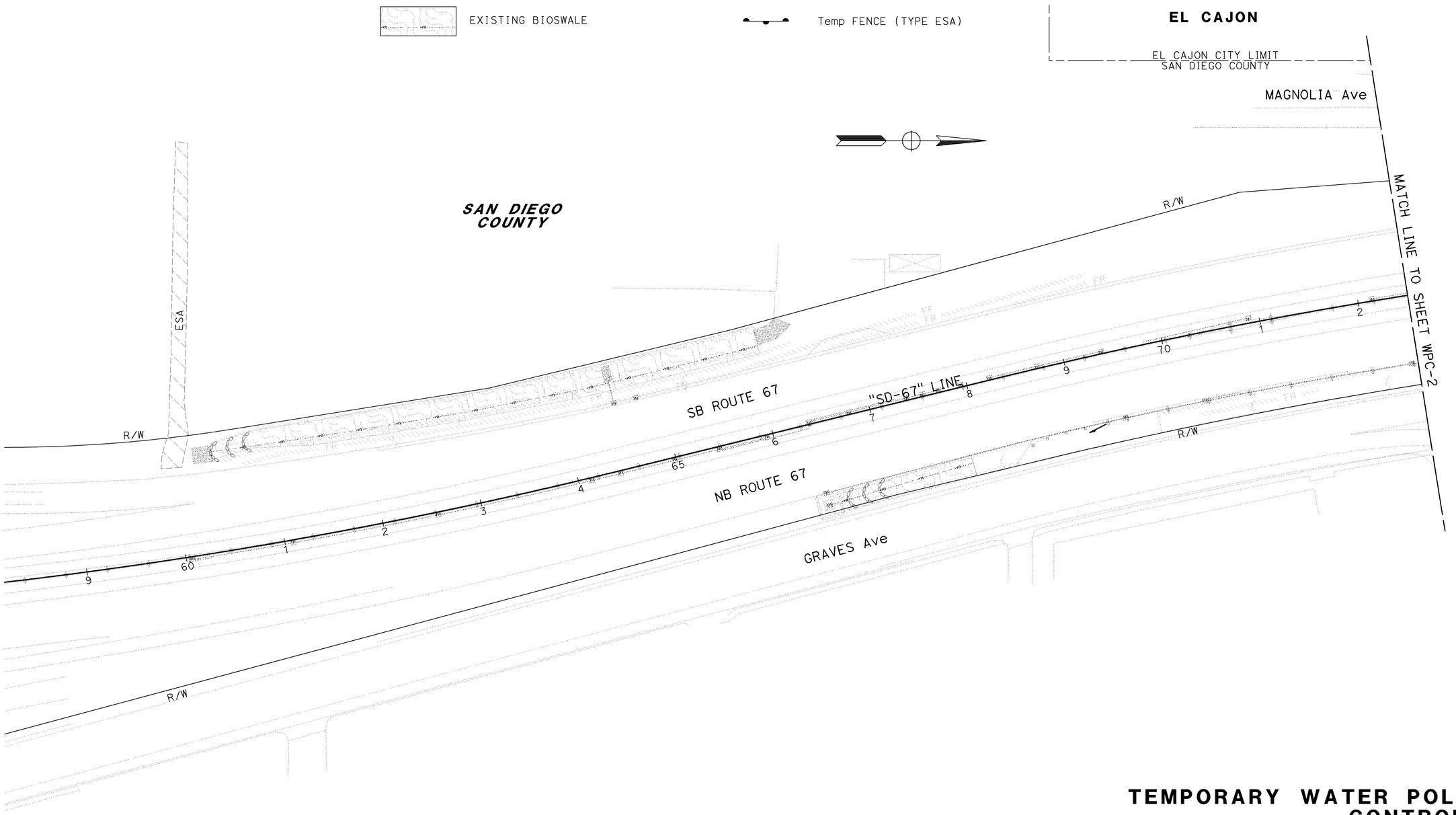

TEMPORARY WATER POLLUTION CONTROL PLAN

THIS PLAN ACCURATE FOR TEMPORARY WATER POLLUTION CONTROL WORK ONLY.

SCALE: 1" = 50'

WPC-1

STATE OF CALIFORNIA - DEPARTMENT OF TRANSPORTATION
Caltrans LANDSCAPE ARCHITECTURE

SENIOR LANDSCAPE ARCHITECT: STEPHEN ALVAREZ
CALCULATED-DESIGNED BY: KENNY MAH
CHECKED BY: NEIL BLEEKER
REVISED BY
DATE REVISED

LAST REVISION 12-08-10
DATE PLOTTED => 12-JAN-2011
TIME PLOTTED => 12:16

Dist	COUNTY	ROUTE	POST MILES TOTAL PROJECT	SHEET No.	TOTAL SHEETS
11	SD	52,67	17.3/17.5, R1.4/R2.4	3	48

LICENSED LANDSCAPE ARCHITECT

01-03-11
PLANS APPROVAL DATE

LICENSED LANDSCAPE ARCHITECT
CAROL B. CALLEJON No. 3859
Signature
11/30/12
Renewal Date
12-06-10
Date
STATE OF CALIFORNIA

THE STATE OF CALIFORNIA OR ITS OFFICERS OR AGENTS SHALL NOT BE RESPONSIBLE FOR THE ACCURACY OR COMPLETENESS OF SCANNED COPIES OF THIS PLAN SHEET.

NOTE:

FOR ACCURATE RIGHT OF WAY DATA, CONTACT RIGHT OF WAY ENGINEERING AT THE DISTRICT OFFICE.

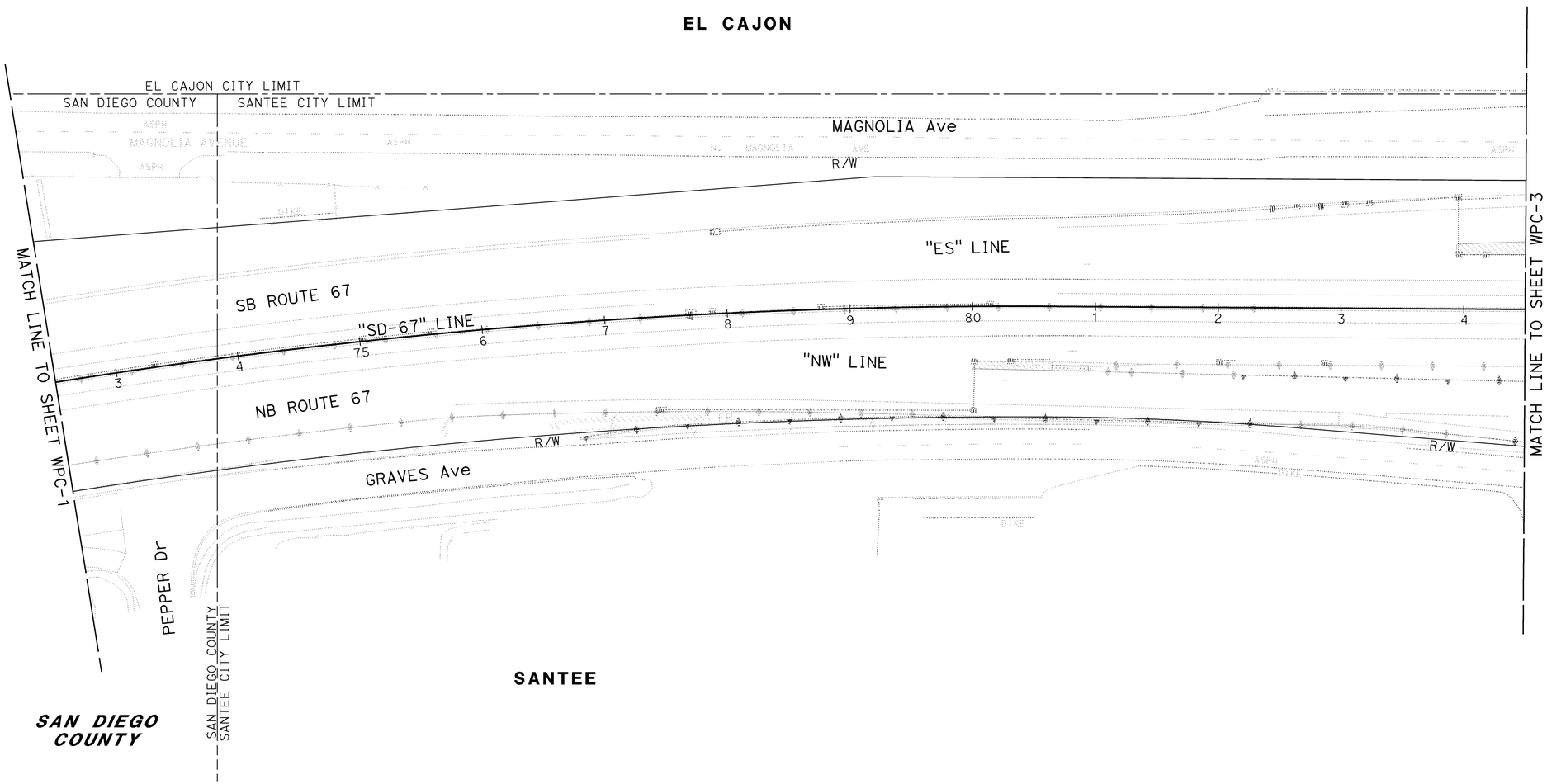

TEMPORARY WATER POLLUTION CONTROL PLAN

SCALE: 1" = 50'

WPC-2

THIS PLAN ACCURATE FOR TEMPORARY WATER POLLUTION CONTROL WORK ONLY.

STATE OF CALIFORNIA - DEPARTMENT OF TRANSPORTATION
Caltrans LANDSCAPE ARCHITECTURE

SENIOR LANDSCAPE ARCHITECT: STEPHEN ALVAREZ
CALCULATED-DESIGNED BY: KENNY MAH
CHECKED BY: NEIL BLEEKER
REVISED BY
DATE REVISED

LAST REVISION 12-08-10
DATE PLOTTED => 12-JAN-2011
TIME PLOTTED => 12:16

Dist	COUNTY	ROUTE	POST MILES TOTAL PROJECT	SHEET No.	TOTAL SHEETS
11	SD	52,67	17.3/17.5, R1.4/R2.4	4	48

LICENSED LANDSCAPE ARCHITECT

01-03-11
PLANS APPROVAL DATE

LICENSED LANDSCAPE ARCHITECT
CARL B. CALLEJON No. 3869
Registration Expiration Date 11/30/12
Renewal Date 12-06-10
STATE OF CALIFORNIA

THE STATE OF CALIFORNIA OR ITS OFFICERS OR AGENTS SHALL NOT BE RESPONSIBLE FOR THE ACCURACY OR COMPLETENESS OF SCANNED COPIES OF THIS PLAN SHEET.

NOTE:

FOR ACCURATE RIGHT OF WAY DATA, CONTACT RIGHT OF WAY ENGINEERING AT THE DISTRICT OFFICE.

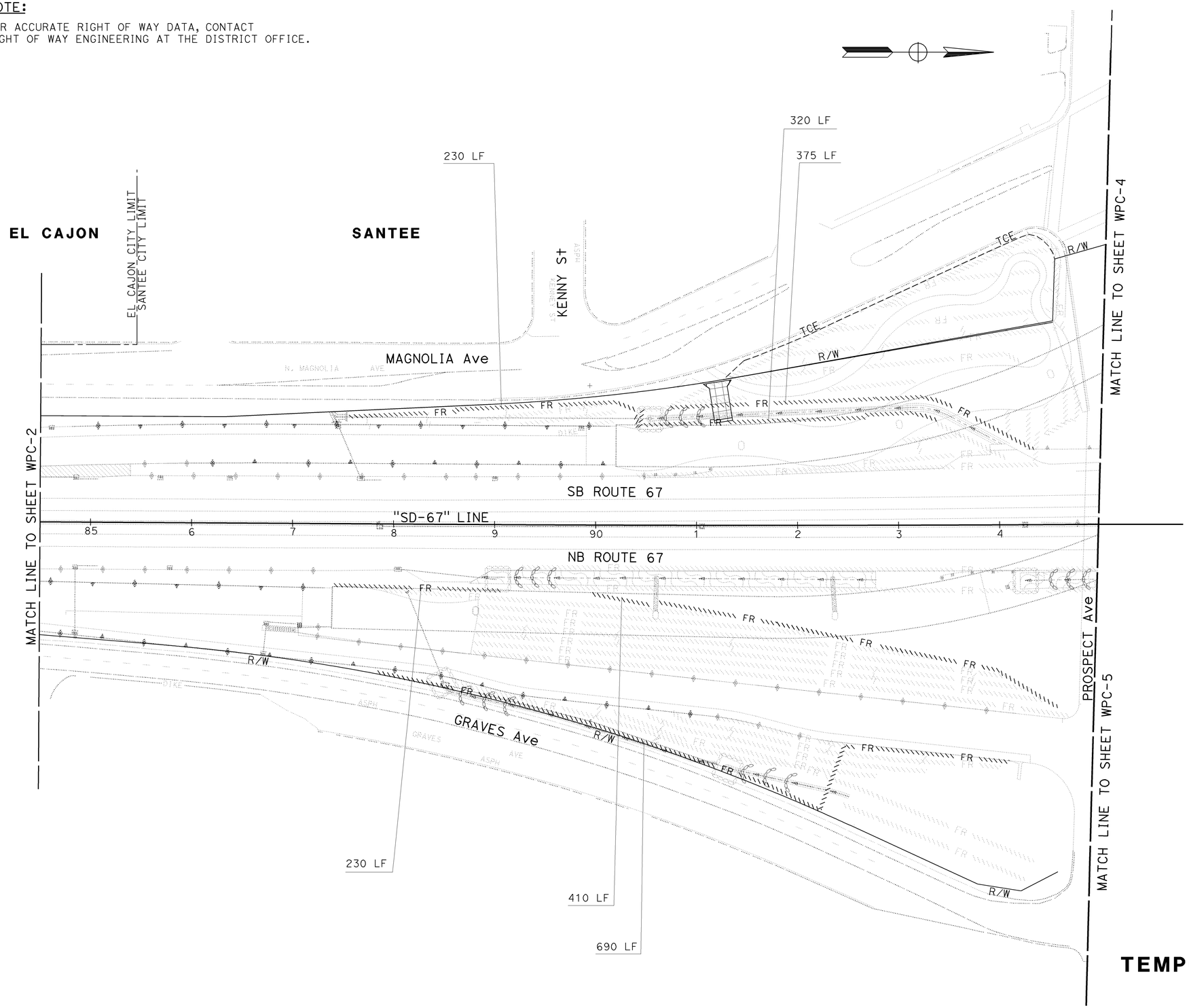

THIS PLAN ACCURATE FOR TEMPORARY WATER POLLUTION CONTROL WORK ONLY.

SCALE: 1" = 50'

TEMPORARY WATER POLLUTION CONTROL PLAN

WPC-3

REVISED BY | DATE REVISED

KENNY MAH | NEIL BLEEKER

CALCULATED-DESIGNED BY | CHECKED BY

SENIOR LANDSCAPE ARCHITECT: STEPHEN ALVAREZ

STATE OF CALIFORNIA - DEPARTMENT OF TRANSPORTATION
Caltrans® LANDSCAPE ARCHITECTURE

LAST REVISION 12-08-10 | DATE PLOTTED => 12-JAN-2011 | TIME PLOTTED => 12:16

Dist	COUNTY	ROUTE	POST MILES TOTAL PROJECT	SHEET No.	TOTAL SHEETS
11	SD	52,67	17.3/17.5, R1.4/R2.4	5	48

LICENSED LANDSCAPE ARCHITECT

01-03-11
PLANS APPROVAL DATE

LICENSED LANDSCAPE ARCHITECT
CAROL B. CALLEJON No. 3859
Signature
11/30/12
Renewal Date
12-06-10
Date
STATE OF CALIFORNIA

THE STATE OF CALIFORNIA OR ITS OFFICERS OR AGENTS SHALL NOT BE RESPONSIBLE FOR THE ACCURACY OR COMPLETENESS OF SCANNED COPIES OF THIS PLAN SHEET.

NOTE:

FOR ACCURATE RIGHT OF WAY DATA, CONTACT RIGHT OF WAY ENGINEERING AT THE DISTRICT OFFICE.

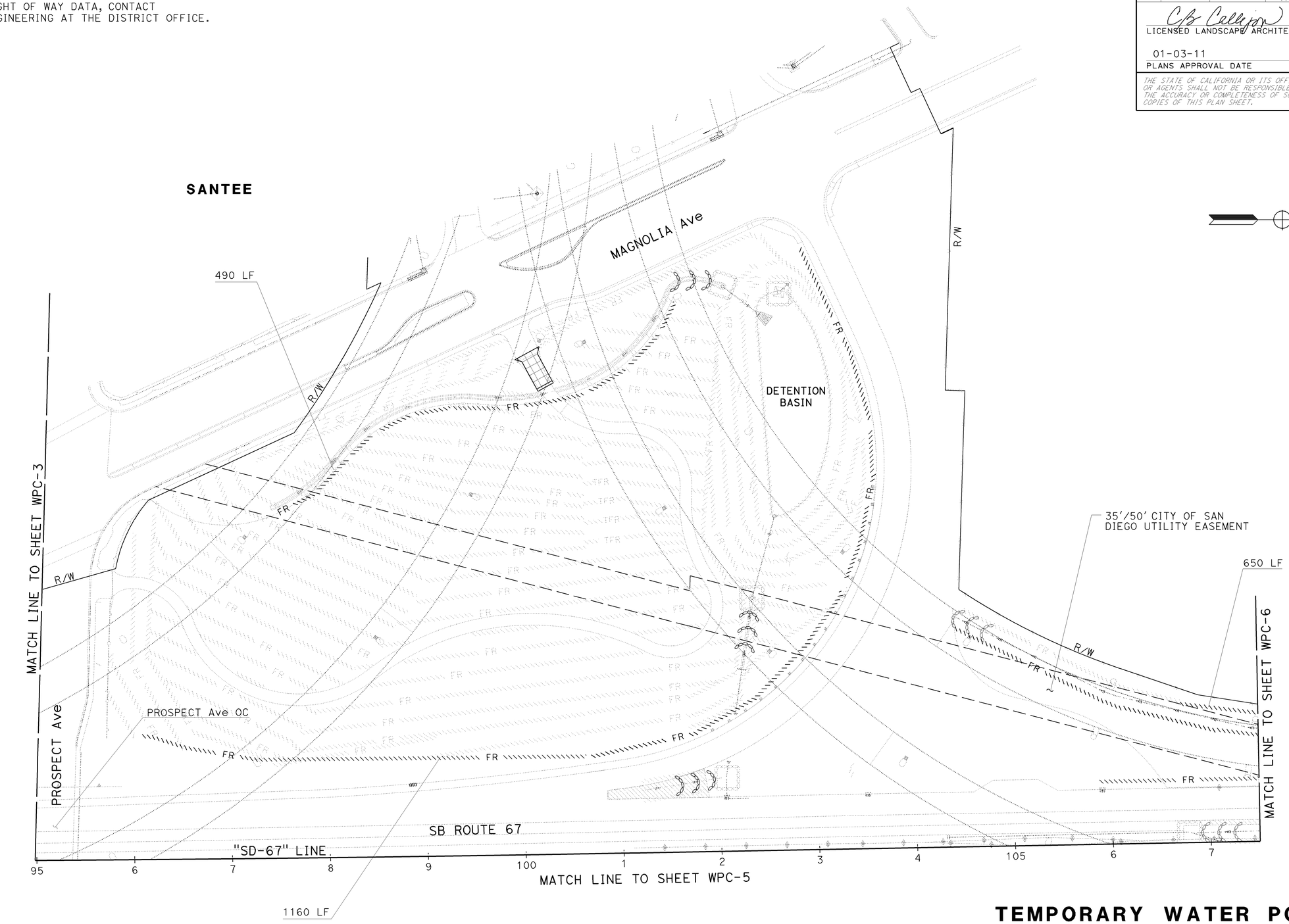

TEMPORARY WATER POLLUTION CONTROL PLAN

THIS PLAN ACCURATE FOR TEMPORARY WATER POLLUTION CONTROL WORK ONLY.

SCALE: 1" = 50'

WPC-4

STATE OF CALIFORNIA - DEPARTMENT OF TRANSPORTATION
Caltrans LANDSCAPE ARCHITECTURE

SENIOR LANDSCAPE ARCHITECT: STEPHEN ALVAREZ
CALCULATED-DESIGNED BY: KENNY MAH
CHECKED BY: NEIL BLEEKER
REVISED BY
DATE REVISED

LAST REVISION 12-09-10
DATE PLOTTED => 12-JAN-2011
TIME PLOTTED => 12:16

Dist	COUNTY	ROUTE	POST MILES TOTAL PROJECT	SHEET No.	TOTAL SHEETS
11	SD	52,67	17.3/17.5, R1.4/R2.4	6	48

LICENSED LANDSCAPE ARCHITECT

01-03-11
PLANS APPROVAL DATE

LICENSED LANDSCAPE ARCHITECT
CAROL B. CALLEJON No. 3660
Signature
11/30/12
Renewal Date
12-06-10
Date
STATE OF CALIFORNIA

THE STATE OF CALIFORNIA OR ITS OFFICERS OR AGENTS SHALL NOT BE RESPONSIBLE FOR THE ACCURACY OR COMPLETENESS OF SCANNED COPIES OF THIS PLAN SHEET.

NOTE:

FOR ACCURATE RIGHT OF WAY DATA, CONTACT RIGHT OF WAY ENGINEERING AT THE DISTRICT OFFICE.

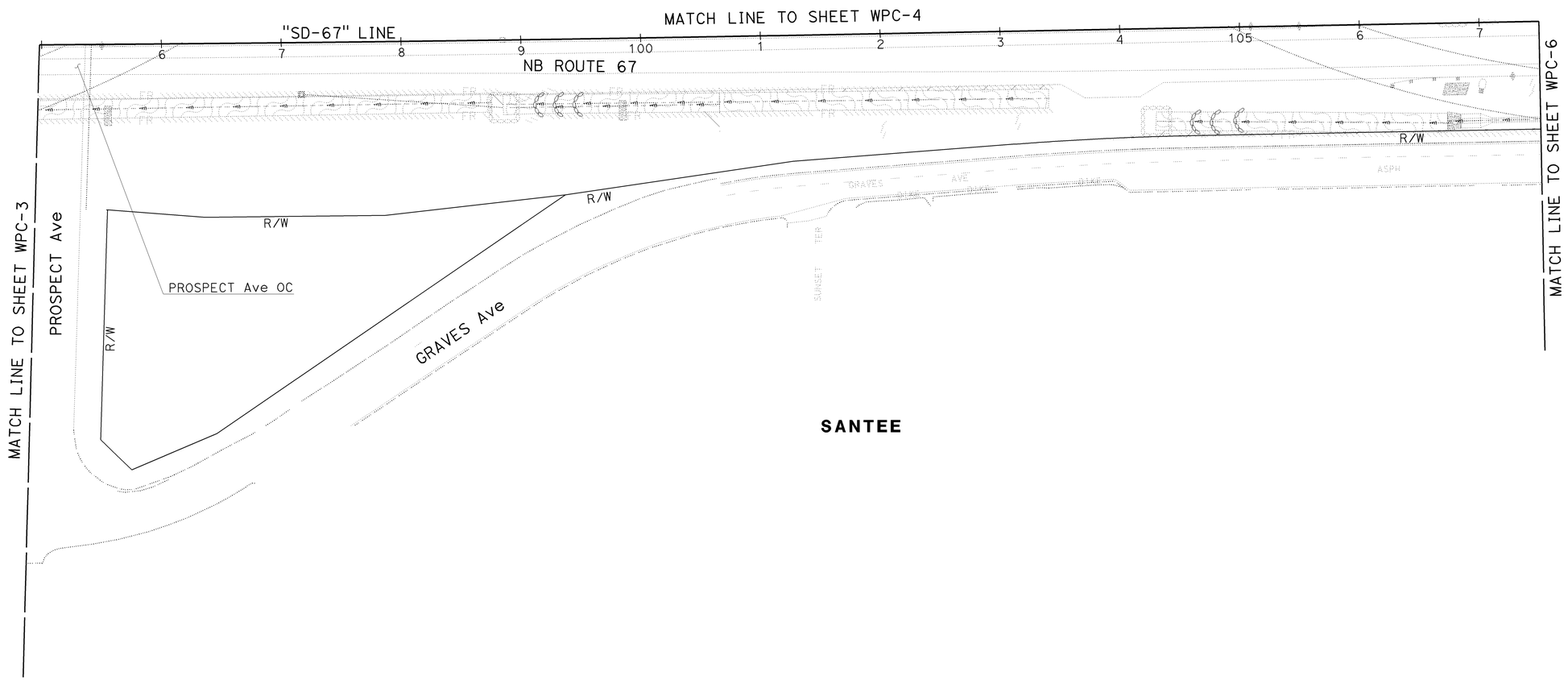

TEMPORARY WATER POLLUTION CONTROL PLAN

SCALE: 1" = 50'

WPC-5

THIS PLAN ACCURATE FOR TEMPORARY WATER POLLUTION CONTROL WORK ONLY.

STATE OF CALIFORNIA - DEPARTMENT OF TRANSPORTATION
Caltrans LANDSCAPE ARCHITECTURE

SENIOR LANDSCAPE ARCHITECT: STEPHEN ALVAREZ
CALCULATED-DESIGNED BY: KENNY MAH
CHECKED BY: NEIL BLEEKER
REVISED BY
DATE REVISED

LAST REVISION 12-09-10
DATE PLOTTED => 12-JAN-2011
TIME PLOTTED => 12:17

Dist	COUNTY	ROUTE	POST MILES TOTAL PROJECT	SHEET No.	TOTAL SHEETS
11	SD	52,67	17.3/17.5, R1.4/R2.4	7	48

LICENSED LANDSCAPE ARCHITECT

01-03-11
PLANS APPROVAL DATE

THE STATE OF CALIFORNIA OR ITS OFFICERS OR AGENTS SHALL NOT BE RESPONSIBLE FOR THE ACCURACY OR COMPLETENESS OF SCANNED COPIES OF THIS PLAN SHEET.

LICENSED LANDSCAPE ARCHITECT
CAROL B. CALLEJON No. 3859
Signature
11/30/12
Renewal Date
12-06-10
Date
STATE OF CALIFORNIA

NOTE:

FOR ACCURATE RIGHT OF WAY DATA, CONTACT RIGHT OF WAY ENGINEERING AT THE DISTRICT OFFICE.

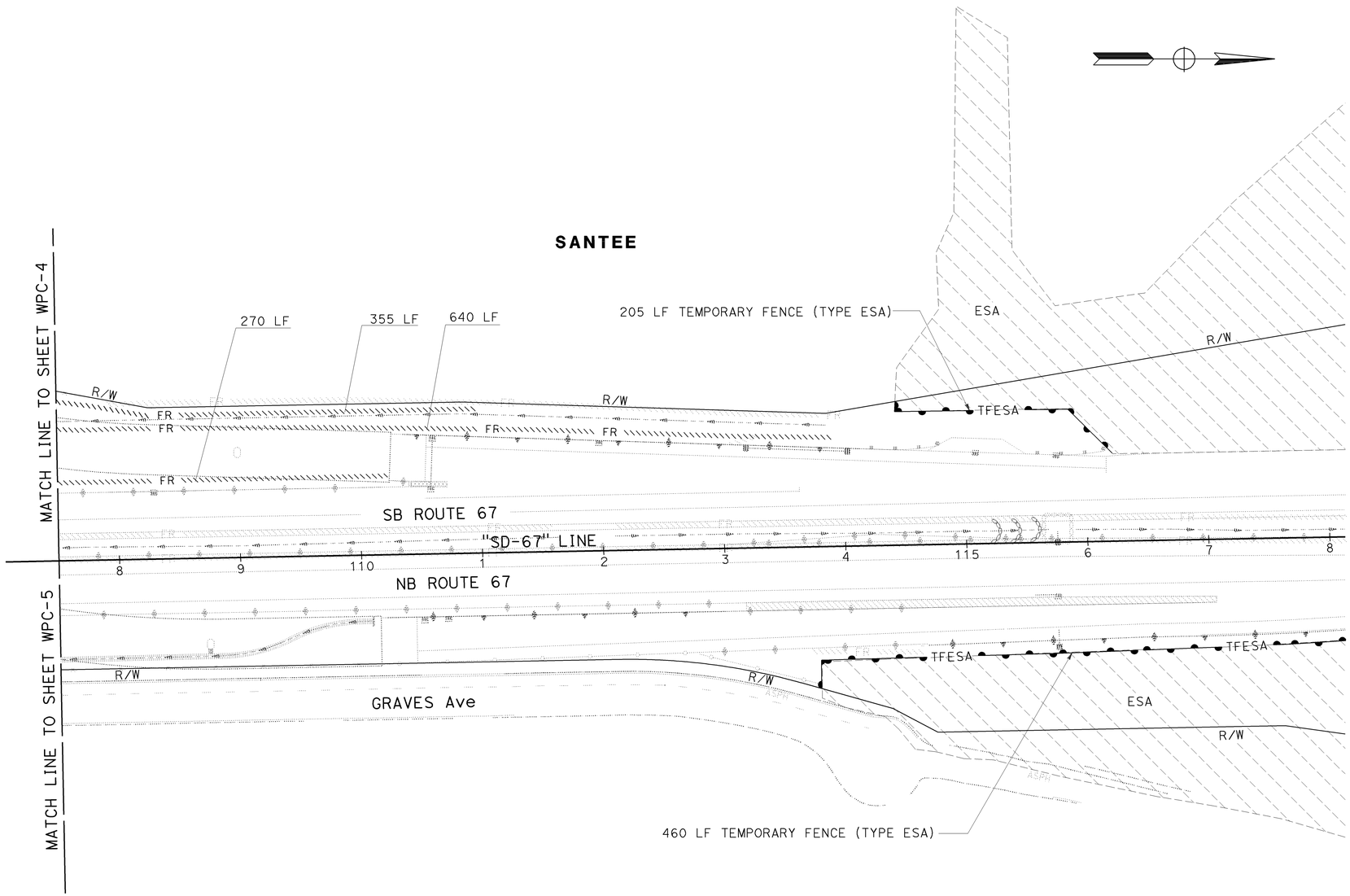

TEMPORARY WATER POLLUTION CONTROL PLAN

THIS PLAN ACCURATE FOR TEMPORARY WATER POLLUTION CONTROL WORK ONLY.

SCALE: 1" = 50'

WPC-6

STATE OF CALIFORNIA - DEPARTMENT OF TRANSPORTATION
Caltrans LANDSCAPE ARCHITECTURE

SENIOR LANDSCAPE ARCHITECT: STEPHEN ALVAREZ
CALCULATED-DESIGNED BY: KENNY MAH
CHECKED BY: NEIL BLEEKER
REVISED BY
DATE REVISED

LAST REVISION 12-09-10
DATE PLOTTED => 12-JAN-2011
TIME PLOTTED => 12:17

Dist	COUNTY	ROUTE	POST MILES TOTAL PROJECT	SHEET No.	TOTAL SHEETS
11	SD	52,67	17.3/17.5, R1.4/R2.4	8	48

LICENSED LANDSCAPE ARCHITECT

01-03-11
PLANS APPROVAL DATE

LICENSED LANDSCAPE ARCHITECT
CAROL B. CALLEJON No. 3859
Signature
11/30/12
Renewal Date
12-06-10
Date
STATE OF CALIFORNIA

THE STATE OF CALIFORNIA OR ITS OFFICERS OR AGENTS SHALL NOT BE RESPONSIBLE FOR THE ACCURACY OR COMPLETENESS OF SCANNED COPIES OF THIS PLAN SHEET.

TEMPORARY WATER POLLUTION CONTROL QUANTITIES

SHEET	MAINTAIN EXISTING FIBER ROLLS (LF)*	FIBER ROLLS (LF)	TEMPORARY CHECK DAM (LF)	TEMPORARY CONSTRUCTION ENTRANCE (EA)	TEMPORARY FENCE (TYPE ESA) (LF)
WPC-1	3,151	-	60	-	-
WPC-2	322	-	-	-	-
WPC-3	8,985	2,255	150	1	-
WPC-4	16,146	2,300	150	1	-
WPC-5	2,125	-	60	-	-
WPC-6	2,680	1,265	30	-	665
TOTAL	33,409	5,820	450	2	665

* LINEAR FOOT QUANTITIES ARE FOR INFORMATION ONLY.

TEMPORARY WATER POLLUTION CONTROL QUANTITIES

WPCQ-1

STATE OF CALIFORNIA - DEPARTMENT OF TRANSPORTATION
Caltrans® LANDSCAPE ARCHITECTURE

SENIOR LANDSCAPE ARCHITECT: STEPHEN ALVAREZ
CALCULATED-DESIGNED BY: KENNY MAH
CHECKED BY: NEIL BLEEKER
REVISED BY
DATE REVISED

LAST REVISION 11-30-10
DATE PLOTTED => 12-JAN-2011
TIME PLOTTED => 12:17

Dist	COUNTY	ROUTE	POST MILES TOTAL PROJECT	SHEET No.	TOTAL SHEETS
11	SD	52,67	17.3/17.5, R1.4/R2.4	9	48

LICENSED LANDSCAPE ARCHITECT

01-03-11
PLANS APPROVAL DATE

LICENSED LANDSCAPE ARCHITECT CAROL B. CALLEJON No. 3869 — REGISTERED 11/30/12 — EXPIRATION DATE 12-06-10 — DATE — STATE OF CALIFORNIA

THE STATE OF CALIFORNIA OR ITS OFFICERS OR AGENTS SHALL NOT BE RESPONSIBLE FOR THE ACCURACY OR COMPLETENESS OF SCANNED COPIES OF THIS PLAN SHEET.

ABBREVIATIONS:

AMEND — amendment
B & B — balled and burlapped
Dia — diameter
EA — each
LB — pound
Oz — ounce
Ft — foot/feet
SQFT — square feet
SQYD — square yard
CF — cubic feet
CY — cubic yard
Max — maximum
Min — minimum
NCN — no common name
No. — number
Pkt — packet
PLT ESTB — plant establishment
PSFM — polymer stabilized fiber matrix
Pvmt — pavement
R/W — right of way
SF — state furnished
TRVD — traveled

NOTE:

1. UNDERLINED PORTIONS OF BOTANICAL NAMES INDICATE ABBREVIATIONS USED ON PLANTING PLANS.

PLANT LIST AND PLANTING SPECIFICATIONS

PLANT GROUP	PLANT No.	SYMBOL	BOTANICAL NAME	COMMON NAME	SIZE	QUANTITY EACH	HOLE SIZE (INCH) Dia	HOLE SIZE (INCH) DEPTH	BASIN TYPE	IRON SULFATE ①	SOIL AMEND (CY) ①	COMMERCIAL FERTILIZER ① PLANTING	COMMERCIAL FERTILIZER ① PLT ESTB	BASIN MULCH (CY)	STAKING	PLANTING LIMITS MINIMUM DISTANCE (Ft) FROM TRVD WAY	PVMT	FENCE	WALL	PAVED DITCH	EARTH DITCH	ON CENTER (Ft)	REMARKS
A	1		BACCHARIS SAROTHROIDES	BROOM BACCHARIS	No. 1	44	②	②	I	-	-	1 Pkt	-	0.06	-	-	8	6	6	6	6	④	SHRUB ⑧
	2		BACCHARIS SAROTHROIDES	BROOM BACCHARIS	No. 1	193	②	②	I	-	-	1 Pkt	-	0.06	-	-	8	6	6	6	6	8	SHRUB ⑧
	3		BACCHARIS SAROTHROIDES	BROOM BACCHARIS	No. 1	375	②	②	I	-	-	1 Pkt	-	0.06	-	-	8	6	6	6	6	8	SHRUB ⑧
	4		ENCELIA CALIFORNICA	COAST SUNFLOWER	No. 1	307	②	②	I	-	-	1 Pkt	-	0.06	-	-	8	6	6	6	6	8	SHRUB ⑧
	5		ENCELIA CALIFORNICA	COAST SUNFLOWER	No. 1	765	②	②	I	-	-	1 Pkt	-	0.06	-	-	8	6	6	6	6	8	SHRUB ⑧
	6	○	HEMEROCALLIS HYBRID 'HAPPY RETURNS'	DAYLILY	No. 1	146	②	②	I	-	-	1 Pkt	-	0.06	-	-	8	6	6	6	6	4	SHRUB
	7	◆	MACFADYENA UNGUIS-CATI	YELLOW TRUMPET VINE	No. 1	125	②	②	I	4 Oz	-	1 Pkt	8 Oz	0.06	⑥	-	-	-	-	-	-	12	VINE
	8		MUHLENBERGIA RIGENS	DEER GRASS	No. 1	135	②	②	I	-	-	1 Pkt	-	0.06	-	-	4	1	1	1	-	6	GRASS
	9	⬡	MUHLENBERGIA RIGENS	DEER GRASS	No. 1	143	②	②	I	-	-	1 Pkt	-	0.06	-	-	4	1	1	1	-	④	GRASS
	10	•	PARTHENOCISSUS TRICUSPIDATA	BOSTON IVY	No. 1	126	②	②	I	4 Oz	-	1 Pkt	8 Oz	0.06	⑥	-	-	-	-	-	-	12	VINE
	11	⊙	PHLOMIS FRUTICOSA	JERUSALEM SAGE	No. 1	131	②	②	I	-	-	1 Pkt	-	0.06	-	-	8	6	6	6	6	④	SHRUB ⑧
	12		RHAMNUS CALIFORNICA	COFFEEBERRY	No. 1	135	②	②	I	-	-	1 Pkt	-	0.06	-	-	8	6	6	6	6	8	SHRUB ⑧
	13		ROMNEYA COULTERI 'WHITE CLOUD'	MATILIJA POPPY	No. 1	442	②	②	I	-	-	1 Pkt	-	0.06	-	-	8	6	6	6	6	8	SHRUB ⑧
	14		ROMNEYA COULTERI 'WHITE CLOUD'	MATILIJA POPPY	No. 1	765	②	②	I	-	-	1 Pkt	-	0.06	-	-	8	6	6	6	6	8	SHRUB ⑧
	15		SALVIA CLEVELANDII	CLEVELAND SAGE	No. 1	442	②	②	I	-	-	1 Pkt	-	0.06	-	-	8	6	6	6	6	8	SHRUB ⑧

APPLICABLE WHEN CIRCLED:

① - QUANTITIES SHOWN ARE "PER PLANT" UNLESS SHOWN AS SQFT OR SQYD APPLICATION RATES.
② - SUFFICIENT TO RECEIVE ROOT BALL.
3 - INCLUDED WITH AREA MULCH.
④ - AS SHOWN ON PLANS.
5 - UNLESS OTHERWISE SHOWN ON PLANS.
⑥ - SEE STANDARD DETAIL.
7 - SEE SPECIAL PROVISIONS.
⑧ - RANDOMLY PLANTED THROUGHOUT DESIGNATED AREA. (THE DESIRED VISUAL EFFECT IS TO BE A NATURAL ONE)

LEGEND:

LIMITS OF CONTAINER STOCK PLANTING AREA

EROSION CONTROL (PSFM) (TYPE 1) (FLAT AREAS)

EROSION CONTROL (PSFM) (TYPE 2) (IRRIGATED SLOPES WITH NATIVE PLANTINGS)

EROSION CONTROL (COMPOST BLANKET) (2" DEEP) (WEED GERMINATION)

ROCK MULCH

MULCH (3" DEEP)

Exist ROCK MULCH

Exist MAINTENANCE PATH

Exist PAVING BEYOND THE GORE

ESA — ENVIRONMENTALLY SENSITIVE AREA

EXISTING TREE

TCE — Temp CONSTRUCTION EASEMENT

REVISED BY | DATE REVISED
HENRY BARNES | CAROL CALLEJON
CALCULATED-DESIGNED BY | CHECKED BY
SENIOR LANDSCAPE ARCHITECT | STEPHEN ALVAREZ

STATE OF CALIFORNIA - DEPARTMENT OF TRANSPORTATION
Caltrans® LANDSCAPE ARCHITECTURE

PLANT LIST
PL-1

LAST REVISION 12-09-10 | DATE PLOTTED => 12-JAN-2011 | TIME PLOTTED => 12:17

Dist	COUNTY	ROUTE	POST MILES TOTAL PROJECT	SHEET No.	TOTAL SHEETS
11	SD	52,67	17.3/17.5, R1.4/R2.4	10	48

LICENSED LANDSCAPE ARCHITECT

01-03-11
PLANS APPROVAL DATE

LICENSED LANDSCAPE ARCHITECT CAROL B. CALLEJON No. 3869 STATE OF CALIFORNIA
11/30/12 Renewal Date
12-06-10 Date

THE STATE OF CALIFORNIA OR ITS OFFICERS OR AGENTS SHALL NOT BE RESPONSIBLE FOR THE ACCURACY OR COMPLETENESS OF SCANNED COPIES OF THIS PLAN SHEET.

PLANT LIST AND PLANTING SPECIFICATIONS

PLANT GROUP	PLANT No.	SYMBOL	BOTANICAL NAME	COMMON NAME	SIZE	QUANTITY EACH	HOLE SIZE (INCH) Dia	HOLE SIZE (INCH) DEPTH	BASIN TYPE	IRON SULFATE ①	SOIL AMEND (CY) ①	COMMERCIAL FERTILIZER ① PLANTING	COMMERCIAL FERTILIZER ① PLT ESTB	BASIN MULCH (CY)	STAKING	PLANTING LIMITS MINIMUM DISTANCE (Ft) FROM TRVD WAY	PVMT	FENCE	WALL	PAVED DITCH	EARTH DITCH	ON CENTER (Ft)	REMARKS
A	16		SALVIA CLEVELANDII	CLEVELAND SAGE	No. 1	765	②	②	I	-	-	1 Pkt	-	0.06	-	-	8	6	6	6	6	④	SHRUB ⑧
	17		SALVIA LEUCANTHA	MEXICAN SAGE	No. 1	114	②	②	I	-	-	1 Pkt	-	0.06	-	-	8	6	6	6	6	8	SHRUB ⑧
	18		ZAUSCHNERIA CALIFORNICA 'GHOSTLY RED'	CALIFORNIA FUCHSIA	No. 1	193	②	②	I	-	-	1 Pkt	-	0.06	-	-	8	6	6	6	6	8	SHRUB ⑧
	19		ZAUSCHNERIA CALIFORNICA 'GHOSTLY RED'	CALIFORNIA FUCHSIA	No. 1	375	②	②	I	-	-	1 Pkt	-	0.06	-	-	8	6	6	6	6	8	SHRUB ⑧
B	20		AGAVE AMERICANA	CENTURY PLANT	No. 5	122	②	②	I	-	-	-	-	0.06	-	-	8	6	6	6	6	④	SUCCULENT
	21		AGAVE ATTENUATA	FOXTAIL AGAVE	No. 5	83	②	②	I	-	-	-	-	0.06	-	-	8	6	6	6	6	④	SUCCULENT
	22		ALOE STRIATA	CORAL ALOE	No. 5	59	②	②	I	-	-	-	-	0.06	-	-	8	6	6	6	6	④	SUCCULENT
	23		PARKINSONIA ACULEATA	MEXICAN PALO VERDE	No. 5	30	②	②	I	-	-	3 Pkt	-	0.06	-	-	8	6	6	6	8	④	TREE
	24		CERCIS OCCIDENTALIS	WESTERN REDBUD	No. 5	12	②	②	I	-	-	3 Pkt	-	0.06	-	-	8	6	6	6	8	④	TREE
	25		HETEROMELES ARBUTIFOLIA	TOYON	No. 5	359	②	②	I	-	-	3 Pkt	-	0.06	-	-	8	6	6	6	8	④	SHRUB
	26		MALOSMA LAURINA	LAUREL SUMAC	No. 5	219	②	②	I	-	-	3 Pkt	-	0.06	-	-	8	6	6	6	8	④	SHRUB
G	27		SENECIO MANDRALISCAE	KLEINA	RTD CUT	50,894	②	②	I	-	-	8 lb/ 1,000 SQFT	4 lb/ 1,000 SQFT	-	-	-	4	1	1	1	-	1	GROUNDCOVER
K	28		LAGERSTROEMIA 'MUSKOGEE'	CRAPE MYRTLE	24" BOX	11	②	②	I	8 Oz	-	5 Pkt	1 lb	0.2	⑥	30	-	15	3	10	12	④	TREE - STANDARD
	29		MAGNOLIA GRANDIFLORA 'LITTLE GEM'	SOUTHERN MAGNOLIA	24" BOX	6	②	②	I	8 Oz	-	5 Pkt	1 lb	0.2	⑥	30	-	15	3	10	12	④	TREE - STANDARD
	30		MAGNOLIA GRANDIFLORA	SOUTHERN MAGNOLIA	24" BOX	4	②	②	I	8 Oz	-	5 Pkt	1 lb	0.2	⑥	30	-	15	3	10	12	④	TREE - STANDARD
	31		TIPUANA TIPU	TIPU TREE	24" BOX	8	②	②	I	8 Oz	-	5 Pkt	1 lb	0.2	⑥	30	-	20	20	20	-	④	TREE - STANDARD
M	32		LEYMUS TRITICOIDES	WILD RYE GRASS	LINER	3,922	②	②	-	-	-	-	-	-	-	-	4	1	1	1	-	2	GRASS
	33		MELICA IMPERFECTA	COAST MELIC	LINER	13,126	②	②	-	-	-	-	-	-	-	-	4	1	1	1	-	2	GRASS
	34		NASELLA PULCHRA	PURPLE NEEDLE GRASS	LINER	3,922	②	②	-	-	-	-	-	-	-	-	4	1	1	1	-	2	GRASS
U	35		EUCALYPTUS CITRIODORA	LEMON-SCENTED GUM	15 GAL	47	②	②	I	8 Oz	-	5 Pkt	1 lb	0.2	⑥	-	8	15	15	20	-	④	TREE
	36		EUCALYPTUS CLADOCALYX	SUGAR GUM	15 GAL	23	②	②	I	8 Oz	-	5 Pkt	1 lb	0.2	⑥	-	4	15	1	20	-	④	TREE
	37		PINUS CANARIENSIS	CANARY ISLAND PINE	15 GAL	30	②	②	I	8 Oz	-	5 Pkt	1 lb	0.2	⑥	30	-	20	3	20	12	④	TREE
	38		PINUS TORREYANA	TORREY PINE	15 GAL	26	②	②	I	8 Oz	-	5 Pkt	1 lb	0.2	⑥	30	-	20	3	20	-	④	TREE
	39		PLATANUS RACEMOSA	WESTERN SYCAMORE	15 GAL	27	②	②	I	8 Oz	-	5 Pkt	1 lb	0.2	⑥	40	-	20	3	20	-	④	TREE
	40		POPULUS FREMONTII	WESTERN COTTONWOOD	15 GAL	26	②	②	I	8 Oz	-	5 Pkt	1 lb	0.2	⑥	40	-	30	3	20	-	④	TREE - STANDARD
	41		QUERCUS AGRIFOLIA	COAST LIVE OAK	15 GAL	31	②	②	I	8 Oz	-	5 Pkt	1 lb	0.2	⑥	30	-	20	15	20	-	④	TREE - STANDARD
	42		QUERCUS ILEX	HOLLY OAK	15 GAL	42	②	②	I	8 Oz	-	5 Pkt	1 lb	0.2	⑥	30	-	20	15	20	-	④	TREE - STANDARD
	43		SCHINUS MOLLE	PERUVIAN PEPPER	15 GAL	20	②	②	I	8 Oz	-	5 Pkt	1 lb	0.2	⑥	40	-	30	10	20	-	④	TREE - STANDARD
	44		TIPUANA TIPU	TIPU TREE	15 GAL	10	②	②	I	8 Oz	-	5 Pkt	1 lb	0.2	⑥	30	-	20	20	20	-	④	TREE - STANDARD

REVISED BY | DATE REVISED
HENRY BARNES | CAROL CALLEJON
CALCULATED- | DESIGNED BY
CHECKED BY
SENIOR LANDSCAPE ARCHITECT
STEPHEN ALVAREZ

STATE OF CALIFORNIA - DEPARTMENT OF TRANSPORTATION
Caltrans® LANDSCAPE ARCHITECTURE

PLANT LIST
PL-2

LAST REVISION 12-09-10 | DATE PLOTTED => 12-JAN-2011 | TIME PLOTTED => 12:17

Dist	COUNTY	ROUTE	POST MILES TOTAL PROJECT	SHEET No.	TOTAL SHEETS
11	SD	52,67	17.3/17.5, R1.4/R2.4	11	48

LICENSED LANDSCAPE ARCHITECT

01-03-11
PLANS APPROVAL DATE

THE STATE OF CALIFORNIA OR ITS OFFICERS OR AGENTS SHALL NOT BE RESPONSIBLE FOR THE ACCURACY OR COMPLETENESS OF SCANNED COPIES OF THIS PLAN SHEET.

LICENSED LANDSCAPE ARCHITECT CAROL B. CALLEJON No. 3869 Signature 11/30/12 Renewal Date 12-06-10 Date STATE OF CALIFORNIA

NOTE:

FOR ACCURATE RIGHT OF WAY DATA, CONTACT RIGHT OF WAY ENGINEERING AT THE DISTRICT OFFICE.

LEGEND:

Exist TREE TO REMAIN

REMOVE Exist TREE

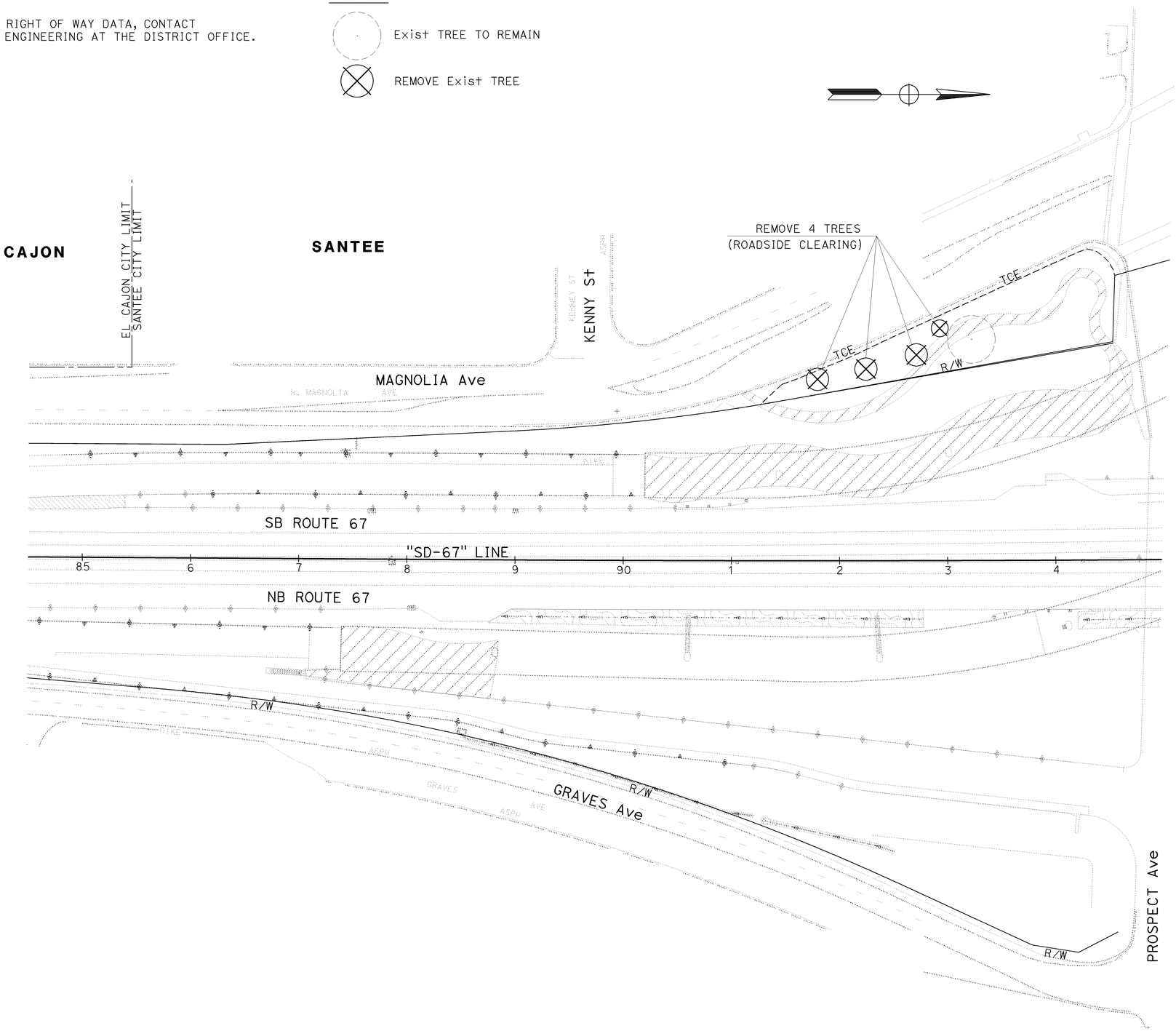

THIS PLAN ACCURATE FOR PLANT REMOVAL WORK ONLY

PLANT REMOVAL PLAN

SCALE: 1" = 50'

PR-1

STATE OF CALIFORNIA - DEPARTMENT OF TRANSPORTATION

Caltrans LANDSCAPE ARCHITECTURE

SENIOR LANDSCAPE ARCHITECT: STEPHEN ALVAREZ

CALCULATED-DESIGNED BY: HENRY BARNES

CHECKED BY: CAROL CALLEJON

REVISED BY

DATE REVISED

LAST REVISION 12-09-10

DATE PLOTTED => 12-JAN-2011
TIME PLOTTED => 12:17

Dist	COUNTY	ROUTE	POST MILES TOTAL PROJECT	SHEET No.	TOTAL SHEETS
11	SD	52,67	17.3/17.5, R1.4/R2.4	12	48

LICENSED LANDSCAPE ARCHITECT

01-03-11
PLANS APPROVAL DATE

THE STATE OF CALIFORNIA OR ITS OFFICERS OR AGENTS SHALL NOT BE RESPONSIBLE FOR THE ACCURACY OR COMPLETENESS OF SCANNED COPIES OF THIS PLAN SHEET.

LICENSED LANDSCAPE ARCHITECT CAROL B. CALLEJON No. 3859 Signature 11/30/12 Renewal Date 12-06-10 Date STATE OF CALIFORNIA

NOTE:

FOR ACCURATE RIGHT OF WAY DATA, CONTACT RIGHT OF WAY ENGINEERING AT THE DISTRICT OFFICE.

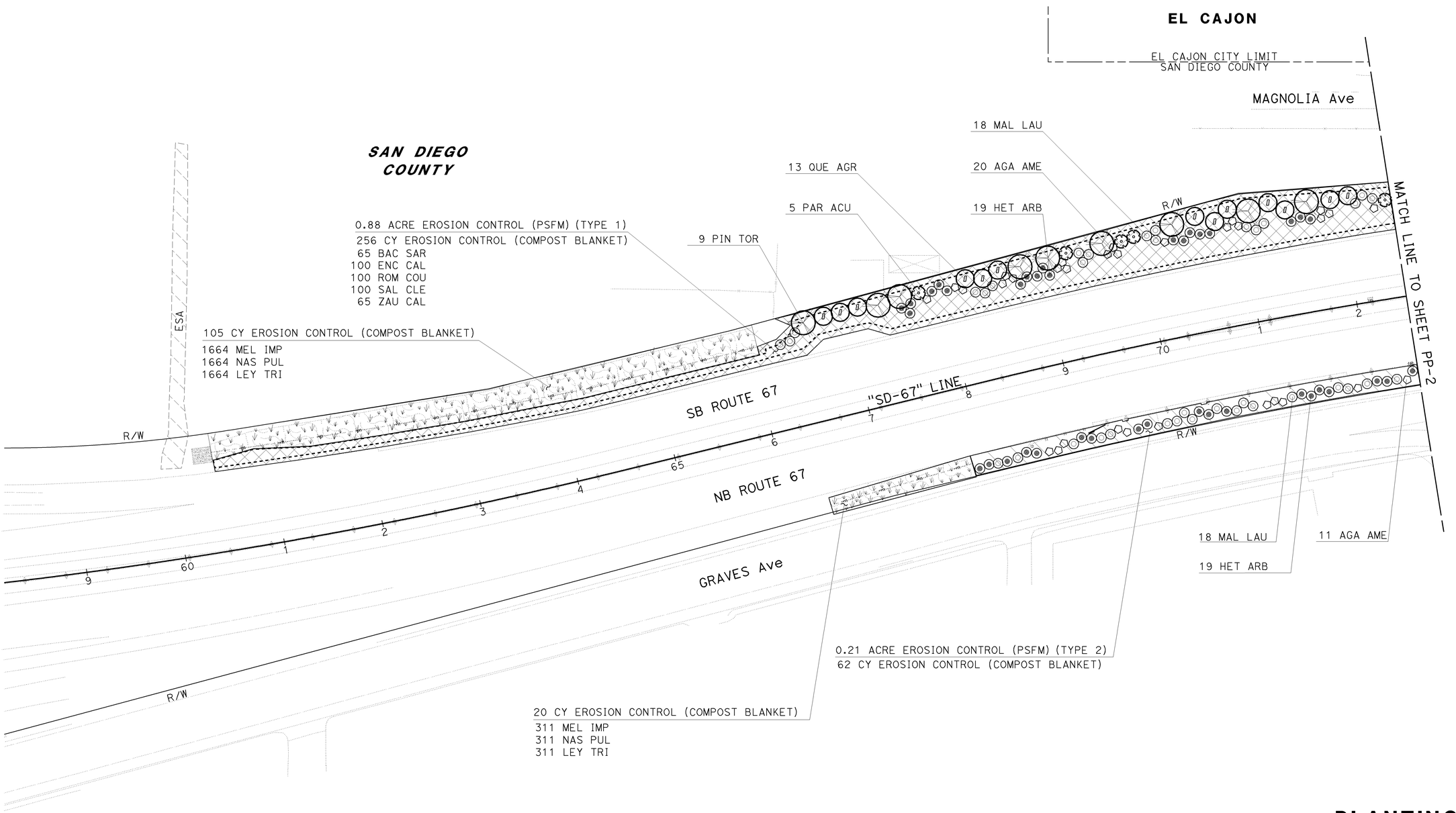

PLANTING PLAN

SCALE: 1" = 50'

PP-1

THIS PLAN ACCURATE FOR PLANTING WORK ONLY.

STATE OF CALIFORNIA - DEPARTMENT OF TRANSPORTATION
Caltrans LANDSCAPE ARCHITECTURE

SENIOR LANDSCAPE ARCHITECT: STEPHEN ALVAREZ
CALCULATED-DESIGNED BY: HENRY BARNES
CHECKED BY: CAROL CALLEJON
REVISED BY
DATE REVISED

LAST REVISION 12-09-10
DATE PLOTTED => 12-JAN-2011
TIME PLOTTED => 12:17

Dist	COUNTY	ROUTE	POST MILES TOTAL PROJECT	SHEET No.	TOTAL SHEETS
11	SD	52,67	17.3/17.5, R1.4/R2.4	13	48

LICENSED LANDSCAPE ARCHITECT

01-03-11

PLANS APPROVAL DATE

LICENSED LANDSCAPE ARCHITECT CAROL B. CALLEJON No. 3859 Signature 11/30/12 Renewal Date 12-06-10 Date STATE OF CALIFORNIA

THE STATE OF CALIFORNIA OR ITS OFFICERS OR AGENTS SHALL NOT BE RESPONSIBLE FOR THE ACCURACY OR COMPLETENESS OF SCANNED COPIES OF THIS PLAN SHEET.

NOTE:

FOR ACCURATE RIGHT OF WAY DATA, CONTACT RIGHT OF WAY ENGINEERING AT THE DISTRICT OFFICE.

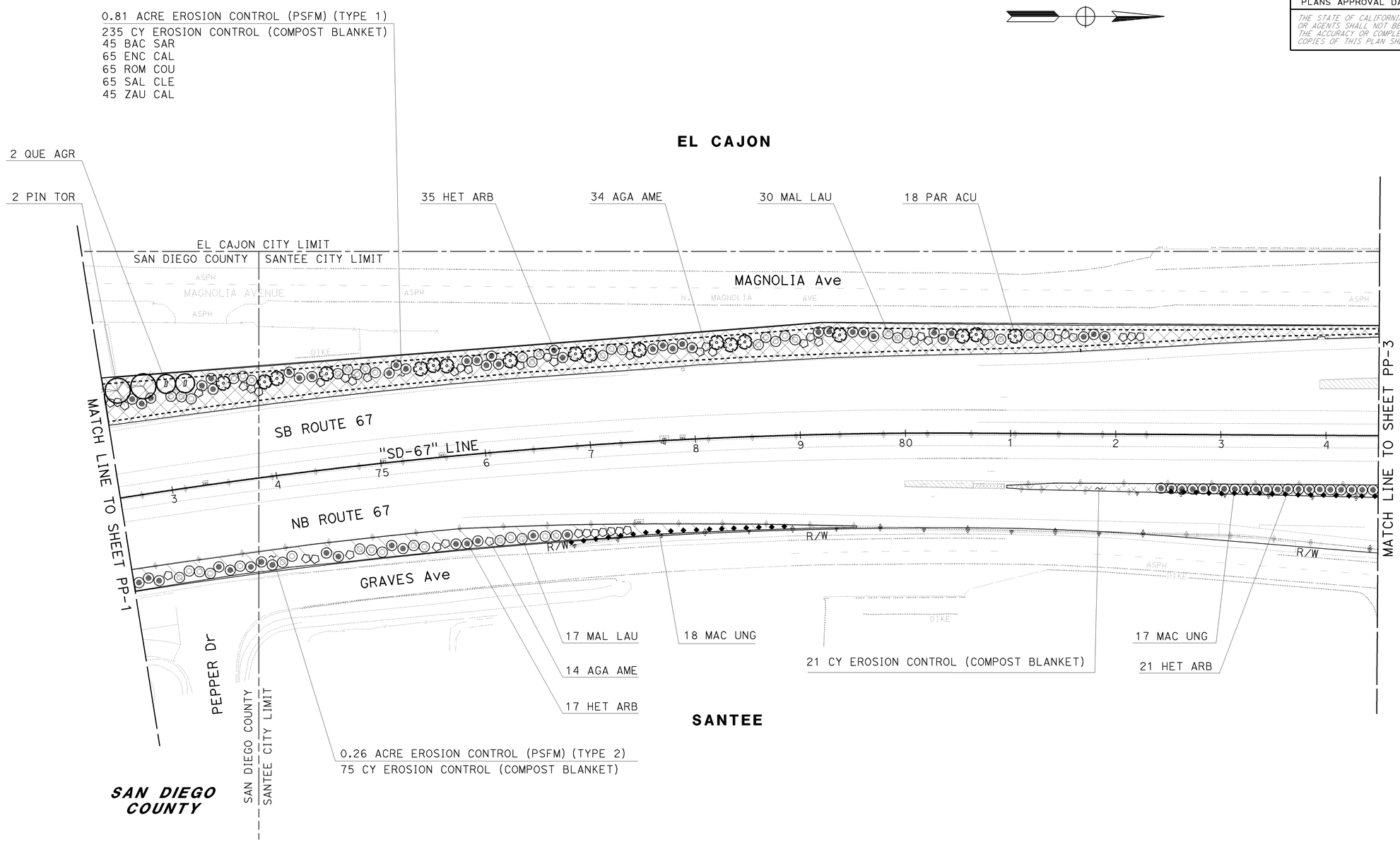

PLANTING PLAN

SCALE: 1" = 50'

PP-2

THIS PLAN ACCURATE FOR PLANTING WORK ONLY.

STATE OF CALIFORNIA - DEPARTMENT OF TRANSPORTATION

Caltrans® LANDSCAPE ARCHITECTURE

SENIOR LANDSCAPE ARCHITECT: STEPHEN ALVAREZ

CALCULATED-DESIGNED BY: HENRY BARNES

CHECKED BY: CAROL CALLEJON

REVISED BY

DATE REVISED

LAST REVISION 12-09-10

DATE PLOTTED => 12-JAN-2011

TIME PLOTTED => 12:17

Dist	COUNTY	ROUTE	POST MILES TOTAL PROJECT	SHEET No.	TOTAL SHEETS
11	SD	52,67	17.3/17.5, R1.4/R2.4	14	48

LICENSED LANDSCAPE ARCHITECT

01-03-11
PLANS APPROVAL DATE

THE STATE OF CALIFORNIA OR ITS OFFICERS OR AGENTS SHALL NOT BE RESPONSIBLE FOR THE ACCURACY OR COMPLETENESS OF SCANNED COPIES OF THIS PLAN SHEET.

LICENSED LANDSCAPE ARCHITECT
CAROL B. CALLEJON No. 3659
Signature
11/30/12
Renewal Date
12-06-10
Date
STATE OF CALIFORNIA

NOTE:

FOR ACCURATE RIGHT OF WAY DATA, CONTACT RIGHT OF WAY ENGINEERING AT THE DISTRICT OFFICE.

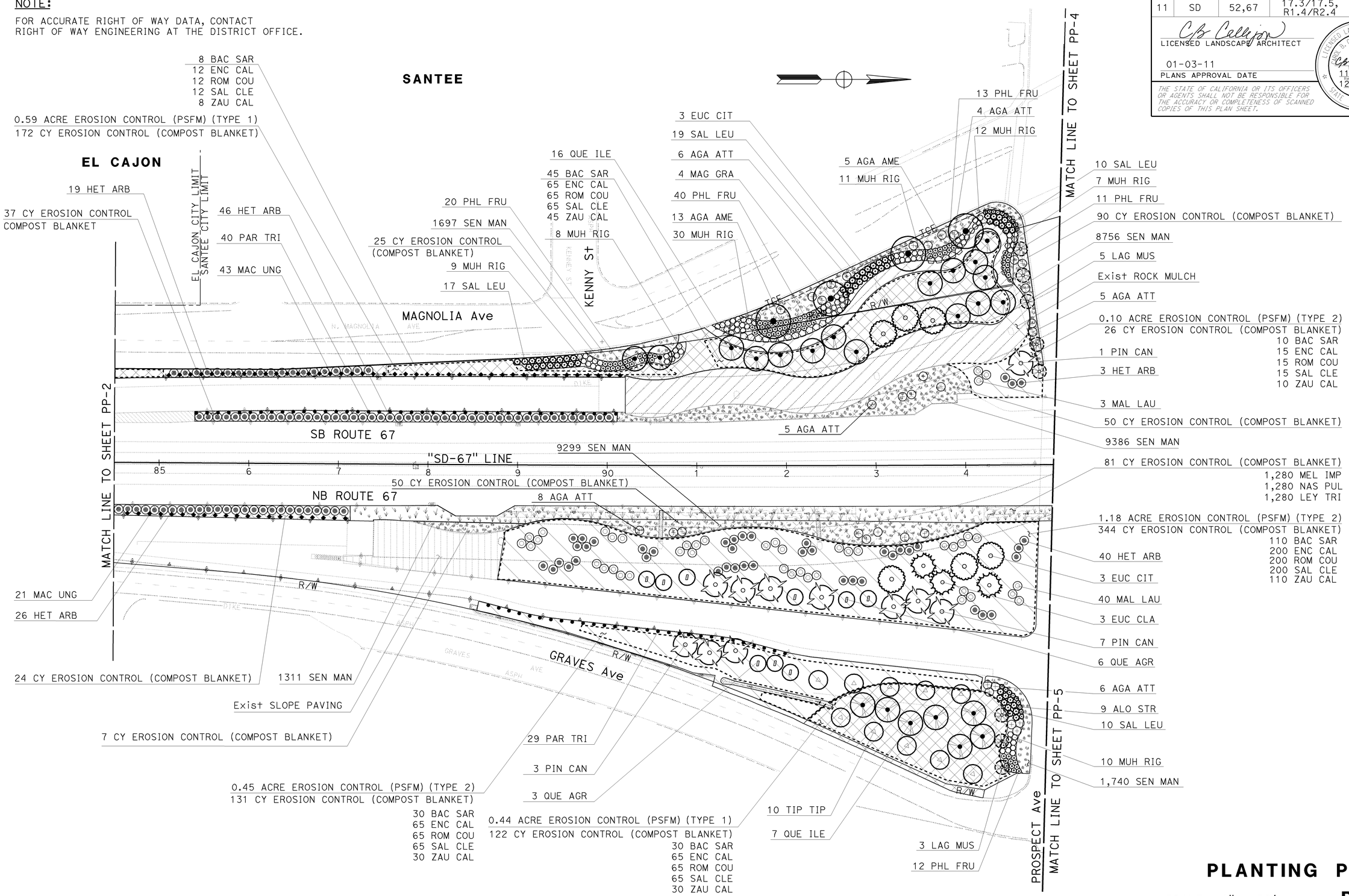

THIS PLAN ACCURATE FOR PLANTING WORK ONLY.

PLANTING PLAN

SCALE: 1" = 50'

PP-3

STATE OF CALIFORNIA - DEPARTMENT OF TRANSPORTATION
Caltrans LANDSCAPE ARCHITECTURE

SENIOR LANDSCAPE ARCHITECT: STEPHEN ALVAREZ
CALCULATED-DESIGNED BY: HENRY BARNES
CHECKED BY: CAROL CALLEJON
REVISED BY
DATE REVISED

LAST REVISION 12-09-10
DATE PLOTTED => 12-JAN-2011
TIME PLOTTED => 12:17

Dist	COUNTY	ROUTE	POST MILES TOTAL PROJECT	SHEET No.	TOTAL SHEETS
11	SD	52,67	17.3/17.5, R1.4/R2.4	15	48

LICENSED LANDSCAPE ARCHITECT

01-03-11

PLANS APPROVAL DATE

LICENSED LANDSCAPE ARCHITECT CAROL B. CALLEJON No. 3859 Signature 11/30/12 Renewal Date 12-06-10 Date STATE OF CALIFORNIA

THE STATE OF CALIFORNIA OR ITS OFFICERS OR AGENTS SHALL NOT BE RESPONSIBLE FOR THE ACCURACY OR COMPLETENESS OF SCANNED COPIES OF THIS PLAN SHEET.

NOTE:

FOR ACCURATE RIGHT OF WAY DATA, CONTACT RIGHT OF WAY ENGINEERING AT THE DISTRICT OFFICE.

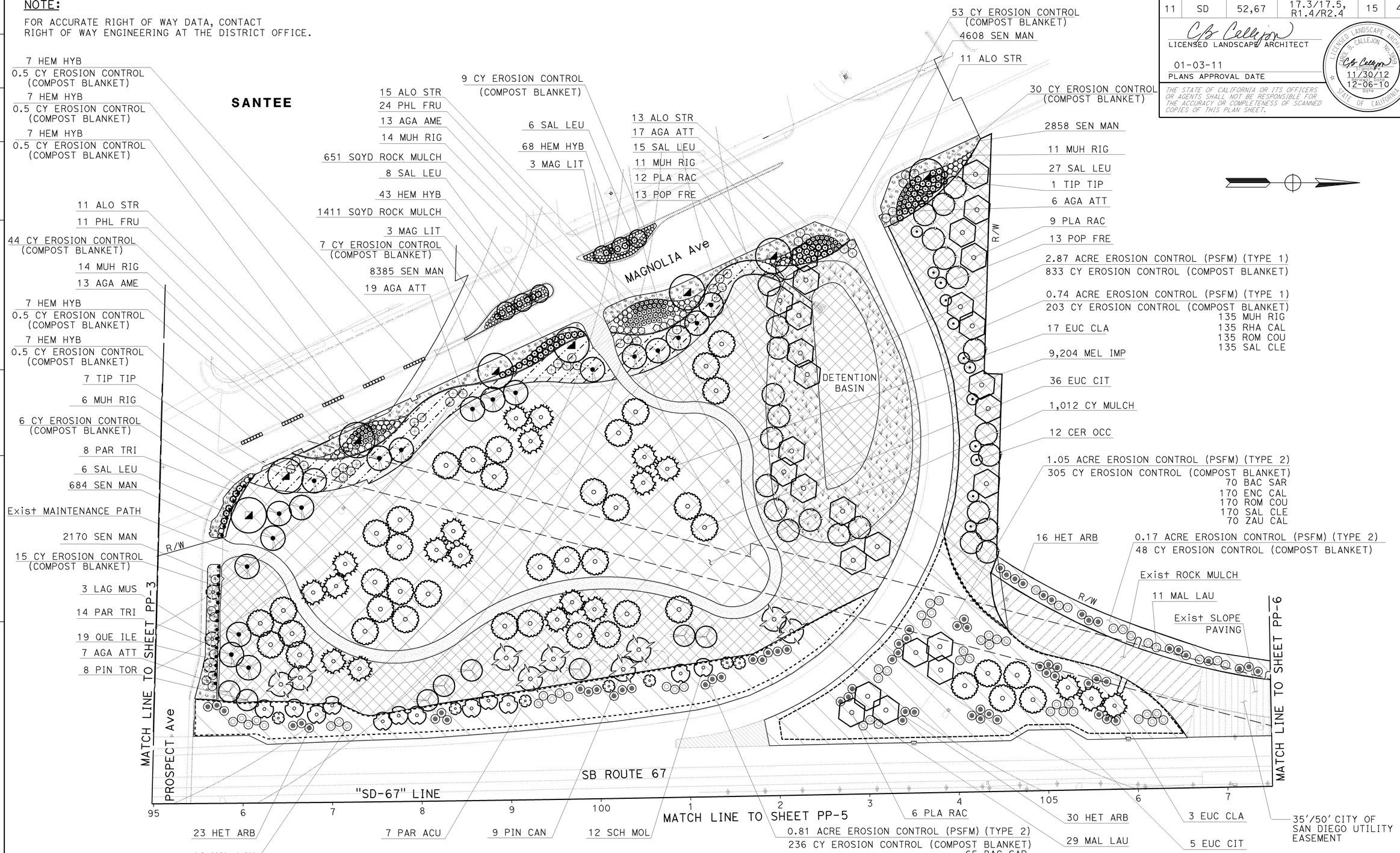

THIS PLAN ACCURATE FOR PLANTING WORK ONLY.

PLANTING PLAN

SCALE: 1" = 50'

PP-4

STATE OF CALIFORNIA - DEPARTMENT OF TRANSPORTATION

Caltrans LANDSCAPE ARCHITECTURE

SENIOR LANDSCAPE ARCHITECT: STEPHEN ALVAREZ

CALCULATED-DESIGNED BY: HENRY BARNES

CHECKED BY: CAROL CALLEJON

REVISED BY

DATE REVISED

LAST REVISION 12-09-10

DATE PLOTTED => 12-JAN-2011

TIME PLOTTED => 12:17

Dist	COUNTY	ROUTE	POST MILES TOTAL PROJECT	SHEET No.	TOTAL SHEETS
11	SD	52,67	17.3/17.5, R1.4/R2.4	16	48

LICENSED LANDSCAPE ARCHITECT

01-03-11
PLANS APPROVAL DATE

LICENSED LANDSCAPE ARCHITECT
CAROL B. CALLEJON No. 3860
Signature
11/30/12
Renewal Date
12-06-10
Date
STATE OF CALIFORNIA

THE STATE OF CALIFORNIA OR ITS OFFICERS OR AGENTS SHALL NOT BE RESPONSIBLE FOR THE ACCURACY OR COMPLETENESS OF SCANNED COPIES OF THIS PLAN SHEET.

NOTE:

FOR ACCURATE RIGHT OF WAY DATA, CONTACT RIGHT OF WAY ENGINEERING AT THE DISTRICT OFFICE.

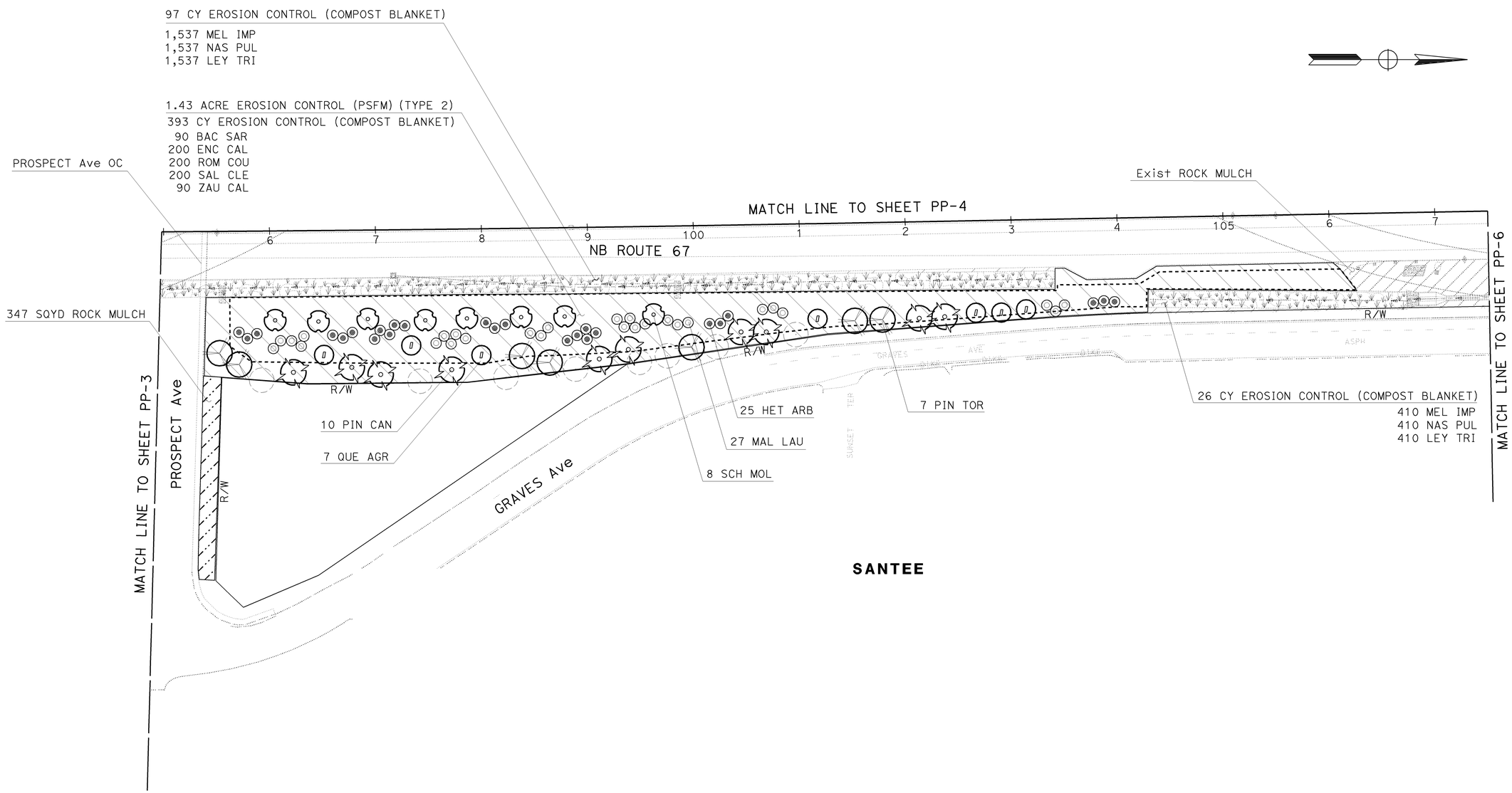

PLANTING PLAN

SCALE: 1" = 50'

PP-5

THIS PLAN ACCURATE FOR PLANTING WORK ONLY.

STATE OF CALIFORNIA - DEPARTMENT OF TRANSPORTATION
Caltrans LANDSCAPE ARCHITECTURE

SENIOR LANDSCAPE ARCHITECT: STEPHEN ALVAREZ
CALCULATED-DESIGNED BY: HENRY BARNES
CHECKED BY: CAROL CALLEJON
REVISED BY
DATE REVISED

LAST REVISION 12-09-10
DATE PLOTTED => 12-JAN-2011
TIME PLOTTED => 12:17

Dist	COUNTY	ROUTE	POST MILES TOTAL PROJECT	SHEET No.	TOTAL SHEETS
11	SD	52,67	17.3/17.5, R1.4/R2.4	17	48

LICENSED LANDSCAPE ARCHITECT

01-03-11
PLANS APPROVAL DATE

THE STATE OF CALIFORNIA OR ITS OFFICERS OR AGENTS SHALL NOT BE RESPONSIBLE FOR THE ACCURACY OR COMPLETENESS OF SCANNED COPIES OF THIS PLAN SHEET.

LICENSED LANDSCAPE ARCHITECT CAROL B. CALLEJON No. 3859 Signature 11/30/12 Renewal Date 12-06-10 Date STATE OF CALIFORNIA

NOTE:

FOR ACCURATE RIGHT OF WAY DATA, CONTACT RIGHT OF WAY ENGINEERING AT THE DISTRICT OFFICE.

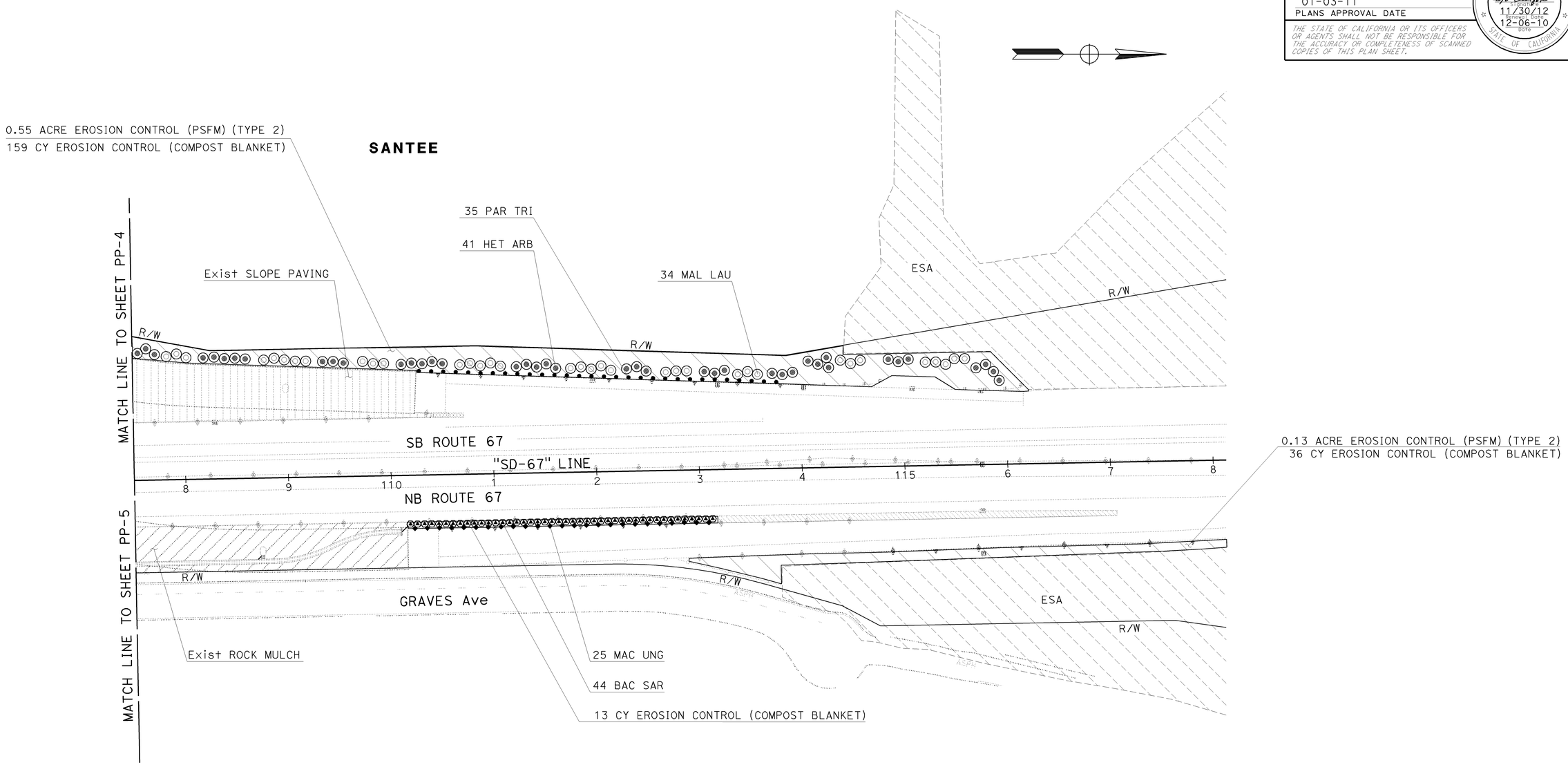

PLANTING PLAN

SCALE: 1" = 50'

PP-6

THIS PLAN ACCURATE FOR PLANTING WORK ONLY.

STATE OF CALIFORNIA - DEPARTMENT OF TRANSPORTATION
Caltrans LANDSCAPE ARCHITECTURE

SENIOR LANDSCAPE ARCHITECT: STEPHEN ALVAREZ
CALCULATED-DESIGNED BY: HENRY BARNES
CHECKED BY: CAROL CALLEJON
REVISED BY
DATE REVISED

LAST REVISION 12-10-10
DATE PLOTTED => 12-JAN-2011
TIME PLOTTED => 12:17

Dist	COUNTY	ROUTE	POST MILES TOTAL PROJECT	SHEET No.	TOTAL SHEETS
11	SD	52,67	17.3/17.5, R1.4/R2.4	18	48

LICENSED LANDSCAPE ARCHITECT

01-03-11
PLANS APPROVAL DATE

THE STATE OF CALIFORNIA OR ITS OFFICERS OR AGENTS SHALL NOT BE RESPONSIBLE FOR THE ACCURACY OR COMPLETENESS OF SCANNED COPIES OF THIS PLAN SHEET.

LICENSED LANDSCAPE ARCHITECT
CAROL B. CALLEJON No. 3859
Signature
11/30/12
Renewal Date
12-06-10
Date
STATE OF CALIFORNIA

NOTE:

FOR ACCURATE RIGHT OF WAY DATA, CONTACT RIGHT OF WAY ENGINEERING AT THE DISTRICT OFFICE.

THIS AREA IRRIGATED WITH RECYCLED WATER

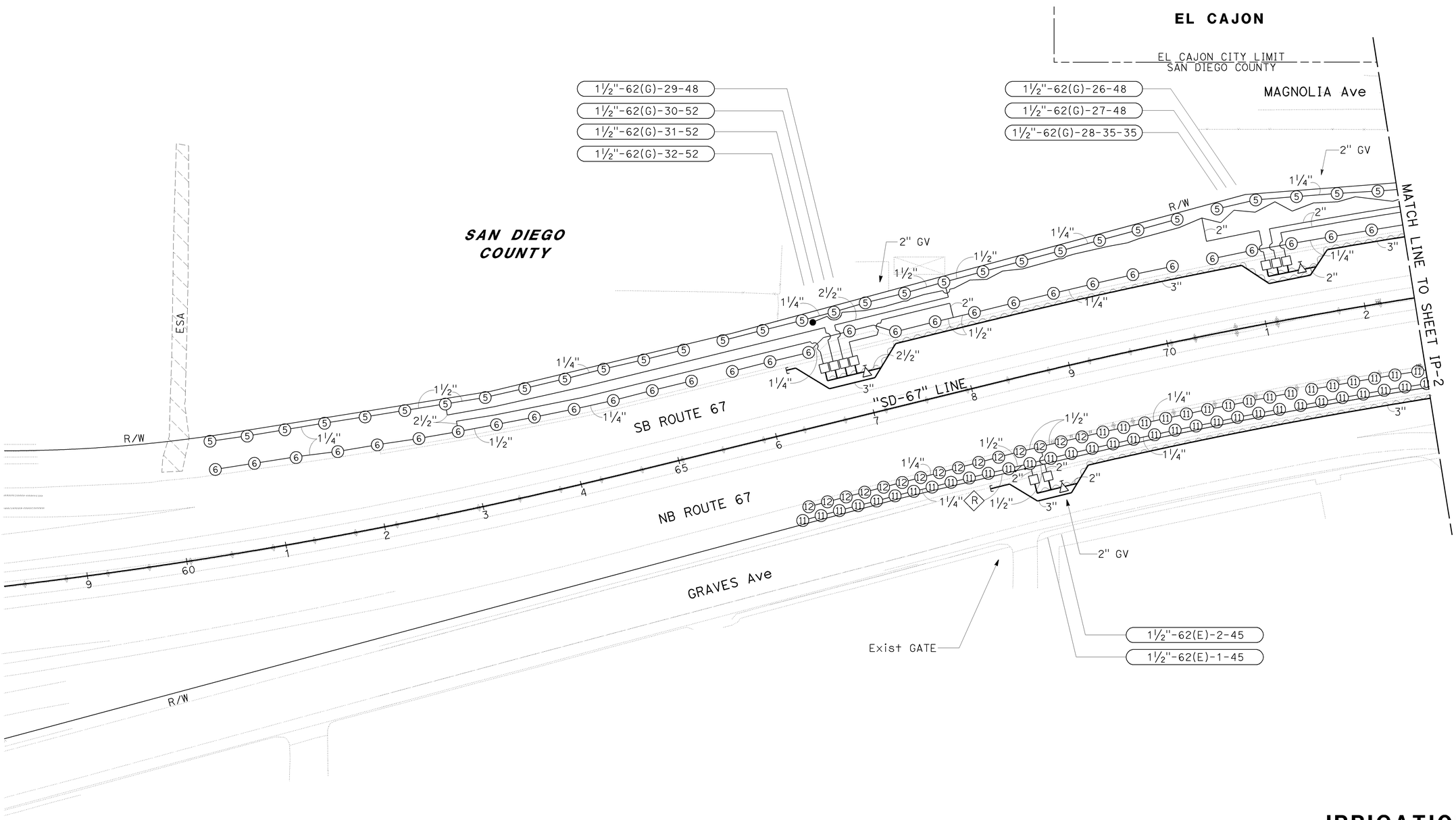

IRRIGATION PLAN

SCALE: 1" = 50'

IP-1

THIS PLAN ACCURATE FOR IRRIGATION WORK ONLY.

STATE OF CALIFORNIA - DEPARTMENT OF TRANSPORTATION
Caltrans LANDSCAPE ARCHITECTURE

SENIOR LANDSCAPE ARCHITECT: STEPHEN ALVAREZ
CALCULATED-DESIGNED BY: NEIL BLEEKER
CHECKED BY: CAROL CALLEJON
REVISED BY
DATE REVISED

LAST REVISION 12-10-10
DATE PLOTTED => 12-JAN-2011
TIME PLOTTED => 12:17

Dist	COUNTY	ROUTE	POST MILES TOTAL PROJECT	SHEET No.	TOTAL SHEETS
11	SD	52,67	17.3/17.5, R1.4/R2.4	19	48

LICENSED LANDSCAPE ARCHITECT

01-03-11
PLANS APPROVAL DATE

LICENSED LANDSCAPE ARCHITECT — CAROL A. CALLEJON — No. 3869 — 11/30/12 Renewal Date — 12-06-10 Date — STATE OF CALIFORNIA

THE STATE OF CALIFORNIA OR ITS OFFICERS OR AGENTS SHALL NOT BE RESPONSIBLE FOR THE ACCURACY OR COMPLETENESS OF SCANNED COPIES OF THIS PLAN SHEET.

NOTE:

FOR ACCURATE RIGHT OF WAY DATA, CONTACT RIGHT OF WAY ENGINEERING AT THE DISTRICT OFFICE.

THIS AREA IRRIGATED WITH RECYCLED WATER

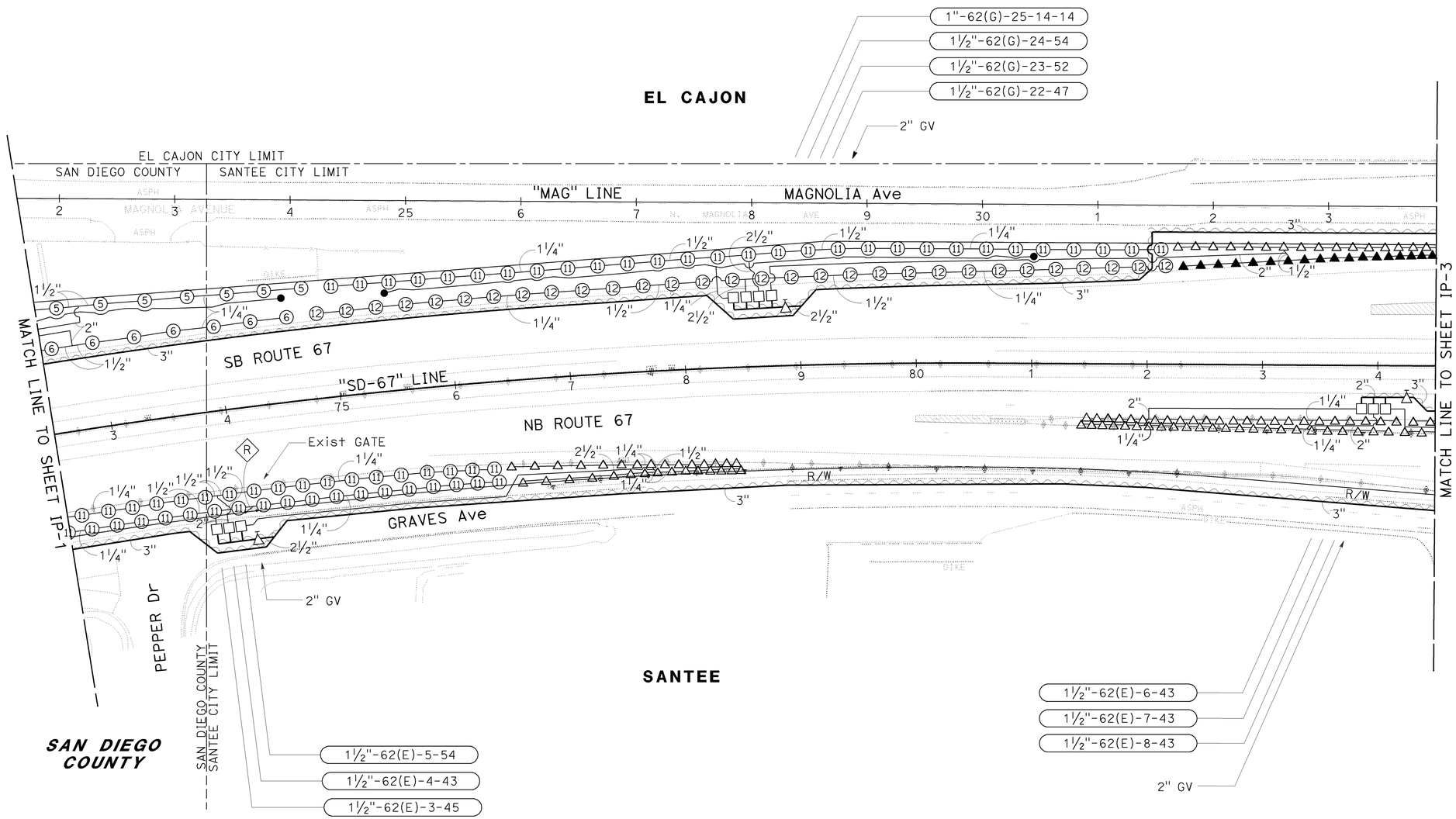

THIS PLAN ACCURATE FOR IRRIGATION WORK ONLY.

IRRIGATION PLAN

SCALE: 1" = 50'

IP-2

STATE OF CALIFORNIA - DEPARTMENT OF TRANSPORTATION
Caltrans® LANDSCAPE ARCHITECTURE

SENIOR LANDSCAPE ARCHITECT: STEPHEN ALVAREZ
CALCULATED-DESIGNED BY: NEIL BLEEKER
CHECKED BY: CAROL CALLEJON
REVISED BY
DATE REVISED

LAST REVISION 12-10-10
DATE PLOTTED => 12-JAN-2011
TIME PLOTTED => 12:18

Dist	COUNTY	ROUTE	POST MILES TOTAL PROJECT	SHEET No.	TOTAL SHEETS
11	SD	52,67	17.3/17.5, R1.4/R2.4	20	48

LICENSED LANDSCAPE ARCHITECT

01-03-11
PLANS APPROVAL DATE

LICENSED LANDSCAPE ARCHITECT
CAROL B. CALLEJON No. 3859
Signature
11/30/12
Renewal Date
12-06-10
Date
STATE OF CALIFORNIA

THE STATE OF CALIFORNIA OR ITS OFFICERS OR AGENTS SHALL NOT BE RESPONSIBLE FOR THE ACCURACY OR COMPLETENESS OF SCANNED COPIES OF THIS PLAN SHEET.

NOTE:

FOR ACCURATE RIGHT OF WAY DATA, CONTACT RIGHT OF WAY ENGINEERING AT THE DISTRICT OFFICE.

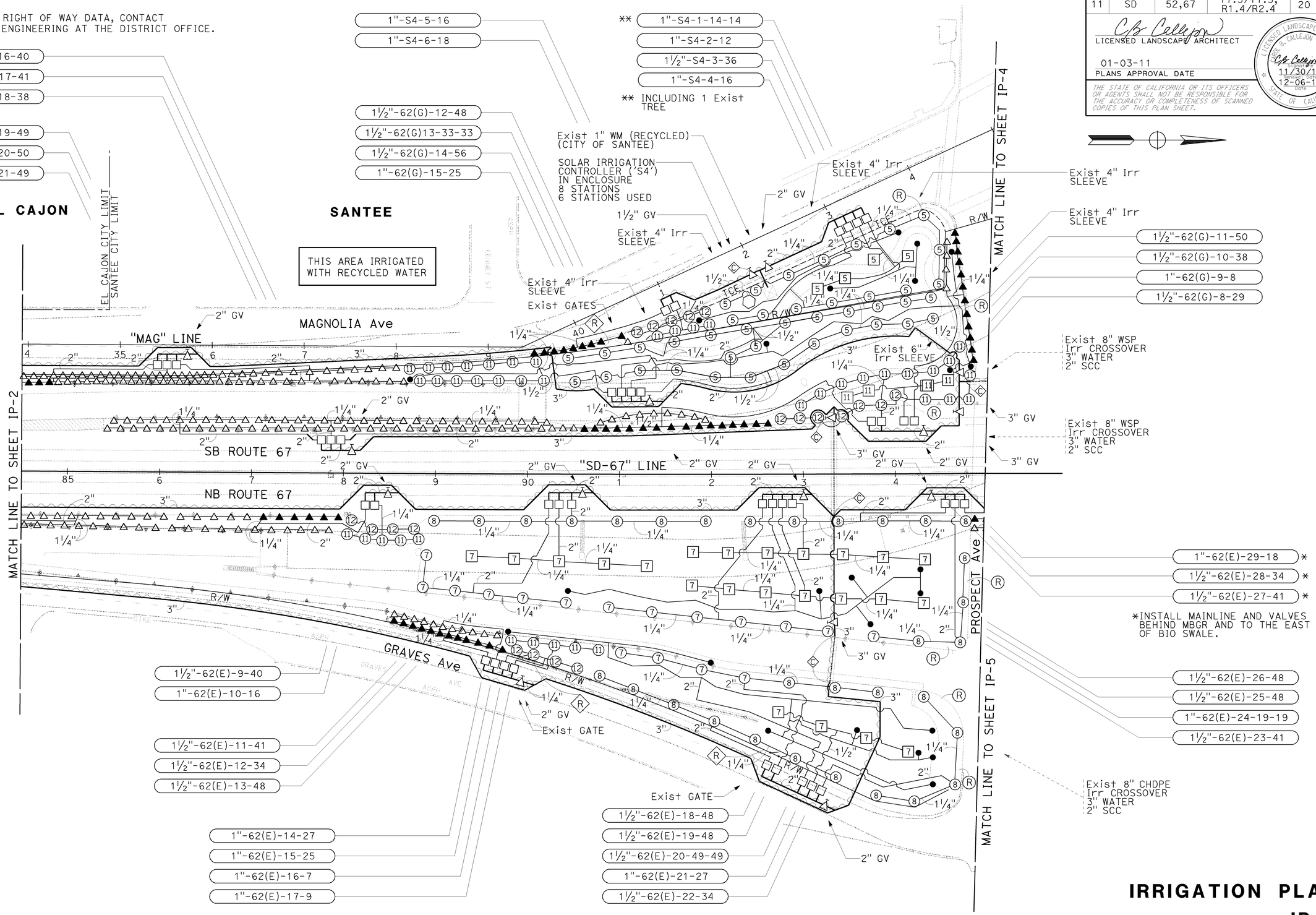

THIS PLAN ACCURATE FOR IRRIGATION WORK ONLY.

IRRIGATION PLAN

SCALE: 1" = 50'

IP-3

STATE OF CALIFORNIA - DEPARTMENT OF TRANSPORTATION
Caltrans LANDSCAPE ARCHITECTURE

SENIOR LANDSCAPE ARCHITECT: STEPHEN ALVAREZ
CALCULATED-DESIGNED BY: NEIL BLEEKER
CHECKED BY: CAROL CALLEJON
REVISED BY
DATE REVISED

LAST REVISION 12-10-10
DATE PLOTTED => 12-JAN-2011
TIME PLOTTED => 12:18

BORDER LAST REVISED 7/1/2010
USERNAME => s127284
DGN FILE => 1100000443t1003.dgn
RELATIVE BORDER SCALE IS IN INCHES 0 1 2 3
UNIT 2816
PROJECT NUMBER & PHASE 11000004431

Dist	COUNTY	ROUTE	POST MILES TOTAL PROJECT	SHEET No.	TOTAL SHEETS
11	SD	52,67	17.3/17.5, R1.4/R2.4	21	48

LICENSED LANDSCAPE ARCHITECT

01-03-11

PLANS APPROVAL DATE

THE STATE OF CALIFORNIA OR ITS OFFICERS OR AGENTS SHALL NOT BE RESPONSIBLE FOR THE ACCURACY OR COMPLETENESS OF SCANNED COPIES OF THIS PLAN SHEET.

LICENSED LANDSCAPE ARCHITECT CAROL B. CALLEJON No. 3859 Signature 11/30/12 Renewal Date 12-06-10 Date STATE OF CALIFORNIA

NOTE:

FOR ACCURATE RIGHT OF WAY DATA, CONTACT RIGHT OF WAY ENGINEERING AT THE DISTRICT OFFICE.

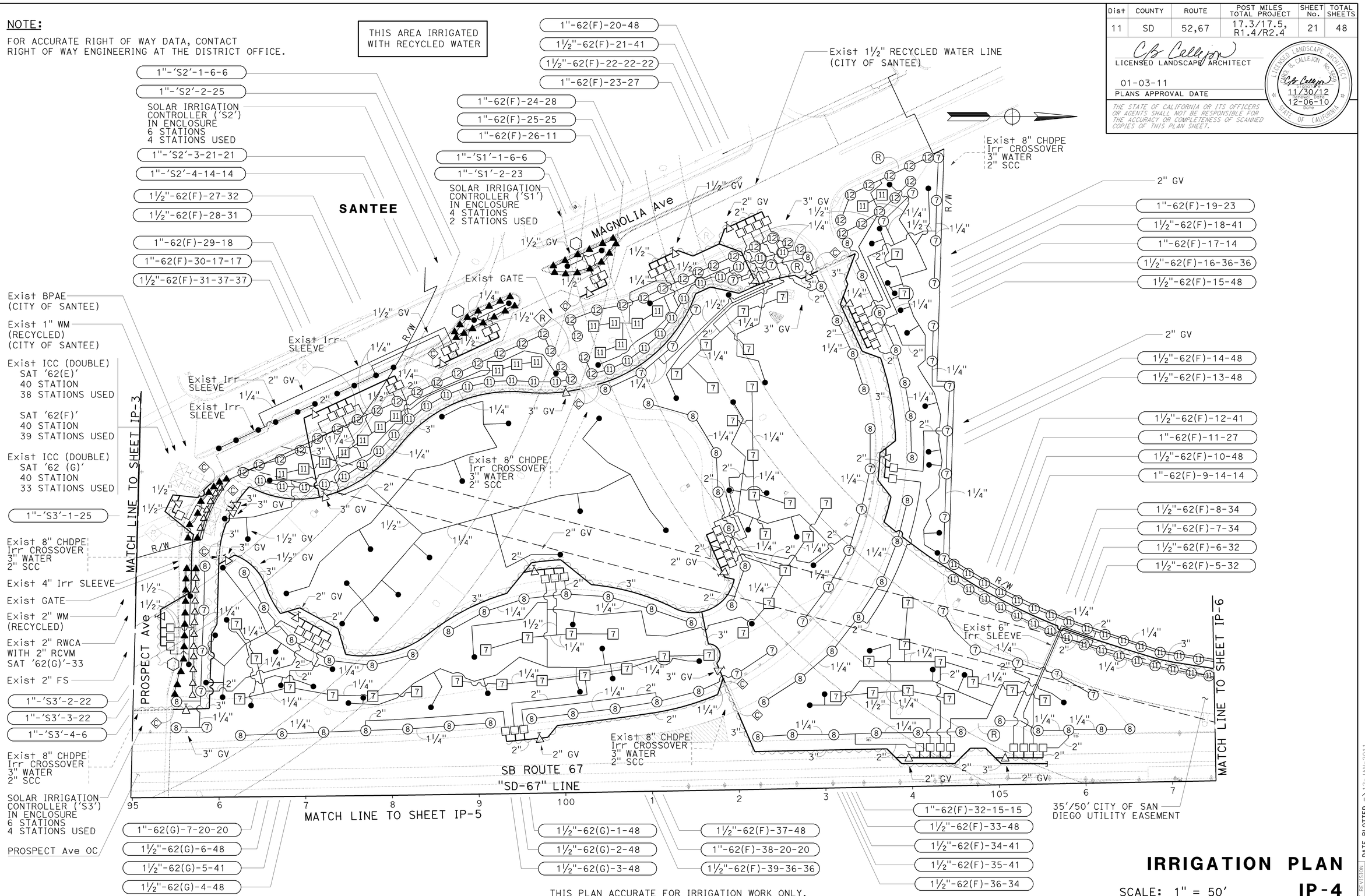

THIS PLAN ACCURATE FOR IRRIGATION WORK ONLY.

IRRIGATION PLAN

SCALE: 1" = 50'

IP-4

STATE OF CALIFORNIA - DEPARTMENT OF TRANSPORTATION

Caltrans® LANDSCAPE ARCHITECTURE

SENIOR LANDSCAPE ARCHITECT: STEPHEN ALVAREZ

CALCULATED-DESIGNED BY: NEIL BLEEKER

CHECKED BY: CAROL CALLEJON

REVISED BY

DATE REVISED

LAST REVISION 12-10-10

DATE PLOTTED => 12-JAN-2011

TIME PLOTTED => 12:18

Dist	COUNTY	ROUTE	POST MILES TOTAL PROJECT	SHEET No.	TOTAL SHEETS
11	SD	52,67	17.3/17.5, R1.4/R2.4	22	48

LICENSED LANDSCAPE ARCHITECT

01-03-11
PLANS APPROVAL DATE

LICENSED LANDSCAPE ARCHITECT
CAROL B. CALLEJON No. 3859
Signature
11/30/12
Renewal Date
12-06-10
Date
STATE OF CALIFORNIA

THE STATE OF CALIFORNIA OR ITS OFFICERS OR AGENTS SHALL NOT BE RESPONSIBLE FOR THE ACCURACY OR COMPLETENESS OF SCANNED COPIES OF THIS PLAN SHEET.

NOTE:

FOR ACCURATE RIGHT OF WAY DATA, CONTACT RIGHT OF WAY ENGINEERING AT THE DISTRICT OFFICE.

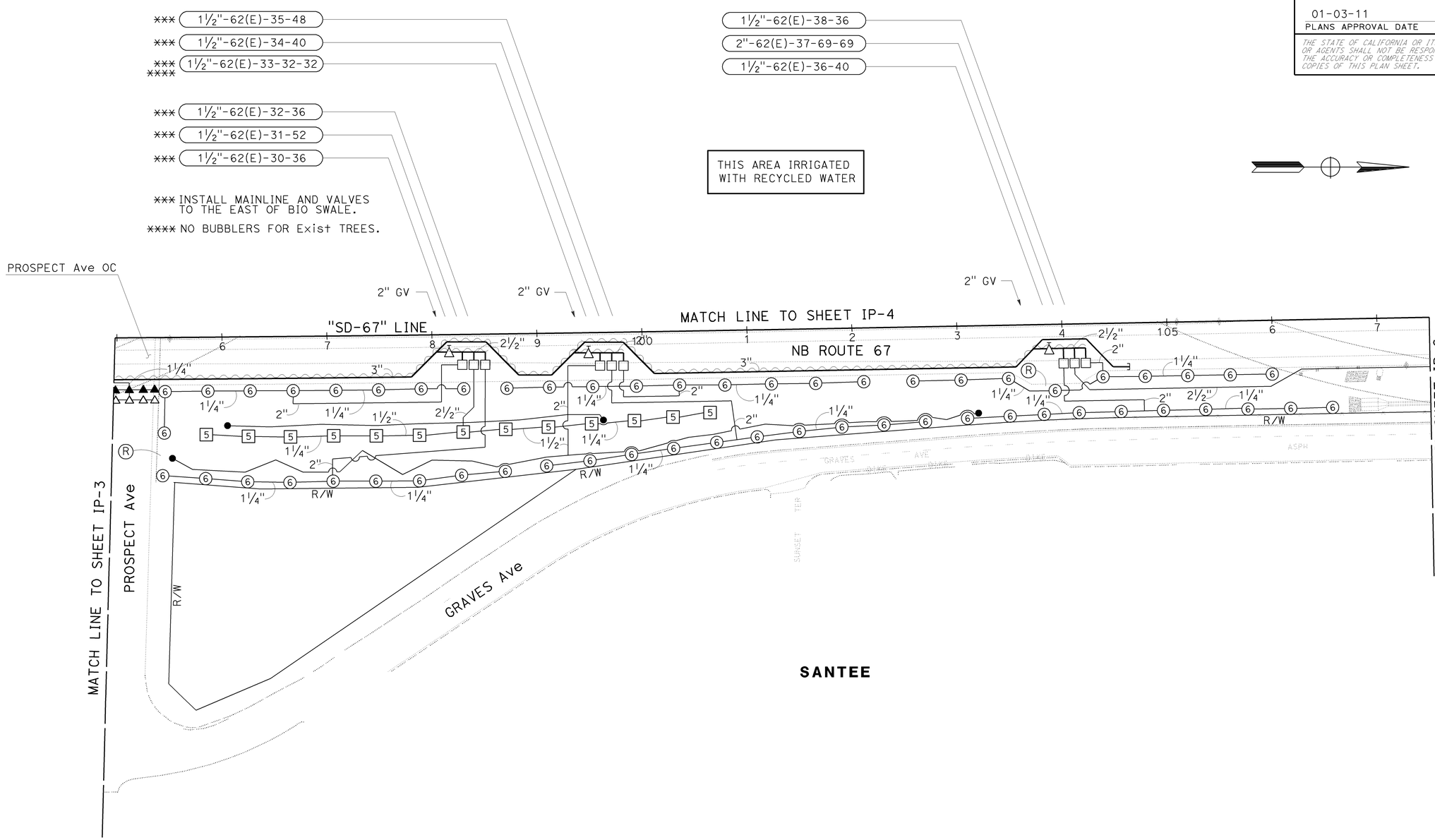

IRRIGATION PLAN

SCALE: 1" = 50'

IP-5

THIS PLAN ACCURATE FOR IRRIGATION WORK ONLY.

STATE OF CALIFORNIA - DEPARTMENT OF TRANSPORTATION
Caltrans® LANDSCAPE ARCHITECTURE

SENIOR LANDSCAPE ARCHITECT: STEPHEN ALVAREZ
CALCULATED-DESIGNED BY: NEIL BLEEKER
CHECKED BY: CAROL CALLEJON
REVISED BY
DATE REVISED

LAST REVISION 12-10-10
DATE PLOTTED => 12-JAN-2011
TIME PLOTTED => 12:18

BORDER LAST REVISED 7/1/2010
USERNAME => s127284
DGN FILE => 1100000443t1005.dgn
RELATIVE BORDER SCALE IS IN INCHES 0 1 2 3
UNIT 2816
PROJECT NUMBER & PHASE 11000004431

Dist	COUNTY	ROUTE	POST MILES TOTAL PROJECT	SHEET No.	TOTAL SHEETS
11	SD	52,67	17.3/17.5, R1.4/R2.4	23	48

LICENSED LANDSCAPE ARCHITECT

01-03-11
PLANS APPROVAL DATE

LICENSED LANDSCAPE ARCHITECT
CAROL B. CALLEJON No. 3859
Signature
11/30/12
Renewal Date
12-06-10
Date
STATE OF CALIFORNIA

THE STATE OF CALIFORNIA OR ITS OFFICERS OR AGENTS SHALL NOT BE RESPONSIBLE FOR THE ACCURACY OR COMPLETENESS OF SCANNED COPIES OF THIS PLAN SHEET.

NOTE:

FOR ACCURATE RIGHT OF WAY DATA, CONTACT RIGHT OF WAY ENGINEERING AT THE DISTRICT OFFICE.

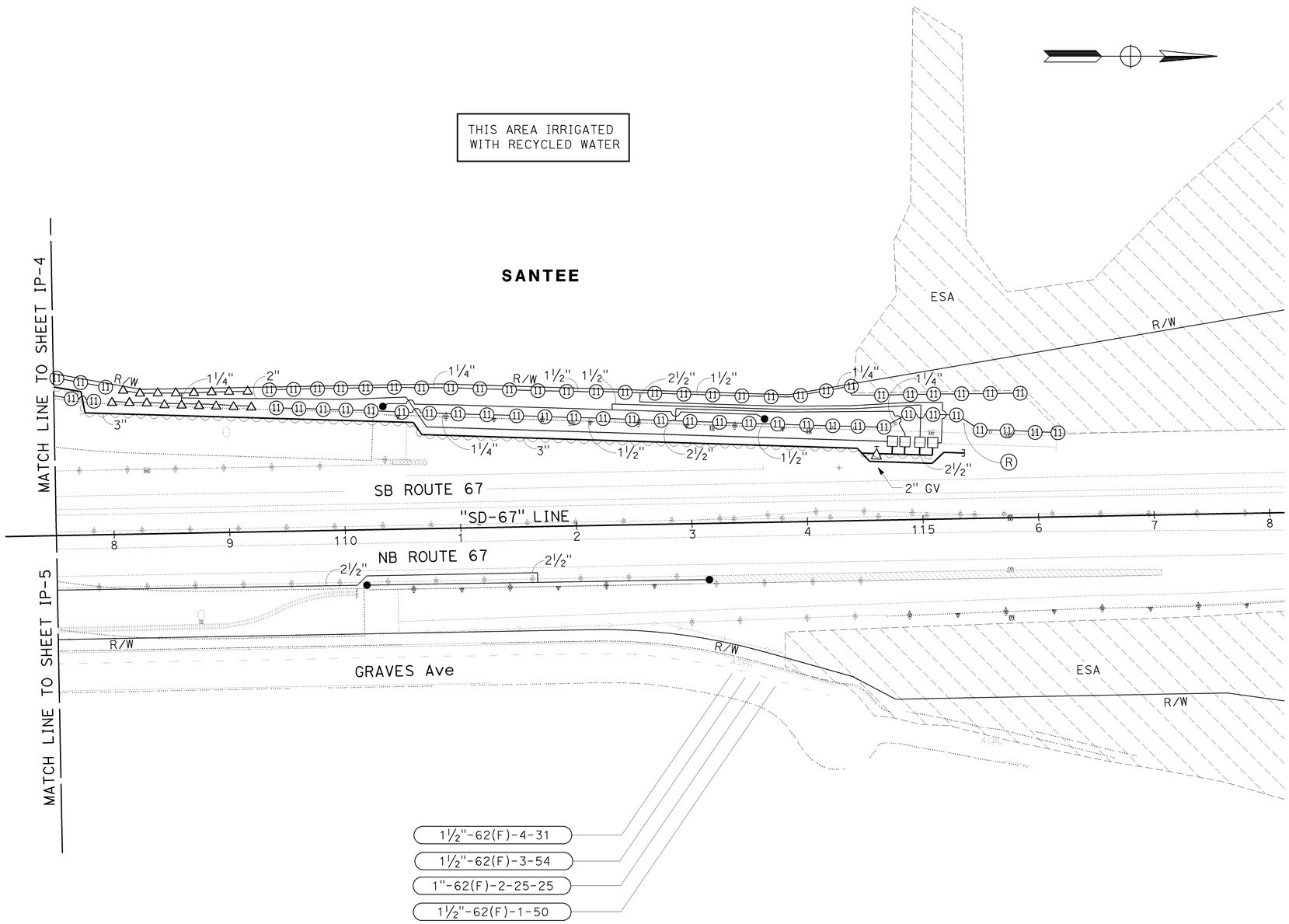

IRRIGATION PLAN

SCALE: 1" = 50'

IP-6

THIS PLAN ACCURATE FOR IRRIGATION WORK ONLY.

STATE OF CALIFORNIA - DEPARTMENT OF TRANSPORTATION
Caltrans® LANDSCAPE ARCHITECTURE

SENIOR LANDSCAPE ARCHITECT: STEPHEN ALVAREZ
CALCULATED-DESIGNED BY: NEIL BLEEKER
CHECKED BY: CAROL CALLEJON
REVISED BY
DATE REVISED

LAST REVISION 12-10-10
DATE PLOTTED => 12-JAN-2011
TIME PLOTTED => 12:18

Dist	COUNTY	ROUTE	POST MILES TOTAL PROJECT	SHEET No.	TOTAL SHEETS
11	SD	52,67	17.3/17.5, R1.4/R2.4	24	48

LICENSED LANDSCAPE ARCHITECT

01-03-11
PLANS APPROVAL DATE

LICENSED LANDSCAPE ARCHITECT CAROL B. CALLEJON No. 3609 STATE OF CALIFORNIA
11/30/12 renewal date
12-06-10 date

THE STATE OF CALIFORNIA OR ITS OFFICERS OR AGENTS SHALL NOT BE RESPONSIBLE FOR THE ACCURACY OR COMPLETENESS OF SCANNED COPIES OF THIS PLAN SHEET.

SPRINKLER SCHEDULE

SYMBOL	TYPE	DESCRIPTION	SPRAY PATTERN	OPERATING PRESSURE (PSI)	PRESSURE COMPENSATING	PLUS / MINUS 5% ② DISCHARGE: GALLONS PER SECOND (GPS)	GALLONS PER MINUTE (GPM)	GALLONS PER HOUR (GPH)	RADIUS (Ft)	WIDTH x LENGTH (Ft)	MATERIAL	NOZZLE SIZE (INCH)	INLET CONNECTION (NPT) (DN IN INCHES)(INCH)	POSITIVE-LOCKING ADJ ARC STOP	BACKSPLASH PREVENTER	DIFFUSER PIN	DISTANCE CONTROL FLAP	ADJ DISCHARGE	RISER: TYPE	MATERIAL: PLASTIC	MATERIAL: GALVANIZED	SIZE (IPS) (INCH)	HEIGHT (INCH)	FLOW SHUTOFF DEVICE	SWING JOINT (TYPE)	RISER SUPPORT	SPRINKLER PROTECTOR (TYPE)	REMARKS
5	A-5	GEAR DRIVEN	F	50	-	-	4	-	40	-	PL	-	¾	-	-	X	-	-	I	X	-	¾	6	-	1	-	-	③
⑤	A-5	GEAR DRIVEN	P	50	-	-	4	-	40	-	PL	-	¾	-	-	X	-	-	I	X	-	¾	6	-	1	-	-	③⑦
⑥	A-6	GEAR DRIVEN	P	50	-	-	4	-	40	-	PL	-	¾	-	-	X	-	-	-	-	-	-	-	-	1	-	1	③⑦ 12" POP-UP
7	A-7	GEAR DRIVEN	F	50	-	-	6.8	-	48	-	PL	-	¾	-	-	X	-	-	I	X	-	¾	6	-	1	-	-	③
⑦	A-7	GEAR DRIVEN	P	50	-	-	6.8	-	48	-	PL	-	¾	-	-	X	-	-	I	X	-	¾	6	-	1	-	-	③⑦
⑧	A-8	GEAR DRIVEN	P	50	-	-	6.8	-	48	-	PL	-	¾	-	-	X	-	-	-	-	-	-	-	-	1	-	1	③⑦ 12" POP-UP
11	A-11	GEAR DRIVEN	F	50	-	-	1.8	-	25	-	PL	-	¾	-	-	X	-	-	I	X	-	¾	6	-	1	-	-	③
⑪	A-11	GEAR DRIVEN	P	50	-	-	1.8	-	25	-	PL	-	¾	-	-	X	-	-	I	X	-	¾	6	-	1	-	-	③⑦
⑫	A-12	GEAR DRIVEN	P	50	-	-	1.8	-	25	-	PL	-	¾	-	-	X	-	-	-	-	-	-	-	-	1	-	1	③⑦ 12" POP-UP
△	B-1	SPRAY HEAD	H	30	-	-	1.8	-	15	-	PL	-	½	-	-	X	-	X	I	X	-	½	6	-	1	-	-	⑧⑨
▲	B-2	SPRAY HEAD	H	30	-	-	1.8	-	15	-	PL	-	½	-	-	X	-	X	-	-	-	-	-	-	1	-	1	⑧⑨ 12" POP-UP
•	C-2 Mod	MODIFIED FLOOD BUBBLER	-	30	X	-	1.0	-	-	-	PL	-	½	-	-	-	-	-	I	X	-	½	-	-	1	-	-	④⑨⑩

X IN BOX DENOTES REQUIREMENT

APPLICABLE WHEN CIRCLED BELOW:

1 - SEE SPECIAL PROVISIONS.
② - IF A PRESSURE COMPENSATING DEVICE IS SPECIFIED, THE DISCHARGE AND RADII SHOWN REFLECT ITS USE.
③ - SHALL HAVE AN INTERNAL OR EXTERNAL CHECK VALVE.
④ - NON-ADJUSTABLE DISCHARGE RATE.
5 - REQUIRED ADJACENT TO SHOULDERS, CURBS, SIDEWALKS, AND DIKES.
6 - UNLESS OTHERWISE SHOWN ON PLANS.
⑦ - ADJUSTABLE ARC.
⑧ - MATCHED PRECIPITATION RATE NOZZLES.
⑨ - REFER TO PIPE SIZING CHARTS.
⑩ - PROVIDE 2 BUBBLERS PER BOX TREES AND (1) BUBBLER FOR ALL OTHER TREES (NEW & EXISTING) AND VINES (UNLESS INDICATED OTHERWISE).

ABBREVIATIONS:

ADJ — ADJUSTABLE
B/B — BRASS/BRONZE
B/B/PL — BRASS/BRONZE/PLASTIC
B/PL — BRASS/PLASTIC
CST — CENTER STRIP
DN — DIAMETER NOMINAL
EST — END STRIP
Ft — FEET
F — FULL CIRCLE
F/P — FULL/PART CIRCLE
GPM — GALLONS PER MINUTE
H — HALF CIRCLE
IPS — IRON PIPE SIZE
NPT — NATIONAL PIPE THREAD
P — PART CIRCLE
PL — PLASTIC
PSI — POUNDS PER SQUARE INCH
Q — QUARTER CIRCLE
SST — SIDE STRIP
T — THIRD CIRCLE
TQ — THREE QUARTER CIRCLE
TT — TWO THIRDS CIRCLE

NOTES:

1. ALL NEW LATERAL PIPE NOT LABELED SHALL BE 1 INCH, OR AS SHOWN ON PIPE SIZING CHARTS.
2. ALL SPRINKLER HEADS, VALVES, MAINLINE AND LATERAL LINE NEAR MVP LOCATIONS ARE TO BE INSTALLED OUTSIDE OF THE MVP AREA. VALVES TO BE INSTALLED AT EXITING END OF MVP.
3. LOCATE VALVE MANIFOLDS AND MAINLINE OUTSIDE OF ROCK MULCH AND MAINTENANCE ACCESS AREAS.
4. ALL NEW MAINLINE PIPE WHICH HAS A CHANGE IN DIRECTION OF 90 DEGREES OR MORE SHALL HAVE (2)-45 DEGREE ELBOWS.
5. PULL ONE ADDITIONAL CNC WIRE FROM EACH CONTROLLER TO THE LAST VALVE BOX AT EACH VALVE MANIFOLD. (FOR FUTURE USE)
6. ALL IRRIGATION EQUIPMENT SHALL BE PURPLE IN COLOR AND/OR LABELED AS PER SAN DIEGO COUNTY DEPARTMENT OF HEALTH REQUIREMENTS. NO PONDING, RUNOFF, OR OVERSPRAY IS PERMITTED. ADJUST ALL SPRINKLER HEADS TO PREVENT OVERSPRAYING ONTO SIDEWALKS, STREETS, AND PRIVATE LOTS.

21-33	15-20	8-14	1-7
2"	1½"	1¼"	1"

B-1 & B-2 PIPE SIZING CHART

ALL CALULATIONS ARE FOR 180° THROW.

51-69	31-50	22-30	12-21	1-11
2½"	2"	1½"	1¼"	1"

C-2 (Mod) PIPE SIZING CHART

LEGEND:

RW — Exist RWCA (RECYCLED WATER CONNECTION ASSEMBLY)

FS — Exist FLOW SENSOR

(R) — RECYCLED WATER WARNING SIGN - FENCE OR CAGE MOUNTED

(R) — RECYCLED WATER WARNING SIGN - POST MOUNTED

(R) — Exist RECYCLED WATER WARNING SIGN - FENCE MOUNTED

(R) — Exist RECYCLED WATER WARNING SIGN - POST MOUNTED

X-X(X)-XX-XX-XX

- RCV SIZE
- IRRIGATION CLUSTER CONTROL UNIT - (CCU)
- IRRIGATION SATELLITE CONTROLLER - (SAT)
- CONTROL VALVE STATION
- GALLONS PER MINUTE (GPM)
- QUANTITY OF SPRINKLERS (WHEN SHOWN)

PROPOSED VALVE CODE SAT CONTROLLED VALVES

LANDSCAPE DETAILS

NO SCALE

LD-1

REVISED BY | DATE REVISED
NEIL BLEEKER | CAROL CALLEJON
CALCULATED-DESIGNED BY | CHECKED BY
SENIOR LANDSCAPE ARCHITECT
STEPHEN ALVAREZ

STATE OF CALIFORNIA - DEPARTMENT OF TRANSPORTATION
Caltrans® LANDSCAPE ARCHITECTURE

LAST REVISION 12-10-10
DATE PLOTTED => 12-JAN-2011
TIME PLOTTED => 12:18

Dist	COUNTY	ROUTE	POST MILES TOTAL PROJECT	SHEET No.	TOTAL SHEETS
11	SD	52,67	17.3/17.5, R1.4/R2.4	25	48

LICENSED LANDSCAPE ARCHITECT

01-03-11

PLANS APPROVAL DATE

LICENSED LANDSCAPE ARCHITECT CAROL B. CALLEJON No. 3659 Signature 11/30/12 Renewal Date 12-06-10 Date STATE OF CALIFORNIA

THE STATE OF CALIFORNIA OR ITS OFFICERS OR AGENTS SHALL NOT BE RESPONSIBLE FOR THE ACCURACY OR COMPLETENESS OF SCANNED COPIES OF THIS PLAN SHEET.

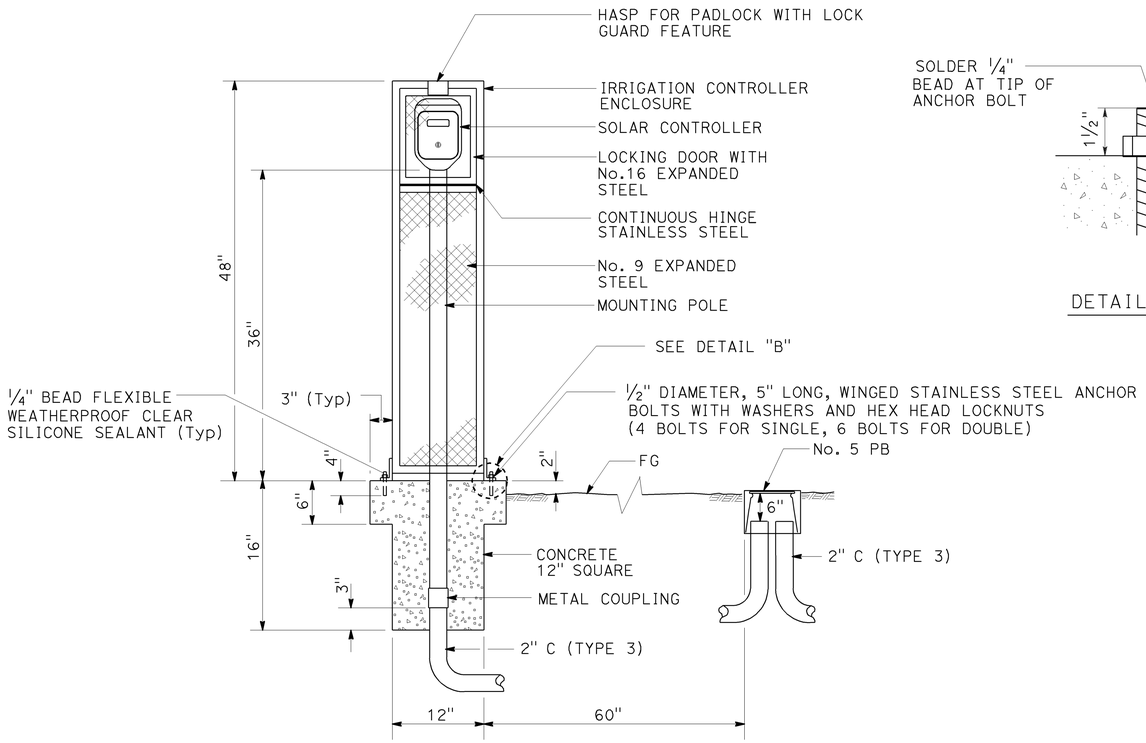

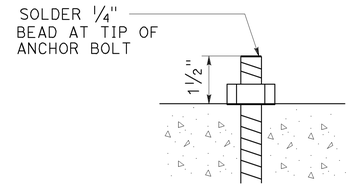

DETAIL "B"

SOLAR IRRIGATION CONTROLLER (POLE MOUNTED) (IN IRRIGATION CONTROLLER ENCLOSURE)

NOTES:

1. INSTALL SPRINKLER TYPE C-2 Mod ON UP-HILL SIDE OF PLANT WHEN ON SLOPE.
2. INSTALL SPRINKLER WITHIN BASIN.
3. WHEN TWO SPRINKLER TYPE C-2 Mod ARE REQUIRED, INSTALL ON OPPOSITE SIDES OF THE BASIN.

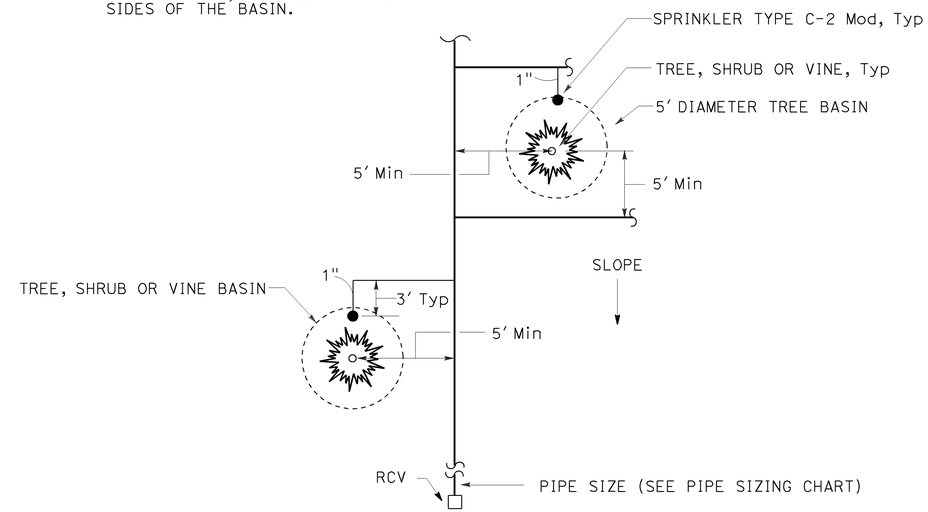

PLAN

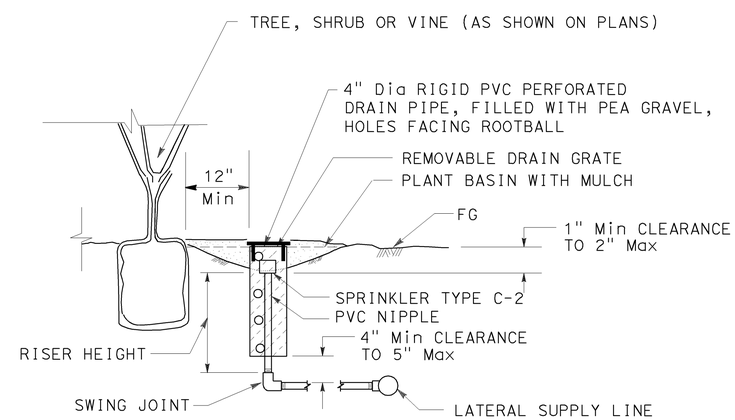

SECTION

SPRINKLER TYPE C-2 Mod INSTALLATION

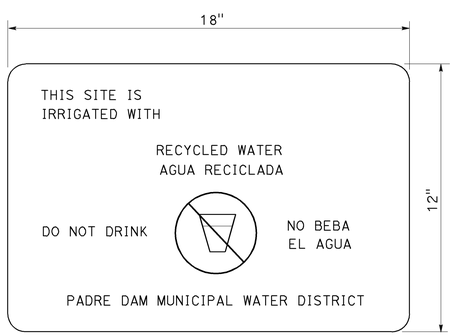

'DO NOT DRINK' SIGN

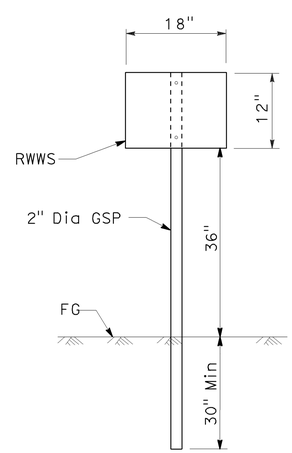

NOTE:
ATTACH RWWS TO POST WITH 2-1/4" THEFT PROOF BOLTS.

RECYCLED WATER WARNING SIGN (RWWS)

(POST MOUNTED)

LANDSCAPE DETAILS

NO SCALE

LD-2

STATE OF CALIFORNIA - DEPARTMENT OF TRANSPORTATION
Caltrans LANDSCAPE ARCHITECTURE
SENIOR LANDSCAPE ARCHITECT: STEPHEN ALVAREZ
CALCULATED-DESIGNED BY: NEIL BLEEKER
CHECKED BY: CAROL CALLEJON
REVISED BY
DATE REVISED

LAST REVISION 12-10-10
DATE PLOTTED => 12-JAN-2011
TIME PLOTTED => 12:18

Dist	COUNTY	ROUTE	POST MILES TOTAL PROJECT	SHEET No.	TOTAL SHEETS
11	SD	52,67	17.3/17.5, R1.4/R2.4	26	48

LICENSED LANDSCAPE ARCHITECT

01-03-11
PLANS APPROVAL DATE

LICENSED LANDSCAPE ARCHITECT
CAROL B. CALLEJON No. 3869
Signature
11/30/12
Renewal Date
12-06-10
Date
STATE OF CALIFORNIA

THE STATE OF CALIFORNIA OR ITS OFFICERS OR AGENTS SHALL NOT BE RESPONSIBLE FOR THE ACCURACY OR COMPLETENESS OF SCANNED COPIES OF THIS PLAN SHEET.

THRUST BLOCK DETAIL

INSTALLATION	TYPE FITTING	INSTALLATION	TYPE FITTING
	90° ELL	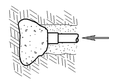	DEAD END
	BEND 45° 22.5° 11.25°		GATE VALVE
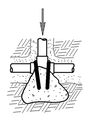	TEE		VERTICAL BEND (TYPE I) 45° 22.5° 11.25° OR
		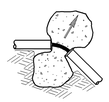	VERTICAL BEND (TYPE II) 45° 22.5° 11.25°

NOTES:
Min 1 CF PCC FOR 1½" PIPE SIZE AND SMALLER.
Min 2 CF PCC FOR 2" PIPE SIZE.
Min 3 CF PCC FOR 3" AND 4" PIPE SIZE.
USE #3 REINFORCING BAR WHERE SHOWN.

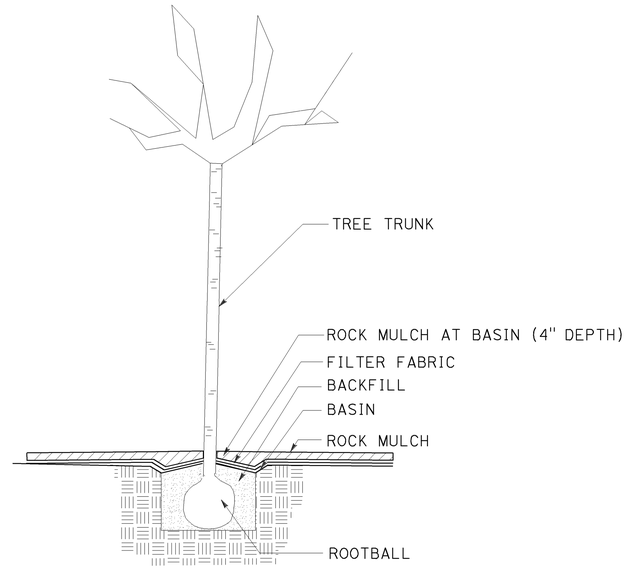

TREE PLANTING

IN ROCK MULCH AREAS

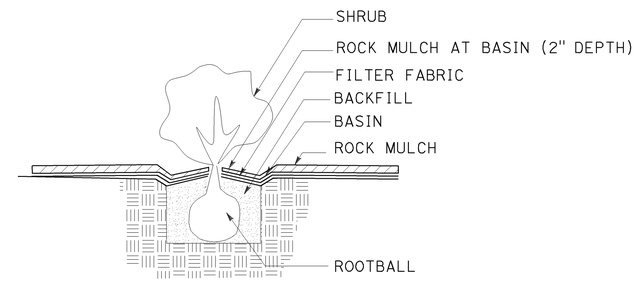

SHRUB PLANTING

IN ROCK MULCH AREAS

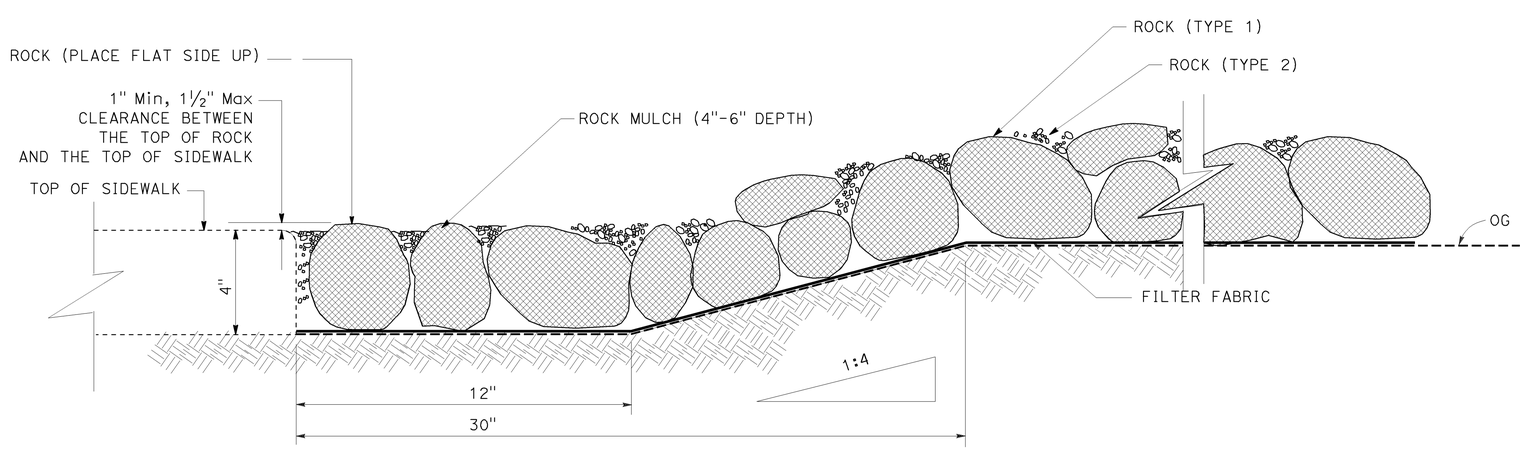

ROCK MULCH

LANDSCAPE DETAILS

NO SCALE

LD-3

STATE OF CALIFORNIA - DEPARTMENT OF TRANSPORTATION
Caltrans LANDSCAPE ARCHITECTURE

SENIOR LANDSCAPE ARCHITECT: STEPHEN ALVAREZ
CALCULATED-DESIGNED BY: NEIL BLEEKER
CHECKED BY: CAROL CALLEJON
REVISED BY
DATE REVISED

LAST REVISION 12-10-10
DATE PLOTTED => 12-JAN-2011
TIME PLOTTED => 12:18

Dist	COUNTY	ROUTE	POST MILES TOTAL PROJECT	SHEET No.	TOTAL SHEETS
11	SD	52,67	17.3/17.5, R1.4/R2.4	27	48

LICENSED LANDSCAPE ARCHITECT

01-03-11
PLANS APPROVAL DATE

LICENSED LANDSCAPE ARCHITECT
CARLOS B. CALLEJON No. 3869
11/30/12
12-06-10
STATE OF CALIFORNIA

THE STATE OF CALIFORNIA OR ITS OFFICERS OR AGENTS SHALL NOT BE RESPONSIBLE FOR THE ACCURACY OR COMPLETENESS OF SCANNED COPIES OF THIS PLAN SHEET.

WEED GERMINATION (N)

SHEET NUMBER	ACRES
PP-1	1.50
PP-2	1.07
PP-3	3.98
PP-4	6.17
PP-5	1.78
PP-6	0.72
TOTAL	15.22

(N) - NOT A SEPARATE PAY ITEM, FOR INFORMATION ONLY.

ROCK MULCH

SHEET NUMBER	SQYD
PP-1	-
PP-2	-
PP-3	-
PP-4	2,062
PP-5	347
PP-6	-
TOTAL	2,409

MULCH

SHEET NUMBER	CY
PP-1	-
PP-2	-
PP-3	-
PP-4	1,012.0
PP-5	-
PP-6	-
PLANT BASINS	458.5
TOTAL	1,470.5

EROSION CONTROL (COMPOST BLANKET)

SHEET NUMBER	CY
PP-1	443.0
PP-2	331.0
PP-3	1,159.0
PP-4	1,791.5
PP-5	516.0
PP-6	208.0
TOTAL	4,448.5

EROSION CONTROL (PSFM)

SHEET NUMBER	(TYPE 1) ACRE	(TYPE 2) ACRE
PP-1	0.88	0.21
PP-2	0.81	0.26
PP-3	1.03	1.73
PP-4	3.61	2.03
PP-5	-	1.43
PP-6	-	0.68
SUBTOTAL	6.33	6.34
TOTAL	12.67	

RECYCLED WATER WARNING SIGNS

SHEET	POST MOUNTED EA (N)	FENCE MOUNTED EA (N)
IP-1	-	1
IP-2	-	1
IP-3	4	3
IP-4	2	1
IP-5	1	-
IP-6	1	-

(N) - NOT A SEPARATE PAY ITEM, FOR INFORMATION ONLY

EROSION CONTROL (PSFM) COMPONENTS

TYPE	AREA		TACKIFIER GALLON (N)	WOOD FIBER LB (N)	CELLULOSE FIBER LB (N)	PURE LIVE SEED LB (N)	PURE LIVE SEED LB (N)
	SQFT (N)	ACRE					
EROSION CONTROL PSFM (TYPE 1)	275,733	6.33	63.3	7,596	5,064	44.3	-
EROSION CONTROL PSFM (TYPE 2)	276,168	6.34	63.4	7,608	5,072	-	159.1

(N) - NOT A SEPARATE PAY ITEM, FOR INFORMATION ONLY.

LANDSCAPE DETAILS

NO SCALE

LD-4

REVISED BY | DATE REVISED
HENRY BARNES | NEIL BLEEKER
CALCULATED-DESIGNED BY | CHECKED BY
SENIOR LANDSCAPE ARCHITECT
STEPHEN ALVAREZ

STATE OF CALIFORNIA - DEPARTMENT OF TRANSPORTATION
Caltrans® LANDSCAPE ARCHITECTURE

LAST REVISION 12-10-10 | DATE PLOTTED => 12-JAN-2011 | TIME PLOTTED => 12:18

Dist	COUNTY	ROUTE	POST MILES TOTAL PROJECT	SHEET No.	TOTAL SHEETS
11	SD	52,67	17.3/17.5, R1.4/R2.4	28	48

LICENSED LANDSCAPE ARCHITECT

01-03-11
PLANS APPROVAL DATE

LICENSED LANDSCAPE ARCHITECT
CARL B. CALLEJON No. 3869
11/30/12
12-06-10
STATE OF CALIFORNIA

THE STATE OF CALIFORNIA OR ITS OFFICERS OR AGENTS SHALL NOT BE RESPONSIBLE FOR THE ACCURACY OR COMPLETENESS OF SCANNED COPIES OF THIS PLAN SHEET.

SUBTOTALS PER VALVE ON LATERAL SUPPLY SIDE OF CONTROL VALVE

VALVE OR ASSEMBLY NUMBER FOR SAT '62(E)'

DESCRIPTION		UNIT	1	2	3	4	5	6	7	8	9	10	11	12	13	14	15	16	17	18	19	20	21	22	23	24	25	26	27	28	29	30	31	32	33	34	35	36	37	38	39	40	SUBTOTALS	UNIT	DESCRIPTION	
PLASTIC PIPE SUPPLY LINE SCH 40	1 INCH	LF	243	243	250	253	340	230	280	348	340	160	82	94	200	124	116	131	170	91	94	770	151	95	92	515	88	88	92	96	110	165	157	166	1132	162	172	156	98	177			8,271	LF	1 INCH	SCH 40 PLASTIC PIPE SUPPLY LINE
	1¼ INCH	LF	208	210	215	219	48	10	10	10	15	10	110	98	100	81	109			193	193	80		100	146	110	166	166	142	88	40	164	166	164	30	207	173	196	78	178			4,233	LF	1¼ INCH	
	1½ INCH	LF	44	43	43	22	12															166	67										166		40				78				681	LF	1½ INCH	
	2 INCH	LF	19	34	19	32		190	60	105	140		145	50	10					86	150	210		172	130		92	60	100	140		69		250	78	192	94	124	40	33			2,824	LF	2 INCH	
	2½ INCH	LF					372																																785				1,157	LF	2½ INCH	
SPRINKLER TYPE	A-5	EA																															13										13	EA	A-5	SPRINKLER TYPE
	A-6	EA																														9		9		10	9	10		9			56	EA	A-6	
	A-7	EA											6	5							4		4		6		7	7		1													40	EA	A-7	
	A-8	EA													7					7	3			5					6	4													32	EA	A-8	
	A-11	EA	25	10	25	24						5							5																								94	EA	A-11	
	A-12	EA		15								4						4																									23	EA	A-12	
	B-1	EA					30	24	24	24	16						11														5												134	EA	B-1	
	B-2	EA									6					12															5												23	EA	B-2	
	C-2 Mod	EA																				49				19									32				69				169	EA	C-2 Mod	

VALVE OR ASSEMBLY NUMBER FOR SAT '62(F)'

DESCRIPTION		UNIT	1	2	3	4	5	6	7	8	9	10	11	12	13	14	15	16	17	18	19	20	21	22	23	24	25	26	27	28	29	30	31	32	33	34	35	36	37	38	39	40	SUBTOTALS	UNIT	DESCRIPTION	
PLASTIC PIPE SUPPLY LINE SCH 40	1 INCH	LF	290	305	268	128	77	260	260	98	452	130	95	93	101	91	92	611	90	141	285	88	130	640	98	265	290	210	290	300	330	530	1240	385	95	156	100	100	102	102	872		10,190	LF	1 INCH	SCH 40 PLASTIC PIPE SUPPLY LINE
	1¼ INCH	LF	249	25	244	15	74	108	109	98	93	160	41	143	197	203	172	170	52	80	16	168	88	50	49	26	26		130	100	50	60	80	42	185	85	148	92	197	52	67		3,944	LF	1¼ INCH	
	1½ INCH	LF	127	294	178								113							53	141				220	15	45			15			55								66		1,322	LF	1½ INCH	
	2 INCH	LF				630	48	173	200	110		95		90	222	109	30	83		131		110	175						40				160		180	129	158	67	24	69	38		3,071	LF	2 INCH	
	2½ INCH	LF	296		225																																						521	LF	2½ INCH	
																																												LF	3 INCH	PR 315 PLASTIC PIPE SUPPLY LINE
SPRINKLER TYPE	A-5	EA																																										EA	A-5	SPRINKLER TYPE
	A-6	EA																																										EA	A-6	
	A-7	EA								5		7	4			7			2	6		2	6		3											6		5		4			57	EA	A-7	
	A-8	EA					5							6	7		7					5			1										7		6		7				51	EA	A-8	
	A-11	EA	28		30			18	18												2						11	6	16		10												139	EA	A-11	
	A-12	EA																			11					13	3		2	17													46	EA	A-12	
	B-1	EA				17																																					17	EA	B-1	
	B-2	EA																																										EA	B-2	
	C-2 Mod	EA		25							14							36						22								17	37	15							36		202	EA	C-2 Mod	

IRRIGATION QUANTITIES
IQ-1

STATE OF CALIFORNIA - DEPARTMENT OF TRANSPORTATION
Caltrans® LANDSCAPE ARCHITECTURE

SENIOR LANDSCAPE ARCHITECT: STEPHEN ALVAREZ
CALCULATED-DESIGNED BY: NEIL BLEEKER
CHECKED BY: JOHN NEWLON
REVISED BY
DATE REVISED

DATE PLOTTED => 12-JAN-2011
TIME PLOTTED => 12:19
LAST REVISION 12-10-10

Dist	COUNTY	ROUTE	POST MILES TOTAL PROJECT	SHEET No.	TOTAL SHEETS
11	SD	52,67	17.3/17.5, R1.4/R2.4	29	48

LICENSED LANDSCAPE ARCHITECT

01-03-11
PLANS APPROVAL DATE

LICENSED LANDSCAPE ARCHITECT
CARL B. CALLEJON No. 3869
11/30/12 Renewal Date
12-06-10 Date
STATE OF CALIFORNIA

THE STATE OF CALIFORNIA OR ITS OFFICERS OR AGENTS SHALL NOT BE RESPONSIBLE FOR THE ACCURACY OR COMPLETENESS OF SCANNED COPIES OF THIS PLAN SHEET.

SUBTOTALS PER VALVE ON LATERAL SUPPLY SIDE OF CONTROL VALVE

DESCRIPTION		UNIT	VALVE OR ASSEMBLY NUMBER FOR SAT '62(G)'																																								SUBTOTALS	UNIT	DESCRIPTION		
			1	2	3	4	5	6	7	8	9	10	11	12	13	14	15	16	17	18	19	20	21	22	23	24	25	26	27	28	29	30	31	32	33	34	35	36	37	38	39	40					
PLASTIC PIPE SUPPLY LINE	SCH 40	1 INCH	LF	100	107	102		130	128	100	200	145	440	260	140	611	170	275	287	302	304	372	230	264	350	305	302	566	145	145	572	157	157	157	157									7,810	LF	1 INCH	SCH 40	PLASTIC PIPE SUPPLY LINE
		1¼ INCH	LF	195	192	193		170	136	93	20		35	90	240		230	20	12	12	12	19	12	22		261	262	32	225	225	260	260	225	240	240									4,103	LF	1¼ INCH		
		1½ INCH	LF								165			15	40	274	60	90				14	8	8	19	158	182		35	35		40	80	80	80									1,303	LF	1½ INCH		
		2 INCH	LF	186	140	196		80	150	135			20		160				154	12	12	152	12	120	473				170	210	100	115	140	410	390									3,613	LF	2 INCH		
		2½ INCH	LF														180									40	16																	236	LF	2½ INCH		
SPRINKLER TYPE		A-5	EA												12		14													12			13	13											64	EA	A-5	SPRINKLER TYPE	
		A-6	EA																										12			12			13										37	EA	A-6		
		A-7	EA	2	7			7	4	4			14																															38	EA	A-7		
		A-8	EA	5		7			3	1			7																															23	EA	A-8		
		A-11	EA									4						14								29																			47	EA	A-11		
		A-12	EA																								30																		30	EA	A-12		
		B-1	EA								4			12					22	23	23	27	28	19	13																				171	EA	B-1		
		B-2	EA								12			16										8	13																				49	EA	B-2		
		C-2 Mod	EA													25												14			35														74	EA	C-2 Mod		

DESCRIPTION		UNIT	VALVE OR ASSEMBLY NUMBER FOR Exist CONTROLLER 'S1'				VALVE OR ASSEMBLY NUMBER FOR SOLAR CONTROLLER 'S2'						SUBTOTALS	UNIT	DESCRIPTION		
			1	2	3	4	1	2	3	4	5	6					
PLASTIC PIPE SUPPLY LINE	SCH 40	1 INCH	LF	66	183		60	157	124	74			664	LF	1 INCH	SCH 40	PLASTIC PIPE SUPPLY LINE
		1¼ INCH	LF					15	275	114			404	LF	1¼ INCH		
		1½ INCH	LF		6			6					12	LF	1½ INCH		
		2 INCH	LF											LF	2 INCH		
		2½ INCH	LF											LF	2½ INCH		
SPRINKLER TYPE		A-5	EA											EA	A-5	SPRINKLER TYPE	
		A-6	EA											EA	A-6		
		A-7	EA											EA	A-7		
		A-8	EA											EA	A-8		
		A-11	EA											EA	A-11		
		A-12	EA											EA	A-12		
		B-1	EA											EA	B-1		
		B-2	EA		13			14					27	EA	B-2		
		C-2 Mod	EA	6			6		21	14			47	EA	C-2 Mod		

IRRIGATION QUANTITIES
IQ-2

REVISED BY | DATE REVISED
JOHN NEWLON | NEIL BLEEKER
CALCULATED-DESIGNED BY | CHECKED BY
SENIOR LANDSCAPE ARCHITECT
STEPHEN ALVAREZ

STATE OF CALIFORNIA - DEPARTMENT OF TRANSPORTATION
Caltrans® LANDSCAPE ARCHITECTURE

DATE PLOTTED => 12-JAN-2011
TIME PLOTTED => 12:19
LAST REVISION 12-10-10

Dist	COUNTY	ROUTE	POST MILES TOTAL PROJECT	SHEET No.	TOTAL SHEETS
11	SD	52,67	17.3/17.5, R1.4/R2.4	30	48

LICENSED LANDSCAPE ARCHITECT

01-03-11
PLANS APPROVAL DATE

LICENSED LANDSCAPE ARCHITECT
CARLOS R. CALLEJON No. 3869
11/30/12 Expiration date
12-06-10 Date
STATE OF CALIFORNIA

THE STATE OF CALIFORNIA OR ITS OFFICERS OR AGENTS SHALL NOT BE RESPONSIBLE FOR THE ACCURACY OR COMPLETENESS OF SCANNED COPIES OF THIS PLAN SHEET.

SUBTOTALS PER VALVE ON LATERAL SUPPLY SIDE OF CONTROL VALVE

DESCRIPTION			UNIT	VALVE OR ASSEMBLY NUMBER FOR SOLAR CONTROLLER 'S3' 1	2	3	4	5	6	VALVE OR ASSEMBLY NUMBER FOR SOLAR CONTROLLER 'S4' 1	2	3	4	5	6	7	8	SUBTOTALS	UNIT	DESCRIPTION		
PLASTIC PIPE SUPPLY LINE	SCH 40	1 INCH	LF	155	152	152	95			284	120	175	175	158	110			1,576	LF	1 INCH	SCH 40	PLASTIC PIPE SUPPLY LINE
		1¼ INCH	LF	10						22	63	168	164	11	112			550	LF	1¼ INCH		
		1½ INCH	LF	34	25	10												69	LF	1½ INCH		
		2 INCH	LF									10						10	LF	2 INCH		
		2½ INCH	LF																LF	2½ INCH		
SPRINKLER TYPE		A-5	EA								4	9	6					19	EA	A-5		SPRINKLER TYPE
		A-6	EA																EA	A-6		
		A-7	EA																EA	A-7		
		A-8	EA																EA	A-8		
		A-11	EA											4				4	EA	A-11		
		A-12	EA											5				5	EA	A-12		
		B-1	EA	6	11										1			18	EA	B-1		
		B-2	EA	9	1	12									9			31	EA	B-2		
		C-2 Mod	EA				6			14								20	EA	C-2 Mod		

IRRIGATION QUANTITIES
IQ-3

STATE OF CALIFORNIA - DEPARTMENT OF TRANSPORTATION
Caltrans® LANDSCAPE ARCHITECTURE

SENIOR LANDSCAPE ARCHITECT: STEPHEN ALVAREZ
CALCULATED-DESIGNED BY: JOHN NEWLON
CHECKED BY: NEIL BLEEKER
REVISED BY
DATE REVISED

LAST REVISION 12-10-10
DATE PLOTTED => 12-JAN-2011
TIME PLOTTED => 12:19

Dist	COUNTY	ROUTE	POST MILES TOTAL PROJECT	SHEET No.	TOTAL SHEETS
11	SD	52,67	17.3/17.5, R1.4/R2.4	31	48

LICENSED LANDSCAPE ARCHITECT

01-03-11
PLANS APPROVAL DATE

LICENSED LANDSCAPE ARCHITECT — CARLOS B. CALLEJON No. 3868 — 11/30/12 Renewal Date — 12-06-10 Date — STATE OF CALIFORNIA

THE STATE OF CALIFORNIA OR ITS OFFICERS OR AGENTS SHALL NOT BE RESPONSIBLE FOR THE ACCURACY OR COMPLETENESS OF SCANNED COPIES OF THIS PLAN SHEET.

SUBTOTALS PER PLAN SHEET ON MAIN SUPPLY SIDE OF CONTROL VALVE

DESCRIPTION			UNIT	SHEET NUMBER IP-1	IP-2	IP-3	IP-4	IP-5	IP-6	SUBTOTALS
BPA		1 INCH	EA							
BPA		2 INCH	EA							
BPA		3 INCH	EA							
BPA		ENCLOSURE	EA							
WATER METER		1 INCH	EA							
WATER METER		2 INCH	EA							
WATER METER		3 INCH	EA							
BOOSTER PUMP			EA							
IRRIGATION CONTROLLER	CCU	6 CHANNEL	EA							
IRRIGATION CONTROLLER	CCU	28 CHANNEL	EA							
IRRIGATION CONTROLLER	SOLAR	4 STATION	EA				1			1
IRRIGATION CONTROLLER	SOLAR	6 STATION	EA				2			2
IRRIGATION CONTROLLER	SOLAR	8 STATION	EA			1				1
IRRIGATION CONTROLLER	SOLAR	ENCLOSURE	EA			1	3			4
IRRIGATION CONTROLLER	CEC	TYPE A	EA							
IRRIGATION CONTROLLER	CEC	TYPE B	EA							
VALVES AND ASSEMBLIES	RCVMF	2 INCH	EA							
VALVES AND ASSEMBLIES	RCVMF	3 INCH	EA							
VALVES AND ASSEMBLIES	RCV	1 INCH	EA		1	15	24		1	41
VALVES AND ASSEMBLIES	RCV	1½ INCH	EA	9	9	26	28	8	3	83
VALVES AND ASSEMBLIES	RCV	2 INCH	EA					1		
VALVES AND ASSEMBLIES	GV	1 INCH	EA							
VALVES AND ASSEMBLIES	GV	1¼ INCH	EA							
VALVES AND ASSEMBLIES	GV	1½ INCH	EA			1	5			6
VALVES AND ASSEMBLIES	GV	2 INCH	EA	3	3	10	10	3	1	30
VALVES AND ASSEMBLIES	GV	3 INCH	EA			4	9			13
VALVES AND ASSEMBLIES	FIA									
VALVES AND ASSEMBLIES	FAU									
CONDUIT	CSP									
CONDUIT	WSP									
PLASTIC PIPE SUPPLY LINE	SCH 40	1 INCH	LF							
PLASTIC PIPE SUPPLY LINE	SCH 40	1¼ INCH	LF			41				41
PLASTIC PIPE SUPPLY LINE	SCH 40	1½ INCH	LF			106	409			515
PLASTIC PIPE SUPPLY LINE	SCH 40	2 INCH	LF	86	36	604	752	34		1,512
PLASTIC PIPE SUPPLY LINE	SCH 40	2½ INCH	LF	55	109			84	60	308
PLASTIC PIPE SUPPLY LINE	SCH 40	3 INCH	LF	1137	2490	4536	3224	1042	875	13,304
PLASTIC PIPE SUPPLY LINE	SCH 40	4 INCH	LF							
PLASTIC PIPE SUPPLY LINE	PR 315									
	GSP									
	DIP									

TOTAL QUANTITIES

TOTALS	UNIT	DESCRIPTION	
	EA	1 INCH	BPA
	EA	2 INCH	BPA
	EA	3 INCH	BPA
	EA	ENCLOSURE	BPA
	EA	1 INCH	WATER METER
	EA	2 INCH	WATER METER
	EA	3 INCH	WATER METER
	EA	BOOSTER PUMP	
	EA	6 CHANNEL	IRRIGATION CONTROLLER CCU
	EA	28 CHANNEL	IRRIGATION CONTROLLER CCU
1	EA	4 STATION	IRRIGATION CONTROLLER SOLAR
2	EA	6 STATION	IRRIGATION CONTROLLER SOLAR
1	EA	8 STATION	IRRIGATION CONTROLLER SOLAR
4	EA	ENCLOSURE	IRRIGATION CONTROLLER SOLAR
	EA	TYPE A	IRRIGATION CONTROLLER CEC
	EA	TYPE B	IRRIGATION CONTROLLER CEC
	EA	2 INCH	VALVES AND ASSEMBLIES RCVMF
	EA	3 INCH	VALVES AND ASSEMBLIES RCVMF
41	EA	1 INCH	VALVES AND ASSEMBLIES RCV
83	EA	1½ INCH	VALVES AND ASSEMBLIES RCV
	EA	2 INCH	VALVES AND ASSEMBLIES RCV
	EA	1 INCH	VALVES AND ASSEMBLIES GV
	EA	1¼ INCH	VALVES AND ASSEMBLIES GV
6	EA	1½ INCH	VALVES AND ASSEMBLIES GV
30	EA	2 INCH	VALVES AND ASSEMBLIES GV
13	EA	3 INCH	VALVES AND ASSEMBLIES GV
			VALVES AND ASSEMBLIES FIA
			VALVES AND ASSEMBLIES FAU
			CONDUIT
			CONDUIT
28,511	LF	1 INCH	PLASTIC PIPE SUPPLY LINE SCH 40
13,275	LF	1¼ INCH	PLASTIC PIPE SUPPLY LINE SCH 40
3,902	LF	1½ INCH	PLASTIC PIPE SUPPLY LINE SCH 40
11,030	LF	2 INCH	PLASTIC PIPE SUPPLY LINE SCH 40
2,222	LF	2½ INCH	PLASTIC PIPE SUPPLY LINE SCH 40
13,304	LF	3 INCH	PLASTIC PIPE SUPPLY LINE SCH 40
			PLASTIC PIPE SUPPLY LINE PR 315
			GSP
			DIP
96	EA	A-5	SPRINKLER TYPE
93	EA	A-6	SPRINKLER TYPE
135	EA	A-7	SPRINKLER TYPE
106	EA	A-8	SPRINKLER TYPE
284	EA	A-11	SPRINKLER TYPE
104	EA	A-12	SPRINKLER TYPE
340	EA	B-1	SPRINKLER TYPE
130	EA	B-2	SPRINKLER TYPE
512	EA	C-2 Mod	SPRINKLER TYPE

IRRIGATION QUANTITIES
IQ-4

STATE OF CALIFORNIA - DEPARTMENT OF TRANSPORTATION
Caltrans® LANDSCAPE ARCHITECTURE
SENIOR LANDSCAPE ARCHITECT: STEPHEN ALVAREZ
CALCULATED-DESIGNED BY: JOHN NEWLON
CHECKED BY: NEIL BLEEKER
REVISED BY
DATE REVISED

LAST REVISION 12-13-10
DATE PLOTTED => 12-JAN-2011
TIME PLOTTED => 13:50

Dist	COUNTY	ROUTE	POST MILES TOTAL PROJECT	SHEET No.	TOTAL SHEETS
11	SD	52,67	17.3/17.5, R1.4/R2.4	32	48

Simon Tse 12-07-10
REGISTERED CIVIL ENGINEER DATE

01-03-11
PLANS APPROVAL DATE

REGISTERED PROFESSIONAL ENGINEER SIMON TSE No. C66401 Exp. 06-30-12 CIVIL STATE OF CALIFORNIA

THE STATE OF CALIFORNIA OR ITS OFFICERS OR AGENTS SHALL NOT BE RESPONSIBLE FOR THE ACCURACY OR COMPLETENESS OF SCANNED COPIES OF THIS PLAN SHEET.

NOTES:

1. LOCATION OF UTILITY FACILITIES SHOWN ON THESE PLANS WERE OBTAINED EITHER FROM THE OWNER'S RECORDS AND/OR FROM STATE SURVEYS.
2. LOCATION OF UTILITY LINES SHOWN ON THESE PLANS ARE APPROXIMATE. THE CONTRACTOR IS TO FIELD VERIFY OR POTHOLE IN ORDER TO DETERMINE EXACT LOCATION.
3. FOR ACCURATE RIGHT OF WAY AND ACCESS DATA, CONTACT RIGHT OF WAY ENGINEERING AT THE DISTRICT OFFICE.

LEGEND:

SYMBOL	EXISTING UTILITY	OWNER
-——w———	WATER	PADRE DAM MUNICIPAL WATER DISTRICT
-——w———	ABANDONED WATER	
——--s———---	SEWER	PADRE DAM MUNICIPAL WATER DISTRICT
——--s———---	ABANDONED SEWER	
———-g———--	GAS	SAN DIEGO GAS & ELECTRIC
———-e———	ELECTRICAL	SAN DIEGO GAS & ELECTRIC
—-e——-(oh)—	ELECTRICAL (OVERHEAD)	SAN DIEGO GAS & ELECTRIC
——--t———	TELEPHONE	SBC CALIFORNIA
ESA	ENVIRONMENTALLY SENSITIVE AREA	

ABBREVIATIONS:

CCP	CAST CONCRETE PIPE
HPG	HIGH PRESSURE GAS
RCCP	REINFORCED CAST CONCRETE PIPE
U/G	UNDERGROUND

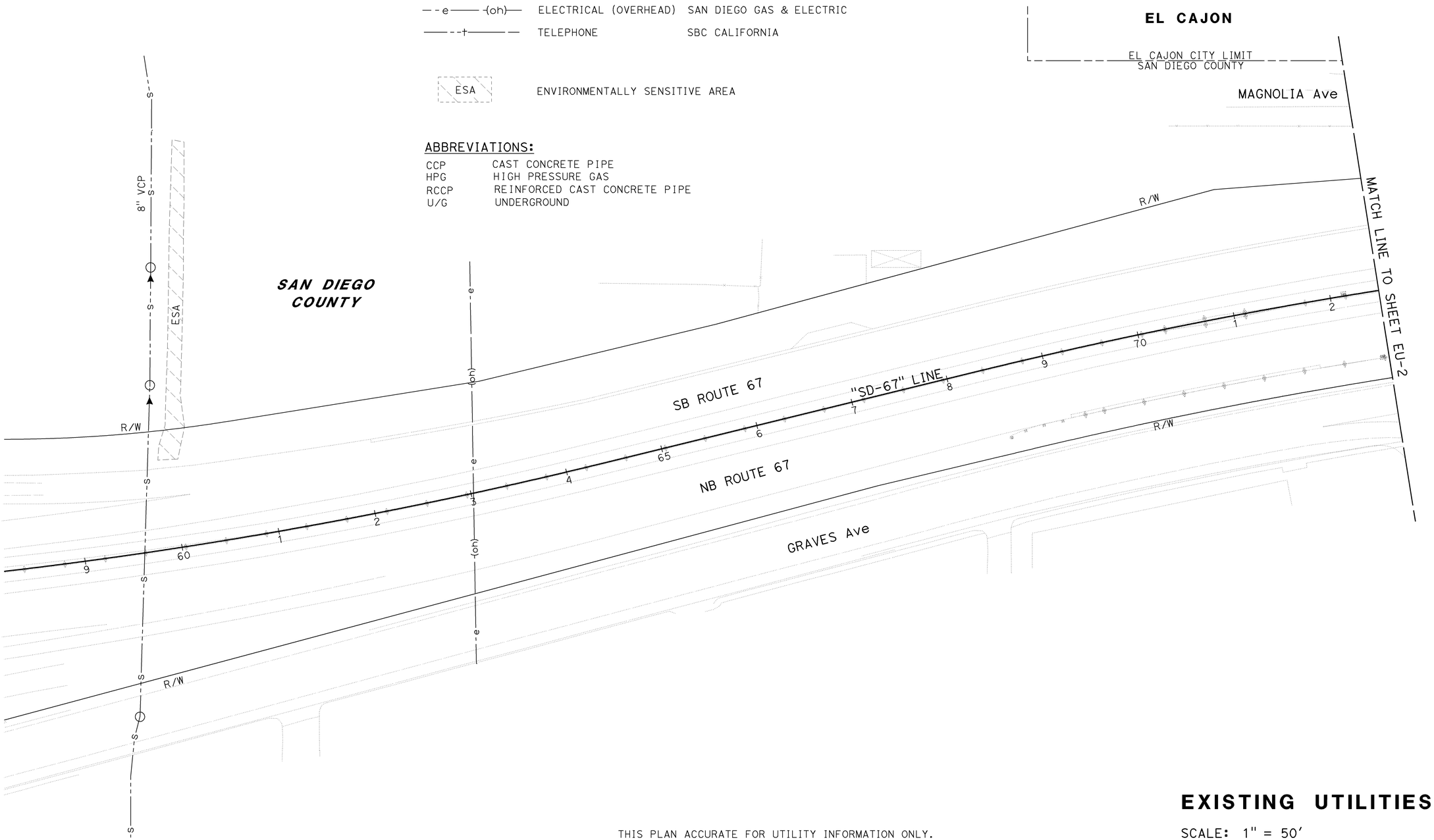

THIS PLAN ACCURATE FOR UTILITY INFORMATION ONLY.

EXISTING UTILITIES PLAN

SCALE: 1" = 50'

EU-1

STATE OF CALIFORNIA - DEPARTMENT OF TRANSPORTATION
Caltrans ENGINEERING SERVICES

FUNCTIONAL SUPERVISOR: ABU-BAKR AL-JAFRI
CALCULATED-DESIGNED BY: ANN HOANG
CHECKED BY: SIMON TSE
REVISED BY
DATE REVISED

LAST REVISION 12-13-10
DATE PLOTTED => 12-JAN-2011
TIME PLOTTED => 12:19

Dist	COUNTY	ROUTE	POST MILES TOTAL PROJECT	SHEET No.	TOTAL SHEETS
11	SD	52,67	17.3/17.5, R1.4/R2.4	33	48

Simon Tse 12-07-10
REGISTERED CIVIL ENGINEER DATE

01-03-11
PLANS APPROVAL DATE

REGISTERED PROFESSIONAL ENGINEER SIMON TSE No. C66401 Exp. 06-30-12 CIVIL STATE OF CALIFORNIA

THE STATE OF CALIFORNIA OR ITS OFFICERS OR AGENTS SHALL NOT BE RESPONSIBLE FOR THE ACCURACY OR COMPLETENESS OF SCANNED COPIES OF THIS PLAN SHEET.

NOTES:

1. LOCATION OF UTILITY FACILITIES SHOWN ON THESE PLANS WERE OBTAINED EITHER FROM THE OWNER'S RECORDS AND/OR FROM STATE SURVEYS.
2. LOCATION OF UTILITY LINES SHOWN ON THESE PLANS ARE APPROXIMATE. THE CONTRACTOR IS TO FIELD VERIFY OR POTHOLE IN ORDER TO DETERMINE EXACT LOCATION.
3. FOR ACCURATE RIGHT OF WAY AND ACCESS DATA, CONTACT RIGHT OF WAY ENGINEERING AT THE DISTRICT OFFICE.

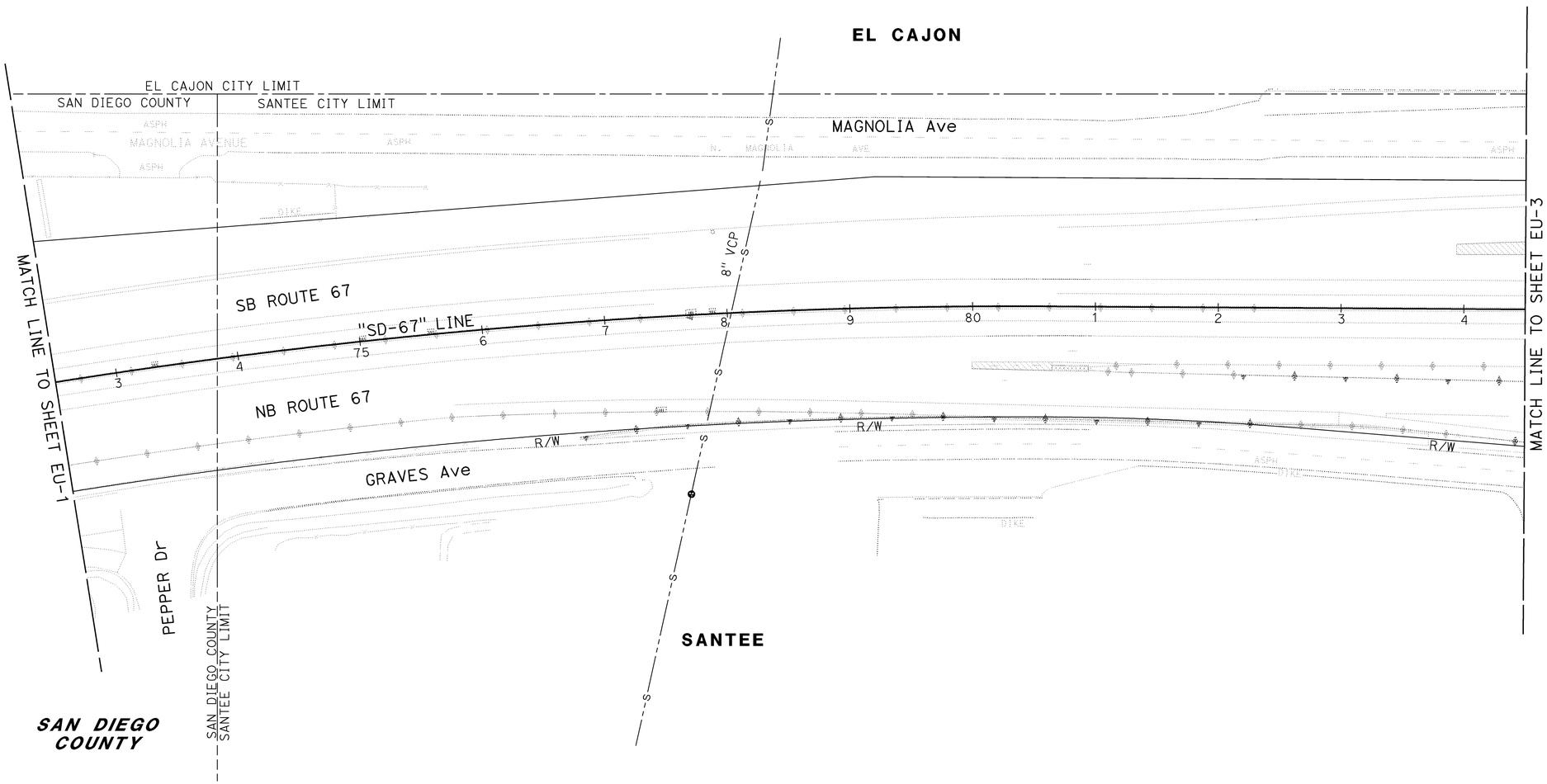

THIS PLAN ACCURATE FOR UTILITY INFORMATION ONLY.

EXISTING UTILITIES PLAN

SCALE: 1" = 50'

EU-2

STATE OF CALIFORNIA - DEPARTMENT OF TRANSPORTATION
Caltrans ENGINEERING SERVICES

FUNCTIONAL SUPERVISOR: ABU-BAKR AL-JAFRI
CALCULATED-DESIGNED BY: ANN HOANG
CHECKED BY: SIMON TSE
REVISED BY
DATE REVISED

LAST REVISION 12-13-10
DATE PLOTTED => 12-JAN-2011
TIME PLOTTED => 12:19

Dist	COUNTY	ROUTE	POST MILES TOTAL PROJECT	SHEET No.	TOTAL SHEETS
11	SD	52,67	17.3/17.5, R1.4/R2.4	34	48

Simon Tse 12-07-10
REGISTERED CIVIL ENGINEER DATE

01-03-11
PLANS APPROVAL DATE

REGISTERED PROFESSIONAL ENGINEER SIMON TSE No. C66401 Exp. 06-30-12 CIVIL STATE OF CALIFORNIA

THE STATE OF CALIFORNIA OR ITS OFFICERS OR AGENTS SHALL NOT BE RESPONSIBLE FOR THE ACCURACY OR COMPLETENESS OF SCANNED COPIES OF THIS PLAN SHEET.

NOTES:

1. LOCATION OF UTILITY FACILITIES SHOWN ON THESE PLANS WERE OBTAINED EITHER FROM THE OWNER'S RECORDS AND/OR FROM STATE SURVEYS.
2. LOCATION OF UTILITY LINES SHOWN ON THESE PLANS ARE APPROXIMATE. THE CONTRACTOR IS TO FIELD VERIFY OR POTHOLE IN ORDER TO DETERMINE EXACT LOCATION.
3. FOR ACCURATE RIGHT OF WAY AND ACCESS DATA, CONTACT RIGHT OF WAY ENGINEERING AT THE DISTRICT OFFICE.

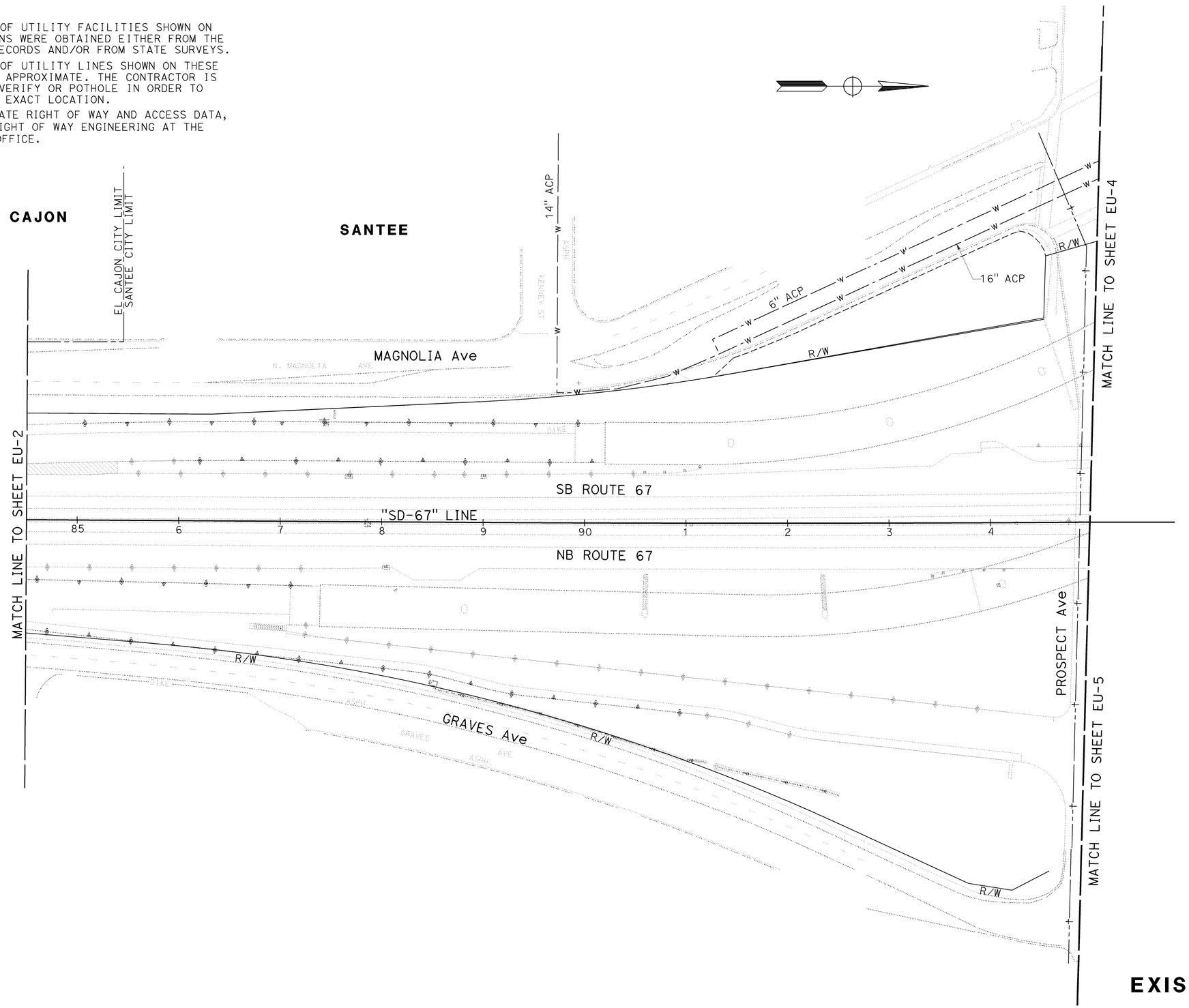

THIS PLAN ACCURATE FOR UTILITY INFORMATION ONLY.

EXISTING UTILITIES PLAN

SCALE: 1" = 50'

EU-3

STATE OF CALIFORNIA - DEPARTMENT OF TRANSPORTATION
Caltrans ENGINEERING SERVICES

FUNCTIONAL SUPERVISOR: ABU-BAKR AL-JAFRI
CALCULATED-DESIGNED BY: ANN HOANG
CHECKED BY: SIMON TSE
REVISED BY
DATE REVISED

LAST REVISION 12-13-10
DATE PLOTTED => 12-JAN-2011
TIME PLOTTED => 12:19

Dist	COUNTY	ROUTE	POST MILES TOTAL PROJECT	SHEET No.	TOTAL SHEETS
11	SD	52,67	17.3/17.5, R1.4/R2.4	35	48

Simon Tse 12-07-10
REGISTERED CIVIL ENGINEER DATE

01-03-11
PLANS APPROVAL DATE

REGISTERED PROFESSIONAL ENGINEER SIMON TSE No. C66401 Exp. 06-30-12 CIVIL STATE OF CALIFORNIA

THE STATE OF CALIFORNIA OR ITS OFFICERS OR AGENTS SHALL NOT BE RESPONSIBLE FOR THE ACCURACY OR COMPLETENESS OF SCANNED COPIES OF THIS PLAN SHEET.

NOTES:

1. LOCATION OF UTILITY FACILITIES SHOWN ON THESE PLANS WERE OBTAINED EITHER FROM THE OWNER'S RECORDS AND/OR FROM STATE SURVEYS.
2. LOCATION OF UTILITY LINES SHOWN ON THESE PLANS ARE APPROXIMATE. THE CONTRACTOR IS TO FIELD VERIFY OR POTHOLE IN ORDER TO DETERMINE EXACT LOCATION.
3. FOR ACCURATE RIGHT OF WAY AND ACCESS DATA, CONTACT RIGHT OF WAY ENGINEERING AT THE DISTRICT OFFICE.

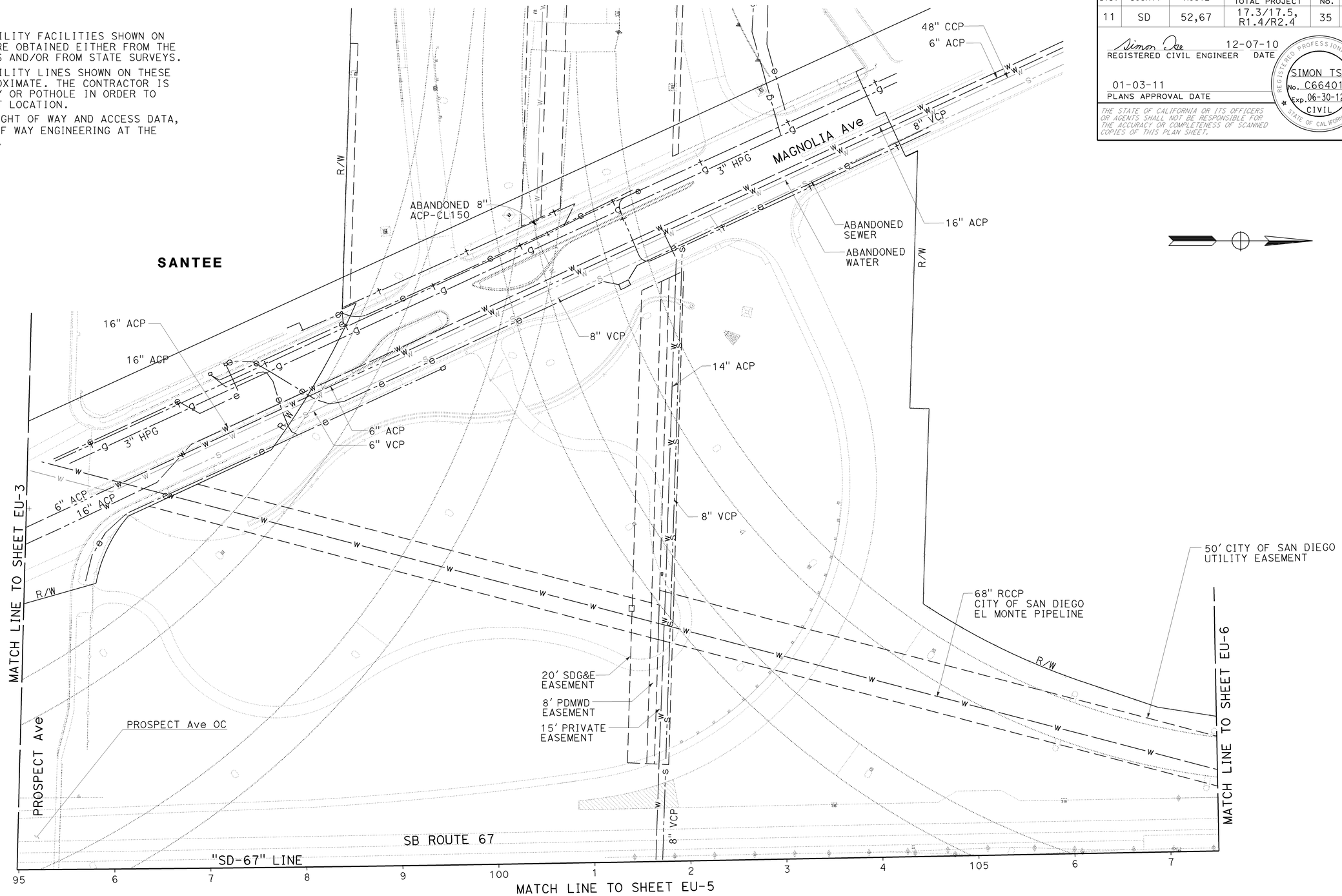

THIS PLAN ACCURATE FOR UTILITY INFORMATION ONLY.

EXISTING UTILITIES PLAN

SCALE: 1" = 50'

EU-4

STATE OF CALIFORNIA - DEPARTMENT OF TRANSPORTATION
Caltrans ENGINEERING SERVICES

FUNCTIONAL SUPERVISOR: ABU-BAKR AL-JAFRI
CALCULATED-DESIGNED BY: ANN HOANG
CHECKED BY: SIMON TSE
REVISED BY
DATE REVISED

LAST REVISION 12-13-10
DATE PLOTTED => 12-JAN-2011
TIME PLOTTED => 12:19

Dist	COUNTY	ROUTE	POST MILES TOTAL PROJECT	SHEET No.	TOTAL SHEETS
11	SD	52,67	17.3/17.5, R1.4/R2.4	36	48

Simon Tse 12-07-10
REGISTERED CIVIL ENGINEER DATE

01-03-11
PLANS APPROVAL DATE

REGISTERED PROFESSIONAL ENGINEER SIMON TSE No. C66401 Exp. 06-30-12 CIVIL STATE OF CALIFORNIA

THE STATE OF CALIFORNIA OR ITS OFFICERS OR AGENTS SHALL NOT BE RESPONSIBLE FOR THE ACCURACY OR COMPLETENESS OF SCANNED COPIES OF THIS PLAN SHEET.

NOTES:

1. LOCATION OF UTILITY FACILITIES SHOWN ON THESE PLANS WERE OBTAINED EITHER FROM THE OWNER'S RECORDS AND/OR FROM STATE SURVEYS.
2. LOCATION OF UTILITY LINES SHOWN ON THESE PLANS ARE APPROXIMATE. THE CONTRACTOR IS TO FIELD VERIFY OR POTHOLE IN ORDER TO DETERMINE EXACT LOCATION.
3. FOR ACCURATE RIGHT OF WAY AND ACCESS DATA, CONTACT RIGHT OF WAY ENGINEERING AT THE DISTRICT OFFICE.

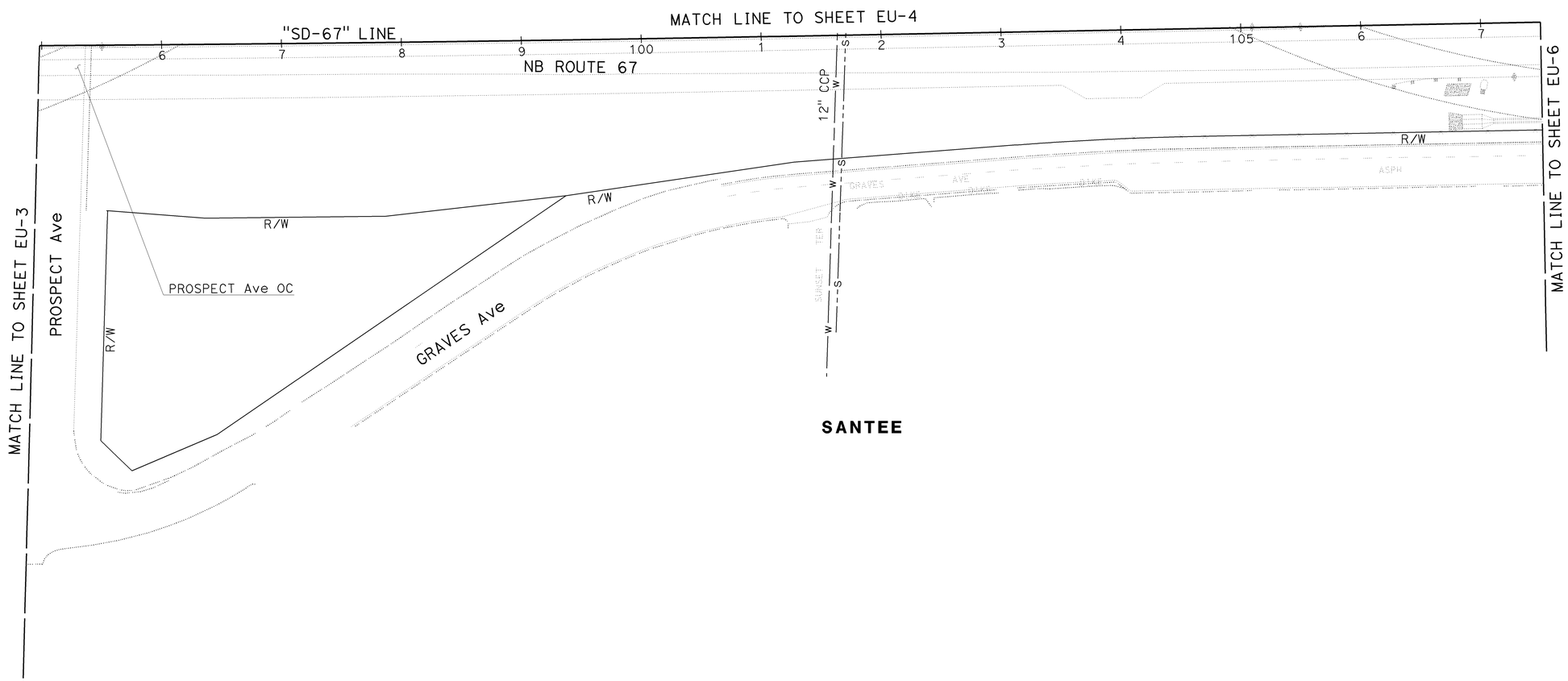

THIS PLAN ACCURATE FOR UTILITY INFORMATION ONLY.

EXISTING UTILITIES PLAN

SCALE: 1" = 50'

EU-5

STATE OF CALIFORNIA - DEPARTMENT OF TRANSPORTATION
Caltrans ENGINEERING SERVICES

FUNCTIONAL SUPERVISOR: ABU-BAKR AL-JAFRI
CALCULATED-DESIGNED BY: ANN HOANG
CHECKED BY: SIMON TSE
REVISED BY
DATE REVISED

LAST REVISION 12-14-10
DATE PLOTTED => 12-JAN-2011
TIME PLOTTED => 12:19

Dist	COUNTY	ROUTE	POST MILES TOTAL PROJECT	SHEET No.	TOTAL SHEETS
11	SD	52,67	17.3/17.5, R1.4/R2.4	37	48

Simon Tse 12-07-10
REGISTERED CIVIL ENGINEER DATE

01-03-11
PLANS APPROVAL DATE

REGISTERED PROFESSIONAL ENGINEER SIMON TSE No. C66401 Exp. 06-30-12 CIVIL STATE OF CALIFORNIA

THE STATE OF CALIFORNIA OR ITS OFFICERS OR AGENTS SHALL NOT BE RESPONSIBLE FOR THE ACCURACY OR COMPLETENESS OF SCANNED COPIES OF THIS PLAN SHEET.

NOTES:

1. LOCATION OF UTILITY FACILITIES SHOWN ON THESE PLANS WERE OBTAINED EITHER FROM THE OWNER'S RECORDS AND/OR FROM STATE SURVEYS.
2. LOCATION OF UTILITY LINES SHOWN ON THESE PLANS ARE APPROXIMATE. THE CONTRACTOR IS TO FIELD VERIFY OR POTHOLE IN ORDER TO DETERMINE EXACT LOCATION.
3. FOR ACCURATE RIGHT OF WAY AND ACCESS DATA, CONTACT RIGHT OF WAY ENGINEERING AT THE DISTRICT OFFICE.

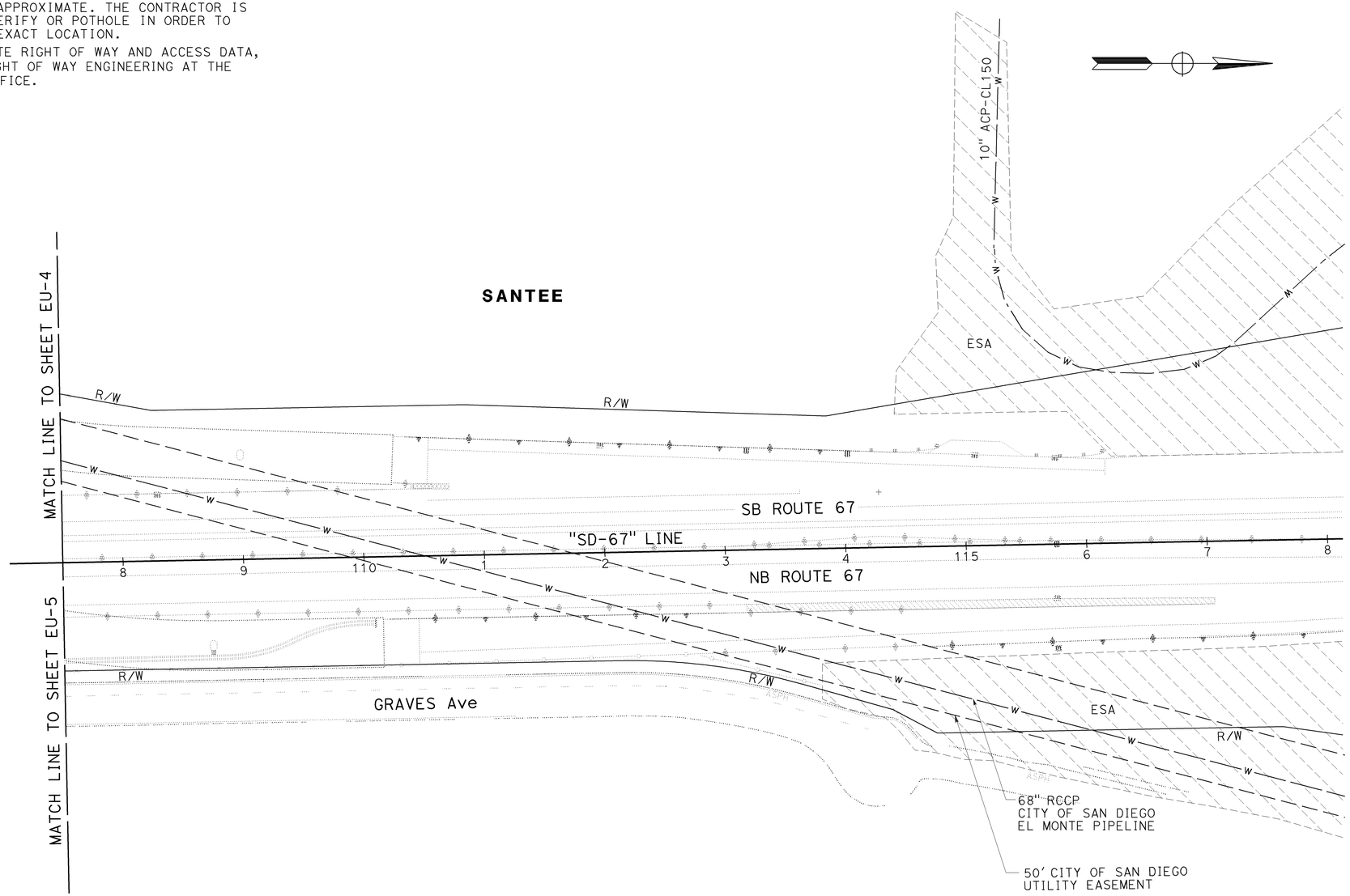

THIS PLAN ACCURATE FOR UTILITY INFORMATION ONLY.

EXISTING UTILITIES PLAN

SCALE: 1" = 50'

EU-6

STATE OF CALIFORNIA - DEPARTMENT OF TRANSPORTATION
Caltrans ENGINEERING SERVICES

FUNCTIONAL SUPERVISOR: ABU-BAKR AL-JAFRI
CALCULATED-DESIGNED BY: ANN HOANG
CHECKED BY: SIMON TSE
REVISED BY
DATE REVISED

LAST REVISION 12-14-10
DATE PLOTTED => 12-JAN-2011
TIME PLOTTED => 12:19

Dist	COUNTY	ROUTE	POST MILES TOTAL PROJECT	SHEET No.	TOTAL SHEETS
11	SD	52,67	17.3/17.5 R1.6/R2.4	38	48

REGISTERED CIVIL ENGINEER 12-06-10 DATE

01-03-11
PLANS APPROVAL DATE

REGISTERED PROFESSIONAL ENGINEER SHAHIN T. ADIBI No. 54839 Exp. 06-30-12 CIVIL STATE OF CALIFORNIA

THE STATE OF CALIFORNIA OR ITS OFFICERS OR AGENTS SHALL NOT BE RESPONSIBLE FOR THE ACCURACY OR COMPLETENESS OF SCANNED COPIES OF THIS PLAN SHEET.

LEGEND:

XX = CONSTRUCTION AREA SIGN

ESA = ENVIRONMENTALLY SENSITIVE AREA

TYPICAL PLACEMENT OF TRAFFIC PLASTIC DRUM

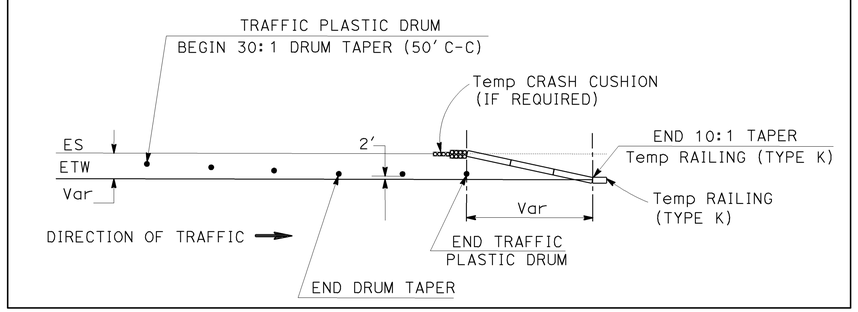

CONSTRUCTION AREA SIGNS

SIGN No.	CODE	PANEL SIZE (In)	No. OF POST AND SIZE (In)	No. OF SIGNS
1	C40 (CA)	108 X 42	2-4 X 6 (S)	3
2	C23 (Mod) (CA)	48 X 48	1-4 X 6 (S)	14
3	C14 (Mod) (CA)	48 X 24	1-4 X 4 (S)	13
			TOTAL	30

(S) DENOTES STATIONARY MOUNTED SIGN

NOTES:

1. EXACT LOCATION OF CONSTRUCTION AREA SIGNS TO BE DETERMINED BY ENGINEER.
2. FEDERAL MANUAL ON UNIFORM TRAFFIC CONTROL DEVICES (MUTCD) SIGN CODES ARE SHOWN UNLESS DESIGNATED BY (CA), INDICATING CALIFORNIA SIGN SPECIFICATION ARE USED.
3. EXISTING UTILITIES ARE NOT SHOWN ON THESE PLANS. THE CONTRACTOR SHALL VERIFY LOCATIONS OF EXISTING UTILITIES AND AVOID IMPACTING THESE UTILITIES BY ADJUSTING THE FIELD LOCATION OF THE SIGN POST IN CONSULTATION WITH THE ENGINEER.

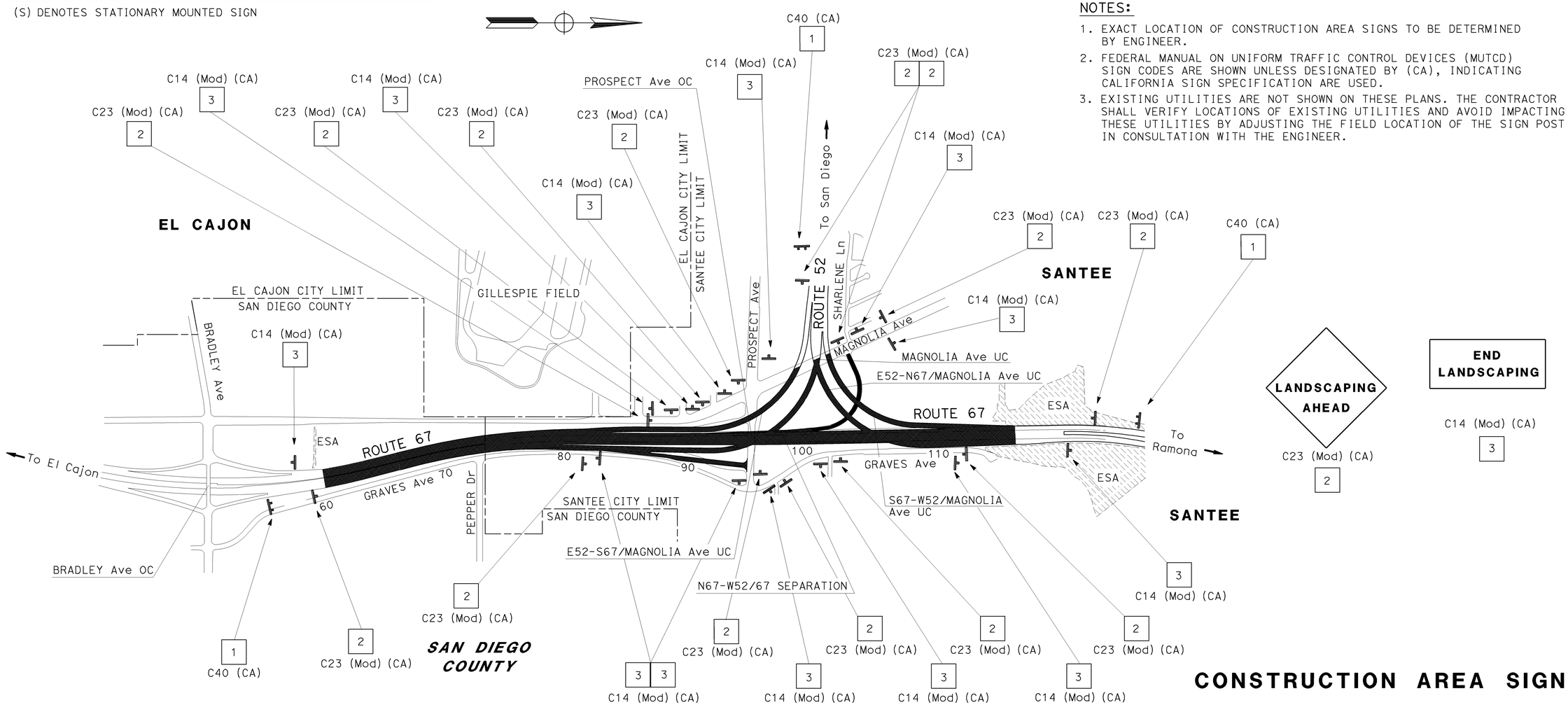

THIS PLAN ACCURATE FOR CONSTRUCTION AREA SIGN WORK ONLY

CONSTRUCTION AREA SIGNS

NO SCALE

CS-1

STATE OF CALIFORNIA - DEPARTMENT OF TRANSPORTATION
Caltrans TRAFFIC DESIGN

FUNCTIONAL SUPERVISOR: CAMILLE ABOUFADEL
CALCULATED-DESIGNED BY: IRAM SYED
CHECKED BY: SHAHIN T ADIBI
REVISED BY
DATE REVISED

LAST REVISION 12-14-10
DATE PLOTTED => 12-JAN-2011
TIME PLOTTED => 12:19

DIST	COUNTY	ROUTE	POST MILES TOTAL PROJECT	SHEET NO.	TOTAL SHEETS
11	SD	52,67	17.3/17.5 R1.4/R2.4	39	48

Robert B Schott
LICENSED LANDSCAPE ARCHITECT

April 3, 2009
PLANS APPROVAL DATE

LICENSED LANDSCAPE ARCHITECT Robert B. Schott 3895 Signature 11-30-10 Renewal Date 2-25-09 Date STATE OF CALIFORNIA

The State of California or its officers or agents shall not be responsible for the accuracy or completeness of electronic copies of this plan sheet.

To accompany plans dated 01-03-11

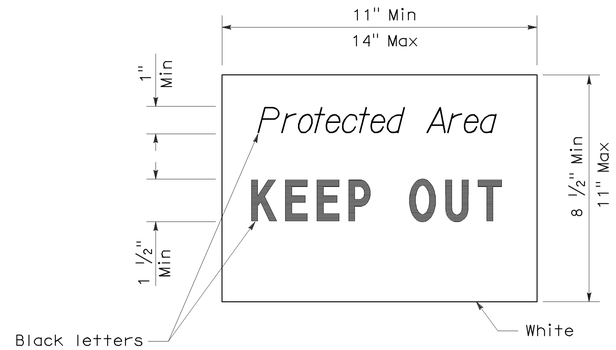

SIGN DETAIL

NOTE:

1. Temporary silt fence and temporary straw bale barrier shown for reference purposes only.

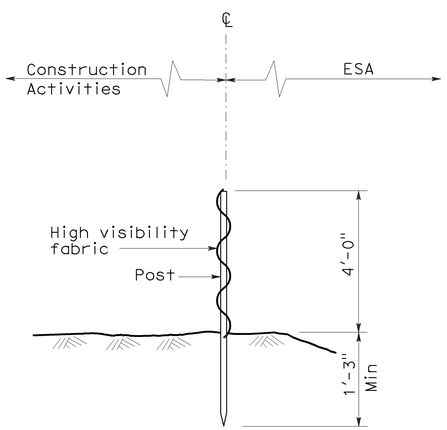

SECTION
TEMPORARY FENCE (TYPE ESA)

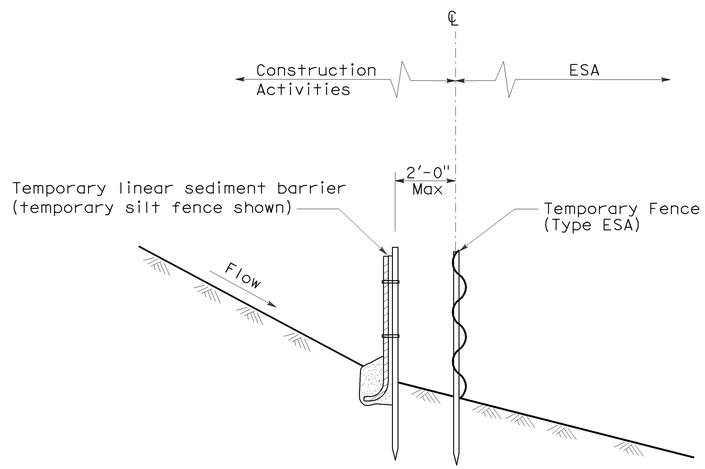

SECTION
PLACEMENT DETAIL
FOR TEMPORARY LINEAR SEDIMENT BARRIER
USED WITH TEMPORARY
FENCE (TYPE ESA)
(See Note 1)

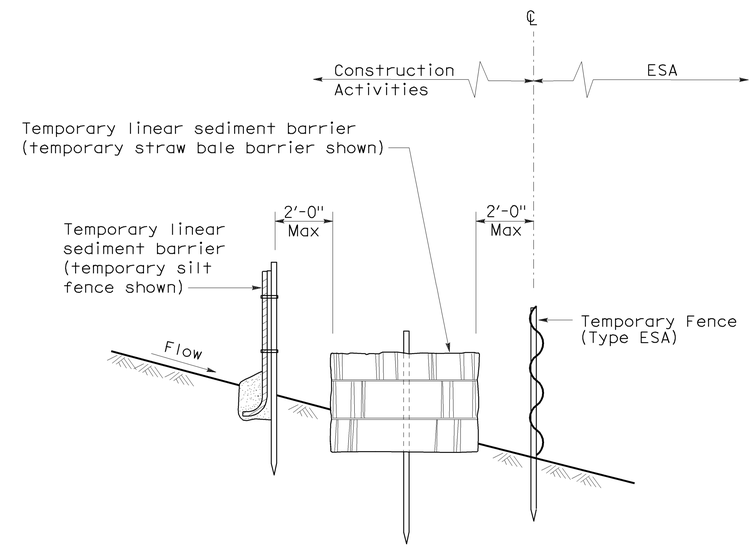

SECTION
PLACEMENT DETAIL
FOR TEMPORARY SILT FENCE
AND TEMPORARY STRAW BALE BARRIER
USED WITH TEMPORARY FENCE (TYPE ESA)
(See Note 1)

STATE OF CALIFORNIA
DEPARTMENT OF TRANSPORTATION

TEMPORARY WATER POLLUTION CONTROL DETAILS [TEMPORARY FENCE (TYPE ESA)]

NO SCALE

NSP T65 DATED APRIL 3, 2009 SUPPLEMENTS
THE STANDARD PLANS BOOK DATED MAY 2006.

NEW STANDARD PLAN NSP T65

2006 NEW STANDARD PLAN NSP T65

1-7-09

DIST	COUNTY	ROUTE	POST MILES TOTAL PROJECT	SHEET NO.	TOTAL SHEETS
11	SD	52,67	17.3/17.5 R1.4/R2.4	40	48

LICENSED LANDSCAPE ARCHITECT

April 3, 2009
PLANS APPROVAL DATE

LICENSED LANDSCAPE ARCHITECT
Gregory A. Balzer 2576
02-28-11 Renewal date
03-04-09 Date
STATE OF CALIFORNIA

The State of California or its officers or agents shall not be responsible for the accuracy or completeness of electronic copies of this plan sheet.

To accompany plans dated 01-03-11

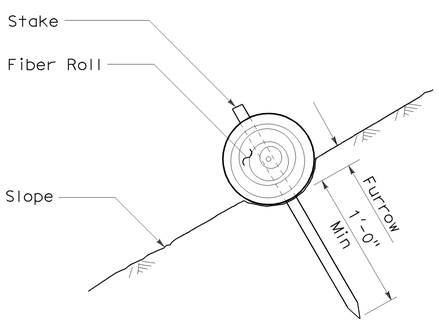

SECTION

FIBER ROLL (TYPE 1)

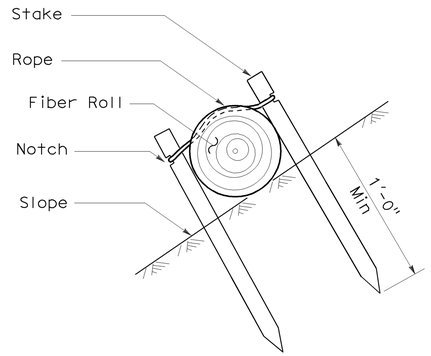

SECTION

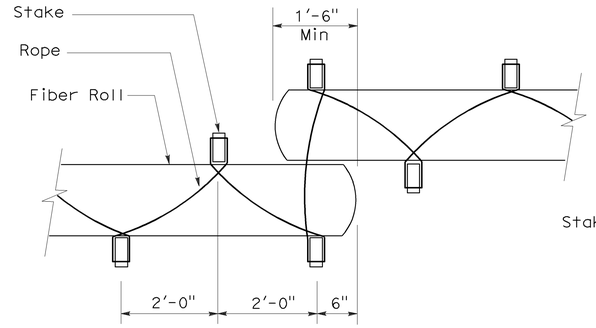

PLAN

FIBER ROLL (TYPE 2)

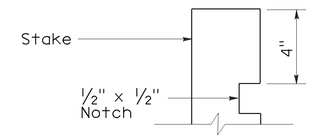

ELEVATION

STAKE NOTCH DETAIL

NOTES:

1. Fiber roll spacing varies depending upon slope inclination.
2. Installations shown in the perspectives are for slope inclination of 10:1 and steeper.

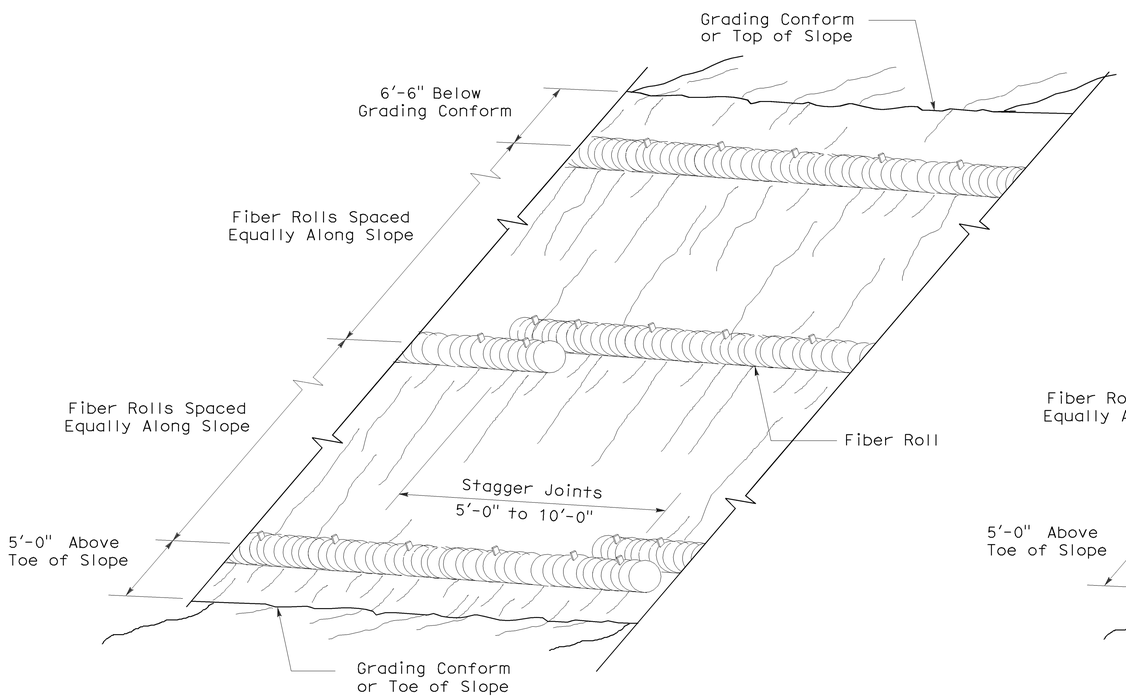

PERSPECTIVE

FIBER ROLL (TYPE 1)

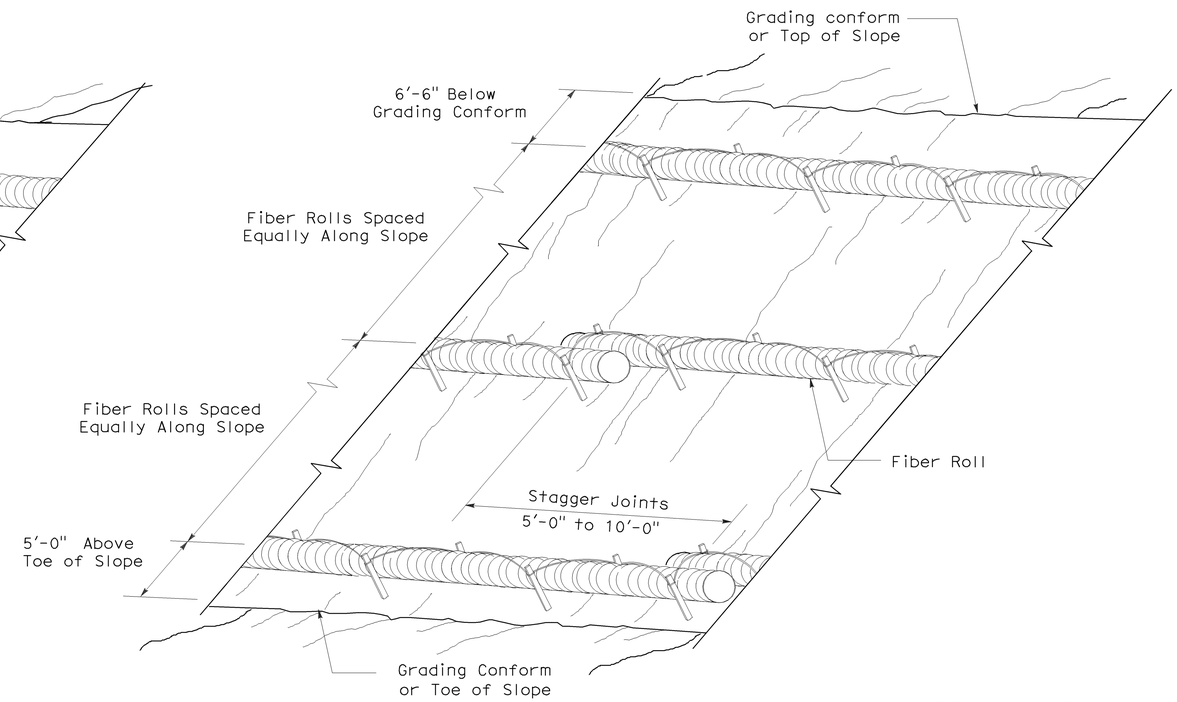

PERSPECTIVE

FIBER ROLL (TYPE 2)

STATE OF CALIFORNIA
DEPARTMENT OF TRANSPORTATION

EROSION CONTROL DETAILS (FIBER ROLL)

NO SCALE

RNSP H51 DATED APRIL 3, 2009 SUPERSEDES NSP H51 DATED DECEMBER 1, 2006 THAT SUPPLEMENTS THE STANDARD PLANS BOOK DATED MAY 2006.

REVISED NEW STANDARD PLAN RNSP H51

2006 REVISED NEW STANDARD PLAN RNSP H51

3-4-09

DIST	COUNTY	ROUTE	POST MILES TOTAL PROJECT	SHEET NO.	TOTAL SHEETS
11	SD	52,67	17.3/17.5 R1.4/R2.4	41	48

LICENSED LANDSCAPE ARCHITECT

June 5, 2009
PLANS APPROVAL DATE

The State of California or its officers or agents shall not be responsible for the accuracy or completeness of electronic copies of this plan sheet.

LICENSED LANDSCAPE ARCHITECT
Gregory A. Balzer 2575
Renewal Date 2-28-11
Renewal Date 5-14-09
Date
STATE OF CALIFORNIA

To accompany plans dated 01-03-11

A

AB	aggregate base
ABS	acrylonitrile-butadiene-styrene
AC	asphalt concrete
Adj	adjacent/adjustable
AIC	auxiliary irrigation controller
Alt	alternative
AMEND	amendment
ARV	air release valve
AUTO	automatic
AUX	auxiliary
AVB	atmospheric vacuum breaker

B

B&B	balled and burlapped
B/B	brass/bronze
B/B/PL	brass/bronze/plastic
B/PL	brass/plastic
BFM	bonded fiber matrix
Bit Ctd	bituminous coated
BP	booster pump
BPA	backflow preventer assembly
BPAE	backflow preventer assembly in enclosure
BPE	backflow preventer enclosure
BV	ball valve

C

CAP	corrugated aluminum pipe
CARV	combination air release valve
CCA	cam coupler assembly
CEC	controller enclosure cabinet
CHDPE	corrugated high density polyethylene
CL	chain link
CNC	control and neutral conductors
Conc	concrete
Cond	conduit
CSP	corrugated steel pipe
CST	center strip
CV	check valve

D

Dia	diameter
DIP	ductile iron pipe
DN	diameter nominal

E

EA	each
Elect	electric/electrical
Elev	elevation
ENCL	enclosure
EP	edge of pavement
ES	edge of shoulder
EST	end strip
ESTB	establishment
ETW	edge of traveled way

F

F	full circle
F/P	full/part circle
FAU	filter assembly unit
FCV	flow control valve
FERT	fertilizer
FG	finished grade
FIPT	female iron pipe thread
FIS	fertilizer injector system
FL	flow line
FM	flow monitor
FS	flow sensor
Ft	foot/feet
FV	flush valve

G

GAL	Gallon(s)
Galv	galvanized
GARV	garden valve
GPH	gallons per hour
GPM	gallons per minute
GSP	galvanized steel pipe
GV	gate valve

H

H	half circle
HB	hose bib
HDPE	high density polyethylene
HP	horsepower/hinge point
HPL	high pressure line
Hwy	highway

I

IC	irrigation controller
ICC	irrigation controller(s) in controller enclosure cabinet
ID	inside diameter
In	inches
IFS	irrigation filtration system
IPS	iron pipe size
IPT	iron pipe thread
Irr	irrigation

L

L	length
LF	linear foot

M

Max	maximum
MBGR	metal beam guard railing
MCV	manual control valve
MIC	master irrigation controller
Min	minimum
MIPT	male iron pipe thread
Misc	miscellaneous
Mtl	material
MVP	maintenance vehicle pullout

N

NCN	no common name
NL	nozzle line
No.	number
NPT	national pipe thread

O

O/C	on center
OD	outside diameter
Oz	ounce

P

P	part circle
PB	pull box
PCC	portland cement concrete
PE	polyethylene
Pkt	packet
PL	plastic
PLT	plant/planting
PLT ESTB	plant establishment
PM	post mile
PR	pressure rated
PRLV	pressure relief valve
PSFM	polymer stabilized fiber matrix
PSI	pounds per square inch
PRV	pressure reducing valve
PVC	polyvinyl chloride
Pvmt	pavement

Q

Q	quarter circle
QCV	quick coupling valve

R

R	radius
RCP	reinforced concrete pipe
RCV	remote control valve
RCVM	remote control valve (master)
RCVMF	remote control valve (master) w/ flow meter
RCW	recycled/reclaimed water
RECP	rolled erosion control product
REQ	required
R/W	right of way

S

S	slip
SCC	sprinkler control conduit
SCH	schedule
SF	state-furnished
Shld	shoulder
SQFT	square foot/feet
SQYD	square yard(s)
SST	side strip
Sta	station
Std	standard
SW	sidewalk/sound wall

T

T	third circle/thread
TLS	truck loading standpipe
TQ	three quarter circle
TRM	turf reinforcement mat
TRVD	traveled
TT	two third circle
Typ	typical

U

UG	underground

V

VAU	valve assembly unit

W

W	width
W/	with
WM	water meter
WS	wye strainer
WSP	welded steel pipe
WWM	welded wire mesh

NOTE:
FOR ADDITIONAL ABBREVIATIONS, SEE STANDARD PLANS A10A AND A10B.

STATE OF CALIFORNIA
DEPARTMENT OF TRANSPORTATION

PLANTING AND IRRIGATION ABBREVIATIONS

NO SCALE

RSP H1 DATED JUNE 5, 2009 SUPERSEDES STANDARD PLAN H1
DATED MAY 1, 2006 - PAGE 201 OF THE STANDARD PLANS BOOK DATED MAY 2006.

REVISED STANDARD PLAN RSP H1

2006 REVISED STANDARD PLAN RSP H1

DIST	COUNTY	ROUTE	POST MILES TOTAL PROJECT	SHEET NO.	TOTAL SHEETS
11	SD	52,67	17.3/17.5 R1.4/R2.4	42	48

Gregory A Balzer
LICENSED LANDSCAPE ARCHITECT

June 5, 2009
PLANS APPROVAL DATE

The State of California or its officers or agents shall not be responsible for the accuracy or completeness of electronic copies of this plan sheet.

LICENSED LANDSCAPE ARCHITECT
Gregory A. Balzer 2576
Signature
2-28-11
Renewal Date
5-14-09
Date
STATE OF CALIFORNIA

To accompany plans dated 01-03-11

EXISTING	PROPOSED	ITEM DESCRIPTION
		WATER METER (WM)
		BACKFLOW PREVENTER ASSEMBLY (BPA)
		BACKFLOW PREVENTER ASSEMBLY IN ENCLOSURE (BPAE)
		BACKFLOW PREVENTER ENCLOSURE (BPE)
		BOOSTER PUMP (BP)
		TRUCK LOADING STANDPIPE (TLS)
FS	FS	FLOW SENSOR (FS)
		MASTER IRRIGATION CONTROLLER (MIC)
		AUXILIARY IRRIGATION CONTROLLER (AIC)
		IRRIGATION CONTROLLER (IC)/ IRRIGATION CONTROLLER (IC) (BATTERY) IRRIGATION CONTROLLER (IC) (SOLAR)
		IRRIGATION CONTROLLER(S) IN CONTROLLER ENCLOSURE CABINET (ICC)
		CONTROL AND NEUTRAL CONDUCTORS (CNC)
SCC	SCC	SPRINKLER CONTROL CONDUIT (SCC)
		IRRIGATION CROSSOVER
		EXTEND IRRIGATION CROSSOVER
		IRRIGATION SLEEVE
dip	DIP	DUCTILE IRON PIPE (SUPPLY LINE) (MAIN) (DIP)
		GALVANIZED STEEL PIPE (SUPPLY LINE) (MAIN) (GSP)
		GALVANIZED STEEL PIPE (SUPPLY LINE) (LATERAL) (GSP)
		PLASTIC PIPE (PR 200) (SUPPLY LINE) (MAIN)
		PLASTIC PIPE (PR 200) (SUPPLY LINE) (LATERAL)
		PLASTIC PIPE (IRRIGATION LINE)
		REMOTE CONTROL VALVE (RCV) REMOTE CONTROL VALVE (MASTER) (RCVM) REMOTE CONTROL VALVE (MASTER) W/FLOW METER (RCVMF)
		MANUAL CONTROL VALVE (MCV)
		VALVE ASSEMBLY UNIT (VAU)
		WYE STRAINER (WS)
		FILTER ASSEMBLY UNIT (FAU)
		GATE VALVE (GV)
		BALL VALVE (BV)

EXISTING	PROPOSED	ITEM DESCRIPTION
		QUICK COUPLING VALVE (QCV)
		CAM COUPLER ASSEMBLY (CCA)
		PRESSURE REDUCING VALVE (PRV)
		PRESSURE RELIEF VALVE (PRLV)
		FLOW CONTROL VALVE (FCV)
		COMBINATION AIR RELEASE VALVE (CARV)
		CHECK VALVE (CV)
		FLUSH VALVE (FV)
		NOZZLE LINE W/TURNING UNION
		IRRIGATION SYSTEM
		IRRIGATION SYSTEM TO BE REMOVED
		CHAIN LINK GATE
		QUICK COUPLING VALVE W/SPRINKLER PROTECTOR
3	3	SPRINKLER W/SPRINKLER PROTECTOR
	C	CONNECT TO EXISTING SYSTEM
		CAP
		CAP EXISTING

VALVE CODE

RCV SIZE
IRRIGATION CONTROLLER
CONTROLLER STATION
VALVE IN PARALLEL (IF APPLICABLE)
GPM
QUANTITY OF SPRINKLERS (WHEN SHOWN)

* 2½"-A-2b-40 -60

MCV SIZE
VALVE NUMBER
GPM
QUANTITY OF TYPE SPRINKLERS (WHEN SHOWN)

* 2"-3-30 -50

* VALVE CODES FOR EXISTING VALVES ARE SHOWN IN A DASHED ENCLOSURE.

STATE OF CALIFORNIA
DEPARTMENT OF TRANSPORTATION

PLANTING AND IRRIGATION SYMBOLS

NO SCALE

RSP H2 DATED JUNE 5, 2009 SUPERSEDES RSP H2 DATED MARCH 7, 2008 AND STANDARD PLAN H2 DATED MAY 1, 2006 - PAGE 202 OF THE STANDARD PLANS BOOK DATED MAY 2006.

REVISED STANDARD PLAN RSP H2

2006 REVISED STANDARD PLAN RSP H2

5-11-09

DIST	COUNTY	ROUTE	POST MILES TOTAL PROJECT	SHEET NO.	TOTAL SHEETS
11	SD	52,67	17.3/17.5 R1.4/R2.4	43	48

Gregory A Balzer
LICENSED LANDSCAPE ARCHITECT

June 5, 2009
PLANS APPROVAL DATE

The State of California or its officers or agents shall not be responsible for the accuracy or completeness of electronic copies of this plan sheet.

LICENSED LANDSCAPE ARCHITECT
Gregory A. Balzer 2576
Gregory A Balzer
Signature
2-28-11
Renewal Date
5-14-09
Date
STATE OF CALIFORNIA

To accompany plans dated 01-03-11

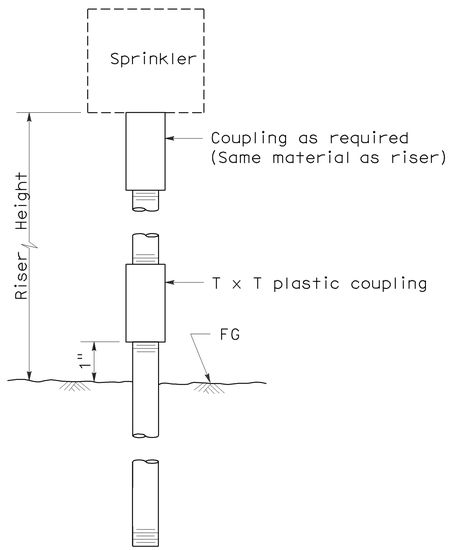

ELEVATION
RISER TYPE I

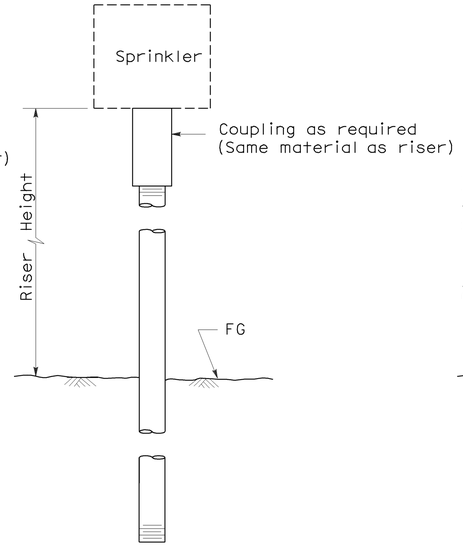

ELEVATION
RISER TYPE II

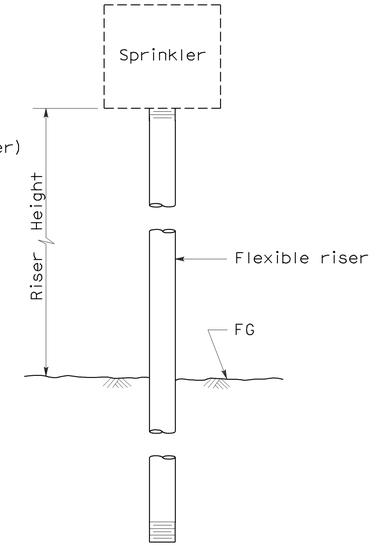

ELEVATION
RISER TYPE III

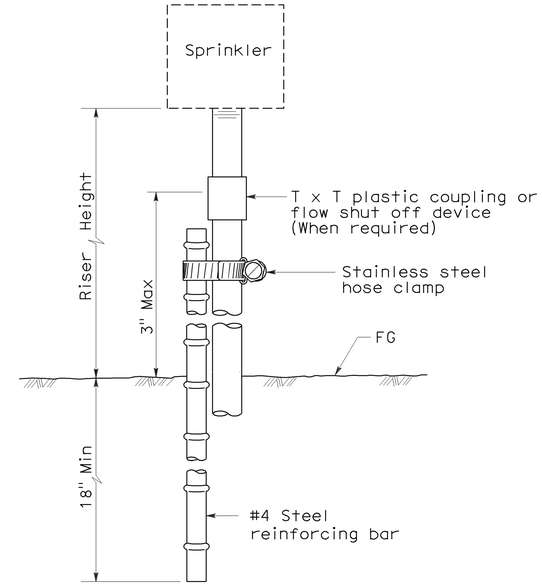

ELEVATION
RISER TYPE IV

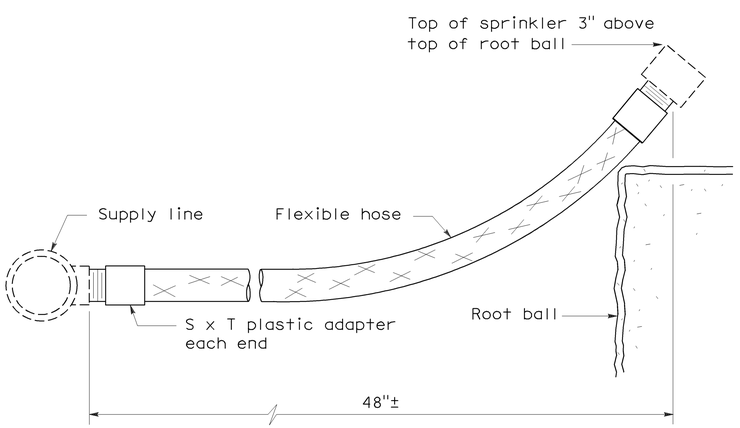

ELEVATION
RISER TYPE V

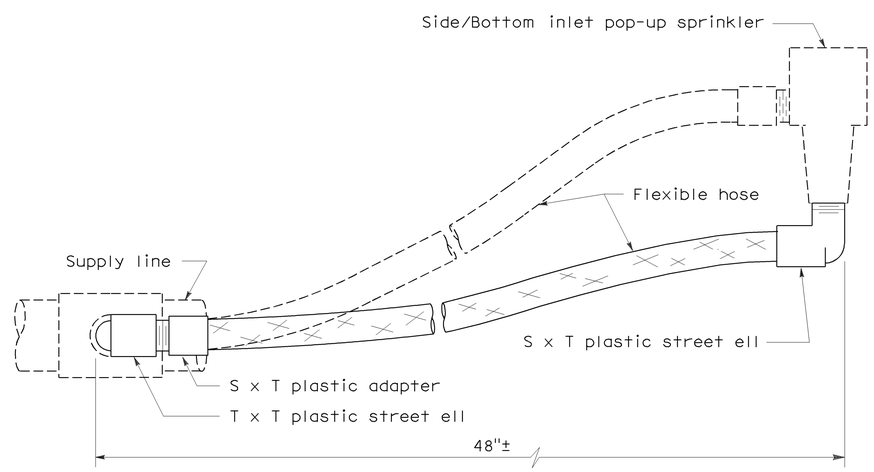

ELEVATION
RISER TYPE VI

STATE OF CALIFORNIA
DEPARTMENT OF TRANSPORTATION

PLANTING AND IRRIGATION DETAILS

NO SCALE

RSP H5 DATED JUNE 5, 2009 SUPERSEDES STANDARD PLAN H5
DATED MAY 1, 2006 - PAGE 205 OF THE STANDARD PLANS BOOK DATED MAY 2006.

REVISED STANDARD PLAN RSP H5

2006 REVISED STANDARD PLAN RSP H5

5-28-09

DIST	COUNTY	ROUTE	POST MILES TOTAL PROJECT	SHEET NO.	TOTAL SHEETS
11	SD	52,67	17.3/17.5 R1.4/R2.4	44	48

Gregory A Balzer
LICENSED LANDSCAPE ARCHITECT

June 5, 2009
PLANS APPROVAL DATE

LICENSED LANDSCAPE ARCHITECT
Gregory A. Balzer 2576
Signature
2-28-11
Renewal Date
5-14-09
Date
STATE OF CALIFORNIA

The State of California or its officers or agents shall not be responsible for the accuracy or completeness of electronic copies of this plan sheet.

To accompany plans dated 01-03-11

2006 REVISED STANDARD PLAN RSP H7

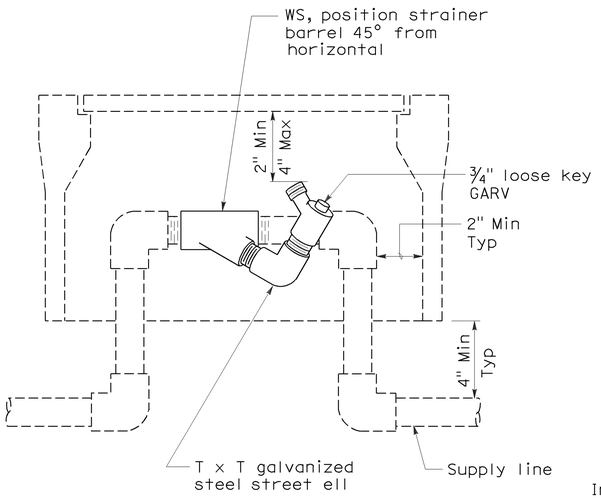

ELEVATION
WYE STRAINER

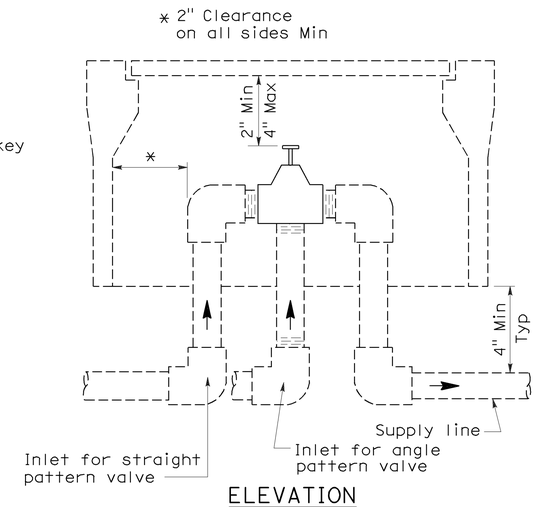

ELEVATION
VALVE

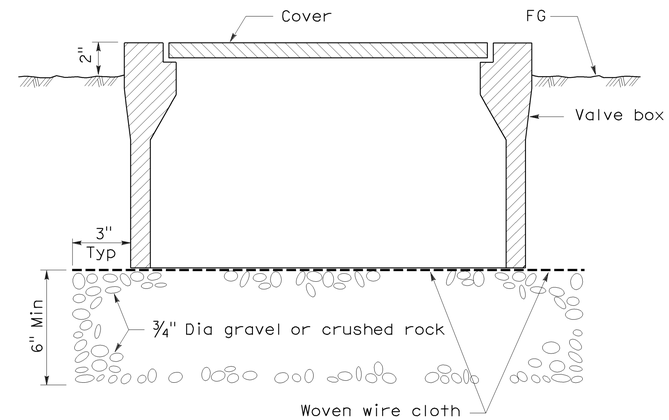

SECTION
VALVE BOX

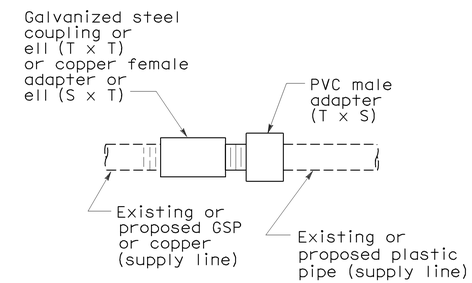

PLAN
GALVANIZED OR COPPER PIPE CONNECTION TO PLASTIC PIPE

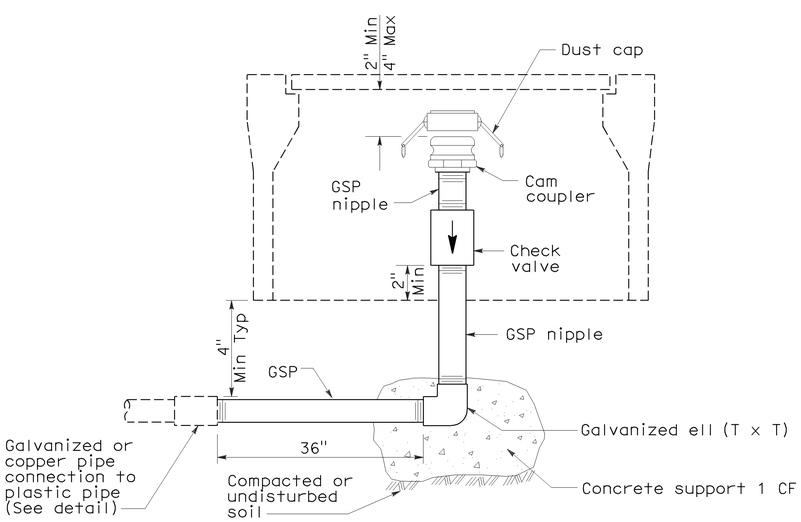

ELEVATION
CAM COUPLER ASSEMBLY

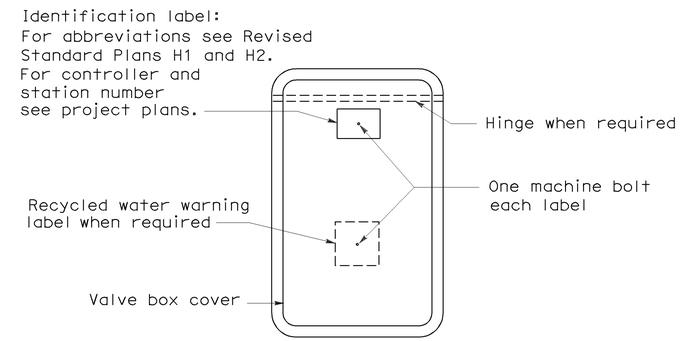

PLAN

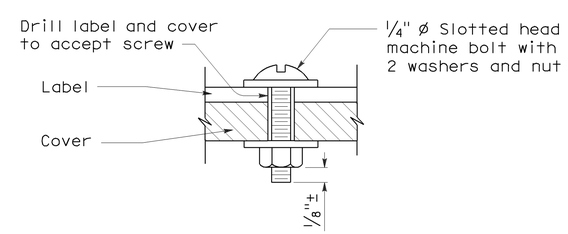

SECTION
VALVE BOX IDENTIFICATION

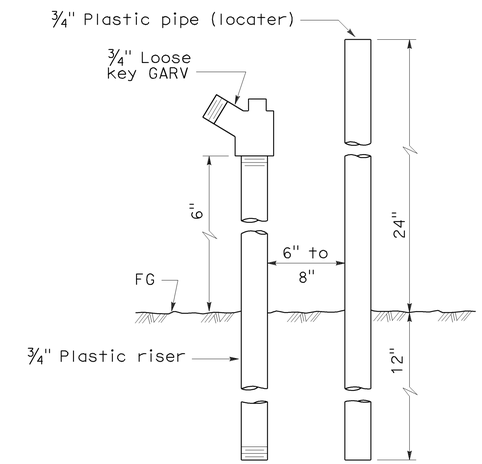

ELEVATION
FLUSH VALVE

STATE OF CALIFORNIA
DEPARTMENT OF TRANSPORTATION

PLANTING AND IRRIGATION DETAILS

NO SCALE

RSP H7 DATED JUNE 5, 2009 SUPERSEDES STANDARD PLAN H7
DATED MAY 1, 2006 - PAGE 207 OF THE STANDARD PLANS BOOK DATED MAY 2006.

REVISED STANDARD PLAN RSP H7

5-28-09

DIST	COUNTY	ROUTE	POST MILES TOTAL PROJECT	SHEET NO.	TOTAL SHEETS
11	SD	52,67	17.3/17.5 R1.4/R2.4	45	48

Randell D. Hiatt
REGISTERED CIVIL ENGINEER

June 6, 2008
PLANS APPROVAL DATE

REGISTERED PROFESSIONAL ENGINEER Randell D. Hiatt No. C50200 Exp. 6-30-09 CIVIL STATE OF CALIFORNIA

The State of California or its officers or agents shall not be responsible for the accuracy or completeness of electronic copies of this plan sheet.

To accompany plans dated 01-03-11

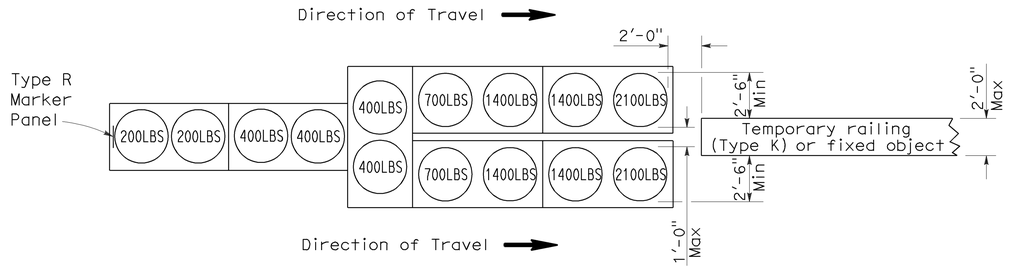

ARRAY 'TU14'

Approach speed 45 mph or more

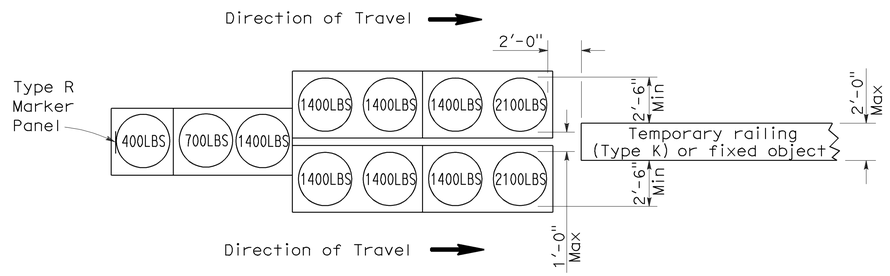

ARRAY 'TU11'

Approach speed less than 45 mph

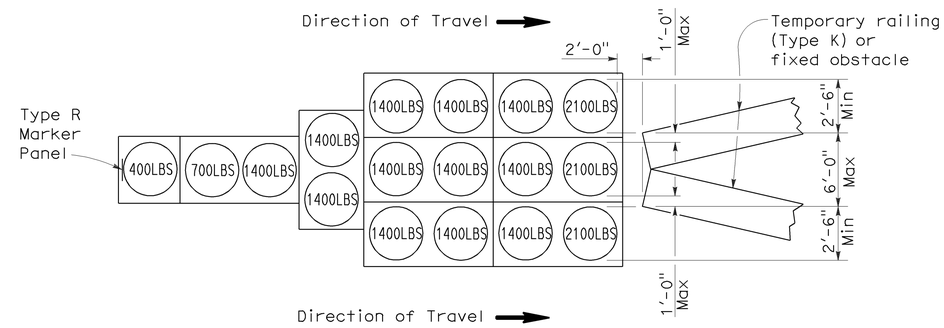

ARRAY 'TU17'

Approach speed less than 45 mph

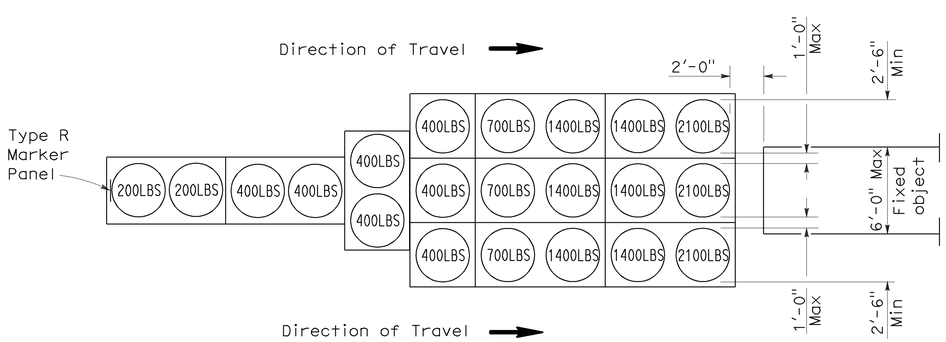

ARRAY 'TU21'

Approach speed 45 mph or more

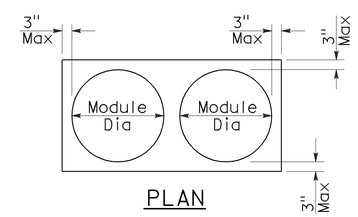

PLAN

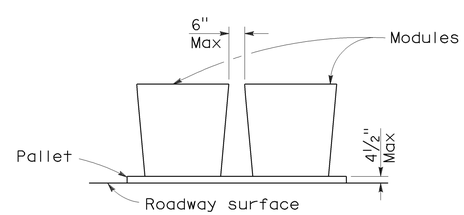

ELEVATION

CRASH CUSHION PALLET DETAIL

See Note 7

NOTES:

1. (XXX) Indicates sand filled module location and weight of sand in pounds for each module. Module spacing is based on the greater diameter of the module.
2. All sand weights are nominal.
3. Temporary crash cushion arrays shall not encroach on the traveled way.
4. Place the top of Type R marker panel 1" below the module lid.
5. Refer to Standard Plan A73B for marker details.
6. Approach speeds indicated conform to NCHRP 350 Report criteria.
7. Use of pallets is optional.

STATE OF CALIFORNIA
DEPARTMENT OF TRANSPORTATION

TEMPORARY CRASH CUSHION, SAND FILLED (UNIDIRECTIONAL)

NO SCALE

RSP T1A DATED JUNE 6, 2008 SUPERSEDES STANDARD PLAN T1A
DATED MAY 1, 2006 - PAGE 211 OF THE STANDARD PLANS BOOK DATED MAY 2006.

REVISED STANDARD PLAN RSP T1A

2006 REVISED STANDARD PLAN RSP T1A

5-15-08

DIST	COUNTY	ROUTE	POST MILES TOTAL PROJECT	SHEET NO.	TOTAL SHEETS
11	SD	52,67	17.3/17.5 R1.4/R2.4	46	48

Randell D. Hiatt
REGISTERED CIVIL ENGINEER

June 6, 2008
PLANS APPROVAL DATE

REGISTERED PROFESSIONAL ENGINEER
Randell D. Hiatt
No. C50200
Exp. 6-30-09
CIVIL
STATE OF CALIFORNIA

The State of California or its officers or agents shall not be responsible for the accuracy or completeness of electronic copies of this plan sheet.

To accompany plans dated 01-03-11

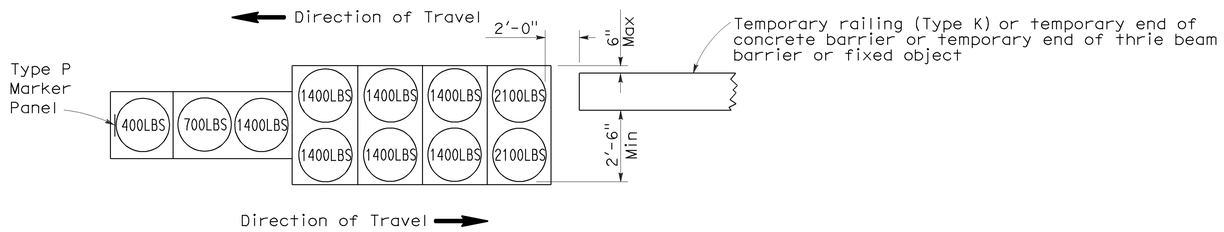

ARRAY 'TB11'

Approach speed less than 45 mph

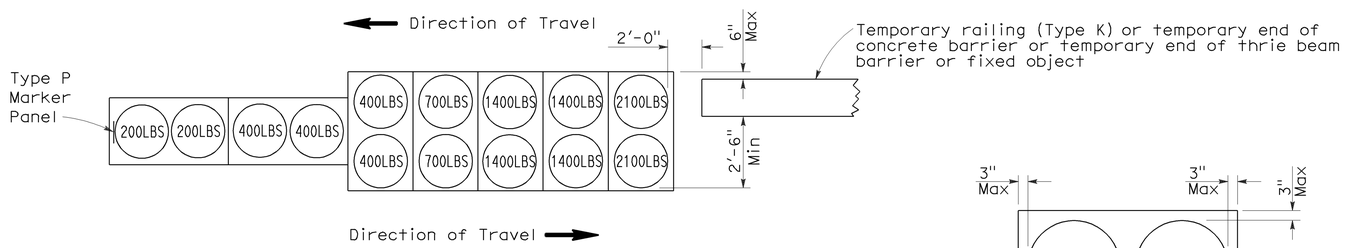

ARRAY 'TB14'

Approach speed 45 mph or more

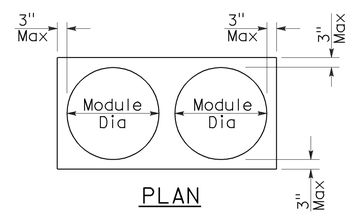

PLAN

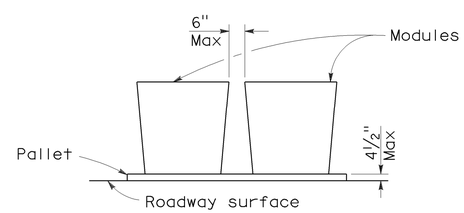

ELEVATION

CRASH CUSHION PALLET DETAIL

See Note 7

NOTES:

1. (XXX) Indicates sand filled module location and weight of sand in pounds for each module. Module spacing is based on the greater diameter of the module.
2. All sand weights are nominal.
3. Temporary crash cushion arrays shall not encroach on the traveled way.
4. Place the Type P marker panel so that the bottom of the panel rests upon the pallet.
5. Refer to Standard Plan A73B for marker details.
6. Approach speeds indicated conform to NCHRP 350 Report criteria.
7. Use of pallets is optional.

STATE OF CALIFORNIA
DEPARTMENT OF TRANSPORTATION

TEMPORARY CRASH CUSHION, SAND FILLED (BIDIRECTIONAL)

NO SCALE

RSP T1B DATED JUNE 6, 2008 SUPERSEDES STANDARD PLAN T1B
DATED MAY 1, 2006 - PAGE 212 OF THE STANDARD PLANS BOOK DATED MAY 2006.

REVISED STANDARD PLAN RSP T1B

2006 REVISED STANDARD PLAN RSP T1B

5-15-08

DIST	COUNTY	ROUTE	POST MILES TOTAL PROJECT	SHEET NO.	TOTAL SHEETS
11	SD	52,67	17.3/17.5 R1.4/R2.4	47	48

Randell D. Hiatt
REGISTERED CIVIL ENGINEER

June 6, 2008
PLANS APPROVAL DATE

REGISTERED PROFESSIONAL ENGINEER Randell D. Hiatt No. C50200 Exp. 6-30-09 CIVIL STATE OF CALIFORNIA

The State of California or its officers or agents shall not be responsible for the accuracy or completeness of electronic copies of this plan sheet.

To accompany plans dated 01-03-11

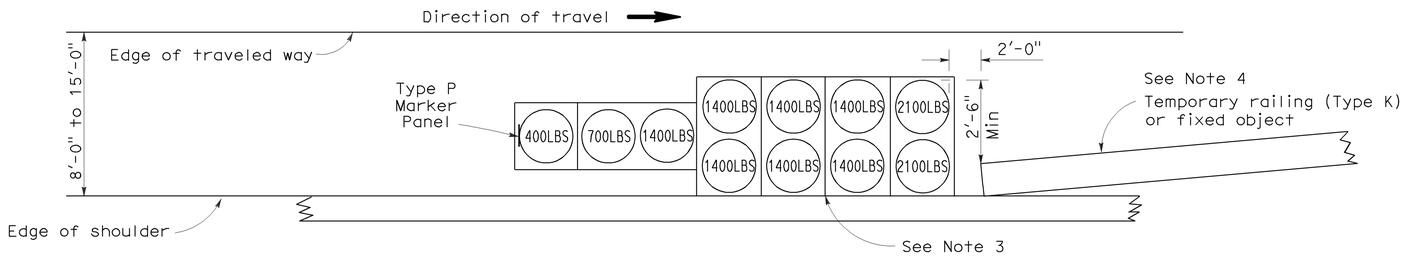

ARRAY 'TS11'

Approach speed less than 45 mph
See Note 9

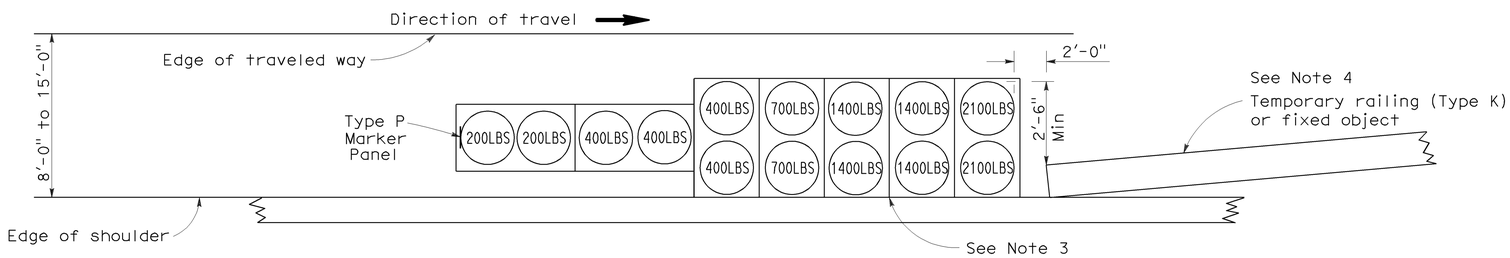

ARRAY 'TS14'

Approach speed 45 mph or more
See Note 9

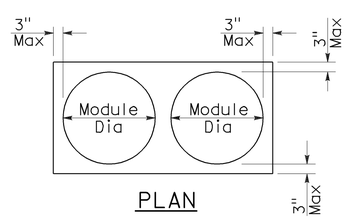

PLAN

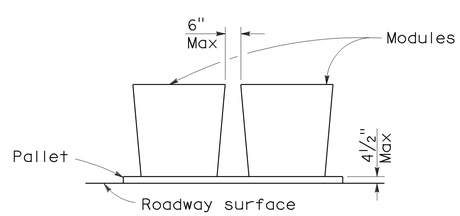

ELEVATION

CRASH CUSHION PALLET DETAIL

See Note 11

NOTES:

1. (XXX) Indicates sand filled module location and weight of sand in pounds for each module. Module spacing is based on the greater diameter of the module.
2. All sand weights are nominal.
3. The temporary crash cushion arrays shown on this plan shall be used only in locations where there will be traffic on one side of the temporary crash cushion array.
4. If the fixed object or approach end of the temporary railing is less than 15'-0" from the edge of traveled way, a temporary crash cushion is required in a construction or work zone.
5. Temporary crash cushion arrays shall not encroach on the traveled way.
6. Arrays for median shoulders shall conform to details shown on this plan for outside shoulders.
7. Place the Type P marker panel so that the bottom of the panel rests upon the pallet and faces traffic.
8. Refer to Standard Plan A73B for marker details.
9. For shoulder widths less than 8'-0", appropriate approved crash cushion protection, other than sand filled modules, shall be provided at fixed objects and at approach ends of temporary railing. The specific type of crash cushion shall be as shown on the project plans or as specified in the Special Provisions, or if not shown on the project plans or specified in the Special Provisions, shall be as approved by the Engineer.
10. Approach speeds indicated conform to NCHRP 350 Report criteria.
11. Use of pallets is optional.

STATE OF CALIFORNIA
DEPARTMENT OF TRANSPORTATION

TEMPORARY CRASH CUSHION, SAND FILLED (SHOULDER INSTALLATIONS)

NO SCALE

RSP T2 DATED JUNE 6, 2008 SUPERSEDES STANDARD PLAN T2
DATED MAY 1, 2006 - PAGE 213 OF THE STANDARD PLANS BOOK DATED MAY 2006.

REVISED STANDARD PLAN RSP T2

2006 REVISED STANDARD PLAN RSP T2

5-15-08

DIST	COUNTY	ROUTE	POST MILES TOTAL PROJECT	SHEET NO.	TOTAL SHEETS
11	SD	52,67	17.3/17.5 R1.4/R2.4	48	48

REGISTERED CIVIL ENGINEER

November 17, 2006
PLANS APPROVAL DATE

Greg W. Edwards No. C36386 Exp. 6-30-08 CIVIL — REGISTERED PROFESSIONAL ENGINEER — STATE OF CALIFORNIA

The State of California or its officers or agents shall not be responsible for the accuracy or completeness of electronic copies of this plan sheet.

To accompany plans dated 01-03-11

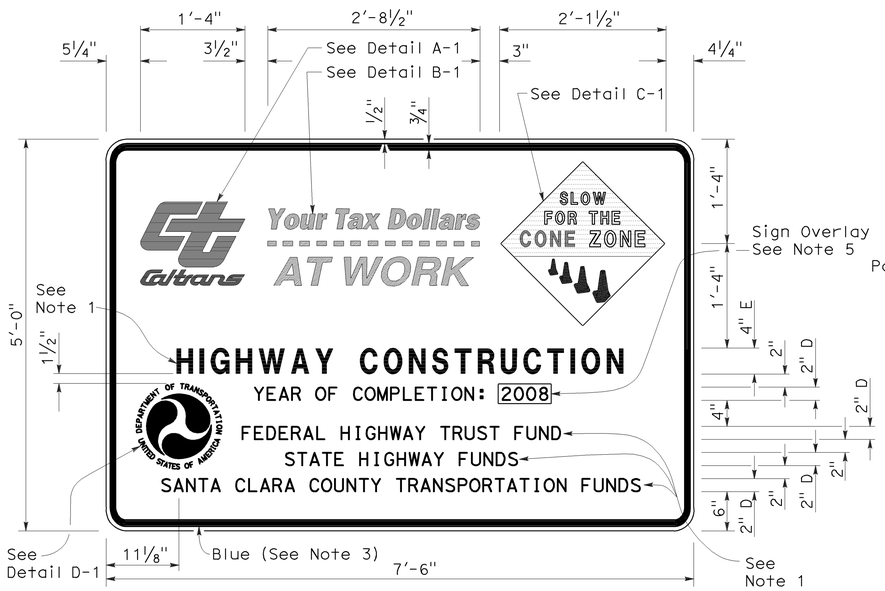

TYPE 1

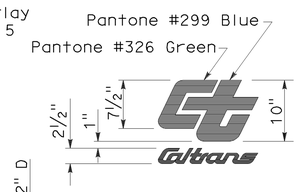

DETAIL A-1

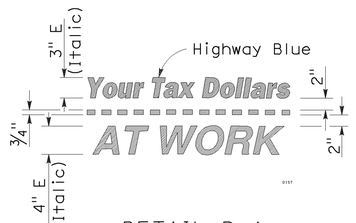

DETAIL B-1
(See Note 3)

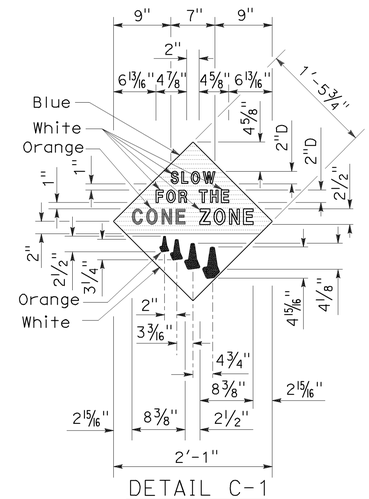

DETAIL C-1
(See Note 4)

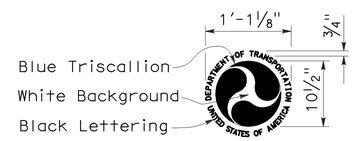

DETAIL D-1
(See Note 6)

NOTES:

1. The sign messages shown for type of project and fund types are examples only. See the Special Provisions for the applicable type of project and fund type messages to be used.
2. Except as otherwise shown, the legend of sign shall be black on a white background (non-reflective).
3. The border of the signs and details "B-1" and "B-2" shall be blue (non-reflective).
4. The diamond in details "C-1" and "C-2" shall be blue for the background of message, " SLOW FOR THE CONE ZONE", and white background for the orange cones. The color and type of font for the "SLOW FOR THE CONE ZONE" message shall be: "SLOW" white D; "FOR THE" white D; "CONE" orange Arial font; "ZONE" white Arial font.
5. Year of completion of project construction shown on the overlay is an example only. See the Special Provisions.
6. Use when the Project involves Federal Highway Trust Fund.

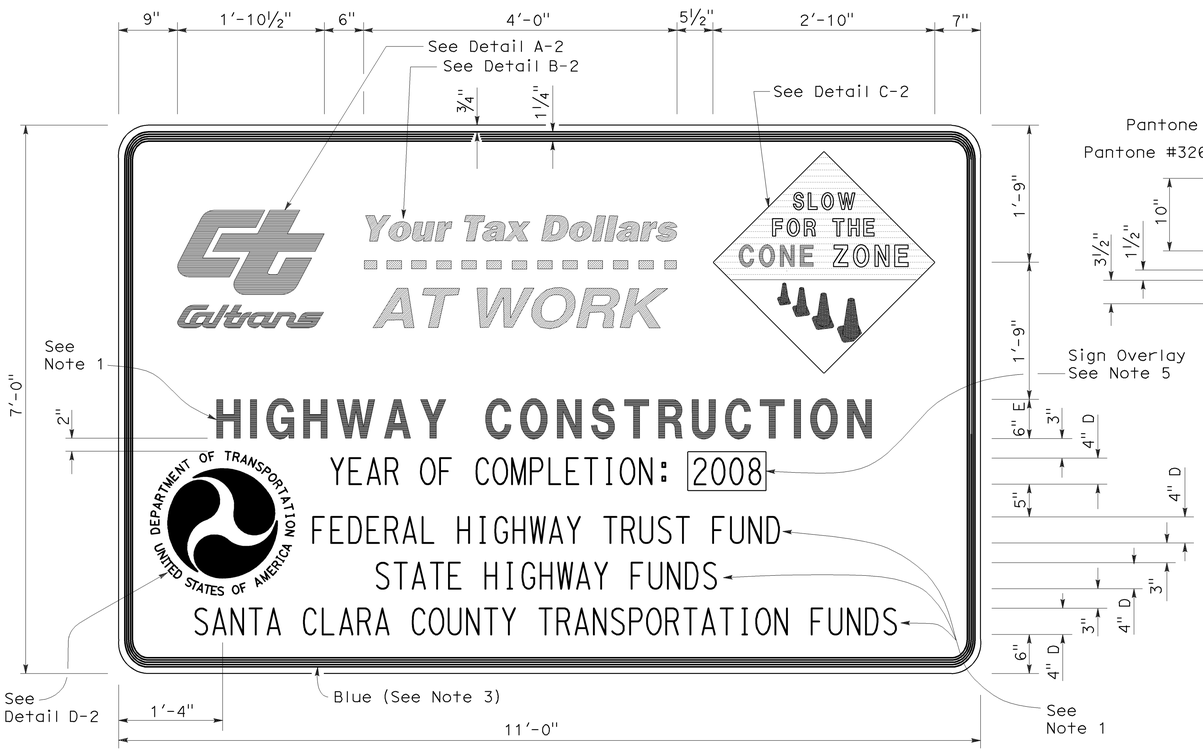

TYPE 2

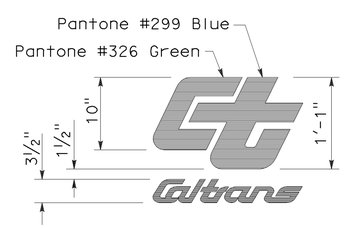

DETAIL A-2

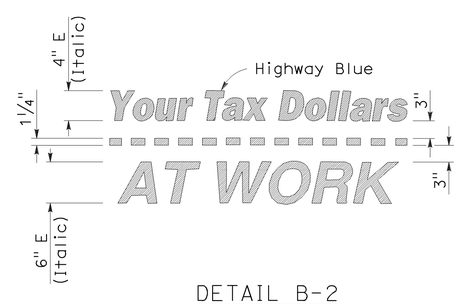

DETAIL B-2
(See Note 3)

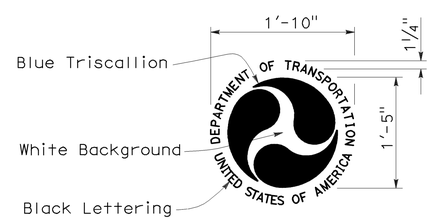

DETAIL D-2
(See Note 6)

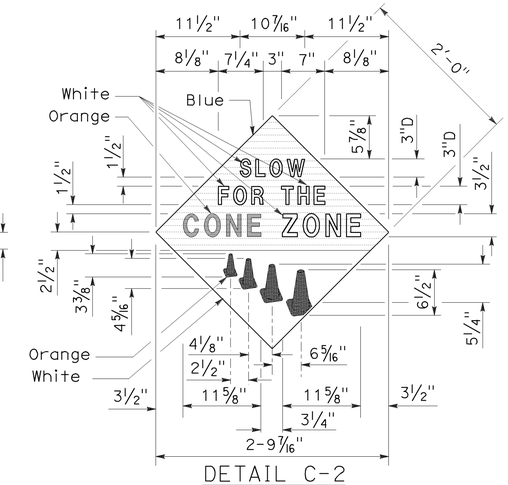

DETAIL C-2
(See Note 4)

STATE OF CALIFORNIA
DEPARTMENT OF TRANSPORTATION

CONSTRUCTION PROJECT FUNDING IDENTIFICATION SIGNS

NO SCALE

RSP T7 DATED NOVEMBER 17, 2006 SUPERSEDES STANDARD PLAN T7
DATED MAY 1, 2006 - PAGE 217 OF THE STANDARD PLANS BOOK DATED MAY 2006.

REVISED STANDARD PLAN RSP T7

2006 REVISED STANDARD PLAN RSP T7

9-7-06