Dist	COUNTY	ROUTE	POST MILES TOTAL PROJECT	SHEET No.	TOTAL SHEETS
11	Imp	8,78,86	Var	1	16

INDEX OF PLANS

SHEET No.	DESCRIPTION
1	TITLE AND LOCATION MAP
2	LOCATIONS OF CONSTRUCTION
3	CONSTRUCTION AREA SIGNS
4-6	PAVEMENT DELINEATION DETAILS AND QUANTITIES
7-12	REVISED STANDARD PLANS

STRUCTURE PLANS

13-14	GENERAL PLAN
15	JOINT SEAL DETAILS
16	QUANTITIES

THE STANDARD PLANS LIST APPLICABLE TO THIS CONTRACT IS INCLUDED IN THE NOTICE TO BIDDERS AND SPECIAL PROVISIONS BOOK.

STATE OF CALIFORNIA

DEPARTMENT OF TRANSPORTATION

PROJECT PLANS FOR CONSTRUCTION ON

STATE HIGHWAY

IN IMPERIAL COUNTY AT VARIOUS LOCATIONS

TO BE SUPPLEMENTED BY STANDARD PLANS DATED 2010

LOCATION MAP

LOCATIONS OF CONSTRUCTION Nos. 7 THROUGH 21

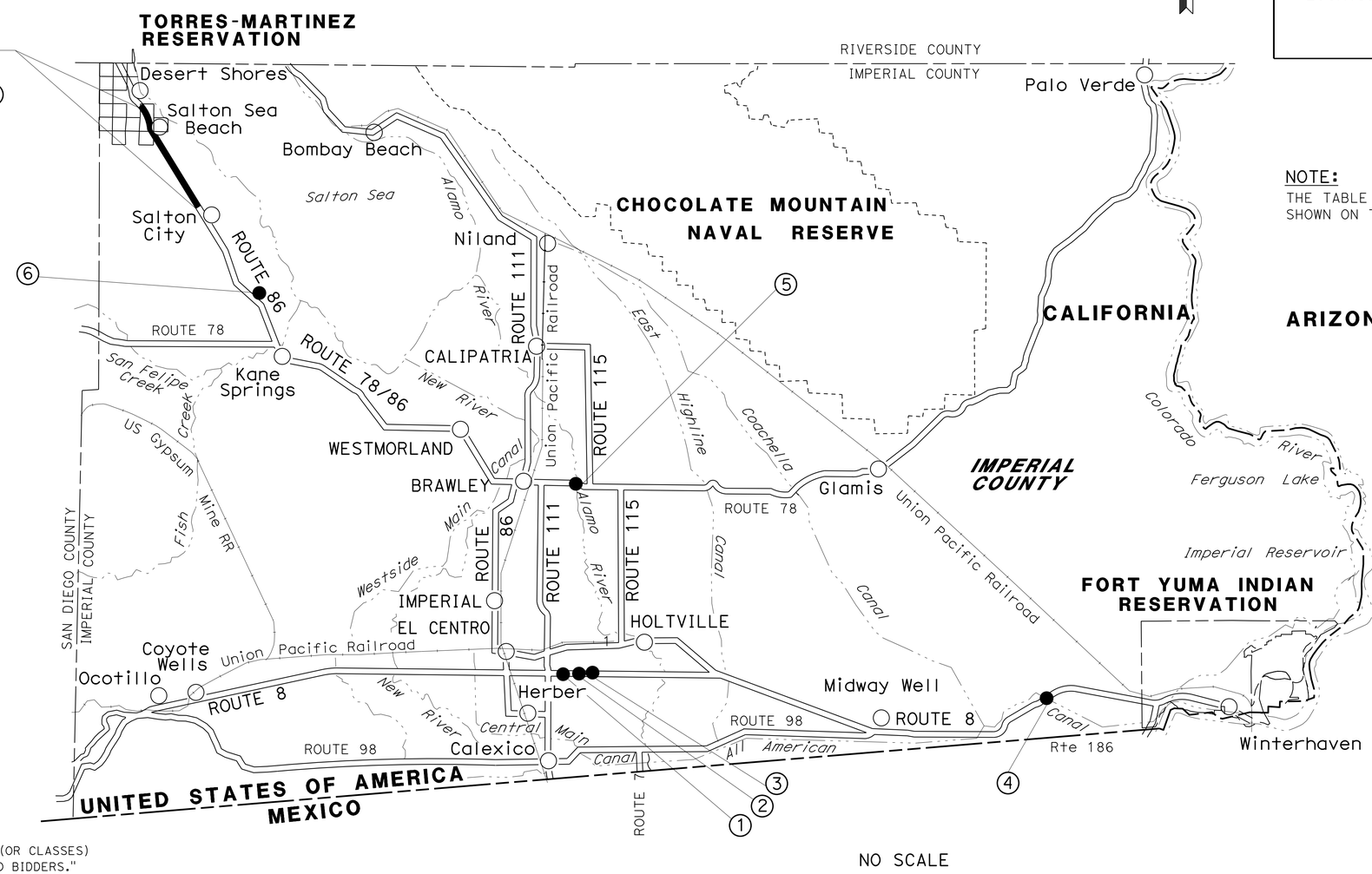

NOTE:
THE TABLE OF LOCATIONS OF CONSTRUCTION IS SHOWN ON THE LOCATIONS OF CONSTRUCTION SHEET.

THE CONTRACTOR SHALL POSSESS THE CLASS (OR CLASSES) OF LICENSE AS SPECIFIED IN THE "NOTICE TO BIDDERS."

NO SCALE

PROJECT MANAGER: ALBERTO GAYON

DESIGN ENGINEER: MIGUEL H. VASQUEZ

12-18-13
PROJECT ENGINEER / REGISTERED CIVIL ENGINEER — DATE

REGISTERED PROFESSIONAL ENGINEER — MIGUEL H. VASQUEZ — No. C56329 — Exp. 12-31-14 — CIVIL — STATE OF CALIFORNIA

February 24, 2014
PLANS APPROVAL DATE

THE STATE OF CALIFORNIA OR ITS OFFICERS OR AGENTS SHALL NOT BE RESPONSIBLE FOR THE ACCURACY OR COMPLETENESS OF SCANNED COPIES OF THIS PLAN SHEET.

CONTRACT No.	11-2M6104
PROJECT ID	1113000051

LAST REVISION 12-23-13 — DATE PLOTTED => 25-FEB-2014 — TIME PLOTTED => 15:15

Dist	COUNTY	ROUTE	POST MILES TOTAL PROJECT	SHEET No.	TOTAL SHEETS
11	Imp	8,78,86	Var	2	16

REGISTERED CIVIL ENGINEER 12-18-13 DATE

02-24-14
PLANS APPROVAL DATE

REGISTERED PROFESSIONAL ENGINEER MIGUEL H. VASQUEZ No. C56329 Exp 12-31-14 CIVIL STATE OF CALIFORNIA

THE STATE OF CALIFORNIA OR ITS OFFICERS OR AGENTS SHALL NOT BE RESPONSIBLE FOR THE ACCURACY OR COMPLETENESS OF SCANNED COPIES OF THIS PLAN SHEET.

LOCATIONS OF CONSTRUCTION

Loc	Rte	PM	BRIDGE No.	DESCRIPTION
1	8	R42.54	58-0214	BOWKER Rd OC
2	8	R45.05	58-0216	BARBARA WORTH Rd OC
3	8	R47.05	58-0217	METZ Rd OC
4	8	81.69	58-0195R	ALL AMERICAN CANAL
5	78	17.48	58-0118	ALAMO RIVER
6	86	R39.01	58-0034L	WILLOW WASH
7	86	56.59	58-0042R	IBERIA DITCH
8	86	57.33	58-0043R	AMEROSA DITCH
9	86	57.34	58-0043L	AMEROSA DITCH
10	86	57.68	58-0044R	VERDE DITCH
11	86	57.69	58-0044L	VERDE DITCH
12	86	62.98	58-0061L	TORTIF DITCH
13	86	63.21	58-0063L	FLORIS DITCH
14	86	63.21	58-0063R	FLORIS DITCH
15	86	63.34	58-0064L	INCIENSO DITCH
16	86	64.10	58-0067R	GODETIA DITCH
17	86	64.33	58-0068R	CALYX DITCH
18	86	64.63	58-0069L	MATIS DITCH
19	86	64.83	58-0071L	ROMNEY DITCH
20	86	64.83	58-0071R	ROMNEY DITCH
21	86	65.00	58-0072R	PAROSA DITCH

LOCATIONS OF CONSTRUCTION

LC-1

REVISED BY | DATE REVISED
EYERUSALEM TADESSE | MIGUEL VAASQUEZ
CALCULATED-DESIGNED BY | CHECKED BY
FUNCTIONAL SUPERVISOR
ALBERTO GAYON

STATE OF CALIFORNIA - DEPARTMENT OF TRANSPORTATION
Caltrans
MAINTENANCE ENGINERRING

LAST REVISION 12-20-13 | DATE PLOTTED => 25-FEB-2014 | TIME PLOTTED => 15:15

Dist	COUNTY	ROUTE	POST MILES TOTAL PROJECT	SHEET No.	TOTAL SHEETS
11	Imp	8,78,86	Var	3	16

12-18-13
REGISTERED CIVIL ENGINEER DATE

02-24-14
PLANS APPROVAL DATE

REGISTERED PROFESSIONAL ENGINEER
MIGUEL H. VASQUEZ
No. C56329
Exp. 12-31-14
CIVIL
STATE OF CALIFORNIA

THE STATE OF CALIFORNIA OR ITS OFFICERS OR AGENTS SHALL NOT BE RESPONSIBLE FOR THE ACCURACY OR COMPLETENESS OF SCANNED COPIES OF THIS PLAN SHEET.

NOTES:

1. EXACT LOCATION OF CONSTRUCTION AREA SIGNS WILL BE DETERMINED BY THE ENGINEER.
2. FEDERAL MANUAL ON UNIFORM TRAFFIC CONTROL DEVICES (MUTCD) SIGN CODES ARE SHOWN UNLESS DESIGNATED BY (CA), INDICATING CALIFORNIA MUTCD.
3. EXISTING UTILITIES ARE NOT SHOWN ON THESE PLAN SHEETS. THE CONTRACTOR SHALL VERIFY LOCATIONS OF EXISTING UTILITIES AND ADJUST THE FIELD LOCATION OF SIGN POSTS IN CONSULTATION WITH THE ENGINEER.

LEGEND:

XX = CONSTRUCTION AREA SIGNS

CONSTRUCTION AREA SIGNS

SIGN No.	CODE	PANEL SIZE (In)	No. OF POST AND SIZE (In)	No. OF SIGNS
1	W20-1	48 X 48	1-4 X 6 (S)	25
2	G20-2	48 X 24	1-4 X 4 (S)	25

NOTE: (S) DENOTES STATIONARY MOUNTED SIGN.

TYPICAL PLACEMENT OF TRAFFIC PLASTIC DRUM

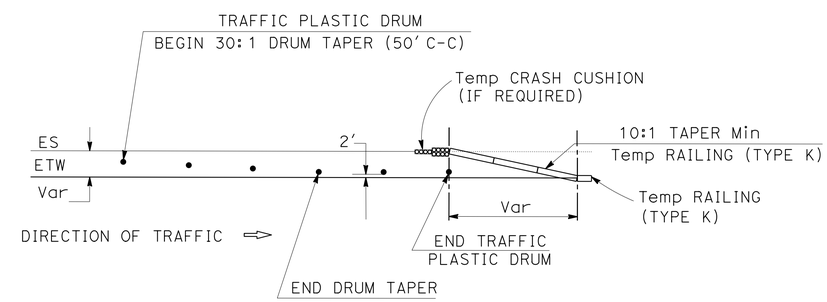

TYPICAL PLACEMENT OF W20-1 AND G20-2 CONSTRUCTION AREA SIGNS

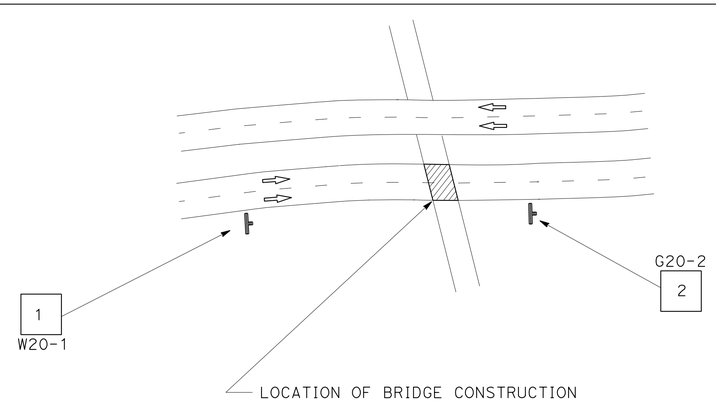

TYPICAL PLACEMENT OF W20-1 AND G20-2 CONSTRUCTION AREA SIGNS

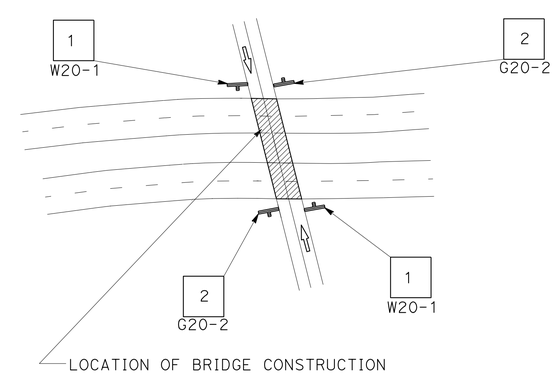

APPROVED FOR CONSTRUCTION AREA SIGN WORK ONLY

CONSTRUCTION AREA SIGNS

NO SCALE

CS-1

STATE OF CALIFORNIA - DEPARTMENT OF TRANSPORTATION
Caltrans
MAINTENANCE ENGINEERING

FUNCTIONAL SUPERVISOR: ALBERTO GAYON
CALCULATED-DESIGNED BY: MIGUEL VASQUEZ
CHECKED BY
REVISED BY
DATE REVISED
EYERUSALEM TADESSE

LAST REVISION 12-23-13
DATE PLOTTED => 25-FEB-2014
TIME PLOTTED => 15:15

Dist	COUNTY	ROUTE	POST MILES TOTAL PROJECT	SHEET No.	TOTAL SHEETS
11	Imp	8,78,86	Var	4	16

REGISTERED CIVIL ENGINEER 12-18-13 DATE

02-24-14
PLANS APPROVAL DATE

REGISTERED PROFESSIONAL ENGINEER MIGUEL H. VASQUEZ No. C56329 Exp 12-31-14 CIVIL STATE OF CALIFORNIA

THE STATE OF CALIFORNIA OR ITS OFFICERS OR AGENTS SHALL NOT BE RESPONSIBLE FOR THE ACCURACY OR COMPLETENESS OF SCANNED COPIES OF THIS PLAN SHEET.

DETAIL 11/13 COMBINATION

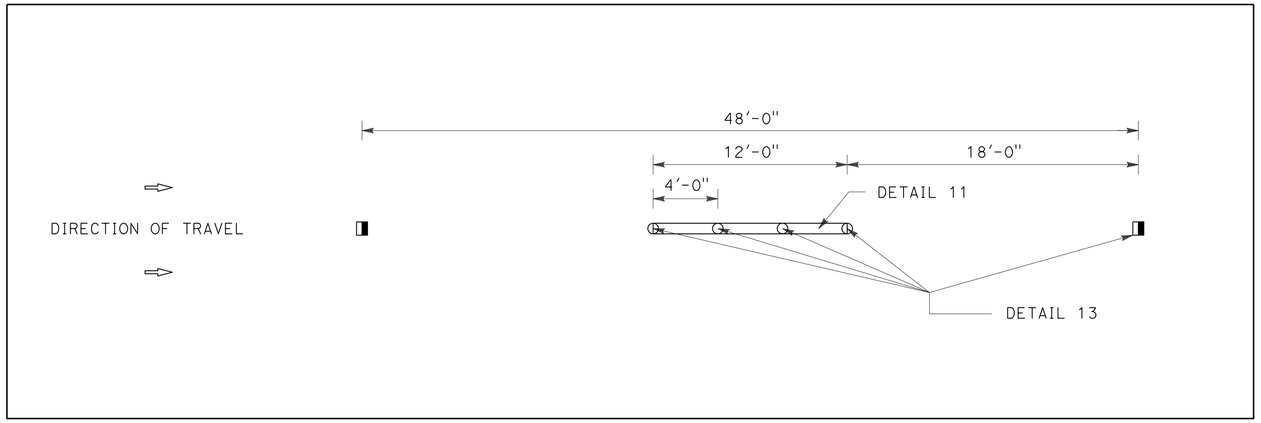

DETAIL 21 (Mod)

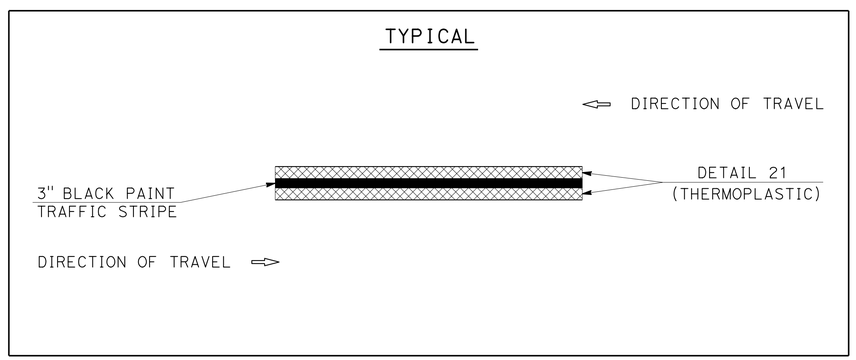

DETAIL 27B (Mod)

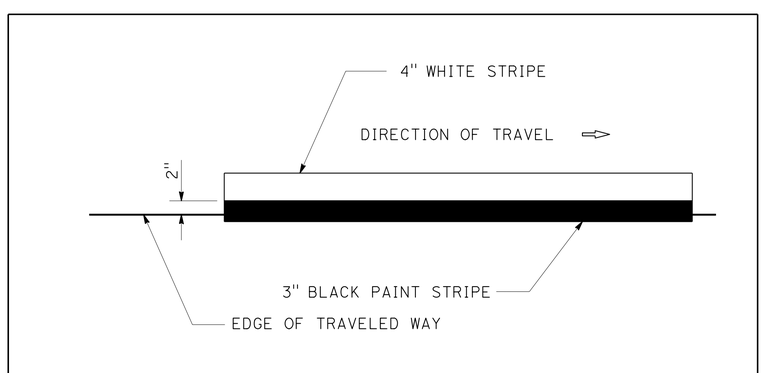

DETAIL 25 (Mod)

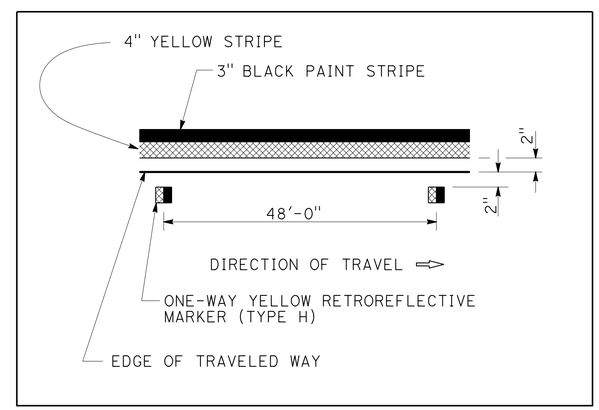

PAVEMENT DELINEATION DETAILS

NO SCALE

PDD-1

STATE OF CALIFORNIA - DEPARTMENT OF TRANSPORTATION
Caltrans
MAINTENANCE ENGINEERING

FUNCTIONAL SUPERVISOR: ALBERTO GAYON
CALCULATED-DESIGNED BY / CHECKED BY: MIGUEL VASQUEZ
EYERUSALEM TADESSE
REVISED BY / DATE REVISED

LAST REVISION 12-23-13
DATE PLOTTED => 25-FEB-2014
TIME PLOTTED => 15:15

Dist	COUNTY	ROUTE	POST MILES TOTAL PROJECT	SHEET No.	TOTAL SHEETS
11	Imp	8,78,86	Var	5	16

REGISTERED CIVIL ENGINEER 12-18-13 DATE

02-24-14
PLANS APPROVAL DATE

REGISTERED PROFESSIONAL ENGINEER MIGUEL H. VASQUEZ No. C56329 Exp. 12-31-14 CIVIL STATE OF CALIFORNIA

THE STATE OF CALIFORNIA OR ITS OFFICERS OR AGENTS SHALL NOT BE RESPONSIBLE FOR THE ACCURACY OR COMPLETENESS OF SCANNED COPIES OF THIS PLAN SHEET.

PAVEMENT DELINEATION QUANTITIES

LOCATION			PAVEMENT MARKER SUMMARY				TRAFFIC STRIPE SUMMARY		
			PAVEMENT MARKER (EA)				PAINT (1 COAT)	THERMOPLASTIC ENHANCED WET NIGHT VISIBILITY (LF)	
			NON-REFLECTIVE	RETROREFLECTIVE				4 INCH	
LOCATION	ROUTE	DETAIL No.	TYPE A WHITE	TYPE D YELLOW	TYPE G CLEAR	TYPE H YELLOW	3"-BLACK (LF)	SOLID 4"	BROKEN 36'-12'
1	8	21 (Mod)					208	416	
		27B (Mod)					416	416	
2	8	21 (Mod)					208	416	
		27B (Mod)					416	416	
3	8	21 (Mod)					208	416	
		27B (Mod)					416	416	
5	78	19		5		9	170	340	
		27B (Mod)					340		
6	86	11/13	6		2				68
		25 (Mod)				3	68	68	
		27B (Mod)					68	68	
7	86	11/13	6		2				71
		25 (Mod)				3	71	71	
		27B (Mod)					71	71	
8	86	11/13	3		2				39
		25 (Mod)				2	39	39	
		27B (Mod)					39	39	
9	86	11/13	3		2				38
		25 (Mod)				2	38	38	
		27B (Mod)					38	38	
10	86	11/13	3		2				35
		25 (Mod)				1	35	35	
		27B (Mod)					35	35	
11	86	11/13	3		2				36
		25 (Mod)				2	36	36	
		27B (Mod)					36	36	
12	86	11/13	7		3				86
		25 (Mod)				4	86	86	
		27B (Mod)					86	86	
13	86	11/13	7		3				80
		25 (Mod)				3	80	80	
		27B (Mod)					80	80	
14	86	11/13	7		3				81
		25 (Mod)				3	81	81	
		27B (Mod)					81	81	
15	86	11/13	6		2				66
		25 (Mod)					66	66	
		27B (Mod)				3	66	66	
16	86	11/13	5		2				63
		25 (Mod)				3	63	63	
		27B (Mod)					63	63	
17	86	11/13	7		3				81
		25 (Mod)				3	81	81	
		27B (Mod)					81	81	
		SUBTOTAL	63	5	28	41	3,870	4,324	744

PAVEMENT DELINEATION QUANTITIES

PDQ-1

STATE OF CALIFORNIA - DEPARTMENT OF TRANSPORTATION
Caltrans
MAINTENANCE ENGINEERING

FUNCTIONAL SUPERVISOR: ALBERTO GAYON
CALCULATED-DESIGNED BY: EYERUSALEM TADESSE
CHECKED BY: MIGUEL VASQUEZ
REVISED BY
DATE REVISED

LAST REVISION 12-23-13 | DATE PLOTTED => 25-FEB-2014 | TIME PLOTTED => 15:15

Dist	COUNTY	ROUTE	POST MILES TOTAL PROJECT	SHEET No.	TOTAL SHEETS
11	Imp	8,78,86	Var	6	16

REGISTERED CIVIL ENGINEER 12-18-13 DATE

02-24-14
PLANS APPROVAL DATE

REGISTERED PROFESSIONAL ENGINEER MIGUEL H. VASQUEZ No. C56329 Exp 12-31-14 CIVIL STATE OF CALIFORNIA

THE STATE OF CALIFORNIA OR ITS OFFICERS OR AGENTS SHALL NOT BE RESPONSIBLE FOR THE ACCURACY OR COMPLETENESS OF SCANNED COPIES OF THIS PLAN SHEET.

PAVEMENT DELINEATION QUANTITIES

LOCATION			PAVEMENT MARKER SUMMARY				TRAFFIC STRIPE SUMMARY		
			PAVEMENT MARKER (EA)				PAINT (1 COAT)	THERMOPLASTIC ENHANCED WET NIGHT VISIBILITY (LF)	
			NON-REFLECTIVE	RETROREFLECTIVE				4 INCH	
LOCATION	ROUTE	DETAIL No.	TYPE A	TYPE D	TYPE G	TYPE H	3"-BLACK	SOLID	BROKEN
			WHITE	YELLOW	CLEAR	YELLOW	(LF)	4"	36'-12'
18	86	11/13	5		2				62
		25 (Mod)				3	62	62	
		27B (Mod)					62	62	
19	86	11/13	5		2				62
		25 (Mod)				3	62	62	
		27B (Mod)					62	62	
20	86	11/13	5		2				59
		25 (Mod)				2	59	59	
		27B (Mod)					59	59	
21	86	11/13	7		3				81
		25 (Mod)				3	81	81	
		27B (Mod)					81	81	
SUBTOTAL			22		9	11	528	528	264
SUBTOTAL (PDQ-1)			63	5	28	41	3,870	4,324	744
TOTAL			85	94			4,398	4,852	1,008

REMOVE PAINTED TRAFFIC STRIPE

LOCATION	ROUTE	POSTMILE	BRIDGE No.	DETAIL	LF
1	8	R42.54	58-0214	21(Mod), 27B	1,560
2	8	R45.05	58-0216	21(Mod), 27B	1,560
3	8	R47.05	58-0217	21(Mod), 27B	1,560
5	78	17.48	58-0118	19, 27B (Mod)	808
6	86	R39.01	58-0034L	11/13, 25 (Mod), 27B (Mod)	255
7	86	56.59	58-0042R	11/13, 25 (Mod), 27B (Mod)	266
8	86	57.33	58-0043R	11/13, 25 (Mod), 27B (Mod)	146
9	86	57.34	58-0043L	11/13, 25 (Mod), 27B (Mod)	143
10	86	57.68	58-0044R	11/13, 25 (Mod), 27B (Mod)	131
11	86	57.69	58-0044L	11/13, 25 (Mod), 27B (Mod)	135
12	86	57.98	58-0061L	11/13, 25 (Mod), 27B (Mod)	323
13	86	63.21	58-0063L	11/13, 25 (Mod), 27B (Mod)	300
14	86	63.21	58-0063L	11/13, 25 (Mod), 27B (Mod)	304
15	86	63.24	58-0064L	11/13, 25 (Mod), 27B (Mod)	248
16	86	64.10	58.0067R	11/13, 25 (Mod), 27B (Mod)	236
17	86	64.33	58-0068R	11/13, 25 (Mod), 27B (Mod)	304
18	86	64.75	58-0069L	11/13, 25 (Mod), 27B (Mod)	233
19	86	64.83	58-0071L	11/13, 25 (Mod), 27B (Mod)	233
20	86	64.83	58-0071R	11/13, 25 (Mod), 27B (Mod)	221
21	86	65.00	58-0072R	11/13, 25 (Mod), 27B (Mod)	304
				TOTAL	9,268

REMOVE PAVEMENT MARKER (EA) (N)

LOCATION	ROUTE	POSTMILE	BRIDGE No.	TYPE			
				A	D	G	H
5	78	17.48	58-0118		5		9
6	86	R39.01	58-0034L	6		2	3
7	86	56.59	58-0042R	6		2	3
8	86	57.33	58-0043R	3		2	2
9	86	57.34	58-0043L	3		2	2
10	86	57.68	58-0044R	3		2	1
11	86	57.69	58-0044L	3		2	2
12	86	57.98	58-0061L	7		3	4
13	86	63.21	58-0063L	7		3	3
14	86	63.21	58-0063R	7		3	3
15	86	63.24	58-0064L	6		2	3
16	86	64.10	58-0067R	5		2	3
17	86	64.33	58-0068R	7		3	3
18	86	64.75	58-0069L	5		2	3
19	86	64.83	58-0071L	5		2	3
20	86	64.83	58-0071R	5		2	2
21	86	65.00	58-0072R	7		3	3
			SUBTOTAL	85	5	37	52
			TOTAL	179			

(N) NOT A SEPARATE PAY ITEM FOR INFORMATION ONLY

PAVEMENT DELINEATION QUANTITIES

PDQ-2

STATE OF CALIFORNIA - DEPARTMENT OF TRANSPORTATION
Caltrans
MAINTENANCE ENGINEERING

FUNCTIONAL SUPERVISOR: ALBERTO GAYON
CALCULATED-DESIGNED BY: EYERUSALEM TADESSE
CHECKED BY: MIGUEL VASQUEZ
REVISED BY
DATE REVISED

LAST REVISION 12-23-13
DATE PLOTTED => 25-FEB-2014
TIME PLOTTED => 15:15

M

Maint	MAINTENANCE
Max	MAXIMUM
MB	METAL BEAM
MBB	METAL BEAM BARRIER
MBGR	METAL BEAM GUARD RAILING
Med	MEDIAN
MGS	MIDWEST GUARDRAIL SYSTEM
MH	MANHOLE
Min	MINIMUM
Misc	MISCELLANEOUS
Misc I & S	MISCELLANEOUS IRON AND STEEL
Mkr	MARKER
Mod	MODIFIED,
	MODIFY
Mon	MONUMENT
MP	METAL PLATE
MPGR	METAL PLATE GUARD RAILING
MR	MOVEMENT RATING
MSE	MECHANICALLY STABILIZED EMBANKMENT
Mt	MOUNTAIN, MOUNT
Mtl	MATERIAL
MVP	MAINTENANCE VEHICLE PULLOUT

N

N	NORTH
NB	NORTHBOUND
No.	NUMBER (MUST HAVE PERIOD)
Nos.	NUMBERS (MUST HAVE PERIOD)
NPS	NOMINAL PIPE SIZE
NS	NEAR SIDE
NSP	NEW STANDARD PLAN
NTS	NOT TO SCALE

O

Oblr	OBLITERATE
OC	OVERCROSSING
OD	OUTSIDE DIAMETER
OF	OUTSIDE FACE
OG	ORIGINAL GROUND
OGAC	OPEN GRADED ASPHALT CONCRETE
OGFC	OPEN GRADED FRICTION COURSE
OH	OVERHEAD
OHWM	ORDINARY HIGH WATER MARK
O-O	OUT TO OUT
Opp	OPPOSITE
OSD	OVERSIDE DRAIN

P

P	PAGE
PAP	PERFORATED ALUMINUM PIPE
PB	PULL BOX
PC	POINT OF CURVATURE,
	PRECAST
PCC	POINT OF COMPOUND CURVE,
	PORTLAND CEMENT CONCRETE
PCMS	PORTABLE CHANGEABLE MESSAGE SIGN
PCP	PERFORATED CONCRETE PIPE,
	PRESTRESSED CONCRETE PIPE
PCVC	POINT OF COMPOUND VERTICAL CURVE
PEC	PERMIT TO ENTER AND CONSTRUCT
Ped	PEDESTRIAN
Ped OC	PEDESTRIAN OVERCROSSING
Ped UC	PEDESTRIAN UNDERCROSSING
Perm Mtl	PERMEABLE MATERIAL

P continued

PG	PROFILE GRADE
PI	POINT OF INTERSECTION
PJP	PARTIAL JOINT PENETRATION
Pkwy	PARKWAY
ℙ,PL	PLATE
P/L	PROPERTY LINE
PM	POST MILE,
	TIME FROM NOON TO MIDNIGHT
PN	PAVING NOTCH
POC	POINT OF HORIZONTAL CURVE
POT	POINT OF TANGENT
POVC	POINT OF VERTICAL CURVE
PP	PIPE PILE,
	PLASTIC PIPE,
	POWER POLE
PPL	PREFORMED PERMEABLE LINER
PPP	PERFORATED PLASTIC PIPE
PRC	POINT OF REVERSE CURVE
PRF	PAVEMENT REINFORCING FABRIC
PRVC	POINT OF REVERSE VERTICAL CURVE
PS&E	PLANS, SPECIFICATIONS AND ESTIMATES
PS, P/S	PRESTRESSED
PSP	PERFORATED STEEL PIPE
PT	POINT OF TANGENCY
PVC	POLYVINYL CHLORIDE
Pvmt	PAVEMENT

Q

Qty	QUANTITY

R

R	RADIUS
R & D	REMOVE AND DISPOSE
R & S	REMOVE AND SALVAGE
R/C	RATE OF CHANGE
RCA	REINFORCED CONCRETE ARCH
RCB	REINFORCED CONCRETE BOX
RCP	REINFORCED CONCRETE PIPE
RCPA	REINFORCED CONCRETE PIPE ARCH
Rd	ROAD
Reinf	REINFORCED,
	REINFORCEMENT,
	REINFORCING
Rel	RELOCATE
Repl	REPLACEMENT
Ret	RETAINING
Rev	REVISED, REVISION
Rdwy	ROADWAY
RHMA	RUBBERIZED HOT MIX ASPHALT
Riv	RIVER
RM	ROAD-MIXED
RP	RADIUS POINT,
	REFERENCE POINT
RR	RAILROAD
RSP	ROCK SLOPE PROTECTION,
	REVISED STANDARD PLAN
Rt	RIGHT
Rte	ROUTE
RW	REDWOOD,
	RETAINING WALL
R/W	RIGHT OF WAY
Rwy	RAILWAY

S

S	SOUTH,
	SUPPLEMENT
SAE	STRUCTURE APPROACH EMBANKMENT
Salv	SALVAGE
SAPP	STRUCTURAL ALUMINUM PLATE PIPE
SB	SOUTHBOUND
SC	SAND CUSHION
SCSP	SLOTTED CORRUGATED STEEL PIPE
SD	STORM DRAIN
Sec	SECOND,
	SECTION
Sep	SEPARATION
SG	SUBGRADE
Shld	SHOULDER
Sht	SHEET
Sim	SIMILAR
℄	STATION LINE
SM	SELECTED MATERIAL
Spec	SPECIAL,
	SPECIFICATIONS
SPP	SLOTTED PLASTIC PIPE
SS	SLOPE STAKE
SSBM	STRAP AND SADDLE BRACKET METHOD
SSD	STRUCTURAL SECTION DRAIN
SSPA	STRUCTURAL STEEL PLATE ARCH
SSPP	STRUCTURAL STEEL PLATE PIPE
SSPPA	STRUCTURAL STEEL PLATE PIPE ARCH
SSRP	STEEL SPIRAL RIB PIPE
St	STREET
Sta	STATION
STBB	SINGLE THRIE BEAM BARRIER
Std	STANDARD
Str	STRUCTURE
Surf	SURFACING
SW	SIDEWALK,
	SOUND WALL
Swr	SEWER
Sym	SYMMETRICAL
S4S	SURFACE 4 SIDES

T

T	SEMI-TANGENT
Tan	TANGENT
TBB	THRIE BEAM BARRIER
Tbr	TIMBER
TC	TOP OF CURB
TCB	TRAFFIC CONTROL BOX
TCE	TEMPORARY CONSTRUCTION EASEMENT
Tel	TELEPHONE
Temp	TEMPORARY
TG	TOP OF GRADE
Tot	TOTAL
TP	TELEPHONE POLE
TPB	TREATED PERMEABLE BASE
TPM	TREATED PERMEABLE MATERIAL
Trans	TRANSITION

T continued

TS	TRANSVERSE,
	TRAFFIC SIGNAL,
	TUBULAR STEEL
Typ	TYPICAL

U

UC	UNDERCROSSING
UD	UNDERDRAIN
UG	UNDERGROUND
UON	UNLESS OTHERWISE NOTED
UP	UNDERPASS

V

V	VALVE,
	DESIGN SPEED
Var	VARIABLE,
	VARIES
VC	VERTICAL CURVE
VCP	VITRIFIED CLAY PIPE
Vert	VERTICAL
Via	VIADUCT
Vol	VOLUME

W

W	WEST,
	WIDTH
WB	WESTBOUND
WH	WEEP HOLE
WM	WIRE MESH
WS	WATER SURFACE
WSP	WELDED STEEL PIPE
Wt	WEIGHT
WV	WATER VALVE
WW	WINGWALL
WWLOL	WINGWALL LAYOUT LINE

X

X Sec	CROSS SECTION
Xing	CROSSING

Y

Yr	YEAR
Yrs	YEARS

Dist	COUNTY	ROUTE	POST MILES TOTAL PROJECT	SHEET No.	TOTAL SHEETS
11	Imp	8,78,86	Var	7	16

Grace M. Tsushima
REGISTERED CIVIL ENGINEER

July 19, 2013
PLANS APPROVAL DATE

REGISTERED PROFESSIONAL ENGINEER Grace M. Tsushima No. C49814 Exp. 9-30-14 CIVIL STATE OF CALIFORNIA

THE STATE OF CALIFORNIA OR ITS OFFICERS OR AGENTS SHALL NOT BE RESPONSIBLE FOR THE ACCURACY OR COMPLETENESS OF SCANNED COPIES OF THIS PLAN SHEET.

TO ACCOMPANY PLANS DATED 02-24-14

2010 REVISED STANDARD PLAN RSP A10B

UNIT OF MEASUREMENT SYMBOLS:

Some of the symbols used in the project plan quantity tables and in the Bid Item List are:

TABLE A

SYMBOL USED	DEFINITIONS
ACRE	ACRE
CF	CUBIC FOOT
CY	CUBIC YARD
EA	EACH
GAL	GALLON
LB	POUND
LF	LINEAR FOOT
SQFT	SQUARE FOOT
SQYD	SQUARE YARD
STA	100 FEET
TAB	TABLET
TON	2,000 POUNDS

Some of the symbols used in the plans other than in the project plan quantity tables are:

TABLE B

SYMBOL USED	DEFINITIONS
ksi	KIPS PER SQUARE INCH
ksf	KIPS PER SQUARE FOOT
psi	POUNDS PER SQUARE INCH
psf	POUNDS PER SQUARE FOOT
lb/ft^3, pcf	POUNDS PER CUBIC FOOT
tsf	TONS PER SQUARE FOOT
mph, MPH *	MILES PER HOUR
ø	NOMINAL DIAMETER
oz	OUNCE
lb	POUND
kip	1,000 POUNDS
cal	CALORIE
ft	FOOT OR FEET
gal	GALLON

* For use on a sign panel only

STATE OF CALIFORNIA
DEPARTMENT OF TRANSPORTATION

ABBREVIATIONS (SHEET 2 OF 2)

NO SCALE

RSP A10B DATED JULY 19, 2013 SUPERSEDES STANDARD PLAN A10B DATED MAY 20, 2011 - PAGE 2 OF THE STANDARD PLANS BOOK DATED 2010.

REVISED STANDARD PLAN RSP A10B

6-7-13

Dist	COUNTY	ROUTE	POST MILES TOTAL PROJECT	SHEET No.	TOTAL SHEETS
11	Imp	8,78,86	Var	8	16

REGISTERED CIVIL ENGINEER

July 19, 2013
PLANS APPROVAL DATE

REGISTERED PROFESSIONAL ENGINEER
Gurinderpal Bhullar
No. C48815
Exp. 9-30-14
CIVIL
STATE OF CALIFORNIA

THE STATE OF CALIFORNIA OR ITS OFFICERS OR AGENTS SHALL NOT BE RESPONSIBLE FOR THE ACCURACY OR COMPLETENESS OF SCANNED COPIES OF THIS PLAN SHEET.

TO ACCOMPANY PLANS DATED 02-24-14

2010 REVISED STANDARD PLAN RSP T9

TABLE 1

TAPER LENGTH CRITERIA AND CHANNELIZING DEVICE SPACING

SPEED (S)	MINIMUM TAPER LENGTH * FOR WIDTH OF OFFSET 12 FEET (W)				MAXIMUM CHANNELIZING DEVICE SPACING		
					X	Y	Z **
	TANGENT 2L	MERGING L	SHIFTING L/2	SHOULDER L/3	TAPER	TANGENT	CONFLICT
mph	ft	ft	ft	ft	ft	ft	ft
20	160	80	40	27	20	40	10
25	250	125	63	42	25	50	12
30	360	180	90	60	30	60	15
35	490	245	123	82	35	70	17
40	640	320	160	107	40	80	20
45	1080	540	270	180	45	90	22
50	1200	600	300	200	50	100	25
55	1320	660	330	220	55	110	27
60	1440	720	360	240	60	120	30
65	1560	780	390	260	65	130	32
70	1680	840	420	280	70	140	35

* - For other offsets, use the following merging taper length formula for L:
For speed of 40 mph or less, $L = WS^2/60$
For speed of 45 mph or more, $L = WS$

Where: L = Taper length in feet
W = Width of offset in feet
S = Posted speed limit, off-peak 85th-percentile speed prior to work starting, or the anticipated operating speed in mph

** - Use for taper and tangent sections where there are no pavement markings or where there is a conflict between existing pavement markings and channelizers (CA).

TABLE 2

LONGITUDINAL BUFFER SPACE AND FLAGGER STATION SPACING

SPEED *	Min D **	DOWNGRADE Min D ***		
		-3%	-6%	-9%
mph	ft	ft	ft	ft
20	115	116	120	126
25	155	158	165	173
30	200	205	215	227
35	250	257	271	287
40	305	315	333	354
45	360	378	400	427
50	425	446	474	507
55	495	520	553	593
60	570	598	638	686
65	645	682	728	785
70	730	771	825	891

* - Speed is posted speed limit, off-peak 85th-percentile speed prior to work starting, or the anticipated operating speed in mph

** - Longitudinal buffer space or flagger station spacing

*** - Use on sustained downgrade steeper than -3 percent and longer than 1 mile.

TABLE 3

ADVANCE WARNING SIGN SPACING

ROAD TYPE	DISTANCE BETWEEN SIGNS *		
	A	B	C
	ft	ft	ft
URBAN - 25 mph OR LESS	100	100	100
URBAN - MORE THAN 25 mph TO 40 mph	250	250	250
URBAN - MORE THAN 40 mph	350	350	350
RURAL	500	500	500
EXPRESSWAY / FREEWAY	1000	1500	2640

* - The distances are approximate, are intended for guidance purposes only, and should be applied with engineering judgment. These distances should be adjusted by the Engineer for field conditions, if necessary, by increasing or decreasing the recommmended distances.

STATE OF CALIFORNIA
DEPARTMENT OF TRANSPORTATION

TRAFFIC CONTROL SYSTEM TABLES FOR LANE AND RAMP CLOSURES

NO SCALE

RSP T9 DATED JULY 19, 2013 SUPERSEDES RSP T9 DATED APRIL 19, 2013 THAT SUPPLEMENTS THE STANDARD PLANS BOOK DATED 2010.

REVISED STANDARD PLAN RSP T9

Dist	COUNTY	ROUTE	POST MILES TOTAL PROJECT	SHEET No.	TOTAL SHEETS
11	Imp	8,78,86	Var	9	16

REGISTERED CIVIL ENGINEER

April 19, 2013
PLANS APPROVAL DATE

REGISTERED PROFESSIONAL ENGINEER Gurinderpal Bhullar No. C48815 Exp. 9-30-14 CIVIL STATE OF CALIFORNIA

THE STATE OF CALIFORNIA OR ITS OFFICERS OR AGENTS SHALL NOT BE RESPONSIBLE FOR THE ACCURACY OR COMPLETENESS OF SCANNED COPIES OF THIS PLAN SHEET.

TO ACCOMPANY PLANS DATED 02-24-14

NOTES:

See Revised Standard Plan RSP T9 for tables.

Use cone spacing X for taper segment, Y for tangent segment or Z for conflict situations, as approriate, per Table 1, unless X, Y, or Z cone spacing is shown on this sheet.

Unless otherwise specified in the special provisions, all temporary warning signs shall have black legend on fluorescent orange background.

California codes are designated by (CA). Otherwise, Federal (MUTCD) codes are shown.

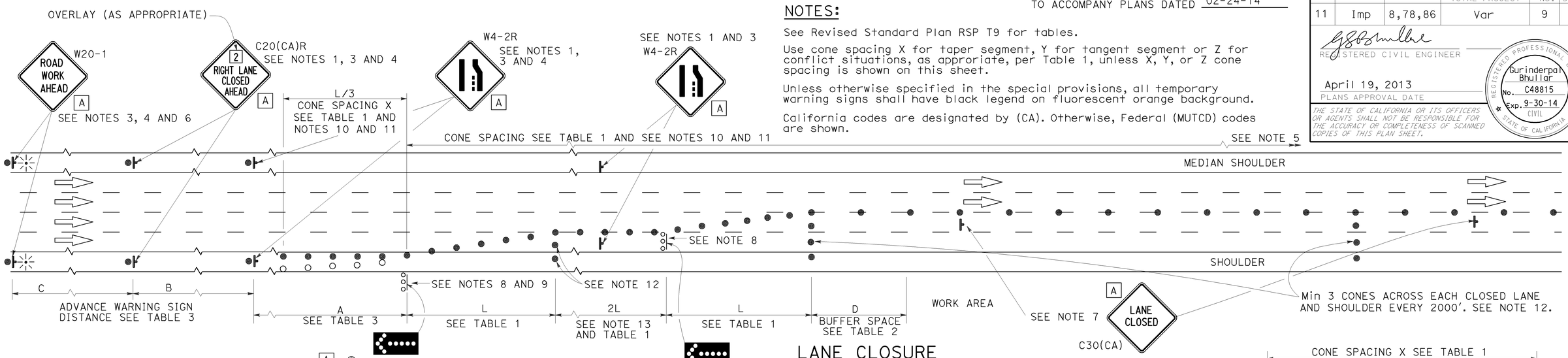

LANE CLOSURE

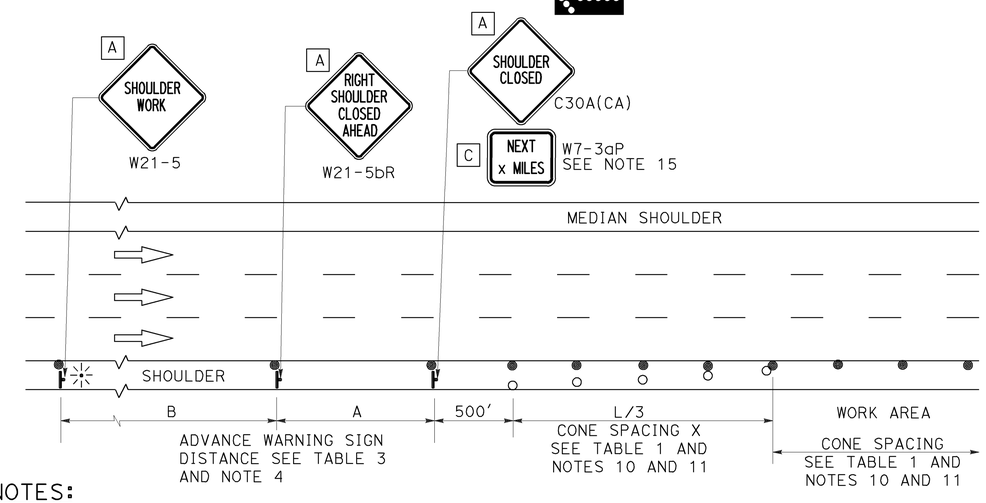

SHOULDER CLOSURE

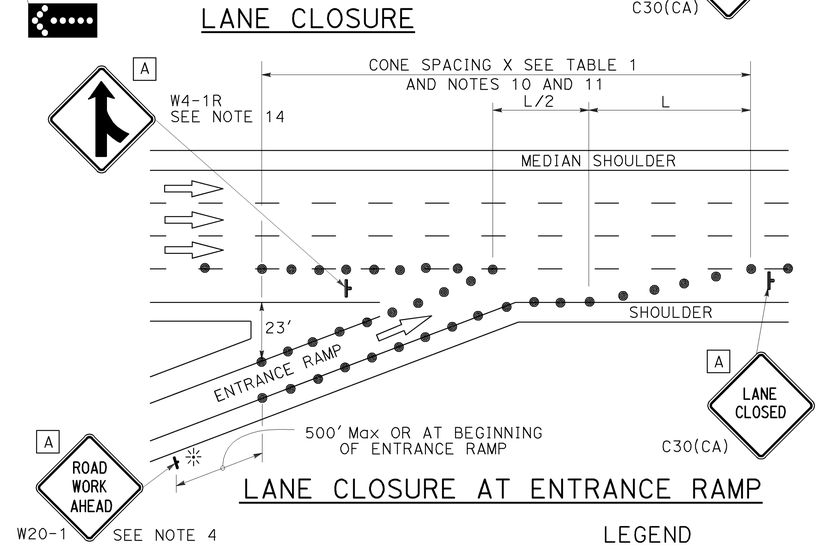

LANE CLOSURE AT ENTRANCE RAMP

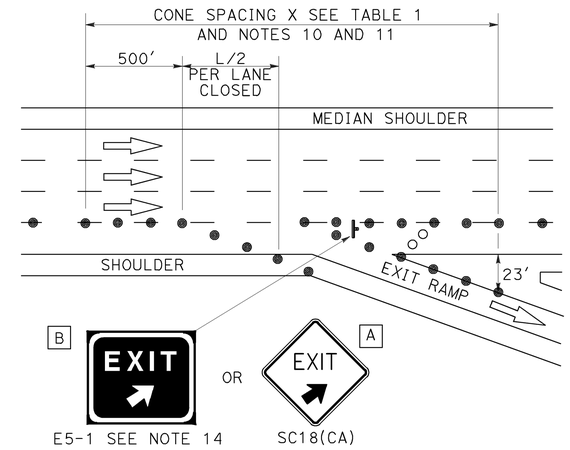

LANE CLOSURE AT EXIT RAMP

NOTES:

1. Median lane closures shall conform to the details as shown except that C20(CA)L and W4-2L signs shall be used.
2. At least one person shall be assigned to provide full time maintenance of traffic control devices for lane closures.
3. Duplicate sign installations are not required:
   a) On opposite shoulder if at least one-half of the available lanes remain open to traffic.
   b) In the median if the width of the median shoulder is less than 8' and the outside lanes are to be closed.
4. Each advance warning sign on each side of the roadway shall be equipped with at least two flags for daytime closure. Each flag shall be at least 16" x 16" in size and shall be orange or fluorescent red-orange in color. Flashing beacons shall be placed at the locations indicated for lane closure during hours of darkness.
5. A G20-2 "END ROAD WORK" sign, with minimum size of 48" x 24" as appropriate, shall be placed at the end of the lane closure unless the end of work area is obvious or ends within a larger project's limits.
6. If the W20-1 sign would follow within 2000' of a stationary W20-1 or G20-1 "ROAD WORK NEXT _____ MILES", use a C20(CA) sign for the first advance warning sign.
7. Place a C30(CA) sign every 2000' throughout length of lane closure.
8. One flashing arrow sign for each lane closed. The flashing arrow signs shall be Type I.
9. A minimum 1500' of sight distance shall be provided where possible for vehicles approaching the first flashing arrow sign. Lane closures shall not begin at top of crest vertical curve or on a horizontal curve.
10. All cones used for lane closures during the hours of darkness shall be fitted with retroreflective bands (or sleeves) as specified in the specifications.
11. Portable delineators, placed at one-half the spacing indicated for traffic cones may be used instead of cones for daytime closures only.
12. Unless otherwise specified in the special provisions, a minimum of 3 cones shall be placed transversely across each closed lane and shoulder at each location where a taper across a traffic lane ends and every 2000' as shown on the "Lane Closure" detail. Two Type II barricades may be used instead of the 3 cones. The transverse alignment of the cones or barricades on the closed shoulder may be shifted from the transverse alignment to provide access to the work.
13. Unless otherwise specified in the special provisions, the 2L tangent shown along lane lines shall be used between the L tapers required for each closed traffic lane.
14. Unless otherwise specified in the special provisions, the E5-1 or SC18(CA) and W4-1 signs shall be used as shown.
15. A W7-3aP "NEXT____ MILES" plaque must be used if theshoulder closure extends beyond the distance that can be perceived by road users.

LEGEND

- TRAFFIC CONE
- TRAFFIC CONE (OPTIONAL TAPER)
- TEMPORARY TRAFFIC CONTROL SIGN
- FLASHING ARROW SIGN (FAS)
- FAS SUPPORT OR TRAILER
- PORTABLE FLASHING BEACON

SIGN PANEL SIZE (Min)

A	48" x 48"
B	72" x 60"
C	36" x 30"

STATE OF CALIFORNIA
DEPARTMENT OF TRANSPORTATION

TRAFFIC CONTROL SYSTEM FOR LANE CLOSURE ON FREEWAYS AND EXPRESSWAYS

NO SCALE

RSP T10 DATED APRIL 19, 2013 SUPERSEDES STANDARD PLAN T10 DATED MAY 20, 2011 - PAGE 237 OF THE STANDARD PLANS BOOK DATED 2010.

REVISED STANDARD PLAN RSP T10

2010 REVISED STANDARD PLAN RSP T10

12-18-12

Dist	COUNTY	ROUTE	POST MILES TOTAL PROJECT	SHEET No.	TOTAL SHEETS
11	Imp	8,78,86	Var	10	16

REGISTERED CIVIL ENGINEER

April 19, 2013
PLANS APPROVAL DATE

REGISTERED PROFESSIONAL ENGINEER Gurinderpal Bhullar No. C48815 Exp. 9-30-14 CIVIL STATE OF CALIFORNIA

THE STATE OF CALIFORNIA OR ITS OFFICERS OR AGENTS SHALL NOT BE RESPONSIBLE FOR THE ACCURACY OR COMPLETENESS OF SCANNED COPIES OF THIS PLAN SHEET.

TO ACCOMPANY PLANS DATED 02-24-14

NOTES: See Revised Standard Plan RSP T9 for tables.

Use cone spacing X for taper segment, Y for tangent segment or Z for conflict situations, as approriate, per Table 1, unless X, Y, or Z cone spacing is shown on this sheet.

Unless otherwise specified in the special provisions, all temporary warning signs shall have black legend on fluorescent orange background.

California codes are designated by (CA). Otherwise, Federal (MUTCD) codes are shown.

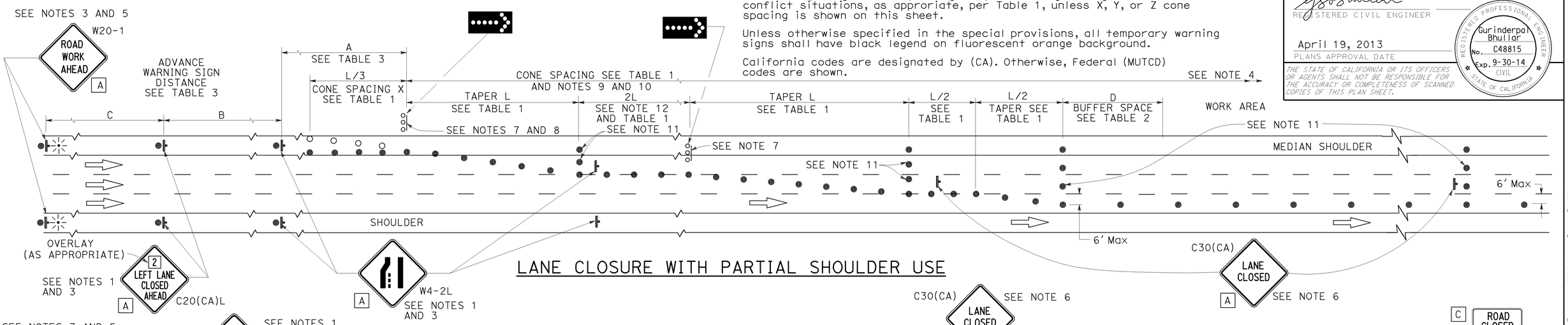

LANE CLOSURE WITH PARTIAL SHOULDER USE

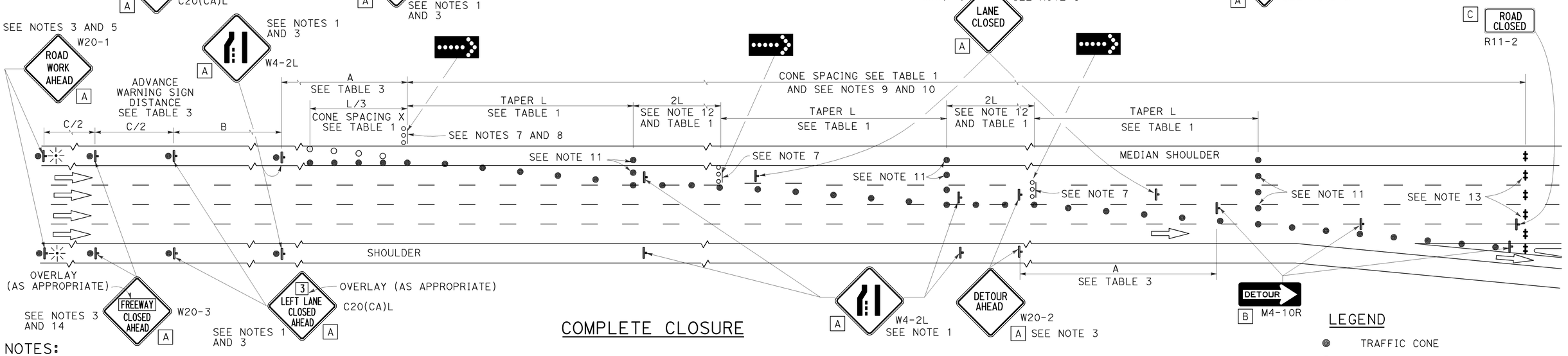

COMPLETE CLOSURE

NOTES:

1. Lane closures on the right side using partial median shoulder as a traffic lane shall conform to the details as shown except that C20(CA)R and W4-2R signs shall be used.
2. At least one person shall be assigned to provide full time maintenance of traffic control devices for lane closures.
3. Each advance warning sign on each side of the roadway shall be equipped with at least two flags for daytime closure. Each flag shall be at least 16" X 16" in size and shall be orange or fluorescent red-orange in color. Flashing beacons shall be placed at the locations indicated for lane closure during hours of darkness.
4. A G20-2 "END ROAD WORK" sign, with minimum size of 48" x 24" as appropriate, shall be placed at the end of the lane closure unless the end of work area is obvious or ends within a larger project's limits.
5. If the W20-1 sign would follow within 2000' of a stationary W20-1 or G20-1 "ROAD WORK NEXT ___ MILES", use a C20(CA) sign for the first advance warning sign.
6. Place a C30(CA) sign every 2000' throughout length of lane closure.
7. One flashing arrow sign for each lane closed. The flashing arrow signs shall be Type I.
8. A minimum 1500' of sight distance shall be provided where possible for vehicles approaching the first flashing arrow sign. Lane closures shall not begin at the top of crest vertical curve or on a horizontal curve.
9. All cones used for lane closures during the hours of darkness shall be fitted with retroreflective bands (or sleeves) as specified in the specifications.
10. Portable delineators, placed at one-half the spacing indicated for traffic cones, may be used instead of cones for daytime closures only.
11. Unless otherwise specified in the special provisions, a minimum of 3 cones shall be placed transversely across each closed lane and shoulder at each location where a taper across a traffic lane ends and every 2000' as shown on the "Lane Closure With Partial Shoulder Use" detail. Two Type II barricades may be used instead of the 3 cones. The transverse alignment of the cones or barricades on the closed shoulder may be shifted from the transverse alignment to provide access to the work.
12. Unless otherwise specified in the special provisions, the 2L tangent shown along lane lines shall be used between the L tapers required for each closed traffic lane.
13. A minimum of Two Type II or III barricades shall be placed across each closed lane and shoulder at the location shown and every 2000' within the complete closure area. Within the complete closure area, the transverse alignment of the barricades on the closed shoulder may be shifted from the transverse alignment to provide access to the work.
14. When specified in the special provisions, a W20-2 "DETOUR AHEAD" sign is to be used in place of the W20-3 "FREEWAY CLOSED AHEAD" sign.

SIGN PANEL SIZE (Min)

A	48" x 48"
B	48" x 18"
C	48" x 30"

LEGEND

- TRAFFIC CONE
- TRAFFIC CONE (OPTIONAL TAPER)
- TEMPORARY TRAFFIC CONTROL SIGN
- FLASHING ARROW SIGN (FAS)
- FAS SUPPORT OR TRAILER
- PORTABLE FLASHING BEACON

STATE OF CALIFORNIA
DEPARTMENT OF TRANSPORTATION

TRAFFIC CONTROL SYSTEM FOR LANE CLOSURES ON FREEWAYS AND EXPRESSWAYS

NO SCALE

RSP T10A DATED APRIL 19, 2013 SUPERSEDES STANDARD PLAN T10A DATED MAY 20, 2011 - PAGE 238 OF THE STANDARD PLANS BOOK DATED 2010.

REVISED STANDARD PLAN RSP T10A

2010 REVISED STANDARD PLAN RSP T10A

12-18-12

Dist	COUNTY	ROUTE	POST MILES TOTAL PROJECT	SHEET No.	TOTAL SHEETS
11	Imp	8,78,86	Var	11	16

REGISTERED CIVIL ENGINEER

April 19, 2013
PLANS APPROVAL DATE

REGISTERED PROFESSIONAL ENGINEER
Gurinderpal Bhullar
No. C48815
Exp. 9-30-14
CIVIL
STATE OF CALIFORNIA

THE STATE OF CALIFORNIA OR ITS OFFICERS OR AGENTS SHALL NOT BE RESPONSIBLE FOR THE ACCURACY OR COMPLETENESS OF SCANNED COPIES OF THIS PLAN SHEET.

TO ACCOMPANY PLANS DATED 02-24-14

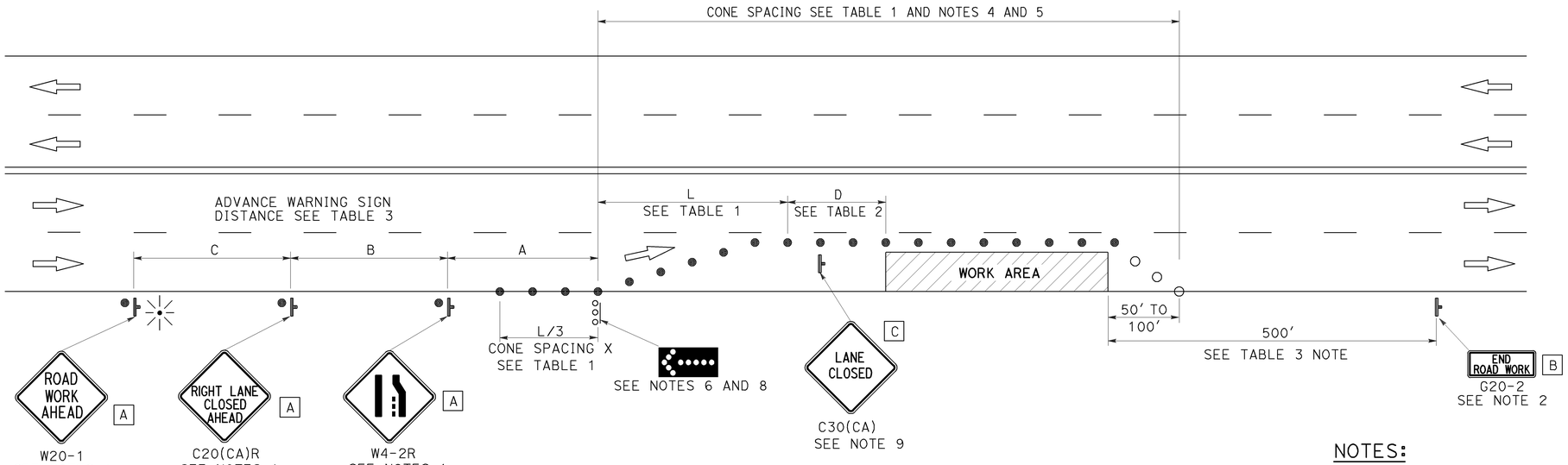

TYPICAL LANE CLOSURE

NOTES:

See Revised Standard Plan RSP T9 for tables.

Use cone spacing X for taper segment, Y for tangent segment or Z for conflict situations, as approriate, per Table 1, unless X, Y, or Z cone spacing is shown on this sheet.

Unless otherwise specified in the special provisions, all temporary warning signs shall have black legend on fluorescent orange background.

California codes are designated by (CA). Otherwise, Federal (MUTCD) codes are shown.

NOTES:

1. Each advance warning sign shall be equipped with at least two flags for daytime closure. Each flag shall be at least 16" x 16" in size and shall be orange or fluorescent red-orange in color. Flashing beacons shall be placed at the locations indicated for lane closure during hours of darkness.
2. A G20-2 "END ROAD WORK" sign, as appropriate, shall be placed at the end of the lane closure unless the end of work area is obvious, or ends within a larger project's limits.
3. If the W20-1 sign would follow within 2000' of a stationary W20-1 or G20-1 "ROAD WORK NEXT _____ MILES", use a C20(CA) sign for the first advance warning sign.
4. All cones used for lane closures during the hours of darkness shall be fitted with retroreflective bands (or sleeves) as specified in the specifications.
5. Portable delineators, placed at one-half the spacing indicated for traffic cones, may be used instead of cones for daytime closures only.
6. Flashing arrow sign shall be either Type I or Type II.
7. For approach speeds over 50 mph, use the "Traffic Control System for Lane Closure On Freeways And Expressways" plan for lane closure details and requirements.
8. A minimum 1500' of sight distance shall be provided where possible for vehicles approaching the first flashing arrow sign. Lane closures shall not begin at the top of crest vertical curve or on a horizontal curve.
9. Place a C30(CA) sign every 2000' throughout length of lane closure.
10. Median lane closures shall conform to the details as shown except that C20(CA)L and W4-2L signs shall be used.
11. At least one person shall be assigned to provide full time maintenance of traffic control devices for lane closure unless, otherwise directed by the Engineer.

LEGEND

- ● TRAFFIC CONE
- ○ TRAFFIC CONE (OPTIONAL TAPER)
- TEMPORARY TRAFFIC CONTROL SIGN
- FLASHING ARROW SIGN (FAS)
- FAS SUPPORT OR TRAILER
- PORTABLE FLASHING BEACON

SIGN PANEL SIZE (Min)

A	48" x 48"
B	36" x 18"
C	30" x 30"

STATE OF CALIFORNIA
DEPARTMENT OF TRANSPORTATION

TRAFFIC CONTROL SYSTEM FOR LANE CLOSURE ON MULTILANE CONVENTIONAL HIGHWAYS

NO SCALE

RSP T11 DATED APRIL 19, 2013 SUPERSEDES STANDARD PLAN T11 DATED MAY 20, 2011 - PAGE 239 OF THE STANDARD PLANS BOOK DATED 2010.

REVISED STANDARD PLAN RSP T11

2010 REVISED STANDARD PLAN RSP T11

4-2-13

Dist	COUNTY	ROUTE	POST MILES TOTAL PROJECT	SHEET No.	TOTAL SHEETS
11	Imp	8,78,86	Var	12	16

REGISTERED CIVIL ENGINEER

April 19, 2013
PLANS APPROVAL DATE

REGISTERED PROFESSIONAL ENGINEER Gurinderpal Bhullar No. C48815 Exp. 9-30-14 CIVIL STATE OF CALIFORNIA

THE STATE OF CALIFORNIA OR ITS OFFICERS OR AGENTS SHALL NOT BE RESPONSIBLE FOR THE ACCURACY OR COMPLETENESS OF SCANNED COPIES OF THIS PLAN SHEET.

TO ACCOMPANY PLANS DATED 02-24-14

NOTES:

See Revised Standard Plan RSP T9 for tables.

Use cone spacing X for taper segment, Y for tangent segment or Z for conflict situations, as approriate, per Table 1, unless X, Y, or Z cone spacing is shown on this sheet.

Unless otherwise specified in the special provisions, all temporary warning signs shall have black legend on fluorescent orange background.

California codes are designated by (CA). Otherwise, Federal (MUTCD) codes are shown.

TYPICAL LANE CLOSURE WITH REVERSIBLE CONTROL

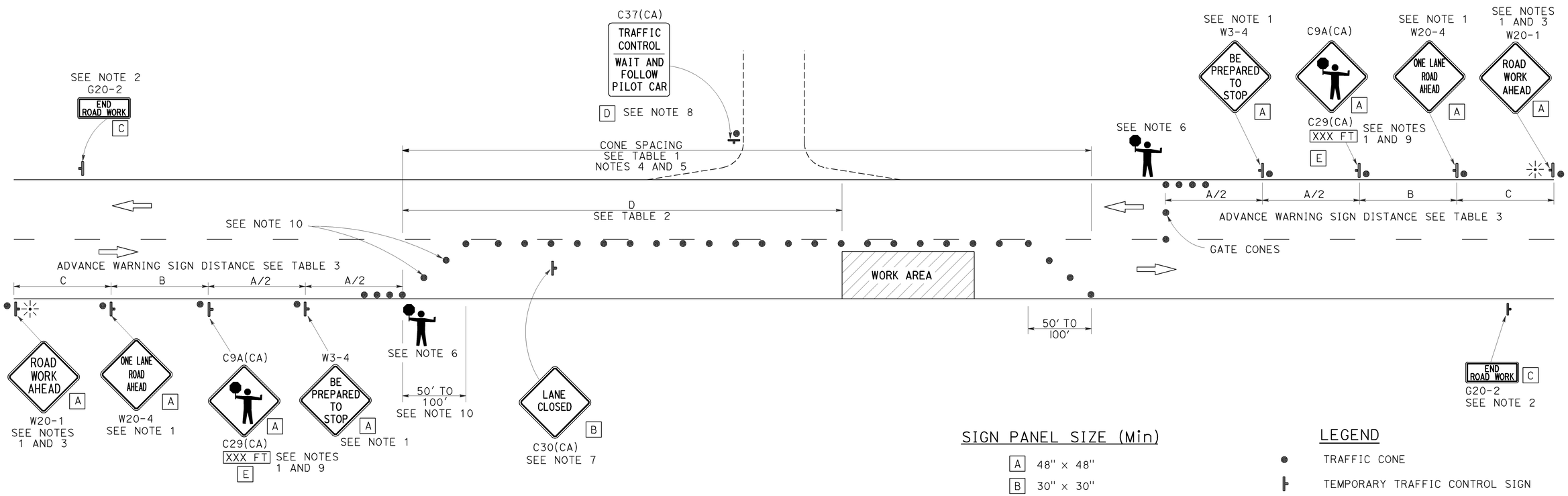

SIGN PANEL SIZE (Min)

A	48" × 48"
B	30" × 30"
C	36" × 18"
D	36" × 42"
E	20" × 7"

LEGEND

- TRAFFIC CONE
- TEMPORARY TRAFFIC CONTROL SIGN
- PORTABLE FLASHING BEACON
- FLAGGER

NOTES:

1. Each advance warning sign in each direction of travel shall be equipped with at least two flags for daytime closure. Each flag shall be at least 16" x 16" in size and shall be orange or fluorescent red-orange in color. Flashing beacons shall be placed at the locations indicated for lane closure during hours of darkness.
2. A G20-2 "END ROAD WORK" sign, as appropriate, shall be placed at the end of the lane control unless the end of work area is obvious, or ends within a larger project's limits.
3. If the W20-1 sign would follow within 2000' of a stationary W20-1 or G20-1 "ROAD WORK NEXT _____ MILES", use a W20-4 sign for the first advance warning sign.
4. All cones used for lane closures during the hours of darkness shall be fitted with retroreflective bands (or sleeves) as specified in the specifications.
5. Portable delineators, placed at one-half the spacing indicated for traffic cones, may be used instead of cones for daytime closures only.
6. Additional advance flaggers may be required. Flagger should stand in a conspicuous place, be visible to approaching traffic as well as approaching vehicles after the first vehicle has stopped. During the hours of darkness, the flagging-station and flagger shall be illuminated and clearly visible to approaching traffic. The illumination footprint of the lighting on the ground shall be at least 20' in diameter. Place a minimum of four cones at 50' intervals in advance of flagger station as shown.
7. Place C30(CA) "LANE CLOSED" sign at 500' to 1000' intervals throughout extended work areas. They are optional if the work area is visible from the flagger station.
8. When a pilot car is used, place a C37(CA) "TRAFFIC CONTROL-WAIT AND FOLLOW PILOT CAR" sign with black legend on white background at all intersections, driveways and alleys without a flagger within traffic control area. Signs shall be clean and visible at all times. Where traffic can not be effectively self-regulated, at least one flagger shall be used at each intersection within traffic control area.
9. An optional C29(CA) sign may be placed below the C9A(CA) sign.
10. Either traffic cones or barricades shall be placed on the taper. Barricades shall be Type I, II, or III.

STATE OF CALIFORNIA
DEPARTMENT OF TRANSPORTATION

TRAFFIC CONTROL SYSTEM FOR LANE CLOSURE ON TWO LANE CONVENTIONAL HIGHWAYS

NO SCALE

RSP T13 DATED APRIL 19, 2013 SUPERSEDES STANDARD PLAN T13 DATED MAY 20, 2011 - PAGE 241 OF THE STANDARD PLANS BOOK DATED 2010.

REVISED STANDARD PLAN RSP T13

2010 REVISED STANDARD PLAN RSP T13

4-2-13

DIST	COUNTY	ROUTE	POST MILES TOTAL PROJECT	SHEET No.	TOTAL SHEETS
11	Imp	8,78,86	Var	13	16

REGISTERED CIVIL ENGINEER 11-22-13 DATE

02-24-14
PLANS APPROVAL DATE

REGISTERED PROFESSIONAL ENGINEER CHARLES R. HUTCHINSON No. C 54226 Exp. 12-31-15 CIVIL STATE OF CALIFORNIA

The State of California or its officers or agents shall not be responsible for the accuracy or completeness of electronic copies of this plan sheet.

DESCRIPTION									QUANTITIES			
BRIDGE NAME	BRIDGE NUMBER	ROUTE	COUNTY	POST MILE	BRIDGE LENGTH (ft)	ROADWAY WIDTH (ft)	SKEW	DESCRIPTION OF WORK	PREPARE CONCRETE BRIDGE DECK SURFACE (ft^2)	FURNISH BRIDGE DECK TREATMENT MATERIAL (Gal)	TREAT BRIDGE DECK (ft^2)	SEE JOINT SEAL TABLE
WILLOW WASH	58-0034L	86	IMP	R39.01	68.00	39.00	14°	1	2,652	30	2,652	
IBERIA DITCH	58-0042R	86	IMP	56.59	69.60	41.00	---	1	2,854	32	2,854	
AMEROSA DITCH	58-0043L	86	IMP	57.34	37.50	41.00	---	1	1,537	17	1,537	
	58-0043R	86	IMP	57.33	38.50	40.00	---	1	1,540	17	1,540	
VERDE DITCH	58-0044L	86	IMP	57.69	35.50	41.00	---	1 2	1,455	16	1,455	---
	58-0044R	86	IMP	57.68	34.50	40.00	---	1	1,380	16	1,380	
TORTIF DITCH	58-0061L	86	IMP	62.98	85.50	41.00	---	1 2	3,506	39	3,506	---
FLORIS DITCH	58-0063L	86	IMP	63.21	79.50	41.00	---	1 2	3,259	36	3,259	---
	58-0063R	86	IMP	63.21	80.50	40.00	---	1	3,220	36	3,220	
INCIENSO DITCH	58-0064L	86	IMP	63.34	65.52	41.00	8°	1 2	2,686	30	2,686	---
GODETIA DITCH	58-0067R	86	IMP	64.10	62.50	40.00	---	1	2,500	28	2,500	
CALYX DITCH	58-0068R	86	IMP	64.33	80.50	40.00	---	1	3,220	36	3,220	
MATIS DITCH	58-0069L	86	IMP	64.63	61.50	41.00	---	1	2,522	28	2,522	
ROMNEY DITCH	58-0071L	86	IMP	64.83	61.63	41.00	23°	1	2,527	28	2,527	---
	58-0071R	86	IMP	64.83	58.50	40.00	---	1	2,340	26	2,340	
PAROSA DITCH	58-0072R	86	IMP	65.00	80.50	40.00	---	1	3,220	36	3,220	
ALAMO RIVER	58-0118	78	IMP	17.48	169.50	40.00	---	1	6,780	75	6,780	
ALL AMERICAN CANAL	58-0195R	8	IMP	81.69	556.00	36.83	---	2	---	---	---	---
BOWKER ROAD OVERCROSSING	58-0214	8	IMP	R42.54	208.00	40.00	---	1	8,320	92	8,320	
BARBARA WORTH ROAD OVERCROSSING	58-0216	8	IMP	R45.05	208.00	32.00	---	1	6,656	74	6,656	
METZ ROAD OVERCROSSING	58-0217	8	IMP	R47.05	208.00	32.00	---	1	6,656	74	6,656	
TOTAL									68,830	766	68,830	---

NOTES: (APPLY TO ALL SHEETS)

Indicates existing.

THE CONTRACTOR SHALL VERIFY ALL CONTROLLING FIELD DIMENSIONS BEFORE ORDERING OR FABRICATING ANY MATERIAL.

STANDARD PLAN SHEET NUMBER
DETAIL NUMBER

NOTES: (APPLY TO THIS SHEET ONLY)

1 Indicates limits of prepare concrete bridge deck surface and treat bridge deck with high molecular weight methacrylate. See "TYPICAL - PLAN" on GENERAL PLAN No. 2 sheet.

2 Indicates limits of remove existing joint seal, clean expansion joint and place new joint seal. See "TYPICAL - PLAN" on GENERAL PLAN No. 2 sheet and "JOINT SEAL TABLE" on JOINT SEAL DETAILS sheet.

INDEX TO PLANS

SHEET No.	TITLE
1	GENERAL PLAN No. 1
2	GENERAL PLAN No. 2
3	JOINT SEAL DETAILS
4	QUANTITIES

STANDARD PLANS DATED 2010

SHEET No.	TITLE
A10A	ABBREVIATIONS (SHEET 1 OF 2)
RSP A10B	ABBREVIATIONS (SHEET 2 OF 2)
B6-21	JOINT SEALS (MAXIMUM MOVEMENT RATING = 2")

Michael J. Lee 11-22-13
DESIGN ENGINEER

DESIGN	BY KHANH TRUONG	CHECKED CHARLES HUTCHINSON	LOAD FACTOR DESIGN	LIVE LOADING: HS20-44 AND ALTERNATIVE AND PERMIT DESIGN LOAD
DETAILS	BY KHANH TRUONG	CHECKED CHARLES HUTCHINSON	LAYOUT	BY KHANH TRUONG / CHECKED CHARLES HUTCHINSON
QUANTITIES	BY KHANH TRUONG	CHECKED CHARLES HUTCHINSON	SPECIFICATIONS	BY / PLANS AND SPECS COMPARED

STATE OF CALIFORNIA
DEPARTMENT OF TRANSPORTATION

DIVISION OF MAINTENANCE
STRUCTURE MAINTENANCE DESIGN

BRIDGE NO. VARIOUS
POST MILE VARIES

ROUTE 86, 78, 8 BRIDGES (REPLACE JOINT SEALS & TREAT DECK)

GENERAL PLAN No. 1

STRUCTURES MAINTENANCE GENERAL PLAN SHEET (ENGLISH) (REV. 09-01-10)

ORIGINAL SCALE IN INCHES FOR REDUCED PLANS 0 1 2 3

UNIT: 3488
PROJECT NUMBER & PHASE: 1113000051 1
CONTRACT NO.: 11-2M6101

DISREGARD PRINTS BEARING EARLIER REVISION DATES
REVISION DATES: 7-12-13 8-1-13 10-28-13 11-21-13 1-24-14

SHEET 1 OF 4

FILE => 11-2m6101_01gp1.dgn

USERNAME => s6121511 DATE PLOTTED => 11-FEB-2014 TIME PLOTTED => 11:01

DIST	COUNTY	ROUTE	POST MILES TOTAL PROJECT	SHEET No.	TOTAL SHEETS
11	Imp	8,78,86	Var	14	16

Charles R. Hutchinson 11-22-13
REGISTERED CIVIL ENGINEER DATE

02-24-14
PLANS APPROVAL DATE

REGISTERED PROFESSIONAL ENGINEER
CHARLES R. HUTCHINSON
No. C 54226
Exp. 12-31-15
CIVIL
STATE OF CALIFORNIA

The State of California or its officers or agents shall not be responsible for the accuracy or completeness of electronic copies of this plan sheet.

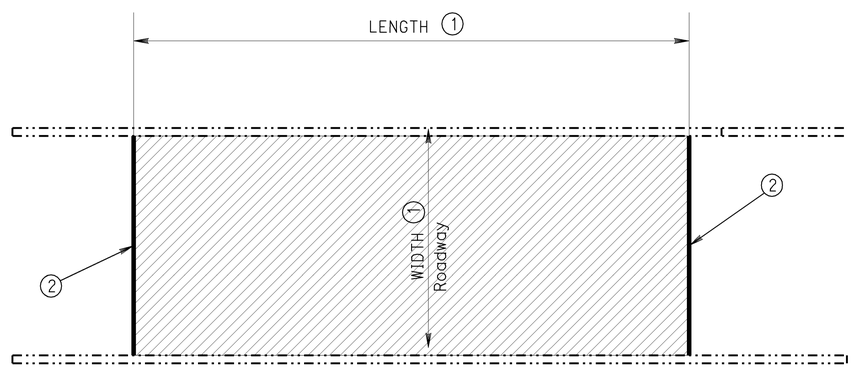

TYPICAL - PLAN

NO SCALE

NOTES: (APPLY TO THIS SHEET ONLY)

1 Indicates limits of prepare concrete bridge deck surface and treat bridge deck with high molecular weight methacrylate. See "TYPICAL - PLAN".

2 Indicates limits of remove existing joint seal, clean expansion joint and place new joint seal. See "TYPICAL - PLAN" and "JOINT SEAL TABLE" on JOINT SEAL DETAILS sheet.

Michael J. Lee 11-22-13
DESIGN ENGINEER

	BY	CHECKED
DESIGN	KHANH TRUONG	CHARLES HUTCHINSON
DETAILS	KHANH TRUONG	CHARLES HUTCHINSON
QUANTITIES	KHANH TRUONG	CHARLES HUTCHINSON

LOAD FACTOR DESIGN — LIVE LOADING: HS20-44 AND ALTERNATIVE AND PERMIT DESIGN LOAD

	BY	CHECKED
LAYOUT	KHANH TRUONG	CHARLES HUTCHINSON
SPECIFICATIONS	BY	PLANS AND SPECS COMPARED

STATE OF CALIFORNIA
DEPARTMENT OF TRANSPORTATION

DIVISION OF MAINTENANCE
STRUCTURE MAINTENANCE DESIGN

BRIDGE NO. VARIOUS
POST MILE VARIES

ROUTE 86, 78, 8 BRIDGES (REPLACE JOINT SEALS & TREAT DECK)

GENERAL PLAN No. 2

STRUCTURES MAINTENANCE GENERAL PLAN SHEET (ENGLISH) (REV. 09-01-10)

ORIGINAL SCALE IN INCHES FOR REDUCED PLANS 0 1 2 3

UNIT: 3488
PROJECT NUMBER & PHASE: 1113000051 1
CONTRACT NO.: 11-2M6101

DISREGARD PRINTS BEARING EARLIER REVISION DATES
REVISION DATES: 7-12-13 8-1-13 10-28-13 11-21-13 1-24-14

SHEET 2 OF 4

FILE => 11-2m6101_02gp2.dgn

USERNAME => s8121511 DATE PLOTTED => 26-FEB-2014 TIME PLOTTED => 10:42

DIST	COUNTY	ROUTE	POST MILES TOTAL PROJECT	SHEET No.	TOTAL SHEETS
11	Imp	8,78,86	Var	15	16

Charles R Hutchinson 11-22-13
REGISTERED CIVIL ENGINEER DATE

02-24-14
PLANS APPROVAL DATE

REGISTERED PROFESSIONAL ENGINEER
CHARLES R. HUTCHINSON
No. C 54226
Exp. 12-31-15
CIVIL
STATE OF CALIFORNIA

The State of California or its officers or agents shall not be responsible for the accuracy or completeness of electronic copies of this plan sheet.

JOINT SEAL TABLE

BRIDGE NAME	BRIDGE NUMBER	LOCATION		"MR" (IN)	APPROXIMATE LENGTH (FT)	EXISTING WATERSTOP	APPROXIMATE DEPTH TO CLEAN EXPANSION JOINT (IN)	CLEAN EXPANSION JOINT (FT)
VERDE DITCH	58-0044L	Abut 1	BB	½	39.0	NO	12	39.0
		Abut 2	EB	½	39.0	NO	12	39.0
TORTIF DITCH	58-0061L	Abut 1	BB	½	39.0	NO	12	39.0
		Abut 4	EB	½	39.0	NO	12	39.0
FLORIS DITCH	58-0063L	Abut 1	BB	½	39.0	NO	12	39.0
		Abut 4	EB	½	39.0	NO	12	39.0
INCIENSO DITCH	58-0064L	Abut 1	BB	½	42.0	NO	12	42.0
		Abut 3	EB	½	42.0	NO	12	42.0
ALL AMERICAN CANAL	58-0195R	Bent 2	℄	1	37.0	NO	12	37.0
		Bent 5	℄	1	37.0	NO	12	37.0

LEGEND:

BB = Paving notch at beginning of bridge
EB = Paving notch at end of bridge
℄ = Bent Joint

The following notes apply to JOINT SEAL TYPE B:

1) Seal must satisfy both minimum Movement Rating (MR) and minimum W1 requirements.

2) Minimum W1 is the calculated maximum width of the joint based on field measurements. After the joints have been cleaned, minimum W1 is to be calculated by the Engineer.

3) W1 shall be the smaller of the values determined as follows:

   A) 0.85 times the manufacturer's designed minimum uncompressed width of the seal.

   B) The width of the seal on the third successive test cycle of the pressure deflection test, when compressed to an average pressure of 3 psi.

4) Bend Type B joint seal 6" up into curb or rail on the low side of the deck where deck joint matches curb or rail joint.

5) For details not shown see B6-21

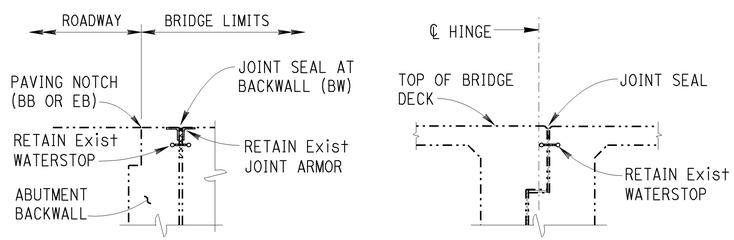

ABUTMENT WITH BACKWALL

HINGE

JOINT SEAL LOCATION

NO SCALE

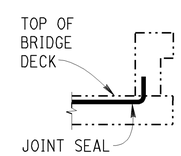

BARRIER RAIL

JOINT SEAL AT LOW SIDE OF DECK

For use only where deck joint matches the barrier rail joint. Details shown for illustration purposes only.
NO SCALE

DESIGN	BY KHANH TRUONG	CHECKED CHARLES HUTCHINSON	
DETAILS	BY KHANH TRUONG	CHECKED CHARLES HUTCHINSON	
QUANTITIES	BY KHANH TRUONG	CHECKED CHARLES HUTCHINSON	

STATE OF CALIFORNIA
DEPARTMENT OF TRANSPORTATION

DIVISION OF MAINTENANCE
STRUCTURE MAINTENANCE DESIGN

BRIDGE NO. VARIOUS
POST MILE VARIES

ROUTE 86, 78, 8 BRIDGES (REPLACE JOINT SEALS & TREAT DECK)

JOINT SEAL DETAILS

STRUCTURES MAINTENANCE GENERAL PLAN SHEET (ENGLISH) (REV. 09-01-10)

ORIGINAL SCALE IN INCHES FOR REDUCED PLANS 0 1 2 3

UNIT: 3488
PROJECT NUMBER & PHASE: 1113000051 1
CONTRACT NO.: 11-2M6101

DISREGARD PRINTS BEARING EARLIER REVISION DATES → REVISION DATES 7-12-13 8-1-13 10-28-13 1-24-14

SHEET 3 OF 4

FILE => 11-2m6101_03jtseal detail.dgn

USERNAME => s121511 DATE PLOTTED => 11-FEB-2014 TIME PLOTTED => 11:01

DIST	COUNTY	ROUTE	POST MILES TOTAL PROJECT	SHEET No.	TOTAL SHEETS
11	Imp	8,78,86	Var	16	16

Charles R Hutchinson 11-22-13
REGISTERED CIVIL ENGINEER DATE

02-24-14
PLANS APPROVAL DATE

REGISTERED PROFESSIONAL ENGINEER CHARLES R. HUTCHINSON No. C 54226 Exp. 12-31-15 CIVIL STATE OF CALIFORNIA

The State of California or its officers or agents shall not be responsible for the accuracy or completeness of electronic copies of this plan sheet.

WILLOW WASH BRIDGE NO. 58-0034L

QUANTITIES

PREPARE CONCRETE BRIDGE DECK SURFACE	2,652	SQFT
TREAT BRIDGE DECK	2,652	SQFT
FURNISH BRIDGE DECK TREATMENT MATERIAL	30	GAL

IBERIA DITCH BRIDGE NO. 58-0042R

QUANTITIES

PREPARE CONCRETE BRIDGE DECK SURFACE	2,854	SQFT
TREAT BRIDGE DECK	2,854	SQFT
FURNISH BRIDGE DECK TREATMENT MATERIAL	32	GAL

AMEROSA DITCH BRIDGE NO. 58-0043L/R

QUANTITIES

PREPARE CONCRETE BRIDGE DECK SURFACE	3,077	SQFT
TREAT BRIDGE DECK	3,077	SQFT
FURNISH BRIDGE DECK TREATMENT MATERIAL	34	GAL

VERDE DITCH BRIDGE NO. 58-0044L/R

QUANTITIES

PREPARE CONCRETE BRIDGE DECK SURFACE	2,835	SQFT
TREAT BRIDGE DECK	2,835	SQFT
FURNISH BRIDGE DECK TREATMENT MATERIAL	32	GAL
CLEAN EXPANSION JOINT	78	LF
JOINT SEAL (MR 1/2")	78	LF

TORIF DITCH BRIDGE NO. 58-0061L

QUANTITIES

PREPARE CONCRETE BRIDGE DECK SURFACE	3,506	SQFT
TREAT BRIDGE DECK	3,506	SQFT
FURNISH BRIDGE DECK TREATMENT MATERIAL	39	GAL
CLEAN EXPANSION JOINT	78	LF
JOINT SEAL (MR 1/2")	78	LF

FLORIS DITCH BRIDGE NO. 58-0063L/R

QUANTITIES

PREPARE CONCRETE BRIDGE DECK SURFACE	6,479	SQFT
TREAT BRIDGE DECK	6,479	SQFT
FURNISH BRIDGE DECK TREATMENT MATERIAL	72	GAL
CLEAN EXPANSION JOINT	78	LF
JOINT SEAL (MR 1/2")	78	LF

INCIENSO DITCH BRIDGE NO. 58-0064L

QUANTITIES

PREPARE CONCRETE BRIDGE DECK SURFACE	2,686	SQFT
TREAT BRIDGE DECK	2,686	SQFT
FURNISH BRIDGE DECK TREATMENT MATERIAL	30	GAL
CLEAN EXPANSION JOINT	84	LF
JOINT SEAL (MR 1/2")	84	LF

GODETIA DITCH BRIDGE NO. 58-0067R

QUANTITIES

PREPARE CONCRETE BRIDGE DECK SURFACE	2,500	SQFT
TREAT BRIDGE DECK	2,500	SQFT
FURNISH BRIDGE DECK TREATMENT MATERIAL	28	GAL

CALYX DITCH BRIDGE NO. 58-0068R

QUANTITIES

PREPARE CONCRETE BRIDGE DECK SURFACE	3,220	SQFT
TREAT BRIDGE DECK	3,220	SQFT
FURNISH BRIDGE DECK TREATMENT MATERIAL	36	GAL

MATIS DITCH BRIDGE NO. 58-0069L

QUANTITIES

PREPARE CONCRETE BRIDGE DECK SURFACE	2,522	SQFT
TREAT BRIDGE DECK	2,522	SQFT
FURNISH BRIDGE DECK TREATMENT MATERIAL	28	GAL

ROMNEY DITCH BRIDGE NO. 58-0071L/R

QUANTITIES

PREPARE CONCRETE BRIDGE DECK SURFACE	4,867	SQFT
TREAT BRIDGE DECK	4,867	SQFT
FURNISH BRIDGE DECK TREATMENT MATERIAL	54	GAL

PAROSA DITCH BRIDGE NO. 58-0072R

QUANTITIES

PREPARE CONCRETE BRIDGE DECK SURFACE	3,220	SQFT
TREAT BRIDGE DECK	3,220	SQFT
FURNISH BRIDGE DECK TREATMENT MATERIAL	36	GAL

ALAMO RIVER BRIDGE NO. 58-0118

QUANTITIES

PREPARE CONCRETE BRIDGE DECK SURFACE	6,780	SQFT
TREAT BRIDGE DECK	6,780	SQFT
FURNISH BRIDGE DECK TREATMENT MATERIAL	75	GAL

ALL AMERICAN CANAL BRIDGE NO. 58-0195R

QUANTITIES

CLEAN EXPANSION JOINT	74	LF
JOINT SEAL (MR 1")	74	LF

BOWKER ROAD OC BRIDGE NO. 58-0214

QUANTITIES

PREPARE CONCRETE BRIDGE DECK SURFACE	8,320	SQFT
TREAT BRIDGE DECK	8,320	SQFT
FURNISH BRIDGE DECK TREATMENT MATERIAL	92	GAL

BARBARA WORTH ROAD OC BRIDGE NO. 58-0216

QUANTITIES

PREPARE CONCRETE BRIDGE DECK SURFACE	6,656	SQFT
TREAT BRIDGE DECK	6,656	SQFT
FURNISH BRIDGE DECK TREATMENT MATERIAL	74	GAL

METZ ROAD OC BRIDGE NO. 58-0217

QUANTITIES

PREPARE CONCRETE BRIDGE DECK SURFACE	6,656	SQFT
TREAT BRIDGE DECK	6,656	SQFT
FURNISH BRIDGE DECK TREATMENT MATERIAL	74	GAL

	BY	CHECKED
DESIGN	KHANH TRUONG	CHARLES HUTCHINSON
DETAILS	KHANH TRUONG	CHARLES HUTCHINSON
QUANTITIES	KHANH TRUONG	CHARLES HUTCHINSON

STATE OF CALIFORNIA
DEPARTMENT OF TRANSPORTATION

DIVISION OF MAINTENANCE
STRUCTURE MAINTENANCE DESIGN

BRIDGE NO. VARIOUS
POST MILE VARIES

ROUTE 86, 78, 8 BRIDGES (REPLACE JOINT SEALS & TREAT DECK)

QUANTITIES

STRUCTURES MAINTENANCE GENERAL PLAN SHEET (ENGLISH) (REV. 09-01-10)

ORIGINAL SCALE IN INCHES FOR REDUCED PLANS 0 1 2 3

UNIT: 3488
PROJECT NUMBER & PHASE: 1113000051 1
CONTRACT NO.: 11-2M6101

DISREGARD PRINTS BEARING EARLIER REVISION DATES → REVISION DATES 7-12-13 8-1-13 11-21-13 1-24-14

SHEET 4 OF 4

FILE => 11-2m6101_04quant.dgn

USERNAME => s121511 DATE PLOTTED => 11-FEB-2014 TIME PLOTTED => 11:01