Dist	COUNTY	ROUTE	POST MILES TOTAL PROJECT	SHEET No.	TOTAL SHEETS
11	SD	56	3.5	1	41

INDEX OF PLANS

SHEET No.	DESCRIPTION
1	TITLE AND LOCATION MAP
2	KEY MAP AND LINE INDEX
3	PROJECT CONTROL
4-7	EROSION CONTROL PLANS
8-10	CONTOUR GRADING
11-12	PLANT LIST
13-15	PLANTING PLANS
16-19	IRRIGATION PLANS
20-23	LANDSCAPE DETAILS
24-25	IRRIGATION QUANTITIES
26-29	EXISTING UTILITIES PLANS
30-41	REVISED AND NEW STANDARD PLANS

THE STANDARD PLANS LIST APPLICABLE TO THIS CONTRACT IS INCLUDED IN THE NOTICE TO BIDDERS AND SPECIAL PROVISIONS BOOK.

STATE OF CALIFORNIA

DEPARTMENT OF TRANSPORTATION

PROJECT PLANS FOR CONSTRUCTION ADJACENT TO STATE HIGHWAY

IN SAN DIEGO COUNTY IN SAN DIEGO AT 0.2 MILE SOUTHEAST OF CAMINO SANTA FE OVERCROSSING

TO BE SUPPLEMENTED BY STANDARD PLANS DATED MAY 2006

LOCATION MAP

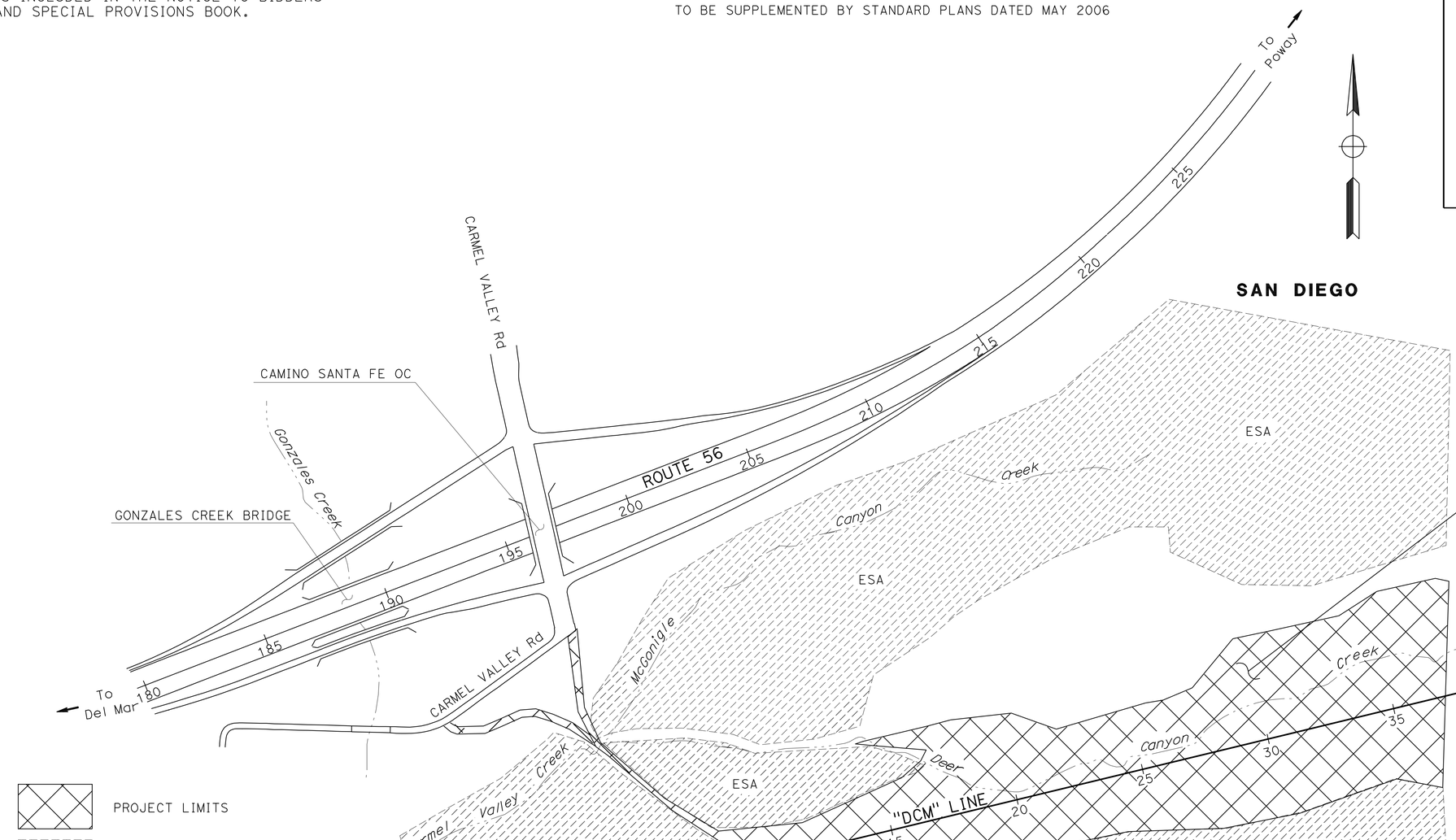

LOCATION OF CONSTRUCTION
PM 3.5

PROJECT LIMITS

ESA ENVIRONMENTALLY SENSITIVE AREA

NO SCALE

THE CONTRACTOR SHALL POSSESS THE CLASS (OR CLASSES) OF LICENSE AS SPECIFIED IN THE "NOTICE TO BIDDERS."

LICENSED LANDSCAPE ARCHITECT

July 25, 2011
PLANS APPROVAL DATE

LICENSED LANDSCAPE ARCHITECT EDWARD E. THURSTON No. 3818 Signature 03-31-12 Renewal Date 05-19-11 Date STATE OF CALIFORNIA

THE STATE OF CALIFORNIA OR ITS OFFICERS OR AGENTS SHALL NOT BE RESPONSIBLE FOR THE ACCURACY OR COMPLETENESS OF SCANNED COPIES OF THIS PLAN SHEET.

CONTRACT No.	11-2E0064
PROJECT ID	1100020036

PROJECT MANAGER ARTURO JACOBO

SENIOR ENVIRONMENTAL PLANNER BRUCE APRIL

LAST REVISION 05-20-11 DATE PLOTTED => 26-JUL-2011 TIME PLOTTED => 09:55

Dist	COUNTY	ROUTE	POST MILES TOTAL PROJECT	SHEET No.	TOTAL SHEETS
11	SD	56	3.5	2	41

LICENSED LANDSCAPE ARCHITECT

7-25-11
PLANS APPROVAL DATE

LICENSED LANDSCAPE ARCHITECT
EDWARD E. THURSTON No. 3818
Signature
03-31-12
Renewal Date
05-19-11
Date
STATE OF CALIFORNIA

THE STATE OF CALIFORNIA OR ITS OFFICERS OR AGENTS SHALL NOT BE RESPONSIBLE FOR THE ACCURACY OR COMPLETENESS OF SCANNED COPIES OF THIS PLAN SHEET.

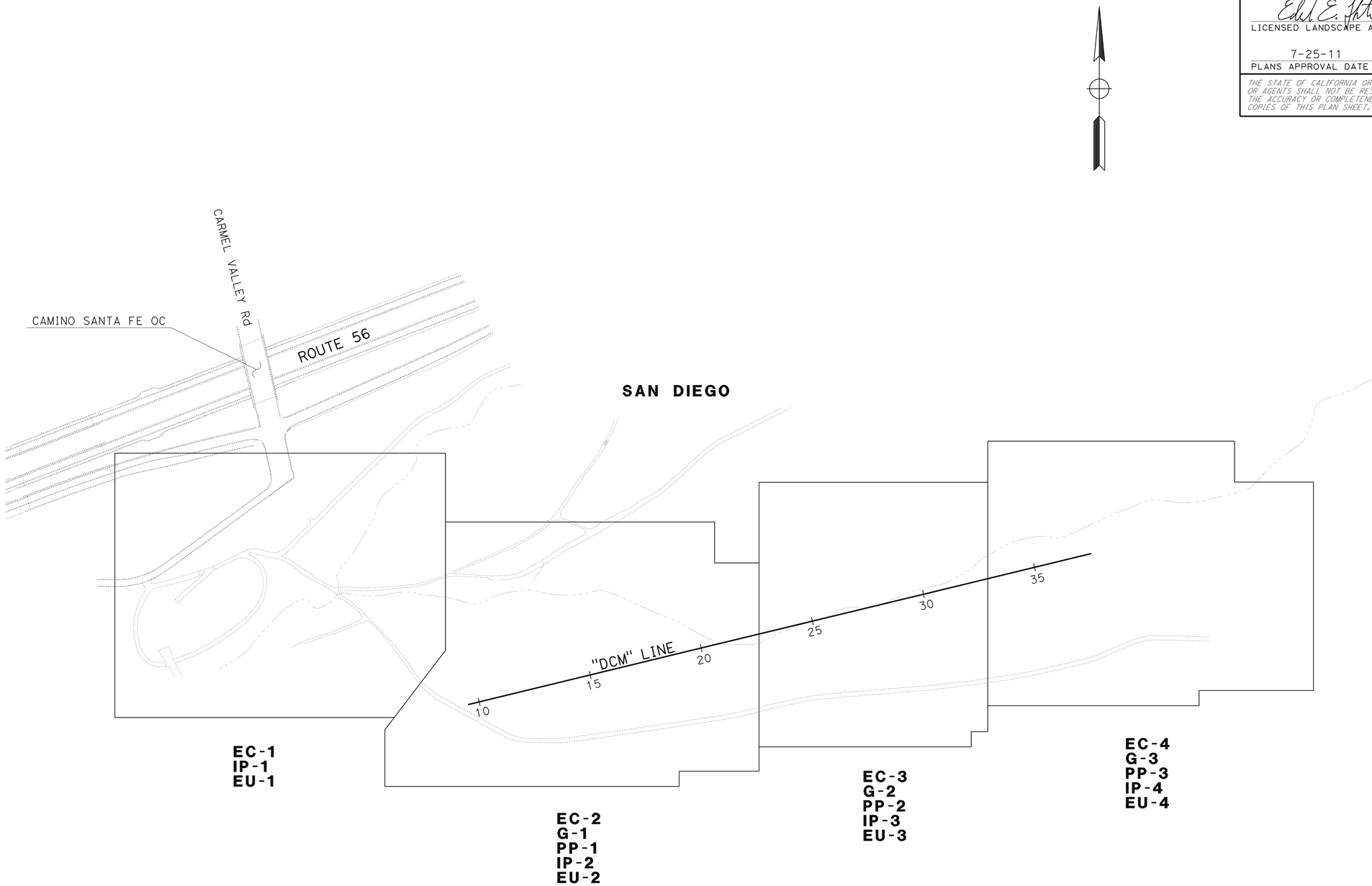

KEY MAP AND LINE INDEX

NO SCALE

K-1

STATE OF CALIFORNIA - DEPARTMENT OF TRANSPORTATION
Caltrans® ENVIRONMENTAL

SENIOR ENVIRONMENTAL PLANNER: BRUCE APRIL
CALCULATED-DESIGNED BY: RICH MALLEN
CHECKED BY: MIKE CONNELLY
REVISED BY
DATE REVISED

LAST REVISION 05-20-11
DATE PLOTTED => 26-JUL-2011
TIME PLOTTED => 10:13

Dist	COUNTY	ROUTE	POST MILES TOTAL PROJECT	SHEET No.	TOTAL SHEETS
11	SD	56	3.5	3	41

PROFESSIONAL LAND SURVEYOR DATE 01-10-11

PLANS APPROVAL DATE 7-25-11

PROFESSIONAL LAND SURVEYOR MARK D. PHELAN L.S.7111 EXP:12-31-12 STATE OF CALIFORNIA

THE STATE OF CALIFORNIA OR ITS OFFICERS OR AGENTS SHALL NOT BE RESPONSIBLE FOR THE ACCURACY OR COMPLETENESS OF SCANNED COPIES OF THIS PLAN SHEET.

NOTES:

1. CONTACT DISTRICT 11'S LAND SURVEY DIVISION, PHONE (858)467-4305, FOR ADDITIONAL INFORMATION OR QUERIES REGARDING THIS SURVEY PROJECT CONTROL.
2. FOR ACCURATE RIGHT OF WAY DATA, CONTACT RIGHT OF WAY ENGINEERING AT THE DISTRICT OFFICE.
3. BASIS OF BEARINGS AND COORDINATES
   FOR THIS PROJECT IS THE CALIFORNIA COORDINATE SYSTEM OF 1983, HPGN EPOCH ADJUSTMENT [CCS 83 (1991.35)], ZONE 6. PROJECT CONTROL STATIONS WERE ESTABLISHED ACCORDING TO CRITERIA SET FORTH IN THE FEDERAL GEODETIC CONTROL SUBCOMMITTEE'S "GEOMETRIC GEODETIC ACCURACY STANDARDS AND SPECIFICATIONS FOR USING GPS RELATIVE POSITIONING TECHNIQUES" REPRINTED AUGUST 1, 1989.

   THIS GPS STATIC SURVEY WAS CONSTRAINED TO "A" ORDER STATION "SAN DIEGO GPS 17" & "B" ORDER STATION "LOMAX".
4. BASIS OF ELEVATIONS
   FOR THIS PROJECT IS THE NORTH AMERICAN VERTICAL DATUM OF 1988 (NAVD 88). ELEVATIONS WERE ESTABLISHED BY GPS CONSTRAINING TO 3RD ORDER STATION "56-1.8".
5. IN THE EVENT GPS MACHINE CONTROL/GUIDANCE IS USED FOR THIS PROJECT, THE CONTRACTOR SHALL CONTACT OR MEET WITH DISTRICT 11'S LAND SURVEY DIVISION TO OBTAIN THE CONTROL NECESSARY TO ESTABLISH A PROJECT CALIBRATION COMPATIBLE FOR ALL USERS.

ABBREVIATIONS:

CADT CALIFORNIA DEPARTMENT OF TRANSPORTATION
CDH CALIFORNIA DIVISION OF HIGHWAYS
IP IRON PIPE

LEGEND:

"A" ORDER STATION
"B" ORDER STATION
1ST ORDER STATION
2ND ORDER STATION

CONTROL FOR DESIGN AND CONSTRUCTION

STATION DESIGNATION	ORDER	NORTHING	EASTING	ELEVATION	DESCRIPTION
SAN DIEGO GPS 17	A	1,878,748.66	6,285,831.16	411.84	SURVEY DISK IN LIGHT STRUCTURE
LOMAX	B	1,981,547.83	6,303,011.30	944.42	3½" CDH BRASS DISK ROCK OUTCROP
56-1.8	1ST	1,924,457.88	6,266,019.07	117.79	2¼" CADT BRASS DISK
56-3.14R	1ST	1,927,518.11	6,272,189.59	172.86	2¼" CADT BRASS DISK IN DRAIN
56-3.43R	1ST	1,928,116.55	6,273,605.87	190.47	2¼" CADT BRASS DISK IN DRAIN
56-KP6.4	2ND	1,927,136.24	6,273,484.44	235.97	2¼" CADT BRASS DISK IN 2" IP

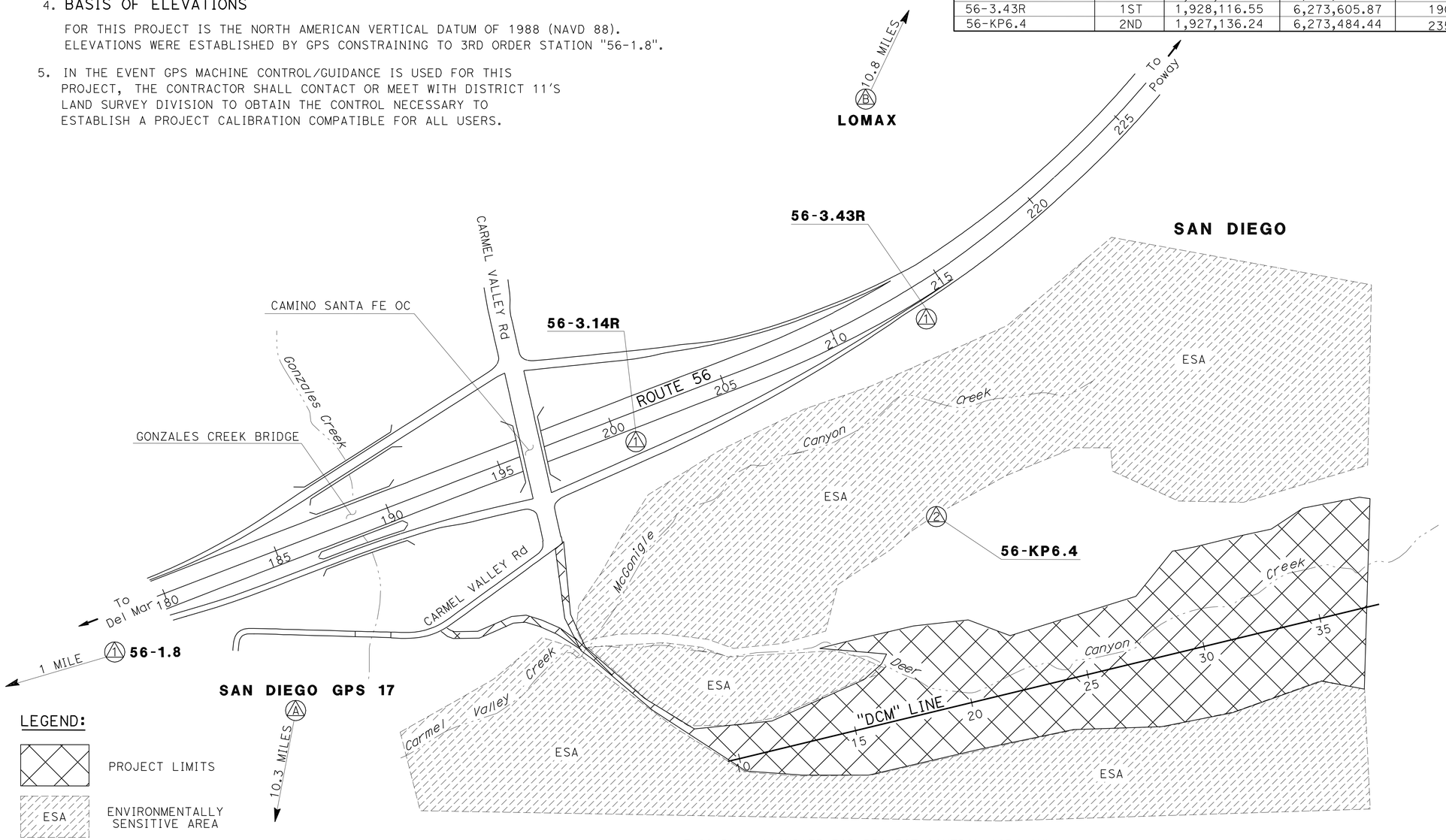

THIS PLAN ACCURATE FOR PROJECT CONTROL WORK ONLY

PROJECT CONTROL

NO SCALE

PC-1

STATE OF CALIFORNIA - DEPARTMENT OF TRANSPORTATION
Caltrans LAND SURVEYS DIVISION

FUNCTIONAL SUPERVISOR: BRUCE URQUHART
CALCULATED-DESIGNED BY: MARK PHELAN
CHECKED BY: NED SALMAN
REVISED BY
DATE REVISED

LAST REVISION 05-20-11 DATE PLOTTED => 26-JUL-2011 TIME PLOTTED => 10:14

Dist	COUNTY	ROUTE	POST MILES TOTAL PROJECT	SHEET No.	TOTAL SHEETS
11	SD	56	3.5	4	41

LICENSED LANDSCAPE ARCHITECT

7-25-11
PLANS APPROVAL DATE

THE STATE OF CALIFORNIA OR ITS OFFICERS OR AGENTS SHALL NOT BE RESPONSIBLE FOR THE ACCURACY OR COMPLETENESS OF SCANNED COPIES OF THIS PLAN SHEET.

LICENSED LANDSCAPE ARCHITECT
EDWARD E. THURSTON No. 3818
Signature
03-31-12
Renewal Date
05-19-11
Date
STATE OF CALIFORNIA

NOTE:

FOR LOCATIONS OF ADDITIONAL EROSION CONTROL (PSFM)(TYPE 1) WORK SEE PLANTING PLANS.

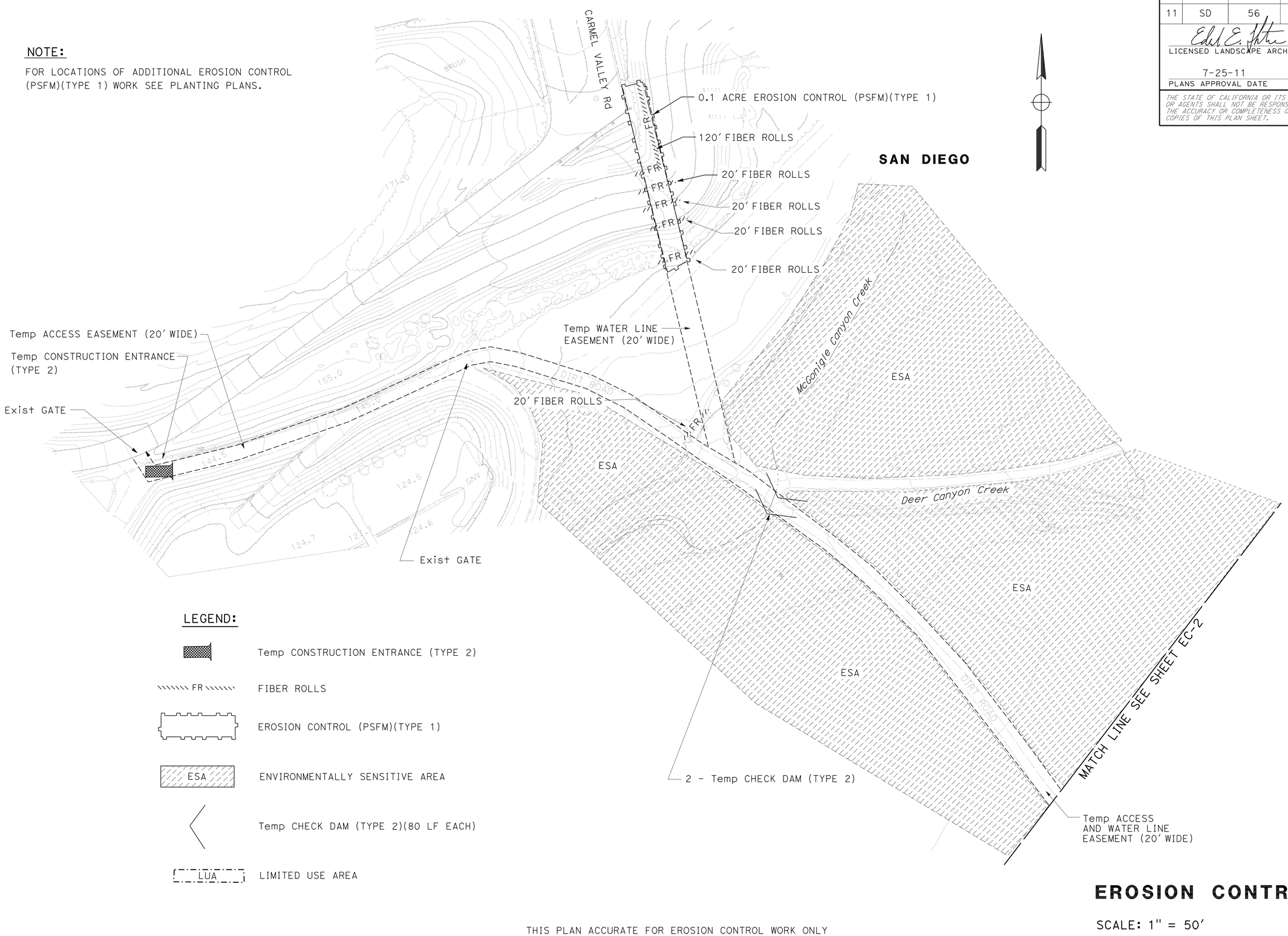

LEGEND:

- Temp CONSTRUCTION ENTRANCE (TYPE 2)
- FR — FIBER ROLLS
- EROSION CONTROL (PSFM)(TYPE 1)
- ESA — ENVIRONMENTALLY SENSITIVE AREA
- Temp CHECK DAM (TYPE 2)(80 LF EACH)
- LUA — LIMITED USE AREA

THIS PLAN ACCURATE FOR EROSION CONTROL WORK ONLY

EROSION CONTROL PLAN

SCALE: 1" = 50'

EC-1

STATE OF CALIFORNIA - DEPARTMENT OF TRANSPORTATION
Caltrans® ENVIRONMENTAL

SENIOR ENVIRONMENTAL PLANNER: BRUCE APRIL
CALCULATED-DESIGNED BY: RICH MALLEN
CHECKED BY: MIKE CONNELLY
REVISED BY
DATE REVISED

LAST REVISION 05-20-11
DATE PLOTTED => 26-JUL-2011
TIME PLOTTED => 10:14

Dist	COUNTY	ROUTE	POST MILES TOTAL PROJECT	SHEET No.	TOTAL SHEETS
11	SD	56	3.5	5	41

LICENSED LANDSCAPE ARCHITECT

7-25-11
PLANS APPROVAL DATE

THE STATE OF CALIFORNIA OR ITS OFFICERS OR AGENTS SHALL NOT BE RESPONSIBLE FOR THE ACCURACY OR COMPLETENESS OF SCANNED COPIES OF THIS PLAN SHEET.

LICENSED LANDSCAPE ARCHITECT
EDWARD E. THURSTON No. 3818
Signature
03-31-12
Renewal Date
05-19-11
Date
STATE OF CALIFORNIA

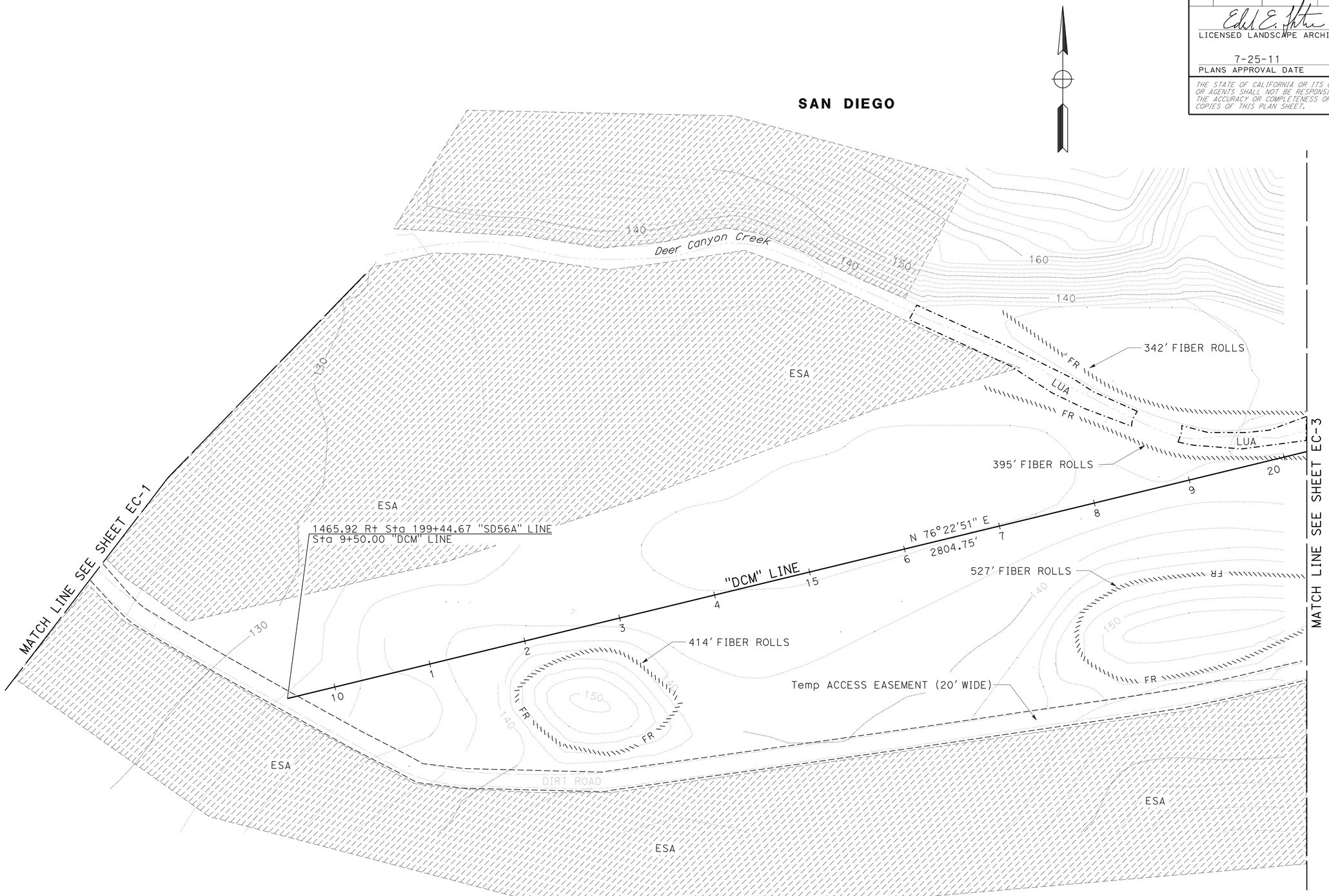

EROSION CONTROL PLAN

SCALE: 1" = 50'

EC-2

THIS PLAN ACCURATE FOR EROSION CONTROL WORK ONLY

STATE OF CALIFORNIA - DEPARTMENT OF TRANSPORTATION
Caltrans
ENVIRONMENTAL

SENIOR ENVIRONMENTAL PLANNER: BRUCE APRIL
CALCULATED-DESIGNED BY: RICH MALLEN
CHECKED BY: MIKE CONNELLY
REVISED BY
DATE REVISED

LAST REVISION 05-20-11
DATE PLOTTED => 26-JUL-2011
TIME PLOTTED => 10:14

Dist	COUNTY	ROUTE	POST MILES TOTAL PROJECT	SHEET No.	TOTAL SHEETS
11	SD	56	3.5	6	41

LICENSED LANDSCAPE ARCHITECT

7-25-11
PLANS APPROVAL DATE

LICENSED LANDSCAPE ARCHITECT
EDWARD E. THURSTON No. 3818
Signature
03-31-12
Renewal Date
05-19-11
Date
STATE OF CALIFORNIA

THE STATE OF CALIFORNIA OR ITS OFFICERS OR AGENTS SHALL NOT BE RESPONSIBLE FOR THE ACCURACY OR COMPLETENESS OF SCANNED COPIES OF THIS PLAN SHEET.

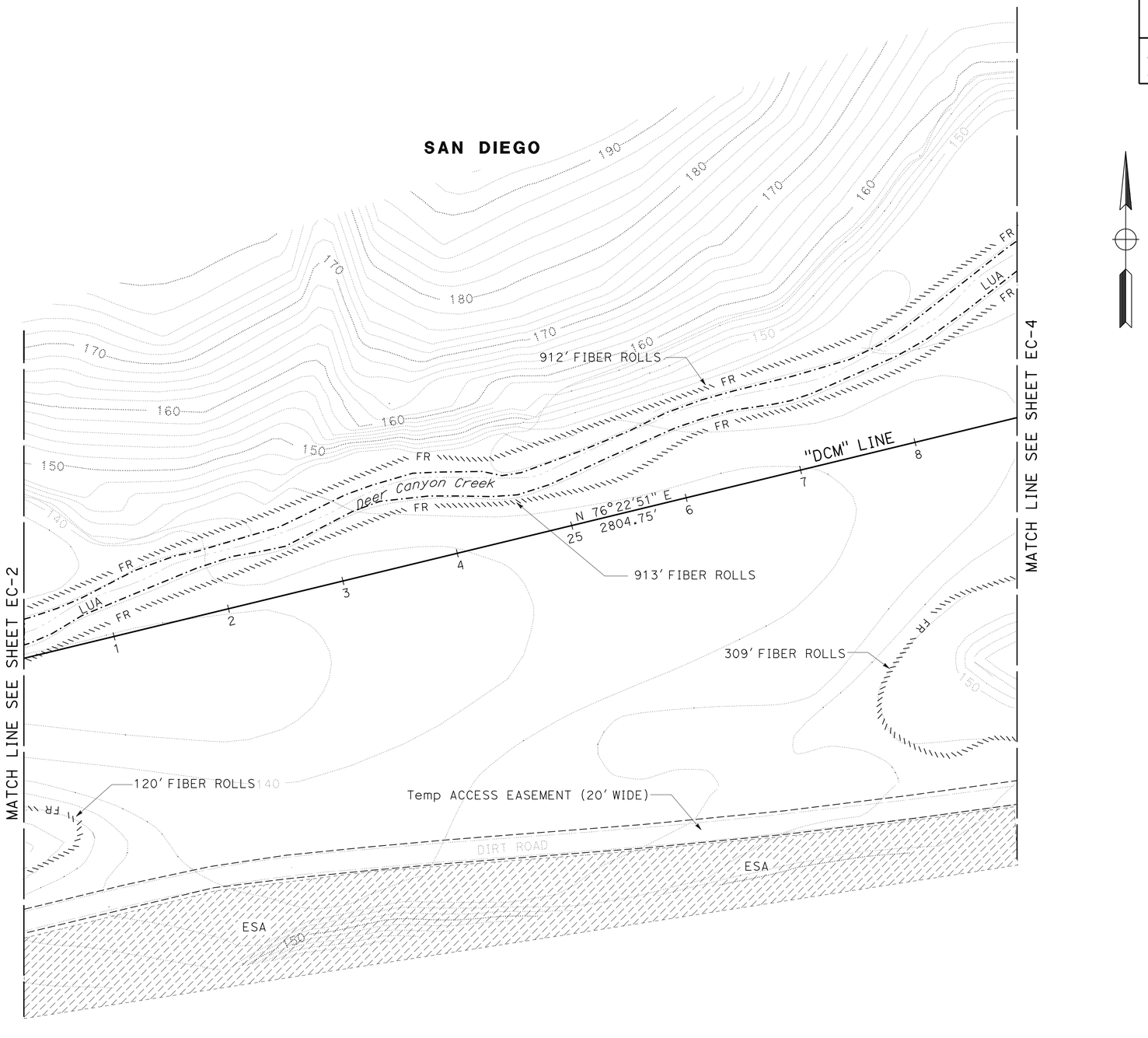

EROSION CONTROL PLAN

SCALE: 1" = 50'

EC-3

THIS PLAN ACCURATE FOR EROSION CONTROL WORK ONLY

STATE OF CALIFORNIA - DEPARTMENT OF TRANSPORTATION
Caltrans® ENVIRONMENTAL

SENIOR ENVIRONMENTAL PLANNER: BRUCE APRIL
CALCULATED-DESIGNED BY: RICH MALLEN
CHECKED BY: MIKE CONNELLY
REVISED BY
DATE REVISED

LAST REVISION 05-20-11
DATE PLOTTED => 26-JUL-2011
TIME PLOTTED => 10:14

Dist	COUNTY	ROUTE	POST MILES TOTAL PROJECT	SHEET No.	TOTAL SHEETS
11	SD	56	3.5	7	41

LICENSED LANDSCAPE ARCHITECT

7-25-11
PLANS APPROVAL DATE

LICENSED LANDSCAPE ARCHITECT
EDWARD E. THURSTON No. 3018
Signature
03-31-12
Renewal Date
05-19-11
Date
STATE OF CALIFORNIA

THE STATE OF CALIFORNIA OR ITS OFFICERS OR AGENTS SHALL NOT BE RESPONSIBLE FOR THE ACCURACY OR COMPLETENESS OF SCANNED COPIES OF THIS PLAN SHEET.

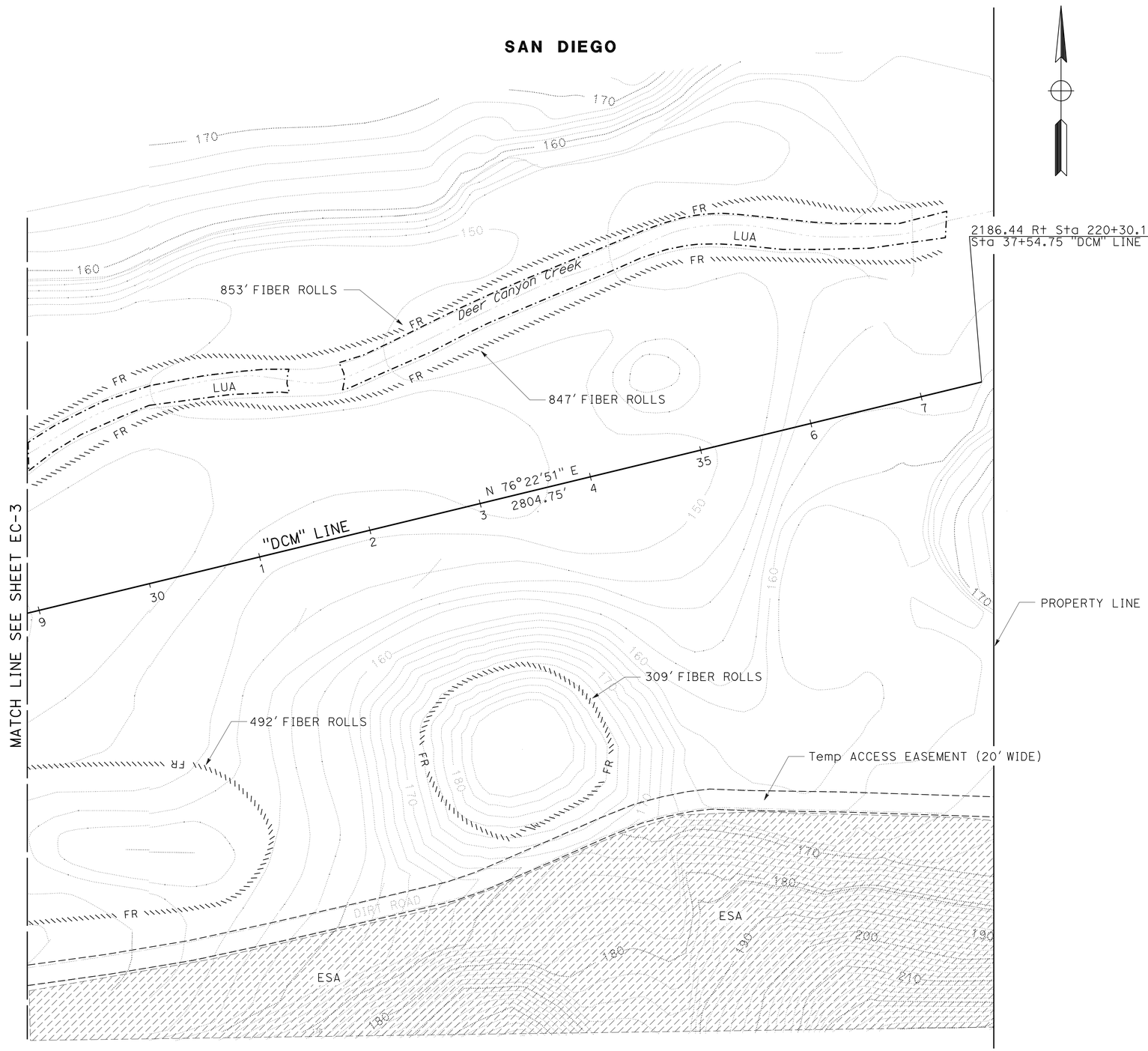

EROSION CONTROL PLAN

SCALE: 1" = 50'

EC-4

THIS PLAN ACCURATE FOR EROSION CONTROL WORK ONLY

STATE OF CALIFORNIA - DEPARTMENT OF TRANSPORTATION
Caltrans®
ENVIRONMENTAL

SENIOR ENVIRONMENTAL PLANNER: BRUCE APRIL

CALCULATED-DESIGNED BY: RICH MALLEN
CHECKED BY: MIKE CONNELLY

REVISED BY
DATE REVISED

LAST REVISION 05-20-11
DATE PLOTTED => 26-JUL-2011
TIME PLOTTED => 10:14

Dist	COUNTY	ROUTE	POST MILES TOTAL PROJECT	SHEET No.	TOTAL SHEETS
11	SD	56	3.5	8	41

LICENSED LANDSCAPE ARCHITECT

7-25-11
PLANS APPROVAL DATE

LICENSED LANDSCAPE ARCHITECT
EDWARD E. THURSTON No. 3018
CALIFORNIA
03-31-12
EXPIRATION DATE
05-19-11
DATE
STATE OF CALIFORNIA

THE STATE OF CALIFORNIA OR ITS OFFICERS OR AGENTS SHALL NOT BE RESPONSIBLE FOR THE ACCURACY OR COMPLETENESS OF SCANNED COPIES OF THIS PLAN SHEET.

LEGEND:

- EXISTING MONITORING WELL - PROTECT IN PLACE
- ESA — ENVIRONMENTALLY SENSITIVE AREA
- LUA — LIMITED USE AREA

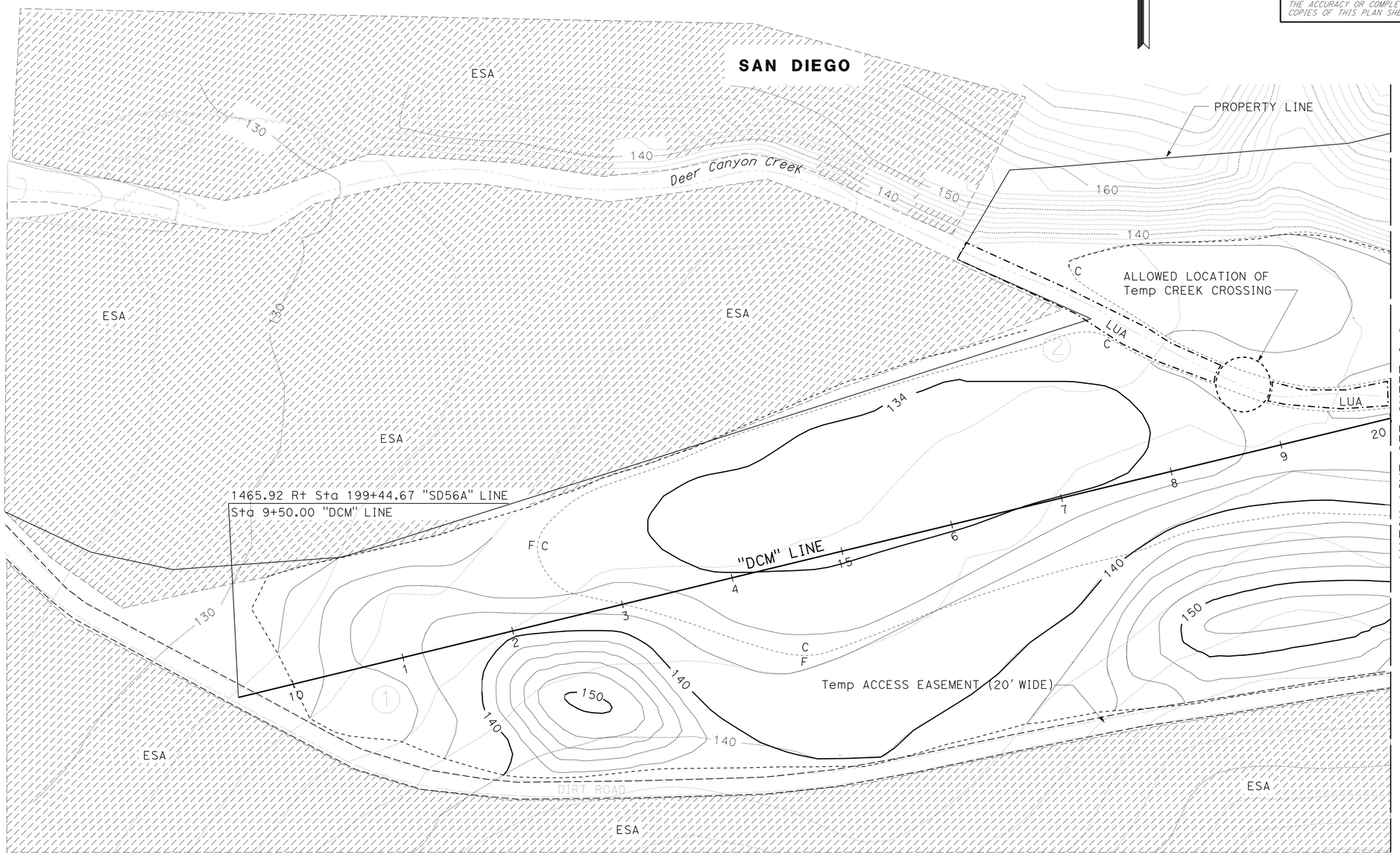

THIS PLAN ACCURATE FOR CONTOUR GRADING WORK ONLY

CONTOUR GRADING

SCALE: 1" = 50'

G-1

STATE OF CALIFORNIA - DEPARTMENT OF TRANSPORTATION
Caltrans
ENVIRONMENTAL

SENIOR ENVIRONMENTAL PLANNER: BRUCE APRIL
CALCULATED-DESIGNED BY: RICH MALLEN
CHECKED BY: MIKE CONNELLY
REVISED BY
DATE REVISED

LAST REVISION 05-20-11
DATE PLOTTED => 26-JUL-2011
TIME PLOTTED => 10:14

Dist	COUNTY	ROUTE	POST MILES TOTAL PROJECT	SHEET No.	TOTAL SHEETS
11	SD	56	3.5	9	41

LICENSED LANDSCAPE ARCHITECT

7-25-11
PLANS APPROVAL DATE

LICENSED LANDSCAPE ARCHITECT
EDWARD E. THURSTON No. 3818
Signature
03-31-12
Renewal Date
05-19-11
Date
STATE OF CALIFORNIA

THE STATE OF CALIFORNIA OR ITS OFFICERS OR AGENTS SHALL NOT BE RESPONSIBLE FOR THE ACCURACY OR COMPLETENESS OF SCANNED COPIES OF THIS PLAN SHEET.

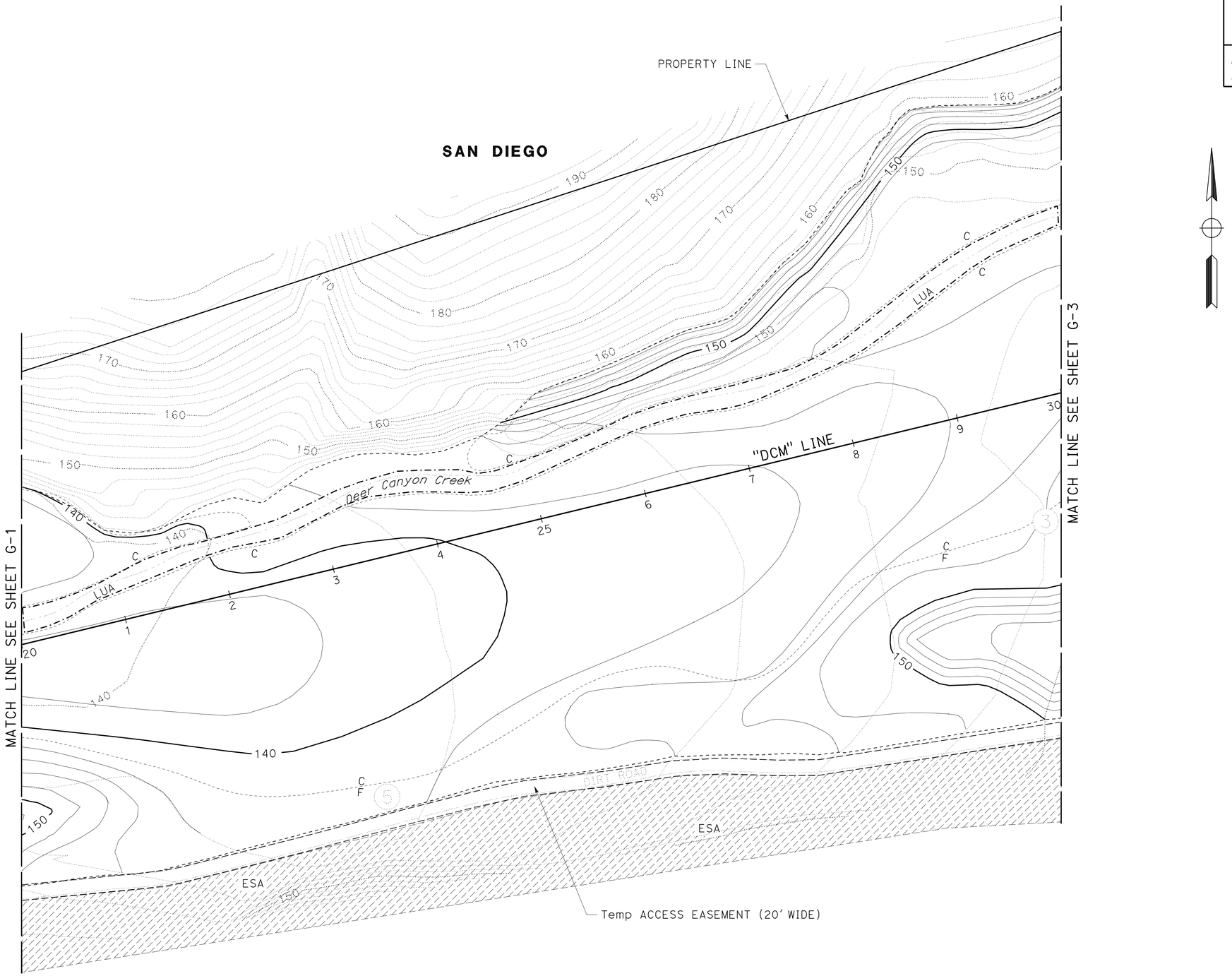

CONTOUR GRADING

SCALE: 1" = 50'

G-2

THIS PLAN ACCURATE FOR CONTOUR GRADING WORK ONLY

STATE OF CALIFORNIA - DEPARTMENT OF TRANSPORTATION
Caltrans®
ENVIRONMENTAL

SENIOR ENVIRONMENTAL PLANNER: BRUCE APRIL
CALCULATED-DESIGNED BY: RICH MALLEN
CHECKED BY: MIKE CONNELLY
REVISED BY
DATE REVISED

LAST REVISION 05-20-11
DATE PLOTTED => 26-JUL-2011
TIME PLOTTED => 09:48

Dist	COUNTY	ROUTE	POST MILES TOTAL PROJECT	SHEET No.	TOTAL SHEETS
11	SD	56	3.5	10	41

LICENSED LANDSCAPE ARCHITECT

7-25-11
PLANS APPROVAL DATE

LICENSED LANDSCAPE ARCHITECT
EDWARD E. THURSTON No. 3018
03-31-12
05-19-11
STATE OF CALIFORNIA

THE STATE OF CALIFORNIA OR ITS OFFICERS OR AGENTS SHALL NOT BE RESPONSIBLE FOR THE ACCURACY OR COMPLETENESS OF SCANNED COPIES OF THIS PLAN SHEET.

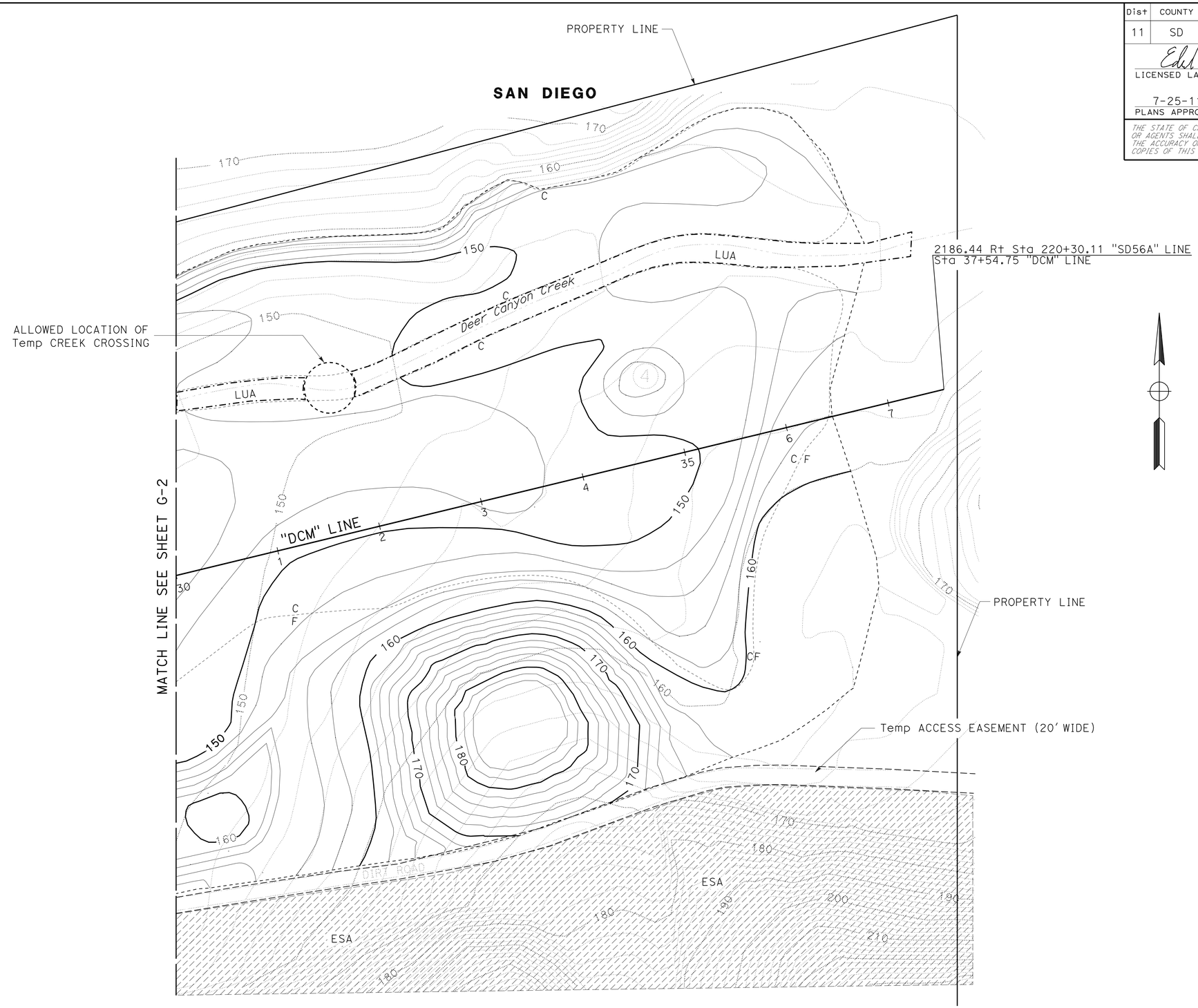

CONTOUR GRADING

SCALE: 1" = 50'

G-3

THIS PLAN ACCURATE FOR CONTOUR GRADING WORK ONLY

STATE OF CALIFORNIA - DEPARTMENT OF TRANSPORTATION
Caltrans
ENVIRONMENTAL

SENIOR ENVIRONMENTAL PLANNER: BRUCE APRIL
CALCULATED-DESIGNED BY: MIKE CONNELLY
CHECKED BY: RICH MALLEN
REVISED BY
DATE REVISED

LAST REVISION 05-20-11
DATE PLOTTED => 26-JUL-2011
TIME PLOTTED => 09:48

Dist	COUNTY	ROUTE	POST MILES TOTAL PROJECT	SHEET No.	TOTAL SHEETS
11	SD	56	3.5	11	41

LICENSED LANDSCAPE ARCHITECT

7-25-11
PLANS APPROVAL DATE

LICENSED LANDSCAPE ARCHITECT — EDWARD E. THURSTON No. 3018 — Expiration Date 03-31-12 — Renewed Date 05-19-11 — Date — STATE OF CALIFORNIA

THE STATE OF CALIFORNIA OR ITS OFFICERS OR AGENTS SHALL NOT BE RESPONSIBLE FOR THE ACCURACY OR COMPLETENESS OF SCANNED COPIES OF THIS PLAN SHEET.

ABBREVIATIONS:

AMEND — AMENDMENT
B & B — BALLED AND BURLAPPED
Dia — DIAMETER
EA — EACH
LB — POUND
Oz — OUNCE
Ft — FOOT/FEET
SQFT — SQUARE FEET
SQYD — SQUARE YARD
CF — CUBIC FEET
CY — CUBIC YARD
GAL — GALLON
Max — MAXIMUM
Min — MINIMUM
NCN — NO COMMON NAME
No. — NUMBER
Pkt — PACKET
PLT ESTB — PLANT ESTABLISHMENT
Pvmt — PAVEMENT
R/W — RIGHT OF WAY
SF — STATE FURNISHED
TRVD — TRAVELED

PLANT LIST AND PLANTING SPECIFICATIONS

PLANT GROUP	PLANT No.	SYMBOL (12)	BOTANICAL NAME	COMMON NAME	SIZE	QUANTITY EACH	HOLE SIZE (INCH) Dia	HOLE SIZE (INCH) DEPTH	BASIN TYPE	IRON SULFATE (1)	SOIL AMEND (1)	COMMERCIAL FERTILIZER (1) PLANTING	COMMERCIAL FERTILIZER (1) PLT ESTB	BASIN MULCH (CY)	STAKING	PLANTING LIMITS MINIMUM DISTANCE (Ft) FROM TRVD WAY	PVMT	FENCE	WALL	PAVED DITCH	EARTH DITCH	ON CENTER (Ft)	REMARKS
A	1		ANEMOPSIS CALIFORNICA	YERBA MANSA	1 GAL	888	12	18	1	-	-	1 Pkt	-	-	-	-	-	-	-	-	-	-	PERENNIAL (6) (8) (11)
	2		ARTEMISIA CALIFORNICA	CALIFORNIA SAGEBRUSH	1 GAL	1659	12	18	1	-	-	1 Pkt	-	0.06	-	-	-	-	-	-	-	8	SHRUB (6)
	3		ARTEMISIA PALMERI	SAN DIEGO SAGEWORT	1 GAL	1526	12	18	1	-	-	1 Pkt	-	-	-	-	-	-	-	-	-	-	PERENNIAL (6) (8)
	4		BACCHARIS SALICIFOLIA	MULE FAT	1 GAL	786	12	18	1	-	-	1 Pkt	-	-	-	-	-	-	-	-	-	6	SHRUB (6)
	5		CYLINDROPUNTIA PROLIFERA	COAST CHOLLA	1 GAL	300	12	18	1	-	-	1 Pkt	-	0.06	-	-	-	-	-	-	-	3	CACTUS (9)
	6		ENCELIA CALIFORNICA	BUSH SUNFLOWER	1 GAL	1244	12	18	1	-	-	1 Pkt	-	0.06	-	-	-	-	-	-	-	8	SHRUB (6)
	7		HETEROMELES ARBUTIFOLIA	TOYON	1 GAL	830	12	18	1	-	-	1 Pkt	-	0.06	-	-	-	-	-	-	-	8	SHRUB (6)
	8		ISOMERIS ARBOREA	BLADDERPOD	1 GAL	830	12	18	1	-	-	1 Pkt	-	0.06	-	-	-	-	-	-	-	8	SHRUB (6)
	9		IVA HAYESIANA	SAN DIEGO MARSH-ELDER	1 GAL	2652	12	18	1	-	-	1 Pkt	-	-	-	-	-	-	-	-	-	-	SHRUB (6)
	10		JUNCUS ACUTUS	SPINY RUSH	1 GAL	2246	12	18	1	-	-	1 Pkt	-	-	-	-	-	-	-	-	-	-	PERENNIAL (6) (8)
	11		LEYMUS CONDENSATUS	GIANT WILD RYE	1 GAL	416	12	18	1	-	-	1 Pkt	-	0.06	-	-	-	-	-	-	-	8	PERENNIAL (6)
	12		MIRABILIS CALIFORNICA	WISHBONE PLANT	1 GAL	416	12	18	1	-	-	1 Pkt	-	0.06	-	-	-	-	-	-	-	8	PERENNIAL (6)
	13		MUHLENBERGIA RIGENS	DEERGRASS	1 GAL	885	12	18	1	-	-	1 Pkt	-	-	-	-	-	-	-	-	-	-	PERENNIAL (6) (8)
	14		PLATANUS RACEMOSA	CALIFORNIA SYCAMORE	1 GAL	629	12	18	1	-	-	1 Pkt	-	-	-	-	-	-	-	-	-	25	TREE (6)
	15		POPULUS FREMONTII	WESTERN COTTONWOOD	1 GAL	631	12	18	1	-	-	1 Pkt	-	-	-	-	-	-	-	-	-	25	TREE (6)
	16		RHUS INTEGRIFOLIA	LEMONADEBERRY	1 GAL	830	12	18	1	-	-	1 Pkt	-	0.06	-	-	-	-	-	-	-	8	SHRUB (6)
	17		ROSA CALIFORNICA	CALIFORNIA ROSE	1 GAL	1324	12	18	1	-	-	1 Pkt	-	-	-	-	-	-	-	-	-	-	SHRUB (6) (8)

APPLICABLE WHEN CIRCLED:

1 - QUANTITIES SHOWN ARE "PER PLANT" UNLESS SHOWN AS SQFT OR SQYD APPLICATION RATES
2 - BASIN MULCH IS INCLUDED WITH MULCH QUANTITIES SHOWN ON PLANTING PLAN
(3) - SUFFICIENT TO RECEIVE ROOT BALL AND AMENDMENTS IF REQUIRED
4 - SEE DETAIL
5 - SEE SPECIAL PROVISIONS
(6) - RANDOMLY MIXED THROUGHOUT ENTIRE DESIGNATED AREA
(7) - RANDOMLY PLANT IN WETLAND AREA, WITHIN 20 FEET OF UPLAND PLANTING
(8) - UNDERSTORY PLANTING COMPONENT FOR THE RIPARIAN TREE PLANTING
(9) - RANDOMLY PLANT IN GROUPS OF 10 THROUGHOUT DESIGNATED AREA
10 - NURSERY CONTAINERS SHALL BE ROSE POT LINER SIZE
(11) - RANDOMLY PLANT IN LOWEST ELEVATIONS WITHIN THE DESIGNATED AREA
(12) - TWO SYMBOL TYPES SHOWN FOR SOME PLANTS

NOTES:

UNDERLINED PORTIONS OF BOTANICAL NAME INDICATE ABBREVIATIONS USED ON PLANTING PLANS.

SEE SHEET PL-2 FOR LEGEND.

PLANT LIST
PL-1

REVISED BY	DATE REVISED
RICH MALLEN	MIKE CONNELLY

CALCULATED-DESIGNED BY: SENIOR ENVIRONMENTAL PLANNER — BRUCE APRIL
CHECKED BY

STATE OF CALIFORNIA - DEPARTMENT OF TRANSPORTATION
Caltrans®
ENVIRONMENTAL

LAST REVISION 05-20-11 | DATE PLOTTED => 26-JUL-2011 | TIME PLOTTED => 09:48

Dist	COUNTY	ROUTE	POST MILES TOTAL PROJECT	SHEET No.	TOTAL SHEETS
11	SD	56	3.5	12	41

LICENSED LANDSCAPE ARCHITECT

7-25-11
PLANS APPROVAL DATE

LICENSED LANDSCAPE ARCHITECT — EDWARD E. THURSTON No. 3018 — Expiration Date 03-31-12 — Registered Owner's Date 05-19-11 — STATE OF CALIFORNIA

THE STATE OF CALIFORNIA OR ITS OFFICERS OR AGENTS SHALL NOT BE RESPONSIBLE FOR THE ACCURACY OR COMPLETENESS OF SCANNED COPIES OF THIS PLAN SHEET.

PLANT LIST AND PLANTING SPECIFICATIONS

PLANT GROUP	PLANT No.	SYMBOL (12)	BOTANICAL NAME	COMMON NAME	SIZE	QUANTITY EACH	HOLE SIZE (INCH) Dia	HOLE SIZE (INCH) DEPTH	BASIN TYPE	IRON SULFATE (1)	SOIL AMEND (1)	COMMERCIAL FERTILIZER (1) PLANTING	COMMERCIAL FERTILIZER (1) PLT ESTB	BASIN MULCH (CY)	STAKING	PLANTING LIMITS MINIMUM DISTANCE (Ft) FROM TRVD WAY	PVMT	FENCE	WALL	PAVED DITCH	EARTH DITCH	ON CENTER (Ft)	REMARKS
A	18		RUBUS URSINUS	CALIFORNIA BLACKBERRY	1 GAL	885	12	18	1	-	-	1 Pkt	-	-	-	-	-	-	-	-	-	-	PERENNIAL (6) (8)
	19		SALIX EXIGUA	SANDBAR WILLOW	1 GAL	2357	12	18	1	-	-	1 Pkt	-	-	-	-	-	-	-	-	-	6	TREE (6)
	20		SALIX GOODDINGII	BLACK WILLOW	1 GAL	3152	12	18	1	-	-	1 Pkt	-	-	-	-	-	-	-	-	-	6	TREE (6)
	21		SALIX LAEVIGATA	RED WILLOW	1 GAL	1572	12	18	1	-	-	1 Pkt	-	-	-	-	-	-	-	-	-	6	TREE (6)
	22		SALIX LASIOLEPIS	ARROYO WILLOW	1 GAL	3958	12	18	1	-	-	1 Pkt	-	-	-	-	-	-	-	-	-	6	TREE (6)
	23		SALVIA APIANA	WHITE SAGE	1 GAL	830	12	18	1	-	-	1 Pkt	-	0.06	-	-	-	-	-	-	-	-	SHRUB (6)
	24		SALVIA MELLIFERA	BLACK SAGE	1 GAL	830	12	18	1	-	-	1 Pkt	-	0.06	-	-	-	-	-	-	-	-	SHRUB (6)
	25		SAMBUCUS MEXICANA	MEXICAN ELDERBERRY	1 GAL	416	12	18	1	-	-	1 Pkt	-	0.06	-	-	-	-	-	-	-	-	TREE (6)
	26		SAMBUCUS MEXICANA	MEXICAN ELDERBERRY	1 GAL	1572	12	18	1	-	-	1 Pkt	-	-	-	-	-	-	-	-	-	-	TREE (6)
B	27		PLATANUS RACEMOSA	CALIFORNIA SYCAMORE	5 GAL	629	24	30	1	-	-	3 Pkt	-	-	-	-	-	-	-	-	-	25	TREE (6)
	28		POPULUS FREMONTII	WESTERN COTTONWOOD	5 GAL	472	24	30	1	-	-	3 Pkt	-	-	-	-	-	-	-	-	-	25	TREE (6)
	29		QUERCUS AGRIFOLIA	COAST LIVE OAK	5 GAL	25	24	30	1	-	-	3 Pkt	-	-	-	-	-	-	-	-	-	50	TREE (6) (7)
M	30		NASSELLA PULCHRA	PURPLE NEEDLEGRASS	LINER	10,000	(3)	(3)	-	-	-	-	-	-	-	-	-	-	-	-	-	-	PERENNIAL (6)
	31		DISTICHLIS SPICATA	SALTGRASS	LINER	6,400	(3)	(3)	-	-	-	-	-	-	-	-	-	-	-	-	-	-	PERENNIAL (6)

LEGEND

- EROSION CONTROL (DRY SEED)/COMPOST(INCORPORATE)/HUMATE
- EROSION CONTROL (PSFM)(TYPE 1)
- EROSION CONTROL (PSFM)(TYPE 2)
- ESA — ENVIRONMENTALLY SENSITIVE AREA
- LUA — LIMITED USE AREA
- TUBULAR STEEL GATE
- FENCE (TYPE BW, 4-STRAND, METAL POST)
- HABITAT RESTORATION SIGN

PLANT LIST
PL-2

REVISED BY | DATE REVISED
RICH MALLEN | MIKE CONNELLY
CALCULATED-DESIGNED BY | CHECKED BY
SENIOR ENVIRONMENTAL PLANNER | BRUCE APRIL
STATE OF CALIFORNIA - DEPARTMENT OF TRANSPORTATION
Caltrans® ENVIRONMENTAL

LAST REVISION 05-23-11 | DATE PLOTTED => 26-JUL-2011 | TIME PLOTTED => 09:48

Dist	COUNTY	ROUTE	POST MILES TOTAL PROJECT	SHEET No.	TOTAL SHEETS
11	SD	56	3.5	13	41

LICENSED LANDSCAPE ARCHITECT

7-25-11
PLANS APPROVAL DATE

THE STATE OF CALIFORNIA OR ITS OFFICERS OR AGENTS SHALL NOT BE RESPONSIBLE FOR THE ACCURACY OR COMPLETENESS OF SCANNED COPIES OF THIS PLAN SHEET.

LICENSED LANDSCAPE ARCHITECT
EDWARD E. THURSTON No. 3818
Signature
03-31-12
Renewal Date
05-19-11
Date
STATE OF CALIFORNIA

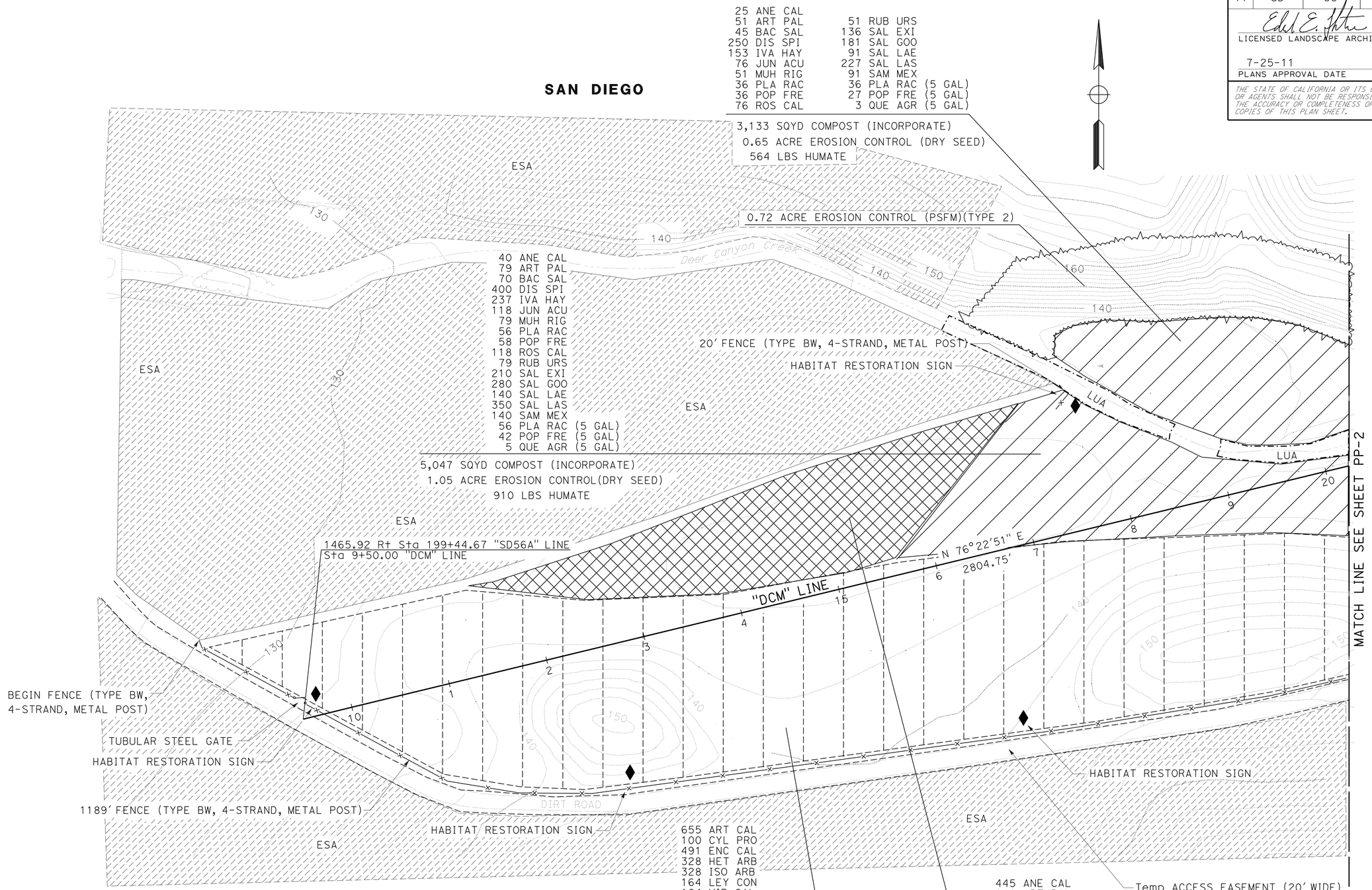

THIS PLAN ACCURATE FOR PLANTING WORK ONLY

PLANTING PLAN

SCALE: 1" = 50'

PP-1

STATE OF CALIFORNIA - DEPARTMENT OF TRANSPORTATION
Caltrans
ENVIRONMENTAL

SENIOR ENVIRONMENTAL PLANNER: BRUCE APRIL
CALCULATED-DESIGNED BY: RICH MALLEN
CHECKED BY: MIKE CONNELLY
REVISED BY
DATE REVISED

LAST REVISION 05-23-11
DATE PLOTTED => 26-JUL-2011
TIME PLOTTED => 09:47

Dist	COUNTY	ROUTE	POST MILES TOTAL PROJECT	SHEET No.	TOTAL SHEETS
11	SD	56	3.5	14	41

LICENSED LANDSCAPE ARCHITECT

7-25-11
PLANS APPROVAL DATE

LICENSED LANDSCAPE ARCHITECT
EDWARD E. THURSTON No. 3018
03-31-12
Renewal Date
05-19-11
Date
STATE OF CALIFORNIA

THE STATE OF CALIFORNIA OR ITS OFFICERS OR AGENTS SHALL NOT BE RESPONSIBLE FOR THE ACCURACY OR COMPLETENESS OF SCANNED COPIES OF THIS PLAN SHEET.

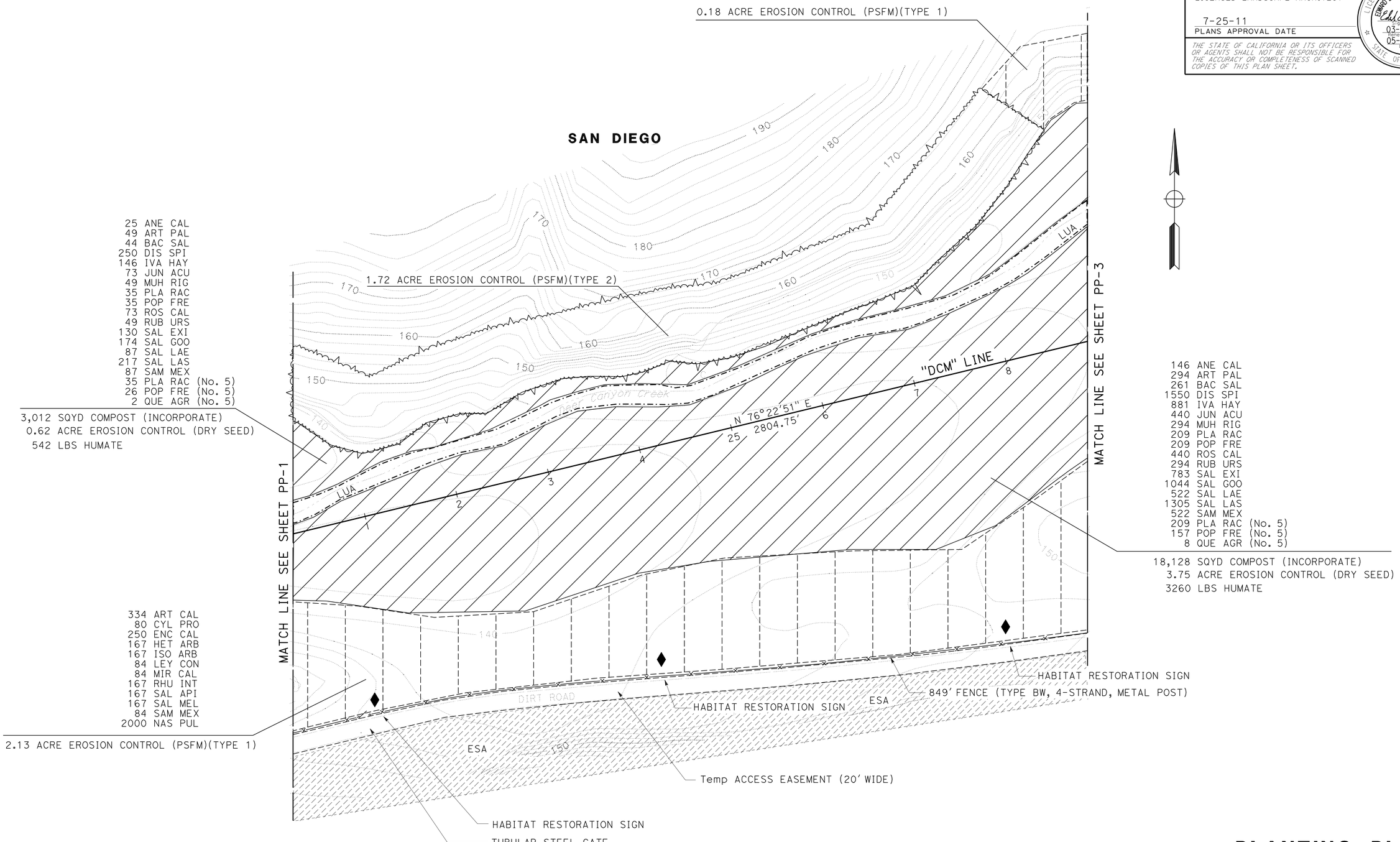

PLANTING PLAN

SCALE: 1" = 50'

PP-2

THIS PLAN ACCURATE FOR PLANTING WORK ONLY

STATE OF CALIFORNIA - DEPARTMENT OF TRANSPORTATION
Caltrans
ENVIRONMENTAL

SENIOR ENVIRONMENTAL PLANNER: BRUCE APRIL
CALCULATED-DESIGNED BY: RICH MALLEN
CHECKED BY: MIKE CONNELLY
REVISED BY
DATE REVISED

LAST REVISION 05-23-11
DATE PLOTTED => 26-JUL-2011
TIME PLOTTED => 09:47

Dist	COUNTY	ROUTE	POST MILES TOTAL PROJECT	SHEET No.	TOTAL SHEETS
11	SD	56	3.5	15	41

LICENSED LANDSCAPE ARCHITECT

7-25-11
PLANS APPROVAL DATE

THE STATE OF CALIFORNIA OR ITS OFFICERS OR AGENTS SHALL NOT BE RESPONSIBLE FOR THE ACCURACY OR COMPLETENESS OF SCANNED COPIES OF THIS PLAN SHEET.

LICENSED LANDSCAPE ARCHITECT
EDWARD E. THURSTON No. 3818
Signature
03-31-12
Renewal Date
05-19-11
Date
STATE OF CALIFORNIA

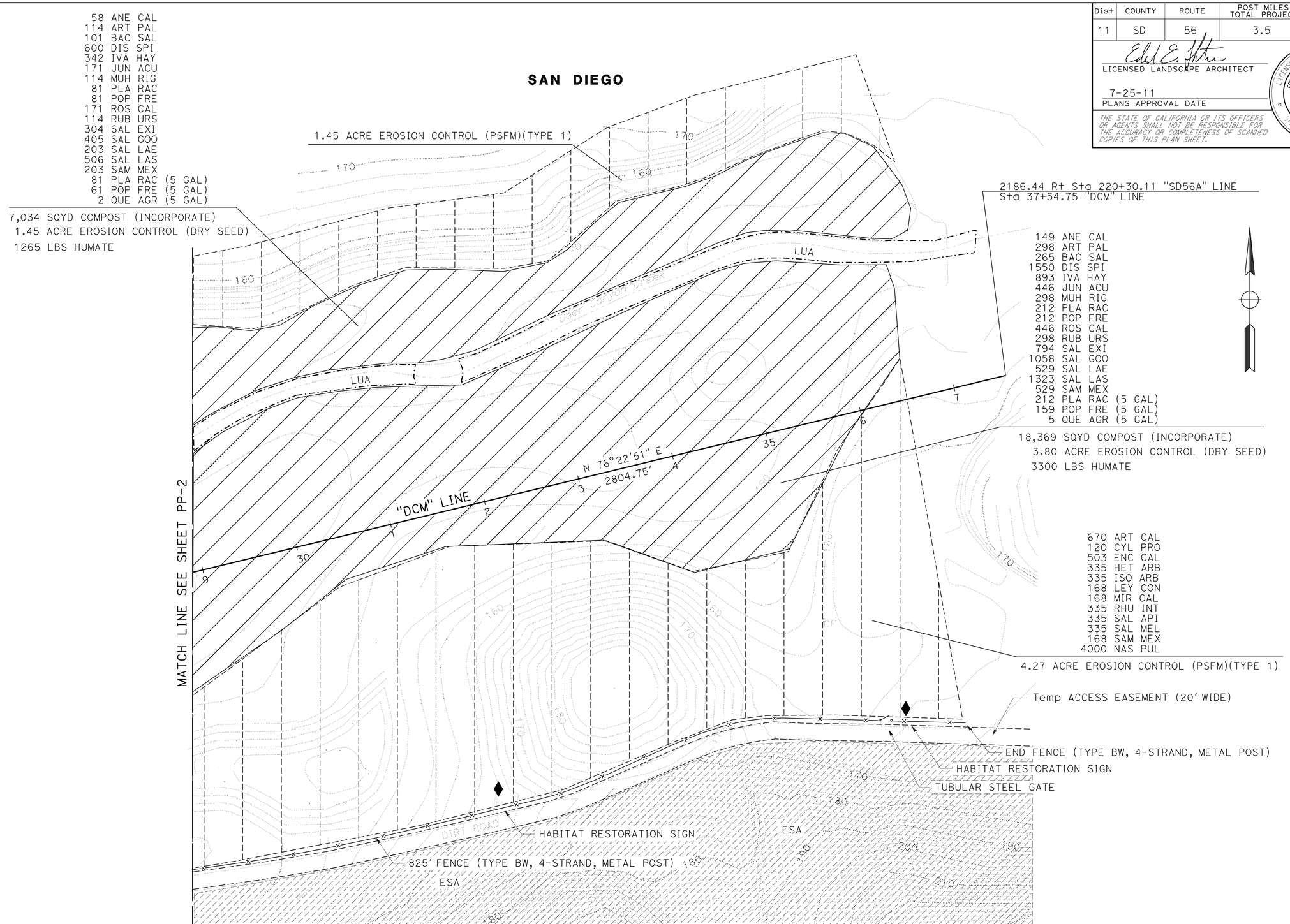

PLANTING PLAN

SCALE: 1" = 50'

PP-3

THIS PLAN ACCURATE FOR PLANTING WORK ONLY

STATE OF CALIFORNIA - DEPARTMENT OF TRANSPORTATION
Caltrans ENVIRONMENTAL

SENIOR ENVIRONMENTAL PLANNER: BRUCE APRIL
CALCULATED-DESIGNED BY: RICH MALLEN
CHECKED BY: MIKE CONNELLY
REVISED BY
DATE REVISED

LAST REVISION 05-23-11
DATE PLOTTED => 26-JUL-2011
TIME PLOTTED => 09:47

Dist	COUNTY	ROUTE	POST MILES TOTAL PROJECT	SHEET No.	TOTAL SHEETS
11	SD	56	3.5	16	41

LICENSED LANDSCAPE ARCHITECT

7-25-11
PLANS APPROVAL DATE

LICENSED LANDSCAPE ARCHITECT
EDWARD E. THURSTON No. 3018
Edward E. Thurston
03-31-12
Renewal Date
05-19-11
Date
STATE OF CALIFORNIA

THE STATE OF CALIFORNIA OR ITS OFFICERS OR AGENTS SHALL NOT BE RESPONSIBLE FOR THE ACCURACY OR COMPLETENESS OF SCANNED COPIES OF THIS PLAN SHEET.

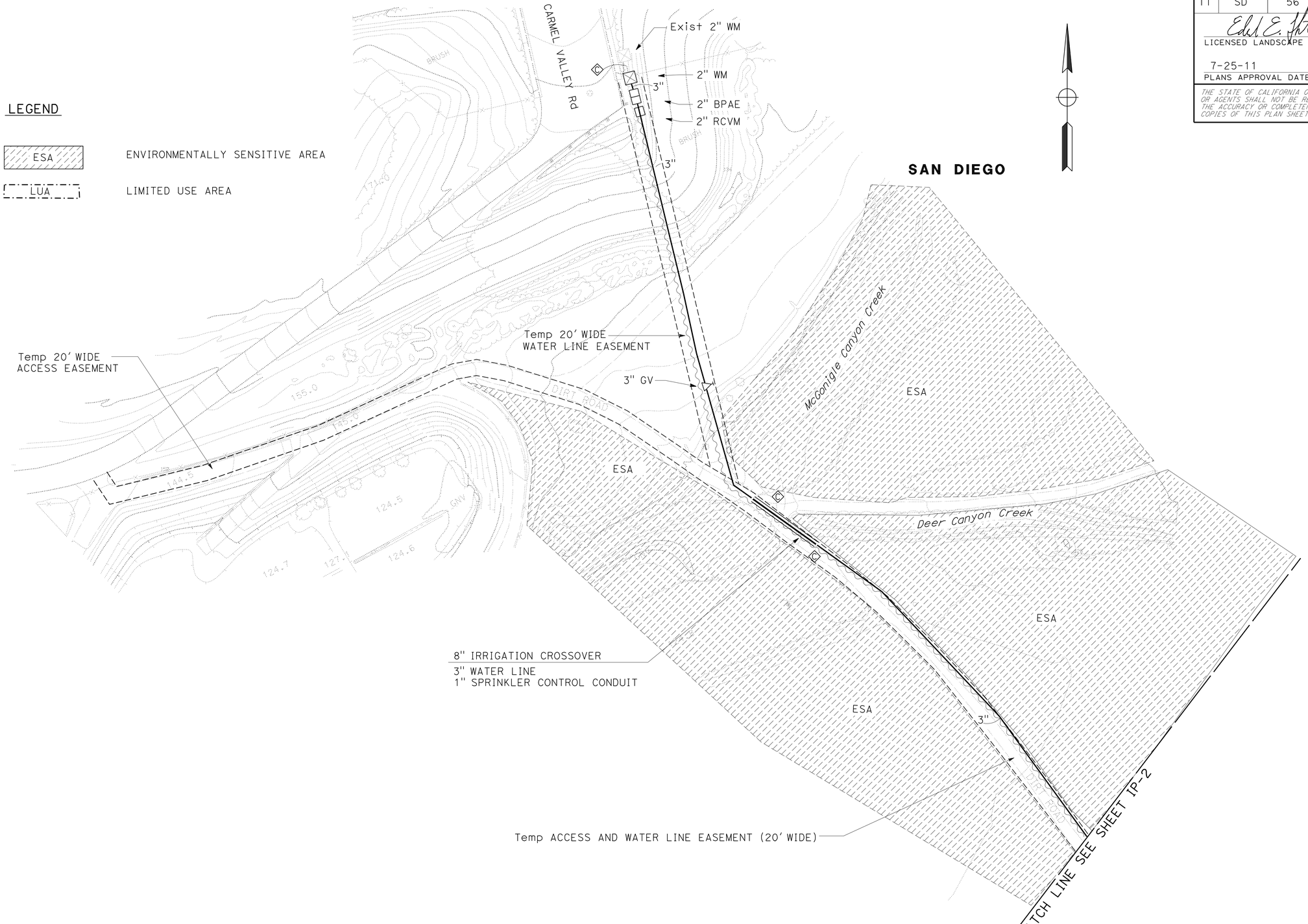

IRRIGATION PLAN

SCALE: 1" = 50'

IP-1

THIS PLAN ACCURATE FOR IRRIGATION WORK ONLY

STATE OF CALIFORNIA - DEPARTMENT OF TRANSPORTATION
Caltrans
ENVIRONMENTAL

SENIOR ENVIRONMENTAL PLANNER: BRUCE APRIL
CALCULATED-DESIGNED BY: RICH MALLEN
CHECKED BY: MIKE CONNELLY
REVISED BY
DATE REVISED

LAST REVISION 05-23-11
DATE PLOTTED => 26-JUL-2011
TIME PLOTTED => 09:47

Dist	COUNTY	ROUTE	POST MILES TOTAL PROJECT	SHEET No.	TOTAL SHEETS
11	SD	56	3.5	17	41

LICENSED LANDSCAPE ARCHITECT

7-25-11
PLANS APPROVAL DATE

THE STATE OF CALIFORNIA OR ITS OFFICERS OR AGENTS SHALL NOT BE RESPONSIBLE FOR THE ACCURACY OR COMPLETENESS OF SCANNED COPIES OF THIS PLAN SHEET.

LICENSED LANDSCAPE ARCHITECT
EDWARD E. THURSTON No. 3818
Signature
03-31-12
Renewal Date
05-19-11
Date
STATE OF CALIFORNIA

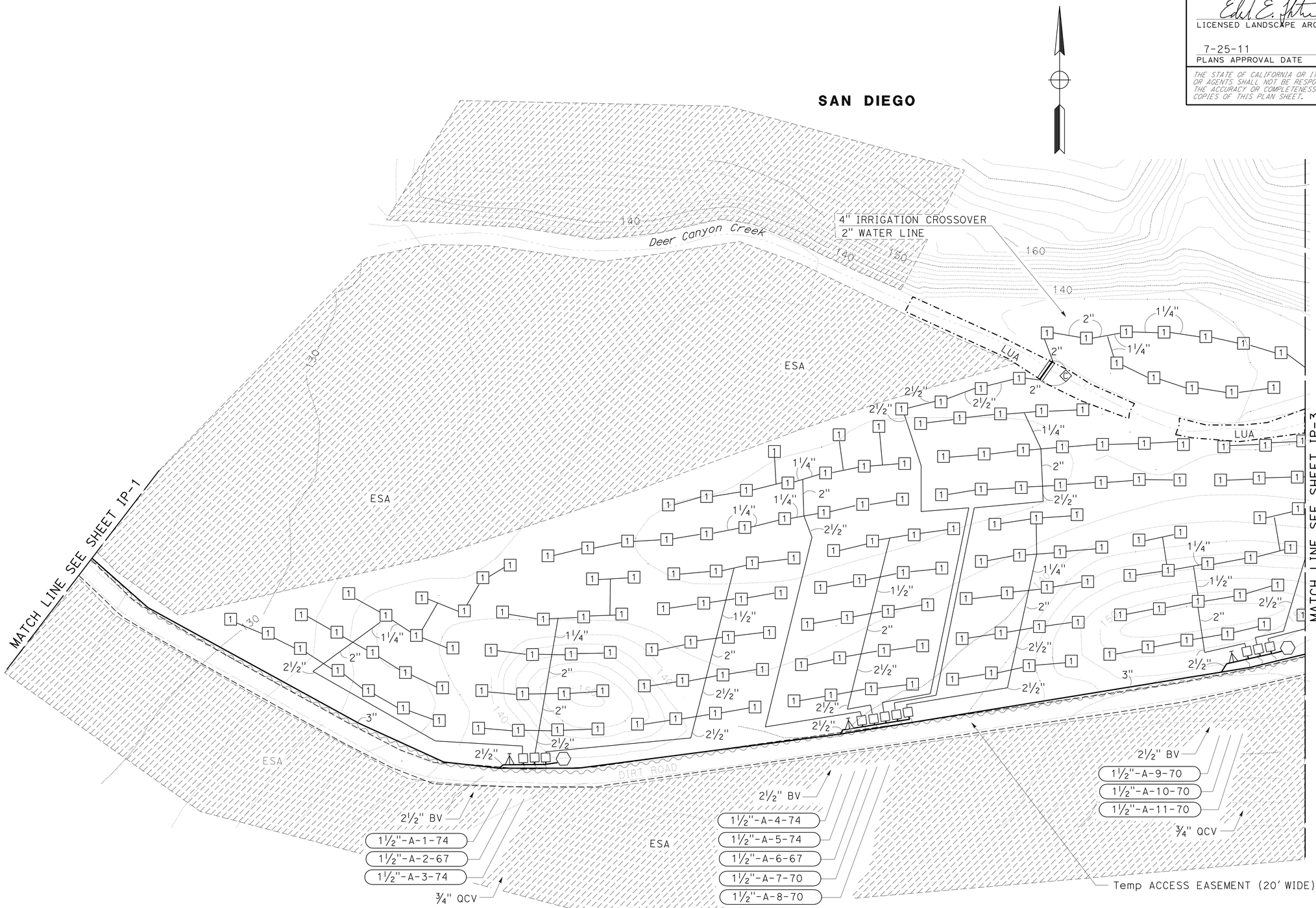

IRRIGATION PLAN

SCALE: 1" = 50'

IP-2

THIS PLAN ACCURATE FOR IRRIGATION WORK ONLY

STATE OF CALIFORNIA - DEPARTMENT OF TRANSPORTATION
Caltrans
ENVIRONMENTAL

SENIOR ENVIRONMENTAL PLANNER: BRUCE APRIL
CALCULATED-DESIGNED BY: RICH MALLEN
CHECKED BY: MIKE CONNELLY
REVISED BY
DATE REVISED

LAST REVISION 05-23-11
DATE PLOTTED => 26-JUL-2011
TIME PLOTTED => 09:47

Dist	COUNTY	ROUTE	POST MILES TOTAL PROJECT	SHEET No.	TOTAL SHEETS
11	SD	56	3.5	18	41

LICENSED LANDSCAPE ARCHITECT

7-25-11
PLANS APPROVAL DATE

LICENSED LANDSCAPE ARCHITECT
EDWARD E. THURSTON No. 3018
03-31-12
EXPIRATION DATE
05-19-11
DATE
STATE OF CALIFORNIA

THE STATE OF CALIFORNIA OR ITS OFFICERS OR AGENTS SHALL NOT BE RESPONSIBLE FOR THE ACCURACY OR COMPLETENESS OF SCANNED COPIES OF THIS PLAN SHEET.

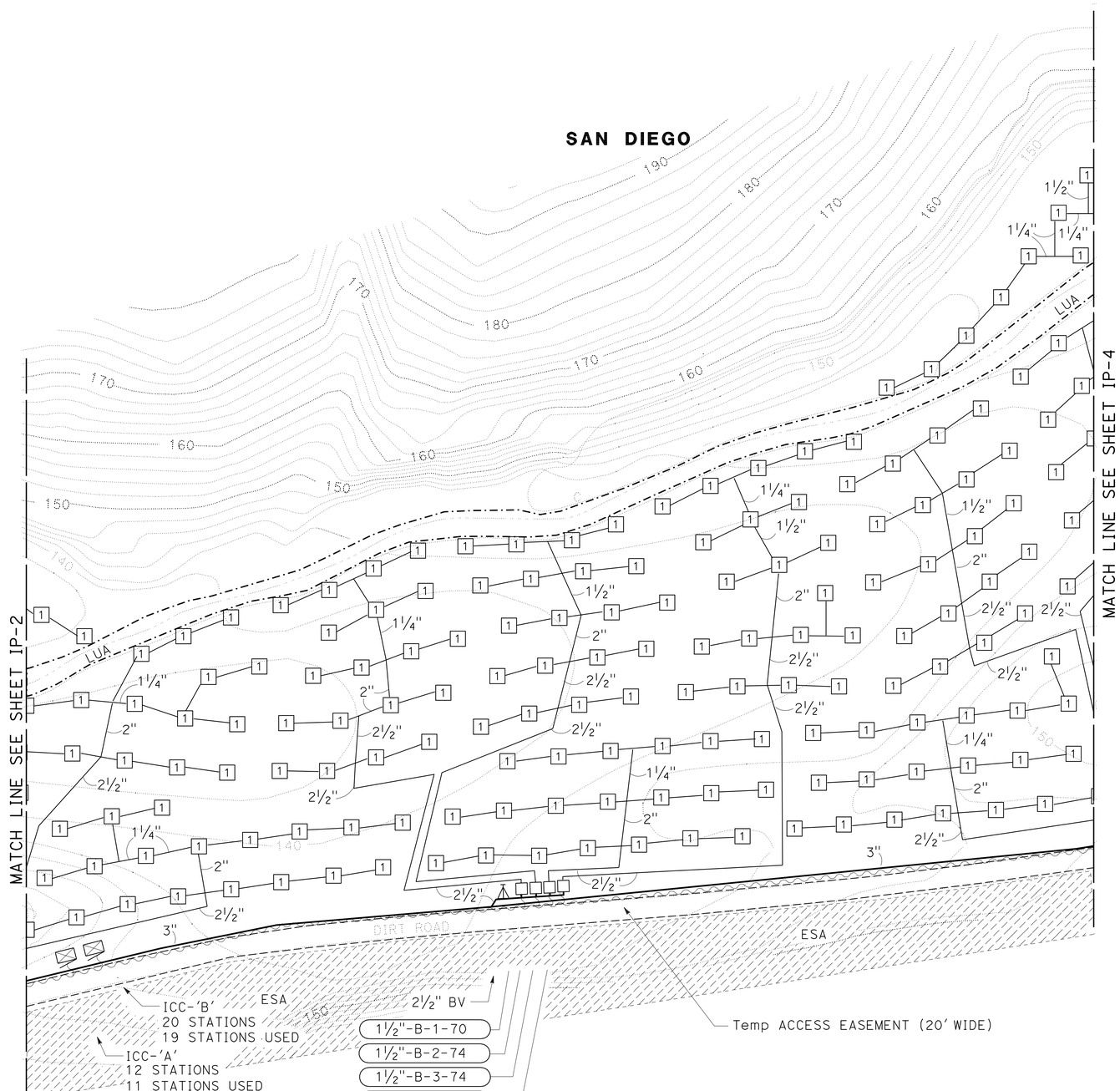

THIS PLAN ACCURATE FOR IRRIGATION WORK ONLY

IRRIGATION PLAN

SCALE: 1" = 50'

IP-3

STATE OF CALIFORNIA - DEPARTMENT OF TRANSPORTATION
Caltrans®
ENVIRONMENTAL

SENIOR ENVIRONMENTAL PLANNER: BRUCE APRIL

CALCULATED-DESIGNED BY: RICH MALLEN
CHECKED BY: MIKE CONNELLY

REVISED BY
DATE REVISED

LAST REVISION 05-23-11
DATE PLOTTED => 26-JUL-2011
TIME PLOTTED => 09:48

Dist	COUNTY	ROUTE	POST MILES TOTAL PROJECT	SHEET No.	TOTAL SHEETS
11	SD	56	3.5	19	41

LICENSED LANDSCAPE ARCHITECT

7-25-11
PLANS APPROVAL DATE

LICENSED LANDSCAPE ARCHITECT
EDWARD E. THURSTON No. 3018
03-31-12
EXPIRATION DATE
05-19-11
DATE
STATE OF CALIFORNIA

THE STATE OF CALIFORNIA OR ITS OFFICERS OR AGENTS SHALL NOT BE RESPONSIBLE FOR THE ACCURACY OR COMPLETENESS OF SCANNED COPIES OF THIS PLAN SHEET.

THIS PLAN ACCURATE FOR IRRIGATION WORK ONLY

IRRIGATION PLAN

SCALE: 1" = 50'

IP-4

STATE OF CALIFORNIA - DEPARTMENT OF TRANSPORTATION
Caltrans®
ENVIRONMENTAL

SENIOR ENVIRONMENTAL PLANNER: BRUCE APRIL
CALCULATED-DESIGNED BY: MIKE CONNELLY
CHECKED BY: RICH MALLEN
REVISED BY
DATE REVISED

LAST REVISION 05-23-11
DATE PLOTTED => 26-JUL-2011
TIME PLOTTED => 09:48

Dist	COUNTY	ROUTE	POST MILES TOTAL PROJECT	SHEET No.	TOTAL SHEETS
11	SD	56	3.5	20	41

LICENSED LANDSCAPE ARCHITECT

7-25-11
PLANS APPROVAL DATE

LICENSED LANDSCAPE ARCHITECT
EDWARD E. THURSTON No. 3018
03-31-12 Expiration Date
05-19-11 Date
STATE OF CALIFORNIA

THE STATE OF CALIFORNIA OR ITS OFFICERS OR AGENTS SHALL NOT BE RESPONSIBLE FOR THE ACCURACY OR COMPLETENESS OF SCANNED COPIES OF THIS PLAN SHEET.

SPRINKLER SCHEDULE

SYMBOL	TYPE	DESCRIPTION	SPRAY PATTERN	OPERATING PRESSURE (PSI)	PRESSURE COMPENSATING	PLUS/MINUS 5% ② DISCHARGE: GALLONS PER MINUTE (GPM)	GALLONS PER HOUR (GPH)	RADIUS (Ft)	WIDTH x LENGTH (Ft)	MATERIAL	INLET CONNECTION (NPT INCH)	POSITIVE-LOCKING Adj ARC STOP	BACKSPLASH PREVENTER	DIFFUSER PIN	DISTANCE CONTROL FLAP	ADJ DISCHARGE	RISER: TYPE	MATERIAL: PLASTIC	GALVANIZED	SIZE (IPS INCH)	HEIGHT (INCH)	FLOW SHUTOFF DEVICE	SWING JOINT (TYPE)	RISER SUPPORT	SPRINKLER PROTECTOR (TYPE)	REMARKS
[1]	A-1	SIDE IMPACT	F	45	-	3.7	-	40	-	PL	½	-	-	-	-	-	1	X	-	½	48	-	1	⑥	-	

X IN BOX DENOTES REQUIREMENT

APPLICABLE WHEN CIRCLED BELOW:

1 - SEE SPECIAL PROVISIONS.
2 - IF A PRESSURE COMPENSATING DEVICE IS SPECIFIED, THE DISCHARGE AND RADII SHOWN REFLECT ITS USE.
3 - ARC STOP SHALL BE FITTED WITH A NUT AND BOLT.
4 - VINYL-COATED CAST IRON HOUSING.
5 - SWING JOINTS REQUIRED ADJACENT TO SHOULDERS, CURBS, SIDEWALKS, AND DIKES.
⑥ - SEE DETAIL.

ABBREVIATIONS:

F — FULL CIRCLE
P — PART CIRCLE
F/P — FULL/PART CIRCLE
Q — QUARTER CIRCLE
T — THIRD CIRCLE
H — HALF CIRCLE
TT — TWO THIRD CIRCLE
TQ — THREE QUARTER CIRCLE
CST — CENTER STRIP
SST — SIDE STRIP
EST — END STRIP
Ft — FEET/FOOT
GPM — GALLONS PER MINUTE
GPH — GALLONS PER HOUR
Adj — ADJUSTABLE
PL — PLASTIC
B/B — BRASS/BRONZE
B/PL — BRASS/PLASTIC
B/B/PL — BRASS/BRONZE/PLASTIC
NPT — NATIONAL PIPE THREAD
IPS — IRON PIPE SIZE
PSI — POUNDS PER SQUARE INCH

NOTE:
ALL LATERAL PIPE NOT LABELED SHALL BE 1".

HUMATE

SHEET	LB
PP-1	2,311
PP-2	3,802
PP-3	4,565
-	-
TOTAL	10,678

FENCE (TYPE BW, 4-STRAND, METAL POST)

SHEET	LF
PP-1	1,209
PP-2	849
PP-3	825
-	-
TOTAL	2,883

COMPOST (INCORPORATE)

SHEET	SQYD	CY (N)
PP-1	12,838	713
PP-2	21,140	1,167
PP-3	25,403	1,410
-	-	-
TOTAL	59,381	3,290

EARTHWORK

SHEET	ROADWAY EXCAVATION	EMBANKMENT
	CY	CY (N)
G-1	9,100	13,400
G-2	15,700	8,800
G-3	23,000	25,600
TOTAL	47,800	47,800

Temp CONSTRUCTION ENTRANCE

SHEET	(TYPE 2)
	EA
EC-1	1
TOTAL	1

Temp CHECK DAM

SHEET	LF
EC-1	160
-	-
TOTAL	160

FIBER ROLLS

SHEET	LF
EC-1	220
EC-2	1,678
EC-3	2,254
EC-4	2,501
TOTAL	6,653

HABITAT RESTORATION SIGN

SHEET	EA
PP-1	4
PP-2	3
PP-3	2
-	-
TOTAL	9

TUBULAR STEEL GATE

SHEET	EA
PP-1	1
PP-2	1
PP-3	1
-	-
TOTAL	3

EROSION CONTROL (DRY SEED)

SHEET	ACRE
PP-1	2.66
PP-2	4.37
PP-3	5.25
-	-
TOTAL	12.28

EROSION CONTROL (PSFM)

SHEET	(TYPE 1)	(TYPE 2)
	ACRE	ACRE
EC-1	0.10	-
PP-1	4.18	0.72
PP-2	2.31	1.72
PP-3	5.72	-
SUBTOTAL	12.31	2.44
TOTAL	14.75	

(N) - NOT A SEPARATE PAY ITEM, FOR INFORMATION ONLY.

IRRIGATION CROSSOVERS

LOCATION	CONDUIT TYPE ① THICKNESS 0.237"	0.250"	(N) WATER LINE CROSSOVER SIZE (INCH)	(N) SPRINKLER CONTROL CROSSOVER SIZE (INCH)
SHEET	SIZE (INCH) 4	8		
	LENGTH (LF)			
IP-1	-	80	3	1
IP-2	30	-	2	-
IP-4	-	30	TWO 2½	-
TOTAL	30	110		

(N) - NOT A SEPARATE PAY ITEM FOR INFORMATION ONLY

CONDUIT TYPE:
(APPLICABLE WHEN CIRCLED BELOW AND SHOWN UNDER THE 'CONDUIT TYPE' COLUMN HEADING)
① WELDED STEEL PIPE CONDUIT

LANDSCAPE DETAILS

NO SCALE

LD-1

RICH MALLEN — REVISED BY
MIKE CONNELLY — DATE REVISED
CALCULATED-DESIGNED BY
CHECKED BY
BRUCE APRIL — SENIOR ENVIRONMENTAL PLANNER
STATE OF CALIFORNIA - DEPARTMENT OF TRANSPORTATION
ENVIRONMENTAL
Caltrans

LAST REVISION 05-23-11
DATE PLOTTED => 26-JUL-2011
TIME PLOTTED => 09:48

Dist	COUNTY	ROUTE	POST MILES TOTAL PROJECT	SHEET No.	TOTAL SHEETS
11	SD	56	3.5	21	41

LICENSED LANDSCAPE ARCHITECT

7-25-11
PLANS APPROVAL DATE

THE STATE OF CALIFORNIA OR ITS OFFICERS OR AGENTS SHALL NOT BE RESPONSIBLE FOR THE ACCURACY OR COMPLETENESS OF SCANNED COPIES OF THIS PLAN SHEET.

LICENSED LANDSCAPE ARCHITECT
EDWARD E. THURSTON No. 3818
Signature
03-31-12
Renewal Date
05-19-11
Date
STATE OF CALIFORNIA

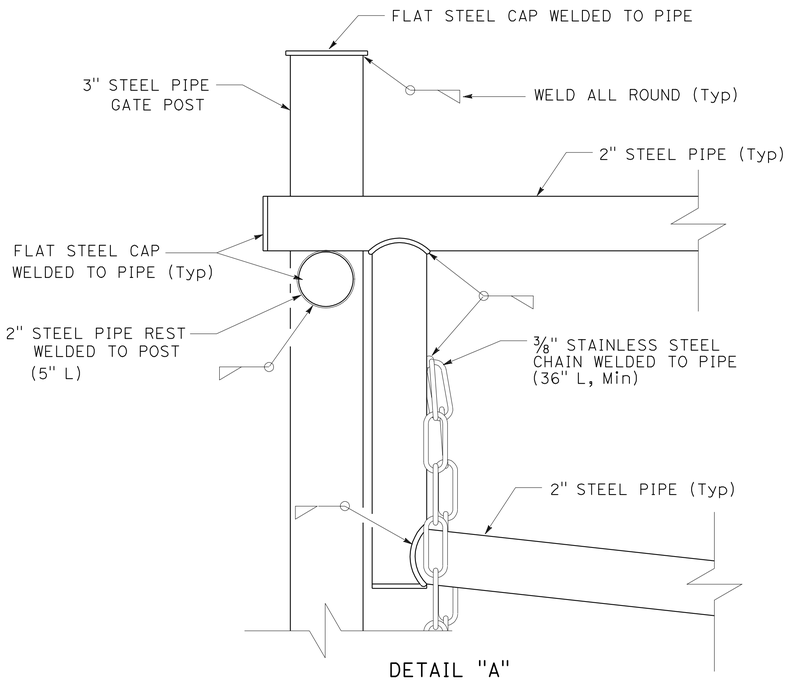

DETAIL "A"

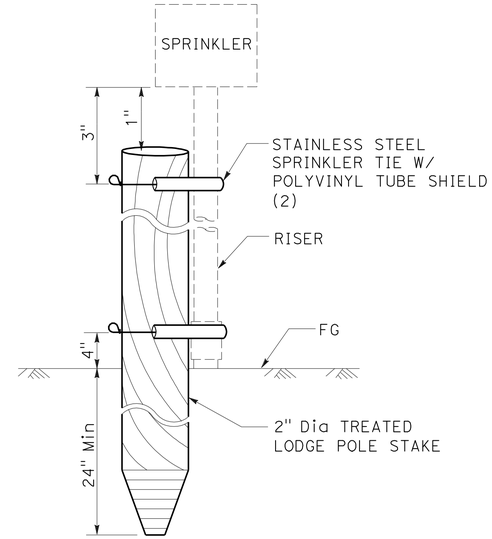

ELEVATION

RISER SUPPORT

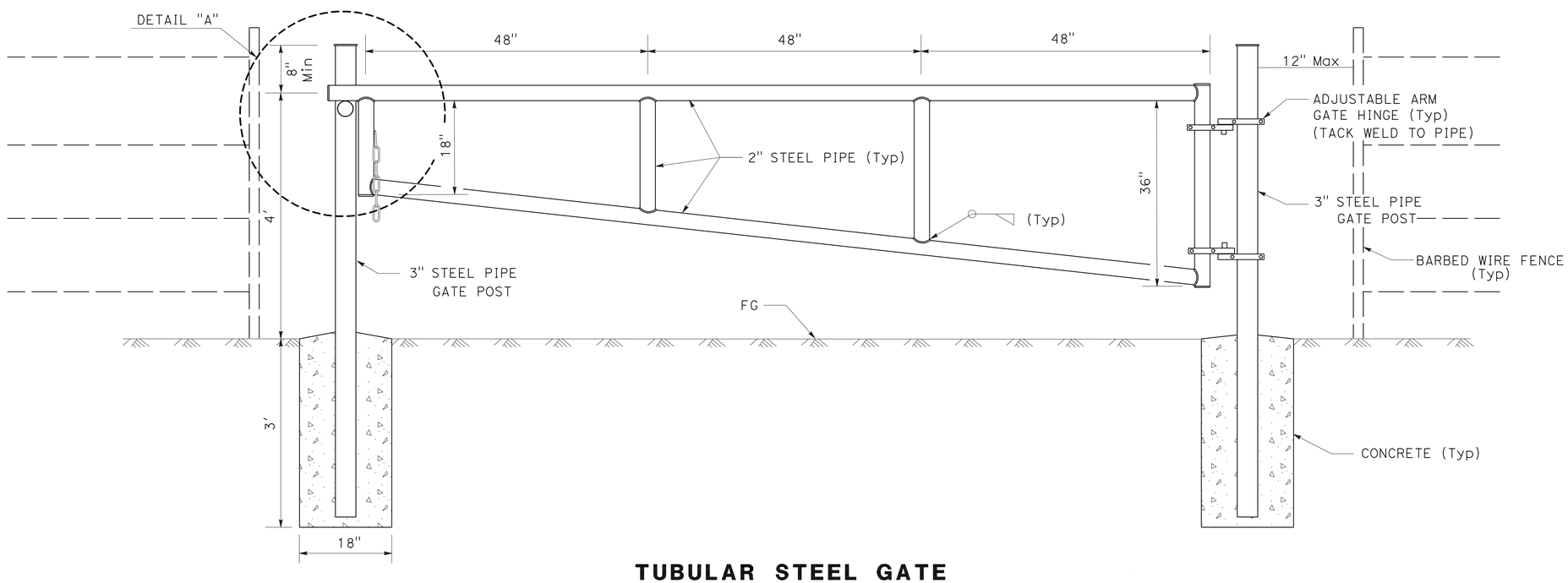

TUBULAR STEEL GATE

LANDSCAPE DETAILS

NO SCALE

LD-2

STATE OF CALIFORNIA - DEPARTMENT OF TRANSPORTATION
Caltrans® ENVIRONMENTAL

SENIOR ENVIRONMENTAL PLANNER: BRUCE APRIL
CALCULATED-DESIGNED BY: RICH MALLEN
CHECKED BY: MIKE CONNELLY
REVISED BY
DATE REVISED

LAST REVISION 05-23-11
DATE PLOTTED => 26-JUL-2011
TIME PLOTTED => 10:36

Dist	COUNTY	ROUTE	POST MILES TOTAL PROJECT	SHEET No.	TOTAL SHEETS
11	SD	56	3.5	22	41

LICENSED LANDSCAPE ARCHITECT

7-25-11
PLANS APPROVAL DATE

LICENSED LANDSCAPE ARCHITECT
EDWARD E. THURSTON No. 3018
Expiration Date 03-31-12
Renewal Date 05-19-11
Date
STATE OF CALIFORNIA

THE STATE OF CALIFORNIA OR ITS OFFICERS OR AGENTS SHALL NOT BE RESPONSIBLE FOR THE ACCURACY OR COMPLETENESS OF SCANNED COPIES OF THIS PLAN SHEET.

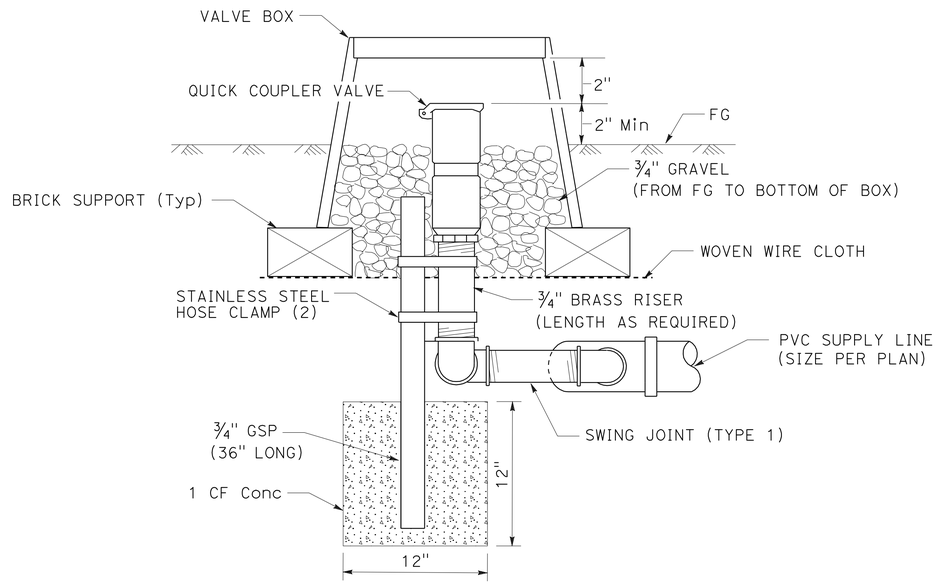

QUICK COUPLER VALVE

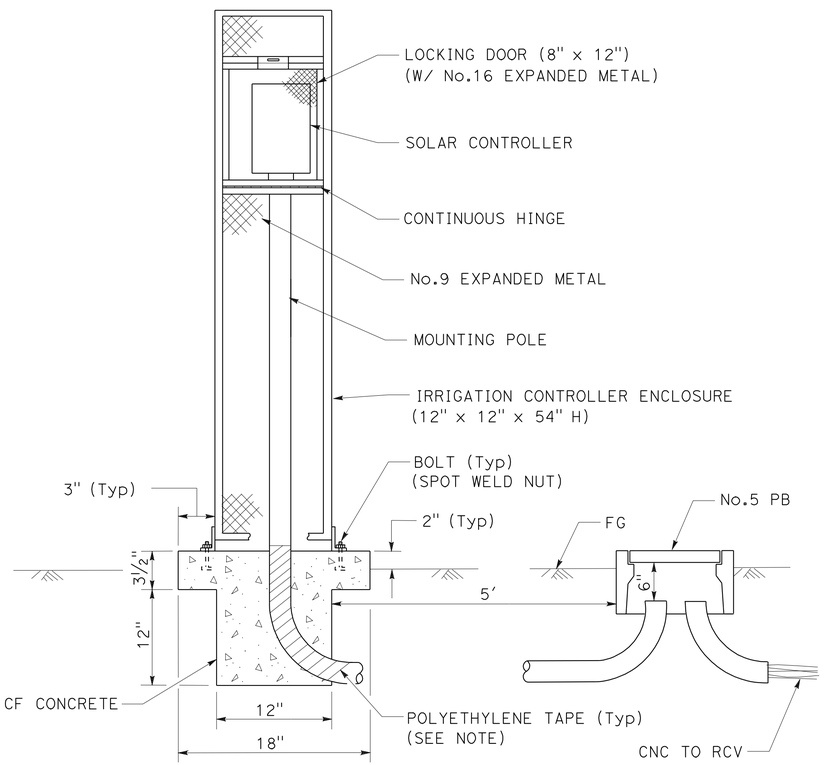

NOTE:

ALL METAL IN CONTACT WITH SOIL AND PCC SHALL BE POLYETHYLENE WRAPPED USING 2" WIDE PLASTIC BACKED ADHESIVE TAPE, 20 MIL THICK WITH ½" OVERLAP.

SOLAR IRRIGATION CONTROLLER (IN ENCLOSURE)

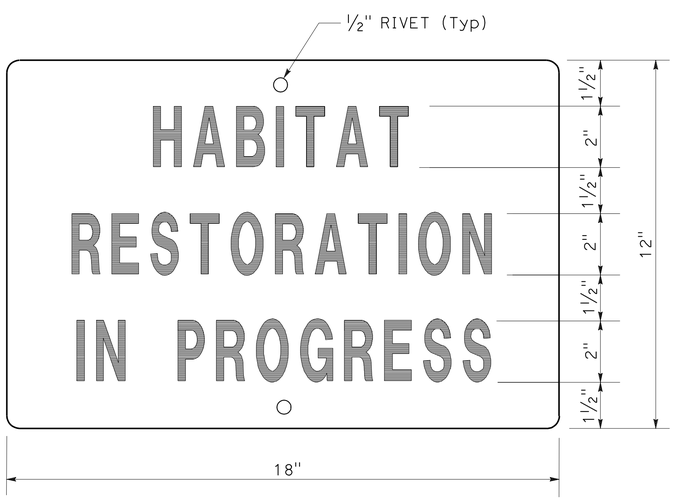

HABITAT RESTORATION SIGN

NOTE:

BLACK LETTERS ON WHITE BACKGROUND.

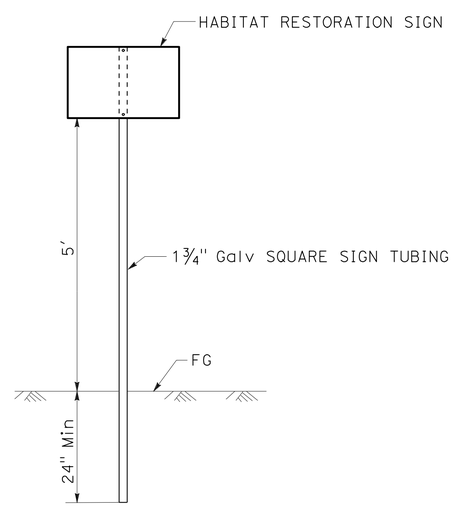

HABITAT RESTORATION SIGN

LANDSCAPE DETAILS

NO SCALE

LD-3

STATE OF CALIFORNIA - DEPARTMENT OF TRANSPORTATION
ENVIRONMENTAL

SENIOR ENVIRONMENTAL PLANNER: BRUCE APRIL

CALCULATED-DESIGNED BY: RICH MALLEN
CHECKED BY: MIKE CONNELLY
REVISED BY
DATE REVISED

LAST REVISION 05-23-11
DATE PLOTTED => 26-JUL-2011
TIME PLOTTED => 10:36

Dist	COUNTY	ROUTE	POST MILES TOTAL PROJECT	SHEET No.	TOTAL SHEETS
11	SD	56	3.5	23	41

LICENSED LANDSCAPE ARCHITECT

7-25-11
PLANS APPROVAL DATE

EDWARD E. THURSTON No. 3018 — LICENSED LANDSCAPE ARCHITECT — STATE OF CALIFORNIA
Expiration Date 03-31-12
Renewal Date 05-19-11
Date

THE STATE OF CALIFORNIA OR ITS OFFICERS OR AGENTS SHALL NOT BE RESPONSIBLE FOR THE ACCURACY OR COMPLETENESS OF SCANNED COPIES OF THIS PLAN SHEET.

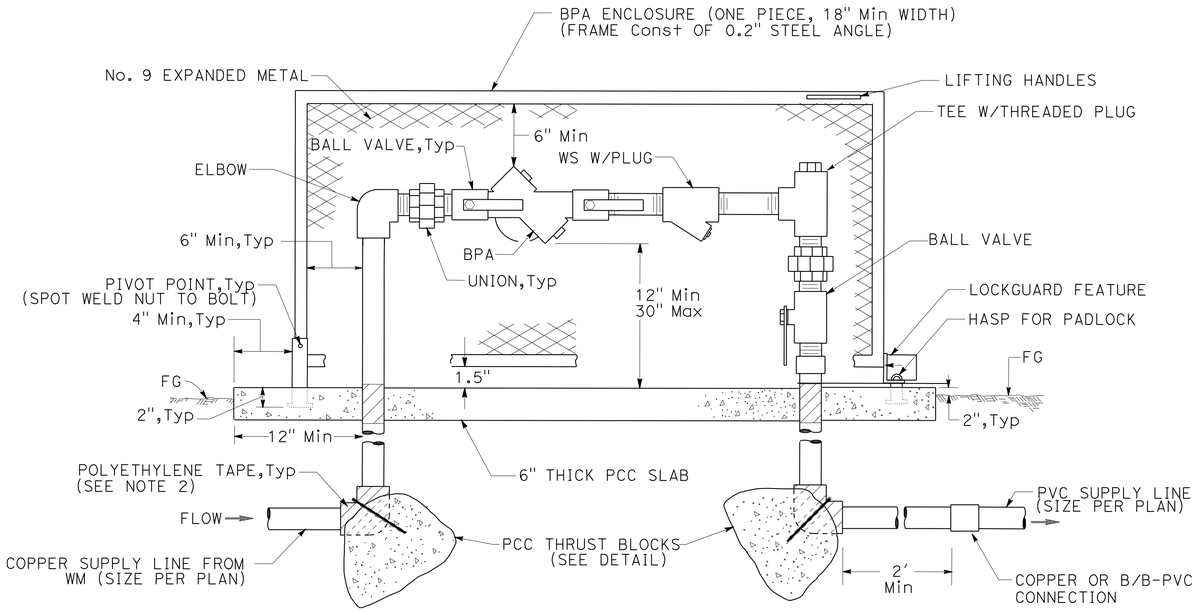

ELEVATION

NOTES:

1. WS AND FITTINGS SHALL BE SAME SIZE AS BACKFLOW PREVENTER SHOWN ON PLANS. BPA SHALL BE CONSTRUCTED WITH COPPER PIPE FROM WM THROUGH BPA TO CONNECTION TO PVC AS SHOWN ON DETAIL.
2. ALL METAL IN CONTACT WITH PCC SHALL BE POLYETHYLENE WRAPPED USING 2" WIDE PLASTIC BACKED ADHESIVE TAPE 1" THICK WITH ½" OVERLAP.
3. EXPOSED COPPER SURFACES SHALL BE PAINTED A TAN OR LIGHT BROWN COLOR MATCHING PAINT USED FOR THE BPA ENCLOSURE.

BACKFLOW PREVENTER ASSEMBLY IN ENCLOSURE (BPAE)

(MODIFIED)

THRUST BLOCK DETAIL

INSTALLATION	TYPE FITTING	INSTALLATION	TYPE FITTING
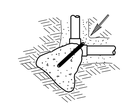	90° ELL	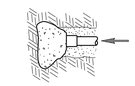	DEAD END
	BEND 45° 22.5° 11.25°	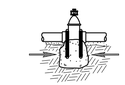	GATE VALVE
			VERTICAL BEND (TYPE I) 45° 22.5° 11.25°
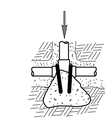	TEE		OR
			VERTICAL BEND (TYPE II) 45° 22.5° 11.25°

NOTES:

Min 1 CF PCC FOR 1½" PIPE SIZE AND SMALLER.
Min 2 CF PCC FOR 2" PIPE SIZE.
Min 3 CF PCC FOR 3" AND 4" PIPE SIZE.
Min 5 CF PCC FOR 6" PIPE SIZE.
Min 8 CF PCC FOR 8" PIPE SIZE.
USE #3 REINFORCING BAR WHERE SHOWN.

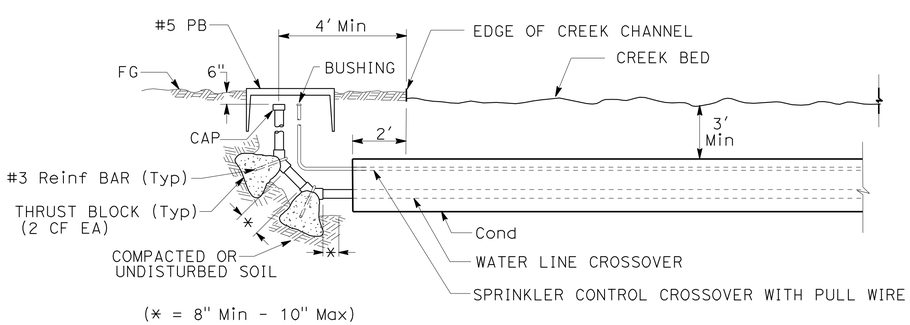

SECTION

IRRIGATION CROSSOVER

(MODIFIED)
(SHEET IP-1)

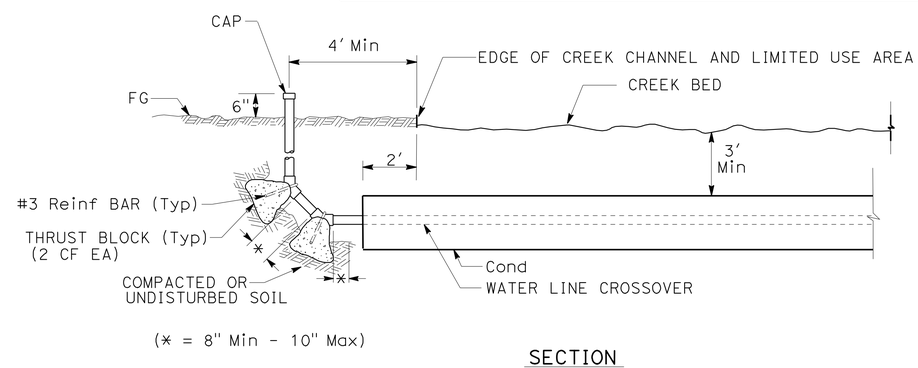

SECTION

IRRIGATION CROSSOVER

(MODIFIED)
(SHEETS IP-2 & IP-4)

LANDSCAPE DETAILS

NO SCALE

LD-4

STATE OF CALIFORNIA - DEPARTMENT OF TRANSPORTATION
Caltrans®
ENVIRONMENTAL
SENIOR ENVIRONMENTAL PLANNER
BRUCE APRIL
RICH MALLEN
MIKE CONNELLY
CALCULATED-DESIGNED BY
CHECKED BY
REVISED BY
DATE REVISED

LAST REVISION 05-23-11
DATE PLOTTED => 26-JUL-2011
TIME PLOTTED => 10:36

Dist	COUNTY	ROUTE	POST MILES TOTAL PROJECT	SHEET No.	TOTAL SHEETS
11	SD	56	3.5	24	41

LICENSED LANDSCAPE ARCHITECT

7-25-11
PLANS APPROVAL DATE

THE STATE OF CALIFORNIA OR ITS OFFICERS OR AGENTS SHALL NOT BE RESPONSIBLE FOR THE ACCURACY OR COMPLETENESS OF SCANNED COPIES OF THIS PLAN SHEET.

LICENSED LANDSCAPE ARCHITECT — EDWARD E. THURSTON No. 3818 — Signature — 03-31-12 Renewal Date — 05-19-11 Date — STATE OF CALIFORNIA

ABBREVIATIONS:

EA — EACH
DIP — DUCTILE IRON PIPE
GSP — GALVANIZED STEEL PIPE
Ft — FOOT/FEET
PR — PRESSURE RATED

SUBTOTALS PER VALVE ON LATERAL SUPPLY SIDE OF CONTROL VALVE

VALVE NUMBER FOR CONTROLLER 'A'

DESCRIPTION		UNIT	1	2	3	4	5	6	7	8	9	10	11	SUBTOTALS	UNIT	DESCRIPTION
PLASTIC PIPE SUPPLY LINE PR 200	1"	LF	636	581	658	599	625	351	659	572	634	649	598	6562	LF	1"
	1¼"	LF	80	37	-	142	-	131	44	35	14	-	64	547	LF	1¼"
	1½"	LF	-	-	39	-	38	-	-	-	36	-	-	113	LF	1½"
	2"	LF	38	77	41	38	42	115	36	41	38	45	35	546	LF	2"
	2½"	LF	245	24	212	289	76	454	289	167	49	199	184	2188	LF	2½"
PLASTIC PIPE SUPPLY LINE PR 315																
GSP																
DIP																
SPRINKLER TYPE	A-1	EA	20	18	20	20	20	18	19	19	19	19	19	211	EA	A-1

VALVE NUMBER FOR CONTROLLER 'B'

DESCRIPTION		UNIT	1	2	3	4	5	6	7	8	9	10	11	12	13	14	15	16	17	18	19	SUBTOTALS	UNIT	DESCRIPTION
PLASTIC PIPE SUPPLY LINE PR 200	1"	LF	592	649	698	614	698	667	622	666	573	678	390	347	376	716	674	665	536	467	383	11 011	LF	1"
	1¼"	LF	42	-	43	37	39	-	-	-	40	40	171	86	129	-	-	-	38	41	77	783	LF	1¼"
	1½"	LF	-	36	-	43	-	45	42	38	36	-	-	74	-	42	31	25	40	40	39	531	LF	1½"
	2"	LF	66	38	36	56	36	43	42	38	85	47	-	194	100	40	35	62	115	43	41	1117	LF	2"
	2½"	LF	206	176	66	335	145	279	296	84	118	353	187	539	616	118	423	358	244	30	155	4728	LF	2½"
PLASTIC PIPE SUPPLY LINE PR 315																								
GSP																								
DIP																								
SPRINKLER TYPE	A-1	EA	19	20	20	20	20	20	19	20	20	20	20	20	17	20	20	20	18	15	15	363	EA	A-1

IRRIGATION QUANTITIES

IQ-1

STATE OF CALIFORNIA - DEPARTMENT OF TRANSPORTATION
Caltrans® ENVIRONMENTAL

SENIOR ENVIRONMENTAL PLANNER: BRUCE APRIL
CALCULATED-DESIGNED BY: RICH MALLEN
CHECKED BY: MIKE CONNELLY
REVISED BY
DATE REVISED

LAST REVISION 05-23-11
DATE PLOTTED => 26-JUL-2011
TIME PLOTTED => 10:36

Dist	COUNTY	ROUTE	POST MILES TOTAL PROJECT	SHEET No.	TOTAL SHEETS
11	SD	56	3.5	25	41

LICENSED LANDSCAPE ARCHITECT

7-25-11
PLANS APPROVAL DATE

LICENSED LANDSCAPE ARCHITECT
EDWARD E. THURSTON No. 3018
Expiration Date 03-31-12
Renewal Date 05-19-11
Date
STATE OF CALIFORNIA

THE STATE OF CALIFORNIA OR ITS OFFICERS OR AGENTS SHALL NOT BE RESPONSIBLE FOR THE ACCURACY OR COMPLETENESS OF SCANNED COPIES OF THIS PLAN SHEET.

SUBTOTALS PER PLAN SHEET ON MAIN SUPPLY SIDE OF CONTROL VALVE

DESCRIPTION			UNIT	SHEET NUMBER 1	2	3	4	SUBTOTALS
BPA	2"		EA	1	-	-	-	1
BPA	ENCLOSURE		EA	1	-	-	-	1
WATER METER			EA	1	-	-	-	1
IRRIGATION CONTROLLER	12 STATION		EA	-	-	1	-	1
IRRIGATION CONTROLLER	20 STATION		EA	-	-	1	-	1
IRRIGATION CONTROLLER	STATION							
VALVES AND ASSEMBLIES	CE							
VALVES AND ASSEMBLIES	RCVM	2"	EA	1	-	-	-	1
VALVES AND ASSEMBLIES	RCV	1½"	EA	-	11	4	15	30
VALVES AND ASSEMBLIES	GV	3"	EA	1	-	-	-	1
VALVES AND ASSEMBLIES	QCV	¾"	EA	-	2	-	1	3
VALVES AND ASSEMBLIES	BV	2½"	EA	-	3	1	3	7
VALVES AND ASSEMBLIES	FAU							
CONDUIT	CSP							
CONDUIT	WSP							
PLASTIC PIPE SUPPLY LINE	PR 200	1"	LF	-	-	-	-	-
PLASTIC PIPE SUPPLY LINE	PR 200	1¼"	LF	-	-	-	-	-
PLASTIC PIPE SUPPLY LINE	PR 200	1½"	LF	-	-	-	-	-
PLASTIC PIPE SUPPLY LINE	PR 200	2"	LF	-	-	-	-	-
PLASTIC PIPE SUPPLY LINE	PR 200	2½"	LF	-	60	20	60	140
PLASTIC PIPE SUPPLY LINE	PR 315	3"	LF	1029	1300	854	684	3867
GSP								
DIP								

TOTAL QUANTITIES

TOTALS	UNIT	DESCRIPTION	
1	EA	2"	BPA
1	EA	ENCLOSURE	BPA
1	EA	WATER METER	
1	EA	12 STATION SOLAR	IRRIGATION CONTROLLER WITH ENCLOSURE
1	EA	20 STATION SOLAR	IRRIGATION CONTROLLER WITH ENCLOSURE
1	EA	2"	VALVES AND ASSEMBLIES – RCVM
30	EA	1½"	VALVES AND ASSEMBLIES – RCV
1	EA	3"	VALVES AND ASSEMBLIES – GV
3	EA	¾"	VALVES AND ASSEMBLIES – QCV
7	EA	2½"	VALVES AND ASSEMBLIES – BV
17 573	LF	1"	PLASTIC PIPE SUPPLY LINE – PR 200
1330	LF	1¼"	PLASTIC PIPE SUPPLY LINE – PR 200
644	LF	1½"	PLASTIC PIPE SUPPLY LINE – PR 200
1663	LF	2"	PLASTIC PIPE SUPPLY LINE – PR 200
7056	LF	2½"	PLASTIC PIPE SUPPLY LINE – PR 200
3867	LF	3"	PLASTIC PIPE SUPPLY LINE – PR 315
574	EA	A-1	SPRINKLER TYPE

ABBREVIATIONS:

BPA — BACKFLOW PREVENTER ASSEMBLY
BV — BALL VALVE
CV — CHECK VALVE
CE — CONTROLLER ENCLOSURE
CSP — CORRUGATED STEEL PIPE
DIP — DUCTILE IRON PIPE
EA — EACH
FAU — FILTER ASSEMBLY UNIT
FCV — FLOW CONTROL VALVE
FS — FLOW SENSOR
FV — FLUSH VALVE
GSP — GALVANIZED STEEL PIPE
GV — GATE VALVE
MCV — MANUAL CONTROL VALVE
LF — LINEAR FEET
PR — PRESSURE RATED
PRV — PRESSURE REDUCING VALVE
PRLV — PRESSURE RELIEF VALVE
QCV — QUICK COUPLING VALVE
RCV — REMOTE CONTROL VALVE
RCVM — REMOTE CONTROL VALVE (MASTER)
VAU — VALVE ASSEMBLY UNIT
WSP — WELDED STEEL PIPE
WS — WYE STRAINER

IRRIGATION QUANTITIES
IQ-2

REVISED BY: RICH MALLEN
DATE REVISED:
CALCULATED-DESIGNED BY: MIKE CONNELLY
CHECKED BY:
SENIOR LANDSCAPE ARCHITECT: BRUCE APRIL

STATE OF CALIFORNIA - DEPARTMENT OF TRANSPORTATION
Caltrans® ENVIRONMENTAL

LAST REVISION 05-23-11
DATE PLOTTED => 26-JUL-2011
TIME PLOTTED => 10:36

Dist	COUNTY	ROUTE	POST MILES TOTAL PROJECT	SHEET No.	TOTAL SHEETS
11	SD	56	3.5	26	41

REGISTERED CIVIL ENGINEER 03-14-11 DATE

7-25-11
PLANS APPROVAL DATE

REGISTERED PROFESSIONAL ENGINEER
VASANT KALE
No. C61372
Exp. 6-30-13
CIVIL
STATE OF CALIFORNIA

THE STATE OF CALIFORNIA OR ITS OFFICERS OR AGENTS SHALL NOT BE RESPONSIBLE FOR THE ACCURACY OR COMPLETENESS OF SCANNED COPIES OF THIS PLAN SHEET.

LEGEND

SYMBOL	EXISTING UTILITY OWNER
——--s——-	SEWER - CITY OF SAN DIEGO
ESA	ENVIRONMENTALLY SENSITIVE AREA
LUA	LIMITED USE AREA

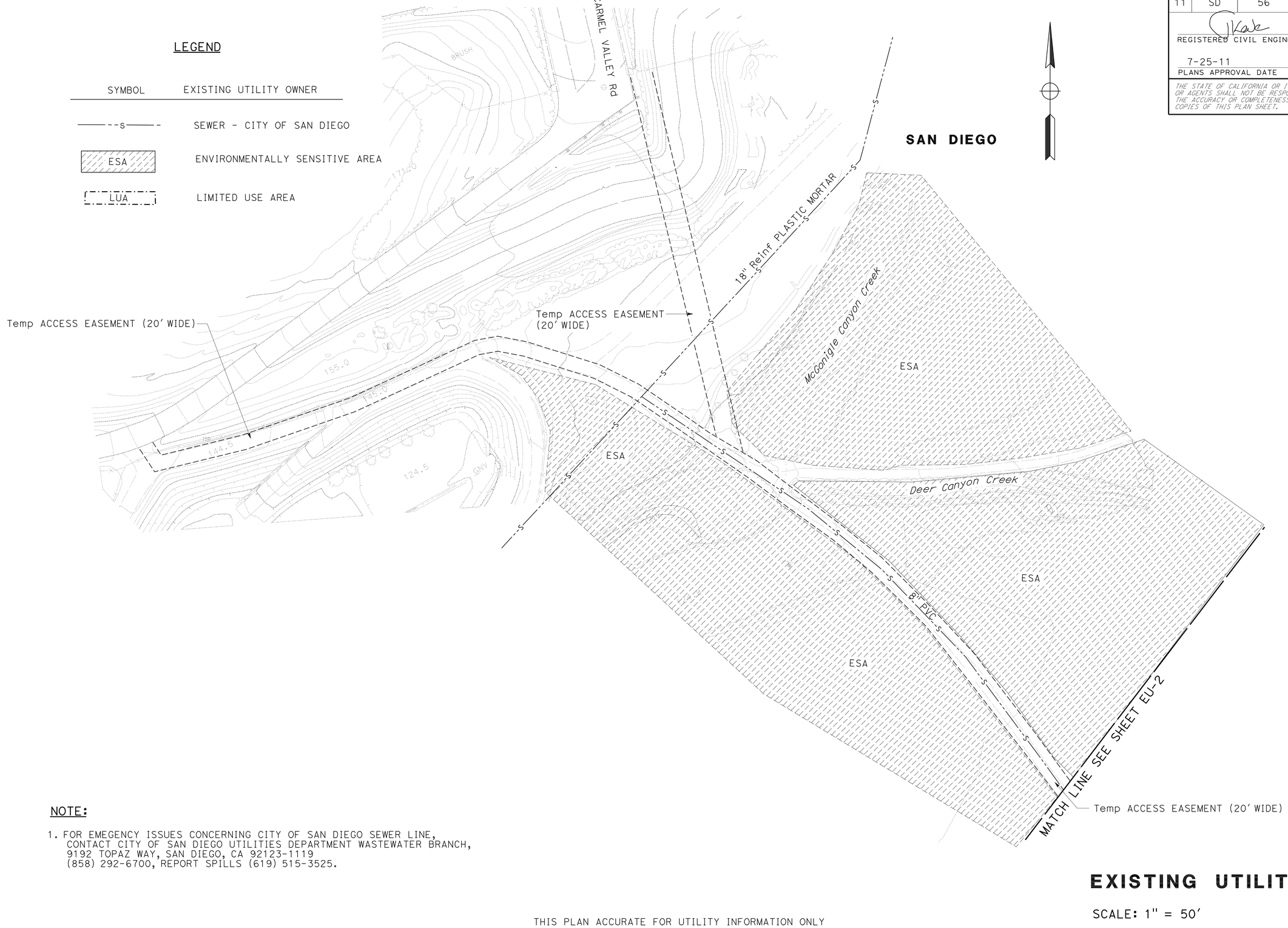

NOTE:

1. FOR EMEGENCY ISSUES CONCERNING CITY OF SAN DIEGO SEWER LINE, CONTACT CITY OF SAN DIEGO UTILITIES DEPARTMENT WASTEWATER BRANCH, 9192 TOPAZ WAY, SAN DIEGO, CA 92123-1119 (858) 292-6700, REPORT SPILLS (619) 515-3525.

THIS PLAN ACCURATE FOR UTILITY INFORMATION ONLY

EXISTING UTILITIES PLAN

SCALE: 1" = 50'

EU-1

STATE OF CALIFORNIA - DEPARTMENT OF TRANSPORTATION
Caltrans DESIGN

FUNCTIONAL SUPERVISOR: ABU-BAKR-JAFRI
CALCULATED-DESIGNED BY: MICHAEL CONNELLY
CHECKED BY: VASANT KALE
REVISED BY
DATE REVISED

LAST REVISION 05-23-11
DATE PLOTTED => 26-JUL-2011
TIME PLOTTED => 10:05

Dist	COUNTY	ROUTE	POST MILES TOTAL PROJECT	SHEET No.	TOTAL SHEETS
11	SD	56	3.5	27	41

REGISTERED CIVIL ENGINEER DATE 03-14-11

7-25-11
PLANS APPROVAL DATE

REGISTERED PROFESSIONAL ENGINEER
VASANT KALE
No. C61372
Exp. 6-30-13
CIVIL
STATE OF CALIFORNIA

THE STATE OF CALIFORNIA OR ITS OFFICERS OR AGENTS SHALL NOT BE RESPONSIBLE FOR THE ACCURACY OR COMPLETENESS OF SCANNED COPIES OF THIS PLAN SHEET.

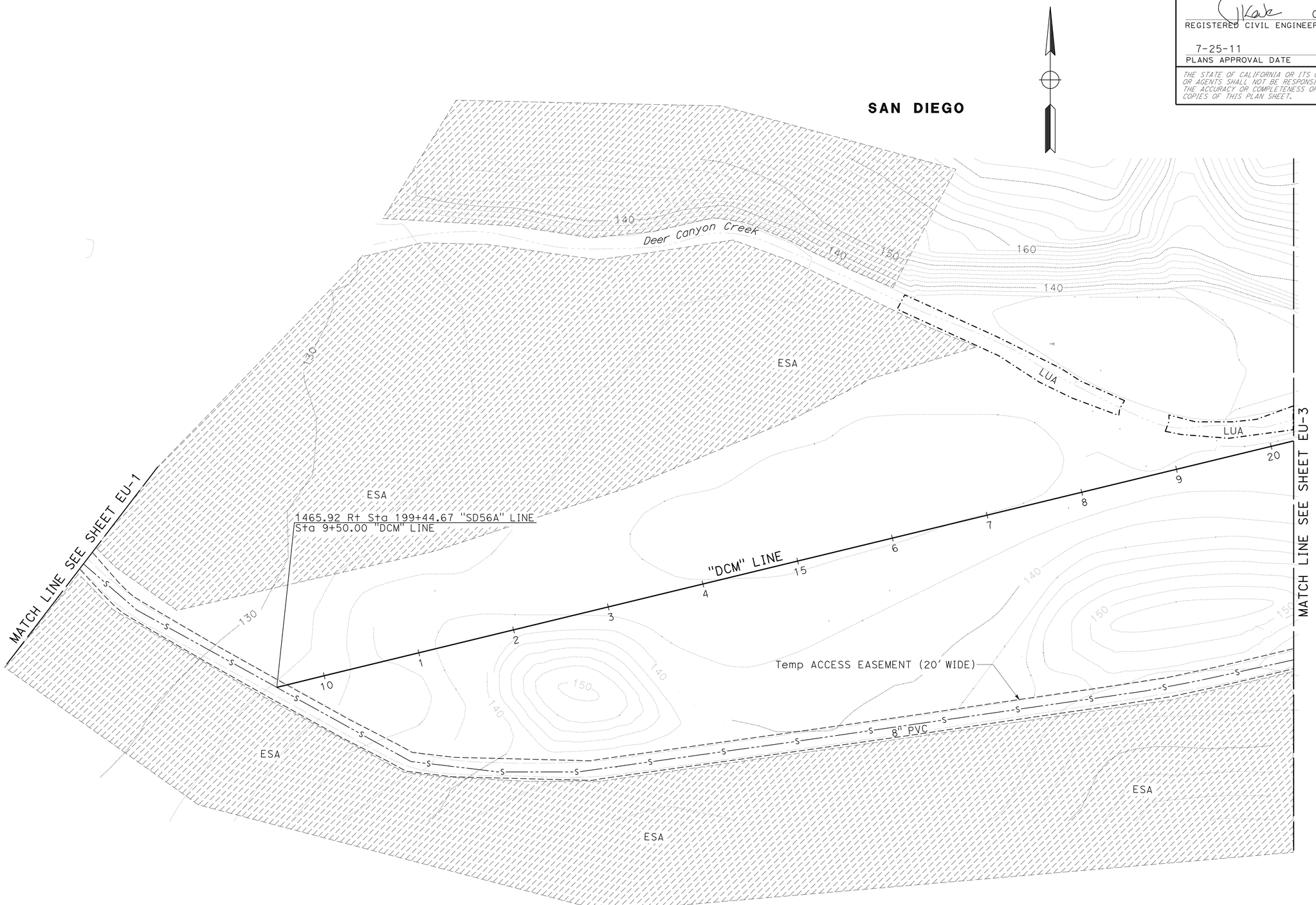

EXISTING UTILITIES PLAN

SCALE: 1" = 50'

EU-2

THIS PLAN ACCURATE FOR UTILITY INFORMATION ONLY

STATE OF CALIFORNIA - DEPARTMENT OF TRANSPORTATION
Caltrans®
DESIGN

FUNCTIONAL SUPERVISOR: ABU-BAKR-JAFRI
CALCULATED-DESIGNED BY: MICHAEL CONNELLY
CHECKED BY: VASANT KALE
REVISED BY
DATE REVISED

LAST REVISION 05-23-11
DATE PLOTTED => 26-JUL-2011
TIME PLOTTED => 10:06

Dist	COUNTY	ROUTE	POST MILES TOTAL PROJECT	SHEET No.	TOTAL SHEETS
11	SD	56	3.5	28	41

REGISTERED CIVIL ENGINEER DATE 03-14-11

7-25-11
PLANS APPROVAL DATE

REGISTERED PROFESSIONAL ENGINEER
VASANT KALE
No. C61372
Exp. 6-30-13
CIVIL
STATE OF CALIFORNIA

THE STATE OF CALIFORNIA OR ITS OFFICERS OR AGENTS SHALL NOT BE RESPONSIBLE FOR THE ACCURACY OR COMPLETENESS OF SCANNED COPIES OF THIS PLAN SHEET.

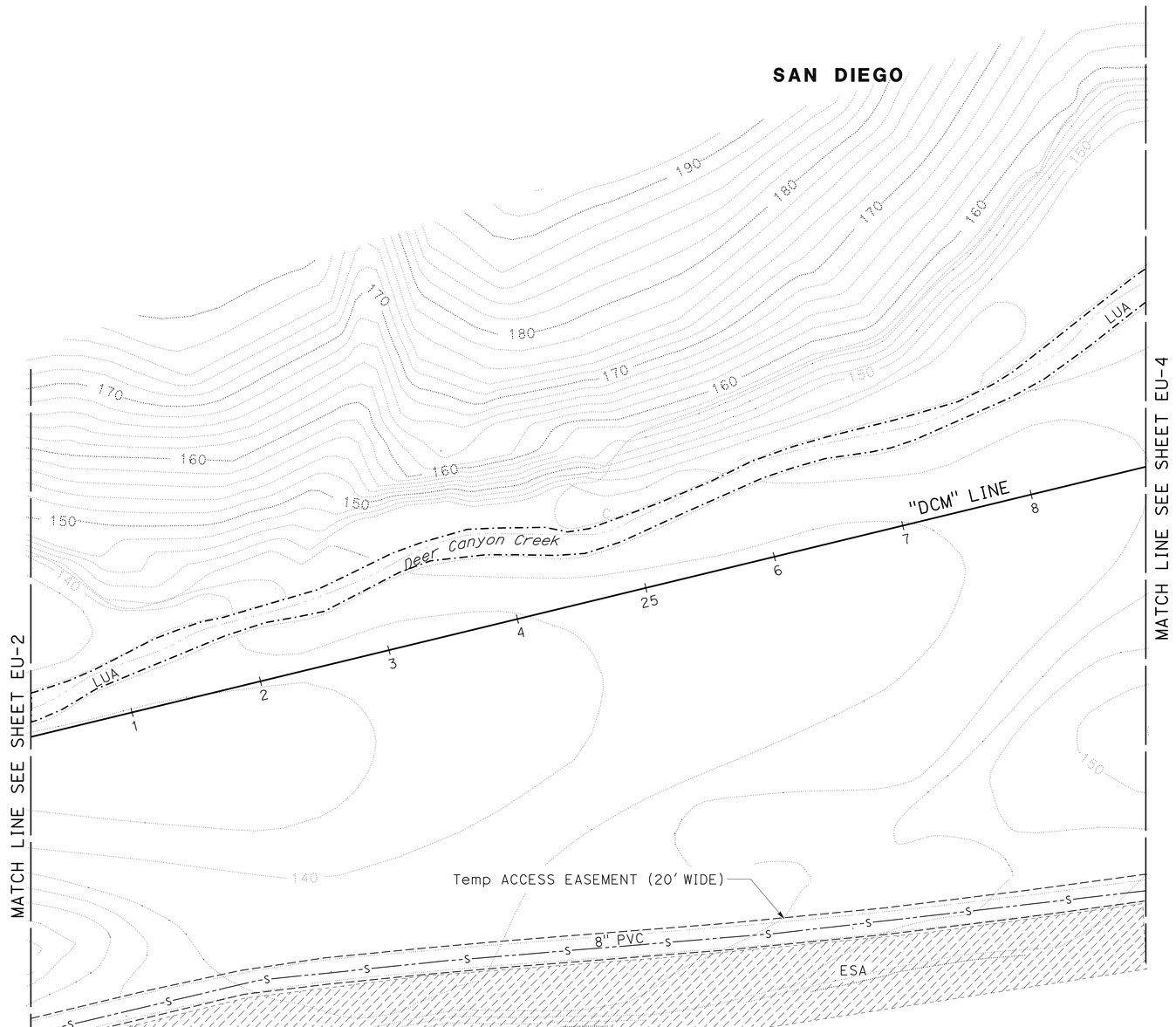

EXISTING UTILITIES PLAN

SCALE: 1" = 50'

EU-3

THIS PLAN ACCURATE FOR UTILITY INFORMATION ONLY

STATE OF CALIFORNIA - DEPARTMENT OF TRANSPORTATION
Caltrans®
DESIGN

FUNCTIONAL SUPERVISOR: ABU-BAKR-JAFRI
CALCULATED-DESIGNED BY: MICHAEL CONNELLY
CHECKED BY: VASANT KALE
REVISED BY
DATE REVISED

LAST REVISION 05-23-11
DATE PLOTTED => 26-JUL-2011
TIME PLOTTED => 10:06

Dist	COUNTY	ROUTE	POST MILES TOTAL PROJECT	SHEET No.	TOTAL SHEETS
11	SD	56	3.5	29	41

REGISTERED CIVIL ENGINEER 03-14-11 DATE

7-25-11
PLANS APPROVAL DATE

REGISTERED PROFESSIONAL ENGINEER
VASANT KALE
No. C61372
Exp. 6-30-13
CIVIL
STATE OF CALIFORNIA

THE STATE OF CALIFORNIA OR ITS OFFICERS OR AGENTS SHALL NOT BE RESPONSIBLE FOR THE ACCURACY OR COMPLETENESS OF SCANNED COPIES OF THIS PLAN SHEET.

EXISTING UTILITIES PLAN

SCALE: 1" = 50'

EU-4

THIS PLAN ACCURATE FOR UTILITY INFORMATION ONLY

STATE OF CALIFORNIA - DEPARTMENT OF TRANSPORTATION
Caltrans
DESIGN

FUNCTIONAL SUPERVISOR: ABU-BAKR-JAFRI
CALCULATED-DESIGNED BY: MICHAEL CONNELLY
CHECKED BY: VASANT KALE
REVISED BY
DATE REVISED

LAST REVISION 05-24-11
DATE PLOTTED => 26-JUL-2011
TIME PLOTTED => 10:06

DIST	COUNTY	ROUTE	POST MILES TOTAL PROJECT	SHEET NO.	TOTAL SHEETS
11	SD	56	3.5	30	41

REGISTERED CIVIL ENGINEER

June 5, 2009
PLANS APPROVAL DATE

REGISTERED PROFESSIONAL ENGINEER Glenn DeCou No. C34547 Exp. 9-30-09 CIVIL STATE OF CALIFORNIA

The State of California or its officers or agents shall not be responsible for the accuracy or completeness of electronic copies of this plan sheet.

To accompany plans dated 7-25-11

NOTES:

1. Offset to be 2'-0" at monument locations, measured at right angles to R/W lines. Taper to achieve offset to be at least 20'-0" long.
2. Line post spacing for wood post equals 12'-0" maximum. Line post spacing for metal post equals 10'-0" maximum.
3. See Standard Plan A86 for Barbed Wire and Wire Mesh dimensions and for steel post and wood post dimensions and weight.
4. Use wood posts when specified in the Special Provisions or shown on the Project Plans.

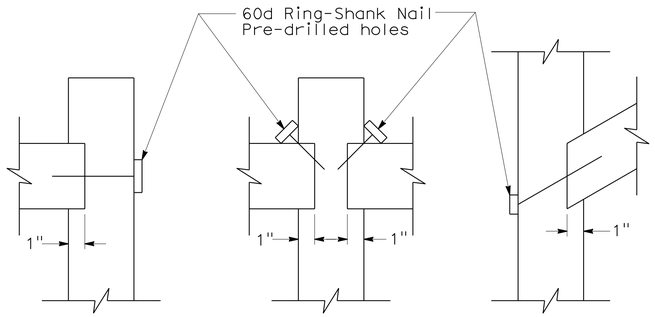

WOOD MORTISE DETAIL

See Note 4

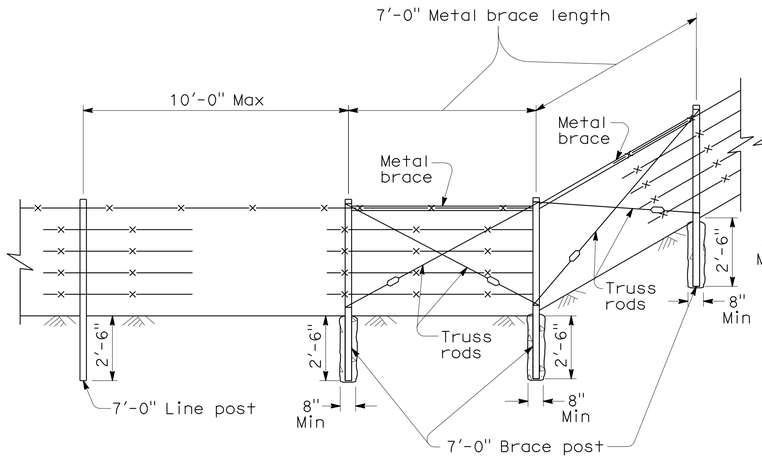

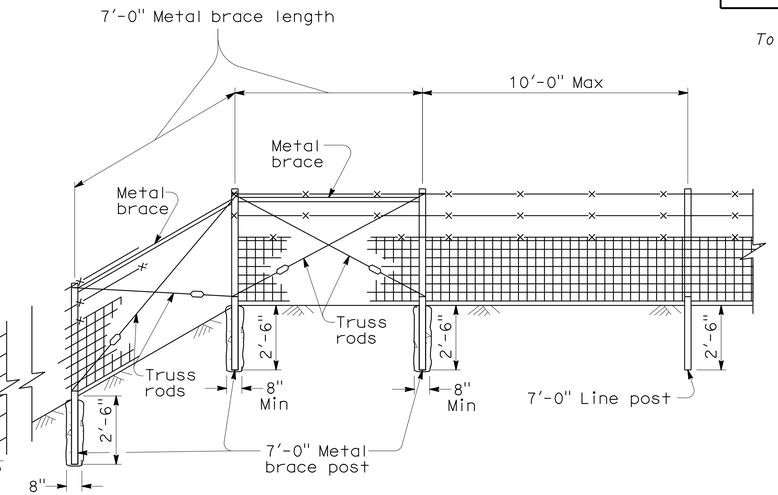

METAL POST

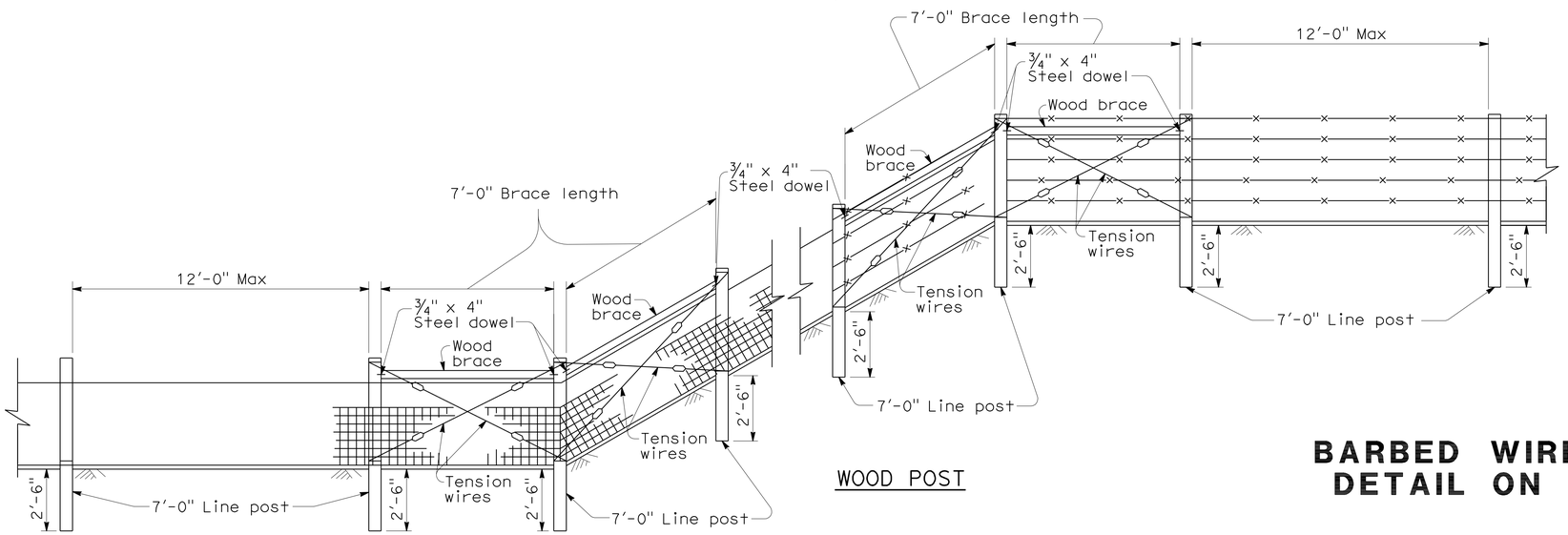

WOOD POST

FENCE ON SHARP BREAK IN GRADE

LEGEND

Wire Mesh fencing

Barbed Wire fencing

STATE OF CALIFORNIA
DEPARTMENT OF TRANSPORTATION

BARBED WIRE AND WIRE MESH FENCE DETAIL ON SHARP BREAK IN GRADE

NO SCALE

NSP A86A DATED JUNE 5, 2009 SUPPLEMENTS THE STANDARD PLANS BOOK DATED MAY 2006.

NEW STANDARD PLAN NSP A86A

2006 NEW STANDARD PLAN NSP A86A

5-12-09

DIST	COUNTY	ROUTE	POST MILES TOTAL PROJECT	SHEET NO.	TOTAL SHEETS
11	SD	56	3.5	31	41

REGISTERED CIVIL ENGINEER

June 5, 2009
PLANS APPROVAL DATE

REGISTERED PROFESSIONAL ENGINEER Glenn DeCou No. C34547 Exp. 9-30-09 CIVIL STATE OF CALIFORNIA

The State of California or its officers or agents shall not be responsible for the accuracy or completeness of electronic copies of this plan sheet.

To accompany plans dated 7-25-11

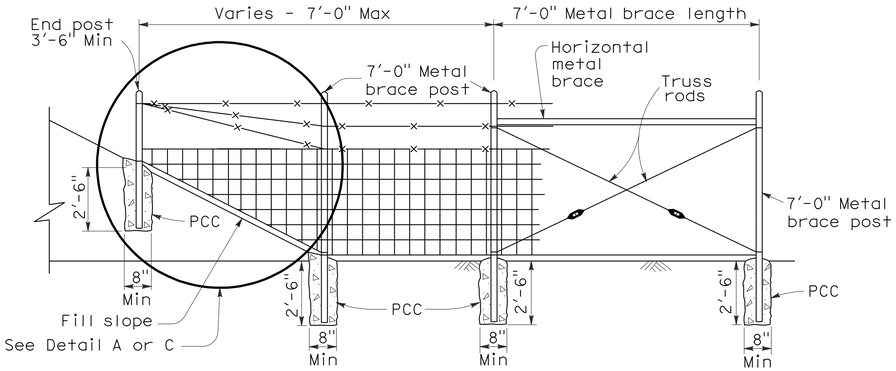

METAL POST

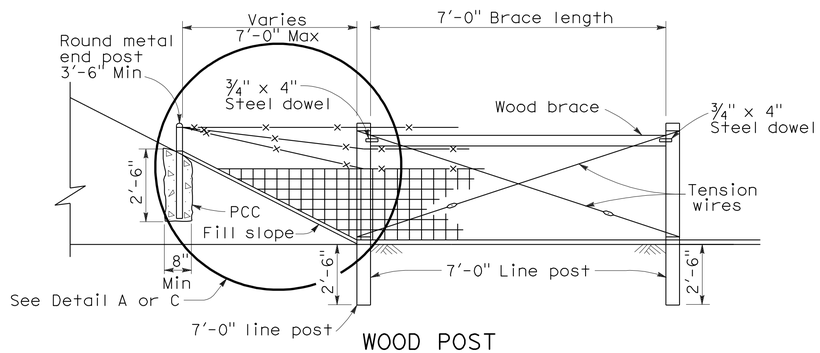

WOOD POST

METHOD OF ERECTING FENCE FOR FILL SLOPE

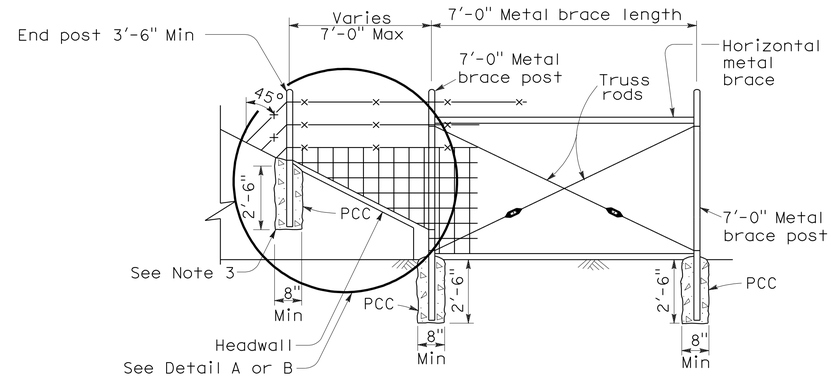

METAL POST

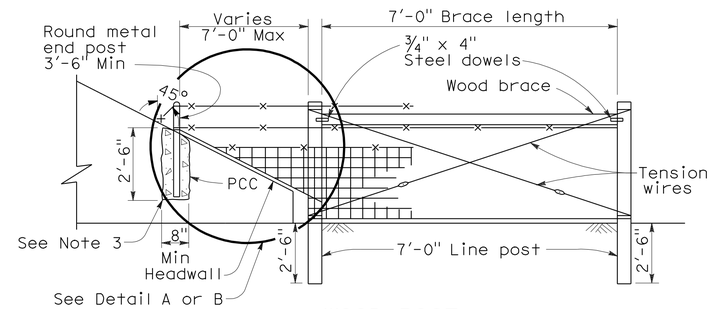

WOOD POST

METHOD OF TYING FENCE TO HEADWALL

NOTES:

1. Wire Mesh fencing shown, can also use Barbed Wire fencing.
2. See Standard Plan A86 for Wire Mesh and Barbed Wire fence dimensions.
3. See Standard Plan B11-7 Alternative Anchorage Detail for connection at headwall. Round metal post to be used for all fence types.

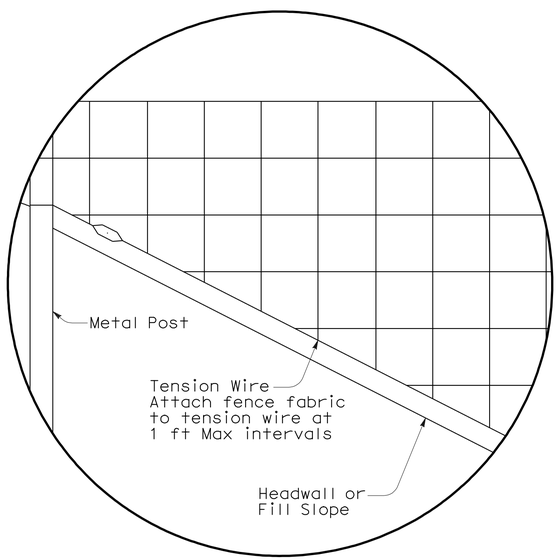

DETAIL A

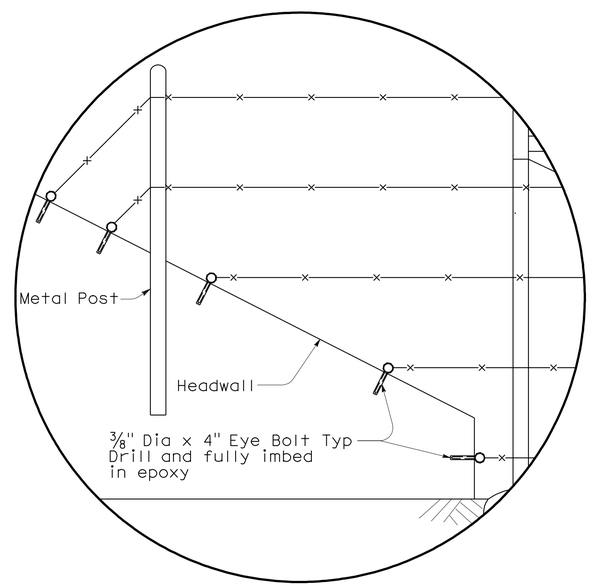

DETAIL B

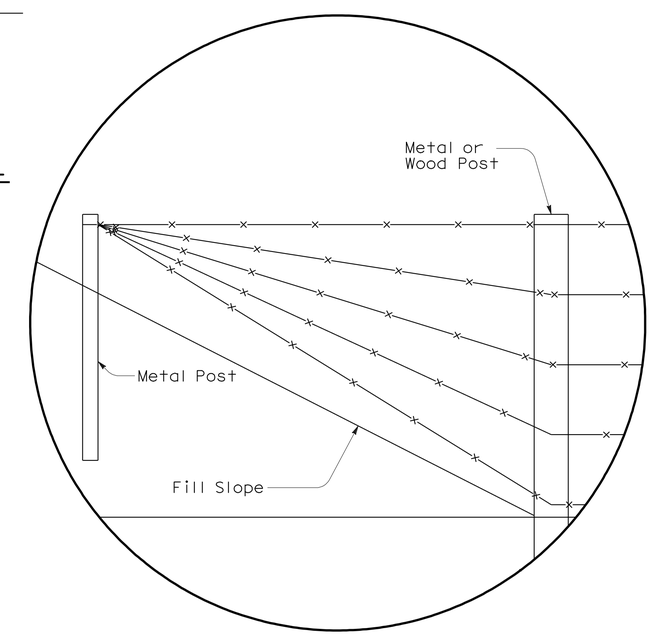

DETAIL C

STATE OF CALIFORNIA
DEPARTMENT OF TRANSPORTATION

BARBED WIRE AND WIRE MESH FENCE DETAILS

NSP A86B DATED JUNE 5, 2009 SUPPLEMENTS THE STANDARD PLANS BOOK DATED MAY 2006.

NEW STANDARD PLAN NSP A86B

2006 NEW STANDARD PLAN NSP A86B

5-12-09

DIST	COUNTY	ROUTE	POST MILES TOTAL PROJECT	SHEET NO.	TOTAL SHEETS
11	SD	56	3.5	32	41

Gregory A. Balzer
LICENSED LANDSCAPE ARCHITECT

June 5, 2009
PLANS APPROVAL DATE

LICENSED LANDSCAPE ARCHITECT
Gregory A. Balzer 2016
Gregory A. Balzer
10-Renewal
2-28-11
(Renewal) Date
5-14-09
Date
STATE OF CALIFORNIA

The State of California or its officers or agents shall not be responsible for the accuracy or completeness of electronic copies of this plan sheet.

To accompany plans dated 7-25-11

A

AB	aggregate base
ABS	acrylonitrile-butadiene-styrene
AC	asphalt concrete
Adj	adjacent/adjustable
AIC	auxiliary irrigation controller
Alt	alternative
AMEND	amendment
ARV	air release valve
AUTO	automatic
AUX	auxiliary
AVB	atmospheric vacuum breaker

B

B&B	balled and burlapped
B/B	brass/bronze
B/B/PL	brass/bronze/plastic
B/PL	brass/plastic
BFM	bonded fiber matrix
Bit Ctd	bituminous coated
BP	booster pump
BPA	backflow preventer assembly
BPAE	backflow preventer assembly in enclosure
BPE	backflow preventer enclosure
BV	ball valve

C

CAP	corrugated aluminum pipe
CARV	combination air release valve
CCA	cam coupler assembly
CEC	controller enclosure cabinet
CHDPE	corrugated high density polyethylene
CL	chain link
CNC	control and neutral conductors
Conc	concrete
Cond	conduit
CSP	corrugated steel pipe
CST	center strip
CV	check valve

D

Dia	diameter
DIP	ductile iron pipe
DN	diameter nominal

E

EA	each
Elect	electric/electrical
Elev	elevation
ENCL	enclosure
EP	edge of pavement
ES	edge of shoulder
EST	end strip
ESTB	establishment
ETW	edge of traveled way

F

F	full circle
F/P	full/part circle
FAU	filter assembly unit
FCV	flow control valve
FERT	fertilizer
FG	finished grade
FIPT	female iron pipe thread
FIS	fertilizer injector system
FL	flow line
FM	flow monitor
FS	flow sensor
Ft	foot/feet
FV	flush valve

G

GAL	Gallon(s)
Galv	galvanized
GARV	garden valve
GPH	gallons per hour
GPM	gallons per minute
GSP	galvanized steel pipe
GV	gate valve

H

H	half circle
HB	hose bib
HDPE	high density polyethylene
HP	horsepower/hinge point
HPL	high pressure line
Hwy	highway

I

IC	irrigation controller
ICC	irrigation controller(s) in controller enclosure cabinet
ID	inside diameter
In	inches
IFS	irrigation filtration system
IPS	iron pipe size
IPT	iron pipe thread
Irr	irrigation

L

L	length
LF	linear foot

M

Max	maximum
MBGR	metal beam guard railing
MCV	manual control valve
MIC	master irrigation controller
Min	minimum
MIPT	male iron pipe thread
Misc	miscellaneous
Mtl	material
MVP	maintenance vehicle pullout

N

NCN	no common name
NL	nozzle line
No.	number
NPT	national pipe thread

O

O/C	on center
OD	outside diameter
Oz	ounce

P

P	part circle
PB	pull box
PCC	portland cement concrete
PE	polyethylene
Pkt	packet
PL	plastic
PLT	plant/planting
PLT ESTB	plant establishment
PM	post mile
PR	pressure rated
PRLV	pressure relief valve
PSFM	polymer stabilized fiber matrix
PSI	pounds per square inch
PRV	pressure reducing valve
PVC	polyvinyl chloride
Pvmt	pavement

Q

Q	quarter circle
QCV	quick coupling valve

R

R	radius
RCP	reinforced concrete pipe
RCV	remote control valve
RCVM	remote control valve (master)
RCVMF	remote control valve (master) w/ flow meter
RCW	recycled/reclaimed water
RECP	rolled erosion control product
REQ	required
R/W	right of way

S

S	slip
SCC	sprinkler control conduit
SCH	schedule
SF	state-furnished
Shld	shoulder
SQFT	square foot/feet
SQYD	square yard(s)
SST	side strip
Sta	station
Std	standard
SW	sidewalk/sound wall

T

T	third circle/thread
TLS	truck loading standpipe
TQ	three quarter circle
TRM	turf reinforcement mat
TRVD	traveled
TT	two third circle
Typ	typical

U

UG	underground

V

VAU	valve assembly unit

W

W	width
W/	with
WM	water meter
WS	wye strainer
WSP	welded steel pipe
WWM	welded wire mesh

NOTE:

FOR ADDITIONAL ABBREVIATIONS, SEE STANDARD PLANS A10A AND A10B.

STATE OF CALIFORNIA
DEPARTMENT OF TRANSPORTATION

PLANTING AND IRRIGATION ABBREVIATIONS

NO SCALE

RSP H1 DATED JUNE 5, 2009 SUPERSEDES STANDARD PLAN H1
DATED MAY 1, 2006 - PAGE 201 OF THE STANDARD PLANS BOOK DATED MAY 2006.

REVISED STANDARD PLAN RSP H1

2006 REVISED STANDARD PLAN RSP H1

5-28-09

DIST	COUNTY	ROUTE	POST MILES TOTAL PROJECT	SHEET NO.	TOTAL SHEETS
11	SD	56	3.5	33	41

Gregory A. Balzer
LICENSED LANDSCAPE ARCHITECT

June 5, 2009
PLANS APPROVAL DATE

LICENSED LANDSCAPE ARCHITECT
Gregory A. Balzer 2576
Q. Chapter
2-28-11
Renewal Date
5-14-09
Date
STATE OF CALIFORNIA

The State of California or its officers or agents shall not be responsible for the accuracy or completeness of electronic copies of this plan sheet.

To accompany plans dated 7-25-11

EXISTING	PROPOSED	ITEM DESCRIPTION
		WATER METER (WM)
		BACKFLOW PREVENTER ASSEMBLY (BPA)
		BACKFLOW PREVENTER ASSEMBLY IN ENCLOSURE (BPAE)
		BACKFLOW PREVENTER ENCLOSURE (BPE)
		BOOSTER PUMP (BP)
		TRUCK LOADING STANDPIPE (TLS)
FS	FS	FLOW SENSOR (FS)
		MASTER IRRIGATION CONTROLLER (MIC)
		AUXILIARY IRRIGATION CONTROLLER (AIC)
		IRRIGATION CONTROLLER (IC)/ IRRIGATION CONTROLLER (IC) (BATTERY) IRRIGATION CONTROLLER (IC) (SOLAR)
		IRRIGATION CONTROLLER(S) IN CONTROLLER ENCLOSURE CABINET (ICC)
		CONTROL AND NEUTRAL CONDUCTORS (CNC)
SCC	SCC	SPRINKLER CONTROL CONDUIT (SCC)
		IRRIGATION CROSSOVER
		EXTEND IRRIGATION CROSSOVER
		IRRIGATION SLEEVE
dip	DIP	DUCTILE IRON PIPE (SUPPLY LINE) (MAIN) (DIP)
		GALVANIZED STEEL PIPE (SUPPLY LINE) (MAIN) (GSP)
		GALVANIZED STEEL PIPE (SUPPLY LINE) (LATERAL) (GSP)
		PLASTIC PIPE (PR 200) (SUPPLY LINE) (MAIN)
		PLASTIC PIPE (PR 200) (SUPPLY LINE) (LATERAL)
		PLASTIC PIPE (IRRIGATION LINE)
		REMOTE CONTROL VALVE (RCV) REMOTE CONTROL VALVE (MASTER) (RCVM) REMOTE CONTROL VALVE (MASTER) W/FLOW METER (RCVMF)
		MANUAL CONTROL VALVE (MCV)
		VALVE ASSEMBLY UNIT (VAU)
		WYE STRAINER (WS)
		FILTER ASSEMBLY UNIT (FAU)
		GATE VALVE (GV)
		BALL VALVE (BV)

EXISTING	PROPOSED	ITEM DESCRIPTION
		QUICK COUPLING VALVE (QCV)
		CAM COUPLER ASSEMBLY (CCA)
		PRESSURE REDUCING VALVE (PRV)
		PRESSURE RELIEF VALVE (PRLV)
		FLOW CONTROL VALVE (FCV)
		COMBINATION AIR RELEASE VALVE (CARV)
		CHECK VALVE (CV)
		FLUSH VALVE (FV)
		NOZZLE LINE W/TURNING UNION
		IRRIGATION SYSTEM
		IRRIGATION SYSTEM TO BE REMOVED
		CHAIN LINK GATE
		QUICK COUPLING VALVE W/SPRINKLER PROTECTOR
3	3	SPRINKLER W/SPRINKLER PROTECTOR
		CONNECT TO EXISTING SYSTEM
		CAP
		CAP EXISTING

VALVE CODE

RCV SIZE
IRRIGATION CONTROLLER
CONTROLLER STATION
VALVE IN PARALLEL (IF APPLICABLE)
GPM
QUANTITY OF SPRINKLERS (WHEN SHOWN)

* 2½"-A-2b-40 -60

MCV SIZE
VALVE NUMBER
GPM
QUANTITY OF TYPE SPRINKLERS (WHEN SHOWN)

* 2"-3-30 -50

* VALVE CODES FOR EXISTING VALVES ARE SHOWN IN A DASHED ENCLOSURE.

STATE OF CALIFORNIA
DEPARTMENT OF TRANSPORTATION

PLANTING AND IRRIGATION SYMBOLS

NO SCALE

RSP H2 DATED JUNE 5, 2009 SUPERSEDES RSP H2 DATED MARCH 7, 2008 AND STANDARD PLAN H2 DATED MAY 1, 2006 - PAGE 202 OF THE STANDARD PLANS BOOK DATED MAY 2006.

REVISED STANDARD PLAN RSP H2

2006 REVISED STANDARD PLAN RSP H2

5-11-09

DIST	COUNTY	ROUTE	POST MILES TOTAL PROJECT	SHEET NO.	TOTAL SHEETS
11	SD	56	3.5	34	41

Gregory A. Balzer
LICENSED LANDSCAPE ARCHITECT

June 5, 2009
PLANS APPROVAL DATE

LICENSED LANDSCAPE ARCHITECT
Gregory A. Balzer 2576
Signature
2-28-11
Renewal Date
5-14-09
Date
STATE OF CALIFORNIA

The State of California or its officers or agents shall not be responsible for the accuracy or completeness of electronic copies of this plan sheet.

To accompany plans dated 7-25-11

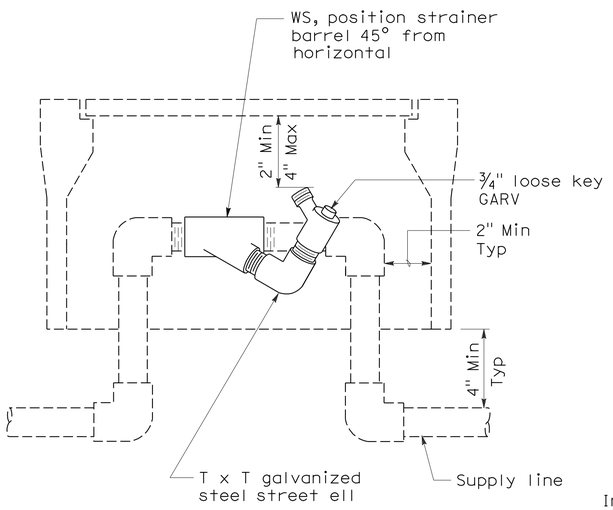

ELEVATION
WYE STRAINER

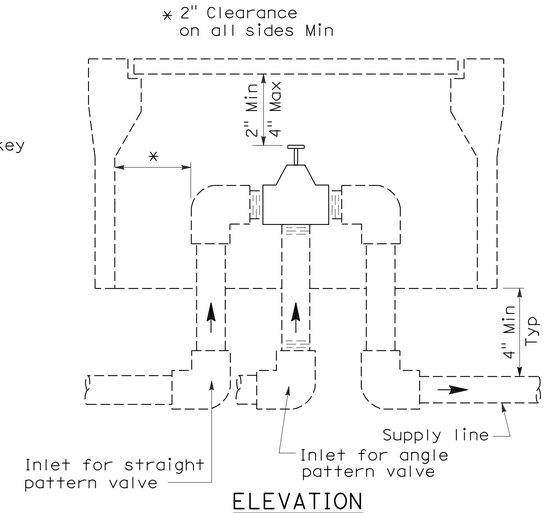

ELEVATION
VALVE

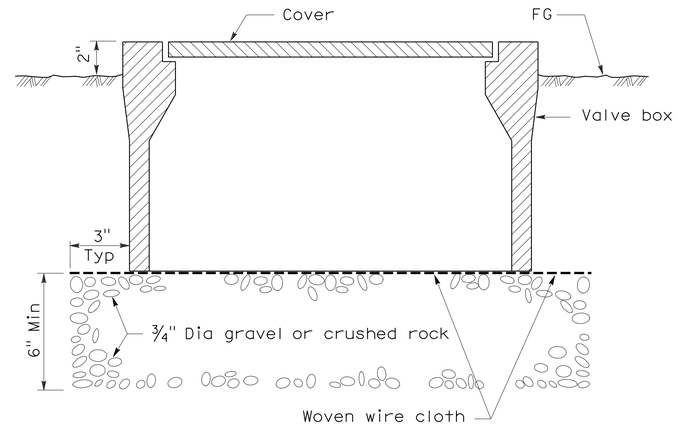

SECTION
VALVE BOX

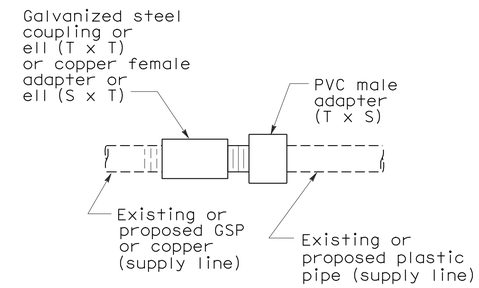

PLAN
GALVANIZED OR COPPER PIPE CONNECTION TO PLASTIC PIPE

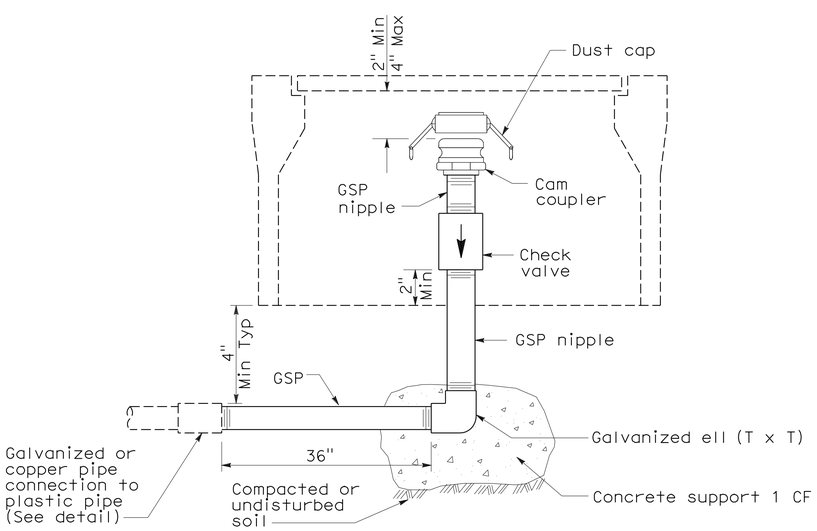

ELEVATION
CAM COUPLER ASSEMBLY

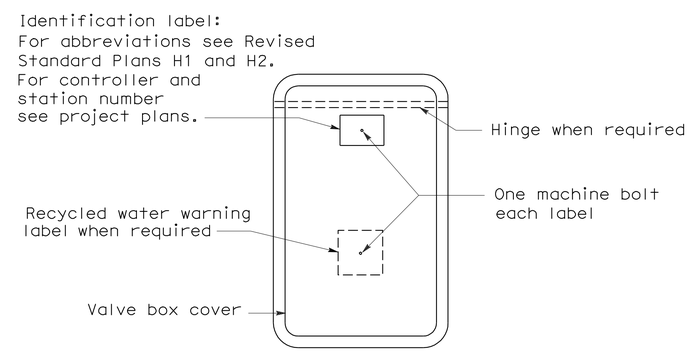

PLAN

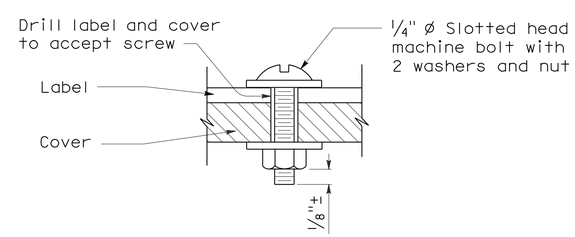

SECTION
VALVE BOX IDENTIFICATION

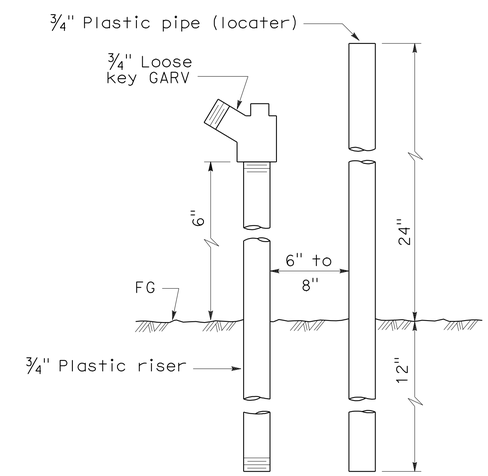

ELEVATION
FLUSH VALVE

STATE OF CALIFORNIA
DEPARTMENT OF TRANSPORTATION

PLANTING AND IRRIGATION DETAILS

NO SCALE

RSP H7 DATED JUNE 5, 2009 SUPERSEDES STANDARD PLAN H7
DATED MAY 1, 2006 - PAGE 207 OF THE STANDARD PLANS BOOK DATED MAY 2006.

REVISED STANDARD PLAN RSP H7

2006 REVISED STANDARD PLAN RSP H7

5-28-09

DIST	COUNTY	ROUTE	POST MILES TOTAL PROJECT	SHEET NO.	TOTAL SHEETS
11	SD	56	3.5	35	41

Gregory A. Balzer
LICENSED LANDSCAPE ARCHITECT

June 5, 2009
PLANS APPROVAL DATE

LICENSED LANDSCAPE ARCHITECT
Gregory A. Balzer 2576
Signature
2-28-11
Renewal Date
5-14-09
Date
STATE OF CALIFORNIA

The State of California or its officers or agents shall not be responsible for the accuracy or completeness of electronic copies of this plan sheet.

To accompany plans dated 7-25-11

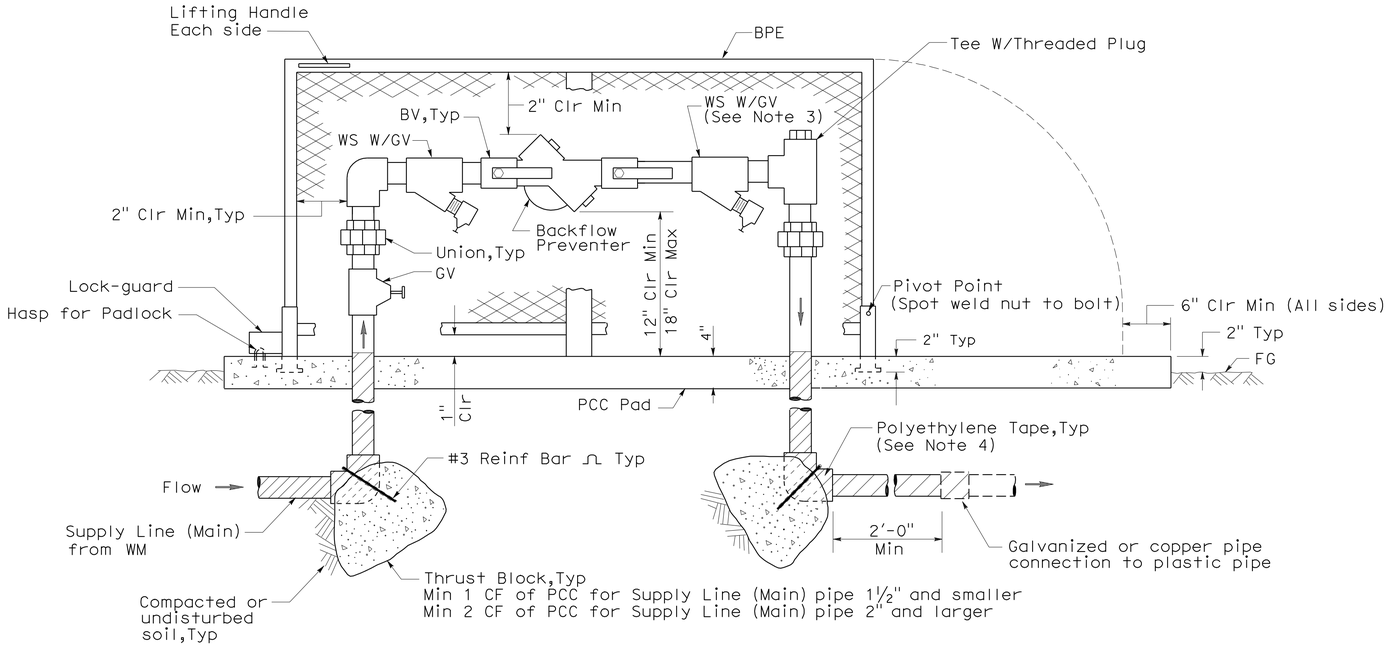

ELEVATION

BACKFLOW PREVENTER ASSEMBLY IN ENCLOSURE (ONE PIECE)

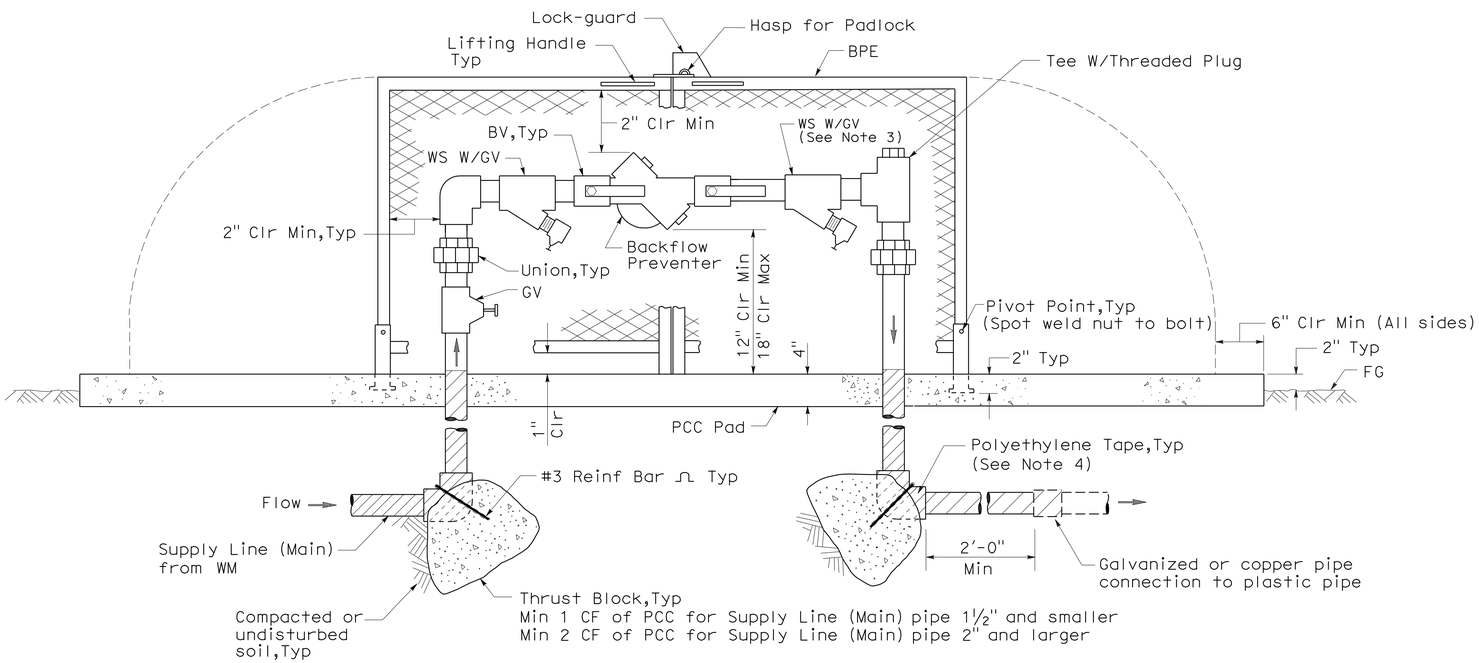

ELEVATION

BACKFLOW PREVENTER ASSEMBLY IN ENCLOSURE (TWO PIECE)

NOTES:

1. Wye strainer and fittings must be the same size as the backflow preventer shown on the plans.
2. Backflow preventer assembly manifold pipe must be the same pipe as the supply line (main) pipe to be installed from the water meter to the backflow preventer assembly.
3. Wye strainer location shown downstream of the backflow preventer is for District 11 projects only.
4. All metal in contact with soil and Portland Cement Concrete must be polyethylene wrapped using 2" wide plastic backed adhesive tape 20 mil thick with ½" overlap.

STATE OF CALIFORNIA
DEPARTMENT OF TRANSPORTATION

PLANTING AND IRRIGATION DETAILS

NO SCALE

RSP H8 DATED JUNE 5, 2009 SUPERSEDES STANDARD PLAN H8
DATED MAY 1, 2006 - PAGE 208 OF THE STANDARD PLANS BOOK DATED MAY 2006.

REVISED STANDARD PLAN RSP H8

2006 REVISED STANDARD PLAN RSP H8

5-28-09

DIST	COUNTY	ROUTE	POST MILES TOTAL PROJECT	SHEET NO.	TOTAL SHEETS
11	SD	56	3.5	36	41

Gregory A. Balzer
LICENSED LANDSCAPE ARCHITECT

April 3, 2009
PLANS APPROVAL DATE

LICENSED LANDSCAPE ARCHITECT
Gregory A. Balzer 2576
Signature
02-28-11
Renewal Date
03-04-09
Date
STATE OF CALIFORNIA

The State of California or its officers or agents shall not be responsible for the accuracy or completeness of electronic copies of this plan sheet.

To accompany plans dated 7-25-11

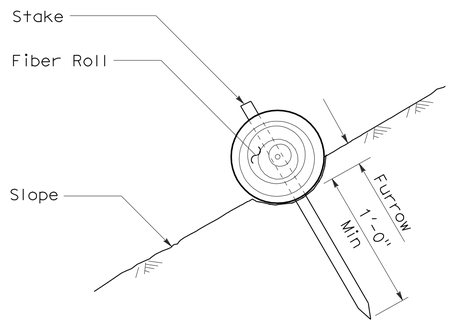

SECTION

FIBER ROLL (TYPE 1)

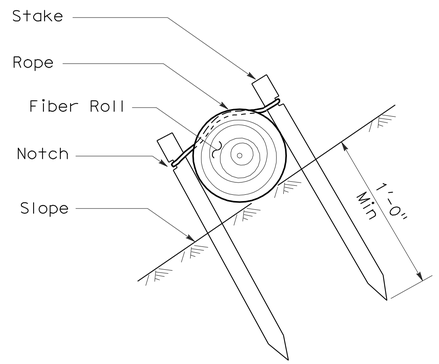

SECTION

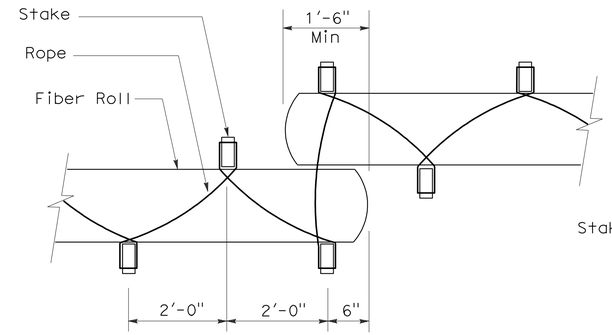

PLAN

FIBER ROLL (TYPE 2)

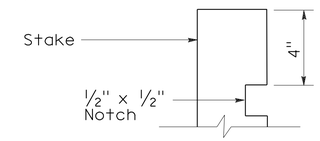

ELEVATION

STAKE NOTCH DETAIL

NOTES:

1. Fiber roll spacing varies depending upon slope inclination.
2. Installations shown in the perspectives are for slope inclination of 10:1 and steeper.

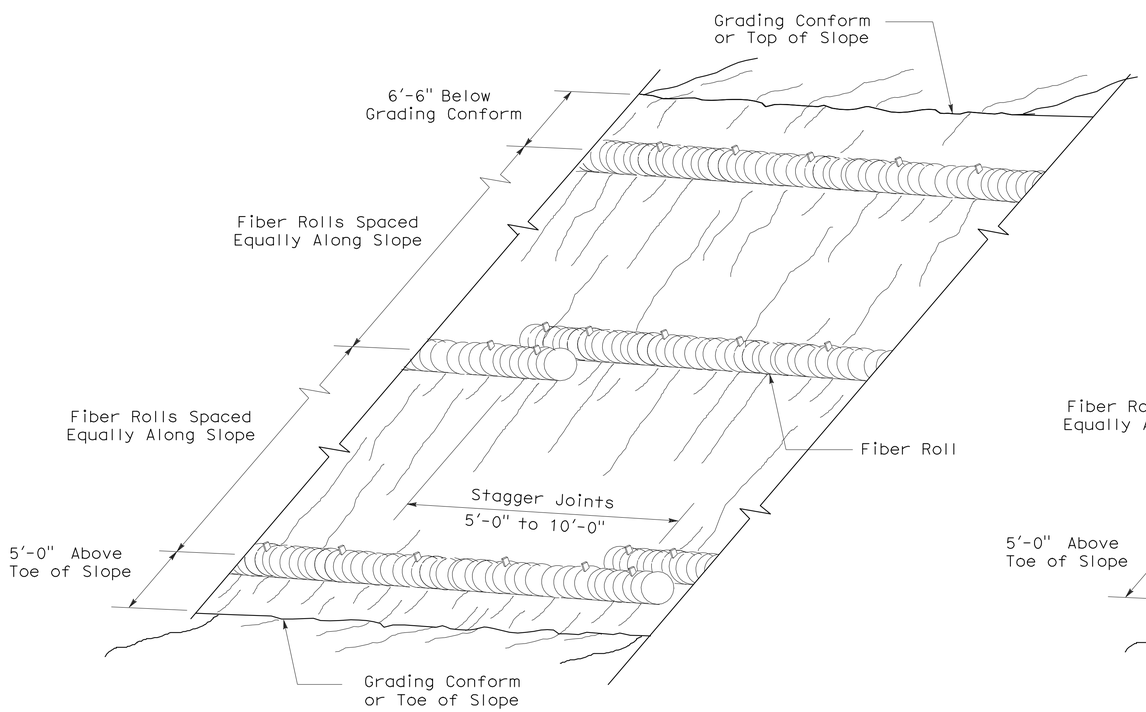

PERSPECTIVE

FIBER ROLL (TYPE 1)

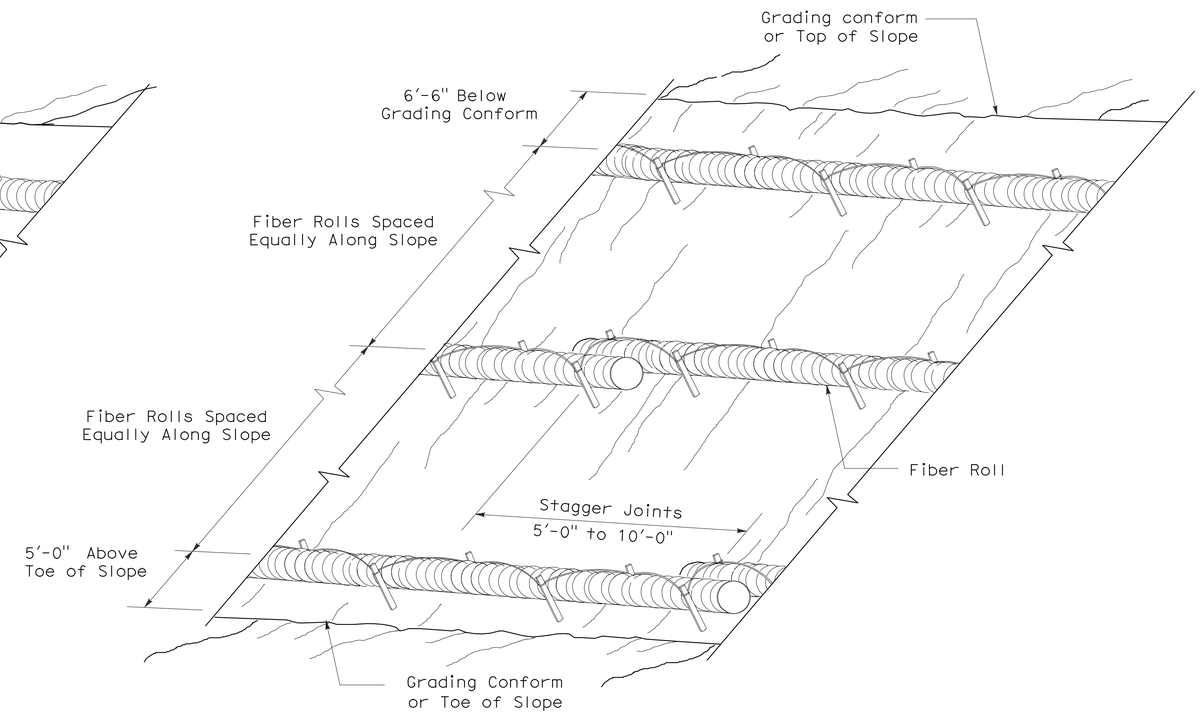

PERSPECTIVE

FIBER ROLL (TYPE 2)

STATE OF CALIFORNIA
DEPARTMENT OF TRANSPORTATION

EROSION CONTROL DETAILS (FIBER ROLL)

NO SCALE

RNSP H51 DATED APRIL 3, 2009 SUPERSEDES NSP H51 DATED DECEMBER 1, 2006 THAT SUPPLEMENTS THE STANDARD PLANS BOOK DATED MAY 2006.

REVISED NEW STANDARD PLAN RNSP H51

2006 REVISED NEW STANDARD PLAN RNSP H51

3-4-09

DIST	COUNTY	ROUTE	POST MILES TOTAL PROJECT	SHEET NO.	TOTAL SHEETS
11	SD	56	3.5	37	41

Randell D. Hiatt
REGISTERED CIVIL ENGINEER

June 6, 2008
PLANS APPROVAL DATE

REGISTERED PROFESSIONAL ENGINEER
Randell D. Hiatt
No. C50200
Exp. 6-30-09
CIVIL
STATE OF CALIFORNIA

The State of California or its officers or agents shall not be responsible for the accuracy or completeness of electronic copies of this plan sheet.

To accompany plans dated 7-25-11

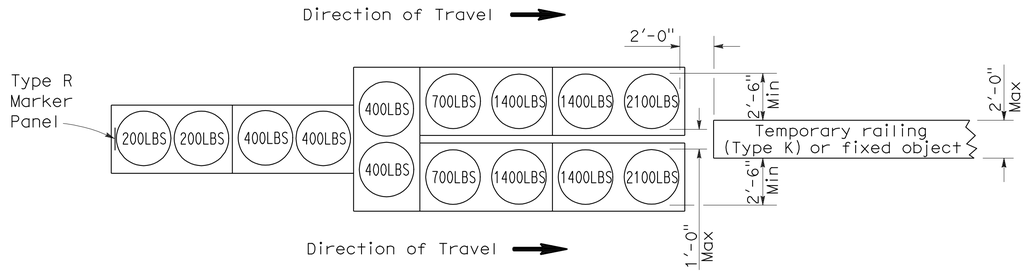

ARRAY 'TU14'

Approach speed 45 mph or more

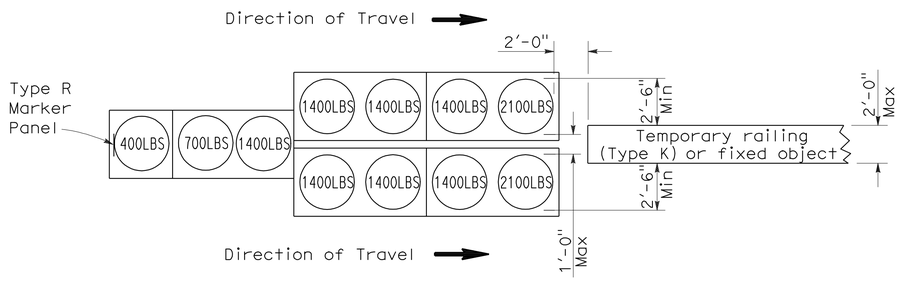

ARRAY 'TU11'

Approach speed less than 45 mph

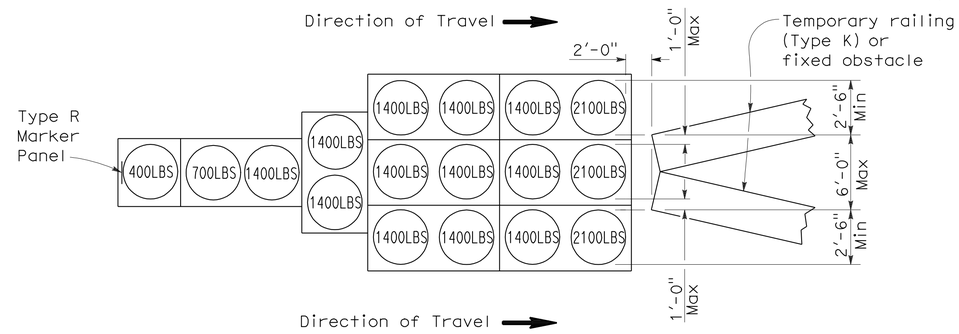

ARRAY 'TU17'

Approach speed less than 45 mph

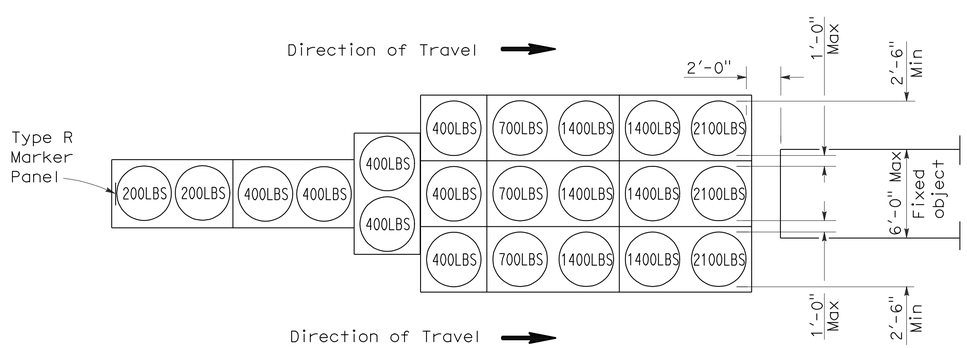

ARRAY 'TU21'

Approach speed 45 mph or more

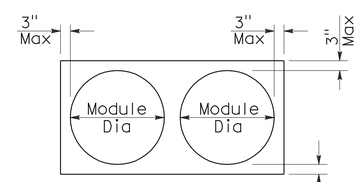

PLAN

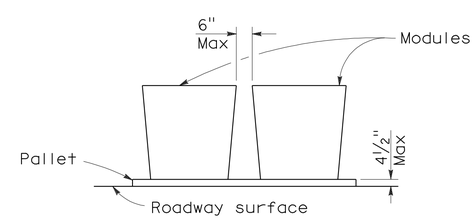

ELEVATION

CRASH CUSHION PALLET DETAIL

See Note 7

NOTES:

1. (XXX) Indicates sand filled module location and weight of sand in pounds for each module. Module spacing is based on the greater diameter of the module.
2. All sand weights are nominal.
3. Temporary crash cushion arrays shall not encroach on the traveled way.
4. Place the top of Type R marker panel 1" below the module lid.
5. Refer to Standard Plan A73B for marker details.
6. Approach speeds indicated conform to NCHRP 350 Report criteria.
7. Use of pallets is optional.

STATE OF CALIFORNIA
DEPARTMENT OF TRANSPORTATION

TEMPORARY CRASH CUSHION, SAND FILLED (UNIDIRECTIONAL)

NO SCALE

RSP T1A DATED JUNE 6, 2008 SUPERSEDES STANDARD PLAN T1A
DATED MAY 1, 2006 - PAGE 211 OF THE STANDARD PLANS BOOK DATED MAY 2006.

REVISED STANDARD PLAN RSP T1A

2006 REVISED STANDARD PLAN RSP T1A

DIST	COUNTY	ROUTE	POST MILES TOTAL PROJECT	SHEET NO.	TOTAL SHEETS
11	SD	56	3.5	38	41

Randell D. Hiatt
REGISTERED CIVIL ENGINEER

June 6, 2008
PLANS APPROVAL DATE

REGISTERED PROFESSIONAL ENGINEER
Randell D. Hiatt
No. C50200
Exp. 6-30-09
CIVIL
STATE OF CALIFORNIA

The State of California or its officers or agents shall not be responsible for the accuracy or completeness of electronic copies of this plan sheet.

To accompany plans dated 7-25-11

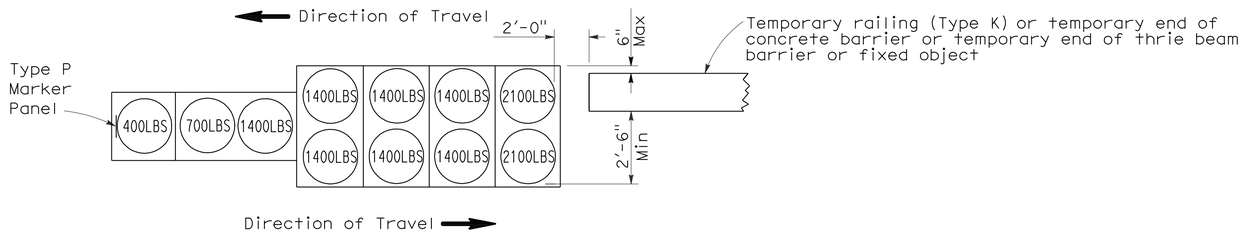

ARRAY 'TB11'

Approach speed less than 45 mph

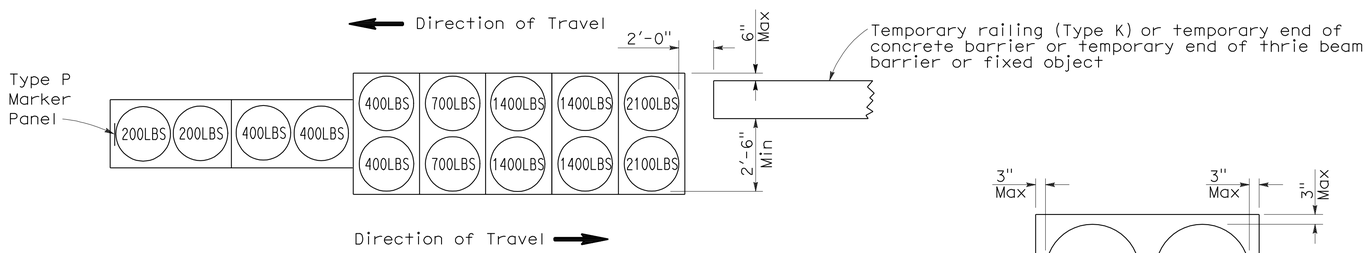

ARRAY 'TB14'

Approach speed 45 mph or more

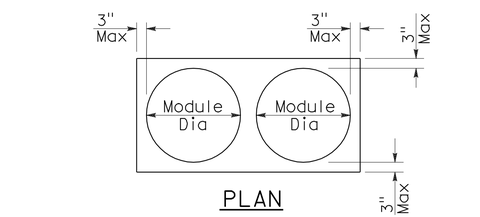

PLAN

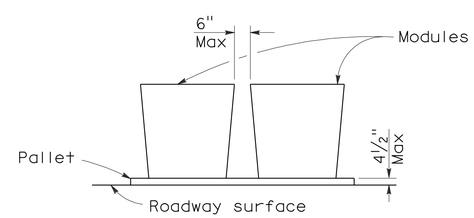

ELEVATION

CRASH CUSHION PALLET DETAIL

See Note 7

NOTES:

1. (XXX) Indicates sand filled module location and weight of sand in pounds for each module. Module spacing is based on the greater diameter of the module.
2. All sand weights are nominal.
3. Temporary crash cushion arrays shall not encroach on the traveled way.
4. Place the Type P marker panel so that the bottom of the panel rests upon the pallet.
5. Refer to Standard Plan A73B for marker details.
6. Approach speeds indicated conform to NCHRP 350 Report criteria.
7. Use of pallets is optional.

STATE OF CALIFORNIA
DEPARTMENT OF TRANSPORTATION

TEMPORARY CRASH CUSHION, SAND FILLED (BIDIRECTIONAL)

NO SCALE

RSP T1B DATED JUNE 6, 2008 SUPERSEDES STANDARD PLAN T1B
DATED MAY 1, 2006 - PAGE 212 OF THE STANDARD PLANS BOOK DATED MAY 2006.

REVISED STANDARD PLAN RSP T1B

2006 REVISED STANDARD PLAN RSP T1B

DIST	COUNTY	ROUTE	POST MILES TOTAL PROJECT	SHEET NO.	TOTAL SHEETS
11	SD	56	3.5	39	41

Randell D. Hiatt
REGISTERED CIVIL ENGINEER

June 6, 2008
PLANS APPROVAL DATE

REGISTERED PROFESSIONAL ENGINEER
Randell D. Hiatt
No. C50200
Exp. 6-30-09
CIVIL
STATE OF CALIFORNIA

The State of California or its officers or agents shall not be responsible for the accuracy or completeness of electronic copies of this plan sheet.

To accompany plans dated 7-25-11

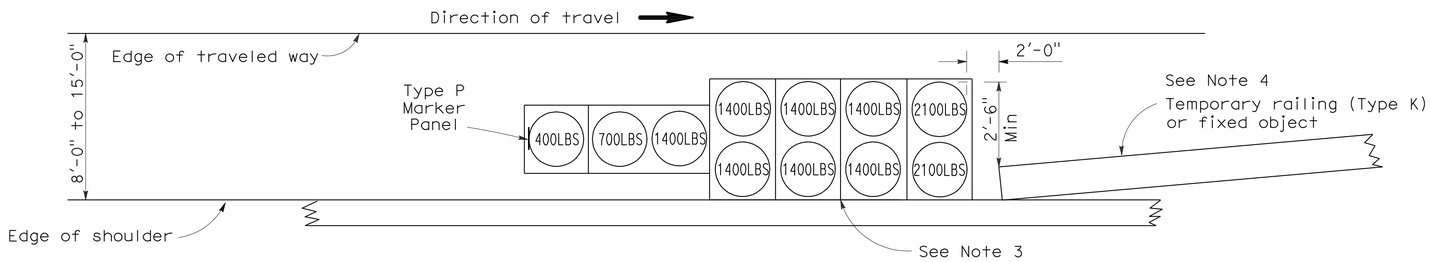

ARRAY 'TS11'

Approach speed less than 45 mph
See Note 9

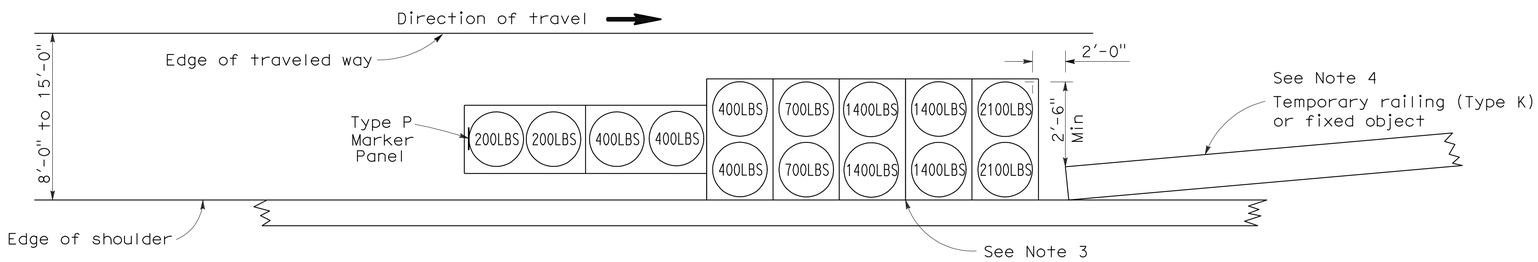

ARRAY 'TS14'

Approach speed 45 mph or more
See Note 9

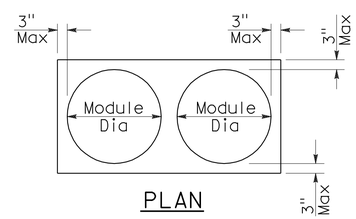

PLAN

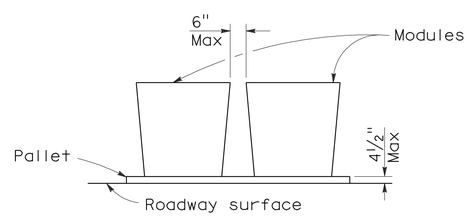

ELEVATION

CRASH CUSHION PALLET DETAIL

See Note 11

NOTES:

1. (XXX) Indicates sand filled module location and weight of sand in pounds for each module. Module spacing is based on the greater diameter of the module.
2. All sand weights are nominal.
3. The temporary crash cushion arrays shown on this plan shall be used only in locations where there will be traffic on one side of the temporary crash cushion array.
4. If the fixed object or approach end of the temporary railing is less than 15'-0" from the edge of traveled way, a temporary crash cushion is required in a construction or work zone.
5. Temporary crash cushion arrays shall not encroach on the traveled way.
6. Arrays for median shoulders shall conform to details shown on this plan for outside shoulders.
7. Place the Type P marker panel so that the bottom of the panel rests upon the pallet and faces traffic.
8. Refer to Standard Plan A73B for marker details.
9. For shoulder widths less than 8'-0", appropriate approved crash cushion protection, other than sand filled modules, shall be provided at fixed objects and at approach ends of temporary railing. The specific type of crash cushion shall be as shown on the project plans or as specified in the Special Provisions, or if not shown on the project plans or specified in the Special Provisions, shall be as approved by the Engineer.
10. Approach speeds indicated conform to NCHRP 350 Report criteria.
11. Use of pallets is optional.

STATE OF CALIFORNIA
DEPARTMENT OF TRANSPORTATION

TEMPORARY CRASH CUSHION, SAND FILLED (SHOULDER INSTALLATIONS)

NO SCALE

RSP T2 DATED JUNE 6, 2008 SUPERSEDES STANDARD PLAN T2
DATED MAY 1, 2006 - PAGE 213 OF THE STANDARD PLANS BOOK DATED MAY 2006.

REVISED STANDARD PLAN RSP T2

2006 REVISED STANDARD PLAN RSP T2

5-15-08

Dist	COUNTY	ROUTE	POST MILES TOTAL PROJECT	SHEET No.	TOTAL SHEETS
11	SD	56	3.5	40	41

Randell D. Hiatt
REGISTERED CIVIL ENGINEER

May 20, 2011
PLANS APPROVAL DATE

REGISTERED PROFESSIONAL ENGINEER
Randell D. Hiatt
No. C50200
Exp. 6-30-11
CIVIL
STATE OF CALIFORNIA

The State of California or its officers or agents shall not be responsible for the accuracy or completeness of electronic copies of this plan sheet.

To accompany plans dated 7-25-11

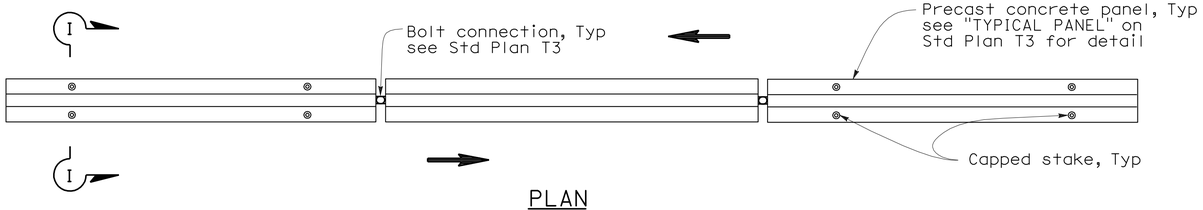

PLAN

RAILING STAKING CONFIGURATION FOR TWO-WAY TRAFFIC

See Note 1

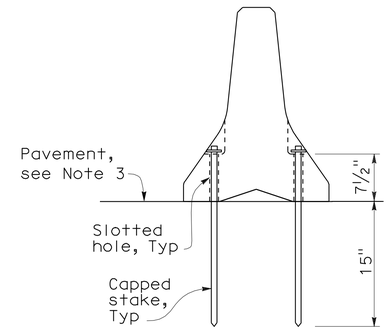

SECTION I-I

NOTES:

1. Where Type K Temporary Railing is placed as a temporary or long term barrier in two-way traffic on highways with less than 24" from the edge of traveled way, use four capped stakes per every other panel with end panels staked.
2. Where Type K Temporary Railing is placed 3" to 24" from the edge of an excavation on highways, use two capped stakes per panel along the traffic side.
3. Staked Type K Temporary Railing must be supported by at least 4" thick concrete, hot mix asphalt or existing asphalt concrete pavement.
4. The minimum yield strength for the washer must be 60,000 psi.
5. Direction of adjacent traffic indicated by ⟹.

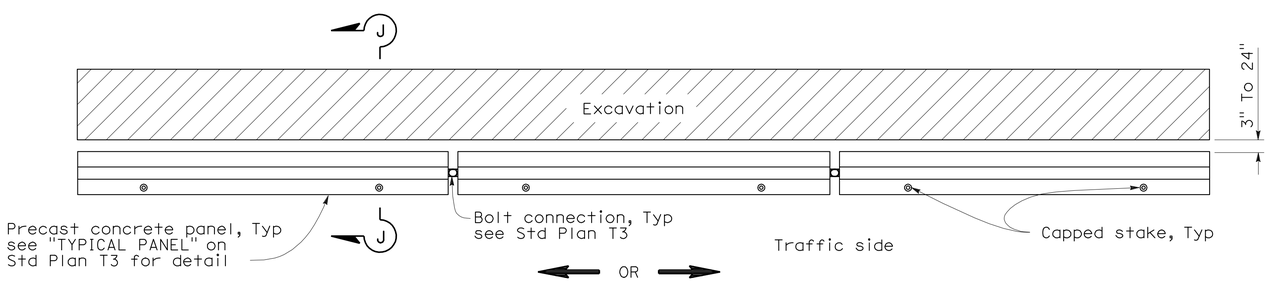

PLAN

RAILING STAKING CONFIGURATION ADJACENT TO AN EXCAVATION

See Note 2

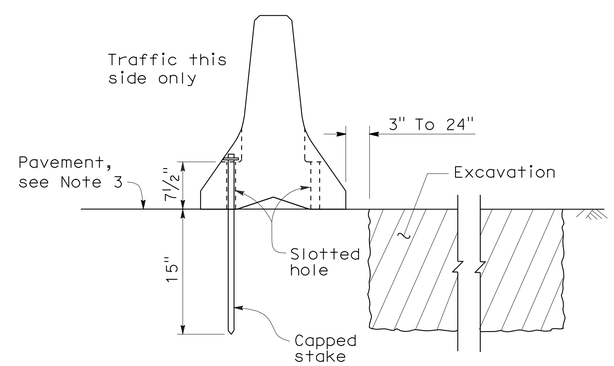

SECTION J-J

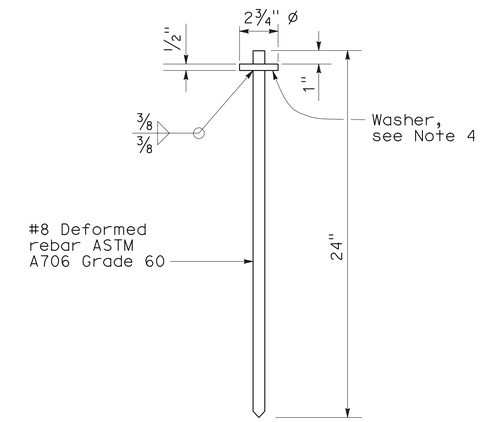

CAPPED STAKE DETAIL

STATE OF CALIFORNIA
DEPARTMENT OF TRANSPORTATION

TEMPORARY RAILING (TYPE K)

NO SCALE

NSP T3A DATED MAY 20, 2011 SUPPLEMENTS
THE STANDARD PLANS BOOK DATED MAY 2006.

NEW STANDARD PLAN NSP T3A

2006 NEW STANDARD PLAN NSP T3A

DIST	COUNTY	ROUTE	POST MILES TOTAL PROJECT	SHEET NO.	TOTAL SHEETS
11	SD	56	3.5	41	41

REGISTERED CIVIL ENGINEER

November 17, 2006
PLANS APPROVAL DATE

REGISTERED PROFESSIONAL ENGINEER
Greg W. Edwards
No. C36386
Exp. 6-30-08
CIVIL
STATE OF CALIFORNIA

The State of California or its officers or agents shall not be responsible for the accuracy or completeness of electronic copies of this plan sheet.

To accompany plans dated 7-25-11

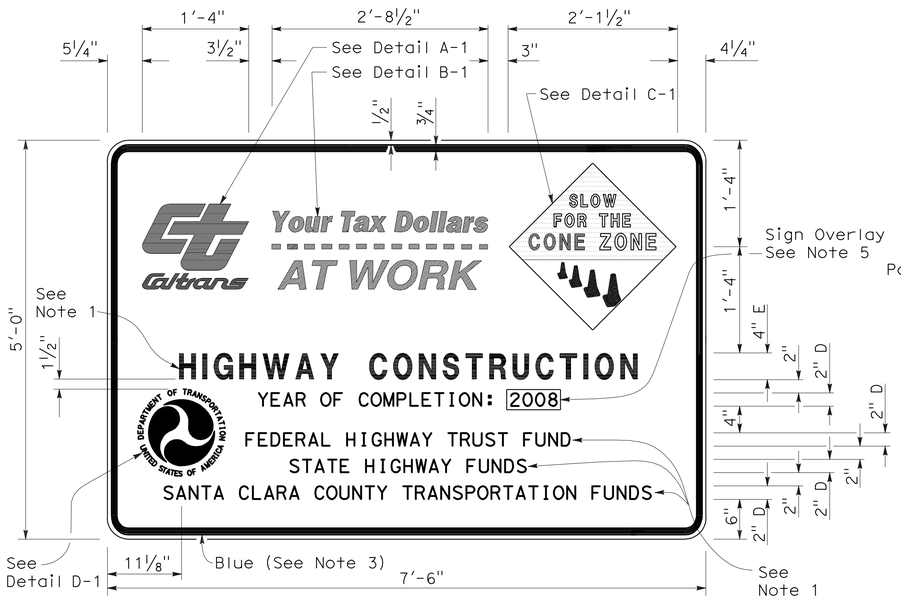

TYPE 1

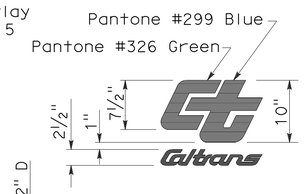

DETAIL A-1

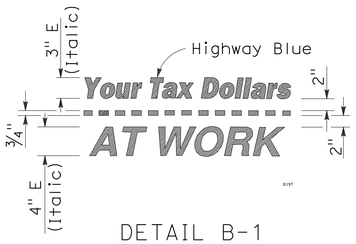

DETAIL B-1
(See Note 3)

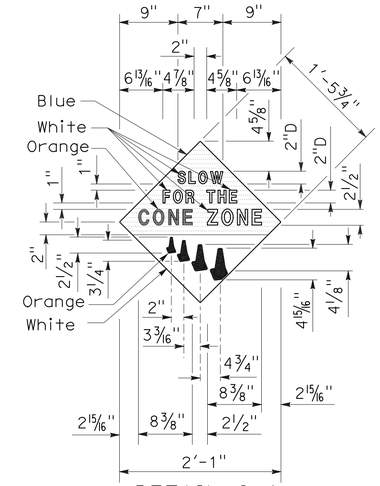

DETAIL C-1
(See Note 4)

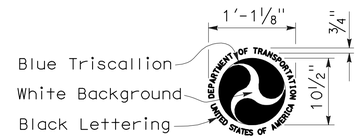

DETAIL D-1
(See Note 6)

NOTES:

1. The sign messages shown for type of project and fund types are examples only. See the Special Provisions for the applicable type of project and fund type messages to be used.
2. Except as otherwise shown, the legend of sign shall be black on a white background (non-reflective).
3. The border of the signs and details "B-1" and "B-2" shall be blue (non-reflective).
4. The diamond in details "C-1" and "C-2" shall be blue for the background of message, " SLOW FOR THE CONE ZONE", and white background for the orange cones. The color and type of font for the "SLOW FOR THE CONE ZONE" message shall be: "SLOW" white D; "FOR THE" white D; "CONE" orange Arial font; "ZONE" white Arial font.
5. Year of completion of project construction shown on the overlay is an example only. See the Special Provisions.
6. Use when the Project involves Federal Highway Trust Fund.

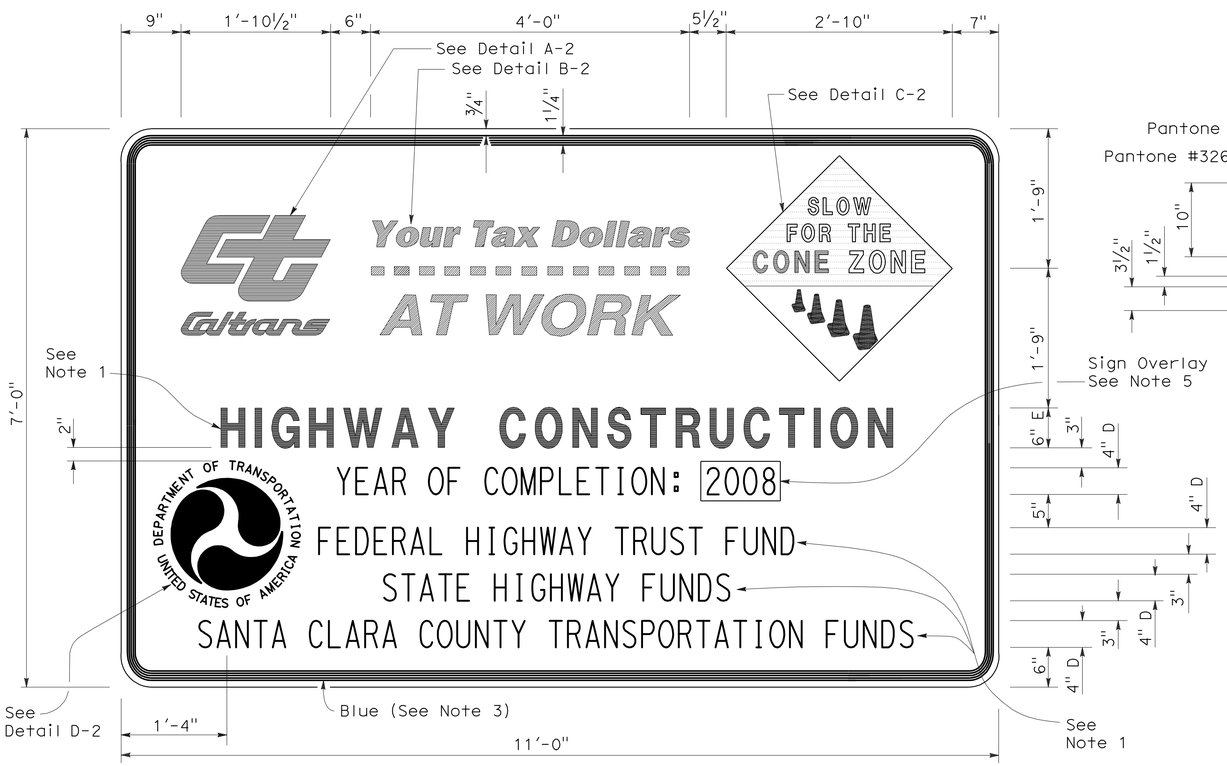

TYPE 2

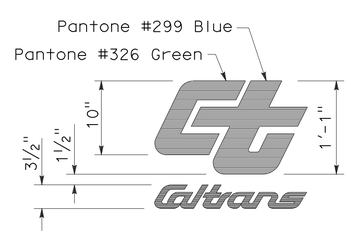

DETAIL A-2

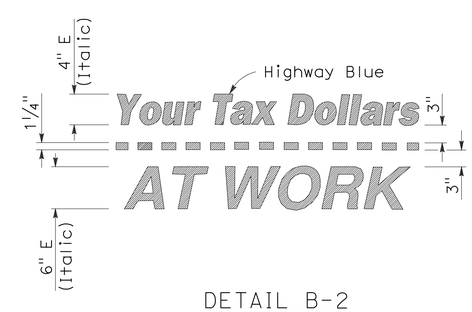

DETAIL B-2
(See Note 3)

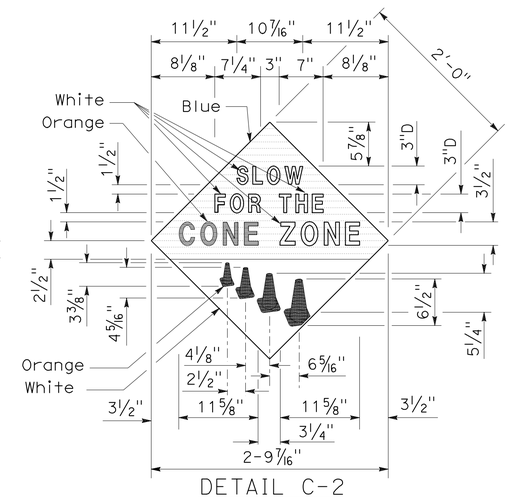

DETAIL C-2
(See Note 4)

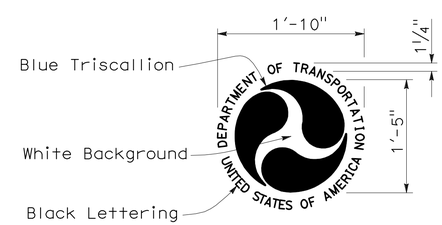

DETAIL D-2
(See Note 6)

STATE OF CALIFORNIA
DEPARTMENT OF TRANSPORTATION

CONSTRUCTION PROJECT FUNDING IDENTIFICATION SIGNS

NO SCALE

RSP T7 DATED NOVEMBER 17, 2006 SUPERSEDES STANDARD PLAN T7
DATED MAY 1, 2006 - PAGE 217 OF THE STANDARD PLANS BOOK DATED MAY 2006.

REVISED STANDARD PLAN RSP T7

2006 REVISED STANDARD PLAN RSP T7

9-7-06