Dist	COUNTY	ROUTE	POST MILES TOTAL PROJECT	SHEET No.	TOTAL SHEETS
11	SD	54, 125	5.3/6.4, 9.2/9.7	1	56

STATE OF CALIFORNIA

HSSTPG-P054(008)E

DEPARTMENT OF TRANSPORTATION

PROJECT PLANS FOR CONSTRUCTION ON

STATE HIGHWAY

IN SAN DIEGO COUNTY NEAR SAN DIEGO ON ROUTE 54 FROM 0.3 MILE EAST OF BRIARWOOD ROAD OVERCROSSING TO 0.4 MILE EAST OF SWEETWATER ROAD UNDERCROSSING AND ON ROUTE 125 FROM 0.5 MILE WEST OF ELKELTON PLACE UNDERCROSSING TO ELKELTON PLACE UNDERCROSSING

TO BE SUPPLEMENTED BY STANDARD PLANS DATED MAY 2006

INDEX OF PLANS

SHEET NO.	DESCRIPTION
1	TITLE AND LOCATION MAP
2	TYPICAL CROSS SECTIONS
3	PROJECT CONTROL
4-9	LAYOUT
10-13	CONSTRUCTION DETAILS
14-21	TEMPORARY WATER POLLUTION CONTROL PLAN, DETAILS AND QUANTITIES
22-26	DRAINAGE PLAN, PROFILES, DETAILS AND QUANTITIES
27	CONSTRUCTION AREA SIGNS
28-34	TRAFFIC HANDLING PLANS AND QUANTITIES
35	PAVEMENT DELINEATION DETAILS AND QUANTITIES
36-37	SUMMARY OF QUANTITIES
38	PLANT LIST
39	PLANTING PLAN
40	IRRIGATION REMOVAL PLAN
41	IRRIGATION PLAN
42	LANDSCAPE DETAILS
43-56	NEW AND REVISED STANDARD PLANS

THE STANDARD PLANS LIST APPLICABLE TO THIS CONTRACT IS INCLUDED IN THE NOTICE TO BIDDERS AND SPECIAL PROVISIONS BOOK.

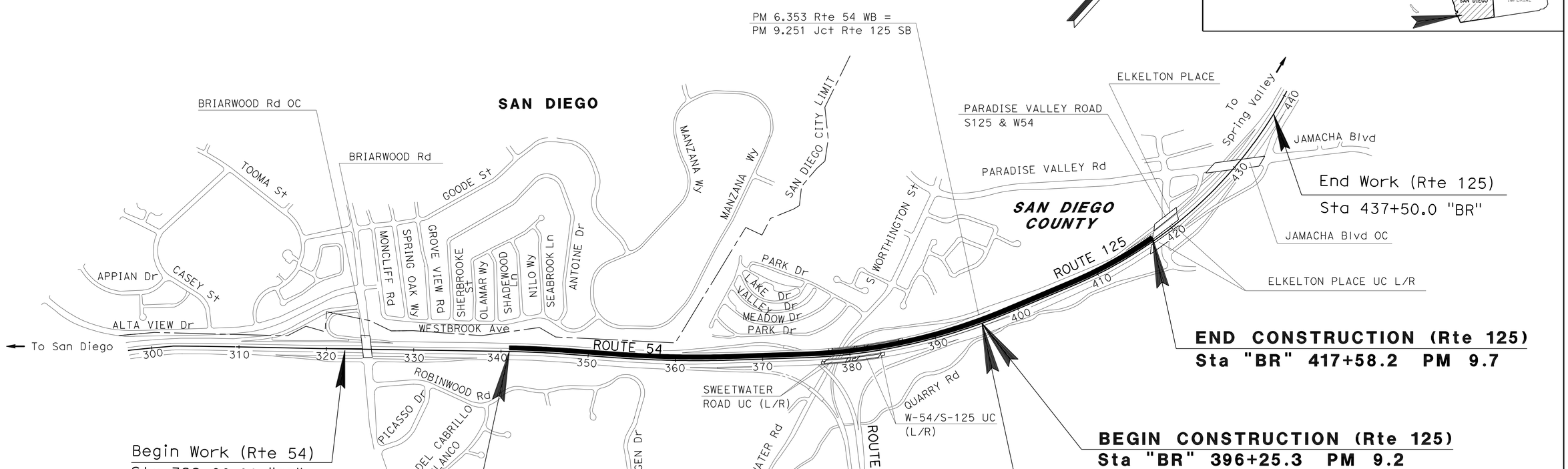

NO SCALE

THE CONTRACTOR SHALL POSSESS THE CLASS (OR CLASSES) OF LICENSE AS SPECIFIED IN THE "NOTICE TO BIDDERS."

PROJECT MANAGER: RICHARD N. ESTRADA

DESIGN ENGINEER: ALBERT N. LABRADOR

08-11-11
PROJECT ENGINEER REGISTERED CIVIL ENGINEER — DATE

REGISTERED PROFESSIONAL ENGINEER — ALBERT LABRADOR — No. 65294 — Exp. 09-30-11 — CIVIL — STATE OF CALIFORNIA

September 19, 2011
PLANS APPROVAL DATE

THE STATE OF CALIFORNIA OR ITS OFFICERS OR AGENTS SHALL NOT BE RESPONSIBLE FOR THE ACCURACY OR COMPLETENESS OF SCANNED COPIES OF THIS PLAN SHEET.

CONTRACT No.	11-298404
PROJECT ID	1100000416

LAST REVISION 08-17-11 — DATE PLOTTED => 21-SEP-2011 — TIME PLOTTED => 10:18

Dist	COUNTY	ROUTE	POST MILES TOTAL PROJECT	SHEET No.	TOTAL SHEETS
11	SD	54, 125	5.3/6.4, 9.2/9.7	2	56

REGISTERED CIVIL ENGINEER 08-11-11 DATE

09-19-11
PLANS APPROVAL DATE

REGISTERED PROFESSIONAL ENGINEER ALBERT LABRADOR No. 65294 Exp. 09-30-11 CIVIL STATE OF CALIFORNIA

THE STATE OF CALIFORNIA OR ITS OFFICERS OR AGENTS SHALL NOT BE RESPONSIBLE FOR THE ACCURACY OR COMPLETENESS OF SCANNED COPIES OF THIS PLAN SHEET.

NOTES:

1. DIMENSIONS OF THE PAVEMENT STRUCTURES (STRUCTURAL SECTION) ARE SUBJECT TO TOLERANCES SPECIFIED IN THE STANDARD SPECIFICATIONS.
2. FOR DOUBLE THRIE BEAM BARRIER AND MBGR WORK, SEE LAYOUTS.
3. FOG SEAL COAT SHALL BE APPLIED TO ALL HMA SURFACES EXCEPT TRAVELED WAYS.
4. FOR "A" AND "B" WIDTHS, SEE TABLE A.
5. PLACE EROSION CONTROL (BONDED FIBER MATRIX). SEE SUMMARY OF QUANTITIES FOR EXACT WIDTH.

DESIGN DESIGNATION (ROUTE 54/125)

ROUTE 54
2005 ADT = 124,512
2030 ADT = 172,713
D=52%, T=5%, V=70 MPH
DHV=16,729

ROUTE 125
2005 ADT = 43,975
2030 ADT = 88,254
D=56%, T=5%, V=70 MPH
DHV=11,534

ABBREVIATIONS:

S/C - SAW CUT LINE
C/P - CATCH POINT
HMA-A = HOT MIX ASPHALT (TYPE A)

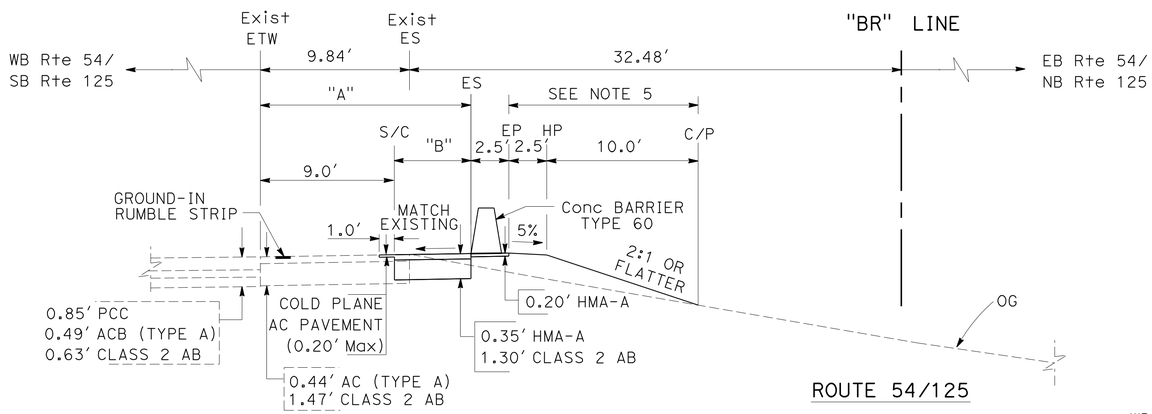

Sta 415+45.00 TO Sta 417+40.00 "BR" LINE

SOUTHBOUND ROUTE 125

Sta 386+50.00 TO Sta 412+75.00 "BR" LINE
Sta 343+70.00 TO Sta 376+20.00 "BR" LINE

WESTBOUND ROUTE 54/ SOUTHBOUND ROUTE 125

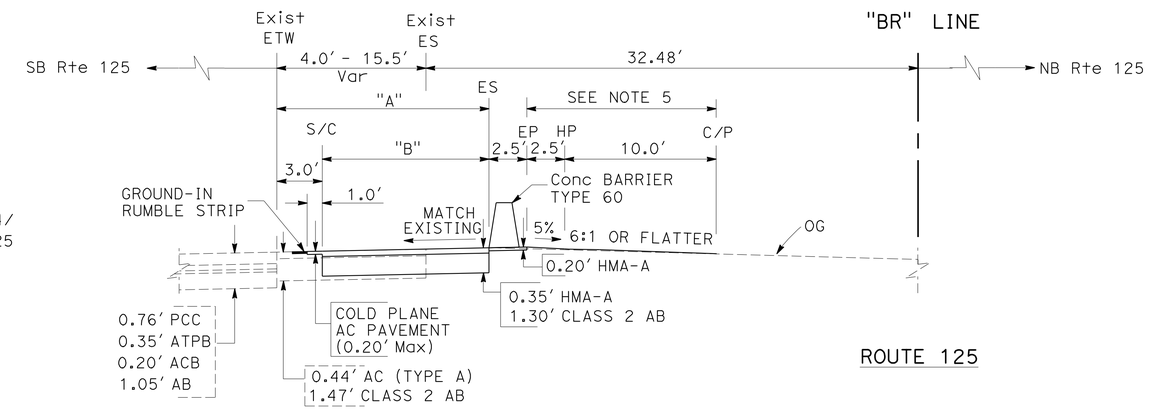

Sta 412+75.00 TO Sta 415+45.00 "BR" LINE

SOUTHBOUND ROUTE 125

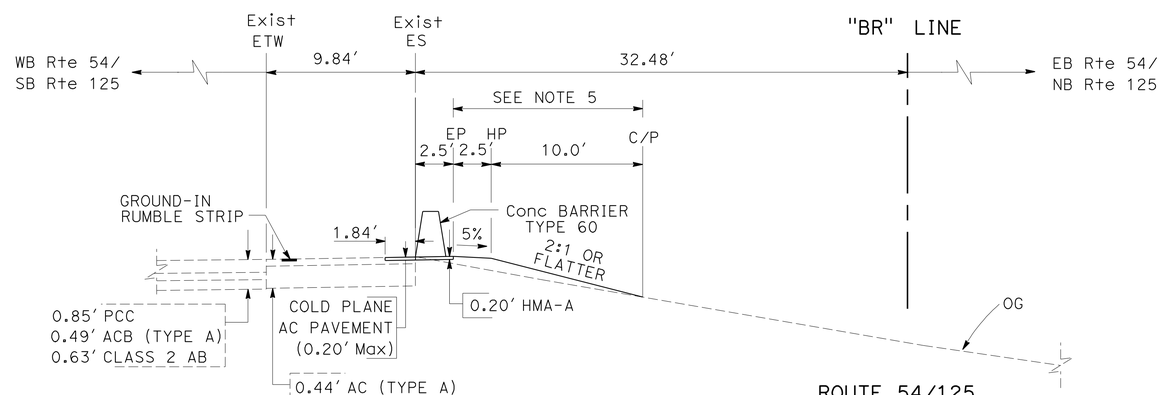

Sta 376+20.00 TO Sta 377+38.61 "BR" LINE
Sta 385+75.02 TO Sta 386+50.00 "BR" LINE

SOUTHBOUND ROUTE 54

Sta 417+40.00 TO Sta 417+58.17 "BR" LINE

SOUTHBOUND ROUTE 125

TABLE A

ROUTE	STATION FROM	STATION TO	"A"	"B"
ROUTE 54	343+70.00	375+40.00	14.0′	5.0′
ROUTE 54	375+40.00	376+20.00	Var 14.0′ - 9.84′	Var 5.0′ - 0.84′
ROUTE 54	386+50.00	387+33.20	Var 14.0′ - 9.84′	Var 5.0′ - 0.84′
ROUTE 54/125	387+33.20	412+75.00	14.0′	5.0′
ROUTE 125	412+75.00	415+45.00	14.0′	11.0′
ROUTE 125	415+45.00	416+56.80	14.0′	5.0′
ROUTE 125	416+56.80	417+40.00	Var 14.0′ - 9.84′	Var 5.0′ - 0.84′

TYPICAL CROSS SECTIONS

NO SCALE

X-1

STATE OF CALIFORNIA - DEPARTMENT OF TRANSPORTATION
TRAFFIC PROJECT DEVELOPMENT
Caltrans

FUNCTIONAL SUPERVISOR: RICHARD N. ESTRADA
CALCULATED-DESIGNED BY: ALBERT N. LABRADOR
CHECKED BY: DOLORES VALADEZ
REVISED BY
DATE REVISED

LAST REVISION 08-17-11
DATE PLOTTED => 21-SEP-2011
TIME PLOTTED => 10:18

Dist	COUNTY	ROUTE	POST MILES TOTAL PROJECT	SHEET No.	TOTAL SHEETS
11	SD	54,125	5.3/6.4, 9.2/9.7	3	56

08-15-11
PROFESSIONAL LAND SURVEYOR DATE

09-19-11
PLANS APPROVAL DATE

PROFESSIONAL LAND SURVEYOR MARK D. PHELAN L.S.7111 EXP:12-31-12 STATE OF CALIFORNIA

THE STATE OF CALIFORNIA OR ITS OFFICERS OR AGENTS SHALL NOT BE RESPONSIBLE FOR THE ACCURACY OR COMPLETENESS OF SCANNED COPIES OF THIS PLAN SHEET.

NOTES:

1. CONTACT DISTRICT 11'S LAND SURVEY DIVISION, PHONE (858)467-4305, FOR ADDITIONAL INFORMATION OR QUERIES REGARDING THIS SURVEY PROJECT CONTROL.
2. BASIS OF BEARINGS AND COORDINATES
   FOR THIS PROJECT IS THE CALIFORNIA COORDINATE SYSTEM OF 1983, HPGN EPOCH ADJUSTMENT [CCS 83 (1991.35)], ZONE 6. PROJECT CONTROL STATIONS WERE ESTABLISHED ACCORDING TO CRITERIA SET FORTH IN THE FEDERAL GEODETIC CONTROL SUBCOMMITTEE'S "GEOMETRIC GEODETIC ACCURACY STANDARDS AND SPECIFICATIONS FOR USING GPS RELATIVE POSITIONING TECHNIQUES" REPRINTED AUGUST 1, 1989.

   THIS REAL TIME KENEMATIC (RTK) GPS SURVEY WAS CONSTRAINED TO 2ND ORDER STATION "125-KP 17.9 L" & 3RD ORDER STATION "54-5.01".
3. BASIS OF ELEVATIONS
   FOR THIS PROJECT IS THE NORTH AMERICAN VERTICAL DATUM OF 1988 (NAVD88). ELEVATIONS ARE ESTABLISHED BY RTK CONSTRAINING TO STATION "125-KP17.9 L".
4. IN THE EVENT GPS MACHINE CONTROL/GUIDANCE IS USED FOR THIS PROJECT, THE CONTRACTOR SHALL CONTACT OR MEET WITH DISTRICT 11'S LAND SURVEY DIVISION TO OBTAIN THE CONTROL NECESSARY TO ESTABLISH A PROJECT CALIBRATION COMPATIBLE FOR ALL USERS.

ABBREVIATIONS:

CADT CALIFORNIA DEPARTMENT OF TRANSPORTATION
IP IRON PIPE

LEGEND:

(2) 2ND ORDER STATION
(3) 3RD ORDER STATION

CONTROL FOR DESIGN AND CONSTRUCTION

STATION DESIGNATION	ORDER	NORTHING	EASTING	ELEVATION	DESCRIPTION
125-KP17.9 L	2ND	1,835,100.49	6,327,184.98	332.97	2¼" CADT BRASS DISK IN STRUCTURE
54-5.01	3RD	1,827,712.99	6,320,873.35	280.55	2¼" CADT BRASS DISK IN 2" IP
54 5.40	3RD	1,829,684.81	6,322,833.38	242.62	"X" IN CONCRETE
*54 5.46	3RD	1,829,910.05	6,323,070.03	249.95	2 X 2 HUB AND TACK
54 5.58	3RD	1,830,324.04	6,323,584.07	257.01	2 X 2 HUB AND TACK
*54 5.71	3RD	1,830,743.01	6,324,096.24	262.87	2 X 2 HUB AND TACK
54 5.83	3RD	1,831,180.81	6,324,587.78	285.58	2 X 2 HUB AND TACK
*54 5.96	3RD	1,831,629.96	6,325,070.31	309.05	2 X 2 HUB AND TACK
54 6.06	3RD	1,832,024.55	6,325,467.94	327.34	2 X 2 HUB AND TACK
54 6.25	3RD	1,832,800.22	6,326,116.35	351.14	2 X 2 HUB AND TACK
54 6.37	3RD	1,833,340.70	6,326,492.06	352.87	2 X 2 HUB AND TACK
*54 6.49	3RD	1,833,926.78	6,326,793.98	348.07	2 X 2 HUB AND TACK
54 6.60	3RD	1,834,523.03	6,327,075.56	332.46	2 X 2 HUB AND TACK
*54 6.72	3RD	1,835,128.81	6,327,340.21	309.71	2 X 2 HUB AND TACK
54 6.78	3RD	1,835,455.72	6,327,451.93	301.45	2 X 2 HUB AND TACK

* NOT ALL STATIONS SHOWN GRAPHICALLY ON ALIGNMENT

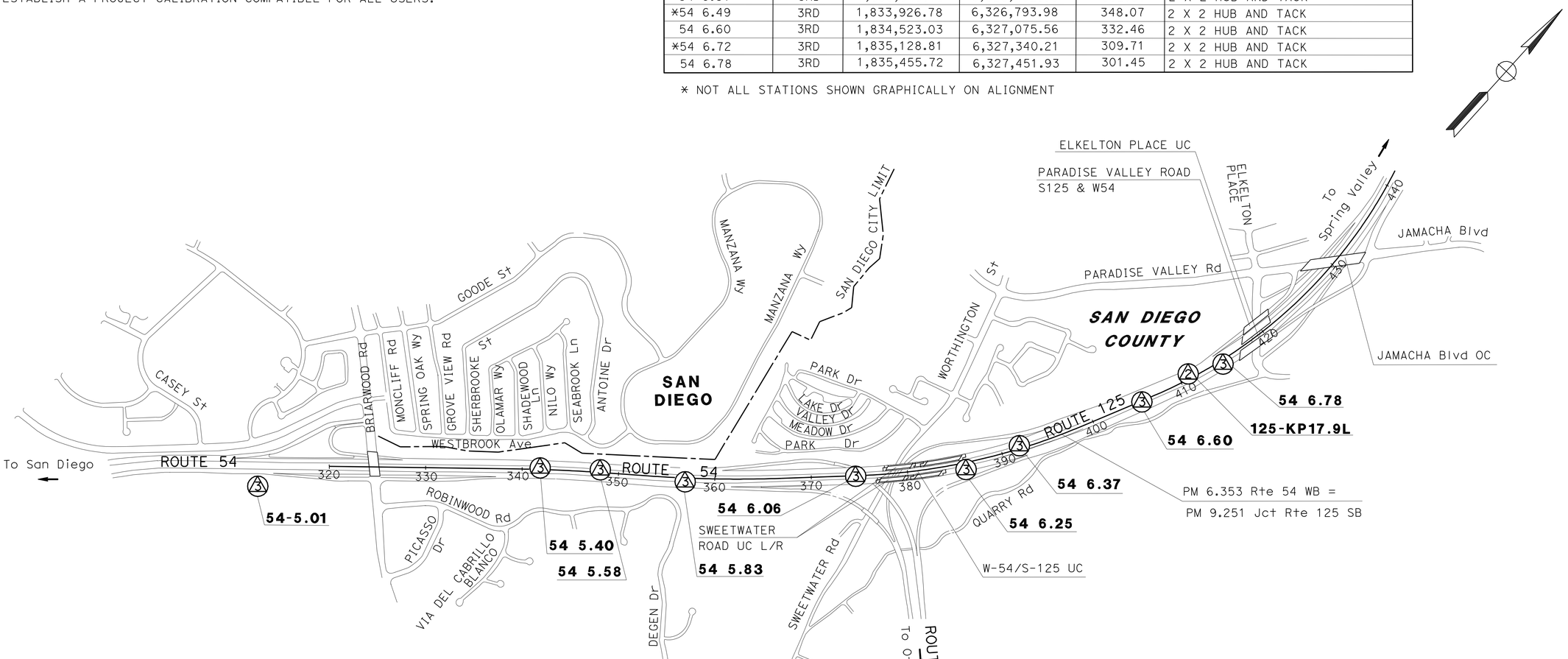

APPROVED FOR PROJECT CONTROL INFORMATION ONLY

PROJECT CONTROL

NO SCALE

PC-1

STATE OF CALIFORNIA - DEPARTMENT OF TRANSPORTATION
Caltrans LAND SURVEYS DIVISION
FUNCTIONAL SUPERVISOR: BRUCE URQUHART
CALCULATED-DESIGNED BY: MARK PHELAN
CHECKED BY: NED SALMAN
REVISED BY
DATE REVISED

LAST REVISION 08-17-11 DATE PLOTTED => 21-SEP-2011 TIME PLOTTED => 10:18

Dist	COUNTY	ROUTE	POST MILES TOTAL PROJECT	SHEET No.	TOTAL SHEETS
11	SD	54, 125	5.3/6.4, 9.2/9.7	4	56

REGISTERED CIVIL ENGINEER 08-11-11 DATE

09-19-11
PLANS APPROVAL DATE

REGISTERED PROFESSIONAL ENGINEER ALBERT LABRADOR No. 65294 Exp. 09-30-11 CIVIL STATE OF CALIFORNIA

THE STATE OF CALIFORNIA OR ITS OFFICERS OR AGENTS SHALL NOT BE RESPONSIBLE FOR THE ACCURACY OR COMPLETENESS OF SCANNED COPIES OF THIS PLAN SHEET.

NOTES:

1. FOR ACCURATE RIGHT OF WAY DATA, CONTACT RIGHT OF WAY ENGINEERING AT THE DISTRICT OFFICE.
2. SEE DRAINAGE DETAILS FOR CONCRETE BARRIER (TYPE 60 MODIFIED).
3. EXISTING 2" WATER METER IS LOCATED AT BRIARWOOD ROAD AND ALTA VIEW DRIVE FOR IRRIGATION SYSTEM .

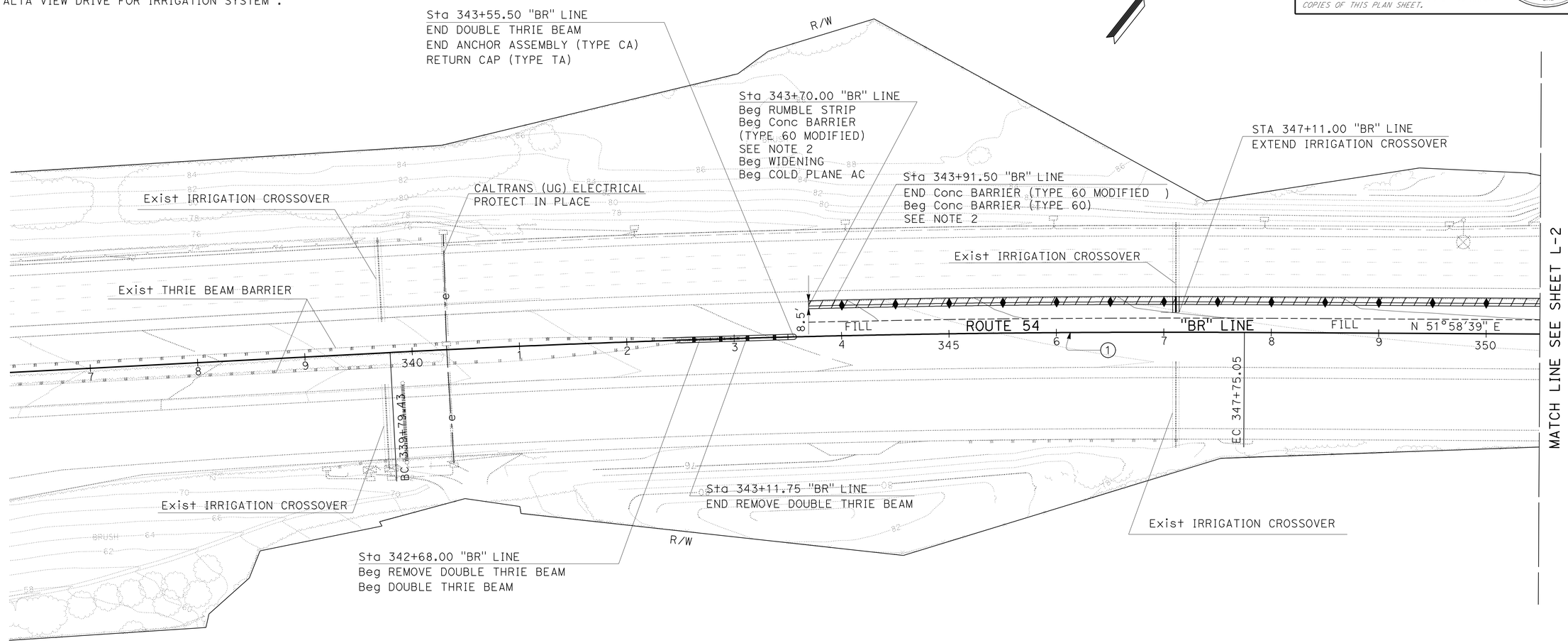

LEGEND:

- Exist 2" WATER METER
- Exist IRRIGATION CROSSOVER
- EXTEND IRRIGATION CROSSOVER
- COLD PLANE AC AND WIDENING
- —-e——— EXISTING UNDERGROUND (UG) ELECTRICAL - CALTRANS
- —fo—— — EXISTING UNDERGROUND (UG) FIBER OPTIC - CALTRANS
- EXISTING ELECTRICAL PULL BOX (PROTECT IN PLACE) - CALTRANS
- ——--s—— EXISTING SEWER MAIN - CITY OF SAN DIEGO
- ——-g—— EXISTING GAS MAIN - SAN DIEGO GAS & ELECTRIC (SDG&E)
- ——-e—(oh) EXISTING OVERHEAD (OH) ELECTRICAL - SAN DIEGO GAS & ELECTRIC (SDG&E)
- -——w—— EXISTING WATER MAIN - SAN DIEGO WATER AUTHORITY

CURVE DATA

No.	R	Δ	T	L
1	13,779.50′	3°18′30′	397.92′	795.62′

LAYOUT

SCALE: 1" = 50′ **L-1**

STATE OF CALIFORNIA - DEPARTMENT OF TRANSPORTATION
Caltrans
TRAFFIC PROJECT DEVELOPMENT

FUNCTIONAL SUPERVISOR: RICHARD N. ESTRADA
CALCULATED-DESIGNED BY: DOLORES VALADEZ
CHECKED BY: MIKE DISPENZIERI
REVISED BY / DATE REVISED

LAST REVISION 08-17-11 | DATE PLOTTED => 21-SEP-2011 | TIME PLOTTED => 10:18

Dist	COUNTY	ROUTE	POST MILES TOTAL PROJECT	SHEET No.	TOTAL SHEETS
11	SD	54, 125	5.3/6.4, 9.2/9.7	5	56

REGISTERED CIVIL ENGINEER 08-11-11 DATE

09-19-11
PLANS APPROVAL DATE

REGISTERED PROFESSIONAL ENGINEER ALBERT LABRADOR No. 65294 Exp. 09-30-11 CIVIL STATE OF CALIFORNIA

THE STATE OF CALIFORNIA OR ITS OFFICERS OR AGENTS SHALL NOT BE RESPONSIBLE FOR THE ACCURACY OR COMPLETENESS OF SCANNED COPIES OF THIS PLAN SHEET.

NOTES:

1. FOR ACCURATE RIGHT OF WAY DATA, CONTACT RIGHT OF WAY ENGINEERING AT THE DISTRICT OFFICE.
2. EXISTING 2" WATER METER IS LOCATED AT BRIARWOOD ROAD AND ALTA VIEW DRIVE FOR IRRIGATION SYSTEM.

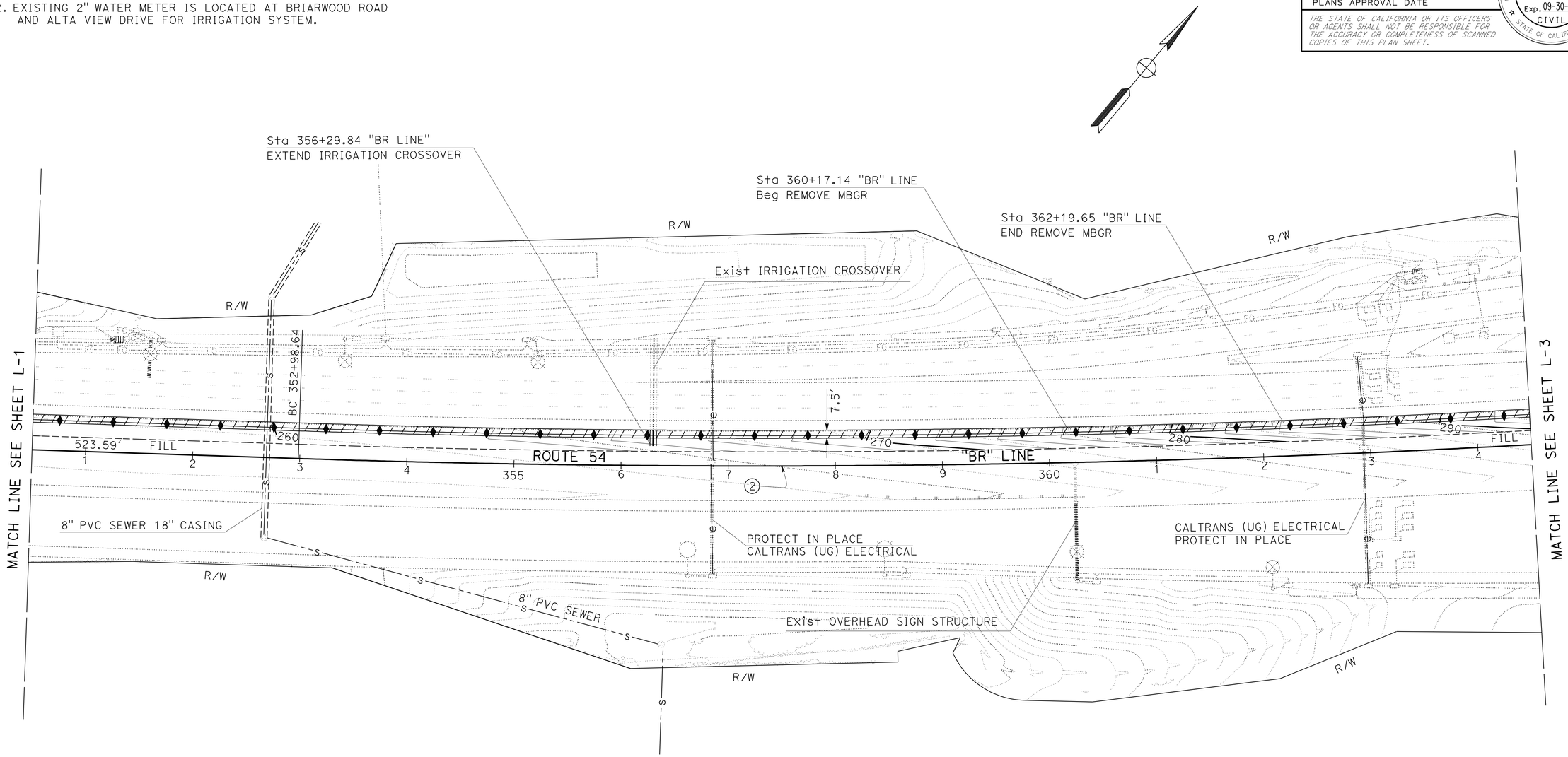

CURVE DATA

No.	R	Δ	T	L
2	13,123.33'	6°05'13"	697.74'	1,394.16'

LAYOUT

SCALE: 1" = 50' **L-2**

STATE OF CALIFORNIA - DEPARTMENT OF TRANSPORTATION
TRAFFIC PROJECT DEVELOPMENT
Caltrans

FUNCTIONAL SUPERVISOR: RICHARD N. ESTRADA
CALCULATED-DESIGNED BY: DOLORES VALADEZ
CHECKED BY: MIKE DISPENZIERI
REVISED BY
DATE REVISED

LAST REVISION 08-17-11
DATE PLOTTED => 21-SEP-2011
TIME PLOTTED => 10:18

Dist	COUNTY	ROUTE	POST MILES TOTAL PROJECT	SHEET No.	TOTAL SHEETS
11	SD	54, 125	5.3/6.4, 9.2/9.7	6	56

REGISTERED CIVIL ENGINEER 08-11-11 DATE

09-19-11
PLANS APPROVAL DATE

REGISTERED PROFESSIONAL ENGINEER ALBERT LABRADOR No. 65294 Exp. 09-30-11 CIVIL STATE OF CALIFORNIA

THE STATE OF CALIFORNIA OR ITS OFFICERS OR AGENTS SHALL NOT BE RESPONSIBLE FOR THE ACCURACY OR COMPLETENESS OF SCANNED COPIES OF THIS PLAN SHEET.

NOTES:

1. FOR ACCURATE RIGHT OF WAY DATA, CONTACT RIGHT OF WAY ENGINEERING AT THE DISTRICT OFFICE.

2. EXISTING 2" WATER METER IS LOCATED AT BRIARWOOD ROAD AND ALTA VIEW DRIVE FOR IRRIGATION SYSTEM.

CURVE DATA

No.	R	Δ	T	L
2	13,123.33′	6°05′13"	697.74′	1,394.16′
3	6,561.67′	20°57′18"	1,213.47′	2,399.82′

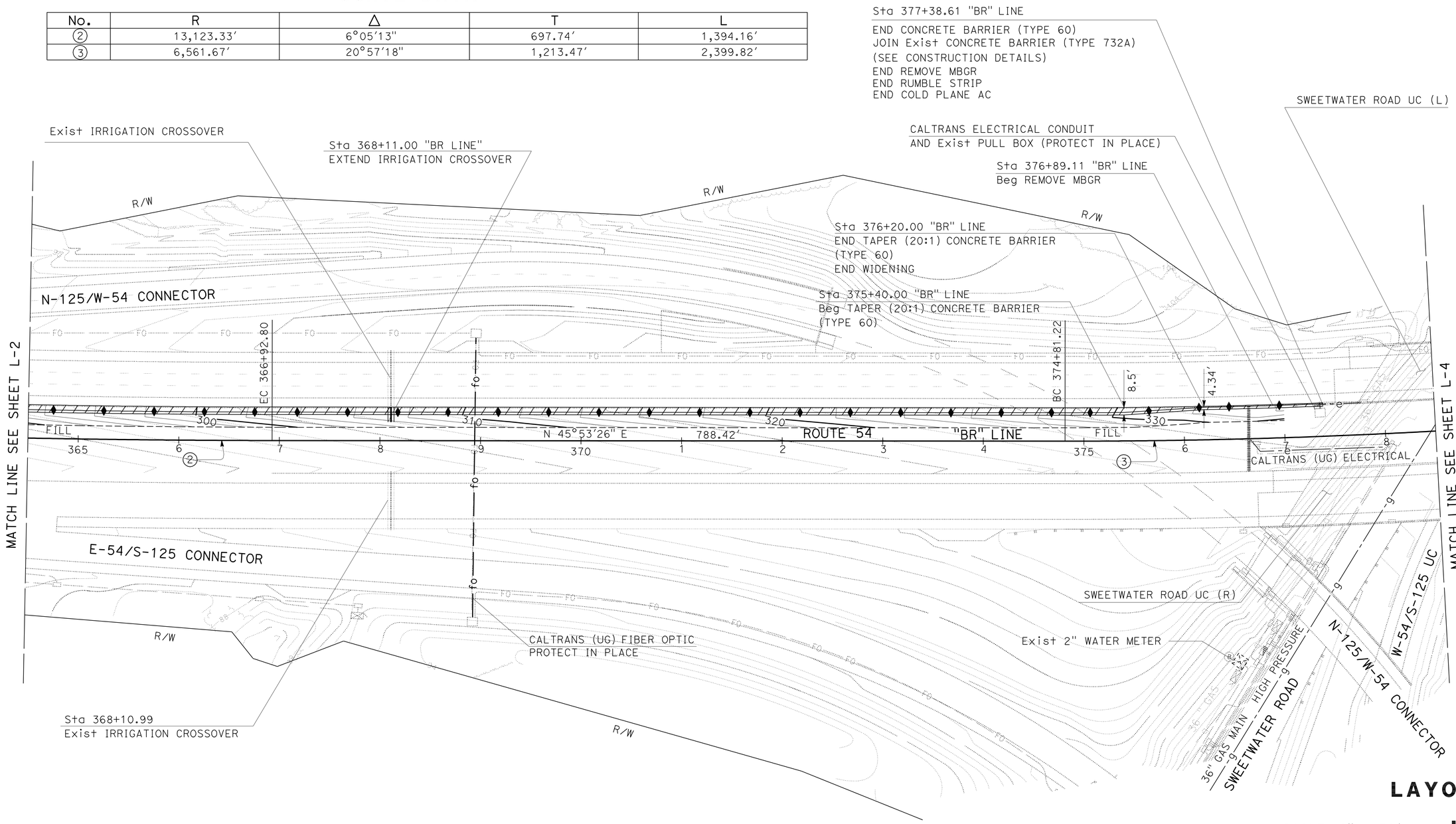

LAYOUT

SCALE: 1" = 50′

L-3

STATE OF CALIFORNIA - DEPARTMENT OF TRANSPORTATION
Caltrans
TRAFFIC PROJECT DEVELOPMENT

FUNCTIONAL SUPERVISOR: RICHARD N. ESTRADA
CALCULATED-DESIGNED BY: DOLORES VALADEZ
CHECKED BY: MIKE DISPENZIERI
REVISED BY
DATE REVISED

LAST REVISION 08-17-11
DATE PLOTTED => 21-SEP-2011
TIME PLOTTED => 10:18

Dist	COUNTY	ROUTE	POST MILES TOTAL PROJECT	SHEET No.	TOTAL SHEETS
11	SD	54, 125	5.3/6.4, 9.2/9.7	7	56

REGISTERED CIVIL ENGINEER 08-11-11 DATE

09-19-11
PLANS APPROVAL DATE

REGISTERED PROFESSIONAL ENGINEER
ALBERT LABRADOR
No. 65294
Exp. 09-30-11
CIVIL
STATE OF CALIFORNIA

THE STATE OF CALIFORNIA OR ITS OFFICERS OR AGENTS SHALL NOT BE RESPONSIBLE FOR THE ACCURACY OR COMPLETENESS OF SCANNED COPIES OF THIS PLAN SHEET.

NOTES:

1. FOR ACCURATE RIGHT OF WAY DATA, CONTACT RIGHT OF WAY ENGINEERING AT THE DISTRICT OFFICE.
2. EXISTING 2" WATER METER IS LOCATED AT SWEETWATER ROAD TO ELKELTON PLACE FOR IRRIGATION SYSTEM.

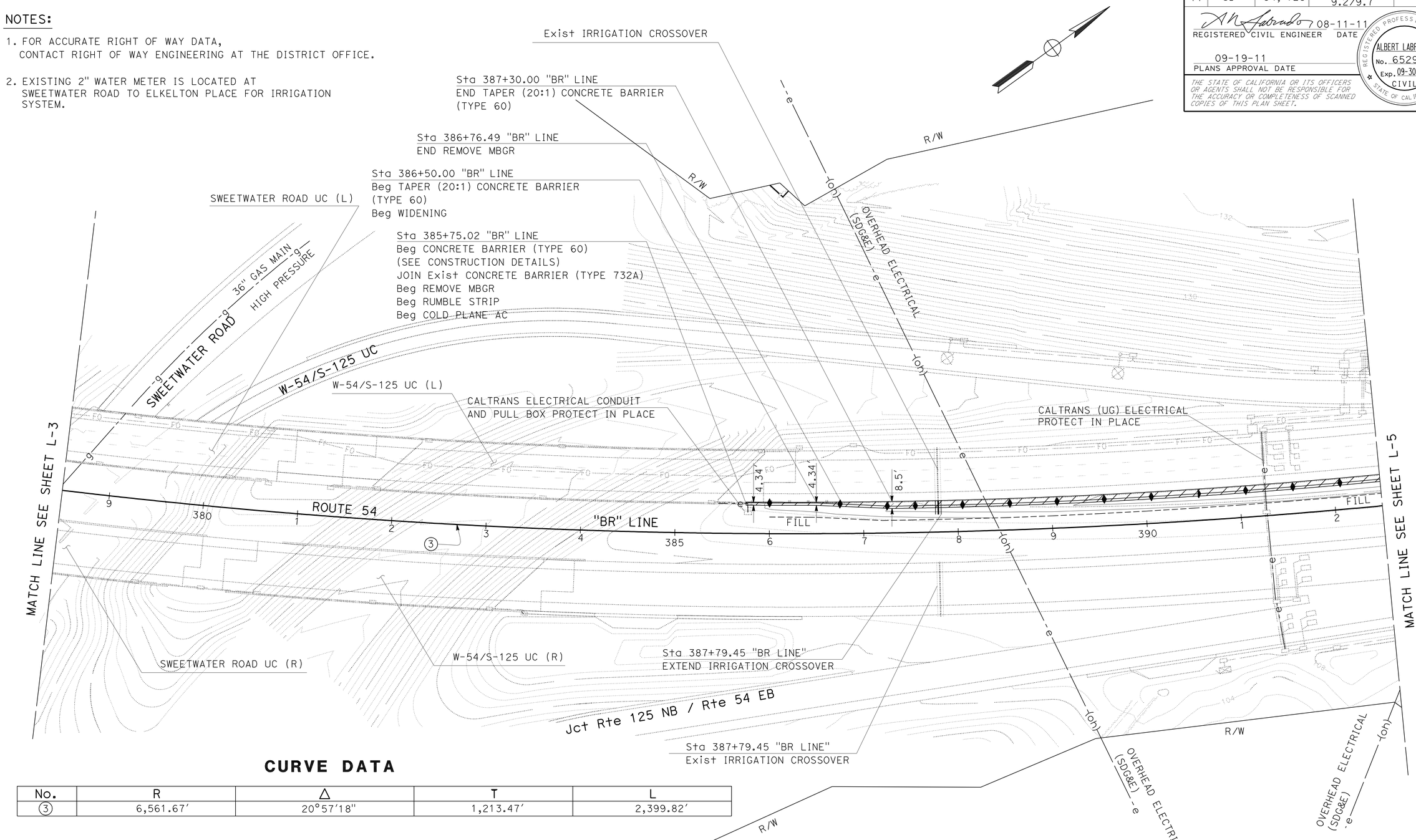

CURVE DATA

No.	R	Δ	T	L
3	6,561.67′	20°57′18"	1,213.47′	2,399.82′

LAYOUT

SCALE: 1" = 50′ **L-4**

STATE OF CALIFORNIA - DEPARTMENT OF TRANSPORTATION
TRAFFIC PROJECT DEVELOPMENT
Caltrans

FUNCTIONAL SUPERVISOR: RICHARD N. ESTRADA
CALCULATED-DESIGNED BY: DOLORES VALADEZ
CHECKED BY: MIKE DISPENZIERI
REVISED BY / DATE REVISED

LAST REVISION 08-17-11 | DATE PLOTTED => 21-SEP-2011 | TIME PLOTTED => 10:18

Dist	COUNTY	ROUTE	POST MILES TOTAL PROJECT	SHEET No.	TOTAL SHEETS
11	SD	54, 125	5.3/6.4, 9.2/9.7	8	56

REGISTERED CIVIL ENGINEER 08-11-11 DATE

09-19-11
PLANS APPROVAL DATE

REGISTERED PROFESSIONAL ENGINEER
ALBERT LABRADOR
No. 65294
Exp. 09-30-11
CIVIL
STATE OF CALIFORNIA

THE STATE OF CALIFORNIA OR ITS OFFICERS OR AGENTS SHALL NOT BE RESPONSIBLE FOR THE ACCURACY OR COMPLETENESS OF SCANNED COPIES OF THIS PLAN SHEET.

NOTE:

FOR ACCURATE RIGHT OF WAY DATA, CONTACT
RIGHT OF WAY ENGINEERING AT THE DISTRICT OFFICE.

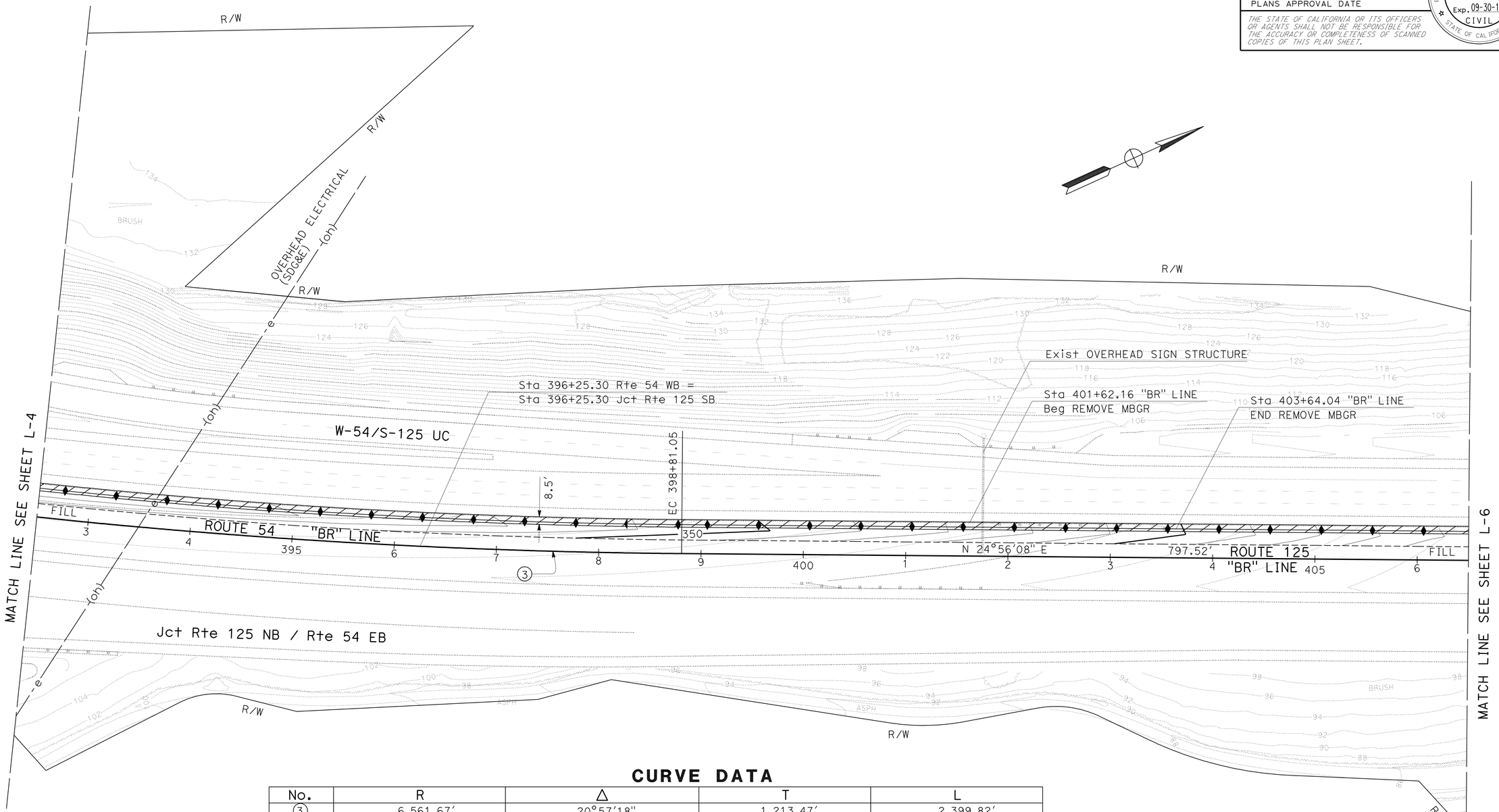

CURVE DATA

No.	R	Δ	T	L
3	6,561.67′	20°57′18"	1,213.47′	2,399.82′

LAYOUT

SCALE: 1" = 50′ **L-5**

STATE OF CALIFORNIA - DEPARTMENT OF TRANSPORTATION
TRAFFIC PROJECT DEVELOPMENT
Caltrans

FUNCTIONAL SUPERVISOR: RICHARD N. ESTRADA
CALCULATED-DESIGNED BY: DOLORES VALADEZ
CHECKED BY: MIKE DISPENZIERI
REVISED BY
DATE REVISED

LAST REVISION 08-17-11
DATE PLOTTED => 21-SEP-2011
TIME PLOTTED => 10:18

Dist	COUNTY	ROUTE	POST MILES TOTAL PROJECT	SHEET No.	TOTAL SHEETS
11	SD	54, 125	5.3/6.4, 9.2/9.7	9	56

REGISTERED CIVIL ENGINEER 08-11-11 DATE

09-19-11
PLANS APPROVAL DATE

REGISTERED PROFESSIONAL ENGINEER ALBERT LABRADOR No. 65294 Exp. 09-30-11 CIVIL STATE OF CALIFORNIA

THE STATE OF CALIFORNIA OR ITS OFFICERS OR AGENTS SHALL NOT BE RESPONSIBLE FOR THE ACCURACY OR COMPLETENESS OF SCANNED COPIES OF THIS PLAN SHEET.

NOTES:

1. FOR ACCURATE RIGHT OF WAY DATA, CONTACT RIGHT OF WAY ENGINEERING AT THE DISTRICT OFFICE.
2. EXISTING 2" WATER METER IS LOCATED AT SWEETWATER ROAD TO ELKELTON PLACE FOR IRRIGATION SYSTEM.

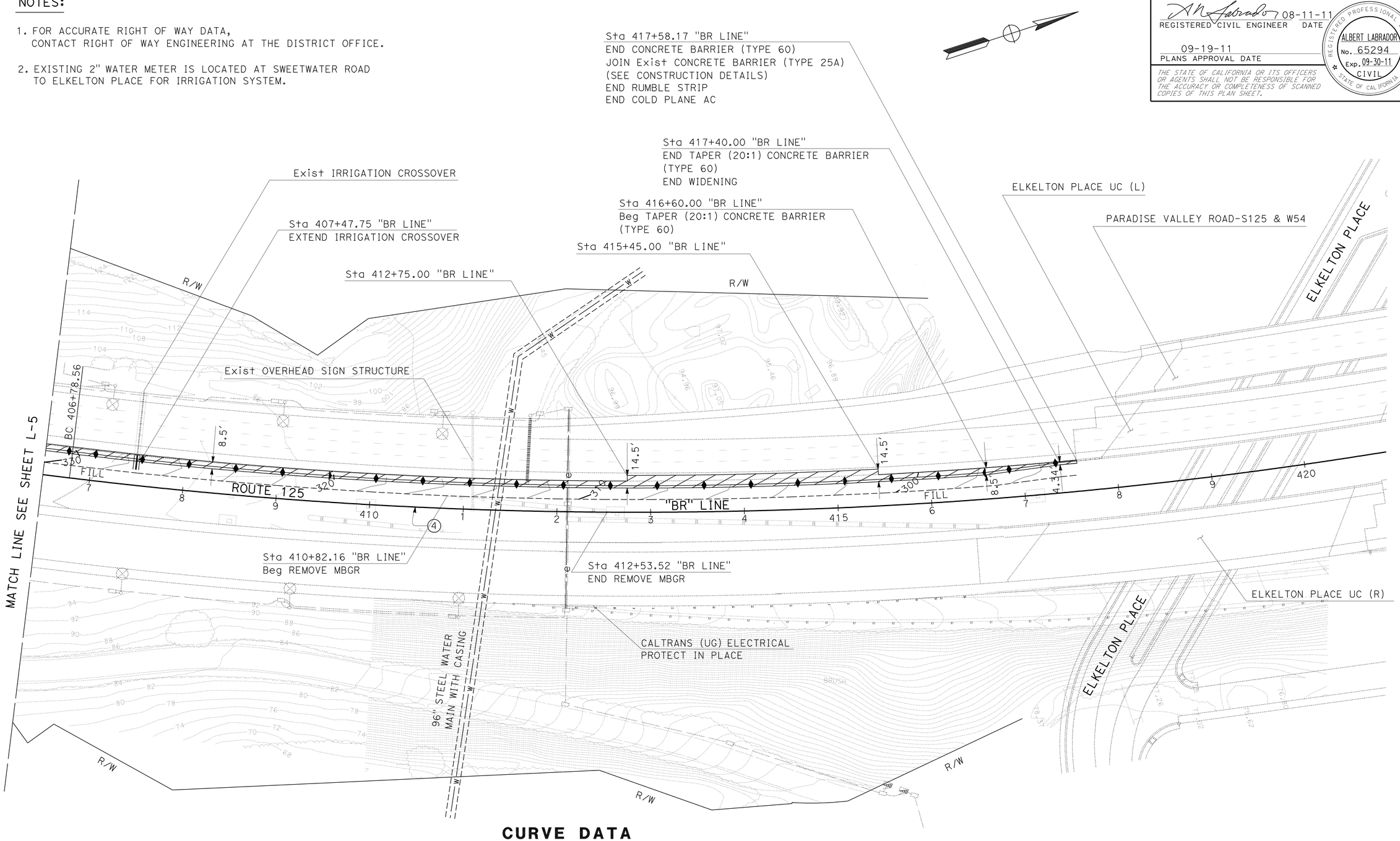

CURVE DATA

No.	R	Δ	T	L
4	4,999.99′	43°36′01"	1,999.87′	3,804.84′

LAYOUT

SCALE: 1" = 50′ **L-6**

STATE OF CALIFORNIA - DEPARTMENT OF TRANSPORTATION
TRAFFIC PROJECT DEVELOPMENT
Caltrans

FUNCTIONAL SUPERVISOR: RICHARD N. ESTRADA
CALCULATED-DESIGNED BY: DOLORES VALADEZ
CHECKED BY: MIKE DISPENZIERI
REVISED BY
DATE REVISED

LAST REVISION 08-17-11
DATE PLOTTED => 21-SEP-2011
TIME PLOTTED => 10:19

Dist	COUNTY	ROUTE	POST MILES TOTAL PROJECT	SHEET No.	TOTAL SHEETS
11	SD	54, 125	5.3/6.4, 9.2/9.7	10	56

REGISTERED CIVIL ENGINEER 08-11-11 DATE

09-19-11
PLANS APPROVAL DATE

REGISTERED PROFESSIONAL ENGINEER ALBERT LABRADOR No. 65294 Exp. 09-30-11 CIVIL STATE OF CALIFORNIA

THE STATE OF CALIFORNIA OR ITS OFFICERS OR AGENTS SHALL NOT BE RESPONSIBLE FOR THE ACCURACY OR COMPLETENESS OF SCANNED COPIES OF THIS PLAN SHEET.

NOTE:

1. FOR DETAILS NOT SHOWN FOR CONCRETE BARRIER TYPE 60, SEE REVISED STANDARDS PLAN A76A.

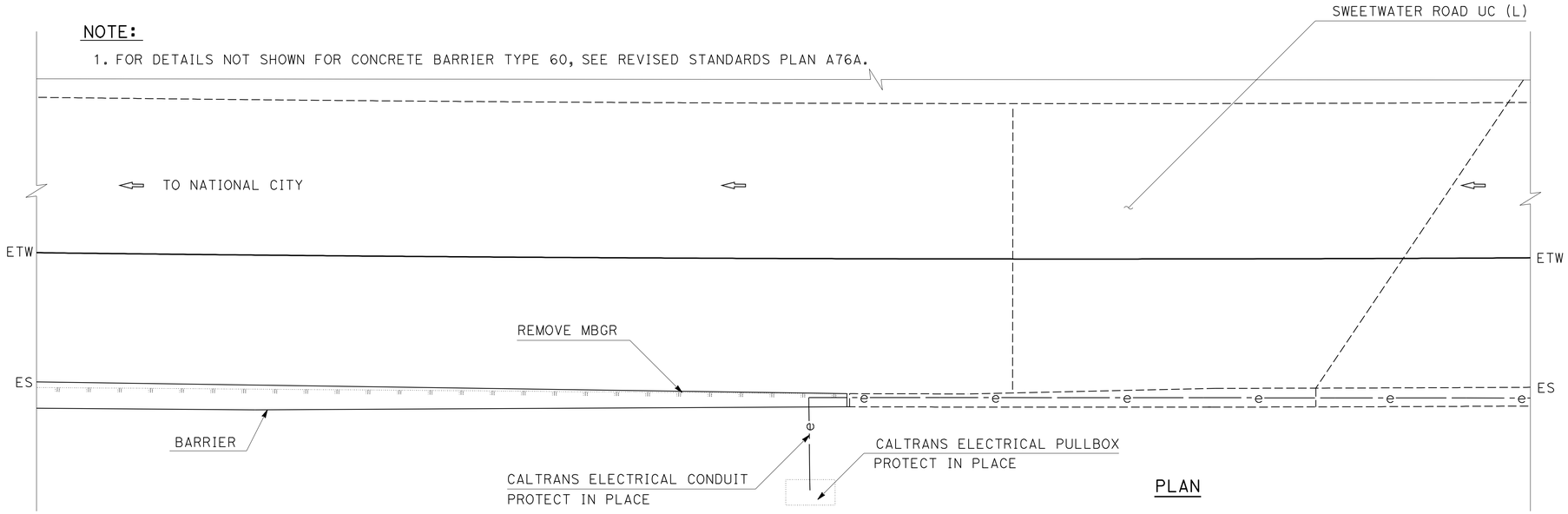

PLAN

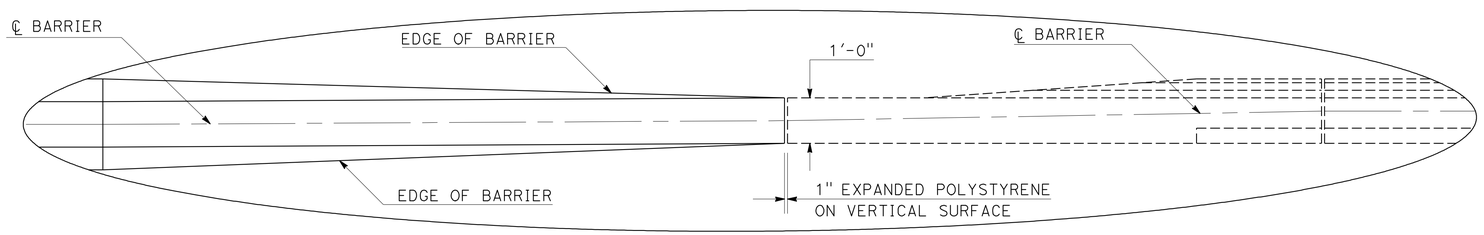

CONCRETE BARRIER CONNECTION/TRANSITION DETAIL

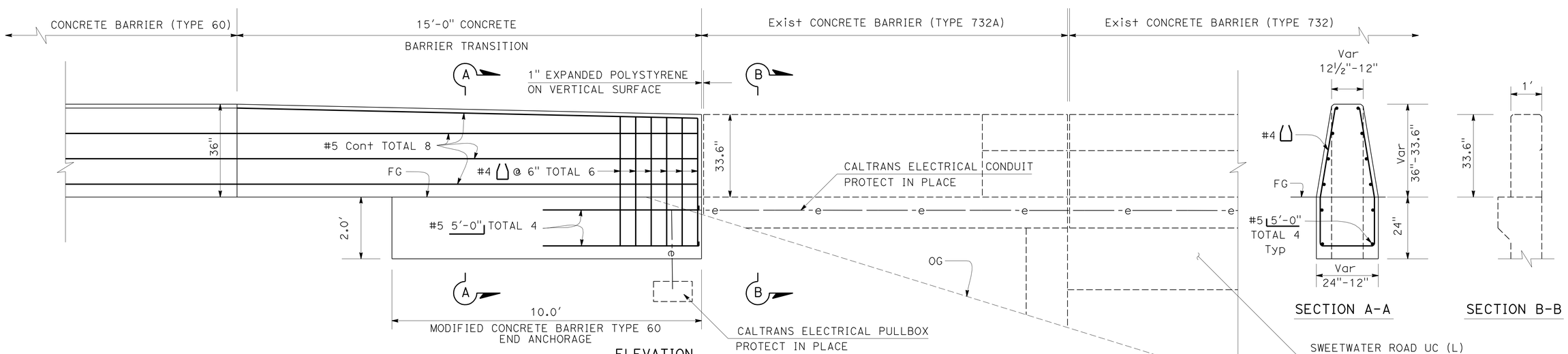

ELEVATION

SECTION A-A

SECTION B-B

CONCRETE BARRIER TYPE 60 CONNECTION TO EXISTING CONCRETE BARRIER TYPE 732A AT SWEETWATER ROAD UC (L)

CONSTRUCTION DETAILS

NO SCALE

C-1

STATE OF CALIFORNIA - DEPARTMENT OF TRANSPORTATION
TRAFFIC PROJECT DEVELOPMENT
Caltrans

FUNCTIONAL SUPERVISOR: RICHARD N. ESTRADA
CALCULATED-DESIGNED BY: DOLORES VALADEZ
CHECKED BY: MIKE DISPENZIERI
REVISED BY
DATE REVISED

LAST REVISION 08-17-11
DATE PLOTTED => 21-SEP-2011
TIME PLOTTED => 10:19

Dist	COUNTY	ROUTE	POST MILES TOTAL PROJECT	SHEET No.	TOTAL SHEETS
11	SD	54, 125	5.3/6.4, 9.2/9.7	11	56

REGISTERED CIVIL ENGINEER 08-11-11 DATE

09-19-11
PLANS APPROVAL DATE

REGISTERED PROFESSIONAL ENGINEER ALBERT LABRADOR No. 65294 Exp. 09-30-11 CIVIL STATE OF CALIFORNIA

THE STATE OF CALIFORNIA OR ITS OFFICERS OR AGENTS SHALL NOT BE RESPONSIBLE FOR THE ACCURACY OR COMPLETENESS OF SCANNED COPIES OF THIS PLAN SHEET.

NOTE:

1. FOR DETAILS NOT SHOWN FOR CONCRETE BARRIER TYPE 60, SEE REVISED STANDARDS PLAN A76A.

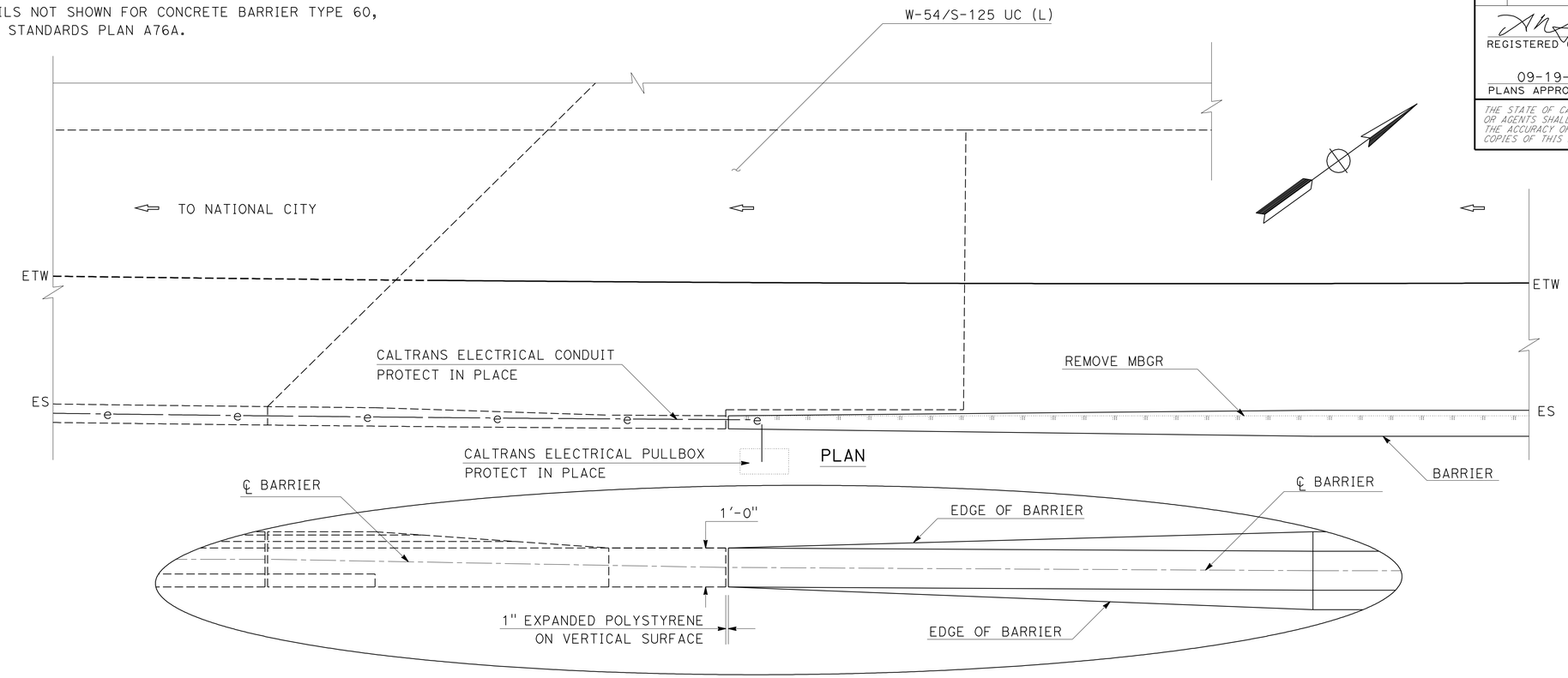

CONCRETE BARRIER CONNECTION/TRANSITION DETAIL

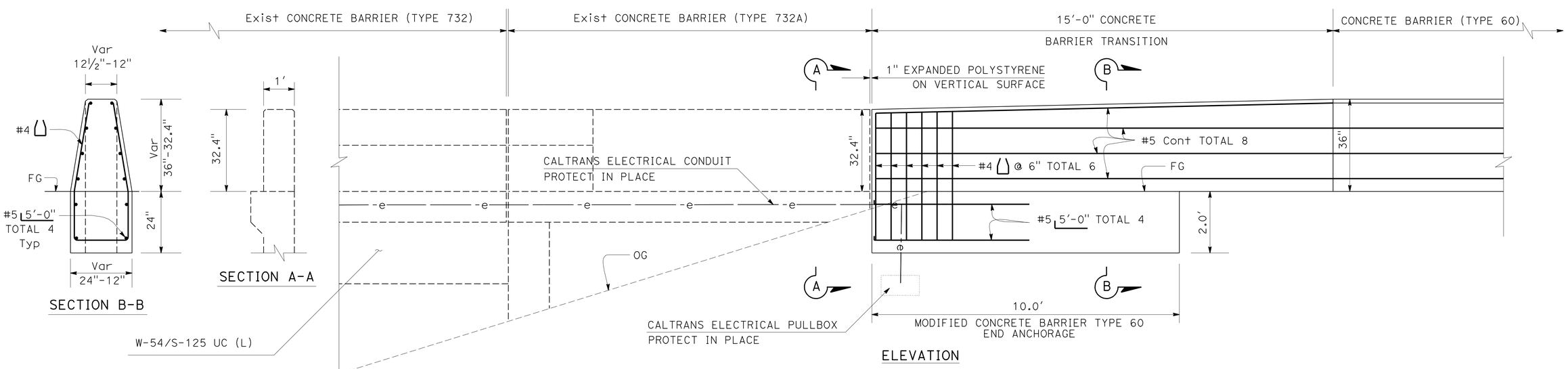

CONCRETE BARRIER TYPE 60 CONNECTION TO EXISTING CONCRETE BARRIER TYPE 732A AT W-54/S-125 UC (L)

CONSTRUCTION DETAILS

NO SCALE

C-2

STATE OF CALIFORNIA - DEPARTMENT OF TRANSPORTATION
TRAFFIC PROJECT DEVELOPMENT
Caltrans

FUNCTIONAL SUPERVISOR: RICHARD N. ESTRADA
CALCULATED-DESIGNED BY: DOLORES VALADEZ
CHECKED BY: MIKE DISPENZIERI
REVISED BY
DATE REVISED

LAST REVISION 08-17-11
DATE PLOTTED => 21-SEP-2011
TIME PLOTTED => 10:19

Dist	COUNTY	ROUTE	POST MILES TOTAL PROJECT	SHEET No.	TOTAL SHEETS
11	SD	54, 125	5.3/6.4, 9.2/9.7	12	56

REGISTERED CIVIL ENGINEER 08-11-11 DATE

09-19-11
PLANS APPROVAL DATE

REGISTERED PROFESSIONAL ENGINEER
ALBERT LABRADOR
No. 65294
Exp. 09-30-11
CIVIL
STATE OF CALIFORNIA

THE STATE OF CALIFORNIA OR ITS OFFICERS OR AGENTS SHALL NOT BE RESPONSIBLE FOR THE ACCURACY OR COMPLETENESS OF SCANNED COPIES OF THIS PLAN SHEET.

NOTE:

1. FOR DETAILS NOT SHOWN FOR CONCRETE BARRIER TYPE 60, SEE REVISED STANDARDS PLAN A76A.

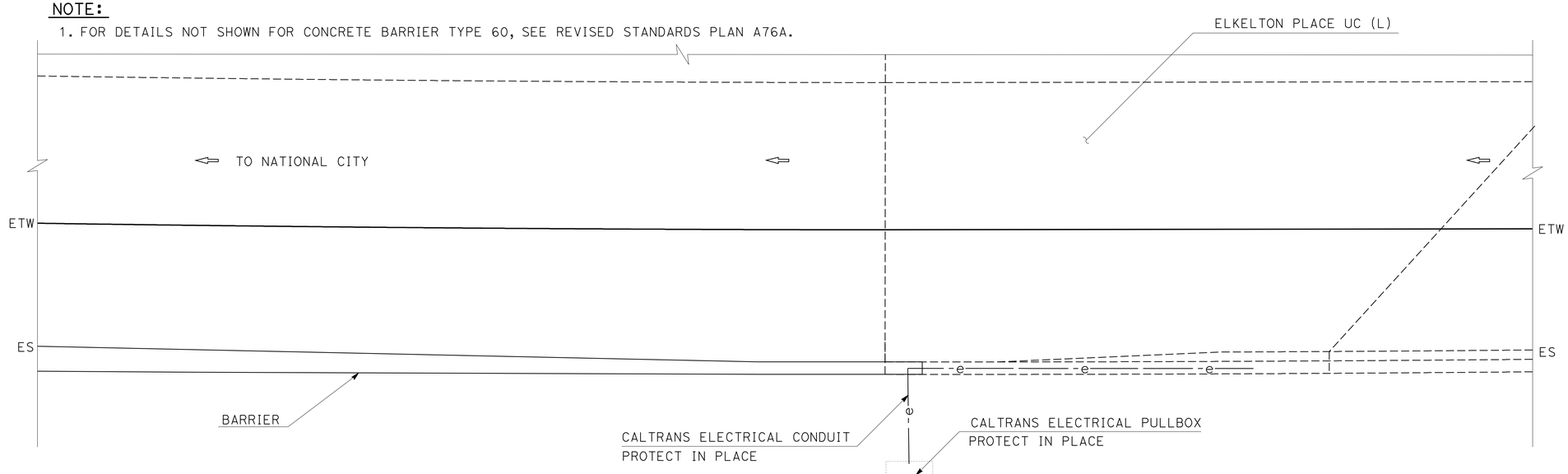

PLAN

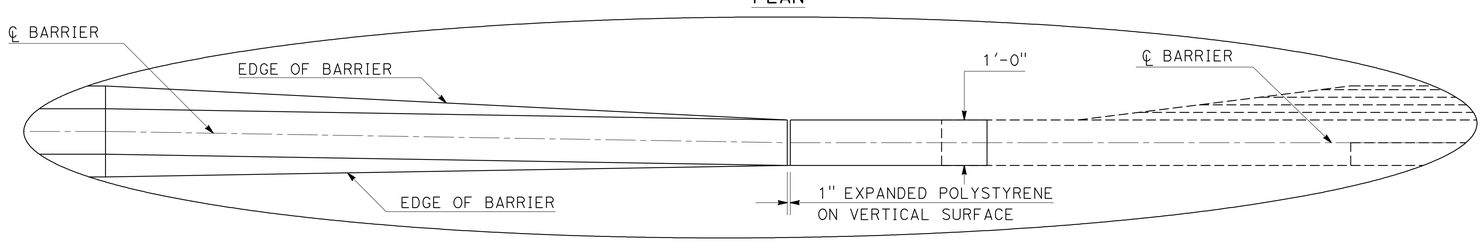

CONCRETE BARRIER CONNECTION/TRANSITION DETAIL

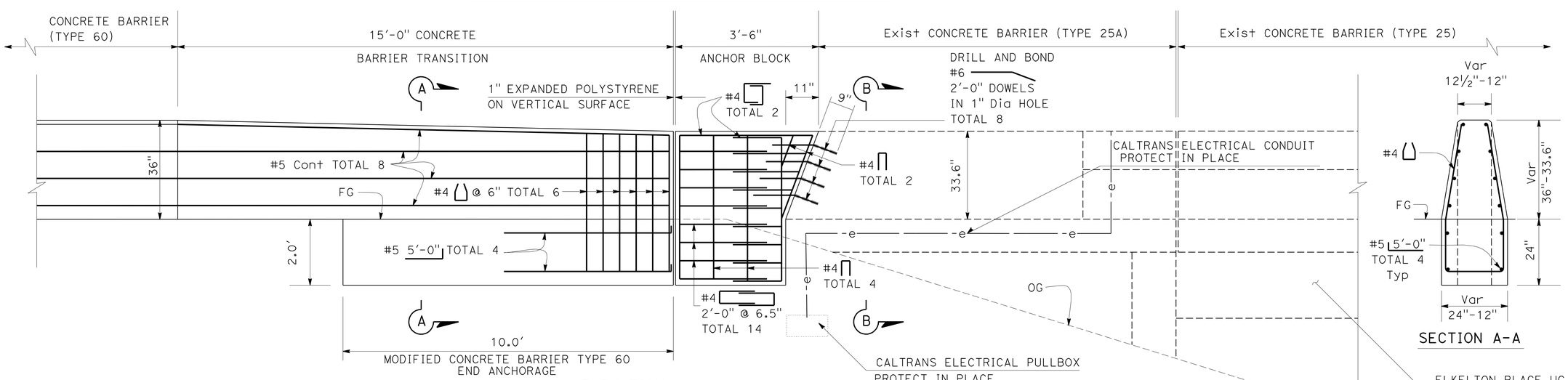

ELEVATION

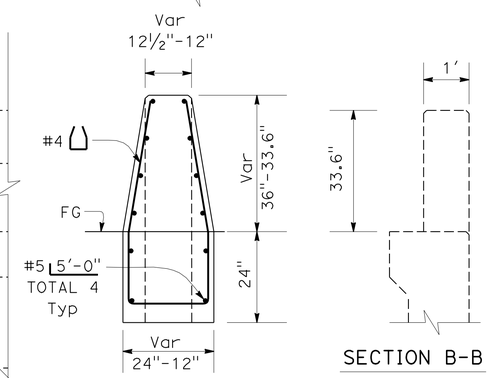

SECTION A-A

SECTION B-B

CONCRETE BARRIER TYPE 60 CONNECTION TO EXISTING CONCRETE BARRIER TYPE 25A AT ELKELTON PLACE UC (L)

CONSTRUCTION DETAILS

NO SCALE

C-3

REVISED BY | DATE REVISED
DOLORES VALADEZ | MIKE DISPENZIERI
CALCULATED-DESIGNED BY | CHECKED BY
FUNCTIONAL SUPERVISOR | RICHARD N. ESTRADA

STATE OF CALIFORNIA - DEPARTMENT OF TRANSPORTATION
TRAFFIC PROJECT DEVELOPMENT
Caltrans

LAST REVISION 08-18-11 | DATE PLOTTED => 21-SEP-2011 | TIME PLOTTED => 10:19

Dist	COUNTY	ROUTE	POST MILES TOTAL PROJECT	SHEET No.	TOTAL SHEETS
11	SD	54, 125	5.3/6.4, 9.2/9.7	13	56

REGISTERED CIVIL ENGINEER 08-11-11 DATE

09-19-11
PLANS APPROVAL DATE

REGISTERED PROFESSIONAL ENGINEER
ALBERT LABRADOR
No. 65294
Exp. 09-30-11
CIVIL
STATE OF CALIFORNIA

THE STATE OF CALIFORNIA OR ITS OFFICERS OR AGENTS SHALL NOT BE RESPONSIBLE FOR THE ACCURACY OR COMPLETENESS OF SCANNED COPIES OF THIS PLAN SHEET.

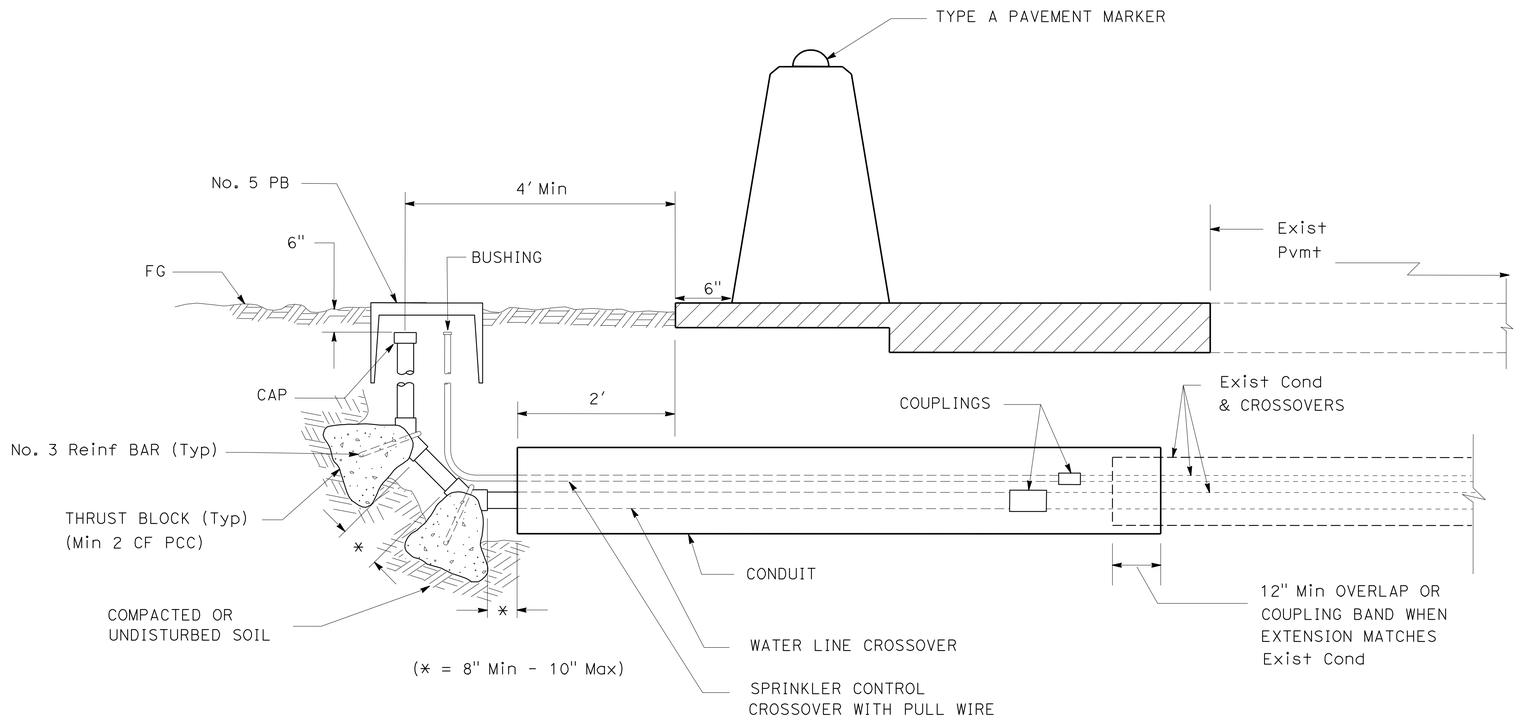

SECTION

EXTEND IRRIGATION CROSSOVER (MODIFIED)

THRUST BLOCK DETAIL

INSTALLATION	TYPE FITTING	PIPE SIZE						
		2"	2½"	3"	4"	6"	8"	
	45°	0.074	0.08	0.1	0.1	0.2	0.3	CUBIC YARD CONCRETE

CONSTRUCTION DETAILS

NO SCALE

C-4

REVISED BY | DATE REVISED
DOLORES VALADEZ
CALCULATED-DESIGNED BY | CHECKED BY
FUNCTIONAL SUPERVISOR
RICHARD N. ESTRADA
STATE OF CALIFORNIA - DEPARTMENT OF TRANSPORTATION
Caltrans
TRAFFIC PROJECT DEVELOPMENT

LAST REVISION 08-18-11 | DATE PLOTTED => 21-SEP-2011 | TIME PLOTTED => 10:19

Dist	COUNTY	ROUTE	POST MILES TOTAL PROJECT	SHEET No.	TOTAL SHEETS
11	SD	54, 125	5.3/6.4, 9.2/9.7	14	56

REGISTERED CIVIL ENGINEER 08-11-11 DATE

09-19-11
PLANS APPROVAL DATE

REGISTERED PROFESSIONAL ENGINEER ALBERT LABRADOR No. 65294 Exp. 09-30-11 CIVIL STATE OF CALIFORNIA

THE STATE OF CALIFORNIA OR ITS OFFICERS OR AGENTS SHALL NOT BE RESPONSIBLE FOR THE ACCURACY OR COMPLETENESS OF SCANNED COPIES OF THIS PLAN SHEET.

NOTE:

FOR ACCURATE RIGHT OF WAY DATA, CONTACT RIGHT OF WAY ENGINEERING AT THE DISTRICT OFFICE.

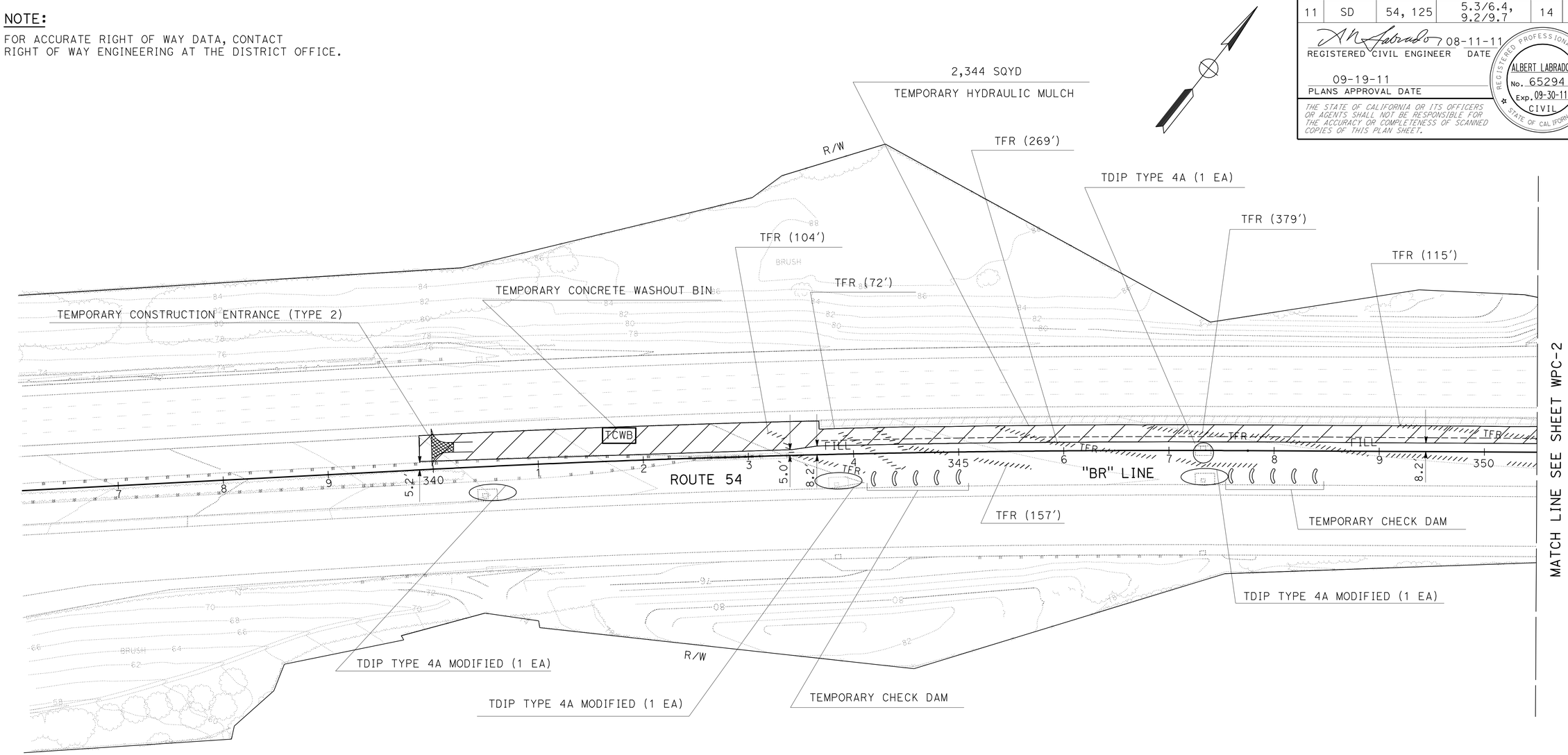

LEGEND:

- TEMPORARY CHECK DAM (TYPE 1) (10 LF EACH)
- TEMPORARY CHECK DAM (TYPE 2) (10 LF EACH)
- TEMPORARY DRAINAGE INLET PROTECTION (TDIP) TYPE 4A
- TEMPORARY DRAINAGE INLET PROTECTION (TDIP) TYPE 4A MODIFIED
- TEMPORARY HYDRAULIC MULCH
- // TFR // TEMPORARY FIBER ROLL (TFR)
- TEMPORARY CONSTRUCTION ENTRANCE (TYPE 2)
- TCWB TEMPORARY CONCRETE WASHOUT BIN

APPROVED FOR TEMPORARY WATER POLLUTION CONTROL WORK ONLY

SCALE: 1"= 50'

TEMPORARY WATER POLLUTION CONTROL PLAN

WPC-1

STATE OF CALIFORNIA - DEPARTMENT OF TRANSPORTATION
TRAFFIC PROJECT DEVELOPMENT
Caltrans

FUNCTIONAL SUPERVISOR: RICHARD N. ESTRADA
CALCULATED-DESIGNED BY: MICHAEL DISPENZIERI
CHECKED BY: DOLORES VALADEZ
REVISED BY / DATE REVISED

LAST REVISION 08-18-11 | DATE PLOTTED => 21-SEP-2011 | TIME PLOTTED => 10:19

Dist	COUNTY	ROUTE	POST MILES TOTAL PROJECT	SHEET No.	TOTAL SHEETS
11	SD	54, 125	5.3/6.4, 9.2/9.7	15	56

REGISTERED CIVIL ENGINEER 08-11-11 DATE

09-19-11
PLANS APPROVAL DATE

REGISTERED PROFESSIONAL ENGINEER ALBERT LABRADOR No. 65294 Exp. 09-30-11 CIVIL STATE OF CALIFORNIA

THE STATE OF CALIFORNIA OR ITS OFFICERS OR AGENTS SHALL NOT BE RESPONSIBLE FOR THE ACCURACY OR COMPLETENESS OF SCANNED COPIES OF THIS PLAN SHEET.

NOTE:

FOR ACCURATE RIGHT OF WAY DATA, CONTACT RIGHT OF WAY ENGINEERING AT THE DISTRICT OFFICE.

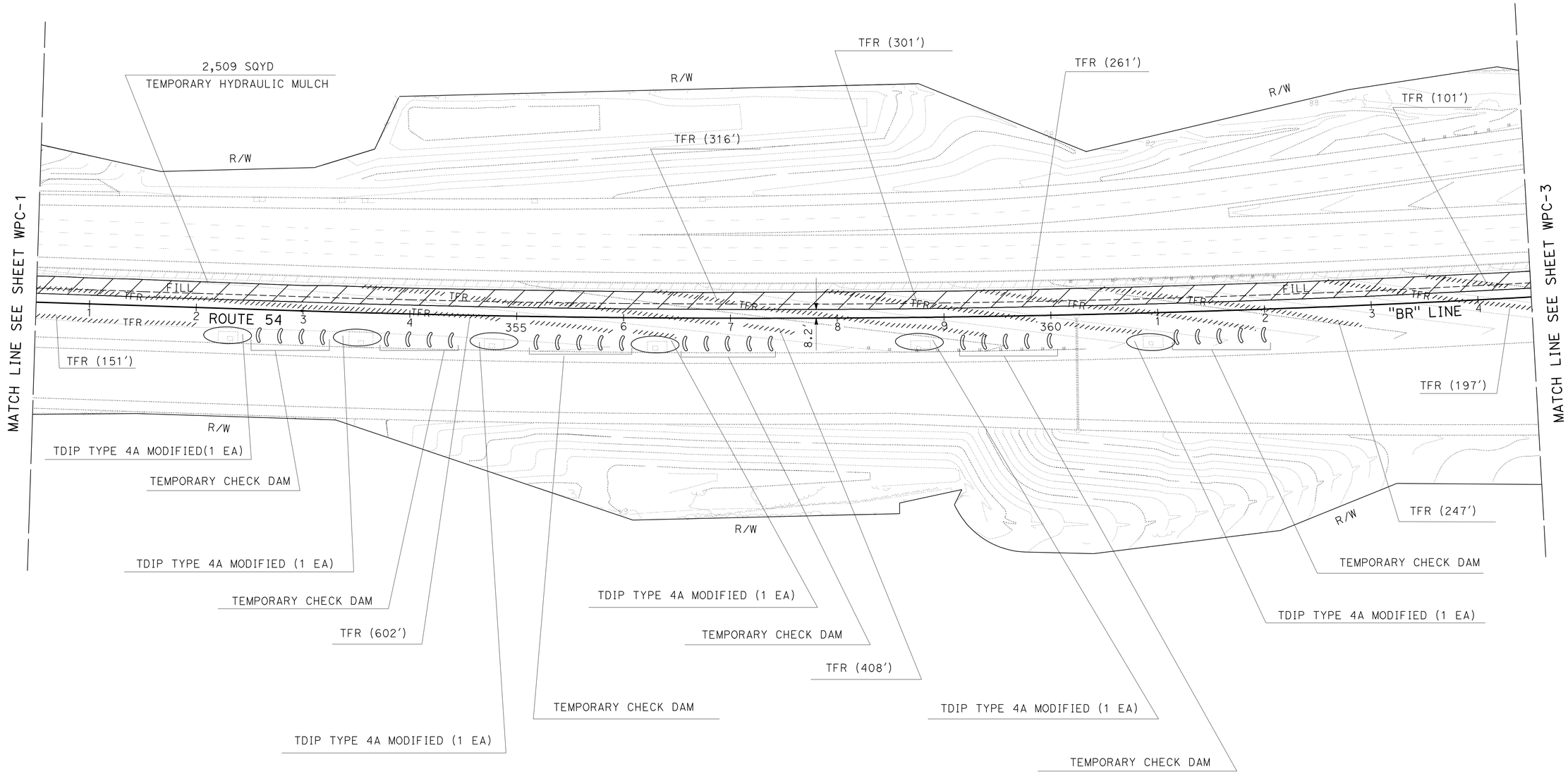

TEMPORARY WATER POLLUTION CONTROL PLAN

SCALE: 1" = 50'

WPC-2

APPROVED FOR TEMPORARY WATER POLLUTION CONTROL WORK ONLY

STATE OF CALIFORNIA - DEPARTMENT OF TRANSPORTATION
TRAFFIC PROJECT DEVELOPMENT
Caltrans

FUNCTIONAL SUPERVISOR: RICHARD N. ESTRADA
CALCULATED-DESIGNED BY: MICHAEL DISPENZIERI
CHECKED BY: DOLORES VALADEZ
REVISED BY
DATE REVISED

LAST REVISION 08-18-11
DATE PLOTTED => 21-SEP-2011
TIME PLOTTED => 10:19

Dist	COUNTY	ROUTE	POST MILES TOTAL PROJECT	SHEET No.	TOTAL SHEETS
11	SD	54, 125	5.3/6.4, 9.2/9.7	16	56

08-11-11
REGISTERED CIVIL ENGINEER DATE

09-19-11
PLANS APPROVAL DATE

REGISTERED PROFESSIONAL ENGINEER
ALBERT LABRADOR
No. 65294
Exp. 09-30-11
CIVIL
STATE OF CALIFORNIA

THE STATE OF CALIFORNIA OR ITS OFFICERS OR AGENTS SHALL NOT BE RESPONSIBLE FOR THE ACCURACY OR COMPLETENESS OF SCANNED COPIES OF THIS PLAN SHEET.

NOTE:

FOR ACCURATE RIGHT OF WAY DATA, CONTACT RIGHT OF WAY ENGINEERING AT THE DISTRICT OFFICE.

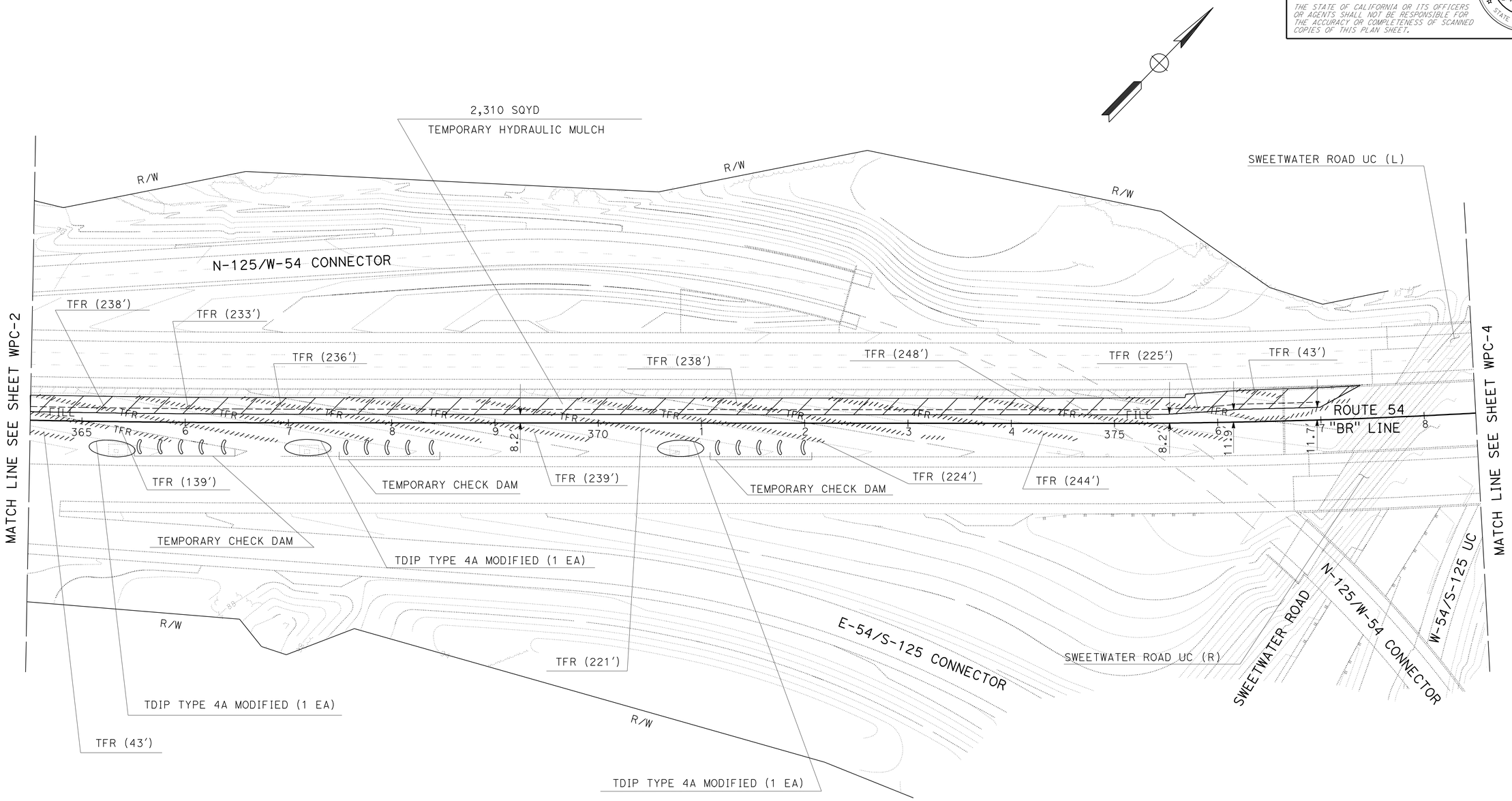

TEMPORARY WATER POLLUTION CONTROL PLAN

SCALE: 1" = 50'

WPC-3

APPROVED FOR TEMPORARY WATER POLLUTION CONTROL WORK ONLY

STATE OF CALIFORNIA - DEPARTMENT OF TRANSPORTATION
TRAFFIC PROJECT DEVELOPMENT
Caltrans

FUNCTIONAL SUPERVISOR: RICHARD N. ESTRADA
CALCULATED-DESIGNED BY: MICHAEL DISPENZIERI
CHECKED BY: DOLORES VALADEZ
REVISED BY
DATE REVISED

LAST REVISION 08-18-11
DATE PLOTTED => 21-SEP-2011
TIME PLOTTED => 10:19

Dist	COUNTY	ROUTE	POST MILES TOTAL PROJECT	SHEET No.	TOTAL SHEETS
11	SD	54, 125	5.3/6.4, 9.2/9.7	17	56

REGISTERED CIVIL ENGINEER 08-11-11 DATE

09-19-11
PLANS APPROVAL DATE

REGISTERED PROFESSIONAL ENGINEER
ALBERT LABRADOR
No. 65294
Exp. 09-30-11
CIVIL
STATE OF CALIFORNIA

THE STATE OF CALIFORNIA OR ITS OFFICERS OR AGENTS SHALL NOT BE RESPONSIBLE FOR THE ACCURACY OR COMPLETENESS OF SCANNED COPIES OF THIS PLAN SHEET.

NOTE:

FOR ACCURATE RIGHT OF WAY DATA, CONTACT RIGHT OF WAY ENGINEERING AT THE DISTRICT OFFICE.

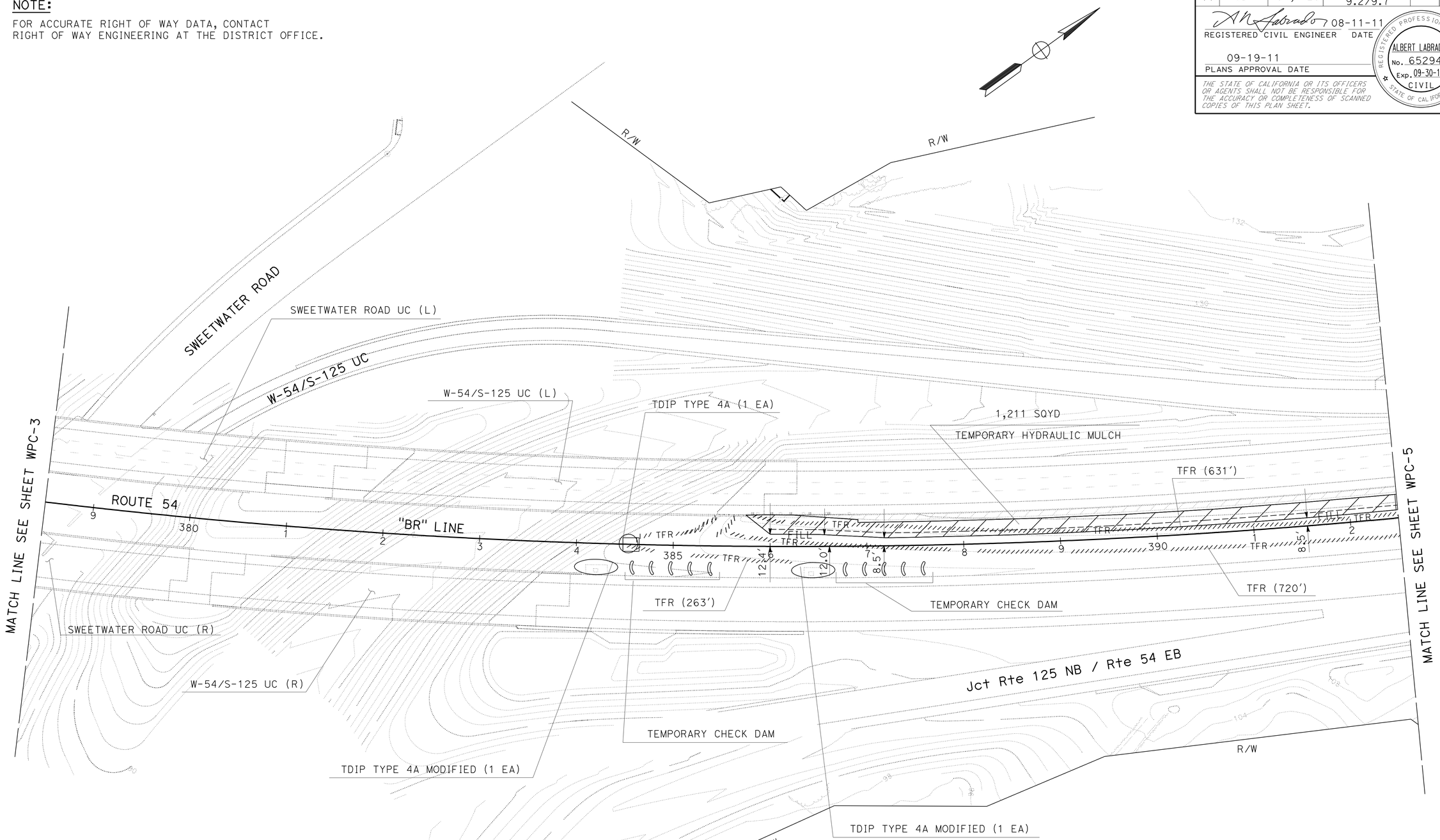

TEMPORARY WATER POLLUTION CONTROL PLAN

SCALE: 1" = 50'

WPC-4

APPROVED FOR TEMPORARY WATER POLLUTION CONTROL WORK ONLY

STATE OF CALIFORNIA - DEPARTMENT OF TRANSPORTATION
TRAFFIC PROJECT DEVELOPMENT
Caltrans

FUNCTIONAL SUPERVISOR: RICHARD N. ESTRADA
CALCULATED-DESIGNED BY: MICHAEL DISPENZIERI
CHECKED BY: DOLORES VALADEZ
REVISED BY
DATE REVISED

LAST REVISION 08-18-11
DATE PLOTTED => 21-SEP-2011
TIME PLOTTED => 10:19

Dist	COUNTY	ROUTE	POST MILES TOTAL PROJECT	SHEET No.	TOTAL SHEETS
11	SD	54, 125	5.3/6.4, 9.2/9.7	18	56

REGISTERED CIVIL ENGINEER 08-11-11 DATE

09-19-11
PLANS APPROVAL DATE

REGISTERED PROFESSIONAL ENGINEER
ALBERT LABRADOR
No. 65294
Exp. 09-30-11
CIVIL
STATE OF CALIFORNIA

THE STATE OF CALIFORNIA OR ITS OFFICERS OR AGENTS SHALL NOT BE RESPONSIBLE FOR THE ACCURACY OR COMPLETENESS OF SCANNED COPIES OF THIS PLAN SHEET.

NOTE:

FOR ACCURATE RIGHT OF WAY DATA, CONTACT RIGHT OF WAY ENGINEERING AT THE DISTRICT OFFICE.

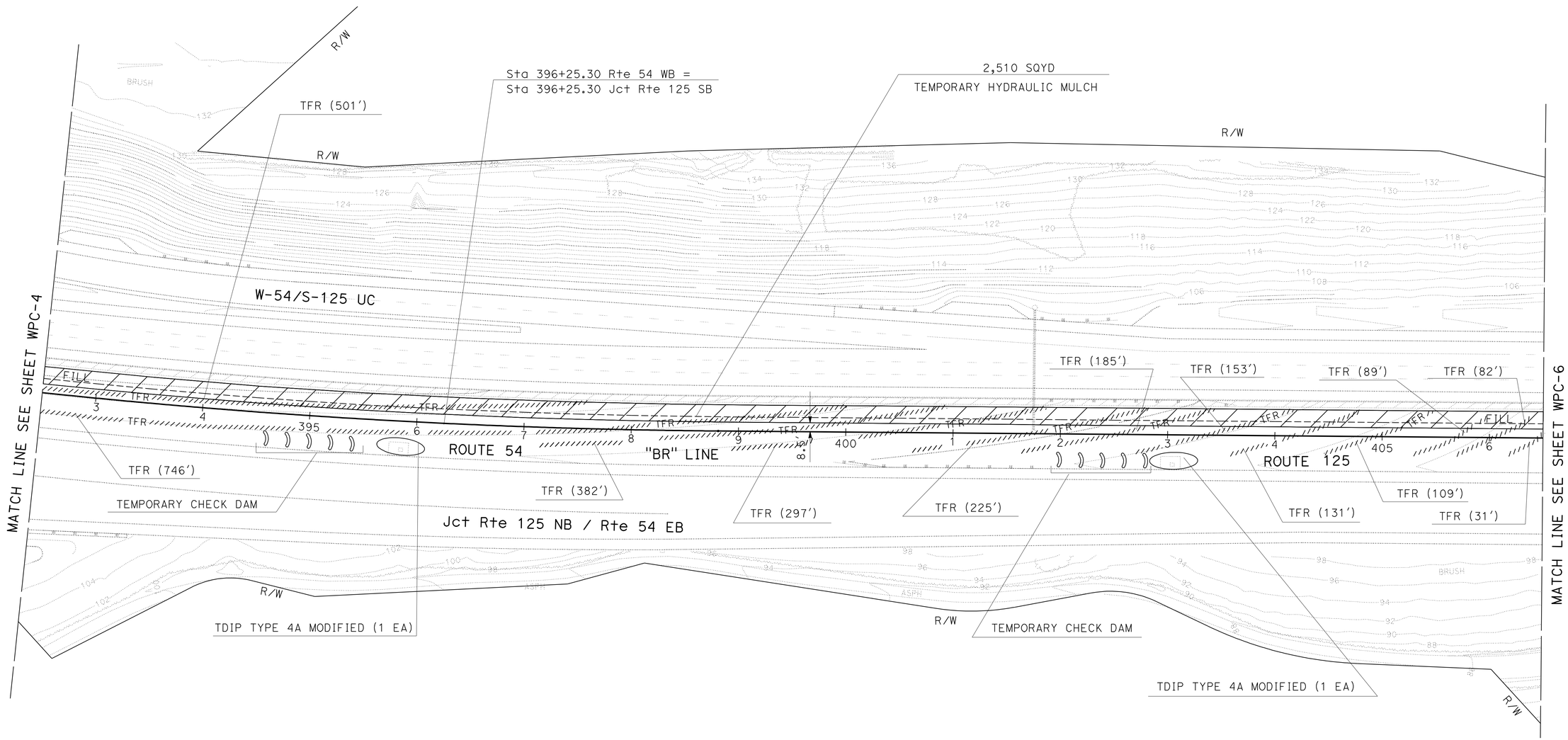

TEMPORARY WATER POLLUTION CONTROL PLAN

SCALE: 1" = 50'

WPC-5

APPROVED FOR TEMPORARY WATER POLLUTION CONTROL WORK ONLY

REVISED BY | DATE REVISED

MICHAEL DISPENZIERI | DOLORES VALADEZ

CALCULATED-DESIGNED BY | CHECKED BY

FUNCTIONAL SUPERVISOR: RICHARD N. ESTRADA

STATE OF CALIFORNIA - DEPARTMENT OF TRANSPORTATION
TRAFFIC PROJECT DEVELOPMENT
Caltrans

LAST REVISION 08-18-11 | DATE PLOTTED => 21-SEP-2011 | TIME PLOTTED => 10:19

Dist	COUNTY	ROUTE	POST MILES TOTAL PROJECT	SHEET No.	TOTAL SHEETS
11	SD	54, 125	5.3/6.4, 9.2/9.7	19	56

REGISTERED CIVIL ENGINEER 08-11-11 DATE

09-19-11
PLANS APPROVAL DATE

REGISTERED PROFESSIONAL ENGINEER ALBERT LABRADOR No. 65294 Exp. 09-30-11 CIVIL STATE OF CALIFORNIA

THE STATE OF CALIFORNIA OR ITS OFFICERS OR AGENTS SHALL NOT BE RESPONSIBLE FOR THE ACCURACY OR COMPLETENESS OF SCANNED COPIES OF THIS PLAN SHEET.

NOTE:

FOR ACCURATE RIGHT OF WAY DATA, CONTACT RIGHT OF WAY ENGINEERING AT THE DISTRICT OFFICE.

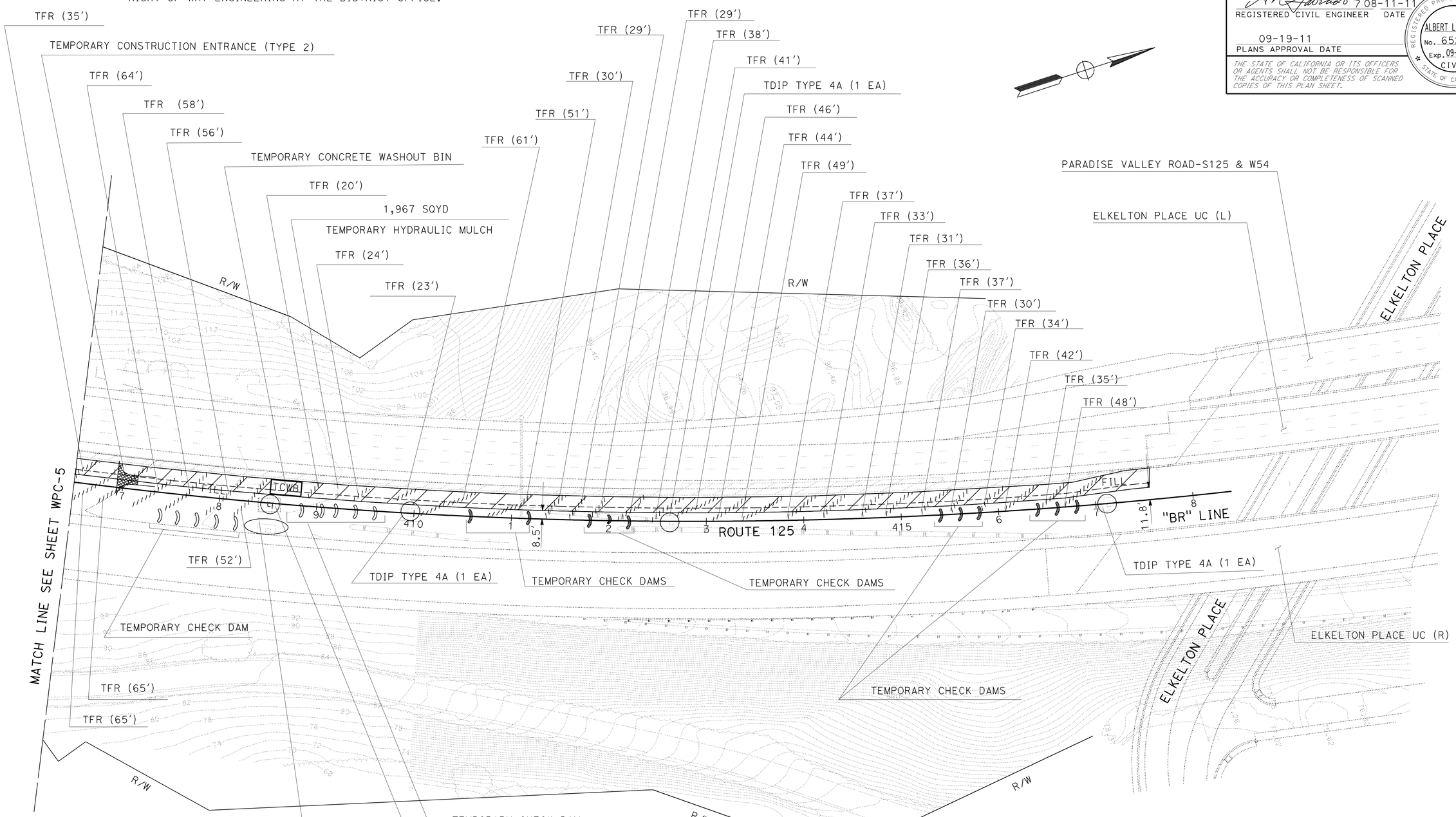

TEMPORARY WATER POLLUTION CONTROL PLAN

SCALE: 1" = 50'

WPC-6

APPROVED FOR TEMPORARY WATER POLLUTION CONTROL WORK ONLY

STATE OF CALIFORNIA - DEPARTMENT OF TRANSPORTATION
TRAFFIC PROJECT DEVELOPMENT
Caltrans

FUNCTIONAL SUPERVISOR: RICHARD N. ESTRADA
CALCULATED-DESIGNED BY: MICHAEL DISPENZIERI
CHECKED BY: DOLORES VALADEZ
REVISED BY
DATE REVISED

LAST REVISION 08-18-11
DATE PLOTTED => 21-SEP-2011
TIME PLOTTED => 10:20

Dist	COUNTY	ROUTE	POST MILES TOTAL PROJECT	SHEET No.	TOTAL SHEETS
11	SD	54, 125	5.3/6.4, 9.2/9.7	20	56

REGISTERED CIVIL ENGINEER 08-11-11 DATE

09-19-11
PLANS APPROVAL DATE

REGISTERED PROFESSIONAL ENGINEER
ALBERT LABRADOR
No. 65294
Exp. 09-30-11
CIVIL
STATE OF CALIFORNIA

THE STATE OF CALIFORNIA OR ITS OFFICERS OR AGENTS SHALL NOT BE RESPONSIBLE FOR THE ACCURACY OR COMPLETENESS OF SCANNED COPIES OF THIS PLAN SHEET.

NOTES:

1. SEE NEW STANDARD PLAN T63 FOR TEMPORARY DRAINAGE INLET PROTECTION (TYPE 4A).
2. DIMENSIONS MAY VARY TO FIT FIELD CONDITIONS.

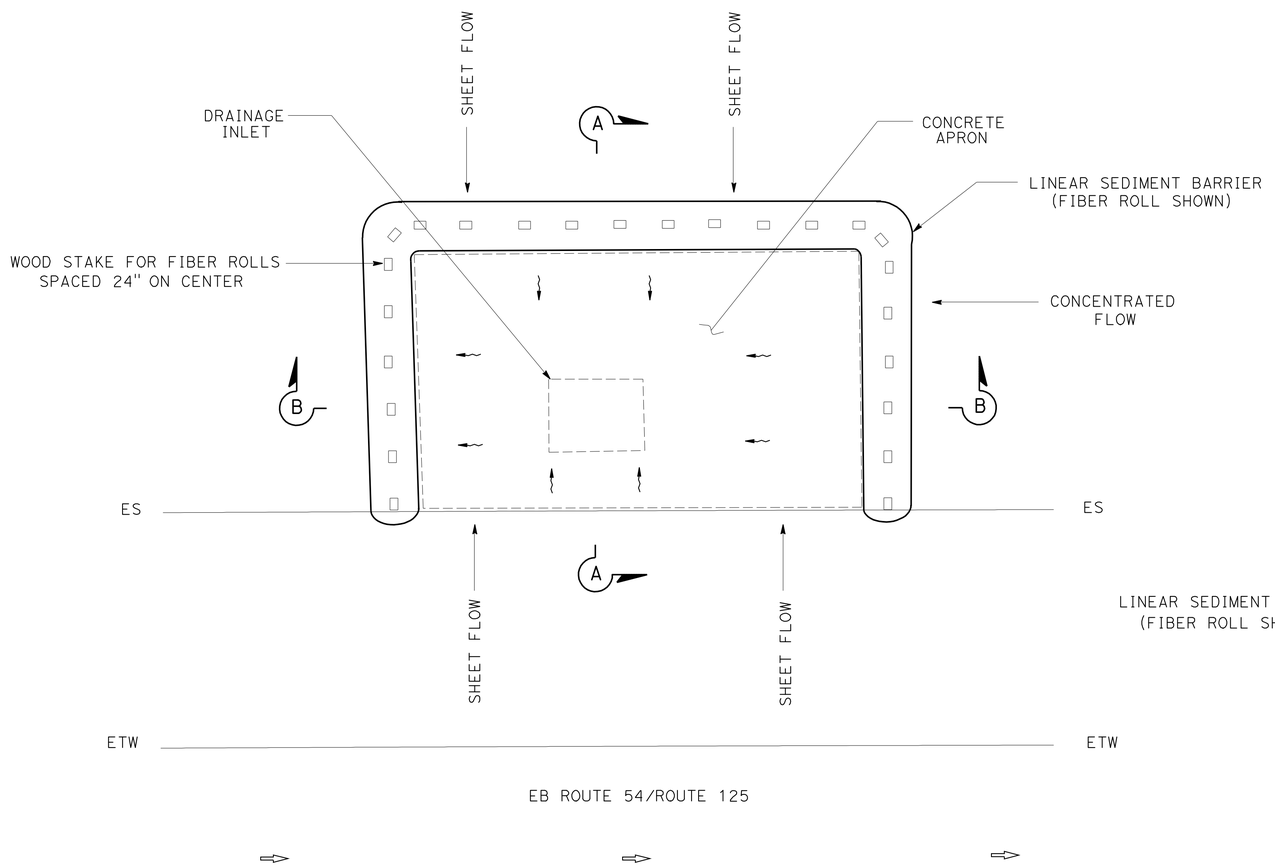

PLAN

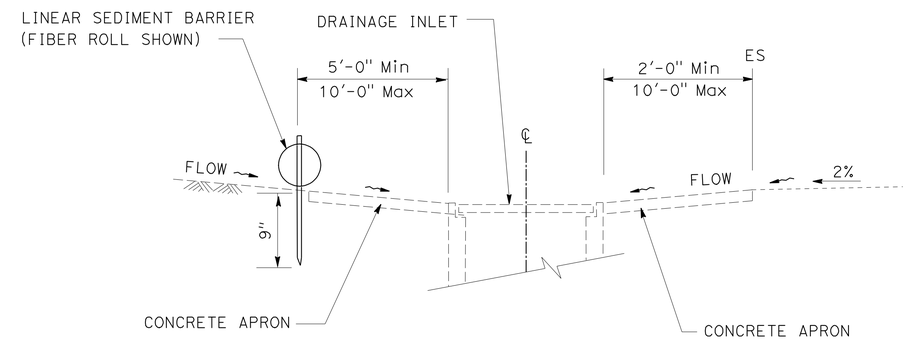

SECTION A-A

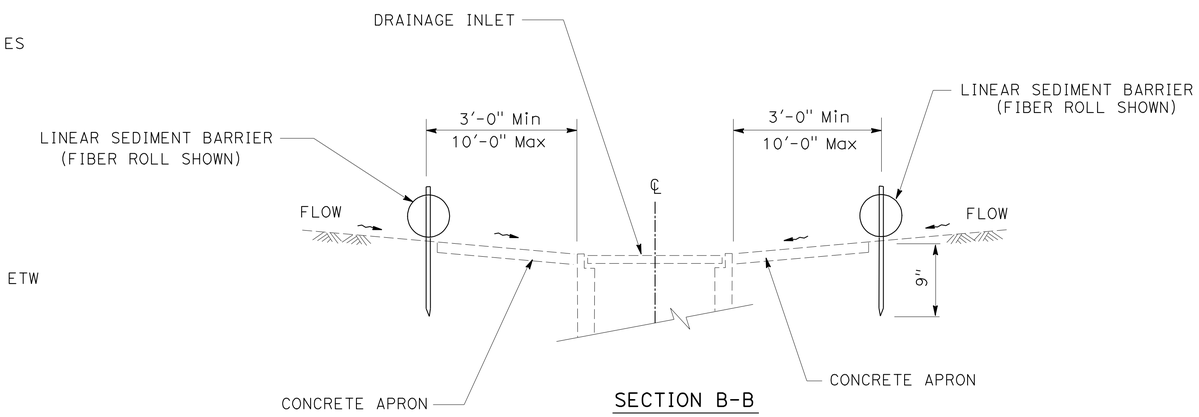

SECTION B-B

TEMPORARY DRAINAGE INLET PROTECTION (TYPE 4A) MODIFIED

TEMPORARY WATER POLLUTION CONTROL DETAILS

NO SCALE

WPCD-1

STATE OF CALIFORNIA - DEPARTMENT OF TRANSPORTATION
TRAFFIC PROJECT DEVELOPMENT
Caltrans

FUNCTIONAL SUPERVISOR: RICHARD N. ESTRADA
CALCULATED-DESIGNED BY: DOLORES VALADEZ
CHECKED BY: ALBERT LABRADOR
REVISED BY
DATE REVISED

LAST REVISION 08-18-11
DATE PLOTTED => 21-SEP-2011
TIME PLOTTED => 10:20

Dist	COUNTY	ROUTE	POST MILES TOTAL PROJECT	SHEET No.	TOTAL SHEETS
11	SD	54, 125	5.3/6.4, 9.2/9.7	21	56

A N Labrador 08-11-11
REGISTERED CIVIL ENGINEER DATE

09-19-11
PLANS APPROVAL DATE

REGISTERED PROFESSIONAL ENGINEER
ALBERT LABRADOR
No. 65294
Exp. 09-30-11
CIVIL
STATE OF CALIFORNIA

THE STATE OF CALIFORNIA OR ITS OFFICERS OR AGENTS SHALL NOT BE RESPONSIBLE FOR THE ACCURACY OR COMPLETENESS OF SCANNED COPIES OF THIS PLAN SHEET.

TEMPORARY HYDRAULIC MULCH

SHEET	STATION	SQYD
WPC-1	339+87.06 TO 350+50.00	2,344
WPC-2	350+50.00 TO 364+50.00	2,509
WPC-3	364+50.00 TO 377+37.32	2,310
WPC-4	385+75.28 TO 392+50.00	1,211
WPC-5	392+50.00 TO 406+50.00	2,510
WPC-6	406+50.00 TO 417+58.17	1,967
	TOTAL	12,851

TEMPORARY WATER POLLUTION CONTROL QUANTITIES

SHEET	TEMPORARY DRAINAGE INLET PROTECTION		TEMPORARY CHECK DAM		TEMPORARY FIBER ROLL	TEMPORARY CONSTRUCTION ENTRANCE	TEMPORARY CONCRETE WASHOUT BIN
	TYPE 4A MODIFIED	TYPE 4A	TYPE 1	TYPE 2		TYPE 2	
	EA	EA	LF	LF	LF	EA	EA
WPC-1	3	1	100	0	1,096	1	1
WPC-2	6	0	280	0	2,584	0	0
WPC-3	3	0	150	0	2,571	0	0
WPC-4	2	1	100	0	1,614	0	0
WPC-5	2	0	100	0	2,931	0	0
WPC-6	1	4	100	110	1,243	1	1
TOTAL	23		940		12,039	2	2

TEMPORARY WATER POLLUTION CONTROL QUANTITIES

WPCQ-1

STATE OF CALIFORNIA - DEPARTMENT OF TRANSPORTATION
TRAFFIC PROJECT DEVELOPMENT
Caltrans

FUNCTIONAL SUPERVISOR: RICHARD N. ESTRADA
CALCULATED-DESIGNED BY: MICHAEL DISPENZIERI
CHECKED BY: DOLORES VALADEZ
REVISED BY
DATE REVISED

LAST REVISION 08-18-11
DATE PLOTTED => 21-SEP-2011
TIME PLOTTED => 10:20

Dist	COUNTY	ROUTE	POST MILES TOTAL PROJECT	SHEET No.	TOTAL SHEETS
11	SD	54, 125	5.3/6.4, 9.2/9.7	22	56

REGISTERED CIVIL ENGINEER 08-11-11 DATE

09-19-11
PLANS APPROVAL DATE

REGISTERED PROFESSIONAL ENGINEER
ALBERT LABRADOR
No. 65294
Exp. 09-30-11
CIVIL
STATE OF CALIFORNIA

THE STATE OF CALIFORNIA OR ITS OFFICERS OR AGENTS SHALL NOT BE RESPONSIBLE FOR THE ACCURACY OR COMPLETENESS OF SCANNED COPIES OF THIS PLAN SHEET.

NOTE:

FOR ACCURATE RIGHT OF WAY DATA, CONTACT RIGHT OF WAY ENGINEERING AT THE DISTRICT OFFICE.

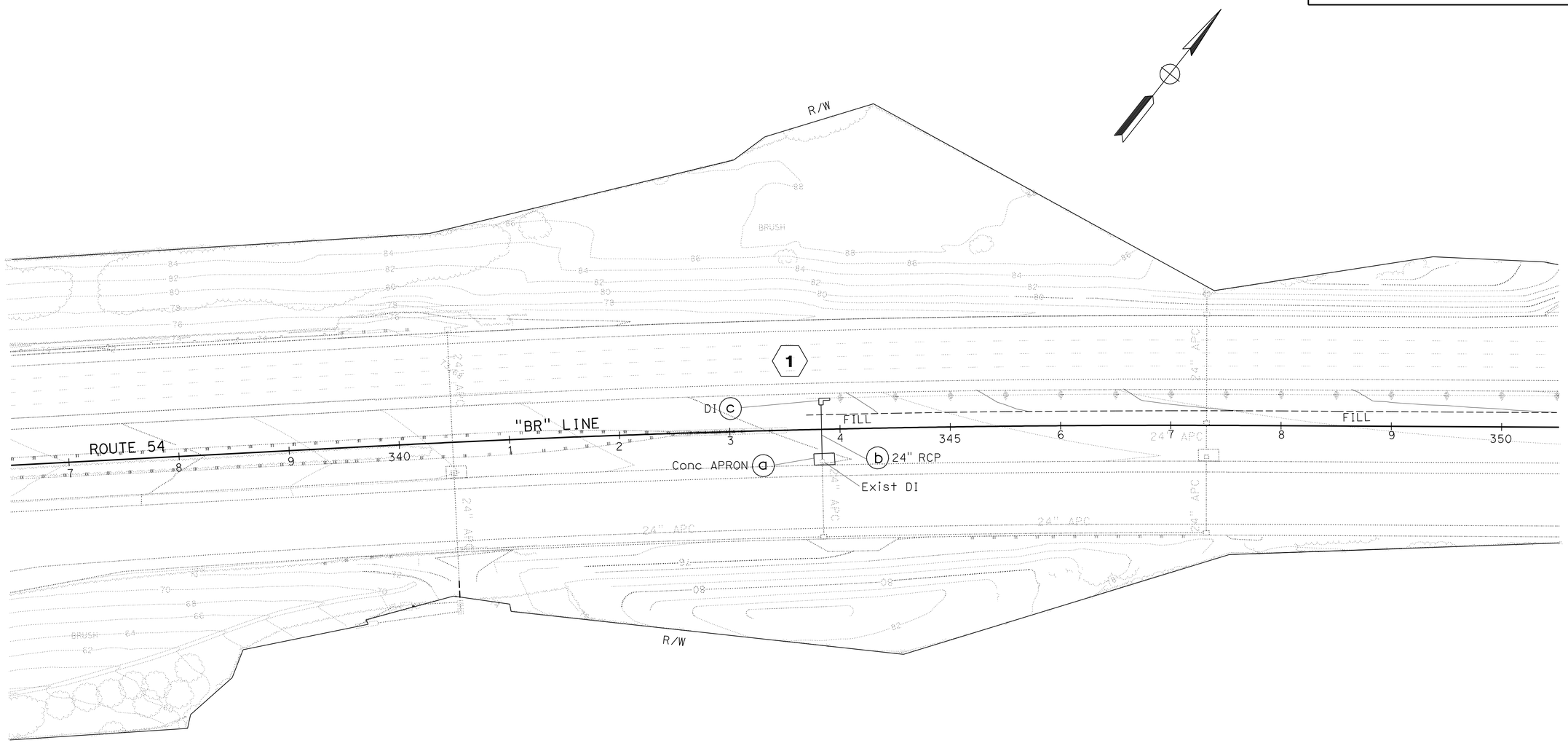

LEGEND:

(X) DRAINAGE SYSTEM NUMBER

(X) DRAINAGE UNIT NUMBER

APPROVED FOR DRAINAGE WORK ONLY

DRAINAGE PLAN

SCALE: 1" = 50'

D-1

STATE OF CALIFORNIA - DEPARTMENT OF TRANSPORTATION
TRAFFIC PROJECT DEVELOPMENT
Caltrans

FUNCTIONAL SUPERVISOR: RICHARD N. ESTRADA

CALCULATED-DESIGNED BY: ALBERT N. LABRADOR
CHECKED BY: MIKE DISPENZIERI

REVISED BY
DATE REVISED

LAST REVISION 08-19-11
DATE PLOTTED => 21-SEP-2011
TIME PLOTTED => 10:20

Dist	COUNTY	ROUTE	POST MILES TOTAL PROJECT	SHEET No.	TOTAL SHEETS
11	SD	54, 125	5.3/6.4, 9.2/9.7	23	56

REGISTERED CIVIL ENGINEER 08-11-11 DATE

09-19-11
PLANS APPROVAL DATE

REGISTERED PROFESSIONAL ENGINEER
ALBERT LABRADOR
No. 65294
Exp. 09-30-11
CIVIL
STATE OF CALIFORNIA

THE STATE OF CALIFORNIA OR ITS OFFICERS OR AGENTS SHALL NOT BE RESPONSIBLE FOR THE ACCURACY OR COMPLETENESS OF SCANNED COPIES OF THIS PLAN SHEET.

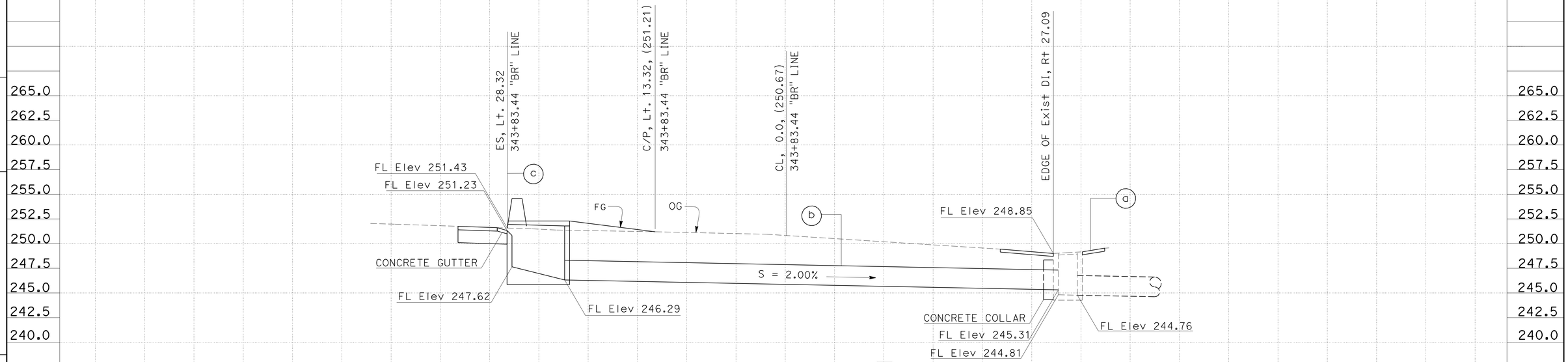

DRAINAGE SYSTEM No. 1

(a) REMOVE & PLACE CONCRETE APRON TYPE 1 (SEE DRAINAGE DETAILS)

(b) 24" x 50' RCP W/ CONCRETE COLLAR (SEE DRAINAGE DETAILS)

(c) TYPE OL-10 INLET W/ CONCRETE GUTTER (MODIFIED) AND
1/4" CHECKERED PLATE COVER & FRAME, H = 5.14' (SEE DRAINAGE DETAILS)

DRAINAGE PROFILES

SCALE: Horiz 1" = 5'
Vert 1" = 5'

DP-1

STATE OF CALIFORNIA - DEPARTMENT OF TRANSPORTATION
TRAFFIC PROJECT DEVELOPMENT
Caltrans

FUNCTIONAL SUPERVISOR: RICHARD N. ESTRADA
CALCULATED-DESIGNED BY: ALBERT N. LABRADOR
CHECKED BY: MIKE DISPENZIERI
REVISED BY
DATE REVISED

LAST REVISION 08-19-11
DATE PLOTTED => 21-SEP-2011
TIME PLOTTED => 10:20

Dist	COUNTY	ROUTE	POST MILES TOTAL PROJECT	SHEET No.	TOTAL SHEETS
11	SD	54, 125	5.3/6.4, 9.2/9.7	24	56

REGISTERED CIVIL ENGINEER 08-11-11 DATE

09-19-11
PLANS APPROVAL DATE

REGISTERED PROFESSIONAL ENGINEER ALBERT LABRADOR No. 65294 Exp. 09-30-11 CIVIL STATE OF CALIFORNIA

THE STATE OF CALIFORNIA OR ITS OFFICERS OR AGENTS SHALL NOT BE RESPONSIBLE FOR THE ACCURACY OR COMPLETENESS OF SCANNED COPIES OF THIS PLAN SHEET.

NOTE:

1. CONCRETE APRON SHALL NOT EXTEND BEYOND THE EDGE OF SHOULDER (ES).

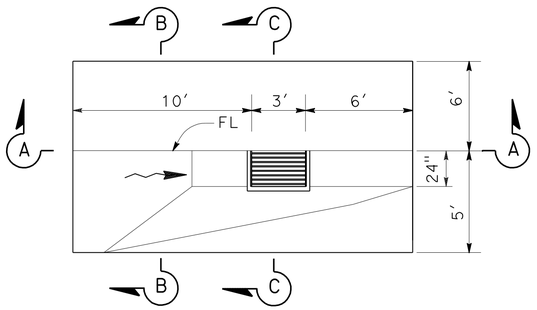

PLAN

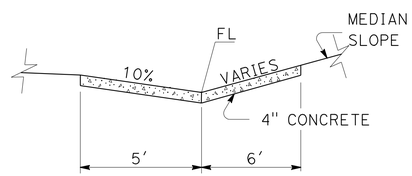

SECTION B-B

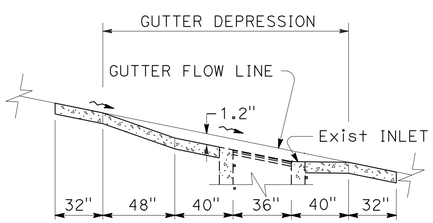

SECTION A-A (PROFILE)

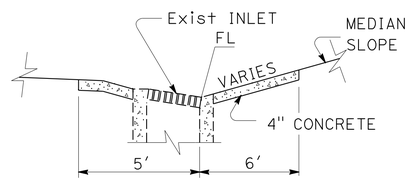

SECTION C-C

CONCRETE APRON - TYPE 1 (1) (a)

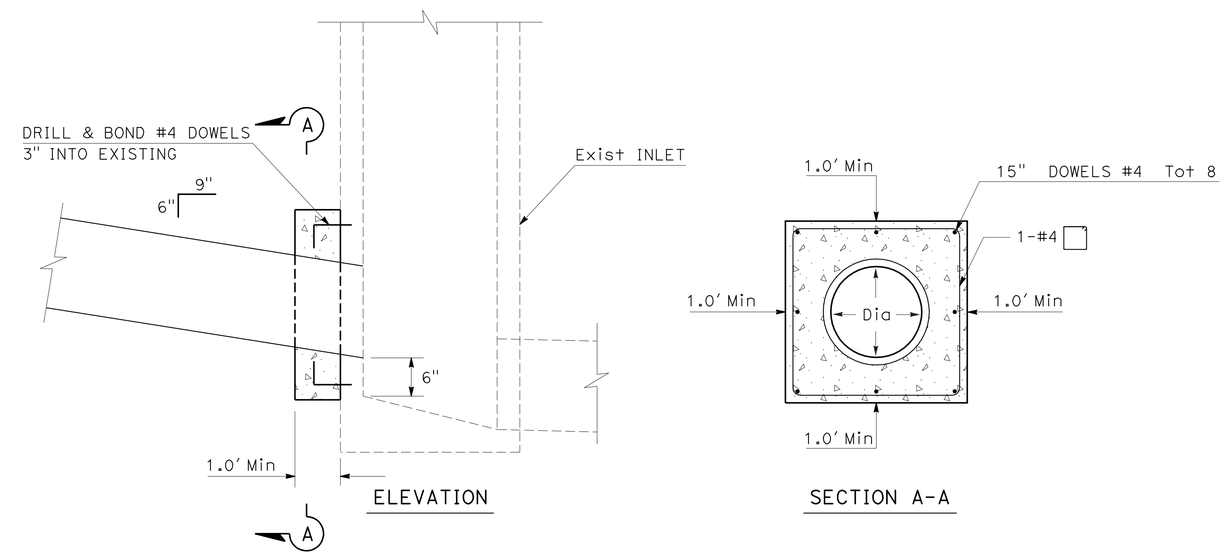

CONCRETE COLLAR

(1) (b)

NOTE:

BEND EXPOSED REBAR INTO CONCRETE COLLAR.

DRAINAGE DETAILS

NO SCALE

DD-1

STATE OF CALIFORNIA - DEPARTMENT OF TRANSPORTATION
TRAFFIC PROJECT DEVELOPMENT
Caltrans

FUNCTIONAL SUPERVISOR: RICHARD N. ESTRADA
CALCULATED-DESIGNED BY: ALBERT N. LABRADOR
CHECKED BY: DOLORES VALADEZ
REVISED BY
DATE REVISED

LAST REVISION 08-19-11
DATE PLOTTED => 21-SEP-2011
TIME PLOTTED => 10:20

Dist	COUNTY	ROUTE	POST MILES TOTAL PROJECT	SHEET No.	TOTAL SHEETS
11	SD	54, 125	5.3/6.4, 9.2/9.7	25	56

REGISTERED CIVIL ENGINEER 08-11-11 DATE

09-19-11
PLANS APPROVAL DATE

REGISTERED PROFESSIONAL ENGINEER ALBERT LABRADOR No. 65294 Exp. 09-30-11 CIVIL STATE OF CALIFORNIA

THE STATE OF CALIFORNIA OR ITS OFFICERS OR AGENTS SHALL NOT BE RESPONSIBLE FOR THE ACCURACY OR COMPLETENESS OF SCANNED COPIES OF THIS PLAN SHEET.

NOTES:

1. SEE STANDARD PLAN D72 FOR DETAILS NOT SHOWN FOR TYPE OL-10 INLET.
2. SEE REVISED STANDARD PLAN A76A FOR DETAILS NOT SHOWN FOR CONCRETE BARRIER TYPE 60.

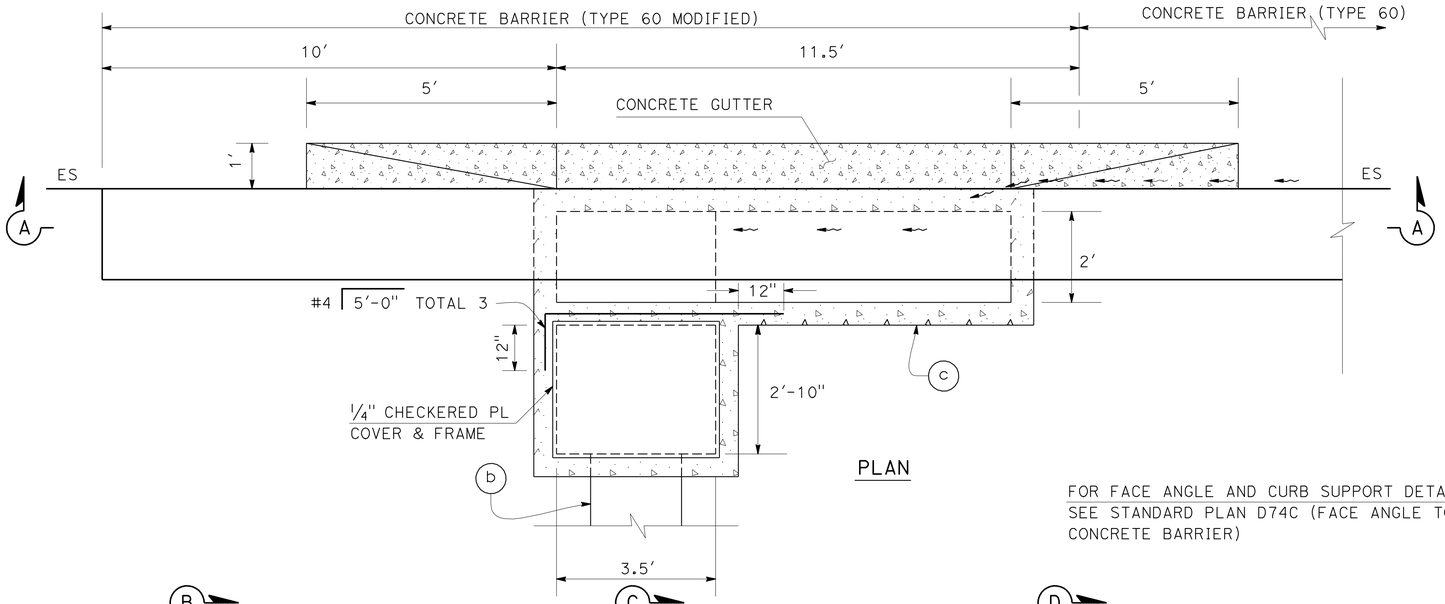

PLAN

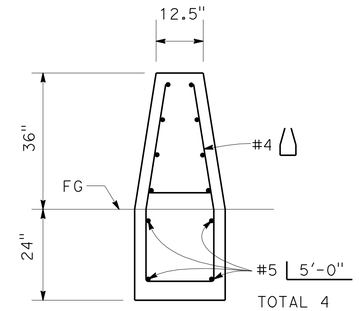

SECTION B-B
ELEVATION

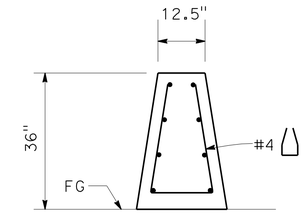

SECTION D-D
ELEVATION

FOR FACE ANGLE AND CURB SUPPORT DETAILS, SEE STANDARD PLAN D74C (FACE ANGLE TO MATCH CONCRETE BARRIER)

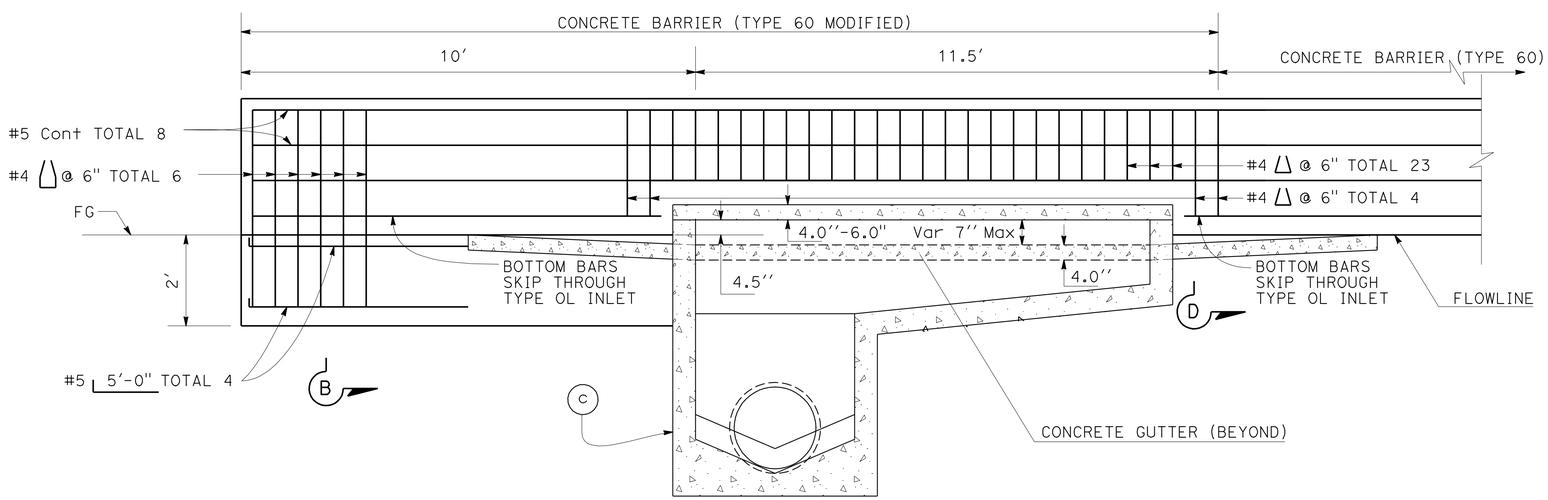

SECTION A-A
ELEVATION

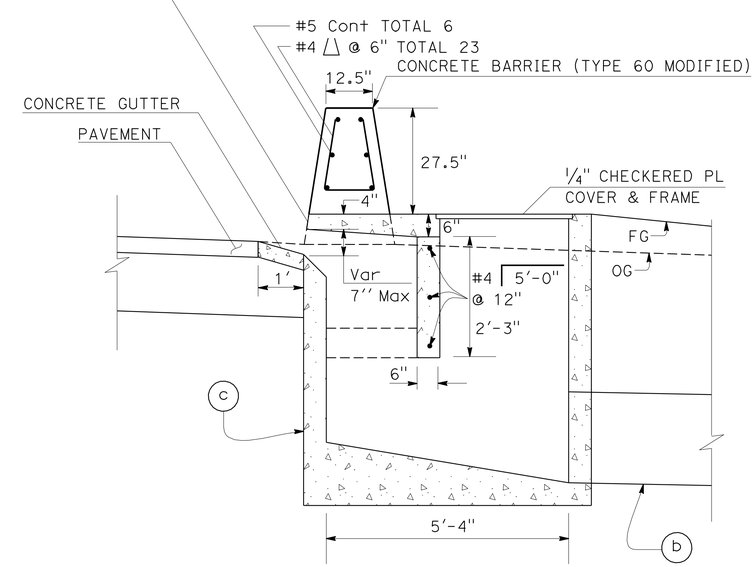

SECTION C-C
ELEVATION

TYPE OL-10 INLET (MODIFIED)

1 c

DRAINAGE DETAILS

NO SCALE

DD-2

STATE OF CALIFORNIA - DEPARTMENT OF TRANSPORTATION
TRAFFIC PROJECT DEVELOPMENT
Caltrans

FUNCTIONAL SUPERVISOR: RICHARD N. ESTRADA
CALCULATED-DESIGNED BY: ALBERT N. LABRADOR
CHECKED BY: DOLORES VALADEZ
REVISED BY
DATE REVISED

LAST REVISION 08-19-11
DATE PLOTTED => 21-SEP-2011
TIME PLOTTED => 10:20

Dist	COUNTY	ROUTE	POST MILES TOTAL PROJECT	SHEET No.	TOTAL SHEETS
11	SD	54, 125	5.3/6.4, 9.2/9.7	26	56

A N Labrador 08-11-11
REGISTERED CIVIL ENGINEER DATE

09-19-11
PLANS APPROVAL DATE

REGISTERED PROFESSIONAL ENGINEER
ALBERT LABRADOR
No. 65294
Exp. 09-30-11
CIVIL
STATE OF CALIFORNIA

THE STATE OF CALIFORNIA OR ITS OFFICERS OR AGENTS SHALL NOT BE RESPONSIBLE FOR THE ACCURACY OR COMPLETENESS OF SCANNED COPIES OF THIS PLAN SHEET.

DRAINAGE QUANTITIES

DRAINAGE SYSTEM No. ⬡	DRAINAGE UNIT No. ◯	RCP	FRAMES, GRATES AND COVERS	DRAINAGE INLETS													
		24"	1/4" CHECKERED PL COVER & FRAME (N)	OL (N)	MINOR CONCRETE (MINOR STRUCTURE)	CONCRETE (SLOPE PROTECTION)	REMOVE CONCRETE	MISCELLANEOUS IRON AND STEEL	HEIGHT OF INLET "H" (N)	Max HEIGHT OF COVER (N)	CONCRETE COLLAR (N)	JOINT CLASSIFICATION	DESCRIPTION	STATION	DRAINAGE PLAN SHEET No.	DRAINAGE SYSTEM No. ⬡	DRAINAGE UNIT No. ◯
		LF	EA	EA	CY	CY	CY	LB	FT	FT	EA						
1	a					2.58	2.58						REPLACE CONCRETE APRON TYPE1	343+83.44	D-1	1	a
1	b	50								3	1	Std	24" x 50' RCP W/ CONCRETE COLLAR	343+83.44	D-1	1	b
1	c		1	1	4.39	0.25		170	5.14				TYPE OL-10 INLET (MODIFIED) W/ CONCRETE GUTTER	343+83.44	D-1	1	c
TOTAL		50			* 4.39	2.83	2.58	170									

* SEE SUMMARY OF QUANTITIES FOR ADDITIONAL QUANTITIES.
(N) - NOT A SEPARATE PAY ITEM.

STATE OF CALIFORNIA - DEPARTMENT OF TRANSPORTATION
TRAFFIC PROJECT DEVELOPMENT
Caltrans

FUNCTIONAL SUPERVISOR: RICHARD N. ESTRADA
CALCULATED-DESIGNED BY: ALBERT N. LABRADOR
CHECKED BY: DOLORES VALADEZ
REVISED BY
DATE REVISED

DRAINAGE QUANTITIES
DQ-1

LAST REVISION 08-19-11
DATE PLOTTED => 21-SEP-2011
TIME PLOTTED => 10:20

Dist	COUNTY	ROUTE	POST MILES TOTAL PROJECT	SHEET No.	TOTAL SHEETS
11	SD	54, 125	5.3/6.4, 9.2/9.7	27	56

REGISTERED CIVIL ENGINEER 08-11-11 DATE

09-19-11
PLANS APPROVAL DATE

REGISTERED PROFESSIONAL ENGINEER SHAHIN T. ADIBI No. 54839 Exp. 06/30/12 CIVIL STATE OF CALIFORNIA

THE STATE OF CALIFORNIA OR ITS OFFICERS OR AGENTS SHALL NOT BE RESPONSIBLE FOR THE ACCURACY OR COMPLETENESS OF SCANNED COPIES OF THIS PLAN SHEET.

LEGEND:

XX = CONSTRUCTION AREA SIGN

NOTES:

1. EXACT LOCATION OF CONSTRUCTION AREA SIGNS SHALL BE DETERMINED BY THE ENGINEER.
2. FEDERAL MANUAL ON UNIFORM TRAFFIC CONTROL DEVICES (MUTCD) SIGN CODES ARE SHOWN UNLESS DESIGNATED BY (CA) INDICATING STANDARD CALIFORNIA SIGN SPECIFICATIONS ARE USED.
3. EXISTING UTILITIES ARE NOT SHOWN ON THESE PLAN SHEETS (SEE LAYOUTS). THE CONTRACTOR SHALL VERIFY LOCATIONS OF EXISTING UTILITIES AND ADJUST THE FIELD LOCATION OF SIGN POSTS IN CONSULTATION WITH THE ENGINEER.
4. SEE TRAFFIC HANDLING PLANS FOR ADDITIONAL CONSTRUCTION AREA SIGNS.

TYPICAL PLACEMENT OF TRAFFIC PLASTIC DRUM

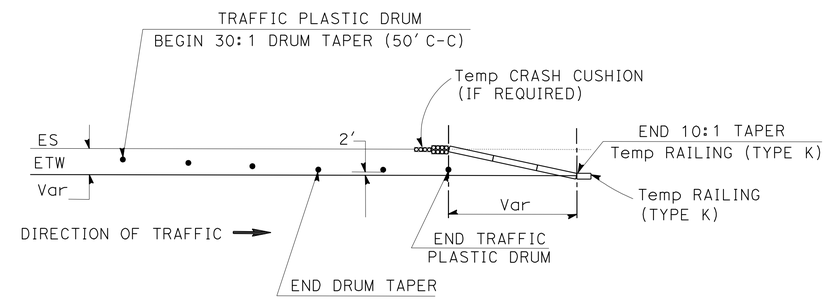

CONSTRUCTION AREA SIGNS

SIGN No.	TYPE	PANEL SIZE (In)	No. OF POST AND SIZE (In)	No. OF SIGNS
1	C40 (CA)	108 X 42	2-4 X 6 (S)	1
2	C23 (CA)	48 X 48	1-4 X 6 (S)	5
3	C14 (CA)	48 X 24	1-4 X 4 (S)	3
4	C30A (CA)	48 X 48	PORTABLE	1
	W7-3a	30 X 30	PORTABLE	1
5	W21-5b	36 X 36	PORTABLE	1
6	W21-5	30 X 30	PORTABLE	1
			TOTAL	13

(S) DENOTES STATIONARY MOUNTED SIGN

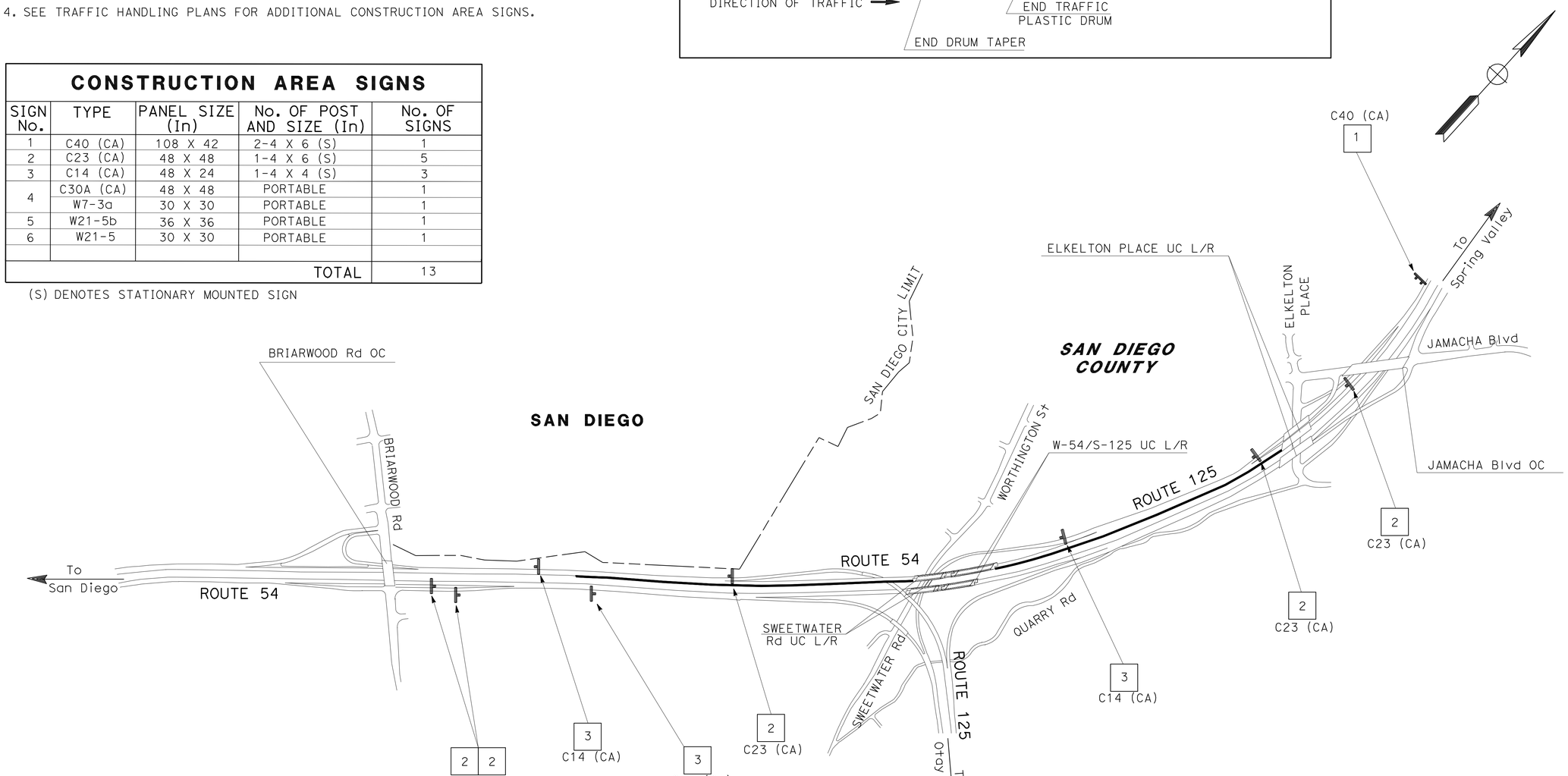

APPROVED FOR CONSTRUCTION AREA SIGN WORK ONLY

CONSTRUCTION AREA SIGNS

NO SCALE

CS-1

STATE OF CALIFORNIA - DEPARTMENT OF TRANSPORTATION
Caltrans
TRAFFIC DESIGN

FUNCTIONAL SUPERVISOR: CAMILLE ABOUFADEL
CALCULATED-DESIGNED BY: MARY BETH HAYES/RYAN CHAO
CHECKED BY: SHAHIN ADIBI
REVISED BY
DATE REVISED

LAST REVISION 08-22-11
DATE PLOTTED => 21-SEP-2011
TIME PLOTTED => 10:20

Dist	COUNTY	ROUTE	POST MILES TOTAL PROJECT	SHEET No.	TOTAL SHEETS
11	SD	54, 125	5.3/6.4, 9.2/9.7	28	56

REGISTERED CIVIL ENGINEER 08-11-11 DATE

09-19-11
PLANS APPROVAL DATE

REGISTERED PROFESSIONAL ENGINEER ALBERT LABRADOR No. 65294 Exp. 09-30-11 CIVIL STATE OF CALIFORNIA

THE STATE OF CALIFORNIA OR ITS OFFICERS OR AGENTS SHALL NOT BE RESPONSIBLE FOR THE ACCURACY OR COMPLETENESS OF SCANNED COPIES OF THIS PLAN SHEET.

NOTE:

FOR ACCURATE RIGHT OF WAY DATA, CONTACT RIGHT OF WAY ENGINEERING AT THE DISTRICT OFFICE.

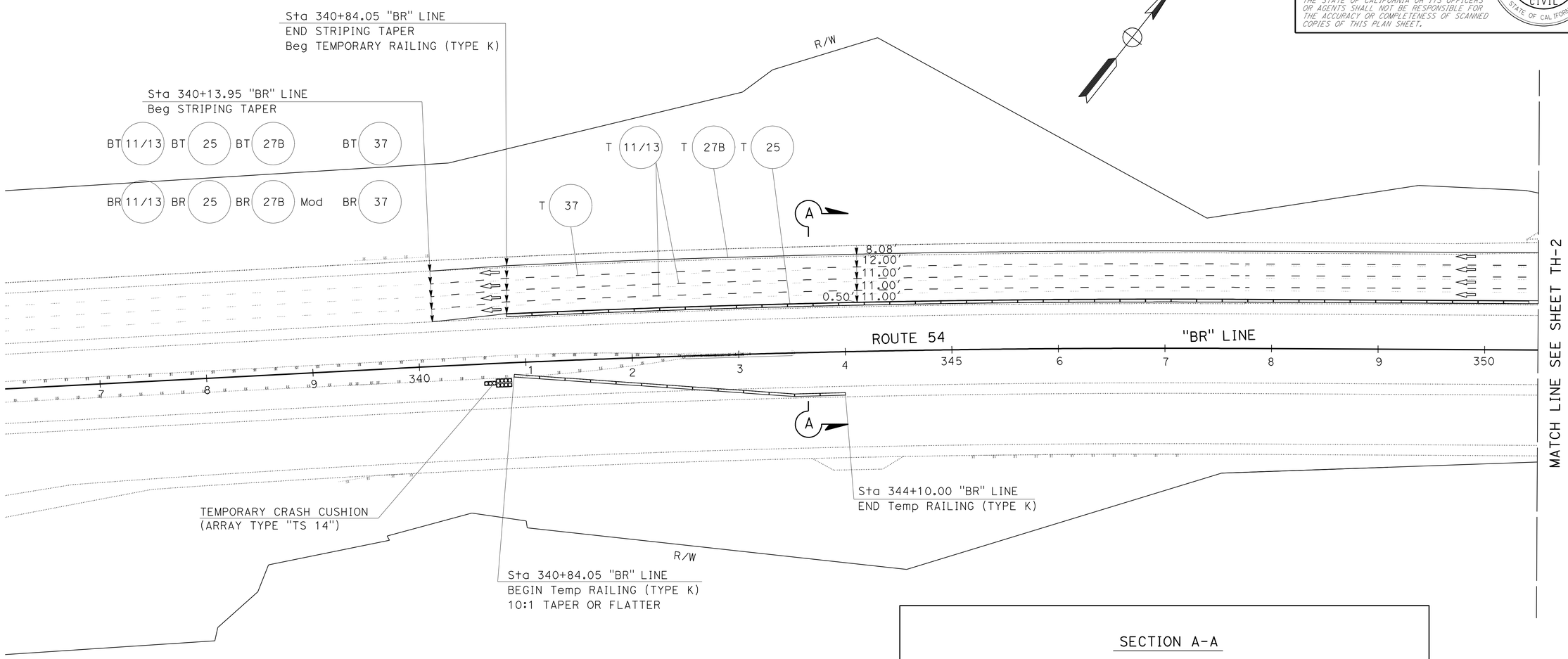

LEGEND:

- • TRAFFIC PLASTIC DRUMS
- BT — BEGIN TEMPORARY DELINEATION
- BR — BEGIN REMOVE DELINEATION
- ET — END TEMPORARY DELINIEATION
- ER — END REMOVE DELINEATION
- T — Temp PAVEMENT DELINEATION DETAIL
- XX — CONSTRUCTION AREA SIGN

SECTION A-A

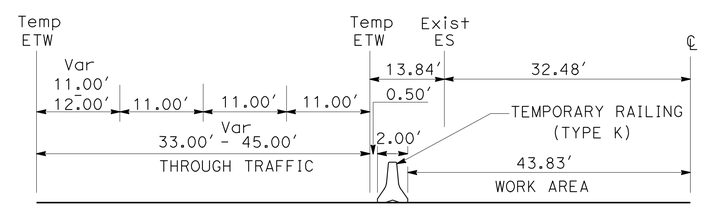

NO SCALE

APPROVED FOR TRAFFIC HANDLING WORK ONLY

TRAFFIC HANDLING PLAN

SCALE: 1" = 50'

TH-1

STATE OF CALIFORNIA - DEPARTMENT OF TRANSPORTATION
TRAFFIC PROJECT DEVELOPMENT
Caltrans

FUNCTIONAL SUPERVISOR: RICHARD N. ESTRADA
CALCULATED-DESIGNED BY: MIKE DISPENZIERI
CHECKED BY: DOLORES VALADEZ
REVISED BY / DATE REVISED

LAST REVISION 08-22-11 | DATE PLOTTED => 21-SEP-2011 | TIME PLOTTED => 10:20

Dist	COUNTY	ROUTE	POST MILES TOTAL PROJECT	SHEET No.	TOTAL SHEETS
11	SD	54, 125	5.3/6.4, 9.2/9.7	29	56

REGISTERED CIVIL ENGINEER 08-11-11 DATE

09-19-11
PLANS APPROVAL DATE

REGISTERED PROFESSIONAL ENGINEER
ALBERT LABRADOR
No. 65294
Exp. 09-30-11
CIVIL
STATE OF CALIFORNIA

THE STATE OF CALIFORNIA OR ITS OFFICERS OR AGENTS SHALL NOT BE RESPONSIBLE FOR THE ACCURACY OR COMPLETENESS OF SCANNED COPIES OF THIS PLAN SHEET.

NOTE:

FOR ACCURATE RIGHT OF WAY DATA, CONTACT RIGHT OF WAY ENGINEERING AT THE DISTRICT OFFICE.

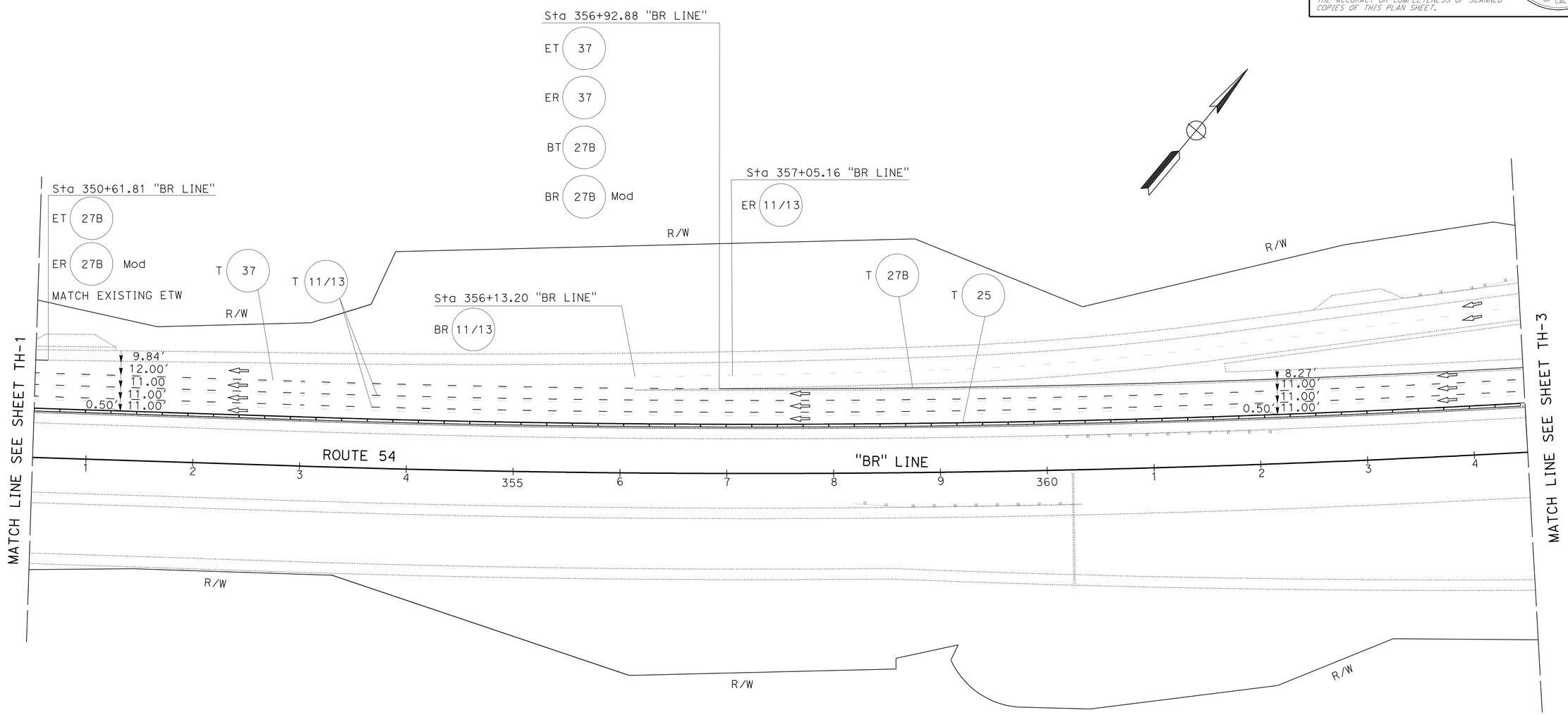

APPROVED FOR TRAFFIC HANDLING WORK ONLY

TRAFFIC HANDLING PLAN

SCALE: 1" = 50'

TH-2

STATE OF CALIFORNIA - DEPARTMENT OF TRANSPORTATION
TRAFFIC PROJECT DEVELOPMENT
Caltrans

FUNCTIONAL SUPERVISOR: RICHARD N. ESTRADA
CALCULATED-DESIGNED BY: MIKE DISPENZIERI
CHECKED BY: DOLORES VALADEZ
REVISED BY
DATE REVISED

LAST REVISION 08-22-11
DATE PLOTTED => 21-SEP-2011
TIME PLOTTED => 10:20

Dist	COUNTY	ROUTE	POST MILES TOTAL PROJECT	SHEET No.	TOTAL SHEETS
11	SD	54, 125	5.3/6.4, 9.2/9.7	30	56

08-11-11
REGISTERED CIVIL ENGINEER DATE

09-19-11
PLANS APPROVAL DATE

REGISTERED PROFESSIONAL ENGINEER
ALBERT LABRADOR
No. 65294
Exp. 09-30-11
CIVIL
STATE OF CALIFORNIA

THE STATE OF CALIFORNIA OR ITS OFFICERS OR AGENTS SHALL NOT BE RESPONSIBLE FOR THE ACCURACY OR COMPLETENESS OF SCANNED COPIES OF THIS PLAN SHEET.

NOTE:

FOR ACCURATE RIGHT OF WAY DATA, CONTACT RIGHT OF WAY ENGINEERING AT THE DISTRICT OFFICE.

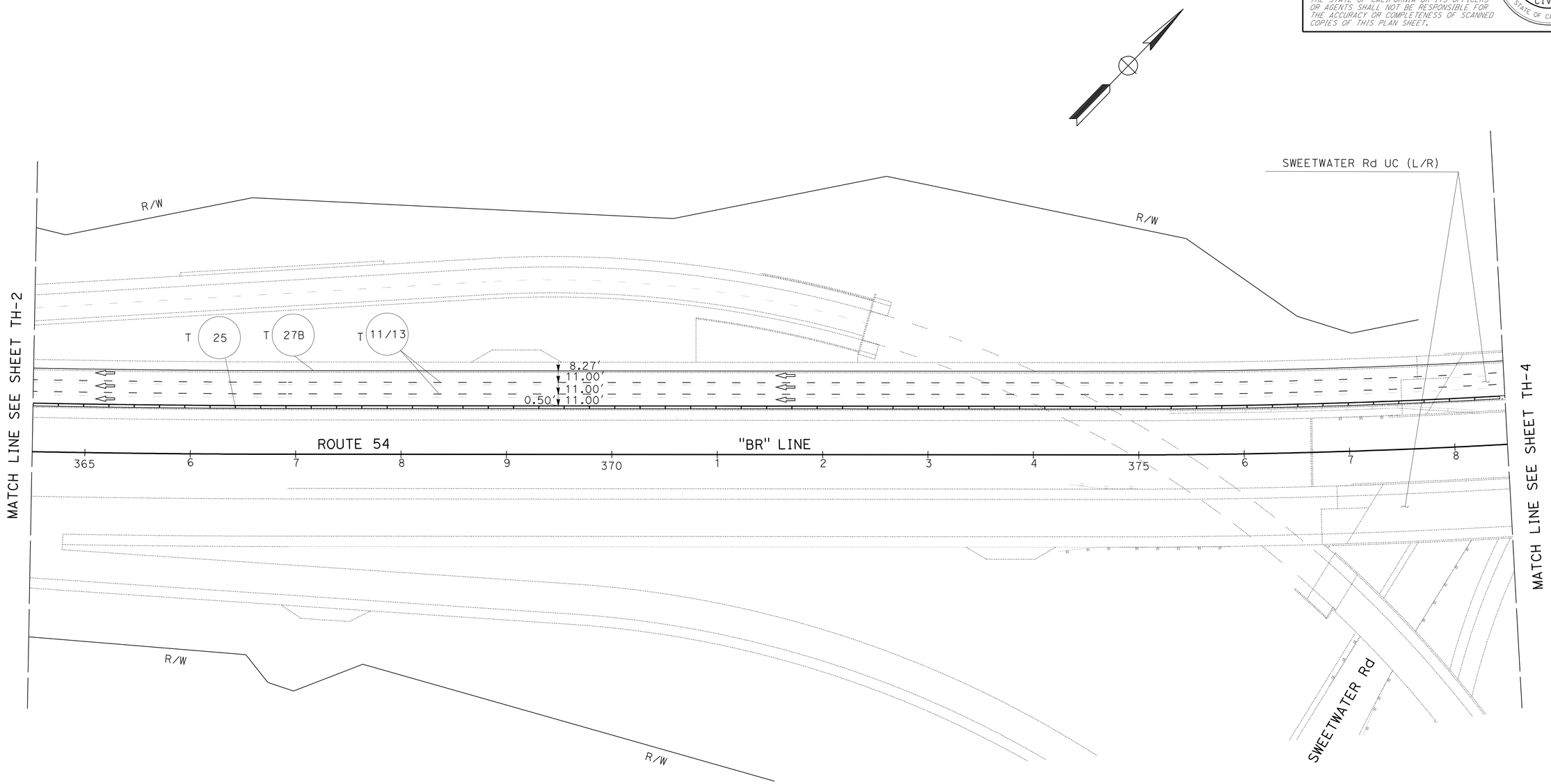

APPROVED FOR TRAFFIC HANDLING WORK ONLY

TRAFFIC HANDLING PLAN

SCALE: 1" = 50'

TH-3

STATE OF CALIFORNIA - DEPARTMENT OF TRANSPORTATION
Caltrans
TRAFFIC PROJECT DEVELOPMENT

FUNCTIONAL SUPERVISOR: RICHARD N. ESTRADA
CALCULATED-DESIGNED BY: MIKE DISPENZIERI
CHECKED BY: DOLORES VALADEZ
REVISED BY
DATE REVISED

LAST REVISION 08-22-11
DATE PLOTTED => 21-SEP-2011
TIME PLOTTED => 10:20

Dist	COUNTY	ROUTE	POST MILES TOTAL PROJECT	SHEET No.	TOTAL SHEETS
11	SD	54, 125	5.3/6.4, 9.2/9.7	31	56

REGISTERED CIVIL ENGINEER 08-11-11 DATE

09-19-11
PLANS APPROVAL DATE

REGISTERED PROFESSIONAL ENGINEER
ALBERT LABRADOR
No. 65294
Exp. 09-30-11
CIVIL
STATE OF CALIFORNIA

THE STATE OF CALIFORNIA OR ITS OFFICERS OR AGENTS SHALL NOT BE RESPONSIBLE FOR THE ACCURACY OR COMPLETENESS OF SCANNED COPIES OF THIS PLAN SHEET.

NOTE:

FOR ACCURATE RIGHT OF WAY DATA, CONTACT RIGHT OF WAY ENGINEERING AT THE DISTRICT OFFICE.

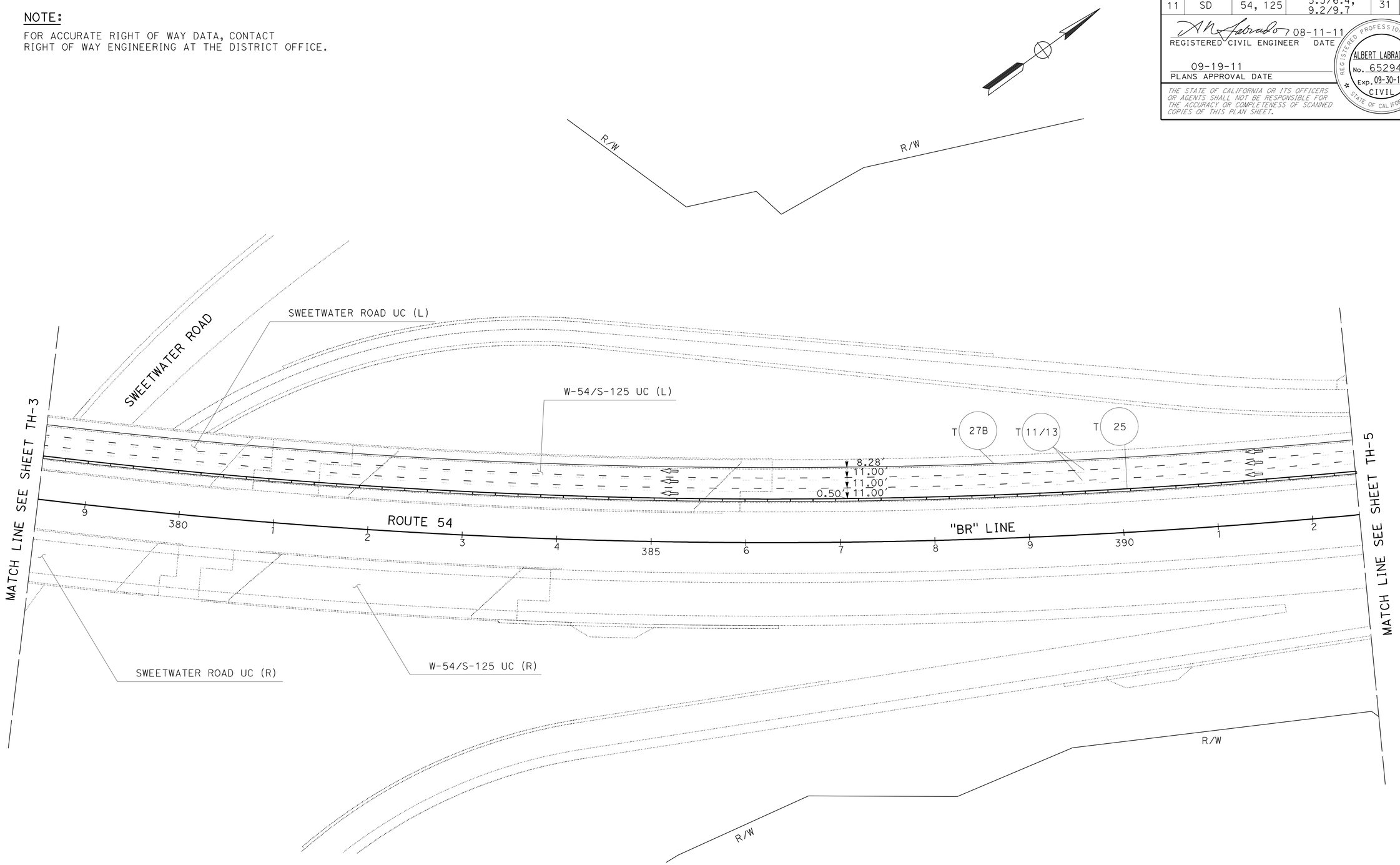

TRAFFIC HANDLING PLAN

SCALE: 1" = 50'

TH-4

APPROVED FOR TRAFFIC HANDLING WORK ONLY

STATE OF CALIFORNIA - DEPARTMENT OF TRANSPORTATION
TRAFFIC PROJECT DEVELOPMENT
Caltrans

FUNCTIONAL SUPERVISOR: RICHARD N. ESTRADA
CALCULATED-DESIGNED BY: MIKE DISPENZIERI
CHECKED BY: DOLORES VALADEZ
REVISED BY
DATE REVISED

LAST REVISION 08-22-11
DATE PLOTTED => 21-SEP-2011
TIME PLOTTED => 10:21

Dist	COUNTY	ROUTE	POST MILES TOTAL PROJECT	SHEET No.	TOTAL SHEETS
11	SD	54, 125	5.3/6.4, 9.2/9.7	32	56

REGISTERED CIVIL ENGINEER 08-11-11 DATE

09-19-11
PLANS APPROVAL DATE

REGISTERED PROFESSIONAL ENGINEER
ALBERT LABRADOR
No. 65294
Exp. 09-30-11
CIVIL
STATE OF CALIFORNIA

THE STATE OF CALIFORNIA OR ITS OFFICERS OR AGENTS SHALL NOT BE RESPONSIBLE FOR THE ACCURACY OR COMPLETENESS OF SCANNED COPIES OF THIS PLAN SHEET.

NOTE:

FOR ACCURATE RIGHT OF WAY DATA, CONTACT
RIGHT OF WAY ENGINEERING AT THE DISTRICT OFFICE.

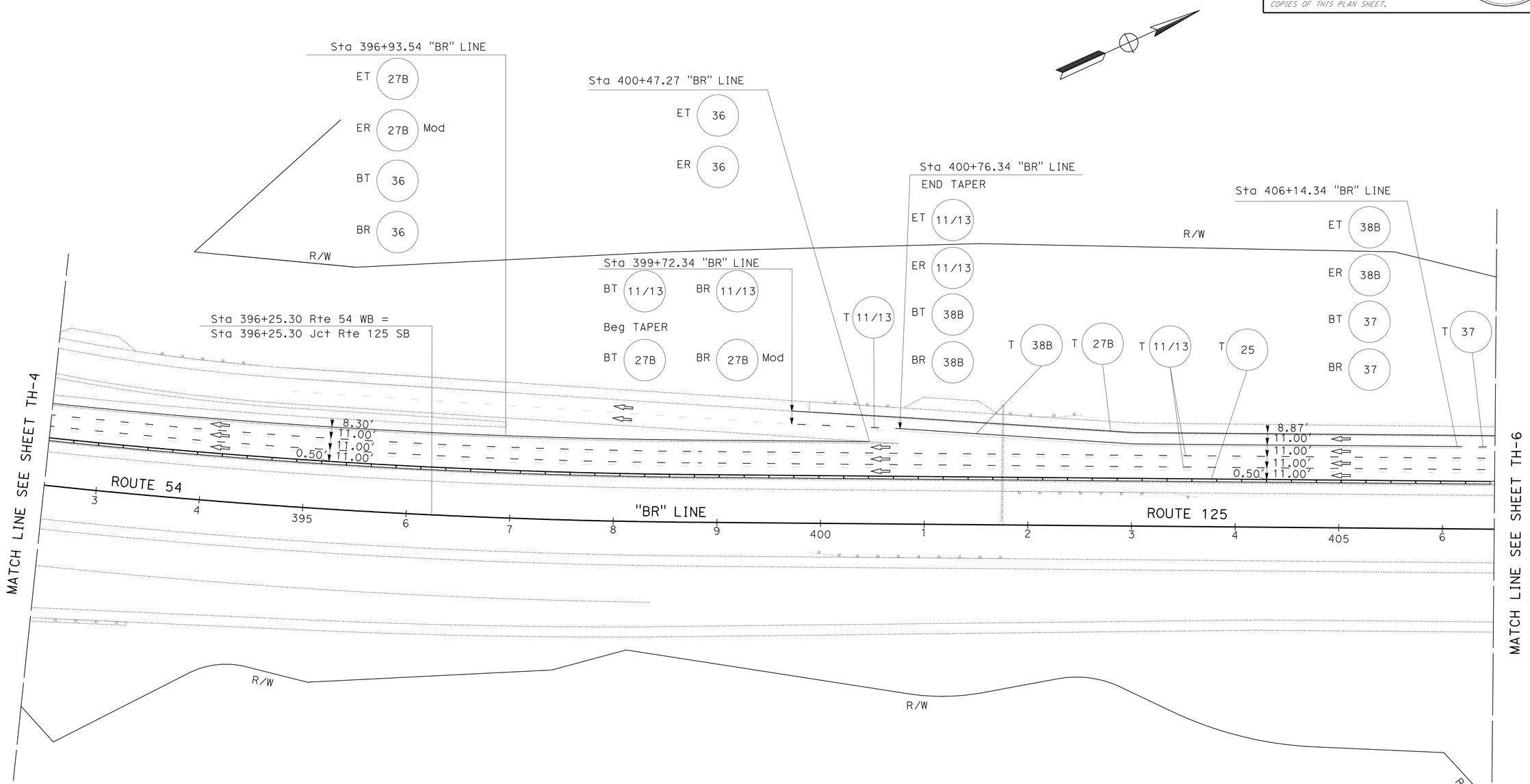

TRAFFIC HANDLING PLAN

SCALE: 1" = 50'

TH-5

APPROVED FOR TRAFFIC HANDLING WORK ONLY

STATE OF CALIFORNIA - DEPARTMENT OF TRANSPORTATION
TRAFFIC PROJECT DEVELOPMENT
Caltrans

FUNCTIONAL SUPERVISOR: RICHARD N. ESTRADA
CALCULATED-DESIGNED BY: MIKE DISPENZIERI
CHECKED BY: DOLORES VALADEZ
REVISED BY
DATE REVISED

LAST REVISION 08-22-11
DATE PLOTTED => 21-SEP-2011
TIME PLOTTED => 10:21

Dist	COUNTY	ROUTE	POST MILES TOTAL PROJECT	SHEET No.	TOTAL SHEETS
11	SD	54, 125	5.3/6.4, 9.2/9.7	33	56

REGISTERED CIVIL ENGINEER 08-11-11 DATE

09-19-11
PLANS APPROVAL DATE

REGISTERED PROFESSIONAL ENGINEER ALBERT LABRADOR No. 65294 Exp. 09-30-11 CIVIL STATE OF CALIFORNIA

THE STATE OF CALIFORNIA OR ITS OFFICERS OR AGENTS SHALL NOT BE RESPONSIBLE FOR THE ACCURACY OR COMPLETENESS OF SCANNED COPIES OF THIS PLAN SHEET.

NOTES:

1. FOR ACCURATE RIGHT OF WAY DATA, SEE RIGHT OF WAY RECORD MAP AT DISTRICT OFFICE.
2. SEE CONSTRUCTION AREA SIGNS FOR ADDITIONAL INFORMATION.

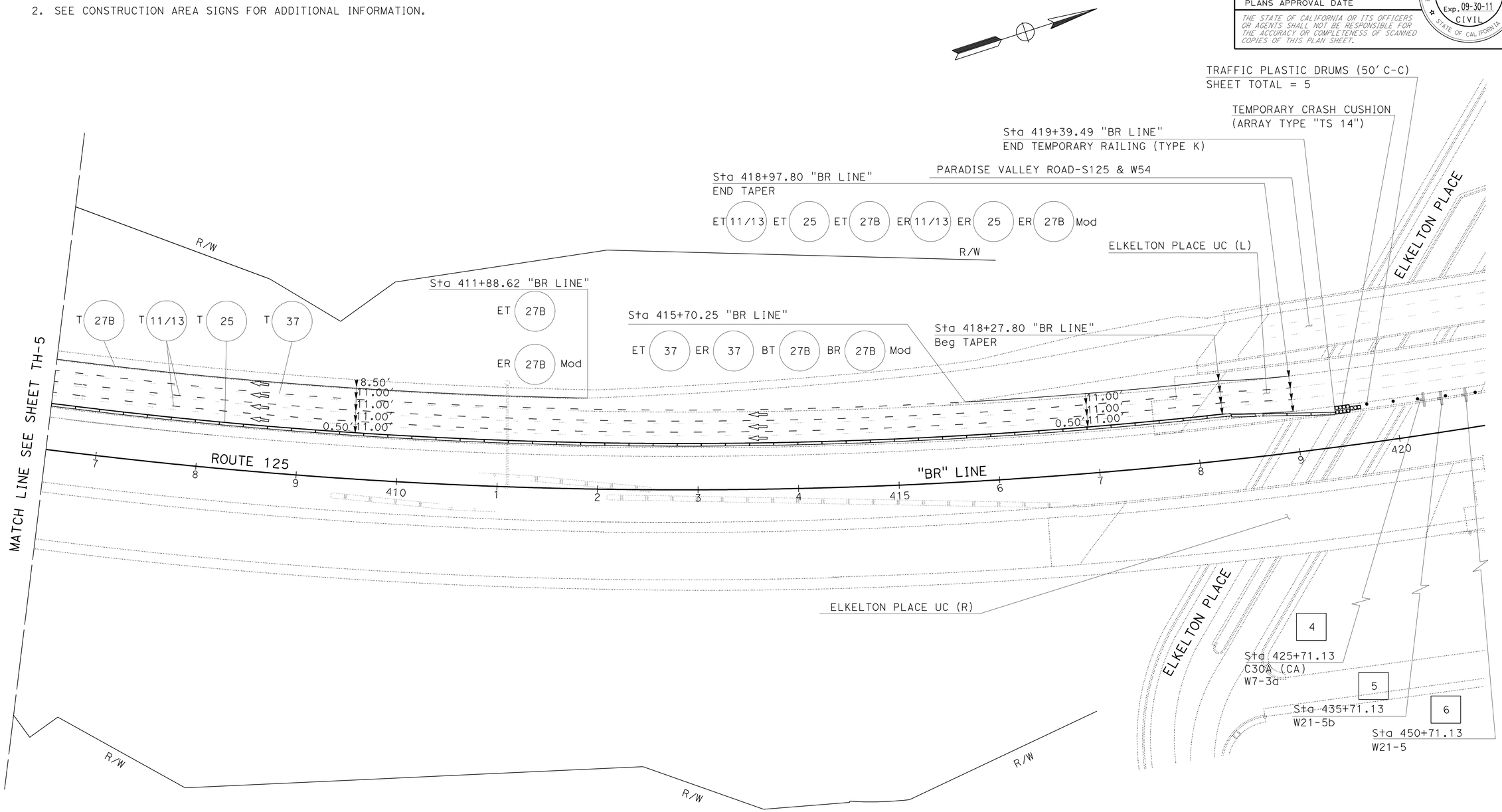

APPROVED FOR TRAFFIC HANDLING WORK ONLY

TRAFFIC HANDLING PLAN

SCALE: 1" = 50'

TH-6

STATE OF CALIFORNIA - DEPARTMENT OF TRANSPORTATION
Caltrans
TRAFFIC PROJECT DEVELOPMENT

FUNCTIONAL SUPERVISOR: RICHARD N. ESTRADA
CALCULATED-DESIGNED BY: MIKE DISPENZIERI
CHECKED BY: DOLORES VALADEZ
REVISED BY
DATE REVISED

LAST REVISION 08-22-11
DATE PLOTTED => 21-SEP-2011
TIME PLOTTED => 10:21

Dist	COUNTY	ROUTE	POST MILES TOTAL PROJECT	SHEET No.	TOTAL SHEETS
11	SD	54, 125	5.3/6.4, 9.2/9.7	34	56

REGISTERED CIVIL ENGINEER 08-11-11 DATE

09-19-11
PLANS APPROVAL DATE

REGISTERED PROFESSIONAL ENGINEER ALBERT LABRADOR No. 65294 Exp. 09-30-11 CIVIL STATE OF CALIFORNIA

THE STATE OF CALIFORNIA OR ITS OFFICERS OR AGENTS SHALL NOT BE RESPONSIBLE FOR THE ACCURACY OR COMPLETENESS OF SCANNED COPIES OF THIS PLAN SHEET.

TEMPORARY PAVEMENT DELINEATION

Rte	STATION	SHEET	TEMPORARY TRAFFIC STRIPE (PAINT)(LF)						TEMPORARY PAVEMENT MARKER (EA)			
			DETAIL NUMBER						NON-REFLECTIVE	RETROREFLECTIVE		
			11/13	25	27B	36	37	38B	TYPE A	TYPE C	TYPE G	TYPE H
54	340+13.95 TO 350+50.00	TH-1	2,072	1,036	1,036	0	1,036	0	173	8	107	23
54	350+00.00 TO 364+50.00	TH-2	2,849	1,400	769	0	643	0	237	0	105	30
54	364+50.00 TO 378+50.00	TH-3	2,800	1,400	1,400	0	0	0	233	0	59	30
54	378+50.00 TO 392+50.00	TH-4	2,800	1,400	1,400	0	0	0	233	0	59	30
54/125	392+50.00 TO 406+50.00	TH-5	2,904	1,400	1,121	354	36	538	239	2	126	30
125	406+50.00 TO 418+97.80	TH-6	2,496	1,248	866	0	920	0	208	6	111	27
		SUBTOTAL	15,921	7,884	6,592	354	2,635	538	1,323	16	567	170
		TOTAL	33,923						2,076			

REMOVE PAVEMENT DELINEATION

Rte	STATION	SHEET	REMOVE PAINTED TRAFFIC STRIPE (LF)						REMOVE THERMOPLASTIC TRAFFIC STRIPE (LF)						REMOVE PAVEMENT MARKER (EA) (N)			
			DETAIL NUMBER						DETAIL NUMBER						NON-REFLECTIVE	RETROREFLECTIVE		
			11/13		25		27B Mod		36		37		38B					
			LENGTH REMOVED	DETAIL LENGTH (N)	LENGTH REMOVED	DETAIL LENGTH (N)	LENGTH REMOVED	DETAIL LENGTH (N)	LENGTH REMOVED	DETAIL LENGTH (N)	LENGTH REMOVED	DETAIL LENGTH (N)	LENGTH REMOVED	DETAIL LENGTH (N)	TYPE A	TYPE C	TYPE G	TYPE H
54	340+13.95 TO 350+50.00	TH-1	518	2,072	1,036	1,036	2,072	1,036	0	0	414	1,036	0	0	173	8	107	23
54	350+00.00 TO 364+50.00	TH-2	712	2,849	1,400	1,400	1,538	769	0	0	257	643	0	0	237	0	105	30
54	364+50.00 TO 378+50.00	TH-3	700	2,800	1,400	1,400	2,800	1,400	0	0	0	0	0	0	233	0	59	30
54	378+50.00 TO 392+50.00	TH-4	700	2,800	1,400	1,400	2,800	1,400	0	0	0	0	0	0	233	0	59	30
54/125	392+50.00 TO 406+50.00	TH-5	726	2,904	1,400	1,400	2,242	1,121	707	354	14	36	1,076	538	239	2	126	30
125	406+50.00 TO 418+97.80	TH-6	624	2,496	1,248	1,248	1732	866	0	0	368	920	0	0	208	6	111	27
		SUBTOTAL	3,980		7,884		13,184		707		1,054		1,076		1,323	16	567	170
		TOTAL	25,048 *						2,838						2,076 *			

* - FOR ADDITIONAL QUANTITIES, SEE PAVEMENT DELINEATION QUANTITIES.

TEMPORARY RAILING (TYPE K)

Rte	STATION	SHEET	LENGTH (LF)
54	340+84.05 TO 350+50.00	TH-1	1,300.00
54	350+00.00 TO 364+50.00	TH-2	1,400.00
54	364+50.00 TO 378+50.00	TH-3	1,400.00
54	378+50.00 TO 392+50.00	TH-4	1,400.00
54/125	392+50.00 TO 406+50.00	TH-5	1,400.00
125	406+50.00 TO 419+39.49	TH-6	1,300.00
		TOTAL	8,200.00

(N) - NOT A SEPARATE PAY ITEM, FOR INFORMATION ONLY

TEMPORARY CRASH CUSHION MODULE

ARRAY TYPE "TS14"	
SHEET	EACH
TH-1	14
TH-6	14
TOTAL	28

TRAFFIC PLASTIC DRUM

SHEET	EACH
TH-6	5
TOTAL	5

TRAFFIC HANDLING QUANTITIES

THQ-1

REVISED BY | DATE REVISED
MIKE DISPENZIERI | DOLORES VALADEZ
CALCULATED-DESIGNED BY | CHECKED BY
FUNCTIONAL SUPERVISOR
RICHARD N. ESTRADA

STATE OF CALIFORNIA - DEPARTMENT OF TRANSPORTATION
Caltrans
TRAFFIC PROJECT DEVELOPMENT

LAST REVISION 08-22-11 | DATE PLOTTED => 21-SEP-2011 | TIME PLOTTED => 10:21

Dist	COUNTY	ROUTE	POST MILES TOTAL PROJECT	SHEET No.	TOTAL SHEETS
11	SD	54,125	5.3/6.4 9.2/9.7	35	56

08-11-11
REGISTERED CIVIL ENGINEER DATE

09-19-11
PLANS APPROVAL DATE

REGISTERED PROFESSIONAL ENGINEER
SHAHIN T. ADIBI
No. 54839
Exp. 06/30/12
CIVIL
STATE OF CALIFORNIA

THE STATE OF CALIFORNIA OR ITS OFFICERS OR AGENTS SHALL NOT BE RESPONSIBLE FOR THE ACCURACY OR COMPLETENESS OF SCANNED COPIES OF THIS PLAN SHEET.

PAVEMENT MARKER SUMMARY / TRAFFIC STRIPE SUMMARY

ROUTE	LINE	STATION BEGIN	STATION END	DETAIL	NON-REFLECTIVE (EA) TYPE A	RETROREFLECTIVE (EA) TYPE C	TYPE G	TYPE H	PAINT (1-COAT) (LF)	THERMOPLASTIC (LF) 4"	8"	8"	4"	REMARKS
					WHITE	RED-CLEAR	CLEAR	YELLOW	BLACK	BROKEN 36-12	BROKEN 12-3	SOLID	SOLID	
54/125	"BR" LINE	340+13.95	418+97.80	11/13	1,463		367			17,567				
54/125	"BR" LINE	340+13.95	418+97.80	25				170					7,884	
54/125	"BR" LINE	340+13.95	418+97.80	25(Mod)				18	836				836	BRIDGE
54/125	"BR" LINE	340+13.95	418+97.80	27B(Mod)					7,425				7,425	
54/125	"BR" LINE	340+13.95	418+97.80	37		8	60				966			
54/125	"BR" LINE	340+13.95	418+97.80	38B			47					538		
54/125	"BR" LINE	340+13.95	418+97.80	36								335		
				IRRIGATION CROSSOVERS	5									
				TOTAL	1,468	670			8,261	17,567	966	873	16,145	

REMOVE PAINTED TRAFFIC STRIPE

ROUTE	LINE	STATION BEGIN	STATION END	DETAIL (TEMPORARY)	LF
54/125	"BR" LINE	340+13.95	418+97.80	11/13	3,980
54/125	"BR" LINE	340+13.95	418+97.80	25	7,884
54/125	"BR" LINE	340+13.95	418+97.80	27B	6,592
54/125	"BR" LINE	340+13.95	418+97.80	37	1,054
54/125	"BR" LINE	340+13.95	418+97.80	38B	1,076
54/125	"BR" LINE	340+13.95	418+97.80	36	707
				TOTAL	21,294 *

* FOR ADDITIONAL QUANTITIES, SEE TRAFFIC HANDLING QUANTITIES.

REMOVE PAVEMENT MARKER (N)

ROUTE	STATION BEGIN	STATION END	DETAIL (TEMPORARY)	TYPE	EA
54/125	340+13.95	418+97.80	13,25,37,38B	A,C,G,H	2,076
			TOTAL		2,076

(N) NOT A SEPARATE PAY ITEM, FOR INFORMATION ONLY.

DETAIL 27B (Mod)

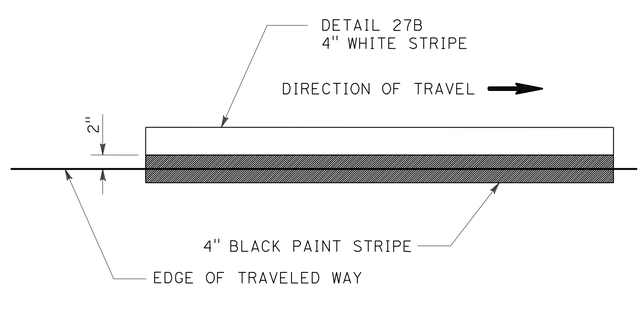

DETAIL 25 (Mod)

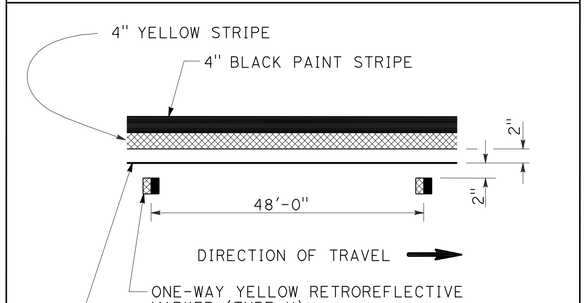

PAVEMENT DELINEATION DETAILS AND QUANTITIES

NO SCALE

PDD-1

STATE OF CALIFORNIA - DEPARTMENT OF TRANSPORTATION
Caltrans®
TRAFFIC DESIGN

FUNCTIONAL SUPERVISOR: CAMILLE ABOUFADEL
CALCULATED-DESIGNED BY: RYAN CHAO
CHECKED BY: SHAHIN ADIBI
REVISED BY
DATE REVISED

LAST REVISION 08-22-11
DATE PLOTTED => 21-SEP-2011
TIME PLOTTED => 10:21

Dist	COUNTY	ROUTE	POST MILES TOTAL PROJECT	SHEET No.	TOTAL SHEETS
11	SD	54, 125	5.3/6.4, 9.2/9.7	36	56

REGISTERED CIVIL ENGINEER 08-11-11 DATE

09-19-11
PLANS APPROVAL DATE

REGISTERED PROFESSIONAL ENGINEER ALBERT LABRADOR No. 65294 Exp. 09-30-11 CIVIL STATE OF CALIFORNIA

THE STATE OF CALIFORNIA OR ITS OFFICERS OR AGENTS SHALL NOT BE RESPONSIBLE FOR THE ACCURACY OR COMPLETENESS OF SCANNED COPIES OF THIS PLAN SHEET.

PAVEMENT STRUCTURE QUANTITIES SUMMARY

LINE	STATION FROM	STATION TO	CLASS 2 AGGREGATE BASE CY	HMA (TYPE A) TON	ASPHALTIC EMULSION (FOG SEAL COAT) TON	TACK COAT TON	COLD PLANE ASPHALT CONCRETE PAVEMENT SQYD
"BR"	343+70.00	375+40.00	763.15	513.54	0.95	0.50	352.22
"BR"	375+40.00	376+20.00	13.17	9.77	0.02	0.01	8.89
"BR"	376+20.00	377+38.61	0.00	4.27	0.02	0.01	24.25
"BR"	385+75.02	386+50.00	0.00	2.70	0.01	0.00	15.33
"BR"	386+50.00	387+30.00	13.17	9.77	0.01	0.01	8.89
"BR"	387+30.00	412+75.00	612.69	412.29	0.40	0.40	282.78
"BR"	412+75.00	415+45.00	143.00	84.56	0.04	0.09	30.00
"BR"	415+45.00	416+60.00	27.69	18.63	0.02	0.02	12.78
"BR"	416+60.00	417+40.00	13.17	9.77	0.01	0.01	8.89
"BR"	417+40.00	417+58.17	0.00	0.65	0.00	0.00	3.71
		TOTAL	1,586.04	1,065.97	1.47	1.05	747.74

REMOVE DOUBLE THRIE BEAM BARRIER

SHEET	LINE	STATION FROM	STATION TO	LF
L-1	"BR"	342+68.00	343+11.75	43.75
			TOTAL	43.75

DOUBLE THRIE BEAM BARRIER

SHEET	LINE	STATION FROM	STATION TO	LF
L-1	"BR"	342+68.00	343+55.50	87.50
			TOTAL	87.50

END ANCHOR ASSEMBLY (TYPE CA)

SHEET	LINE	STATION	EA
L-1	"BR"	343+50.00	1
		TOTAL	1

RUMBLE STRIP

STATION FROM	STATION TO	(Sta)
343+70.00	417+58.17	65.5
	TOTAL	65.5

CONCRETE BARRIER (TYPE 60 MODIFIED)

SHEET	LINE	STATION FROM	STATION TO	LF
L-1	"BR"	343+70.00	343+91.50	21.5
			TOTAL	21.5

CONCRETE BARRIER (TYPE 60)

SHEET	LINE	STATION FROM	STATION TO	LF
L-1 THRU L-3	"BR"	343+91.50	377+38.61	3,347.11
L-4 THRU L-6	"BR"	385+75.02	417+58.17	3,183.15
			TOTAL	6,530.26

MINOR CONCRETE (MINOR STRUCTURE)

LOCATION LINE	LOCATION STATION	ANCHOR BLOCK CY	REMARKS
"BR"	417+58.17	0.89	CONCRETE BARRIER TYPE 60 CONNECTION TO EXIST CONCRETE BARRIER TYPE 25A AT ELKELTON PLACE UC (L)
	TOTAL	0.89 *	

* FOR ADDITIONAL QUANTITIES SEE DRAINAGE QUANTITIES.

REMOVE METAL BEAM GUARD RAILING

SHEET	LINE	STATION FROM	STATION TO	LF
L-2	"BR"	360+17.14	362+19.65	160.00
L-3	"BR"	376+89.11	377+38.61	49.50
L-4	"BR"	385+75.02	386+76.49	101.47
L-5	"BR"	401+62.16	403+64.04	201.88
L-6	"BR"	410+82.16	412+53.52	171.36
			TOTAL	684.21

RETURN CAP (TYPE TA)

SHEET	LINE	STATION	EA
L-1	"BR"	343+50.00	1
		TOTAL	1

SUMMARY OF QUANTITIES
Q-1

REVISED BY | DATE REVISED
MIKE DISPENZIERI | DOLORES VALADEZ
CALCULATED-DESIGNED BY | CHECKED BY
FUNCTIONAL SUPERVISOR: RICHARD N. ESTRADA
STATE OF CALIFORNIA - DEPARTMENT OF TRANSPORTATION
TRAFFIC PROJECT DEVELOPMENT
Caltrans

LAST REVISION 07-14-11 | DATE PLOTTED => 21-SEP-2011 | TIME PLOTTED => 10:21

Dist	COUNTY	ROUTE	POST MILES TOTAL PROJECT	SHEET No.	TOTAL SHEETS
11	SD	54, 125	5.3/6.4, 9.2/9.7	37	56

REGISTERED CIVIL ENGINEER 08-11-11 DATE

09-19-11
PLANS APPROVAL DATE

REGISTERED PROFESSIONAL ENGINEER ALBERT LABRADOR No. 65294 Exp. 09-30-11 CIVIL STATE OF CALIFORNIA

THE STATE OF CALIFORNIA OR ITS OFFICERS OR AGENTS SHALL NOT BE RESPONSIBLE FOR THE ACCURACY OR COMPLETENESS OF SCANNED COPIES OF THIS PLAN SHEET.

EXTEND IRRIGATION CROSSOVERS

SHEET	LINE	STATION	Exist Cond SIZE (INCH)	Exist Cond TYPE	SIDE R+	SIDE L+	EXTEND Cond CHDPE LENGTH (LF) SIZE (In) 12"	EXTEND Cond CHDPE LENGTH (LF) DN -	CB	OL	(N) WATER LINE CROSSOVER SIZE (INCH)	(N) SIZE (INCH) SPRINKLER CONTROL CROSSOVER
L-1	"BR"	347+11.00	10	CHDPE		X	7.0		-	X	3"	2"
L-2	"BR"	356+29.00	10	CHDPE		X	7.0		-	X	3"	2"
L-3	"BR"	368+11.00	10	CHDPE		X	7.0		-	X	3"	2"
L-4	"BR"	387+79.45	10	CHDPE		X	7.0		-	X	3"	2"
L-6	"BR"	407+47.00	10	CHDPE		X	7.0		-	X	3"	2"
						TOTAL	35.0					

(N) - NOT A SEPARATE PAY ITEM, FOR INFORMATION ONLY

X - DENOTES REQUIREMENT

DN - DIAMETER NOMINAL

CB - COUPLING BAND

OL - OVERLAP

EARTHWORK QUANTITIES SUMMARY

LINE	STATION FROM	STATION TO	ROADWAY EXCAVATION CY	EMBANKMENT (N) CY	IMPORTED BORROW CY
"BR"	343+70.00	375+40.00	906.60	975.80	
"BR"	375+40.00	376+20.00	12.33	27.49	
"BR"	376+20.00	377+38.61	5.97	16.26	
"BR"	385+75.02	386+50.00	3.81	3.51	
"BR"	386+50.00	387+30.00	13.58	17.75	
"BR"	387+30.00	412+75.00	692.15	786.28	
"BR"	412+75.00	415+45.00	178.80	20.79	
"BR"	415+45.00	416+60.00	34.35	12.54	
"BR"	416+60.00	417+40.00	12.61	5.47	
"BR"	417+40.00	417+58.17	3.08	1.50	
		TOTAL	1,863.28	1,867.39	190.00

(N) NOT A SEPARATE PAY ITEM, FOR INFORMATION ONLY.
* 10% SHRINKAGE FACTOR OF EXCAVATED MATERIAL WAS CONSIDERED IN CALCULATION

EROSION CONTROL (BONDED FIBER MATRIX)

STATION FROM	STATION TO	(N) WIDTH (LF)	SQFT
339+87.06	343+67.00	22	8,389
343+67.00	350+50.00	12.5	8,538
350+50.00	364+50.00	12.5	17,500
364+50.00	377+00.00	12.5	15,625
377+00.00	377+37.32	Var 12.5 - 0	233
385+75.28	386+00.00	Var 0 - 15	185
386+00.00	386+91.00	Var 15 - 12.5	1,251
386+91.00	392+50.00	12.5	6,988
392+50.00	406+50.00	12.5	17,500
406+50.00	410+91.00	12.5	5,512
410+91.00	417+37.00	47.9	30,943
417+37.00	417+58.17	15	318
		TOTAL	112,952

(N) NOT A SEPARATE PAY ITEM, FOR INFORMATION ONLY.

SUMMARY OF QUANTITIES

Q-2

STATE OF CALIFORNIA - DEPARTMENT OF TRANSPORTATION
TRAFFIC PROJECT DEVELOPMENT
Caltrans

FUNCTIONAL SUPERVISOR: RICHARD N. ESTRADA
CALCULATED-DESIGNED BY: MIKE DISPENZIERI
CHECKED BY: DOLORES VALADEZ
REVISED BY / DATE REVISED

LAST REVISION 08-22-11
DATE PLOTTED => 21-SEP-2011
TIME PLOTTED => 10:21

Dist	COUNTY	ROUTE	POST MILES TOTAL PROJECT	SHEET No.	TOTAL SHEETS
11	SD	54,125	5.3/6.4 9.2/9.7	38	56

LICENSED LANDSCAPE ARCHITECT

09-19-11
PLANS APPROVAL DATE

LICENSED LANDSCAPE ARCHITECT
STEPHEN ALVAREZ No. 3026
Signature
06-30-12
Renewal Date
08-11-11
Date
STATE OF CALIFORNIA

THE STATE OF CALIFORNIA OR ITS OFFICERS OR AGENTS SHALL NOT BE RESPONSIBLE FOR THE ACCURACY OR COMPLETENESS OF SCANNED COPIES OF THIS PLAN SHEET.

ABBREVIATIONS:

AMEND — amendment
B & B — balled and burlapped
Dia — diameter
EA — each
lb — pound
oz — ounce
Ft — foot/feet
SQFT — square feet
CF — cubic feet
Max — maximum
Min — minimum
NCN — no common name
No. — number
Pkt — packet
PLT ESTB — plant establishment
Pvmt — pavement
R/W — right of way
SF — state furnished
TRVD — traveled

PLANT LIST AND PLANTING SPECIFICATIONS

PLANT GROUP	PLANT No.	SYMBOL	BOTANICAL NAME	COMMON NAME	SIZE	QUANTITY EACH	HOLE SIZE (INCH)		BASIN TYPE	IRON SULFATE ①	SOIL AMEND ①	COMMERCIAL FERTILIZER ①		BASIN MULCH	STAKING	PLANTING LIMITS							REMARKS
																MINIMUM DISTANCE (Ft) FROM						ON CENTER (Ft)	
							Dia	DEPTH				PLANTING	PLT ESTB			TRVD WAY	PVMT	FENCE	WALL	PAVED DITCH	EARTH DITCH		
B	1	⊙	NERIUM OLEANDER 'SINGLE PINK'	OLEANDER	No. 5	3	②	②	1	8 oz	-	3 Pkt	-	0.06 CY	-	-	12	12	10	10	12	8	SHRUB

APPLICABLE WHEN CIRCLED:

① - QUANTITIES SHOWN ARE "PER PLANT" UNLESS SHOWN AS SQFT OR SQYD APPLICATION RATES.
② - SUFFICIENT TO RECEIVE ROOT BALL.
3 - DOES NOT APPLY TO MULCH AREAS.
4 - AS SHOWN ON PLANS.
5 - UNLESS OTHERWISE SHOWN ON PLANS.
6 - SEE DETAIL.
7 - SEE SPECIAL PROVISIONS.
8 - MULCH (3 IN DEEP).
9 - INCLUDED WITH AREA MULCH.

LEGEND:

EXISTING PLANTS TO REMAIN

NOTE:

UNDERLINED PORTIONS OF BOTANICAL NAME INDICATE ABBREVIATIONS USED ON PLANTING PLANS.

PLANT LIST
PL-1

STATE OF CALIFORNIA - DEPARTMENT OF TRANSPORTATION
Caltrans® LANDSCAPE ARCHITECTURE

SENIOR LANDSCAPE ARCHITECT: STEPHEN ALVAREZ
CALCULATED-DESIGNED BY: RUDY MEDINA
CHECKED BY: STEPHEN ALVAREZ
REVISED BY
DATE REVISED

LAST REVISION 08-22-11
DATE PLOTTED => 21-SEP-2011
TIME PLOTTED => 10:21

Dist	COUNTY	ROUTE	POST MILES TOTAL PROJECT	SHEET No.	TOTAL SHEETS
11	SD	54,125	5.3/6.4 9.2/9.7	39	56

LICENSED LANDSCAPE ARCHITECT

09-19-11
PLANS APPROVAL DATE

LICENSED LANDSCAPE ARCHITECT
STEPHEN ALVAREZ No. 3068
Signature
06-30-12
Renewal Date
08-11-11
Date
STATE OF CALIFORNIA

THE STATE OF CALIFORNIA OR ITS OFFICERS OR AGENTS SHALL NOT BE RESPONSIBLE FOR THE ACCURACY OR COMPLETENESS OF SCANNED COPIES OF THIS PLAN SHEET.

NOTE:

FOR ACCURATE RIGHT OF WAY DATA, CONTACT
RIGHT OF WAY ENGINEERING AT THE DISTRICT OFFICE.

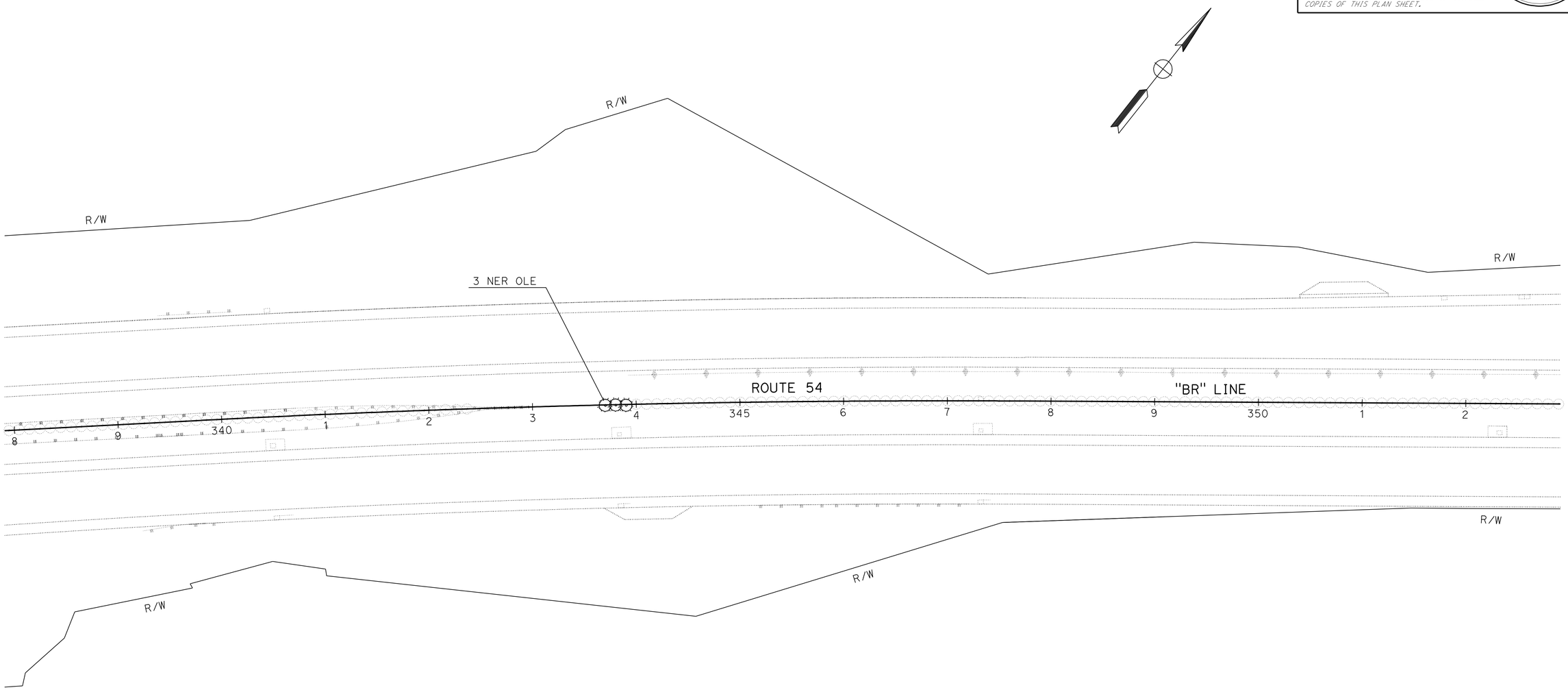

PLANTING PLAN

SCALE: 1" = 50' **PP-1**

APPROVED FOR PLANTING WORK ONLY

REVISED BY | DATE REVISED
RUDY MEDINA | STEPHEN ALVAREZ
CALCULATED-DESIGNED BY | CHECKED BY
SENIOR LANDSCAPE ARCHITECT | STEPHEN ALVAREZ
STATE OF CALIFORNIA - DEPARTMENT OF TRANSPORTATION
Caltrans® LANDSCAPE ARCHITECTURE

LAST REVISION 08-22-11
DATE PLOTTED => 21-SEP-2011
TIME PLOTTED => 10:21

Dist	COUNTY	ROUTE	POST MILES TOTAL PROJECT	SHEET No.	TOTAL SHEETS
11	SD	54,125	5.3/6.4 9.2/9.7	40	56

LICENSED LANDSCAPE ARCHITECT

09-19-11
PLANS APPROVAL DATE

LICENSED LANDSCAPE ARCHITECT
STEPHEN ALVAREZ No. 2506
Signature
06-30-12
Renewal Date
08-11-11
Date
STATE OF CALIFORNIA

THE STATE OF CALIFORNIA OR ITS OFFICERS OR AGENTS SHALL NOT BE RESPONSIBLE FOR THE ACCURACY OR COMPLETENESS OF SCANNED COPIES OF THIS PLAN SHEET.

NOTES:

1. FOR ACCURATE RIGHT OF WAY DATA, CONTACT RIGHT OF WAY ENGINEERING AT THE DISTRICT OFFICE.
2. EXISTING 2" WATER METER LOCATED AT BRIARWOOD AND ALTA VIEW DRIVE IN THE NW QUADRANT.

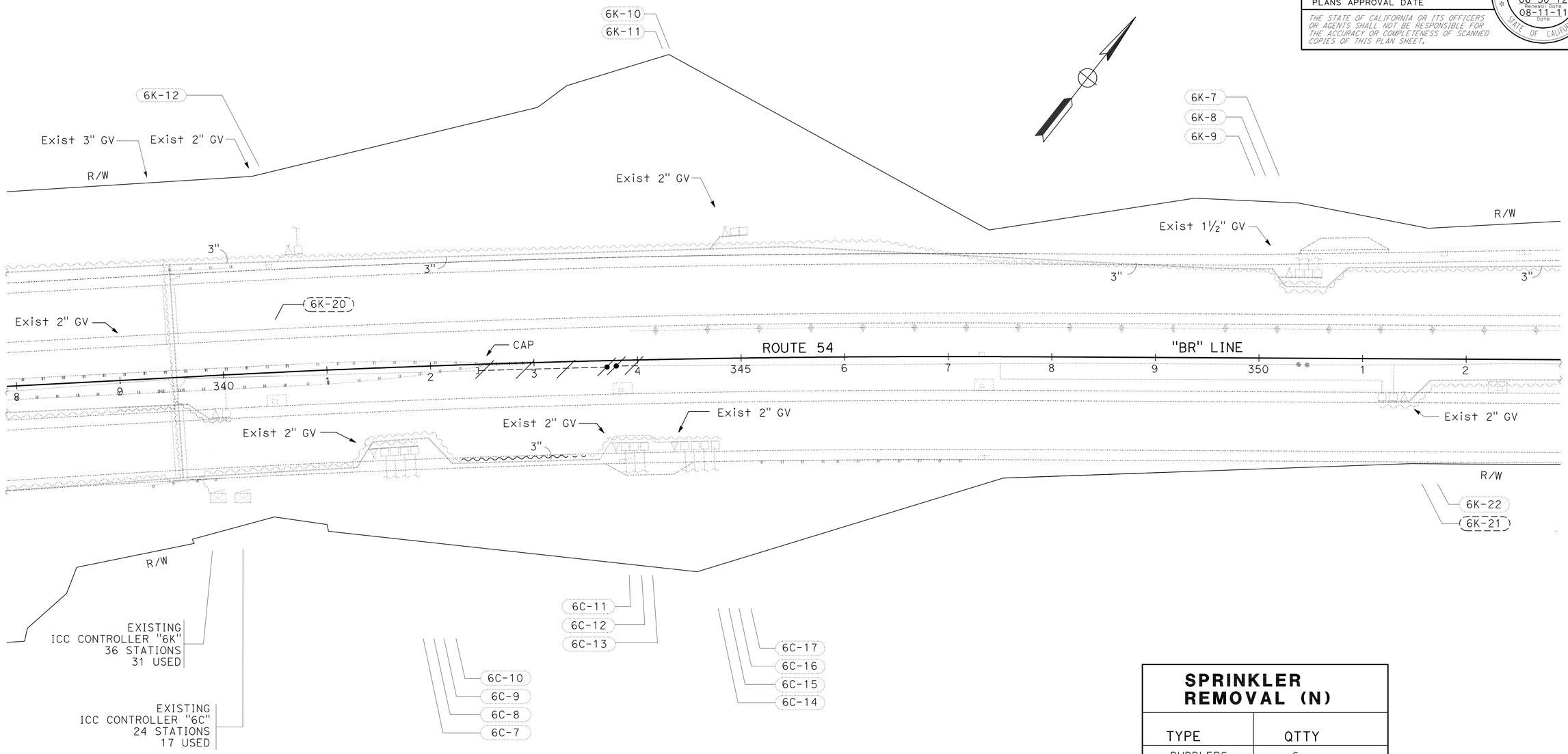

SPRINKLER REMOVAL (N)	
TYPE	QTTY
BUBBLERS	6

IRRIGATION REMOVAL PLAN

SCALE: 1" = 50'

IR-1

APPROVED FOR IRRIGATION REMOVAL WORK ONLY.

STATE OF CALIFORNIA - DEPARTMENT OF TRANSPORTATION
Caltrans® LANDSCAPE ARCHITECTURE

SENIOR LANDSCAPE ARCHITECT: STEPHEN ALVAREZ

CALCULATED-DESIGNED BY: RUDY MEDINA
CHECKED BY: STEPHEN ALVAREZ

REVISED BY
DATE REVISED

LAST REVISION 08-22-11
DATE PLOTTED => 21-SEP-2011
TIME PLOTTED => 10:21

Dist	COUNTY	ROUTE	POST MILES TOTAL PROJECT	SHEET No.	TOTAL SHEETS
11	SD	54,125	5.3/6.4 9.2/9.7	41	56

LICENSED LANDSCAPE ARCHITECT

09-19-11
PLANS APPROVAL DATE

LICENSED LANDSCAPE ARCHITECT
STEPHEN ALVAREZ No. 3068
Signature
06-30-12
Renewal Date
08-11-11
Date
STATE OF CALIFORNIA

THE STATE OF CALIFORNIA OR ITS OFFICERS OR AGENTS SHALL NOT BE RESPONSIBLE FOR THE ACCURACY OR COMPLETENESS OF SCANNED COPIES OF THIS PLAN SHEET.

NOTES:

1. FOR ACCURATE RIGHT OF WAY DATA, CONTACT RIGHT OF WAY ENGINEERING AT THE DISTRICT OFFICE.
2. EXISTING 2" WATER METER LOCATED AT BRIARWOOD AND ALTA VIEW DRIVE IN THE NW QUADRANT.

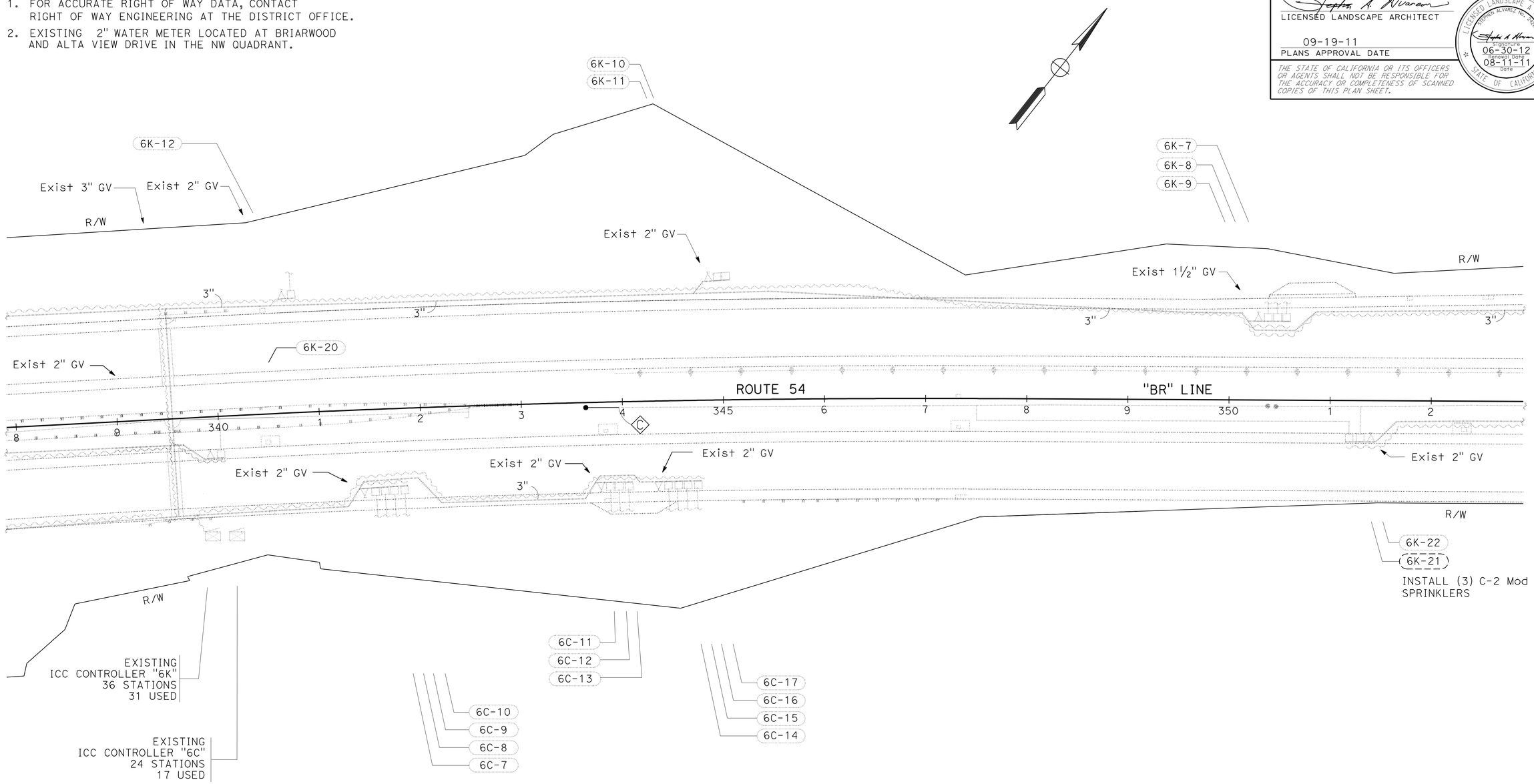

APPROVED FOR IRRIGATION WORK ONLY

IRRIGATION PLAN

SCALE: 1" = 50'

IP-1

STATE OF CALIFORNIA - DEPARTMENT OF TRANSPORTATION
Caltrans LANDSCAPE ARCHITECTURE

SENIOR LANDSCAPE ARCHITECT: STEPHEN ALVAREZ

CALCULATED-DESIGNED BY: RUDY MEDINA
CHECKED BY: STEPHEN ALVAREZ

REVISED BY
DATE REVISED

LAST REVISION 08-22-11
DATE PLOTTED => 21-SEP-2011
TIME PLOTTED => 10:22

Dist	COUNTY	ROUTE	POST MILES TOTAL PROJECT	SHEET No.	TOTAL SHEETS
11	SD	54,125	5.3/6.4 9.2/9.7	42	56

LICENSED LANDSCAPE ARCHITECT

09-19-11
PLANS APPROVAL DATE

LICENSED LANDSCAPE ARCHITECT
STEPHEN ALVAREZ No. 3026
Signature
06-30-12
Renewal Date
08-11-11
Date
STATE OF CALIFORNIA

THE STATE OF CALIFORNIA OR ITS OFFICERS OR AGENTS SHALL NOT BE RESPONSIBLE FOR THE ACCURACY OR COMPLETENESS OF SCANNED COPIES OF THIS PLAN SHEET.

SPRINKLER SCHEDULE

SYMBOL	TYPE	DESCRIPTION	SPRAY PATTERN	OPERATING PRESSURE (PSI)	PRESSURE COMPENSATING	PLUS/MINUS 5% ② DISCHARGE: GALLONS PER MINUTE (GPM)	GALLONS PER HOUR (GPH)	RADIUS (F+)	WIDTH x LENGTH (F+)	MATERIAL	INLET CONNECTION (NPT INCH)	POSITIVE-LOCKING ADJ ARC STOP	BACKSPLASH PREVENTER	DIFFUSER PIN	DISTANCE CONTROL FLAP	ADJ DISCHARGE	RISER: TYPE	MATERIAL: PLASTIC	GALVANIZED	SIZE (IPS INCH)	HEIGHT (INCH)	FLOW SHUTOFF DEVICE	SWING JOINT (TYPE)	RISER SUPPORT	SPRINKLER PROTECTOR (TYPE)	REMARKS
●	C-2 Mod	FLOOD BUBBLER	-	30	X	0.5	-	-	-	PL	½"	-	-	-	-	-	III	X	-	½"	6"	-	1	-	-	④

X IN BOX DENOTES REQUIREMENT

APPLICABLE WHEN CIRCLED BELOW:

1 - SEE SPECIAL PROVISIONS.
② - IF A PRESSURE COMPENSATING DEVICE IS SPECIFIED, THE DISCARGE AND RADII SHOWN REFLECT ITS USE.
3 - SHALL HAVE AND INTERNAL OR EXTERNAL CHECK VALVE.
④ - NON-ADJUSTABLE DISCHARGE RATE.
5 - REQUIRED ADJACENT TO SHOULDERS. CURBS, SIDEWALKS, AND DIKES.
6 - UNLESS OTHERWISE SHOWN ON PLANS.
7 - ADJUSTABLE ARC.
8 - MATCHED PRECIPITATION RATE NOZZLES.
9 - REFER TO PIPE SIZING CHARTS.
10 - SHALL HAVE UV-RESISTANT PURPLE IDENTIFICATION CAP COMPATIBLE FOR USE WITH RECYCLED WATER.

ABBREVIATIONS:

F — FULL CIRCLE
P — PART CIRCLE
F/P — FULL/PART CIRCLE
Q — QUARTER CIRCLE
T — THIRD CIRCLE
H — HALF CIRCLE
TT — TWO THIRD CIRCLE
TQ — THREE QUARTER CIRCLE
CST — CENTER STRIP
SST — SIDE STRIP
EST — END STRIP
RWM — RECYCLED WATER METER
F+ — FEET/FOOT
GPM — GALLONS PER MINUTE
GPH — GALLONS PER HOUR
Adj — ADJUSTABLE
PL — PLASTIC
B/B — BRASS/BRONZE
B/PL — BRASS/PLASTIC
B/B/PL — BRASS/BRONZE/PLASTIC
NPT — NATION PIPE THREAD
IPS — IRON PIPE SIZE
PSI — POUNDS PER SQUARE INCH
RCVMF — REMOTE CONTROL VALVE MASTER WITH FLOW METER

NOTE:

1. ALL LATERAL PIPES NOT LABELED SHALL BE 1 INCH, OR AS SHOWN ON PIPE SIZING CHARTS.

LEGEND:

X(X)-X — Exist IRRIGATION SYSTEM TO REMAIN
Exist VALVE AND VALVE CODE TO REMAIN (NO CHANGE)

Exist IRRIGATION SYSTEM TO BE REMOVED

X(X)-XX — Exist IRRIGATION SYSTEM TO BE MODIFIED
Exist VALVE TO REMAIN

NOTES:

1. INSTALL SPRINKLER TYPE C-2 Mod ON UP-HILL SIDE OF PLANT WHEN ON SLOPE
2. INSTALL SPRINKLER WITHIN TREE BASIN

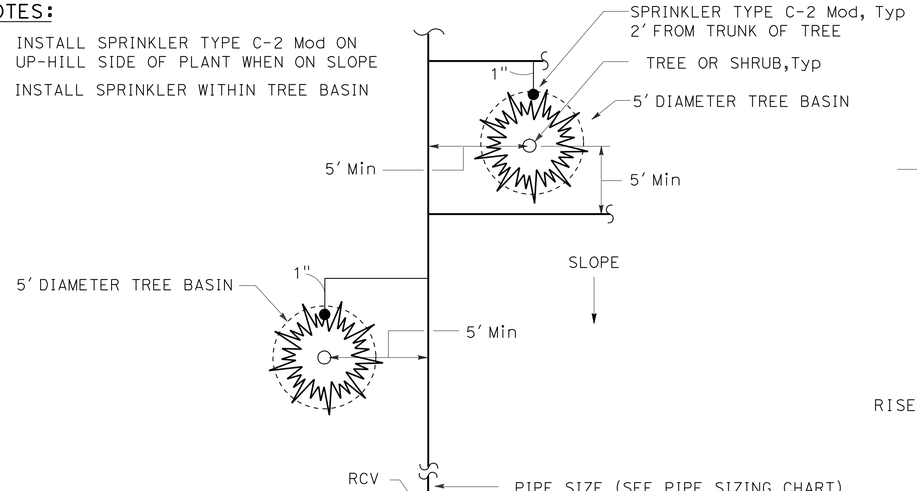

PLAN

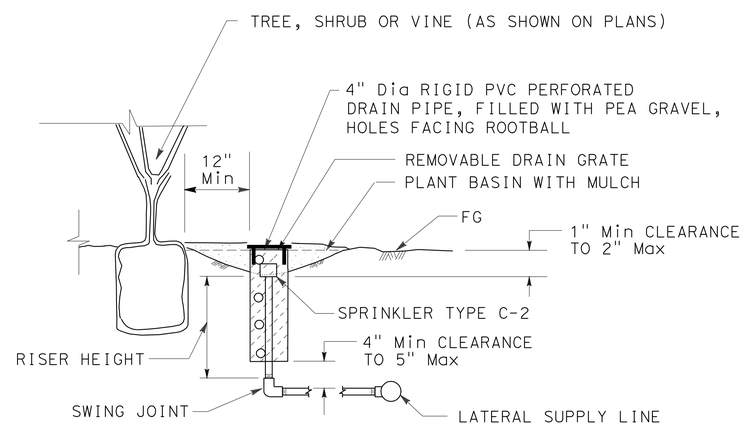

SECTION

SPRINKLER TYPE C-2 Mod INSTALLATION

LANDSCAPE DETAILS

NO SCALE

LD-1

STATE OF CALIFORNIA - DEPARTMENT OF TRANSPORTATION
Caltrans® LANDSCAPE ARCHITECTURE
SENIOR LANDSCAPE ARCHITECT: STEPHEN ALVAREZ
CALCULATED-DESIGNED BY: RUDY MEDINA
CHECKED BY: STEPHEN ALVAREZ
REVISED BY
DATE REVISED

LAST REVISION 08-22-11
DATE PLOTTED => 21-SEP-2011
TIME PLOTTED => 10:22

DIST	COUNTY	ROUTE	POST MILES TOTAL PROJECT	SHEET NO.	TOTAL SHEETS
11	SD	54, 125	5.3/6.4 9.2/9.7	43	56

REGISTERED CIVIL ENGINEER

November 17, 2006
PLANS APPROVAL DATE

REGISTERED PROFESSIONAL ENGINEER
Dallas Forester
No. C37765
Exp. 12-31-06
CIVIL
STATE OF CALIFORNIA

The State of California or its officers or agents shall not be responsible for the accuracy or completeness of electronic copies of this plan sheet.

To accompany plans dated 09-19-11

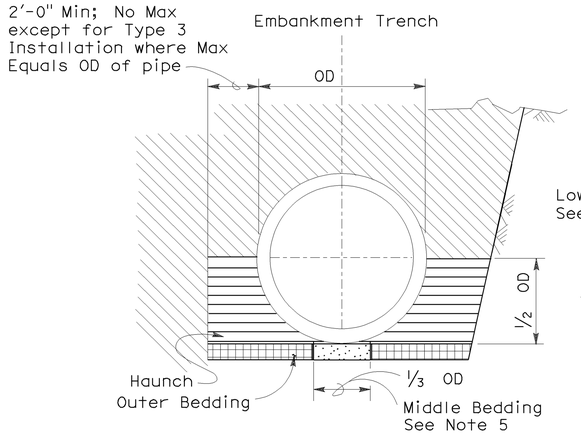

BACKFILL

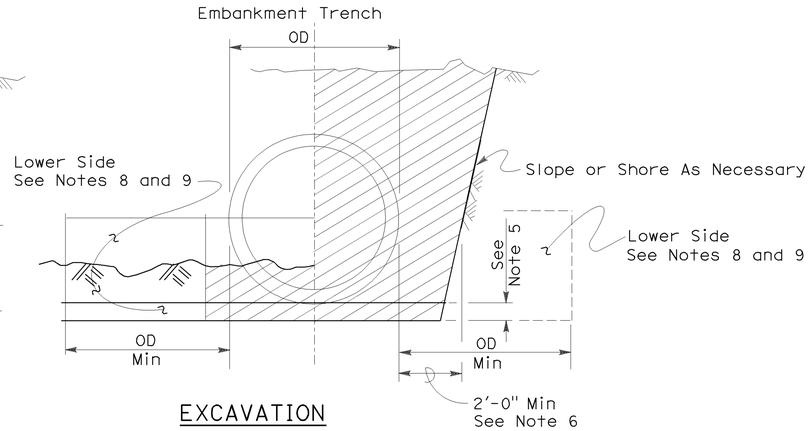

EXCAVATION

Roadway Embankment

Structure Backfill (Culvert) See Note 6

Structure Backfill (Culvert) See Note 6

Loose Backfill

Excavation Structure (Culvert)

TYPE 1 INSTALLATION:

The haunch and outer bedding shall be compacted to a minimum 90 percent relative compaction. In addition, the minimum sand equivalent in these areas shall be 30 and the maximum percentage passing the 75 μm sieve size shall be 12.

TYPE 2 INSTALLATION:

The haunch and outer bedding shall be compacted to a minimum 90 percent relative compaction. In addition, the minimum sand equivalent in these areas shall be 25.

TYPE 3 INSTALLATION:

The haunch and outer bedding shall be compacted to a minimum 85 percent relative compaction. 90 percent relative compaction will be required where the fill over the pipe is less than 4'-0" or 1/2 OD.

NOTES:

1. Unless otherwise shown on the plans or specified in the special provision, the Contractor shall have the option of selecting the class of RCP and the type of installation to be used, provided the height of cover does not exceed the value shown for the RCP selected.
   Example: 24" RCP culvert with maximum cover of 19'-0" the options are:
   a) Class III or stronger with Installation Type 1.
   b) Class III Special or stronger with Installation Type 2.
   c) Class IV Special or stronger with Installation Type 3.
   Cover is defined as the maximum vertical distance from top of the pipe to finished grade within the length of any given culvert.
2. The class of RCP and Installation Type selected shall be the same throughout the length of any given culvert.
3. The "length of any culvert" is defined as the culvert between:
   a) Successive drainage structure (inlets, junction boxes, headwalls, etc.).
   b) A drainage structure and the inlet or outlet end of the culvert.
   c) The inlet and outlet end of the culvert when there are no intervening drainage structures.
4. Oval and arch shaped RCP shall not be used.
5. 1/25 OD Min, not less than 3".
6. Slurry cement backfill may be substituted for backfill in the outer bedding and haunch areas. If slurry is used the outer and middle beddings shall be omitted. Prior to installation the soil under the middle 1/3 of the outside diameter of the pipe shall be softened by scarifying or other means to a minimum depth of 1/25 OD, but not less than 3". Where slurry cement backfill is used clear distance to trench wall may be reduced as set forth in Section 19-3.062 of the Standard Specifications.
7. Backfill shall be placed full width of excavation except where dimensions are shown for backfill width or thickness. Dimensions shown are minimums.
8. Lower side shall be suitable material as determined by the Engineer. Otherwise it shall be considered unsuitable as set forth in Section 19-2.02 of the Standard Specifications. See Note 9.
9. Where the pipe is placed in a trench, if the trench walls are sloped at 5 vertical to 1 horizontal or steeper for at least 90 percent of the trench height or up to not less than 12" from the grading plane, the firmness of the soil in the lower side need not be considered.
10. Non-reinforced precast concrete pipe sizes 3'-0" or smaller may be placed under installation Types 1, 2 or 3.

INSTALLATION TYPE 1

MINIMUM CLASS AND D-LOAD	COVER	
	108" Dia AND SMALLER	OVER 108" Dia
Class II 1000D	14.9'	12.9'
Class III 1350D	15.0' - 20.9'	13.0' - 18.9'
Class III Special 1700D	21.0' - 26.9'	19.0' - 24.9'
Class IV 2000D	27.0' - 31.9'	25.0' - 29.9'
Class IV Special 2500D	32.0' - 40.9'	30.0' - 38.9'
Class V 3000D	41.0' - 49.9'	39.0' - 46.9'
Class V Special 3600D	50.0' - 59.0'	47.0' - 58.0'

INSTALLATION TYPE 2

MINIMUM CLASS AND D-LOAD	COVER
Class II 1000D	9.9'
Class III 1350D	10.0'- 14.9'
Class III Special 1700D	15.0' - 19.9'
Class IV 2000D	20.0' - 24.9'
Class IV Special 2500D	25.0' - 31.9'
Class V 3000D	32.0' - 38.9'
Class V Special 3600D	39.0' - 47.0'

INSTALLATION TYPE 3

MINIMUM CLASS AND D-LOAD	COVER	
	48" Dia AND SMALLER	OVER 48" Dia
Class II 1000D	7.9'	5.9'
Class III 1350D	8.0' - 10.9'	6.0' - 8.9'
Class III Special 1700D	11.0' - 14.9'	9.0' - 12.9'
Class IV 2000D	15.0' - 17.9'	13.0' - 15.9'
Class IV Special 2500D	18.0' - 21.9'	16.0' - 19.9'
Class V 3000D	22.0' - 26.9'	20.0' - 24.9'
Class V Special 3600D	30.0' - 33.0'	25.0' - 31.0'

STATE OF CALIFORNIA
DEPARTMENT OF TRANSPORTATION

EXCAVATION AND BACKFILL CONCRETE PIPE CULVERTS

NO SCALE

RSP A62DA DATED NOVEMBER 17, 2006 SUPERSEDES STANDARD PLAN A62DA DATED MAY 1, 2006 - PAGE 20 OF THE STANDARD PLANS BOOK DATED MAY 2006.

REVISED STANDARD PLAN RSP A62DA

2006 REVISED STANDARD PLAN RSP A62DA

10-26-06

DIST	COUNTY	ROUTE	POST MILES TOTAL PROJECT	SHEET NO.	TOTAL SHEETS
11	SD	54, 125	5.3/6.4 9.2/9.7	44	56

Randell D. Hiatt
REGISTERED CIVIL ENGINEER

June 6, 2008
PLANS APPROVAL DATE

REGISTERED PROFESSIONAL ENGINEER
Randell D. Hiatt
No. C50200
Exp. 6-30-09
CIVIL
STATE OF CALIFORNIA

The State of California or its officers or agents shall not be responsible for the accuracy or completeness of electronic copies of this plan sheet.

To accompany plans dated 09-19-11

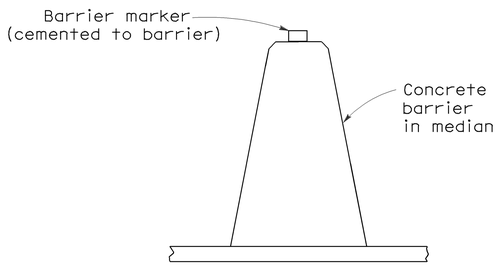

CONCRETE BARRIER TYPE 60 DELINEATION

See Notes 7 and 8

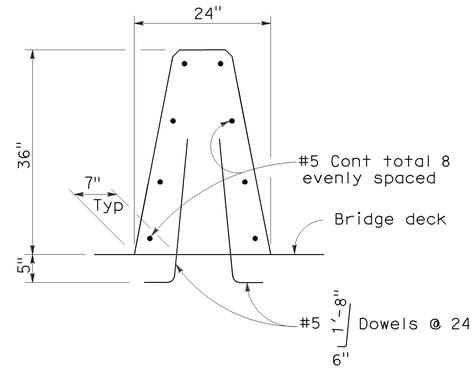

CONCRETE BARRIER TYPE 60A

Details similar to Type 60 except as noted.

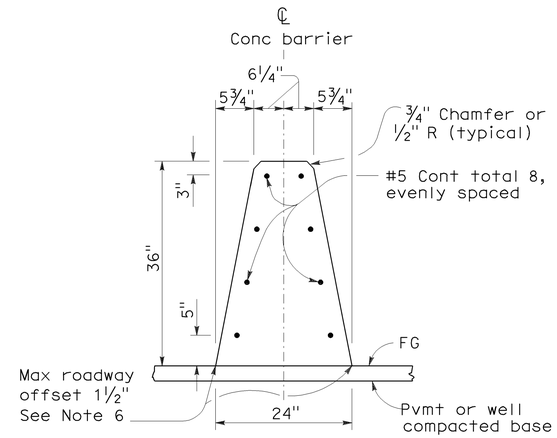

CONCRETE BARRIER TYPE 60

NOTES:

1. See Standard Plan A76B for details of Concrete Barrier Type 60 end anchors, connection to structures and transitions to Concrete Barrier Type 50 and Concrete Barrier Type 60S.
2. See Standard Plan A76C for Concrete Barrier Type 60 transitions at bridge column and sign pedestals.
3. Where glare screen is required on Concrete Barrier Type 60, use Concrete Barrier Type 60G.
4. Where the concrete barrier is added to the face of existing concrete structure, match existing weep holes.
5. Expansion joints in concrete barrier shall be located at all deck, pavement and principal wall joints. Expansion joint filler material shall be the same size as joint or ½" minimum.
6. Where roadway offset is greater than 1½", see Concrete Barrier Type 60C.
7. Barrier delineation to be used when required by the Special Provisions.
8. Spacing of barrier markers to match spacing of raised pavement markers on the adjacent median edgeline pavement delineation.
9. Reinforcing stirrup not required for roadway offsets less than 1'-0".
10. For roadway surfaces offset greater than 1½" to 3", no rebars required. For roadway surfaces offset greater than 3" to 8" use two #4 rebars at 3" above the lower roadway surface. For roadway surfaces offset greater than 8" to 12", use two #4 rebars at 3" above the lower roadway surface and two #4 rebars at 8" above the lower roadway surface. For roadway surfaces offset greater than 12" to 36", use two #4 rebars at 3" above the lower roadway surface and two #4 rebars at every 8" increment vertical spacing above the first two #4 rebars.

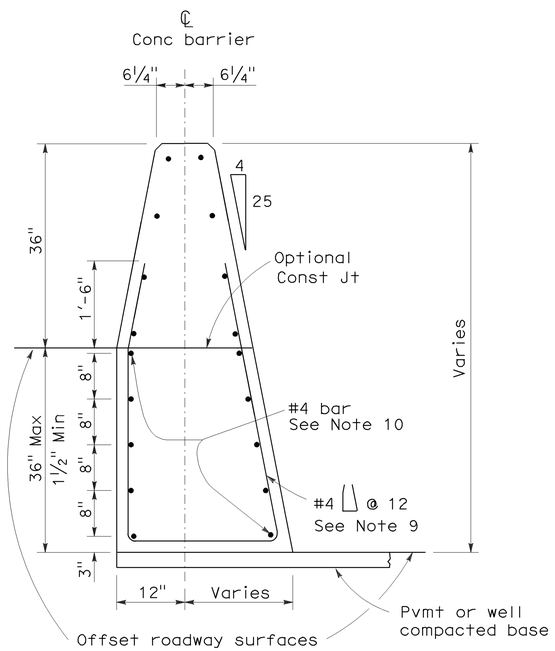

CONCRETE BARRIER TYPE 60C

Details similar to Type 60 except as noted.
Concrete barrier end anchor when necessary.
36" roadway surfaces offset shown.

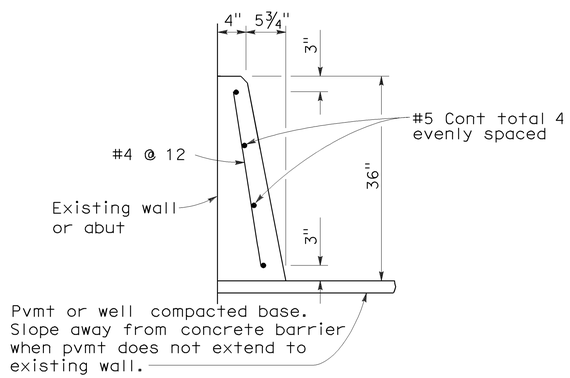

CONCRETE BARRIER TYPE 60D

STATE OF CALIFORNIA
DEPARTMENT OF TRANSPORTATION

CONCRETE BARRIER TYPE 60

NO SCALE

RSP A76A DATED JUNE 6, 2008 SUPERSEDES STANDARD PLAN A76A
DATED MAY 1, 2006 - PAGE 29 OF THE STANDARD PLANS BOOK DATED MAY 2006.

REVISED STANDARD PLAN RSP A76A

2006 REVISED STANDARD PLAN RSP A76A

5-21-08

DIST	COUNTY	ROUTE	POST MILES TOTAL PROJECT	SHEET NO.	TOTAL SHEETS
11	SD	54, 125	5.3/6.4 9.2/9.7	45	56

Randell D. Hiatt
REGISTERED CIVIL ENGINEER

June 6, 2008
PLANS APPROVAL DATE

REGISTERED PROFESSIONAL ENGINEER
Randell D. Hiatt
No. C50200
Exp. 6-30-09
CIVIL
STATE OF CALIFORNIA

The State of California or its officers or agents shall not be responsible for the accuracy or completeness of electronic copies of this plan sheet.

To accompany plans dated 09-19-11

2006 REVISED STANDARD PLAN RSP A78B

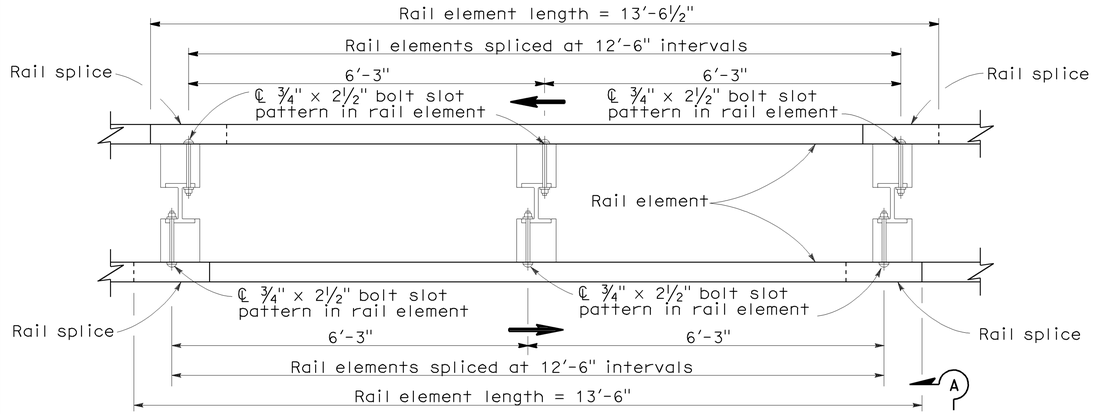

PLAN

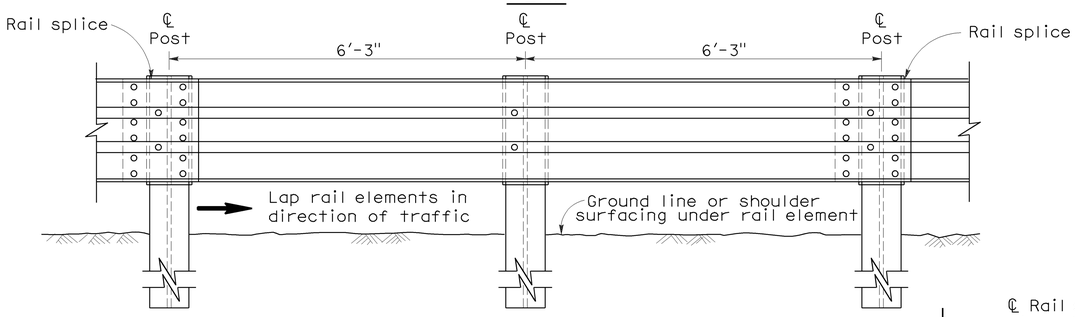

ELEVATION

DOUBLE THRIE BEAM BARRIER

(Steel post with notched wood or notched plastic blocks)
See Note 1

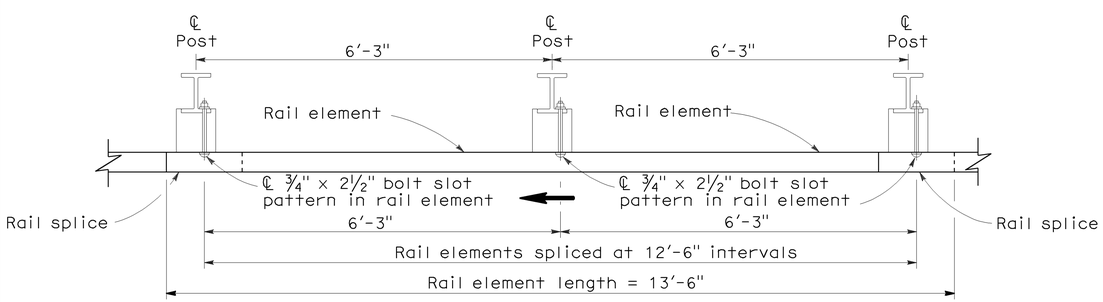

PLAN

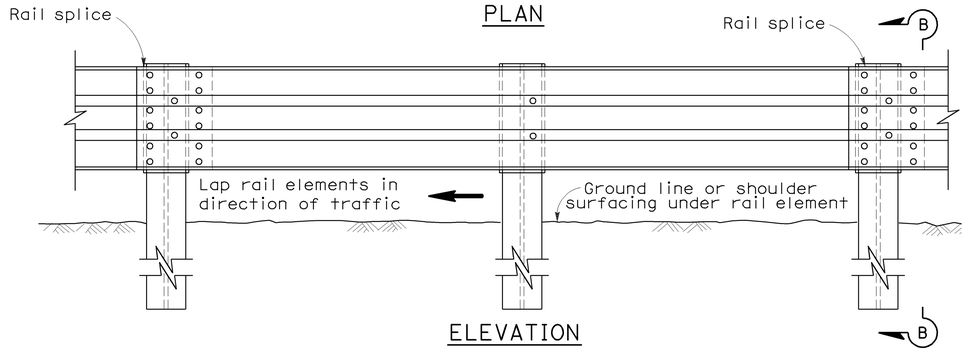

ELEVATION

SINGLE THRIE BEAM BARRIER

(Steel post with notched wood or notched plastic blocks)
See Note 1

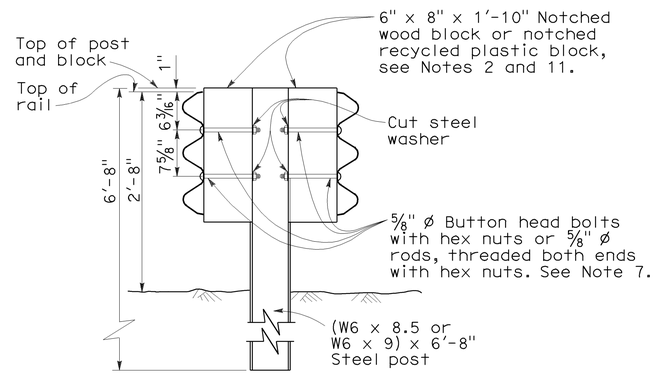

SECTION A-A

TYPICAL STEEL LINE POST INSTALLATION

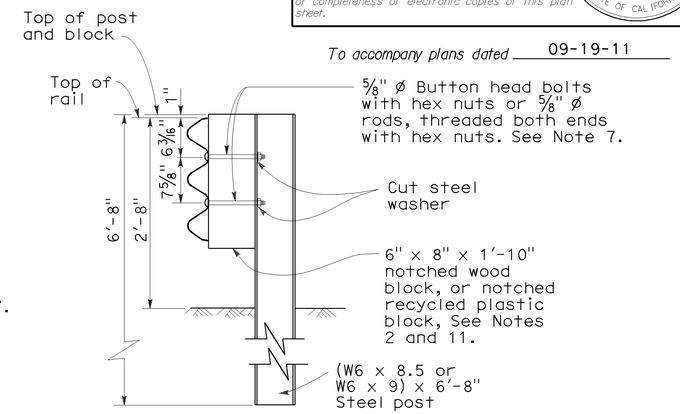

SECTION B-B

TYPICAL STEEL LINE POST INSTALLATION

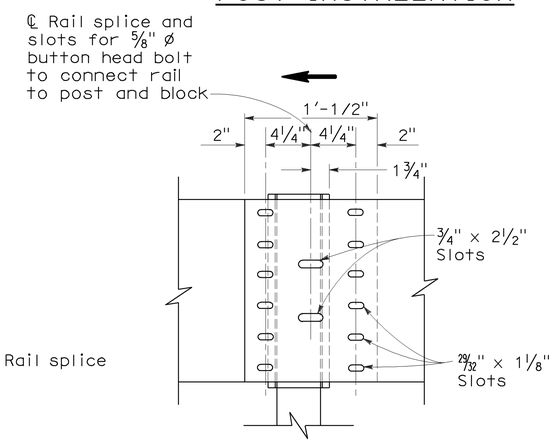

ELEVATION

RAIL ELEMENT SPLICE DETAIL

a) Connect the overlapped ends of the thrie beam rail elements with ⅝" ø x 1⅛" button head oval shoulder bolts inserted into the 29/32" x 1⅛" slots and bolted together with ⅝" ø x 1⅛" recessed hex nuts. Recess of hex nut points toward rail element. A total of 12 bolts and nuts are to be used at each rail splice connection.

b) The ends of the rail elements are to be overlapped in the direction of traffic (see details).

c) Where end cap is to be attached to the end of a rail element, a total of 4 of the above described splice bolts and nuts are to be used. Where a return cap is to be attached to the ends of rail elements, a total of 8 of the above described splice bolts and nuts are to be used.

NOTES:

1. For details of the cross section of the thrie beam rail element and details for wood post with wood block installations, see Standard Plan A78A.
2. For details of standard hardware, posts and blocks used to construct thrie beam barrier, see Revised Standard Plan RSP A78C1 and Standard Plan A78C2.
3. Thrie beam barrier post spacing to be 6'-3" center to center, except as otherwise noted.
4. Top of barrier rail to be 2'-8" above ground line or shoulder surfacing under the rail element.
5. For barrier end treatments and barrier connections, see Standard Plans A78E1, A78E2 and A78E3, Revised Standard Plans RSPs A78F1 and A78F2, Standard Plan A78G and Revised Standard Plan RSP A78H.
6. For connection to Concrete Barrier, see Revised Standard Plan RSP A78I.
7. Attach rail element to block and steel post with 2 bolts or rods on approaching traffic side of block and post web. No washer on rail face for rod or bolted connections to line post.
8. For details of thrie beam barrier on bridges, see Standard Plan A78D2. For details of thrie beam barrier at fixed objects, see Standard Plan A78D1.
9. Direction of traffic indicated by ⟶.
10. Notched face of block faces steel post.

STATE OF CALIFORNIA
DEPARTMENT OF TRANSPORTATION

THRIE BEAM BARRIER STANDARD BARRIER RAILING SECTION (STEEL POST WITH NOTCHED WOOD BLOCK OR NOTCHED RECYCLED PLASTIC BLOCK)

NO SCALE

RSP A78B DATED JUNE 6, 2008 SUPERSEDES STANDARD PLAN A78B
DATED MAY 1, 2006 - PAGE 84 OF THE STANDARD PLANS BOOK DATED MAY 2006.

REVISED STANDARD PLAN RSP A78B

5-14-08

DIST	COUNTY	ROUTE	POST MILES TOTAL PROJECT	SHEET No.	TOTAL SHEETS
11	SD	54, 125	5.3/6.4 9.2/9.7	46	56

Randell D. Hiatt
REGISTERED CIVIL ENGINEER

June 6, 2008
PLANS APPROVAL DATE

REGISTERED PROFESSIONAL ENGINEER
Randell D. Hiatt
No. C50200
Exp. 6-30-09
CIVIL
STATE OF CALIFORNIA

The State of California or its officers or agents shall not be responsible for the accuracy or completeness of electronic copies of this plan sheet.

To accompany plans dated 09-19-11

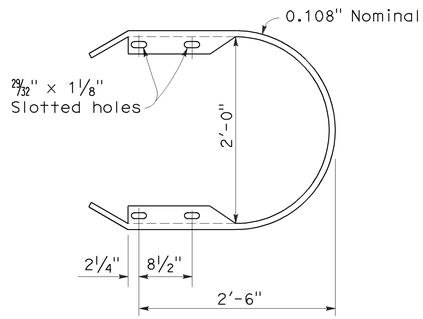

RETURN CAP
(TYPE TA)

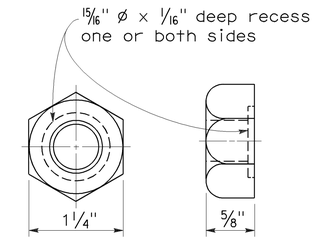

5/8" ø RECESS NUT

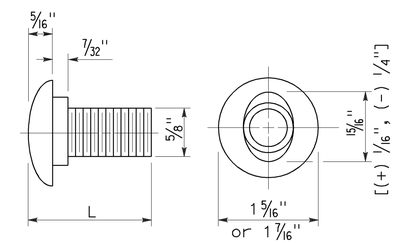

5/8" ø BUTTON HEAD BOLT

L	THREAD LENGTH
1 1/4"	full thread length
2"	full thread length
9 1/2"	4" Min thread length
18"	4" Min thread length

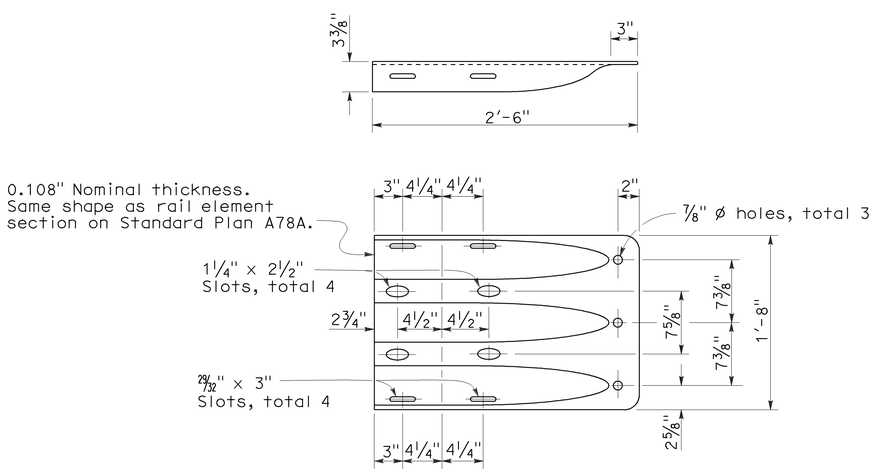

END CAP
(TYPE TC)

STATE OF CALIFORNIA
DEPARTMENT OF TRANSPORTATION

THRIE BEAM BARRIER STANDARD HARDWARE DETAILS

NO SCALE

RSP A78C1 DATED JUNE 6, 2008 SUPERSEDES STANDARD PLAN A78C1
DATED MAY 1, 2006 - PAGE 85 OF THE STANDARD PLANS BOOK DATED MAY 2006.

REVISED STANDARD PLAN RSP A78C1

2006 REVISED STANDARD PLAN RSP A78C1

4-21-08

DIST	COUNTY	ROUTE	POST MILES TOTAL PROJECT	SHEET NO.	TOTAL SHEETS
11	SD	54, 125	5.3/6.4 9.2/9.7	47	56

REGISTERED CIVIL ENGINEER

January 18, 2008
PLANS APPROVAL DATE

The State of California or its officers or agents shall not be responsible for the accuracy or completeness of electronic copies of this plan sheet.

REGISTERED PROFESSIONAL ENGINEER Raymond Don Tsztoo No. C37332 Exp. 6-30-08 CIVIL STATE OF CALIFORNIA

To accompany plans dated 09-19-11

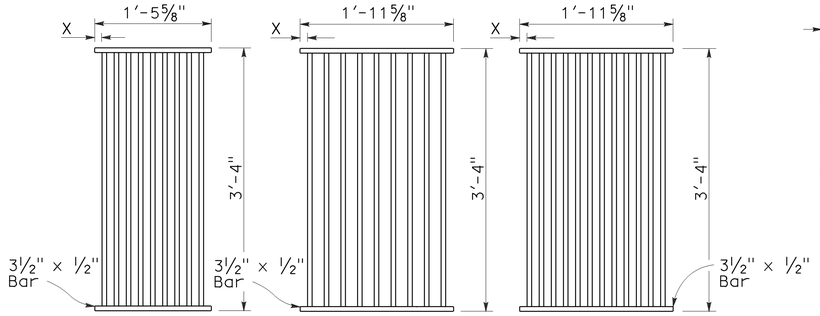

TYPE 18-9

1⅜" Clear spacing. Use within the roadbed on highways where bicycles and pedestrians are excluded.

TYPE 24-9

2" Clear spacing. Use in locations off the roadbed on all types of highways.

TYPE 24-12

1⅜" Clear spacing. Use within the roadbed on highways where bicycles and pedestrians are excluded.

RECTANGULAR GRATE DETAILS

(See table below)

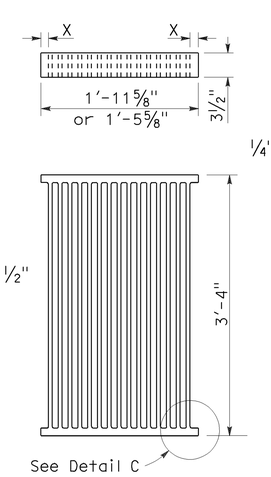

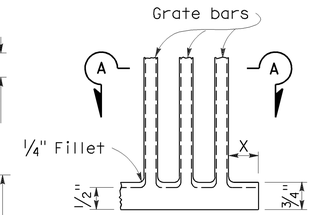

DETAIL C

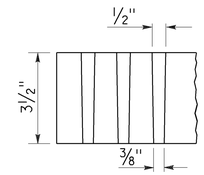

SECTION A-A

ALTERNATIVE CAST NODULAR IRON GRATE OR CAST STEEL GRATE

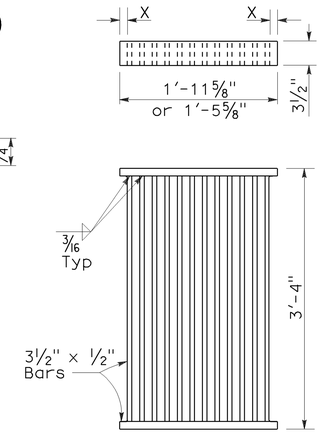

ALTERNATIVE WELDED GRATE

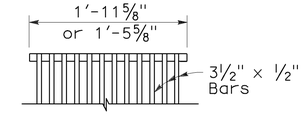

CAST END BLOCK

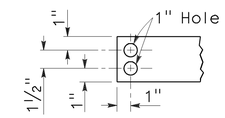

END OF BAR

NOTES:

1. Grate type numbers refer to approximate width of grate in inches and number of bars, respectively.
2. Contractor has the option of using cast nodular iron, cast steel, welded, bolted, or cast end block grate.
3. See Special Provisions for requirements pertaining to galvanizing or asphalt dipping of grates and frames.
4. Rounded top of bars optional on all grates.
5. Pipe inlets with a grate shall be placed so that bars parallel direction of principle surface flow.
6. Full penetration butt welds may be substituted for the fillet welds on all anchors.
7. Standard square, hexagon, round or equivalent headed anchors may be substituted for the right angle hooks on the anchors shown on this plan.
8. Grate and frame weights are based on welded grates (weights of face angles, steps, protection bars, etc. are not included).

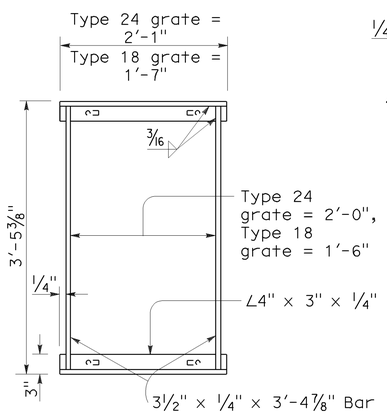

TYPICAL FRAME

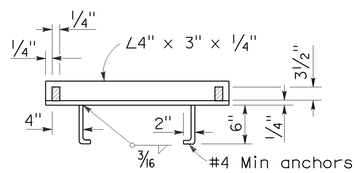

CROSS SECTION

(Thru frame)

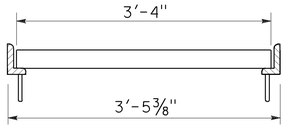

LONGITUDINAL SECTION

(Thru frame and grate)

RECTANGULAR FRAME DETAILS

(For all rectangular grates)

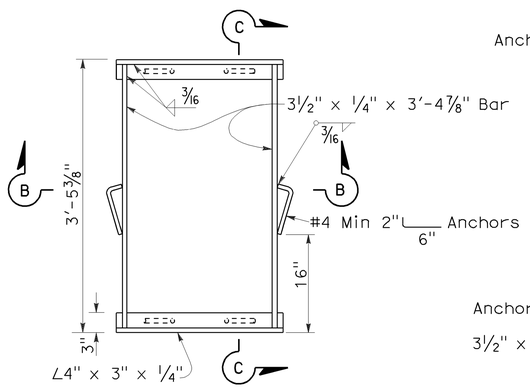

TYPICAL FRAME

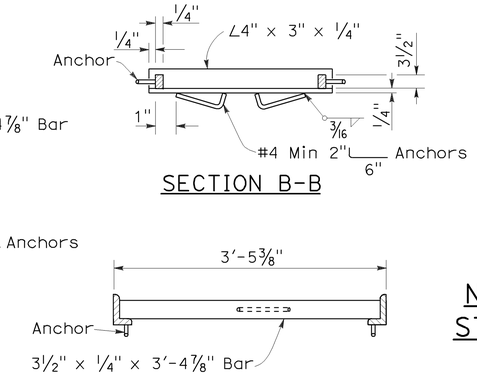

SECTION B-B

SECTION C-C

ALTERNATIVE ANCHOR FOR RECTANGULAR FRAME

(For details not shown, See Rectangular Frame Details)

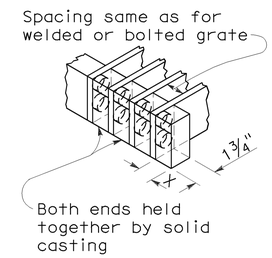

ALTERNATIVE CAST NODULAR IRON OR CAST STEEL END BLOCK GRATE

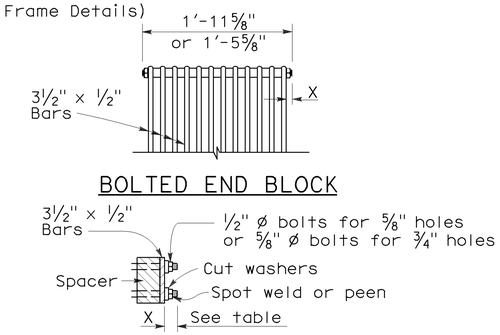

BOLTED END BLOCK

BOLTING DETAIL

ALTERNATIVE BOLTED GRATE

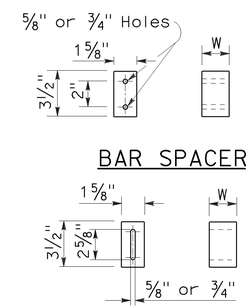

BAR SPACER

ALTERNATIVE SPACER

W = 1⅜" or 2"

GRATE BAR SPACING TABLE

TYPE	No. OF BARS	CLEAR BAR SPACING	X
18-9	9	1⅜"	1 1/16"
24-9	9	2"	1 9/16"
24-12	12	1⅜"	1¼"

INLET TYPE	COVER TYPE	WEIGHT LB
OS	PLATE	174
OL-7	PLATE	170
OL-10	PLATE	170
OL-14	PLATE	170
OL-21	PLATE	170
OCP	PLATE	112
OCPI	PLATE	112
OCPI	REDWOOD	42
OMP	PLATE	177
OMPI	PLATE	177

INLET TYPE	GRATE TYPE	No. OF GRATES	WEIGHT LB
GDO	24-12	2	634
GOL-7	24-12	1	326
GOL-10	24-12	1	326
GO,G1,G2,G3,G4 (TYPE 24)	24-9	1	263
	24-12	1	326
G4 (TYPE 18),G5,G6	18-9	1	249
GT1	18-9	2	498
GT2	18-9	2	498
GT3	24-12	2	652
GT4	24-12	2	652
TRASH RACK			22

BASIS FOR MISC IRON & STEEL FINAL PAY WEIGHTS FOR DRAINAGE INLETS

(See General Notes, No 8)

STATE OF CALIFORNIA
DEPARTMENT OF TRANSPORTATION

GRATE DETAILS

NO SCALE

RSP D77A DATED JANUARY 18, 2008 SUPERSEDES STANDARD PLAN D77A DATED MAY 1, 2006 - PAGE 155 OF THE STANDARD PLANS BOOK DATED MAY 2006.

REVISED STANDARD PLAN RSP D77A

2006 REVISED STANDARD PLAN RSP D77A

12-14-07

DIST	COUNTY	ROUTE	POST MILES TOTAL PROJECT	SHEET NO.	TOTAL SHEETS
11	SD	54, 125	5.3/6.4 9.2/9.7	48	56

Gregory A. Balzer
LICENSED LANDSCAPE ARCHITECT

June 5, 2009
PLANS APPROVAL DATE

LICENSED LANDSCAPE ARCHITECT
Gregory A. Balzer 2576
10-28-10
Renewal Date
2-28-11
Renewal Date
5-14-09
Date
STATE OF CALIFORNIA

The State of California or its officers or agents shall not be responsible for the accuracy or completeness of electronic copies of this plan sheet.

To accompany plans dated 09-19-11

A

AB	aggregate base
ABS	acrylonitrile-butadiene-styrene
AC	asphalt concrete
Adj	adjacent/adjustable
AIC	auxiliary irrigation controller
Alt	alternative
AMEND	amendment
ARV	air release valve
AUTO	automatic
AUX	auxiliary
AVB	atmospheric vacuum breaker

B

B&B	balled and burlapped
B/B	brass/bronze
B/B/PL	brass/bronze/plastic
B/PL	brass/plastic
BFM	bonded fiber matrix
Bit Ctd	bituminous coated
BP	booster pump
BPA	backflow preventer assembly
BPAE	backflow preventer assembly in enclosure
BPE	backflow preventer enclosure
BV	ball valve

C

CAP	corrugated aluminum pipe
CARV	combination air release valve
CCA	cam coupler assembly
CEC	controller enclosure cabinet
CHDPE	corrugated high density polyethylene
CL	chain link
CNC	control and neutral conductors
Conc	concrete
Cond	conduit
CSP	corrugated steel pipe
CST	center strip
CV	check valve

D

Dia	diameter
DIP	ductile iron pipe
DN	diameter nominal

E

EA	each
Elect	electric/electrical
Elev	elevation
ENCL	enclosure
EP	edge of pavement
ES	edge of shoulder
EST	end strip
ESTB	establishment
ETW	edge of traveled way

F

F	full circle
F/P	full/part circle
FAU	filter assembly unit
FCV	flow control valve
FERT	fertilizer
FG	finished grade
FIPT	female iron pipe thread
FIS	fertilizer injector system
FL	flow line
FM	flow monitor
FS	flow sensor
Ft	foot/feet
FV	flush valve

G

GAL	Gallon(s)
Galv	galvanized
GARV	garden valve
GPH	gallons per hour
GPM	gallons per minute
GSP	galvanized steel pipe
GV	gate valve

H

H	half circle
HB	hose bib
HDPE	high density polyethylene
HP	horsepower/hinge point
HPL	high pressure line
Hwy	highway

I

IC	irrigation controller
ICC	irrigation controller(s) in controller enclosure cabinet
ID	inside diameter
In	inches
IFS	irrigation filtration system
IPS	iron pipe size
IPT	iron pipe thread
Irr	irrigation

L

L	length
LF	linear foot

M

Max	maximum
MBGR	metal beam guard railing
MCV	manual control valve
MIC	master irrigation controller
Min	minimum
MIPT	male iron pipe thread
Misc	miscellaneous
Mtl	material
MVP	maintenance vehicle pullout

N

NCN	no common name
NL	nozzle line
No.	number
NPT	national pipe thread

O

O/C	on center
OD	outside diameter
Oz	ounce

P

P	part circle
PB	pull box
PCC	portland cement concrete
PE	polyethylene
Pkt	packet
PL	plastic
PLT	plant/planting
PLT ESTB	plant establishment
PM	post mile
PR	pressure rated
PRLV	pressure relief valve
PSFM	polymer stabilized fiber matrix
PSI	pounds per square inch
PRV	pressure reducing valve
PVC	polyvinyl chloride
Pvmt	pavement

Q

Q	quarter circle
QCV	quick coupling valve

R

R	radius
RCP	reinforced concrete pipe
RCV	remote control valve
RCVM	remote control valve (master)
RCVMF	remote control valve (master) w/ flow meter
RCW	recycled/reclaimed water
RECP	rolled erosion control product
REQ	required
R/W	right of way

S

S	slip
SCC	sprinkler control conduit
SCH	schedule
SF	state-furnished
Shld	shoulder
SQFT	square foot/feet
SQYD	square yard(s)
SST	side strip
Sta	station
Std	standard
SW	sidewalk/sound wall

T

T	third circle/thread
TLS	truck loading standpipe
TQ	three quarter circle
TRM	turf reinforcement mat
TRVD	traveled
TT	two third circle
Typ	typical

U

UG	underground

V

VAU	valve assembly unit

W

W	width
W/	with
WM	water meter
WS	wye strainer
WSP	welded steel pipe
WWM	welded wire mesh

NOTE:

FOR ADDITIONAL ABBREVIATIONS, SEE STANDARD PLANS A10A AND A10B.

STATE OF CALIFORNIA
DEPARTMENT OF TRANSPORTATION

PLANTING AND IRRIGATION ABBREVIATIONS

NO SCALE

RSP H1 DATED JUNE 5, 2009 SUPERSEDES STANDARD PLAN H1
DATED MAY 1, 2006 - PAGE 201 OF THE STANDARD PLANS BOOK DATED MAY 2006.

REVISED STANDARD PLAN RSP H1

2006 REVISED STANDARD PLAN RSP H1

DIST	COUNTY	ROUTE	POST MILES TOTAL PROJECT	SHEET NO.	TOTAL SHEETS
11	SD	54, 125	5.3/6.4 9.2/9.7	49	56

LICENSED LANDSCAPE ARCHITECT

June 5, 2009
PLANS APPROVAL DATE

Gregory A. Balzer 2576 LICENSED LANDSCAPE ARCHITECT 10-29-10 Renewal Date 2-28-11 Renewal Date 5-14-09 Date STATE OF CALIFORNIA

The State of California or its officers or agents shall not be responsible for the accuracy or completeness of electronic copies of this plan sheet.

To accompany plans dated 09-19-11

2006 REVISED STANDARD PLAN RSP H2

EXISTING	PROPOSED	ITEM DESCRIPTION
		WATER METER (WM)
		BACKFLOW PREVENTER ASSEMBLY (BPA)
		BACKFLOW PREVENTER ASSEMBLY IN ENCLOSURE (BPAE)
		BACKFLOW PREVENTER ENCLOSURE (BPE)
		BOOSTER PUMP (BP)
		TRUCK LOADING STANDPIPE (TLS)
	FS	FLOW SENSOR (FS)
X	X	MASTER IRRIGATION CONTROLLER (MIC)
		AUXILIARY IRRIGATION CONTROLLER (AIC)
		IRRIGATION CONTROLLER (IC)/ IRRIGATION CONTROLLER (IC) (BATTERY) IRRIGATION CONTROLLER (IC) (SOLAR)
		IRRIGATION CONTROLLER(S) IN CONTROLLER ENCLOSURE CABINET (ICC)
		CONTROL AND NEUTRAL CONDUCTORS (CNC)
SCC	SCC	SPRINKLER CONTROL CONDUIT (SCC)
		IRRIGATION CROSSOVER
		EXTEND IRRIGATION CROSSOVER
		IRRIGATION SLEEVE
dip	DIP	DUCTILE IRON PIPE (SUPPLY LINE) (MAIN) (DIP)
		GALVANIZED STEEL PIPE (SUPPLY LINE) (MAIN) (GSP)
		GALVANIZED STEEL PIPE (SUPPLY LINE) (LATERAL) (GSP)
		PLASTIC PIPE (PR 200) (SUPPLY LINE) (MAIN)
		PLASTIC PIPE (PR 200) (SUPPLY LINE) (LATERAL)
		PLASTIC PIPE (IRRIGATION LINE)
		REMOTE CONTROL VALVE (RCV) REMOTE CONTROL VALVE (MASTER) (RCVM) REMOTE CONTROL VALVE (MASTER) W/FLOW METER (RCVMF)
		MANUAL CONTROL VALVE (MCV)
		VALVE ASSEMBLY UNIT (VAU)
		WYE STRAINER (WS)
		FILTER ASSEMBLY UNIT (FAU)
		GATE VALVE (GV)
		BALL VALVE (BV)

EXISTING	PROPOSED	ITEM DESCRIPTION
		QUICK COUPLING VALVE (QCV)
		CAM COUPLER ASSEMBLY (CCA)
		PRESSURE REDUCING VALVE (PRV)
		PRESSURE RELIEF VALVE (PRLV)
		FLOW CONTROL VALVE (FCV)
		COMBINATION AIR RELEASE VALVE (CARV)
		CHECK VALVE (CV)
		FLUSH VALVE (FV)
		NOZZLE LINE W/TURNING UNION
		IRRIGATION SYSTEM
		IRRIGATION SYSTEM TO BE REMOVED
		CHAIN LINK GATE
		QUICK COUPLING VALVE W/SPRINKLER PROTECTOR
3	3	SPRINKLER W/SPRINKLER PROTECTOR
	C	CONNECT TO EXISTING SYSTEM
		CAP
		CAP EXISTING

VALVE CODE

RCV SIZE
IRRIGATION CONTROLLER
CONTROLLER STATION
VALVE IN PARALLEL (IF APPLICABLE)
GPM
QUANTITY OF SPRINKLERS (WHEN SHOWN)

* 2½"-A-2b-40 -60

MCV SIZE
VALVE NUMBER
GPM
QUANTITY OF TYPE SPRINKLERS (WHEN SHOWN)

* 2"-3-30 -50

* VALVE CODES FOR EXISTING VALVES ARE SHOWN IN A DASHED ENCLOSURE.

STATE OF CALIFORNIA
DEPARTMENT OF TRANSPORTATION

PLANTING AND IRRIGATION SYMBOLS

NO SCALE

RSP H2 DATED JUNE 5, 2009 SUPERSEDES RSP H2 DATED MARCH 7, 2008 AND STANDARD PLAN H2 DATED MAY 1, 2006 - PAGE 202 OF THE STANDARD PLANS BOOK DATED MAY 2006.

REVISED STANDARD PLAN RSP H2

5-11-09

DIST	COUNTY	ROUTE	POST MILES TOTAL PROJECT	SHEET NO.	TOTAL SHEETS
11	SD	54, 125	5.3/6.4 9.2/9.7	50	56

Randell D. Hiatt
REGISTERED CIVIL ENGINEER

June 6, 2008
PLANS APPROVAL DATE

REGISTERED PROFESSIONAL ENGINEER
Randell D. Hiatt
No. C50200
Exp. 6-30-09
CIVIL
STATE OF CALIFORNIA

The State of California or its officers or agents shall not be responsible for the accuracy or completeness of electronic copies of this plan sheet.

To accompany plans dated 09-19-11

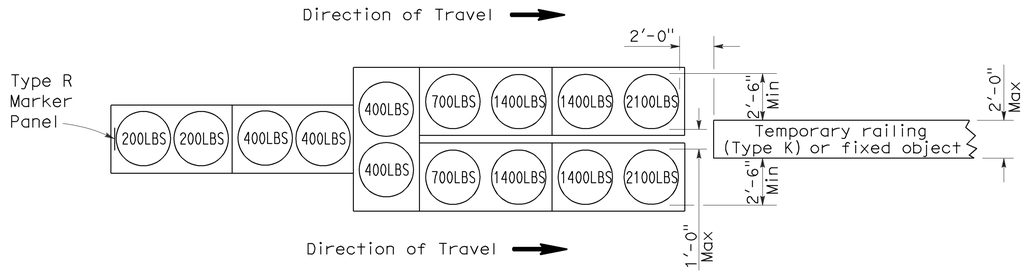

ARRAY 'TU14'

Approach speed 45 mph or more

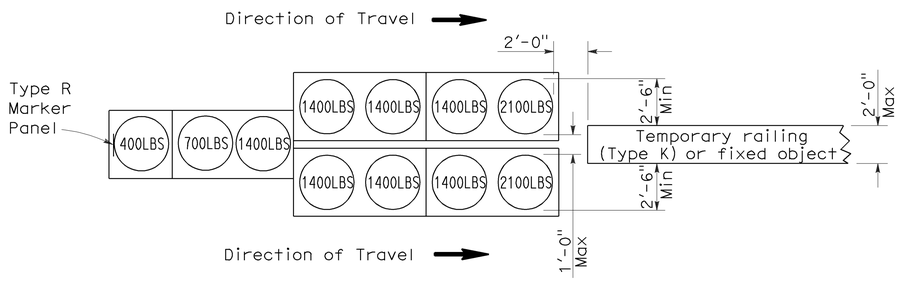

ARRAY 'TU11'

Approach speed less than 45 mph

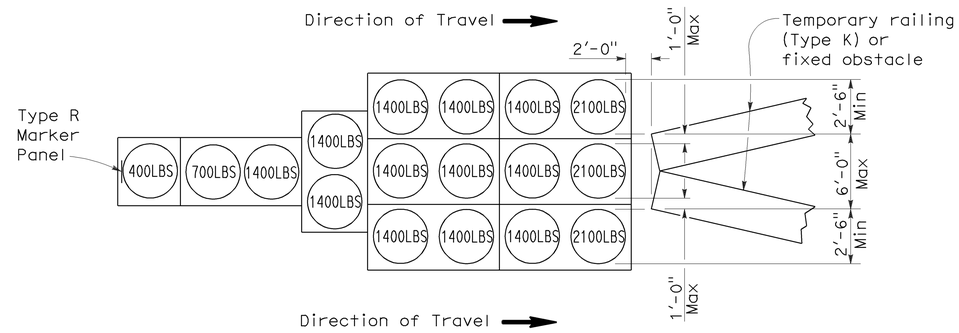

ARRAY 'TU17'

Approach speed less than 45 mph

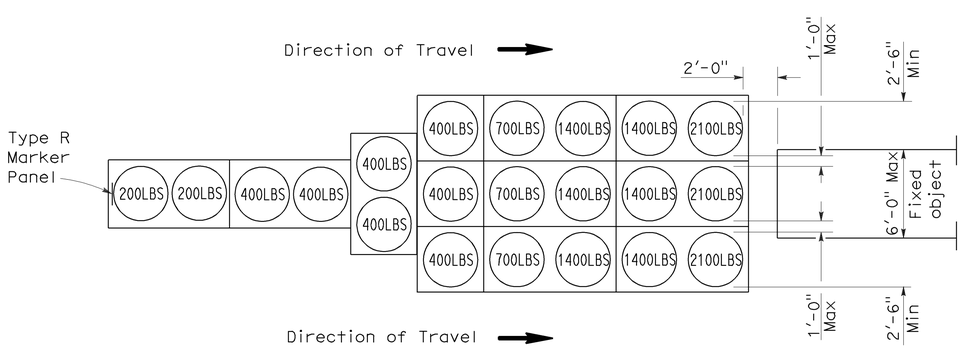

ARRAY 'TU21'

Approach speed 45 mph or more

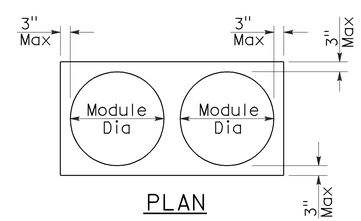

PLAN

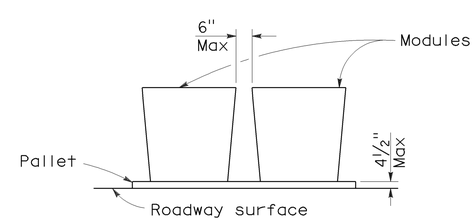

ELEVATION

CRASH CUSHION PALLET DETAIL

See Note 7

NOTES:

1. (XXX) Indicates sand filled module location and weight of sand in pounds for each module. Module spacing is based on the greater diameter of the module.
2. All sand weights are nominal.
3. Temporary crash cushion arrays shall not encroach on the traveled way.
4. Place the top of Type R marker panel 1" below the module lid.
5. Refer to Standard Plan A73B for marker details.
6. Approach speeds indicated conform to NCHRP 350 Report criteria.
7. Use of pallets is optional.

STATE OF CALIFORNIA
DEPARTMENT OF TRANSPORTATION

TEMPORARY CRASH CUSHION, SAND FILLED (UNIDIRECTIONAL)

NO SCALE

RSP T1A DATED JUNE 6, 2008 SUPERSEDES STANDARD PLAN T1A
DATED MAY 1, 2006 - PAGE 211 OF THE STANDARD PLANS BOOK DATED MAY 2006.

REVISED STANDARD PLAN RSP T1A

2006 REVISED STANDARD PLAN RSP T1A

DIST	COUNTY	ROUTE	POST MILES TOTAL PROJECT	SHEET NO.	TOTAL SHEETS
11	SD	54, 125	5.3/6.4 9.2/9.7	51	56

Randell D. Hiatt
REGISTERED CIVIL ENGINEER

June 6, 2008
PLANS APPROVAL DATE

REGISTERED PROFESSIONAL ENGINEER
Randell D. Hiatt
No. C50200
Exp. 6-30-09
CIVIL
STATE OF CALIFORNIA

The State of California or its officers or agents shall not be responsible for the accuracy or completeness of electronic copies of this plan sheet.

To accompany plans dated 09-19-11

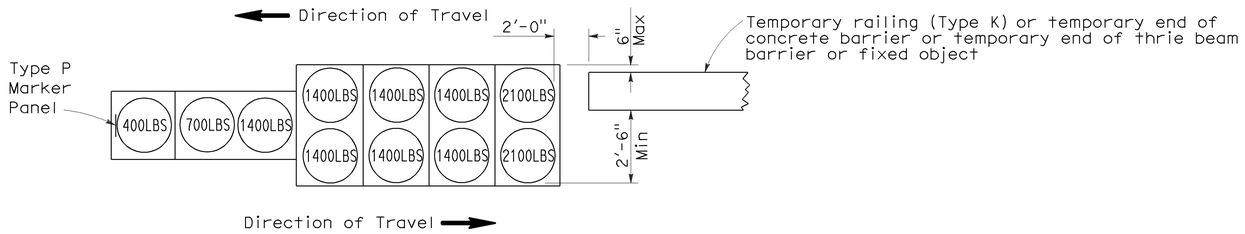

ARRAY 'TB11'

Approach speed less than 45 mph

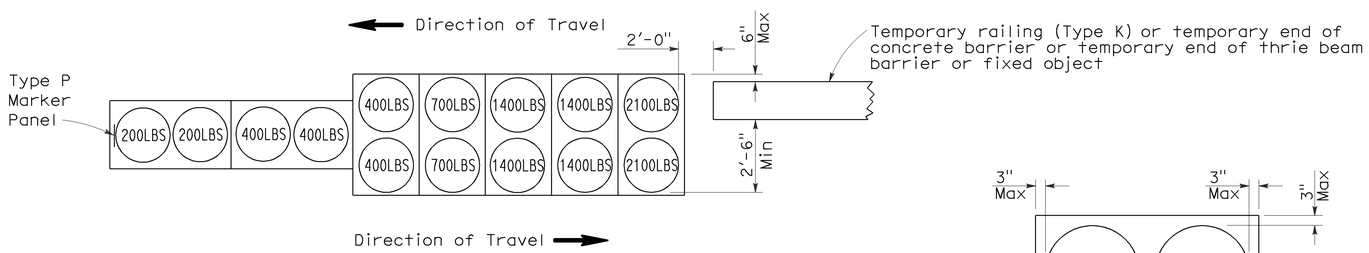

ARRAY 'TB14'

Approach speed 45 mph or more

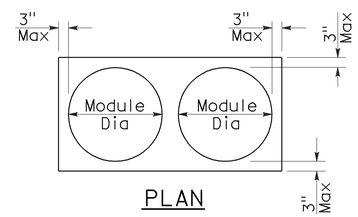

PLAN

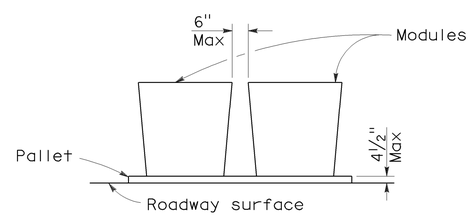

ELEVATION

CRASH CUSHION PALLET DETAIL

See Note 7

NOTES:

1. (XXX) Indicates sand filled module location and weight of sand in pounds for each module. Module spacing is based on the greater diameter of the module.
2. All sand weights are nominal.
3. Temporary crash cushion arrays shall not encroach on the traveled way.
4. Place the Type P marker panel so that the bottom of the panel rests upon the pallet.
5. Refer to Standard Plan A73B for marker details.
6. Approach speeds indicated conform to NCHRP 350 Report criteria.
7. Use of pallets is optional.

STATE OF CALIFORNIA
DEPARTMENT OF TRANSPORTATION

TEMPORARY CRASH CUSHION, SAND FILLED (BIDIRECTIONAL)

NO SCALE

RSP T1B DATED JUNE 6, 2008 SUPERSEDES STANDARD PLAN T1B
DATED MAY 1, 2006 - PAGE 212 OF THE STANDARD PLANS BOOK DATED MAY 2006.

REVISED STANDARD PLAN RSP T1B

2006 REVISED STANDARD PLAN RSP T1B

5-15-08

DIST	COUNTY	ROUTE	POST MILES TOTAL PROJECT	SHEET NO.	TOTAL SHEETS
11	SD	54, 125	5.3/6.4 9.2/9.7	52	56

Randell D. Hiatt
REGISTERED CIVIL ENGINEER

June 6, 2008
PLANS APPROVAL DATE

REGISTERED PROFESSIONAL ENGINEER
Randell D. Hiatt
No. C50200
Exp. 6-30-09
CIVIL
STATE OF CALIFORNIA

The State of California or its officers or agents shall not be responsible for the accuracy or completeness of electronic copies of this plan sheet.

To accompany plans dated 09-19-11

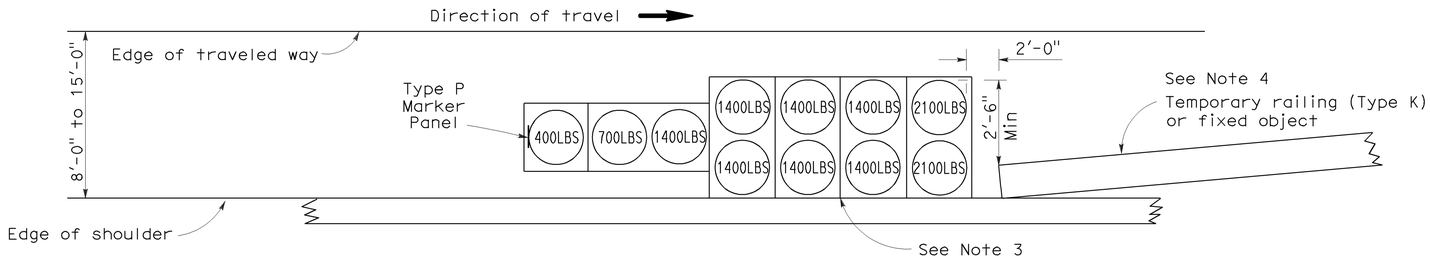

ARRAY 'TS11'

Approach speed less than 45 mph
See Note 9

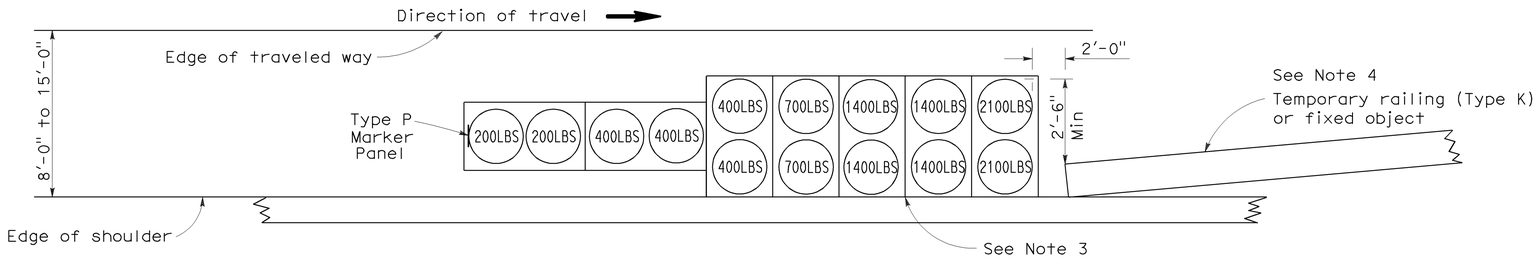

ARRAY 'TS14'

Approach speed 45 mph or more
See Note 9

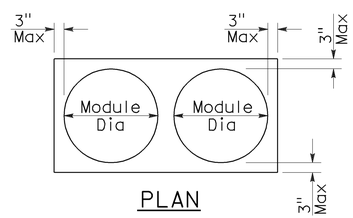

PLAN

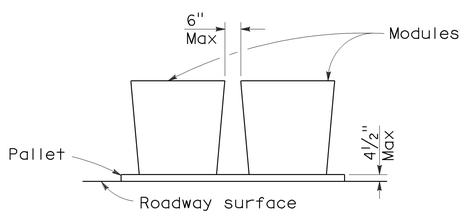

ELEVATION

CRASH CUSHION PALLET DETAIL

See Note 11

NOTES:

1. (XXX) Indicates sand filled module location and weight of sand in pounds for each module. Module spacing is based on the greater diameter of the module.
2. All sand weights are nominal.
3. The temporary crash cushion arrays shown on this plan shall be used only in locations where there will be traffic on one side of the temporary crash cushion array.
4. If the fixed object or approach end of the temporary railing is less than 15'-0" from the edge of traveled way, a temporary crash cushion is required in a construction or work zone.
5. Temporary crash cushion arrays shall not encroach on the traveled way.
6. Arrays for median shoulders shall conform to details shown on this plan for outside shoulders.
7. Place the Type P marker panel so that the bottom of the panel rests upon the pallet and faces traffic.
8. Refer to Standard Plan A73B for marker details.
9. For shoulder widths less than 8'-0", appropriate approved crash cushion protection, other than sand filled modules, shall be provided at fixed objects and at approach ends of temporary railing. The specific type of crash cushion shall be as shown on the project plans or as specified in the Special Provisions, or if not shown on the project plans or specified in the Special Provisions, shall be as approved by the Engineer.
10. Approach speeds indicated conform to NCHRP 350 Report criteria.
11. Use of pallets is optional.

STATE OF CALIFORNIA
DEPARTMENT OF TRANSPORTATION

TEMPORARY CRASH CUSHION, SAND FILLED (SHOULDER INSTALLATIONS)

NO SCALE

RSP T2 DATED JUNE 6, 2008 SUPERSEDES STANDARD PLAN T2
DATED MAY 1, 2006 - PAGE 213 OF THE STANDARD PLANS BOOK DATED MAY 2006.

REVISED STANDARD PLAN RSP T2

2006 REVISED STANDARD PLAN RSP T2

5-15-08

Dist	COUNTY	ROUTE	POST MILES TOTAL PROJECT	SHEET No.	TOTAL SHEETS
11	SD	54, 125	5.3/6.4 9.2/9.7	53	56

Randell D. Hiatt
REGISTERED CIVIL ENGINEER

May 20, 2011
PLANS APPROVAL DATE

REGISTERED PROFESSIONAL ENGINEER
Randell D. Hiatt
No. C50200
Exp. 6-30-11
CIVIL
STATE OF CALIFORNIA

The State of California or its officers or agents shall not be responsible for the accuracy or completeness of electronic copies of this plan sheet.

To accompany plans dated 09-19-11

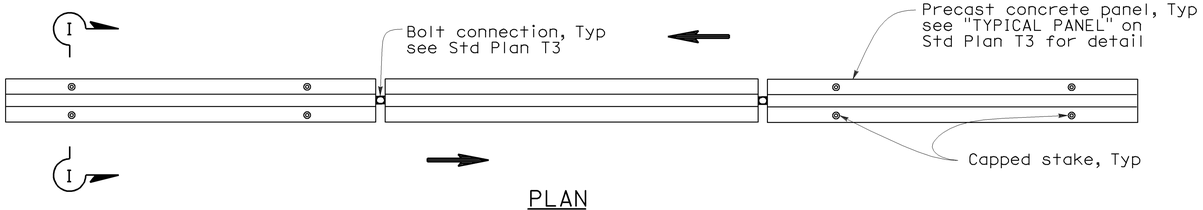

PLAN

RAILING STAKING CONFIGURATION FOR TWO-WAY TRAFFIC

See Note 1

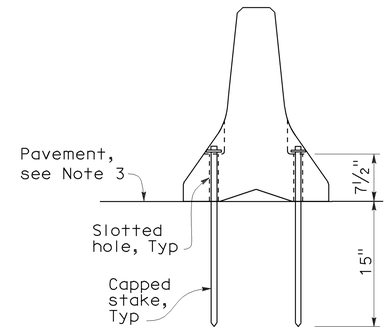

SECTION I-I

NOTES:

1. Where Type K Temporary Railing is placed as a temporary or long term barrier in two-way traffic on highways with less than 24" from the edge of traveled way, use four capped stakes per every other panel with end panels staked.
2. Where Type K Temporary Railing is placed 3" to 24" from the edge of an excavation on highways, use two capped stakes per panel along the traffic side.
3. Staked Type K Temporary Railing must be supported by at least 4" thick concrete, hot mix asphalt or existing asphalt concrete pavement.
4. The minimum yield strength for the washer must be 60,000 psi.
5. Direction of adjacent traffic indicated by ⟹.

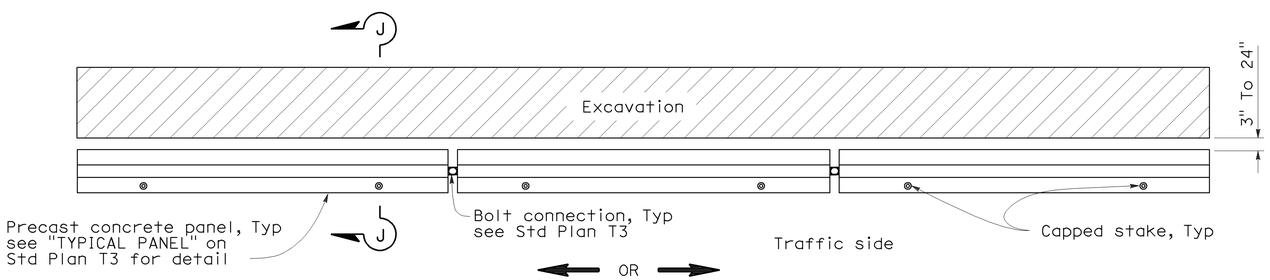

PLAN

RAILING STAKING CONFIGURATION ADJACENT TO AN EXCAVATION

See Note 2

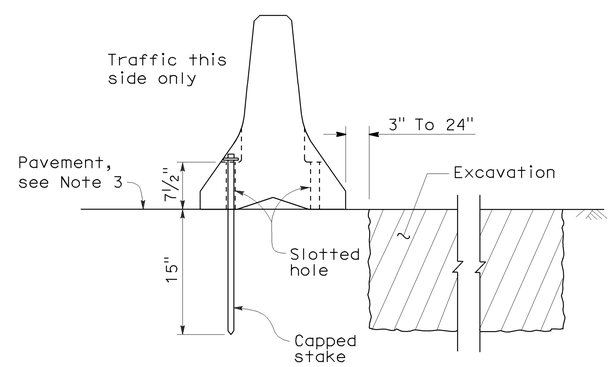

SECTION J-J

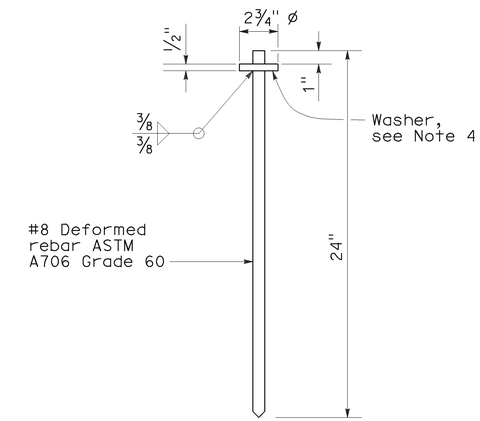

CAPPED STAKE DETAIL

STATE OF CALIFORNIA
DEPARTMENT OF TRANSPORTATION

TEMPORARY RAILING (TYPE K)

NO SCALE

NSP T3A DATED MAY 20, 2011 SUPPLEMENTS
THE STANDARD PLANS BOOK DATED MAY 2006.

NEW STANDARD PLAN NSP T3A

2006 NEW STANDARD PLAN NSP T3A

DIST	COUNTY	ROUTE	POST MILES TOTAL PROJECT	SHEET NO.	TOTAL SHEETS
11	SD	54, 125	5.3/6.4 9.2/9.7	54	56

Greg W. Edwards
REGISTERED CIVIL ENGINEER

November 17, 2006
PLANS APPROVAL DATE

REGISTERED PROFESSIONAL ENGINEER
Greg W. Edwards
No. C36386
Exp. 6-30-08
CIVIL
STATE OF CALIFORNIA

The State of California or its officers or agents shall not be responsible for the accuracy or completeness of electronic copies of this plan sheet.

To accompany plans dated 09-19-11

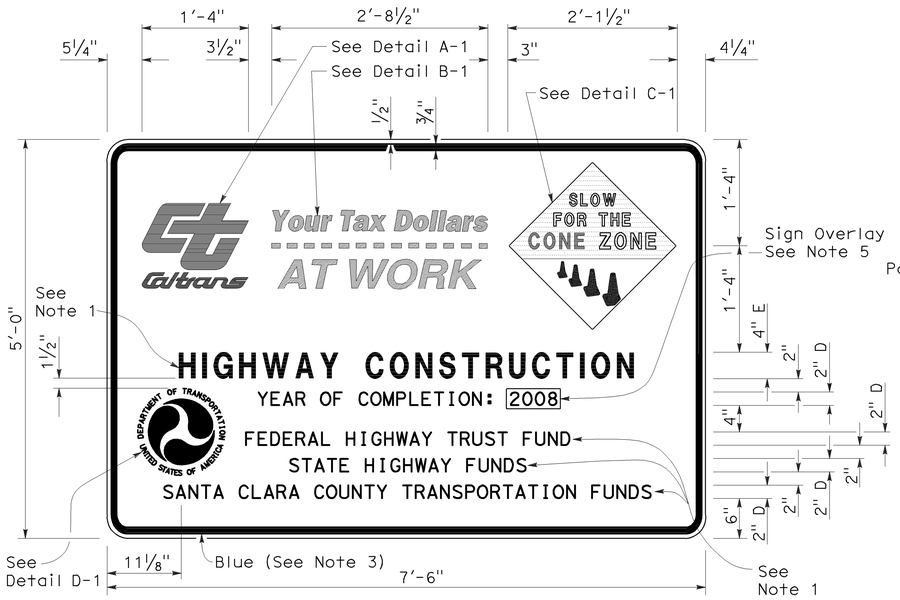

TYPE 1

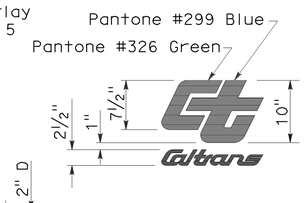

DETAIL A-1

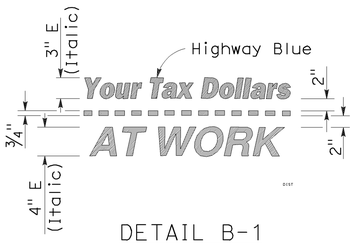

DETAIL B-1
(See Note 3)

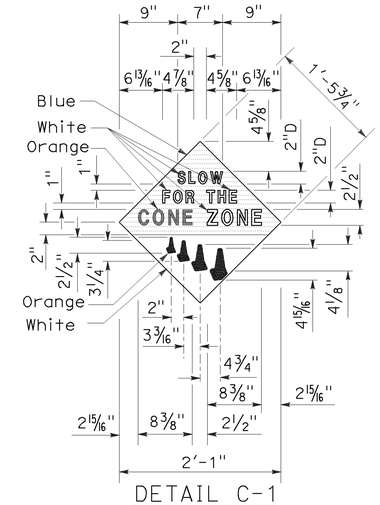

DETAIL C-1
(See Note 4)

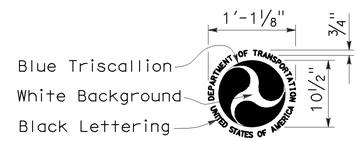

DETAIL D-1
(See Note 6)

NOTES:

1. The sign messages shown for type of project and fund types are examples only. See the Special Provisions for the applicable type of project and fund type messages to be used.
2. Except as otherwise shown, the legend of sign shall be black on a white background (non-reflective).
3. The border of the signs and details "B-1" and "B-2" shall be blue (non-reflective).
4. The diamond in details "C-1" and "C-2" shall be blue for the background of message, " SLOW FOR THE CONE ZONE", and white background for the orange cones. The color and type of font for the "SLOW FOR THE CONE ZONE" message shall be: "SLOW" white D; "FOR THE" white D; "CONE" orange Arial font; "ZONE" white Arial font.
5. Year of completion of project construction shown on the overlay is an example only. See the Special Provisions.
6. Use when the Project involves Federal Highway Trust Fund.

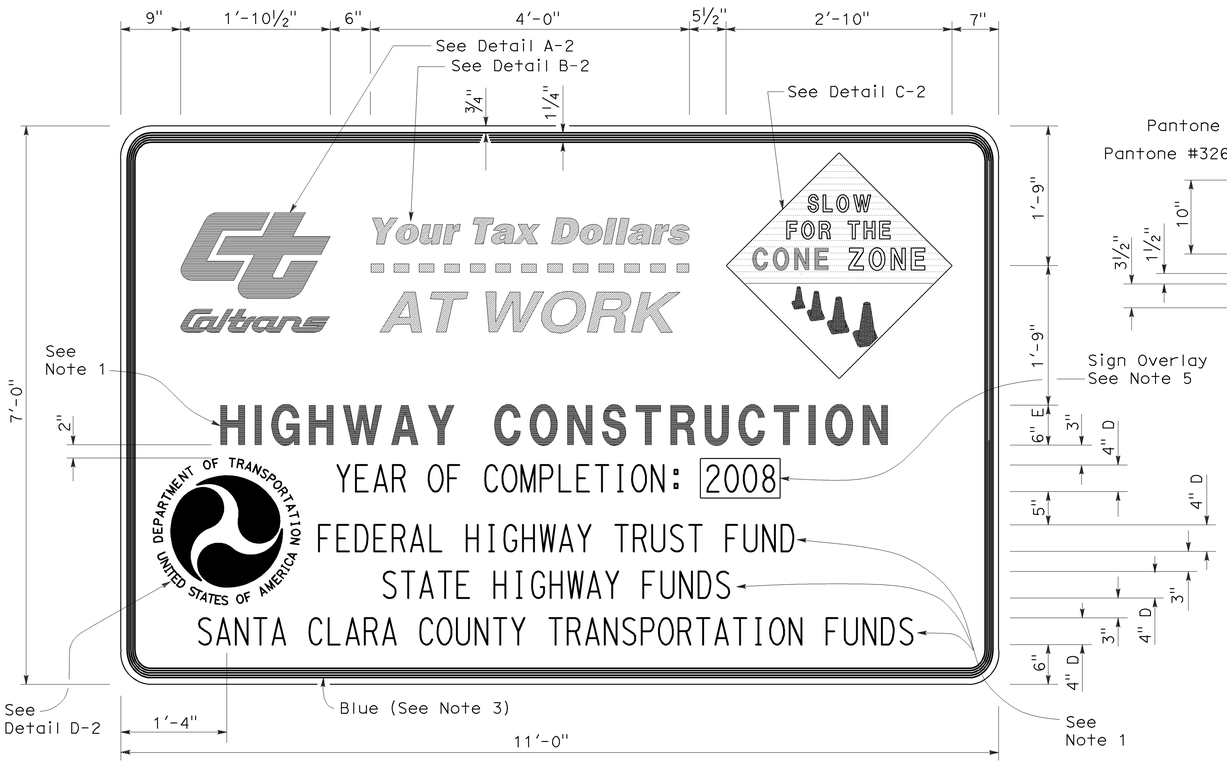

TYPE 2

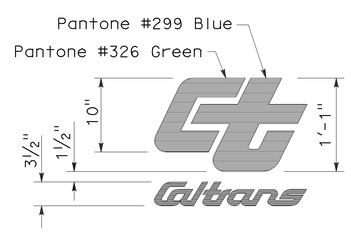

DETAIL A-2

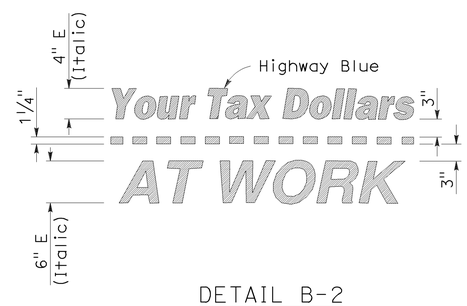

DETAIL B-2
(See Note 3)

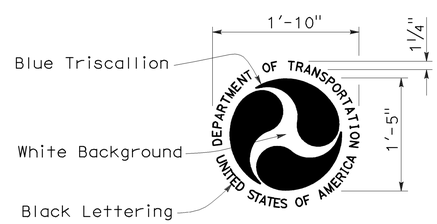

DETAIL D-2
(See Note 6)

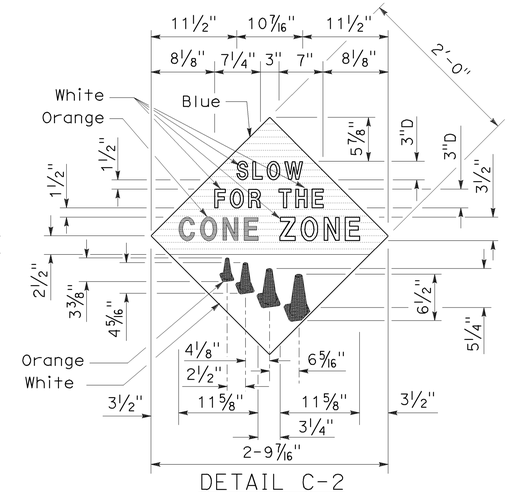

DETAIL C-2
(See Note 4)

STATE OF CALIFORNIA
DEPARTMENT OF TRANSPORTATION

CONSTRUCTION PROJECT FUNDING IDENTIFICATION SIGNS

NO SCALE

RSP T7 DATED NOVEMBER 17, 2006 SUPERSEDES STANDARD PLAN T7
DATED MAY 1, 2006 - PAGE 217 OF THE STANDARD PLANS BOOK DATED MAY 2006.

REVISED STANDARD PLAN RSP T7

2006 REVISED STANDARD PLAN RSP T7

9-7-06

DIST	COUNTY	ROUTE	POST MILES TOTAL PROJECT	SHEET NO.	TOTAL SHEETS
11	SD	54, 125	5.3/6.4 9.2/9.7	55	56

LICENSED LANDSCAPE ARCHITECT

April 3, 2009
PLANS APPROVAL DATE

The State of California or its officers or agents shall not be responsible for the accuracy or completeness of electronic copies of this plan sheet.

LICENSED LANDSCAPE ARCHITECT — Robert B. Schott 3635 — 11-30-10 Renewal Date — 2-25-09 Date — STATE OF CALIFORNIA

To accompany plans dated 09-19-11

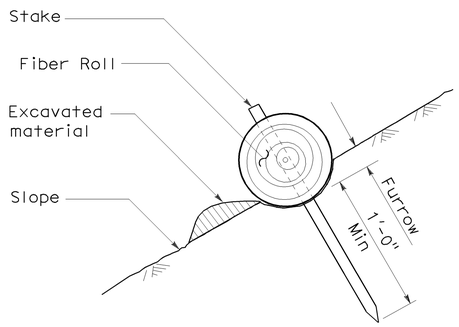

SECTION

TEMPORARY FIBER ROLL (TYPE 1)

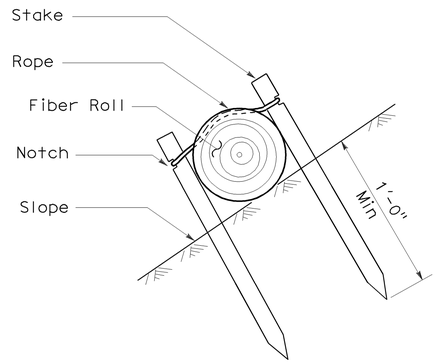

SECTION

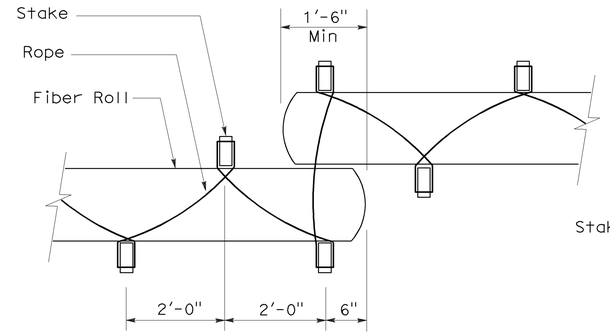

PLAN

TEMPORARY FIBER ROLL (TYPE 2)

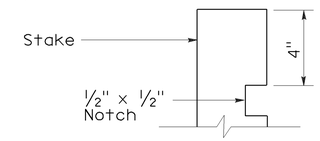

ELEVATION

STAKE NOTCH DETAIL

NOTES:

1. Temporary fiber roll spacing varies depending upon slope inclination.
2. Installations shown in the perspectives are for slope inclination of 10:1 and steeper.

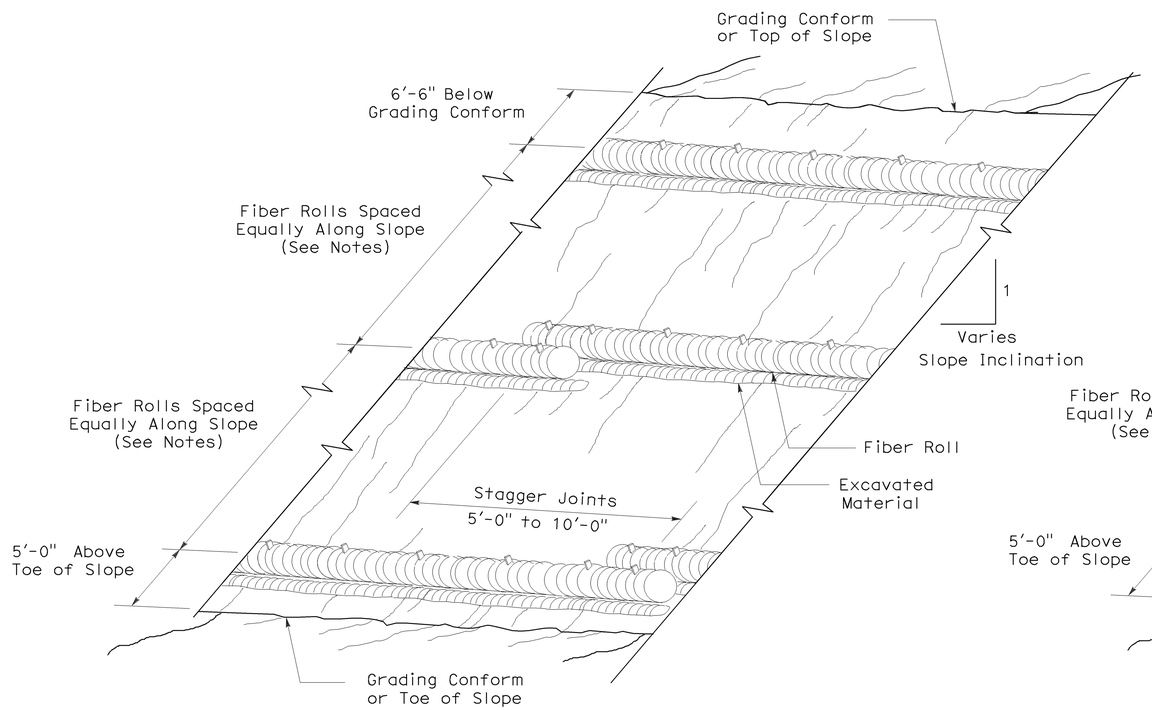

PERSPECTIVE

TEMPORARY FIBER ROLL (TYPE 1)

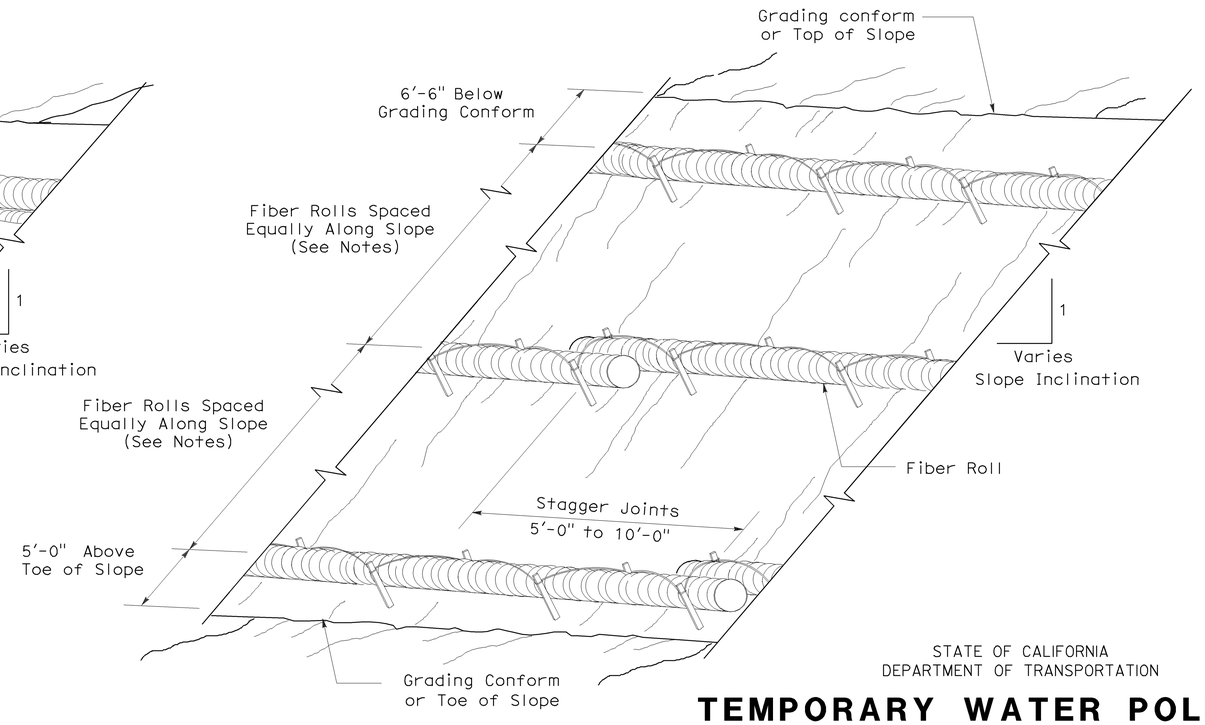

PERSPECTIVE

TEMPORARY FIBER ROLL (TYPE 2)

STATE OF CALIFORNIA
DEPARTMENT OF TRANSPORTATION

TEMPORARY WATER POLLUTION CONTROL DETAILS (TEMPORARY FIBER ROLL)

NO SCALE

RSP T56 DATED APRIL 3, 2009 SUPERSEDES STANDARD PLAN T56
DATED MAY 1, 2006 - PAGE 232 OF THE STANDARD PLANS BOOK DATED MAY 2006.

REVISED STANDARD PLAN RSP T56

2006 REVISED STANDARD PLAN RSP T56

DIST	COUNTY	ROUTE	POST MILES TOTAL PROJECT	SHEET NO.	TOTAL SHEETS
11	SD	54, 125	5.3/6.4 9.2/9.7	56	56

LICENSED LANDSCAPE ARCHITECT

August 15, 2008
PLANS APPROVAL DATE

LICENSED LANDSCAPE ARCHITECT — Robert B. Schott — 3635 — Signature — 11-04-08 Renewal Date — 08-11-08 Date — STATE OF CALIFORNIA

The State of California or its officers or agents shall not be responsible for the accuracy or completeness of electronic copies of this plan sheet.

To accompany plans dated 09-19-11

FLEXIBLE SEDIMENT BARRIER SPACING TABLE

SLOPE OF ROADWAY (PERCENT)	0 to 0.9	1 to 1.9	2 to 2.9	3 to 4	5+
INTERVAL BETWEEN BARRIERS	50′	35′	30′	25′	20′
ANGLE FROM FACE OF CURB	70°	70°	70°	45°	45°
SUGGESTED BARRIER LENGTH	6′	6′	6′	6′	6′

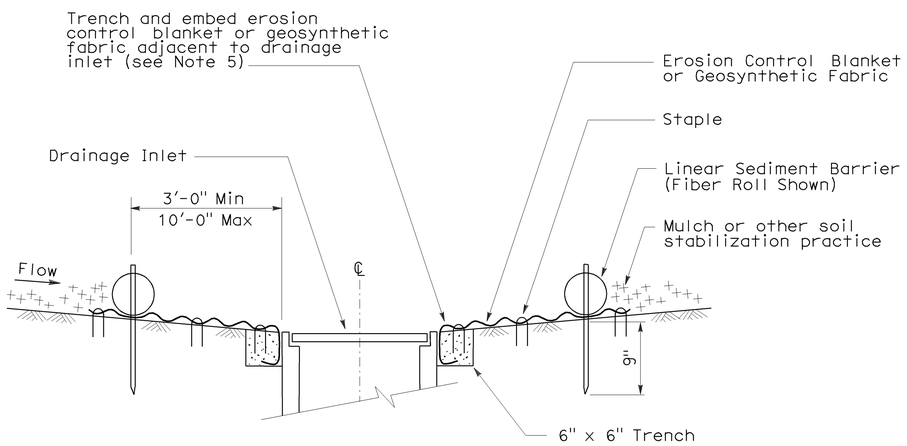

SECTION A-A

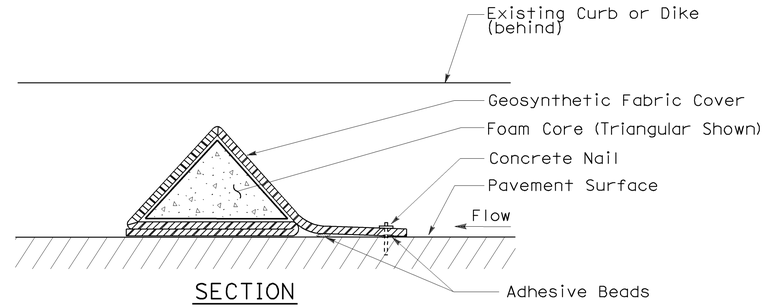

SECTION

FLEXIBLE SEDIMENT BARRIER DETAIL (FOAM BARRIER SHOWN)

NOTES:

1. See Standard Plan T51 for Temporary Silt Fence.
2. Dimensions may vary to fit field conditions.
3. Install a minimum of 3 flexible sediment barriers upstream of each drainage inlet to be protected.
4. Position erosion control blanket or geosynthetic fabric at edge of concrete apron and secure in trench.
5. Erosion control blanket or geosynthetic fabric is not required if the area adjacent to the drainage inlet is vegetated.

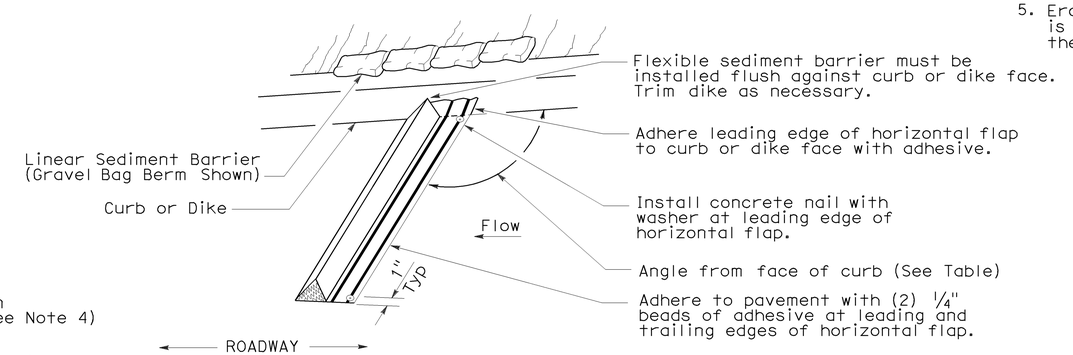

PERSPECTIVE

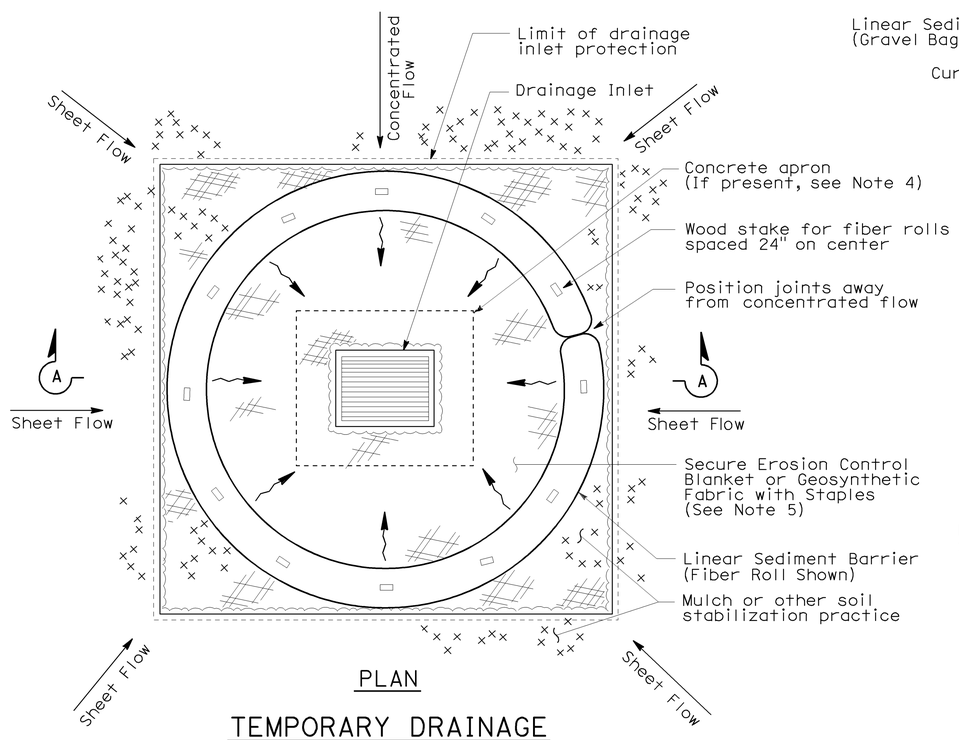

PLAN

TEMPORARY DRAINAGE INLET PROTECTION (TYPE 4A)

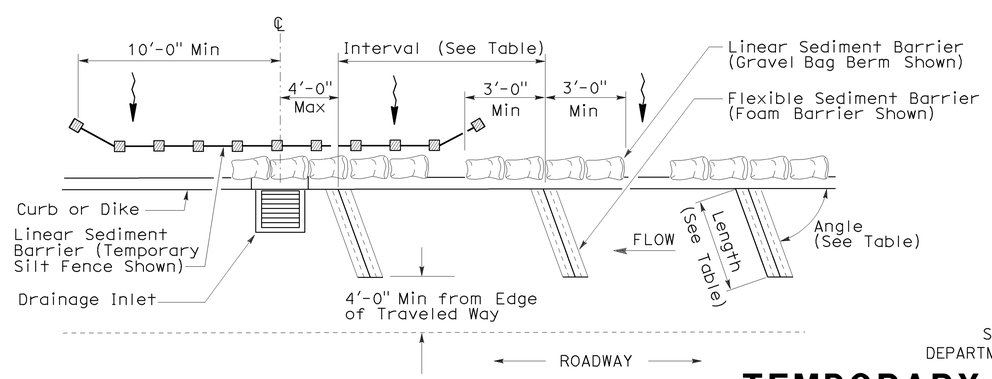

PLAN

TEMPORARY DRAINAGE INLET PROTECTION (TYPE 4B) FLEXIBLE SEDIMENT BARRIER

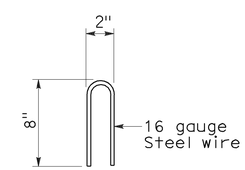

STAPLE DETAIL

STATE OF CALIFORNIA
DEPARTMENT OF TRANSPORTATION

TEMPORARY WATER POLLUTION CONTROL DETAILS (TEMPORARY DRAINAGE INLET PROTECTION)

NO SCALE

NSP T63 DATED AUGUST 15, 2008 SUPPLEMENTS THE STANDARD PLANS BOOK DATED MAY 2006.

NEW STANDARD PLAN NSP T63

2006 NEW STANDARD PLAN NSP T63

7-11-08