Dist	COUNTY	ROUTE	POST MILES TOTAL PROJECT	SHEET No.	TOTAL SHEETS
11	SD	76	28.8/29.1	1	47

HSSTP-P076(027)N

STATE OF CALIFORNIA
DEPARTMENT OF TRANSPORTATION

PROJECT PLANS FOR CONSTRUCTION ON
STATE HIGHWAY
IN SAN DIEGO COUNTY
NEAR PAUMA VALLEY
FROM 0.2 MILE WEST OF TO 0.1 MILE EAST OF PAUMA RESERVATION ROAD

TO BE SUPPLEMENTED BY STANDARD PLANS DATED MAY 2006

INDEX OF PLANS

SHEET NO.	DESCRIPTION
1	TITLE AND LOCATION MAP
2-4	TYPICAL CROSS SECTIONS
5	PROJECT CONTROL
6-7	LAYOUT
8-10	CONSTRUCTION DETAILS
11-12	TEMPORARY WATER POLLUTION CONTROL PLAN AND QUANTITIES
13-14	UTILITY PLAN
15	CONSTRUCTION AREA SIGNS
16-19	STAGE CONSTRUCTION PLANS AND QUANTITIES
20-23	PAVEMENT DELINEATION AND SIGN PLAN AND QUANTITIES
24-26	SIGNS DETAILS AND QUANTITIES
27	SUMMARY OF QUANTITIES
28-32	ELECTRICAL PLANS
33-47	NEW AND REVISED STANDARD PLANS

THE STANDARD PLANS LIST APPLICABLE TO THIS CONTRACT IS INCLUDED IN THE NOTICE TO BIDDERS AND SPECIAL PROVISIONS BOOK.

LOCATION MAP

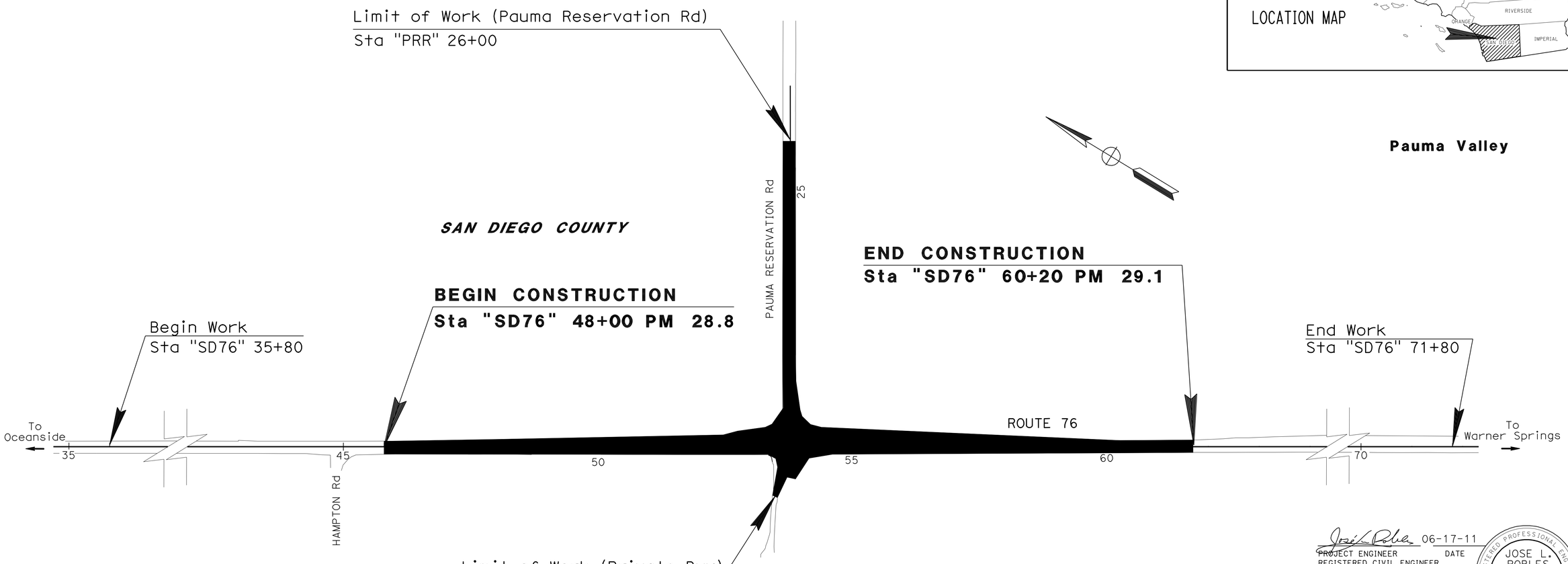

NO SCALE

THE CONTRACTOR SHALL POSSESS THE CLASS (OR CLASSES) OF LICENSE AS SPECIFIED IN THE "NOTICE TO BIDDERS."

PROJECT MANAGER: RICHARD ESTRADA

DESIGN ENGINEER: JOSE L. ROBLES

06-17-11
PROJECT ENGINEER REGISTERED CIVIL ENGINEER — DATE

REGISTERED PROFESSIONAL ENGINEER — JOSE L. ROBLES No. 64402 Exp. 06-30-13 CIVIL — STATE OF CALIFORNIA

June 20, 2011
PLANS APPROVAL DATE

THE STATE OF CALIFORNIA OR ITS OFFICERS OR AGENTS SHALL NOT BE RESPONSIBLE FOR THE ACCURACY OR COMPLETENESS OF SCANNED COPIES OF THIS PLAN SHEET.

CONTRACT No.	11-297804
PROJECT ID	1100000413

LAST REVISION 07-06-11 — DATE PLOTTED => 22-JUL-2011 — TIME PLOTTED => 11:07

Dist	COUNTY	ROUTE	POST MILES TOTAL PROJECT	SHEET No.	TOTAL SHEETS
11	SD	76	28.8/29.1	2	47

REGISTERED CIVIL ENGINEER DATE 06-17-11

06-20-11
PLANS APPROVAL DATE

REGISTERED PROFESSIONAL ENGINEER JOSE L. ROBLES No. 64402 Exp. 06-30-13 CIVIL STATE OF CALIFORNIA

THE STATE OF CALIFORNIA OR ITS OFFICERS OR AGENTS SHALL NOT BE RESPONSIBLE FOR THE ACCURACY OR COMPLETENESS OF ELECTRONIC COPIES OF THIS PLAN SHEET.

NOTES:

1. DIMENSIONS OF THE PAVEMENT STRUCTURES (STRUCTURAL SECTIONS) ARE SUBJECT TO TOLERANCES SPECIFIED IN THE STANDARD SPECIFICATIONS.
2. SLURRY SEAL SHALL BE APPLIED ON ALL DIKES.
3. SEE LAYOUT SHEETS FOR LOCATION AND TYPE OF HMA DIKE.
4. SEE PAVEMENT AND DELINEATION SHEETS FOR PLACEMENT OF RUMBLE STRIPS.

DESIGN DESIGNATION (ROUTE 76)

2005 ADT = 6,200 D = 54%
2030 ADT = 10,000 T = 14%
DHV = 1,500 V = 55 MPH

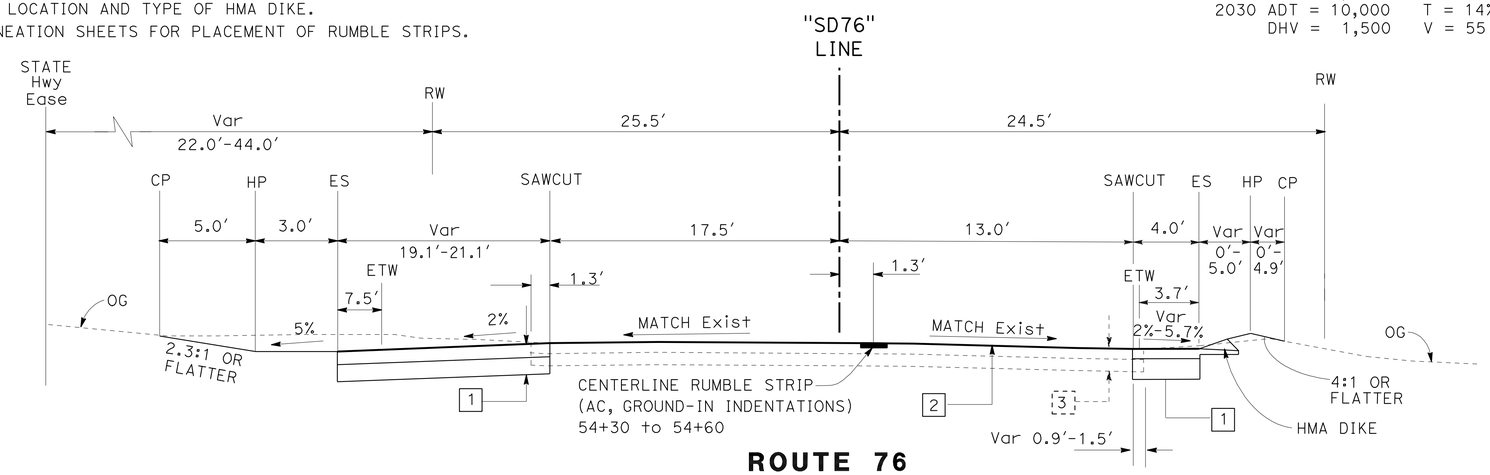

ROUTE 76

Sta "SD76" 54+34.30 TO 54+60.00 Sta "SD76" 54+25.00 TO 54+60.00

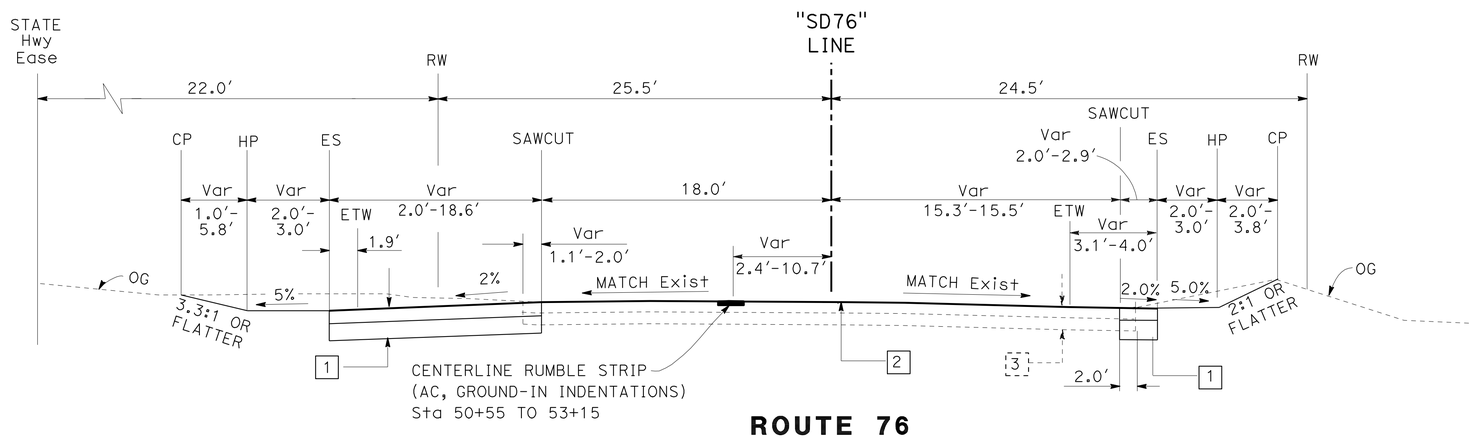

ROUTE 76

Sta "SD76" 50+55.00 TO 53+24.08 Sta "SD76" 53+20.00 TO 53+34.31

LEGEND:

RMAS - ROADWAY MIXED ASPHALT SUBBASE

TYPICAL STRUCTURAL SECTION

1 — 0.55' HMA
1.10' AB CLASS II

2 — SLURRY SEAL

3 — Exist
0.50' AC (TYPE B)
0.50' RMAS

4 — 0.55' HMA

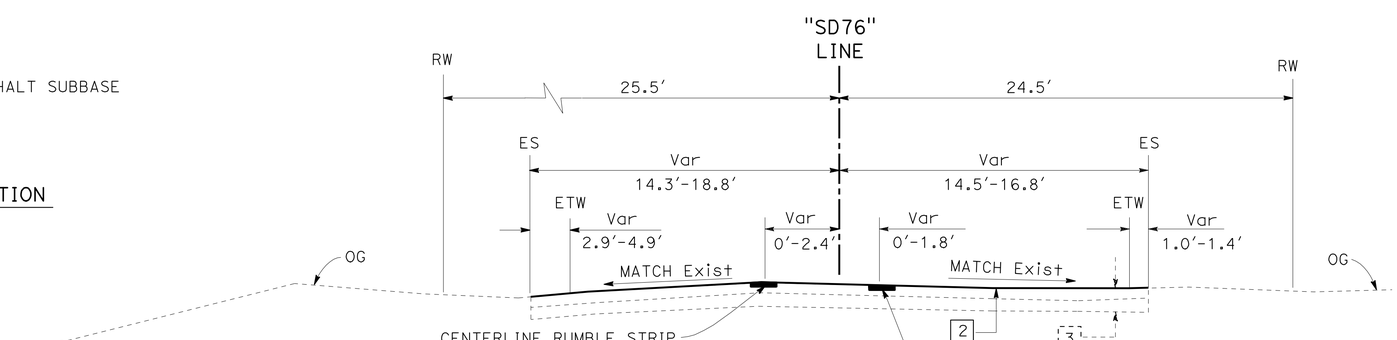

ROUTE 76

Sta "SD76" 48+00.00 TO 50+55.00 Sta "SD76" 48+00.00 TO 53+20.00

TYPICAL CROSS SECTIONS

NO SCALE

X-1

STATE OF CALIFORNIA - DEPARTMENT OF TRANSPORTATION
Caltrans
TRAFFIC PROJECT DEVELOPMENT

FUNCTIONAL SUPERVISOR: RICHARD ESTRADA
CALCULATED-DESIGNED BY: EVANGELINA PALMA
CHECKED BY: JOSE L. ROBLES
REVISED BY
DATE REVISED

LAST REVISION 07-06-11
DATE PLOTTED => 22-JUL-2011
TIME PLOTTED => 11:07

Dist	COUNTY	ROUTE	POST MILES TOTAL PROJECT	SHEET No.	TOTAL SHEETS
11	SD	76	28.8/29.1	3	47

REGISTERED CIVIL ENGINEER DATE 06-17-11

06-20-11
PLANS APPROVAL DATE

REGISTERED PROFESSIONAL ENGINEER JOSE L. ROBLES No. 64402 Exp. 06-30-13 CIVIL STATE OF CALIFORNIA

THE STATE OF CALIFORNIA OR ITS OFFICERS OR AGENTS SHALL NOT BE RESPONSIBLE FOR THE ACCURACY OR COMPLETENESS OF ELECTRONIC COPIES OF THIS PLAN SHEET.

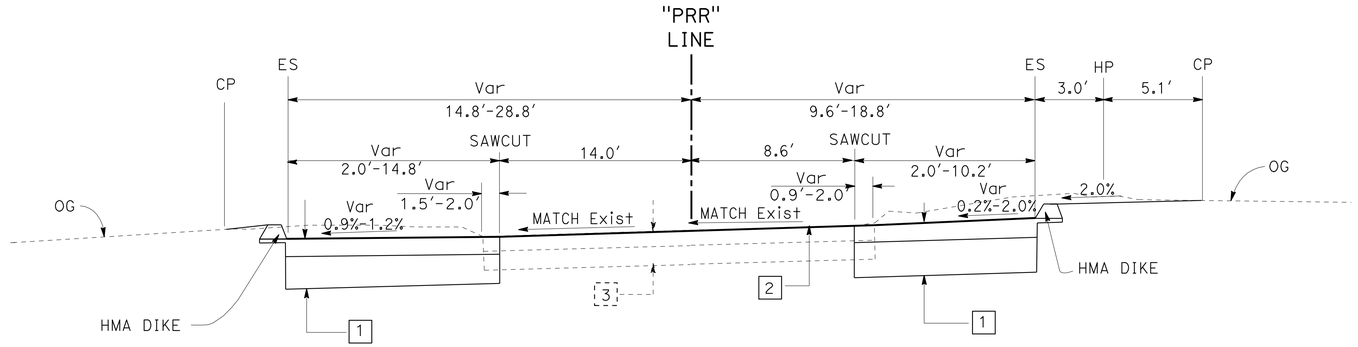

PAUMA RESERVATION ROAD

Sta "PRR" 20+53.83 TO 20+76.00 Sta "PRR" 20+72.12 TO 21+31.15

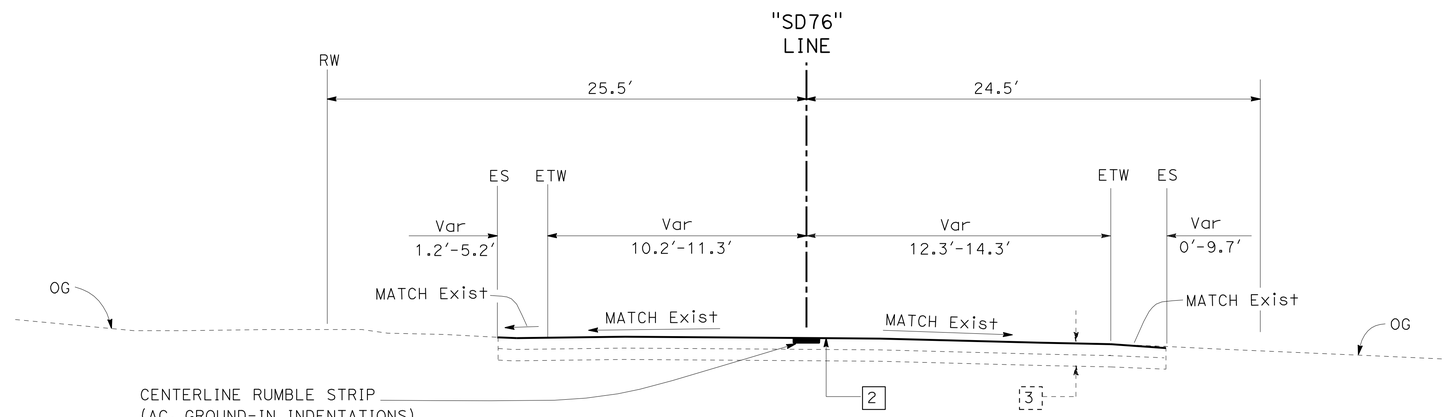

ROUTE 76

Sta "SD76" 57+60.00 TO 60+20.00 Sta "SD76" 55+70.00 TO 60+20.00

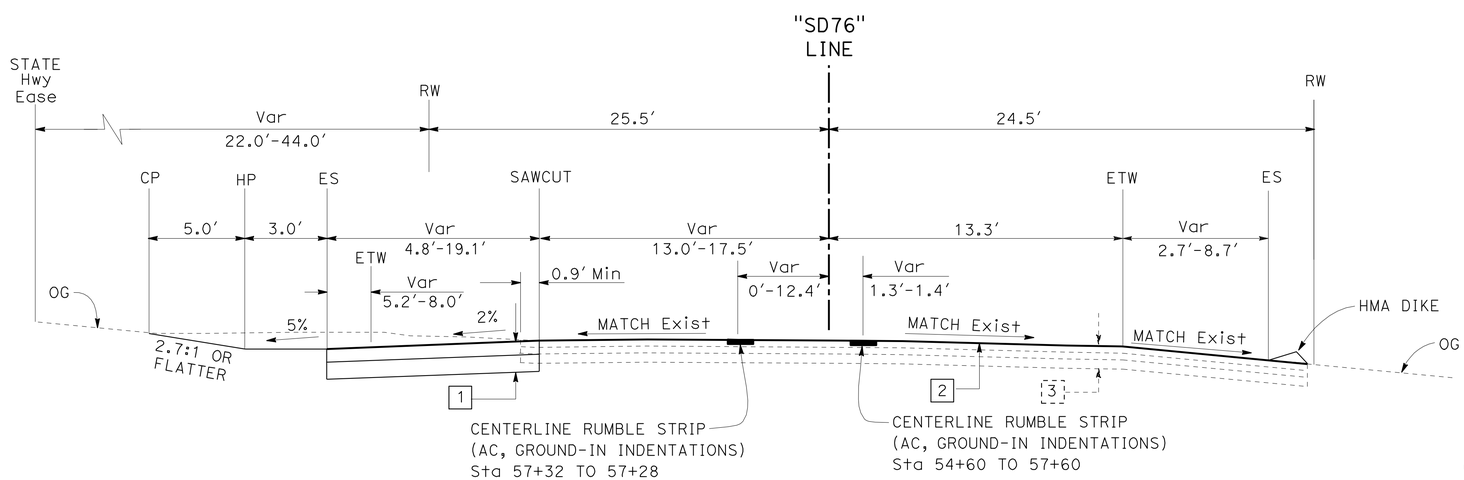

ROUTE 76

Sta "SD76" 54+60.00 TO 57+60.00 Sta "SD76" 54+60.00 TO 55+70.00

TYPICAL CROSS SECTIONS

NO SCALE

X-2

STATE OF CALIFORNIA - DEPARTMENT OF TRANSPORTATION
Caltrans
TRAFFIC PROJECT DEVELOPMENT

FUNCTIONAL SUPERVISOR: RICHARD ESTRADA
CALCULATED-DESIGNED BY: EVANGELINA PALMA
CHECKED BY: JOSE L. ROBLES
REVISED BY
DATE REVISED

LAST REVISION 07-07-11
DATE PLOTTED => 22-JUL-2011
TIME PLOTTED => 11:07

Dist	COUNTY	ROUTE	POST MILES TOTAL PROJECT	SHEET No.	TOTAL SHEETS
11	SD	76	28.8/29.1	4	47

REGISTERED CIVIL ENGINEER DATE 06-17-11

06-20-11
PLANS APPROVAL DATE

REGISTERED PROFESSIONAL ENGINEER JOSE L. ROBLES No. 64402 Exp. 06-30-13 CIVIL STATE OF CALIFORNIA

THE STATE OF CALIFORNIA OR ITS OFFICERS OR AGENTS SHALL NOT BE RESPONSIBLE FOR THE ACCURACY OR COMPLETENESS OF ELECTRONIC COPIES OF THIS PLAN SHEET.

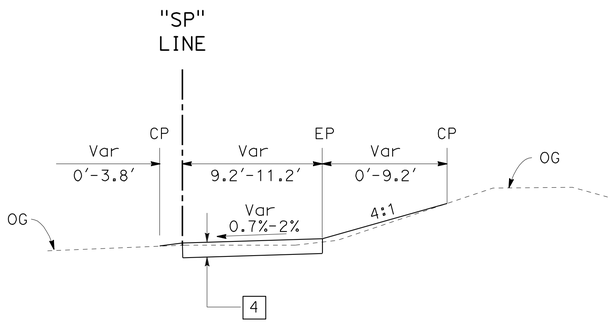

PRIVATE DRIVEWAY

Sta "SP" 40+00 TO 40+30

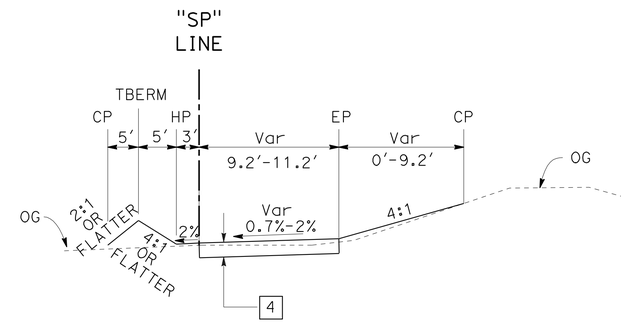

PRIVATE DRIVEWAY

Sta "SP" 40+30 TO 40+36.53

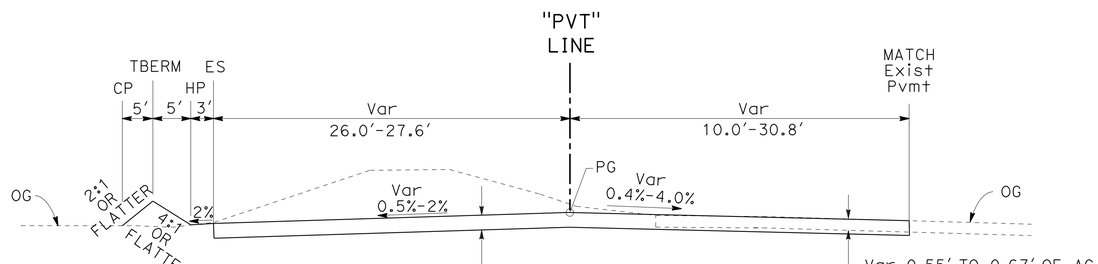

PRIVATE DRIVEWAY

Sta "PVT" 10+36.78 TO 10+61.70 Sta "PVT" 10+36.78 TO 10+76.63

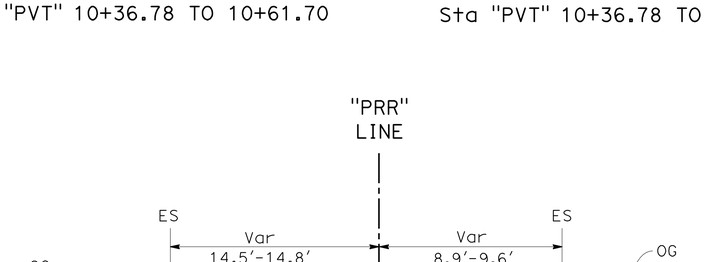

PAUMA RESERVATION ROAD

Sta "PRR" 20+76.00 TO 22+78.00 Sta "PRR" 21+31.15 TO 22+78.00

TYPICAL CROSS SECTIONS

NO SCALE

X-3

STATE OF CALIFORNIA - DEPARTMENT OF TRANSPORTATION
Caltrans
TRAFFIC PROJECT DEVELOPMENT

FUNCTIONAL SUPERVISOR: RICHARD ESTRADA
CALCULATED-DESIGNED BY: EVANGELINA PALMA
CHECKED BY: JOSE L. ROBLES
REVISED BY
DATE REVISED

LAST REVISION 07-08-11
DATE PLOTTED => 22-JUL-2011
TIME PLOTTED => 11:07

Dist	COUNTY	ROUTE	POST MILES TOTAL PROJECT	SHEET No.	TOTAL SHEETS
11	SD	76	28.8/29.1	5	47

06-17-11
PROFESSIONAL LAND SURVEYOR DATE

06-20-11
PLANS APPROVAL DATE

PROFESSIONAL LAND SURVEYOR MARK D. PHELAN L.S.7111 EXP:12-31-12 STATE OF CALIFORNIA

THE STATE OF CALIFORNIA OR ITS OFFICERS OR AGENTS SHALL NOT BE RESPONSIBLE FOR THE ACCURACY OR COMPLETENESS OF SCANNED COPIES OF THIS PLAN SHEET.

NOTES:

1. CONTACT DISTRICT 11'S LAND SURVEY'S DIVISION, PHONE (858)467-4305, FOR ADDITIONAL INFORMATION OR QUERIES REGARDING THIS SURVEY PROJECT CONTROL.
2. BASIS OF BEARINGS AND COORDINATES
   FOR THIS PROJECT IS THE CALIFORNIA COORDINATE SYSTEM OF 1983, HPGN EPOCH ADJUSTMENT [CCS 83 (1991.35)], ZONE 6. PROJECT CONTROL STATIONS WERE ESTABLISHED ACCORDING TO CRITERIA SET FORTH IN THE FEDERAL GEODETIC CONTROL SUBCOMMITTEE'S "GEOMETRIC GEODETIC ACCURACY STANDARDS AND SPECIFICATIONS FOR USING GPS RELATIVE POSITIONING TECHNIQUES" REPRINTED AUGUST 1, 1989.

   THIS GPS STATIC SURVEY WAS CONSTRAINED TO 1ST ORDER STATIONS "TE 248" AND "PMT 66".
3. BASIS OF ELEVATIONS
   FOR THIS PROJECT IS THE NORTH AMERICAN VERTICAL DATUM OF 1988 (NAVD88). ELEVATIONS ARE ESTABLISHED BY 1ST ORDER TRIGONOMETRIC LEVELING AND CONSTRAINING TO "TE 248" AND "PMT 66".
4. IN THE EVENT GPS MACHINE CONTROL/GUIDANCE IS USED FOR THIS PROJECT, THE CONTRACTOR SHALL CONTACT OR MEET WITH DISTRICT 11'S LAND SURVEY DIVISION TO OBTAIN THE CONTROL NECESSARY TO ESTABLISH A PROJECT CALIBRATION COMPATIBLE FOR ALL USERS.

LEGEND:

(1) 1ST ORDER STATION

(3) 3RD ORDER STATION

CONTROL FOR DESIGN AND CONSTRUCTION

STATION DESIGNATION	ORDER	NORTHING	EASTING	ELEVATION	DESCRIPTION
PMT 66	1ST	2,051,754.94	6,342,060.37	835.14	SD CO ENGR DISK IN BOULDER
TE 248	1ST	2,073,987.41	6,321,465.83	724.13	SD CO ENGR DISK IN BOULDER
76-28.5	3RD	2,066,701.06	6,330,921.62	787.09	2 1/4" CADT BRASS DISK IN ASPHALT
WP 311	3RD	2,065,005.86	6,332,003.94	826.45	SET SPIKE
WP 312	3RD	2,064,393.31	6,332,316.32	831.62	SET PK
WP 313	3RD	2,064,589.39	6,332,542.18	841.81	SET SPIKE

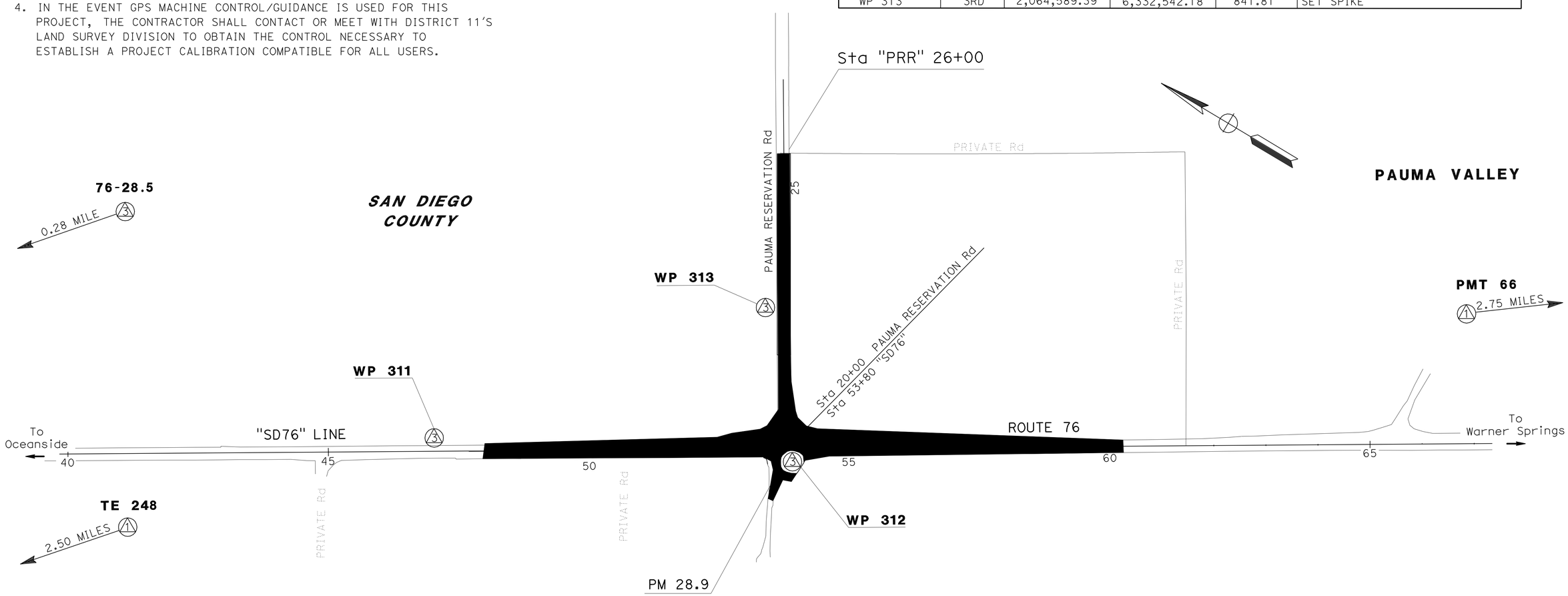

PROJECT CONTROL

THIS PLAN ACCURATE FOR PROJECT CONTROL INFORMATION ONLY

NO SCALE

PC-1

STATE OF CALIFORNIA - DEPARTMENT OF TRANSPORTATION
Caltrans LAND SURVEYS DIVISION

FUNCTIONAL SUPERVISOR: BRUCE URQUHART

CALCULATED-DESIGNED BY: MARK PHELAN
CHECKED BY: NED SALMAN

REVISED BY
DATE REVISED

LAST REVISION 07-07-11
DATE PLOTTED => 22-JUL-2011
TIME PLOTTED => 11:07

Dist	COUNTY	ROUTE	POST MILES TOTAL PROJECT	SHEET No.	TOTAL SHEETS
11	SD	76	28.8/29.1	6	47

REGISTERED CIVIL ENGINEER 06-17-11 DATE

06-20-11
PLANS APPROVAL DATE

REGISTERED PROFESSIONAL ENGINEER JOSE L. ROBLES No. 64402 Exp. 06-30-13 CIVIL STATE OF CALIFORNIA

THE STATE OF CALIFORNIA OR ITS OFFICERS OR AGENTS SHALL NOT BE RESPONSIBLE FOR THE ACCURACY OR COMPLETENESS OF SCANNED COPIES OF THIS PLAN SHEET.

NOTES:

1. FOR ACCURATE RIGHT OF WAY, CONTACT RIGHT OF WAY ENGINEERING AT THE DISTRICT OFFICE.
2. COORDINATES, BEARINGS AND DISTANCES ARE BASED ON CC83 (199.35) ZONE 6.
3. SEE UTILITY PLANS FOR POLES TO BE RELOCATED/REMOVED.
4. CENTERLINE RUMBLE STRIP (AC, GROUND-IN INDENTATIONS) SHALL NOT BE PLACED AT INTERSECTIONS.

LEGEND

- (0.55′ HMA (TYPE A) OVER 1.10′ AB CLASS II)
- (0.55′ HMA)
- (0.33′ HMA) PEDESTRIAN RAMP
- SLURRY SEAL BOUNDARY
- TCE — TEMPORARY CONSTRUCTION EASEMENT
- REMOVE TREES

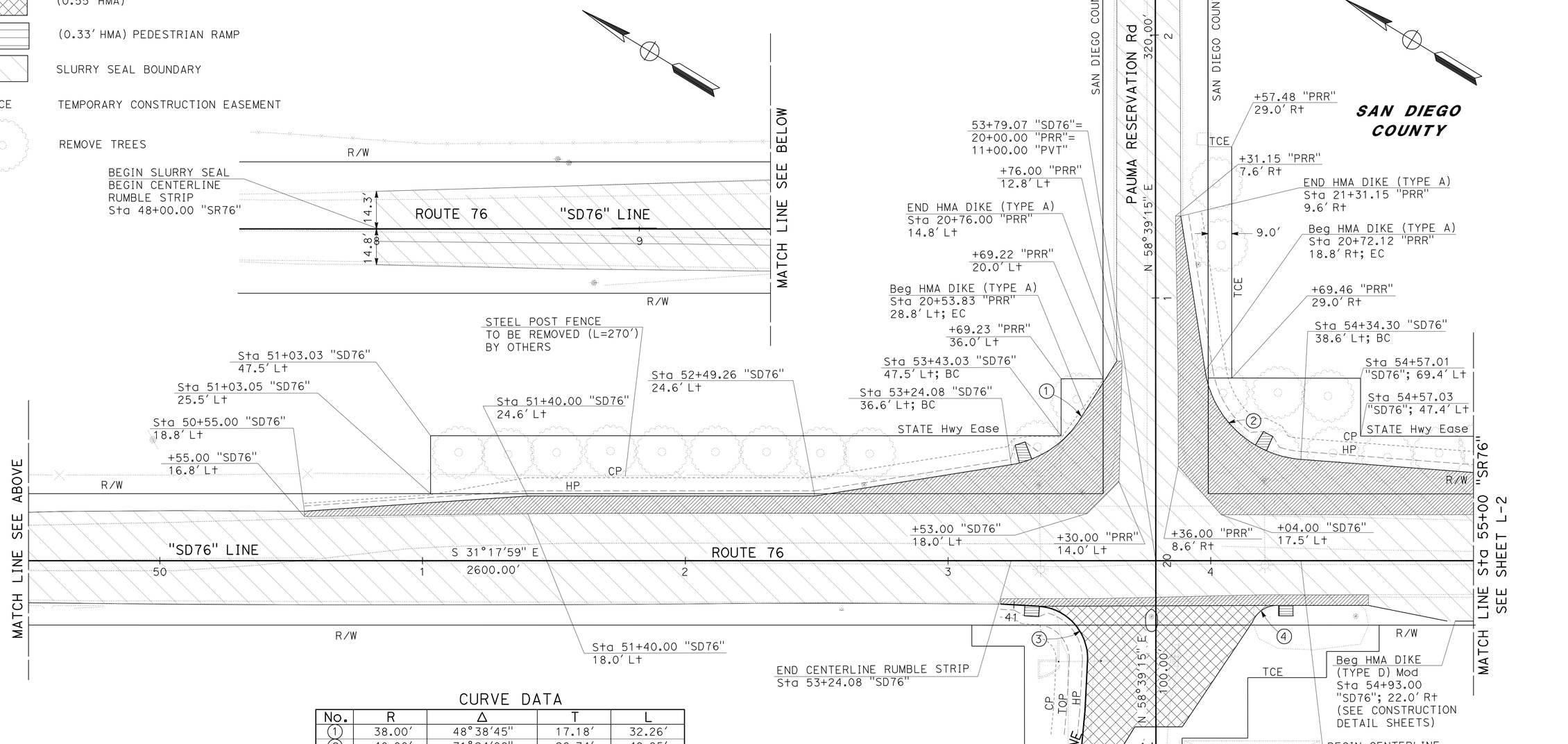

CURVE DATA

No.	R	Δ	T	L
1	38.00′	48°38′45″	17.18′	32.26′
2	40.00′	71°24′08″	28.74′	49.85′
3	20.00′	89°36′01″	19.86′	31.28′
4	10.00′	67°27′23″	6.68′	11.77′

LAYOUT L-1

SCALE: 1" = 20′

STATE OF CALIFORNIA - DEPARTMENT OF TRANSPORTATION
Caltrans
TRAFFIC PROJECT DEVELOPMENT

FUNCTIONAL SUPERVISOR: RICHARD ESTRADA
CALCULATED-DESIGNED BY: EVANGELINA PALMA
CHECKED BY: JOSE L. ROBLES
REVISED BY / DATE REVISED

LAST REVISION 07-07-11
DATE PLOTTED => 22-JUL-2011
TIME PLOTTED => 11:08

Dist	COUNTY	ROUTE	POST MILES TOTAL PROJECT	SHEET No.	TOTAL SHEETS
11	SD	76	28.8/29.1	7	47

REGISTERED CIVIL ENGINEER DATE 06-17-11

PLANS APPROVAL DATE 06-20-11

REGISTERED PROFESSIONAL ENGINEER JOSE L. ROBLES No. 64402 Exp. 06-30-13 CIVIL STATE OF CALIFORNIA

THE STATE OF CALIFORNIA OR ITS OFFICERS OR AGENTS SHALL NOT BE RESPONSIBLE FOR THE ACCURACY OR COMPLETENESS OF SCANNED COPIES OF THIS PLAN SHEET.

NOTES:

1. FOR ACCURATE RIGHT OF WAY, CONTACT RIGHT OF WAY ENGINEERING AT THE DISTRICT OFFICE.
2. COORDINATES, BEARINGS AND DISTANCES ARE BASED ON CC83 (199.35) ZONE 6.

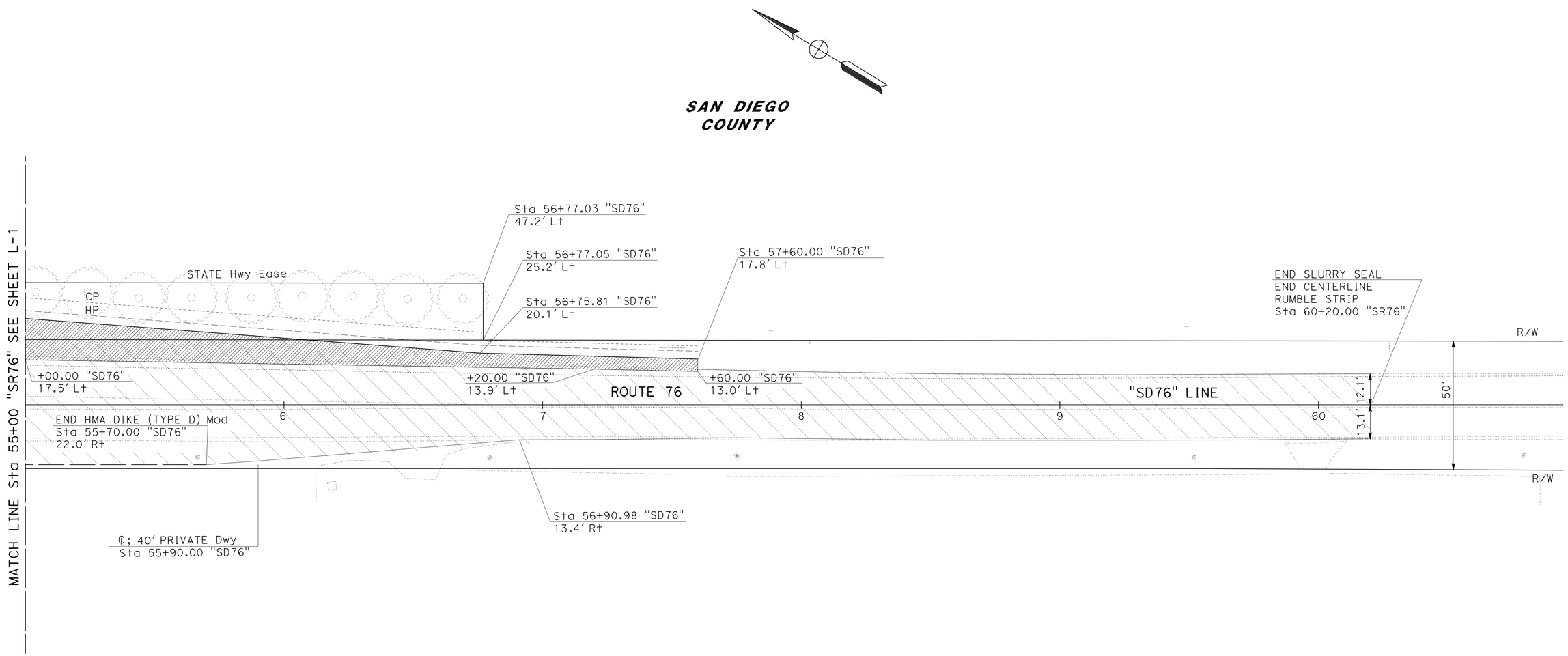

LAYOUT

SCALE: 1" = 20'

L-2

EVANGELINA PALMA
JOSE L. ROBLES
RICHARD ESTRADA

REVISED BY | DATE REVISED
CALCULATED-DESIGNED BY | CHECKED BY
FUNCTIONAL SUPERVISOR

STATE OF CALIFORNIA - DEPARTMENT OF TRANSPORTATION
Caltrans
TRAFFIC PROJECT DEVELOPMENT

LAST REVISION 07-07-11
DATE PLOTTED => 22-JUL-2011
TIME PLOTTED => 11:08

Dist	COUNTY	ROUTE	POST MILES TOTAL PROJECT	SHEET No.	TOTAL SHEETS
11	SD	76	28.8/29.1	8	47

REGISTERED CIVIL ENGINEER 06-17-11 DATE

06-20-11
PLANS APPROVAL DATE

REGISTERED PROFESSIONAL ENGINEER JOSE L. ROBLES No. 64402 Exp. 06-30-13 CIVIL STATE OF CALIFORNIA

THE STATE OF CALIFORNIA OR ITS OFFICERS OR AGENTS SHALL NOT BE RESPONSIBLE FOR THE ACCURACY OR COMPLETENESS OF SCANNED COPIES OF THIS PLAN SHEET.

NOTES:

1. FOR ACCURATE RIGHT OF WAY, CONTACT RIGHT OF WAY ENGINEERING AT THE DISTRICT OFFICE.
2. COORDINATES, BEARINGS AND DISTANCES ARE BASED ON CC83 (199.35) ZONE 6.

CURVE DATA

No.	R	Δ	T	L
1	38.00′	48°38′45"	17.18′	32.26′
2	40.00′	71°24′08"	28.74′	49.85′
3	20.00′	89°36′01"	19.86′	31.28′
4	10.00′	67°27′23"	6.68′	11.77′

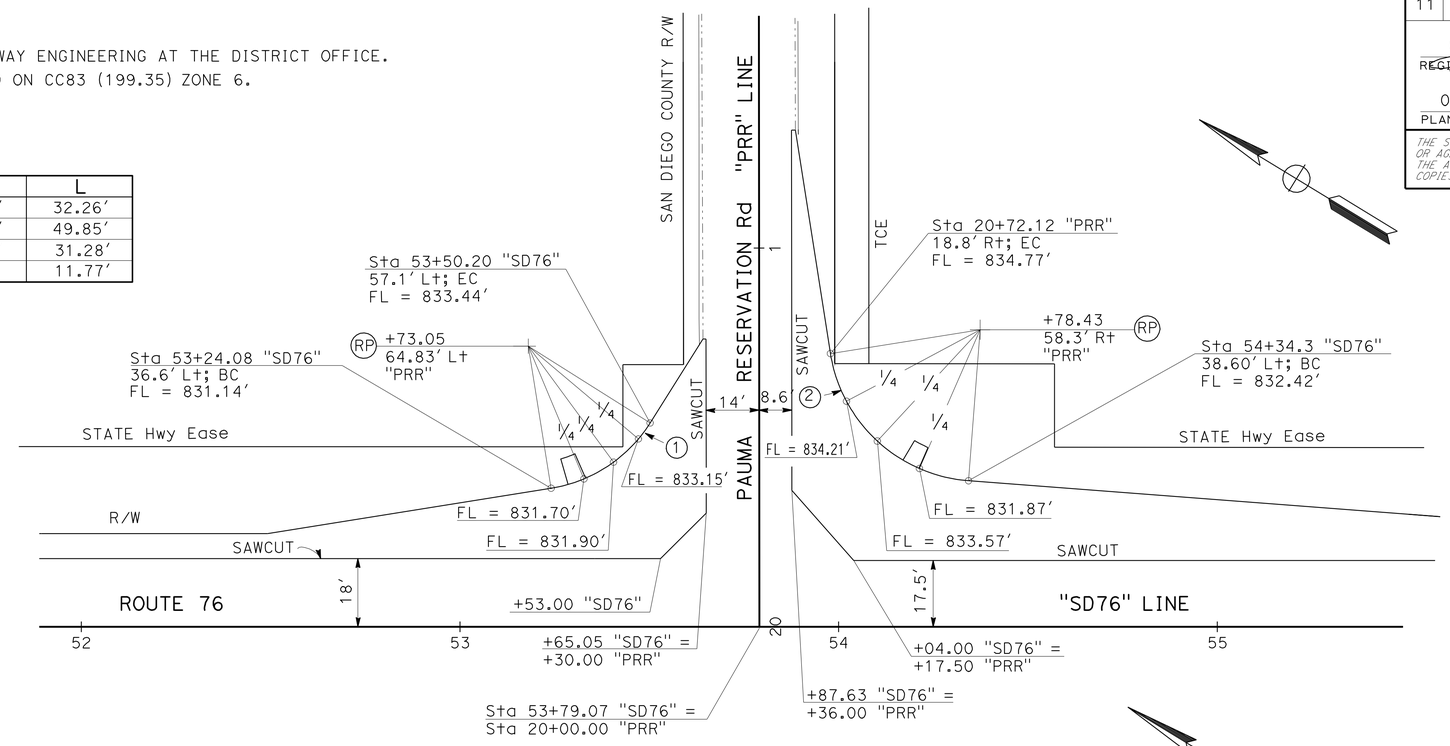

PAUMA RESERVATION Rd

SCALE: 1" = 20′

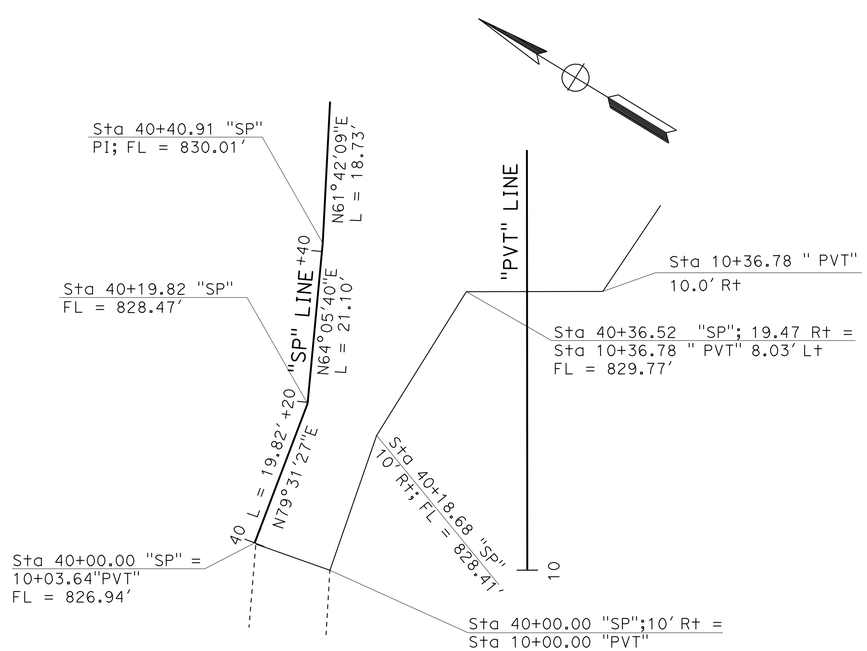

DETAIL A

NO SCALE

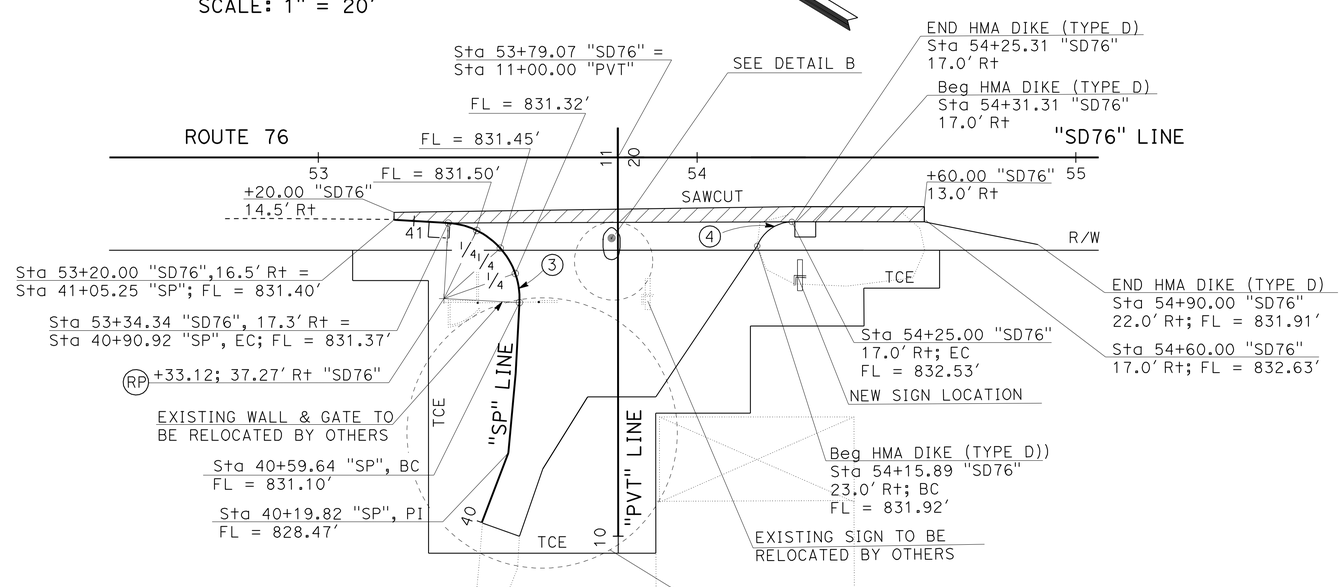

PRIVATE DRIVEWAY

SCALE: 1" = 20′

CONSTRUCTION DETAILS

SCALE AS SHOWN

C-1

STATE OF CALIFORNIA - DEPARTMENT OF TRANSPORTATION
Caltrans
TRAFFIC PROJECT DEVELOPMENT

FUNCTIONAL SUPERVISOR: RICHARD ESTRADA
CALCULATED-DESIGNED BY: EVANGELINA PALMA
CHECKED BY: JOSE L. ROBLES
REVISED BY
DATE REVISED

LAST REVISION 07-07-11
DATE PLOTTED => 22-JUL-2011
TIME PLOTTED => 11:08

Dist	COUNTY	ROUTE	POST MILES TOTAL PROJECT	SHEET No.	TOTAL SHEETS
11	SD	76	28.8/29.1	9	47

REGISTERED CIVIL ENGINEER 06-17-11 DATE

06-20-11
PLANS APPROVAL DATE

REGISTERED PROFESSIONAL ENGINEER JOSE L. ROBLES No. 64402 Exp. 06-30-13 CIVIL STATE OF CALIFORNIA

THE STATE OF CALIFORNIA OR ITS OFFICERS OR AGENTS SHALL NOT BE RESPONSIBLE FOR THE ACCURACY OR COMPLETENESS OF SCANNED COPIES OF THIS PLAN SHEET.

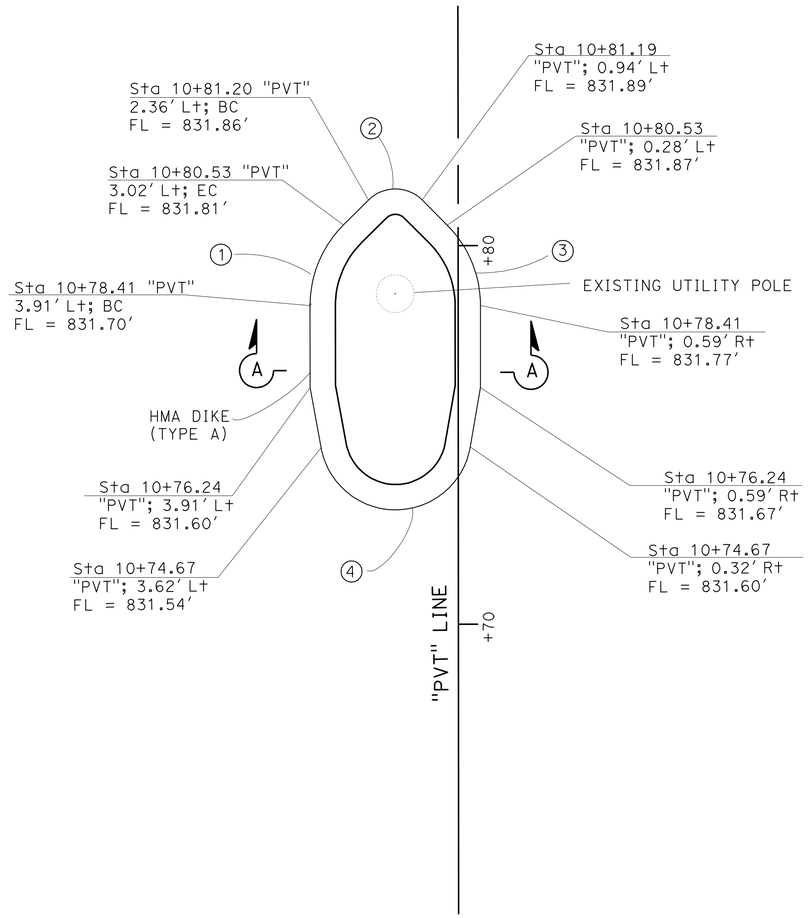

DETAIL B

SCALE: 1" = 2′

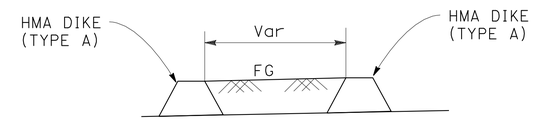

SECTION A-A

NO SCALE

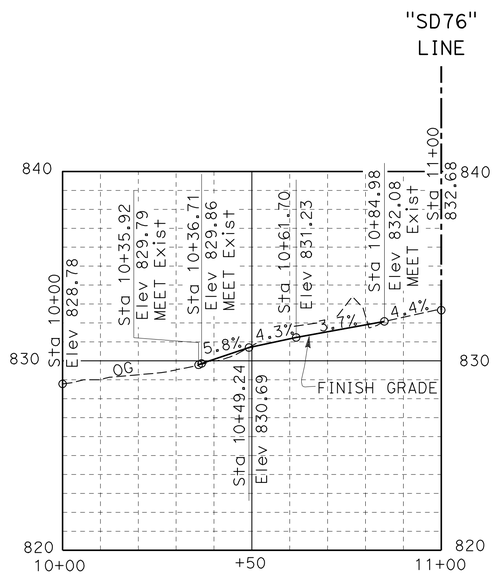

"PVT" PROFILE

SCALE: Vert 1" = 4′
Horiz 1" = 20′

CURVE DATA

No.	R	Δ	T	L
1	3.00′	45°08′07"	1.25′	2.36′
2	1.00′	90°00′00"	1.00′	1.57′
3	3.00′	44°51′53"	1.24′	2.35′
4	2.00′	20°09′05"	11.26′	5.58′

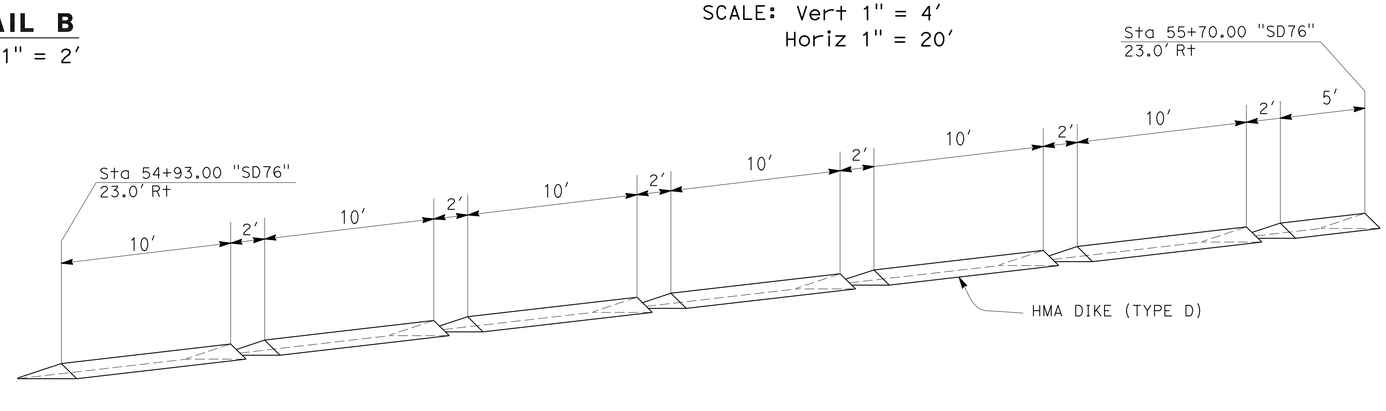

HMA DIKE (TYPE D) Mod

NO SCALE

CONSTRUCTION DETAILS

SCALE AS SHOWN

C-2

STATE OF CALIFORNIA - DEPARTMENT OF TRANSPORTATION
TRAFFIC PROJECT DEVELOPMENT
Caltrans

FUNCTIONAL SUPERVISOR: RICHARD ESTRADA
CALCULATED-DESIGNED BY: EVANGELINA PALMA
CHECKED BY: JOSE L. ROBLES
REVISED BY / DATE REVISED

LAST REVISION 07-07-11
DATE PLOTTED => 22-JUL-2011
TIME PLOTTED => 11:08

Dist	COUNTY	ROUTE	POST MILES TOTAL PROJECT	SHEET No.	TOTAL SHEETS
11	SD	76	28.8/29.1	10	47

REGISTERED CIVIL ENGINEER 06-17-11 DATE

06-20-11
PLANS APPROVAL DATE

REGISTERED PROFESSIONAL ENGINEER JOSE L. ROBLES No. 64402 Exp. 06-30-13 CIVIL STATE OF CALIFORNIA

THE STATE OF CALIFORNIA OR ITS OFFICERS OR AGENTS SHALL NOT BE RESPONSIBLE FOR THE ACCURACY OR COMPLETENESS OF SCANNED COPIES OF THIS PLAN SHEET.

NOTES:

1. FOR ACCURATE RIGHT OF WAY, CONTACT RIGHT OF WAY ENGINEERING AT THE DISTRICT OFFICE.
2. COORDINATES, BEARINGS AND DISTANCES ARE BASED ON CC83 (199.35) ZONE 6.

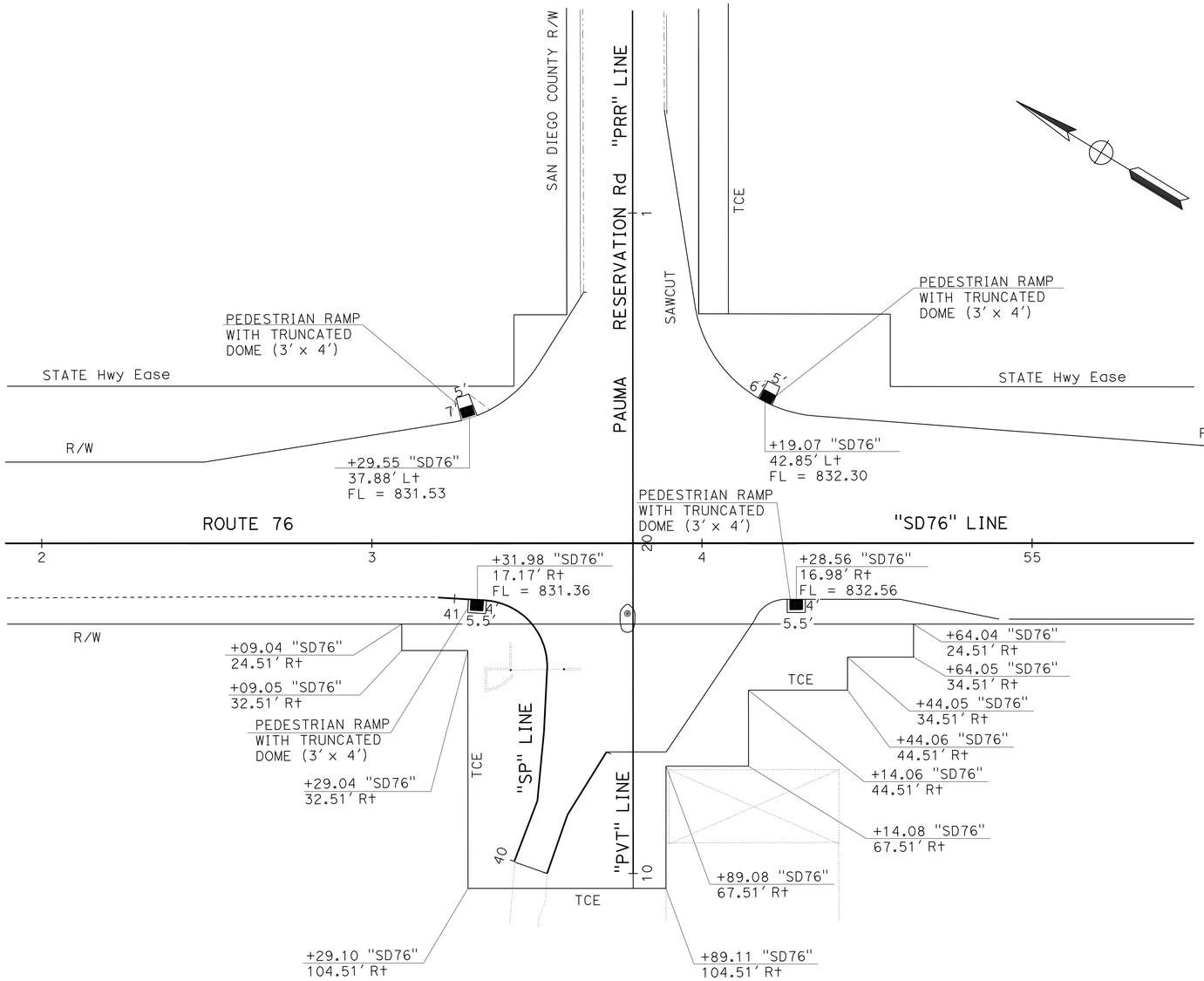

PAUMA RESERVATION Rd

SCALE: 1" = 20'

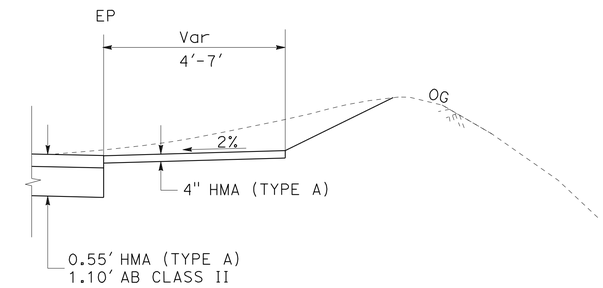

PEDESTRIAN RAMP DETAIL

NO SCALE

CONSTRUCTION DETAILS

SCALE AS SHOWN

C-3

STATE OF CALIFORNIA - DEPARTMENT OF TRANSPORTATION
Caltrans
TRAFFIC PROJECT DEVELOPMENT

FUNCTIONAL SUPERVISOR: RICHARD ESTRADA
CALCULATED-DESIGNED BY: EVANGELINA PALMA
CHECKED BY: JOSE L. ROBLES
REVISED BY
DATE REVISED

LAST REVISION 07-07-11
DATE PLOTTED => 22-JUL-2011
TIME PLOTTED => 11:08

Dist	COUNTY	ROUTE	POST MILES TOTAL PROJECT	SHEET No.	TOTAL SHEETS
11	SD	76	28.8/29.1	11	47

REGISTERED CIVIL ENGINEER 06-17-11 DATE

06-20-11
PLANS APPROVAL DATE

REGISTERED PROFESSIONAL ENGINEER JOSE L. ROBLES No. 64402 Exp. 06-30-13 CIVIL STATE OF CALIFORNIA

THE STATE OF CALIFORNIA OR ITS OFFICERS OR AGENTS SHALL NOT BE RESPONSIBLE FOR THE ACCURACY OR COMPLETENESS OF SCANNED COPIES OF THIS PLAN SHEET.

NOTES:

1. FOR ACCURATE RIGHT OF WAY, CONTACT RIGHT OF WAY ENGINEERING AT THE DISTRICT OFFICE.
2. COORDINATES, BEARINGS AND DISTANCES ARE BASED ON CC83 (199.35) ZONE 6.

LEGEND:

- TFR - TEMPORARY FIBER ROLLS
- TEMPORARY CONSTRUCTION ENTRANCE (TYPE 2)
- TEMPORARY HYDRAULIC MULCH (POLYMER STABILIZED FIBER MATRIX)

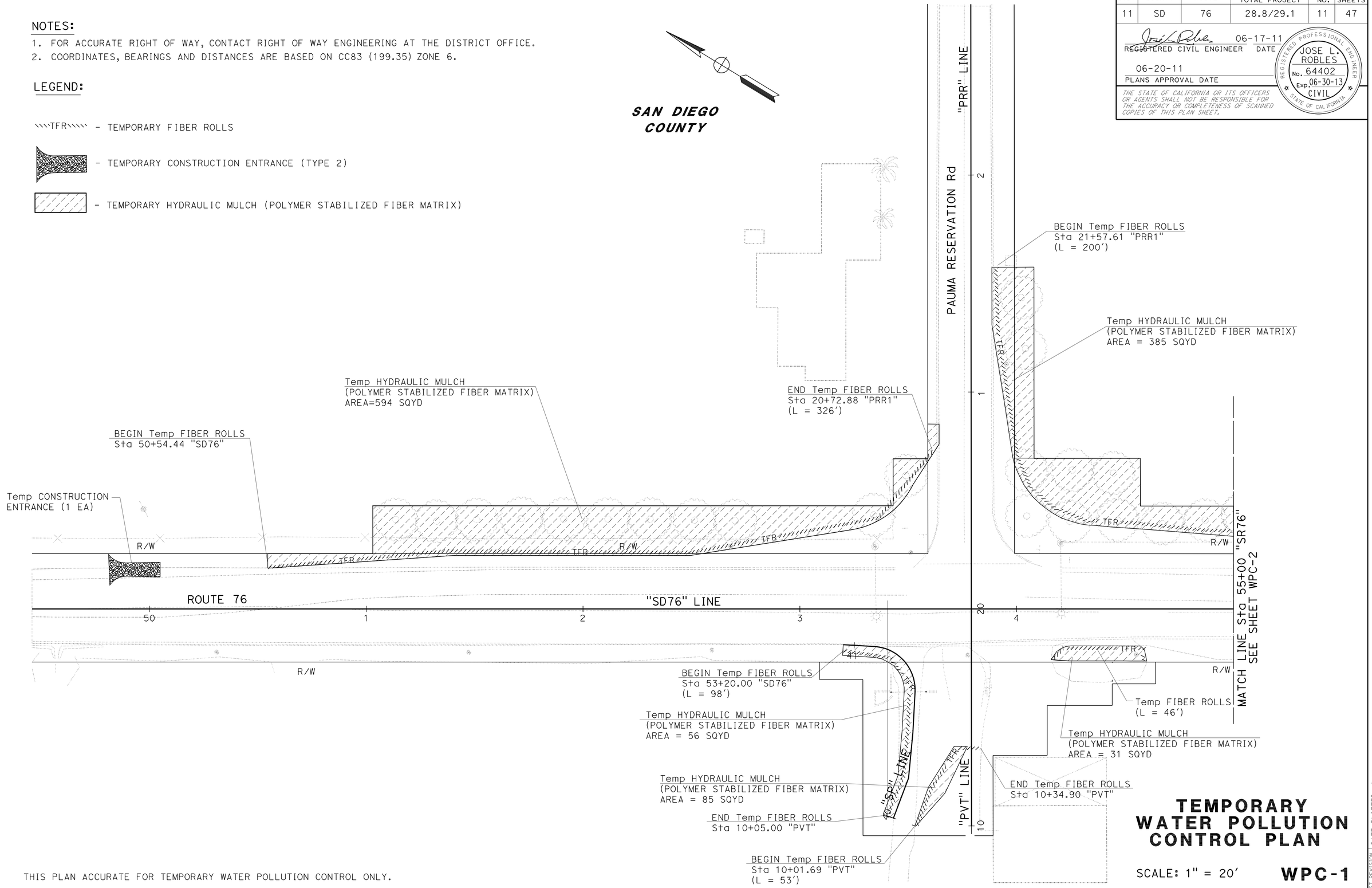

THIS PLAN ACCURATE FOR TEMPORARY WATER POLLUTION CONTROL ONLY.

TEMPORARY WATER POLLUTION CONTROL PLAN

SCALE: 1" = 20'

WPC-1

STATE OF CALIFORNIA - DEPARTMENT OF TRANSPORTATION
Caltrans
TRAFFIC PROJECT DEVELOPMENT

FUNCTIONAL SUPERVISOR: RICHARD ESTRADA
CALCULATED-DESIGNED BY: EVANGELINA PALMA
CHECKED BY: JOSE L. ROBLES
REVISED BY / DATE REVISED

LAST REVISION 07-07-11 | DATE PLOTTED => 22-JUL-2011 | TIME PLOTTED => 11:08

Dist	COUNTY	ROUTE	POST MILES TOTAL PROJECT	SHEET No.	TOTAL SHEETS
11	SD	76	28.8/29.1	12	47

REGISTERED CIVIL ENGINEER 06-17-11 DATE

06-20-11
PLANS APPROVAL DATE

REGISTERED PROFESSIONAL ENGINEER JOSE L. ROBLES No. 64402 Exp. 06-30-13 CIVIL STATE OF CALIFORNIA

THE STATE OF CALIFORNIA OR ITS OFFICERS OR AGENTS SHALL NOT BE RESPONSIBLE FOR THE ACCURACY OR COMPLETENESS OF SCANNED COPIES OF THIS PLAN SHEET.

NOTES:

1. FOR ACCURATE RIGHT OF WAY, CONTACT RIGHT OF WAY ENGINEERING AT THE DISTRICT OFFICE.
2. COORDINATES, BEARINGS AND DISTANCES ARE BASED ON CC83 (199.35) ZONE 6.
3. LENGTH OF FIBER ROLL IS FOR THIS PLAN ONLY.

TEMPORARY WATER POLLUTION CONTROL QUANTITY SUMMARY

SHEET	TEMPORARY CONSTRUCTION ENTRANCE	TEMPORARY FIBER ROLLS	TEMPORARY HYDRAULIC MULCH (POLYMER STABILIZED FIBER MATRIX)
	EA	LF	SQYD
WPC-1	1	723	1,151
WPC-2	1	261	457
TOTAL	2	984	1,608

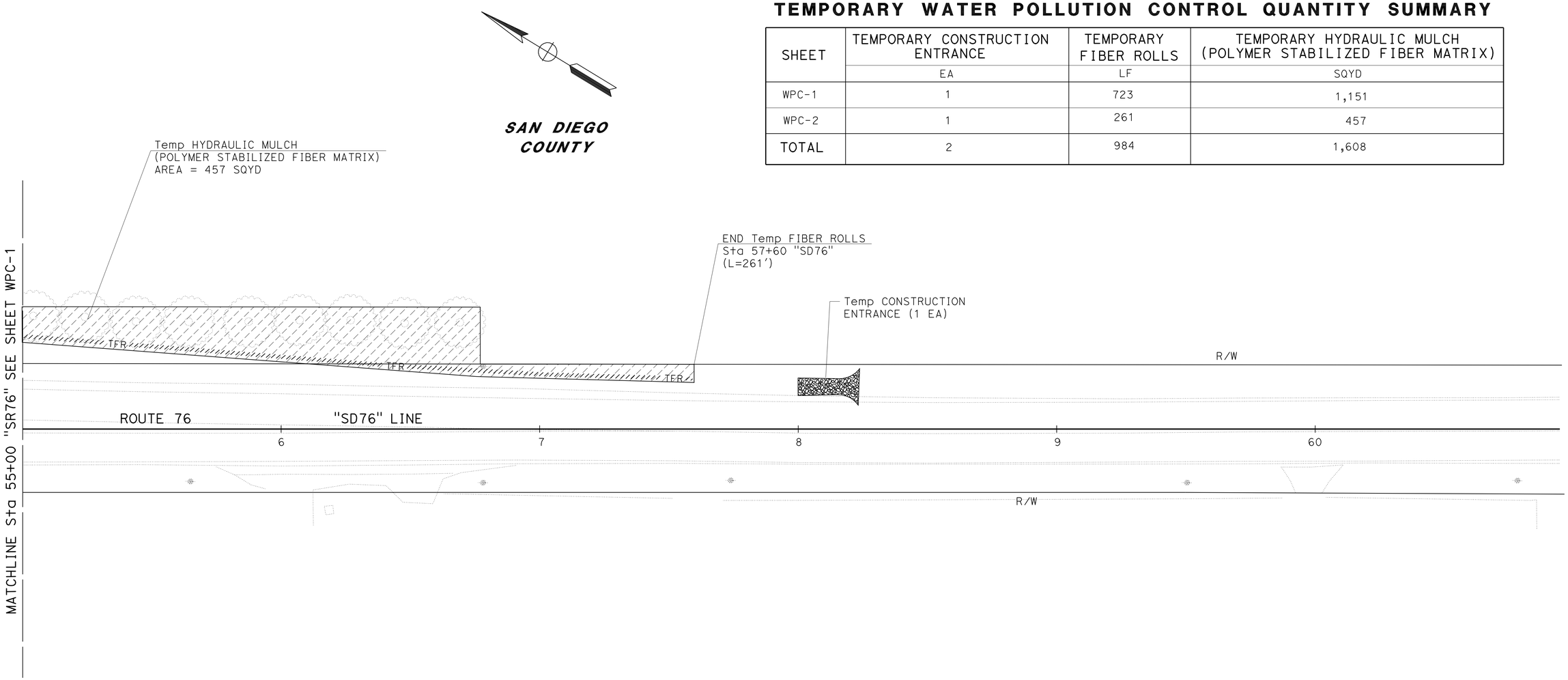

TEMPORARY WATER POLLUTION CONTROL PLAN AND QUANTITIES

SCALE: 1" = 20'

WPC-2

THIS PLAN ACCURATE FOR TEMPORARY WATER POLLUTION CONTROL ONLY.

STATE OF CALIFORNIA - DEPARTMENT OF TRANSPORTATION
Caltrans
TRAFFIC PROJECT DEVELOPMENT

FUNCTIONAL SUPERVISOR: RICHARD ESTRADA
CALCULATED-DESIGNED BY: EVANGELINA PALMA
CHECKED BY: JOSE L. ROBLES
REVISED BY
DATE REVISED

LAST REVISION 07-07-11
DATE PLOTTED => 22-JUL-2011
TIME PLOTTED => 11:08

Dist	COUNTY	ROUTE	POST MILES TOTAL PROJECT	SHEET No.	TOTAL SHEETS
11	SD	76	28.8/29.1	13	47

REGISTERED CIVIL ENGINEER DATE 06-17-11

PLANS APPROVAL DATE 06-20-11

REGISTERED PROFESSIONAL ENGINEER ARTURO A. REYES No. 75491 Exp. 06-30-12 CIVIL STATE OF CALIFORNIA

THE STATE OF CALIFORNIA OR ITS OFFICERS OR AGENTS SHALL NOT BE RESPONSIBLE FOR THE ACCURACY OR COMPLETENESS OF SCANNED COPIES OF THIS PLAN SHEET.

LEGEND:

SYMBOL	UTILITY	OWNER
w	Exist WATER	YUIMA MUNICIPAL WATER DISTRICT & PAUMA VALLEY WATER COMPANY
W	NEW WATER	YUIMA MUNICIPAL WATER DISTRICT & PAUMA VALLEY WATER COMPANY
tv (oh)	Exist TELEVISION	MEDIACOM
TV (OH)	NEW TELEVISION	MEDIACOM
t (oh)	Exist TELEPHONE	AT&T
T (OH)	NEW TELEPHONE	AT&T
e (oh)	Exist ELECTRICAL	SDG&E
E (OH)	NEW ELECTRICAL	SDG&E

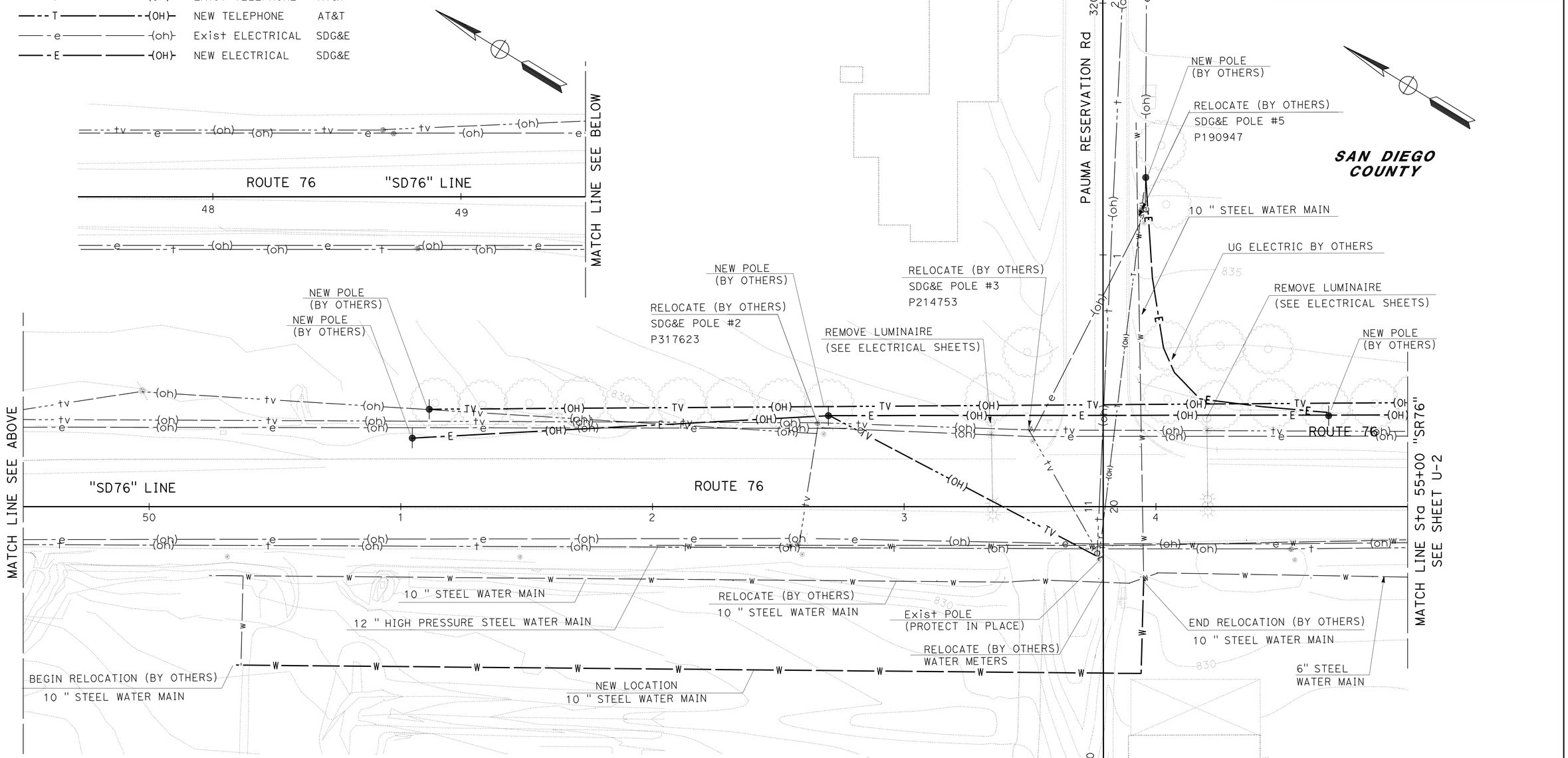

NOTES:

1. FOR ACCURATE RIGHT OF WAY, CONTACT RIGHT OF WAY ENGINEERING AT THE DISTRICT OFFICE.
2. LOCATION OF UTILITY FACILITIES SHOWN ON THESE PLANS WERE OBTAINED FROM OWNER RECORDS AND/OR FROM STATE SURVEYS.
3. ALL UTILITIES TO BE FIELD VERIFIED.

THIS PLAN ACCURATE FOR UTILITY WORK ONLY.

UTILITY PLAN

SCALE: 1" = 20'

U-1

STATE OF CALIFORNIA - DEPARTMENT OF TRANSPORTATION

PROJECT DEVELOPMENT

Caltrans

FUNCTIONAL SUPERVISOR: ABU-BAKR AL-JAFRI

CALCULATED-DESIGNED BY: ARTURO REYES

CHECKED BY: VASANT KALE

REVISED BY

DATE REVISED

LAST REVISION 07-08-11

DATE PLOTTED => 22-JUL-2011

TIME PLOTTED => 11:08

Dist	COUNTY	ROUTE	POST MILES TOTAL PROJECT	SHEET No.	TOTAL SHEETS
11	SD	76	28.8/29.1	14	47

REGISTERED CIVIL ENGINEER 06-17-11 DATE

06-20-11
PLANS APPROVAL DATE

REGISTERED PROFESSIONAL ENGINEER ARTURO A. REYES No. 75491 Exp. 06-30-12 CIVIL STATE OF CALIFORNIA

THE STATE OF CALIFORNIA OR ITS OFFICERS OR AGENTS SHALL NOT BE RESPONSIBLE FOR THE ACCURACY OR COMPLETENESS OF SCANNED COPIES OF THIS PLAN SHEET.

NOTES:

1. FOR ACCURATE RIGHT OF WAY, CONTACT RIGHT OF WAY ENGINEERING AT THE DISTRICT OFFICE.
2. LOCATION OF UTILITY FACILITIES SHOWN ON THESE PLANS WERE OBTAINED FROM OWNER RECORDS AND/OR FROM STATE SURVEYS.
3. ALL UTILITIES TO BE FIELD VERIFIED.

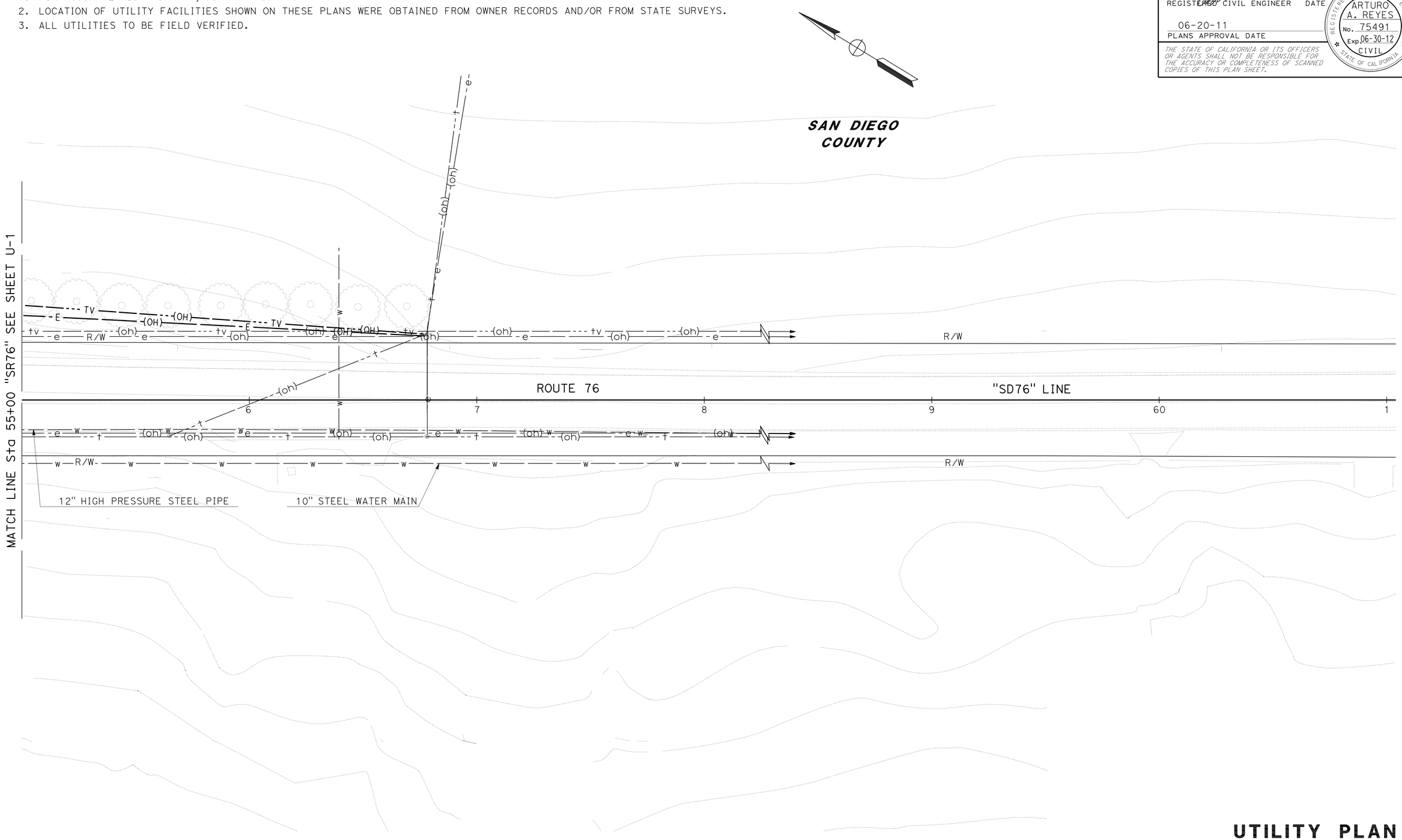

THIS PLAN ACCURATE FOR UTILITY WORK ONLY.

UTILITY PLAN

SCALE: 1" = 20'

U-2

STATE OF CALIFORNIA - DEPARTMENT OF TRANSPORTATION
PROJECT DEVELOPMENT
Caltrans

FUNCTIONAL SUPERVISOR: ABU-BAKR AL-JAFRI
CALCULATED-DESIGNED BY: ARTURO REYES
CHECKED BY: VASANT KALE
REVISED BY
DATE REVISED

LAST REVISION 07-08-11
DATE PLOTTED => 22-JUL-2011
TIME PLOTTED => 11:08

Dist	COUNTY	ROUTE	POST MILES TOTAL PROJECT	SHEET No.	TOTAL SHEETS
11	SD	76	28.8/29.1	15	47

REGISTERED CIVIL ENGINEER 06-17-11 DATE

06-20-11
PLANS APPROVAL DATE

REGISTERED PROFESSIONAL ENGINEER SHAHIN T. ADIBI No. 66748 Exp. 06-30-12 CIVIL STATE OF CALIFORNIA

THE STATE OF CALIFORNIA OR ITS OFFICERS OR AGENTS SHALL NOT BE RESPONSIBLE FOR THE ACCURACY OR COMPLETENESS OF SCANNED COPIES OF THIS PLAN SHEET.

NOTES:

1. EXACT LOCATION OF CONSTRUCTION AREA SIGNS WILL BE DETERMINED BY THE ENGINEER.
2. FEDERAL MUTCD SIGN CODES ARE SHOWN UNLESS DESIGNATED BY (CA) INDICATING STANDARD CALIFORNIA SIGN SPECIFICATIONS ARE USED.
3. EXISTING UTILITIES ARE NOT SHOWN ON THESE PLAN SHEETS. THE CONTRACTOR SHALL VERIFY LOCATIONS OF EXISTING UTILITIES AND ADJUST THE FIELD LOCATION OF SIGN POSTS IN CONSULTATION WITH THE ENGINEER.

LEGEND

XX = CONSTRUCTION AREA SIGN

→ = DIRECTION OF TRAFFIC

TYPICAL PLACEMENT OF TRAFFIC PLASTIC DRUM

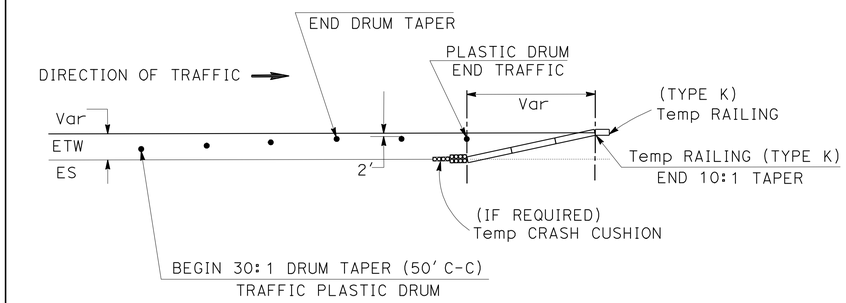

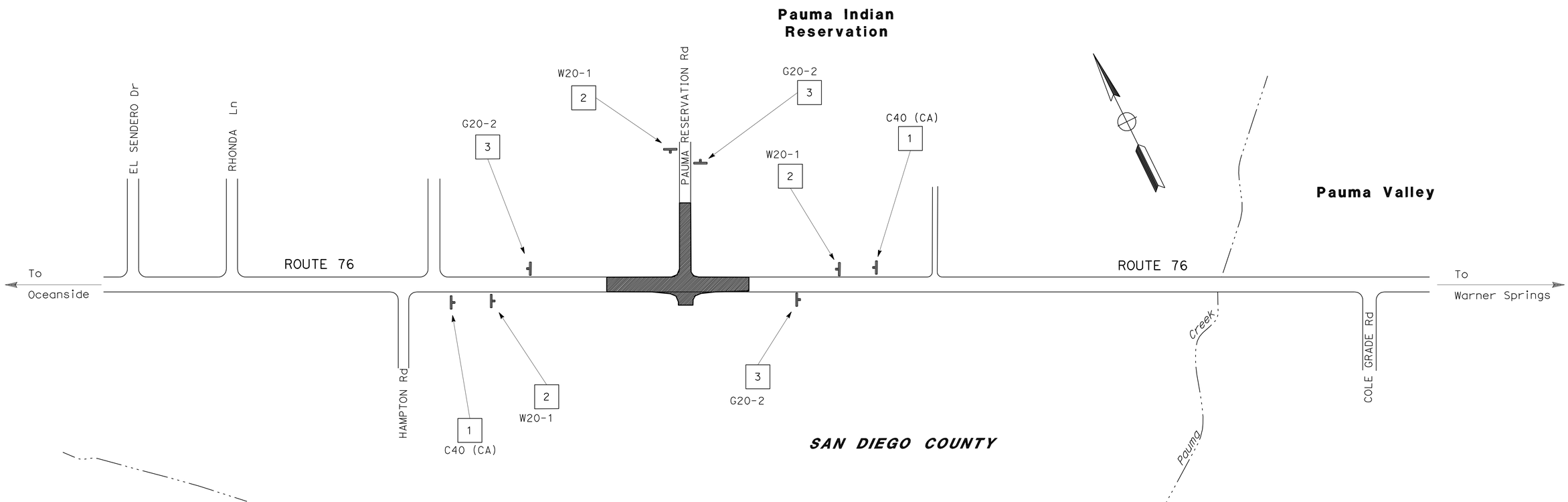

CONSTRUCTION AREA SIGNS

SIGN No.	CODE	PANEL SIZE (In)	No. OF POST AND SIZE (In)	No. OF SIGNS
1	C40 (CA)	108 X 42	2-4 X 6 (S)	2
2	W20-1	48 X 48	1-4 X 6 (S)	3
3	G20-2	48 X 24	1-4 X 6 (S)	3
			TOTAL	8

(S) DENOTES STATIONARY MOUNTED SIGN

NOTE: SEE SCQ-1 SHEET FOR ADDITONAL SIGNS

THIS PLAN ACCURATE FOR CONSTRUCTION AREA SIGN WORK ONLY

CONSTRUCTION AREA SIGNS

NO SCALE

CS-1

STATE OF CALIFORNIA - DEPARTMENT OF TRANSPORTATION

Caltrans® **TRAFFIC DESIGN**

FUNCTIONAL SUPERVISOR: CAMILLE ABOUFADEL

CALCULATED-DESIGNED BY: ROBERT EDEJER

CHECKED BY: SHAHIN T ADIBI

REVISED BY | DATE REVISED

LAST REVISION 07-08-11 | DATE PLOTTED => 22-JUL-2011 | TIME PLOTTED => 11:08

Dist	COUNTY	ROUTE	POST MILES TOTAL PROJECT	SHEET No.	TOTAL SHEETS
11	SD	76	28.8/29.1	16	47

REGISTERED CIVIL ENGINEER 06-17-11 DATE

06-20-11
PLANS APPROVAL DATE

REGISTERED PROFESSIONAL ENGINEER JOSE L. ROBLES No. 64402 Exp. 06-30-13 CIVIL STATE OF CALIFORNIA

THE STATE OF CALIFORNIA OR ITS OFFICERS OR AGENTS SHALL NOT BE RESPONSIBLE FOR THE ACCURACY OR COMPLETENESS OF SCANNED COPIES OF THIS PLAN SHEET.

NOTES:

1. FOR ACCURATE RIGHT OF WAY, CONTACT RIGHT OF WAY ENGINEERING AT THE DISTRICT OFFICE.

LEGEND:

- BT (XX) BEGIN TEMPORARY TRAFFIC STRIPE (PAINT)
- ET (XX) END TEMPORARY TRAFFIC STRIPE (PAINT)
- BR (XX) BEGIN REMOVAL PAVEMENT DELINEATION
- ER (XX) END REMOVAL PAVEMENT DELINEATION
- T (XX) TEMPORARY TRAFFIC STRIPE (PAINT)
- R (XX) REMOVE PAVEMENT DELINEATION
- T (XX) TEMPORARY ROADSIDE SIGN
- ∘ TRAFFIC PLASTIC DRUM
- WORK AREA
- TEMPORARY CRASH CUSHION (TYPE ADIEM)
- S/C SAWCUT LINE

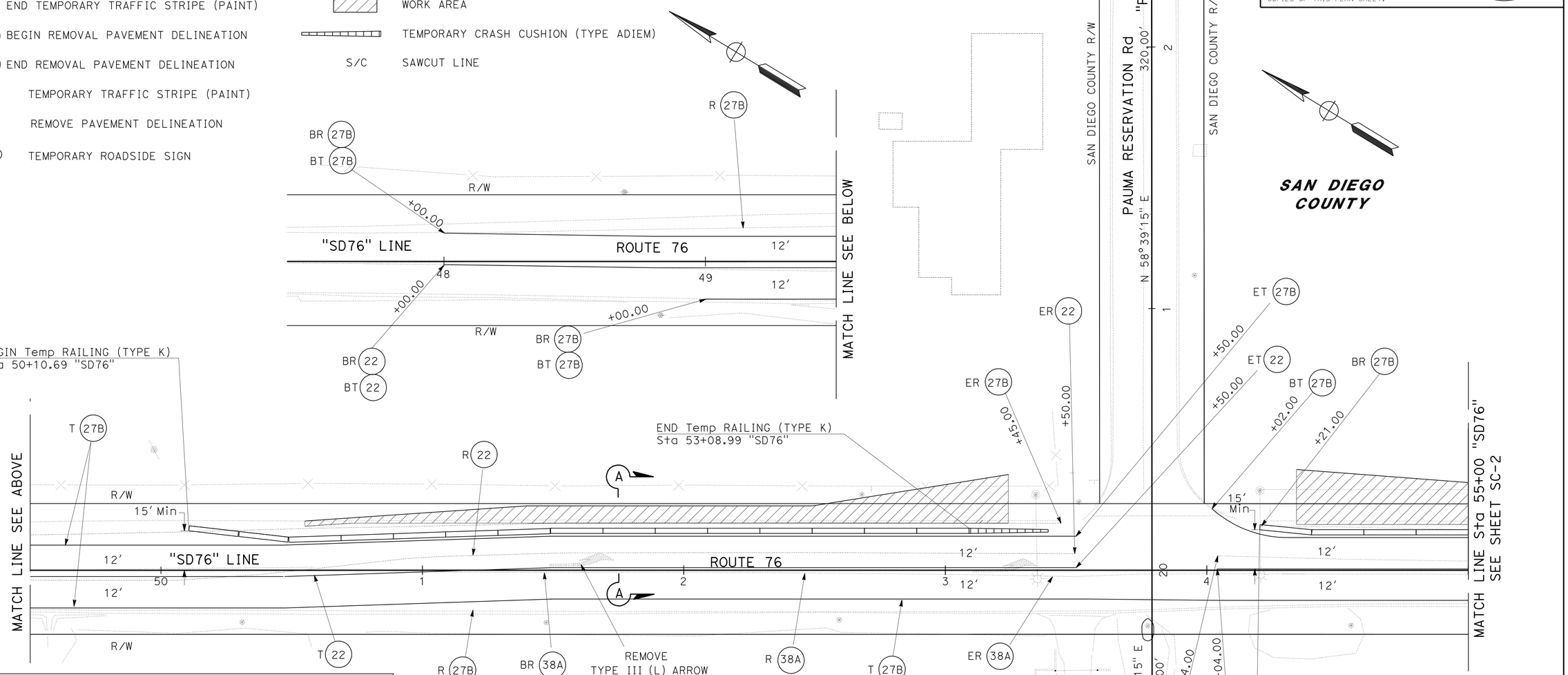

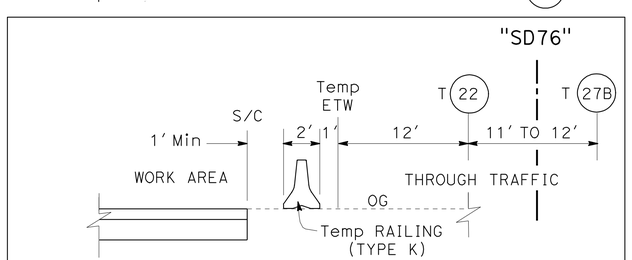

SECTION A-A
NO SCALE

THIS PLAN ACCURATE FOR STAGE CONSTRUCTION ONLY.

STAGE 1
STAGE CONSTRUCTION
SCALE: 1" = 20'

SC-1

REVISED BY	DATE REVISED
EVANGELINA D. PALMA	JOSE L. ROBLES
CALCULATED-DESIGNED BY	CHECKED BY
FUNCTIONAL SUPERVISOR	RICHARD ESTRADA

STATE OF CALIFORNIA - DEPARTMENT OF TRANSPORTATION
Caltrans TRAFFIC PROJECT DEVELOPMENT

LAST REVISION 07-08-11 | DATE PLOTTED => 22-JUL-2011 | TIME PLOTTED => 11:09

Dist	COUNTY	ROUTE	POST MILES TOTAL PROJECT	SHEET No.	TOTAL SHEETS
11	SD	76	28.8/29.1	17	47

REGISTERED CIVIL ENGINEER 06-17-11 DATE

06-20-11
PLANS APPROVAL DATE

REGISTERED PROFESSIONAL ENGINEER JOSE L. ROBLES No. 64402 Exp. 06-30-13 CIVIL STATE OF CALIFORNIA

THE STATE OF CALIFORNIA OR ITS OFFICERS OR AGENTS SHALL NOT BE RESPONSIBLE FOR THE ACCURACY OR COMPLETENESS OF SCANNED COPIES OF THIS PLAN SHEET.

NOTES:

1. FOR ACCURATE RIGHT OF WAY, CONTACT RIGHT OF WAY ENGINEERING AT THE DISTRICT OFFICE.
2. COORDINATES, BEARINGS AND DISTANCES ARE BASED ON CC83 (199.35) ZONE 6.

SAN DIEGO COUNTY

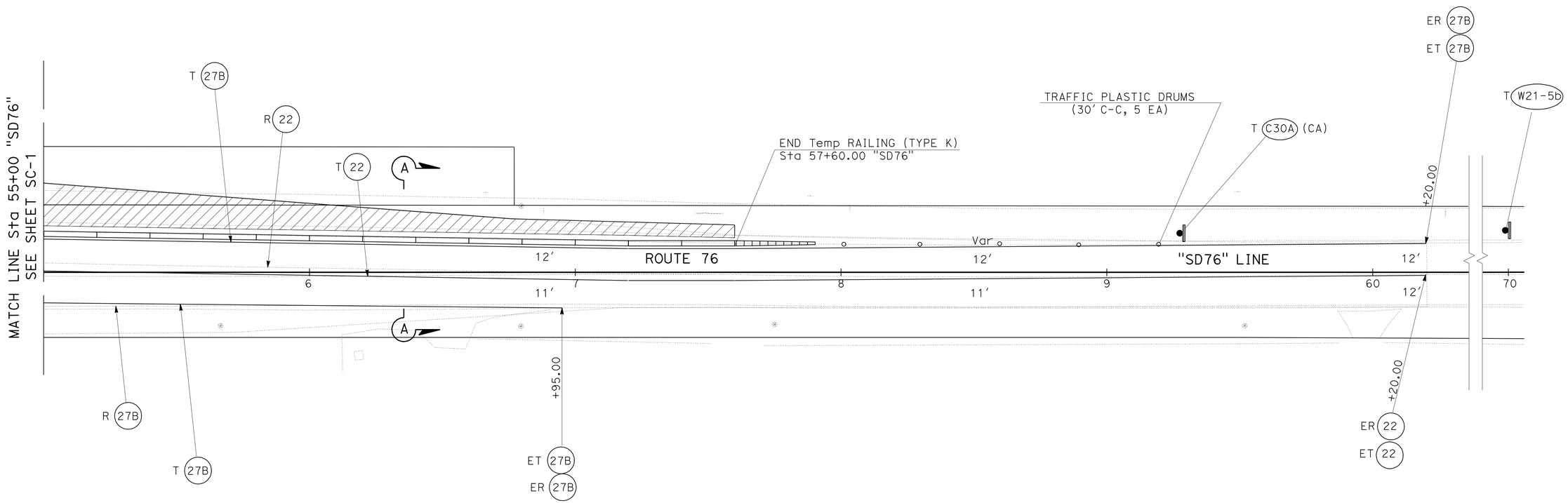

THIS PLAN ACCURATE FOR STAGE CONSTRUCTION ONLY.

STAGE 1

STAGE CONSTRUCTION

SCALE: 1" = 20'

SC-2

STATE OF CALIFORNIA - DEPARTMENT OF TRANSPORTATION
Caltrans PROJECT DEVELOPMENT
TRAFFIC

FUNCTIONAL SUPERVISOR: RICHARD ESTRADA
CALCULATED-DESIGNED BY: EVANGELINA D. PALMA
CHECKED BY: JOSE L. ROBLES
REVISED BY
DATE REVISED

LAST REVISION 07-08-11
DATE PLOTTED => 22-JUL-2011
TIME PLOTTED => 11:09

Dist	COUNTY	ROUTE	POST MILES TOTAL PROJECT	SHEET No.	TOTAL SHEETS
11	SD	76	28.8/29.1	18	47

REGISTERED CIVIL ENGINEER DATE 06-17-11

06-20-11
PLANS APPROVAL DATE

REGISTERED PROFESSIONAL ENGINEER JOSE L. ROBLES No. 64402 Exp. 06-30-13 CIVIL STATE OF CALIFORNIA

THE STATE OF CALIFORNIA OR ITS OFFICERS OR AGENTS SHALL NOT BE RESPONSIBLE FOR THE ACCURACY OR COMPLETENESS OF SCANNED COPIES OF THIS PLAN SHEET.

NOTES:

1. FOR ACCURATE RIGHT OF WAY, CONTACT RIGHT OF WAY ENGINEERING AT THE DISTRICT OFFICE.

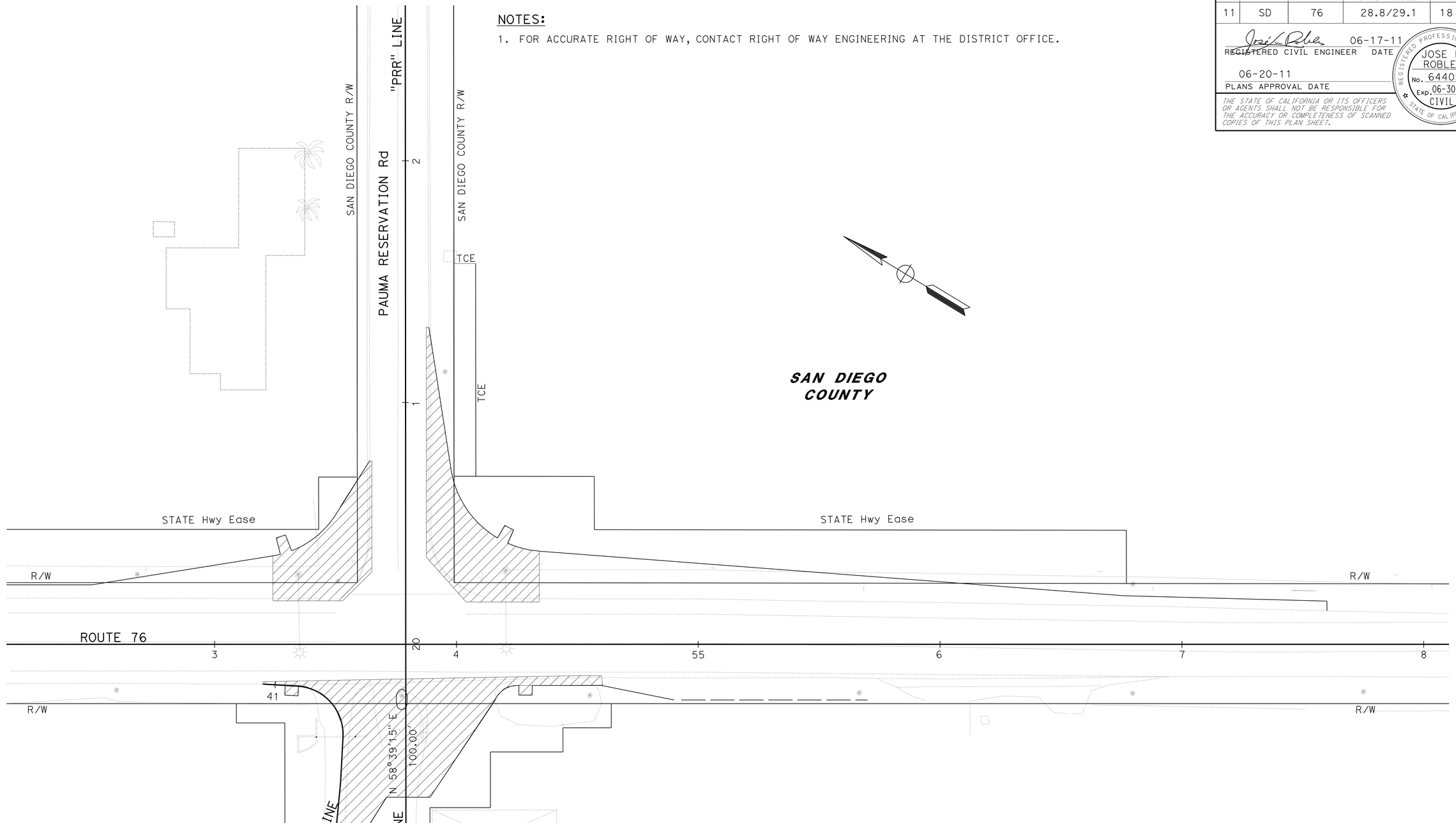

THIS PLAN ACCURATE FOR STAGE CONSTRUCTION ONLY.

STAGE 2

STAGE CONSTRUCTION

SCALE: 1" = 20'

SC-3

STATE OF CALIFORNIA - DEPARTMENT OF TRANSPORTATION
Caltrans
TRAFFIC PROJECT DEVELOPMENT

FUNCTIONAL SUPERVISOR: RICHARD ESTRADA

CALCULATED-DESIGNED BY: EVANGELINA D. PALMA
CHECKED BY: JOSE L. ROBLES

REVISED BY
DATE REVISED

LAST REVISION 07-08-11 | DATE PLOTTED => 22-JUL-2011 | TIME PLOTTED => 11:09

Dist	COUNTY	ROUTE	POST MILES TOTAL PROJECT	SHEET No.	TOTAL SHEETS
11	SD	76	28.8/29.1	19	47

REGISTERED CIVIL ENGINEER 06-17-11 DATE

06-20-11
PLANS APPROVAL DATE

REGISTERED PROFESSIONAL ENGINEER JOSE L. ROBLES No. 64402 Exp. 06-30-13 CIVIL STATE OF CALIFORNIA

THE STATE OF CALIFORNIA OR ITS OFFICERS OR AGENTS SHALL NOT BE RESPONSIBLE FOR THE ACCURACY OR COMPLETENESS OF SCANNED COPIES OF THIS PLAN SHEET.

TEMPORARY PAVEMENT DELINEATION

TEMPORARY PAVEMENT MARKER						TEMPORARY TRAFFIC STRIPE	
ROUTE	LINE	LOCATION FROM STATION	LOCATION TO STATION	DETAIL No.	TYPE D (EA) Yellow	PAINT (LF) 4"	REMARKS
76	"SD76"	48+00.00	60+20.00	22	100	1,166	L = 1,166′
76	"SD76"	48+00.00	60+20.00	27B		2,065	
				TOTAL	100	3,231	

TEMPORARY CRASH CUSHION (TYPE ADIEM)

SHEET	EA
SC-1	1
SC-2	1
TOTAL	2

TEMPORARY RAILING (TYPE K)

SHEET	LF
SC-1	380
SC-2	260
TOTAL	640

TRAFFIC PLASTIC DRUM

SHEET	EA
SC-1	-
SC-2	5
TOTAL	5

REMOVE PAINTED TRAFFIC STRIPE

ROUTE	LINE	SHEET	TYPE	LF	REMARKS
76	"SD76"	SC-1 & SC-2	DETAIL 27B	1,939	
76	"SD76"	SC-1	DETAIL 38A	340	L = 170′
			TOTAL	2,279	

NOTE: SEE PD SHEETS FOR ADDITIONAL REMOVAL.

REMOVE YELLOW PAINTED TRAFFIC STRIPE (HAZARDOUS WASTE)

ROUTE	LINE	SHEET	TYPE	LF	REMARKS
					INCLUDES THE 3" BLACK PAINT STRIPE
76	"SD76"	SC-1 & SC-2	DETAIL 22	3,206	
			TOTAL	3,206	

NOTE: SEE PD SHEETS FOR ADDITIONAL REMOVAL.

REMOVE THERMOPLASTIC PAVEMENT MARKING

ROUTE	LOCATION	DIRECTION	POSTMILE	TYPE III (L) SQFT
76	MAINLANE	EB	28.9	84
			TOTAL	84

NOTE: SEE PD SHEETS FOR ADDITIONAL REMOVAL.

REMOVE PAVEMENT MARKER (N)

ROUTE	LINE	SHEET	TYPE	EA
76	"SD76"	SC-1 & SC-2	DETAIL 22	268
			TOTAL	268

NOTE: SEE PD SHEETS FOR ADDITIONAL REMOVAL.

CONSTRUCTION AREA SIGNS

SIGN No.	CODE	PANEL SIZE (In)	No. OF POST AND SIZE (In)	No. OF SIGNS
1	C30A (CA)	36 X 36	1-4 X 4 (S)	1
2	W21-5B (1000′)	36 X 36	1-4 X 4 (S)	1
			TOTAL	2

(S) DENOTES STATIONARY MOUNTED SIGN

NOTE: SEE CS-1 SHEET FOR ADDITIONAL SIGNS

STAGE CONSTRUCTION QUANTITIES

SCQ-1

REVISED BY | DATE REVISED
EVANGELINA PALMA | JOSE L. ROBLES
CALCULATED-DESIGNED BY | CHECKED BY
FUNCTIONAL SUPERVISOR: RICHARD ESTRADA

STATE OF CALIFORNIA - DEPARTMENT OF TRANSPORTATION
Caltrans
TRAFFIC PROJECT DEVELOPMENT

LAST REVISION 07-08-11 | DATE PLOTTED => 22-JUL-2011 | TIME PLOTTED => 11:09

Dist	COUNTY	ROUTE	POST MILES TOTAL PROJECT	SHEET No.	TOTAL SHEETS
11	SD	76	28.8/29.1	20	47

REGISTERED CIVIL ENGINEER DATE 06-17-11

06-20-11
PLANS APPROVAL DATE

REGISTERED PROFESSIONAL ENGINEER SHAHIN T. ADIBI No. 66748 Exp. 06-30-12 CIVIL STATE OF CALIFORNIA

THE STATE OF CALIFORNIA OR ITS OFFICERS OR AGENTS SHALL NOT BE RESPONSIBLE FOR THE ACCURACY OR COMPLETENESS OF ELECTRONIC COPIES OF THIS PLAN SHEET.

LEGEND

- = CHANGE OF PAVEMENT DELINEATION DETAIL
- U/L = UPPER AND LOWER CASE LETTERING
- NUM = NUMERAL SIZE
- (XX) = PAVEMENT DELINEATION DETAIL
- R (XX) = BEGIN REMOVE PAVEMENT DELINEATION DETAIL
- BR (XX) = BEGIN REMOVE PAVEMENT DELINEATION DETAIL
- ER (XX) = END REMOVE PAVEMENT DELINEATION DETAIL
- = SIGNAL LIGHT POST AND MAST-ARM
- (XX) = ROADSIDE SIGN
- MA (XX) = MAST ARM MOUNTED SIGN
- RM (XX) = REMOVE ROADSIDE SIGN
- S/S (XX) = STRAP AND SADDLE BRACKET METHOD
- RS (XX) = RESET ROADSIDE SIGN
- EP (XX) = INSTALL ROADSIDE SIGN PANEL ON EXISTING POST

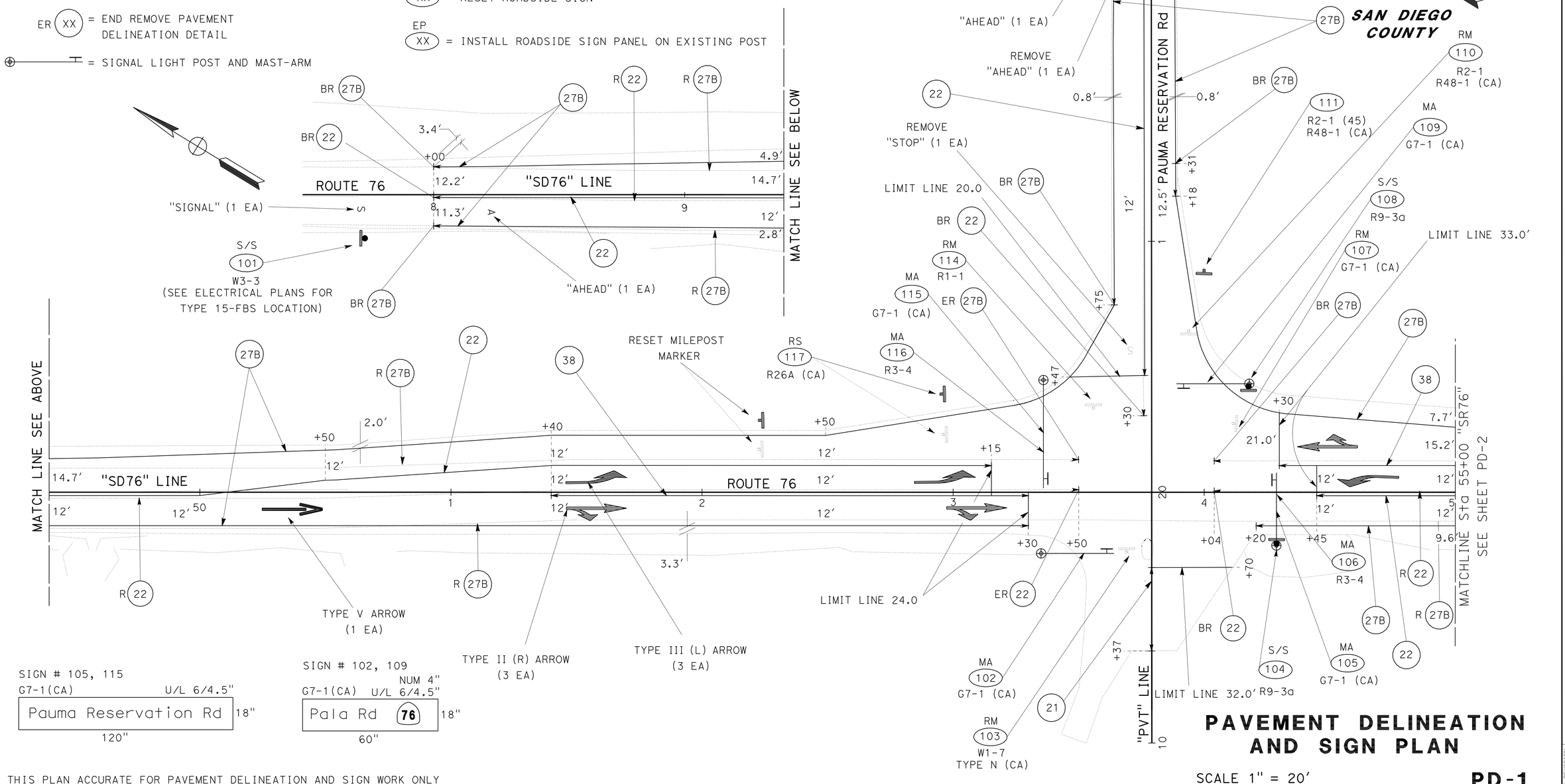

THIS PLAN ACCURATE FOR PAVEMENT DELINEATION AND SIGN WORK ONLY

PAVEMENT DELINEATION AND SIGN PLAN

SCALE 1" = 20'

PD-1

STATE OF CALIFORNIA - DEPARTMENT OF TRANSPORTATION
Caltrans TRAFFIC DESIGN

FUNCTIONAL SUPERVISOR: CAMILLE ABOUFADEL
CALCULATED-DESIGNED BY: ROBERT EDEJER
CHECKED BY: SHAHIN T ADIBI
REVISED BY / DATE REVISED

LAST REVISION 07-08-11 | DATE PLOTTED => 22-JUL-2011 | TIME PLOTTED => 11:09

Dist	COUNTY	ROUTE	POST MILES TOTAL PROJECT	SHEET No.	TOTAL SHEETS
11	SD	76	28.8/29.1	21	47

06-17-11
REGISTERED CIVIL ENGINEER DATE

06-20-11
PLANS APPROVAL DATE

REGISTERED PROFESSIONAL ENGINEER
SHAHIN T. ADIBI
No. 66748
Exp. 06-30-12
CIVIL
STATE OF CALIFORNIA

THE STATE OF CALIFORNIA OR ITS OFFICERS OR AGENTS SHALL NOT BE RESPONSIBLE FOR THE ACCURACY OR COMPLETENESS OF ELECTRONIC COPIES OF THIS PLAN SHEET.

NOTES:

1. SEE STANDARD PLAN A40B FOR CENTERLINE RUMBLE STRIP (AC, GROUND-IN INDENTATION) DIMENSIONS.
2. CENTERLINE RUMBLE STRIP (AC, GROUND-IN INDENTATIONS) SHALL NOT BE PLACED AT INTERSECTIONS.

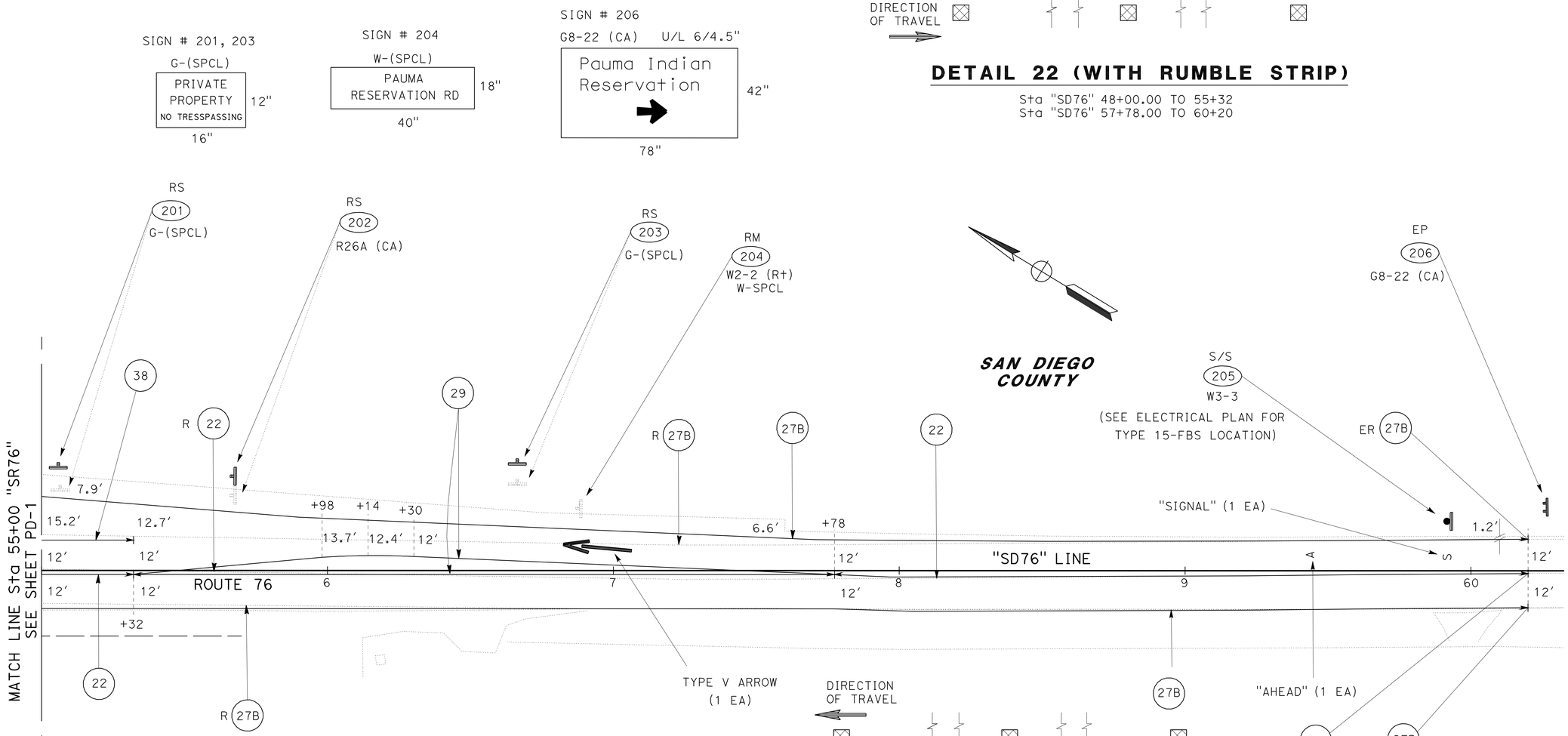

DETAIL 22 (WITH RUMBLE STRIP)

Sta "SD76" 48+00.00 TO 55+32
Sta "SD76" 57+78.00 TO 60+20

DETAIL 29 (WITH RUMBLE STRIP)

Sta "SD76" 55+32 TO 57+78.00

THIS PLAN ACCURATE FOR PAVEMENT DELINEATION AND SIGN WORK ONLY

PAVEMENT DELINEATION AND SIGN PLAN

SCALE: 1" = 20'

PD-2

STATE OF CALIFORNIA - DEPARTMENT OF TRANSPORTATION
Caltrans TRAFFIC DESIGN

FUNCTIONAL SUPERVISOR: CAMILLE ABOUFADEL
CALCULATED-DESIGNED BY: ROBERT EDEJER
CHECKED BY: SHAHIN T ADIBI
REVISED BY
DATE REVISED

LAST REVISION DATE PLOTTED => 22-JUL-2011
TIME PLOTTED => 11:09
07-08-11

Dist	COUNTY	ROUTE	POST MILES TOTAL PROJECT	SHEET No.	TOTAL SHEETS
11	SD	76	28.8/29.1	22	47

06-17-11
REGISTERED CIVIL ENGINEER DATE

06-20-11
PLANS APPROVAL DATE

REGISTERED PROFESSIONAL ENGINEER SHAHIN T. ADIBI No. 66748 Exp. 06-30-12 CIVIL STATE OF CALIFORNIA

THE STATE OF CALIFORNIA OR ITS OFFICERS OR AGENTS SHALL NOT BE RESPONSIBLE FOR THE ACCURACY OR COMPLETENESS OF SCANNED COPIES OF THIS PLAN SHEET.

PAVEMENT DELINEATION QUANTITIES

ROUTE	DESCRIPTION	POSTMILE	SHEET No.	DETAIL	PAVEMENT MARKER SUMMARY RETROREFLECTIVE (EA) TYPE D YELLOW	PAVEMENT MARKER SUMMARY RETROREFLECTIVE (EA) TYPE G CLEAR	TRAFFIC STRIPE SUMMARY PAINT (LF) (1-COAT)	TRAFFIC STRIPE SUMMARY THERMOPLASTIC (LF) 4" SOLID	TRAFFIC STRIPE SUMMARY THERMOPLASTIC (LF) 8" SOLID	REMARKS
76	EB/WB - MAINLANE	28.9	PD-1	22	49		585*	1,170		L = 585'
				27B				2,220		
				38		9			190	
	PRIVATE DRIVEWAY			21			33*	66		L = 33'
	PAUMA RESERVATION Rd			22	22		231*	462		L = 231'
				27B				496		
	EB/WB - MAINLANE		PD-2	22	23		274*	548		L = 274'
				27B				1,240		
				29	24		492*	984		L = 246'
				38		5			102	
				SUBTOTAL	118	14	1,615*	7,186	292	
				TOTAL	132		1,615*	7,186	292	

* - BLACK PAINT

THERMOPLASTIC PAVEMENT MARKING

ROUTE	LOCATION	DIRECTION	POSTMILE	TYPE II (R) SQFT	TYPE III (L) SQFT	TYPE V SQFT	SIGNAL SQFT	AHEAD SQFT	12" LIMIT LINE SQFT	
76	MAINLANE	EB	28.9	90	84	33	32	31	24	
	MAINLANE	WB		45	42	33	32	31	36	
	PAUMA RESERVATION ROAD	NB					32	31	32	
	PAUMA RESERVATION ROAD	SB							20	
			SUBTOTAL	135	126	66	96	93	112	
			TOTAL	628						

PAVEMENT DELINEATION QUANTITIES

PDQ-1

REVISED BY | DATE REVISED
ROBERT EDEJER | SHAHIN T ADIBI
CALCULATED-DESIGNED BY | CHECKED BY
FUNCTIONAL SUPERVISOR: CAMILLE ABOUFADEL

STATE OF CALIFORNIA - DEPARTMENT OF TRANSPORTATION
Caltrans
TRAFFIC DESIGN

LAST REVISION 07-08-11 | DATE PLOTTED => 22-JUL-2011 | TIME PLOTTED => 11:09

Dist	COUNTY	ROUTE	POST MILES TOTAL PROJECT	SHEET No.	TOTAL SHEETS
11	SD	76	28.8/29.1	23	47

06-17-11
REGISTERED CIVIL ENGINEER DATE

06-20-11
PLANS APPROVAL DATE

REGISTERED PROFESSIONAL ENGINEER
SHAHIN T. ADIBI
No. 66748
Exp. 06-30-12
CIVIL
STATE OF CALIFORNIA

THE STATE OF CALIFORNIA OR ITS OFFICERS OR AGENTS SHALL NOT BE RESPONSIBLE FOR THE ACCURACY OR COMPLETENESS OF SCANNED COPIES OF THIS PLAN SHEET.

REMOVE PAINTED TRAFFIC STRIPE

ROUTE	DESCRIPTION	POSTMILE	SHEET No.	DETAIL	LENGTH (LF)	REMARKS
76	EB/WB - MAINLANE	28.9	PD-1	22	1,165	3X LENGTH (INCLUDING BLACK PAINT)
				27B	1,350	
	PAUMA RESERVATION Rd			27B	350	
	EB/WB - MAINLANE		PD-2	22	1,560	3X LENGTH (INCLUDING BLACK PAINT)
				27B	1,040	
				TOTAL	5,465*	

REMOVE YELLOW PAINTED TRAFFIC STRIPE (HAZARDOUS WASTE)

ROUTE	DESCRIPTION	POSTMILE	SHEET No.	DETAIL	LENGTH (LF)	REMARKS
76	PAUMA RESERVATION Rd	28.9	PD-1	22	744	2X LENGTH
				TOTAL	744*	

RESET MILEPOST MARKER

ROUTE	LOCATION	DIRECTION	POSTMILE	EA
76	MAINLANE	WB	29.0	1
			TOTAL	1

REMOVE PAVEMENT MARKER (N)

ROUTE	DESCRIPTION	POSTMILE	DETAIL	TYPE	EA
76	EB/WB MAINLANE	28.9	22,38	D, G	104
	PAUMA RESERVATION Rd		22	D	24
				SUBTOTAL	128*

(N) - NOT A SEPARATE PAY ITEM, FOR INFORMATION ONLY.
* SEE SCQ SHEETS FOR ADDITIONAL QUANTITIES.

PAVEMENT DELINEATION QUANTITIES

PDQ-2

REVISED BY | DATE REVISED
ROBERT EDEJER | SHAHIN T ADIBI
CALCULATED-DESIGNED BY | CHECKED BY
FUNCTIONAL SUPERVISOR: CAMILLE ABOUFADEL
STATE OF CALIFORNIA - DEPARTMENT OF TRANSPORTATION
Caltrans
TRAFFIC DESIGN

LAST REVISION 07-08-11 | DATE PLOTTED => 22-JUL-2011 | TIME PLOTTED => 11:09

Dist	COUNTY	ROUTE	POST MILES TOTAL PROJECT	SHEET No.	TOTAL SHEETS
11	SD	76	28.8/29.1	24	47

REGISTERED CIVIL ENGINEER 06-17-11 DATE

06-20-11
PLANS APPROVAL DATE

REGISTERED PROFESSIONAL ENGINEER SHAHIN T. ADIBI No. 66748 Exp. 06-30-12 CIVIL STATE OF CALIFORNIA

THE STATE OF CALIFORNIA OR ITS OFFICERS OR AGENTS SHALL NOT BE RESPONSIBLE FOR THE ACCURACY OR COMPLETENESS OF SCANNED COPIES OF THIS PLAN SHEET.

LEGEND:

U/L = UPPER/LOWER
Caps = CAPITAL LETTERING
Num = NUMBER
SPCL = SPECIAL

SIGN #102, 109
G7-1 (CA)

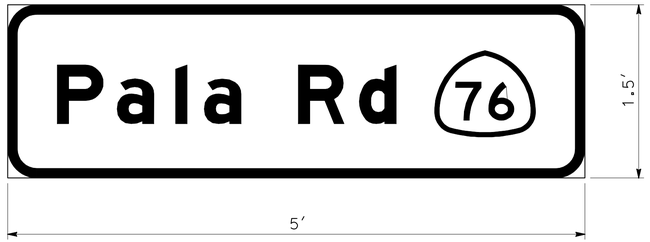

LEGEND				ARROW
LINE#	U/L	Caps	Num	Deg
1	6/4.5 E(M)		4	

SIGN #206
G8-22 (CA)

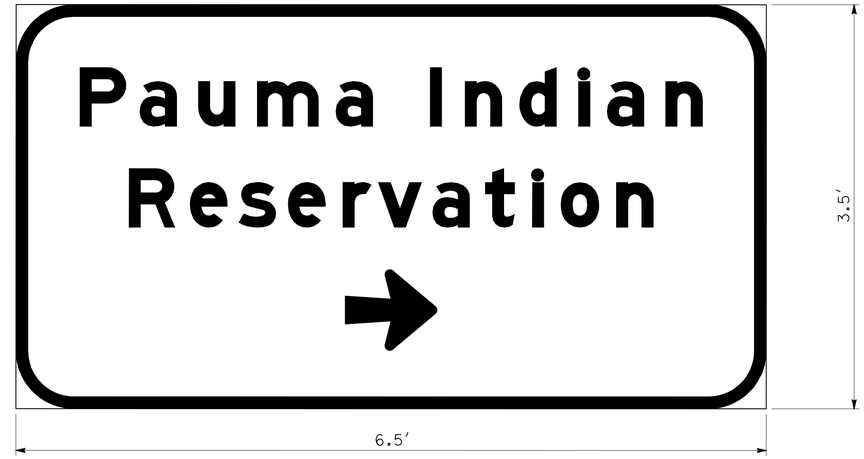

LEGEND				ARROW	
LINE#	U/L	Caps	Num	Deg	LENGTH
1	6/4.5 E(M)				
2	6/4.5 E(M)				
3				0	10

SIGN #105, 115
G7-1 (CA)

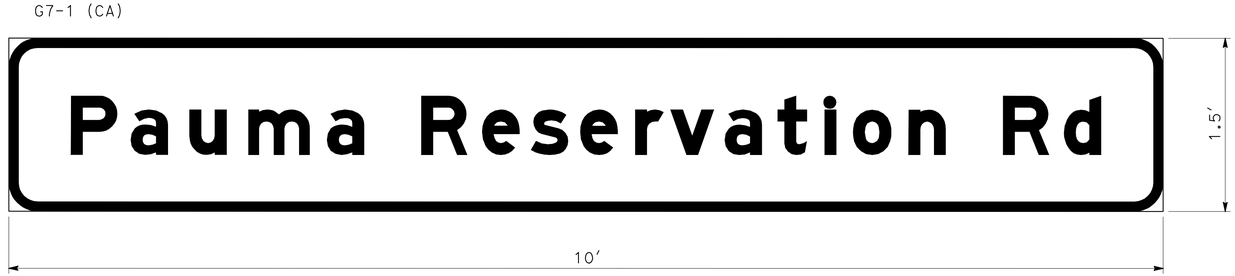

LEGEND				ARROW
LINE#	U/L	Caps	Num	Deg
1	6/4.5 E(M)			

SIGN DETAILS

NO SCALE

SD-1

REVISED BY | DATE REVISED
ROBERT EDEJER | SHAHIN T ADIBI
CALCULATED-DESIGNED BY | CHECKED BY
FUNCTIONAL SUPERVISOR
CAMILLE ABOUFADEL

STATE OF CALIFORNIA - DEPARTMENT OF TRANSPORTATION
Caltrans
TRAFFIC DESIGN

LAST REVISION 07-08-11 | DATE PLOTTED => 22-JUL-2011 | TIME PLOTTED => 11:09

Dist	COUNTY	ROUTE	POST MILES TOTAL PROJECT	SHEET No.	TOTAL SHEETS
11	SD	76	28.8/29.1	25	47

REGISTERED CIVIL ENGINEER 06-17-11 DATE

06-20-11
PLANS APPROVAL DATE

REGISTERED PROFESSIONAL ENGINEER SHAHIN T. ADIBI No. 66748 Exp. 06-30-12 CIVIL STATE OF CALIFORNIA

THE STATE OF CALIFORNIA OR ITS OFFICERS OR AGENTS SHALL NOT BE RESPONSIBLE FOR THE ACCURACY OR COMPLETENESS OF SCANNED COPIES OF THIS PLAN SHEET.

NOTES:

1. FEDERAL MANUAL ON UNIFORM TRAFFIC CONTROL DEVICES (MUTCD) SIGN CODES ARE SHOWN UNLESS DESIGNATED BY (CA), INDICATING CALIFORNIA MUTCD.
2. MINIMUM POST LENGTHS WERE CALCULATED ASSUMING A LEVEL GROUND SURFACE FROM THE EP. ENSURE "C" DIMENSION IS MET. POST LENGTHS MAY VARY DUE TO SITE CONDITIONS.
3. EXACT LOCATIONS OF SIGNS AND POSTS WILL BE DETERMINED BY THE ENGINEER.
4. REFER TO "FURNISH ROADSIDE SIGN PANEL" CHART FOR FURTHER INFORMATION.
5. (N) - NOT A SEPARATE PAY ITEM. FOR INFORMATION ONLY.

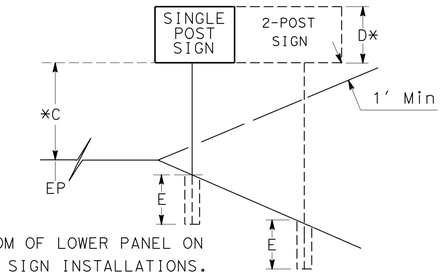

*TO BOTTOM OF LOWER PANEL ON MULTIPLE SIGN INSTALLATIONS.

ROADSIDE SIGN QUANTITIES

SHEET NUMBER	SIGN NUMBER	CODE	PANEL SIZE Horiz X Vert	D	C	E	MINIMUM POST LENGTH	POST SIZE 4 X 6	ROADSIDE SIGN ONE POST	ROADSIDE SIGN RESET	ROADSIDE SIGN REMOVE	INSTALL ROAD-SIDE SIGN PANEL ON EXISTING POST	INSTALL SIGN (STRAP AND SADDLE BRACKET METHOD)	MAST ARM MOUNTED SIGN (N)	REMARKS
			INCHES X INCHES	F†	F†	F†	F†	INCHES X INCHES	EA	EA	EA	EA	EA	EA	
PD-1	101	W3-3	48 X 48										1		ATTACH TO TYPE 15-FBS
	102	G7-1 (CA)	60 X 18											1	
	103	W1-7													
		TYPE N (CA)									1				
	104	R9-3a	24 X 24										1		
	105	G7-1 (CA)	120 X 18											1	
	106	R3-4	24 X 24											1	
	107	G7-1 (CA)									1				
	108	R9-3a	24 X 24										1		
	109	G7-1 (CA)	60 X 18											1	
	110	R2-1	24 X 30												
		R48-1 (CA)									1				
	111	R2-1(45)	24 X 30												
		R48-1 (CA)	24 X 18	4.0	7.0	4.5	15.5	X	1						
	112	W3-1									1				
	113	W3-3	48 X 48										1		ATTACH TO TYPE 15-FBS
	114	R1-1									1				
	115	G7-1 (CA)	120 X 18											1	
	116	R3-4	24 X 24											1	
	117	R26A (CA)								1					
PD-2	201	G-SPCL								1					
	202	R26A (CA)								1					
	203	G-SPCL								1					
	204	W2-2 (R†)													
		W-SPCL									1				
	205	W3-3	48 X 48										1		ATTACH TO TYPE 15-FBS
	206	G8-22 (CA)	78 X 42									1			
								TOTAL	1	4	6	1	5	6	

SIGN QUANTITIES

SQ-1

STATE OF CALIFORNIA - DEPARTMENT OF TRANSPORTATION
Caltrans® TRAFFIC DESIGN

FUNCTIONAL SUPERVISOR: CAMILLE ABOUFADEL
CALCULATED-DESIGNED BY: ROBERT EDEJER
CHECKED BY: SHAHIN T ADIBI
REVISED BY
DATE REVISED

LAST REVISION 07-08-11
DATE PLOTTED => 22-JUL-2011
TIME PLOTTED => 11:09

Dist	COUNTY	ROUTE	POST MILES TOTAL PROJECT	SHEET No.	TOTAL SHEETS
11	SD	76	28.8/29.1	26	47

REGISTERED CIVIL ENGINEER 06-17-11 DATE

06-20-11
PLANS APPROVAL DATE

REGISTERED PROFESSIONAL ENGINEER SHAHIN T. ADIBI No. 66748 Exp. 06-30-12 CIVIL STATE OF CALIFORNIA

THE STATE OF CALIFORNIA OR ITS OFFICERS OR AGENTS SHALL NOT BE RESPONSIBLE FOR THE ACCURACY OR COMPLETENESS OF SCANNED COPIES OF THIS PLAN SHEET.

NOTES:

1. FEDERAL MANUAL ON UNIFORM TRAFFIC CONTROL DEVICES (MUTCD) SIGN CODES ARE SHOWN UNLESS DESIGNATED BY (CA), INDICATING CALIFORNIA MUTCD.
2. REFER TO "ROADSIDE SIGN QUANTITIES" CHART FOR FURTHER INFORMATION.
3. GREEN - Grn, WHITE - Wht, BLACK - Blk, BLUE - Blu, YELLOW - Ylw, BROWN - Brn, RED - Red, ORANGE - Org

FURNISH ROADSIDE SIGN PANEL

SIGN NUMBER	CODE	PANEL SIZE Horiz X Vert INCHES X INCHES	BACKGROUND SHEETING COLOR	BACKGROUND RETRO-REFLECTIVE ASTM TYPE	LEGEND SHEETING COLOR	LEGEND REFLECTIVE ASTM TYPE	LEGEND BLACK(NON-REFLECTIVE	SIGN PANEL SINGLE SHEET ALUMINUM (SQFT) UNFRAMED 0.063 INCHES	UNFRAMED 0.080 INCHES	FRAMED 0.063 INCHES	FRAMED 0.080 INCHES	PROTECTIVE OVERLAY PREMIUM FILM	REMARKS
101	W3-3	48 X 48	Ylw	VIII	Blk		X		16.0			X	
102	G7-1 (CA)	60 X 18	Grn	IV	Wht	IV				7.5		X	
104	R9-3a	24 X 24	Wht	IV	Blk		X	4.0				X	
105	G7-1 (CA)	120 X 18	Grn	IV	Wht	IV					15.0	X	
106	R3-4	24 X 24	Wht	VIII	Blk/Red	VIII	X	4.0				X	
108	R9-3a	24 X 24	Wht	IV	Blk		X	4.0				X	
109	G7-1 (CA)	60 X 18	Grn	IV	Wht	IV				7.5		X	
111	R2-1 (45)	24 X 30	Wht	IV	Blk		X	5.0				X	
	R48-1 (CA)	24 X 18	Wht	IV	Blk		X	3.0				X	
113	W3-3	48 X 48	Ylw	VIII	Blk		X		16.0			X	
115	G7-1 (CA)	120 X 18	Grn	IV	Wht	IV					15.0	X	
116	R3-4	24 X 24	Wht	VIII	Blk/Red	VIII	X	4.0				X	
205	W3-3	48 X 48	Ylw	VIII	Blk		X		16.0			X	
206	G8-22 (CA)	78 X 42	Grn	IV	Wht	IV				22.8		X	
							TOTAL	24.0	48.0	37.8	30.0		

SIGN QUANTITIES

SQ-2

REVISED BY | DATE REVISED
ROBERT EDEJER | SHAHIN T ADIBI
CALCULATED-DESIGNED BY | CHECKED BY
FUNCTIONAL SUPERVISOR: CAMILLE ABOUFADEL

STATE OF CALIFORNIA - DEPARTMENT OF TRANSPORTATION
Caltrans® TRAFFIC DESIGN

LAST REVISION 07-08-11 | DATE PLOTTED => 22-JUL-2011 | TIME PLOTTED => 11:09

Dist	COUNTY	ROUTE	POST MILES TOTAL PROJECT	SHEET No.	TOTAL SHEETS
11	SD	76	28.8/29.1	27	47

REGISTERED CIVIL ENGINEER 06-17-11 DATE

06-20-11
PLANS APPROVAL DATE

REGISTERED PROFESSIONAL ENGINEER JOSE L. ROBLES No. 64402 Exp. 06-30-13 CIVIL STATE OF CALIFORNIA

THE STATE OF CALIFORNIA OR ITS OFFICERS OR AGENTS SHALL NOT BE RESPONSIBLE FOR THE ACCURACY OR COMPLETENESS OF SCANNED COPIES OF THIS PLAN SHEET.

STRUCTURAL SECTION QUANTITIES

STATION	SIDE	HOT MIX ASPHALT (TYPE A) (TON)	CLASS 2 AGGREGATE BASE (CY)	SLURRY SEAL (TON)	TACK COAT (TON)	CENTERLINE RUMBLE STRIP (AC, GROUND-IN INDENTATIONS) (Sta)	MINOR HOT MIX ASPHALT (TON)	PLACE HOT MIX ASPHALT (Misc AREA) (SQYD)	REMARKS
Sta 48+00.00 "SD76" TO Sta 60+20.00 "SD76"	Lt/Rt			76.34		13.51			
Sta 50+55.00 "SD76" TO Sta 57+60.00 "SD76"	Lt	326.12	305.64		0.75				
Sta 53+20.00 "SD76" TO Sta 54+60.00 "SD76"	Rt	18.79	17.61		0.09				
Sta 20+53.83 "PRR" TO Sta 20+76.00 "PRR"	Lt	5.79	5.42		0.02				
Sta 20+72.12 "PRR" TO Sta 21+31.15 "PRR"	Rt	14.32	13.42		0.03				
Sta 20+30.00 "PRR" TO Sta 22+78.00 "PRR"	Lt/Rt			9.53					
Sta 10+36.78 "PVT" TO Sta 10+76.63 "PVT"	Lt/Rt	98.03							
Sta 40+00.00 "SP" TO Sta 40+36.52 "SP"	Lt/Rt	18.67							
HOT MIX ASPHALT DIKE	Lt/Rt			0.53			5.91		
PEDESTRAIN RAMPS	Lt/Rt							12.71	
TOTAL		481.71	342.09	86.40	0.89	13.51	5.91	12.71	

EARTHWORK QUANTITIES

STATION	SIDE	ROADWAY EXCAVATION (CY)	EMBANKMENT (CY) [N]
Sta 50+55.00 "SD76" TO Sta 57+60.00 "SD76"	Lt/Rt	554.56	9.43
Sta 20+53.83 "PRR" TO Sta 21+31.15 "PRR"	Lt/Rt	42.36	0.39
Sta 10+36.78 "PVT" TO Sta 10+61.71 "PVT"	Lt/Rt	51.65	29.15
Sta 40+00.00 "SP" TO Sta 40+36.52 "SP"	Lt/Rt	24.53	6.83
Sta 54+24.08 "SD76" TO Sta 20+53.83 "PRR"		66.45	0.02
Sta 54+34.30 "SD76" TO Sta 20+72.12 "PRR"		113.71	0.07
Sta 53+34.31 "SD76" TO Sta 10+76.63 "PVT"		16.48	10.35
TOTAL		869.74	56.24

[N] - NOT A SEPARATE PAY ITEM, FOR INFORMATION ONLY.

PLACE HOT MIX ASPHALT DIKE

STATION	SIDE	TYPE A (LF)	TYPE D (LF)
Sta 54+15.89 "SD76" TO Sta 55+70.00 "SD76"	Rt		142.11
Sta 20+53.81 "PRR" TO Sta 21+31.15 "PRR"	Lt/Rt	81.20	
SUBTOTAL		81.20	142.11
TOTAL		223.31	

SUMMARY OF QUANTITIES

Q-1

STATE OF CALIFORNIA - DEPARTMENT OF TRANSPORTATION
Caltrans
TRAFFIC PROJECT DEVELOPMENT

FUNCTIONAL SUPERVISOR
CALCULATED-DESIGNED BY EVANGELINA PALMA
CHECKED BY JOSE L. ROBLES
REVISED BY
DATE REVISED

LAST REVISION 07-08-11
DATE PLOTTED => 22-JUL-2011
TIME PLOTTED => 11:10

Dist	COUNTY	ROUTE	POST MILES TOTAL PROJECT	SHEET No.	TOTAL SHEETS
11	SD	76	28.8/29.1	28	47

Joseph Rand 06-17-11
REGISTERED ELECTRICAL ENGINEER DATE

06-20-11
PLANS APPROVAL DATE

REGISTERED PROFESSIONAL ENGINEER JOSEPH RAND No. 11131 Exp. 06-30-13 ELECTRICAL STATE OF CALIFORNIA

THE STATE OF CALIFORNIA OR ITS OFFICERS OR AGENTS SHALL NOT BE RESPONSIBLE FOR THE ACCURACY OR COMPLETENESS OF SCANNED COPIES OF THIS PLAN SHEET.

NOTES:

1 - RC ALL PULL BOXES

2 - AB ALL CONDUITS

3 - RS TYPE III SERVICE ENCLOSURE

4 - RC TYPE 15 AND APPURTENANCES

LEGEND:

AT&T = AMERICAN TELEPHONE AND TELEGRAPH Co

SDG&E = SAN DIEGO GAS AND ELECTRIC COMPANY

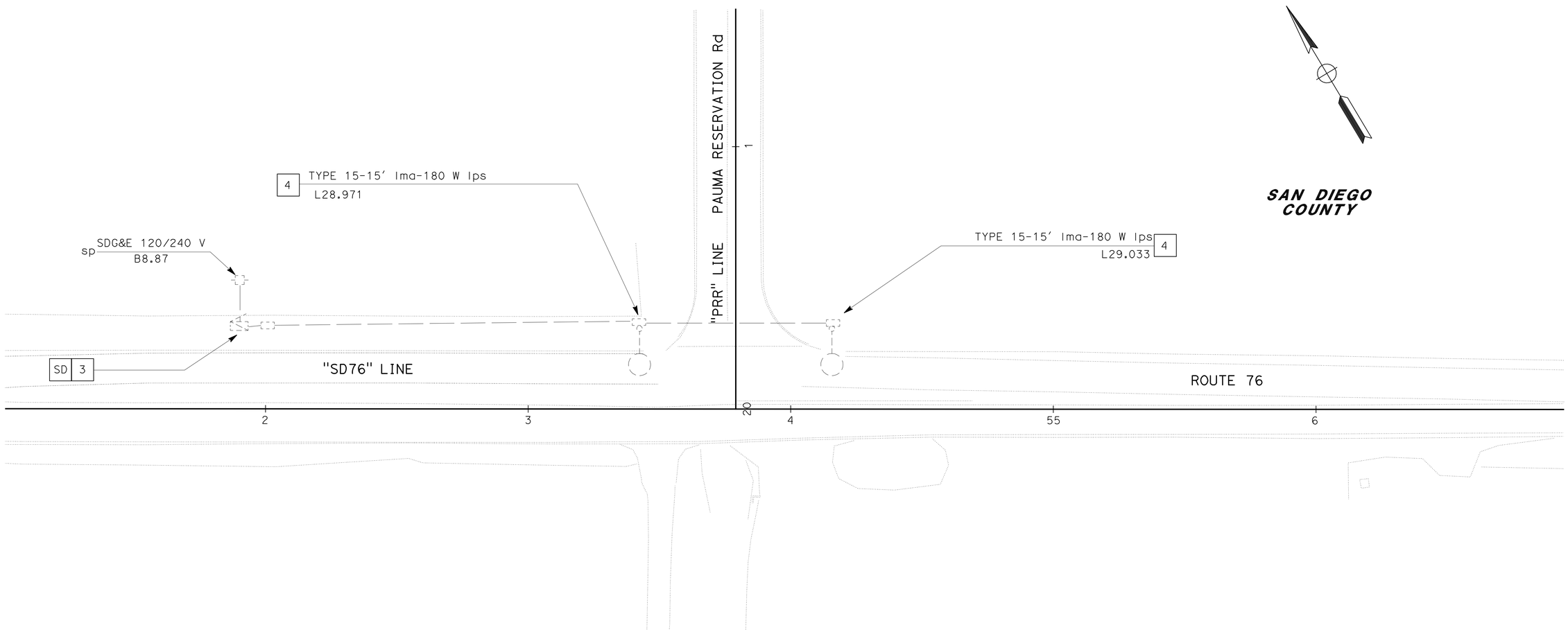

ROUTE 76 & PAUMA RESERVATION Rd

SCALE: 1" = 20'

LIGHTING (REMOVE)

E-1

THIS PLAN IS ACCURATE FOR ELECTRICAL SERVICE WORK ONLY.

STATE OF CALIFORNIA - DEPARTMENT OF TRANSPORTATION
Caltrans® TRAFFIC ELECTRICAL

FUNCTIONAL SUPERVISOR: DALE WILSON
CALCULATED-DESIGNED BY: ENRIQUE BERNAL
CHECKED BY: JOSEPH RAND
REVISED BY
DATE REVISED

LAST REVISION 07-08-11
DATE PLOTTED => 22-JUL-2011
TIME PLOTTED => 11:10

Dist	COUNTY	ROUTE	POST MILES TOTAL PROJECT	SHEET No.	TOTAL SHEETS
11	SD	76	28.8/29.1	29	47

REGISTERED ELECTRICAL ENGINEER — DATE 06-17-11

PLANS APPROVAL DATE 06-20-11

REGISTERED PROFESSIONAL ENGINEER — JOSEPH RAND No. 11131 Exp. 06-30-13 ELECTRICAL — STATE OF CALIFORNIA

THE STATE OF CALIFORNIA OR ITS OFFICERS OR AGENTS SHALL NOT BE RESPONSIBLE FOR THE ACCURACY OR COMPLETENESS OF SCANNED COPIES OF THIS PLAN SHEET.

NOTES:

1. TYPE 15-FBS, SEE Std PLAN ES-7J.
2. FURNISH AND INSTALL COMMUNICATION CARD, VDU AND VIDEO DISPLAY INSIDE 332 CABINET.
3. VIDEO IMAGE SENSOR ASSEMBLY (VIS).
4. SEE WIRING DIAGRAM ON SHEET E-3.
5. PULL BOXES SEE E-5 FOR DETAILS
6. INSTALL TYPE H RISER PER SDG&E REQUIREMENTS.
7. DETAIL 'U', ES-7N REQUIRED
8. 4-SECTION SIGNAL HEAD, SEE DETAIL 'A'
9. COIL EVC IN RED SECTION OF SIGNAL HEAD. LEAVE 10' OF SLACK
10. 200 W HPS LUMINAIRE ON EXISTING SDG&E POLE P113945 BY OTHERS
11. BATTERY BACK UP (BBS) DETAILS, SEE SHEET E-4
12. EQUIPMENT AND POLE SCHEDULE & CONDUIT AND CONDUCTOR SCHEDULE SEE SHEET E-3
13. FOR ACCURATE RIGHT OF WAY DATA, CONTACT RIGHT OF WAY ENGINEERING AT THE DISTRICT OFFICE.

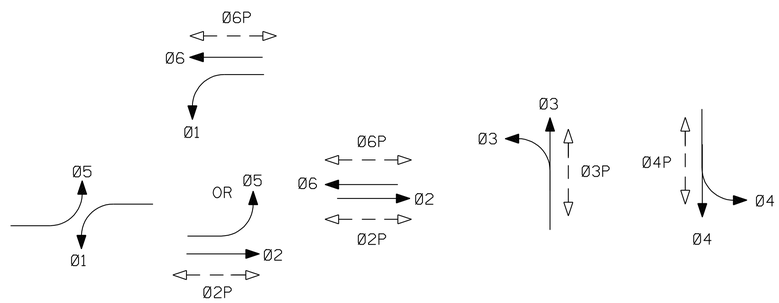

TRAFFIC PHASE DIAGRAM

STEADY DEMAND SEQUENCE →

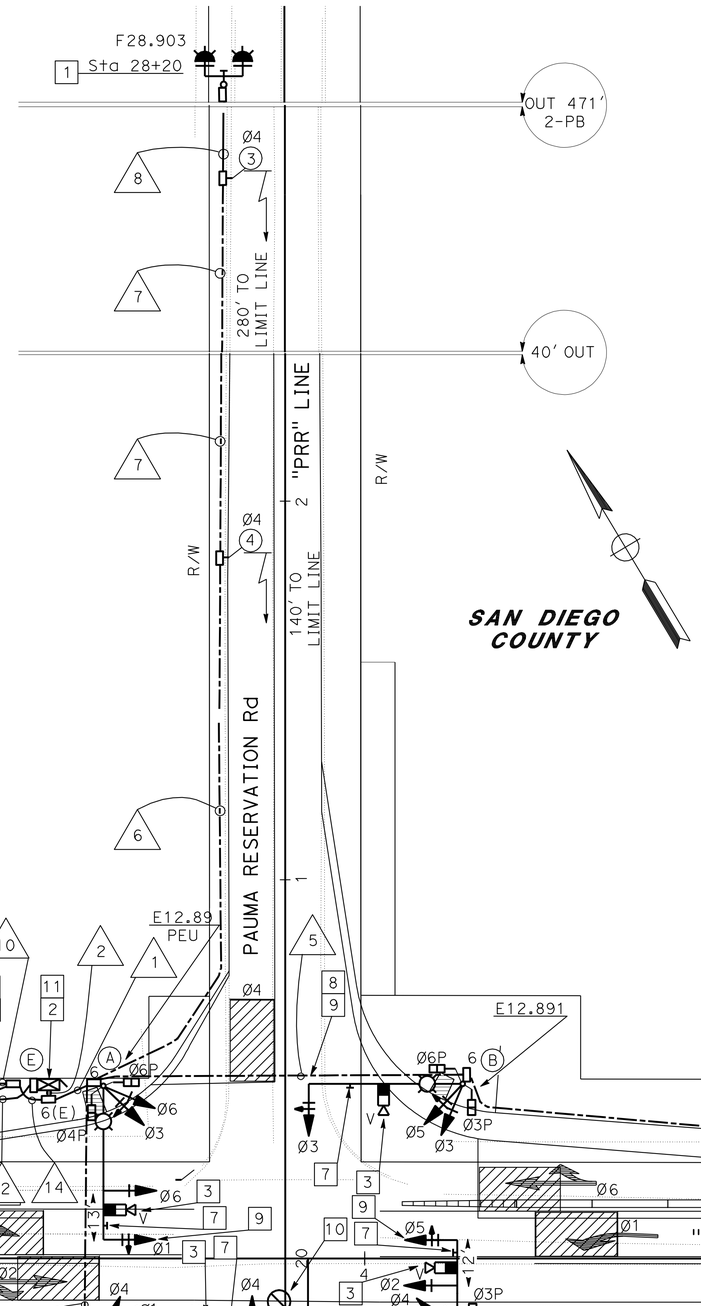

THIS PLAN IS ACCURATE FOR ELECTRICAL WORK ONLY

ROUTE 76 & PAUMA RESERVATION Rd
SIGNAL P28.901

(R)	RED CIRCULAR
(Y)	YELLOW CIRCULAR
(G)	GREEN CIRCULAR
←	GREEN LEFT ARROW

DETAIL 'A'
NO SCALE

CONDUIT NOTES:

6 - 2"C, 2 DLC, 2#8 (FB)
7 - 2"C, 1 DLC, 2#8 (FB)
8 - 2"C, 2#8 (FB)
9 - 3"C, MT (CONDUCTORS BY SDG&E)
10 - 2"C, 2#8 (FB), 3#14 (PEU), 2#8 (LTG), 2#6 (SIG), 2#10 (TDC)
11 - 2"C, MT (CONDUCTORS BY AT&T)
12 - 1"C, 1 OCC
13 - 1"C, 2#10 (TDC)
14 - 2"C, 2#8 (FB), 3#14 (PEU), 2#8 (LTG), 2#6 (SIG)

SIGNAL AND LIGHTING

SCALE: 1" = 20'

E-2

STATE OF CALIFORNIA - DEPARTMENT OF TRANSPORTATION
Caltrans TRAFFIC ELECTRICAL

FUNCTIONAL SUPERVISOR: DALE WILSON
CALCULATED-DESIGNED BY: JOSEPH RAND
CHECKED BY: ENRIQUE BERNAL
REVISED BY / DATE REVISED

LAST REVISION 07-08-11 | DATE PLOTTED => | TIME PLOTTED =>

Dist	COUNTY	ROUTE	POST MILES TOTAL PROJECT	SHEET No.	TOTAL SHEETS
11	SD	76	28.8/29.1	30	47

REGISTERED ELECTRICAL ENGINEER 06-17-11 DATE

06-20-11
PLANS APPROVAL DATE

REGISTERED PROFESSIONAL ENGINEER JOSEPH RAND No. 11131 Exp. 06-30-13 ELECTRICAL STATE OF CALIFORNIA

THE STATE OF CALIFORNIA OR ITS OFFICERS OR AGENTS SHALL NOT BE RESPONSIBLE FOR THE ACCURACY OR COMPLETENESS OF SCANNED COPIES OF THIS PLAN SHEET.

EQUIPMENT AND POLE SCHEDULE

Loc	STANDARD TYPE	STANDARD SMA (FT)	STANDARD LMA (FT)	PLACEMENT DIMENSIONS A (FT)	PLACEMENT DIMENSIONS B (FT)	SIGNAL MOUNTING AND PLACEMENT VEHICLE POLE	VEHICLE MASTARM	PEDESTRIAN SIGNAL	PEDESTRIAN PPB	REMARKS
A	24-4-100	40	12	7.6	6	SV-2-T	1 MAT 1 MAS	SP-2-T	Ø6P → Ø4P ←	200 W HPS
B	24-4-100	40	12	8.6	5	SV-2-T	MAS-4B	SP-2-T	Ø6P ← Ø3P →	200 W HPS
C	18-4-100	25	-	*	3.1	SV-2-T	1 MAT 1 MAS	SP-2-T	Ø2P → Ø3P ←	NO LUMINAIRE
D	27-4-100	40	-	10	6	SV-2-T	MAS-4B	SP-2-T	Ø4P → Ø2P ←	NO LUMINAIRE
E	STATE FURNISHED MODEL 170 CONTROLLER ASSEMBLY. BBS EXTERNAL CABINET SEE SHEET E-4 FOR FOUNDATION DETAILS.									

* Sta 54+26.64

CONDUIT AND CONDUCTOR SCHEDULE

AWG SIZE OR CABLE TYPE	PHASE	POLE OR CIRCUIT	CONDUIT SIZE AND RUN 2-3" (1)	2-3" (2)	3" (3)	3" (4)	3" (5)
No. 14 CONDUCTORS 3CSC		POLE - A	2 2	2 2			
		B	2 2	2 2		2 2	
		C	2 2	2 2	2 2	2 2	
12CSC		D	2 2	2 2	2 2		
TOTAL 3CSC / 12CSC			8 8	8 8	4 4	2 2	2 2
14		PEU	3				
10		LIGHTING	2				2
8		FB	2	2	2		2
6		SIG CONTROLLER	2				
TYPE B DLC	Ø1						
	Ø2		2	2	2		
	Ø3						
	Ø4		2	2			
	Ø5						
	Ø6		2	2			2
	Ø7						
	Ø8						
	OLA						
VIDEO CABLE HARNESS		POLE - A	1	1			
		B	1	1			1
		C	1	1	1	1	
		D	1	1	1		
EVC			4	4	2	1	1
TOTAL CONDUCTORS / CABLES			39	32	16	6	12

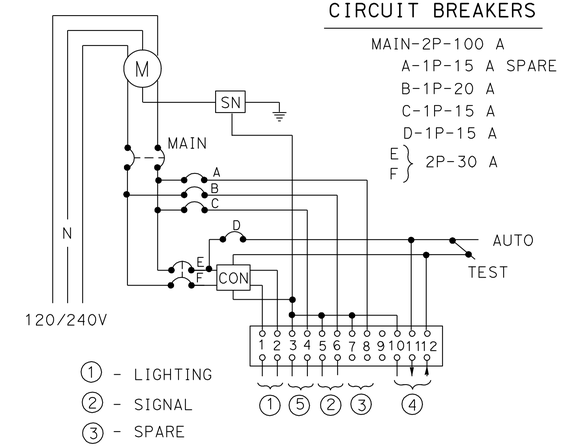

CIRCUIT BREAKERS

MAIN-2P-100 A
A-1P-15 A SPARE
B-1P-20 A
C-1P-15 A
D-1P-15 A
E, F } 2P-30 A

1 - LIGHTING
2 - SIGNAL
3 - SPARE
4 - PEU
5 - FB

WIRING DIAGRAM "A"

TYPE III-BF SERVICE EQUIPMENT ENCLOSURE SEE ES-2C AND ES-2E

CON = CONTACTOR

SIGNAL AND LIGHTING
P28.901

SIGNAL AND LIGHTING

NO SCALE

E-3

REVISED BY | DATE REVISED
JOSEPH RAND | ENRIQUE BERNAL
CALCULATED-DESIGNED BY | CHECKED BY
FUNCTIONAL SUPERVISOR | DALE WILSON
STATE OF CALIFORNIA - DEPARTMENT OF TRANSPORTATION
Caltrans TRAFFIC ELECTRICAL

LAST REVISION 07-08-11 | DATE PLOTTED => 22-JUL-2011 | TIME PLOTTED => 11:10

Dist	COUNTY	ROUTE	POST MILES TOTAL PROJECT	SHEET No.	TOTAL SHEETS
11	SD	76	28.8/29.1	31	47

REGISTERED ELECTRICAL ENGINEER 06-17-11 DATE

06-20-11
PLANS APPROVAL DATE

REGISTERED PROFESSIONAL ENGINEER JOSEPH RAND No. 11131 Exp. 06-30-13 ELECTRICAL STATE OF CALIFORNIA

THE STATE OF CALIFORNIA OR ITS OFFICERS OR AGENTS SHALL NOT BE RESPONSIBLE FOR THE ACCURACY OR COMPLETENESS OF SCANNED COPIES OF THIS PLAN SHEET.

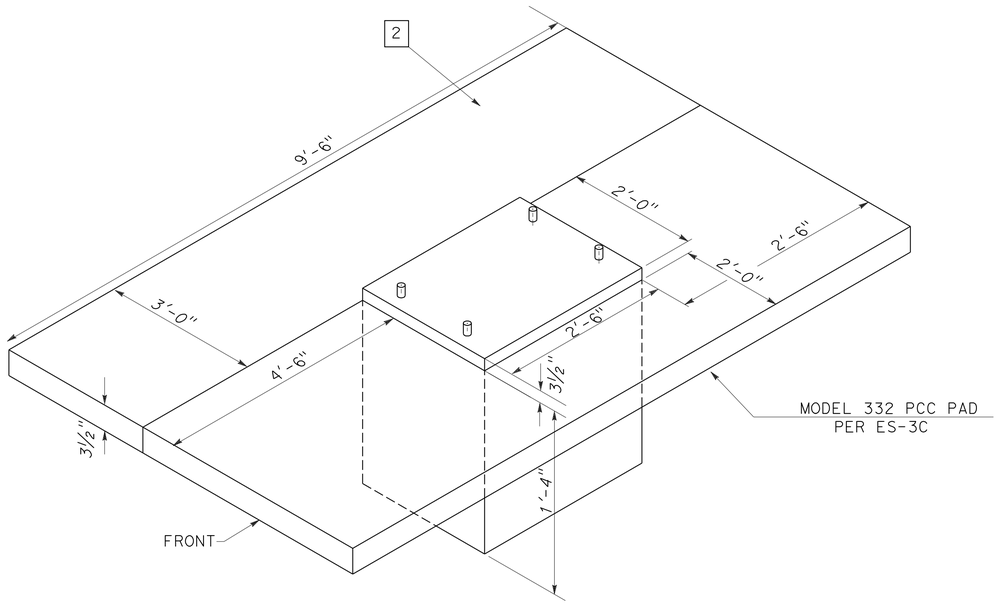

FOUNDATION DETAIL

FOR DETAILS NOT SHOWN SEE ES-3C

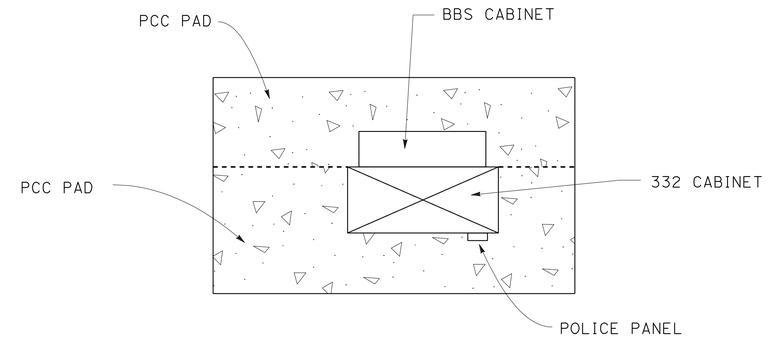

TOP VIEW

NOTES:

1 - THE CONTRACTOR SHALL VERIFY ALL CONTROLLING FIELD DIMENSIONS BEFORE ORDERING OR FABRICATING ANY MATERIAL.

2 - PCC PAD FOR EXTERNAL BBS CABINET, 3'-0" X 9'-6" X 3½". SEE "CABINET HOUSING" DETAIL.

3 - PLACE EXTERNAL BATTERY BACKUP CABINET ON THE SIDE OF MODEL 332 CABINET. SEE "SIDE VIEW DETAILS".

4 - BOTTOM OF BATTERY BACKUP CABINET FLUSHED WITH TOP OF PCC PAD.

5 - THE BBS CABINET SHALL BE MOUNTED TO THE MODEL 332 CABINET WITH:

- EIGHT 18-8 STAINLESS STEEL HEX HEAD, FULLY-THREADED, AND ⅜" - 16 X 1" BOLTS.
- 2 (18-8 STAINLESS STEEL) WASHERS PER ⅜" BOLT, 1" OD ROUND FLAT TYPE.
- K-LOCK NUT PER BOLT, K-LOCK WASHER (18-8 STAINLESS STEEL), AND HEX NUT.

THE LOCATION OF THE BOLTS WILL BE DETERMINED BY THE ENGINEER.

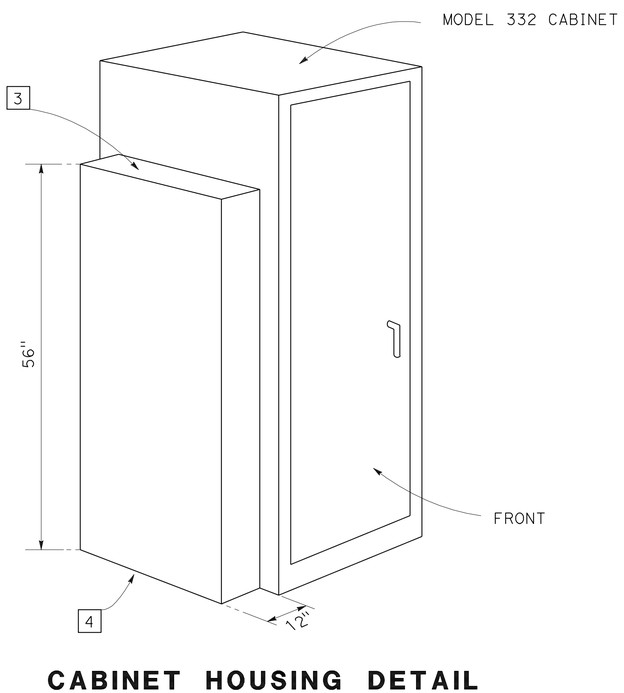

CABINET HOUSING DETAIL

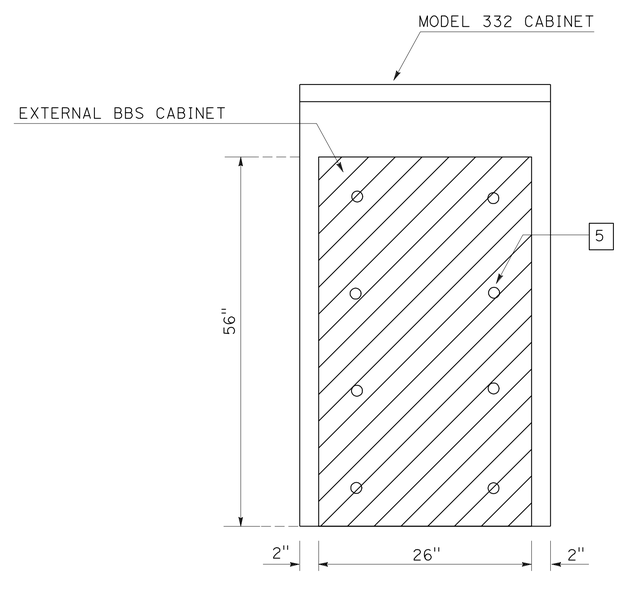

SIDE VIEW DETAIL

ELECTRICAL DETAILS

NO SCALE

E-4

REVISED BY | DATE REVISED

JOSEPH RAND | ENRIQUE BERNAL

CALCULATED-DESIGNED BY | CHECKED BY

FUNCTIONAL SUPERVISOR: DALE WILSON

STATE OF CALIFORNIA - DEPARTMENT OF TRANSPORTATION

Caltrans® TRAFFIC ELECTRICAL

LAST REVISION 07-08-11 | DATE PLOTTED => 22-JUL-2011 | TIME PLOTTED => 11:10

Dist	COUNTY	ROUTE	POST MILES TOTAL PROJECT	SHEET No.	TOTAL SHEETS
11	SD	76	28.8/29.1	32	47

REGISTERED ELECTRICAL ENGINEER 06-17-11 DATE

PLANS APPROVAL DATE 06-20-11

REGISTERED PROFESSIONAL ENGINEER JOSEPH RAND No. 11131 Exp. 06-30-13 ELECTRICAL STATE OF CALIFORNIA

THE STATE OF CALIFORNIA OR ITS OFFICERS OR AGENTS SHALL NOT BE RESPONSIBLE FOR THE ACCURACY OR COMPLETENESS OF SCANNED COPIES OF THIS PLAN SHEET.

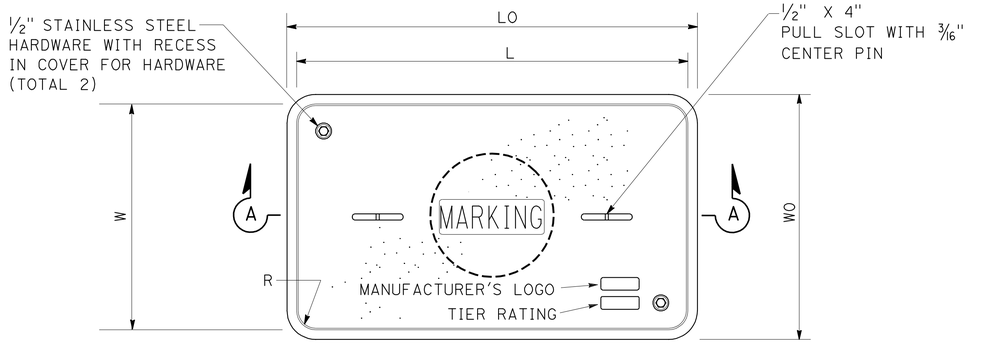

TOP VIEW

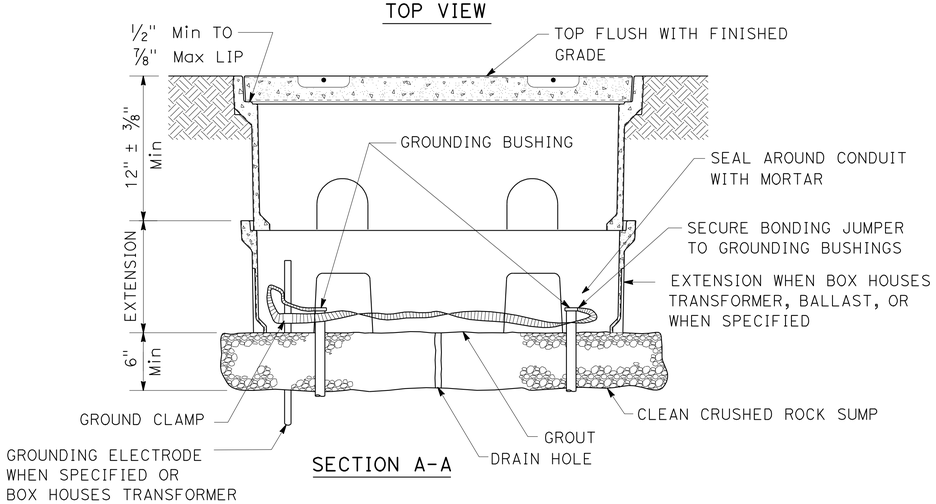

SECTION A-A

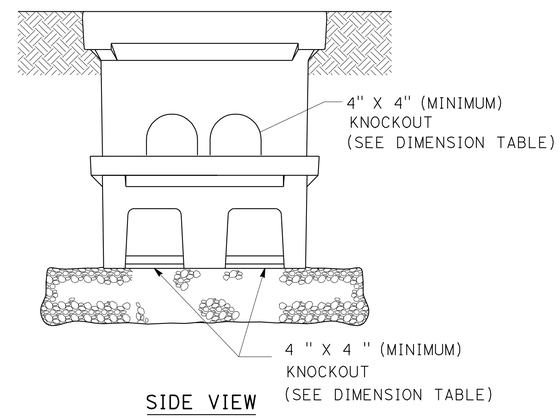

SIDE VIEW

LEGEND:

UNC - UNIFIED NATIONAL COARSE THREAD
LO - LENGTH OUTSIDE
WO - WIDTH OUTSIDE
L - LENGTH (TOP OF COVER)
W - WIDTH (TOP OF COVER)
R - COVER CORNER RADIUS
D - COVER EDGE TO COVER BOLT CENTER DISTANCE
TE - COVER EDGE THICKNESS
TA - COVER EDGE TAPER

NOTES:

1. ALL NON-TRAFFIC RATED PULL BOXES AND COVERS, FOR IN GROUND AND IN SIDEWALK APPLICATIONS, MUST BE INDEPENDENTLY TESTED AND CERTIFIED AS COMPLYING WITH THE PROVISIONS OF ANSI/SCTE 77 2010 "SPECIFICATION FOR UNDERGROUND ENCLOSURE INTEGRITY." PULL BOXES MUST MEET THE TIER 22 APPLICATION. COVERS NOT INSTALLED IN SIDEWALKS MUST MEET THE TIER 22 APPLICATION. COVERS INSTALLED IN SIDEWALKS MUST MEET THE TIER 8 APPLICATION.
2. COVERS MUST BE SECURED WITH A CAPTIVE BOLT DESIGN USING ½"-13 UNC LARGE PENTA-HEAD BOLTS. THE BOLTS AND WASHERS MUST BE STAINLESS STEEL.
3. THE CAPTIVE BOLT DESIGN MUST BE INDEPENDENTLY TESTED AND CERTIFIED AS CAPABLE OF WITHSTANDING A TORQUE OF 56 FT. LBS AND A MINIMUM PULL OUT STRENGTH OF 750 LBS. THE PULL OUT TEST MUST BE PERFORMED WITH THE COVER IN PLACE AND THE BOLTS TORQUED TO 56 FT/LBS. THE BOLTS, INSERTS, AND COVER MUST NOT BE DAMAGED WHEN TESTED UP TO THE MINIMUM PULL OUT STRENGTH.
4. MARKINGS, SHOWING THE TIER RATING, MUST BE LABELED OR STENCILED ON THE INSIDE AND OUTSIDE OF THE PULL BOX AND ON THE UNDERSIDE OF THE COVER.
5. THE TIER RATING MUST BE EMBOSSED ON THE TOP SURFACE OF THE COVER.
6. COVERS AND PULL BOXES MUST BE INTERCHANGEABLE WITH CALIFORNIA STANDARD MALE AND FEMALE GAGES. SEE STANDARD PLAN ES-8, NOTE 7. MINIMUM RADIUS OF TOP OUTSIDE EDGE IS ⅛".
7. PULL BOXES MUST NOT BE INSTALLED WITHIN THE BOUNDARIES OF NEW OR EXISTING CURB RAMPS OR DRIVEWAYS.
8. AN EXTENSION MAY BE SUBSTITUTED WITH A PULL BOX IF THE BOTTOM EDGE OF THE PULL BOX FITS INTO THE PULL BOX COVER OPENING. A PULL BOX AND EXTENSION MAY BE SUBSTITUTED WITH A PULL BOX OF EQUAL DEPTH. IF SUBSTITUTIONS ARE MADE, THE INSTALLED UNIT MUST MEET THE TIER 22 LOAD REQUIREMENTS.
9. SEE STANDARD PLAN ES-8, NOTES 3,4,6 AND 9 FOR OTHER REQUIREMENTS. THESE ADDRESS, BUT ARE NOT LIMITED TO: PLACEMENT, SURROUNDING GRADE, REQUIREMENTS IN UNPAVED AREAS, PULL BOX COVER MARKING, NOMINAL DIMENSIONS OF THE OPENING, AND THE LOCATION OF BOXES FOR ELECTROLIERS AND STANDARDS.

PULL BOX INSTALLATION DETAILS

No. 5 & No. 6

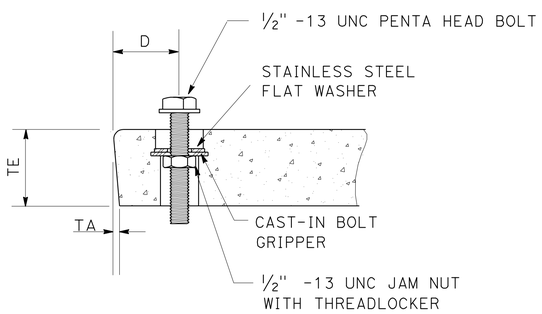

SECTION OF COVER BOLTDOWN
(AS SHOWN OR SIMILAR)

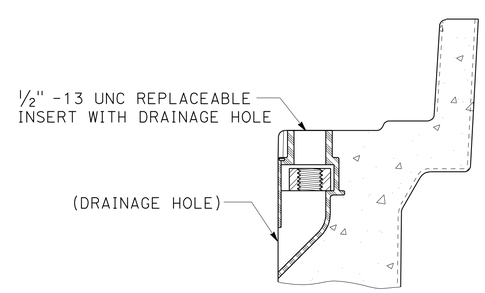

SECTION OF REPLACEABLE INSERT
(AS SHOWN OR SIMILAR)

DIMENSION TABLE

PULL BOX	PULL BOX			COVER							PULL BOX KNOCKOUTS		EXTENSION KNOCKOUTS	
	MINIMUM DEPTH BOX (In)	MINIMUM DEPTH EXTENSION (In)	MAXIMUM WEIGHT (LBS)	L (In)	W (In)	R (In)	TE (In)	TA (In)	D (In)	MAXIMUM WEIGHT (LBS)	SIDE	END	SIDE	END
No. 5	12	10	55	23¼	13¾	1⅜	2	⅛	1¾	60	2	1	2	1
No. 6	12	10	70	30½	17½	1⅜	2	⅛	2	85	2	2	2	2

ELECTRICAL SYSTEMS (NON-TRAFFIC RATED PULL BOX)

NO SCALE

E-5

STATE OF CALIFORNIA - DEPARTMENT OF TRANSPORTATION
Caltrans TRAFFIC ELECTRICAL

FUNCTIONAL SUPERVISOR: DALE WILSON
CALCULATED-DESIGNED BY: JOSEPH RAND
CHECKED BY: ENRIQUE BERNAL
REVISED BY
DATE REVISED

LAST REVISION 07-08-11
DATE PLOTTED => 22-JUL-2011
TIME PLOTTED => 11:10

Dist	COUNTY	ROUTE	POST MILES TOTAL PROJECT	SHEET No.	TOTAL SHEETS
11	SD	76	28.8/29.1	33	47

Randell D. Hiatt
REGISTERED CIVIL ENGINEER

May 20, 2011
PLANS APPROVAL DATE

REGISTERED PROFESSIONAL ENGINEER
Randell D. Hiatt
No. C50200
Exp. 6-30-11
CIVIL
STATE OF CALIFORNIA

The State of California or its officers or agents shall not be responsible for the accuracy or completeness of electronic copies of this plan sheet.

To accompany plans dated 06-20-11

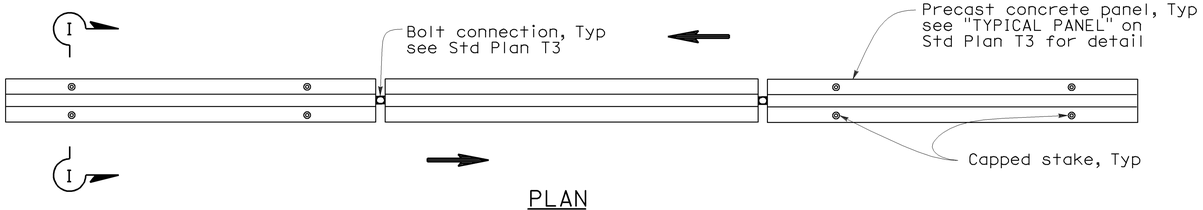

PLAN

RAILING STAKING CONFIGURATION FOR TWO-WAY TRAFFIC

See Note 1

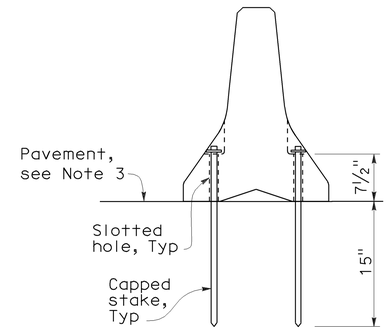

SECTION I-I

NOTES:

1. Where Type K Temporary Railing is placed as a temporary or long term barrier in two-way traffic on highways with less than 24" from the edge of traveled way, use four capped stakes per every other panel with end panels staked.
2. Where Type K Temporary Railing is placed 3" to 24" from the edge of an excavation on highways, use two capped stakes per panel along the traffic side.
3. Staked Type K Temporary Railing must be supported by at least 4" thick concrete, hot mix asphalt or existing asphalt concrete pavement.
4. The minimum yield strength for the washer must be 60,000 psi.
5. Direction of adjacent traffic indicated by ⟹.

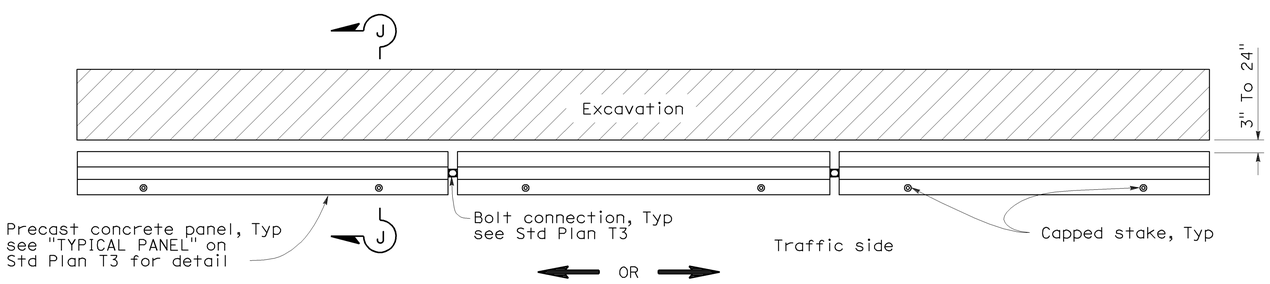

PLAN

RAILING STAKING CONFIGURATION ADJACENT TO AN EXCAVATION

See Note 2

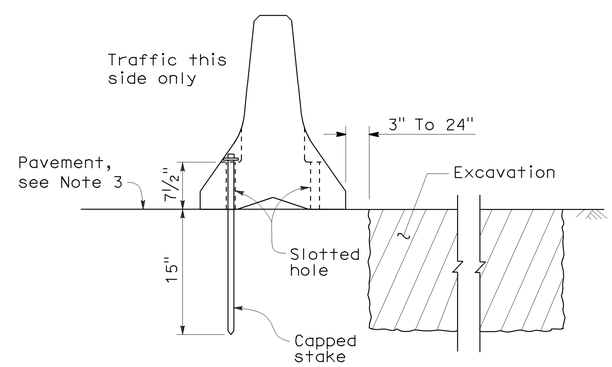

SECTION J-J

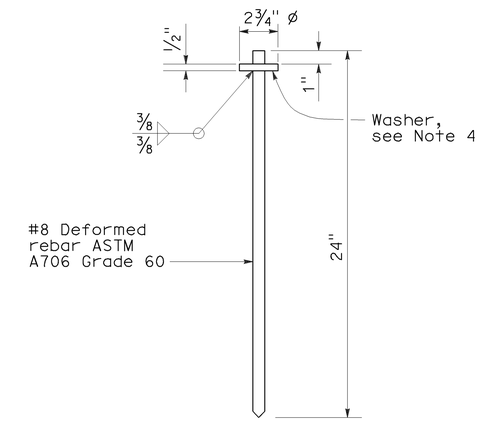

CAPPED STAKE DETAIL

STATE OF CALIFORNIA
DEPARTMENT OF TRANSPORTATION

TEMPORARY RAILING (TYPE K)

NO SCALE

NSP T3A DATED MAY 20, 2011 SUPPLEMENTS
THE STANDARD PLANS BOOK DATED MAY 2006.

NEW STANDARD PLAN NSP T3A

2006 NEW STANDARD PLAN NSP T3A

DIST	COUNTY	ROUTE	POST MILES TOTAL PROJECT	SHEET NO.	TOTAL SHEETS
11	SD	76	28.8/29.1	34	47

REGISTERED ELECTRICAL ENGINEER

October 5, 2007
PLANS APPROVAL DATE

REGISTERED PROFESSIONAL ENGINEER Jeffery G. McRae No. E14512 Exp. 6-30-08 ELECTRICAL STATE OF CALIFORNIA

The State of California or its officers or agents shall not be responsible for the accuracy or completeness of electronic copies of this plan sheet.

To accompany plans dated 06-20-11

ELECTROLIERS

STANDARD TYPES
15, 15D
15 STRUCTURE
21, 21D STRUCTURE
30
31
32
35
36-20A

High mast light pole

Double Arm lighting standard

Existing electrolier

Electrolier foundation (Future installation)

NOTES:

1. Luminaires shall be 310 W HPS when installed on Type 21, 21D, 30, 31, 32, 35 and 36-20A Standards, unless otherwise specified. Luminaires shall be 200 W HPS when installed on other type standards or poles, unless otherwise specified.
2. Luminaires shall be the cutoff type, ANSI Type Ⅲ medium cutoff lighting distribution, unless otherwise specified.
3. Variations noted adjacent to symbol on project plans.

Electrolier (see project notes or project plans)

Luminaire on wood pole

STANDARD NOTES:

- AB Abandon. If applied to conduit, remove conductors.
- BC Install pull box in existing conduit run.
- BP Pedestrian barricade, type as indicated on plan.
- CB Install conduit into existing pull box.
- CC Connect new and existing conduit. Remove existing conductors and install conductors as indicated.
- CF Conduit to remain for future use. Remove conductors. Install pull wire or rope.
- DH Detector handhole.
- FA Foundation to be abandoned.
- IS Install sign on signal mast arm.
- NS No slip base on standard.
- PEC Photoelectric control.
- PEU Photoelectric unit.
- RC Equipment or material to be removed and become the property of the Contractor.
- RE Remove electrolier, fuses and ballast. Tape ends of conductors.
- RL Relocate equipment.
- RR Remove and reuse equipment.
- RS Remove and salvage equipment.
- SC Splice new to existing conductors.
- SD Service disconnect.
- SF Standard to remain for future use. Remove luminaire, pole conductors, fuses and ballast.
- TSP Telephone service point.

ABBREVIATIONS AND EQUIPMENT DESIGNATIONS

PROPOSED	EXISTING	
BBS	bbs	Battery backup system
BC	bc	Bolt circle
C	C	Conduit
CCTV	cctv	Closed circuit television
CKT	ckt	Circuit
CMS	cms	Changeable message sign
DLC	dlc	Loop detector lead-in cable
EMS	ems	Extinguishable message sign
EVC	evc	Emergency vehicle cable
EVD	evd	Emergency vehicle detector
FB	fb	Flashing beacon
FBCA	fbca	Flashing beacon control assembly
FBS	fbs	Flashing beacon with slip base
FO	fo	Fiber optic
G	G	Ground (Equipment Grounding Conductor)
GFCI	GFCI	Ground fault circuit interrupt
HAR	har	Highway advisory radio
HEX	hex	Hexagonal
HPS	hps	High pressure sodium
IISNS	iisns	Internally illuminated street name sign
ISL	isl	Induction sign lighting
LED	led	Light emitting diode
LMA	lma	Luminaire mast arm
LPS	lps	Low pressure sodium
LTG	ltg	Lighting
LUM	lum	Luminaire
MAT	mat	Mast arm mounting vehicle signal faces, top attachment
MAS	mas	Mast arm mounting vehicle signal faces, side attachment
MAS-4A	mas-4A	Mast arm mounting vehicle signal faces, side attachment - 4 signal section
MAS-4B	mas-4B	
MAS-4C	mas-4C	
MAS-5A	mas-5A	Mast arm mounting vehicle signal faces, side attachment - 5 signal section
MAS-5B	mas-5B	
MC	mc	Mercury contactor
M/M	m/m	Multiple to multiple transformer
MT	mt	Conduit with pull wire or rope only
MTG	mtg	Mounting
	mv	Mercury vapor lighting fixture
N	N	Neutral (Grounded Conductor)
NC	NC	Normally closed
NO	NO	Normally open
PB	pb	Pull box
PEC	pec	Photoelectric control (Type Ⅰ, Ⅱ, Ⅲ, Ⅳ or Ⅴ as shown)
PED	ped	Pedestrian
PEU	peu	Photoelectric unit
PPB	ppb	Pedestrian push button
RL		Relocated equipment
RM	rm	Ramp metering
SB	sb	Slip base
SIC	sic	Signal interconnect cable
SIG	sig	Signal
SMA	sma	Signal mast arm
SNS	sns	Street name sign
SP	sp	Service point
TDC	tdc	Telephone demarcation cabinet
TMS	tms	Traffic monitoring station
TOS	tos	Traffic Operations System
VEH	veh	Vehicle
XFMR	xfmr	Transformer
COMM	comm	Communication
RWIS	rwis	Roadway weather information system

SOFFIT AND WALL MOUNTED LUMINAIRES

Pendant, 70 W HPS unless otherwise specified.

Flush, 70 W HPS unless otherwise specified.

Wall surface, 70 W HPS unless otherwise specified.

Existing soffit or wall luminaire to remain unmodified.

Existing soffit or wall luminaire to be modified as specified.

NOTE:

Arrow indicates "street side" of luminaire.

STATE OF CALIFORNIA
DEPARTMENT OF TRANSPORTATION

ELECTRICAL SYSTEMS (SYMBOLS AND ABBREVIATIONS)

NO SCALE

RSP ES-1A DATED OCTOBER 5, 2007 SUPERSEDES STANDARD PLAN ES-1A DATED MAY 1, 2006 - PAGE 400 OF THE STANDARD PLANS BOOK DATED MAY 2006.

REVISED STANDARD PLAN RSP ES-1A

2006 REVISED STANDARD PLAN RSP ES-1A

DIST	COUNTY	ROUTE	POST MILES TOTAL PROJECT	SHEET NO.	TOTAL SHEETS
11	SD	76	28.8/29.1	35	47

REGISTERED ELECTRICAL ENGINEER

October 5, 2007
PLANS APPROVAL DATE

REGISTERED PROFESSIONAL ENGINEER Jeffery G. McRae No. E14512 Exp. 6-30-08 ELECTRICAL STATE OF CALIFORNIA

The State of California or its officers or agents shall not be responsible for the accuracy or completeness of electronic copies of this plan sheet.

To accompany plans dated 06-20-11

CONDUIT

PROPOSED	EXISTING	
		Lighting Conduit, unless otherwise indicated or noted
		Traffic signal conduit
C	c	Communication conduit
T	t	Telephone conduit
F	f	Fire alarm conduit
FO	fo	Fiber optic conduit
		Conduit termination (RSP ES-9A C)
R	r	Conduit riser in/on structure or service pole

SERVICE EQUIPMENT

PROPOSED	EXISTING	
OH	oh	Overhead lines
U	U	Wood pole "U" indicates utility owned
		Pole guy with anchor
		Utility transformer - ground mounted
III		Service equipment enclosure type
		Service equipment enclosure door indicates front of enclosure
T	t	Telephone demarcation cabinet

POLE-MOUNTED SERVICE DESIGNATION

Type of installation

TYPE H SERVICE - 28'-10" ← Pole height above grade

ILLUMINATED OVERHEAD SIGN

PROPOSED	EXISTING	
		Overhead sign - Single post
		Overhead sign - Two post
		Overhead sign - Mounted on structure
		Overhead sign with electrolier

SIGNAL EQUIPMENT

PROPOSED	EXISTING	
		Pedestrian signal face
		Pedestrian push button post
		Pedestrian barricade
		Vehicle signal face (with backplate, 3-Section: red, yellow and green)
		Vehicle signal face with angle visors
PV	PV	Modifications of basic symbols: "L" Indicates all non-arrow sections louvered "LG" Indicates louvered green section only "PV" indicates 12" programmed visibility sections "8" indicates all 8" sections (only when specified)
		Type 15TS and Vehicle signal face
		Vehicle signal face with red, yellow and green left arrow sections
		Vehicle signal face with red and yellow sections and up green arrow
		Vehicle signal face (5 Section) with red, yellow and green sections and yellow and green right arrows
		Type 1 Standard and attached vehicle signal faces
		Standard with signal mast arm only and attached vehicle signal faces and internally illuminated street name sign
		Type 33 Standard, Left-turn vehicle signal face and sign
		Standard with luminaire and signal mast arms and attached vehicle signal faces
		Cantilever flashing beacon Type 9 Frame, with a sign unless otherwise specified or indicated
		Type 15-FBS Standard with two vehicle signal face sections with lens, backplate and visor with a sign
R	Y	Flashing beacon. One vehicle signal face section with lens, backplate and visor. "R" indicates red indication, "Y" indicates yellow indication
		Controller assembly. Door indicates front of cabinet

SIGNAL EQUIPMENT Cont

PROPOSED	EXISTING	
		Guard post
		Type 1 Standard with "Meter On" sign
		Emergency Vehicle detector

NOTES:

1. All signal sections shall be 12" unless shown otherwise.
2. Signal heads shall be provided with backplates unless shown otherwise.
3. Signal indication shall be LED.

STATE OF CALIFORNIA
DEPARTMENT OF TRANSPORTATION

ELECTRICAL SYSTEMS (SYMBOLS AND ABBREVIATIONS)

NO SCALE

RSP ES-1B DATED OCTOBER 5, 2007 SUPERCEDES STANDARD PLAN ES-1B DATED MAY 1, 2006 - PAGE 401 OF THE STANDARD PLANS BOOK DATED MAY 2006.

REVISED STANDARD PLAN RSP ES-1B

2006 REVISED STANDARD PLAN RSP ES-1B

7-10-07

DIST	COUNTY	ROUTE	POST MILES TOTAL PROJECT	SHEET NO.	TOTAL SHEETS
11	SD	76	28.8/29.1	36	47

REGISTERED ELECTRICAL ENGINEER

October 5, 2007
PLANS APPROVAL DATE

REGISTERED PROFESSIONAL ENGINEER
Jeffery G. McRae
No. E14512
Exp. 6-30-08
ELECTRICAL
STATE OF CALIFORNIA

The State of California or its officers or agents shall not be responsible for the accuracy or completeness of electronic copies of this plan sheet.

To accompany plans dated 06-20-11

NOTES-TYPE III SERVICE EQUIPMENT ENCLOSURES:

1. Service equipment enclosure and metering equipment shall meet the requirements of the service utility. The meter area shall have a sealable, lockable, weathertight cover that can be removed without the use of tools.

2. Service equipment enclosures shall be factory wired and conform to NEMA standards.

3. Dimensions of service equipment enclosures shall meet the requirements of the service utility.

4. The dead front panels on Type III service equipment enclosures shall have a continuous stainless steel or aluminum piano hinge. The panel in front of the breakers shall be secured with a latch or captive screws. No live parts shall be mounted on the dead front panel.

5. The exterior door shall have provisions for padlocking. The padlock hole shall be a minimum diameter of 7/16".

6. Enclosures housing transformers of more than one kVA shall have effective screened ventilation louver of not less than 50 square inches. Screen shall be stainless steel No. 304, with a No. 10 size mesh. Framed screen shall be secured with at least four bolts.

7. Fasteners on the exterior of the enclosure shall be vandal-resistant and shall not be removable from the exterior. Exterior screws, nuts, bolts and washers shall be stainless steel.

8. Landing lugs for incoming service conductors shall be compatible with either copper or aluminum conductors sized to suit the conductors shown on the plan. Landing lugs shall be copper or tin-plated aluminum. Neutral bus shall be rated for 125 A and be suitable for copper or aluminum conductors unless otherwise specified. The terminal shall include but not be limited to:

   a) Incoming terminals (landing lugs)
   b) Neutral lugs
   c) Solid neutral terminal strip

9. At least 6 standard single pole circuit breaker spaces, 3/4" nominal, shall be provided for branch circuits. Circuit breaker interiors shall be copper. Interiors of enclosure shall accept plug-in or cable-in/cable-out circuit breakers.

10. Control wiring shall be 600 V, 14 stranded machine tool wire. Where subject to flexing, 19 strand wire shall be used.

11. Main bus shall be rated for 125 A and shall be tin-plated copper.

12. A plastic laminated wiring diagram shall be provided with brass mounting eyelets and attached to the inside of the enclosure and the wiring diagram shall be affixed to the interior with a UL or ETL approved method.

13. An engraved phenolic nameplate on the dead front panel indicating the function of each circuit or device shall be installed with stainless steel rivets or stainless steel screws:

    a) Adjacent to the breaker or device with character size a minimum of 1/8".

    b) At the top of the exterior door panel indicating State system number, voltage level and number of phases with character size a minimum of 3/16".

14. The plan shows the approximate location of devices within the enclosure. Components may be rearranged, however, the "working" clearances within the service equipment enclosure shall be maintained.

15. In unpaved areas a raised portland cement concrete pad 2'-0" x 4" x width of foundation shall be constructed in front of new service equipment enclosure installation. Pad shall be set to elevation of foundation.

16. Foundation shall extend 2" minimum beyond edge of service equipment enclosure.

17. Internal bus, where shown, is typical only. Alternative design of proposed service equipment enclosure shall be submitted to the Engineer for approval.

18. Plug-in circuit breakers may be mounted in the vertical or horizontal position. Cable-in/cable-out circuit breakers shall be mounted in the vertical position.

19. Type III-AF and Type III-BF service equipment enclosures shall have the meter viewing windows located on the front side of the service equipment enclosures.

20. Type III-AR and Type III-BR service equipment enclosures shall be similarly constructed as Type III-AF and Type III-BF respectively, except the meter viewing windows shall be located on the back side of the service equipment enclosures.

21. Minimum clearance shall be required for front and back of service equipment enclosure per National Electrical Code, Article 110.26, "Spaces About Electric Equipment (600 Volts, Nominal, or Less)."

STATE OF CALIFORNIA
DEPARTMENT OF TRANSPORTATION

ELECTRICAL SYSTEMS (SERVICE EQUIPMENT NOTES TYPE III SERIES)

NO SCALE

RSP ES-2C DATED OCTOBER 5, 2007 SUPERCEDES STANDARD PLAN ES-2C
DATED MAY 1, 2006 - PAGE 405 OF THE STANDARD PLANS BOOK DATED MAY 2006.

REVISED STANDARD PLAN RSP ES-2C

2006 REVISED STANDARD PLAN RSP ES-2C

DIST	COUNTY	ROUTE	POST MILES TOTAL PROJECT	SHEET NO.	TOTAL SHEETS
11	SD	76	28.8/29.1	37	47

REGISTERED ELECTRICAL ENGINEER

October 5, 2007
PLANS APPROVAL DATE

REGISTERED PROFESSIONAL ENGINEER Jeffery G. McRae No. E14512 Exp. 6-30-08 ELECTRICAL STATE OF CALIFORNIA

The State of California or its officers or agents shall not be responsible for the accuracy or completeness of electronic copies of this plan sheet.

To accompany plans dated 06-20-11

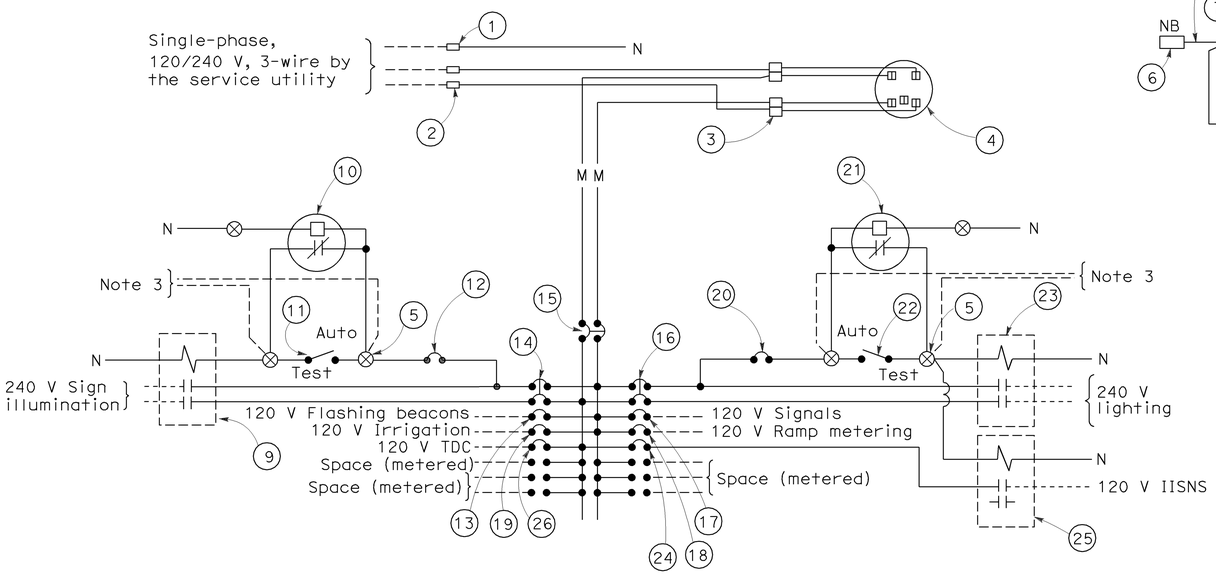

120/240 V SERVICE WIRING DIAGRAM (TYPICAL)

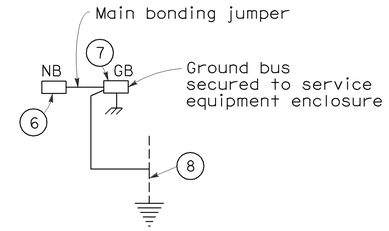

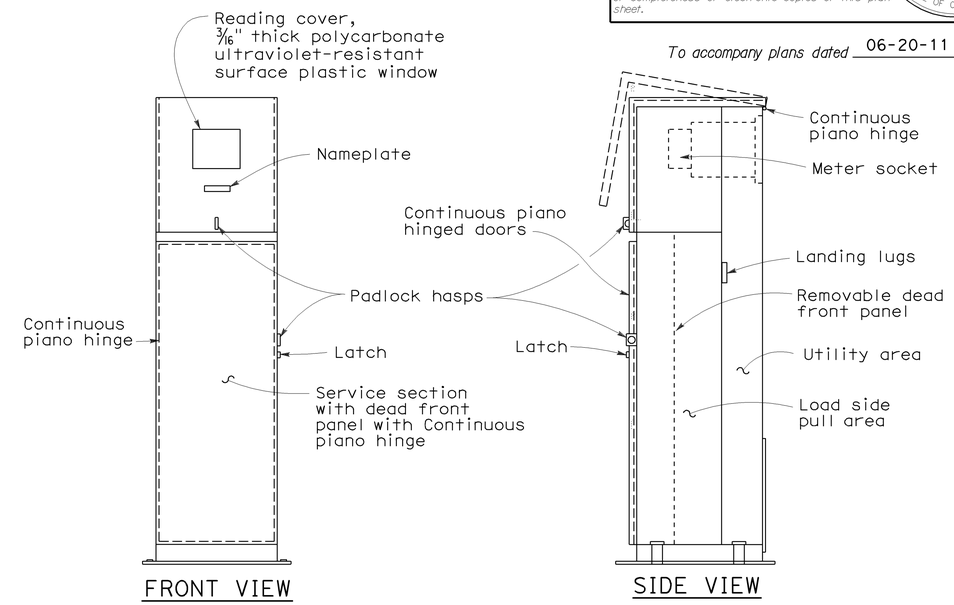

TYPE III-BF SERVICE EQUIPMENT ENCLOSURE WITH PROVISIONS FOR ONE 100 A METER (TYPICAL)

TYPE III-B SERVICE (120/240 V) EQUIPMENT LEGEND		
ITEM No.	COMPONENT	NAME PLATE DESCRIPTION
1	Neutral lug	
2	Landing lug (Note 6)	
3	Test bypass facility	
4	Meter socket and support	
5	Terminal blocks	
6	Neutral bus	
7	Ground bus	
8	Grounding electrode	
9	30 A, 2PNO Contactor	Sign Illumination
10	Photoelectric unit (Note 7)	
11	15 A, 1P, Test switch	Sign Illumination Test Switch
12	15 A, 120 V, 1P, CB	Sign Illumination Control
13	15 A, 120 V, 1P, CB	Flashing Beacon
14	30 A, 240 V, 2P, CB	Sign Illumination
15	100 A, 240 V, 2P, CB	Main Breaker
16	30 A, 240 V, 2P, CB	Lighting
17	50 A, 120 V, 1P, CB	Signals
18	30 A, 120 V, 1P, CB	Ramp Metering
19	20 A, 120 V, 1P, CB	Irrigation
20	15 A, 120 V, 1P, CB	Lighting Control
21	Photoelectric unit (Note 7)	
22	15 A, 1P, Test switch	Lighting Test Switch
23	60 A, 2PNO Contactor	Lighting
24	15 A, 120 V, 1P, CB	IISNS
25	30 A, 2PNO Contactor	IISNS
26	20 A, 120 V, IP, CB	Telephone Demarcation Cabinet

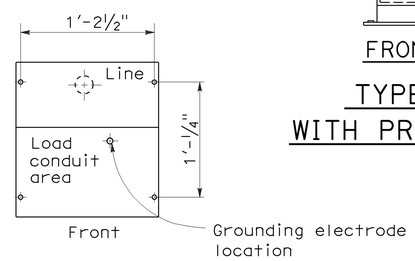

BASE FOR TYPE III-B SERVICE EQUIPMENT ENCLOSURE

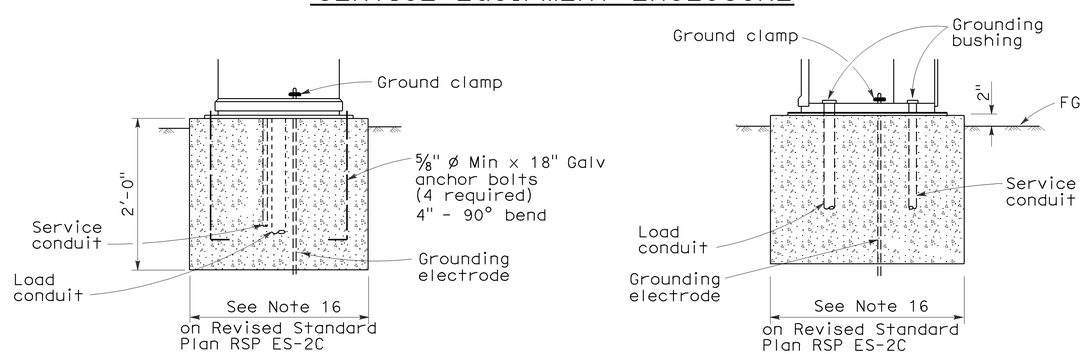

TYPE III-B SERVICE EQUIPMENT ENCLOSURE FOUNDATION DETAILS

NOTES: (FOR SERVICE EQUIPMENT ENCLOSURE)

1. Voltage ratings of service equipment shall conform to the service voltages indicated on the plans.
2. Unless otherwise indicated on the plans, service equipment items shall be provided for each service equipment enclosure as shown.
3. Connect to remote test switch mounted on lighting standards, sign post or structure when required.
4. Items No. 1 and 6 shall be isolated from the service equipment enclosure.
5. Meter sockets shall be 5 clip type.
6. The landing lug shall be suitable for multiple conductors.
7. Type V photoelectric control shall be used unless otherwise indicated on the plans.

STATE OF CALIFORNIA
DEPARTMENT OF TRANSPORTATION

ELECTRICAL SYSTEMS (SERVICE EQUIPMENT AND TYPICAL WIRING DIAGRAM, TYPE III-B SERIES)

NO SCALE

RSP ES-2E DATED OCTOBER 5, 2007 SUPERCEDES STANDARD PLAN ES-2E DATED MAY 1, 2006 - PAGE 407 OF THE STANDARD PLANS BOOK DATED MAY 2006.

REVISED STANDARD PLAN RSP ES-2E

2006 REVISED STANDARD PLAN RSP ES-2E

7-10-07

DIST	COUNTY	ROUTE	POST MILES TOTAL PROJECT	SHEET NO.	TOTAL SHEETS
11	SD	76	28.8/29.1	38	47

REGISTERED ELECTRICAL ENGINEER

June 6, 2008
PLANS APPROVAL DATE

REGISTERED PROFESSIONAL ENGINEER Jeffery G. McRae No. E14512 Exp. 6-30-10 ELECTRICAL STATE OF CALIFORNIA

The State of California or its officers or agents shall not be responsible for the accuracy or completeness of electronic copies of this plan sheet.

To accompany plans dated 06-20-11

VISORS

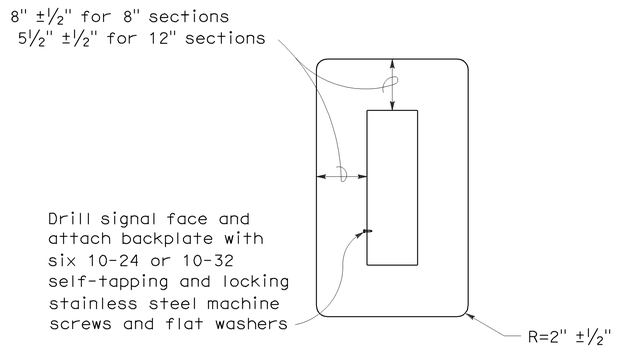

8" AND 12" SECTIONS

BACKPLATE

1/16" minimum thickness
3001-14 aluminum, or plastic when specified

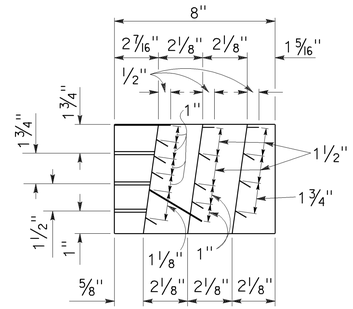

SECTION A-A

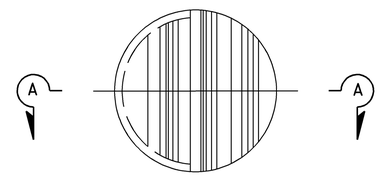

FRONT VIEW

DIRECTIONAL LOUVER

Directional louvers shall be oriented as directed by the Engineer and secured in place with one plated brass machine screw and nut.

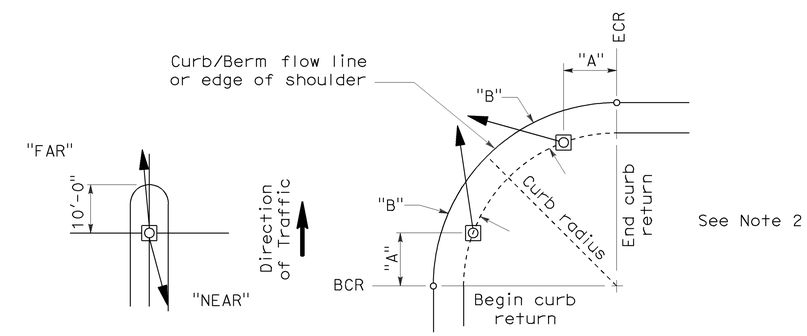

NOTES:

1. Typical signal pole placement unless dimensioned on plans.
2. For "A" and "B" dimensions, see Pole Schedule, or as directed by the Engineer.

SIGNAL STANDARD PLACEMENT DIMENSIONS AND EQUIPMENT LOCATIONS

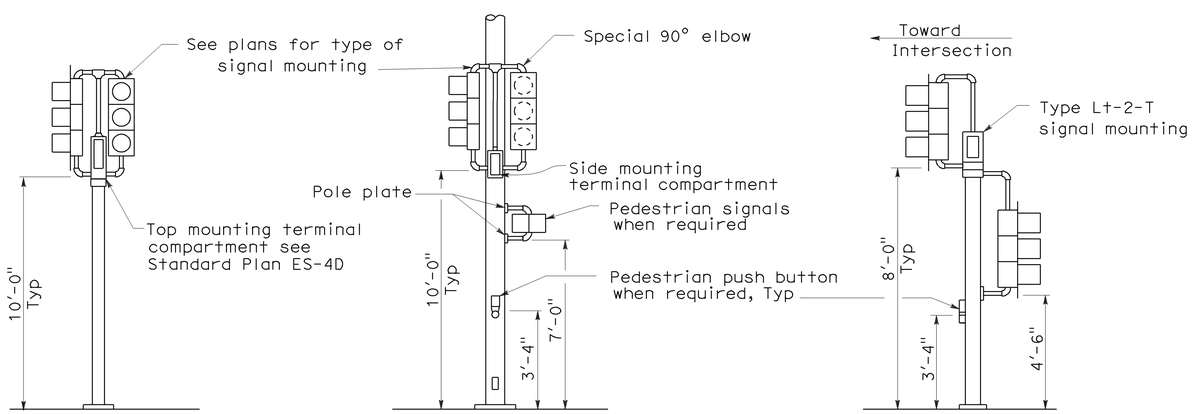

TOP MOUNTED SIGNALS (TV)

Type 1-A, 1-B, 1-C and 1-D standard as indicated on the plans

SIDE MOUNTED SIGNALS (SV AND SP)

Normally used on standards with luminaire or signal mast arm

LEFT TURN LANE SIGNAL

Type 1-A, 1-B, 1-C and 1-D standard as indicated on plans

TYPICAL SIGNAL INSTALLATIONS

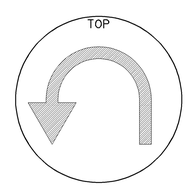

U-TURN SIGNAL FACE

BICYCLE SIGNAL FACE

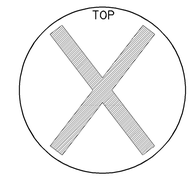

LANE CONTROL SIGNAL FACE

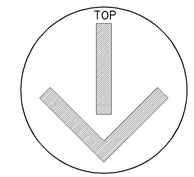

LANE CONTROL SIGNAL FACE

STATE OF CALIFORNIA
DEPARTMENT OF TRANSPORTATION

ELECTRICAL SYSTEMS (SIGNAL HEADS AND MOUNTINGS)

NO SCALE

RSP ES-4C DATED JUNE 6, 2008 SUPERSEDES STANDARD PLAN ES-4C DATED MAY 1, 2006 - PAGE 420 OF THE STANDARD PLANS BOOK DATED MAY 2006.

REVISED STANDARD PLAN RSP ES-4C

2006 REVISED STANDARD PLAN RSP ES-4C

5-19-08

DIST	COUNTY	ROUTE	POST MILES TOTAL PROJECT	SHEET NO.	TOTAL SHEETS
11	SD	76	28.8/29.1	39	47

REGISTERED ELECTRICAL ENGINEER

June 6, 2008
PLANS APPROVAL DATE

REGISTERED PROFESSIONAL ENGINEER Jeffery G. McRae No. E14512 Exp. 6-30-10 ELECTRICAL STATE OF CALIFORNIA

The State of California or its officers or agents shall not be responsible for the accuracy or completeness of electronic copies of this plan sheet.

To accompany plans dated 06-20-11

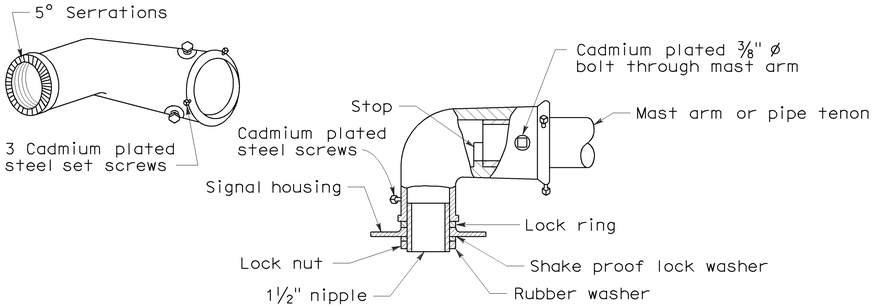

MAST ARM MOUNTING - TYPE "MAT"

For 2 NPS pipe, see Note 1.

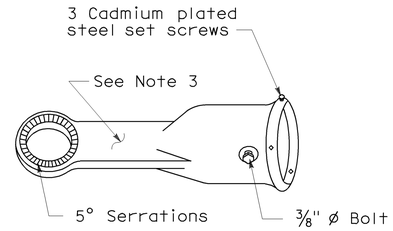

MAST ARM MOUNTING - TYPE "MAS"

For 2 NPS pipe. See Note 1.

SIGNAL SLIP FITTERS

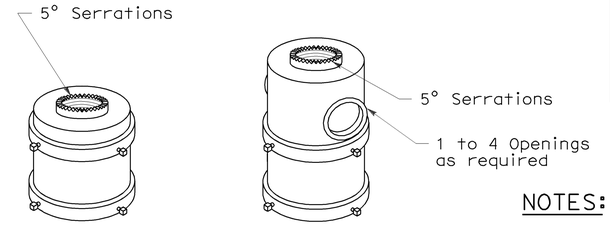

For one mounting For mulitiple mountings

TOP MOUNTINGS

For 4 NPS pipe, see Note 2.

NOTES:

1. After mast arm signal has been plumbed and secured, drill 7/16" hole through mast arm tenon in line with slip fitter hole. Place a cadmium plated ⅜" ø galvanized bolt with washer under bolt head through hole and secure with washer, nut, and locknut. Seal openings between mast arm mountings and mast arm with mastic.
2. (a) Threaded top mounted slip fitter openings shall be 1½ NPS.
   (b) Serrations in fittings shall match those on bottom of signal heads or in lock ring.
   (c) Top opening shall be offset when backplate is used.
3. Wireway shall have a cross section area of 0.95 square inch minimum. Minimum width of ½".

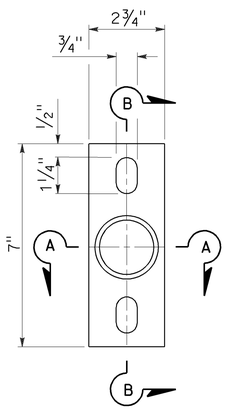

POLE PLATE

For side mountings

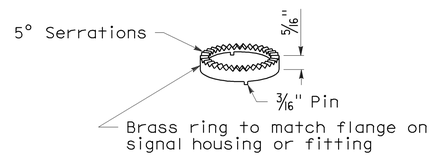

LOCK RING

Use where locking ring is not integral with signal housing or fitting.

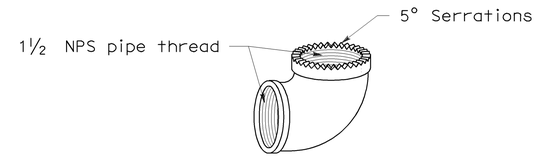

SPECIAL 90° ELBOW

One for each signal head, except those with special slip fitter mounting

MISCELLANEOUS MOUNTING HARDWARE

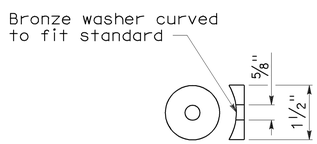

DETAIL "C"

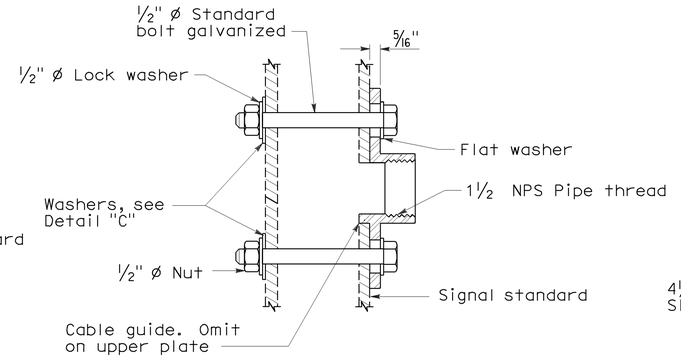

SECTION B-B

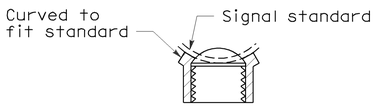

SECTION A-A

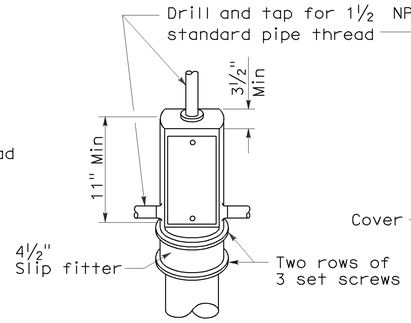

TOP MOUNTING

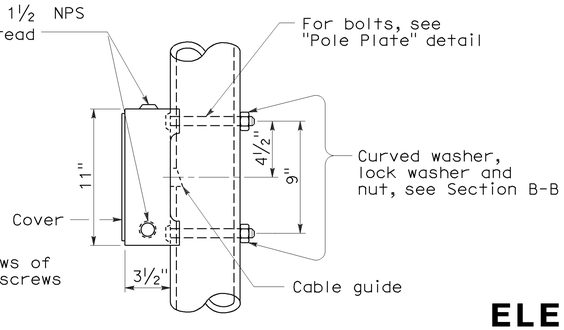

SIDE MOUNTING

TERMINAL COMPARTMENTS

STATE OF CALIFORNIA
DEPARTMENT OF TRANSPORTATION

ELECTRICAL SYSTEMS (SIGNAL HEADS AND MOUNTINGS)

NO SCALE

RSP ES-4D DATED June 6, 2008 SUPERSEDES STANDARD PLAN ES-4D
DATED MAY 1, 2006 - PAGE 421 OF THE STANDARD PLANS BOOK DATED MAY 2006.

REVISED STANDARD PLAN RSP ES-4D

2006 REVISED STANDARD PLAN RSP ES-4D

5-19-08

DIST	COUNTY	ROUTE	POST MILES TOTAL PROJECT	SHEET NO.	TOTAL SHEETS
11	SD	76	28.8/29.1	40	47

REGISTERED ELECTRICAL ENGINEER

October 5, 2007
PLANS APPROVAL DATE

REGISTERED PROFESSIONAL ENGINEER Jeffery G. McRae No. E14512 Exp. 6-30-08 ELECTRICAL STATE OF CALIFORNIA

The State of California or its officers or agents shall not be responsible for the accuracy or completeness of electronic copies of this plan sheet.

To accompany plans dated 06-20-11

2006 REVISED STANDARD PLAN RSP ES-5A

LOOP INSTALLATION PROCEDURE

1. Loops shall be centered in lanes.
2. Saw slots in pavement for loop conductors as shown in details.
3. Distance between side of loop and a lead-in saw cut from adjacent detectors shall be 2'-0" minimum. Distance between lead-in saw cuts shall be 6" minimum.
4. Bottom of saw slot shall be smooth with no sharp edges.
5. Slots shall be washed until clean, blown out and thoroughly dried before installing loop conductors.
6. Adjacent loops on the same sensor unit channel shall be wound in opposite directions.
7. Identify and tag loop circuit pairs in the pull box with loop number, start (S) and finish (F) of conductor. Identify and tag lead-in-cable with sensor number and phase.
8. Install loop conductor in slot using a 3/16" to 1/4" thick wood paddle. Hold loop conductors with wood paddles (at the bottom of the sawed slot) during sealant placement.
9. No more than 2 twisted pairs shall be installed in one sawed slot.
10. Allow additional 5'-0" of slack length of conductor for the lead-in run to pull box.
11. The additional length of each conductor for each loop shall be twisted together into a pair (6 turns per 3'-4" minimum) before being placed in the slot and conduit leading to pull box.
12. Test each loop circuit for continuity, circuit resistance and insulation resistance at the pull box before filling slots.
13. Fill slots as shown in details.
14. Splice loop conductors to lead-in-cable. Splices shall be soldered.
15. End of lead-in-cable and Type 2 loop conductor shall be waterproofed prior to installing in conduit to prevent moisture from entering the cable.
16. Lead-in-cable shall not be spliced between the pull box and the controller cabinet terminals.
17. Test each loop circuit for continuity, circuit resistance and insulation resistance at the controller cabinet location.
18. Where loop conductors are not to be spliced to a lead-in-cable, the ends of the conductors shall be taped and waterproofed with electrical insulating coating.

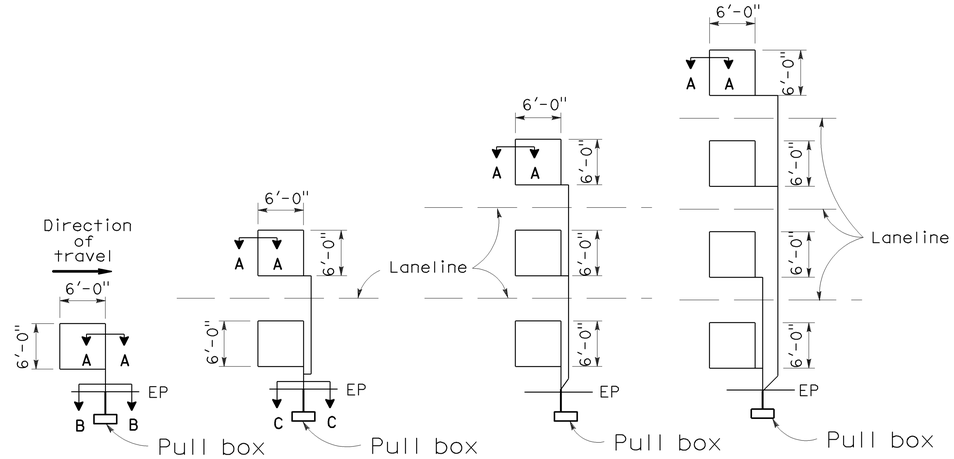

TYPE 1A INSTALLATION | TYPE 2A INSTALLATION | TYPE 3A INSTALLATION | TYPE 4A INSTALLATION

SAWCUT DETAILS

(Type A loop detector configurations illustrated)

1. 1A thru 4A = 1 Type A loop configuration in each lane.
2. 1B thru 4B = 1 Type B loop configuration in each lane.
3. 1C = 1 Type C loop configuration entering lanes as required.
4. 1D thru 4D = 1 Type D loop configuration in each lane.
5. 1E thru 4E = 1 Type E loop configuration in each lane.
6. 1Q thru 4Q = 1 Type Q loop configuration in each lane. (Use Type A, B, C, D, E or Q loop detector configurations only when specified or shown on plans)

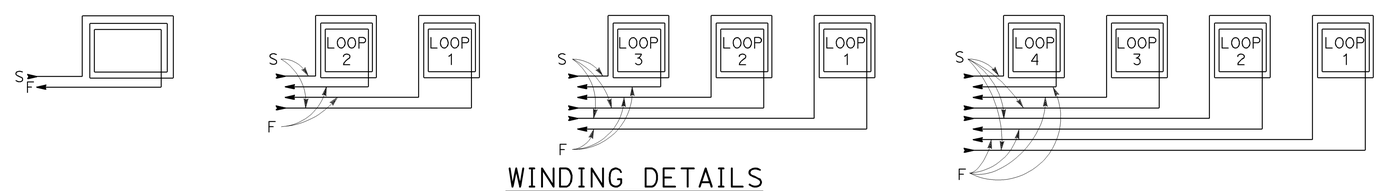

WINDING DETAILS

See Notes 6 and 7

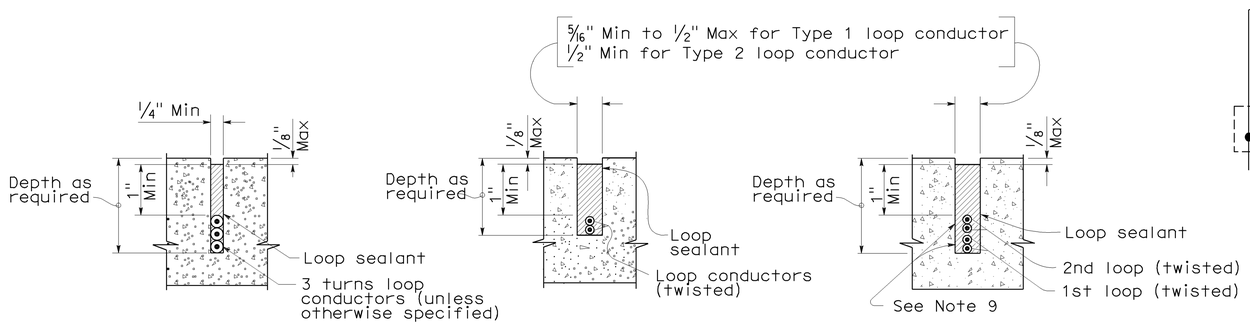

SECTION A-A | SECTION B-B | SECTION C-C

SLOT DETAILS - TYPE 1 AND TYPE 2 LOOP CONDUCTOR

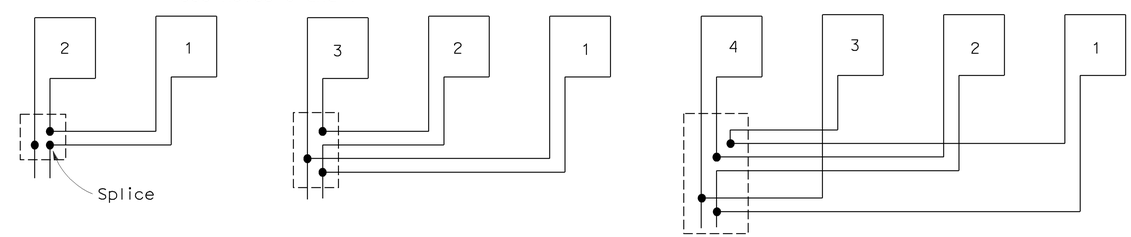

TYPICAL LOOP CONNECTIONS

(Dashed lines represent the pull box)

STATE OF CALIFORNIA
DEPARTMENT OF TRANSPORTATION

ELECTRICAL SYSTEMS (DETECTORS)

NO SCALE

RSP ES-5A DATED OCTOBER 5, 2007 SUPERCEDES STANDARD PLAN ES-5A DATED MAY 1, 2006 - PAGE 423 OF THE STANDARD PLANS BOOK DATED MAY 2006.

REVISED STANDARD PLAN RSP ES-5A

8-17-07

DIST	COUNTY	ROUTE	POST MILES TOTAL PROJECT	SHEET NO.	TOTAL SHEETS
11	SD	76	28.8/29.1	41	47

REGISTERED CIVIL ENGINEER

October 5, 2007
PLANS APPROVAL DATE

REGISTERED PROFESSIONAL ENGINEER
Stanley P. Johnson
No. C57793
Exp. 3-31-08
CIVIL
STATE OF CALIFORNIA

The State of California or its officers or agents shall not be responsible for the accuracy or completeness of electronic copies of this plan sheet.

To accompany plans dated 06-20-11

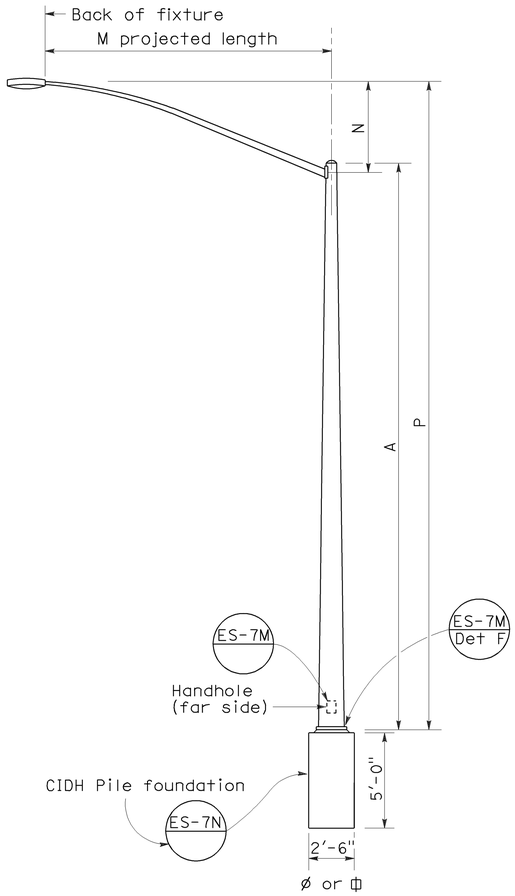

ELEVATION
TYPE 15 AND TYPE 21

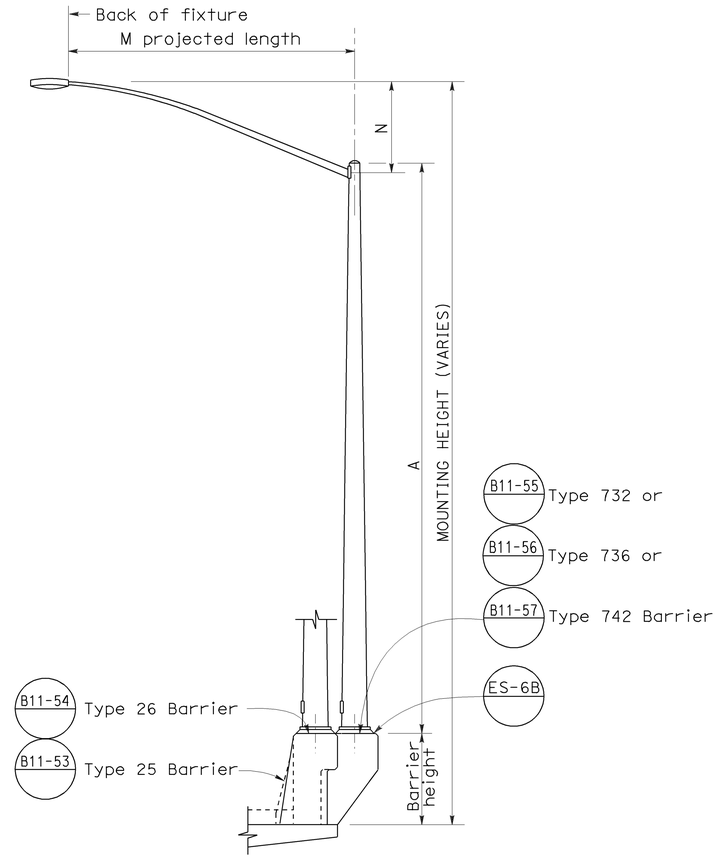

ELEVATION
TYPE 15 AND TYPE 21 BARRIER RAIL MOUNTED

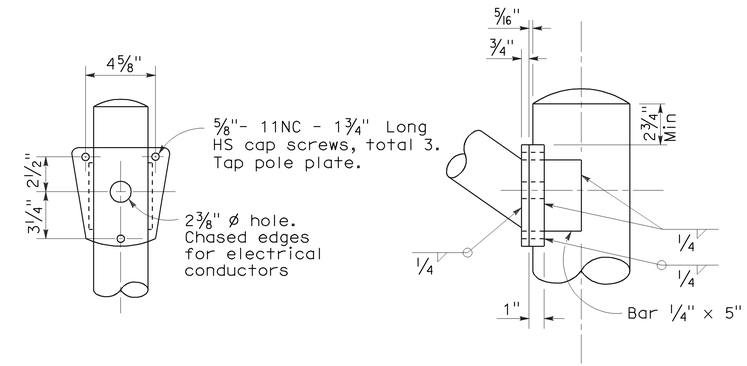

DETAIL R
LUMINAIRE ARM CONNECTION

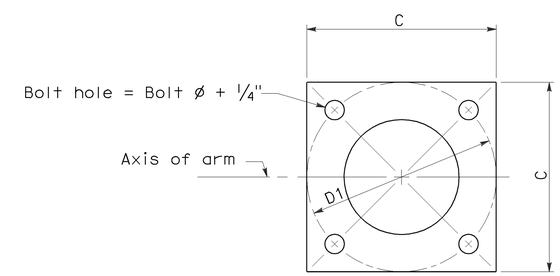

BASE PLATE

POLE TYPE	POLE DATA				BASE PLATE DATA				LUMINAIRE ARM
	A Height	Min OD Base	Min OD Top	Wall Thickness	C	D1 Bolt Circle	Thickness	Anchor Bolts Size	
15	30'	8"	3 7/8"	0.1196"	1'-0"	1'-0"	1"	1" ø x 3'-0" x 4"*	6' - 15' [12']
21	35'	8 5/8"	3 7/8"	0.1196"	1'-0"	1'-0"	1"	1 1/4"ø x 3'-0" x 4"*	6' - 15' [12']

* For barrier rail bolts, see Standard Plan ES-6B.

LUMINAIRE ARM DATA					
M Projected Length	N Rise	Min OD At Pole	Nominal Thickness	P Type 15	P Type 21
6'-0"	2'-0"±	3 1/4"	0.1196"	31'-6"±	36'-6"±
8'-0"	2'-6"±	3 1/2"	0.1196"	32'-0"±	37'-0"±
10'-0"	3'-3"±	3 7/8"	0.1196"	32'-9"±	37'-9"±
12'-0"	4'-3"±	3 7/8"	0.1196"	33'-9"±	38'-9"±
15'-0"	4'-9"±	4 1/4"	0.1196"	34'-3"±	39'-3"±

NOTES:

1. ☐ Indicates arm length to be used unless otherwise noted on the plans.
2. For Type 15-SB, use Type 15 standard with Type 30 slip base plate details, see Standard Plan ES-6F.
3. For additional notes, see Standard Plan ES-7M and ES-7N.

STATE OF CALIFORNIA
DEPARTMENT OF TRANSPORTATION

ELECTRICAL SYSTEMS (LIGHTING STANDARD TYPES 15 AND 21)

NO SCALE

RSP ES-6A DATED OCTOBER 5, 2007 SUPERCEDES STANDARD PLAN ES-6A
DATED MAY 1, 2006 - PAGE 427 OF THE STANDARD PLANS BOOK DATED MAY 2006.

REVISED STANDARD PLAN RSP ES-6A

2006 REVISED STANDARD PLAN RSP ES-6A

7-10-07

DIST	COUNTY	ROUTE	POST MILES TOTAL PROJECT	SHEET NO.	TOTAL SHEETS
11	SD	76	28.8/29.1	42	47

REGISTERED CIVIL ENGINEER

October 5, 2007
PLANS APPROVAL DATE

REGISTERED PROFESSIONAL ENGINEER Stanley P. Johnson No. C57793 Exp. 3-31-08 CIVIL STATE OF CALIFORNIA

The State of California or its officers or agents shall not be responsible for the accuracy or completeness of electronic copies of this plan sheet.

To accompany plans dated 06-20-11

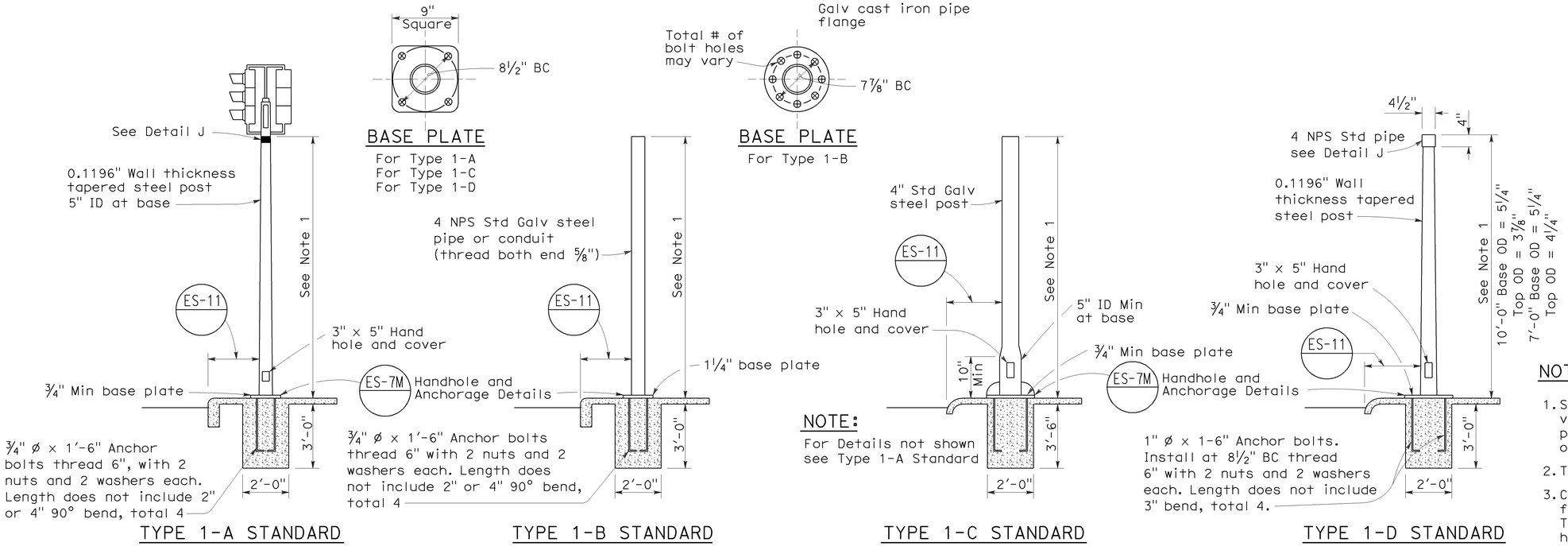

TYPE 1 SIGNAL STANDARDS

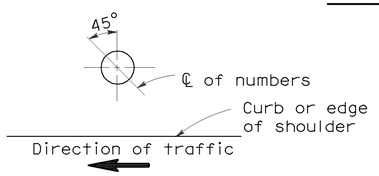

PLAN

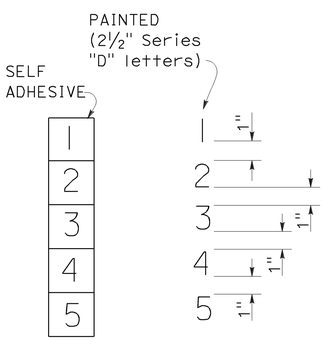

NUMBER DETAIL

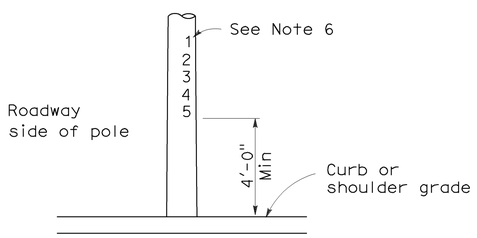

TYPICAL NUMBER FORMAT

LOCATION OF EQUIPMENT NUMBERS ON STANDARDS AND POSTS

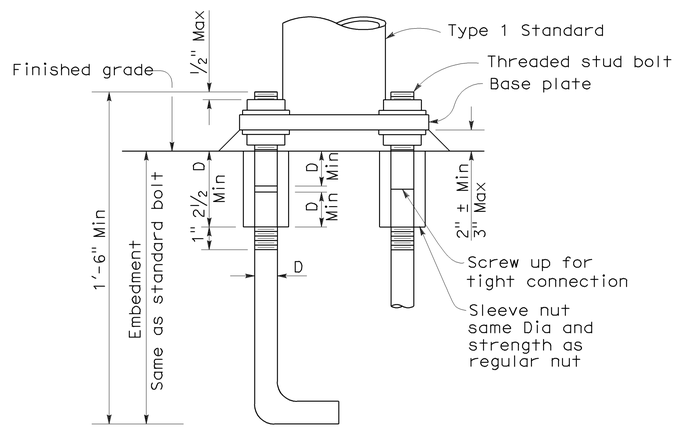

ANCHOR BOLTS WITH SLEEVE NUTS

Sleeve nuts to be used only when shown or specified on Project Plans

D = Diameter of anchor bolt

NOTES:

1. Standards shall be 10'-0" ± 2" for vehicle signals and 7'-0" ± 2" for pedestrian signals unless otherwise noted on plans.
2. Top of standards shall be 4½" OD.
3. Conduits shall extend 2" maximum above finished surface of foundation and for Types 1-A, 1-C and 1-D shall be sloped toward handhole.
4. Anchor bolts shall be bonded to conduit or grounding conductor.
5. Conduit between standard and adjacent pull box shall be 2" minimum.
6. Paint numbers on roadway side facing traffic when electrolier or post is left of direction of traffic.

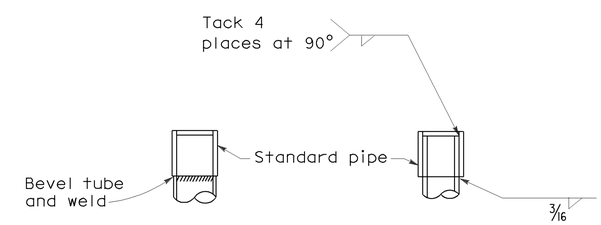

DETAIL J

Tube may be inserted into pipe or butted as required

STATE OF CALIFORNIA
DEPARTMENT OF TRANSPORTATION

ELECTRICAL SYSTEMS (SIGNAL AND LIGHTING STANDARD TYPE 1 STANDARD AND EQUIPMENT NUMBERING)

NO SCALE

RSP ES-7B DATED OCTOBER 5, 2007 SUPERCEDES STANDARD PLAN ES-7B DATED MAY 1, 2006 - PAGE 438 OF THE STANDARD PLANS BOOK DATED MAY 2006.

REVISED STANDARD PLAN RSP ES-7B

2006 REVISED STANDARD PLAN RSP ES-7B

7-10-07

DIST	COUNTY	ROUTE	POST MILES TOTAL PROJECT	SHEET NO.	TOTAL SHEETS
11	SD	76	28.8/29.1	43	47

REGISTERED CIVIL ENGINEER

October 5, 2007
PLANS APPROVAL DATE

REGISTERED PROFESSIONAL ENGINEER Stanley P. Johnson No. C57793 Exp. 3-31-08 CIVIL STATE OF CALIFORNIA

The State of California or its officers or agents shall not be responsible for the accuracy or completeness of electronic copies of this plan sheet.

To accompany plans dated 06-20-11

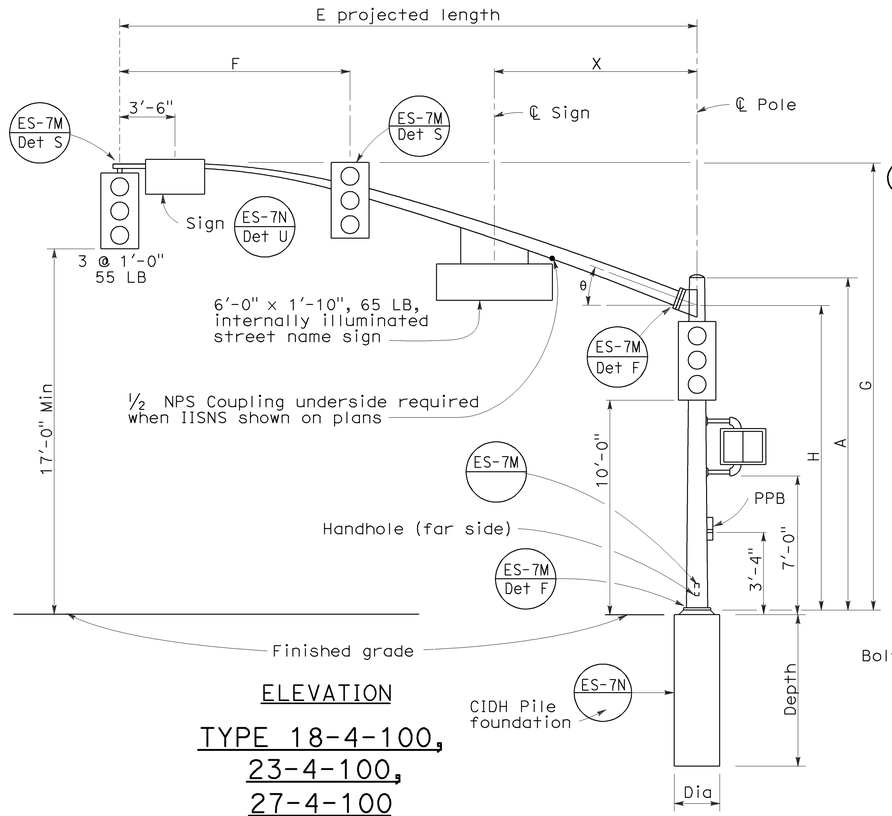

ELEVATION

TYPE 18-4-100, 23-4-100, 27-4-100

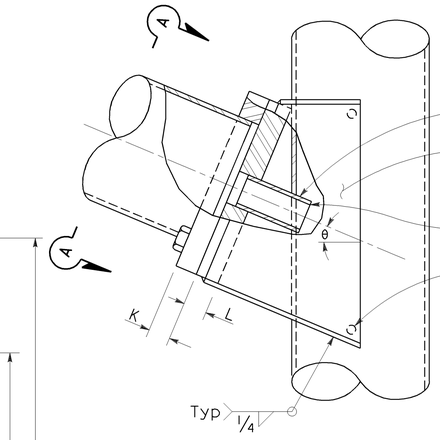

ELEVATION

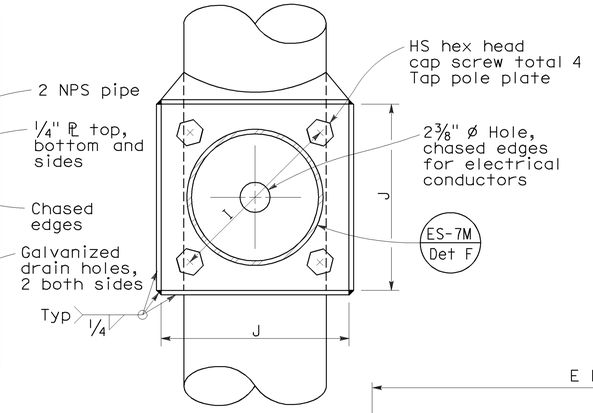

VIEW A-A

SIGNAL ARM CONNECTION DETAILS

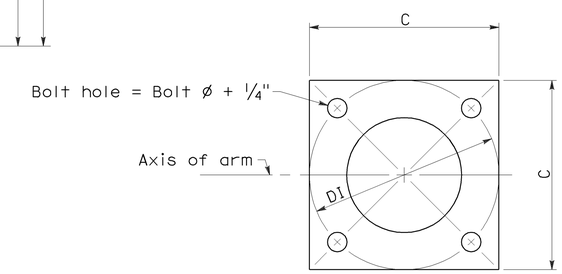

BASE PLATE

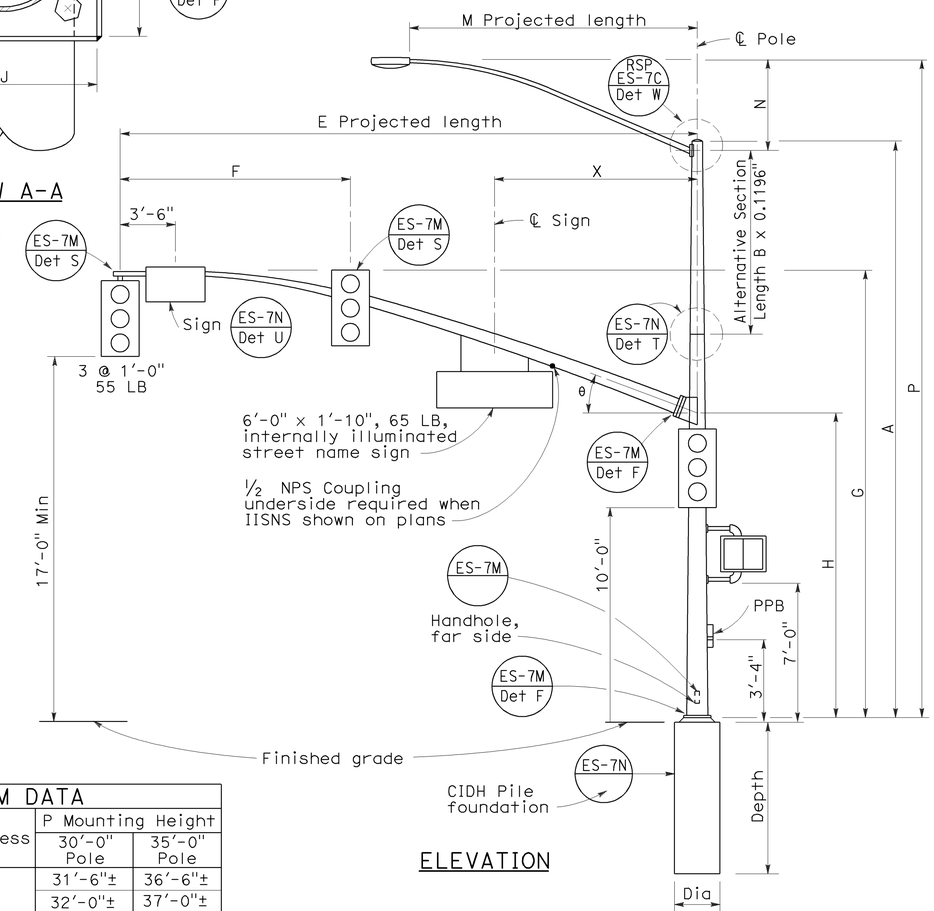

ELEVATION

TYPE 19-4-100, 19A-4-100, 24-4-100, 24A-4-100, 26-4-100, 26A-4-100

SIGNAL ARM DATA												
E Projected Length	F Min Spacing	G Mounting Height	H	Min OD at Pole	Thickness	I Bolt Circle	HS Cap Screws	J Plate Size	K Arm PL Thickness	L Pole PL Thickness	θ	X Max
25'-0"	10'-0"	22'-8"±	16'-0"	7 5/16"	0.2391"	12"	1¼"-7NC-3"	1'-0"	1¼"	1½"	23°	10'-6"
30'-0"	12'-0"	23'-0"±		8"								
35'-0"	14'-0"			8 11/16"		13½"		1'-1½"	1½"	1¾"	21°	
40'-0"	15'-0"			9⅜"							15°	13'-0"
45'-0"		23'-8"±		10¼"								

LUMINAIRE ARM DATA					
M Projected Length	N Rise	Min OD at Pole	Thickness	P Mounting Height 30'-0" Pole	P Mounting Height 35'-0" Pole
6'-0"	2'-0"±	3¼"	0.1196"	31'-6"±	36'-6"±
8'-0"	2'-6"±	3½"		32'-0"±	37'-0"±
10'-0"	3'-3"±	3⅞"		32'-9"±	37'-9"±
12'-0"	4'-3"±			33'-9"±	38'-9"±
15'-0"	4'-9"±	4¼"		34'-3"±	39'-3"±

Pole Type	Load Case	Wind Velocity mph	POLE DATA							BASE PLATE DATA				Luminaire Arm	Signal Arm	CIDH PILE FOUNDATION		
			A Height	Min OD Base	Min OD Top	Thickness	Alternative Section B Length	Alternative Section Bottom	Alternative Section Top	C	DI Bolt Circle	Thickness	Anchor Bolts Size			Dia	Depth	Reinforced
18-4-100	4	100	17'-0"	12"	9"	0.2391"	None			1'-6"	1'-6"	1½"	2" Ø x 42" x 6"	None	25'-0", [30'-0"]	3'-0"	9'-0"	Yes
19-4-100			30'-0"		8"		10'-0"	9⅜"	8"					6'-15' [12'-0"]				
19A-4-100			35'-0"		7 5/16"		15'-0'		7 5/16"					6'-15' [15'-0"]				
23-4-100			17'-0"		9"		None							None	35'-0"			
24-4-100			30'-0"		8"		10'-0"	9⅜"	8"					6'-15' [12'-0"]				
24A-4-100			35'-0"		7 5/16"		15'-0"		7 5/16"					6'-15' [15'-0"]				
26-4-100			30'-0"	12½"	8"	0.3125"	10'-0"	9¾"	8⅜"					6'-15' [12'-0"]	40'-0", [45'-0"]			
26A-4-100			35'-0"		7 5/16"		15'-0"		7 11/16"					6'-15' [15'-0"]				
27-4-100			17'-0"		9¾"		None							None				

☐ Indicates arm length to be used unless otherwise noted on plans.

STATE OF CALIFORNIA
DEPARTMENT OF TRANSPORTATION

ELECTRICAL SYSTEMS (SIGNAL AND LIGHTING STANDARD CASE 4 ARM LOADING WIND VELOCITY=100 MPH ARM LENGTHS 25' TO 45')

NO SCALE

RSP ES-7F DATED OCTOBER 5, 2007 SUPERCEDES RSP ES-7F DATED NOVEMBER 17, 2006 AND STANDARD PLAN ES-7F DATED MAY 1, 2006 - PAGE 442 OF THE STANDARD PLANS BOOK DATED MAY 2006.

REVISED STANDARD PLAN RSP ES-7F

2006 REVISED STANDARD PLAN RSP ES-7F

7-10-07

DIST	COUNTY	ROUTE	POST MILES TOTAL PROJECT	SHEET NO.	TOTAL SHEETS
11	SD	76	28.8/29.1	44	47

Randell D. Hiatt
REGISTERED CIVIL ENGINEER

June 6, 2008
PLANS APPROVAL DATE

REGISTERED PROFESSIONAL ENGINEER
Randell D. Hiatt
No. C50200
Exp. 6-30-09
CIVIL
STATE OF CALIFORNIA

The State of California or its officers or agents shall not be responsible for the accuracy or completeness of electronic copies of this plan sheet.

To accompany plans dated 06-20-11

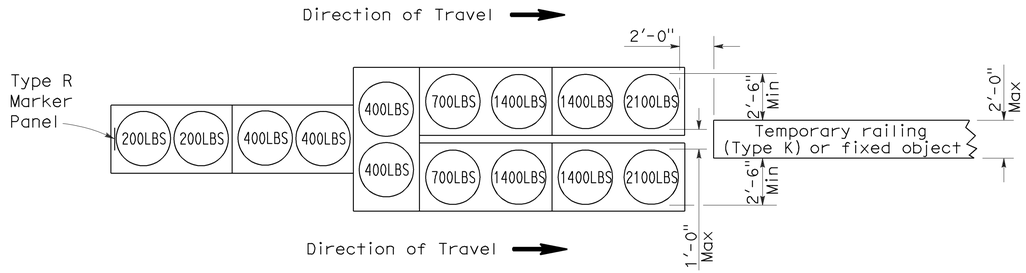

ARRAY 'TU14'

Approach speed 45 mph or more

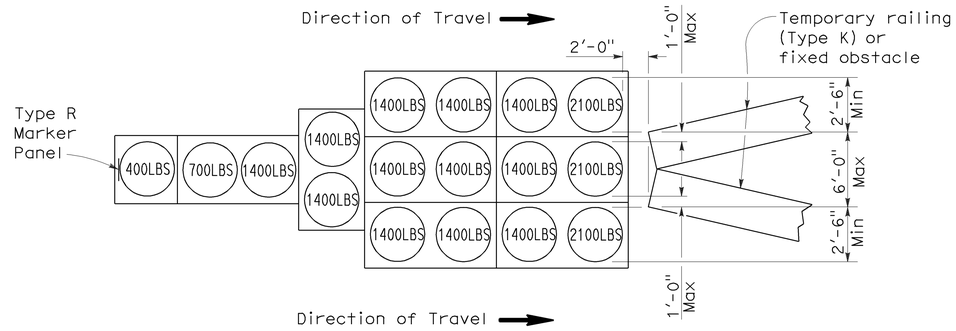

ARRAY 'TU17'

Approach speed less than 45 mph

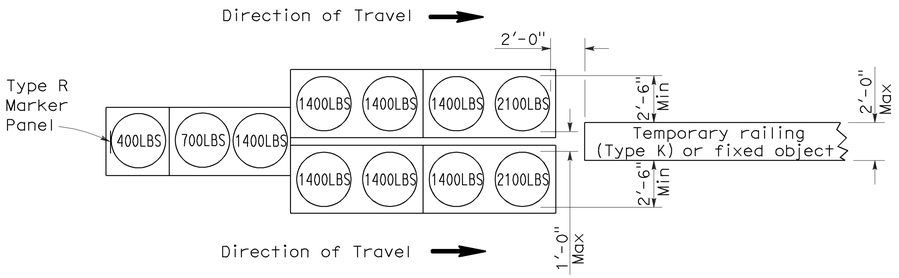

ARRAY 'TU11'

Approach speed less than 45 mph

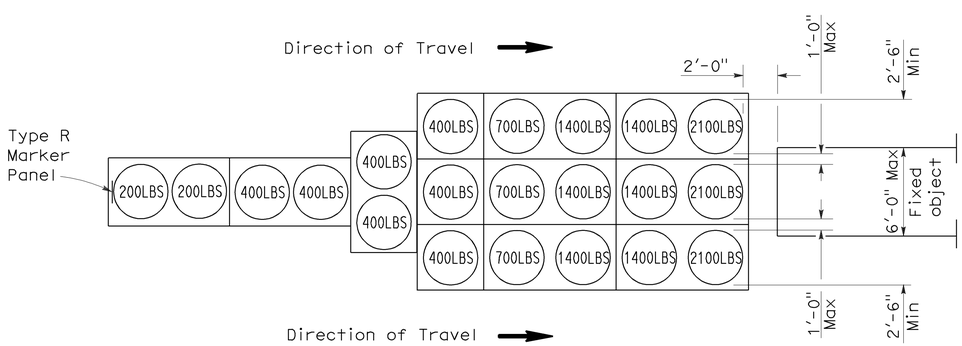

ARRAY 'TU21'

Approach speed 45 mph or more

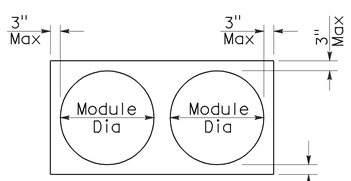

PLAN

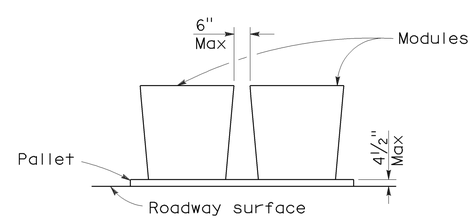

ELEVATION

CRASH CUSHION PALLET DETAIL

See Note 7

NOTES:

1. (XXX) Indicates sand filled module location and weight of sand in pounds for each module. Module spacing is based on the greater diameter of the module.
2. All sand weights are nominal.
3. Temporary crash cushion arrays shall not encroach on the traveled way.
4. Place the top of Type R marker panel 1" below the module lid.
5. Refer to Standard Plan A73B for marker details.
6. Approach speeds indicated conform to NCHRP 350 Report criteria.
7. Use of pallets is optional.

STATE OF CALIFORNIA
DEPARTMENT OF TRANSPORTATION

TEMPORARY CRASH CUSHION, SAND FILLED (UNIDIRECTIONAL)

NO SCALE

RSP T1A DATED JUNE 6, 2008 SUPERSEDES STANDARD PLAN T1A
DATED MAY 1, 2006 - PAGE 211 OF THE STANDARD PLANS BOOK DATED MAY 2006.

REVISED STANDARD PLAN RSP T1A

2006 REVISED STANDARD PLAN RSP T1A

DIST	COUNTY	ROUTE	POST MILES TOTAL PROJECT	SHEET NO.	TOTAL SHEETS
11	SD	76	28.8/29.1	45	47

Randell D. Hiatt
REGISTERED CIVIL ENGINEER

June 6, 2008
PLANS APPROVAL DATE

REGISTERED PROFESSIONAL ENGINEER
Randell D. Hiatt
No. C50200
Exp. 6-30-09
CIVIL
STATE OF CALIFORNIA

The State of California or its officers or agents shall not be responsible for the accuracy or completeness of electronic copies of this plan sheet.

To accompany plans dated 06-20-11

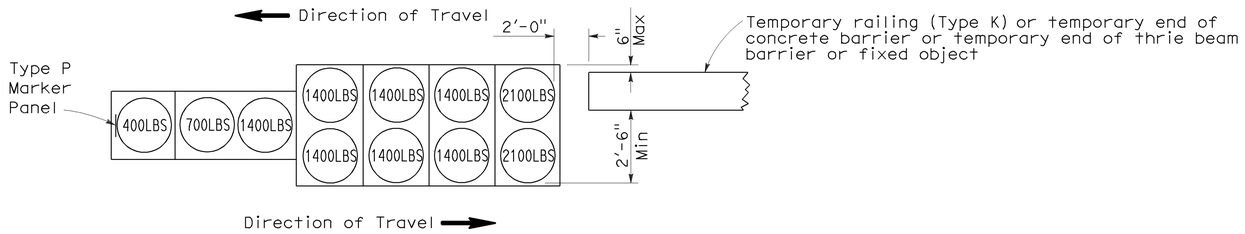

ARRAY 'TB11'

Approach speed less than 45 mph

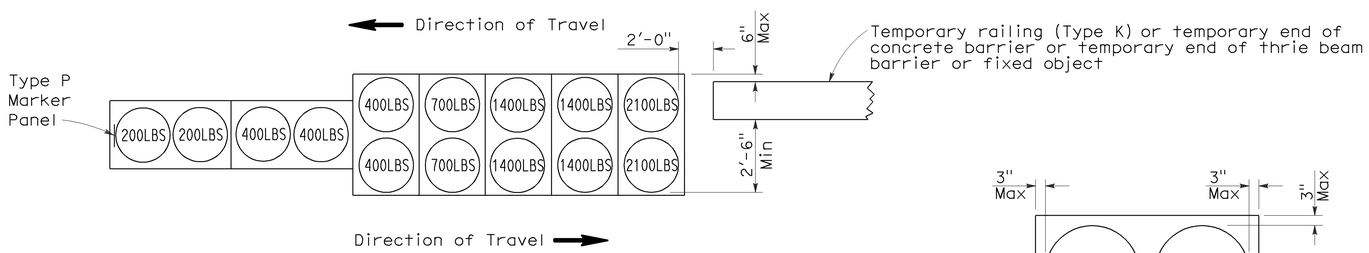

ARRAY 'TB14'

Approach speed 45 mph or more

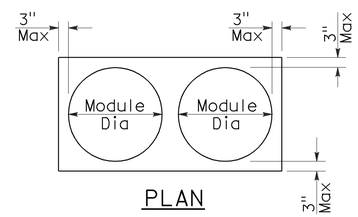

PLAN

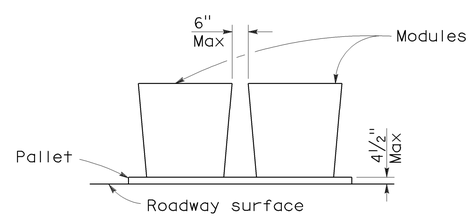

ELEVATION

CRASH CUSHION PALLET DETAIL

See Note 7

NOTES:

1. (XXX) Indicates sand filled module location and weight of sand in pounds for each module. Module spacing is based on the greater diameter of the module.
2. All sand weights are nominal.
3. Temporary crash cushion arrays shall not encroach on the traveled way.
4. Place the Type P marker panel so that the bottom of the panel rests upon the pallet.
5. Refer to Standard Plan A73B for marker details.
6. Approach speeds indicated conform to NCHRP 350 Report criteria.
7. Use of pallets is optional.

STATE OF CALIFORNIA
DEPARTMENT OF TRANSPORTATION

TEMPORARY CRASH CUSHION, SAND FILLED (BIDIRECTIONAL)

NO SCALE

RSP T1B DATED JUNE 6, 2008 SUPERSEDES STANDARD PLAN T1B
DATED MAY 1, 2006 - PAGE 212 OF THE STANDARD PLANS BOOK DATED MAY 2006.

REVISED STANDARD PLAN RSP T1B

2006 REVISED STANDARD PLAN RSP T1B

5-15-08

DIST	COUNTY	ROUTE	POST MILES TOTAL PROJECT	SHEET NO.	TOTAL SHEETS
11	SD	76	28.8/29.1	46	47

Randell D. Hiatt
REGISTERED CIVIL ENGINEER

June 6, 2008
PLANS APPROVAL DATE

REGISTERED PROFESSIONAL ENGINEER
Randell D. Hiatt
No. C50200
Exp. 6-30-09
CIVIL
STATE OF CALIFORNIA

The State of California or its officers or agents shall not be responsible for the accuracy or completeness of electronic copies of this plan sheet.

To accompany plans dated 06-20-11

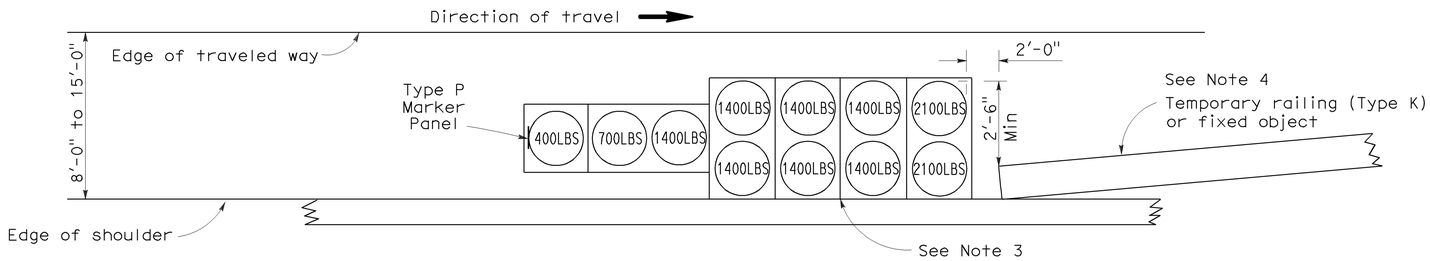

ARRAY 'TS11'

Approach speed less than 45 mph
See Note 9

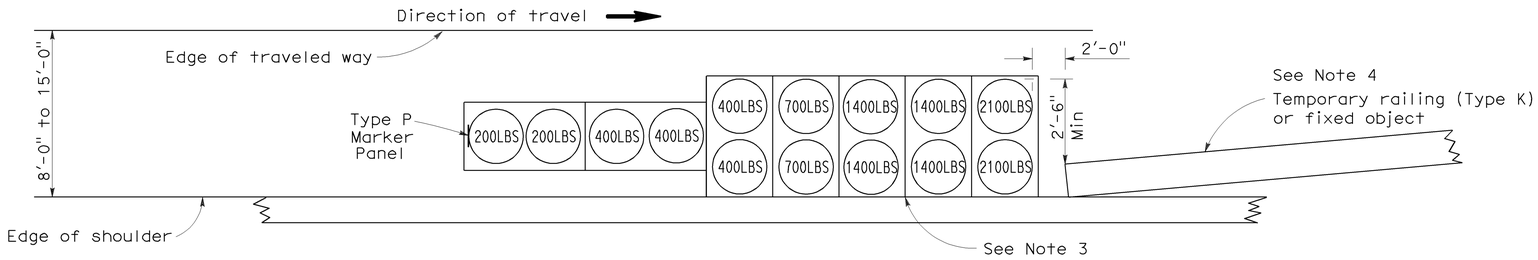

ARRAY 'TS14'

Approach speed 45 mph or more
See Note 9

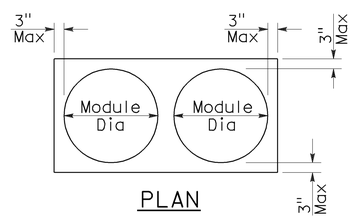

PLAN

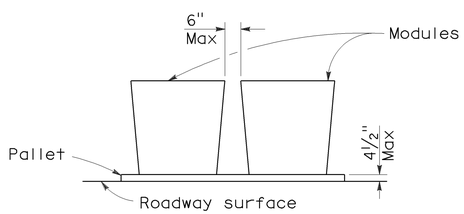

ELEVATION

CRASH CUSHION PALLET DETAIL

See Note 11

NOTES:

1. (XXX) Indicates sand filled module location and weight of sand in pounds for each module. Module spacing is based on the greater diameter of the module.
2. All sand weights are nominal.
3. The temporary crash cushion arrays shown on this plan shall be used only in locations where there will be traffic on one side of the temporary crash cushion array.
4. If the fixed object or approach end of the temporary railing is less than 15'-0" from the edge of traveled way, a temporary crash cushion is required in a construction or work zone.
5. Temporary crash cushion arrays shall not encroach on the traveled way.
6. Arrays for median shoulders shall conform to details shown on this plan for outside shoulders.
7. Place the Type P marker panel so that the bottom of the panel rests upon the pallet and faces traffic.
8. Refer to Standard Plan A73B for marker details.
9. For shoulder widths less than 8'-0", appropriate approved crash cushion protection, other than sand filled modules, shall be provided at fixed objects and at approach ends of temporary railing. The specific type of crash cushion shall be as shown on the project plans or as specified in the Special Provisions, or if not shown on the project plans or specified in the Special Provisions, shall be as approved by the Engineer.
10. Approach speeds indicated conform to NCHRP 350 Report criteria.
11. Use of pallets is optional.

STATE OF CALIFORNIA
DEPARTMENT OF TRANSPORTATION

TEMPORARY CRASH CUSHION, SAND FILLED (SHOULDER INSTALLATIONS)

NO SCALE

RSP T2 DATED JUNE 6, 2008 SUPERSEDES STANDARD PLAN T2
DATED MAY 1, 2006 - PAGE 213 OF THE STANDARD PLANS BOOK DATED MAY 2006.

REVISED STANDARD PLAN RSP T2

2006 REVISED STANDARD PLAN RSP T2

5-15-08

DIST	COUNTY	ROUTE	POST MILES TOTAL PROJECT	SHEET NO.	TOTAL SHEETS
11	SD	76	28.8/29.1	47	47

LICENSED LANDSCAPE ARCHITECT

April 3, 2009
PLANS APPROVAL DATE

The State of California or its officers or agents shall not be responsible for the accuracy or completeness of electronic copies of this plan sheet.

LICENSED LANDSCAPE ARCHITECT — Robert B. Schott 3635 — 11-30-10 Renewal Date — 2-25-09 Date — STATE OF CALIFORNIA

To accompany plans dated 06-20-11

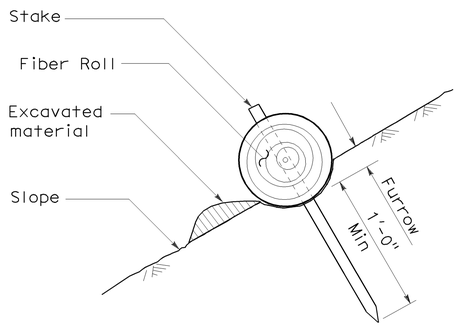

SECTION

TEMPORARY FIBER ROLL (TYPE 1)

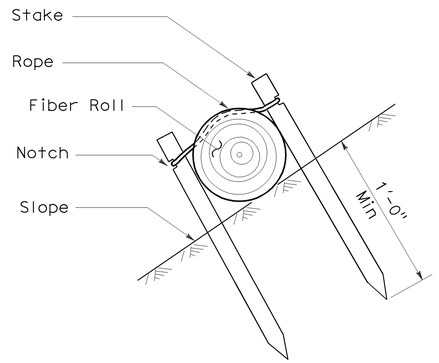

SECTION

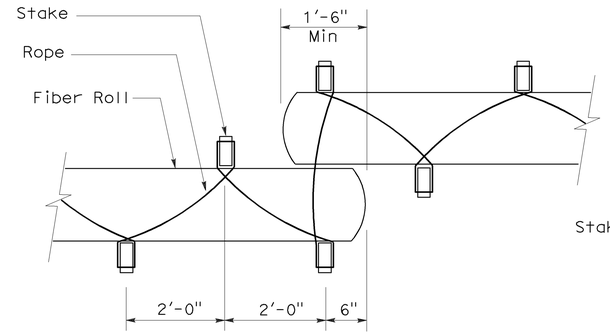

PLAN

TEMPORARY FIBER ROLL (TYPE 2)

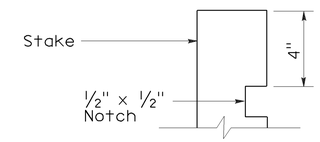

ELEVATION

STAKE NOTCH DETAIL

NOTES:

1. Temporary fiber roll spacing varies depending upon slope inclination.
2. Installations shown in the perspectives are for slope inclination of 10:1 and steeper.

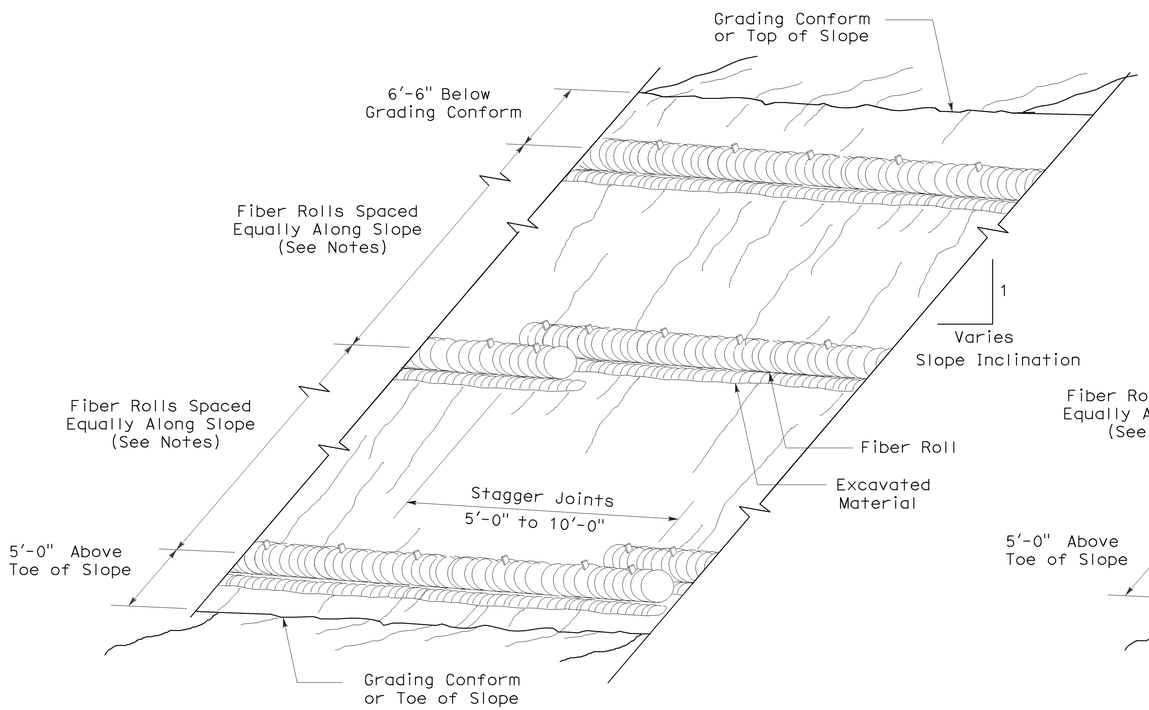

PERSPECTIVE

TEMPORARY FIBER ROLL (TYPE 1)

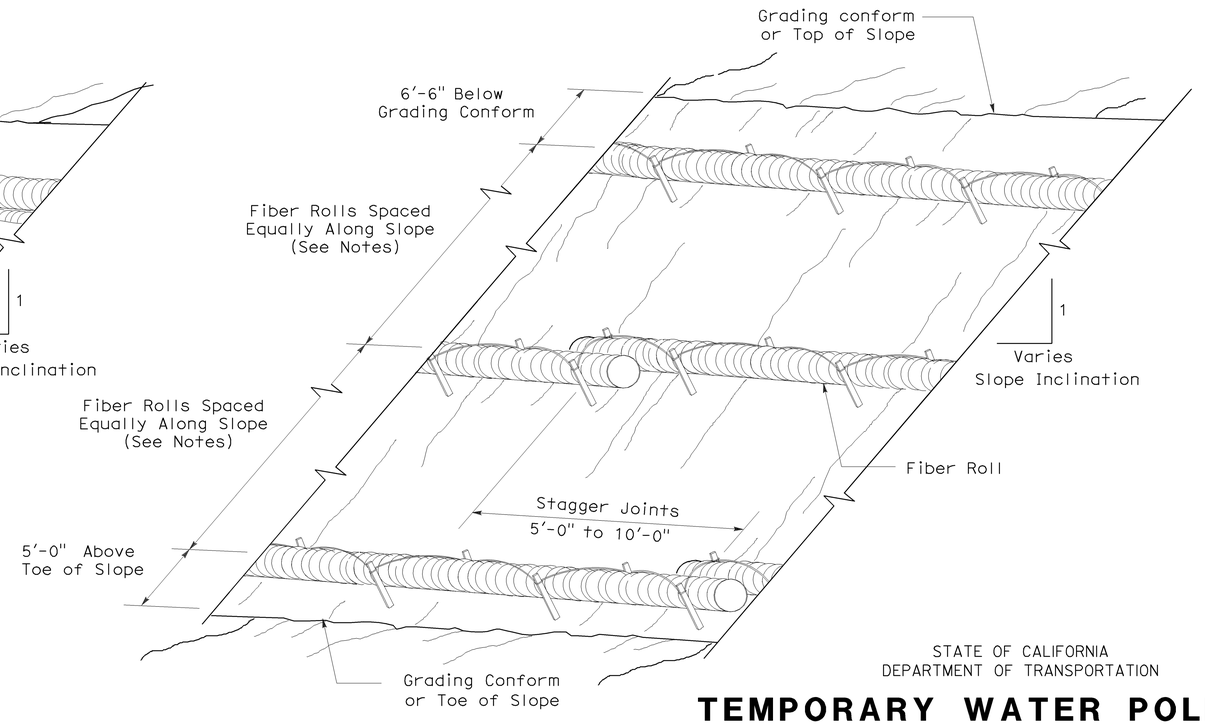

PERSPECTIVE

TEMPORARY FIBER ROLL (TYPE 2)

STATE OF CALIFORNIA
DEPARTMENT OF TRANSPORTATION

TEMPORARY WATER POLLUTION CONTROL DETAILS (TEMPORARY FIBER ROLL)

NO SCALE

RSP T56 DATED APRIL 3, 2009 SUPERSEDES STANDARD PLAN T56
DATED MAY 1, 2006 - PAGE 232 OF THE STANDARD PLANS BOOK DATED MAY 2006.

REVISED STANDARD PLAN RSP T56

2006 REVISED STANDARD PLAN RSP T56

232

2-23-09