HPLU-6211(115)

Dist	COUNTY	ROUTE	POST MILES TOTAL PROJECT	SHEET No.	TOTAL SHEETS
11	SD	5	R10.0,R10.7	1	132

STATE OF CALIFORNIA
DEPARTMENT OF TRANSPORTATION

PROJECT PLANS FOR CONSTRUCTION ON
STATE HIGHWAY

IN SAN DIEGO COUNTY
IN NATIONAL CITY
AT 24TH STREET UNDERCROSSING AND
AT CIVIC CENTER DRIVE UNDERCROSSING

TO BE SUPPLEMENTED BY STANDARD PLANS DATED MAY 2006

INDEX OF PLANS

SHEET No.	DESCRIPTION
1	TITLE AND LOCATION MAP
2-3	TYPICAL CROSS SECTIONS
4	PROJECT CONTROL PLAN
5-6	LAYOUTS
7	PROFILES AND SUPERELEVATION DIAGRAM
8-18	CONSTRUCTION DETAILS
19-23	TEMPORARY WATER POLLUTION CONTROL PLANS AND DETAILS
24-25	CONTOUR GRADING
26-31	DRAINAGE PLANS, PROFILES, DETAILS AND QUANTITIES
32-33	UTILITY PLANS
34	CONSTRUCTION AREA SIGNS
35-41	STAGE CONSTRUCTION PLANS, DETAILS AND QUANTITIES
42-44	TRAFFIC HANDLING PLANS, DETAILS AND QUANTITIES
45-49	PAVEMENT DELINEATION PLANS, DETAILS AND QUANTITIES
50-58	SIGN PLANS, DETAILS AND QUANTITIES
59-60	SUMMARY OF QUANTITIES
61-72	HIGHWAY PLANTING PLANS, DETAILS AND QUANTITIES
73-87	ELECTRICAL PLANS
88-132	REVISED AND NEW STANDARD PLANS

THE STANDARD PLANS LIST APPLICABLE TO THIS CONTRACT IS INCLUDED IN THE NOTICE TO BIDDERS AND SPECIAL PROVISIONS BOOK.

LOCATION MAP

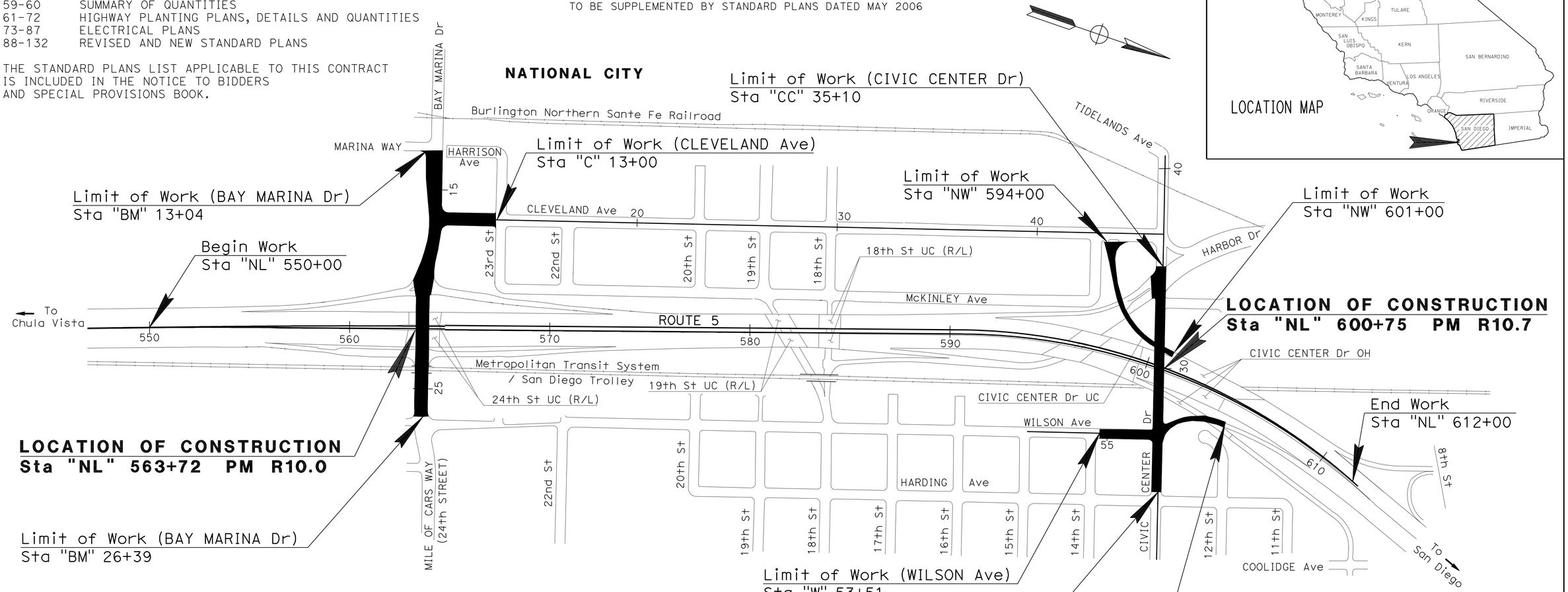

PROJECT MANAGER: MICHAEL J. WEBSTER

DESIGN ENGINEER: JOEL P. SIMS

Joel P. Sims 11-14-11
PROJECT ENGINEER REGISTERED CIVIL ENGINEER — DATE

REGISTERED PROFESSIONAL ENGINEER JOEL P. SIMS No. 49715 Exp. 09-30-12 CIVIL STATE OF CALIFORNIA

February 21, 2012
PLANS APPROVAL DATE

THE STATE OF CALIFORNIA OR ITS OFFICERS OR AGENTS SHALL NOT BE RESPONSIBLE FOR THE ACCURACY OR COMPLETENESS OF SCANNED COPIES OF THIS PLAN SHEET.

THE CONTRACTOR SHALL POSSESS THE CLASS (OR CLASSES) OF LICENSE AS SPECIFIED IN THE "NOTICE TO BIDDERS."

NO SCALE

CONTRACT No.	11-2976U4
PROJECT ID	1100020490

LAST REVISION 11-18-11 | DATE PLOTTED => 27-MAR-2012 | TIME PLOTTED => 14:31

Dist	COUNTY	ROUTE	POST MILES TOTAL PROJECT	SHEET No.	TOTAL SHEETS
11	SD	5	R10.0,R10.7	2	132

REGISTERED CIVIL ENGINEER 11-14-11 DATE

2-21-12
PLANS APPROVAL DATE

REGISTERED PROFESSIONAL ENGINEER JOEL P. SIMS No. 49715 Exp 09-30-12 CIVIL STATE OF CALIFORNIA

THE STATE OF CALIFORNIA OR ITS OFFICERS OR AGENTS SHALL NOT BE RESPONSIBLE FOR THE ACCURACY OR COMPLETENESS OF SCANNED COPIES OF THIS PLAN SHEET.

NOTES:

1. DIMENSIONS OF THE PAVEMENT STRUCTURES (STRUCTURAL SECTIONS) ARE SUBJECT TO TOLERANCES SPECIFIED IN THE STANDARD SPECIFICATIONS.
2. LOCATIONS OF CURB AND HMA DIKE ARE SHOWN ON THE LAYOUTS AND CONSTRUCTION DETAILS.
3. FOG SEAL COAT SHALL BE APPLIED TO ALL HMA SURFACES EXCEPT TRAVELED WAYS.
4. SUPERELEVATIONS ARE SHOWN ON THE SUPERELEVATION DIAGRAMS.

DESIGN DESIGNATION

ADT (2012)	15,600	D	60%
ADT (2032)	20,200	T	25%
DHV	3,000	V	35 mph
ESAL	4,640,000	TI20	11.5

LEGEND:

- [1] 0.2′ RHMA (TYPE G)
0.4′ HMA (TYPE A)
2.3′ CI 2 AB
- [2] 0.6′ MINOR Conc (Misc Const)
2.3′ CI 2 AB
- [3] 0.2′ RHMA-G
0.4′ HMA-A
- [4] 0.3′ MINOR Conc (Misc Const)
- [5] 0.2′ COLD PLANE
0.2′ RHMA (TYPE G)
- [6] 0.5′ HMA-A
2.0′ CI 2 AB
- [7] 0.5′ HMA-A
- [8] 0.5′ AC
0.5′ CI 2 AB
0.7′ CI 2 AS
- [9] 0.3′ PCC SIDEWALK
- [10] 0.3′ AC
- [11] 0.3′ AC
0.5′ CI 2 AB
1.5′ CI 2 AS

ABBREVIATIONS:

CP - CATCH POINT
S/C - SAW CUT LINE
ESW - EDGE OF SIDEWALK
RHMA - RUBBERIZED HOT MIX ASPHALT

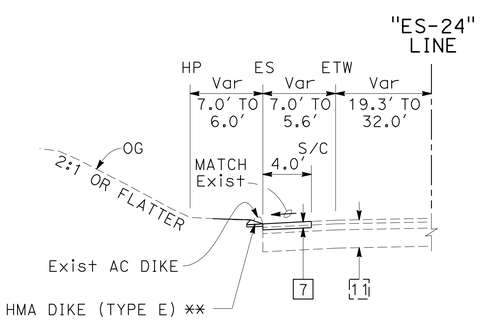

Sta 562+10.00 TO 562+90.00
** Sta 561+48.00 TO 562+75.14

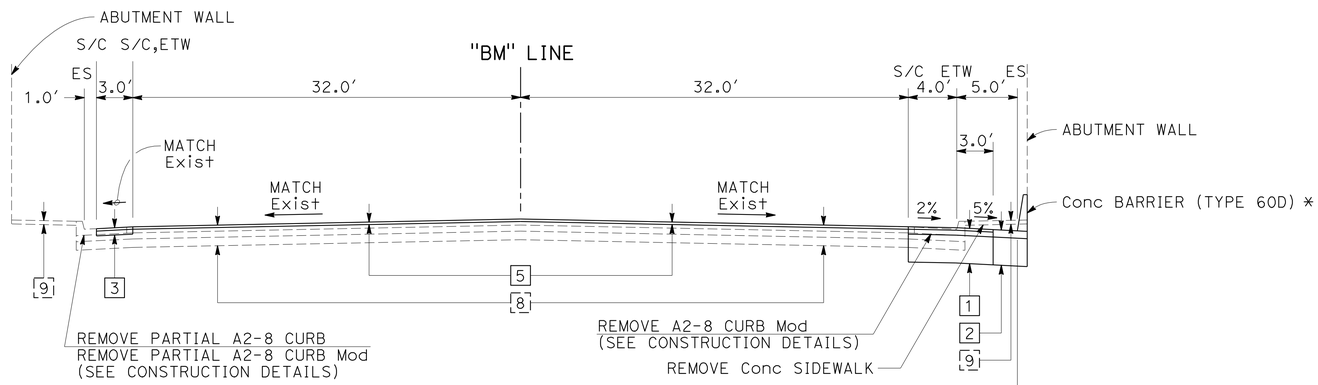

WESTBOUND

Sta 20+28.50 TO 22+91.00

EASTBOUND

Sta 20+47.06 TO 22+97.28
* Sta 20+96.64 TO 21+76.83

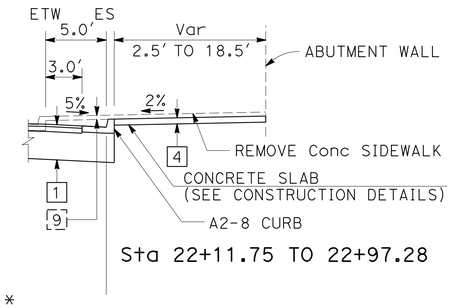

Sta 22+11.75 TO 22+97.28

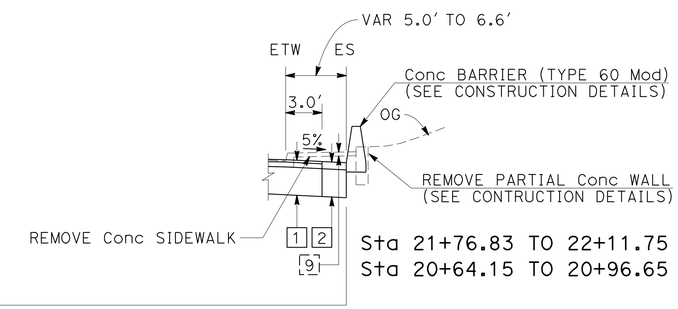

Sta 21+76.83 TO 22+11.75
Sta 20+64.15 TO 20+96.65

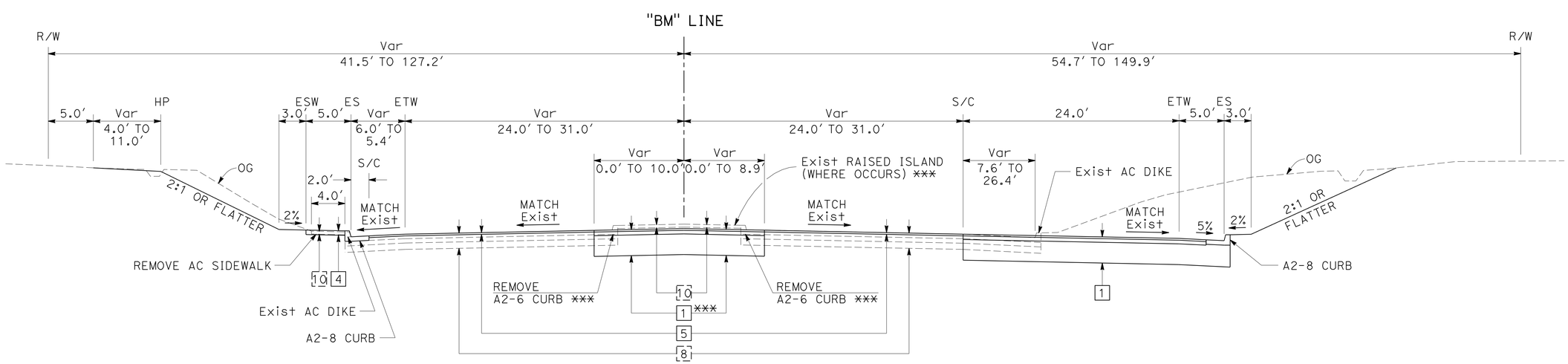

WESTBOUND

Sta 16+95.30 TO 19+33.29

EASTBOUND

Sta 17+07.02 TO 19+59.67

*** FOR BOTH RAISED ISLANDS LOCATIONS

TYPICAL CROSS SECTIONS

NO SCALE

X-1

REVISED BY | DATE REVISED
WAYNE NGUYEN | JOEL SIMS
CALCULATED-DESIGNED BY | CHECKED BY
FUNCTIONAL SUPERVISOR
MICHAEL J. WEBSTER

STATE OF CALIFORNIA - DEPARTMENT OF TRANSPORTATION
Caltrans
DESIGN

LAST REVISION 11-18-11 | DATE PLOTTED => 22-FEB-2012 | TIME PLOTTED => 10:31

Dist	COUNTY	ROUTE	POST MILES TOTAL PROJECT	SHEET No.	TOTAL SHEETS
11	SD	5	R10.0,R10.7	3	132

Joel P. Sims 11-14-11
REGISTERED CIVIL ENGINEER DATE

2-21-12
PLANS APPROVAL DATE

REGISTERED PROFESSIONAL ENGINEER
JOEL P. SIMS
No. 49715
Exp 09-30-12
CIVIL
STATE OF CALIFORNIA

THE STATE OF CALIFORNIA OR ITS OFFICERS OR AGENTS SHALL NOT BE RESPONSIBLE FOR THE ACCURACY OR COMPLETENESS OF SCANNED COPIES OF THIS PLAN SHEET.

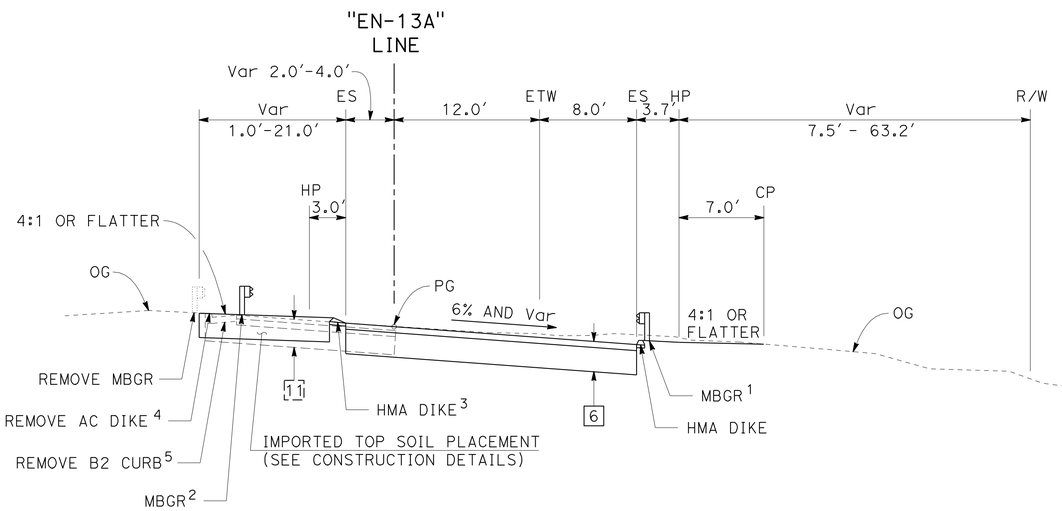

CIVIC CENTER DRIVE NB ON-RAMP

Sta 603+11.00 TO 605+33.56

1 - Sta 603+11.00 TO 604+93.00
2 - Sta 603+70.00 TO 604+07.00
3 - Sta 604+25.00 TO 605+33.56
4 - Sta 602+96.37 TO 603+70.00
5 - Sta 603+70.00 TO 605+33.56

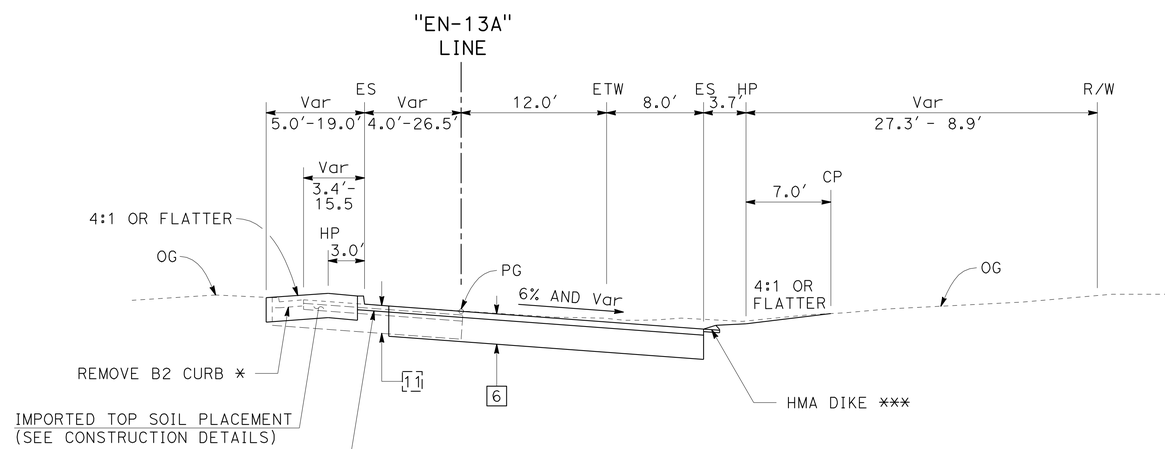

CIVIC CENTER DRIVE NB ON-RAMP

Sta 601+92.10 TO 603+11.00

* - Sta 602+23.40 TO 602+96.37
** - Sta 602+23.40 TO 602+31.39
*** - Sta 602+03.58 TO 603+11.00

TYPICAL CROSS SECTIONS

NO SCALE

X-2

STATE OF CALIFORNIA - DEPARTMENT OF TRANSPORTATION
Caltrans®
DESIGN

FUNCTIONAL SUPERVISOR: MICHAEL J. WEBSTER
CALCULATED-DESIGNED BY: RADHIKA MOTHKURI
CHECKED BY: JOEL SIMS
REVISED BY
DATE REVISED

LAST REVISION 11-18-11
DATE PLOTTED => 22-FEB-2012
TIME PLOTTED => 10:31

Dist	COUNTY	ROUTE	POST MILES TOTAL PROJECT	SHEET No.	TOTAL SHEETS
11	SD	5	R10.0,R10.7	4	132

PROFESSIONAL LAND SURVEYOR DATE 11-16-11

PLANS APPROVAL DATE 2-21-12

PROFESSIONAL LAND SURVEYOR MARK D. PHELAN L.S.7111 EXP:12-31-12 STATE OF CALIFORNIA

THE STATE OF CALIFORNIA OR ITS OFFICERS OR AGENTS SHALL NOT BE RESPONSIBLE FOR THE ACCURACY OR COMPLETENESS OF SCANNED COPIES OF THIS PLAN SHEET.

NOTES:

CONTACT DISTRICT 11'S LAND SURVEY DIVISION, PHONE (858)467-4305, FOR ADDITIONAL INFORMATION OR QUERIES REGARDING THIS SURVEY PROJECT CONTROL.

BASIS OF BEARINGS AND COORDINATES

FOR THIS PROJECT IS THE CALIFORNIA COORDINATE SYSTEM OF 1983, NSRS 2007 EPOCH, ZONE 6. PROJECT CONTROL STATIONS WERE ESTABLISHED ACCORDING TO CRITERIA SET FORTH IN THE FEDERAL GEODETIC CONTROL SUBCOMMITTEE'S "GEOMETRIC GEODETIC ACCURACY STANDARDS AND SPECIFICATIONS FOR USING GPS RELATIVE POSITIONING TECHNIQUES" REPRINTED AUGUST 1, 1989.

THIS GPS STATIC SURVEY WAS CONSTRAINED TO THE FOLLOWING SECOND ORDER STATIONS: "5-10.05" AND "5-9.98".

BASIS OF ELEVATIONS

FOR THIS PROJECT IS THE NORTH AMERICAN VERTICAL DATUM OF 1988 (NAVD88). ELEVATIONS ARE ESTABLISHED BY TRIGONOMETRIC LEVELING METHODS CONSTRAINING TO STATIONS "10.0" AND "10.05"

IN THE EVENT GPS MACHINE CONTROL/GUIDANCE IS USED FOR THIS PROJECT, THE CONTRACTOR SHALL CONTACT OR MEET WITH DISTRICT 11'S LAND SURVEY DIVISION TO OBTAIN THE CONTROL NECESSARY TO ESTABLISH A PROJECT CALIBRATION COMPATIBLE FOR ALL USERS.

ABBREVIATIONS:

CADT	CALIFORNIA DEPARTMENT OF TRANSPORTATION
IP	IRON PIPE
PN	PAVEMENT NAIL
MTS	METROPOLITAN TRANSIT SYSTEM
BNSF	BURLINGTON NORTHERN SANTA FE

LEGEND:

(2) 2ND ORDER STATION

(3) 3RD ORDER STATION

CONTROL FOR DESIGN AND CONSTRUCTION

STATION DESIGNATION	ORDER	NORTHING	EASTING	ELEVATION	DESCRIPTION
5-9.98	2ND	1,820,914.92	6,297,216.17	27.83	PN SET IN TOP OF CURB
5-10.0	2ND	1,820,941.34	6,297,607.69	33.92	2¼" CADT DISK IN 2" IP
5-10.01	3RD	1,820,976.25	6,297,404.40	21.07	PK & WASHER IN ASPHALT
5-10.02	3RD	1,821,058.46	6,297,536.14	11.11	CHISELED "x" IN SIDEWALK
5-10.03	3RD	1,821,080.67	6,297,726.75	6.76	PK & WASHER IN ASPHALT
5-10.04	3RD	1,820,927.73	6,296,975.39	29.45	PK & WASHER IN ASPHALT
5-10.05	2ND	1,821,192.29	6,297,952.68	10.83	PK & WASHER IN ASPHALT
5 CLCC	2ND	1,824,421.68	6,295,947.92	9.18	2¼" CADT DISK IN 2" IP
5-10.75	3RD	1,824,383.16	6,296,251.21	12.96	PK & WASHER SET IN 1" IP
5-10.76	3RD	1,824,579.04	6,296,459.06	11.06	CHISELED "x" IN SIDEWALK
5-10.77	3RD	1,824,720.29	6,296,895.99	12.16	PK & WASHER IN ASPHALT
5-10.78	3RD	1,824,804.34	6,297,167.21	14.79	LEAD & TAG STAMPED LS 5562
5-10.80	2ND	1,824,708.74	6,297,072.85	13.87	2¼" CADT DISK IN SIDEWALK

NATIONAL CITY

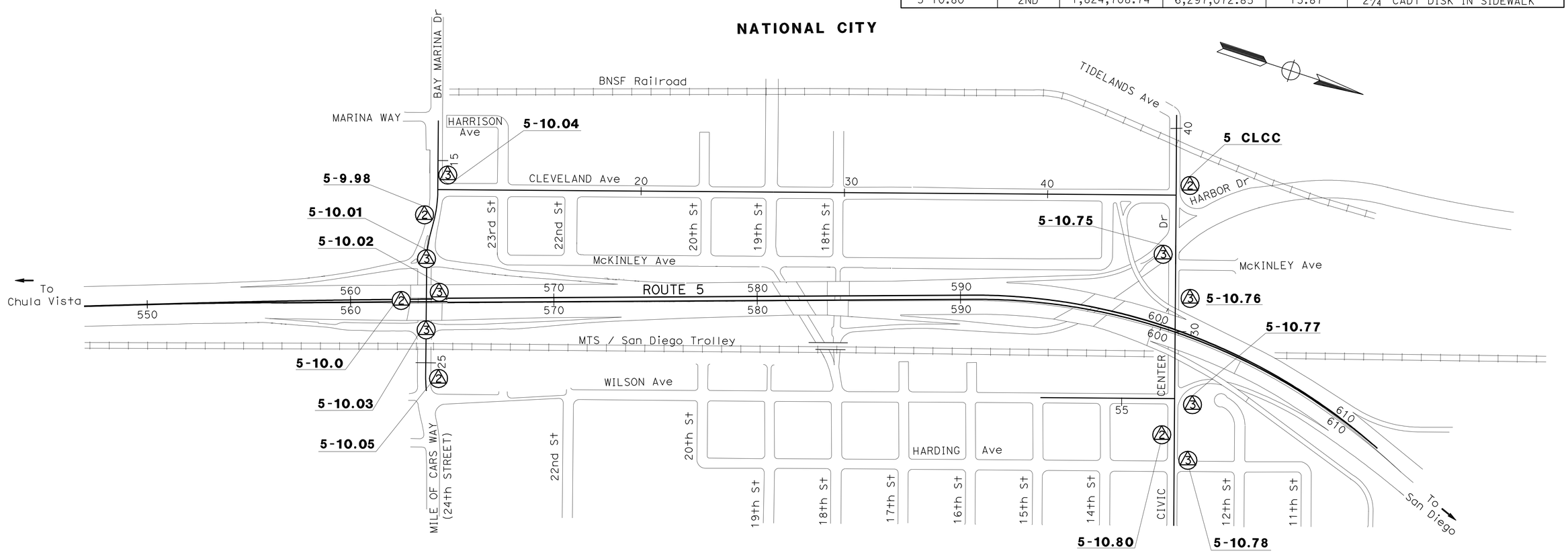

PROJECT CONTROL

NO SCALE

PC-1

STATE OF CALIFORNIA - DEPARTMENT OF TRANSPORTATION

Caltrans LAND SURVEYS

FUNCTIONAL SUPERVISOR: BRUCE URQUHART

CALCULATED-DESIGNED BY: MARK PHELAN

CHECKED BY: NED SALMAN

REVISED BY / DATE REVISED

LAST REVISION 11-18-11 | DATE PLOTTED => 22-FEB-2012 | TIME PLOTTED => 10:31

Dist	COUNTY	ROUTE	POST MILES TOTAL PROJECT	SHEET No.	TOTAL SHEETS
11	SD	5	R10.0,R10.7	5	132

REGISTERED CIVIL ENGINEER 11-14-11 DATE

2-21-12
PLANS APPROVAL DATE

REGISTERED PROFESSIONAL ENGINEER JOEL P. SIMS No. 49715 Exp 09-30-12 CIVIL STATE OF CALIFORNIA

THE STATE OF CALIFORNIA OR ITS OFFICERS OR AGENTS SHALL NOT BE RESPONSIBLE FOR THE ACCURACY OR COMPLETENESS OF SCANNED COPIES OF THIS PLAN SHEET.

NOTES:

1. FOR ACCURATE RIGHT OF WAY DATA, CONTACT RIGHT OF WAY ENGINEERING AT THE DISTRICT OFFICE.
2. SEE CONSTRUCTION DETAILS FOR CURB DATA AT INSTERSECTIONS.
3. SEE CONSTRUCTION DETAILS FOR COLD PLANE AREAS.

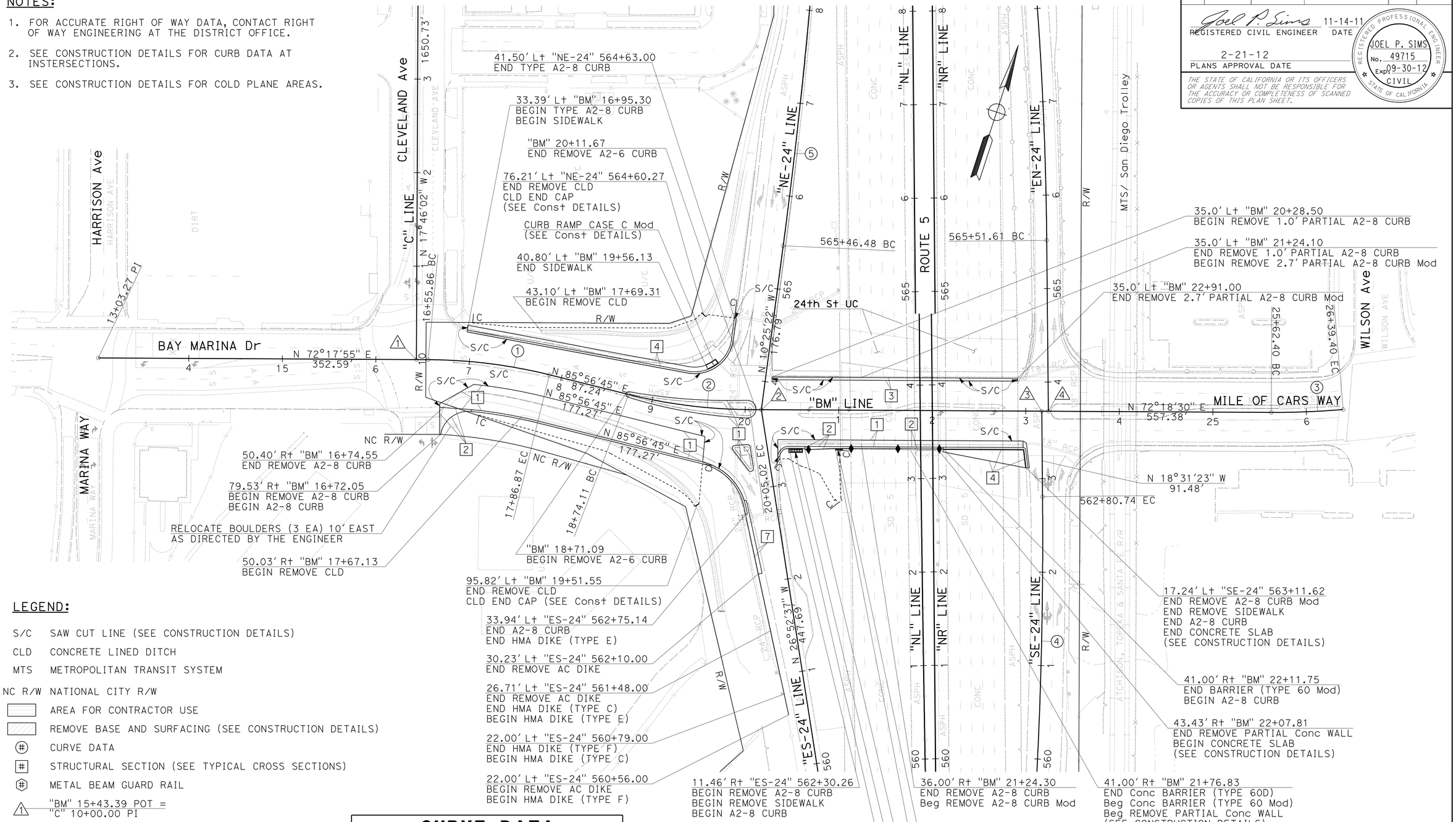

LEGEND:

S/C	SAW CUT LINE (SEE CONSTRUCTION DETAILS)
CLD	CONCRETE LINED DITCH
MTS	METROPOLITAN TRANSIT SYSTEM
NC R/W	NATIONAL CITY R/W
	AREA FOR CONTRACTOR USE
	REMOVE BASE AND SURFACING (SEE CONSTRUCTION DETAILS)
(#)	CURVE DATA
[#]	STRUCTURAL SECTION (SEE TYPICAL CROSS SECTIONS)
(#)	METAL BEAM GUARD RAIL
△1	"BM" 15+43.39 POT = "C" 10+00.00 PI
△2	"BM" 20+17.31 PI = "NE-24" 563+83.21 PI = "ES-24" 563+69.69 PI
△3	"BM" 23+17.08 POT = "SE-24" 563+72.22 PI
△4	"BM" 23+24.07 POT = "EN-24" 563+68.81 PI

CURVE DATA

No.	R	Δ	T	L
1	550.00'	13°38'50"	65.81'	131.00'
2	550.00'	13°38'15"	65.77'	130.91'
3	840.00'	5°15'08"	38.53'	77.00'
4	4988.00'	4°46'25"	207.91'	415.58'
5	6000.00'	3°46'03"	197.34'	394.53'

LAYOUT

SCALE: 1" = 50'

L-1

FUNCTIONAL SUPERVISOR: MICHAEL J. WEBSTER
CALCULATED-DESIGNED BY: WAYNE NGUYEN
CHECKED BY: JOEL SIMS
REVISED BY
DATE REVISED

STATE OF CALIFORNIA - DEPARTMENT OF TRANSPORTATION
Caltrans DESIGN

LAST REVISION 11-18-11
DATE PLOTTED => 22-FEB-2012
TIME PLOTTED => 10:31

Dist	COUNTY	ROUTE	POST MILES TOTAL PROJECT	SHEET No.	TOTAL SHEETS
11	SD	5	R10.0,R10.7	6	132

Joel P. Sims 11-14-11
REGISTERED CIVIL ENGINEER DATE

2-21-12
PLANS APPROVAL DATE

REGISTERED PROFESSIONAL ENGINEER JOEL P. SIMS No. 49715 Exp 09-30-12 CIVIL STATE OF CALIFORNIA

THE STATE OF CALIFORNIA OR ITS OFFICERS OR AGENTS SHALL NOT BE RESPONSIBLE FOR THE ACCURACY OR COMPLETENESS OF SCANNED COPIES OF THIS PLAN SHEET.

NOTE:

FOR ACCURATE RIGHT OF WAY DATA, CONTACT RIGHT OF WAY ENGINEERING AT THE DISTRICT OFFICE.

CURVE DATA

No.	R	Δ	T	L
6	312.00′	48°51′15″	141.71′	266.03′
7	1800.00′	18°45′49″	297.40′	589.47′

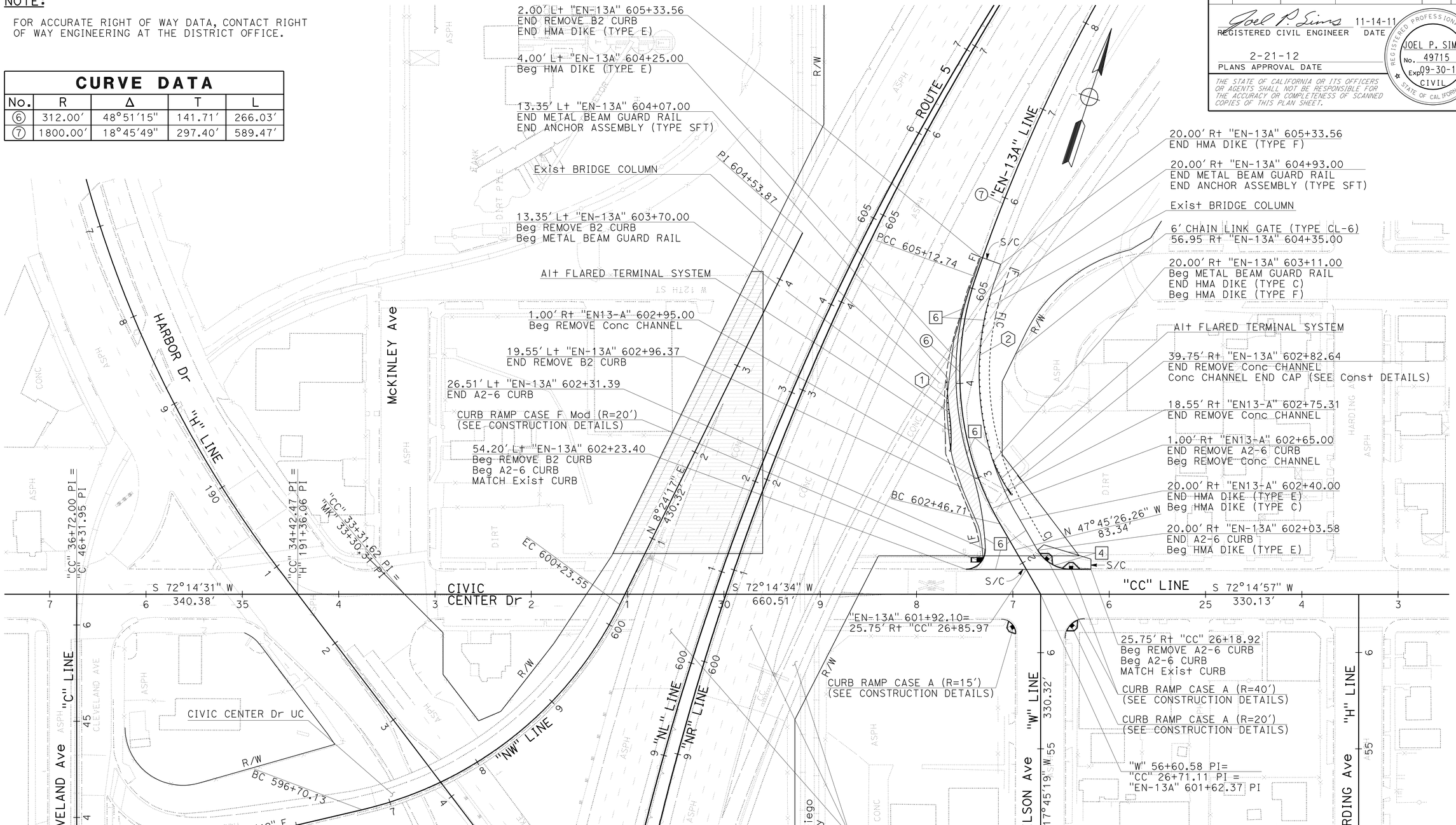

LAYOUT

SCALE: 1" = 50′ **L-2**

STATE OF CALIFORNIA - DEPARTMENT OF TRANSPORTATION
Caltrans® **DESIGN**

FUNCTIONAL SUPERVISOR: MICHAEL J. WEBSTER
CALCULATED-DESIGNED BY: RADHIKA MOTHKURI
CHECKED BY: JOEL SIMS
REVISED BY / DATE REVISED

LAST REVISION 11-18-11
DATE PLOTTED => 22-FEB-2012
TIME PLOTTED => 10:32

Dist	COUNTY	ROUTE	POST MILES TOTAL PROJECT	SHEET No.	TOTAL SHEETS
11	SD	5	R10.0,R10.7	7	132

REGISTERED CIVIL ENGINEER 11-14-11 DATE

2-21-12
PLANS APPROVAL DATE

REGISTERED PROFESSIONAL ENGINEER JOEL P. SIMS No. 49715 Exp 09-30-12 CIVIL STATE OF CALIFORNIA

THE STATE OF CALIFORNIA OR ITS OFFICERS OR AGENTS SHALL NOT BE RESPONSIBLE FOR THE ACCURACY OR COMPLETENESS OF SCANNED COPIES OF THIS PLAN SHEET.

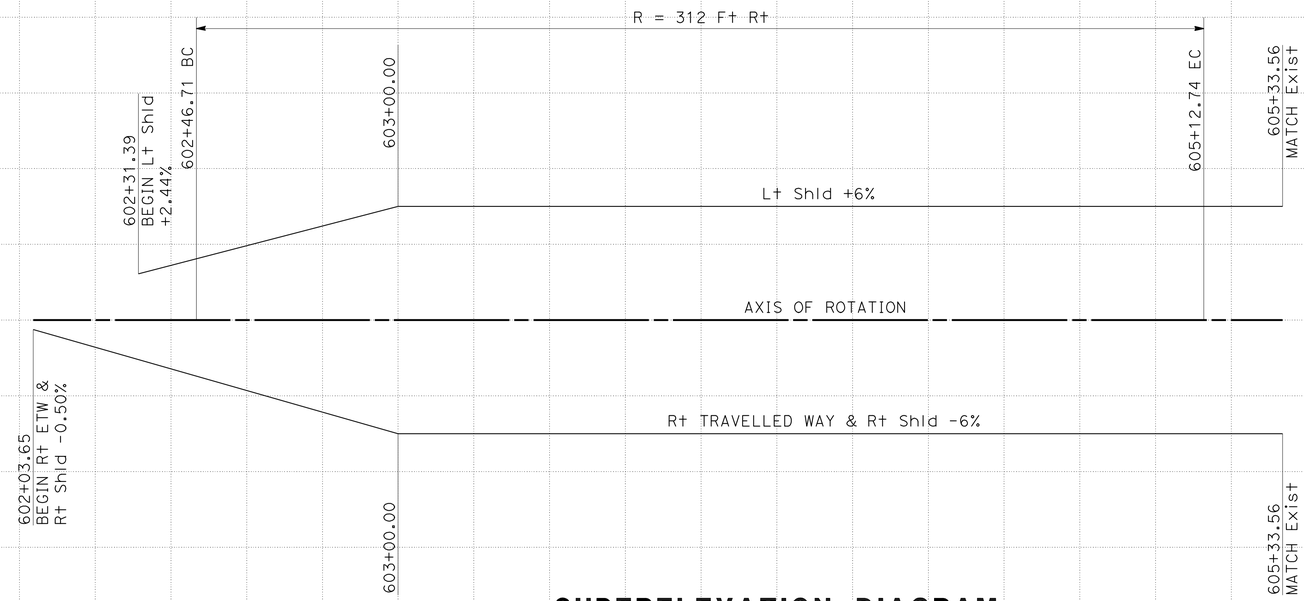

SUPERELEVATION DIAGRAM
"EN-13A" LINE

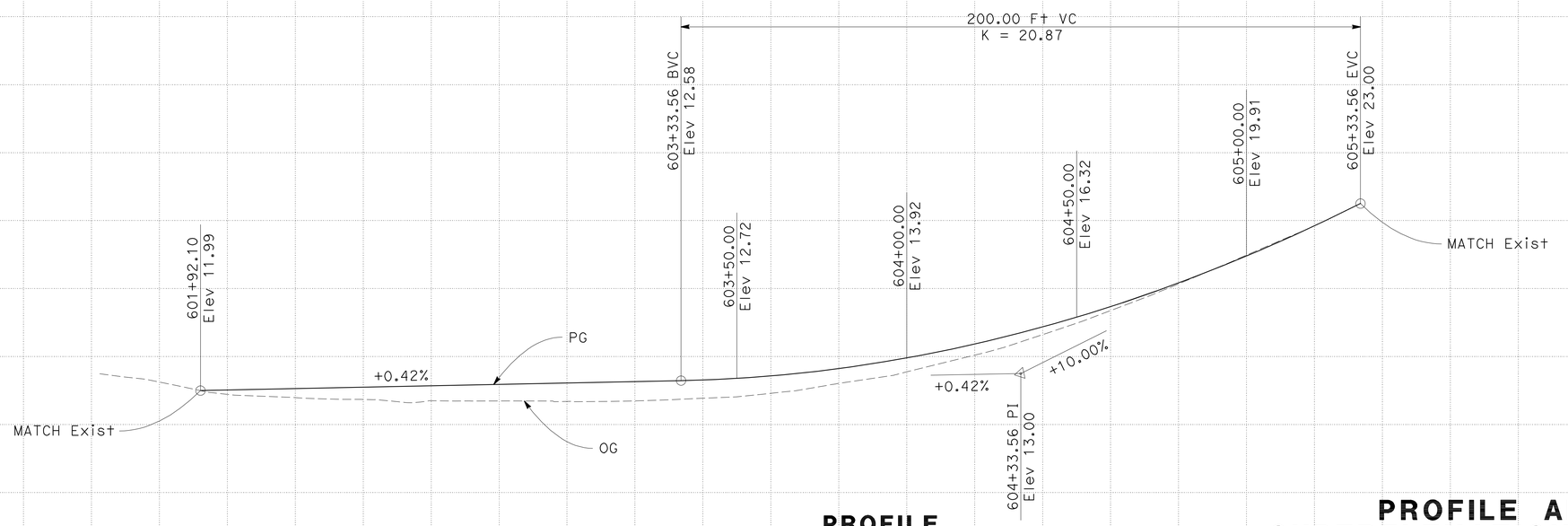

PROFILE
"EN-13A" LINE

PROFILE AND SUPERELEVATION DIAGRAM

SCALE: 1" = 20' Horiz
1" = 4' Vert

PS-1

STATION		2	3	4	605	TOTAL
CY	Exc	700				
	Emb	100				

REVISED BY | DATE REVISED
RADHIKA MOTHKURI | JOEL SIMS
CALCULATED-DESIGNED BY | CHECKED BY
FUNCTIONAL SUPERVISOR
MICHAEL J. WEBSTER

STATE OF CALIFORNIA - DEPARTMENT OF TRANSPORTATION
Caltrans
DESIGN

LAST REVISION 11-18-11 | DATE PLOTTED => 22-FEB-2012 | TIME PLOTTED => 10:32

Dist	COUNTY	ROUTE	POST MILES TOTAL PROJECT	SHEET No.	TOTAL SHEETS
11	SD	5	R10.0,R10.7	8	132

Joel P. Sims 11-14-11
REGISTERED CIVIL ENGINEER DATE

2-21-12
PLANS APPROVAL DATE

REGISTERED PROFESSIONAL ENGINEER JOEL P. SIMS No. 49715 Exp 09-30-12 CIVIL STATE OF CALIFORNIA

THE STATE OF CALIFORNIA OR ITS OFFICERS OR AGENTS SHALL NOT BE RESPONSIBLE FOR THE ACCURACY OR COMPLETENESS OF SCANNED COPIES OF THIS PLAN SHEET.

LEGEND:

S/C SAW CUT LINE
(#) CURVE DATA
[#] ELEVATION
0.2′ RHMA (TYPE G)
0.4′ HMA (TYPE A)

ELEVATIONS

No.	LOCATION	ELEVATION
1	79.53′ R+ "BM" 16+72.05 BC	MATCH Exist
2	65.92′ R+ "BM" 16+78.49	29.75′
3	56.40′ R+ "BM" 16+91.12	29.39′
4	53.00′ R+ "BM" 17+07.02 EC/BC	29.02′
5	79.56′ R+ "BM" 16+70.62	MATCH Exist
6	50.66′ R+ "BM" 16+69.73	MATCH Exist
7	46.66′ R+ "BM" 16+69.61	MATCH Exist
8	35.63′ R+ "BM" 16+88.73	MATCH Exist
9	24.00′ R+ "BM" 17+07.02 BC	MATCH Exist
10	51.12′ R+ "BM" 16+88.37	29.57′
11	51.00′ R+ "BM" 17+07.02 BC	29.12′
12	24.00′ R+ "BM" 17+86.87 EC	MATCH Exist
13	51.00′ R+ "BM" 17+86.87 EC	27.72′
14	53.00′ R+ "BM" 17+86.87 EC	27.62′
15	24.00′ R+ "BM" 18+74.11	MATCH Exist

ELEVATIONS

No.	LOCATION	ELEVATION
16	51.00′ R+ "BM" 18+74.11	25.18′
17	53.00′ R+ "BM" 18+74.11	25.08′
18	31.77′ R+ "BM" 19+59.67	MATCH Exist
19	58.12′ R+ "BM" 19+59.67	21.03′
20	60.37′ R+ "BM" 19+59.67 BC	20.86′
21	63.37′ R+ "BM" 19+73.83	20.00′
22	45.46′ L+ "ES-24" 563+15.16	19.12′
23	37.81′ L+ "ES-24" 563+00.48	MATCH Exist
24	34.46′ L+ "ES-24" 562+84.27 EC	MATCH Exist
25	35.53′ L+ "ES-24" 563+00.00	MATCH Exist
26	33.43′ L+ "ES-24" 563+00.00	MATCH Exist
27	22.25′ L+ "ES-24" 561+40.00	MATCH Exist
28	11.46′ R+ "ES-24" 563+30.26 BC	MATCH Exist
29	41.00′ R+ "BM" 20+47.06 EC	17.08′
30	9.50′ R+ "ES-24" 563+30.69	MATCH Exist

ELEVATIONS

No.	LOCATION	ELEVATION
31	32.00′ R+ "BM" 20+35.07	MATCH Exist
32	41.00′ R+ "BM" 22+97.28 BC	5.17′
33	19.41′ L+ "SE-24" 563+30.62 EC	5.35′
34	17.24′ L+ "SE-24" 563+11.61	MATCH Exist
35	15.23′ L+ "SE-24" 563+11.61	MATCH Exist
36	34.39′ L+ "BM" 19+33.19	MATCH Exist
37	36.38′ L+ "BM" 19+33.29 BC	22.88′
38	38.61′ L+ "BM" 17+50.43	21.98′
39	46.55′ L+ "BM" 19+65.64	21.11′
40	44.75′ L+ "NE-24" 564+24.26	20.45′
41	41.50′ L+ "NE-24" 564+40.05 EC	19.81′
42	39.50′ L+ "NE-24" 564+40.05	MATCH Exist
43	39.50′ L+ "NE-24" 564+63.00	MATCH Exist

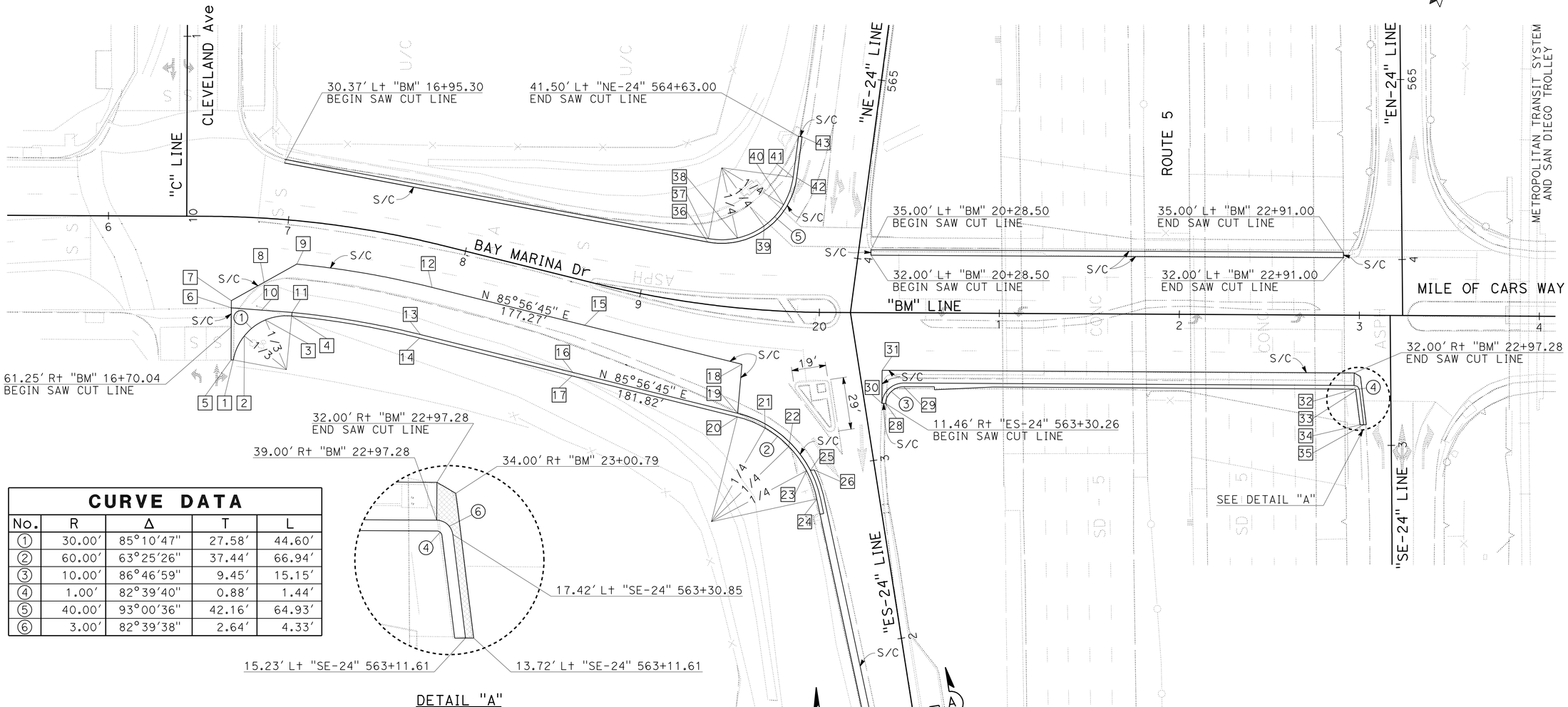

CURVE DATA

No.	R	Δ	T	L
1	30.00′	85°10′47″	27.58′	44.60′
2	60.00′	63°25′26″	37.44′	66.94′
3	10.00′	86°46′59″	9.45′	15.15′
4	1.00′	82°39′40″	0.88′	1.44′
5	40.00′	93°00′36″	42.16′	64.93′
6	3.00′	82°39′38″	2.64′	4.33′

SAW CUT LINE/CURB RETURN DATA

CONSTRUCTION DETAILS

SCALE: 1″ = 30′

C-1

STATE OF CALIFORNIA - DEPARTMENT OF TRANSPORTATION
DESIGN
Caltrans
FUNCTIONAL SUPERVISOR: MICHAEL J. WEBSTER
CALCULATED-DESIGNED BY: JOEL SIMS
CHECKED BY: WAYNE NGUYEN
REVISED BY / DATE REVISED

LAST REVISION 11-18-11
DATE PLOTTED => 22-FEB-2012
TIME PLOTTED => 10:32

Dist	COUNTY	ROUTE	POST MILES TOTAL PROJECT	SHEET No.	TOTAL SHEETS
11	SD	5	R10.0,R10.7	9	132

Joel P. Sims 11-14-11
REGISTERED CIVIL ENGINEER DATE

2-21-12
PLANS APPROVAL DATE

REGISTERED PROFESSIONAL ENGINEER
JOEL P. SIMS
No. 49715
Exp. 09-30-12
CIVIL
STATE OF CALIFORNIA

THE STATE OF CALIFORNIA OR ITS OFFICERS OR AGENTS SHALL NOT BE RESPONSIBLE FOR THE ACCURACY OR COMPLETENESS OF SCANNED COPIES OF THIS PLAN SHEET.

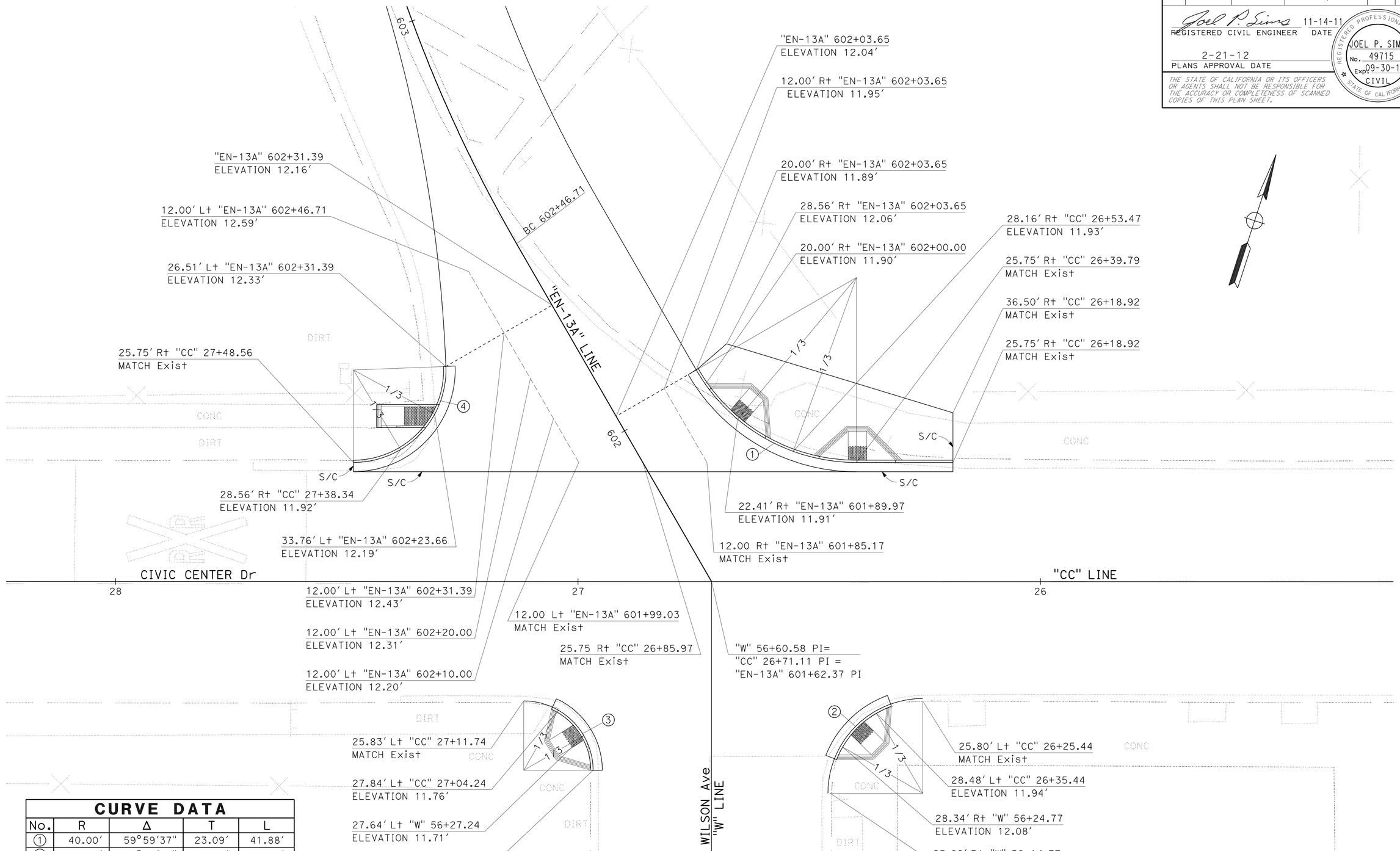

CURVE DATA				
No.	R	Δ	T	L
1	40.00'	59°59'37"	23.09'	41.88'
2	20.00'	90°00'16"	20.00'	31.42'
3	15.00'	-90°00'07"	15.00'	32.56'
4	20.00'	-92°12'25"	20.79'	32.19'

SAW CUT LINE/CURB RETURN DATA

CONSTRUCTION DETAILS

SCALE: 1" = 10'

C-2

STATE OF CALIFORNIA - DEPARTMENT OF TRANSPORTATION
Caltrans®
DESIGN

FUNCTIONAL SUPERVISOR: MICHAEL J. WEBSTER
CALCULATED-DESIGNED BY: RADHIKA MOTHKURI
CHECKED BY: JOEL SIMS
REVISED BY
DATE REVISED

LAST REVISION 11-18-11
DATE PLOTTED => 22-FEB-2012
TIME PLOTTED => 10:32

Dist	COUNTY	ROUTE	POST MILES TOTAL PROJECT	SHEET No.	TOTAL SHEETS
11	SD	5	R10.0,R10.7	10	132

Joel P. Sims 11-14-11
REGISTERED CIVIL ENGINEER DATE

2-21-12
PLANS APPROVAL DATE

REGISTERED PROFESSIONAL ENGINEER
JOEL P. SIMS
No. 49715
Exp 09-30-12
CIVIL
STATE OF CALIFORNIA

THE STATE OF CALIFORNIA OR ITS OFFICERS OR AGENTS SHALL NOT BE RESPONSIBLE FOR THE ACCURACY OR COMPLETENESS OF SCANNED COPIES OF THIS PLAN SHEET.

LEGEND:

[#] STRUCTURAL SECTION (SEE TYPICAL CROSS SECTIONS).

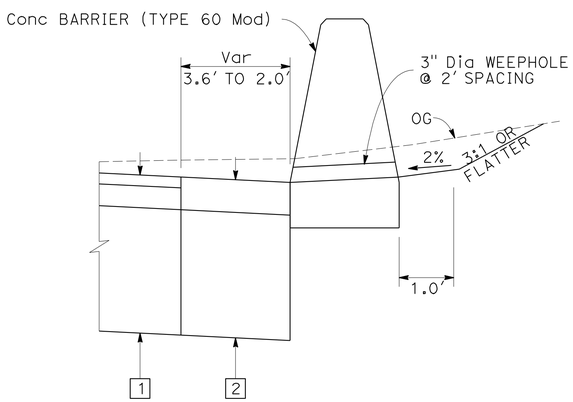

SECTION A-A

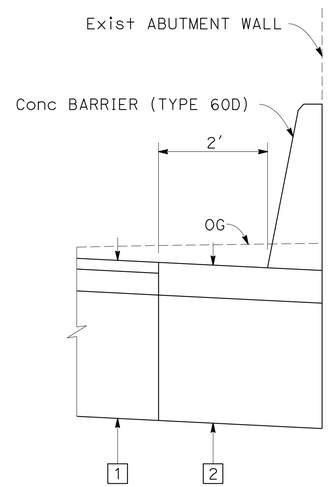

SECTION B-B

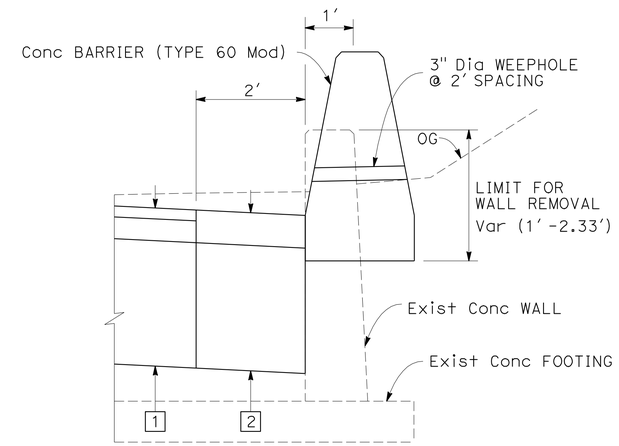

SECTION C-C

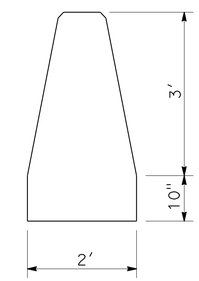

CONCRETE BARRIER (TYPE 60 Mod)

SEE STANDARD PLAN RSP A76A & A76B
FOR ADDITIONAL INFORMATION

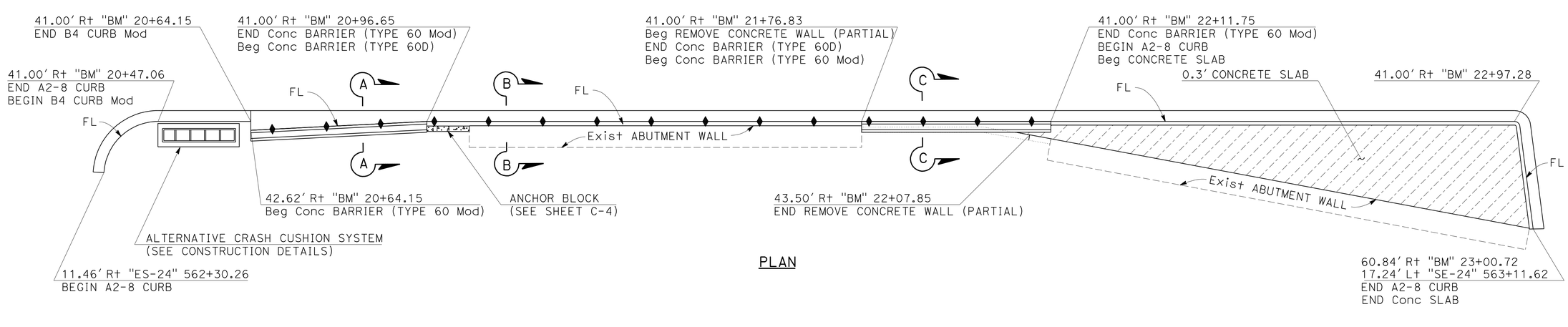

PLAN

CONCRETE BARRIERS, WALL & ANCHOR BLOCK

CONSTRUCTION DETAILS

NO SCALE

C-3

STATE OF CALIFORNIA - DEPARTMENT OF TRANSPORTATION
DESIGN
Caltrans
FUNCTIONAL SUPERVISOR: MICHAEL J. WEBSTER
CALCULATED-DESIGNED BY: FARDAD BEHBOODY
CHECKED BY: WAYNE NGUYEN
REVISED BY
DATE REVISED

LAST REVISION 11-18-11
DATE PLOTTED => 22-FEB-2012
TIME PLOTTED => 10:42

Dist	COUNTY	ROUTE	POST MILES TOTAL PROJECT	SHEET No.	TOTAL SHEETS
11	SD	5	R10.0, R10.7	11	132

Joel P. Sims 11-14-11
REGISTERED CIVIL ENGINEER DATE

2-21-12
PLANS APPROVAL DATE

REGISTERED PROFESSIONAL ENGINEER
JOEL P. SIMS
No. 49715
Exp 09-30-12
CIVIL
STATE OF CALIFORNIA

THE STATE OF CALIFORNIA OR ITS OFFICERS OR AGENTS SHALL NOT BE RESPONSIBLE FOR THE ACCURACY OR COMPLETENESS OF SCANNED COPIES OF THIS PLAN SHEET.

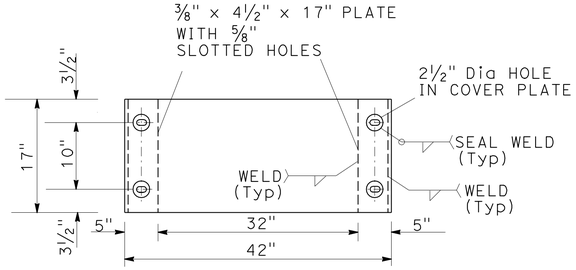

METAL COVER PLATE

* 3/8" x 42" x 17" STEEL PLATE
W/ 4- 2 1/2" Dia HOLES
FOR ACCESS OPENING
(INDENT CONCRETE)
SEE DETAIL A

* FIELD VERIFY DIMENSIONS TO CLEAR THE Exist UTILITY DOOR.

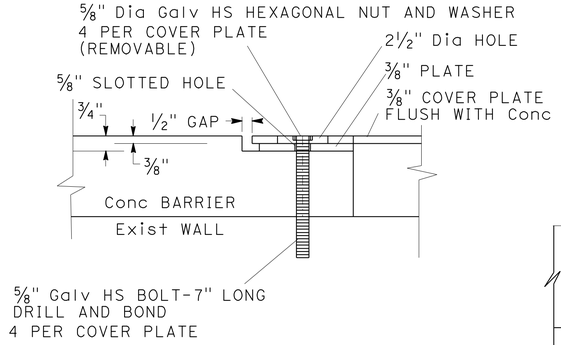

DETAIL A

PLAN

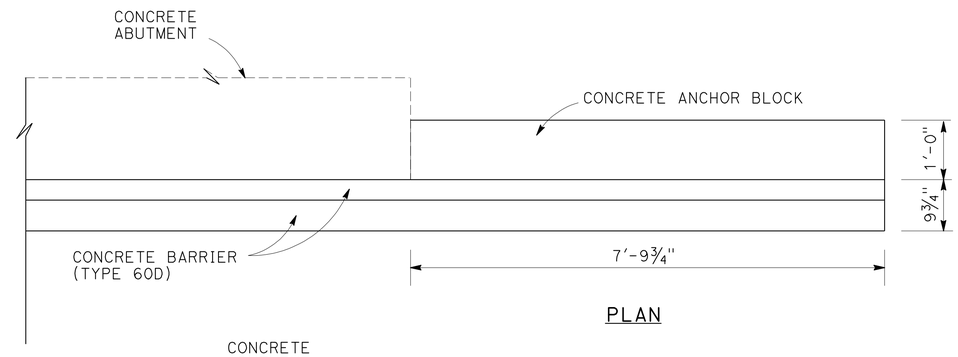

PLAN

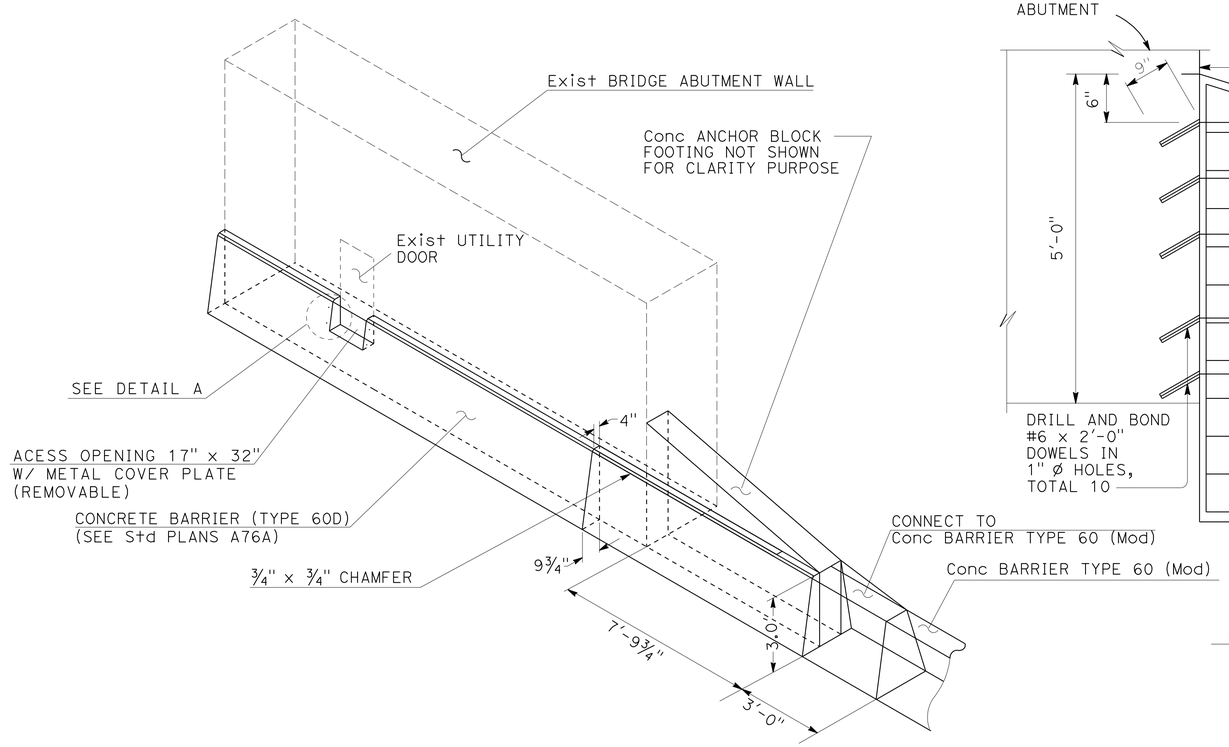

ANCHOR BLOCK/CONCRETE BARRIER TYPE 60D DETAILS (MOD)

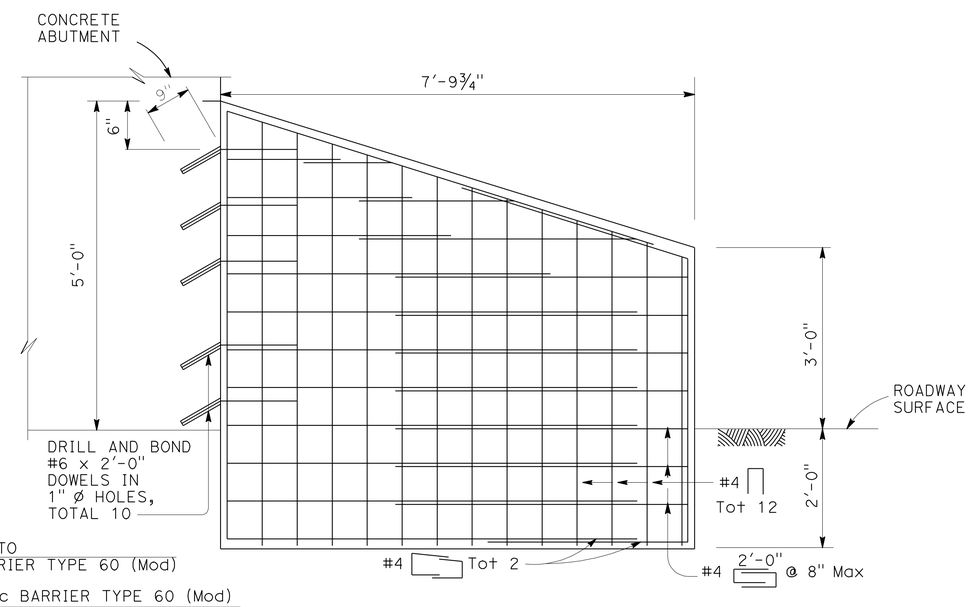

ANCHOR BLOCK DETAIL (MOD)

CONSTRUCTION DETAILS

NO SCALE

C-4

STATE OF CALIFORNIA - DEPARTMENT OF TRANSPORTATION
Caltrans
DESIGN

FUNCTIONAL SUPERVISOR: MICHAEL J. WEBSTER
CALCULATED-DESIGNED BY: FARDAD BEHBOODY
CHECKED BY: JOEL SIMS
REVISED BY
DATE REVISED

LAST REVISION 11-18-11
DATE PLOTTED => 22-FEB-2012
TIME PLOTTED => 10:24

Dist	COUNTY	ROUTE	POST MILES TOTAL PROJECT	SHEET No.	TOTAL SHEETS
11	SD	5	R10.0, R10.7	12	132

REGISTERED CIVIL ENGINEER 11-14-11 DATE

2-21-12
PLANS APPROVAL DATE

REGISTERED PROFESSIONAL ENGINEER JOEL P. SIMS No. 49715 Exp. 09-30-12 CIVIL STATE OF CALIFORNIA

THE STATE OF CALIFORNIA OR ITS OFFICERS OR AGENTS SHALL NOT BE RESPONSIBLE FOR THE ACCURACY OR COMPLETENESS OF SCANNED COPIES OF THIS PLAN SHEET.

NOTES:

1. REFER TO MANUFACTURERS' INSTALLATION RECOMMENDATIONS FOR MORE INFORMATION.
2. LOCATION OF CRASH CUSHION IS APPROXIMATE, EXACT LOCATION TO BE DETERMINED BY THE ENGINEER.
3. FOR TRANSITION BETWEEN CRASH CUSHION (TYPE SCI70GM) AND CONCRETE BARRIER SEE MANUFACTURERS' MANUAL.

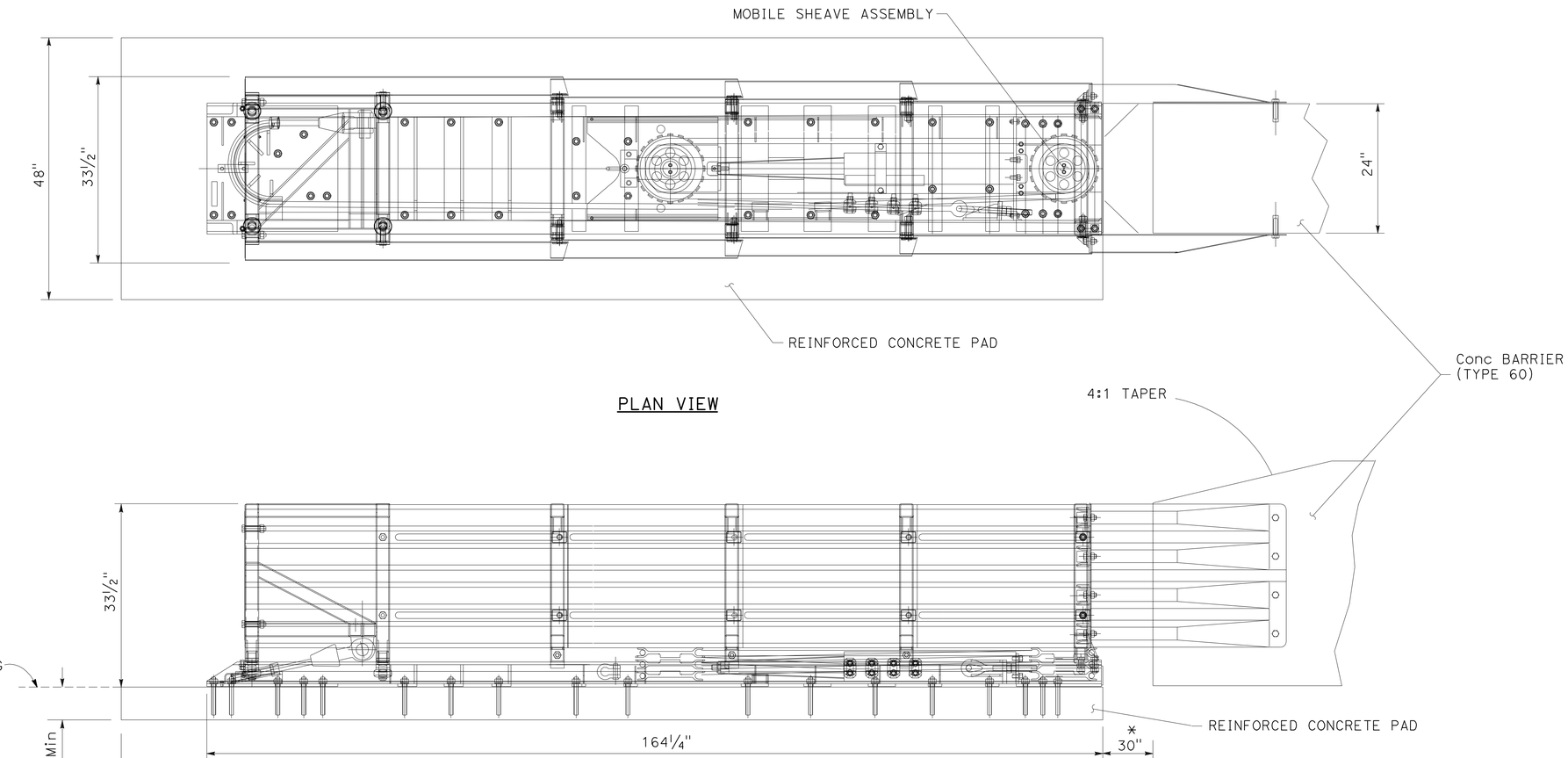

PLAN VIEW

ELEVATION

*OR AS PER MANUFACTURER'S RECOMMENDATION

ALTERNATIVE CRASH CUSHION SYSTEM
(CRASH CUSHION TYPE SMART MODEL SCI-70GM)

CONSTRUCTION DETAILS

NO SCALE

C-5

STATE OF CALIFORNIA - DEPARTMENT OF TRANSPORTATION
Caltrans DESIGN

FUNCTIONAL SUPERVISOR: MICHAEL J. WEBSTER
CALCULATED-DESIGNED BY: WAYNE NGUYEN
CHECKED BY: JOEL SIMS
REVISED BY
DATE REVISED

LAST REVISION 11-18-11
DATE PLOTTED => 22-FEB-2012
TIME PLOTTED => 10:24

Dist	COUNTY	ROUTE	POST MILES TOTAL PROJECT	SHEET No.	TOTAL SHEETS
11	SD	5	R10.0, R10.7	13	132

Joel P. Sims 11-14-11
REGISTERED CIVIL ENGINEER DATE

2-21-12
PLANS APPROVAL DATE

REGISTERED PROFESSIONAL ENGINEER
JOEL P. SIMS
No. 49715
Exp 09-30-12
CIVIL
STATE OF CALIFORNIA

THE STATE OF CALIFORNIA OR ITS OFFICERS OR AGENTS SHALL NOT BE RESPONSIBLE FOR THE ACCURACY OR COMPLETENESS OF SCANNED COPIES OF THIS PLAN SHEET.

NOTES:

1. REFER TO MANUFACTURERS' INSTALLATION RECOMMENDATIONS FOR MORE INFORMATION.
2. LOCATION OF CRASH CUSHION IS APPROXIMATE, EXACT LOCATION TO BE DETERMINED BY THE ENGINEER.
3. FOR TRANSITION BETWEEN CRASH CUSHION (TYPE SCI70GM) AND CONCRETE BARRIER SEE MANUFACTURERS' MANUAL.

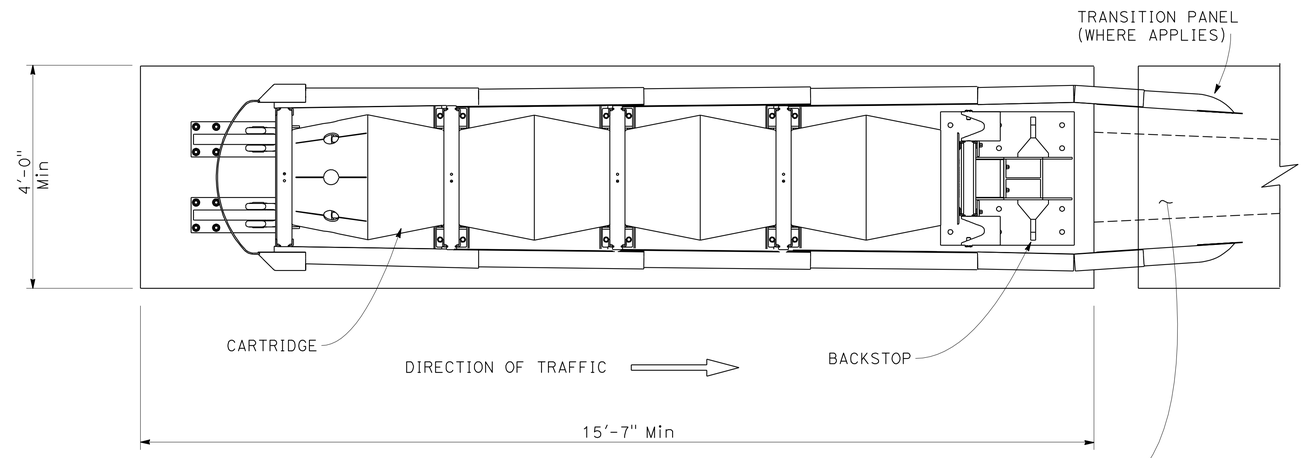

PLAN

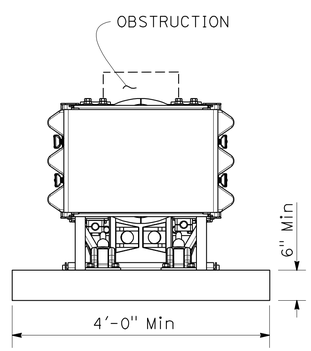

FRONT

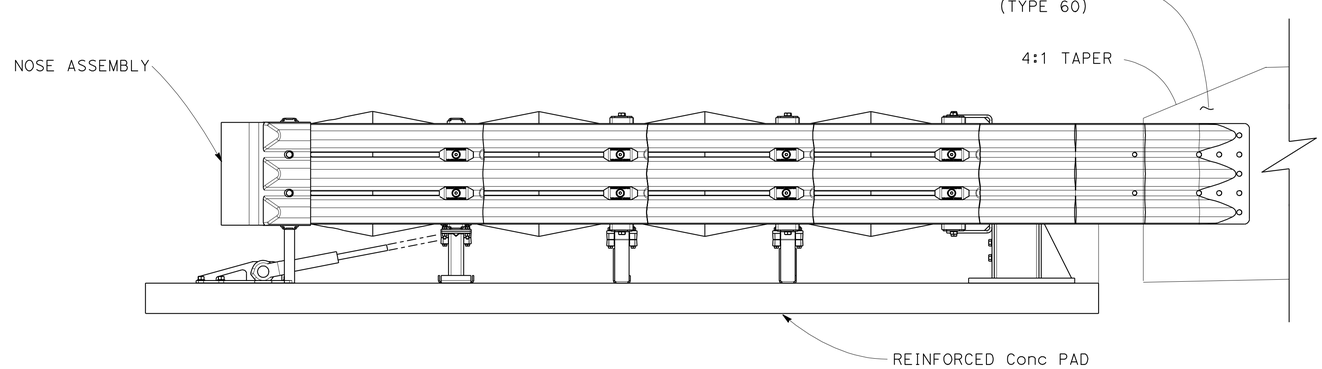

ELEVATION

ALTERNATIVE CRASH CUSHION SYSTEM

(UNIVERSAL TAU-II PARALLEL - 30" COMPACT BACKSTOP, 4 BAYS)

CONSTRUCTION DETAILS

NO SCALE

C-6

STATE OF CALIFORNIA - DEPARTMENT OF TRANSPORTATION
Caltrans
DESIGN

FUNCTIONAL SUPERVISOR: MICHAEL J. WEBSTER
CALCULATED-DESIGNED BY: WAYNE NGUYEN
CHECKED BY: JOEL SIMS
REVISED BY
DATE REVISED

LAST REVISION 11-18-11
DATE PLOTTED => 22-FEB-2012
TIME PLOTTED => 10:24

Dist	COUNTY	ROUTE	POST MILES TOTAL PROJECT	SHEET No.	TOTAL SHEETS
11	SD	5	R10.0, R10.7	14	132

Joel P. Sims 11-14-11
REGISTERED CIVIL ENGINEER DATE

2-21-12
PLANS APPROVAL DATE

REGISTERED PROFESSIONAL ENGINEER
JOEL P. SIMS
No. 49715
Exp. 09-30-12
CIVIL
STATE OF CALIFORNIA

THE STATE OF CALIFORNIA OR ITS OFFICERS OR AGENTS SHALL NOT BE RESPONSIBLE FOR THE ACCURACY OR COMPLETENESS OF SCANNED COPIES OF THIS PLAN SHEET.

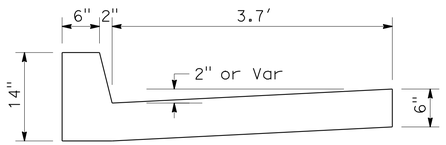

Exist A2-8 CURB Mod

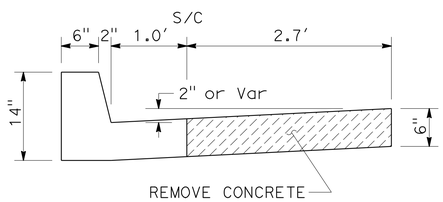

REMOVE PARTIAL A2-8 CURB Mod

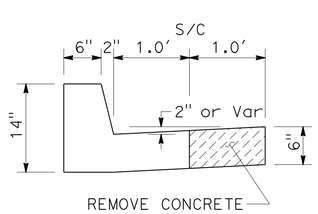

REMOVE PARTIAL A2-8 CURB

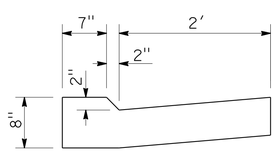

B4 CURB Mod

SEE Std PLAN A87A FOR ADDITIONAL INFORMATION

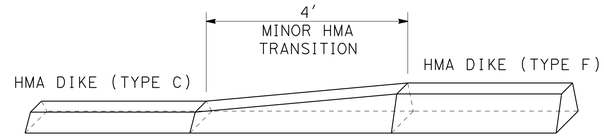

HMA DIKE TRANSITION (TYPE C TO F)

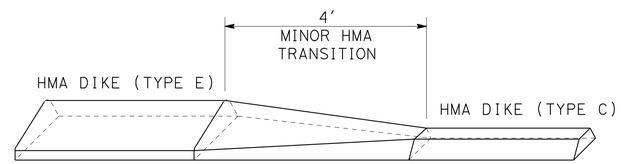

HMA DIKE (TYPE E) TO A2 CURB TRANSITION

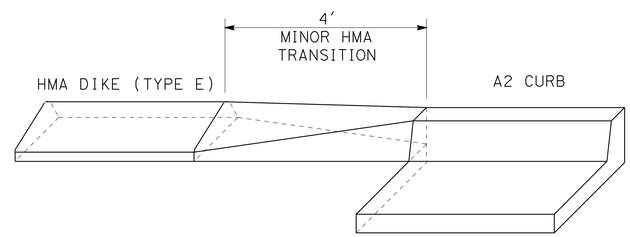

HMA DIKE (TYPE E) TO A2 CURB TRANSITION

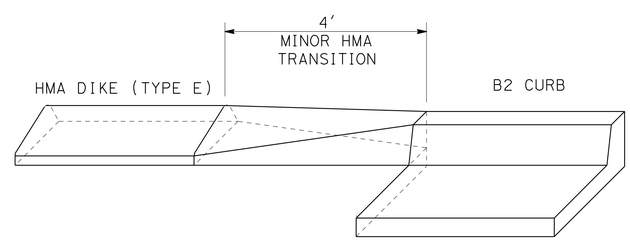

HMA DIKE (TYPE E) TO B2 CURB TRANSITION

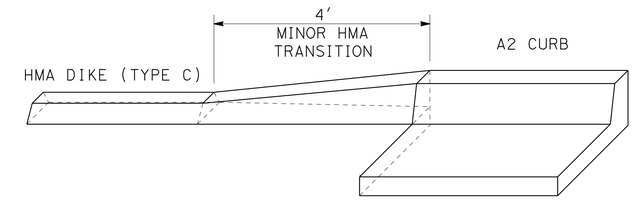

HMA DIKE (TYPE C) TO A2 CURB TRANSITION

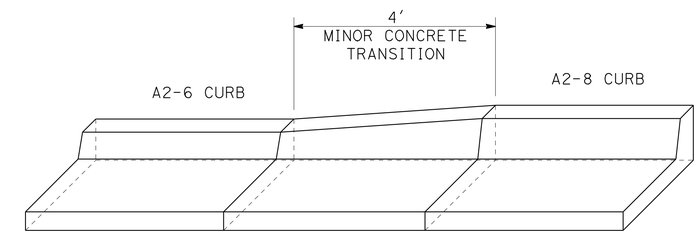

A2-6 CURB TO A2-8 CURB TRANSITION

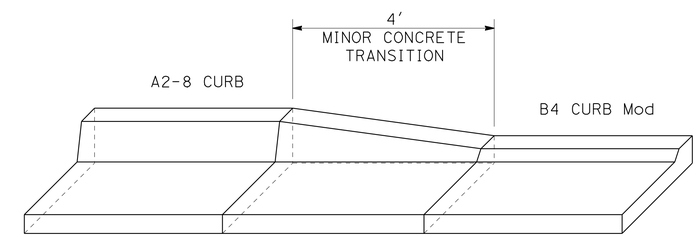

A2-8 CURB TO B4 Mod CURB TRANSITION

CONSTRUCTION DETAILS

NO SCALE

C-7

STATE OF CALIFORNIA - DEPARTMENT OF TRANSPORTATION
Caltrans
DESIGN

FUNCTIONAL SUPERVISOR: MICHAEL J. WEBSTER
CALCULATED-DESIGNED BY: WAYNE NGUYEN
CHECKED BY: JOEL SIMS
REVISED BY
DATE REVISED

LAST REVISION 11-18-11
DATE PLOTTED => 22-FEB-2012
TIME PLOTTED => 10:25

Dist	COUNTY	ROUTE	POST MILES TOTAL PROJECT	SHEET No.	TOTAL SHEETS
11	SD	5	R10.0, R10.7	15	132

REGISTERED CIVIL ENGINEER DATE

2-21-12
PLANS APPROVAL DATE

REGISTERED PROFESSIONAL ENGINEER
JOEL P. SIMS
No. 49715
Exp 09-30-12
CIVIL
STATE OF CALIFORNIA

THE STATE OF CALIFORNIA OR ITS OFFICERS OR AGENTS SHALL NOT BE RESPONSIBLE FOR THE ACCURACY OR COMPLETENESS OF SCANNED COPIES OF THIS PLAN SHEET.

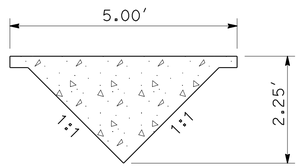

SECTION B-B

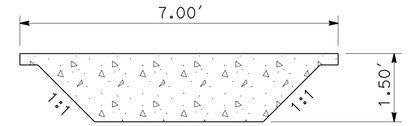

SECTION D-D

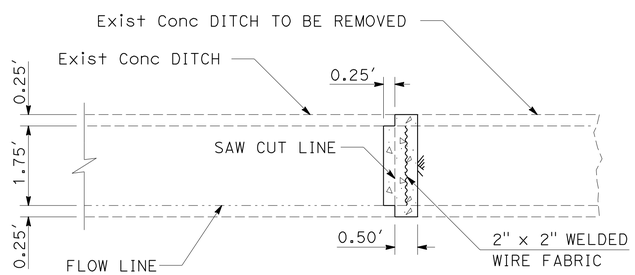

SECTION A-A

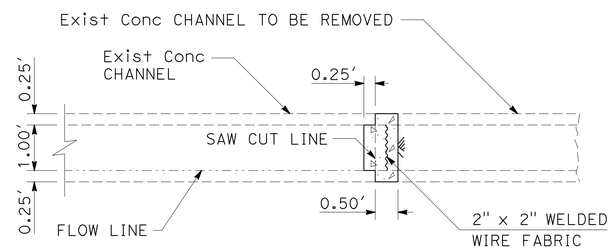

SECTION C-C

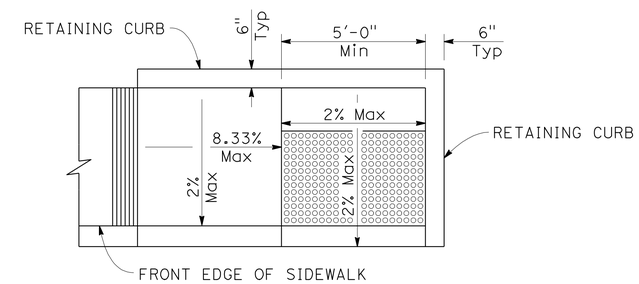

CURB RAMP CASE C Mod

SEE STANDARD PLAN A88A FOR DETAILS NOT SHOWN

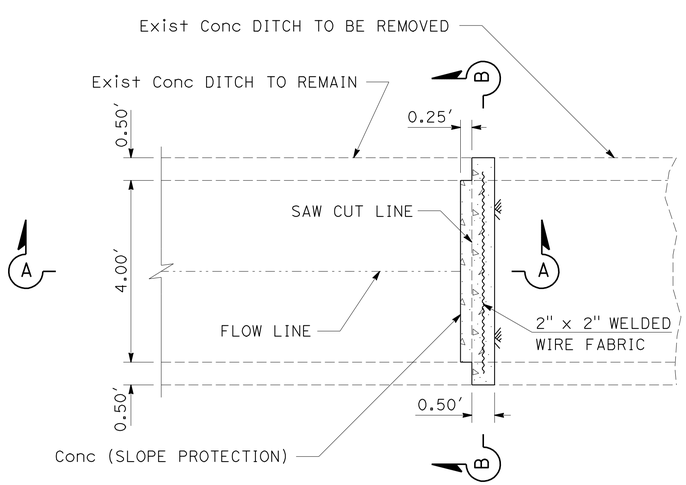

PLAN

CONCRETE LINED DITCH END CAP

104.89 Rt "BM" 19+58.00 & 98.70 Lt "BM" 19+44.00

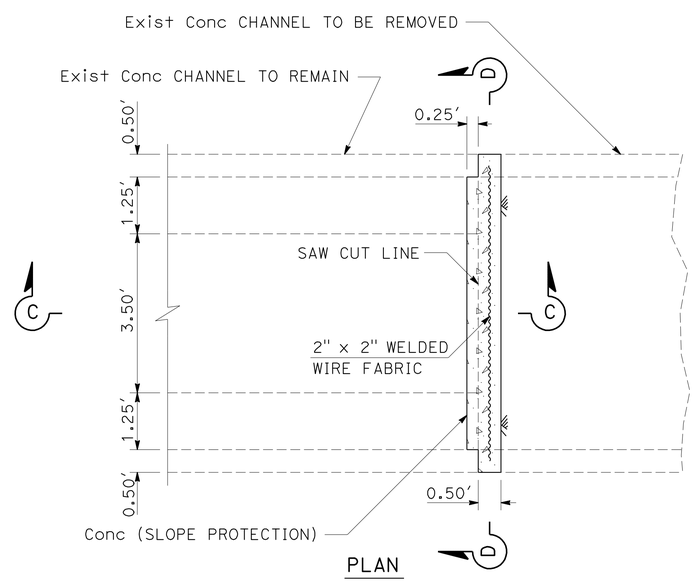

PLAN

CONCRETE CHANNEL END CAP

39.63 Rt "EN-13A" 602+82.61

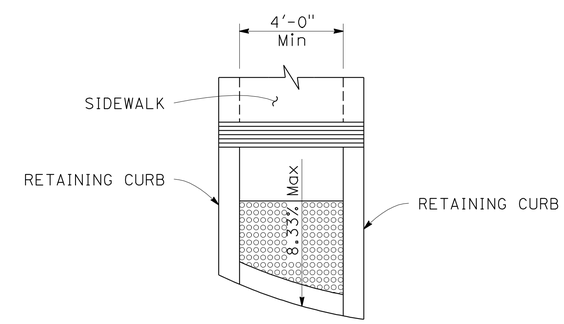

CURB RAMP CASE F Mod

SEE STANDARD PLAN A88A FOR DETAILS NOT SHOWN

CONSTRUCTION DETAILS

NO SCALE

C-8

REVISED BY | DATE REVISED
WAYNE NGUYEN | JOEL SIMS
CALCULATED-DESIGNED BY | CHECKED BY
FUNCTIONAL SUPERVISOR
MICHAEL J. WEBSTER

STATE OF CALIFORNIA - DEPARTMENT OF TRANSPORTATION
DESIGN
Caltrans

LAST REVISION 11-18-11
DATE PLOTTED => 22-FEB-2012
TIME PLOTTED => 10:25

Dist	COUNTY	ROUTE	POST MILES TOTAL PROJECT	SHEET No.	TOTAL SHEETS
11	SD	5	R10.0, R10.7	16	132

Joel P. Sims 11-14-11
REGISTERED CIVIL ENGINEER DATE

2-21-12
PLANS APPROVAL DATE

REGISTERED PROFESSIONAL ENGINEER
JOEL P. SIMS
No. 49715
Exp 09-30-12
CIVIL
STATE OF CALIFORNIA

THE STATE OF CALIFORNIA OR ITS OFFICERS OR AGENTS SHALL NOT BE RESPONSIBLE FOR THE ACCURACY OR COMPLETENESS OF SCANNED COPIES OF THIS PLAN SHEET.

NOTE:

ALL EXISTING RAMPS' STRUCTURAL SECTIONS ARE
0.2' RHMA, 0.1' AC, 0.67' CTB, 1.12' AS

LEGEND

0.2' COLD PLANE
0.2' RHMA (TYPE G)

REPLACE ASPHALT CONCRETE SURFACING
0.5' ASPHALT CONCRETE HMA (TYPE A)

RHMA = RUBERIZED HOT MIX ASPHALT

[X] STRUCTURAL SECTION (SEE TYPICAL CROSS SECTIONS)

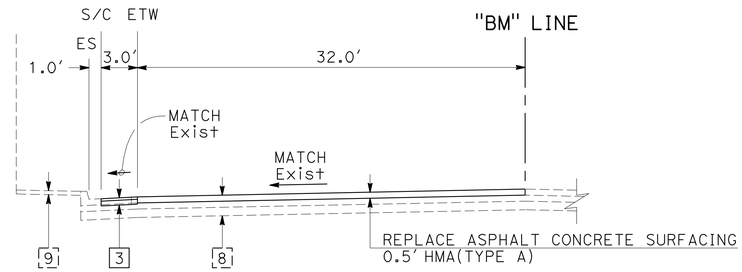

SECTION A-A
NO SCALE

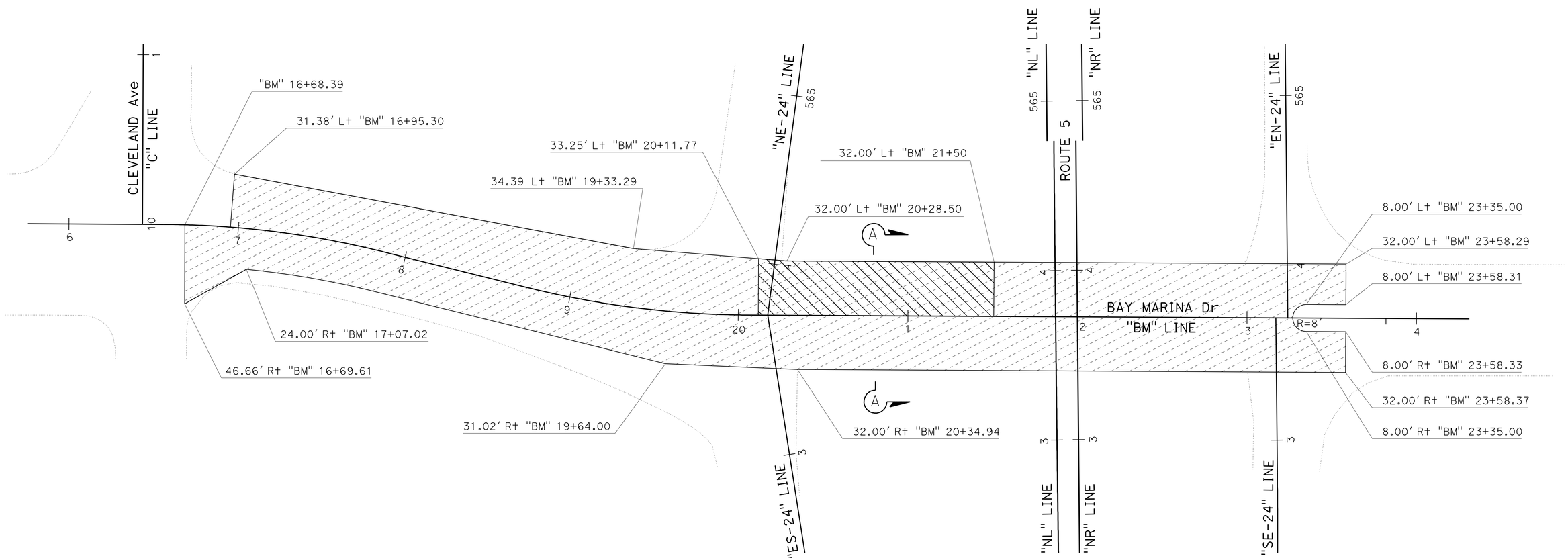

COLD PLANE & REPLACE ASPHALT Conc SURFACING AREA

CONSTRUCTION DETAILS

SCALE: 1"=30'

C-9

STATE OF CALIFORNIA - DEPARTMENT OF TRANSPORTATION
Caltrans
DESIGN

FUNCTIONAL SUPERVISOR: MICHAEL J. WEBSTER
CALCULATED-DESIGNED BY: FARDAD BEHBOODY
CHECKED BY: JOEL SIMS
REVISED BY
DATE REVISED

LAST REVISION 11-18-11
DATE PLOTTED => 22-FEB-2012
TIME PLOTTED => 10:25

Dist	COUNTY	ROUTE	POST MILES TOTAL PROJECT	SHEET No.	TOTAL SHEETS
11	SD	5	R10.0, R10.7	17	132

Joel P. Sims 11-14-11
REGISTERED CIVIL ENGINEER DATE

2-21-12
PLANS APPROVAL DATE

REGISTERED PROFESSIONAL ENGINEER JOEL P. SIMS No. 49715 Exp 09-30-12 CIVIL STATE OF CALIFORNIA

THE STATE OF CALIFORNIA OR ITS OFFICERS OR AGENTS SHALL NOT BE RESPONSIBLE FOR THE ACCURACY OR COMPLETENESS OF SCANNED COPIES OF THIS PLAN SHEET.

LEGEND

ROADWAY EXCAVATION (TYPE Z-2)
(AERIALLY DEPOSITED LEAD)
(TOP 6 INCHES)

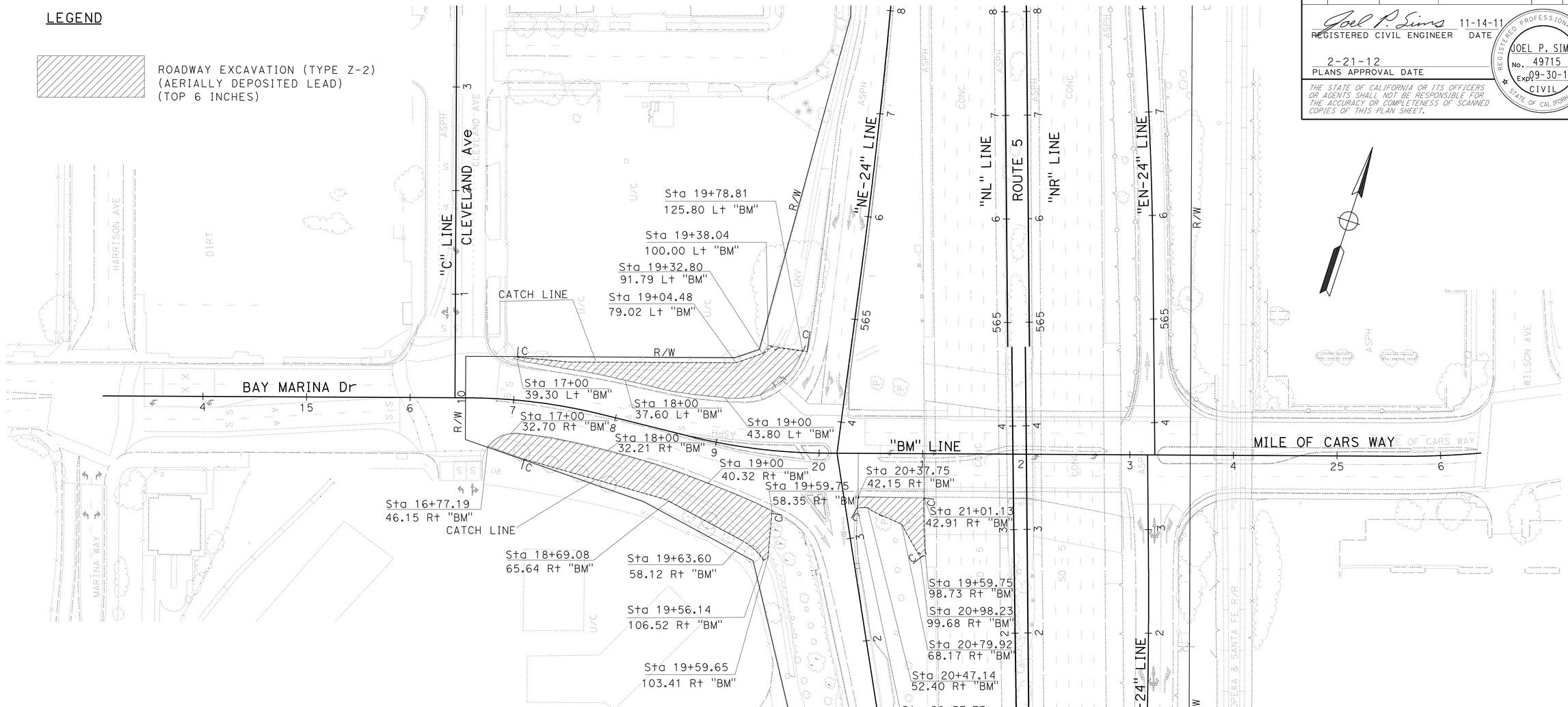

LIMIT OF ROADWAY EXCAVATION (TYPE Z-2)(AERIALLY DEPOSITED LEAD)

CONSTRUCTION DETAILS

SCALE: 1" = 50′ **C-10**

STATE OF CALIFORNIA - DEPARTMENT OF TRANSPORTATION
Caltrans® DESIGN

FUNCTIONAL SUPERVISOR: MICHAEL J. WEBSTER
CALCULATED-DESIGNED BY: FARDAD BEHBOODY
CHECKED BY: JOEL SIMS
REVISED BY
DATE REVISED

LAST REVISION 11-18-11
DATE PLOTTED => 22-FEB-2012
TIME PLOTTED => 10:25

Dist	COUNTY	ROUTE	POST MILES TOTAL PROJECT	SHEET No.	TOTAL SHEETS
11	SD	5	R10.0, R10.7	18	132

Joel P. Sims 11-14-11
REGISTERED CIVIL ENGINEER DATE

2-21-12
PLANS APPROVAL DATE

REGISTERED PROFESSIONAL ENGINEER
JOEL P. SIMS
No. 49715
Exp 09-30-12
CIVIL
STATE OF CALIFORNIA

THE STATE OF CALIFORNIA OR ITS OFFICERS OR AGENTS SHALL NOT BE RESPONSIBLE FOR THE ACCURACY OR COMPLETENESS OF SCANNED COPIES OF THIS PLAN SHEET.

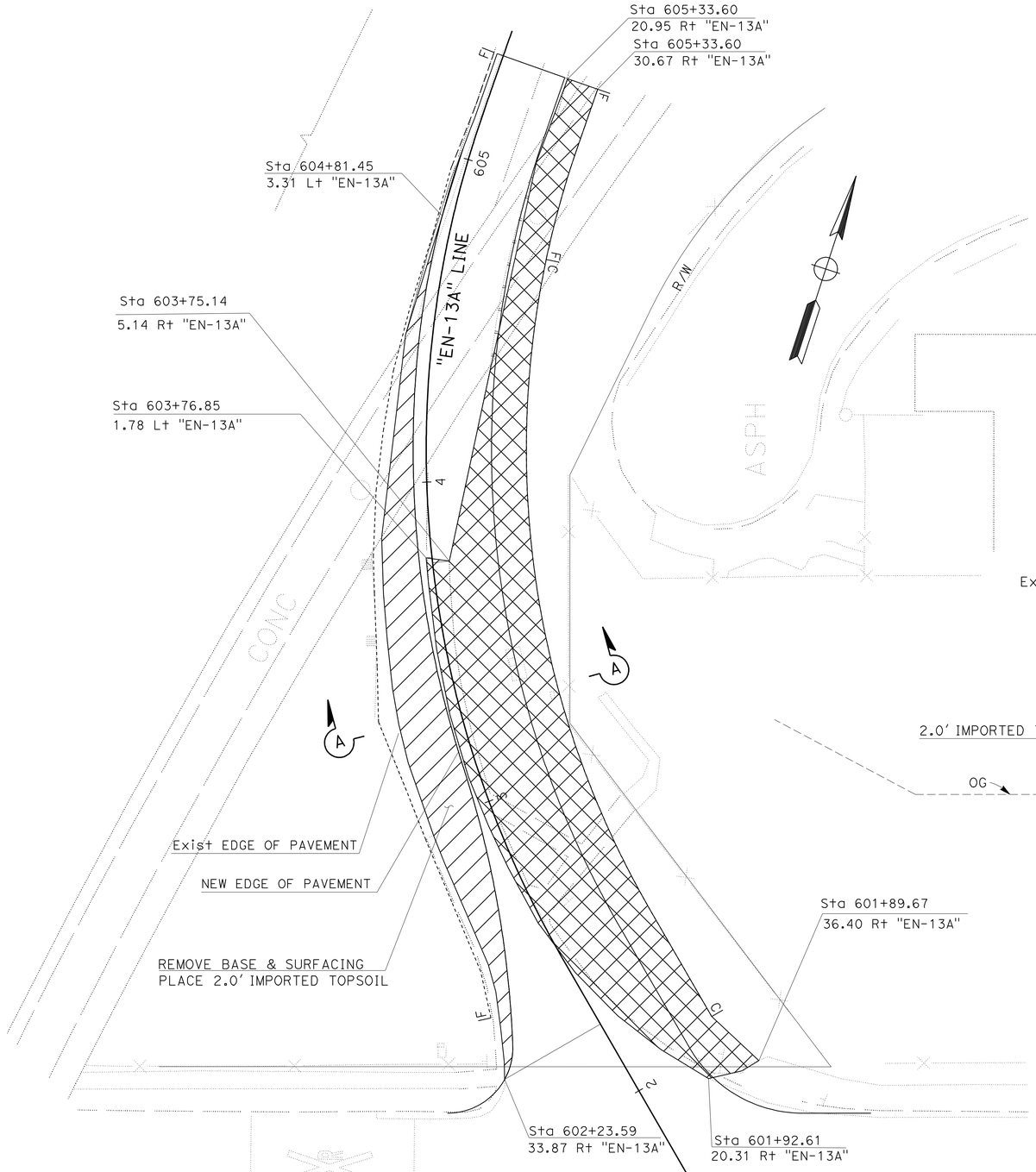

LEGEND

REMOVE BASE & SURFACING IMPORTED TOPSOIL (DEPTH = 2')

ROADWAY EXCAVATION (TYPE J) (AERIALLY DEPOSITED LEAD) (TOP 1.0' OF EXCAVATION)

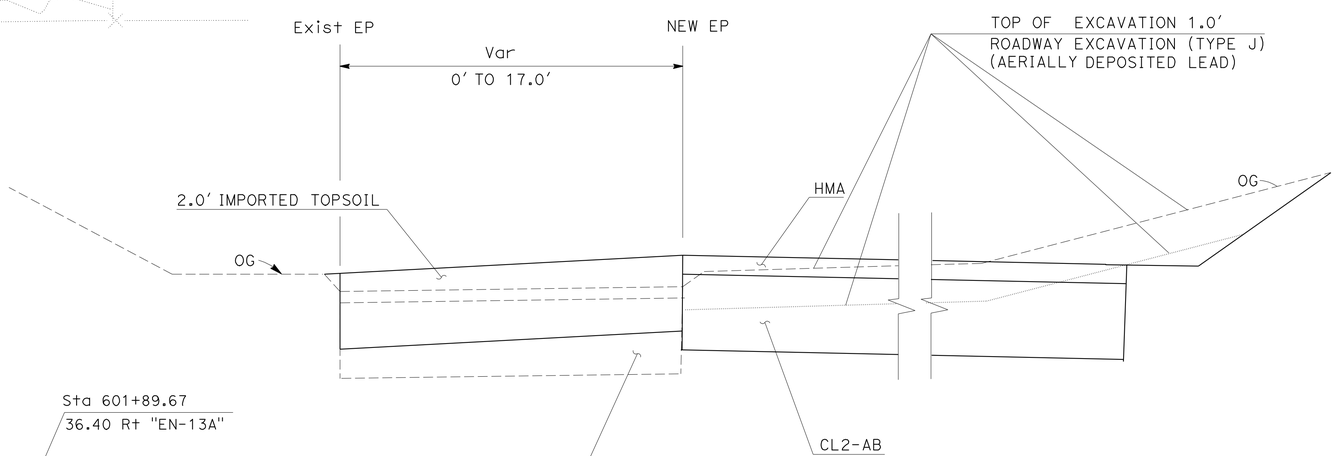

SECTION A-A

REMOVE BASE AND SURFACING AND AREA FOR IMPORTED TOPSOIL PLACEMENT AND LIMIT FOR ROADWAY EXCAVATION (TYPE J)(AERIALLY DEPOSITED LEAD)

CONSTRUCTION DETAILS

NO SCALE

C-11

STATE OF CALIFORNIA - DEPARTMENT OF TRANSPORTATION
Caltrans
DESIGN

FUNCTIONAL SUPERVISOR: MICHAEL J. WEBSTER
CALCULATED-DESIGNED BY: FARDAD BEHBOODY
CHECKED BY: JOEL SIMS
REVISED BY
DATE REVISED

LAST REVISION 11-18-11
DATE PLOTTED => 22-FEB-2012
TIME PLOTTED => 10:25

Dist	COUNTY	ROUTE	POST MILES TOTAL PROJECT	SHEET No.	TOTAL SHEETS
11	SD	5	R10.0, R10.7	19	132

Joel P. Sims 11-14-11
REGISTERED CIVIL ENGINEER DATE

2-21-12
PLANS APPROVAL DATE

REGISTERED PROFESSIONAL ENGINEER
JOEL P. SIMS
No. 49715
Exp 09-30-12
CIVIL
STATE OF CALIFORNIA

THE STATE OF CALIFORNIA OR ITS OFFICERS OR AGENTS SHALL NOT BE RESPONSIBLE FOR THE ACCURACY OR COMPLETENESS OF SCANNED COPIES OF THIS PLAN SHEET.

NOTE:

FOR ACCURATE RIGHT OF WAY DATA, CONTACT RIGHT OF WAY ENGINEERING AT THE DISTRICT OFFICE.

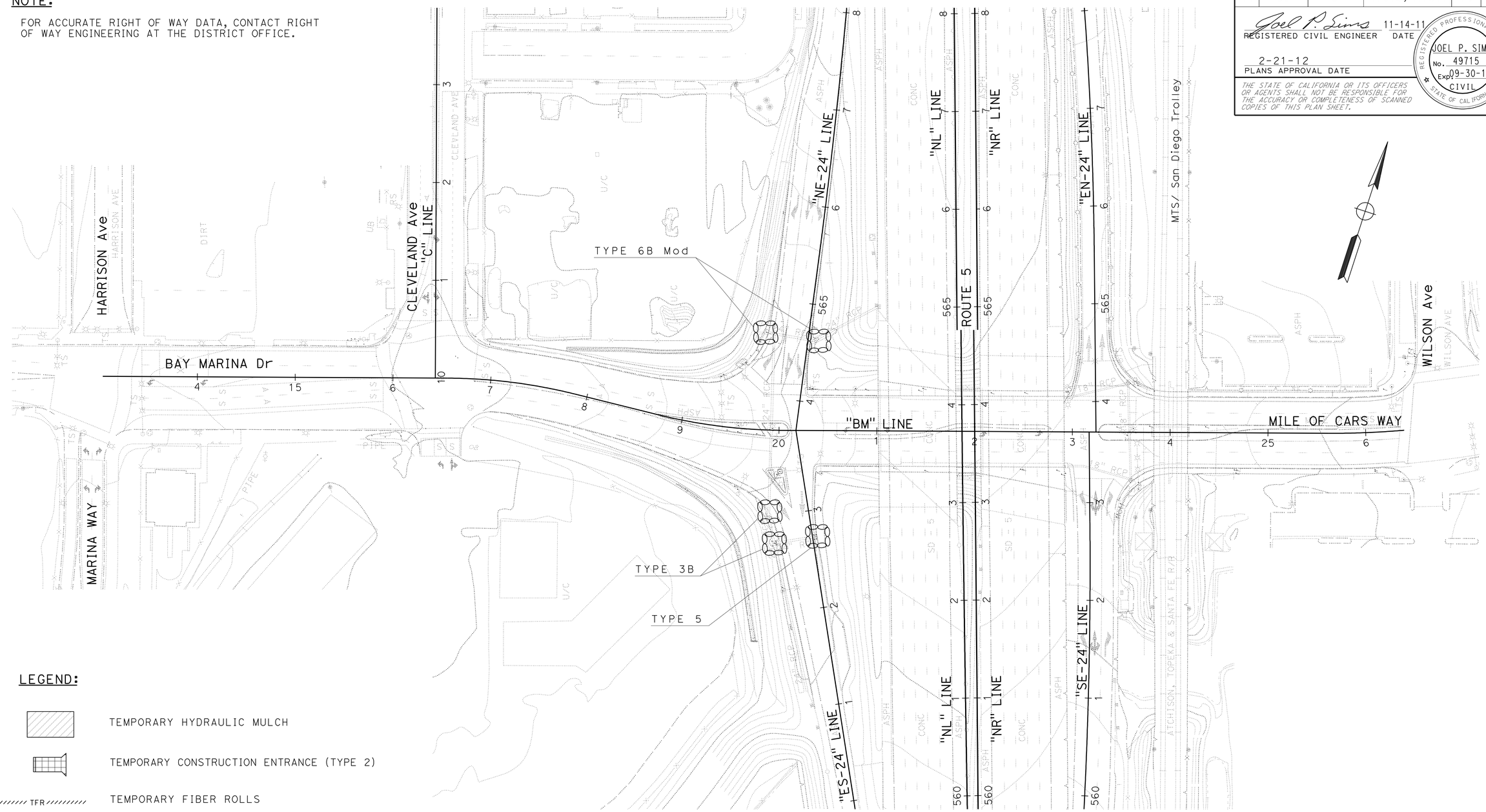

LEGEND:

- TEMPORARY HYDRAULIC MULCH
- TEMPORARY CONSTRUCTION ENTRANCE (TYPE 2)
- TFR — TEMPORARY FIBER ROLLS
- TEMPORARY DRAINAGE INLET PROTECTION
- TEMPORARY CHECK DAM (15 LF EACH)
- EARTH DITCH FLOW LINE
- MTS — METROPOLITAN TRANSIT SYSTEM

TEMPORARY WATER POLLUTION CONTROL PLAN

STAGE 1

APPROVED FOR WATER POLLUTION CONTROL WORK ONLY

SCALE: 1" = 50'

WPC-1

STATE OF CALIFORNIA - DEPARTMENT OF TRANSPORTATION
Caltrans
DESIGN

FUNCTIONAL SUPERVISOR: MICHAEL J. WEBSTER
CALCULATED-DESIGNED BY: FARDAD BEHBOODY
CHECKED BY: JOEL SIMS
REVISED BY
DATE REVISED

LAST REVISION 11-18-11
DATE PLOTTED => 22-FEB-2012
TIME PLOTTED => 10:25

Dist	COUNTY	ROUTE	POST MILES TOTAL PROJECT	SHEET No.	TOTAL SHEETS
11	SD	5	R10.0, R10.7	20	132

Joel P. Sims 11-14-11
REGISTERED CIVIL ENGINEER DATE

2-21-12
PLANS APPROVAL DATE

REGISTERED PROFESSIONAL ENGINEER JOEL P. SIMS No. 49715 Exp 09-30-12 CIVIL STATE OF CALIFORNIA

THE STATE OF CALIFORNIA OR ITS OFFICERS OR AGENTS SHALL NOT BE RESPONSIBLE FOR THE ACCURACY OR COMPLETENESS OF SCANNED COPIES OF THIS PLAN SHEET.

NOTE:

FOR ACCURATE RIGHT OF WAY DATA, CONTACT RIGHT OF WAY ENGINEERING AT THE DISTRICT OFFICE.

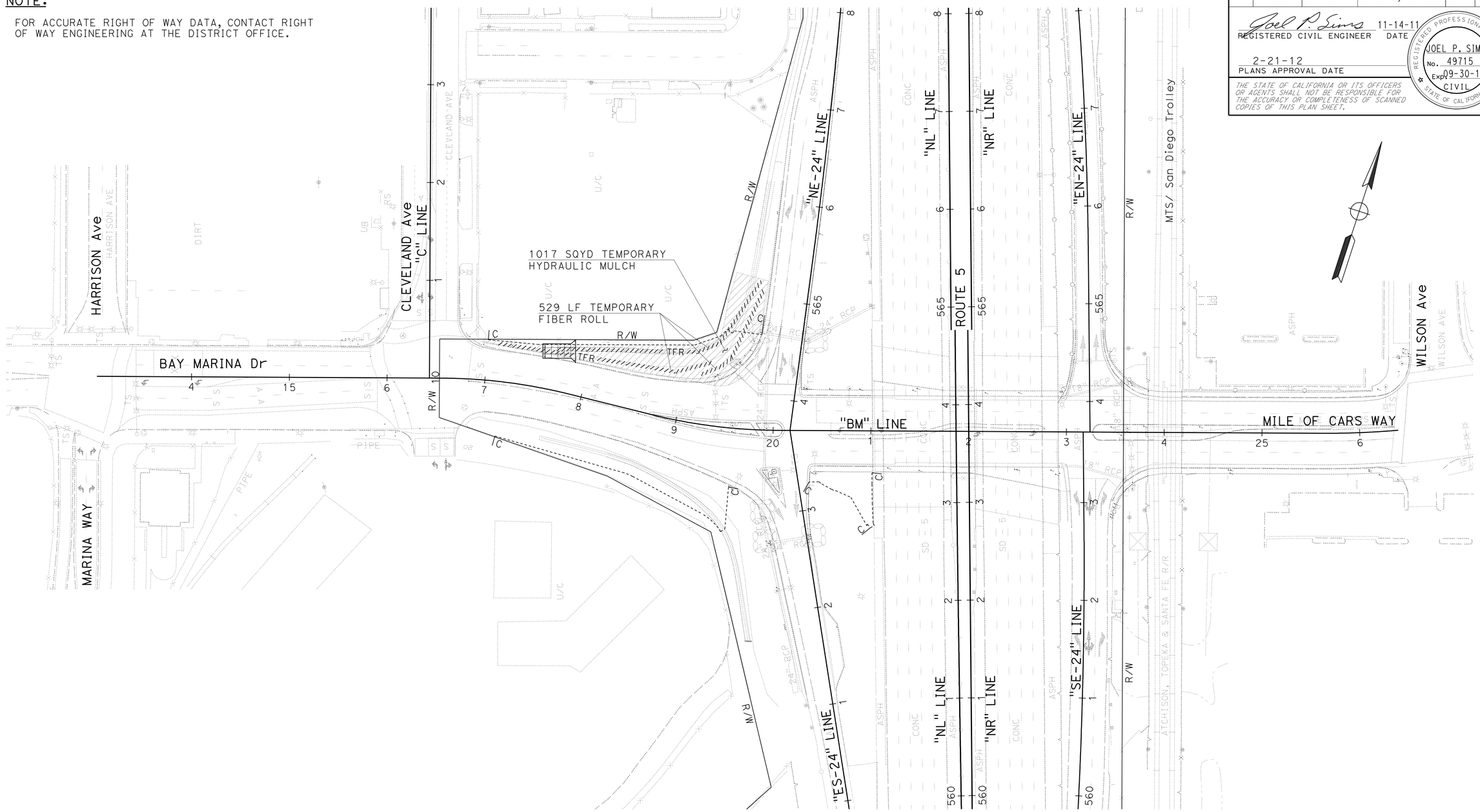

TEMPORARY WATER POLLUTION CONTROL PLAN
STAGE 2

APPROVED FOR WATER POLLUTION CONTROL WORK ONLY

SCALE: 1" = 50'

WPC-2

STATE OF CALIFORNIA - DEPARTMENT OF TRANSPORTATION
Caltrans
DESIGN

FUNCTIONAL SUPERVISOR: MICHAEL J. WEBSTER
CALCULATED-DESIGNED BY: FARDAD BEHBOODY
CHECKED BY: JOEL SIMS
REVISED BY
DATE REVISED

LAST REVISION 11-18-11
DATE PLOTTED => 22-FEB-2012
TIME PLOTTED => 10:25

Dist	COUNTY	ROUTE	POST MILES TOTAL PROJECT	SHEET No.	TOTAL SHEETS
11	SD	5	R10.0, R10.7	21	132

Joel P. Sims 11-14-11
REGISTERED CIVIL ENGINEER DATE

2-21-12
PLANS APPROVAL DATE

REGISTERED PROFESSIONAL ENGINEER
JOEL P. SIMS
No. 49715
Exp 09-30-12
CIVIL
STATE OF CALIFORNIA

THE STATE OF CALIFORNIA OR ITS OFFICERS OR AGENTS SHALL NOT BE RESPONSIBLE FOR THE ACCURACY OR COMPLETENESS OF SCANNED COPIES OF THIS PLAN SHEET.

NOTE:

FOR ACCURATE RIGHT OF WAY DATA, CONTACT RIGHT OF WAY ENGINEERING AT THE DISTRICT OFFICE.

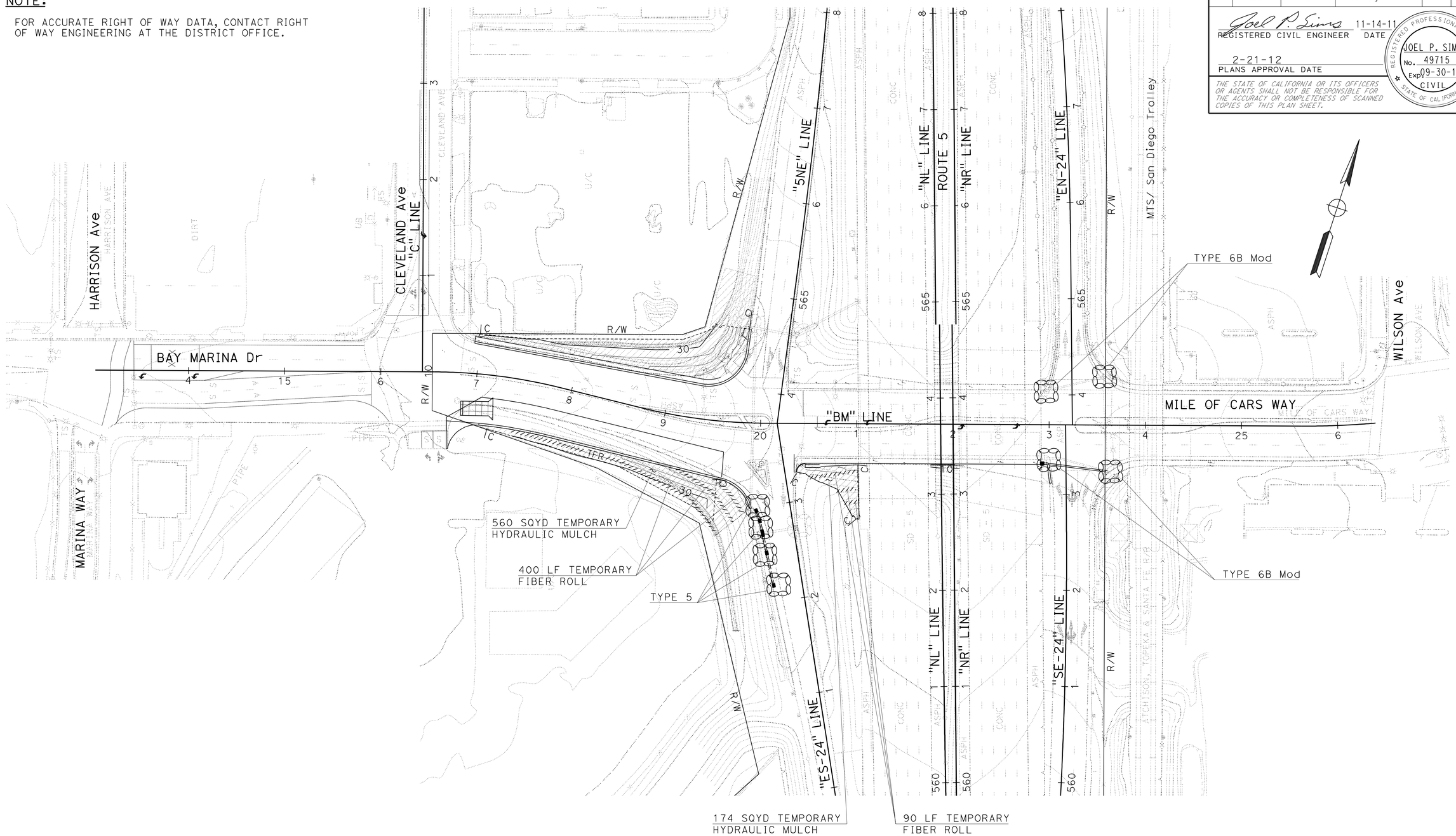

TEMPORARY WATER POLLUTION CONTROL PLAN

STAGE 3

APPROVED FOR WATER POLLUTION CONTROL WORK ONLY

SCALE: 1" = 50'

WPC-3

STATE OF CALIFORNIA - DEPARTMENT OF TRANSPORTATION
Caltrans
DESIGN

FUNCTIONAL SUPERVISOR: MICHAEL J. WEBSTER
CALCULATED-DESIGNED BY: FARDAD BEHBOODY
CHECKED BY: JOEL SIMS
REVISED BY
DATE REVISED

LAST REVISION 11-18-11
DATE PLOTTED => 22-FEB-2012
TIME PLOTTED => 10:26

Dist	COUNTY	ROUTE	POST MILES TOTAL PROJECT	SHEET No.	TOTAL SHEETS
11	SD	5	R10.0, R10.7	22	132

Joel P. Sims 11-14-11
REGISTERED CIVIL ENGINEER DATE

2-21-12
PLANS APPROVAL DATE

REGISTERED PROFESSIONAL ENGINEER
JOEL P. SIMS
No. 49715
Exp 09-30-12
CIVIL
STATE OF CALIFORNIA

THE STATE OF CALIFORNIA OR ITS OFFICERS OR AGENTS SHALL NOT BE RESPONSIBLE FOR THE ACCURACY OR COMPLETENESS OF SCANNED COPIES OF THIS PLAN SHEET.

NOTE:

FOR ACCURATE RIGHT OF WAY DATA, CONTACT RIGHT OF WAY ENGINEERING AT THE DISTRICT OFFICE.

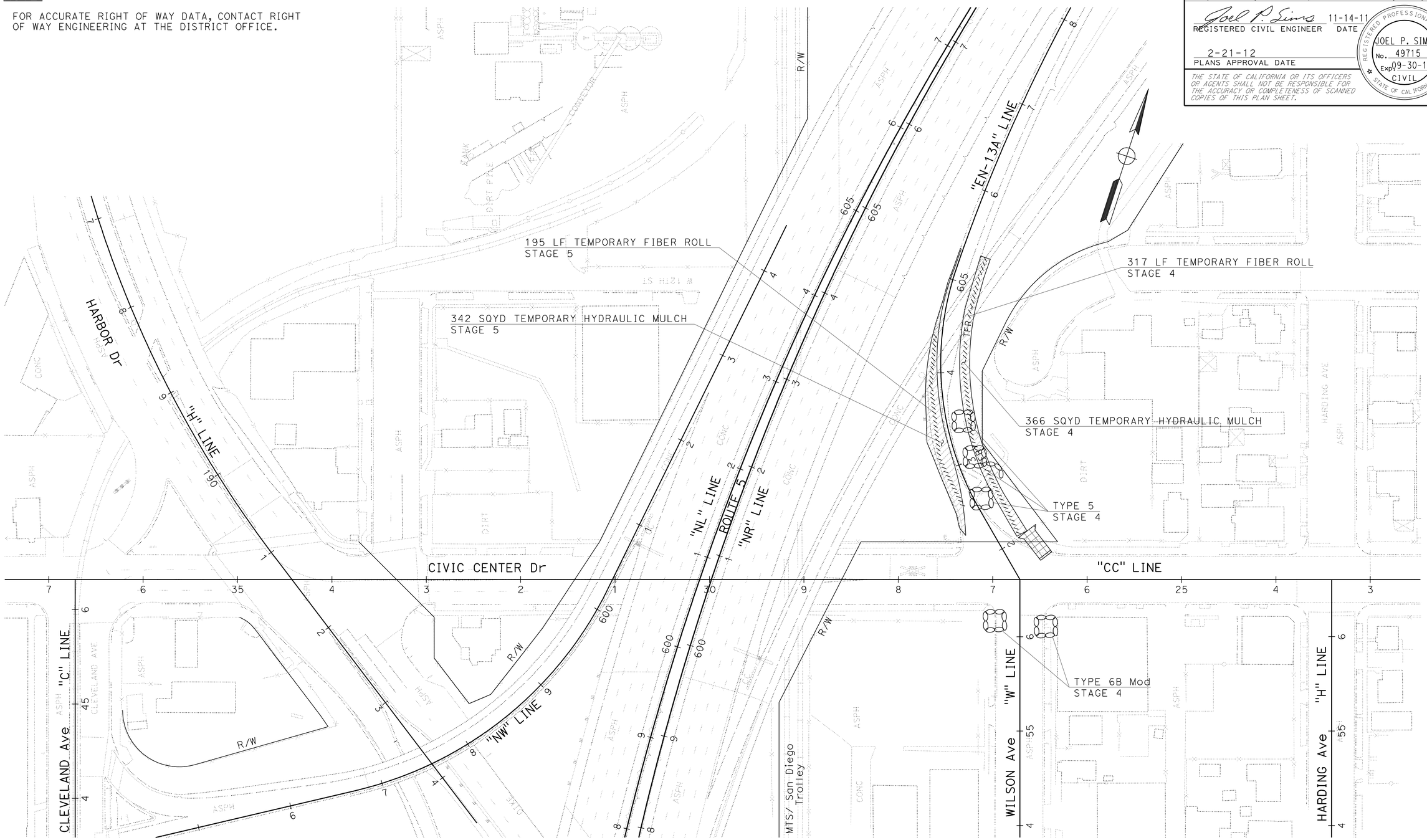

TEMPORARY WATER POLLUTION CONTROL PLAN

STAGE 4 AND 5

APPROVED FOR WATER POLLUTION CONTROL WORK ONLY

SCALE: 1" = 50'

WPC-4

STATE OF CALIFORNIA - DEPARTMENT OF TRANSPORTATION
Caltrans®
DESIGN

FUNCTIONAL SUPERVISOR: MICHAEL J. WEBSTER
CALCULATED-DESIGNED BY: JOEL SIMS
CHECKED BY: FARDAD BEHBOODY
REVISED BY
DATE REVISED

LAST REVISION 11-18-11
DATE PLOTTED => 22-FEB-2012
TIME PLOTTED => 10:26

Dist	COUNTY	ROUTE	POST MILES TOTAL PROJECT	SHEET No.	TOTAL SHEETS
11	SD	5	R10.0, R10.7	23	132

REGISTERED CIVIL ENGINEER 11-14-11 DATE

2-21-12
PLANS APPROVAL DATE

REGISTERED PROFESSIONAL ENGINEER
JOEL P. SIMS
No. 49715
Exp. 09-30-12
CIVIL
STATE OF CALIFORNIA

THE STATE OF CALIFORNIA OR ITS OFFICERS OR AGENTS SHALL NOT BE RESPONSIBLE FOR THE ACCURACY OR COMPLETENESS OF SCANNED COPIES OF THIS PLAN SHEET.

NOTES:

1) SEE STANDARD PLANS SHEETS NSP T62 AND NSP T64 FOR TEMPORARY DRAINAGE INLET PROTECTION DETAILS.
2) SEE REVISED STANDARD PLANS SHEETS T56 FOR ADDITIONAL DETAILS ON TEMPORARY FIBER ROLL DETAILS.

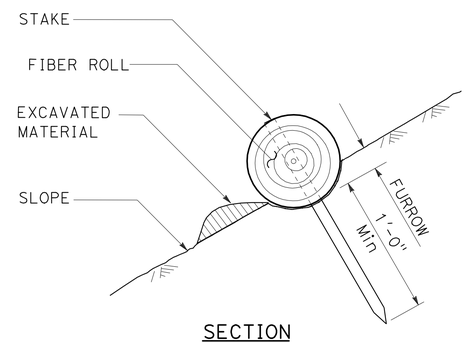

SECTION

TEMPORARY FIBER ROLL (TYPE 1 Mod)

NOTE: STAKE SHALL BE FLUSH TO TOP OF FIBER ROLL.

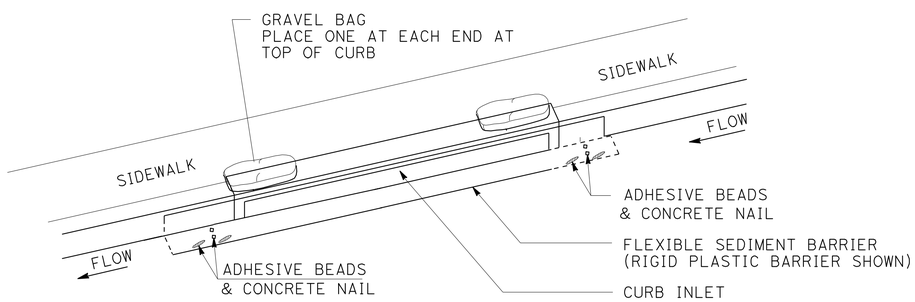

PERSPECTIVE

TEMPORARY DRAINAGE INLET PROTECTION (TYPE 6B Mod) (CURB INLET WITHOUT GRATE)

WATER POLLUTION CONTROL QUANTITIES

STAGE	SHEET	TEMPORARY FIBER ROLL	TEMPORARY HYDRAULIC MULCH	TEMPORARY CHECK DAM	TEMPORARY CONSTRUCTION ENTRANCE	TEMPORARY DRAINAGE INLET PROTECTION		
					TYPE 2	TYPE 3B	TYPE 5	TYPE 6B Mod
		LF	SQYD	LF	EA	EA	EA	EA
1	WPC-1	-	-	-	-	2	1	2
2	WPC-2	529	1,017	-	1	-	-	-
3	WPC-3	490	734	-	1	-	4	4
4/5	WPC-4	512	708	15	1	-	3	2
SUBTOTAL						2	8	8
TOTAL		1,531	2,459	15	3	18		

WATER POLLUTION CONTROL DETAILS AND QUANTITIES

WPCD-1

NO SCALE

STATE OF CALIFORNIA - DEPARTMENT OF TRANSPORTATION
Caltrans
DESIGN
FUNCTIONAL SUPERVISOR: MICHAEL J. WEBSTER
CALCULATED-DESIGNED BY: FARDAD BEHBOODY
CHECKED BY: JOEL SIMS
REVISED BY
DATE REVISED

LAST REVISION 11-18-11
DATE PLOTTED => 22-FEB-2012
TIME PLOTTED => 10:26

Dist	COUNTY	ROUTE	POST MILES TOTAL PROJECT	SHEET No.	TOTAL SHEETS
11	SD	5	R10.0, R10.7	24	132

Joel P. Sims 11-14-11
REGISTERED CIVIL ENGINEER DATE

2-21-12
PLANS APPROVAL DATE

REGISTERED PROFESSIONAL ENGINEER
JOEL P. SIMS
No. 49715
Exp 09-30-12
CIVIL
STATE OF CALIFORNIA

THE STATE OF CALIFORNIA OR ITS OFFICERS OR AGENTS SHALL NOT BE RESPONSIBLE FOR THE ACCURACY OR COMPLETENESS OF SCANNED COPIES OF THIS PLAN SHEET.

NOTE:

FOR ACCURATE RIGHT OF WAY DATA, CONTACT RIGHT OF WAY ENGINEERING AT THE DISTRICT OFFICE.

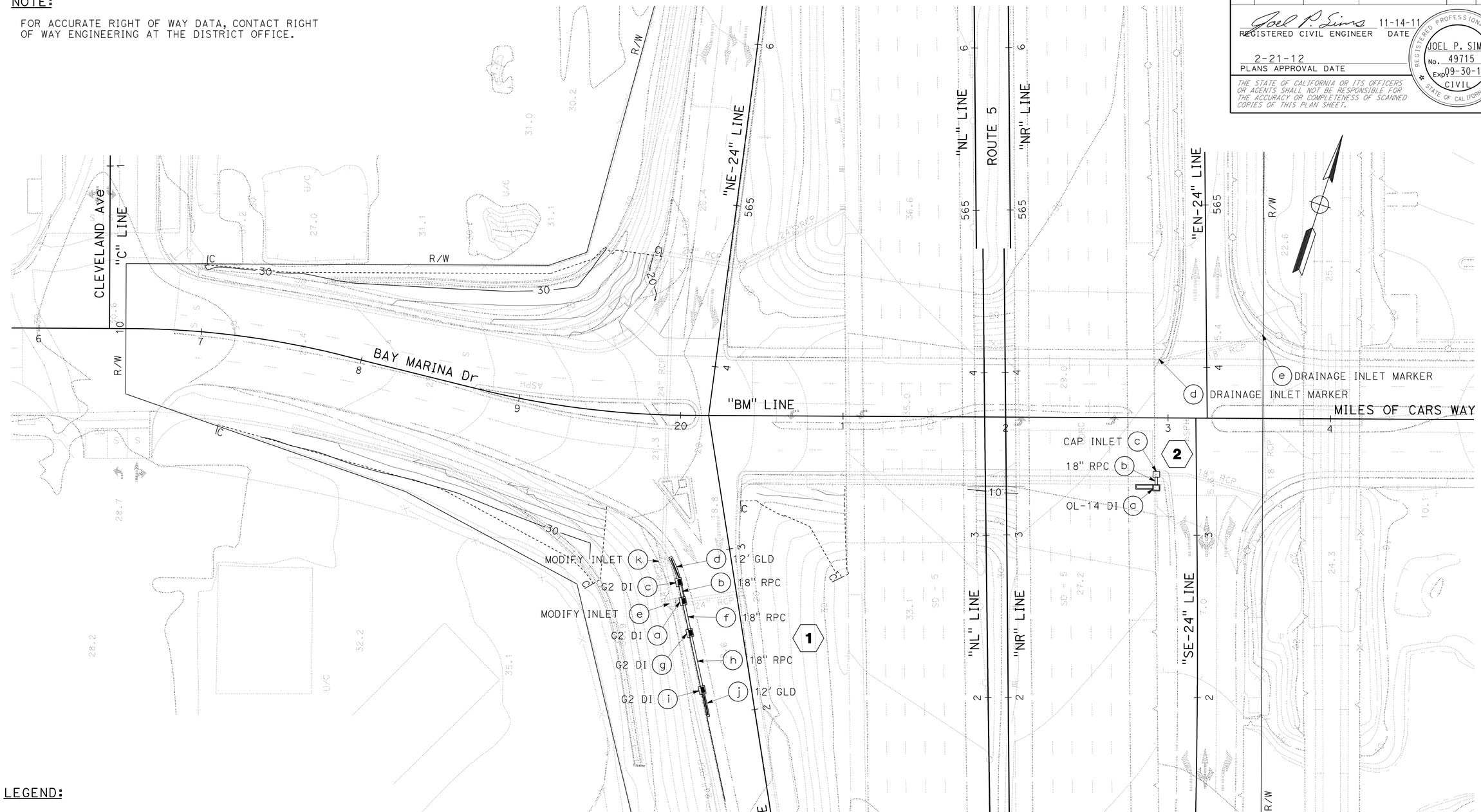

LEGEND:

(X) = DRAINAGE SYSTEM No.

(X) = DRAINAGE UNIT No.

MTS - METROPOLITAN TRANSIT SYSTEM

GLD - GRATED LINE DRAIN

CONTOUR GRADING AND DRAINAGE PLAN

APPROVED FOR CONTOUR GRADING AND DRAINAGE WORK ONLY

SCALE: 1" = 30'

G-1

STATE OF CALIFORNIA - DEPARTMENT OF TRANSPORTATION
Caltrans
DESIGN

FUNCTIONAL SUPERVISOR: MICHAEL J. WEBSTER
CALCULATED-DESIGNED BY: WAYNE NGUYEN
CHECKED BY: JOEL SIMS
REVISED BY
DATE REVISED

LAST REVISION 11-18-11
DATE PLOTTED => 22-FEB-2012
TIME PLOTTED => 10:26

Dist	COUNTY	ROUTE	POST MILES TOTAL PROJECT	SHEET No.	TOTAL SHEETS
11	SD	5	R10.0, R10.7	25	132

Joel P. Sims 11-14-11
REGISTERED CIVIL ENGINEER DATE

2-21-12
PLANS APPROVAL DATE

REGISTERED PROFESSIONAL ENGINEER
JOEL P. SIMS
No. 49715
Exp. 09-30-12
CIVIL
STATE OF CALIFORNIA

THE STATE OF CALIFORNIA OR ITS OFFICERS OR AGENTS SHALL NOT BE RESPONSIBLE FOR THE ACCURACY OR COMPLETENESS OF SCANNED COPIES OF THIS PLAN SHEET.

NOTE:

FOR ACCURATE RIGHT OF WAY DATA, CONTACT RIGHT OF WAY ENGINEERING AT THE DISTRICT OFFICE.

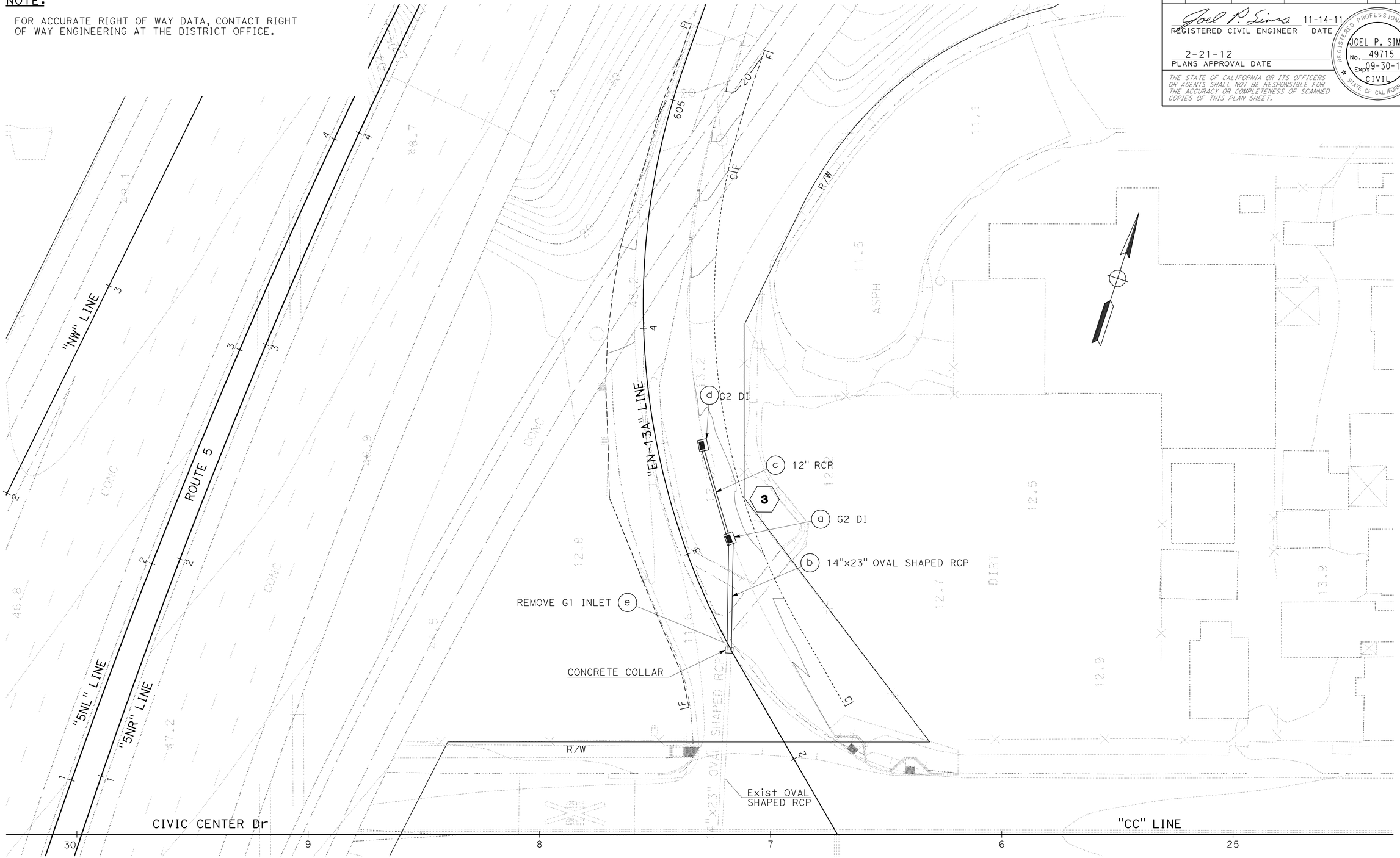

CONTOUR GRADING AND DRAINAGE PLAN

APPROVED FOR CONTOUR GRADING AND DRAINAGE WORK ONLY

SCALE: 1" = 20'

G-2

STATE OF CALIFORNIA - DEPARTMENT OF TRANSPORTATION
Caltrans® DESIGN

FUNCTIONAL SUPERVISOR: MICHAEL J. WEBSTER
CALCULATED-DESIGNED BY: RADHIKA MOTHKURI
CHECKED BY: JOEL SIMS
REVISED BY
DATE REVISED

LAST REVISION 11-18-11
DATE PLOTTED => 22-FEB-2012
TIME PLOTTED => 10:26

Dist	COUNTY	ROUTE	POST MILES TOTAL PROJECT	SHEET No.	TOTAL SHEETS
11	SD	5	R10.0,R10.7	26	132

Joel P. Sims 11-14-11
REGISTERED CIVIL ENGINEER DATE

2-21-12
PLANS APPROVAL DATE

REGISTERED PROFESSIONAL ENGINEER
JOEL P. SIMS
No. 49715
Exp 09-30-12
CIVIL
STATE OF CALIFORNIA

THE STATE OF CALIFORNIA OR ITS OFFICERS OR AGENTS SHALL NOT BE RESPONSIBLE FOR THE ACCURACY OR COMPLETENESS OF SCANNED COPIES OF THIS PLAN SHEET.

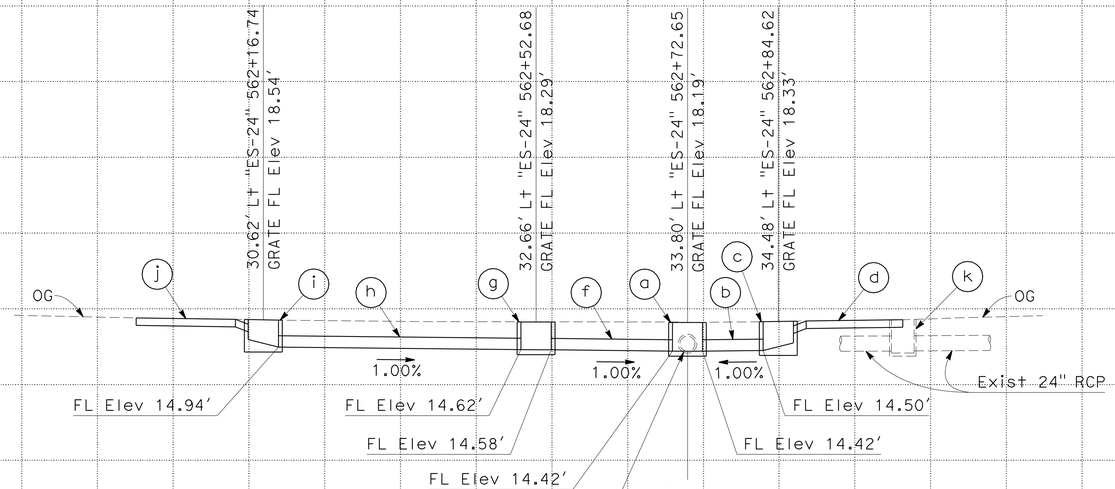

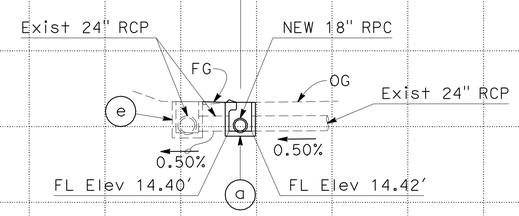

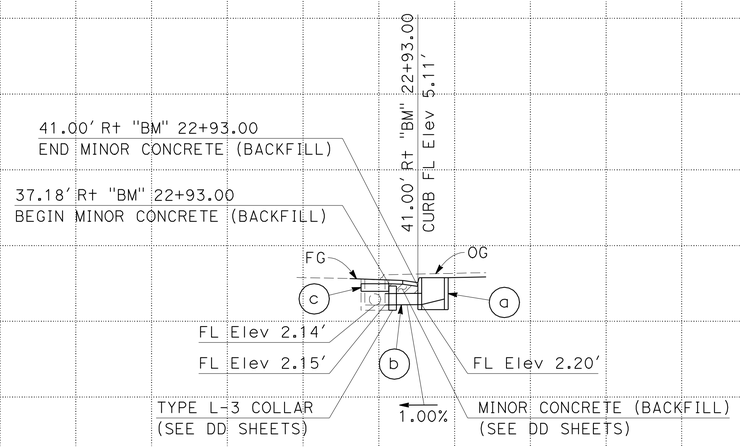

DRAINAGE SYSTEM 1

- (a) G2 INLET w/24-12X GRATE, H=3.8'
- (b) 18" x 8' RPC
- (c) G2 INLET w/24-12X GRATE, H=3.9'
- (d) 12' GRATED LINE DRAIN
- (e) MODIFY INLET (SEE DRAINAGE DETAILS)
- (f) 18" x 16' RPC
- (g) G2 INLET w/24-12X GRATE, H=3.7'
- (h) 18" x 32' RPC
- (i) G2 INLET w/24-12X GRATE, H=3.6'
- (j) 12' GRATED LINE DRAIN
- (k) MODIFY INLET (SEE DRAINAGE DETAILS)

DRAINAGE SYSTEM 2

- (a) OL-14 INLET w/STEEL PLATE COVER, H=2.9'
- (b) 18" x 5' RCP w/TYPE L-3 CONCRETE COLLAR AND MINOR CONCRETE (BACKFILL) (SEE DRAINAGE DETAILS)
- (c) CAP INLET (SEE DRAINAGE DETAILS)
- (d) DRAINAGE INLET MARKER (SEE NEW Std PLAN NSP D71)
- (e) DRAINAGE INLET MARKER (SEE NEW Std PLAN NSP D71)

1 2

DRAINAGE PROFILES

SCALE: 1" = 10' Horiz
1" = 10' Vert

DP-1

REVISED BY | DATE REVISED
WAYNE NGUYEN | JOEL SIMS
CALCULATED-DESIGNED BY | CHECKED BY
FUNCTIONAL SUPERVISOR: MICHAEL J. WEBSTER
STATE OF CALIFORNIA - DEPARTMENT OF TRANSPORTATION
Caltrans
DESIGN

LAST REVISION 11-18-11
DATE PLOTTED => 22-FEB-2012
TIME PLOTTED => 10:10

Dist	COUNTY	ROUTE	POST MILES TOTAL PROJECT	SHEET No.	TOTAL SHEETS
11	SD	5	R10.0,R10.7	27	132

Joel P. Sims 11-14-11
REGISTERED CIVIL ENGINEER DATE

2-21-12
PLANS APPROVAL DATE

REGISTERED PROFESSIONAL ENGINEER
JOEL P. SIMS
No. 49715
Exp 09-30-12
CIVIL
STATE OF CALIFORNIA

THE STATE OF CALIFORNIA OR ITS OFFICERS OR AGENTS SHALL NOT BE RESPONSIBLE FOR THE ACCURACY OR COMPLETENESS OF SCANNED COPIES OF THIS PLAN SHEET.

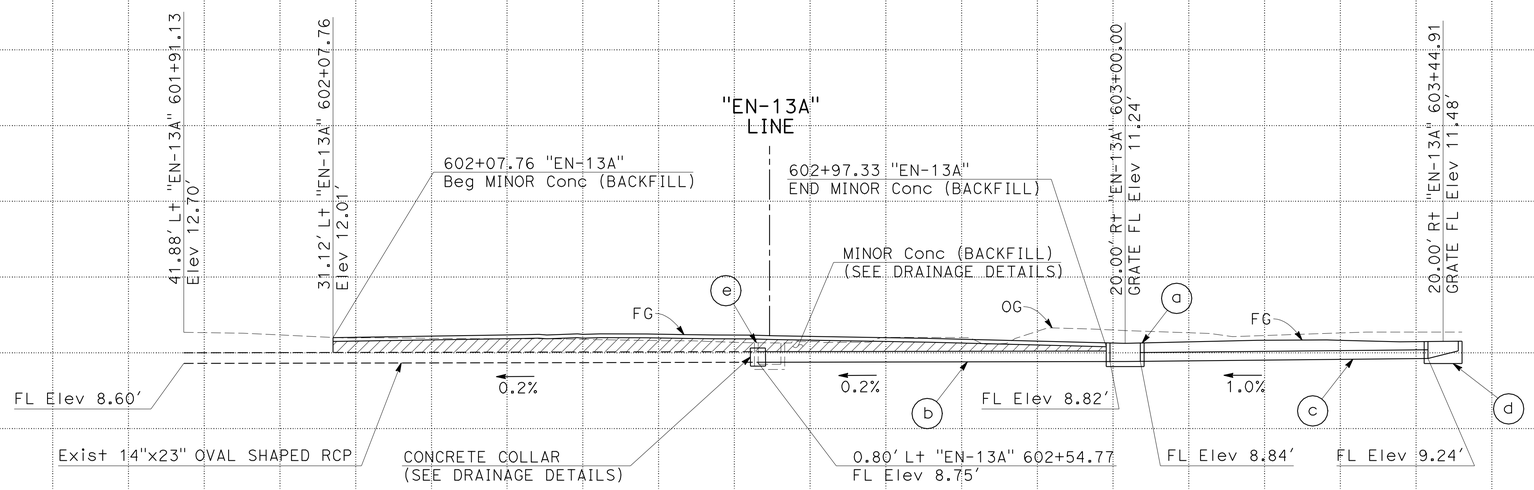

DRAINAGE SYSTEM (3)

(a) G2 INLET w/24-12X GRATE, H=2.4'

(b) 14"x23" X 48' OVAL SHAPED RCP CLASS 2 w/CONCRETE COLLAR AND MINOR CONCRETE (BACKFILL)

(c) 12" X 40' RCP

(d) G2 INLET w/24-12X GRATE, H=2.3'

(e) REMOVE G1 INLET, H=3.0'

(3)

DRAINAGE PROFILES

SCALE: 1" = 10' Horiz
1" = 10' Vert

DP-2

REVISED BY | DATE REVISED
RADHIKA MOTHKURI | JOEL SIMS
CALCULATED-DESIGNED BY | CHECKED BY
FUNCTIONAL SUPERVISOR
MICHAEL J. WEBSTER

STATE OF CALIFORNIA - DEPARTMENT OF TRANSPORTATION
Caltrans
DESIGN

LAST REVISION 11-18-11
DATE PLOTTED => 22-FEB-2012
TIME PLOTTED => 10:10

Dist	COUNTY	ROUTE	POST MILES TOTAL PROJECT	SHEET No.	TOTAL SHEETS
11	SD	5	R10.0,R10.7	28	132

Joel P. Sims 11-14-11
REGISTERED CIVIL ENGINEER DATE

2-21-12
PLANS APPROVAL DATE

REGISTERED PROFESSIONAL ENGINEER
JOEL P. SIMS
No. 49715
Exp 09-30-12
CIVIL
STATE OF CALIFORNIA

THE STATE OF CALIFORNIA OR ITS OFFICERS OR AGENTS SHALL NOT BE RESPONSIBLE FOR THE ACCURACY OR COMPLETENESS OF SCANNED COPIES OF THIS PLAN SHEET.

NOTE:

JOIN PIPES AT INVERTS.

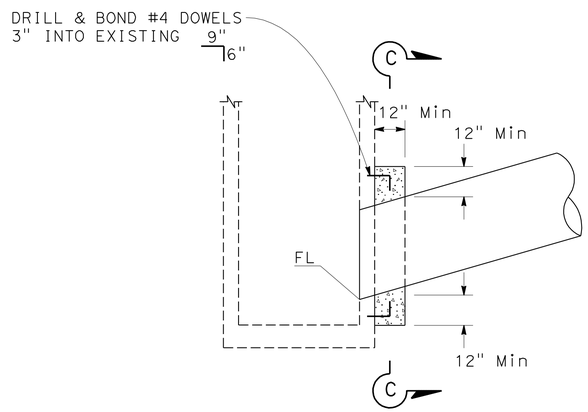

NOTE: BEND EXPOSED REINFOREMENT INTO CONCRETE COLLAR (WHERE OCCURS).

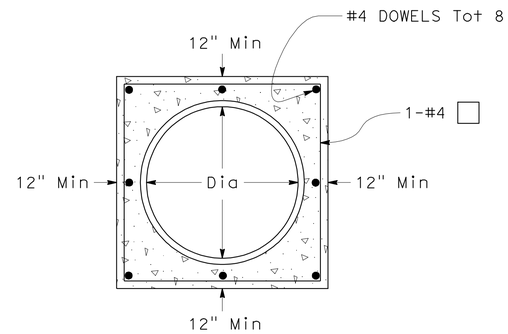

SECTION C-C

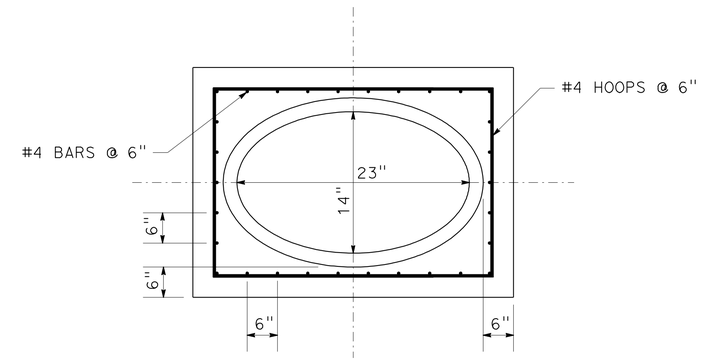

SECTION B-B

TYPE L-3 COLLAR

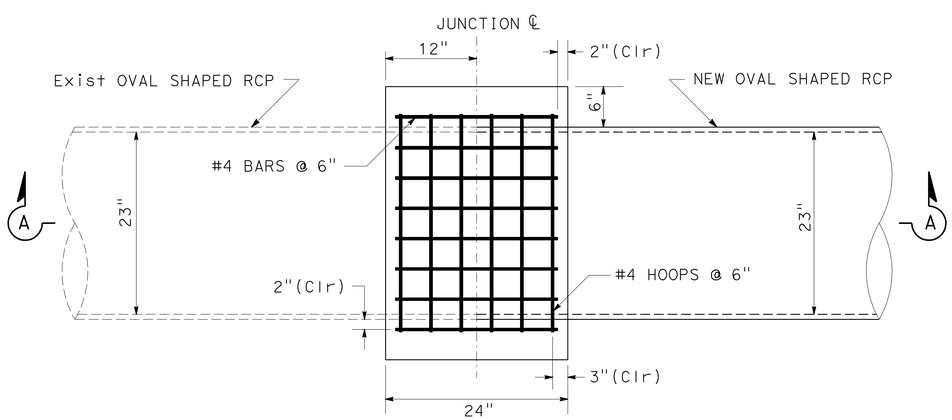

PLAN VIEW

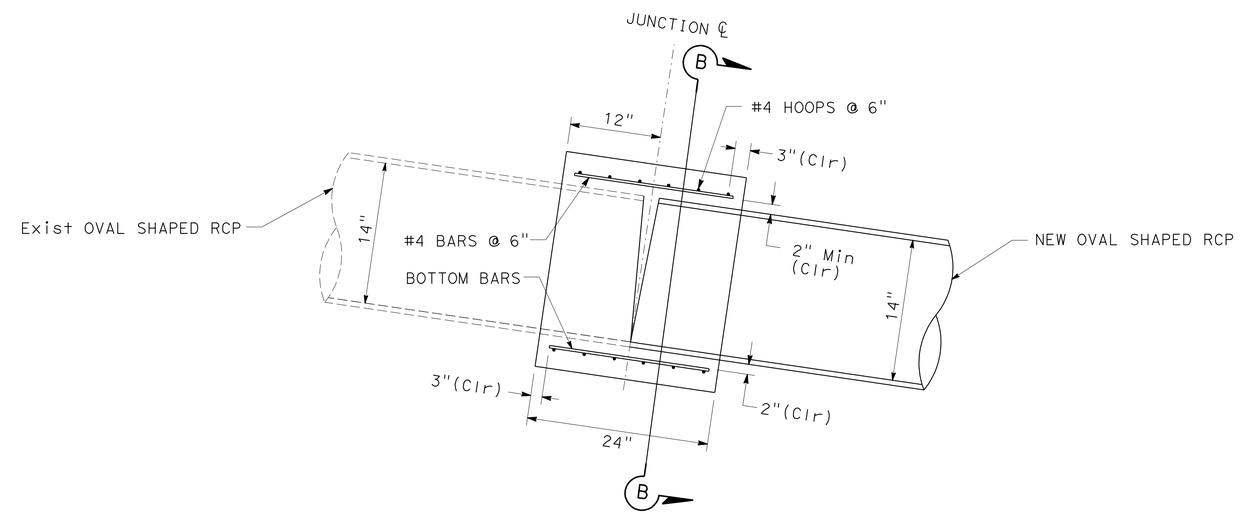

SECTION A-A

NOTE: BEND BOTTOM BARS AS NECESSARY TO MAINTAIN 2" CLEARANCE

CONCRETE COLLAR

DRAINAGE DETAILS

NO SCALE **DD-1**

STATE OF CALIFORNIA - DEPARTMENT OF TRANSPORTATION
Caltrans®
DESIGN
FUNCTIONAL SUPERVISOR: MICHAEL J. WEBSTER
CALCULATED-DESIGNED BY: RADHIKA MOTHKURI
CHECKED BY: JOEL SIMS
REVISED BY
DATE REVISED

LAST REVISION 11-18-11
DATE PLOTTED => 22-FEB-2012
TIME PLOTTED => 10:10

Dist	COUNTY	ROUTE	POST MILES TOTAL PROJECT	SHEET No.	TOTAL SHEETS
11	SD	5	R10.0,R10.7	29	132

Joel P. Sims 11-14-11
REGISTERED CIVIL ENGINEER DATE

2-21-12
PLANS APPROVAL DATE

REGISTERED PROFESSIONAL ENGINEER
JOEL P. SIMS
No. 49715
Exp. 09-30-12
CIVIL
STATE OF CALIFORNIA

THE STATE OF CALIFORNIA OR ITS OFFICERS OR AGENTS SHALL NOT BE RESPONSIBLE FOR THE ACCURACY OR COMPLETENESS OF SCANNED COPIES OF THIS PLAN SHEET.

LEGEND:

ASPHALT CONCRETE

MINOR CONCRETE

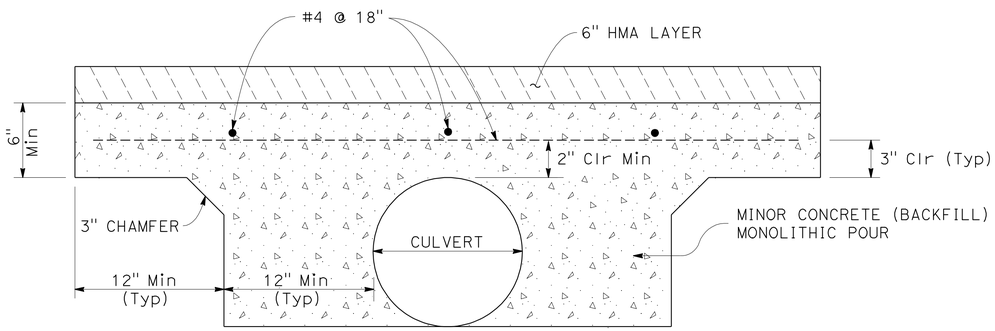

SECTION A-A

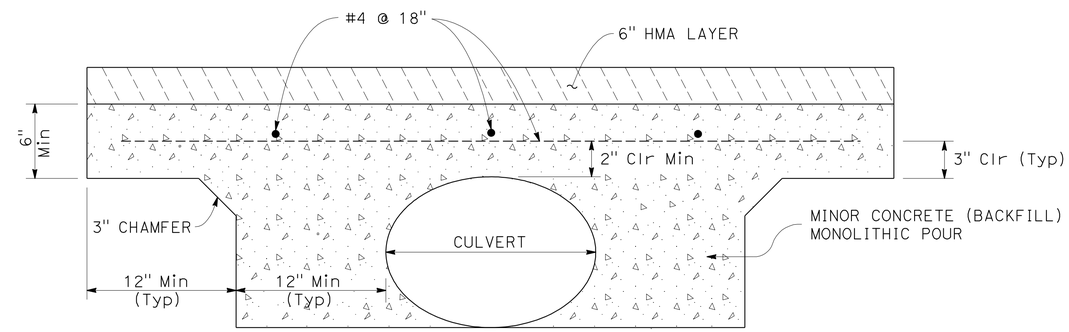

SECTION B-B

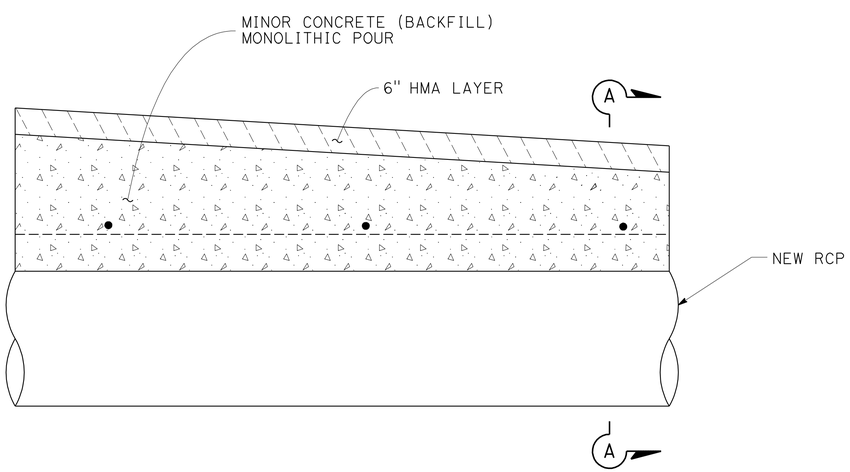

MINOR CONCRETE (BACKFILL)

DRAINAGE SYSTEM 2

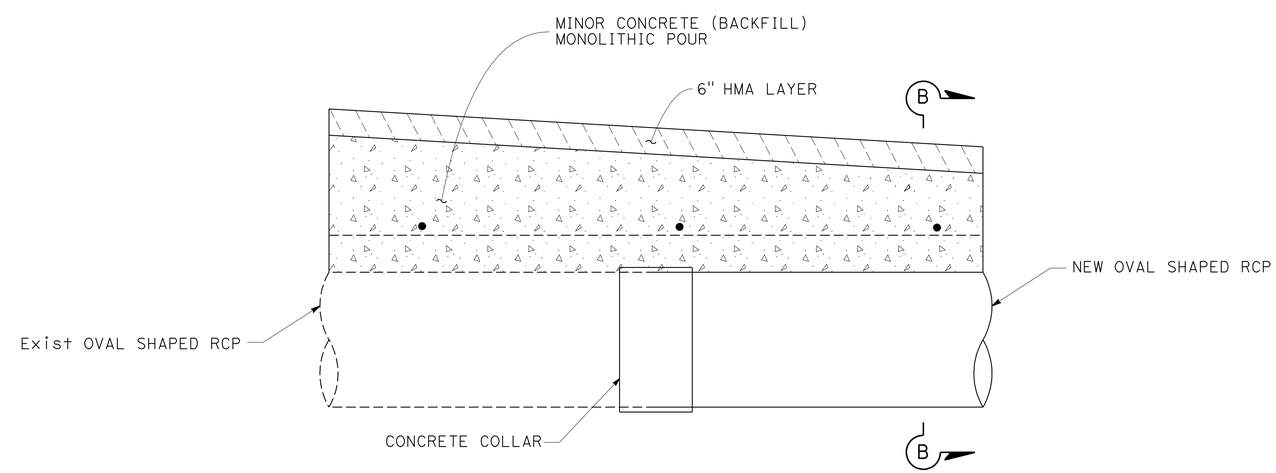

MINOR CONCRETE (BACKFILL)

DRAINAGE SYSTEM 3

DRAINAGE DETAILS

NO SCALE

DD-2

STATE OF CALIFORNIA - DEPARTMENT OF TRANSPORTATION
Caltrans®
DESIGN

FUNCTIONAL SUPERVISOR: MICHAEL J. WEBSTER
CALCULATED-DESIGNED BY: JOEL SIMS
CHECKED BY: RADHIKA MOTHKURI
REVISED BY
DATE REVISED

LAST REVISION 11-18-11
DATE PLOTTED => 22-FEB-2012
TIME PLOTTED => 10:10

Dist	COUNTY	ROUTE	POST MILES TOTAL PROJECT	SHEET No.	TOTAL SHEETS
11	SD	5	R10.0,R10.7	30	132

REGISTERED CIVIL ENGINEER — DATE: 11-14-11

2-21-12
PLANS APPROVAL DATE

REGISTERED PROFESSIONAL ENGINEER — JOEL P. SIMS No. 49715 Exp 09-30-12 CIVIL — STATE OF CALIFORNIA

THE STATE OF CALIFORNIA OR ITS OFFICERS OR AGENTS SHALL NOT BE RESPONSIBLE FOR THE ACCURACY OR COMPLETENESS OF SCANNED COPIES OF THIS PLAN SHEET.

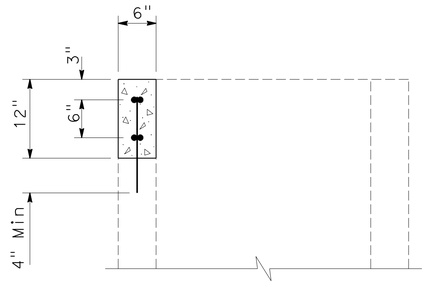

SECTION B-B

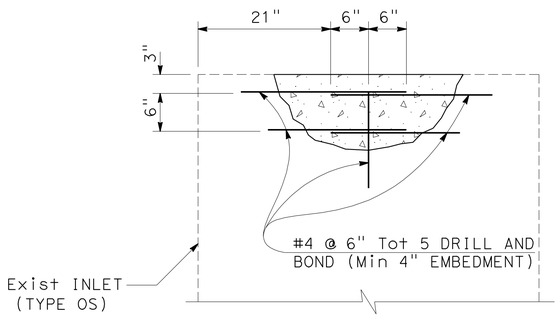

SECTION A-A

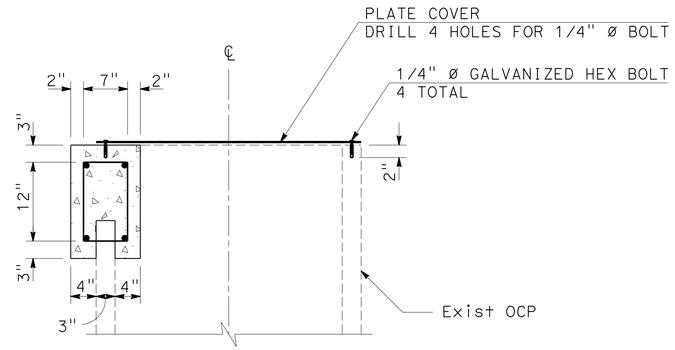

SECTION D-D

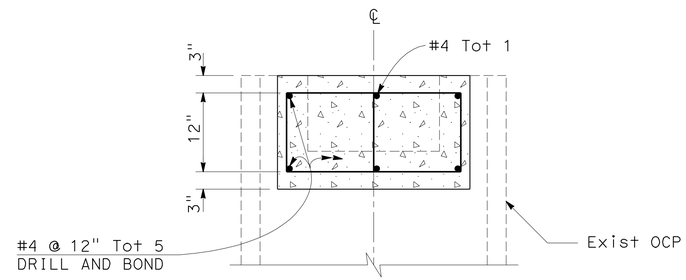

SECTION C-C

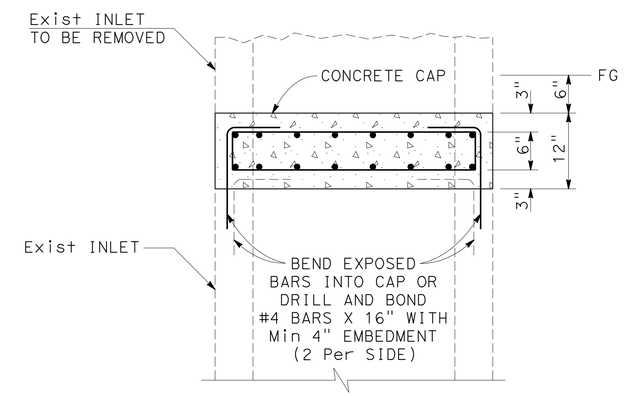

SECTION E-E

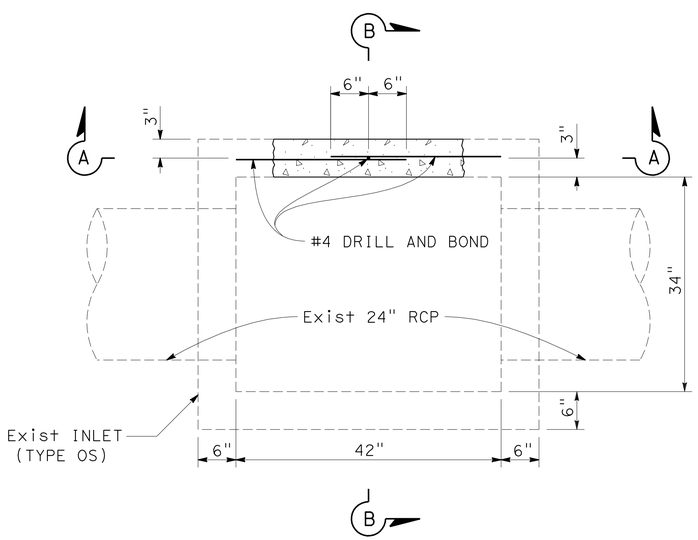

PLAN

MODIFY INLET

1 e

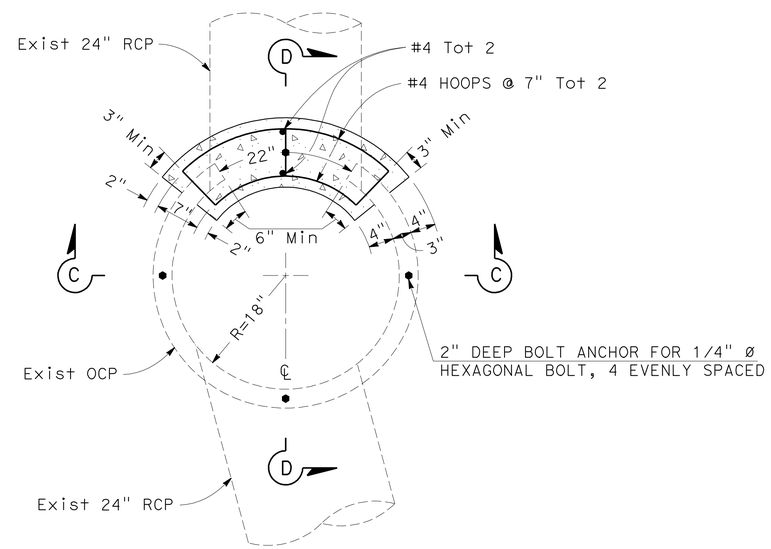

PLAN

MODIFY INLET

1 k

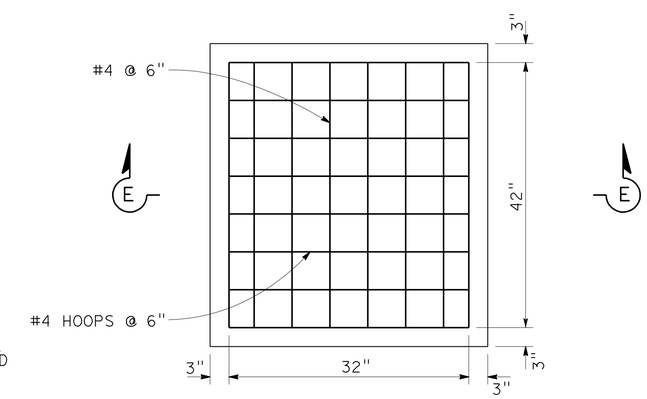

PLAN

CAP INLET

2 c

DRAINAGE DETAILS

NO SCALE

DD-3

STATE OF CALIFORNIA - DEPARTMENT OF TRANSPORTATION
Caltrans® DESIGN
FUNCTIONAL SUPERVISOR: MICHAEL J. WEBSTER
CALCULATED-DESIGNED BY: JOEL SIMS
CHECKED BY: WAYNE NGUYEN
REVISED BY / DATE REVISED

LAST REVISION 11-18-11
DATE PLOTTED => 22-FEB-2012
TIME PLOTTED => 10:10

Dist	COUNTY	ROUTE	POST MILES TOTAL PROJECT	SHEET No.	TOTAL SHEETS
11	SD	5	R10.0,R10.7	31	132

REGISTERED CIVIL ENGINEER 11-14-11 DATE

2-21-12
PLANS APPROVAL DATE

REGISTERED PROFESSIONAL ENGINEER JOEL P. SIMS No. 49715 Exp 09-30-12 CIVIL STATE OF CALIFORNIA

THE STATE OF CALIFORNIA OR ITS OFFICERS OR AGENTS SHALL NOT BE RESPONSIBLE FOR THE ACCURACY OR COMPLETENESS OF SCANNED COPIES OF THIS PLAN SHEET.

NOTES:

1. ALL JOINTS ARE STANDARD JOINT TYPE.
2. SEE Std PLAN NSP D71 FOR DRAINAGE INLET MARKER DETAIL.

DRAINAGE QUANTITIES

DRAINAGE SHEET No.	DRAINAGE SYSTEM No. ⬡	DRAINAGE UNIT ○	12" REINFORCED CONCRETE PIPE LF	18" REINFORCED CONCRETE PIPE LF	14" x 23" OVAL SHAPED REINFORCED CONCRETE PIPE (CLASS II) LF	GRATED LINE DRAIN ** LF	MISCELLANEOUS IRON AND STEEL LB	24-12X GRATE (N) EA	PLATE COVER (N) EA	MODIFY INLET EA	CONCRETE COLLAR (N) EA	MAXIMUM HEIGHT OF COVER (N) LF	HEIGHT OF INLET (N) LF	MINOR CONCRETE (MINOR STRUCTURE) CY	MINOR CONCRETE (BACKFILL) CY	REMOVE INLET EA	CAP INLET EA	DRAINAGE INLET MARKER EA	DESCRIPTION	STATION	DRAINAGE SYSTEM No. ⬡	DRAINAGE UNIT ○	DRAINAGE SHEET No.
G-1	1	a					239	1					3.8	1.51					G2 DI, 24-12X GRATE	"ES-24" 562+72.65	1	a	G-1
		b		8.0								2.3							18" APC			b	
		c					239	1					3.9	1.54					G2 DI, 24-12X GRATE	"ES-24" 562+84.62		c	
		d				12						2.3							18" APC			d	
		e								1									MODIFY OS INLET	"ES-24" 563+00.00		e	
		f		16.0								2.3							18" APC			f	
		g					239	1					3.7	1.49					G2 DI, 24-12X GRATE	"ES-24" 562+52.68		g	
		h		32.0								2.2							18" APC			h	
		i					239	1					3.6	1.46					G2 DI, 24-12X GRATE	"ES-24" 562+16.74		i	
		j				12						2.2							18" APC			j	
		k								1									MODIFY OCP INLET	"ES-24" 562+72.65		k	
	2	a					170		1				2.9	3.06					OL-14 DI, STEEL PLATE COVER	"BM" 22+93	2	a	
		b		5.0							1	1.4			0.9				18" RCP, L-3 Conc COLLAR & MINOR Conc (BACKFILL)	"BM" 22+93		b	
		c															1		CAP INLET	"BM" 22+93		c	
		d																1	DRAINAGE INLET MARKER	"BM" 22+94		d	
		e																1	DRAINAGE INLET MARKER	"BM" 23+58		e	
G-2	3	a					239	1					2.4	1.05					G2 DI, 24-12X GRATE	"EN-13A" 603+00.00	3	a	G-2
		b			48.0						1	1.0			5.6				14" x 23" OVAL SHAPED RCP CLASS 2, Conc COLLAR & MINOR Conc (BACKFILL)			b	
		c	40.0									1.0							12" RCP			c	
		d					239	1					2.3	1.00					G2 DI, 24-12X GRATE	"EN-13A" 603+44.91		d	
		e														1			REMOVE G1 DI	"EN-13A" 602+58.00		e	
TOTAL			40.0	61.0	48.0	24	1,604*			2				11.11*	6.5	1	1	2					

* - SEE SUMMARY OF QUANTITIES FOR ADDITIONAL QUANTITIES
** - ALL GRATED LINE DRAINS ARE NON-SLOPE WITH UNIFORM DEPTH OF 1 FOOT.
(N) NOT A SEPARATE PAY ITEM, FOR INFORMATION ONLY.

DRAINAGE QUANTITIES
DQ-1

STATE OF CALIFORNIA - DEPARTMENT OF TRANSPORTATION
Caltrans® DESIGN

FUNCTIONAL SUPERVISOR: MICHAEL J. WEBSTER
CALCULATED-DESIGNED BY: FARDAD BEHBOODY
CHECKED BY: JOEL SIMS
REVISED BY
DATE REVISED

LAST REVISION 11-18-11
DATE PLOTTED => 22-FEB-2012
TIME PLOTTED => 10:11

Dist	COUNTY	ROUTE	POST MILES TOTAL PROJECT	SHEET No.	TOTAL SHEETS
11	SD	5	R10.0,R10.7	32	132

REGISTERED CIVIL ENGINEER 11-15-11 DATE

2-21-12
PLANS APPROVAL DATE

REGISTERED PROFESSIONAL ENGINEER SIMON TSE No. C66401 Exp. 6-30-12 CIVIL STATE OF CALIFORNIA

THE STATE OF CALIFORNIA OR ITS OFFICERS OR AGENTS SHALL NOT BE RESPONSIBLE FOR THE ACCURACY OR COMPLETENESS OF SCANNED COPIES OF THIS PLAN SHEET.

NOTES:

1. FOR ACCURATE RIGHT OF WAY DATA, CONTACT RIGHT OF WAY ENGINEERING AT THE DISTRICT OFFICE.
2. LOCATIONS OF UTILITY FACILITIES SHOWN ON THESE PLANS ARE APPROXIMATE AND SHALL BE VERIFIED BY THE CONTRACTOR PRIOR TO CONSTRUCTION.

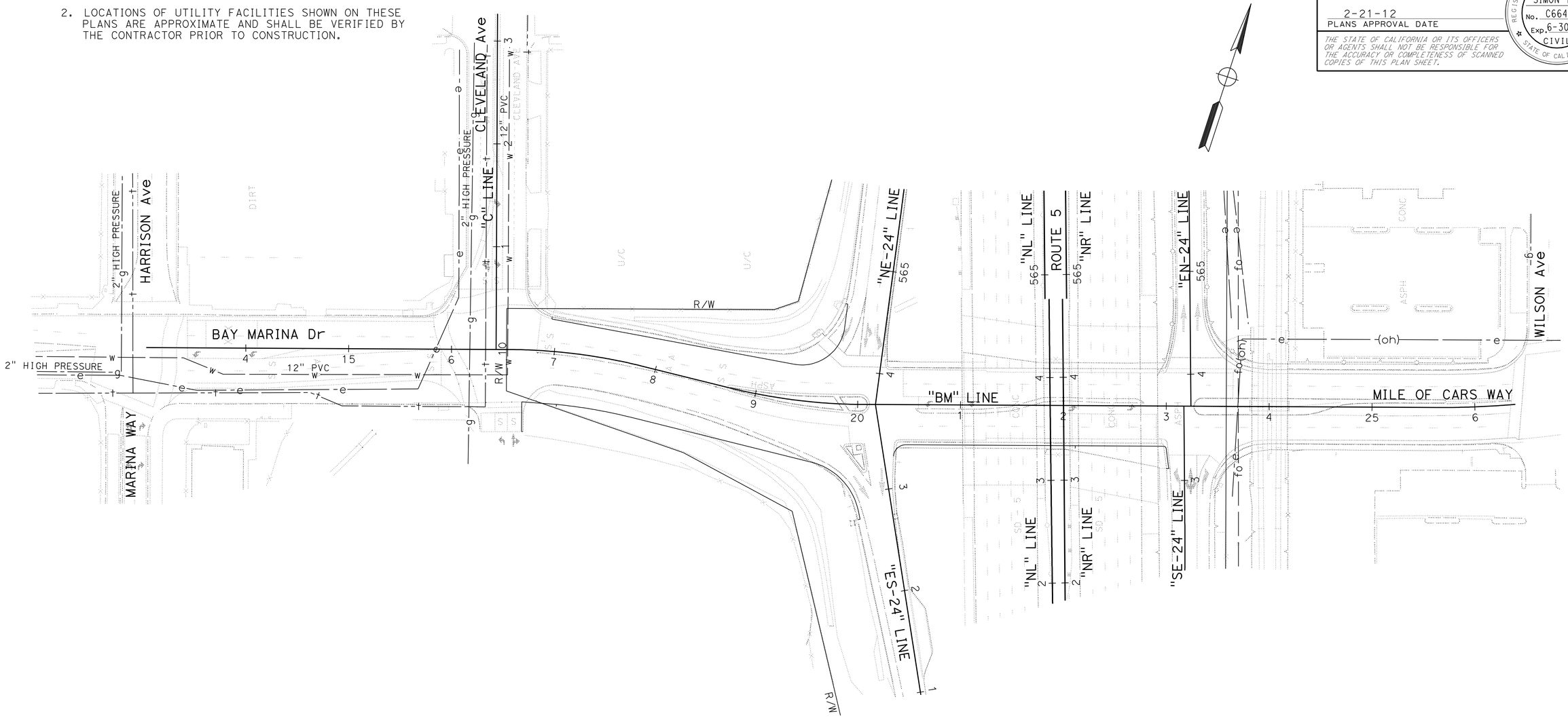

LEGEND:

EXISTING UTILITIES	FACILITY	OWNER
—w—	WATER	SWEETWATER DISTRICT
—g—	GAS	SAN DIEGO GAS & ELECTRIC
—e—	ELECTRIC	SAN DIEGO GAS & ELECTRIC
—e—(oh)—	ELECTRIC (OVERHEAD)	SAN DIEGO GAS & ELECTRIC
—s—	SEWER	CITY OF NATIONAL CITY
—t—	TELEPHONE	AT&T
—t—(oh)—	TELEPHONE (OVERHEAD)	AT&T
—tv—	TELEVISION	TIME WARNER

APPROVED FOR UTILITY INFORMATION ONLY

UTILITY PLAN

SCALE: 1" = 50'

U-1

STATE OF CALIFORNIA - DEPARTMENT OF TRANSPORTATION
Caltrans PROJECT DEVELOPMENT

FUNCTIONAL SUPERVISOR: ABU-BAKR AL-JAFRI
CALCULATED-DESIGNED BY: SIMON TSE
CHECKED BY: ANH HOANG
REVISED BY
DATE REVISED

LAST REVISION 11-18-11
DATE PLOTTED => 22-FEB-2012
TIME PLOTTED => 10:11

Dist	COUNTY	ROUTE	POST MILES TOTAL PROJECT	SHEET No.	TOTAL SHEETS
11	SD	5	R10.0,R10.7	33	132

Simon Tse 11-15-11
REGISTERED CIVIL ENGINEER DATE

2-21-12
PLANS APPROVAL DATE

REGISTERED PROFESSIONAL ENGINEER
SIMON TSE
No. C66401
Exp. 6-30-12
CIVIL
STATE OF CALIFORNIA

THE STATE OF CALIFORNIA OR ITS OFFICERS OR AGENTS SHALL NOT BE RESPONSIBLE FOR THE ACCURACY OR COMPLETENESS OF SCANNED COPIES OF THIS PLAN SHEET.

NOTES:

1. FOR ACCURATE RIGHT OF WAY DATA, CONTACT RIGHT OF WAY ENGINEERING AT THE DISTRICT OFFICE.
2. LOCATIONS OF UTILITY FACILITIES SHOWN ON THESE PLANS ARE APPROXIMATE AND SHALL BE VERIFIED BY THE CONTRACTOR PRIOR TO CONSTRUCTION.
3. THIS SHEET IS FOR INFORMATION ONLY. NO WORK IS REQUIRED ON THIS SHEET.

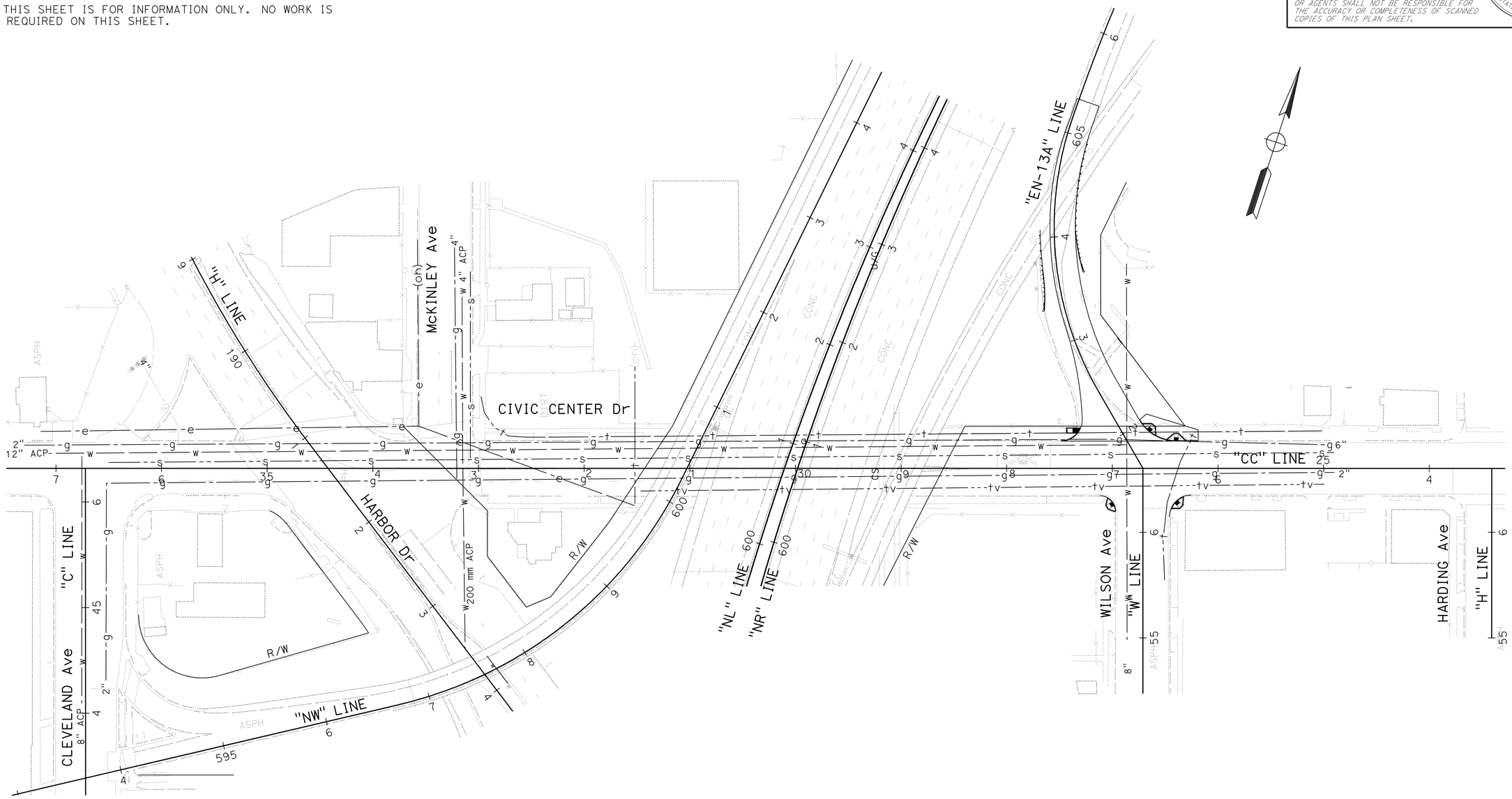

UTILITY PLAN

SCALE: 1" = 50'

U-2

APPROVED FOR UTILITY INFORMATION ONLY

REVISED BY	DATE REVISED
ANH HOANG	SIMON TSE

CALCULATED-DESIGNED BY
CHECKED BY

FUNCTIONAL SUPERVISOR: ABU-BAKR AL-JAFRI

STATE OF CALIFORNIA - DEPARTMENT OF TRANSPORTATION
Caltrans PROJECT DEVELOPMENT

LAST REVISION 11-18-11
DATE PLOTTED => 22-FEB-2012
TIME PLOTTED => 10:11

Dist	COUNTY	ROUTE	POST MILES TOTAL PROJECT	SHEET No.	TOTAL SHEETS
11	SD	5	R10.0,R10.7	34	132

Joel P. Sims 11-14-11
REGISTERED CIVIL ENGINEER DATE

2-21-12
PLANS APPROVAL DATE

REGISTERED PROFESSIONAL ENGINEER
JOEL P. SIMS
No. 49715
Exp 09-30-12
CIVIL
STATE OF CALIFORNIA

THE STATE OF CALIFORNIA OR ITS OFFICERS OR AGENTS SHALL NOT BE RESPONSIBLE FOR THE ACCURACY OR COMPLETENESS OF SCANNED COPIES OF THIS PLAN SHEET.

LEGEND

XX = CONSTRUCTION AREA SIGN

MTS = METROPOLITAN TRANSIT SYSTEM

BNSF = BURLINGTON NORTHERN SANTA FE

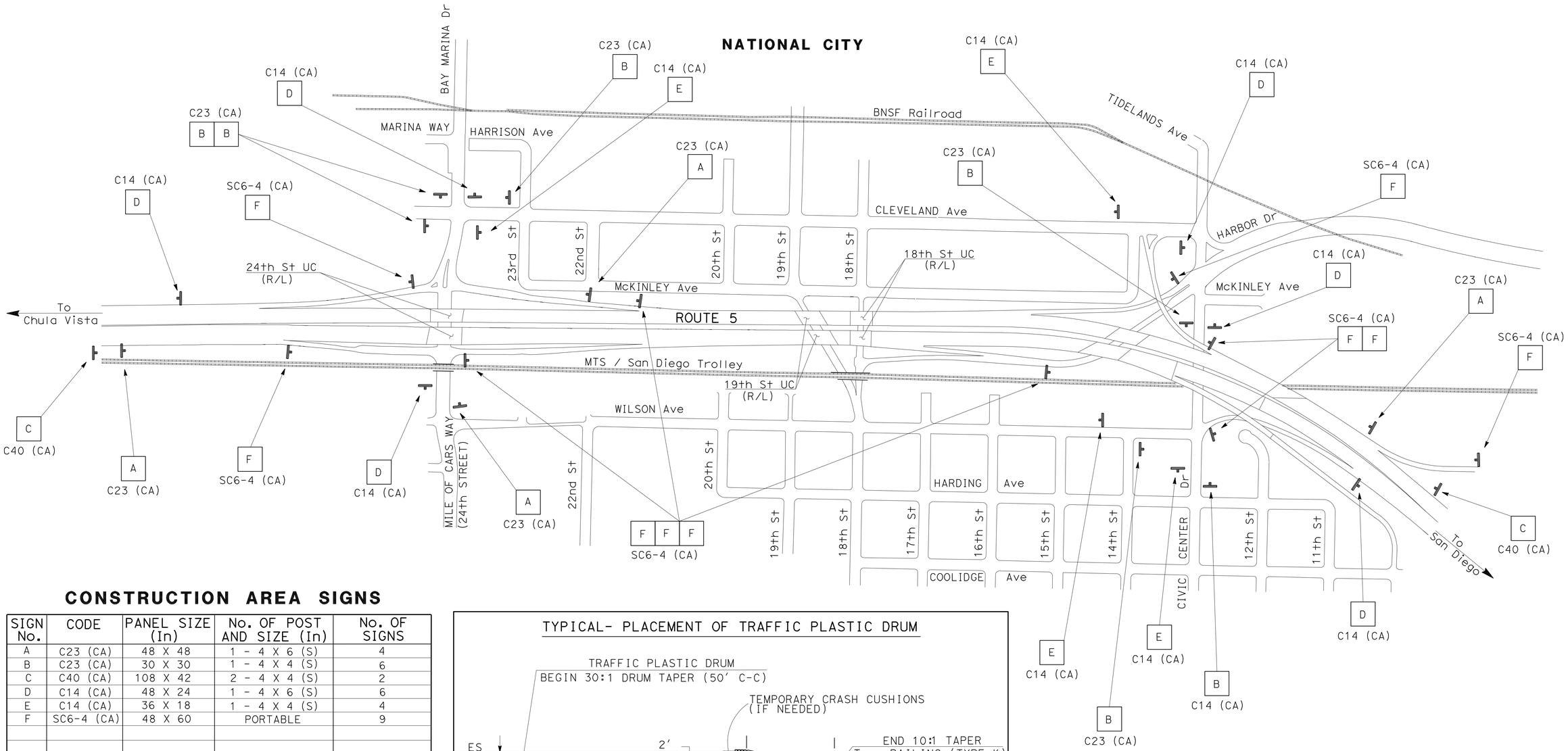

CONSTRUCTION AREA SIGNS

SIGN No.	CODE	PANEL SIZE (In)	No. OF POST AND SIZE (In)	No. OF SIGNS
A	C23 (CA)	48 X 48	1 - 4 X 6 (S)	4
B	C23 (CA)	30 X 30	1 - 4 X 4 (S)	6
C	C40 (CA)	108 X 42	2 - 4 X 4 (S)	2
D	C14 (CA)	48 X 24	1 - 4 X 6 (S)	6
E	C14 (CA)	36 X 18	1 - 4 X 4 (S)	4
F	SC6-4 (CA)	48 X 60	PORTABLE	9
			TOTAL	31

NOTES:

(S) - DENOTES STATIONARY MOUNTED SIGN.

SEE "TH" AND "SC" SHEETS FOR ADDITIONAL CONSTRUCTION AREA SIGN QUANTITIES.

TYPICAL- PLACEMENT OF TRAFFIC PLASTIC DRUM

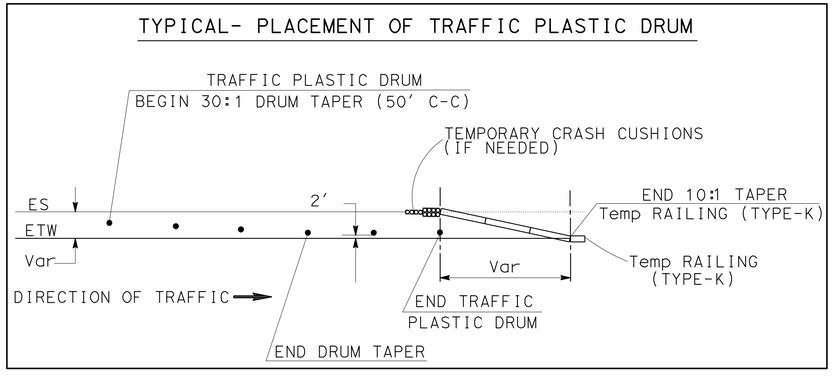

APPROVED FOR CONSTRUCTION AREA SIGN WORK ONLY

NO SCALE

CONSTRUCTION AREA SIGNS

CS-1

STATE OF CALIFORNIA - DEPARTMENT OF TRANSPORTATION
Caltrans
DESIGN

FUNCTIONAL SUPERVISOR: MICHAEL J. WEBSTER
CALCULATED-DESIGNED BY: WAYNE NGUYEN
CHECKED BY: JOEL P. SIMS
REVISED BY
DATE REVISED

LAST REVISION 11-18-11
DATE PLOTTED => 22-FEB-2012
TIME PLOTTED => 10:11

Dist	COUNTY	ROUTE	POST MILES TOTAL PROJECT	SHEET No.	TOTAL SHEETS
11	SD	5	R10.0,R10.7	35	132

Joel P. Sims 11-14-11
REGISTERED CIVIL ENGINEER DATE

2-21-12
PLANS APPROVAL DATE

REGISTERED PROFESSIONAL ENGINEER JOEL P. SIMS No. 49715 Exp 09-30-12 CIVIL STATE OF CALIFORNIA

THE STATE OF CALIFORNIA OR ITS OFFICERS OR AGENTS SHALL NOT BE RESPONSIBLE FOR THE ACCURACY OR COMPLETENESS OF SCANNED COPIES OF THIS PLAN SHEET.

NOTE:

FOR ACCURATE RIGHT OF WAY DATA, CONTACT RIGHT OF WAY ENGINEERING AT THE DISTRICT OFFICE.

LEGEND:

- = CONSTRUCTION WORK THIS STAGE
- ● = PLASTIC TRAFFIC DRUMS
- • = CHANNELIZER (SURFACE MOUNTED)
- [X] = CONSTRUCTION AREA SIGN (SEE SCQ SHEETS FOR MOUNTING TYPE)
- +++ = TYPE III BARRICADE
- ← = Beg/END Temp PAVEMENT DELINEATION DETAIL
- →← = CHANGE OF Temp PAVEMENT DELINEATION DETAIL
- T (X) = TEMPORARY PAVEMENT DELINEATION DETAIL
- BR (X) = BEGIN REMOVE PAVEMENT DELINEATION DETAIL
- ER (X) = END REMOVE PAVEMENT DELINEATION DETAIL
- R (X) = REMOVE PAVEMENT DELINEATION DETAIL

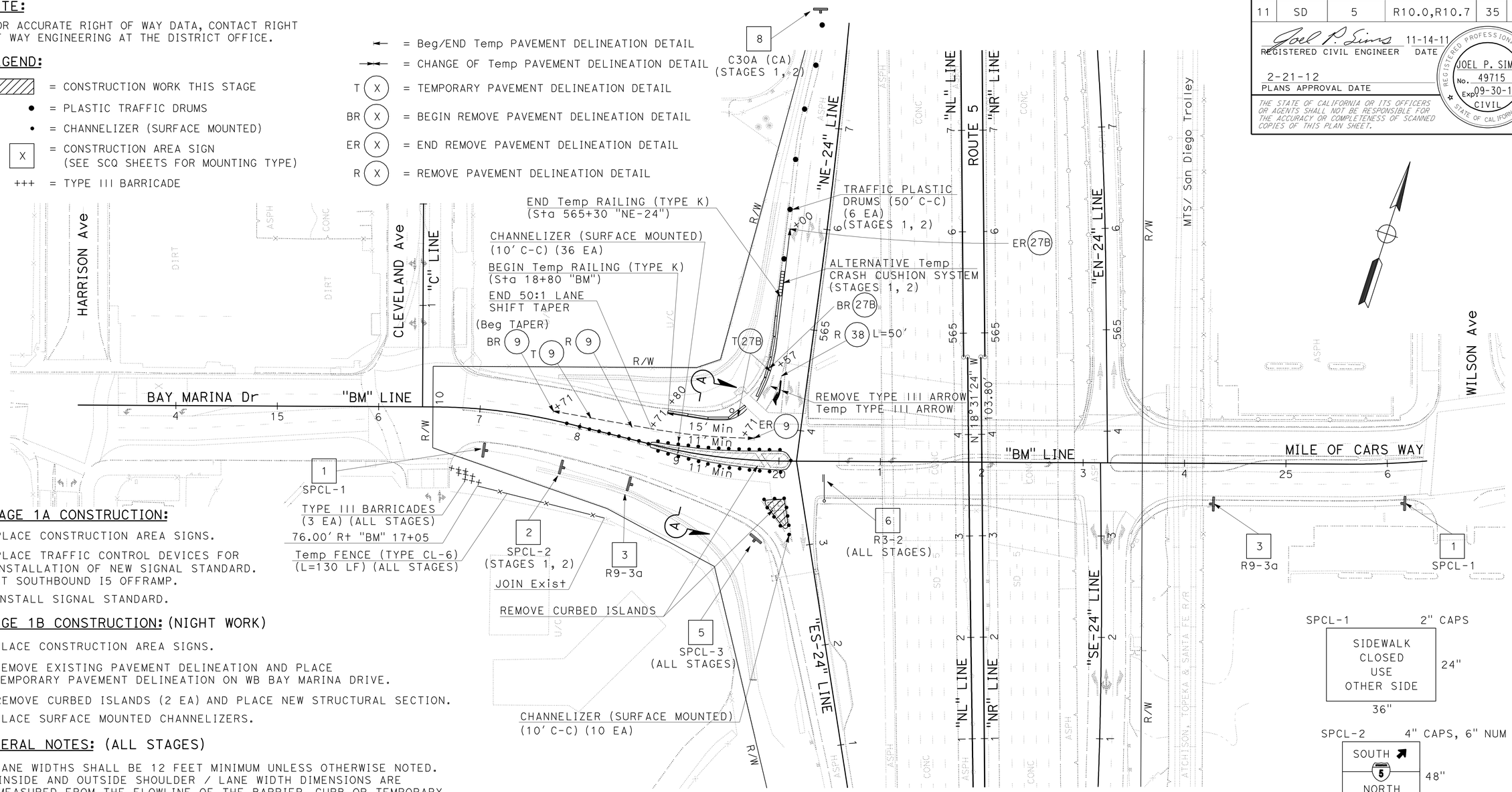

STAGE 1A CONSTRUCTION:

1. PLACE CONSTRUCTION AREA SIGNS.
2. PLACE TRAFFIC CONTROL DEVICES FOR INSTALLATION OF NEW SIGNAL STANDARD. AT SOUTHBOUND I5 OFFRAMP.
3. INSTALL SIGNAL STANDARD.

STAGE 1B CONSTRUCTION: (NIGHT WORK)

1. PLACE CONSTRUCTION AREA SIGNS.
2. REMOVE EXISTING PAVEMENT DELINEATION AND PLACE TEMPORARY PAVEMENT DELINEATION ON WB BAY MARINA DRIVE.
3. REMOVE CURBED ISLANDS (2 EA) AND PLACE NEW STRUCTURAL SECTION.
4. PLACE SURFACE MOUNTED CHANNELIZERS.

GENERAL NOTES: (ALL STAGES)

1. LANE WIDTHS SHALL BE 12 FEET MINIMUM UNLESS OTHERWISE NOTED. INSIDE AND OUTSIDE SHOULDER / LANE WIDTH DIMENSIONS ARE MEASURED FROM THE FLOWLINE OF THE BARRIER, CURB OR TEMPORARY RAILING (TYPE K) UNLESS OTHERWISE NOTED.
2. A MINIMUM CLEARANCE OF 1 FOOT SHALL BE PROVIDED BETWEEN EXISTING OR TEMPORARY EDGE OF TRAVELED WAY AND TEMPORARY RAILING (TYPE K) UNLESS OTHERWISE NOTED.
3. FOR WORK ON EXISTING SIGNAL AND LIGHTING STANDARDS SEE "E" SHEETS FOR FURTHER INFORMATION.

ABBREVIATIONS:

SPCL = SPECIAL CONSTRUCTION AREA SIGN
CAP = CAPITAL LETTERING
NUM = NUMERAL SIZE
S/C = SAW CUT LINE
MTS = METROPOLITAN TRANSIT SYSTEM

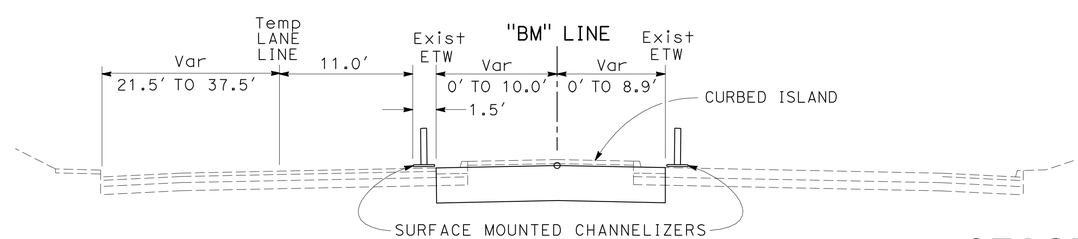

SECTION A-A

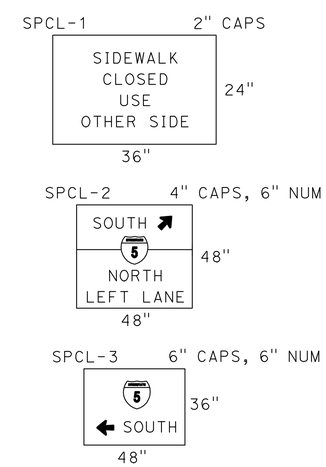

APPROVED FOR STAGE CONSTRUCTION WORK ONLY

STAGE CONSTRUCTION
STAGE 1

SCALE: 1" = 50'

SC-1

REVISED BY	DATE REVISED
JOEL SIMS	FARDAD BEHBOODY
CALCULATED-DESIGNED BY	CHECKED BY
FUNCTIONAL SUPERVISOR	MICHAEL J. WEBSTER

STATE OF CALIFORNIA - DEPARTMENT OF TRANSPORTATION
Caltrans DESIGN

LAST REVISION 11-18-11 | DATE PLOTTED => 22-FEB-2012 | TIME PLOTTED => 11:21

Dist	COUNTY	ROUTE	POST MILES TOTAL PROJECT	SHEET No.	TOTAL SHEETS
11	SD	5	R10.0,R10.7	36	132

REGISTERED CIVIL ENGINEER 11-14-11 DATE

2-21-12
PLANS APPROVAL DATE

REGISTERED PROFESSIONAL ENGINEER JOEL P. SIMS No. 49715 Exp 09-30-12 CIVIL STATE OF CALIFORNIA

THE STATE OF CALIFORNIA OR ITS OFFICERS OR AGENTS SHALL NOT BE RESPONSIBLE FOR THE ACCURACY OR COMPLETENESS OF SCANNED COPIES OF THIS PLAN SHEET.

NOTE:

FOR ACCURATE RIGHT OF WAY DATA, CONTACT RIGHT OF WAY ENGINEERING AT THE DISTRICT OFFICE.

STAGE 2 CONSTRUCTION:

1. REMOVE CONSTRUCTION AREA SIGNS FROM STAGE 1 (UNLESS OTHERWISE NOTED). PLACE CONSTRUCTION AREA SIGNS FOR STAGE 2.
2. REMOVE STRIPING AND PLACE Temp STRIPING ON BAY MARINA DRIVE AND SOUTHBOUND ROUTE 5 RAMPS.
3. PLACE Temp RAILING (TYPE K) AND OTHER TRAFFIC CONTROL DEVICES ON "BM" AND "NE-24" LINES.
4. CONSTRUCT PROJECT FEATURES BEHIND Temp RAILING (TYPE K).

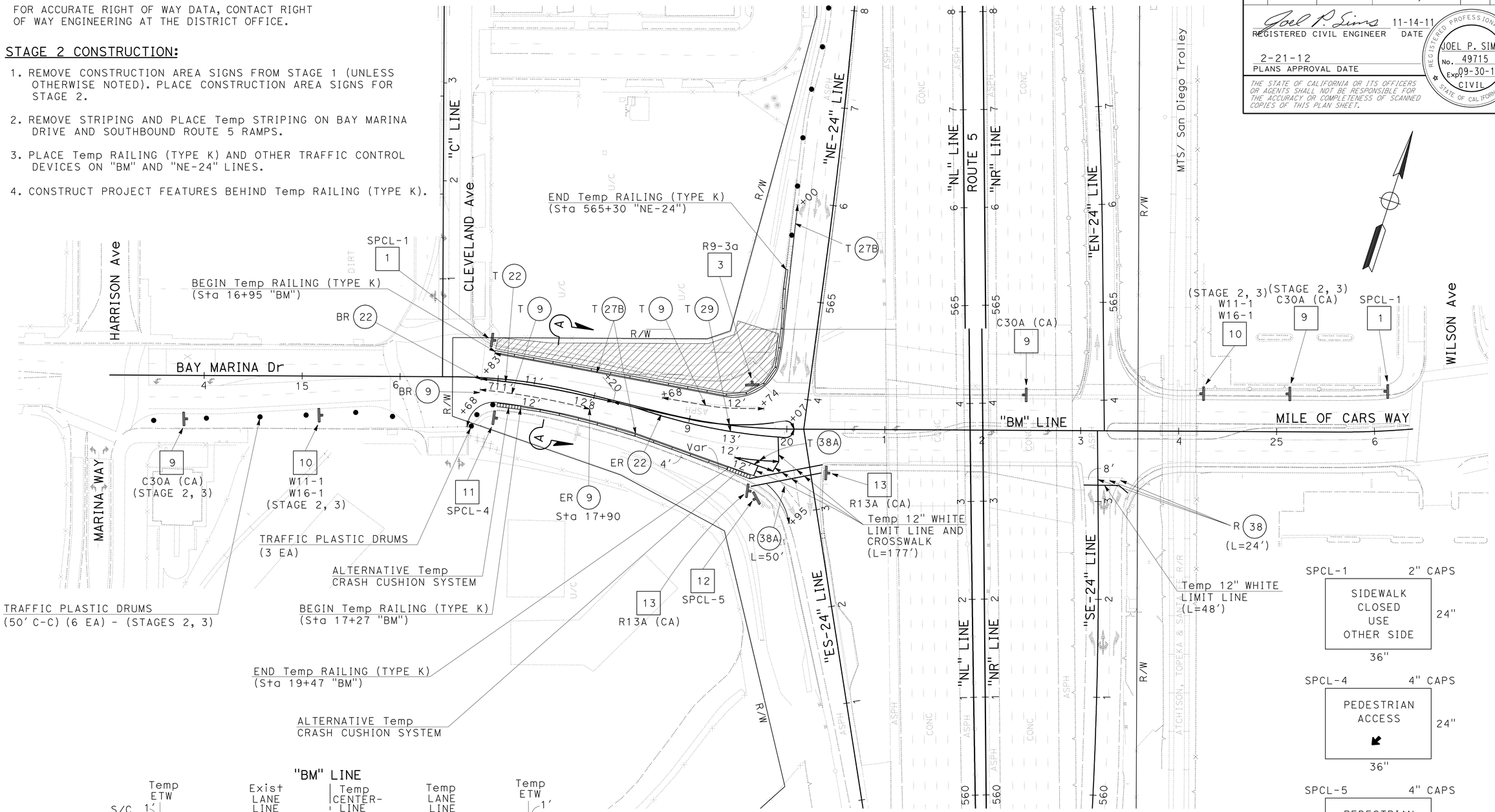

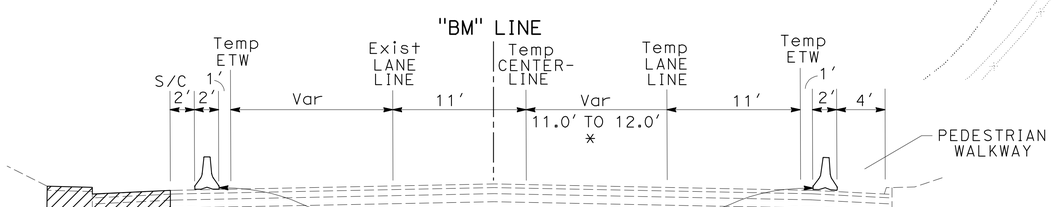

* - SEE TAPER STATION LIMITS ABOVE.

SECTION A-A

APPROVED FOR STAGE CONSTRUCTION WORK ONLY

STAGE CONSTRUCTION
STAGE 2

SCALE: 1" = 50'

SC-2

STATE OF CALIFORNIA - DEPARTMENT OF TRANSPORTATION
DESIGN
FUNCTIONAL SUPERVISOR: MICHAEL J. WEBSTER
CALCULATED-DESIGNED BY: JOEL SIMS
CHECKED BY: FARDAD BEHBOODY
REVISED BY / DATE REVISED

LAST REVISION 11-18-11
DATE PLOTTED => 22-FEB-2012
TIME PLOTTED => 11:21

Dist	COUNTY	ROUTE	POST MILES TOTAL PROJECT	SHEET No.	TOTAL SHEETS
11	SD	5	R10.0,R10.7	37	132

REGISTERED CIVIL ENGINEER — DATE: 11-14-11

2-21-12
PLANS APPROVAL DATE

REGISTERED PROFESSIONAL ENGINEER — JOEL P. SIMS No. 49715 Exp. 09-30-12 CIVIL — STATE OF CALIFORNIA

THE STATE OF CALIFORNIA OR ITS OFFICERS OR AGENTS SHALL NOT BE RESPONSIBLE FOR THE ACCURACY OR COMPLETENESS OF SCANNED COPIES OF THIS PLAN SHEET.

NOTE:

FOR ACCURATE RIGHT OF WAY DATA, CONTACT RIGHT OF WAY ENGINEERING AT THE DISTRICT OFFICE.

STAGE 3A CONSTRUCTION:

1. REMOVE CONSTRUCTION AREA SIGNS AND OTHER TRAFFIC CONTROL ITEMS FROM STAGE 2 (UNLESS OTHERWISE NOTED). PLACE CONSTRUCTION AREA SIGNS FOR STAGE 3.
2. PLACE Temp STRIPING ALONG BAY MARINA DRIVE AS SHOWN.
3. PLACE Temp RAILING (TYPE K) AND OTHER TRAFFIC CONTROL DEVICES ALONG "BM" LINE.
4. BEHIND Temp RAILING (TYPE K), CONSTRUCT PROJECT FEATURES.
5. REMOVE PARTIAL PCC GUTTER AND AC ROADWAY AND REPLACE WITH HMA-A FROM 20+28 TO 22+91 "BM" LINE.

STAGE 3B CONSTRUCTION:

1. REMOVE CONSTRUCTION AREA SIGNS AND OTHER TRAFFIC CONTROL ITEMS FROM STAGE 3a.
2. REPLACE ASPHALT CONCRETE SURFACING AND COLD-PLANE AND OVERLAY BAY MARINA DRIVE.
3. PLACE FINAL SIGNING AND STRIPING AND COMPLETE SIGNAL WORK.

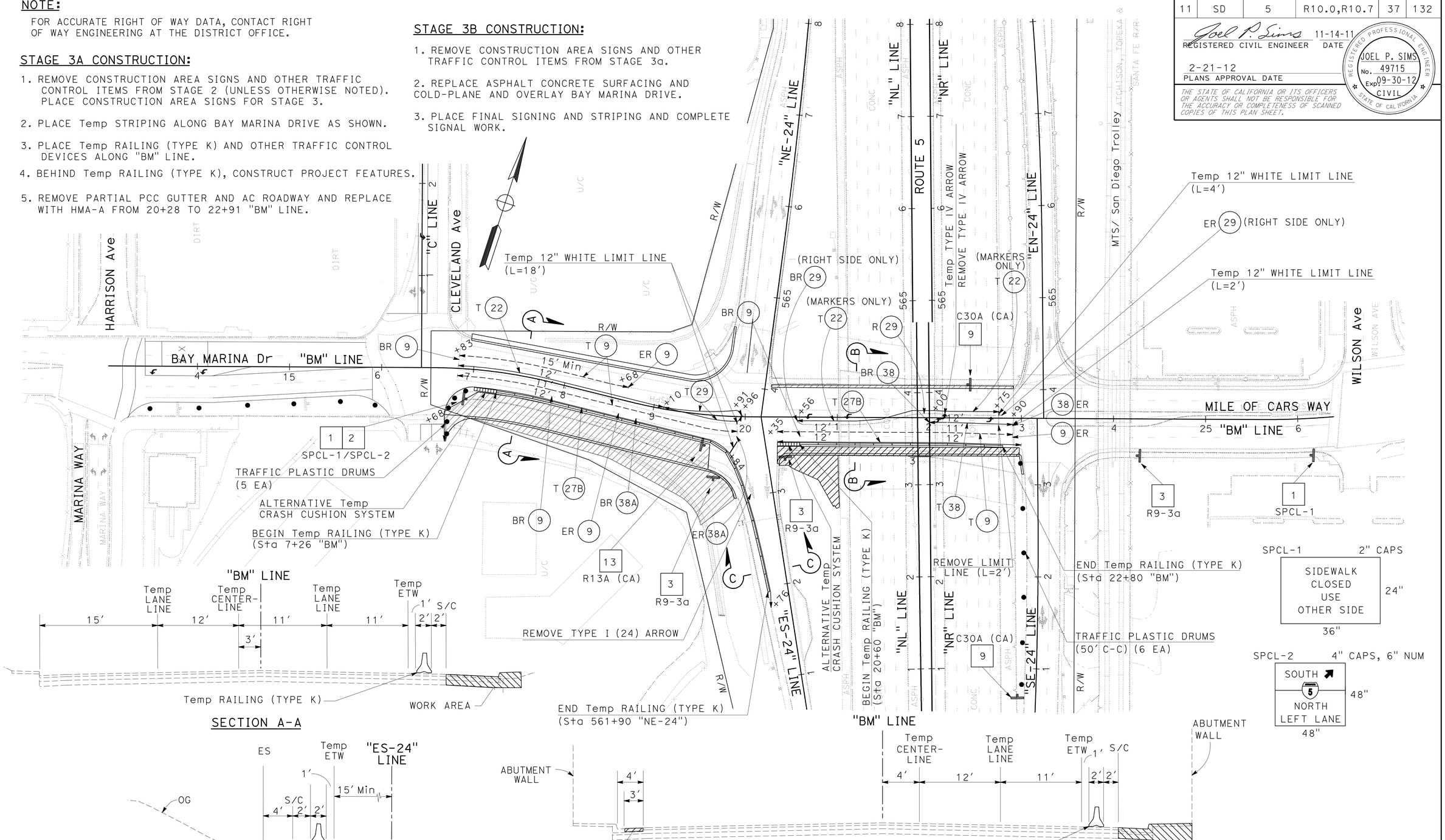

APPROVED FOR STAGE CONSTRUCTION WORK ONLY

STAGE CONSTRUCTION
STAGE 3

SCALE: 1" = 50'

SC-3

REVISED BY	DATE REVISED

FUNCTIONAL SUPERVISOR: MICHAEL J. WEBSTER
CALCULATED-DESIGNED BY: JOEL SIMS
CHECKED BY: FARDAD BEHBOODY

STATE OF CALIFORNIA - DEPARTMENT OF TRANSPORTATION — DESIGN — Caltrans

LAST REVISION 11-18-11 — DATE PLOTTED => 22-FEB-2012 — TIME PLOTTED => 11:21

Dist	COUNTY	ROUTE	POST MILES TOTAL PROJECT	SHEET No.	TOTAL SHEETS
11	SD	5	R10.0,R10.7	38	132

Joel P. Sims 11-14-11
REGISTERED CIVIL ENGINEER DATE

2-21-12
PLANS APPROVAL DATE

REGISTERED PROFESSIONAL ENGINEER JOEL P. SIMS No. 49715 Exp 09-30-12 CIVIL STATE OF CALIFORNIA

THE STATE OF CALIFORNIA OR ITS OFFICERS OR AGENTS SHALL NOT BE RESPONSIBLE FOR THE ACCURACY OR COMPLETENESS OF SCANNED COPIES OF THIS PLAN SHEET.

NOTE:

FOR ACCURATE RIGHT OF WAY DATA, CONTACT RIGHT OF WAY ENGINEERING AT THE DISTRICT OFFICE.

STAGE 4 CONSTRUCTION:

1. PLACE CONSTRUCTION AREA SIGNS.
2. PLACE Temp STRIPING, Temp RAILING (TYPE K) AND OTHER OTHER TRAFFIC CONTROL DEVICES.
3. CONSTRUCT PARTIAL ROADWAY, DRAINAGE AND OTHER PROJECT FEATURES BEHIND Temp RAILING (TYPE K).

SECTION A-A

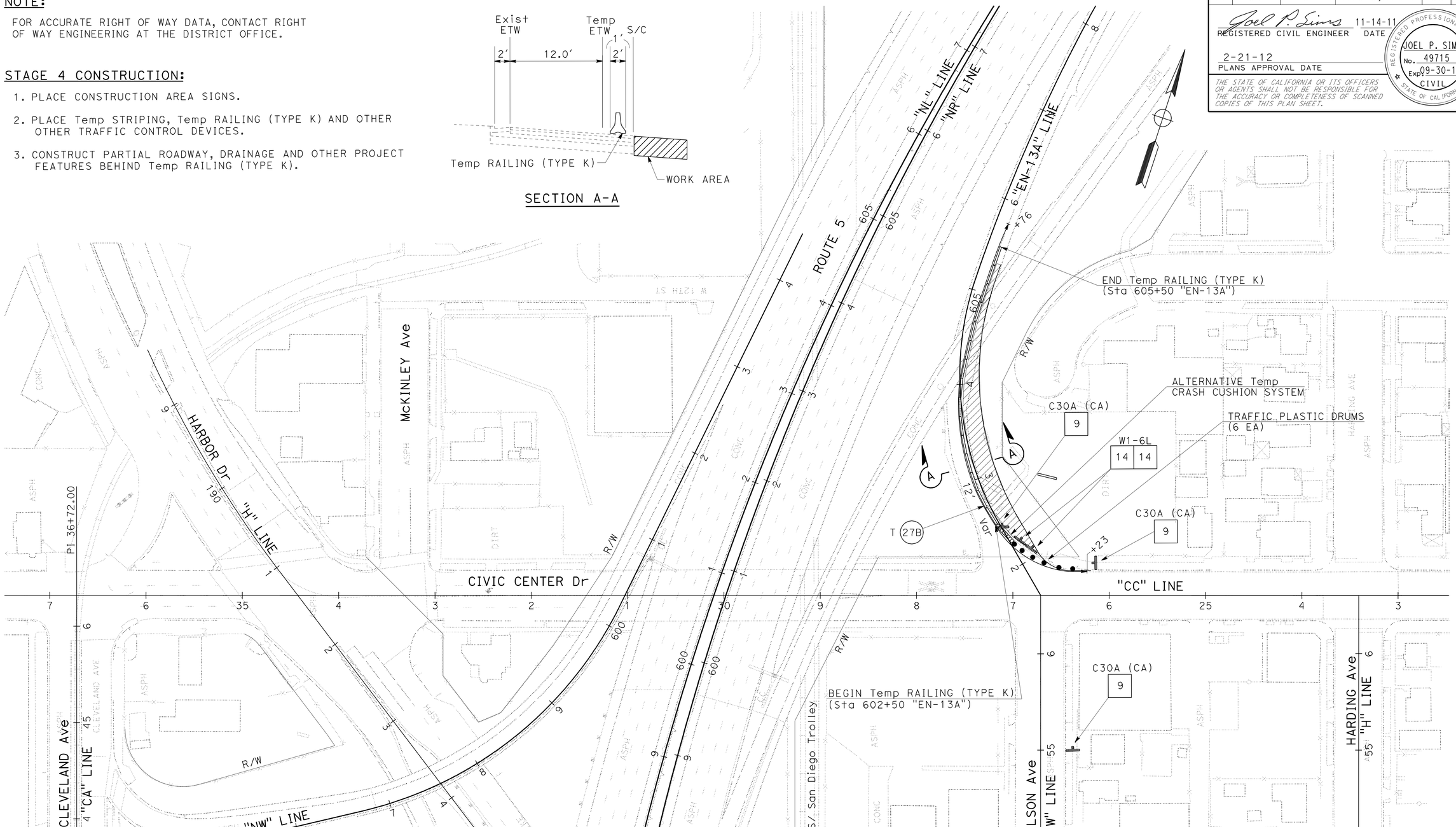

STAGE CONSTRUCTION
STAGE 4

APPROVED FOR STAGE CONSTRUCTION WORK ONLY

SCALE: 1" = 50'

SC-4

STATE OF CALIFORNIA - DEPARTMENT OF TRANSPORTATION
Caltrans®
DESIGN

FUNCTIONAL SUPERVISOR: MICHAEL J. WEBSTER
CALCULATED-DESIGNED BY: JOEL SIMS
CHECKED BY: WAYNE NGUYEN
REVISED BY
DATE REVISED

LAST REVISION 11-18-11
DATE PLOTTED => 22-FEB-2012
TIME PLOTTED => 11:21

Dist	COUNTY	ROUTE	POST MILES TOTAL PROJECT	SHEET No.	TOTAL SHEETS
11	SD	5	R10.0,R10.7	39	132

REGISTERED CIVIL ENGINEER — DATE: 11-14-11

2-21-12
PLANS APPROVAL DATE

REGISTERED PROFESSIONAL ENGINEER — JOEL P. SIMS — No. 49715 — Exp 09-30-12 — CIVIL — STATE OF CALIFORNIA

THE STATE OF CALIFORNIA OR ITS OFFICERS OR AGENTS SHALL NOT BE RESPONSIBLE FOR THE ACCURACY OR COMPLETENESS OF SCANNED COPIES OF THIS PLAN SHEET.

NOTE:

FOR ACCURATE RIGHT OF WAY DATA, CONTACT RIGHT OF WAY ENGINEERING AT THE DISTRICT OFFICE.

STAGE 5 CONSTRUCTION:

1. REMOVE Temp RAILING (TYPE K) AND OTHER TRAFFIC CONTROL DEVICES FROM STAGE 4.
2. PLACE STAGE 5 TRAFFIC CONTROL DEVICES.
3. COMPLETE CONSTRUCTION OF NEW RAMP UNDER WEEKEND RAMP CLOSURE.

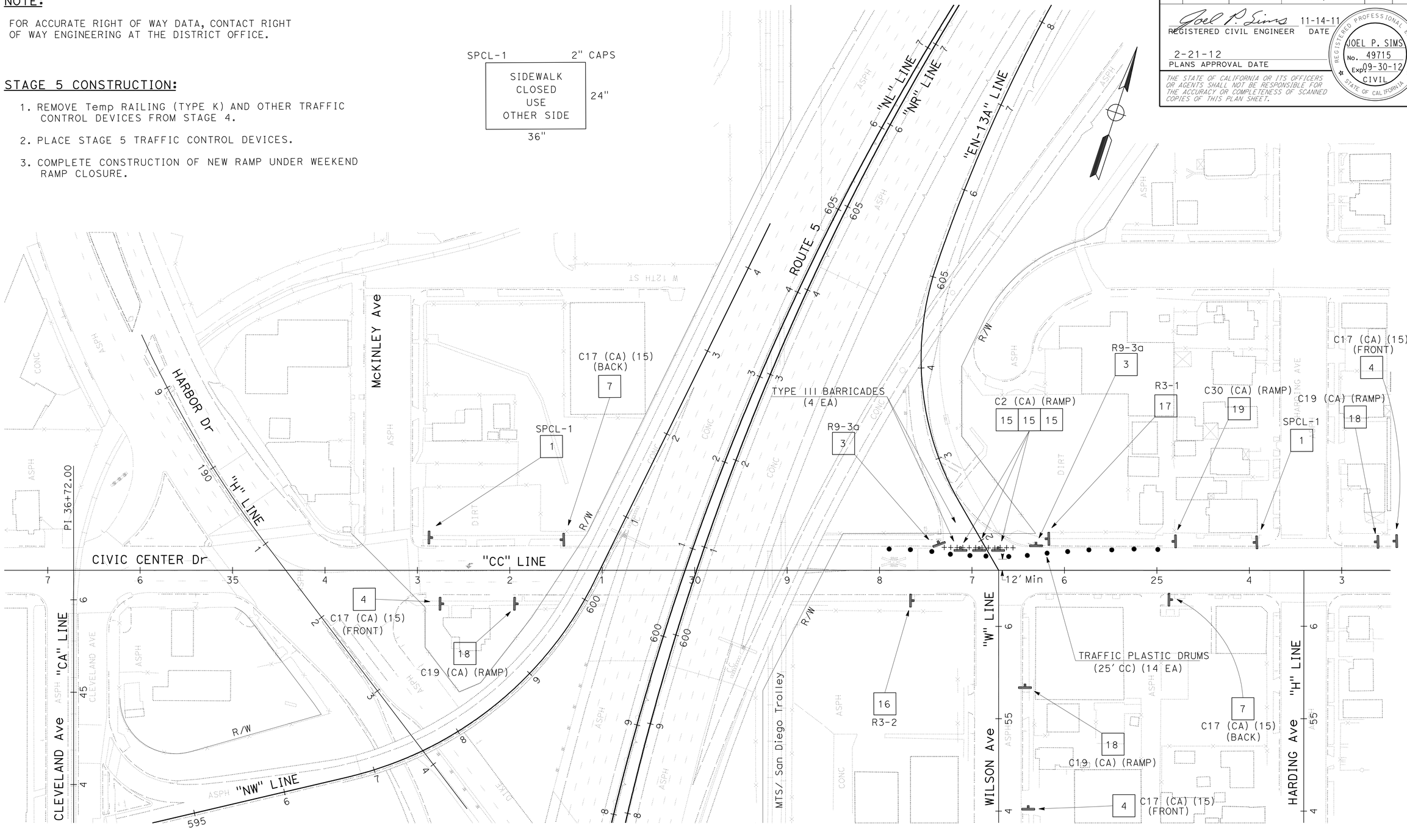

STAGE CONSTRUCTION
STAGE 5

APPROVED FOR STAGE CONSTRUCTION WORK ONLY

SCALE: 1" = 50'

SC-5

STATE OF CALIFORNIA - DEPARTMENT OF TRANSPORTATION
Caltrans® DESIGN

FUNCTIONAL SUPERVISOR: MICHAEL J. WEBSTER
CALCULATED-DESIGNED BY: JOEL SIMS
CHECKED BY: WAYNE NGUYEN
REVISED BY / DATE REVISED

LAST REVISION 11-18-11 | DATE PLOTTED => 22-FEB-2012 | TIME PLOTTED => 11:21

Dist	COUNTY	ROUTE	POST MILES TOTAL PROJECT	SHEET No.	TOTAL SHEETS
11	SD	5	R10.0,R10.7	40	132

Joel P. Sims 11-14-11
REGISTERED CIVIL ENGINEER DATE

2-21-12
PLANS APPROVAL DATE

REGISTERED PROFESSIONAL ENGINEER JOEL P. SIMS No. 49715 Exp. 09-30-12 CIVIL STATE OF CALIFORNIA

THE STATE OF CALIFORNIA OR ITS OFFICERS OR AGENTS SHALL NOT BE RESPONSIBLE FOR THE ACCURACY OR COMPLETENESS OF SCANNED COPIES OF THIS PLAN SHEET.

CONSTRUCTION AREA SIGNS

SHEET No.	SIGN No.	CODE	PANEL SIZE (In)	No. OF POST AND SIZE (In)	No. OF SIGNS
SC-1 THROUGH SC-5	1	SPCL-1	36 X 24	PORTABLE	8
	2	SPCL-2	48 X 48	PORTABLE	2
	3	R9-3a	24 X 24	PORTABLE	8
	4	C17 (CA) FRONT	24 X 24	PORTABLE	3
	5	SPCL-3	48 X 36	PORTABLE	1
	6	R3-2	30 X 30	ON MAST-ARM	1
	7	C17 (CA) BACK	24 X 24	PORTABLE	2
	8	C30A (CA)	36 X 36	1 - 4 X 6 (S)	1
	9	C30A (CA)	36 X 36	PORTABLE	8
	10	W11-1	36 X 36	PORTABLE	2
		W16-1	24 X 30		
	11	SPCL-4	36 X 24	PORTABLE	1
	12	SPCL-5	36 X 24	PORTABLE	1
	13	R9-13A	24 X 36	PORTABLE	3
	14	W1-6L	36 X 18	PORTABLE	2
	15	C2 (CA)	36 X 36	PORTABLE	3
	16	R3-2	24 X 24	PORTABLE	1
	17	R3-1	24 X 24	PORTABLE	1
	18	C19 (CA)	36 X 36	PORTABLE	3
	19	C30 (CA)	36 X 36	PORTABLE	1
				TOTAL	52

SEE CONSTRUCTION AREA SIGN AND TRAFFIC HANDLING SHEETS FOR ADDITIONAL CONSTRUCTION AREA SIGN QUANTITIES.
(S) DENOTES STATIONARY MOUNTED SIGN.

ALTERNATIVE TEMPORARY CRASH CUSHION SYSTEM

STAGE	LOCATION		EACH
	LINE	STATION	
1	"NE-24"	565+30	1
2	"BM"	17+00 & 19+50	2
3	"BM"	17+00 & 20+35	2
4	"EN-13A"	602+50	1
		TOTAL	6

TEMPORARY RAILING (TYPE K)

STAGE	SHEET No.	LOCATION	LENGTH (LF)
1	SC-1	SB OFF RAMP TO WB BAY MARINA Dr	180
2	SC-2	SB OFF RAMP & WB BAY MARINA Dr	400
	SC-2	EB BAY MARINA Dr	220
3	SC-3	EB BAY MARINA Dr & SB ON RAMP	420
	SC-3	EB BAY MARINA Dr	220
4	SC-4	NB ON RAMP FROM CIVIC CENTER Dr	300
		TOTAL	1,740

CHANNELIZER (SURFACE MOUNTED)

STAGE	SHEET	EACH
1	SC-1	46
	TOTAL	46

Temp FENCE (TYPE CL-6)

STAGE	SHEET	LF
1	SC-1	130
	TOTAL	130

TRAFFIC PLASTIC DRUM

STAGE	SHEET No.	LINE	EA
1	SC-1	"NE-24"	6
2	SC-2	"BM"	9
3	SC-3	"BM"&"SE-24"	11
4	SC-4	"EN-13A"	6
5	SC-5	WB "CC"	14
		TOTAL	46

TYPE III BARRICADE

STAGE	SHEET	EACH
1	SC-1	3
5	SC-5	4
	TOTAL	7

STAGE CONSTRUCTION QUANTITIES

SCQ-1

STATE OF CALIFORNIA - DEPARTMENT OF TRANSPORTATION
Caltrans DESIGN
FUNCTIONAL SUPERVISOR: MICHAEL J. WEBSTER
CALCULATED-DESIGNED BY: RADHIKA MOTHKURI
CHECKED BY: JOEL SIMS
REVISED BY
DATE REVISED

LAST REVISION 11-18-11
DATE PLOTTED => 22-FEB-2012
TIME PLOTTED => 11:21

Dist	COUNTY	ROUTE	POST MILES TOTAL PROJECT	SHEET No.	TOTAL SHEETS
11	SD	5	R10.0,R10.7	41	132

Joel P. Sims 11-14-11
REGISTERED CIVIL ENGINEER DATE

2-21-12
PLANS APPROVAL DATE

REGISTERED PROFESSIONAL ENGINEER JOEL P. SIMS No. 49715 Exp 09-30-12 CIVIL STATE OF CALIFORNIA

THE STATE OF CALIFORNIA OR ITS OFFICERS OR AGENTS SHALL NOT BE RESPONSIBLE FOR THE ACCURACY OR COMPLETENESS OF SCANNED COPIES OF THIS PLAN SHEET.

TEMPORARY PAVEMENT DELINEATION (180 DAYS OR LESS)

STAGE	DETAIL No.	TEMPORARY PAVEMENT MARKER TYPE D	TEMPORARY PAVEMENT MARKER TYPE G	TEMPORARY TRAFFIC STRIPE (PAINT)	REMOVE PAINTED TRAFFIC STRIPE Exist	REMOVE PAINTED TRAFFIC STRIPE Temp	REMOVE YELLOW PAINTED TRAFFIC STRIPE (HAZARDOUS WASTE)	REMOVE THERMOPLASTIC TRAFFIC STRIPE	REMOVE PAVEMENT MARKER (N)	REMARKS
		EA	EA	LF	LF	LF	LF	LF	EA	
1	9		5	200		59			5	L = 200 LF
	9				59				5	L = 200 LF
	27B			270		270				L = 270 LF
	27B				143					L = 143 LF
	38							100	3	L = 50 LF
2	9		3	106		32			3	L = 106 LF
	9				32				3	L = 106 LF
	9		3	107		32			3	L = 107 LF
	9				32				3	L = 107 LF
	22	14		137		274			14	L = 137 LF
	22						370		18	L = 185 LF
	27B			454		454				L = 454 LF
	27B			390		390				L = 390 LF
	29	18		374		748			18	L = 187 LF
	38							48	3	L = 24 LF
	38A			90		180				L = 90 LF
3**	9		17	748					17	L = 748 LF
	9				145				11	L = 497 LF
	22	40		227					40	L = 227 LF
	22	40							40	L = 219 LF; MARKERS ONLY
	27B			785		175				L = 785 LF
	29	10		172					10	L = 86 LF
	29						468		11	L = 234 LF; ONE SIDE ONLY
	38	5		90				180	10	L = 90 LF
	38A							220		L = 110 LF
4	27B			438		438				L = 438 LF
TOTAL		155		4,588	3463 *		838 *	548 *	217 *	

* SEE PAVEMENT DELINEATION QUANTITIES FOR ADDITIONAL PAVEMENT DELINEATION REMOVAL QUANTITIES.
** REMOVAL OF PAINT FOR Temp STRIPES NOT REQUIRED ON STAGE 3 (MARKERS ONLY).
(N) NOT A SEPARATE PAY ITEM. FOR INFORMATION ONLY.

TEMPORARY PAVEMENT MARKING (PAINT)

SHEET	LIMIT LINE & X-WALK	ARROW TYPE III	ARROW TYPE IV	REMARKS
	SQFT	SQFT	SQFT	
SC-1		42		STAGE 1
SC-2	225			STAGE 2
SC-3	24		15	STAGE 3
TOTAL	306			

REMOVE PAINTED PAVEMENT MARKING

SHEET	LIMIT LINE & X-WALK	ARROW TYPE III	REMARKS
	SQFT	SQFT	
SC-1		42	Temp MARKING
SC-2	225		Temp MARKING
TOTAL	267		

REMOVE THERMOPLASTIC PAVEMENT MARKING

SHEET	LIMIT LINE & X-WALK	ARROW TYPE IV	ARROW TYPE III	ARROW TYPE I (24)	REMARKS
	SQFT	SQFT	SQFT	SQFT	
SC-1			42		STAGE 1
SC-3	26	15		31	STAGE 3
TOTAL	114 *				

* SEE PAVEMENT DELINEATION QUANTITIES FOR ADDITIONAL PAVEMENT DELINEATION REMOVAL QUANTITIES.

STAGE CONSTRUCTION QUANTITIES

SCQ-2

REVISED BY | DATE REVISED
RADHIKA MOTHKURI | JOEL SIMS
CALCULATED-DESIGNED BY | CHECKED BY
FUNCTIONAL SUPERVISOR: MICHAEL J. WEBSTER
STATE OF CALIFORNIA - DEPARTMENT OF TRANSPORTATION
Caltrans DESIGN

LAST REVISION 11-18-11 | DATE PLOTTED => 22-FEB-2012 | TIME PLOTTED => 11:22

Dist	COUNTY	ROUTE	POST MILES TOTAL PROJECT	SHEET No.	TOTAL SHEETS
11	SD	5	R10.0,R10.7	42	132

Joel P. Sims 11-14-11
REGISTERED CIVIL ENGINEER DATE

2-21-12
PLANS APPROVAL DATE

REGISTERED PROFESSIONAL ENGINEER
JOEL P. SIMS
No. 49715
Exp. 09-30-12
CIVIL
STATE OF CALIFORNIA

THE STATE OF CALIFORNIA OR ITS OFFICERS OR AGENTS SHALL NOT BE RESPONSIBLE FOR THE ACCURACY OR COMPLETENESS OF SCANNED COPIES OF THIS PLAN SHEET.

LEGEND

XX - CONSTRUCTION AREA SIGN
→ - DETOUR DIRECTION OF TRAVEL
MTS - METROPOLITAN TRANSIT SYSTEM
BNSF - BURLINGTON NOTHERN SANTA FE

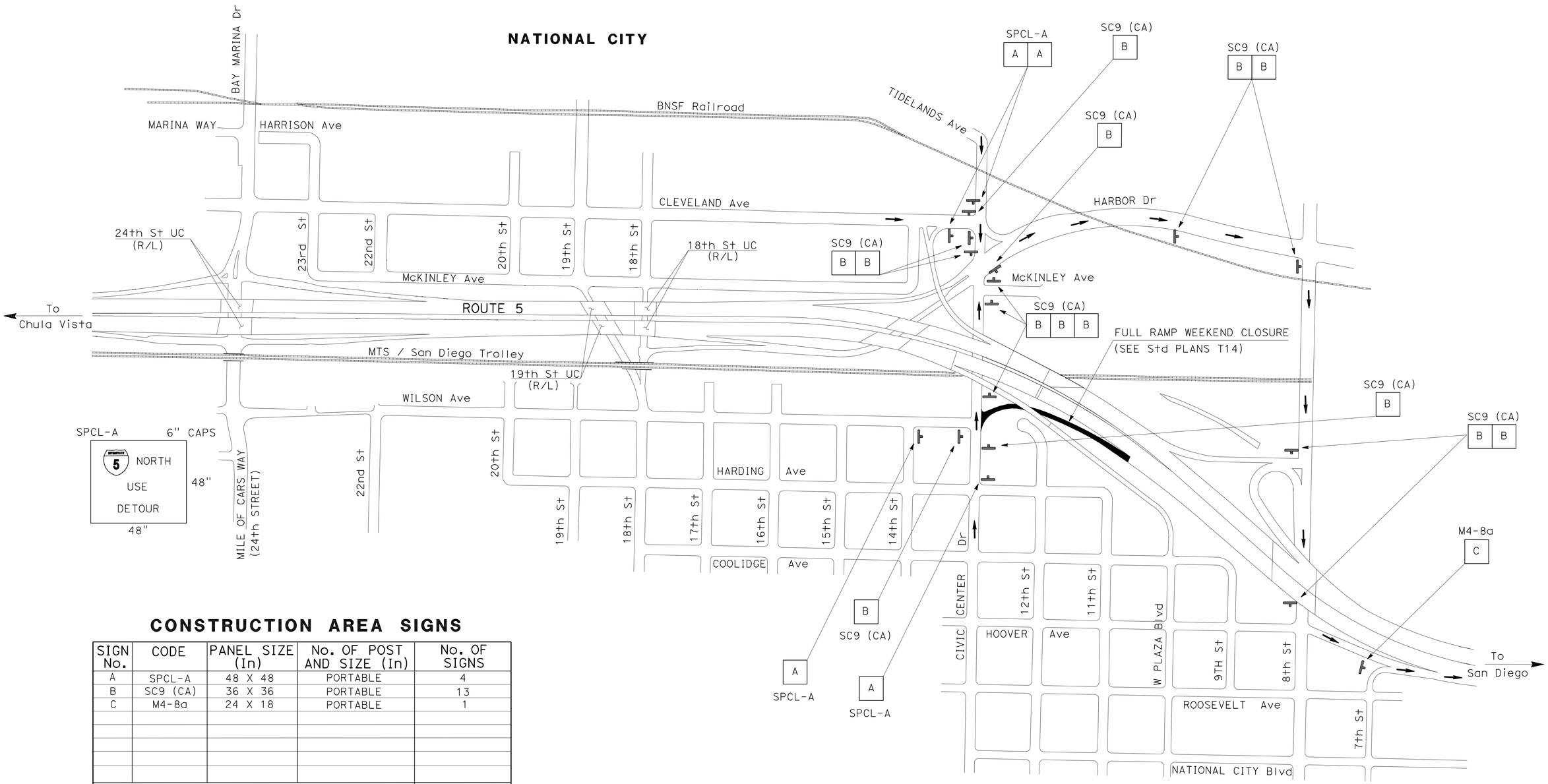

CONSTRUCTION AREA SIGNS

SIGN No.	CODE	PANEL SIZE (In)	No. OF POST AND SIZE (In)	No. OF SIGNS
A	SPCL-A	48 X 48	PORTABLE	4
B	SC9 (CA)	36 X 36	PORTABLE	13
C	M4-8a	24 X 18	PORTABLE	1
			TOTAL	18*

* SEE STAGE CONSTRUCTION QUANTITIES AND CONSTRUCTION AREA SIGN SHEETS FOR ADDITIONAL CONSTRUCTION AREA SIGN QUANTITIES.

APPROVED FOR TRAFFIC HANDLING WORK ONLY

TRAFFIC HANDLING PLAN

NO SCALE

TH-1

STATE OF CALIFORNIA - DEPARTMENT OF TRANSPORTATION
DESIGN
Caltrans®

FUNCTIONAL SUPERVISOR: MICHAEL J. WEBSTER
CALCULATED-DESIGNED BY: JOEL SIMS
CHECKED BY: SIRAJUL RONI
REVISED BY
DATE REVISED

LAST REVISION 11-18-11
DATE PLOTTED => 22-FEB-2012
TIME PLOTTED => 11:22

Dist	COUNTY	ROUTE	POST MILES TOTAL PROJECT	SHEET No.	TOTAL SHEETS
11	SD	5	R10.0,R10.7	43	132

Joel P. Sims 11-14-11
REGISTERED CIVIL ENGINEER DATE

2-21-12
PLANS APPROVAL DATE

REGISTERED PROFESSIONAL ENGINEER
JOEL P. SIMS
No. 49715
Exp. 09-30-12
CIVIL
STATE OF CALIFORNIA

THE STATE OF CALIFORNIA OR ITS OFFICERS OR AGENTS SHALL NOT BE RESPONSIBLE FOR THE ACCURACY OR COMPLETENESS OF SCANNED COPIES OF THIS PLAN SHEET.

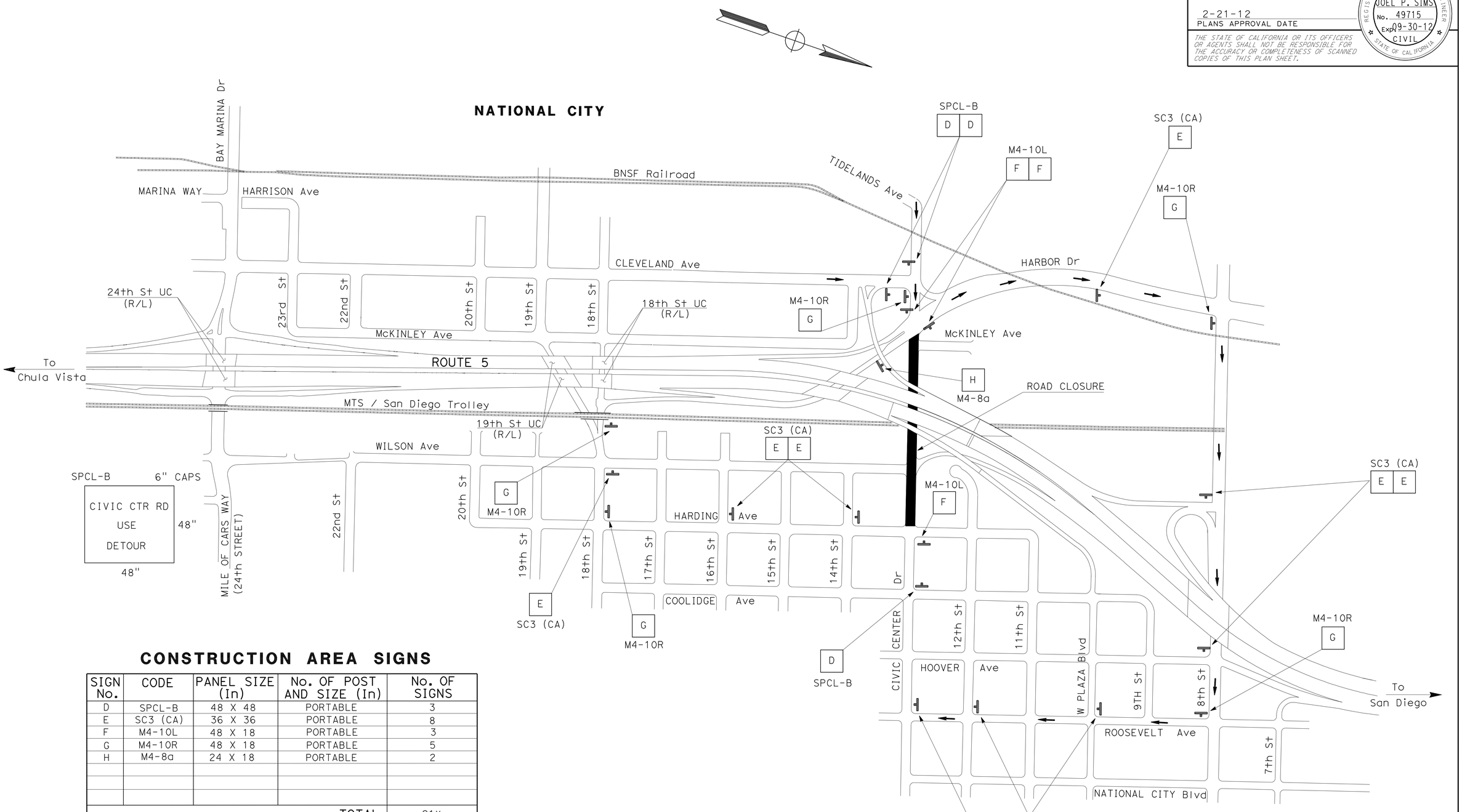

CONSTRUCTION AREA SIGNS

SIGN No.	CODE	PANEL SIZE (In)	No. OF POST AND SIZE (In)	No. OF SIGNS
D	SPCL-B	48 X 48	PORTABLE	3
E	SC3 (CA)	36 X 36	PORTABLE	8
F	M4-10L	48 X 18	PORTABLE	3
G	M4-10R	48 X 18	PORTABLE	5
H	M4-8a	24 X 18	PORTABLE	2
			TOTAL	21*

* SEE STAGE CONSTRUCTION QUANTITIES AND CONSTRUCTION AREA SIGN SHEETS FOR ADDITIONAL CONSTRUCTION AREA SIGN QUANTITIES.

APPROVED FOR TRAFFIC HANDLING WORK ONLY

TRAFFIC HANDLING PLAN

NO SCALE

TH-2

REVISED BY | DATE REVISED
JOEL SIMS | SIRAJUL RONI
CALCULATED-DESIGNED BY | CHECKED BY
FUNCTIONAL SUPERVISOR
MICHAEL J. WEBSTER

STATE OF CALIFORNIA - DEPARTMENT OF TRANSPORTATION
DESIGN
Caltrans

LAST REVISION 11-18-11 | DATE PLOTTED => 22-FEB-2012 | TIME PLOTTED => 11:22

Dist	COUNTY	ROUTE	POST MILES TOTAL PROJECT	SHEET No.	TOTAL SHEETS
11	SD	5	R10.0,R10.7	44	132

Joel P. Sims 11-14-11
REGISTERED CIVIL ENGINEER DATE

2-21-12
PLANS APPROVAL DATE

REGISTERED PROFESSIONAL ENGINEER
JOEL P. SIMS
No. 49715
Exp. 09-30-12
CIVIL
STATE OF CALIFORNIA

THE STATE OF CALIFORNIA OR ITS OFFICERS OR AGENTS SHALL NOT BE RESPONSIBLE FOR THE ACCURACY OR COMPLETENESS OF SCANNED COPIES OF THIS PLAN SHEET.

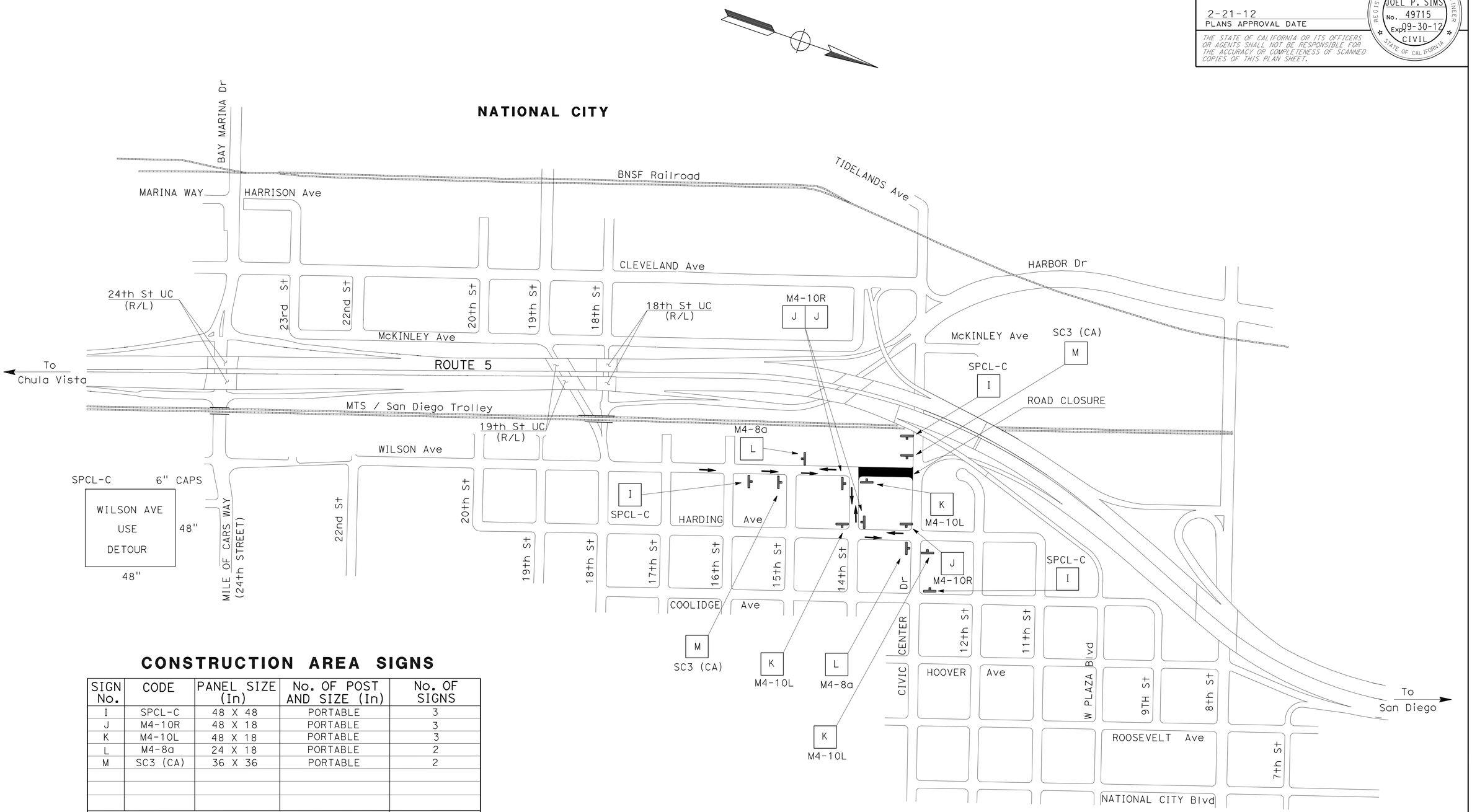

CONSTRUCTION AREA SIGNS

SIGN No.	CODE	PANEL SIZE (In)	No. OF POST AND SIZE (In)	No. OF SIGNS
I	SPCL-C	48 X 48	PORTABLE	3
J	M4-10R	48 X 18	PORTABLE	3
K	M4-10L	48 X 18	PORTABLE	3
L	M4-8a	24 X 18	PORTABLE	2
M	SC3 (CA)	36 X 36	PORTABLE	2
			TOTAL	13*

* SEE STAGE CONSTRUCTION QUANTITIES AND CONSTRUCTION AREA SIGN SHEETS FOR ADDITIONAL CONSTRUCTION AREA SIGN QUANTITIES.

APPROVED FOR TRAFFIC HANDLING WORK ONLY

TRAFFIC HANDLING PLAN

NO SCALE

TH-3

REVISED BY | DATE REVISED
JOEL SIMS | SIRAJUL RONI
CALCULATED-DESIGNED BY | CHECKED BY
FUNCTIONAL SUPERVISOR
MICHAEL J. WEBSTER
STATE OF CALIFORNIA - DEPARTMENT OF TRANSPORTATION
Caltrans
DESIGN

LAST REVISION 11-18-11 | DATE PLOTTED => 22-FEB-2012 | TIME PLOTTED => 11:22

Dist	COUNTY	ROUTE	POST MILES TOTAL PROJECT	SHEET No.	TOTAL SHEETS
11	SD	5	R10.0,R10.7	45	132

REGISTERED CIVIL ENGINEER — DATE: 11-14-11

2-21-12
PLANS APPROVAL DATE

REGISTERED PROFESSIONAL ENGINEER — JOEL P. SIMS — No. 49715 — Exp 09-30-12 — CIVIL — STATE OF CALIFORNIA

THE STATE OF CALIFORNIA OR ITS OFFICERS OR AGENTS SHALL NOT BE RESPONSIBLE FOR THE ACCURACY OR COMPLETENESS OF SCANNED COPIES OF THIS PLAN SHEET.

NOTES:

1. FOR ACCURATE RIGHT OF WAY DATA, CONTACT RIGHT OF WAY ENGINEERING AT THE DISTRICT OFFICE.
2. FOR PAVEMENT DELINEATION REMOVAL FOR THIS LOCATION SEE SHEET PD-2.
3. SEE PAVEMENT DELINEATION DETAIL SHEET FOR BIKE LANE PACKAGE MARKINGS.

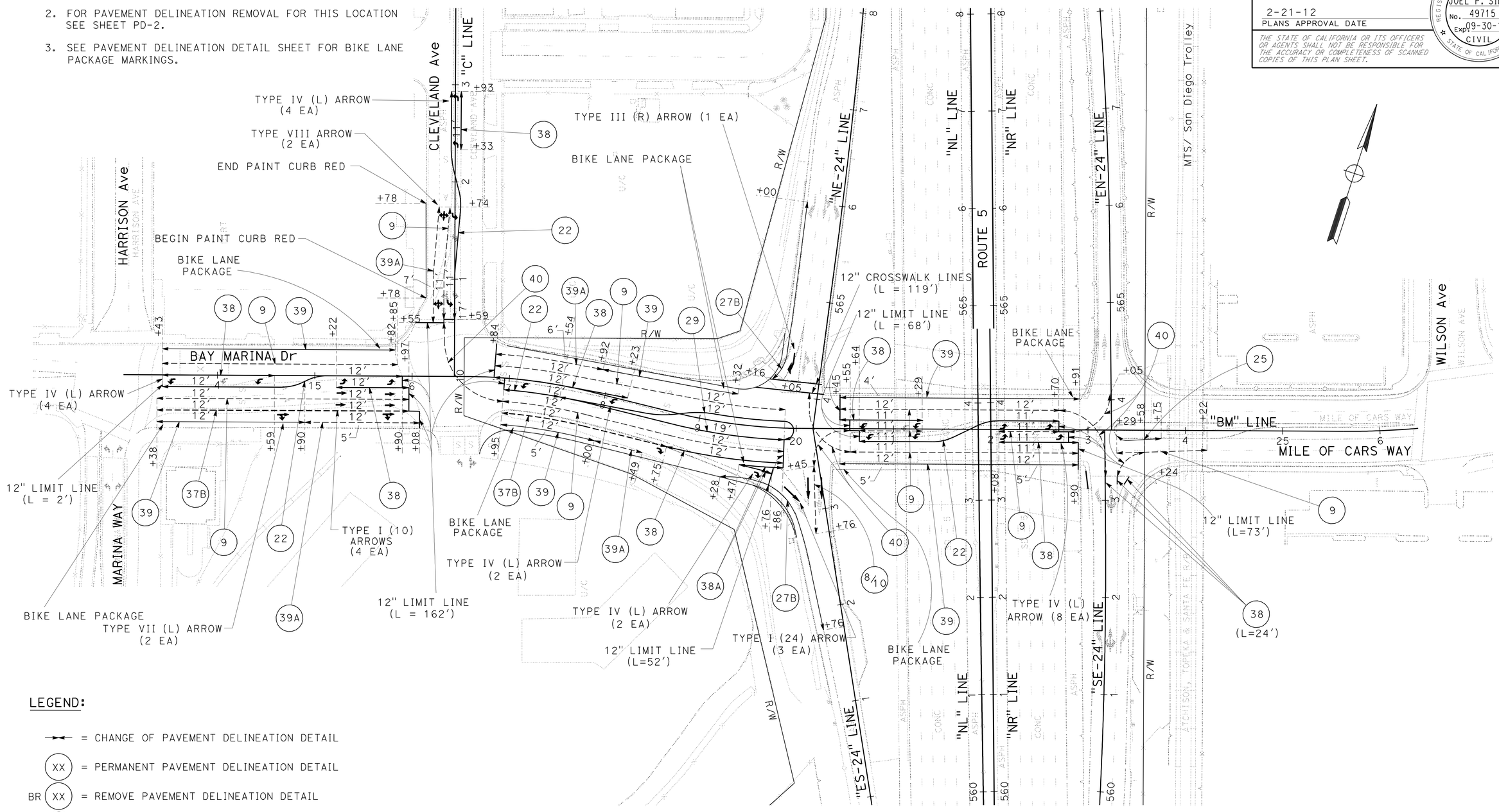

LEGEND:

- ⟷ = CHANGE OF PAVEMENT DELINEATION DETAIL
- (XX) = PERMANENT PAVEMENT DELINEATION DETAIL
- BR (XX) = REMOVE PAVEMENT DELINEATION DETAIL
- ER (XX) = REMOVE PAVEMENT DELINEATION DETAIL
- R (XX) = REMOVE PAVEMENT DELINEATION DETAIL
- MTS = METROPOLITAN TRANSIT SYSTEM

APPROVED FOR PAVEMENT DELINEATION WORK ONLY

PAVEMENT DELINEATION PLAN

SCALE: 1" = 50'

PD-1

STATE OF CALIFORNIA - DEPARTMENT OF TRANSPORTATION — DESIGN

FUNCTIONAL SUPERVISOR: MICHAEL J. WEBSTER
CALCULATED-DESIGNED BY: JOEL SIMS
CHECKED BY: RADHIKA MOTHKURI
REVISED BY / DATE REVISED

LAST REVISION 11-18-11 — DATE PLOTTED => 22-FEB-2012 — TIME PLOTTED => 11:22

Dist	COUNTY	ROUTE	POST MILES TOTAL PROJECT	SHEET No.	TOTAL SHEETS
11	SD	5	R10.0,R10.7	46	132

Joel P. Sims 11-14-11
REGISTERED CIVIL ENGINEER DATE

2-21-12
PLANS APPROVAL DATE

REGISTERED PROFESSIONAL ENGINEER JOEL P. SIMS No. 49715 Exp 09-30-12 CIVIL STATE OF CALIFORNIA

THE STATE OF CALIFORNIA OR ITS OFFICERS OR AGENTS SHALL NOT BE RESPONSIBLE FOR THE ACCURACY OR COMPLETENESS OF SCANNED COPIES OF THIS PLAN SHEET.

NOTES:

1. FOR ACCURATE RIGHT OF WAY DATA, CONTACT RIGHT OF WAY ENGINEERING AT THE DISTRICT OFFICE.
2. FOR PAVEMENT DELINEATION FOR THIS LOCATION SEE SHEET PD-1.

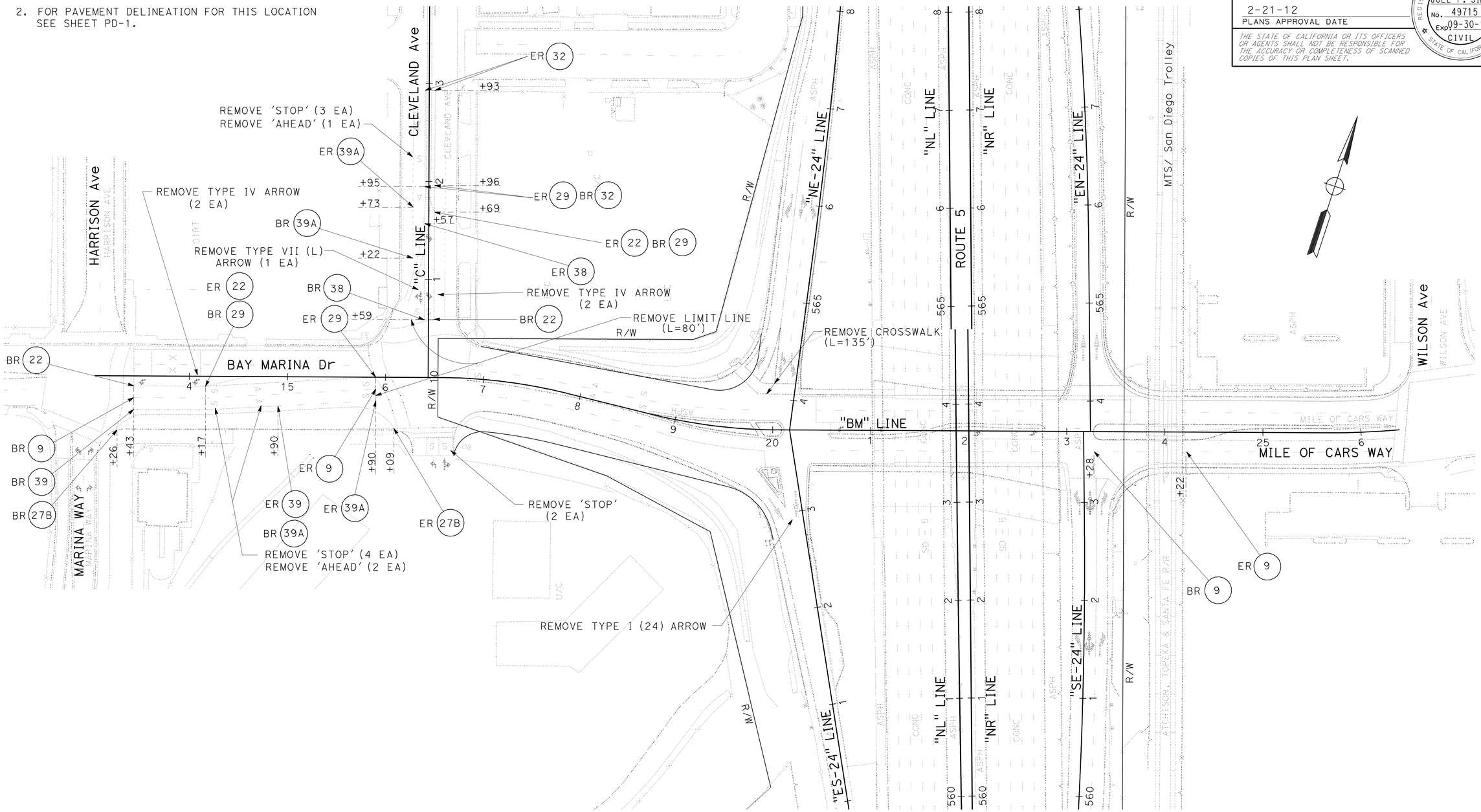

PAVEMENT DELINEATION PLAN

APPROVED FOR PAVEMENT DELINEATION WORK ONLY

SCALE: 1" = 50'

PD-2

STATE OF CALIFORNIA - DEPARTMENT OF TRANSPORTATION
Caltrans® DESIGN

FUNCTIONAL SUPERVISOR: MICHAEL J. WEBSTER
CALCULATED-DESIGNED BY: JOEL SIMS
CHECKED BY: RADHIKA MOTHKURI
REVISED BY
DATE REVISED

LAST REVISION 11-18-11
DATE PLOTTED => 22-FEB-2012
TIME PLOTTED => 11:22

Dist	COUNTY	ROUTE	POST MILES TOTAL PROJECT	SHEET No.	TOTAL SHEETS
11	SD	5	R10.0,R10.7	47	132

REGISTERED CIVIL ENGINEER 11-14-11 DATE

2-21-12
PLANS APPROVAL DATE

REGISTERED PROFESSIONAL ENGINEER JOEL P. SIMS No. 49715 Exp 09-30-12 CIVIL STATE OF CALIFORNIA

THE STATE OF CALIFORNIA OR ITS OFFICERS OR AGENTS SHALL NOT BE RESPONSIBLE FOR THE ACCURACY OR COMPLETENESS OF SCANNED COPIES OF THIS PLAN SHEET.

NOTE:

FOR ACCURATE RIGHT OF WAY DATA, CONTACT RIGHT OF WAY ENGINEERING AT THE DISTRICT OFFICE.

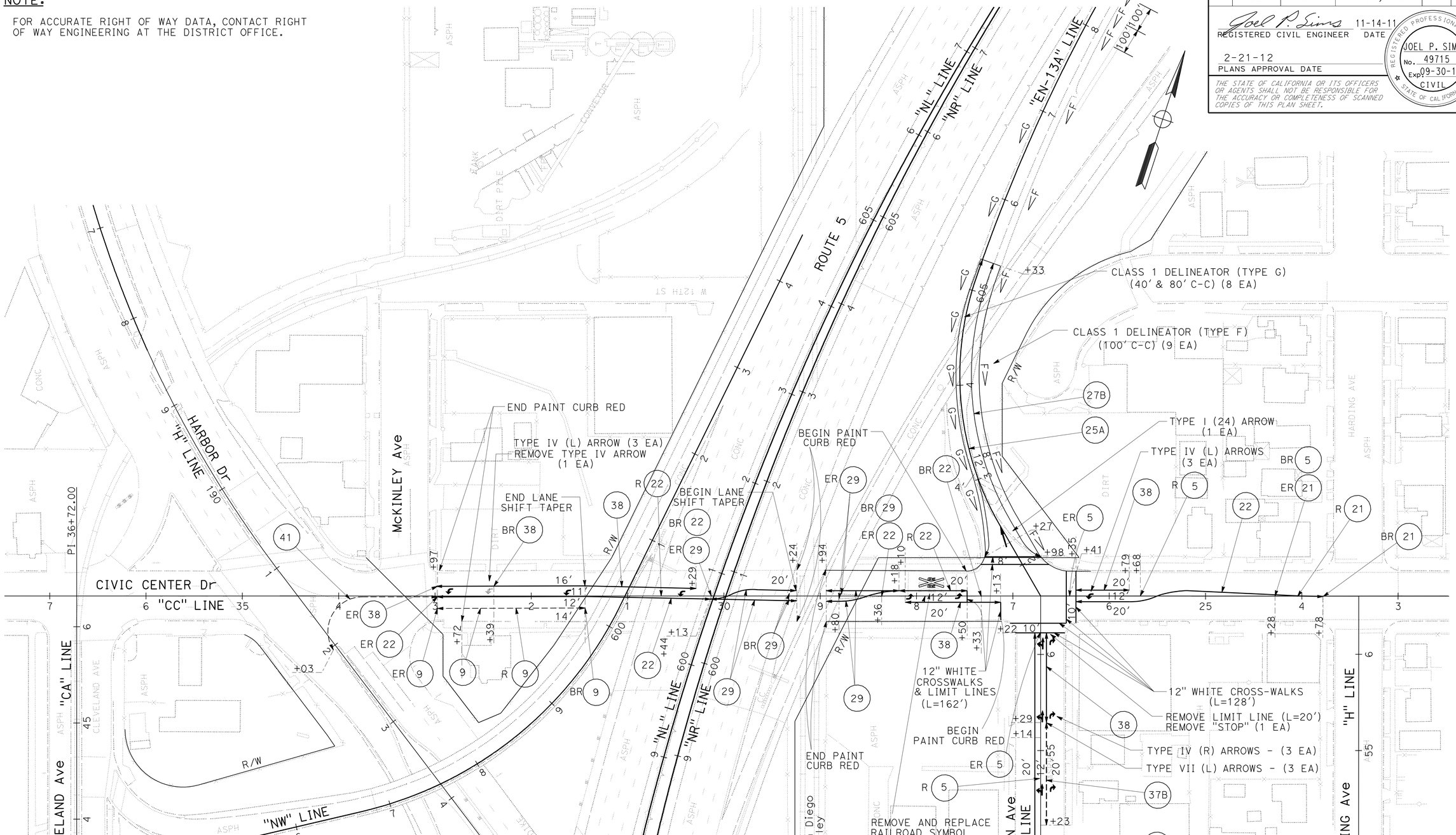

PAVEMENT DELINEATION PLAN

APPROVED FOR PAVEMENT DELINEATION WORK ONLY

SCALE: 1" = 50'

PD-3

STATE OF CALIFORNIA - DEPARTMENT OF TRANSPORTATION

Caltrans® DESIGN

FUNCTIONAL SUPERVISOR: MICHAEL J. WEBSTER

CALCULATED-DESIGNED BY: JOEL SIMS

CHECKED BY: RADHIKA MOTHKURI

REVISED BY / DATE REVISED

LAST REVISION 11-18-11

DATE PLOTTED => 22-FEB-2012
TIME PLOTTED => 11:23

Dist	COUNTY	ROUTE	POST MILES TOTAL PROJECT	SHEET No.	TOTAL SHEETS
11	SD	5	R10.0,R10.7	48	132

Joel P. Sims 11-14-11
REGISTERED CIVIL ENGINEER DATE

2-21-12
PLANS APPROVAL DATE

REGISTERED PROFESSIONAL ENGINEER
JOEL P. SIMS
No. 49715
Exp 09-30-12
CIVIL
STATE OF CALIFORNIA

THE STATE OF CALIFORNIA OR ITS OFFICERS OR AGENTS SHALL NOT BE RESPONSIBLE FOR THE ACCURACY OR COMPLETENESS OF SCANNED COPIES OF THIS PLAN SHEET.

BIKE LANE STRIPING DETAIL

TYPICAL

PAVEMENT DELINEATION FOR BIKE LANES

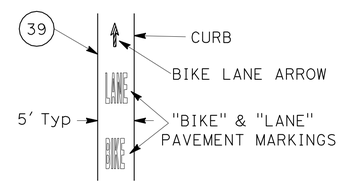

BIKE LANE PACKAGE
(20' SPACING BETWEEN PAVEMENT MARKINGS Typ)

DETAIL 8/10 COMBINATION

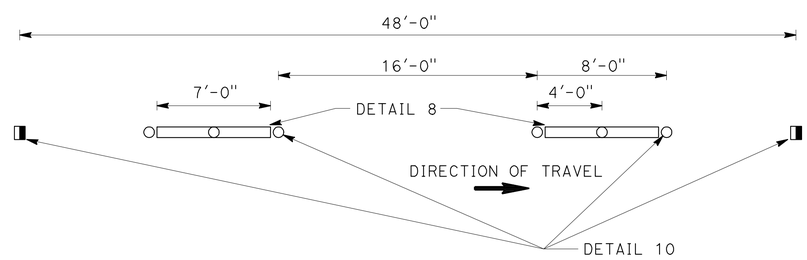

PAVEMENT DELINEATION DETAILS

NO SCALE

PDD-1

STATE OF CALIFORNIA - DEPARTMENT OF TRANSPORTATION
Caltrans
DESIGN

FUNCTIONAL SUPERVISOR: MICHAEL J. WEBSTER
CALCULATED-DESIGNED BY: JOEL SIMS
CHECKED BY: RADHIKA MOTHKURI
REVISED BY
DATE REVISED

LAST REVISION 11-18-11
DATE PLOTTED => 22-FEB-2012
TIME PLOTTED => 11:23

Dist	COUNTY	ROUTE	POST MILES TOTAL PROJECT	SHEET No.	TOTAL SHEETS
11	SD	5	R10.0,R10.7	49	132

Joel P. Sims 11-14-11
REGISTERED CIVIL ENGINEER DATE

2-21-12
PLANS APPROVAL DATE

REGISTERED PROFESSIONAL ENGINEER JOEL P. SIMS No. 49715 Exp 09-30-12 CIVIL STATE OF CALIFORNIA

THE STATE OF CALIFORNIA OR ITS OFFICERS OR AGENTS SHALL NOT BE RESPONSIBLE FOR THE ACCURACY OR COMPLETENESS OF SCANNED COPIES OF THIS PLAN SHEET.

PAVEMENT MARKER AND TRAFFIC STRIPE SUMMARY

ROUTE	SHEET	DETAIL No.	PAVEMENT MARKER (EA) NON-REFLECTIVE TYPE A WHITE	RETROREFLECTIVE TYPE G CLEAR	RETROREFLECTIVE TYPE D YELLOW	RETROREFLECTIVE TYPE H YELLOW	PAINT TRAFFIC STRIPE (2 COAT) LF	THERMOPLASTIC TRAFFIC STRIPE (LF) 8" SOLID	8" BROKEN (12'-3')	4" BROKEN (6'-1')	REMARKS
5	PD-1	8/10	9				69				L=69'
		9		40			1,839				L=1839'
		22			66		753				L=753'
		25				2	93				L=93'
		27B					400				L=400'
		29			24		490				L=245'
		37B		30					440		L=440'
		38		24				561			L=561'
		38A						90			L=90'
		39					1126				L=1126'
		39A					393				L=393'
		40								359	L=359'
	PD-3	9		4			157				L=157'
		22			78		900				L=900'
		25A				14	316				L=316'
		27B					303				L=303'
		29			16		330				L=165'
		37B							106		L=106'
		38		21				492			L=492'
		41								155	L=155'
		TOTAL	9	319			7,169	1,143	546	514	

DELINEATOR (CLASS 1)

SHEET	TYPE	QUANTITY (EA)
PD-3	F	9
	G	8
	TOTAL	17

THERMOPLASTIC PAVEMENT MARKING

ROUTE	LOCATION	LIMIT LINE/ CROSS WALK 12 In SQFT	ARROW TYPE I (10') SQFT	ARROW TYPE I (24') SQFT	ARROW TYPE III(R) SQFT	ARROW TYPE IV(R) SQFT	ARROW TYPE IV(L) SQFT	ARROW TYPE VII(L) SQFT	ARROW TYPE VIII SQFT	BIKE LANE ARROW SQFT	BIKE SQFT	LANE SQFT	X SQFT
5	PD-1	476.0	56.0	93.0	42.0	30.0	270.0	54.0	72.0	42.0	30.0	36.0	
5	PD-3	290.0		31.0		45.0	90.0	81.0					70.0
	TOTAL	1,808.0											

PAINT CURB (2-COAT)

SHEET	QUANTITY (LF)	REMARKS
PD-1	100	RED COLOR
PD-3	1047	RED COLOR
TOTAL	1147	

REMOVE TRAFFIC STRIPE

SHEET	DETAIL No.	REMOVE PAINTED TRAFFIC STRIPE (LF)	REMOVE YELLOW PAINTED TRAFFIC STRIPE (HAZARDOUS WASTE) (LF)	REMOVE THERMOPLASTIC TRAFFIC STRIPE (LF)	REMOVE PAVEMENT MARKER (N) (EA)	REMARKS
PD-2	9	100			3	L=341'
	22		368		16	L=184'
	27B	283				L=283'
	29		800		18	L=200'
	32		243		14	L=97'
	38			196	4	L=98'
	39	221				L=147'
	39A	76				L=151'
PD-3	5		121			L=484'
	9	46			2	L=157'
	21		100			L=50'
	22		774		34	L=387'
	29		588		14	L=147'
	38			116	3	L=58'
	TOTAL	726 *	2,994 *	312 *		

REMOVE THERMOPLASTIC PAVEMENT MARKING

SHEET	AHEAD SQFT	ARROW TYPE I (24') SQFT	LIMIT LINE/ CROSS WALK 12 In SQFT	STOP SQFT	ARROW TYPE IV SQFT	X SQFT	ARROW TYPE VII(L) SQFT
PD-2	93.0	31.0	215.0	198.0	60.0		27.0
PD-3			20.0	22.0	15.0	94.0	
TOTAL	775.0 *						

* SEE STAGE CONSTRUCTION QUANTITIES SHEETS FOR ADDITIONAL PAVEMENT DELINEATION REMOVAL QUANTITIES.

(N) = NOT A SEPARATE PAY ITEM, FOR INFORMATION ONLY.

PAVEMENT DELINEATION QUANTITIES

PDQ-1

REVISED BY | DATE REVISED
RADHIKA MOTHKURI | JOEL SIMS
CALCULATED-DESIGNED BY | CHECKED BY
FUNCTIONAL SUPERVISOR: MICHAEL J. WEBSTER
STATE OF CALIFORNIA - DEPARTMENT OF TRANSPORTATION
Caltrans® DESIGN

LAST REVISION 11-18-11 | DATE PLOTTED => 22-FEB-2012 | TIME PLOTTED => 11:23

Dist	COUNTY	ROUTE	POST MILES TOTAL PROJECT	SHEET No.	TOTAL SHEETS
11	SD	5	R10.0,R10.7	50	132

Joel P. Sims 11-14-11
REGISTERED CIVIL ENGINEER DATE

2-21-12
PLANS APPROVAL DATE

REGISTERED PROFESSIONAL ENGINEER JOEL P. SIMS No. 49715 Exp 09-30-12 CIVIL STATE OF CALIFORNIA

THE STATE OF CALIFORNIA OR ITS OFFICERS OR AGENTS SHALL NOT BE RESPONSIBLE FOR THE ACCURACY OR COMPLETENESS OF SCANNED COPIES OF THIS PLAN SHEET.

NOTE:

FOR ACCURRATE RIGHT OF WAY DATA, CONTACT RIGHT OF WAY ENGINEERING AT THE DISTRICT OFFICE.

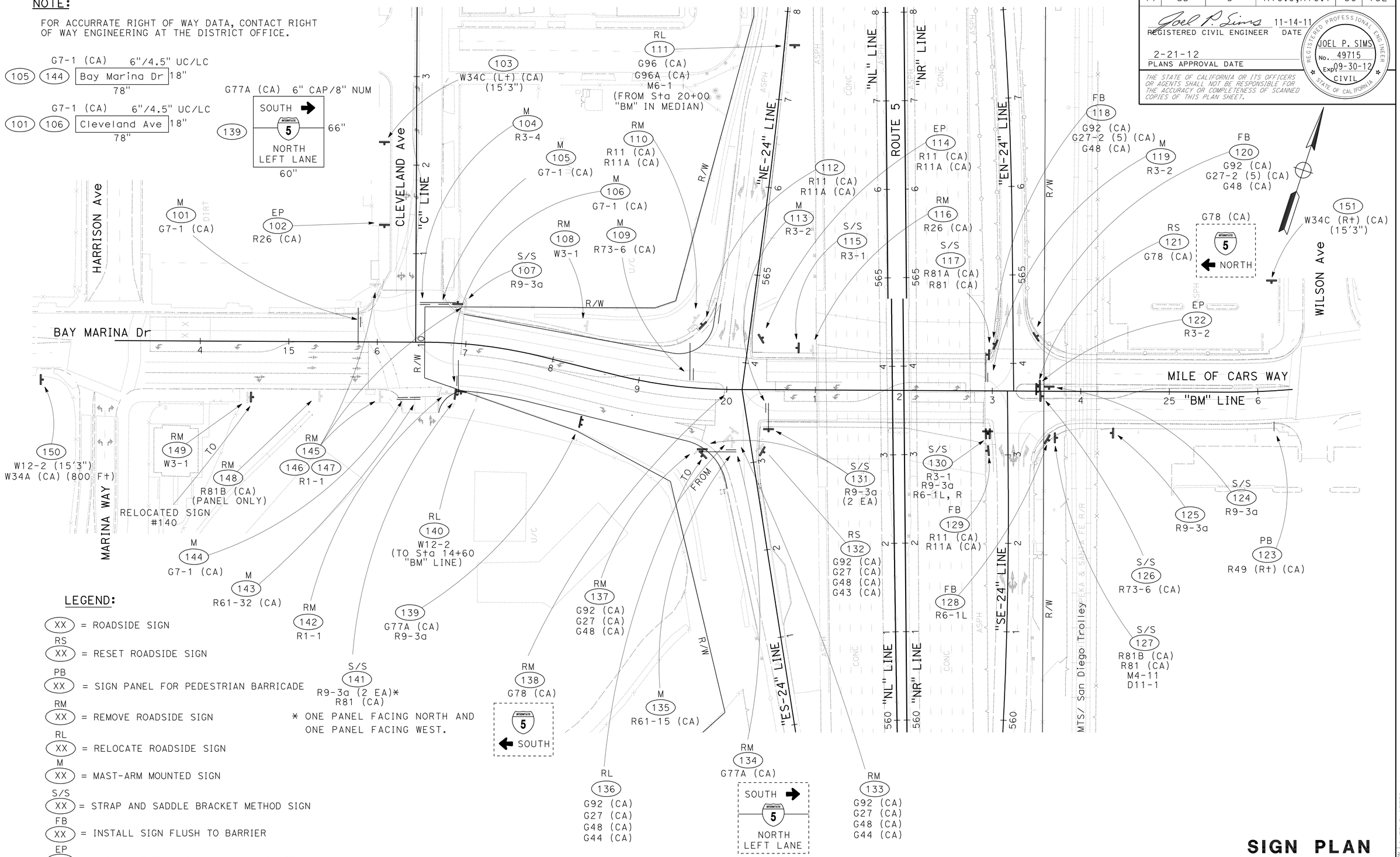

LEGEND:

- (XX) = ROADSIDE SIGN
- RS (XX) = RESET ROADSIDE SIGN
- PB (XX) = SIGN PANEL FOR PEDESTRIAN BARRICADE
- RM (XX) = REMOVE ROADSIDE SIGN
- RL (XX) = RELOCATE ROADSIDE SIGN
- M (XX) = MAST-ARM MOUNTED SIGN
- S/S (XX) = STRAP AND SADDLE BRACKET METHOD SIGN
- FB (XX) = INSTALL SIGN FLUSH TO BARRIER
- EP (XX) = INSTALL SIGN PANEL ON EXISTING POST
- MTS = METROPOLITAN TRANSIT SYSTEM

* ONE PANEL FACING NORTH AND ONE PANEL FACING WEST.

APPROVED FOR SIGN WORK ONLY

SIGN PLAN

SCALE: 1" = 50'

S-1

STATE OF CALIFORNIA - DEPARTMENT OF TRANSPORTATION
DESIGN
Caltrans

FUNCTIONAL SUPERVISOR: MICHAEL J. WEBSTER
CALCULATED-DESIGNED BY: JOEL SIMS
CHECKED BY: RADHIKA MOTHKURI
REVISED BY / DATE REVISED

LAST REVISION 11-18-11
DATE PLOTTED => 22-FEB-2012
TIME PLOTTED => 11:23

Dist	COUNTY	ROUTE	POST MILES TOTAL PROJECT	SHEET No.	TOTAL SHEETS
11	SD	5	R10.0,R10.7	51	132

Joel P. Sims 11-14-11
REGISTERED CIVIL ENGINEER DATE

2-21-12
PLANS APPROVAL DATE

REGISTERED PROFESSIONAL ENGINEER JOEL P. SIMS No. 49715 Exp 09-30-12 CIVIL STATE OF CALIFORNIA

THE STATE OF CALIFORNIA OR ITS OFFICERS OR AGENTS SHALL NOT BE RESPONSIBLE FOR THE ACCURACY OR COMPLETENESS OF SCANNED COPIES OF THIS PLAN SHEET.

NOTE:

FOR ACCURATE RIGHT OF WAY DATA, CONTACT RIGHT OF WAY ENGINEERING AT THE DISTRICT OFFICE.

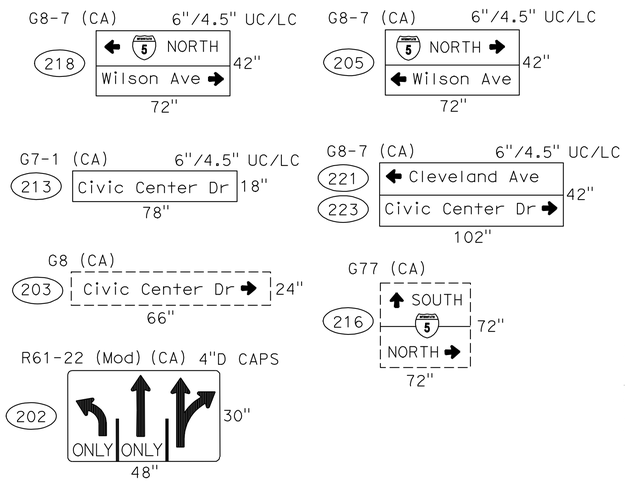

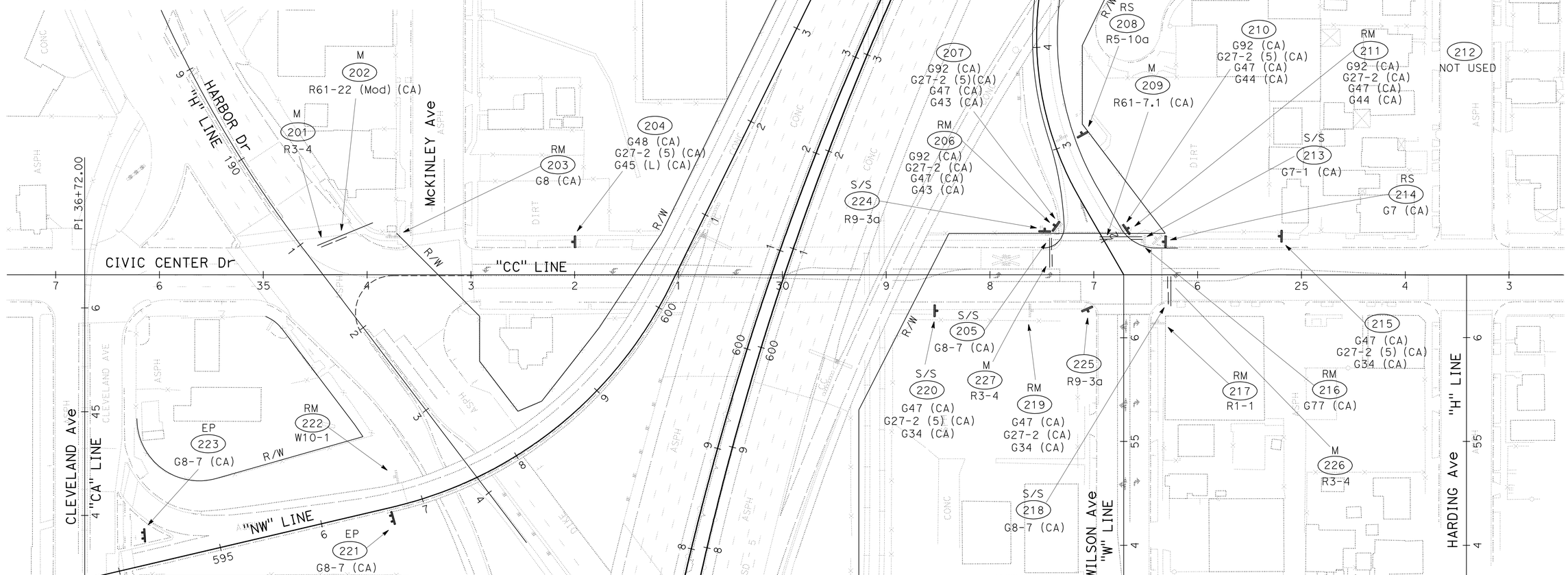

SIGN PLAN

APPROVED FOR SIGN WORK ONLY

SCALE: 1"=50'

S-2

STATE OF CALIFORNIA - DEPARTMENT OF TRANSPORTATION
Caltrans® DESIGN
FUNCTIONAL SUPERVISOR: MICHAEL J. WEBSTER
CALCULATED-DESIGNED BY: JOEL SIMS
CHECKED BY: RADHIKA MOTHKURI
REVISED BY
DATE REVISED

LAST REVISION 11-18-11
DATE PLOTTED => 22-FEB-2012
TIME PLOTTED => 10:28

Dist	COUNTY	ROUTE	POST MILES TOTAL PROJECT	SHEET No.	TOTAL SHEETS
11	SD	5	R10.0,R10.7	52	132

Joel P. Sims 11-14-11
REGISTERED CIVIL ENGINEER DATE

2-21-12
PLANS APPROVAL DATE

REGISTERED PROFESSIONAL ENGINEER
JOEL P. SIMS
No. 49715
Exp. 09-30-12
CIVIL
STATE OF CALIFORNIA

THE STATE OF CALIFORNIA OR ITS OFFICERS OR AGENTS SHALL NOT BE RESPONSIBLE FOR THE ACCURACY OR COMPLETENESS OF SCANNED COPIES OF THIS PLAN SHEET.

(218) G8-7 (CA)

LEGEND				ARROW	
LINE No.	U/L	Caps	Num	Deg	LENGTH
1		4"D	4"	180	9.56"
2	6" & 4-1/2" E (M)			0	9.56"

(202) R61-22 (MOD) (CA)

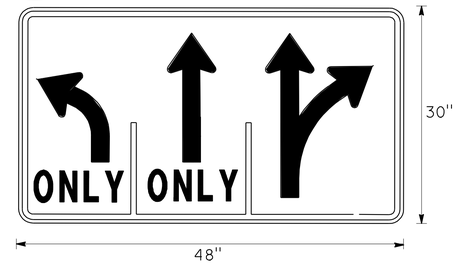

LEGEND				ARROW	
LINE No.	U/L	Caps	Num	Deg	LENGTH
1		4"D			

(221) (223) G8-7 (CA)

LEGEND				ARROW	
LINE No.	U/L	Caps	Num	Deg	LENGTH
1	6" & 4-1/2" E (M)			180	12.25"
2	6" & 4-1/2" E (M)			0	12.25"

(205) G8-7 (CA)

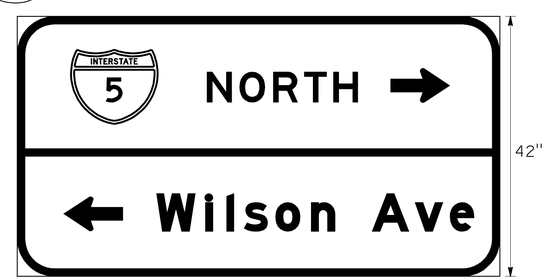

LEGEND				ARROW	
LINE No.	U/L	Caps	Num	Deg	LENGTH
1		4"D	4"	0	9.56"
2	6" & 4-1/2" E (M)			180	9.56"

SIGN DETAILS

CONTRACTOR FURNISHED SIGN PANEL

NO SCALE

SD-1

STATE OF CALIFORNIA - DEPARTMENT OF TRANSPORTATION
Caltrans
DESIGN

FUNCTIONAL SUPERVISOR: MICHAEL J. WEBSTER
CALCULATED-DESIGNED BY: JOEL SIMS
CHECKED BY: THANH NGUYEN
REVISED BY
DATE REVISED

LAST REVISION 11-18-11
DATE PLOTTED => 22-FEB-2012
TIME PLOTTED => 10:28

Dist	COUNTY	ROUTE	POST MILES TOTAL PROJECT	SHEET No.	TOTAL SHEETS
11	SD	5	R10.0,R10.7	53	132

Joel P. Sims 11-14-11
REGISTERED CIVIL ENGINEER DATE

2-21-12
PLANS APPROVAL DATE

REGISTERED PROFESSIONAL ENGINEER
JOEL P. SIMS
No. 49715
Exp. 09-30-12
CIVIL
STATE OF CALIFORNIA

THE STATE OF CALIFORNIA OR ITS OFFICERS OR AGENTS SHALL NOT BE RESPONSIBLE FOR THE ACCURACY OR COMPLETENESS OF SCANNED COPIES OF THIS PLAN SHEET.

(105) (144) G7-1 (CA)

LEGEND				ARROW	
LINE No.	U/L	Caps	Num	Deg	LENGTH
1	6" & 4-1/2" E (M)				

(101) (106) G7-1 (CA)

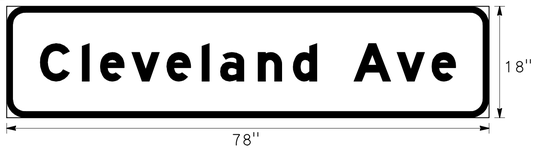

LEGEND				ARROW	
LINE No.	U/L	Caps	Num	Deg	LENGTH
1	6" & 4-1/2" E (M)				

(139) G77A (CA)

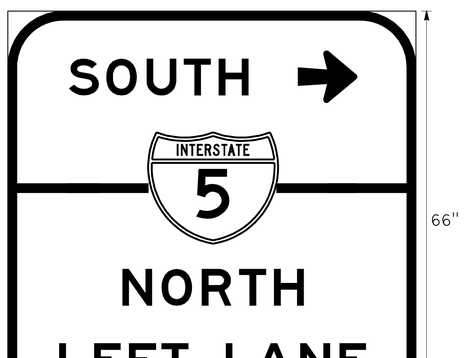

LEGEND				ARROW	
LINE No.	U/L	Caps	Num	Deg	LENGTH
1		6"		0	12.25"
2			8"		
3		6"			
4		6"			

(213) G7-1 (CA)

LEGEND				ARROW	
LINE No.	U/L	Caps	Num	Deg	LENGTH
1	6" & 4-1/2" E (M)				

SIGN DETAILS

CONTRACTOR FURNISHED SIGN PANEL

NO SCALE

SD-2

STATE OF CALIFORNIA - DEPARTMENT OF TRANSPORTATION
Caltrans®
DESIGN
FUNCTIONAL SUPERVISOR: MICHAEL J. WEBSTER
CALCULATED-DESIGNED BY: JOEL SIMS
CHECKED BY: THANH NGUYEN
REVISED BY
DATE REVISED

LAST REVISION 11-18-11
DATE PLOTTED => 22-FEB-2012
TIME PLOTTED => 10:29

Dist	COUNTY	ROUTE	POST MILES TOTAL PROJECT	SHEET No.	TOTAL SHEETS
11	SD	5	R10.0,R10.7	54	132

REGISTERED CIVIL ENGINEER 11-14-11 DATE

2-21-12
PLANS APPROVAL DATE

REGISTERED PROFESSIONAL ENGINEER JOEL P. SIMS No. 49715 Exp 09-30-12 CIVIL STATE OF CALIFORNIA

THE STATE OF CALIFORNIA OR ITS OFFICERS OR AGENTS SHALL NOT BE RESPONSIBLE FOR THE ACCURACY OR COMPLETENESS OF SCANNED COPIES OF THIS PLAN SHEET.

ROADSIDE SIGN QUANTITIES

NOTES:

1. FEDERAL MANUAL ON UNIFORM TRAFFIC CONTROL DEVICES SIGN CODES ARE SHOWN UNLESS DESIGNATED BY (CA) INDICATING STANDARD CALIFORNIA SIGN SPECIFICATIONS.
2. MINIMUM POST LENGTHS WERE CALCULATED ASSUMING A LEVEL GROUND SURFACE FROM THE EP. ENSURE "C" DIMENSION IS MET. POST LENGTHS MAY VARY DUE TO SITE CONDITIONS.
3. EXACT LOCATIONS OF SIGNS AND POSTS WILL BE DETERMINED BY THE ENGINEER.
4. REFER TO "FURNISH ROADSIDE SIGN PANEL" CHART FOR FURTHER INFORMATION.

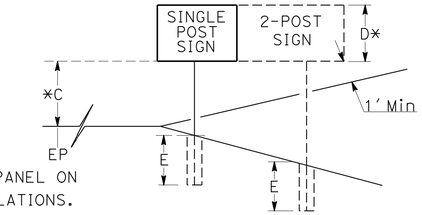

*TO BOTTOM OF LOWER PANEL ON MULTIPLE SIGN INSTALLATIONS.

SHEET	SIGN No.	CODE	PANEL SIZE Horiz	PANEL SIZE Vert	D	C	E	Min POST LENGTH	POST SIZE 4X4	POST SIZE 4X6	POST SIZE 6X6	POST SIZE 6X8	ROADSIDE SIGN ONE POST	ROADSIDE SIGN TWO POST	ROADSIDE SIGN RESET	ROADSIDE SIGN RELOCATE	ROADSIDE SIGN REMOVE	ROADSIDE SIGN INSTALL ROADSIDE SIGN PANEL ON EXISTING POST	PEDESTRIAN BARRICADE (N) INSTALL SIGN PANEL	INSTALL SIGN PANEL FLUSH TO BARRIER	INSTALL SIGN (STRAP & SADDLE BRACKET METHOD)	INSTALL SIGN MAST-ARM MOUNTED (N)	REMARKS
			In	In	LF	LF	LF	LF	In	In	In	In	EA	EA	EA	EA	EA	EA	EA	EA	EA	EA	
S-1	101	G7-1 (CA)	78	18																		1	MAST-ARM HANGER
	102	R26 (CA)	12	18														1					REMOVE Exist R81B (CA) PANEL
	103	W34C (Lt) (CA)	36	54	4.50	7.00	4.50	16.00		X			1										15'3"
	104	R3-4	30	30																		1	
	105	G7-1 (CA)	78	18																		1	MAST-ARM HANGER
	106	G7-1 (CA)	78	18																		1	MAST-ARM HANGER
	107	R9-3a	30	30		7.00															1		
	108	W3-1															1						
	109	R73-6 (CA)	36	36																		1	
	110	R11 (CA)																					
		R11A (CA)															1						
	111	G96 (CA)																					
		G96A (CA)																					FROM Sta 20+00 "BM" IN MEDIAN
		M6-1														1							
	112	R11 (CA)	36	36																			
		R11A (CA)	36	21	4.75	2.00	3.50	10.25	X				1										
	113	R3-2	30	30																		1	
	114	R11 (CA)	36	36																			
		R11A (CA)	36	21														2					
	115	R3-1	30	30		7.00															1		
	116	R26 (CA)															1						
	117	R81A (CA)	12	5																			
		R81 (CA)	24	18		7.00															2		
	118	G92 (CA)	48	30																			
		G27-2 (5) (CA)	24	24																			REMOVE Exist PANELS
		G48 (CA)	21	9																			USE Exist MOUNTING HARDWARE
		G43 (CA)	21	15																4			
	119	R3-2	30	30																		1	
	120	G92 (CA)	48	30																			
		G27-2 (5) (CA)	24	24																			REMOVE Exist PANELS
		G48 (CA)	21	9																			USE Exist MOUNTING HARDWARE
		G44 (CA)	21	15																4			
	121	G78 (CA)													1								
	122	R3-2	30	30														1					
	123	R49 (Rt) (CA)	42	18															1				REMOVE Exist PANEL
	124	R9-3a	30	30																	1		
	125	R9-3a	30	30	2.50	7.00	3.50	13.00	X				1										
	126	R73-6 (CA)	36	36																	1		REMOVE Exist R73-3 (CA) PANEL
	127	R81B (CA)	8	5																			
		R81 (CA)	24	18																			
		M4-11	12	4																			
		D11-1	24	18																	4		
	128	R6-1L	36	12		1.5														1			
	129	R11 (CA)	36	36																			REMOVE Exist PANELS
		R11A (CA)	36	21																2			USE Exist MOUNTING HARDWARE
	130	R3-1	30	30		4.5																	
		R9-3a	30	30		7.0																	TWO PANELS
		R6-1L,R	36	12		1.5															4		
												SUBTOTAL	3		1	1	3	4	1	11	14	7	

(N) NOT A SEPARATE PAY ITEM, FOR INFORMATION ONLY.

SIGN QUANTITIES

SQ-1

REVISED BY | DATE REVISED
JOEL SIMS | RADHIKA MOTHKURI
CALCULATED-DESIGNED BY | CHECKED BY
FUNCTIONAL SUPERVISOR: MICHAEL J. WEBSTER
STATE OF CALIFORNIA - DEPARTMENT OF TRANSPORTATION
Caltrans® DESIGN

LAST REVISION 11-18-11 | DATE PLOTTED => 22-FEB-2012 | TIME PLOTTED => 10:29

Dist	COUNTY	ROUTE	POST MILES TOTAL PROJECT	SHEET No.	TOTAL SHEETS
11	SD	5	R10.0,R10.7	55	132

REGISTERED CIVIL ENGINEER 11-14-11 DATE

2-21-12
PLANS APPROVAL DATE

REGISTERED PROFESSIONAL ENGINEER JOEL P. SIMS No. 49715 Exp 09-30-12 CIVIL STATE OF CALIFORNIA

THE STATE OF CALIFORNIA OR ITS OFFICERS OR AGENTS SHALL NOT BE RESPONSIBLE FOR THE ACCURACY OR COMPLETENESS OF SCANNED COPIES OF THIS PLAN SHEET.

ROADSIDE SIGN QUANTITIES

NOTES:

1. FEDERAL MANUAL ON UNIFORM TRAFFIC CONTROL DEVICES SIGN CODES ARE SHOWN UNLESS DESIGNATED BY (CA) INDICATING STANDARD CALIFORNIA SIGN SPECIFICATIONS.
2. MINIMUM POST LENGTHS WERE CALCULATED ASSUMING A LEVEL GROUND SURFACE FROM THE EP. ENSURE "C" DIMENSION IS MET. POST LENGTHS MAY VARY DUE TO SITE CONDITIONS.
3. EXACT LOCATIONS OF SIGNS AND POSTS WILL BE DETERMINED BY THE ENGINEER.
4. REFER TO "FURNISH ROADSIDE SIGN PANEL" CHART FOR FURTHER INFORMATION.

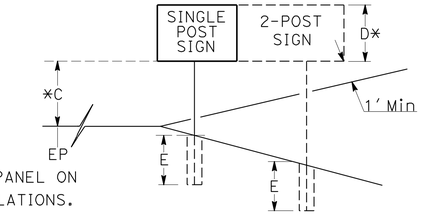

*TO BOTTOM OF LOWER PANEL ON MULTIPLE SIGN INSTALLATIONS.

SHEET	SIGN No.	CODE	PANEL SIZE Horiz	PANEL SIZE Vert	D	C	E	Min POST LENGTH	POST SIZE 4X4	POST SIZE 4X6	POST SIZE 6X6	POST SIZE 6X8	ROADSIDE SIGN ONE POST	ROADSIDE SIGN TWO POST	ROADSIDE SIGN RESET	ROADSIDE SIGN RELOCATE	ROADSIDE SIGN REMOVE	ROADSIDE SIGN INSTALL ROADSIDE SIGN PANEL ON EXISTING POST	PEDESTRIAN BARRICADE (N) INSTALL SIGN PANEL	INSTALL SIGN PANEL FLUSH TO BARRIER	INSTALL SIGN (STRAP & SADDLE BRACKET METHOD)	INSTALL SIGN MAST-ARM MOUNTED (N)	REMARKS
			In X In		LF	LF	LF	LF	In X In				EA	EA	EA	EA	EA	EA	EA	EA	EA	EA	
S-1	131	R9-3a	30 X 30			7.00															2		
	132	G92 (CA)																					
		G27 (CA)																					
		G48 (CA)																					
		G43 (CA)				2.00									1								
	133	G92 (CA)																					
		G27 (CA)																					
		G48 (CA)																					
		G44 (CA)															1						
	134	G77A (CA)															1						
	135	R61-15 (CA)	48 X 30																			1	
	136	G92 (CA)																					
		G27 (CA)																					
		G48 (CA)																					
		G44 (CA)														1							
	137	G92 (CA)																					
		G27 (CA)																					
		G48 (CA)															1						
	138	G78 (CA)															1						
	139	G77A (CA)	60 X 66		5.50	7.00	4.50	17.00		X				1									MOUNT R9-3a PANEL
		R9-3a	30 X 30																				ON RIGHT POST
	140	W12-2														1							
	141	R9-3a	30 X 30			7.00															2		ONE R9-3a FACING NORTH
		R81 (CA)	24 X 18			6.00															1		& ONE FACING WEST
	142	R1-1															1						
	143	R61-32 (CA)	36 X 30																			1	
	144	G7-1 (CA)	78 X 18																			1	MAST ARM HANGER
	145	R1-1															1						
	146	R1-1															1						
	147	R1-1															1						
	148	R81B (CA)															1						PANEL ONLY
	149	W3-1															1						
	150	W12-2	36 X 36																				15'3"
		W34A (CA)	36 X 30		5.50	7.00	4.50	17.00		X			1										800 Ft
	151	W34C (Rt) (CA)	36 X 54		4.50	7.00	4.50	16.00		X			1										15'3"
S-2	201	R3-4	30 X 30																			1	
	202	R61-22 (Mod) (CA)	48 X 30																			1	REMOVE Exist R73-3 (CA) PANEL
	203	G8 (CA)															1						
	204	G48 (CA)	21 X 9																				
		G27-2 (5) (CA)	24 X 24																				
		G45 (L) (CA)	21 X 15		4.00	7.00	3.50	14.50	X				1										
	205	G8-7 (CA)	72 X 42																		1		TO VERTICAL & HORIZONTAL SIGNAL STANDRADS
	206	G92 (CA)																					
		G27-2 (CA)																					
		G47 (CA)																					
		G43 (CA)															1						
												SUBTOTAL	3	1	1	2	12				6	5	

(N) NOT A SEPARATE PAY ITEM, FOR INFORMATION ONLY.

SIGN QUANTITIES

SQ-2

STATE OF CALIFORNIA - DEPARTMENT OF TRANSPORTATION
Caltrans
DESIGN

FUNCTIONAL SUPERVISOR: MICHAEL J. WEBSTER
CALCULATED-DESIGNED BY: RADHIKA MOTHKURI
CHECKED BY: JOEL SIMS
REVISED BY
DATE REVISED

LAST REVISION 11-18-11
DATE PLOTTED => 22-FEB-2012
TIME PLOTTED => 10:29

Dist	COUNTY	ROUTE	POST MILES TOTAL PROJECT	SHEET No.	TOTAL SHEETS
11	SD	5	R10.0,R10.7	56	132

REGISTERED CIVIL ENGINEER 11-14-11 DATE

2-21-12
PLANS APPROVAL DATE

REGISTERED PROFESSIONAL ENGINEER JOEL P. SIMS No. 49715 Exp 09-30-12 CIVIL STATE OF CALIFORNIA

THE STATE OF CALIFORNIA OR ITS OFFICERS OR AGENTS SHALL NOT BE RESPONSIBLE FOR THE ACCURACY OR COMPLETENESS OF SCANNED COPIES OF THIS PLAN SHEET.

ROADSIDE SIGN QUANTITIES

NOTES:

1. FEDERAL MANUAL ON UNIFORM TRAFFIC CONTROL DEVICES SIGN CODES ARE SHOWN UNLESS DESIGNATED BY (CA) INDICATING STANDARD CALIFORNIA SIGN SPECIFICATIONS.
2. MINIMUM POST LENGTHS WERE CALCULATED ASSUMING A LEVEL GROUND SURFACE FROM THE EP. ENSURE "C" DIMENSION IS MET. POST LENGTHS MAY VARY DUE TO SITE CONDITIONS.
3. EXACT LOCATIONS OF SIGNS AND POSTS WILL BE DETERMINED BY THE ENGINEER.
4. REFER TO "FURNISH ROADSIDE SIGN PANEL" CHART FOR FURTHER INFORMATION.

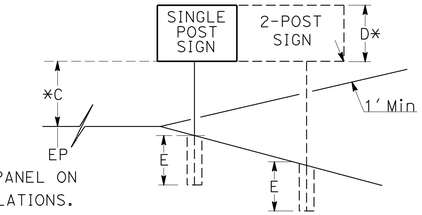

*TO BOTTOM OF LOWER PANEL ON MULTIPLE SIGN INSTALLATIONS.

SHEET	SIGN No.	CODE	PANEL SIZE Horiz	PANEL SIZE Vert	D	C	E	Min POST LENGTH	POST SIZE 4X4	POST SIZE 4X6	POST SIZE 6X6	POST SIZE 6X8	ROADSIDE SIGN ONE POST	ROADSIDE SIGN TWO POST	ROADSIDE SIGN RESET	ROADSIDE SIGN RELOCATE	ROADSIDE SIGN REMOVE	ROADSIDE SIGN INSTALL ROADSIDE SIGN PANEL ON EXISTING POST	PEDESTRIAN BARRICADE (N) INSTALL SIGN PANEL	INSTALL SIGN PANEL FLUSH TO BARRIER	INSTALL SIGN (STRAP & SADDLE BRACKET METHOD)	INSTALL SIGN MAST-ARM MOUNTED (N)	REMARKS
			In	In	LF	LF	LF	LF	In	In	In	In	EA	EA	EA	EA	EA	EA	EA	EA	EA	EA	
S-2	207	G92 (CA)	48	30																			
		G27-2 (5) (CA)	24	24																			
		G47 (CA)	21	9																			
		G43 (CA)	21	15	6.50	2.00	3.50	12.00		X			1										
	208	R5-10a													1								
	209	R61-7.1 (CA)	36	30																		1	
	210	G92 (CA)	48	30																			
		G27-2 (5) (CA)	24	24																			
		G47 (CA)	21	9																			
		G44 (CA)	21	15	6.50	2.00	3.50	12.00		X			1										
	211	G92 (CA)																					
		G27-2 (CA)																					
		G47 (CA)																					
		G44 (CA)															1						
	212	OMITTED SIGN																					
	213	G8-7 (CA)	78	18																	1		
	214	G7 (CA)													1								
	215	G47 (CA)	21	9																			
		G27-2 (CA)	24	24																			
		G34 (CA)	21	15	4.00	7.00	3.50	14.50	X				1										
	216	G77 (CA)															1						
	217	R1-1															1						
	218	G8-7 (CA)	78	18																	1		TO VERTICAL & HORIZONTAL MEMBERS
	219	G47 (CA)	21	9																			
		G27-2 (CA)	24	24																			
		G34 (CA)	21	15													1						
	220	G47 (CA)	21	9																			
		G27-2 (CA)	24	24																			
		G34 (CA)	21	15																	3		
	221	G8-7 (CA)	102	42														1					
	222	W10-1															1						
	223	G8-7 (CA)	102	42														1					
	224	R9-3a	30	30		7.00															1		
	225	R9-3a	30	30	2.50	7.00	3.50	13.00	X				1										
	226	R3-4	30	30																		1	
	227	R3-4	30	30																		1	
												SUBTOTAL	4		2		5	2	1		6	3	
												SUBTOTAL SC-1	3		1	1	3	4		11	14	7	
												SUBTOTAL SC-2	3	1	1	2	12				6	5	
												TOTAL	10	1	4	3	20	6		11	26		

(N) NOT A SEPARATE PAY ITEM, FOR INFORMATION ONLY.

SIGN QUANTITIES

SQ-3

REVISED BY | DATE REVISED

JOEL SIMS | RADHIKA MOTHKURI

CALCULATED-DESIGNED BY | CHECKED BY

FUNCTIONAL SUPERVISOR: MICHAEL J. WEBSTER

STATE OF CALIFORNIA - DEPARTMENT OF TRANSPORTATION

DESIGN

Caltrans

LAST REVISION 11-18-11 | DATE PLOTTED => 22-FEB-2012 | TIME PLOTTED => 10:29

Dist	COUNTY	ROUTE	POST MILES TOTAL PROJECT	SHEET No.	TOTAL SHEETS
11	SD	5	R10.0,R10.7	57	132

Joel P. Sims 11-14-11
REGISTERED CIVIL ENGINEER DATE

2-21-12
PLANS APPROVAL DATE

REGISTERED PROFESSIONAL ENGINEER JOEL P. SIMS No. 49715 Exp. 09-30-12 CIVIL STATE OF CALIFORNIA

THE STATE OF CALIFORNIA OR ITS OFFICERS OR AGENTS SHALL NOT BE RESPONSIBLE FOR THE ACCURACY OR COMPLETENESS OF SCANNED COPIES OF THIS PLAN SHEET.

NOTES:

1. FEDERAL MANUAL ON UNIFORM TRAFFIC CONTROL DEVICES SIGN CODES ARE SHOWN UNLESS DESIGNATED BY (CA) INDICATING STANDARD CALIFORNIA SIGN SPECIFICATIONS.
2. PROTECTIVE OVERLAY DESIGNATIONS ARE AS FOLLOWS: SOC-SPRAY-ON COATING, SF-STANDARD FILM, AND PF-PREMIUM FILM.
3. REFER TO "ROADSIDE SIGN QUANTITIES" CHART FOR FURTHER INFORMATION.
4. GREEN - Grn, WHITE - Wht, BLACK - Blk, BLUE - Blu, YELLOW - Ylw, BROWN - Brn, RED - Red, ORANGE - Org

FURNISH ROADSIDE SIGN PANEL

SIGN No.	CODE	PANEL SIZE Horiz (INCHES)	PANEL SIZE Vert (INCHES)	BACKGROUND SHEETING COLOR	BACKGROUND RETRO-REFLECTIVE ASTM TYPE	LEGEND SHEETING COLOR	LEGEND REFLECTIVE ASTM TYPE	LEGEND BLACK (NON-REFLECTIVE)	SIGN PANEL SINGLE SHEET ALUMINUM (SQFT) UNFRAMED 0.063 INCHES	UNFRAMED 0.080 INCHES	FRAMED 0.063 INCHES	FRAMED 0.080 INCHES	PREMIUM PROTECTIVE OVERLAY FILM	REMARKS
101	G7-1 (CA)	78	18	Grn	IV	Wht	IV			9.75			X	
102	R26 (CA)	12	18	Wht	VII	Red	VII		1.50				X	
103	W34C (Lt) (CA)	36	54	Ylw	VII	Blk		X	13.50				X	
104	R3-4	30	30	Wht	VII	Red/Blk	VII	X	6.25				X	
105	G7-1 (CA)	78	18	Grn	IV	Wht	IV			9.75			X	
106	G7-1 (CA)	78	18	Grn	IV	Wht	IV			9.75			X	
107	R9-3a	30	30	Wht	VII	Red/Blk	VII	X	6.25				X	
109	R73-6 (CA)	36	36	Wht	VII	Red/Blk	VII	X	9.00				X	
112	R11 (CA)	36	36	Wht	VII	Blk		X	9.00				X	
	R11A (CA)	36	21	Wht	VII	Red/Wht	VII		5.25				X	
113	R3-2	30	30	Wht	VII	Red/Blk	VII	X	6.25				X	
114	R11 (CA)	36	36	Wht	VII	Blk		X	9.00				X	
	R11A (CA)	36	21	Wht	VII	Red/Wht	VII		5.25				X	
115	R3-1	30	30	Wht	VII	Red/Blk	VII	X	6.25				X	
117	R81A (CA)	12	5	Wht	VII	Blk		X	0.42				X	
	R81 (CA)	24	18	Wht	VII	Blk		X	3.00				X	
118	G92 (CA)	48	30	Grn	IV	Wht	IV			10.00			X	
	G27-2 (CA)	24	24	Blu/Red	IV	Wht	IV		4.00				X	
	G48 (CA)	21	9	Grn	IV	Wht	IV		1.31				X	
	G43 (CA)	21	15	Grn	IV	Wht	IV		2.19				X	
119	R3-2	30	30	Wht	VII	Red/Blk	VII	X	6.25				X	
120	G92 (CA)	48	30	Grn	IV	Wht	IV			10.00			X	
	G27-2 (CA)	24	24	Blu/Red	IV	Wht	IV		4.00				X	
	G48 (CA)	21	9	Grn	IV	Wht	IV		1.31				X	
	G44 (CA)	21	15	Grn	IV	Wht	IV		2.19				X	
122	R3-2	30	30	Wht	VII	Red/Blk	VII	X	6.25				X	
123	R49 (Rt) (CA)	42	18	Wht	VII	Blk		X		5.25			X	
124	R9-3a	30	30	Wht	VII	Red/Blk	VII	X	6.25				X	
125	R9-3a	30	30	Wht	VII	Red/Blk	VII	X	6.25				X	
126	R73-6 (CA)	36	36	Wht	VII	Blk		X	9.00				X	
127	R81B (CA)	8	5	Wht	VII	Blk		X	0.28				X	
	R81 (CA)	24	18	Wht	VII	Blk		X	3.00				X	
	M4-11	12	4	Grn	VII	Wht	VII		0.33				X	
	D11-1	24	18	Grn	VII	Wht	VII		0.28				X	
128	R6-1L	24	18	Blk	VII	Wht/Blk	VII	X	0.28				X	
129	R11 (CA)	36	36	Wht	VII	Blk		X	9.00				X	
	R11A (CA)	36	21	Wht	VII	Red/Wht	VII		5.25				X	
130	R3-1	30	30	Wht	VII	Red/Blk	VII	X	6.25				X	
	R9-3a	30	30	Wht	VII	Red/Blk	VII	X	6.25				X	
	R6-1L,R	36	12	Blk	VII	Wht/Blk	VII	X	5.25				X	
131	R9-3a	30	30	Wht	VII	Red/Blk	VII	X	12.50				X	2 EACH
135	R61-15 (CA)	48	30	Wht	VII	Blk		X		10.00			X	
139	G77A (CA)	60	66	Grn	IV	Wht	IV				27.50		X	
	R9-3a	30	30	Wht	VII	Red/Blk	VII	X	6.25				X	
141	R9-3a	30	30	Wht	VII	Red/Blk	VII	X	6.25				X	
	R81 (CA)	24	18	Wht	VII	Blk		X	0.28				X	
143	R61-32 (CA)	36	30	Wht	VII	Blk		X	7.50				X	
144	G7-1 (CA)	78	18	Grn	IV	Wht	IV			9.00			X	
150	W12-2	36	36	Ylw	VII	Blk	VII	X	6.25				X	
	W34A	36	30	Ylw	VII	Blk	VII	X	7.50				X	
151	W34C (Rt) (CA)	36	54	Ylw	VII	Blk	VII	X	13.50				X	
							SUB-TOTAL		226.12	73.50	27.50			

SIGN QUANTITIES

SQ-4

STATE OF CALIFORNIA - DEPARTMENT OF TRANSPORTATION
Caltrans® DESIGN

FUNCTIONAL SUPERVISOR: MICHAEL J. WEBSTER
CALCULATED-DESIGNED BY: JOEL SIMS
CHECKED BY: RADHIKA MOTHKURI
REVISED BY
DATE REVISED

LAST REVISION 11-18-11
DATE PLOTTED => 22-FEB-2012
TIME PLOTTED => 10:29

Dist	COUNTY	ROUTE	POST MILES TOTAL PROJECT	SHEET No.	TOTAL SHEETS
11	SD	5	R10.0,R10.7	58	132

REGISTERED CIVIL ENGINEER 11-14-11 DATE

2-21-12
PLANS APPROVAL DATE

REGISTERED PROFESSIONAL ENGINEER JOEL P. SIMS No. 49715 Exp 09-30-12 CIVIL STATE OF CALIFORNIA

THE STATE OF CALIFORNIA OR ITS OFFICERS OR AGENTS SHALL NOT BE RESPONSIBLE FOR THE ACCURACY OR COMPLETENESS OF SCANNED COPIES OF THIS PLAN SHEET.

NOTES:

1. FEDERAL MANUAL ON UNIFORM TRAFFIC CONTROL DEVICES SIGN CODES ARE SHOWN UNLESS DESIGNATED BY (CA) INDICATING STANDARD CALIFORNIA SIGN SPECIFICATIONS.
2. PROTECTIVE OVERLAY DESIGNATIONS ARE AS FOLLOWS: SOC-SPRAY-ON COATING, SF-STANDARD FILM, AND PF-PREMIUM FILM.
3. REFER TO "ROADSIDE SIGN QUANTITIES" CHART FOR FURTHER INFORMATION.
4. GREEN - Grn, WHITE - Wht, BLACK - Blk, BLUE - Blu, YELLOW - Ylw, BROWN - Brn, RED - Red, ORANGE - Org

FURNISH ROADSIDE SIGN PANEL

SIGN No.	CODE	PANEL SIZE Horiz (INCHES X INCHES)	PANEL SIZE Vert (INCHES X INCHES)	BACKGROUND SHEETING COLOR	BACKGROUND RETRO-REFLECTIVE ASTM TYPE	LEGEND SHEETING COLOR	LEGEND REFLECTIVE ASTM TYPE	LEGEND BLACK (NON-REFLECTIVE)	SIGN PANEL SINGLE SHEET ALUMINUM (SQFT) UNFRAMED 0.063 INCHES	UNFRAMED 0.080 INCHES	FRAMED 0.063 INCHES	FRAMED 0.080 INCHES	PREMIUM PROTECTIVE OVERLAY FILM	REMARKS
201	R3-4	30	30	Wht	VII	Red/Blk	VII	X	6.25				X	
202	R61-22 (Mod) (CA)	48	30	Wht	VII	Blk		X		10.00			X	
204	G48 (CA)	21	9	Grn	IV	Wht	IV		1.31				X	
	G27-2 (5) (CA)	24	24	Blu/Red	IV	Wht	IV		4.00				X	
	G45 (CA)	21	15	Grn	VII	Wht	VII		2.19				X	
205	G8-7 (CA)	72	42	Grn	IV	Wht	IV				21.00		X	
207	G92 (CA)	48	30	Grn	IV	Wht	IV			10.00			X	
	G27-2 (5) (CA)	24	24	Blu/Red	IV	Wht	IV		4.00				X	
	G47 (CA)	21	9	Grn	IV	Wht	IV		1.31				X	
	G43 (CA)	21	15	Grn	VII	Wht	VII		2.19				X	
209	R61-7.1 (CA)	36	30	Wht	VII	Blk		X	7.50				X	
210	G92 (CA)	48	30	Grn	IV	Wht	IV			10.00			X	
	G27-2 (5) (CA)	24	24	Blu/Red	IV	Wht	IV		4.00				X	
	G47 (CA)	21	9	Grn	IV	Wht	IV		1.31				X	
	G44 (CA)	21	15	Grn	VII	Wht	VII		2.19				X	
212	OMITTED SIGN													
213	G8-7 (CA)	78	18	Grn	IV	Wht	IV				9.75		X	
215	G47 (CA)	21	9	Grn	IV	Wht	IV		1.31				X	
	G27-2 (5) (CA)	24	24	Blu/Red	IV	Wht	IV		4.00				X	
	G34 (CA)	21	15	Grn	IV	Wht	IV		2.19				X	
218	G8-7 (CA)	78	18	Grn	IV	Wht	IV				9.75		X	
220	G47 (CA)	21	9	Grn	IV	Wht	IV		1.31				X	
	G27-2 (5) (CA)	24	24	Blu/Red	IV	Wht	IV		4.00				X	
	G34 (CA)	21	15	Grn	IV	Wht	IV		2.19				X	
221	G8-7 (CA)	102	42	Grn	IV	Wht	IV					29.75	X	
223	G8-7 (CA)	102	42	Grn	IV	Wht	IV					29.75	X	
224	R9-3a	30	30	Wht	VII	Red/Blk	VII	X	6.25				X	
225	R9-3a	30	30	Wht	VII	Red/Blk	VII	X	6.25				X	
226	R3-4	30	30	Wht	VII	Red/Blk	VII	X	6.25				X	
227	R3-4	30	30	Wht	VII	Red/Blk	VII	X	6.25				X	
								SUBTOTAL	76.31	30.00	40.50	59.50		
								SUBTOTAL (SQ-4)	226.12	73.50	27.50			
								TOTAL	302.43	103.50	68.00	59.50		

SIGN QUANTITIES

SQ-5

STATE OF CALIFORNIA - DEPARTMENT OF TRANSPORTATION
DESIGN
Caltrans

FUNCTIONAL SUPERVISOR: MICHAEL J. WEBSTER
CALCULATED-DESIGNED BY: JOEL SIMS
CHECKED BY: RADHIKA MOTHKURI
REVISED BY
DATE REVISED

LAST REVISION 11-18-11
DATE PLOTTED => 22-FEB-2012
TIME PLOTTED => 10:29

Dist	COUNTY	ROUTE	POST MILES TOTAL PROJECT	SHEET No.	TOTAL SHEETS
11	SD	5	R10.0,R10.7	59	132

Joel P. Sims 11-14-11
REGISTERED CIVIL ENGINEER DATE

2-21-12
PLANS APPROVAL DATE

REGISTERED PROFESSIONAL ENGINEER JOEL P. SIMS No. 49715 Exp. 09-30-12 CIVIL STATE OF CALIFORNIA

THE STATE OF CALIFORNIA OR ITS OFFICERS OR AGENTS SHALL NOT BE RESPONSIBLE FOR THE ACCURACY OR COMPLETENESS OF SCANNED COPIES OF THIS PLAN SHEET.

MINOR CONCRETE (MISCELLANEOUS CONSTRUCTION)

SHEET	LOCATION	CY	REMARKS
L-1	16+95.30 "BM" TO 564+63.00 "NE-24"	20.88	A2-8 CURB
	16+72.05 "BM" TO 562+75.14 "ES-24"	23.87	A2-8 CURB
	562+30.26 "ES-24" TO 20+47.06 "BM"	0.97	A2-8 CURB
	20+47.06 TO 20+64.15 "BM"	0.97	B4 CURB Mod
	22.11.75 "BM" TO 563+11.62 "SE-24"	6.77	A2-8 CURB
	16+95.30 TO 19+56.13 "BM"	14.49	SIDEWALK
	22+07.81 "BM" TO 563+11.62 "SE-24"	9.98	CONCRETE SLAB
	20+64.15 TO 22+11.75 "BM"	8.64	CONCRETE PAD
	46.55′ L+ "BM" 19+65.64	0.60	CURB RAMP (TYPE C Mod)
	98.31′ L+ "BM" 19+43.63	0.14	Conc LINED DITCH END CAP
	105.10′ R+ "BM" 19+58.11	0.14	Conc LINED DITCH END CAP
L-2	602+23.40 TO 602+31.39 "EN-13A"	0.47	A2-6 CURB
	26+18.92 "CC" TO 602+03.58 "EN-13A"	3.28	A2-6 CURB
	25.75′ R+ "CC" 26+39.79	0.84	CURB RAMP (TYPE A)
	35.11′ R+ "CC" 26+65.50	0.84	CURB RAMP (TYPE A)
	31.47′ L+ "CC" 26+39.39	0.84	CURB RAMP (TYPE A)
	33.33′ L+ "CC" 26+98.75	0.84	CURB RAMP (TYPE A)
	35.38′ R+ "CC" 27+32.05	0.75	CURB RAMP (TYPE F)
	39.75′ R+ "EN-13A" 602+82.64	0.20	Conc CHANNEL END CAP
TOTAL		95.51	

MISCELLANEOUS IRON AND STEEL

SHEET	ITEM	LB
C-4	3/8" METAL COVER PLATE	118.6 **

** FOR ADDITIONAL QUANTITIES SEE DRAINAGE QUANTITIES.

RELOCATE BOULDER

SHEET	EA
L-1	3

STRUCTURAL SECTION QUANTITIES

SHEET	STATION BEGIN	STATION END	LINE	SIDE	COLD PLANE AC PAVEMENT (SQYD)	RUBBERIZED HMA (GAP GRADED) (TON)	HMA (TYPE A) (TON)	TACK COAT (TON)	ASPHALTIC EMULSION (FOG SEAL COAT) (TON)	CLASS 2 AGGREGATE BASE (CY)
L-1	16+95.30	19+33.29	"BM"	L+	832	111	11	0.2		31
	19+33.29	20+28.50	"BM"	L+	410	55	16	0.2		47
	20+28.50	22+91.00	"BM"	L+	933	125	18	0.3	0.10	
	22+91.00	23+58.31	"BM"	L+	213	29		0.1		
	16+68.39	17+07.02	"BM"	R+	146	19		0.1		
	17+07.02	19+64.00	"BM"	R+	702	94	206	1.0		634
	19+64.00	20+34.94	"BM"	R+	249	33	22	0.3		32
	20+34.94	22+97.28	"BM"	R+	935	125	57	0.4		261
	22+97.28	23+58.37	"BM"	R+	190	25		0.1		
	562+10.00	563+00.00	"ES-24"	L+			18		0.10	
L-2	601+92.10	605+33.56	"EN-13A"	L+/R+			349	0.8	0.10	707
Q-1	* HMA PAD UNDER DIKE						10			
Q-1	* FOG SEAL COAT ON DIKE								0.07	
Q-1	* TACK COAT PAD UNDER DIKE							0.02		
				TOTAL	4,610	616	707	3.6	0.37	1,712

DIKE QUANTITIES

SHEET	STATION BEGIN	LINE	SIDE	STATION END	LINE	SIDE	PLACE HMA DIKE TYPE F (LF)	PLACE HMA DIKE TYPE C (LF)	PLACE HMA DIKE TYPE E (LF)	MINOR HMA (TON)	REMOVE AC DIKE (LF)	HMA (TYPE A) (PAD UNDER DIKE) (TON)	TACK COAT (PAD UNDER DIKE) (TON)	ASPHALTIC EMULSION (FOG SEAL COAT) (TON)
L-1	560+56.00	"ES-24"	L+	560+79.00	"ES-24"	L+	23			0.3	23	0.2	0.001	0.01
L-1	560+79.00	"ES-24"	L+	561+48.00	"ES-24"	L+		69		0.5	69	0.7	0.001	0.01
L-1	561+48.00	"ES-24"	L+	562+75.14	"ES-24"	L+			127	3.3	62	2.5	0.004	0.01
L-2	604+25.00	"EN-13A"	L+	605+33.56	"EN-13A"	L+			110	2.9		2.2	0.004	0.01
L-2	602+03.58	"EN-13A"	R+	602+40.00	"EN-13A"	R+			37	1.0		0.7	0.004	0.01
L-2	602+40.00	"EN-13A"	R+	603+11.00	"EN-13A"	R+		67		0.5		0.7	0.001	0.01
L-2	603+11.00	"EN-13A"	R+	605+33.56	"EN-13A"	R+	210			2.8		2.1	0.004	0.01
						TOTAL	233	136	274	11.3	154	9.1*	0.02*	0.07*

* TOTAL ADDED TO STRUCTURAL SECTION QUANTITIES TABLE

REPLACE ASPHALT CONCRETE SURFACING

SHEET	STATION BEGIN	STATION END	LINE	SIDE	VOLUME (CY)
C-9	20+11.77	21+50.00	"BM"	L+	83
				TOTAL	83

SUMMARY OF QUANTITIES
Q-1

STATE OF CALIFORNIA - DEPARTMENT OF TRANSPORTATION
Caltrans DESIGN
FUNCTIONAL SUPERVISOR: MICHAEL J. WEBSTER
CALCULATED-DESIGNED BY: FARDAD FEHBOODY
CHECKED BY: JOEL SIMS
REVISED BY / DATE REVISED

LAST REVISION 11-18-11 | DATE PLOTTED => 22-FEB-2012 | TIME PLOTTED => 10:14

Dist	COUNTY	ROUTE	POST MILES TOTAL PROJECT	SHEET No.	TOTAL SHEETS
11	SD	5	R10.0,R10.7	60	132

Joel P. Sims 11-14-11
REGISTERED CIVIL ENGINEER DATE

2-21-12
PLANS APPROVAL DATE

REGISTERED PROFESSIONAL ENGINEER JOEL P. SIMS No. 49715 Exp 09-30-12 CIVIL STATE OF CALIFORNIA

THE STATE OF CALIFORNIA OR ITS OFFICERS OR AGENTS SHALL NOT BE RESPONSIBLE FOR THE ACCURACY OR COMPLETENESS OF SCANNED COPIES OF THIS PLAN SHEET.

EARTHWORK QUANTITIES

LINE	STATION FROM	STATION TO	ROADWAY EXCAVATION (CY)	EMBANKMENT (N) (CY)	ROADWAY EXCAVATION (TYPE Z-2) (AERIALLY DEPOSITED LEAD) (CY)	ROADWAY EXCAVATION (TYPE J) (AERIALLY DEPOSITED LEAD) (CY)
"BM"	16+70.04	23+01.43	1760	200	291	
"EN-13A"	601+92.10	605+33.56	425	100		275
		TOTAL	2185	300	291	275

METAL BEAM GUARD RAILING SUMMARY

MBGR No.	SHEET	(N) LAYOUT TYPE	MBGR	REMOVE MBGR	END ANCHOR ASSEMBLY (TYPE SFT)	GUARD RAILING DELINEATOR TYPE F	GUARD RAILING DELINEATOR TYPE G	ALTERNATIVE FLARED TERMINAL SYSTEM	(N) REMOVE CABLE ANCHOR ASSEMBLY	REMARKS
			LF	LF	EA	EA	EA	EA	EA	
1	L-2	16B	37.5	75.0	1	3		1	2	
2	L-2	16B	175.0	75.0	1		7	1	2	SEE NOTE 1
		TOTAL	212.5	150.0	2	10		2		

(N) - NOT A SEPARATE PAY ITEM, FOR INFORMATION ONLY.

REMOVE CONCRETE (MISCELLANEOUS)

SHEET	STATION	SIDE	CY	REMARKS
L-1	18+71.09 TO 20+11.67 "BM"	R†/L†	8.30	A2-6 CURB
	16+72.05 TO 16+74.55 "BM"	R†	1.85	A2-8 CURB
	562+30.26 "ES-24" TO 21+24.30 "BM"	R†	6.51	A2-8 CURB
	21+24.30 "BM" TO 563+11.62 "SE-24"	R†	18.74	A2-8 CURB Mod
	562+30.26 "ES-24" TO 563+11.62 "SE-24"	R†	26.16	SIDEWALK (0.3' THICK)*
	20+28.50 TO 21+24.10 "BM"	L†	1.77	1.0' PARTIAL A2-8 CURB
	21+24.10 TO 22+91.00 "BM"	L†	8.34	2.7' PARTIAL A2-8 CURB Mod
	21+76.83 TO 22+07.81 "BM"	R†	2.04	PARTIAL CONCRETE WALL
	19+58.50 "BM"	L†	0.60	CURB RAMP (TYPE C Mod)
	17+69.31 "BM" TO 564+60.27 "NE-24"	L†	11.00	CONCRETE LINED DITCH
	17+67.13 TO 19+51.55 "BM"	R†	13.26	CONCRETE LINED DITCH
L-2	602+23.40 TO 602+96.37 "EN-13A"	L†	4.50	B2 CURB
	603+70.00 TO 605+33.56 "EN-13A"	L†	10.09	B2 CURB
	26+53.47 "CC"	R†	0.67	CURB RAMP (TYPE A)
	26+39.39 "CC"	L†	0.67	CURB RAMP (TYPE A)
	26+98.75 "CC"	L†	0.67	CURB RAMP (TYPE A)
	27+32.05 "CC"	R†	0.60	CURB RAMP (TYPE F)
	602+65.00 TO 602+82.64 "EN-13A"	R†	2.91	CONCRETE LINED DITCH
	602+75.31 TO 602+95.00 "EN-13A"	R†	2.03	CONCRETE LINED DITCH
	26+18.92 "CC" TO 602+65.00 "EN-13A"	R†/R†	7.26	A2-6 CURB
		TOTAL	127.97	

* INCLUDES REMOVAL OF EXISTING CONCRETE SLAB.

MINOR CONCRETE (MINOR STRUCTURE)

SHEET	CY	REMARKS
L-1	1.74 *	ANCHOR BLOCK

* FOR ADDITIONAL QUANTITIES SEE DRAINAGE QUANTITIES.

IMPORTED TOPSOIL

SHEET	CY
C-11	171

CONCRETE BARRIER

SHEET	LINE	SIDE	TYPE 60D LF	TYPE 60 Mod LF
L-1	"BM"	R†	81	68

ALTERNATIVE CRASH CUSHION SYSTEM

SHEET	EA
L-1	1

6' CHAIN LINK GATE (TYPE CL-6)

SHEET	EA
L-2	1

SUMMARY OF QUANTITIES

Q-2

REVISED BY | DATE REVISED
FARDAD BEHBOODY | JOEL SIMS
CALCULATED-DESIGNED BY | CHECKED BY
FUNCTIONAL SUPERVISOR | MICHAEL J. WEBSTER
STATE OF CALIFORNIA - DEPARTMENT OF TRANSPORTATION
Caltrans
DESIGN

LAST REVISION 11-18-11 | DATE PLOTTED => 22-FEB-2012 | TIME PLOTTED => 10:14

Dist	COUNTY	ROUTE	POST MILES TOTAL PROJECT	SHEET No.	TOTAL SHEETS
11	SD	5	R10.0,R10.7	61	132

LICENSED LANDSCAPE ARCHITECT

2-21-12
PLANS APPROVAL DATE

LICENSED LANDSCAPE ARCHITECT NEIL CORWIN BLEEKER No. 1367 STATE OF CALIFORNIA
Registration Expiration Date 08-31-13
Renewal Date 11-15-11
Date

THE STATE OF CALIFORNIA OR ITS OFFICERS OR AGENTS SHALL NOT BE RESPONSIBLE FOR THE ACCURACY OR COMPLETENESS OF SCANNED COPIES OF THIS PLAN SHEET.

ABBREVIATIONS:

AMEND — AMENDMENT
B & B — BALLED AND BURLAPPED
Dia — DIAMETER
EA — EACH
LB — POUND
Oz — OUNCE
Ft — FOOT/FEET
SQFT — SQUARE FEET
SQYD — SQUARE YARD
CF — CUBIC FEET
CY — CUBIC YARD
Max — MAXIMUM
Min — MINIMUM
NCN — NO COMMON NAME
No. — NUMBER
Pkt — PACKET
PLT ESTB — PLANT ESTABLISHMENT
PSFM — POLYMER STABILIZED FIBER MATRIX
Pvmt — PAVEMENT
R/W — RIGHT OF WAY
SF — STATE FURNISHED
TRVD — TRAVELED

NOTE:

1. UNDERLINED PORTIONS OF BOTANICAL NAMES INDICATE ABBREVIATIONS USED ON PLANTING PLANS.

PLANT LIST AND PLANTING SPECIFICATIONS

PLANT GROUP	PLANT No.	SYMBOL	BOTANICAL NAME	COMMON NAME	SIZE	QUANTITY EACH	HOLE SIZE (INCH) Dia	HOLE SIZE (INCH) DEPTH	BASIN TYPE	IRON SULFATE (1)	SOIL AMEND (1)	COMMERCIAL FERTILIZER (1) PLANTING	COMMERCIAL FERTILIZER (1) PLT ESTB	BASIN MULCH (CY)	STAKING	PLANTING LIMITS MINIMUM DISTANCE (Ft) FROM TRVD WAY	Pvmt	FENCE	WALL	PAVED DITCH	EARTH DITCH	ON CENTER (Ft)	REMARKS
B	1		BOUGAINVILLEA 'LA JOLLA'	NCN	No. 5	35	(2)	(2)	I	-	-	3 Pkt	—	0.06	-	-	6	6	6	6	8	(4)	SHRUB
F	2		MYOPORUM PARVIFOLIUM 'PUTAH CREEK'	NCN	IN FLATS	4,403	-	-	-	-	-	8 LB/ 1000 SQFT	4 LB/ 1000 SQFT	-	-	-	8	6	6	6	8	24"	GROUNDCOVER
H	3		CARPOBROTUS EDULIS	HOTTENTOT FIG	CUTTINGS	6,430	-	-	-	-	-	8 LB/ 1000 SQFT	4 LB/ 1000 SQFT	-	-	-	8	6	6	6	8	12"	GROUNDCOVER
K	4		TIPUANA TIPU	TIPU TREE	24" BOX	5	(2)	(2)	I	8 Oz	-	5 Pkt	1 LB	0.20	(6)	30	-	20	20	20	-	(4)	TREE - STANDARD
Z	5		PHOENIX RECLINATA	SENEGAL DATE PALM	PALM	9	(8)	(8)	(8)	8 Oz	-	20 Pkt	1 LB	0.20	-	30	-	10	10	8	10	(4)	PALM TREE (9) (10)

APPLICABLE WHEN CIRCLED:

(1) - QUANTITIES SHOWN ARE "PER PLANT" UNLESS SHOWN AS SQFT OR SQYD APPLICATION RATES.
(2) - SUFFICIENT TO RECEIVE ROOT BALL.
3 - INCLUDED WITH AREA MULCH.
(4) - AS SHOWN ON PLANS.
5 - UNLESS OTHERWISE SHOWN ON PLANS.
(6) - SEE STANDARD DETAIL.
7 - SEE SPECIAL PROVISIONS.
(8) - SEE DETAIL
(9) 20 ft COMBINED BROWN TRUNK HEIGHT FOUR TO SIX STEMS PER CLUMP
(10) - MALE ONLY

LEGEND:

ROCK MULCH

PLANT LIST
PL-1

REVISED BY | DATE REVISED
NEIL BLEEKER | JOHN NEWLON
CALCULATED-DESIGNED BY | CHECKED BY
SENIOR LANDSCAPE ARCHITECT | STEPHEN ALVAREZ
STATE OF CALIFORNIA - DEPARTMENT OF TRANSPORTATION
Caltrans LANDSCAPE ARCHITECTURE

LAST REVISION 11-18-11 | DATE PLOTTED => 22-FEB-2012 | TIME PLOTTED => 10:15

Dist	COUNTY	ROUTE	POST MILES TOTAL PROJECT	SHEET No.	TOTAL SHEETS
11	SD	5	R10.0,R10.7	62	132

LICENSED LANDSCAPE ARCHITECT

2-21-12
PLANS APPROVAL DATE

LICENSED LANDSCAPE ARCHITECT
NEIL CORWIN BLEEKER No. 1967
Signature
08-31-13
Renewal Date
11-15-11
Date
STATE OF CALIFORNIA

THE STATE OF CALIFORNIA OR ITS OFFICERS OR AGENTS SHALL NOT BE RESPONSIBLE FOR THE ACCURACY OR COMPLETENESS OF SCANNED COPIES OF THIS PLAN SHEET.

NOTE:
FOR ACCURATE RIGHT OF WAY DATA, CONTACT RIGHT OF WAY ENGINEERING AT THE DISTRICT OFFICE.

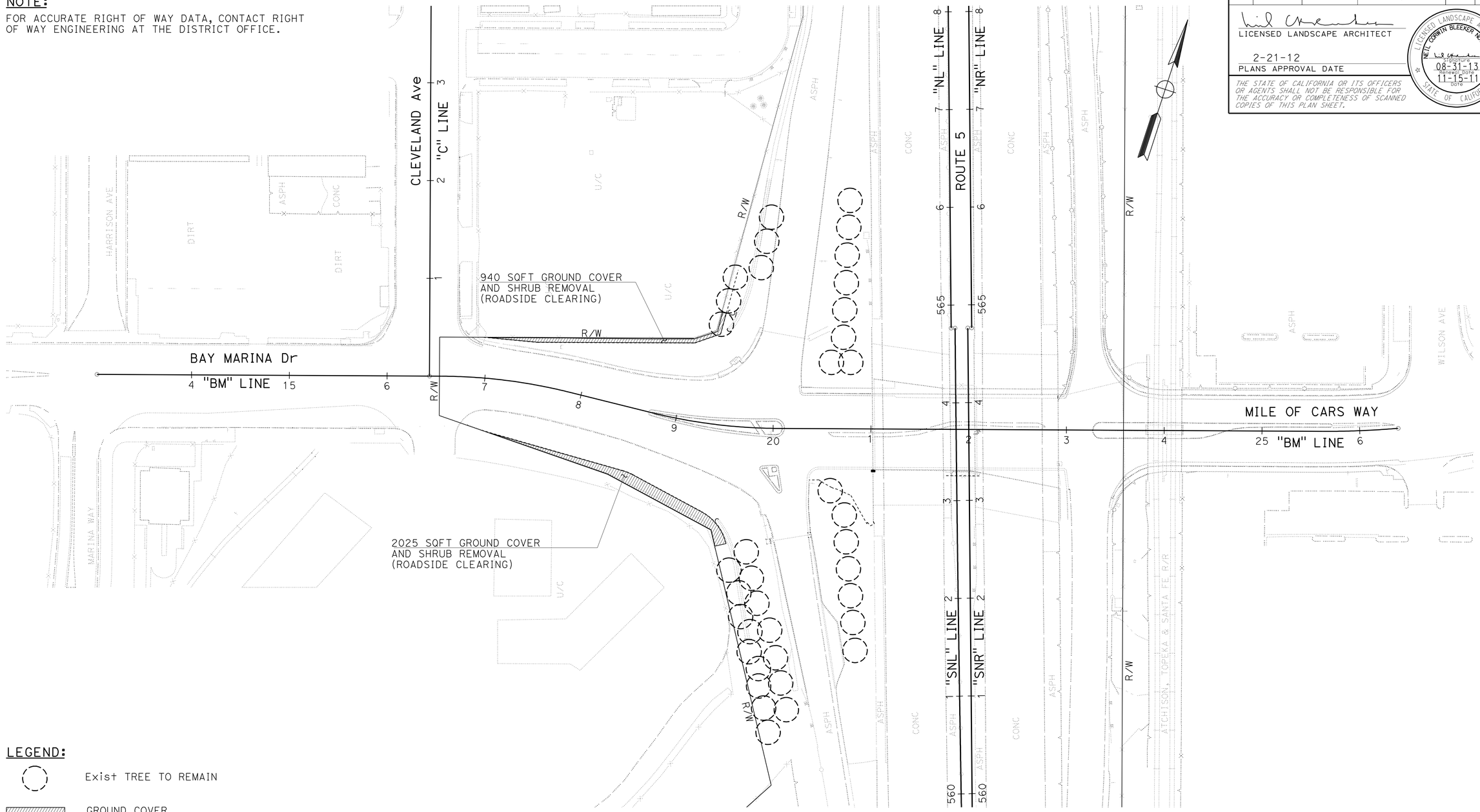

LEGEND:

Exist TREE TO REMAIN

GROUND COVER AND SHRUB REMOVAL (ROADSIDE CLEARING)

PLANT REMOVAL PLAN

SCALE: 1" = 50'

PR-1

APPROVED FOR PLANT REMOVAL WORK ONLY

STATE OF CALIFORNIA - DEPARTMENT OF TRANSPORTATION
Caltrans LANDSCAPE ARCHITECTURE

SENIOR LANDSCAPE ARCHITECT: STEPHEN ALVAREZ

CALCULATED-DESIGNED BY: NEIL BLEEKER
CHECKED BY: JOHN NEWLON

REVISED BY
DATE REVISED

LAST REVISION 11-18-11
DATE PLOTTED => 22-FEB-2012
TIME PLOTTED => 10:15

Dist	COUNTY	ROUTE	POST MILES TOTAL PROJECT	SHEET No.	TOTAL SHEETS
11	SD	5	R10.0,R10.7	63	132

LICENSED LANDSCAPE ARCHITECT

2-21-12
PLANS APPROVAL DATE

LICENSED LANDSCAPE ARCHITECT
NEIL CORWIN BLEEKER No. 1967
Registration Date
08-31-13
Renewal Date
11-15-11
Date
STATE OF CALIFORNIA

THE STATE OF CALIFORNIA OR ITS OFFICERS OR AGENTS SHALL NOT BE RESPONSIBLE FOR THE ACCURACY OR COMPLETENESS OF SCANNED COPIES OF THIS PLAN SHEET.

NOTE:
FOR ACCURATE RIGHT OF WAY DATA, CONTACT RIGHT OF WAY ENGINEERING AT THE DISTRICT OFFICE.

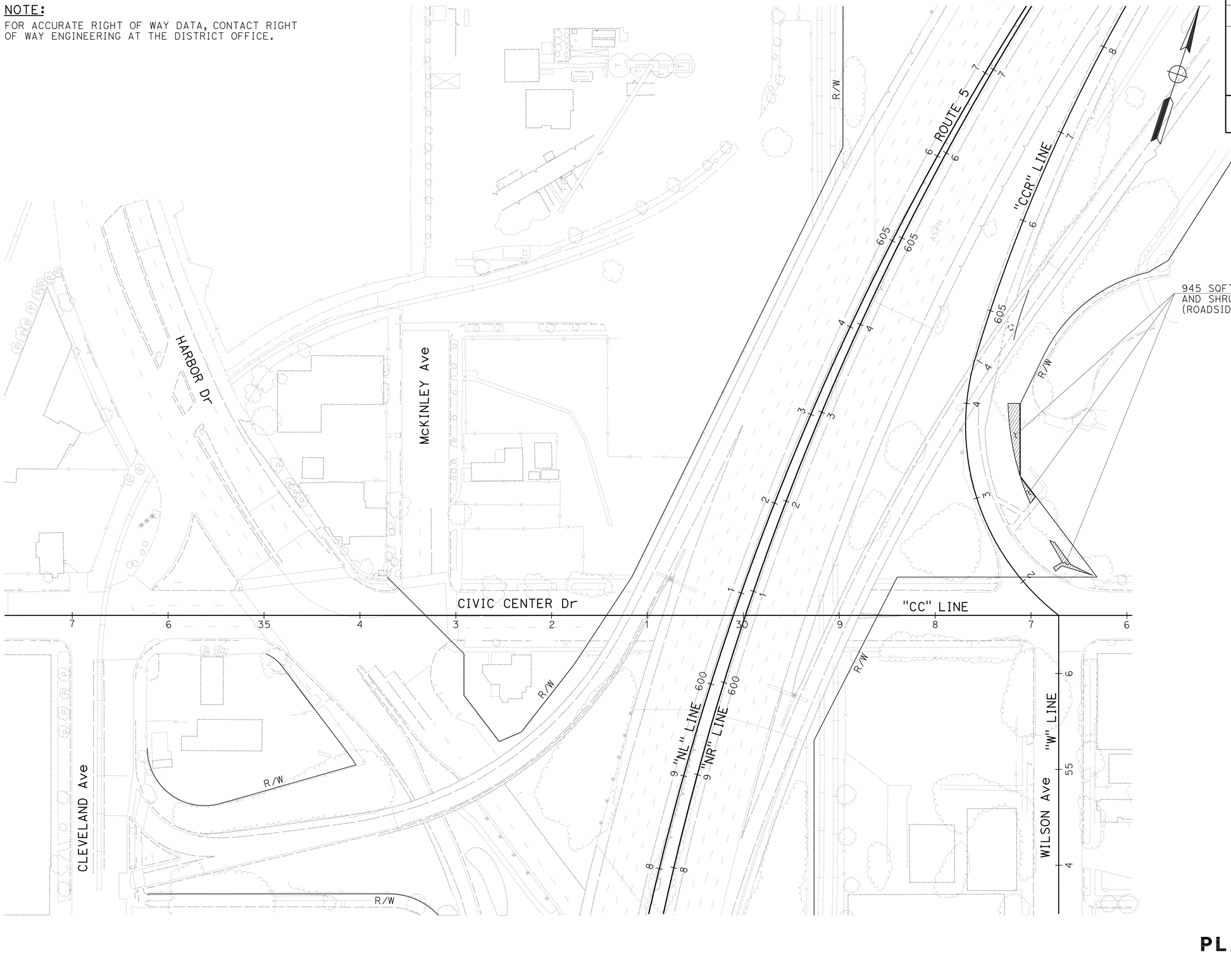

PLANT REMOVAL PLAN

SCALE: 1" = 50'

PR-2

APPROVED FOR PLANT REMOVAL WORK ONLY

STATE OF CALIFORNIA - DEPARTMENT OF TRANSPORTATION
Caltrans® LANDSCAPE ARCHITECTURE

SENIOR LANDSCAPE ARCHITECT: STEPHEN ALVAREZ
CALCULATED-DESIGNED BY: NEIL BLEEKER
CHECKED BY: JOHN NEWLON
REVISED BY
DATE REVISED

LAST REVISION 11-18-11
DATE PLOTTED => 22-FEB-2012
TIME PLOTTED => 10:15

Dist	COUNTY	ROUTE	POST MILES TOTAL PROJECT	SHEET No.	TOTAL SHEETS
11	SD	5	R10.0,R10.7	64	132

LICENSED LANDSCAPE ARCHITECT

2-21-12
PLANS APPROVAL DATE

LICENSED LANDSCAPE ARCHITECT
NEIL CORWIN BLEEKER No. 1967
08-31-13
Renewal Date
11-15-11
Date
STATE OF CALIFORNIA

THE STATE OF CALIFORNIA OR ITS OFFICERS OR AGENTS SHALL NOT BE RESPONSIBLE FOR THE ACCURACY OR COMPLETENESS OF SCANNED COPIES OF THIS PLAN SHEET.

NOTE:

FOR ACCURATE RIGHT OF WAY DATA, CONTACT RIGHT OF WAY ENGINEERING AT THE DISTRICT OFFICE.

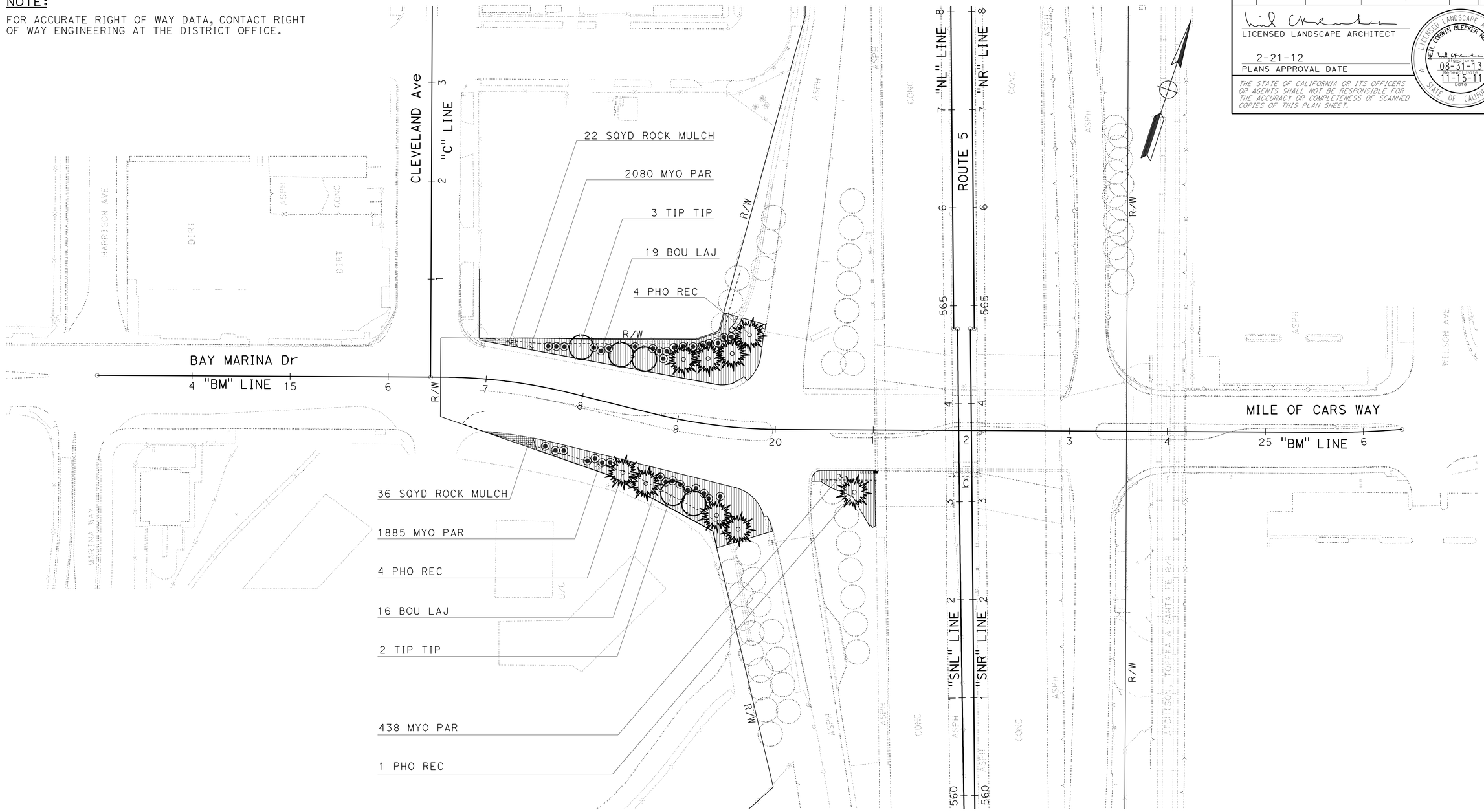

APPROVED FOR PLANTING WORK ONLY

PLANTING PLAN

SCALE: 1" = 50'

PP-1

STATE OF CALIFORNIA - DEPARTMENT OF TRANSPORTATION
Caltrans® LANDSCAPE ARCHITECTURE

SENIOR LANDSCAPE ARCHITECT: STEPHEN ALVAREZ

CALCULATED-DESIGNED BY: NEIL BLEEKER
CHECKED BY: JOHN NEWLON

REVISED BY
DATE REVISED

LAST REVISION 11-18-11
DATE PLOTTED => 22-FEB-2012
TIME PLOTTED => 10:15

Dist	COUNTY	ROUTE	POST MILES TOTAL PROJECT	SHEET No.	TOTAL SHEETS
11	SD	5	R10.0,R10.7	65	132

LICENSED LANDSCAPE ARCHITECT

2-21-12
PLANS APPROVAL DATE

LICENSED LANDSCAPE ARCHITECT
NEIL CORWIN BLEEKER No. 1967
Signature
08-31-13
Renewal Date
11-15-11
Date
STATE OF CALIFORNIA

THE STATE OF CALIFORNIA OR ITS OFFICERS OR AGENTS SHALL NOT BE RESPONSIBLE FOR THE ACCURACY OR COMPLETENESS OF SCANNED COPIES OF THIS PLAN SHEET.

NOTE:
FOR ACCURATE RIGHT OF WAY DATA, CONTACT RIGHT OF WAY ENGINEERING AT THE DISTRICT OFFICE.

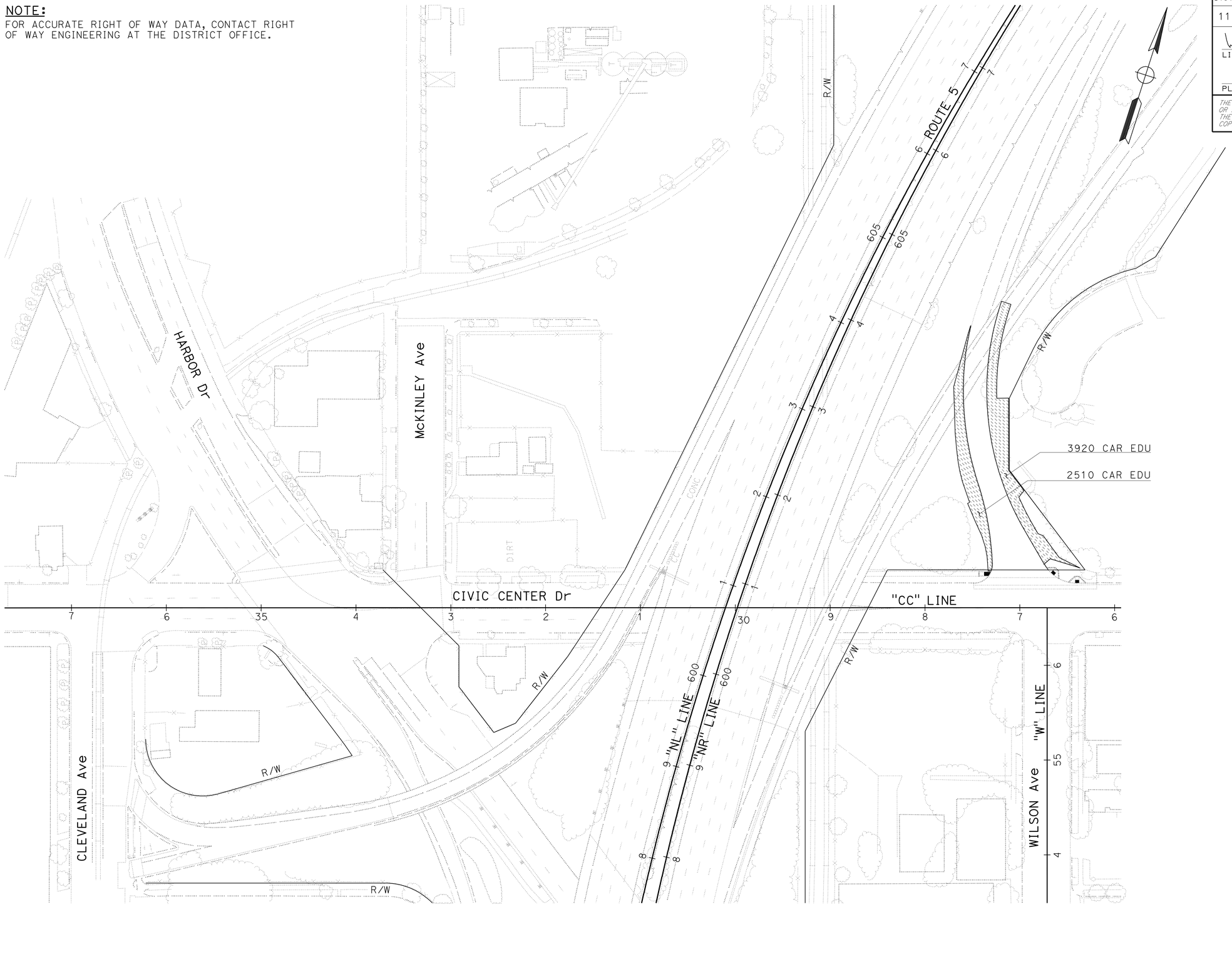

PLANTING PLAN

SCALE: 1" = 50′ **PP-2**

APPROVED FOR PLANTING WORK ONLY

STATE OF CALIFORNIA - DEPARTMENT OF TRANSPORTATION
Caltrans® LANDSCAPE ARCHITECTURE

SENIOR LANDSCAPE ARCHITECT: STEPHEN ALVAREZ
CALCULATED-DESIGNED BY: NEIL BLEEKER
CHECKED BY: JOHN NEWLON
REVISED BY
DATE REVISED

LAST REVISION 11-18-11
DATE PLOTTED => 22-FEB-2012
TIME PLOTTED => 10:15

Dist	COUNTY	ROUTE	POST MILES TOTAL PROJECT	SHEET No.	TOTAL SHEETS
11	SD	5	R10.0,R10.7	66	132

LICENSED LANDSCAPE ARCHITECT

2-21-12
PLANS APPROVAL DATE

THE STATE OF CALIFORNIA OR ITS OFFICERS OR AGENTS SHALL NOT BE RESPONSIBLE FOR THE ACCURACY OR COMPLETENESS OF SCANNED COPIES OF THIS PLAN SHEET.

LICENSED LANDSCAPE ARCHITECT
NEIL CORWIN BLEEKER No. 1967
08-31-13
Renewal Date
11-15-11
Date
STATE OF CALIFORNIA

NOTES:

1. FOR ACCURATE RIGHT OF WAY DATA, CONTACT RIGHT OF WAY ENGINEERING AT THE DISTRICT OFFICE.
2. Exist WATER METER AND BACKFLOW PREVENTER SERVICING MANIFOLDS NORTH OF BAY MARINA DRIVE IS LOCATED ADJACENT TO McKINLEY AVENUE ALONG ROUTE 5 "5NL" LINE AT STA 571+44.000
3. Exist IRRIGATION CONTROLLER 50(A) IS LOCATED ADJACENT TO McKINLEY AVENUE ALONG ROUTE 5 "5NL" LINE AT STA 580+30.000
4. Exist WATER METER AND BACKFLOW PREVENTER SERVICING MANIFOLDS SOUTH OF BAY MARINA DRIVE IS LOCATED ADJACENT TO 33RD STREET APPROXIMATELY 750' WEST OF NATIONAL CITY BOULEVARD.
5. Exist IRRIGATION CONTROLLER 43(D) IS LOCATED ADJACENT TO SHOULDER ON ROUTE 5 NORTHBOUND ALONG "5SNR" LINE AT STA 547+37.000

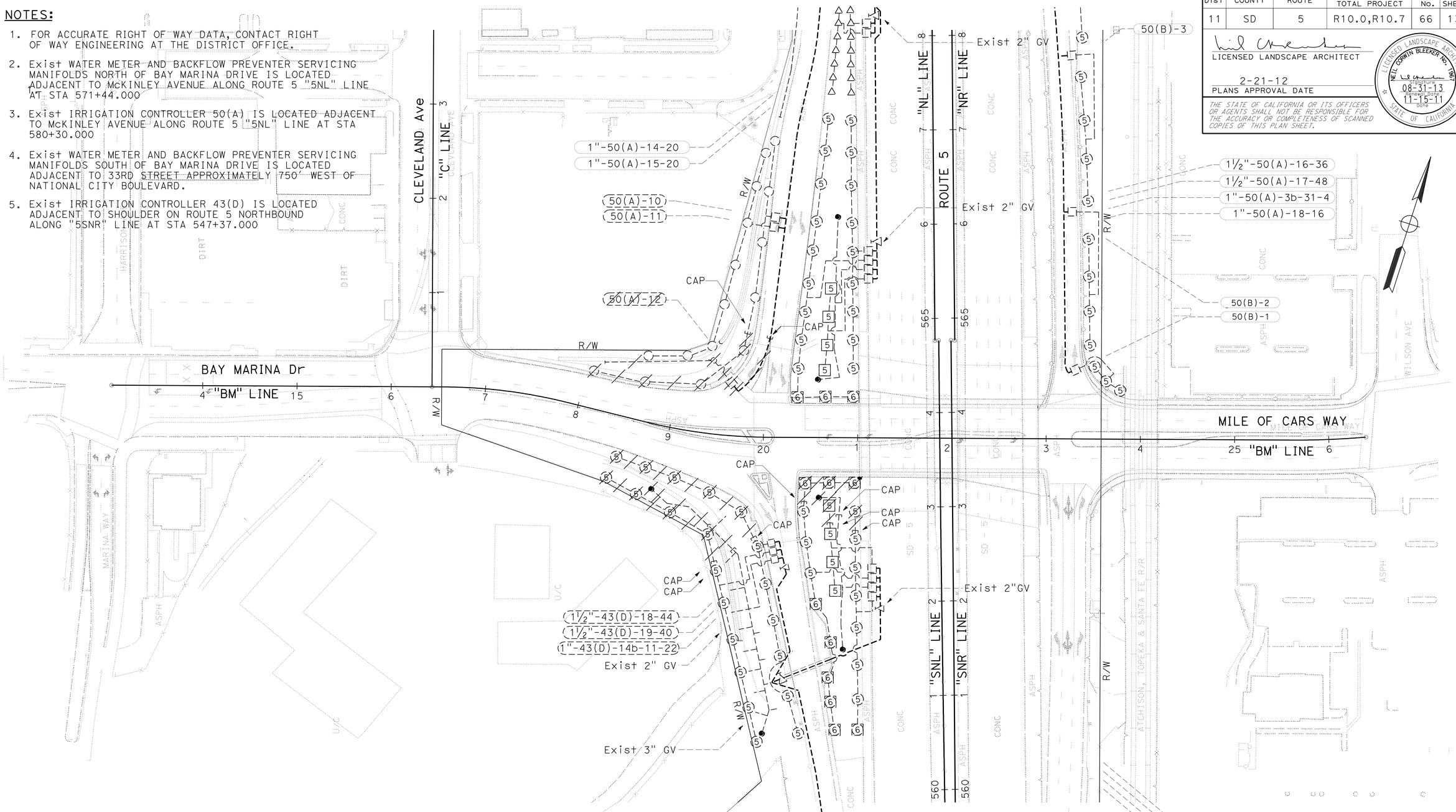

APPROVED FOR IRRIGATION REMOVAL WORK ONLY.

IRRIGATION REMOVAL PLAN

SCALE: 1" = 50'

IR-1

REVISED BY	DATE REVISED
NEIL BLEEKER	JOHN NEWLON

CALCULATED-DESIGNED BY
CHECKED BY

SENIOR LANDSCAPE ARCHITECT
STEPHEN ALVAREZ

STATE OF CALIFORNIA - DEPARTMENT OF TRANSPORTATION
Caltrans® LANDSCAPE ARCHITECTURE

LAST REVISION 11-18-11
DATE PLOTTED => 22-FEB-2012
TIME PLOTTED => 11:00

Dist	COUNTY	ROUTE	POST MILES TOTAL PROJECT	SHEET No.	TOTAL SHEETS
11	SD	5	R10.0,R10.7	67	132

LICENSED LANDSCAPE ARCHITECT

2-21-12
PLANS APPROVAL DATE

LICENSED LANDSCAPE ARCHITECT
NEIL CORWIN BLEEKER No. 1967
Expiration Date
08-31-13
Renewal Date
11-15-11
Date
STATE OF CALIFORNIA

THE STATE OF CALIFORNIA OR ITS OFFICERS OR AGENTS SHALL NOT BE RESPONSIBLE FOR THE ACCURACY OR COMPLETENESS OF SCANNED COPIES OF THIS PLAN SHEET.

NOTE:
FOR ACCURATE RIGHT OF WAY DATA, CONTACT RIGHT OF WAY ENGINEERING AT THE DISTRICT OFFICE.

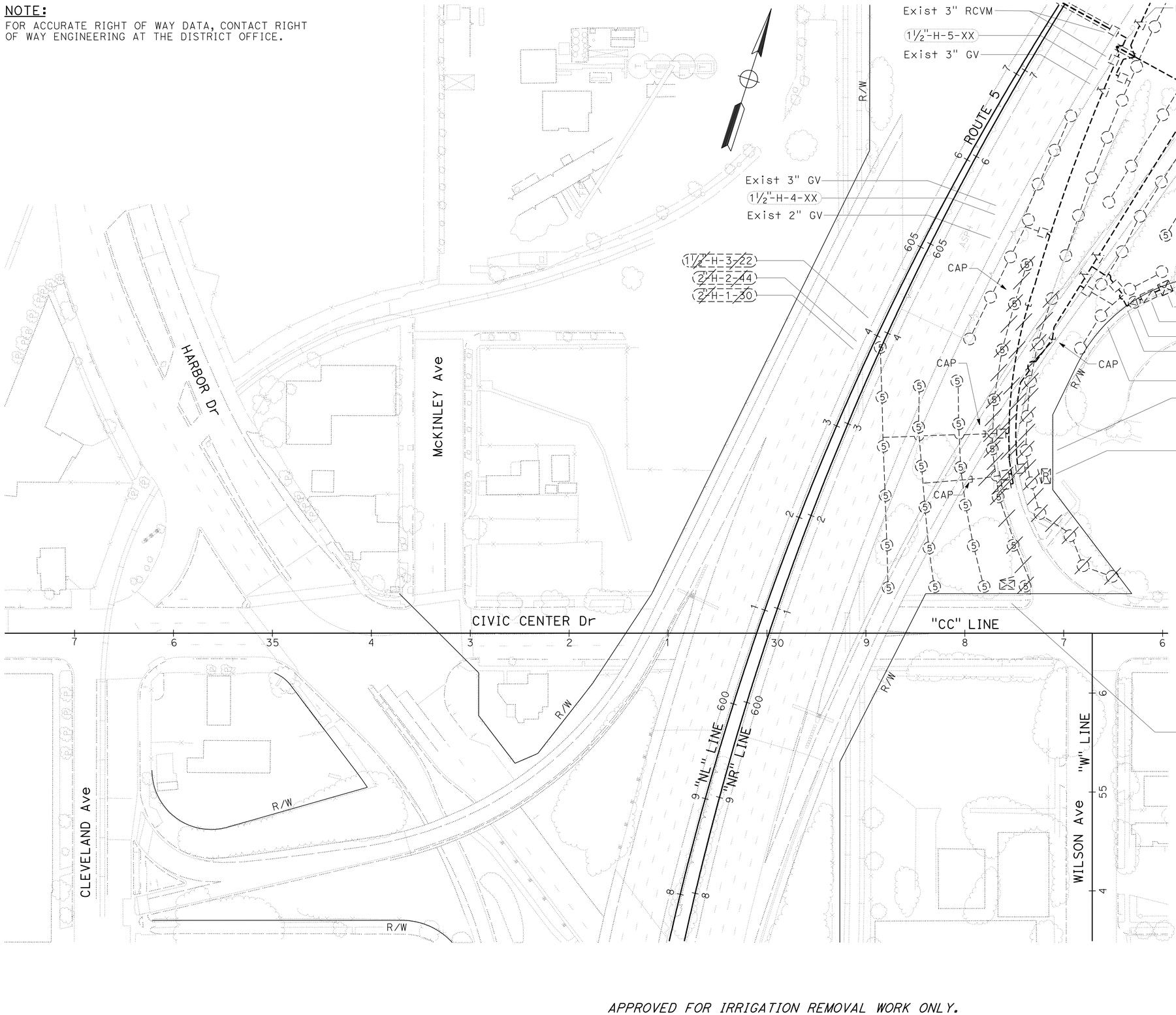

APPROVED FOR IRRIGATION REMOVAL WORK ONLY.

IRRIGATION REMOVAL PLAN

SCALE: 1" = 50'

IR-2

STATE OF CALIFORNIA - DEPARTMENT OF TRANSPORTATION
Caltrans LANDSCAPE ARCHITECTURE

SENIOR LANDSCAPE ARCHITECT: STEPHEN ALVAREZ
CALCULATED-DESIGNED BY: NEIL BLEEKER
CHECKED BY: JOHN NEWLON
REVISED BY
DATE REVISED

LAST REVISION 11-18-11
DATE PLOTTED => 22-FEB-2012
TIME PLOTTED => 11:00

Dist	COUNTY	ROUTE	POST MILES TOTAL PROJECT	SHEET No.	TOTAL SHEETS
11	SD	5	R10.0,R10.7	68	132

LICENSED LANDSCAPE ARCHITECT

2-21-12
PLANS APPROVAL DATE

THE STATE OF CALIFORNIA OR ITS OFFICERS OR AGENTS SHALL NOT BE RESPONSIBLE FOR THE ACCURACY OR COMPLETENESS OF SCANNED COPIES OF THIS PLAN SHEET.

LICENSED LANDSCAPE ARCHITECT
NEIL CORWIN BLEEKER No. 1967
Original Date 08-31-13
Renewal Date 11-15-11
Date
STATE OF CALIFORNIA

NOTES:

1. FOR ACCURATE RIGHT OF WAY DATA, CONTACT RIGHT OF WAY ENGINEERING AT THE DISTRICT OFFICE.
2. Exist WATER METER AND BACKFLOW PREVENTER SERVICING MANIFOLDS NORTH OF BAY MARINA DRIVE IS LOCATED ADJACENT TO McKINLEY AVENUE ALONG ROUTE 5 "5NL" LINE AT STA 571+44.000
3. Exist IRRIGATION CONTROLLER 50(A) IS LOCATED ADJACENT TO McKINLEY AVENUE ALONG ROUTE 5 "5NL" LINE AT STA 580+30.000
4. Exist WATER METER AND BACKFLOW PREVENTER SERVICING MANIFOLDS SOUTH OF BAY MARINA DRIVE IS LOCATED ADJACENT TO 33RD STREET APPROXIMATELY 750' WEST OF NATIONAL CITY BOULEVARD.
5. Exist IRRIGATION CONTROLLER 43(D) IS LOCATED ADJACENT TO SHOULDER ON ROUTE 5 NORTHBOUND ALONG "5SNR" LINE AT STA 547+37.000

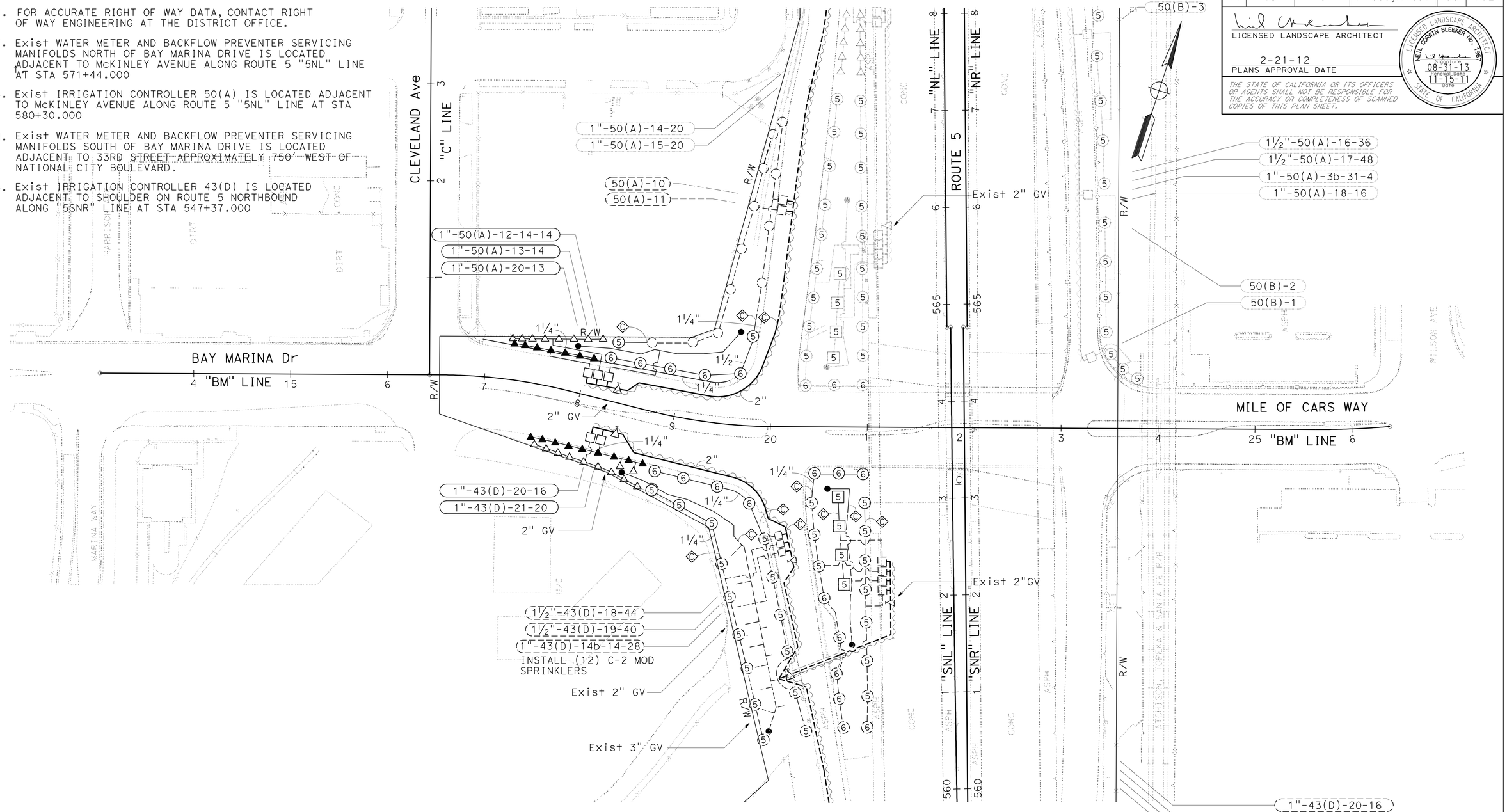

APPROVED FOR IRRIGATION WORK ONLY.

SCALE: 1" = 50'

IRRIGATION PLAN
IP-1

STATE OF CALIFORNIA - DEPARTMENT OF TRANSPORTATION
Caltrans® LANDSCAPE ARCHITECTURE

SENIOR LANDSCAPE ARCHITECT: STEPHEN ALVAREZ
CALCULATED-DESIGNED BY: NEIL BLEEKER
CHECKED BY: JOHN NEWLON
REVISED BY / DATE REVISED

LAST REVISION 11-18-11
DATE PLOTTED => 22-FEB-2012
TIME PLOTTED => 11:01

Dist	COUNTY	ROUTE	POST MILES TOTAL PROJECT	SHEET No.	TOTAL SHEETS
11	SD	5	R10.0,R10.7	69	132

LICENSED LANDSCAPE ARCHITECT

2-21-12
PLANS APPROVAL DATE

LICENSED LANDSCAPE ARCHITECT
NEIL CORWIN BLEEKER No. 1967
Signature
08-31-13
Renewal Date
11-15-11
Date
STATE OF CALIFORNIA

THE STATE OF CALIFORNIA OR ITS OFFICERS OR AGENTS SHALL NOT BE RESPONSIBLE FOR THE ACCURACY OR COMPLETENESS OF SCANNED COPIES OF THIS PLAN SHEET.

NOTE:
FOR ACCURATE RIGHT OF WAY DATA, CONTACT RIGHT OF WAY ENGINEERING AT THE DISTRICT OFFICE.

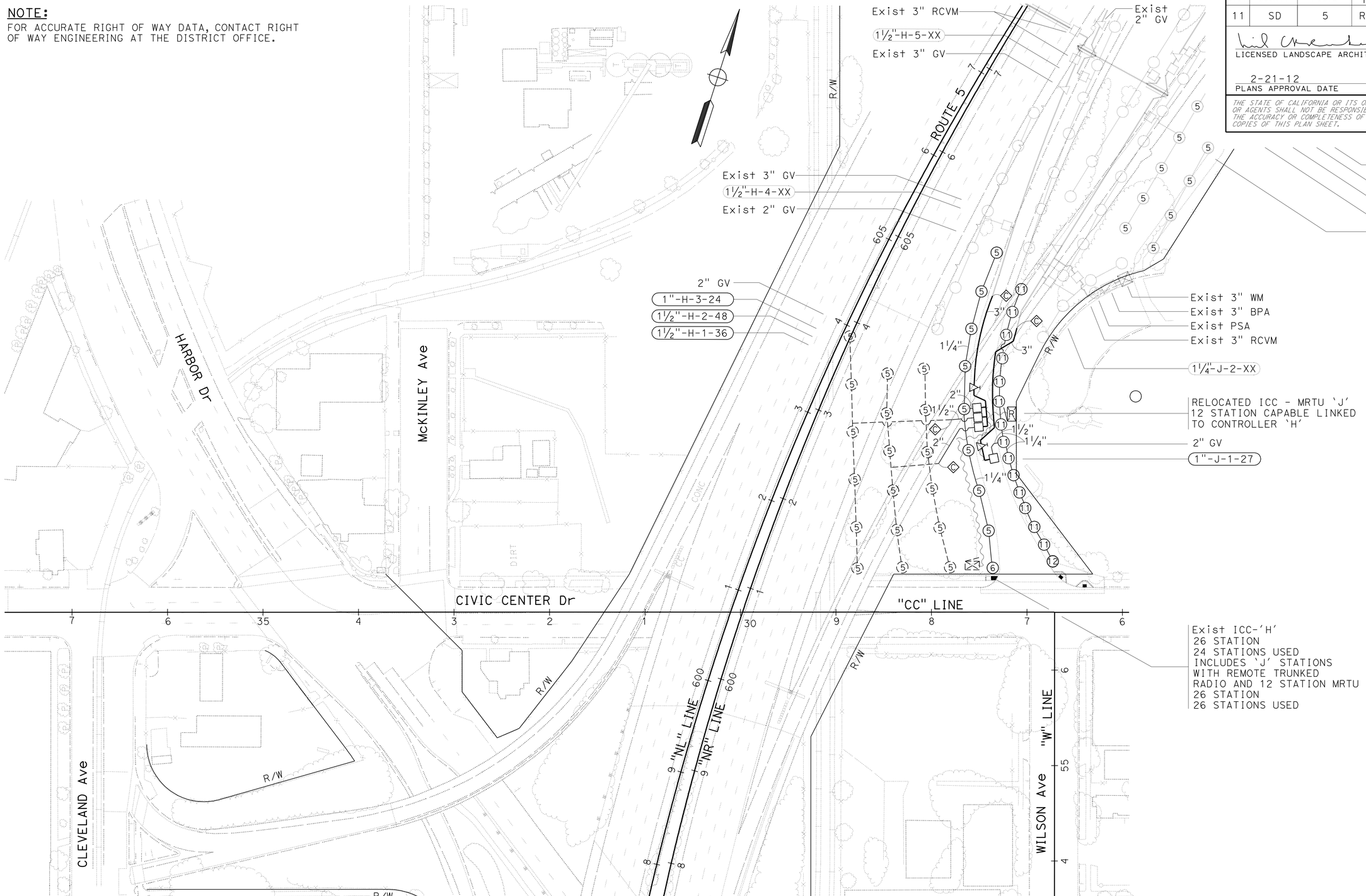

APPROVED FOR IRRIGATION WORK ONLY

SCALE: 1" = 50'

IRRIGATION PLAN
IP-2

STATE OF CALIFORNIA - DEPARTMENT OF TRANSPORTATION
Caltrans® LANDSCAPE ARCHITECTURE

SENIOR LANDSCAPE ARCHITECT: STEPHEN ALVAREZ
CALCULATED-DESIGNED BY: NEIL BLEEKER
CHECKED BY: JOHN NEWLON
REVISED BY
DATE REVISED

LAST REVISION 11-18-11
DATE PLOTTED => 22-FEB-2012
TIME PLOTTED => 12:54

Dist	COUNTY	ROUTE	POST MILES TOTAL PROJECT	SHEET No.	TOTAL SHEETS
11	SD	5	R10.0,R10.7	70	132

LICENSED LANDSCAPE ARCHITECT

2-21-12
PLANS APPROVAL DATE

LICENSED LANDSCAPE ARCHITECT — NEIL CORWIN BLEEKER No. 1967 — STATE OF CALIFORNIA — Registered Date 08-31-13 — Renewal Date 11-15-11

THE STATE OF CALIFORNIA OR ITS OFFICERS OR AGENTS SHALL NOT BE RESPONSIBLE FOR THE ACCURACY OR COMPLETENESS OF SCANNED COPIES OF THIS PLAN SHEET.

SPRINKLER SCHEDULE

SYMBOL	TYPE	DESCRIPTION	SPRAY PATTERN	OPERATING PRESSURE (PSI)	PRESSURE COMPENSATING	PLUS / MINUS 5% ② DISCHARGE: GALLONS PER SECOND (GPS)	GALLONS PER MINUTE (GPM)	GALLONS PER HOUR (GPH)	RADIUS (F†)	WIDTH x LENGTH (F†)	MATERIAL	NOZZLE SIZE (INCH)	INLET CONNECTION (NPT) (DN IN INCHES)(INCH)	POSITIVE-LOCKING ADJ ARC STOP	BACKSPLASH PREVENTER	DIFFUSER PIN	DISTANCE CONTROL FLAP	ADJ DISCHARGE	RISER: TYPE	MATERIAL: PLASTIC	MATERIAL: GALVANIZED	SIZE (IPS) (INCH)	HEIGHT (INCH)	FLOW SHUTOFF DEVICE	SWING JOINT (TYPE)	RISER SUPPORT	SPRINKLER PROTECTOR (TYPE)	REMARKS
⑤	A-5	GEAR DRIVEN	P	50	-	-	4	-	40	-	PL	-	¾	-	-	X	-	-	I	X	-	¾	6	-	1	-	-	③⑦
5	A-5	GEAR DRIVEN	F	50	-	-	4	-	40	-	PL	-	¾	-	-	X	-	-	I	X	-	¾	6	-	1	-	-	③⑦
⑥	A-6	GEAR DRIVEN	P	50	-	-	4	-	40	-	PL	-	¾	-	-	X	-	-	-	-	-	-	-	-	1	-	1	③⑦ 12" POP-UP
⑪	A-11	GEAR DRIVEN	P	50	-	-	1.8	-	25	-	PL	-	¾	-	-	X	-	-	I	X	-	¾	6	-	1	-	-	③⑦
⑫	A-12	GEAR DRIVEN	P	50	-	-	1.8	-	25	-	PL	-	¾	-	-	X	-	-	-	-	-	-	-	-	1	-	1	③⑦ 12" POP-UP
△	B-1	SPRAY HEAD	H	30	-	-	1.8	-	15	-	PL	-	½	-	-	X	-	X	I	X	-	½	6	-	1	-	-	⑧⑨
▲	B-2	SPRAY HEAD	H	30	-	-	1.8	-	15	-	PL	-	½	-	-	X	-	X	-	-	-	-	-	-	1	-	1	⑧⑨ 12" POP-UP
•	C-2 Mod	MODIFIED FLOOD BUBBLER	-	30	X	-	1.0	-	-	-	PL	-	½	-	-	-	-	-	⑥	X	-	½	-	-	1	-	-	④⑨⑩

X IN BOX DENOTES REQUIREMENT

APPLICABLE WHEN CIRCLED BELOW:

1 - SEE SPECIAL PROVISIONS.
② - IF A PRESSURE COMPENSATING DEVICE IS SPECIFIED, THE DISCHARGE AND RADII SHOWN REFLECT ITS USE.
③ - SHALL HAVE AN INTERNAL OR EXTERNAL CHECK VALVE.
④ - NON-ADJUSTABLE DISCHARGE RATE.
5 - REQUIRED ADJACENT TO SHOULDERS, CURBS, SIDEWALKS, AND DIKES.
⑥ - SEE DETAIL.
⑦ - ADJUSTABLE ARC.
⑧ - MATCHED PRECIPITATION RATE NOZZLES.
⑨ - REFER TO PIPE SIZING CHARTS.
⑩ - PROVIDE 2 BUBBLERS PER BOX TREES AND PALMS. 1 BUBBLER FOR ALL OTHER TREES(UNLESS INDICATED OTHERWISE).

ABBREVIATIONS:

ADJ — ADJUSTABLE
B/B — BRASS/BRONZE
B/B/PL — BRASS/BRONZE/PLASTIC
B/PL — BRASS/PLASTIC
CST — CENTER STRIP
DN — DIAMETER NOMINAL
EST — END STRIP
F† — FEET
F — FULL CIRCLE
F/P — FULL/PART CIRCLE
GPM — GALLONS PER MINUTE
H — HALF CIRCLE
IPS — IRON PIPE SIZE
NPT — NATIONAL PIPE THREAD
P — PART CIRCLE
PL — PLASTIC
PSI — POUNDS PER SQUARE INCH
Q — QUARTER CIRCLE
SST — SIDE STRIP
T — THIRD CIRCLE
TQ — THREE QUARTER CIRCLE
TT — TWO THIRDS CIRCLE

NOTES:

1. ALL NEW LATERAL PIPE NOT LABELED SHALL BE 1 INCH, OR AS SHOWN ON PIPE SIZING CHARTS.
2. ALL SPRINKLER HEADS, VALVES, MAINLINE AND LATERAL LINE NEAR MVP LOCATIONS ARE TO BE INSTALLED OUTSIDE OF THE MVP AREA. VALVES TO BE INSTALLED AT EXITING END OF MVP.
3. LOCATE VALVE MANIFOLDS AND MAINLINE OUTSIDE OF ROCK MULCH AND MAINTENANCE ACCESS AREAS.
4. ALL NEW MAINLINE PIPE WHICH HAS A CHANGE IN DIRECTION OF 90 DEGREES OR MORE SHALL HAVE (2)-45 DEGREE ELBOWS.

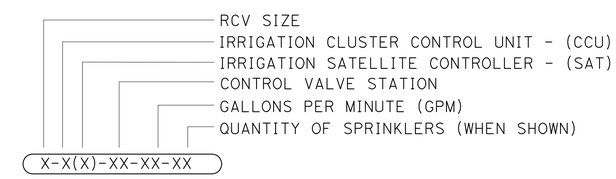

PROPOSED VALVE CODE SAT CONTROLLED VALVES

LEGEND

— Exist PRESSURE SENSOR ASSEMBLY (PSA)
— Exist ICC TO BE RELOCATED
— RELOCATED ICC
X-X-XX-XX-XX — EXISTING IRRIGATION SYSTEM TO REMAIN (NO WORK)
X-X-XX-XX-XX — PROPOSED IRRIGATION VALVE
X-X-XX-XX-XX — EXISTING IRRIGATION SYSTEM TO BE MODIFIED (VALVE TO REMAIN)
X-X-XX-XX-XX — EXISTING IRRIGATION SYSTEM TO BE MODIFIED (VALVE TO BE REMOVED)
— EXISTING IRRIGATION TO BE REMOVED

21-33	15-20	8-14	1-7
2"	1½"	1¼"	1"

B-1 & B-2 PIPE SIZING CHART

ALL CALCULATIONS ARE FOR 180° THROW.

51-69	31-50	22-30	12-21	1-11
2½"	2"	1½"	1¼"	1"

C-2 (Mod) PIPE SIZING CHART

LANDSCAPE DETAILS

NO SCALE

LD-1

REVISED BY | DATE REVISED
NEIL BLEEKER | JOHN NEWLON
CALCULATED-DESIGNED BY | CHECKED BY
SENIOR LANDSCAPE ARCHITECT | STEPHEN ALVAREZ

STATE OF CALIFORNIA - DEPARTMENT OF TRANSPORTATION
Caltrans® LANDSCAPE ARCHITECTURE

LAST REVISION 11-18-11 | DATE PLOTTED => 22-FEB-2012 | TIME PLOTTED => 12:54

Dist	COUNTY	ROUTE	POST MILES TOTAL PROJECT	SHEET No.	TOTAL SHEETS
11	SD	5	R10.0,R10.7	71	132

LICENSED LANDSCAPE ARCHITECT

2-21-12
PLANS APPROVAL DATE

LICENSED LANDSCAPE ARCHITECT NEIL CORWIN BLEEKER No. 1967 STATE OF CALIFORNIA
Registration Expiration Date 08-31-13
Renewal Date 11-15-11
Date

THE STATE OF CALIFORNIA OR ITS OFFICERS OR AGENTS SHALL NOT BE RESPONSIBLE FOR THE ACCURACY OR COMPLETENESS OF SCANNED COPIES OF THIS PLAN SHEET.

NOTES:

1. INSTALL SPRINKLER TYPE C-2 Mod ON UP-HILL SIDE OF PLANT WHEN ON SLOPE
2. INSTALL SPRINKLER WITHIN BASIN
3. WHEN TWO SPRINKLER TYPE C-2 MOD ARE REQUIRED INSTALL ON OPPOSITE SIDES OF THE BASIN

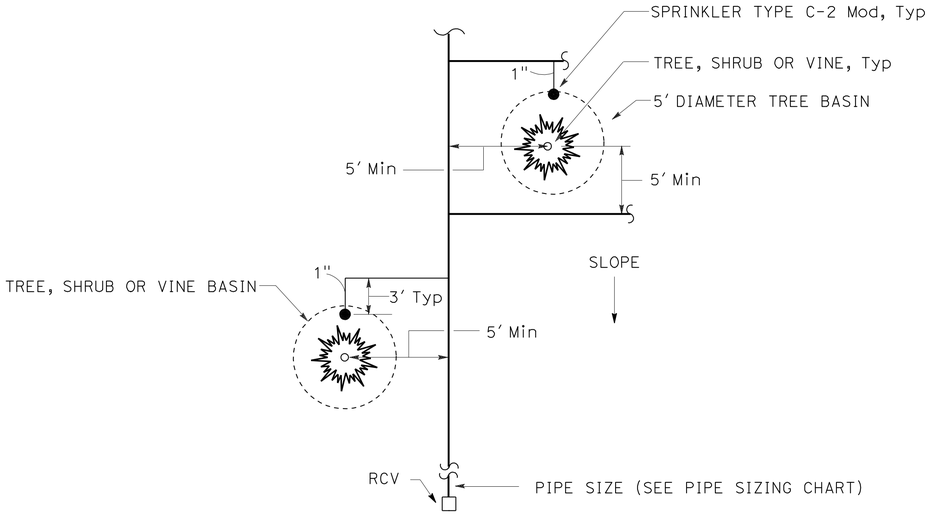

PLAN

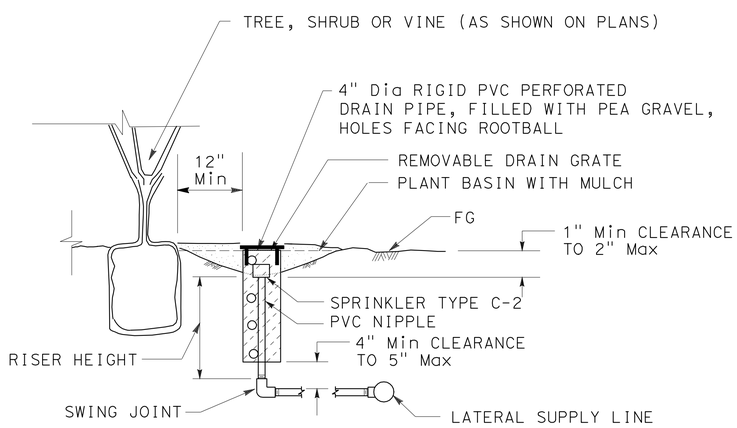

SECTION

SPRINKLER TYPE C-2 Mod INSTALLATION

NOTE:
BACKFILLED PLASTER SAND IS TO BE WATER JETTED WHILE BACKFILLING PLANT HOLE.

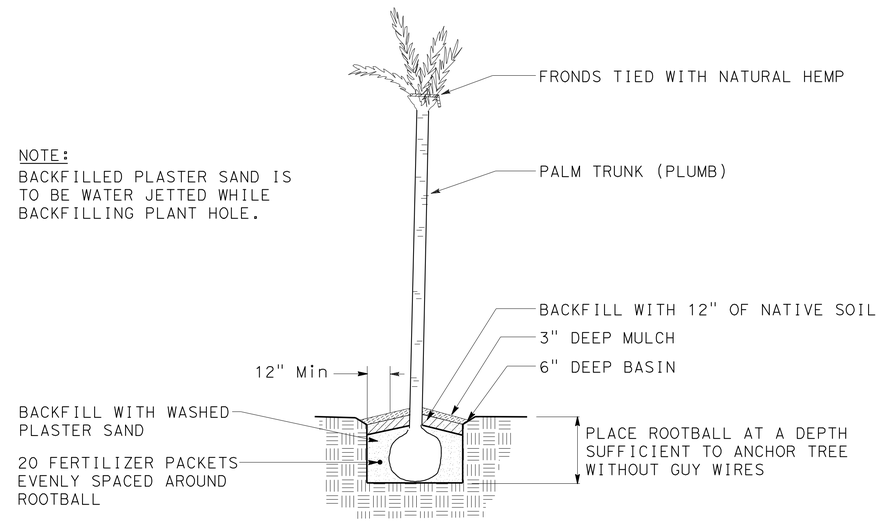

PALM TREE PLANTING

THRUST BLOCK DETAIL

INSTALLATION	TYPE FITTING	INSTALLATION	TYPE FITTING
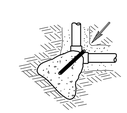	90° ELL	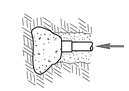	DEAD END
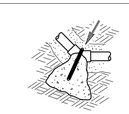	BEND 45° 22.5° 11.25°		GATE VALVE
		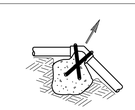	VERTICAL BEND (TYPE I) 45° 22.5° 11.25°
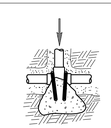	TEE	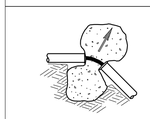	OR VERTICAL BEND (TYPE II) 45° 22.5° 11.25°

NOTES:

Min 1 CF PCC FOR 1½" PIPE SIZE AND SMALLER.
Min 2 CF PCC FOR 2" PIPE SIZE.
Min 3 CF PCC FOR 3" AND 4" PIPE SIZE.
USE #3 REINFORCING BAR WHERE SHOWN.

LANDSCAPE DETAILS

NO SCALE

LD-2

REVISED BY	DATE REVISED
NEIL BLEEKER	JOHN NEWLON

CALCULATED-DESIGNED BY
CHECKED BY

SENIOR LANDSCAPE ARCHITECT
STEPHEN ALVAREZ

STATE OF CALIFORNIA - DEPARTMENT OF TRANSPORTATION
Caltrans® LANDSCAPE ARCHITECTURE

LAST REVISION 11-18-11
DATE PLOTTED => 22-FEB-2012
TIME PLOTTED => 12:54

Dist	COUNTY	ROUTE	POST MILES TOTAL PROJECT	SHEET No.	TOTAL SHEETS
11	SD	5	R10.0,R10.7	72	132

LICENSED LANDSCAPE ARCHITECT

2-21-12
PLANS APPROVAL DATE

LICENSED LANDSCAPE ARCHITECT NEIL CORWIN BLEEKER No. 1967 STATE OF CALIFORNIA
Registered Professional Engineer 08-31-13
Renewal Date
11-15-11
Date

THE STATE OF CALIFORNIA OR ITS OFFICERS OR AGENTS SHALL NOT BE RESPONSIBLE FOR THE ACCURACY OR COMPLETENESS OF SCANNED COPIES OF THIS PLAN SHEET.

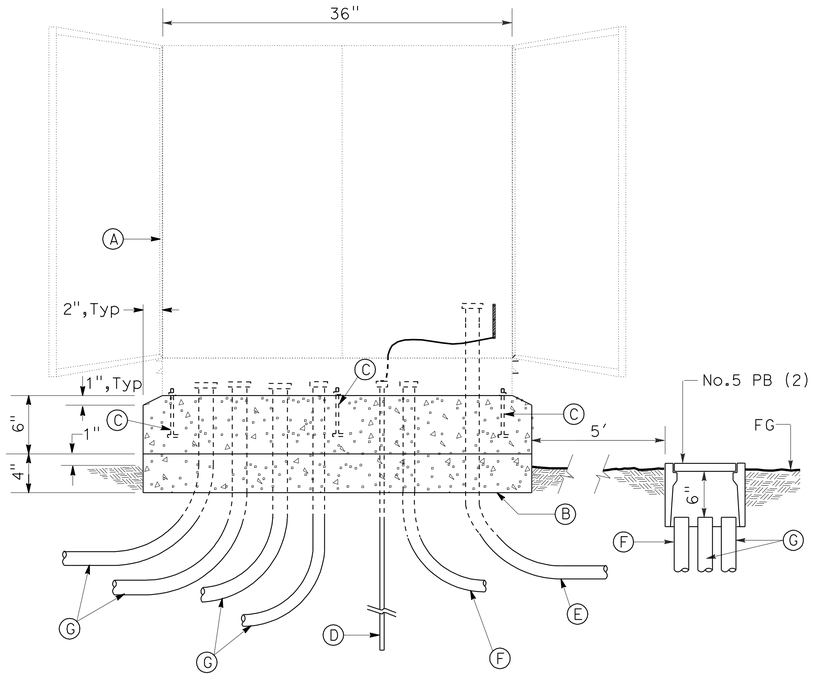

FRONT ELEVATION

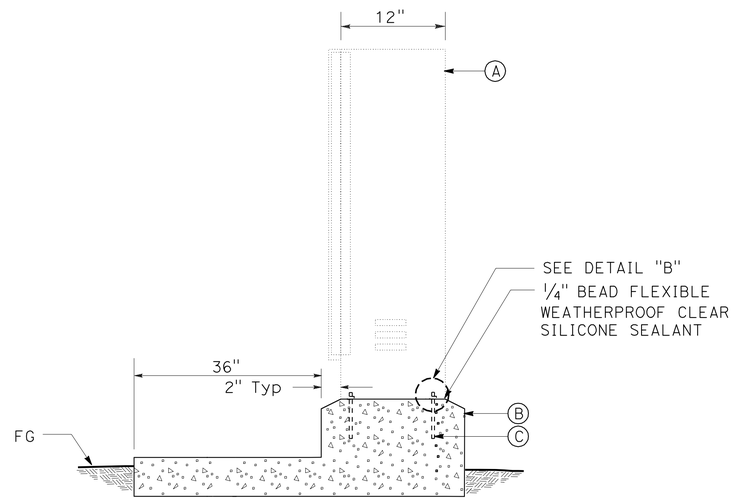

SIDE SECTION

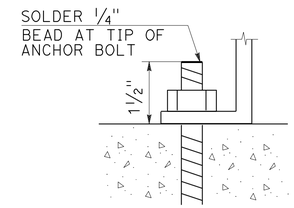

DETAIL "B"

LEGEND:

- (A) Exist STAINLESS STEEL CONTROLLER ENCLOSURE CABINET (RELOCATED)
- (B) PCC PAD AND FOUNDATION
- (C) 3/8" DIAMETER, 2 3/4" LONG, WINGED STAINLESS STEEL ANCHOR BOLTS WITH WASHERS AND HEX HEAD LOCKNUTS (4 BOLTS FOR SINGLE, 6 BOLTS FOR DOUBLE)
- (D) 5/8" X 10' LONG COPPER CLAD STEEL ROD GROUND ELECTRODE AND GROUND CLAMP WITH No. 8 AWG GROUND CONDUCTOR.
- (E) SIZE 1", TYPE 3 CONDUIT FOR ELECTRICAL SERVICE (2 FOR CABINET WITH TELEPHONE SERVICE)
- (F) SIZE 1 1/2", TYPE 3 CONDUIT FOR RCVM AND FS INPUT WIRING
- (G) SIZE 3" & 2" (ONE EACH), TYPE 3 CONDUIT FOR LOW VOLTAGE WIRING

RELOCATED IRRIGATION CONTROLLER ENCLOSURE CABINET FOUNDATION

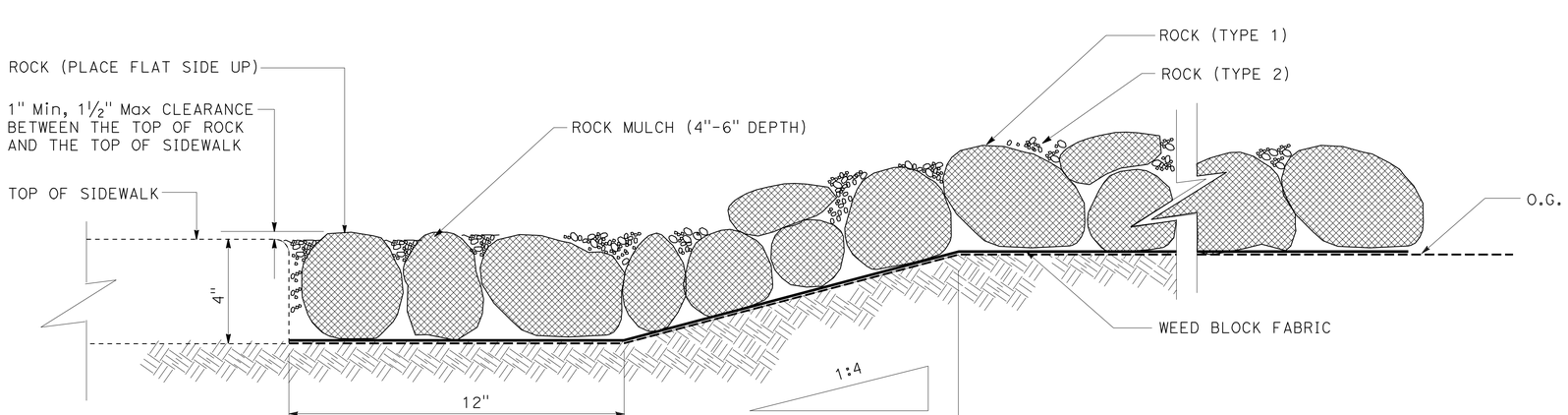

ROCK MULCH

LANDSCAPE DETAILS

NO SCALE

LD-3

STATE OF CALIFORNIA - DEPARTMENT OF TRANSPORTATION
Caltrans LANDSCAPE ARCHITECTURE

SENIOR LANDSCAPE ARCHITECT: STEPHEN ALVAREZ

CALCULATED-DESIGNED BY: NEIL BLEEKER
CHECKED BY: JOHN NEWLON

REVISED BY | DATE REVISED

LAST REVISION 11-18-11 | DATE PLOTTED => 22-FEB-2012 | TIME PLOTTED => 12:55

Dist	COUNTY	ROUTE	POST MILES TOTAL PROJECT	SHEET No.	TOTAL SHEETS
11	SD	5	R10.0, R10.7	73	132

Fariba Ramos 11-15-11
REGISTERED ELECTRICAL ENGINEER DATE

2-21-12
PLANS APPROVAL DATE

REGISTERED PROFESSIONAL ENGINEER FARIBA RAMOS No. E15619 Exp. 12-31-11 ELECTRICAL STATE OF CALIFORNIA

THE STATE OF CALIFORNIA OR ITS OFFICERS OR AGENTS SHALL NOT BE RESPONSIBLE FOR THE ACCURACY OR COMPLETENESS OF SCANNED COPIES OF THIS PLAN SHEET.

FOR ACCURATE RIGHT OF WAY DATA, CONTACT RIGHT OF WAY ENGINEERING AT THE DISTRICT OFFICE.

LEGEND

N C = EXISTING CONDUIT, NO CHANGE
SDG&E = SAN DIEGO GAS AND ELECTRIC COMPANY
MVDS = MICROWAVE VEHICLE DETECTION SYSTEM
mvds = Exist MICROWAVE VEHICLE DETECTION SYSTEM
OCC = OUTDOOR CATEGORY 5E CABLE
occ = Exist OUTDOOR CATEGORY 5E CABLE
NWR = NO WORK REQUIRED
VDU = VIDEO DETECTION UNIT
VIS = VIDEO IMAGE SENSOR
EX = EXISTING

DETAIL "S"
POLES D & A
NO SCALE

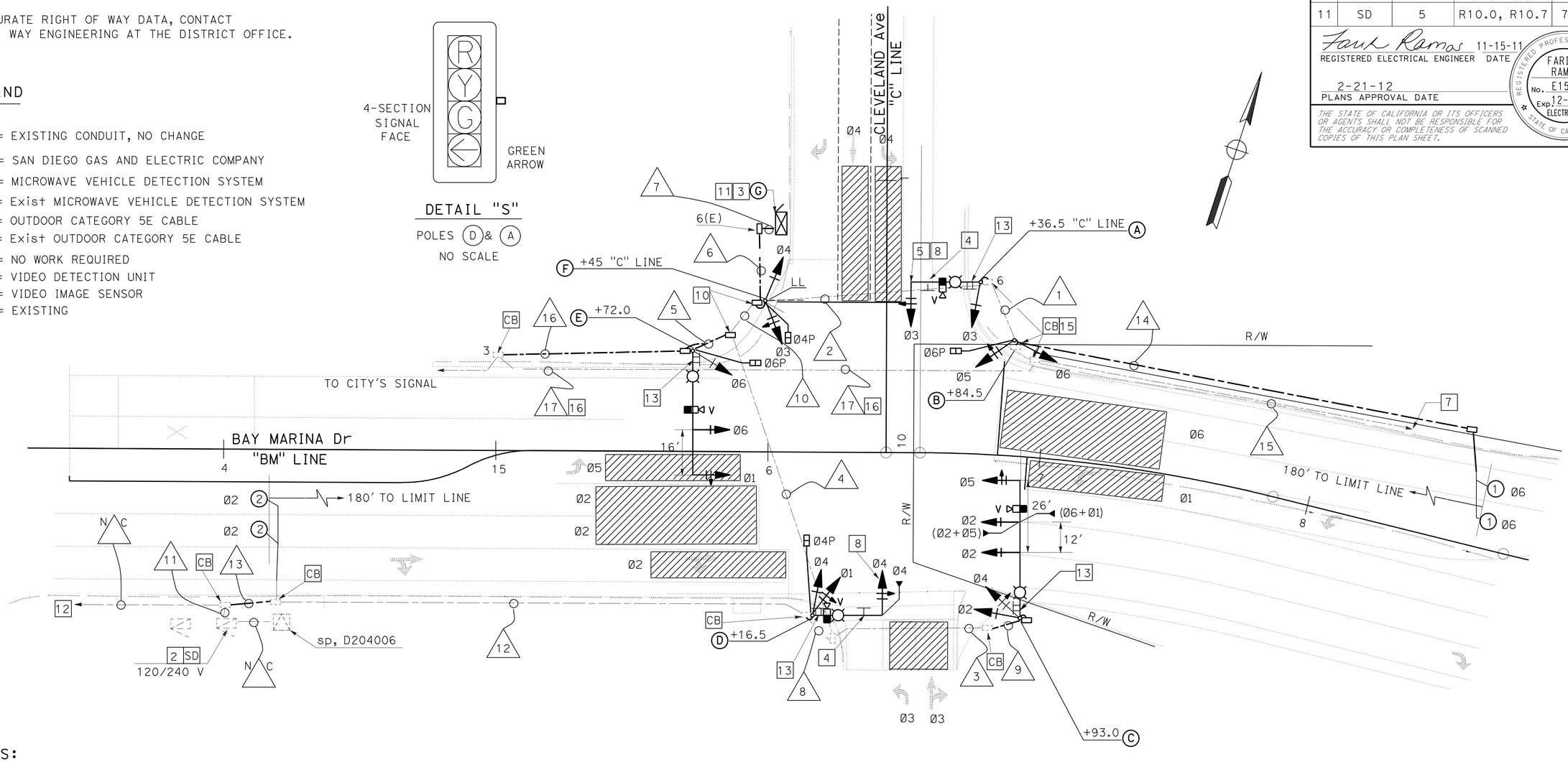

NOTES:

1 - FOR CONDUIT AND CONDUCTOR SCHEDULE AND NOTES SEE E-2.

2 - Exist TYPE III SERVICE EQUIPMENT ENCLOSURE 120/240 V WITH: 2P-100 A MAIN, 1 50 A (signal), 2P-50 A (ltg) ADD: 1P-30 A CB LABEL "SIGNAL, CLEVELAND".

3 - STATE-FURNISHED MODEL 332 CABINET. FOUNDATION PER ES-3C. INSTALL VDU, COMMUNICATION CARD, DISCRIMINATOR MODULE, AND VIDEO DISPLAY IN CABINET.

4 - DETAIL U ES-7N. SEE SIGN PLANS.

5 - TERMINATE EVC IN RED SECTION OF SIGNAL HEAD. LEAVE 2' OF SLACK.

6 - FOR PULL BOXES SEE E-12 FOR DETAILS.

7 - TO SIGNAL AND LIGHTING (LOCATION 1) P10.41, SEE SHEET E-4.

8 - FOUR SECTION SIGNAL FACE. SEE DETAIL "S" THIS SHEET.

9 - FOR EQUIPMENT AND POLE SCHEDULE SEE E-2.

10 - RC Exist No. 5 PB AND PLACE 6(E).

11 - INSTALL BATTERIES AND EXTERNAL BBU SYSTEM CABINET. SEE ELECTRICAL DETAILS ON SHEET E-13.

12 - TO EXISTING SIGNAL AND LIGHTING CIRCUIT, CITY OF NATIONAL CITY. NO WORK REQUIRED.

13 - SNS.

14 - Exist CITY LIGHTING NO SHOWN.

15 - CUT Exist sic.

16 - REMOVE sic AND REUSE IN 5, 10, 6 AND 7.

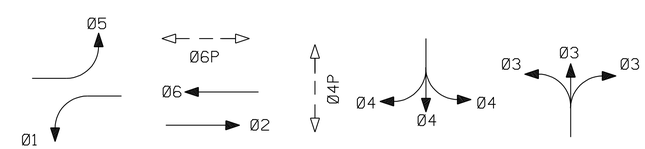

PROPOSED TRAFFIC PHASE DIAGRAM
STEADY DEMAND SEQUENCE →

BAY MARINA Dr/CLEVELAND Ave

SIGNAL AND LIGHTING (CITY)

SCALE: 1" = 20'

E-1

APPROVED FOR ELECTRICAL WORK ONLY

STATE OF CALIFORNIA - DEPARTMENT OF TRANSPORTATION
Caltrans TRAFFIC ELECTRICAL
FUNCTIONAL SUPERVISOR: DALE WILSON
CALCULATED-DESIGNED BY: FARIBA RAMOS
CHECKED BY: ENRIQUE BERNAL
REVISED BY / DATE REVISED

LAST REVISION 11-18-11 | DATE PLOTTED => 23-FEB-2012 | TIME PLOTTED => 15:07

Dist	COUNTY	ROUTE	POST MILES TOTAL PROJECT	SHEET No.	TOTAL SHEETS
11	SD	5	R10.0, R10.7	74	132

Fariba Ramos 11-15-11
REGISTERED ELECTRICAL ENGINEER DATE

2-21-12
PLANS APPROVAL DATE

REGISTERED PROFESSIONAL ENGINEER FARIBA RAMOS No. E15619 Exp. 12-31-11 ELECTRICAL STATE OF CALIFORNIA

THE STATE OF CALIFORNIA OR ITS OFFICERS OR AGENTS SHALL NOT BE RESPONSIBLE FOR THE ACCURACY OR COMPLETENESS OF SCANNED COPIES OF THIS PLAN SHEET.

NOTE:

1 - SEE E-1 SIGNAL PLANS.

2 - EXISTING CONDUITS SHOWN IN THE CONDUIT AND CONDUCTOR SCHEDULE ARE mt. ADD CONDUCTORS AND CABLES AS SHOWN.

CONDUIT & CONDUCTOR SCHEDULE

AWG SIZE OR CABLE TYPE	PHASE	POLE OR CIRCUIT	CONDUIT SIZE AND RUN									
			EX 2" (1)	EX 3" (2)	EX 3" (3)	EX 2-3" (4)	2" (5)	2-3" (6)	2-3" (7)	EX 2" (8)	2" (9)	EX 3" (10)
3CSC / 12CSC		POLE - A		1	1			1	1	1	1	
		B	1		1				1		1	
		C				2	2		2		2	2
		D				1	1	1	1	1	1	1
		E						1	1		1	1
		F						2	1	2	1	
TOTAL 3CSC / 12CSC			1	1	2	2	1	3	1	4	7	4	7	1	1	2	2	4
8		LIGHTING		2	2	2	2			2	2	2
8		SIGNAL				2		2	2	2		2
		SIC	1	1			1	2	2			1
DLC	Ø2					1		1	1	1		1
	Ø6		1	1				1	1			
VIDEO CABLE HARNESS	Ø2/Ø5				1	1		1	1		1	1
	Ø3			1				1	1			
	Ø4					1		1	1	1		1
	Ø6/Ø1						1	1	1			1
EVC				1	2	3		4	4	1	2	3
TOTAL CONDUCTORS / CABLES			3	9	7	14	5	25	29	9	7	18

EQUIPMENT AND POLE SCHEDULE

No.	STANDARD TYPE	SMA (ft)	LMA (ft)	PLACEMENT DIMENSIONS A (ft)	B (ft)	SIGNAL MOUNTING AND PLACEMENT VEHICLE POLE	VEHICLE MASTARM	PEDESTRIAN SIGNAL	PEDESTRIAN PPB	REMARKS
A	19-3-100	25	12	0	6	SV-1-T	MAS-4B	-	Ø6P ←	200 W HPS VIS
B	1-A	-	-	17	5.5	TV-2-T	-	SP-1-T	-	-
C	29-5-100	50	15	19	5.0	SV-2-TD	2-MAS MAT	-	-	200 W HPS VIS
D	19-3-100	25	12	9.0	3.0	SV-2-T	MAS-4B	SP-1-T	Ø4P ←	200 W HPS VIS
E	26-4-100	45	15	2.5	5.0	SV-1-T	MAS MAT	SP-1-T	-	200 W HPS VIS
F	1-A	-	-	15	3.5	TV-2-T	-	SP-1-T	Ø6P → Ø4P ←	-
G	STATE-FURNISHED MODEL 170 CONTROLLER ASSEMBLY.									

CONDUIT NOTES:

11 - EX 2"C,
ADD: 2#8 (SIGNAL), 2#8 (LIGHTING)

12 - EX 2"C, mt ADD: 1 DLC,
2#8 (SIGNAL),
2#8 (LIGHTING)

13 - 2"C, 2#8 (SIGNAL), 2#8 (LIGHTING)

14 - 1½"C, 1 DLC

15 - EX 2"C, 1 sic, RC sic, ADD SIC

16 - 2"C, 1 sic (REUSED)

17 - EX 2"C, 1 sic (REMOVE AND REUSE)

SIGNAL AND LIGHTING (CITY)

NO SCALE

E-2

STATE OF CALIFORNIA - DEPARTMENT OF TRANSPORTATION
Caltrans TRAFFIC ELECTRICAL

FUNCTIONAL SUPERVISOR: DALE WILSON
CALCULATED-DESIGNED BY: FARIBA RAMOS
CHECKED BY: ENRIQUE BERNAL
REVISED BY
DATE REVISED

LAST REVISION 11-18-11
DATE PLOTTED => 22-FEB-2012
TIME PLOTTED => 11:45

Dist	COUNTY	ROUTE	POST MILES TOTAL PROJECT	SHEET No.	TOTAL SHEETS
11	SD	5	R10.0,R10.7	75	132

REGISTERED ELECTRICAL ENGINEER 11-15-11 DATE

2-21-12
PLANS APPROVAL DATE

REGISTERED PROFESSIONAL ENGINEER FARIBA RAMOS No. E15619 Exp. 12-31-11 ELECTRICAL STATE OF CALIFORNIA

THE STATE OF CALIFORNIA OR ITS OFFICERS OR AGENTS SHALL NOT BE RESPONSIBLE FOR THE ACCURACY OR COMPLETENESS OF SCANNED COPIES OF THIS PLAN SHEET.

FOR ACCURATE RIGHT OF WAY DATA, CONTACT
RIGHT OF WAY ENGINEERING AT THE DISTRICT OFFICE.

NOTES:

1 - RC SIGNAL POLES AND APPURTENANCES EXCEPT AS NOTED. FA
2 - RC LIGHTING POLES AND APPURTENANCES EXCEPT AS NOTED. FA
3 - AB CONDUIT AND DETECTOR LOOPS EXCEPT AS NOTED.
4 - RC PULL BOXES EXCEPT AS NOTED.
5 - Exist LOOP TO REMAIN, SEE E-4.
6 - Exist CONDUIT TO REMAIN, SEE E-4. RC ALL CABLES.
7 - Exist PULL BOX TO REMAIN, SEE E-4.
8 - RL Exist MODEL 332 CABINET. SEE E-4.
RL Exist BATTERIES AND EXTERNAL BBS CABINET.
9 - Exist 2"C, sic TO MARINA WAY.
10 - Exist 2"C, sic, SEE E-4.
11 - TO Exist SD, B0.02, SEE E-6.

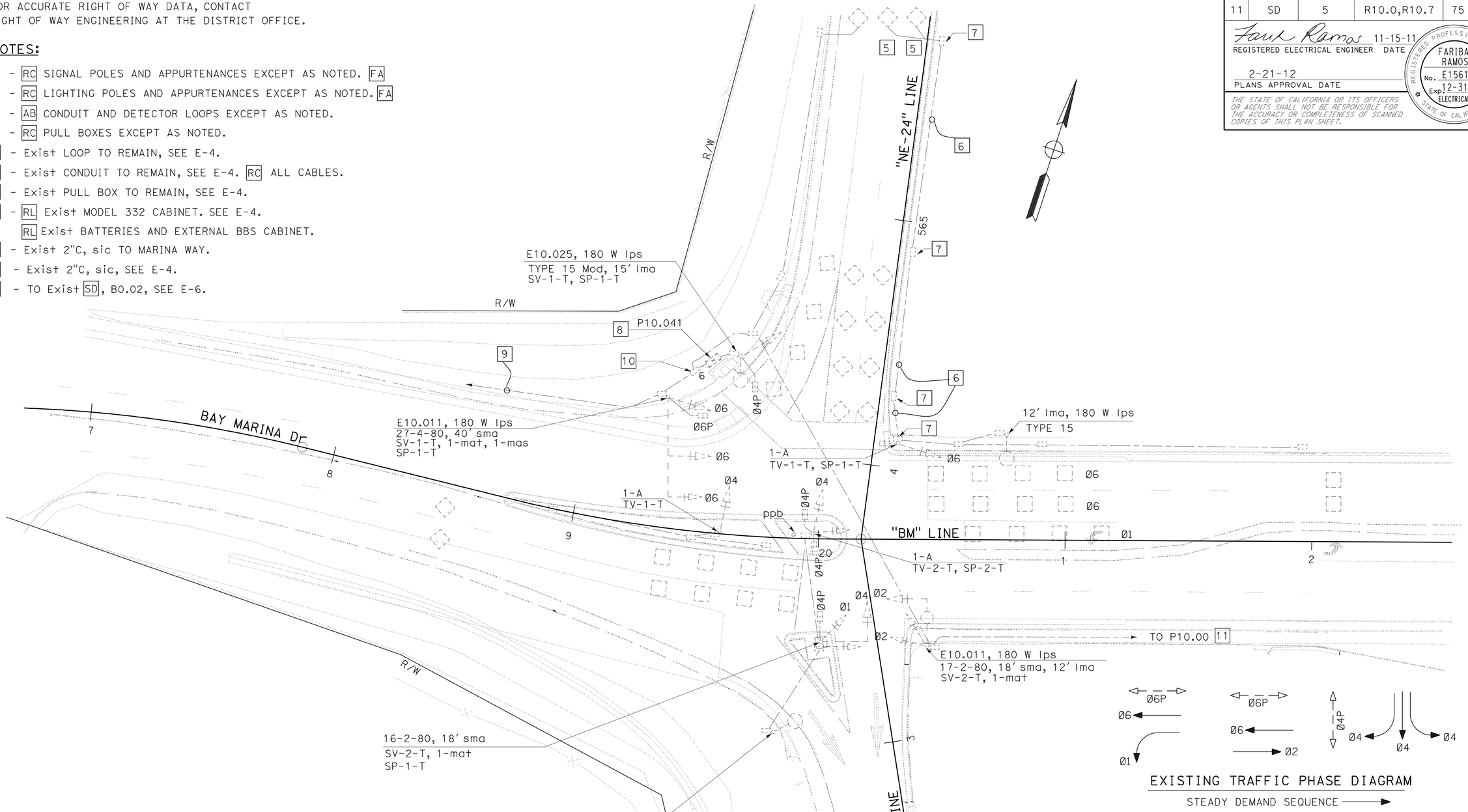

SIGNAL No.: P10.041
ROUTE 5 SB RAMPS

SIGNAL AND LIGHTING (EXISTING AND REMOVE) (LOCATION 1)

SCALE: 1" = 20'

E-3

APPROVED FOR ELECTRICAL WORK ONLY

STATE OF CALIFORNIA - DEPARTMENT OF TRANSPORTATION
Caltrans® TRAFFIC ELECTRICAL

FUNCTIONAL SUPERVISOR: DALE WILSON
CALCULATED-DESIGNED BY: FARIBA RAMOS
CHECKED BY: ENRIQUE BERNAL
REVISED BY
DATE REVISED

LAST REVISION 11-18-11 DATE PLOTTED => 22-FEB-2012 TIME PLOTTED => 11:11

Dist	COUNTY	ROUTE	POST MILES TOTAL PROJECT	SHEET No.	TOTAL SHEETS
11	SD	5	R10.0,R10.7	76	132

REGISTERED ELECTRICAL ENGINEER 11-15-11 DATE

2-21-12
PLANS APPROVAL DATE

REGISTERED PROFESSIONAL ENGINEER FARIBA RAMOS No. E15619 Exp. 12-31-11 ELECTRICAL STATE OF CALIFORNIA

THE STATE OF CALIFORNIA OR ITS OFFICERS OR AGENTS SHALL NOT BE RESPONSIBLE FOR THE ACCURACY OR COMPLETENESS OF SCANNED COPIES OF THIS PLAN SHEET.

FOR ACCURATE RIGHT OF WAY DATA, CONTACT
RIGHT OF WAY ENGINEERING AT THE DISTRICT OFFICE.

NOTES:

1 - FOR EQUIPMENT AND POLE SCHEDULE SEE E-5.

2 - FOR CONDUIT AND CONDUCTOR SCHEDULE SEE E-5.

3 - FOR CONTINUITY SEE E-6.

4 - DETAIL U ES-7N. SEE SIGN PLANS.

5 - RL MODEL 332 CABINET. FURNISH AND INSTALL VDU, VIDEO DISPLAY, AND COMMUNICATION CARD IN CABINET.

6 - RL BATTERIES AND EXTERNAL BBS CABINET. SEE E-13 FOR FOUNDATION DETAILS.

7 - FOR PULL BOXES SEE E-12 FOR DETAILS EXCEPT FOR TRAFFIC RATED PULL BOXES.

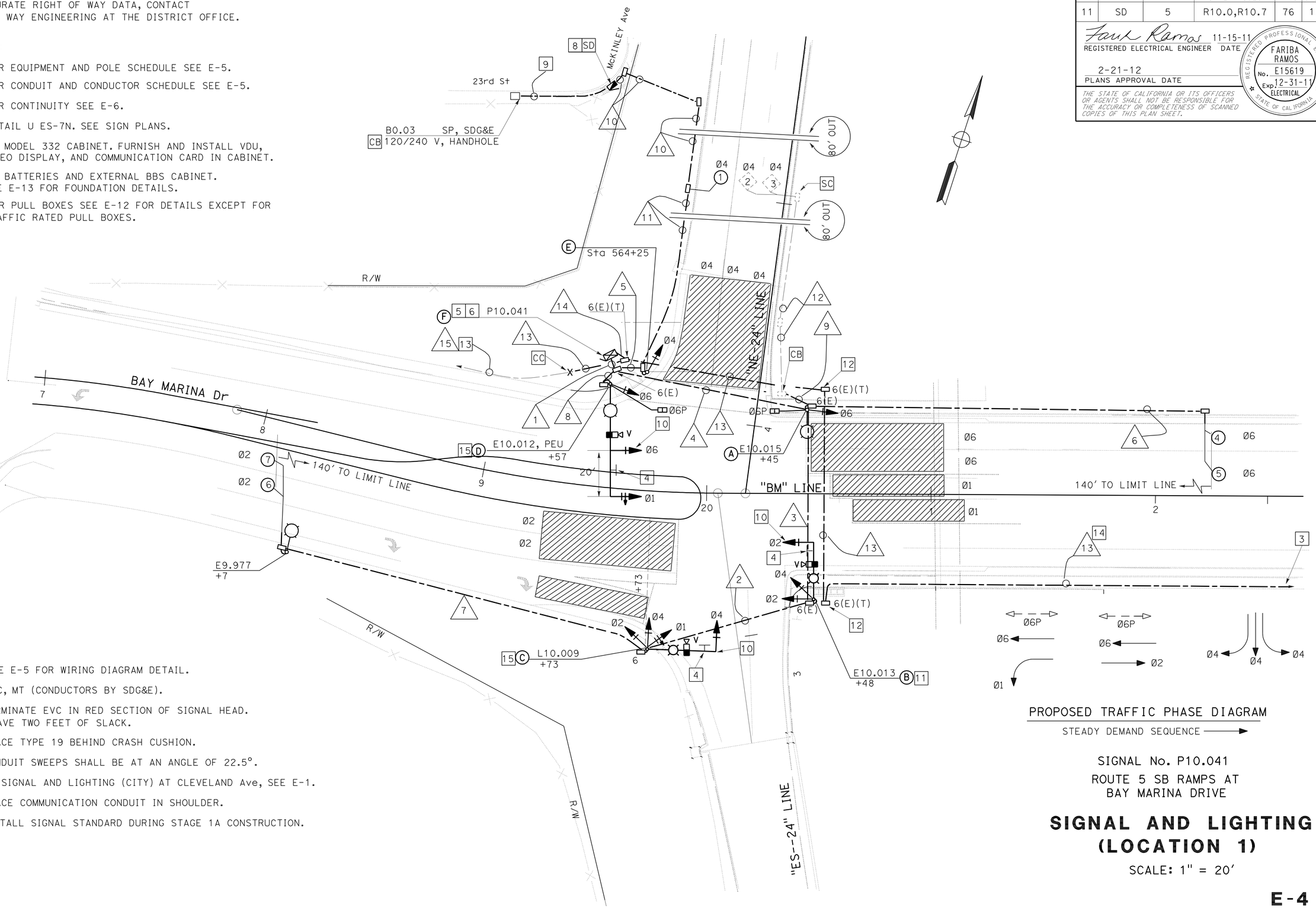

8 - SEE E-5 FOR WIRING DIAGRAM DETAIL.

9 - 3"C, MT (CONDUCTORS BY SDG&E).

10 - TERMINATE EVC IN RED SECTION OF SIGNAL HEAD. LEAVE TWO FEET OF SLACK.

11 - PLACE TYPE 19 BEHIND CRASH CUSHION.

12 - CONDUIT SWEEPS SHALL BE AT AN ANGLE OF 22.5°.

13 - TO SIGNAL AND LIGHTING (CITY) AT CLEVELAND Ave, SEE E-1.

14 - PLACE COMMUNICATION CONDUIT IN SHOULDER.

15 - INSTALL SIGNAL STANDARD DURING STAGE 1A CONSTRUCTION.

SIGNAL No. P10.041

ROUTE 5 SB RAMPS AT
BAY MARINA DRIVE

SIGNAL AND LIGHTING (LOCATION 1)

SCALE: 1" = 20'

E-4

APPROVED FOR ELECTRICAL WORK ONLY

STATE OF CALIFORNIA - DEPARTMENT OF TRANSPORTATION
Caltrans TRAFFIC ELECTRICAL

FUNCTIONAL SUPERVISOR: DALE WILSON
CALCULATED-DESIGNED BY: FARIBA RAMOS
CHECKED BY: ENRIQUE BERNAL
REVISED BY
DATE REVISED

LAST REVISION 11-18-11
DATE PLOTTED => 22-FEB-2012
TIME PLOTTED => 11:11

Dist	COUNTY	ROUTE	POST MILES TOTAL PROJECT	SHEET No.	TOTAL SHEETS
11	SD	5	R10.0, R10.7	77	132

REGISTERED ELECTRICAL ENGINEER 11-15-11 DATE

2-21-12
PLANS APPROVAL DATE

REGISTERED PROFESSIONAL ENGINEER FARIBA RAMOS No. E15619 Exp. 12-31-11 ELECTRICAL STATE OF CALIFORNIA

THE STATE OF CALIFORNIA OR ITS OFFICERS OR AGENTS SHALL NOT BE RESPONSIBLE FOR THE ACCURACY OR COMPLETENESS OF SCANNED COPIES OF THIS PLAN SHEET.

NOTE:

1 - SEE E-4 FOR SIGNAL PLANS.

CONDUIT AND CONDUCTOR SCHEDULE

AWG SIZE OR CABLE TYPE	PHASE	POLE OR CIRCUIT	CONDUIT SIZE AND RUN 2-3" (1)	3" (2)	3" (3)	3" (4)	2" (5)	2" (6)	2" (7)	2" (8)	2" (9)	2" (10)	2" (11)	EX 2" (12)	2" (13)	2" (14)	EX 2" (15)
3CSC / 12CSC		POLE - A	1 1			1 1											
		B	2		2	2											
		C	2	2	2	2											
		D	1 1							1 1							
		E	1				1										
TOTAL 3CSC / 12CSC			2 7	2	4	1 5	1			1 1							
14		PEU					3			3		3	3				
10		LIGHTING		2	2	2	2		2	2		2	2				
6		SIGNAL	2				2					2	2				
DLC	Ø1																
	Ø2		2	2	2	2			2								
	Ø4		3			2	1				2		1	2			
	Ø6		2			2		2									
VIDEO CABLE HARNESS	Ø2		1		1	1											
	Ø4		1	1	1	1											
	~~Ø6~~ Ø1		1							1							
EVC			3	1	2	2				1							
SIC															1	2	RC 1 sic, ADD 1 SIC
TOTAL CONDUCTORS / CABLES			24	8	12	18	9	2	4	9	2	7	8	2	1	2	1

EQUIPMENT AND POLE SCHEDULE

No.	STANDARD TYPE	SMA (ft)	LMA (ft)	PLACEMENT DIMENSIONS A (ft)	B (ft)	SIGNAL MOUNTING AND PLACEMENT VEHICLE POLE	VEHICLE MASTARM	PEDESTRIAN SIGNAL	PEDESTRIAN PPB	REMARKS
A	15TS	-	10	12	6.0	SV-1-T	-	SP-1-T	Ø6P ←	200 W HPS
B	19-3-100	25	15	1.5	6.5	SV-2-T	MAS	-	-	200 W HPS VIS
C	24-3-100	30	15	14	3.5	SV-3-T	MAS	-	-	200 W HPS VIS
D	26-4-100	45	15	19	6.0	SV-1-T	MAS MAT	SP-1-T	Ø6P →	200 W HPS PEU VIS
E	1-A	-	-	22	4.0	TV-1-T	-	-	-	-
F	RL MODEL 170 CONTROLLER ASSEMBLY AND BBS.									

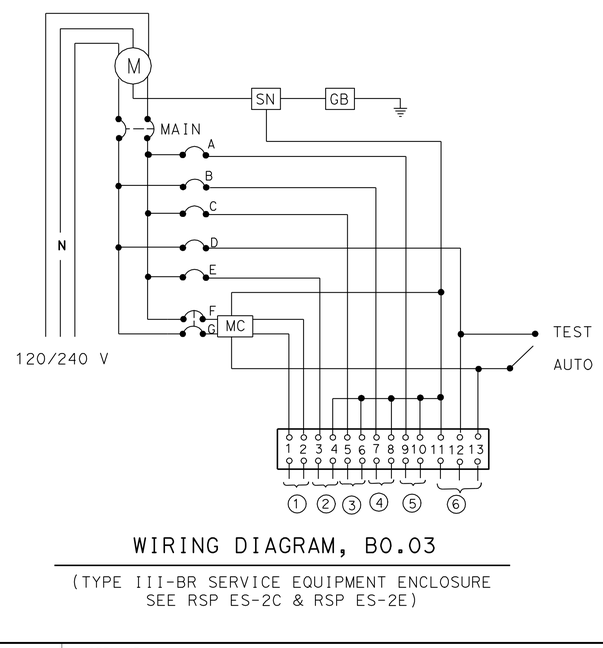

WIRING DIAGRAM, B0.03

(TYPE III-BR SERVICE EQUIPMENT ENCLOSURE
SEE RSP ES-2C & RSP ES-2E)

CIRCUIT BREAKERS

MAIN-2P-100 A

A-1P-15 A
B-1P-15 A
B-1P-15 A
C-1P-15 A
D-1P-15 A
E-1P-30 A
F, G } 2P-30 A

1 - LIGHTING
2 - SIGNAL
3 - SPARE
4 - SPARE
5 - SPARE
6 - PEU

SIGNAL AND LIGHTING (LOCATION 1)

NO SCALE

E-5

REVISED BY | DATE REVISED
FARIBA RAMOS | ENRIQUE BERNAL
CALCULATED-DESIGNED BY | CHECKED BY
FUNCTIONAL SUPERVISOR | DALE WILSON
STATE OF CALIFORNIA - DEPARTMENT OF TRANSPORTATION
Caltrans TRAFFIC ELECTRICAL

LAST REVISION 11-18-11 | DATE PLOTTED => 23-FEB-2012 | TIME PLOTTED => 15:07

Dist	COUNTY	ROUTE	POST MILES TOTAL PROJECT	SHEET No.	TOTAL SHEETS
11	SD	5	R10.0, R10.7	78	132

REGISTERED ELECTRICAL ENGINEER 11-15-11 DATE

2-21-12
PLANS APPROVAL DATE

REGISTERED PROFESSIONAL ENGINEER FARIBA RAMOS No. E15619 Exp. 12-31-11 ELECTRICAL STATE OF CALIFORNIA

THE STATE OF CALIFORNIA OR ITS OFFICERS OR AGENTS SHALL NOT BE RESPONSIBLE FOR THE ACCURACY OR COMPLETENESS OF SCANNED COPIES OF THIS PLAN SHEET.

FOR ACCURATE RIGHT OF WAY DATA, CONTACT
RIGHT OF WAY ENGINEERING AT THE DISTRICT OFFICE.

CONDUIT NOTES:

1 - 2"C, 2 DLC

2 - Exist 2"C, 2#4 (SB signal), 2#10 (ltg), 2#4 (NB signal).
RC: 2#4 (SB signal)

3 - 2"C, 6 DLC, 2#10 (LTG)

4 - 2"C, 16 LOOP WIRES

5 - 2"C, 1-12CSC, 6 DLC, 2#10 (LTG), 1 SIC

6 - Exist 2"C, 2#10 (ltg), 13#14, 5 dlc. 1#10 (signal common)
RC: 13#14 CONDUCTORS, sic, 2#4 (SB signal), 5 dlc, 1#10 (signal common)
ADD: 8 DLC, 1-12CSC, 1 SIC

7 - Exist 2"C, 5 dlc, 2#10 (ltg), 2#4 (SB signal), sic, 13#14 (signal), 1#10 (signal common)
RC: 13#14 CONDUCTORS, 2#4 (SB signal), sic, 5 dlc, 1#10 (signal common)
ADD: 8 DLC, 1-12CSC, 1 SIC

8 - Exist 2"C, 11 dlc, 2#10 (ltg), 2#4 (SB signal), sic, 11 dlc, 13#14 (signal), 1#10 (signal common)
RC: 13#14 CONDUCTORS, 2#4 (SB signal), sic, 5 dlc,1#10 (signal common)
ADD: 8 DLC, 1-12CSC, 1 SIC

9 - Exist 2-2"C, 66#14 (sig), 15 dlc, sic, 1#10 (signal common)
RC: 13#14 CONDUCTORS, 2#4 (SB signal), sic, 5 dlc
ADD: 8 DLC, 1-12CSC, 1 SIC

10 - 2"C, 1 SIC 11 12

NOTES:

9 - EXTEND TERMINATION CONDUIT.

10 - 6(E)(T). COMMUNICATION CONDUIT SWEEPS SHALL BE AT AN ANGLE OF 22.5°.

11 - SEE E-4 FOR CIRCUIT CONTINUITY.

12 - PLACE COMMUNICATION CONDUIT IN SHOULDER.

2 - THE CONTRACTOR SHALL VERIFY ALL CONTROLLING DIMENSIONS BEFORE ORDERING OR FABRICATING MATERIAL.

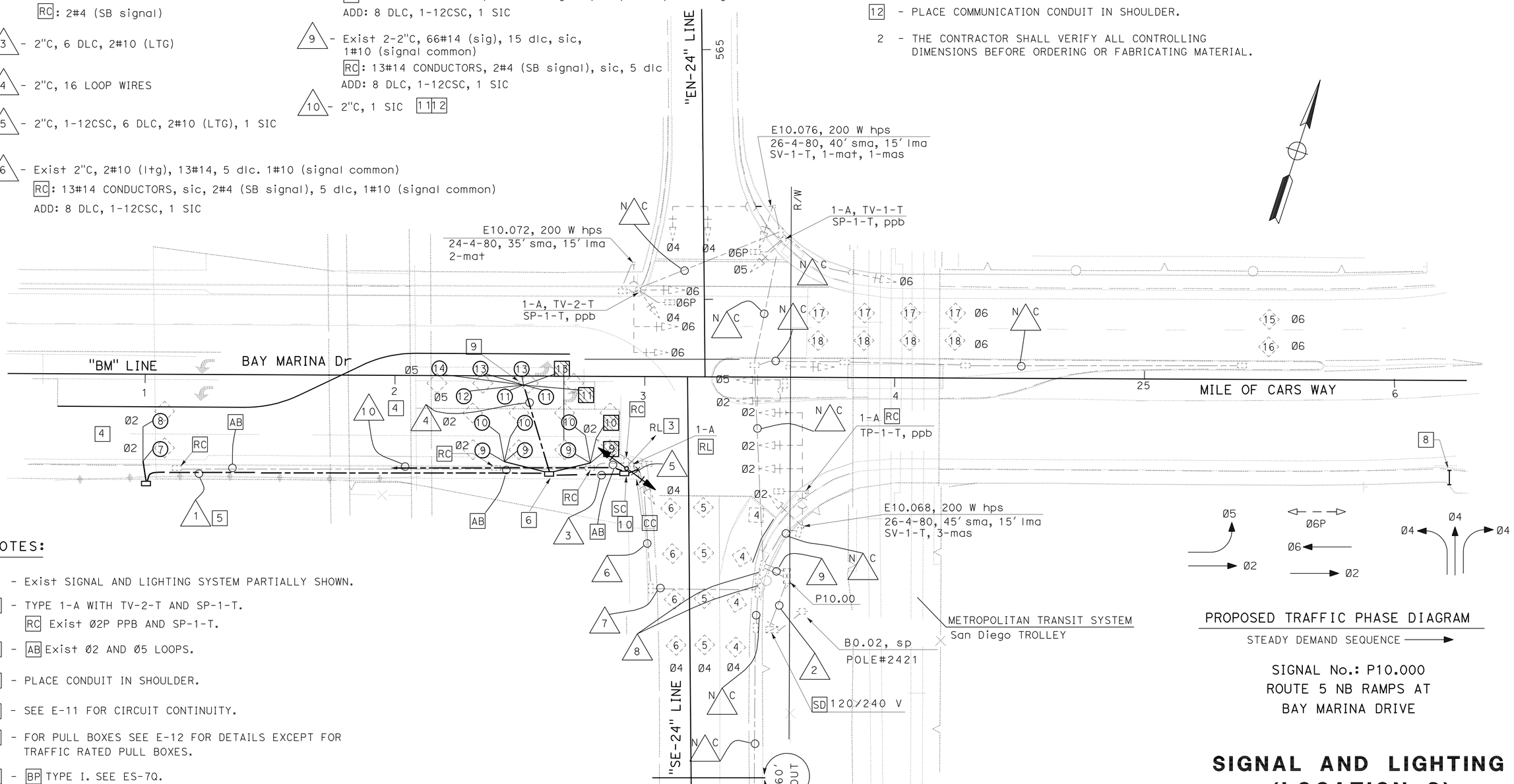

NOTES:

1 - Exist SIGNAL AND LIGHTING SYSTEM PARTIALLY SHOWN.

3 - TYPE 1-A WITH TV-2-T AND SP-1-T.
RC Exist Ø2P PPB AND SP-1-T.

4 - AB Exist Ø2 AND Ø5 LOOPS.

5 - PLACE CONDUIT IN SHOULDER.

6 - SEE E-11 FOR CIRCUIT CONTINUITY.

7 - FOR PULL BOXES SEE E-12 FOR DETAILS EXCEPT FOR TRAFFIC RATED PULL BOXES.

8 - BP TYPE I. SEE ES-7Q.

PROPOSED TRAFFIC PHASE DIAGRAM
STEADY DEMAND SEQUENCE

SIGNAL No.: P10.000
ROUTE 5 NB RAMPS AT
BAY MARINA DRIVE

SIGNAL AND LIGHTING (LOCATION 2)

SCALE: 1" = 20'

E-6

APPROVED FOR ELECTRICAL WORK ONLY

STATE OF CALIFORNIA - DEPARTMENT OF TRANSPORTATION
Caltrans® TRAFFIC ELECTRICAL

FUNCTIONAL SUPERVISOR: DALE WILSON
CALCULATED-DESIGNED BY: FARIBA RAMOS
CHECKED BY: ENRIQUE BERNAL
REVISED BY
DATE REVISED

LAST REVISION 11-18-11
DATE PLOTTED => 23-FEB-2012
TIME PLOTTED => 15:07

Dist	COUNTY	ROUTE	POST MILES TOTAL PROJECT	SHEET No.	TOTAL SHEETS
11	SD	5	R10.0,R10.7	79	132

Fariba Ramos 11-15-11
REGISTERED ELECTRICAL ENGINEER DATE

2-21-12
PLANS APPROVAL DATE

REGISTERED PROFESSIONAL ENGINEER FARIBA RAMOS No. E15619 Exp. 12-31-11 ELECTRICAL STATE OF CALIFORNIA

THE STATE OF CALIFORNIA OR ITS OFFICERS OR AGENTS SHALL NOT BE RESPONSIBLE FOR THE ACCURACY OR COMPLETENESS OF SCANNED COPIES OF THIS PLAN SHEET.

FOR ACCURATE RIGHT OF WAY DATA, CONTACT
RIGHT OF WAY ENGINEERING AT THE DISTRICT OFFICE.

NOTES:

1 - EXISTING LIGHTING SYSTEM PARTIALLY SHOWN.

2 - EXISTING NATIONAL CITY LIGHTING SYSTEM PARTIALLY SHOWN.

3 - STATE-FURNISHED MODEL 170 CONTROLLER ASSEMBLY. INSTALL VDU, VIDEO DISPLAY, AND COMMUNICATION CARD IN CABINET.

4 - DETAIL U ES-7N. SEE SIGN PLANS.

5 - TYPE III CF SERVICE ENCLOSURE. SEE E-8 FOR WIRING DIAGRAM.

6 - RS . EXISTING NATIONAL CITY LIGHTING STANDARD.

7 - LEAVE 50' SLACK OF SIC IN THE PULL BOX FOR FUTURE USE.

8 - TERMINATE EVC IN RED SECTION OF SIGNAL HEAD. LEAVE TWO FEET OF SLACK.

9 - FOR PULL BOXES SEE E-12 FOR DETAILS.

10 - INSTALL COMMUNICATION EQUIPMENT PER COMPONENT DIAGRAM. SEE ELECTRICAL DETAILS ON SHEET E-14.

11 - INSTALL BATTERIES AND EXTERNAL BBU SYSTEM CABINET. SEE ELECTRICAL DETAILS ON SHEET E-13.

12 - SEE E-9 FOR CIRCUIT CONTINUITY.

13 - CONDUIT TO ENTER PER SDG&E REQUIREMENTS.

14 - FOR CONDUIT AND CONDUCTOR SCHEDULE AND NOTES SEE E-8.

15 - FOR EQUIPMENT AND POLE SCHEDULE SEE E-8.

16 - CONNECT SIC TO Exist RAILROAD SIGNAL CONTROLLER. INSTALL LB FITTING

17 - AB Exist ADVANCED LOOPS, 250' FROM LIMIT LINE AT CIVIC CENTER DRIVE AND HARBOR DRIVE.

18 - Exist 1" CONDUIT WITH 1 dlc TO CIVIC CENTER DRIVE AND HARBOR DRIVE SIGNAL.

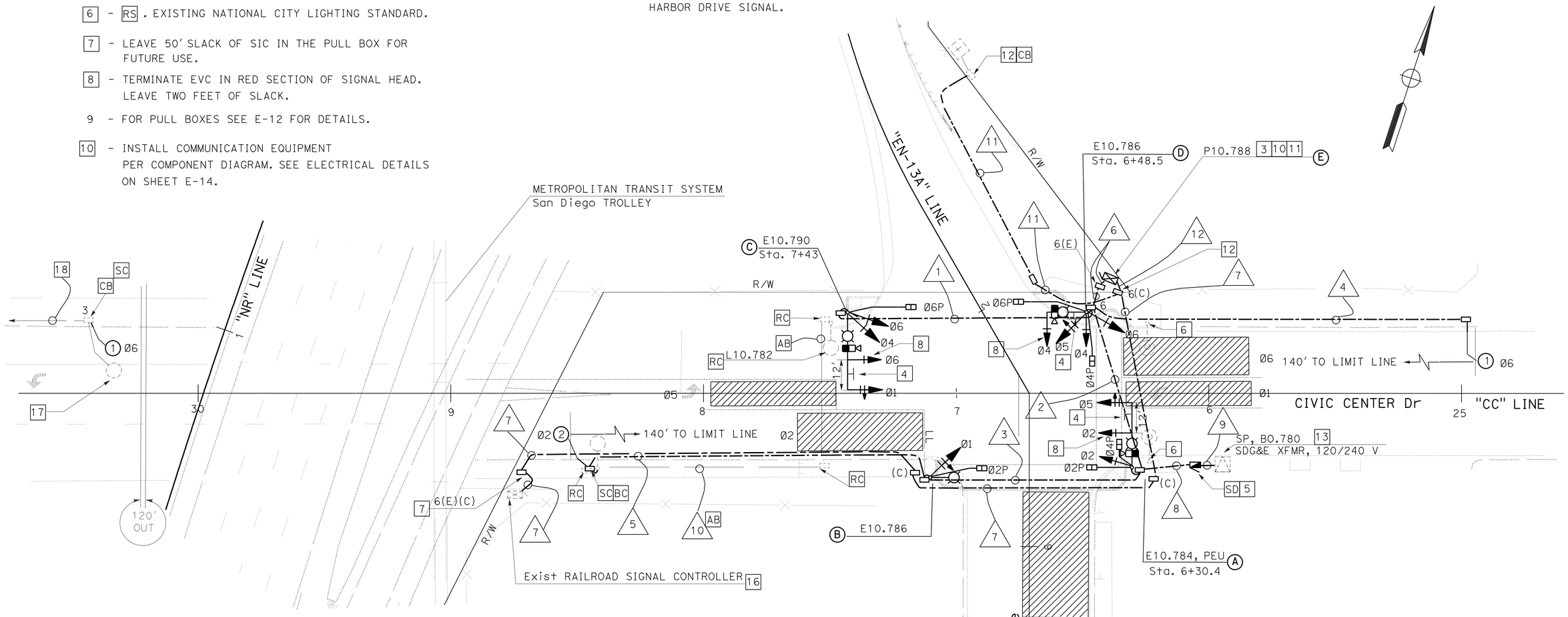

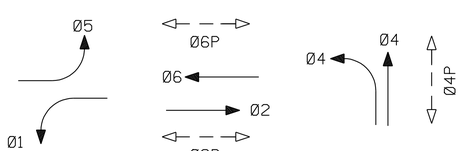

TRAFFIC PHASE DIAGRAM
STEADY DEMAND SEQUENCE

CIVIC CENTER Dr/WILSON Ave & NORTHBOUND 5 RAMP
P10.784

SIGNAL AND LIGHTING (LOCATION 3)

SCALE: 1" = 20'

E-7

APPROVED FOR ELECTRICAL WORK ONLY

STATE OF CALIFORNIA - DEPARTMENT OF TRANSPORTATION
Caltrans TRAFFIC ELECTRICAL
FUNCTIONAL SUPERVISOR: DALE WILSON
CALCULATED-DESIGNED BY: ENRIQUE BERNAL
CHECKED BY: FARIBA RAMOS
REVISED BY
DATE REVISED

LAST REVISION 11-18-11
DATE PLOTTED => 22-FEB-2012
TIME PLOTTED => 11:13

Dist	COUNTY	ROUTE	POST MILES TOTAL PROJECT	SHEET No.	TOTAL SHEETS
11	SD	5	R10.0,R10.7	80	132

REGISTERED ELECTRICAL ENGINEER 11-15-11 DATE

2-21-12
PLANS APPROVAL DATE

REGISTERED PROFESSIONAL ENGINEER FARIBA RAMOS No. E15619 Exp. 12-31-11 ELECTRICAL STATE OF CALIFORNIA

THE STATE OF CALIFORNIA OR ITS OFFICERS OR AGENTS SHALL NOT BE RESPONSIBLE FOR THE ACCURACY OR COMPLETENESS OF SCANNED COPIES OF THIS PLAN SHEET.

EQUIPMENT AND POLE SCHEDULE

No.	STANDARD TYPE	STANDARD SMA (ft)	STANDARD LMA (ft)	PLACEMENT DIMENSIONS A (ft)	PLACEMENT DIMENSIONS B (ft)	SIGNAL MOUNTING AND PLACEMENT: VEHICLE POLE	VEHICLE MASTARM	PEDESTRIAN SIGNAL	PEDESTRIAN PPB	REMARKS
A	19-4-100	25	12	5.0	3.0	SV-1-T	MAS MAT	SP-2-T	Ø2P ← Ø4P ←	200 W HPS PEU VIS
B	15TS	-	12	3.0	5.0	SV-1-T	-	SP-1-T	Ø2P ←	200 W HPS
C	24-4-100	30	12	5.0	3.0	SV-2-T	MAS MAT	SP-1-T	Ø6P ←	200 W HPS VIS
D	19-3-100	15	8	30.0	4.0	SV-3-T	MAS	SP-2-T	Ø6P → Ø4P ←	200 W HPS VIS
E	STATE-FURNISHED MODEL 170 CONTROLLER ASSEMBLY.									

CONDUIT NOTES:

7 - 2"C, 1 SIC

8 - 3"C, 2#8 (LTG),
2#6 (SIG),
3#14 (PEU),
2#12 (TDC),
4#12 (CEC),
2#6 (TMS),
2#8 (MVDS),

9 - 2"C, MT. (CONDUCTORS BY OTHERS).

10 - Exist 1 1/2"C, 2#10 (ltg)

11 - 2"C, 2 OCC

12 - 2"C, 2 OCC, 1 SIC

CONDUIT & CONDUCTOR SCHEDULE

AWG SIZE OR CABLE TYPE	PHASE	POLE OR CIRCUIT	CONDUIT SIZE AND RUN 3" (1)	3" (2)	3" (3)	2" (4)	2" (5)	2-3" (6)
3CSC / 12CSC		POLE - A		2	2			2 / 2
		B		1	1 / 1	1		1 / 1
		C	1	2				1 / 2
		D						2 / 2
TOTAL 3CSC / 12CSC			1 / 2	3 / 3	1 / 1	- / -	- / -	6 / 7
8		LIGHTING	2	2	2		2	
6		SIGNAL		2				2
12		TDC		2				
12		CEC		4				
6		TMS		2				
8		MVDS		2				
DLC	Ø2			1	1		1	1
	Ø6					1		1
VIDEO CABLE HARNESS	Ø2 / Ø5			1				1
	Ø4							1
	Ø6 / Ø1		1					1
EVC			1	1				3
TOTAL CONDUCTORS / CABLES			7	23	5	1	3	23

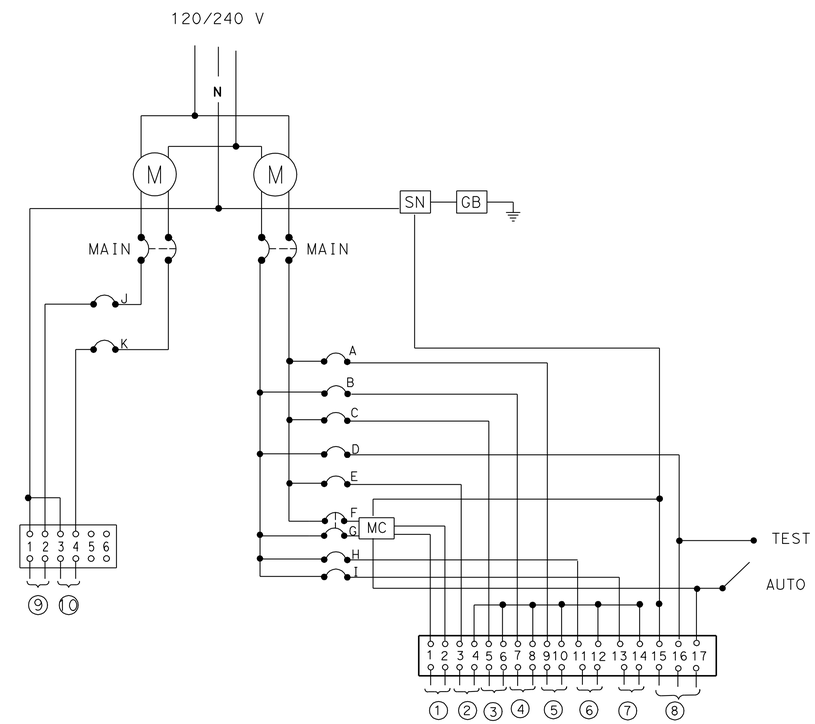

CIRCUIT BREAKERS

MAIN-2P-100 A

A-1P-15 A
B-1P-30 A
C-1P-15 A
D-1P-15 A
E-1P-30 A
F, G } 2P-30 A
H-1P-15 A
I-1P-20 A
J-1P-15 A
K-1P-15 A

1 - LIGHTING
2 - SIGNAL
3 - SPARE
4 - TMS
5 - TDC
6 - SPARE
7 - MVDS
8 - PEU
9 - CEC
10 - CEC

WIRING DIAGRAM

(TYPE III-CF SERVICE EQUIPMENT ENCLOSURE
SEE RSP ES-2C & RSP ES-2F)

CIVIC CENTER DRIVE

SIGNAL AND LIGHTING (LOCATION 3)

NO SCALE

E-8

STATE OF CALIFORNIA - DEPARTMENT OF TRANSPORTATION
Caltrans® TRAFFIC ELECTRICAL

FUNCTIONAL SUPERVISOR: DALE WILSON
CALCULATED-DESIGNED BY: FARIBA RAMOS
CHECKED BY: ENRIQUE BERNAL
REVISED BY
DATE REVISED

LAST REVISION 11-18-11
DATE PLOTTED => 22-FEB-2012
TIME PLOTTED => 13:54

Dist	COUNTY	ROUTE	POST MILES TOTAL PROJECT	SHEET No.	TOTAL SHEETS
11	SD	5	R10.0,R10.7	81	132

REGISTERED ELECTRICAL ENGINEER 11-15-11 DATE

2-21-12
PLANS APPROVAL DATE

REGISTERED PROFESSIONAL ENGINEER FARIBA RAMOS No. E15619 Exp. 12-31-11 ELECTRICAL STATE OF CALIFORNIA

THE STATE OF CALIFORNIA OR ITS OFFICERS OR AGENTS SHALL NOT BE RESPONSIBLE FOR THE ACCURACY OR COMPLETENESS OF SCANNED COPIES OF THIS PLAN SHEET.

FOR ACCURATE RIGHT OF WAY DATA, CONTACT RIGHT OF WAY ENGINEERING AT THE DISTRICT OFFICE.

NOTES:

1 - EXISTING TRAFFIC MONITORING STATION AND IRRIGATION CONTROLLER ARE PARTIALLY SHOWN.

2 - TO EXISTING TYPE III-BR AT 198 WEST PLAZA Blvd RC EXISTING "MVDS", "TMS", AND "TDC" CIRCUIT BREAKERS.

3 - RL MODEL 334 CABINET. CONSTRUCT FOUNDATION PER ES-3C.

4 - FOR PULL BOXES SEE E-12 FOR DETAILS EXCEPT FOR TRAFFIC RATED PULL BOXES.

5 - REUSE EXISTING OCC(s) FROM CONDUIT. INSTALL OCC CABLES IN 6 AND 15.

6 - NOT USED INSTALL MVDS CABLE IN 5

7 - SEE E-7 FOR CIRCUIT CONTINUITY.

8 - AB EXISTING CONDUITS EXCEPT AS NOTED.

9 - RC EXISTING PULL BOXES EXCEPT AS NOTED.

10 - PULL BOX TO REMAIN.

11 - CONDUIT TO REMAIN.

12 - INSTALL A TYPE E LOOP DETECTOR IN THE CENTER OF LANE.

13 - SEE LANDSCAPING PLANS FOR NEW LOCATION.

14 - SEE E-14 AND E-15 FOR ELECTRICAL DETAILS.

15 - INSTALL STATE-FURNISHED MODEL 170 CONTROLLER UNIT IN MODEL 334 CABINET.

16 - IRRIGATION CABINET PER LANDSCAPE DETAILS. CONNECT 2#12 (CEC).

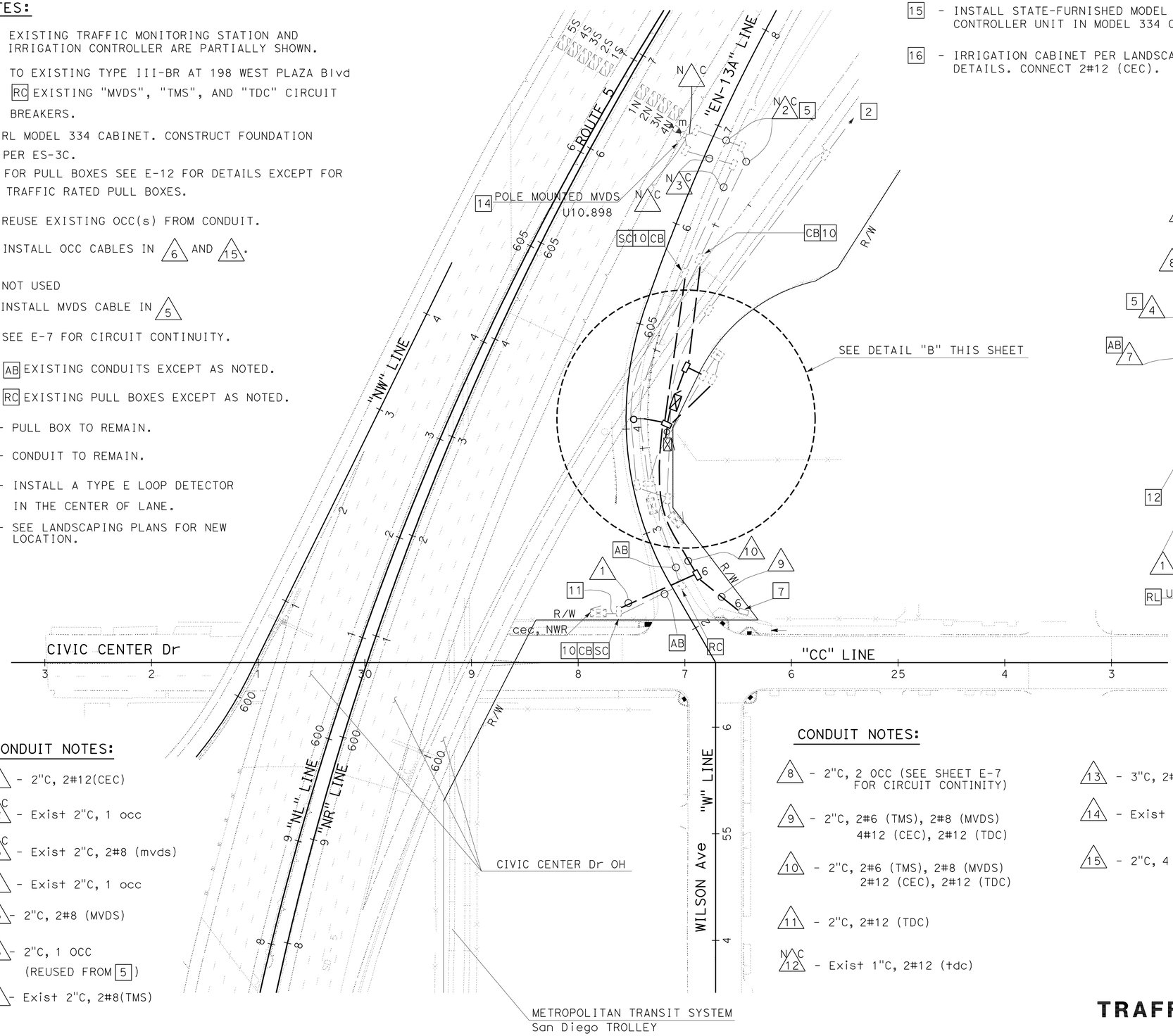

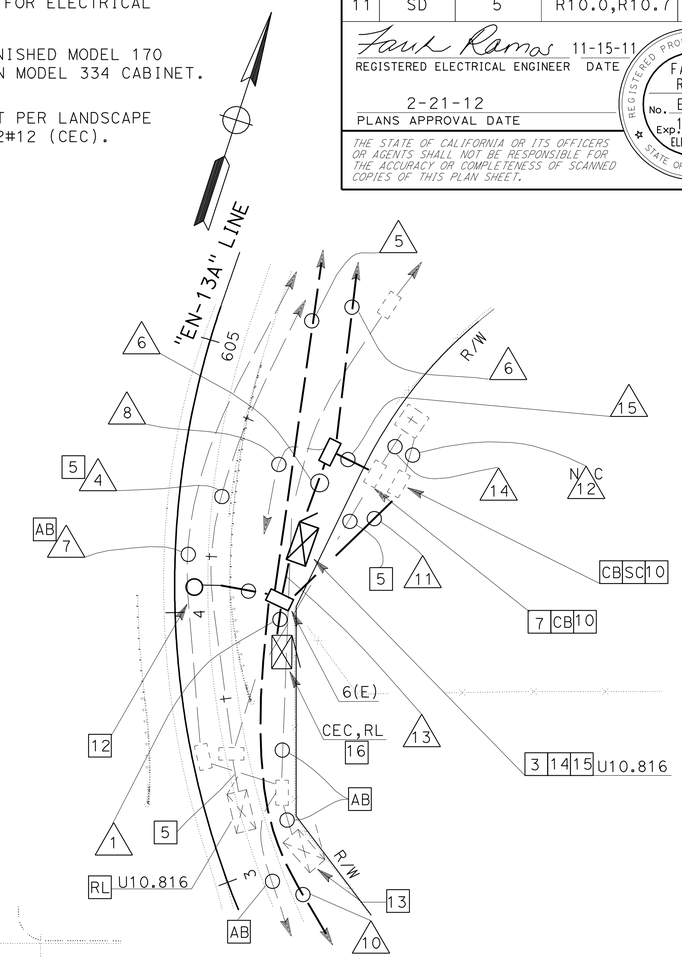

DETAIL "B"
NO SCALE

CONDUIT NOTES:

1 - 2"C, 2#12(CEC)

N C 2 - Exist 2"C, 1 occ

N C 3 - Exist 2"C, 2#8 (mvds)

4 - Exist 2"C, 1 occ

5 - 2"C, 2#8 (MVDS)

6 - 2"C, 1 OCC (REUSED FROM 5)

7 - Exist 2"C, 2#8(TMS)

CONDUIT NOTES:

8 - 2"C, 2 OCC (SEE SHEET E-7 FOR CIRCUIT CONTINITY)

9 - 2"C, 2#6 (TMS), 2#8 (MVDS) 4#12 (CEC), 2#12 (TDC)

10 - 2"C, 2#6 (TMS), 2#8 (MVDS) 2#12 (CEC), 2#12 (TDC)

11 - 2"C, 2#12 (TDC)

N C 12 - Exist 1"C, 2#12 (tdc)

13 - 3"C, 2#6 (TMS), 1 DLC

14 - Exist 1 1/2"C, 2 occ (TELEPHONE) (REUSED), ADD 2 OCC

15 - 2"C, 4 OCC (2 OCC REUSED)

TRAFFIC MONITORING STATION

SCALE: 1" = 50'

APPROVED FOR ELECTRICAL WORK ONLY

E-9

STATE OF CALIFORNIA - DEPARTMENT OF TRANSPORTATION
Caltrans® TRAFFIC ELECTRICAL

FUNCTIONAL SUPERVISOR: DALE WILSON
CALCULATED-DESIGNED BY: ENRIQUE BERNAL
CHECKED BY: FARIBA RAMOS
REVISED BY / DATE REVISED

LAST REVISION 11-18-11
DATE PLOTTED => 23-FEB-2012
TIME PLOTTED => 15:07

Dist	COUNTY	ROUTE	POST MILES TOTAL PROJECT	SHEET No.	TOTAL SHEETS
11	SD	5	R10.0,R10.7	82	132

Fariba Ramos 11-15-11
REGISTERED ELECTRICAL ENGINEER DATE

2-21-12
PLANS APPROVAL DATE

REGISTERED PROFESSIONAL ENGINEER
FARIBA RAMOS
No. E15619
Exp. 12-31-11
ELECTRICAL
STATE OF CALIFORNIA

THE STATE OF CALIFORNIA OR ITS OFFICERS OR AGENTS SHALL NOT BE RESPONSIBLE FOR THE ACCURACY OR COMPLETENESS OF SCANNED COPIES OF THIS PLAN SHEET.

FOR ACCURATE RIGHT OF WAY DATA, CONTACT
RIGHT OF WAY ENGINEERING AT THE DISTRICT OFFICE.

NOTES:

1 - INSTALL A TYPE E LOOP DETECTOR IN THE CENTER OF LANE.

2 - EXISTING LIGHTING SYSTEM NOT SHOWN.

3 - FOR PULL BOXES SEE E-12 FOR DETAILS EXCEPT FOR TRAFFIC RATED PULL BOXES.

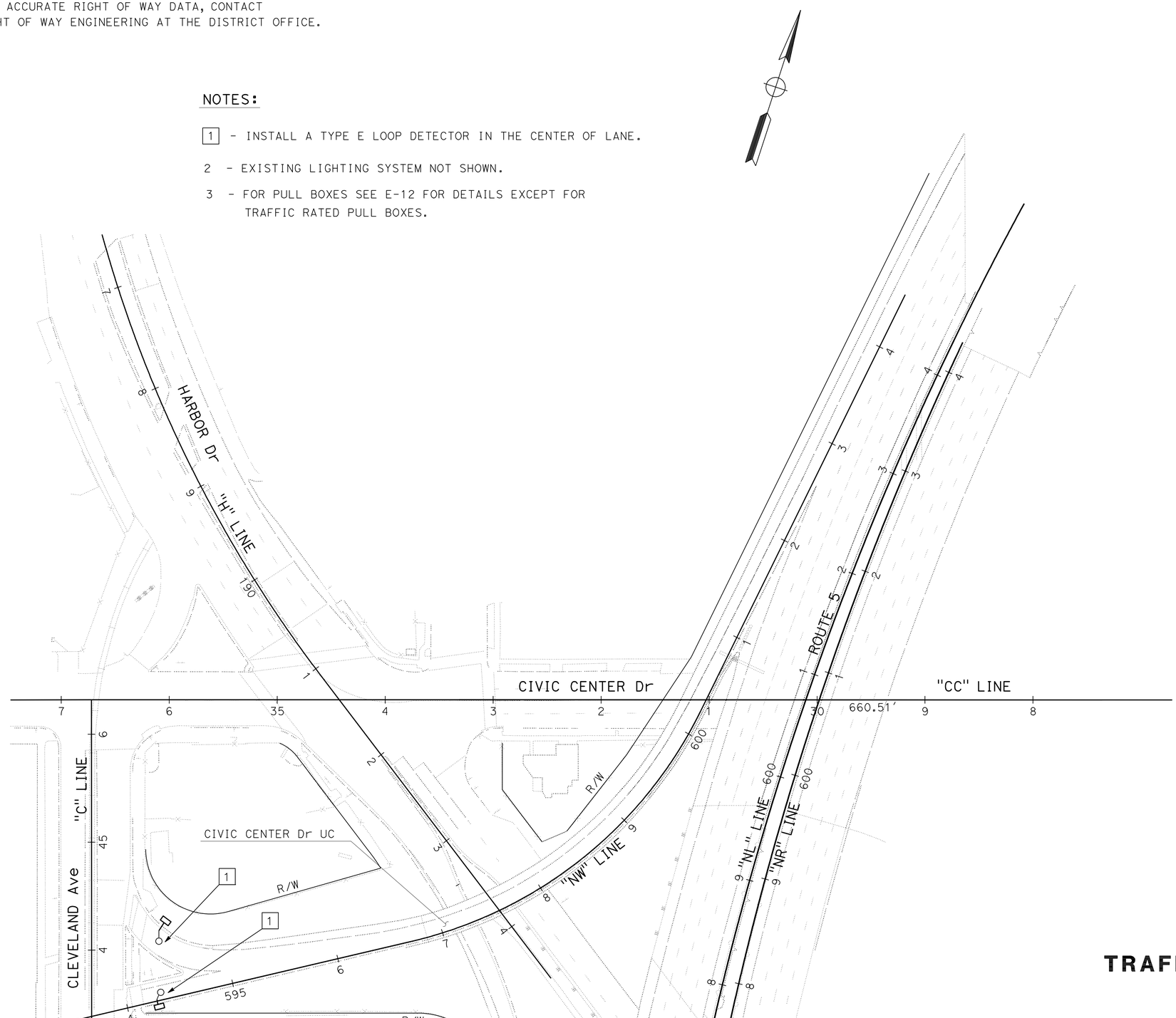

TRAFFIC MONITORING STATION (COUNT)

SCALE: 1" = 50'

E-10

APPROVED FOR ELECTRICAL WORK ONLY

STATE OF CALIFORNIA - DEPARTMENT OF TRANSPORTATION
Caltrans® TRAFFIC ELECTRICAL

FUNCTIONAL SUPERVISOR: DALE WILSON
CALCULATED-DESIGNED BY: ENRIQUE BERNAL
CHECKED BY: FARIBA RAMOS
REVISED BY
DATE REVISED

LAST REVISION 11-18-11
DATE PLOTTED => 22-FEB-2012
TIME PLOTTED => 12:38

Dist	COUNTY	ROUTE	POST MILES TOTAL PROJECT	SHEET No.	TOTAL SHEETS
11	SD	5	R10.0,R10.7	83	132

REGISTERED ELECTRICAL ENGINEER 11-15-11 DATE

2-21-12
PLANS APPROVAL DATE

REGISTERED PROFESSIONAL ENGINEER FARIBA RAMOS No. E15619 Exp. 12-31-11 ELECTRICAL STATE OF CALIFORNIA

THE STATE OF CALIFORNIA OR ITS OFFICERS OR AGENTS SHALL NOT BE RESPONSIBLE FOR THE ACCURACY OR COMPLETENESS OF SCANNED COPIES OF THIS PLAN SHEET.

FOR ACCURATE RIGHT OF WAY AND ACCESS DATA, CONTACT RIGHT OF WAY ENGINEERING AT THE DISTRICT OFFICE.

NOTES:

1 - SEE E-6 FOR CIRCUIT CONTINUITY.

2 - RC EXISTING PB AND REPLACE WITH No. 5.

3 - SEE DETAIL 'A' THIS SHEET.

4 - THE CONTRACTOR SHALL VERIFY ALL CONTROLLING DIMENSIONS BEFORE ORDERING OR FABRICATING MATERIAL.

5 - EXISTING LIGHTING SYSTEM PARTIALLY SHOWN.

6 - INSTALL TYPE C CONDUIT FITTING.

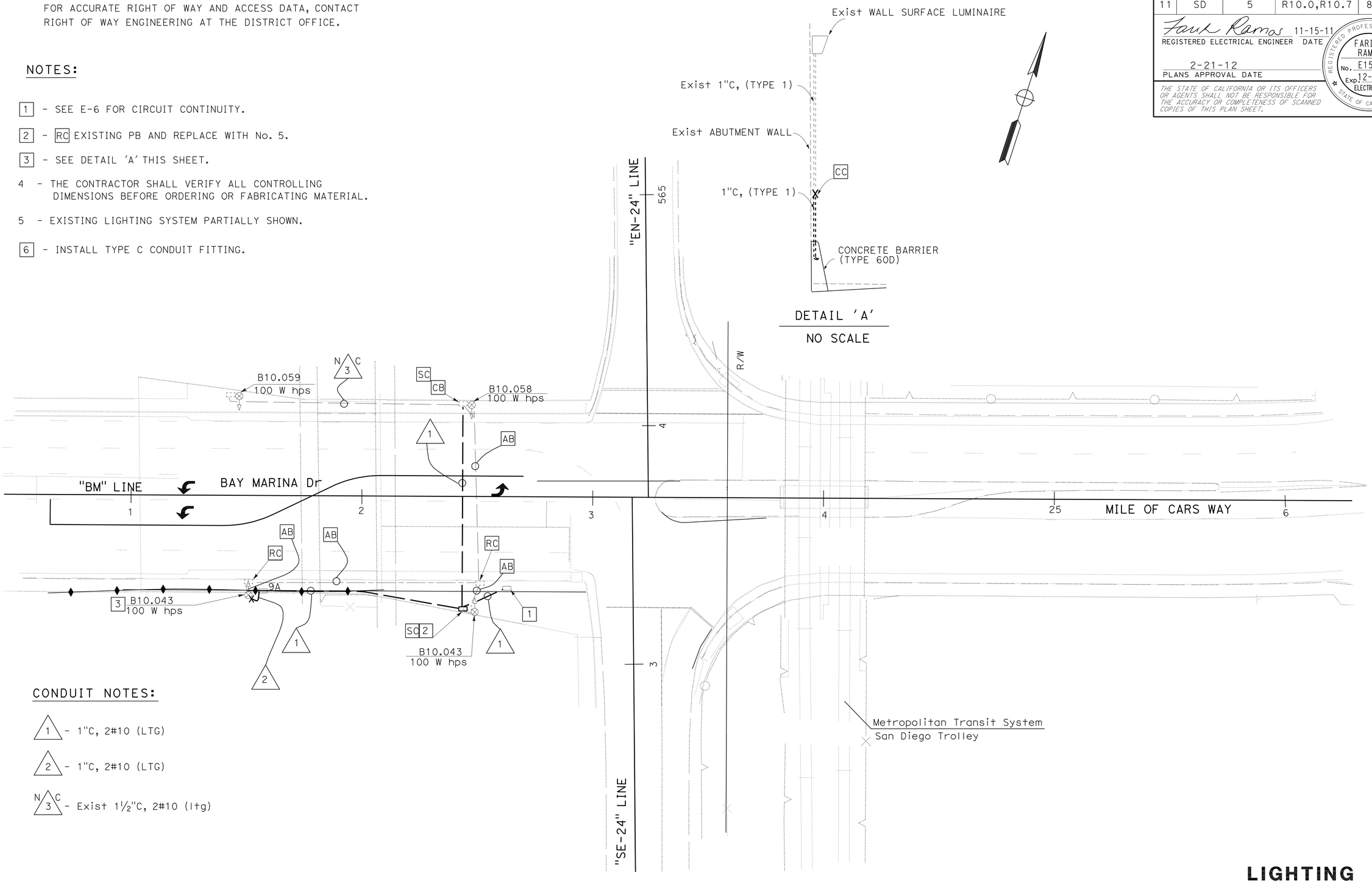

CONDUIT NOTES:

1 - 1"C, 2#10 (LTG)

2 - 1"C, 2#10 (LTG)

N C 3 - Exist 1½"C, 2#10 (ltg)

LIGHTING

SCALE: 1" = 20'

E-11

APPROVED FOR ELECTRICAL WORK ONLY

STATE OF CALIFORNIA - DEPARTMENT OF TRANSPORTATION
Caltrans® TRAFFIC ELECTRICAL

FUNCTIONAL SUPERVISOR: DALE WILSON
CALCULATED-DESIGNED BY: FARIBA RAMOS
CHECKED BY: ENRIQUE BERNAL
REVISED BY
DATE REVISED

LAST REVISION 11-18-11
DATE PLOTTED => 23-FEB-2012
TIME PLOTTED => 15:07

Dist	COUNTY	ROUTE	POST MILES TOTAL PROJECT	SHEET No.	TOTAL SHEETS
11	SD	5	R10.0,R10.7	84	132

Fariba Ramos 11-15-11
REGISTERED ELECTRICAL ENGINEER DATE

2-21-12
PLANS APPROVAL DATE

REGISTERED PROFESSIONAL ENGINEER FARIBA RAMOS No. E15619 Exp. 12-31-11 ELECTRICAL STATE OF CALIFORNIA

THE STATE OF CALIFORNIA OR ITS OFFICERS OR AGENTS SHALL NOT BE RESPONSIBLE FOR THE ACCURACY OR COMPLETENESS OF SCANNED COPIES OF THIS PLAN SHEET.

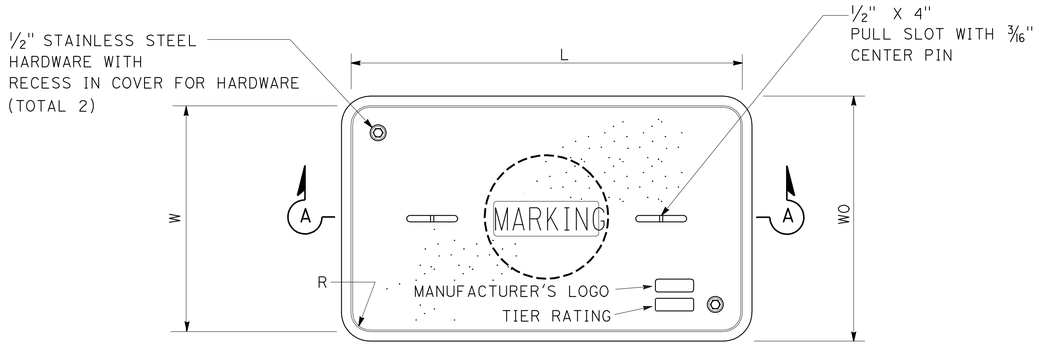

TOP VIEW

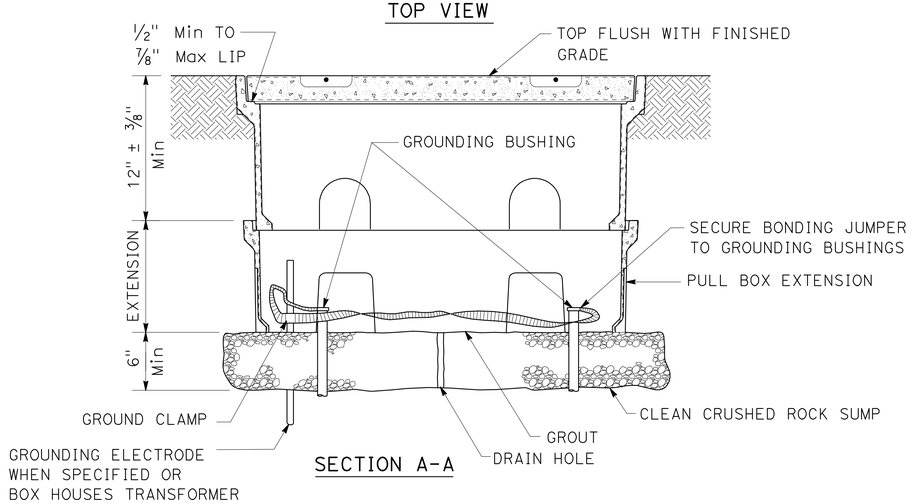

SECTION A-A

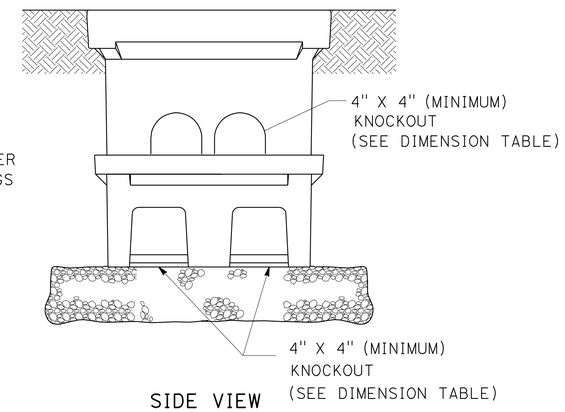

SIDE VIEW

INSTALLATION DETAILS

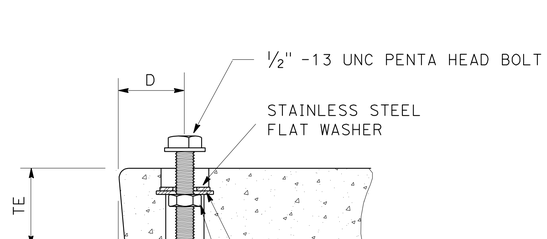

TYPICAL OF COVER CAPTIVE BOLT
(OR SIMILAR)

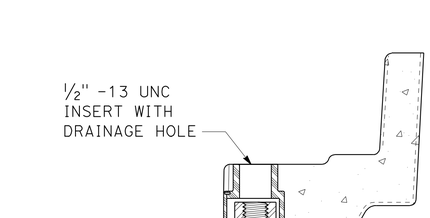

TYPICAL THREADED INSERT
(OR SIMILAR)

NOTES:

1. ALL NON-TRAFFIC RATED PULL BOXES AND COVERS, FOR IN GROUND AND IN SIDEWALK APPLICATIONS, MUST BE INDEPENDENTLY TESTED AND CERTIFIED AS COMPLYING WITH THE PROVISIONS OF ANSI/SCTE 77 2010 "SPECIFICATION FOR UNDERGROUND ENCLOSURE INTEGRITY." PULL BOXES MUST MEET THE TIER 22 APPLICATION. COVERS NOT INSTALLED IN SIDEWALKS MUST MEET THE TIER 22 APPLICATION. COVERS INSTALLED IN SIDEWALKS MUST MEET THE TIER 8 APPLICATION.
2. COVERS MUST BE SECURED WITH A CAPTIVE BOLT DESIGN USING 1/2-13 UNC LARGE PENTA-HEAD BOLTS. THE BOLTS AND WASHERS MUST BE STAINLESS STEEL.
3. THE CAPTIVE BOLT DESIGN MUST BE INDEPENDENTLY TESTED AND CERTIFIED AS CAPABLE OF WITHSTANDING A TORQUE OF 56 ft*Lb AND A MINIMUM PULL OUT STRENGTH OF 750 LBS. THE PULL OUT TEST MUST BE PERFORMED WITH THE COVER IN PLACE AND THE BOLTS TORQUED TO 56 ft*Lb. THE BOLTS, INSERTS, AND COVER MUST NOT BE DAMAGED WHEN TESTED UP TO THE MINIMUM PULL OUT STRENGTH.
4. MARKINGS, SHOWING THE TIER RATING, MUST BE LABELED OR STENCILED ON THE INSIDE AND OUTSIDE OF THE PULL BOX AND ON THE UNDERSIDE OF THE COVER.
5. THE TIER RATING MUST BE EMBOSSED ON THE TOP SURFACE OF THE COVER.
6. COVERS AND PULL BOXES MUST BE INTERCHANGEABLE WITH CALIFORNIA STANDARD MALE AND FEMALE GAGES. SEE STANDARD PLAN ES-8, NOTE 7. MINIMUM RADIUS OF TOP OUTSIDE EDGE IS 1/8".
7. PULL BOXES MUST NOT BE INSTALLED WITHIN THE BOUNDARIES OF NEW OR EXISTING CURB RAMPS OR DRIVEWAYS.
8. AN EXTENSION MAY BE SUBSTITUTED WITH A PULL BOX IF THE BOTTOM EDGE OF THE UPPER PULL BOX FITS EVENLY INTO THE LIP OF THE LOWER PULL BOX.
9. SEE STANDARD PLAN ES-8, NOTES 3,4,6 AND 9 FOR OTHER REQUIREMENTS. THESE ADDRESS, BUT ARE NOT LIMITED TO: PLACEMENT, SURROUNDING GRADE, REQUIREMENTS IN UNPAVED AREAS, PULL BOX COVER MARKING, NOMINAL DIMENSIONS OF THE OPENING, AND THE LOCATION OF BOXES FOR ELECTROLIERS AND STANDARDS.

DIMENSION TABLE

PULL BOX	PULL BOX			COVER							PULL BOX KNOCKOUTS		EXTENSION KNOCKOUTS	
	MINIMUM DEPTH BOX (In)	MINIMUM DEPTH EXTENSION (In)	MAXIMUM WEIGHT (Lb)	L (In)	W (In)	R (In)	TE (In)	TA (In)	D (In)	MAXIMUM WEIGHT (Lb)	SIDE	END	SIDE	END
No. 5	12	10	55	23 1/4	13 3/4	1 3/8	2	1/8	1 3/4	60	2	1	2	1
No. 6	12	10	70	30 1/2	17 1/2	1 3/8	2	1/8	2	85	2	2	2	2

ELECTRICAL SYSTEMS (NON-TRAFFIC RATED PULL BOX)

NO SCALE

E-12

STATE OF CALIFORNIA - DEPARTMENT OF TRANSPORTATION
Caltrans TRAFFIC ELECTRICAL

FUNCTIONAL SUPERVISOR: DALE WILSON
CALCULATED-DESIGNED BY: FARIBA RAMOS
CHECKED BY: ENRIQUE BERNAL
REVISED BY
DATE REVISED

LAST REVISION 11-18-11
DATE PLOTTED => 23-FEB-2012
TIME PLOTTED => 15:07

Dist	COUNTY	ROUTE	POST MILES TOTAL PROJECT	SHEET No.	TOTAL SHEETS
11	SD	5	R10.0,R10.7	85	132

Fariba Ramos 11-15-11
REGISTERED ELECTRICAL ENGINEER DATE

2-21-12
PLANS APPROVAL DATE

REGISTERED PROFESSIONAL ENGINEER FARIBA RAMOS No. E15619 Exp. 12-31-11 ELECTRICAL STATE OF CALIFORNIA

THE STATE OF CALIFORNIA OR ITS OFFICERS OR AGENTS SHALL NOT BE RESPONSIBLE FOR THE ACCURACY OR COMPLETENESS OF SCANNED COPIES OF THIS PLAN SHEET.

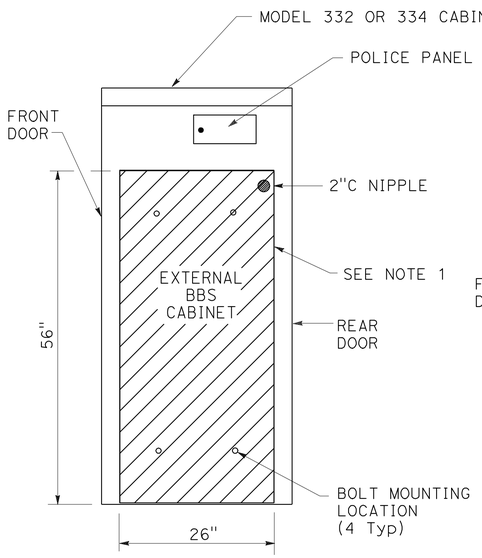

SIDE VIEW

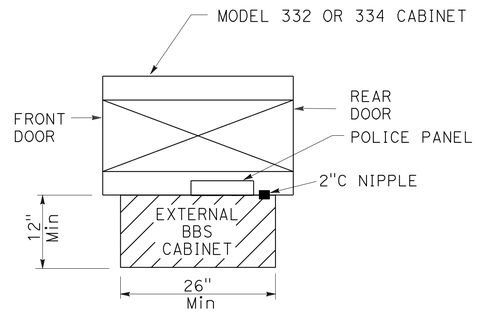

TOP VIEW

EXTERNAL BBS CABINET MOUNTED TO THE MODEL 332 OR 334 CABINET

NOTE: (THIS SHEET ONLY)

1. THE EXTERNAL BBS CABINET SHALL BE MOUNTED TO THE MODEL 332 OR 334 CABINET WITH FOUR 18-8 STAINLESS STEEL HEX HEAD, FULLY-THREADED, 3/8"-16 X 1" BOLTS; TWO WASHERS PER BOLT, DESIGNED FOR 3/8" BOLTS AND ARE 18-8 STAINLESS STEEL, 1" OUTSIDE DIAMETER, ROUND, AND FLAT; AND ONE K-LOCK NUT PER BOLT THAT IS 18-8 STAINLESS STEEL AND A HEX-NUT. THE ENGINEER WILL HAVE TO APPROVE THE BOLT MOUNTING LOCATION PRIOR TO INSTALLATION.
2. THE ANCHOR BOLTS SHALL BE 3/4" Dia X 15" WITH A 2"-90° BEND. THE CABINET MANUFACTURER'S SPECIFICATION SHALL DETERMINE THE LOCATION OF THE ANCHOR BOLTS IN THE FOUNDATION. THE ENGINEER WILL HAVE TO APPROVE THE ANCHOR BOLTS AND ITS LOCATION IN THE FOUNDATION PRIOR TO CONSTRUCTION.
3. THE CONTRACTOR SHALL VERIFY THE DIMENSIONS OF THE BBS CABINET PRIOR TO CONSTRUCTING THE FOUNDATION OF THE MODIFIED PORTION OF THE Std MODEL 332 AND 334 CABINET FOUNDATION. THE ENGINEER WILL HAVE TO APPROVE ANY NECESSARY DEVIATIONS PRIOR TO CONSTRUCTION.
4. ALL DIMENSIONS ARE NOMINAL.

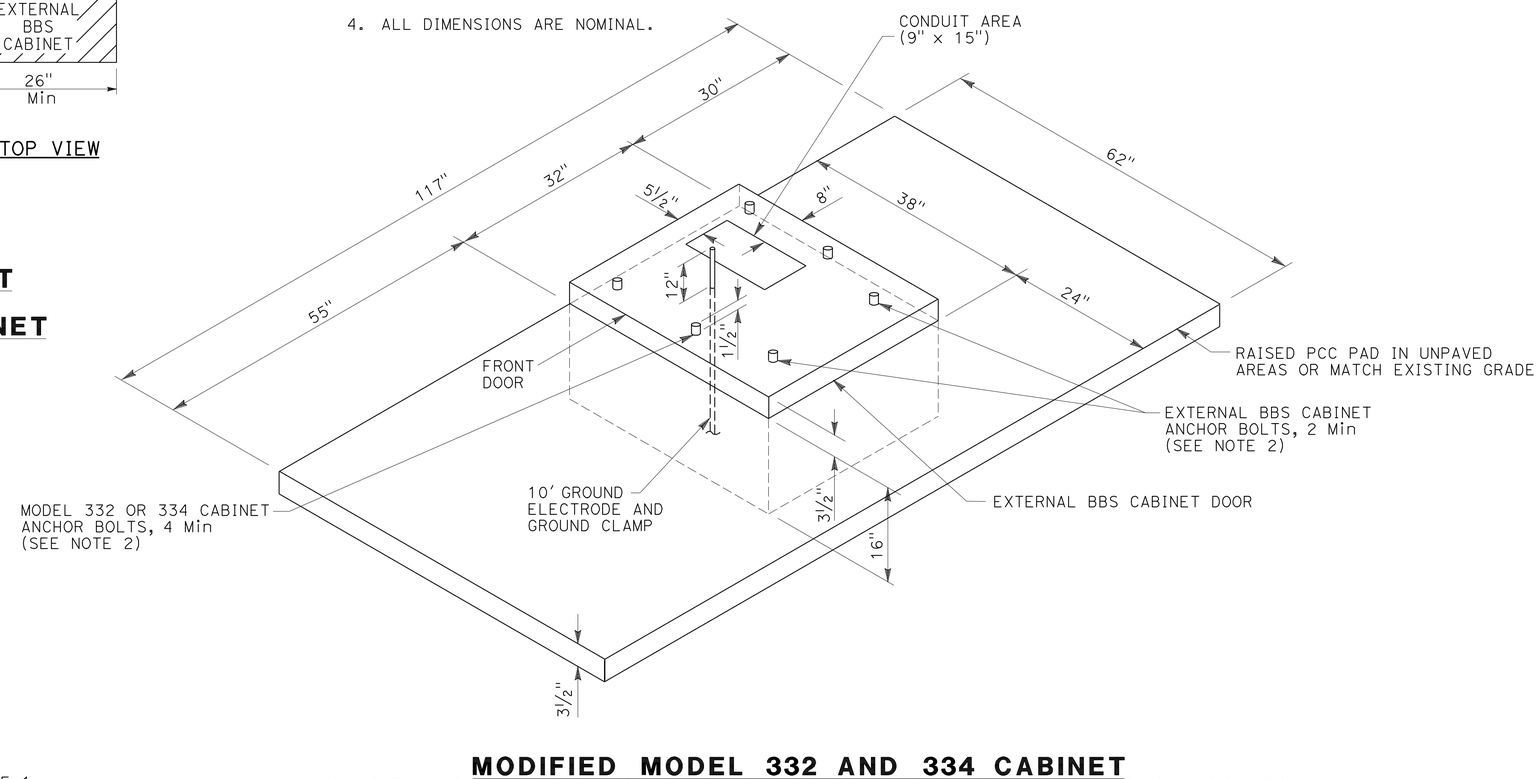

MODIFIED MODEL 332 AND 334 CABINET FOUNDATION DETAIL FOR BATTERY BACKUP SYSTEM (BBS)

(FOR DIMENSIONS AND DETAILS NOT SHOWN AND ADDITIONAL NOTES, SEE SHEET ES-3C OF THE STANDARD PLANS FOR MODEL 332 AND 334 CABINETS)

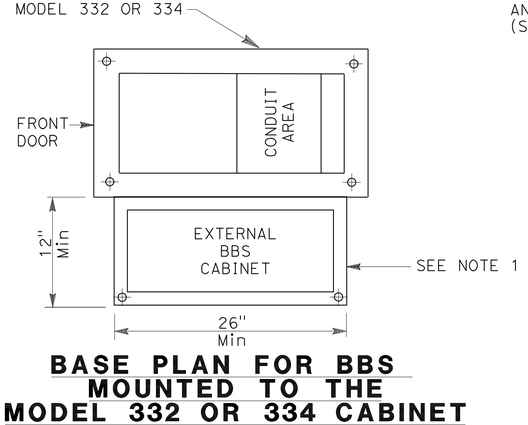

BASE PLAN FOR BBS MOUNTED TO THE MODEL 332 OR 334 CABINET

(FOR DIMENSIONS AND DETAILS NOT SHOWN, SEE SHEET A6-1 TO A6-4, CABINET HOUSING DETAILS OF THE TRANSPORTATION ELECTRICAL EQUIPMENT SPECIFICATION (TEES))

SIGNAL AND LIGHTING ELECTRICAL DETAILS

(BBS FOUNDATION DETAILS)

NO SCALE

E-13

STATE OF CALIFORNIA - DEPARTMENT OF TRANSPORTATION
Caltrans® TRAFFIC ELECTRICAL

FUNCTIONAL SUPERVISOR: DALE WILSON
CALCULATED-DESIGNED BY: FARIBA RAMOS
CHECKED BY: ENRIQUE BERNAL
REVISED BY / DATE REVISED

LAST REVISION 11-18-11
DATE PLOTTED => 22-FEB-2012
TIME PLOTTED => 13:28

Dist	COUNTY	ROUTE	POST MILES TOTAL PROJECT	SHEET No.	TOTAL SHEETS
11	SD	5	R10.0,R10.7	86	132

Fariba Ramos 11-15-11
REGISTERED ELECTRICAL ENGINEER DATE

2-21-12
PLANS APPROVAL DATE

REGISTERED PROFESSIONAL ENGINEER FARIBA RAMOS No. E15619 Exp. 12-31-11 ELECTRICAL STATE OF CALIFORNIA

THE STATE OF CALIFORNIA OR ITS OFFICERS OR AGENTS SHALL NOT BE RESPONSIBLE FOR THE ACCURACY OR COMPLETENESS OF SCANNED COPIES OF THIS PLAN SHEET.

NOTES:

1 - THIS SHEET DEMONSTRATES TYPICAL EQUIPMENT CONNECTIONS. REFER TO SHEETS E-7 TO E-9 FOR WORK CONTRACT REQUIRED.

[2] - INSTALL SECU IN MODEL 170 CONTROLLER CARD SLOT.

[3] - PHONE CABLE.

[4] - 110 PUNCH BLOCK/MODULAR JACK, TERMINATE PER ANSI/TIA DIAGRAM T568B.

[5] - OCC.

6 - FOR CABINET EQUIPMENT LAYOUT SEE ELECTRICAL DETAILS ON SHEET E-15.

[7] - [RS] EXISTING VDSL SWITCH AND REPLACE WITH ETHERNET SWITCH.

[8] - [RS] EXISTING CPE AND REPLACE WITH EEP AND EES PAIR.

ABBREVIATIONS AND LEGENDS:

(THIS SHEET ONLY)

VDSL - VERY HIGH SPEED DIGITAL SUBSCRIBER LOOP
SECU - SERIAL TO ETHERNET CONVERTOR UNIT
EES - ETHERNET EXTENDER SUBSCRIBER
EEP - ETHERNET EXTENDER PROVIDER
CPE - CUSTOMER PREMISES EQUIPMENT
□ - NETWORK PORT
⊔ - RJ11, RJ12 OR RJ45 JACK
▭ - SERIAL CONNECTION

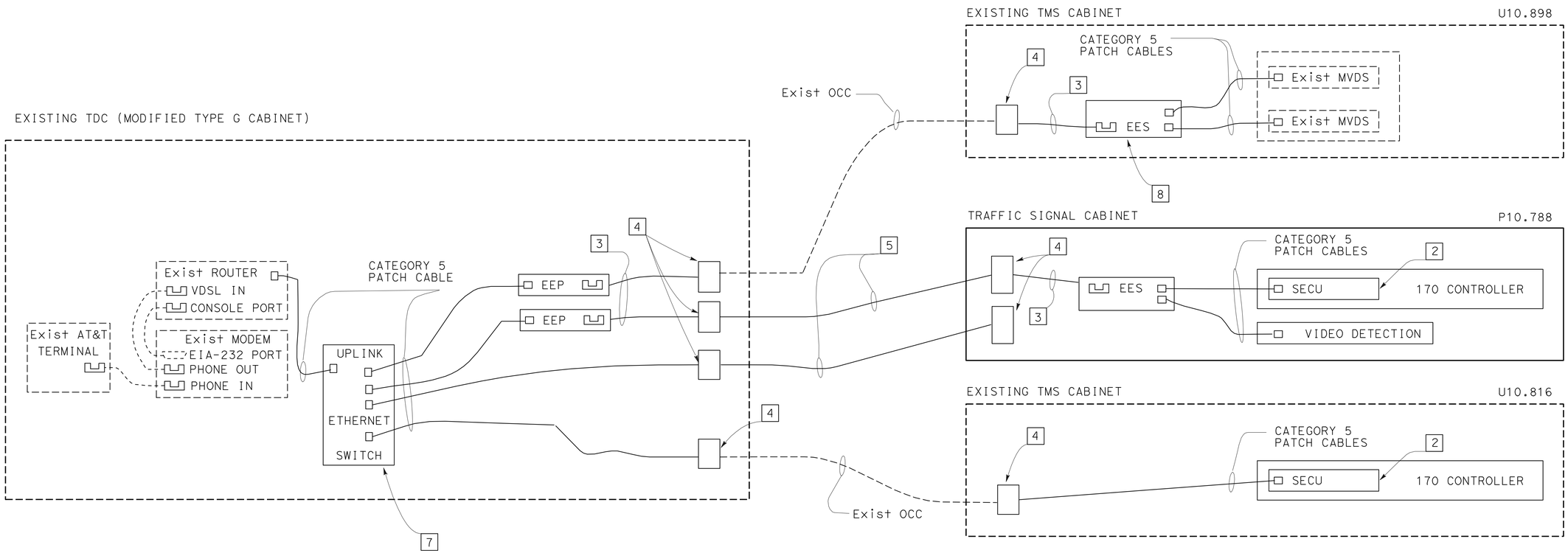

EXISITING TDC CABINET TO TRAFFIC SIGNAL AND TRAFFIC MONITORING STATION CABINET COMPONENT DIAGRAM

SIGNAL AND LIGHTING ELECTRICAL DETAILS

NO SCALE

E-14

STATE OF CALIFORNIA - DEPARTMENT OF TRANSPORTATION
Caltrans® TRAFFIC ELECTRICAL

FUNCTIONAL SUPERVISOR: DALE WILSON
CALCULATED-DESIGNED BY: ENRIQUE BERNAL
CHECKED BY: FARIBA RAMOS
REVISED BY
DATE REVISED

LAST REVISION 11-18-11
DATE PLOTTED => 22-FEB-2012
TIME PLOTTED => 13:28

Dist	COUNTY	ROUTE	POST MILES TOTAL PROJECT	SHEET No.	TOTAL SHEETS
11	SD	5	R10.0,R10.7	87	132

Fariba Ramos 11-15-11
REGISTERED ELECTRICAL ENGINEER DATE

2-21-12
PLANS APPROVAL DATE

REGISTERED PROFESSIONAL ENGINEER FARIBA RAMOS No. E15619 Exp. 12-31-11 ELECTRICAL STATE OF CALIFORNIA

THE STATE OF CALIFORNIA OR ITS OFFICERS OR AGENTS SHALL NOT BE RESPONSIBLE FOR THE ACCURACY OR COMPLETENESS OF SCANNED COPIES OF THIS PLAN SHEET.

NOTES:

1 - THE CONTRACTOR SHALL VERIFY ALL CONTROLLING FIELD DIMENSIONS BEFORE ORDERING OR FABRICATING MATERIAL.

2 - GFCI RECEPTACLES ARE FOR MAINTENANCE EQUIPMENT ONLY.

3 - EXISTING RACK MOUNT SHELF.

4 - RS EXISTING MODULAR JACK. INSTALL 110 PUNCH BLOCK/MODULAR JACK.

5 - EXISTING VDSL SWITCH CABLE AND VDSL CPE CONNECTION POINT.

6 - EXISTING BACK MOUNTING BOARD (1/2" THICK PLYWOOD).

7 - EXISTING 19" EIA RACK RAIL.

8 - BLANK PANEL.

9 - TWO 110 PUNCH BLOCK/MODULAR JACK.

10 - INSTALL SECU IN MODEL 170 CONTROLLER SLOT.

ABBREVIATIONS:

(THIS SHEET ONLY)

EEP - ETHERNET EXTENDER PROVIDER
EES - ETHERNET EXTENDER SUBSCRIBER
VDSL - VERY HIGH SPEED DIGITAL SUBSCRIBER LOOP
SECU - SERIAL TO ETHERNET CONVERTOR UNIT
CPE - CUSTOMER PREMISES EQUIPMENT
DSL - DIGITAL SUBSCRIBER LINE

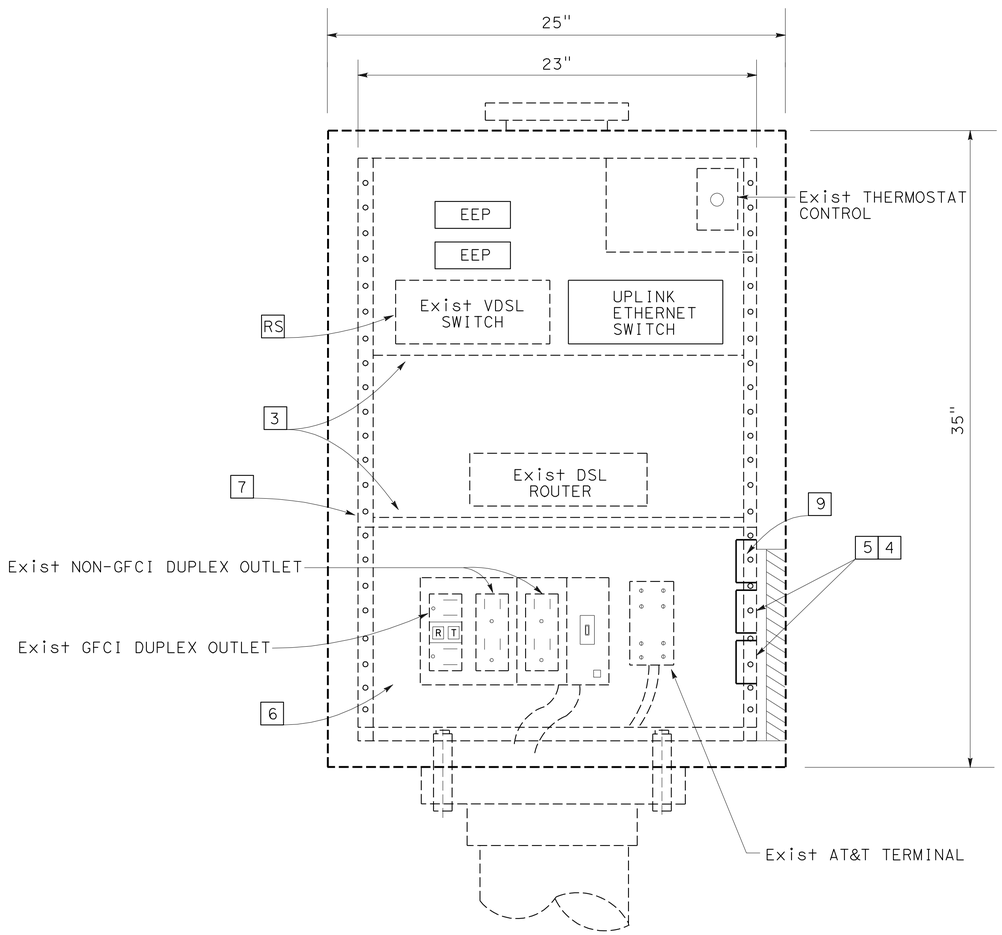

TDC CABINET EQUIPMENT LAYOUT

(EXISTING MODIFIED TYPE G FRONT INTERIOR)

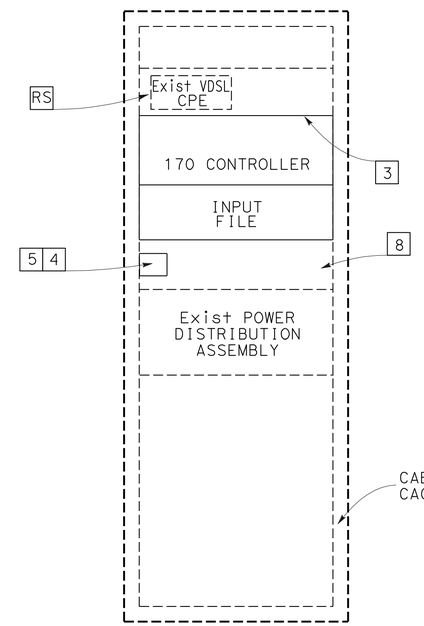

TMS CABINET EQUIPMENT LAYOUT

(EXISTING MODEL 334)

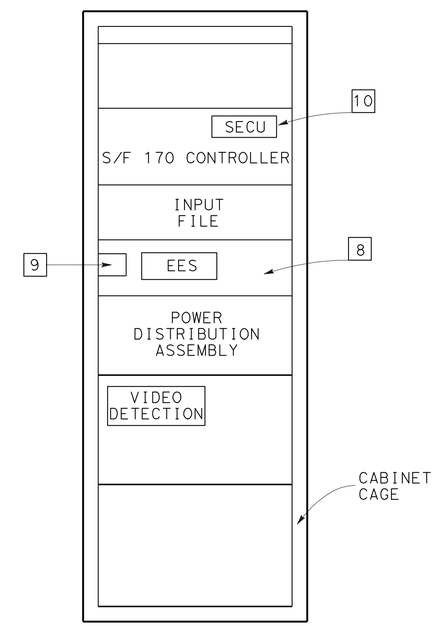

TRAFFIC SIGNAL CABINET EQUIPMENT LAYOUT

(S/F MODEL 332)

SIGNAL AND LIGHTING ELECTRICAL DETAILS

NO SCALE

E-15

STATE OF CALIFORNIA - DEPARTMENT OF TRANSPORTATION
Caltrans TRAFFIC ELECTRICAL
FUNCTIONAL SUPERVISOR: DALE WILSON
CALCULATED-DESIGNED BY: ENRIQUE BERNAL
CHECKED BY: FARIBA RAMOS
REVISED BY
DATE REVISED

LAST REVISION 11-18-11
DATE PLOTTED => 22-FEB-2012
TIME PLOTTED => 13:28

DIST	COUNTY	ROUTE	POST MILES TOTAL PROJECT	SHEET NO.	TOTAL SHEETS
11	SD	5	R10.0,R10.7	88	132

REGISTERED CIVIL ENGINEER

June 6, 2008
PLANS APPROVAL DATE

REGISTERED PROFESSIONAL ENGINEER
Donald E. Howe
No. C46402
Exp. 3-31-09
CIVIL
STATE OF CALIFORNIA

The State of California or its officers or agents shall not be responsible for the accuracy or completeness of electronic copies of this plan sheet.

To accompany plans dated 2-21-12

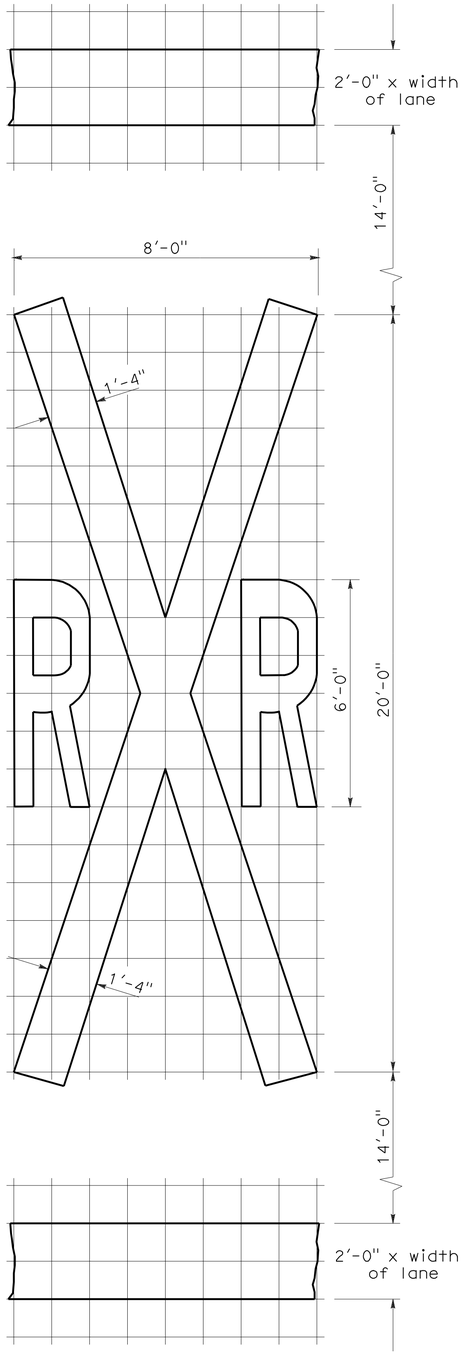

1'-0" GRID
A=70 sq ft ✳

RAILROAD CROSSING SYMBOL

✳70 sq ft DOES NOT INCLUDE THE 2'-0" x VARIABLE WIDTH TRANSVERSE LINES.

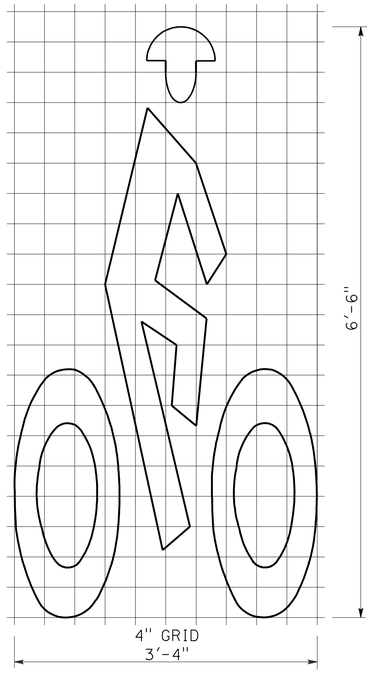

A=7 sq ft

BIKE LANE SYMBOL

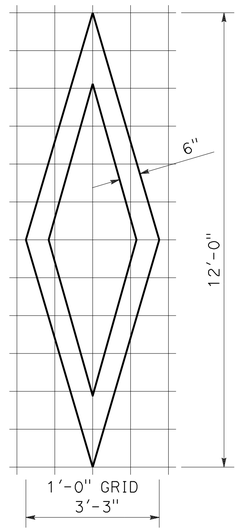

A=11 sq ft

DIAMOND SYMBOL

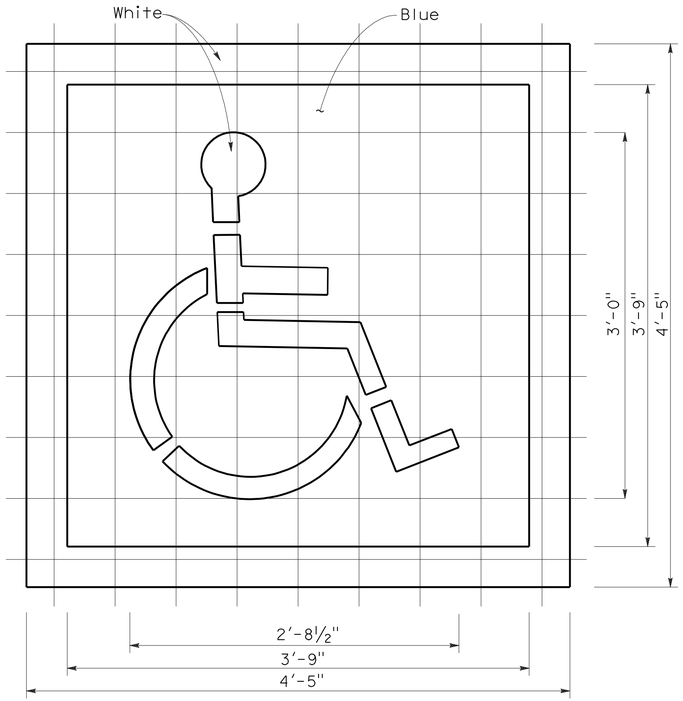

6" GRID
A (White) =9 sq ft
A (Blue) =14 sq ft

INTERNATIONAL SYMBOL OF ACCESSIBILITY MARKING

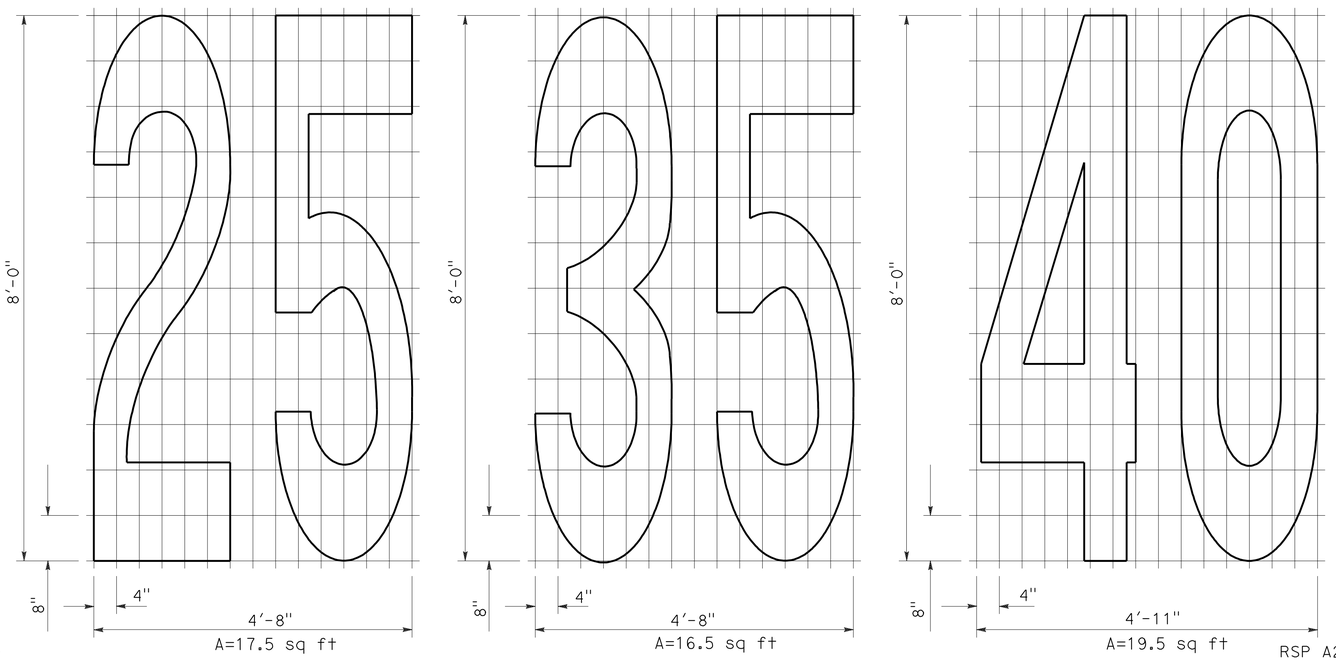

A=17.5 sq ft A=16.5 sq ft A=19.5 sq ft

NUMERALS

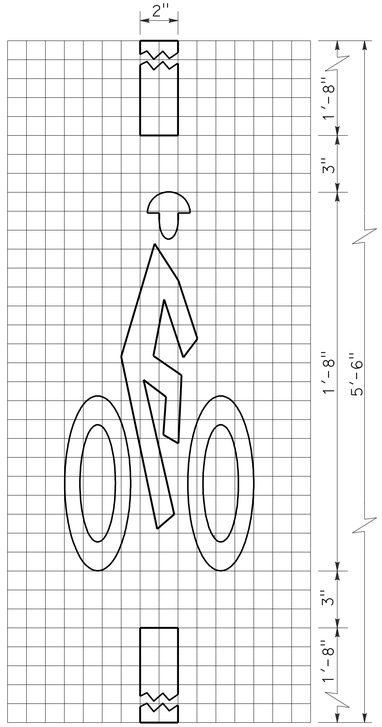

1" GRID
10"
A=2 sq ft

BICYCLE LOOP DETECTOR SYMBOL

NOTE:

1. Minor variations in dimensions may be accepted by the Engineer.

STATE OF CALIFORNIA
DEPARTMENT OF TRANSPORTATION

PAVEMENT MARKINGS SYMBOLS AND NUMERALS

NO SCALE

RSP A24C DATED JUNE 6, 2008 SUPERSEDES STANDARD PLAN A24C DATED MAY 1, 2006 - PAGE 11 OF THE STANDARD PLANS BOOK DATED MAY 2006.

REVISED STANDARD PLAN RSP A24C

2006 REVISED STANDARD PLAN RSP A24C

5-27-08

DIST	COUNTY	ROUTE	POST MILES TOTAL PROJECT	SHEET NO.	TOTAL SHEETS
11	SD	5	R10.0,R10.7	89	132

REGISTERED CIVIL ENGINEER

November 17, 2006
PLANS APPROVAL DATE

REGISTERED PROFESSIONAL ENGINEER Dallas Forester No. C37765 Exp. 12-31-06 CIVIL STATE OF CALIFORNIA

The State of California or its officers or agents shall not be responsible for the accuracy or completeness of electronic copies of this plan sheet.

To accompany plans dated 2-21-12

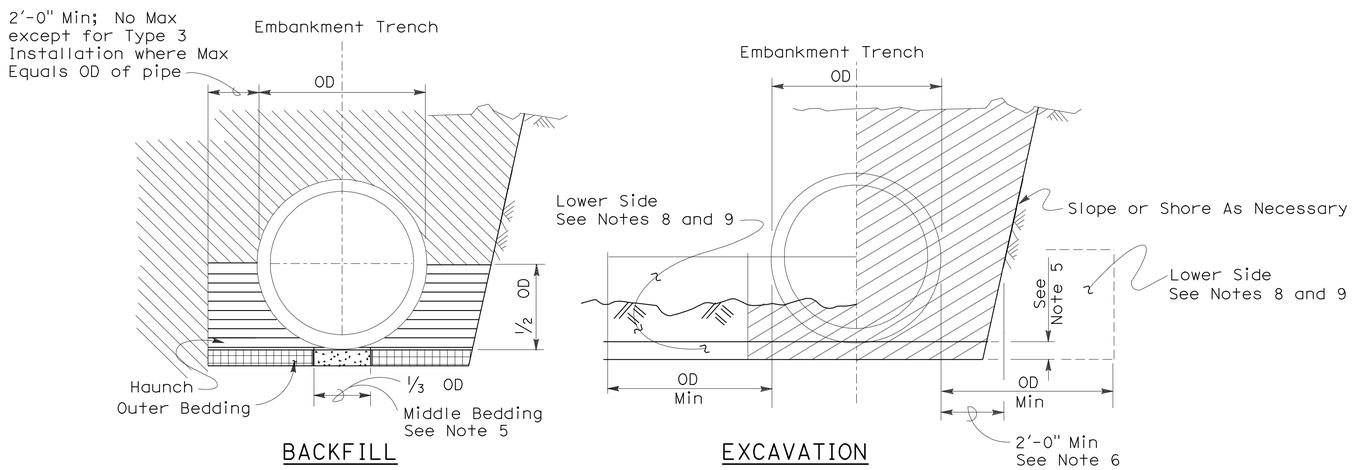

Roadway Embankment

Structure Backfill (Culvert) See Note 6

Structure Backfill (Culvert) See Note 6

Loose Backfill

Excavation Structure (Culvert)

TYPE 1 INSTALLATION:

The haunch and outer bedding shall be compacted to a minimum 90 percent relative compaction. In addition, the minimum sand equivalent in these areas shall be 30 and the maximum percentage passing the 75 μm sieve size shall be 12.

TYPE 2 INSTALLATION:

The haunch and outer bedding shall be compacted to a minimum 90 percent relative compaction. In addition, the minimum sand equivalent in these areas shall be 25.

TYPE 3 INSTALLATION:

The haunch and outer bedding shall be compacted to a minimum 85 percent relative compaction. 90 percent relative compaction will be required where the fill over the pipe is less than 4'-0" or 1/2 OD.

INSTALLATION TYPE 1

MINIMUM CLASS AND D-LOAD	COVER	
	108" Dia AND SMALLER	OVER 108" Dia
Class II 1000D	14.9'	12.9'
Class III 1350D	15.0' - 20.9'	13.0' - 18.9'
Class III Special 1700D	21.0' - 26.9'	19.0' - 24.9'
Class IV 2000D	27.0' - 31.9'	25.0' - 29.9'
Class IV Special 2500D	32.0' - 40.9'	30.0' - 38.9'
Class V 3000D	41.0' - 49.9'	39.0' - 46.9'
Class V Special 3600D	50.0' - 59.0'	47.0' - 58.0'

INSTALLATION TYPE 2

MINIMUM CLASS AND D-LOAD	COVER
Class II 1000D	9.9'
Class III 1350D	10.0'- 14.9'
Class III Special 1700D	15.0' - 19.9'
Class IV 2000D	20.0' - 24.9'
Class IV Special 2500D	25.0' - 31.9'
Class V 3000D	32.0' - 38.9'
Class V Special 3600D	39.0' - 47.0'

INSTALLATION TYPE 3

MINIMUM CLASS AND D-LOAD	COVER	
	48" Dia AND SMALLER	OVER 48" Dia
Class II 1000D	7.9'	5.9'
Class III 1350D	8.0' - 10.9'	6.0' - 8.9'
Class III Special 1700D	11.0' - 14.9'	9.0' - 12.9'
Class IV 2000D	15.0' - 17.9'	13.0' - 15.9'
Class IV Special 2500D	18.0' - 21.9'	16.0' - 19.9'
Class V 3000D	22.0' - 26.9'	20.0' - 24.9'
Class V Special 3600D	30.0' - 33.0'	25.0' - 31.0'

NOTES:

1. Unless otherwise shown on the plans or specified in the special provision, the Contractor shall have the option of selecting the class of RCP and the type of installation to be used, provided the height of cover does not exceed the value shown for the RCP selected.
   Example: 24" RCP culvert with maximum cover of 19'-0" the options are:
   a) Class III or stronger with Installation Type 1.
   b) Class III Special or stronger with Installation Type 2.
   c) Class IV Special or stronger with Installation Type 3.
   Cover is defined as the maximum vertical distance from top of the pipe to finished grade within the length of any given culvert.
2. The class of RCP and Installation Type selected shall be the same throughout the length of any given culvert.
3. The "length of any culvert" is defined as the culvert between:
   a) Successive drainage structure (inlets, junction boxes, headwalls, etc.).
   b) A drainage structure and the inlet or outlet end of the culvert.
   c) The inlet and outlet end of the culvert when there are no intervening drainage structures.
4. Oval and arch shaped RCP shall not be used.
5. 1/25 OD Min, not less than 3".
6. Slurry cement backfill may be substituted for backfill in the outer bedding and haunch areas. If slurry is used the outer and middle beddings shall be omitted. Prior to installation the soil under the middle 1/3 of the outside diameter of the pipe shall be softened by scarifying or other means to a minimum depth of 1/25 OD, but not less than 3". Where slurry cement backfill is used clear distance to trench wall may be reduced as set forth in Section 19-3.062 of the Standard Specifications.
7. Backfill shall be placed full width of excavation except where dimensions are shown for backfill width or thickness. Dimensions shown are minimums.
8. Lower side shall be suitable material as determined by the Engineer. Otherwise it shall be considered unsuitable as set forth in Section 19-2.02 of the Standard Specifications. See Note 9.
9. Where the pipe is placed in a trench, if the trench walls are sloped at 5 vertical to 1 horizontal or steeper for at least 90 percent of the trench height or up to not less than 12" from the grading plane, the firmness of the soil in the lower side need not be considered.
10. Non-reinforced precast concrete pipe sizes 3'-0" or smaller may be placed under installation Types 1, 2 or 3.

STATE OF CALIFORNIA
DEPARTMENT OF TRANSPORTATION

EXCAVATION AND BACKFILL CONCRETE PIPE CULVERTS

NO SCALE

RSP A62DA DATED NOVEMBER 17, 2006 SUPERSEDES STANDARD PLAN A62DA DATED MAY 1, 2006 - PAGE 20 OF THE STANDARD PLANS BOOK DATED MAY 2006.

REVISED STANDARD PLAN RSP A62DA

2006 REVISED STANDARD PLAN RSP A62DA

10-26-06

DIST	COUNTY	ROUTE	POST MILES TOTAL PROJECT	SHEET NO.	TOTAL SHEETS
11	SD	5	R10.0,R10.7	90	132

Randell D. Hiatt
REGISTERED CIVIL ENGINEER

June 6, 2008
PLANS APPROVAL DATE

REGISTERED PROFESSIONAL ENGINEER
Randell D. Hiatt
No. C50200
Exp. 6-30-09
CIVIL
STATE OF CALIFORNIA

The State of California or its officers or agents shall not be responsible for the accuracy or completeness of electronic copies of this plan sheet.

To accompany plans dated 2-21-12

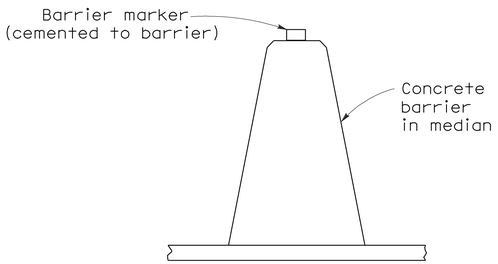

CONCRETE BARRIER TYPE 60 DELINEATION

See Notes 7 and 8

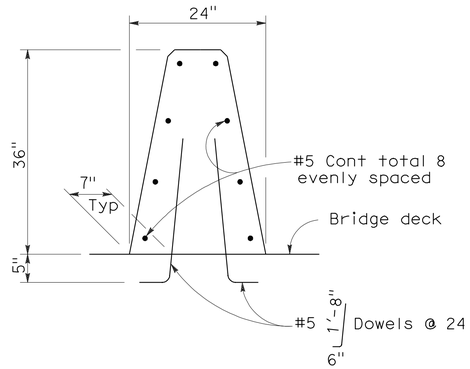

CONCRETE BARRIER TYPE 60A

Details similar to Type 60 except as noted.

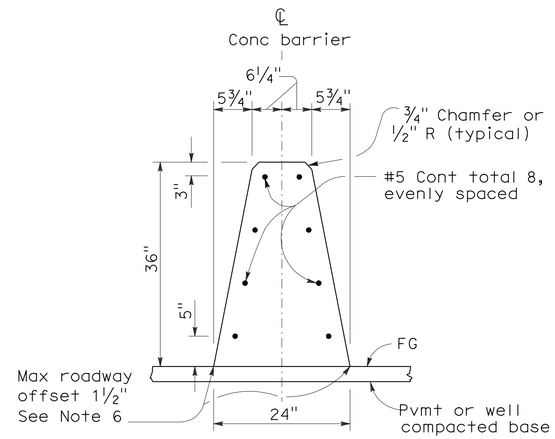

CONCRETE BARRIER TYPE 60

NOTES:

1. See Standard Plan A76B for details of Concrete Barrier Type 60 end anchors, connection to structures and transitions to Concrete Barrier Type 50 and Concrete Barrier Type 60S.
2. See Standard Plan A76C for Concrete Barrier Type 60 transitions at bridge column and sign pedestals.
3. Where glare screen is required on Concrete Barrier Type 60, use Concrete Barrier Type 60G.
4. Where the concrete barrier is added to the face of existing concrete structure, match existing weep holes.
5. Expansion joints in concrete barrier shall be located at all deck, pavement and principal wall joints. Expansion joint filler material shall be the same size as joint or ½" minimum.
6. Where roadway offset is greater than 1½", see Concrete Barrier Type 60C.
7. Barrier delineation to be used when required by the Special Provisions.
8. Spacing of barrier markers to match spacing of raised pavement markers on the adjacent median edgeline pavement delineation.
9. Reinforcing stirrup not required for roadway offsets less than 1'-0".
10. For roadway surfaces offset greater than 1½" to 3", no rebars required. For roadway surfaces offset greater than 3" to 8" use two #4 rebars at 3" above the lower roadway surface. For roadway surfaces offset greater than 8" to 12", use two #4 rebars at 3" above the lower roadway surface and two #4 rebars at 8" above the lower roadway surface. For roadway surfaces offset greater than 12" to 36", use two #4 rebars at 3" above the lower roadway surface and two #4 rebars at every 8" increment vertical spacing above the first two #4 rebars.

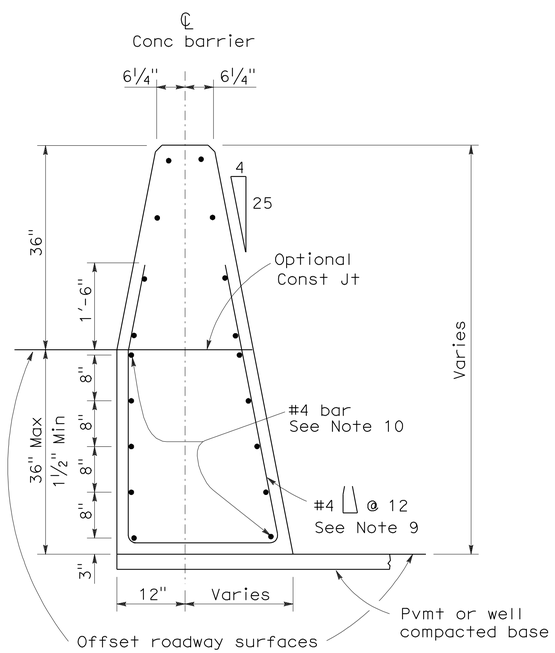

CONCRETE BARRIER TYPE 60C

Details similar to Type 60 except as noted.
Concrete barrier end anchor when necessary.
36" roadway surfaces offset shown.

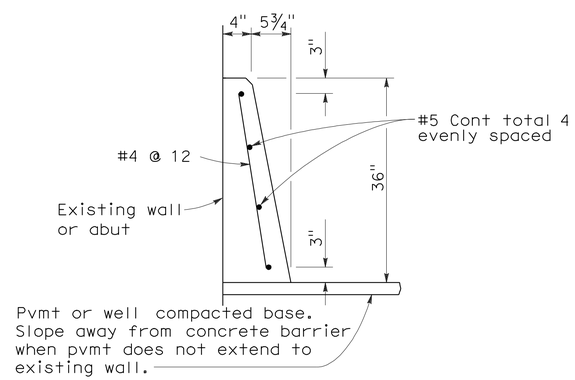

CONCRETE BARRIER TYPE 60D

STATE OF CALIFORNIA
DEPARTMENT OF TRANSPORTATION

CONCRETE BARRIER TYPE 60

NO SCALE

RSP A76A DATED JUNE 6, 2008 SUPERSEDES STANDARD PLAN A76A
DATED MAY 1, 2006 - PAGE 29 OF THE STANDARD PLANS BOOK DATED MAY 2006.

REVISED STANDARD PLAN RSP A76A

2006 REVISED STANDARD PLAN RSP A76A

5-21-08

Dist	COUNTY	ROUTE	POST MILES TOTAL PROJECT	SHEET No.	TOTAL SHEETS
11	SD	5	R10.0,R10.7	91	132

Randell D. Hiatt
REGISTERED CIVIL ENGINEER

May 20, 2011
PLANS APPROVAL DATE

REGISTERED PROFESSIONAL ENGINEER
Randell D. Hiatt
No. C50200
Exp. 6-30-11
CIVIL
STATE OF CALIFORNIA

The State of California or its officers or agents shall not be responsible for the accuracy or completeness of electronic copies of this plan sheet.

To accompany plans dated 2-21-12

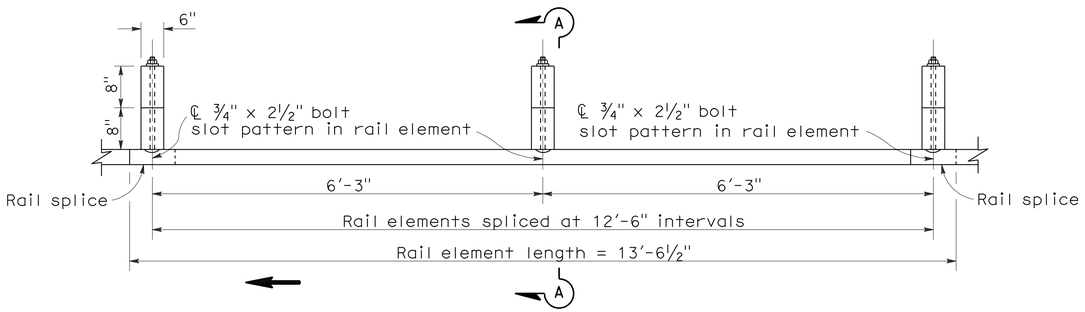

PLAN

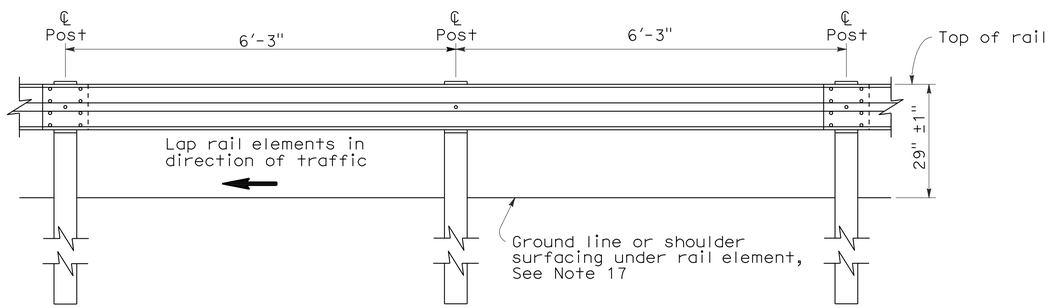

ELEVATION

METAL BEAM GUARD RAILING WITH WOOD POST AND BLOCKS

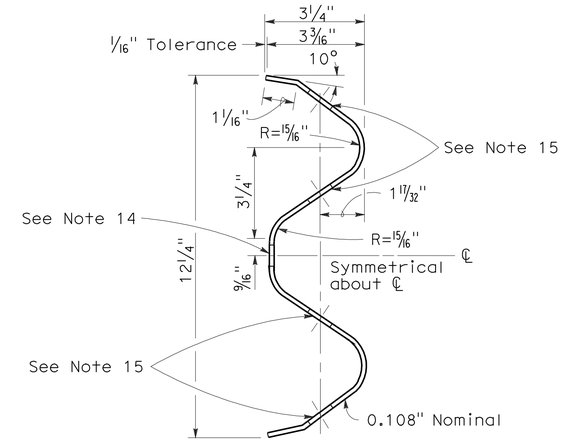

SECTION THRU RAIL ELEMENT

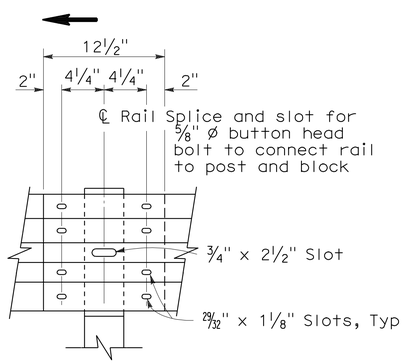

ELEVATION

RAIL ELEMENT SPLICE DETAIL

a) Connect the over lapped end of the rail elements with ⅝" ø x 1⅜" button head oval shoulder splice bolts inserted into the 29⁄32" x 1⅛" slots and bolted together with ⅝" ø recessed hex nuts. Recess of hex nut points toward rail element. A total of 8 bolts and nuts are to be used at each rail splice connection.

b) The ends of the rail elements are to be overlapped in the direction of traffic (see details).

c) Where end cap is to be attached to the end of a rail element, a total of 4 of the above described splice bolts and nuts are to be used.

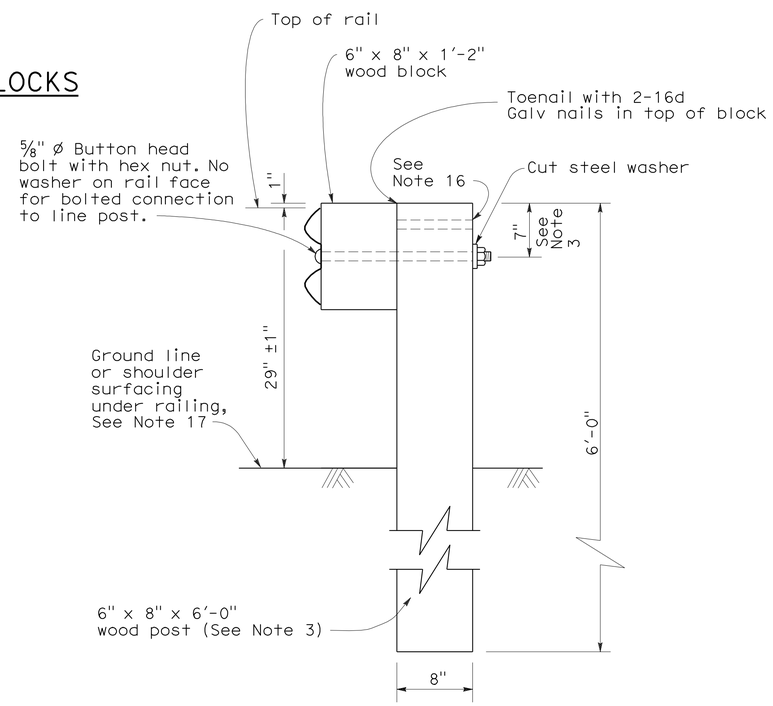

SECTION A-A

TYPICAL WOOD LINE POST INSTALLATION

See Note 4

NOTES:

1. For details of steel post installations, see Standard Plan A77A2.
2. For details of standard hardware used to construct guard railing, see Standard Plan A77B1.
3. For details of wood posts and wood blocks used to construct guard railing, see Standard Plan A77C1.
4. For additional installation details, see Standard Plan A77C3.
5. Guard railing post spacing to be 6'-3" center to center, except as otherwise noted.
6. For guard railing typical layouts, see the A77E, A77F and A77G Series of Standard Plans.
7. For terminal system end treatment details, see the A77L Series of Standard Plans. To connect railing to terminal system end treatment, transition the top of railing height at a ratio of 120:1 to terminal system end treatment height plus one 12'-6" standard railing section at the transitioned height for a horizontal connection to the end treatment.
8. For guard railing end anchor details, see Standard Plans A77H1 and A77I2.
9. For details of guard railing transition to bridge railing, see Standard Plan A77J4.
10. For additional details of guard railing connection to bridge railings, see Standard Plans A77J1, A77J2 and A77K1.
11. For guard railing connection details to abutments and walls, see Standard Plan A77J3.
12. Direction of adjacent traffic indicated by ➡.
13. For typical guard railing delineation and dike positioning details, see Standard Plan A77C4.
14. Slotted hole for bolted connection of rail element to block and post. See "Section Thru Rail Element".
15. Slotted holes for splice bolts to overlap ends of rail element. See "Section Thru Rail Element".
16. Additional hole in uppermost portion of line post is for potential future adjustments of railing height. See Standard Plan A77C1.
17. Install posts in soil.

STATE OF CALIFORNIA
DEPARTMENT OF TRANSPORTATION

METAL BEAM GUARD RAILING STANDARD RAILING SECTION (WOOD POST WITH WOOD BLOCK)

NO SCALE

RSP A77A1 DATED MAY 20, 2011 SUPERSEDES STANDARD PLAN A77A1 DATED MAY 1, 2006 - PAGE 41 OF THE STANDARD PLANS BOOK DATED MAY 2006.

REVISED STANDARD PLAN RSP A77A1

2006 REVISED STANDARD PLAN RSP A77A1

3-10-11

To accompany plans dated 2-21-12

Dist	COUNTY	ROUTE	POST MILES TOTAL PROJECT	SHEET No.	TOTAL SHEETS
11	SD	5	R10.0,R10.7	92	132

Randell D. Hiatt
REGISTERED CIVIL ENGINEER

May 20, 2011
PLANS APPROVAL DATE

REGISTERED PROFESSIONAL ENGINEER
Randell D. Hiatt
No. C50200
Exp. 6-30-11
CIVIL
STATE OF CALIFORNIA

The State of California or its officers or agents shall not be responsible for the accuracy or completeness of electronic copies of this plan sheet.

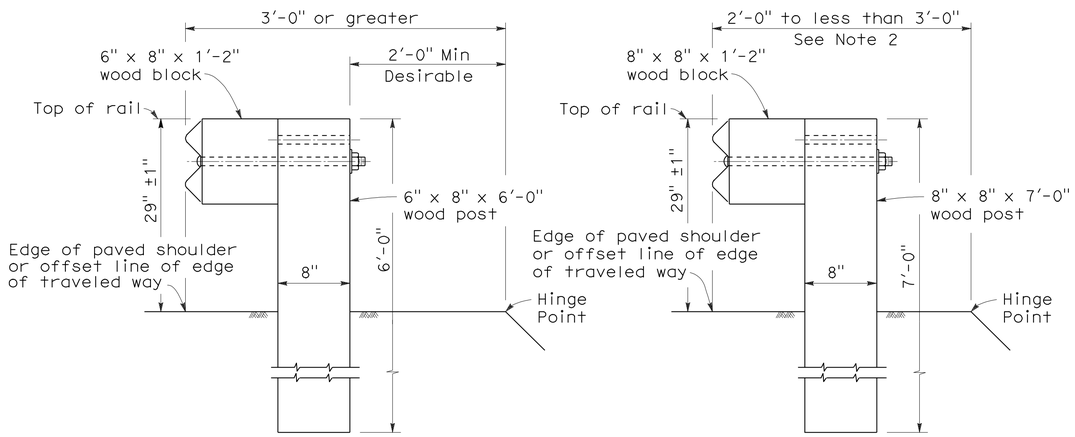

DETAIL A
TYPICAL ROADWAY INSTALLATION
See Note 1

DETAIL B
NARROW ROADWAY INSTALLATION
See Note 1

POST EMBEDMENT

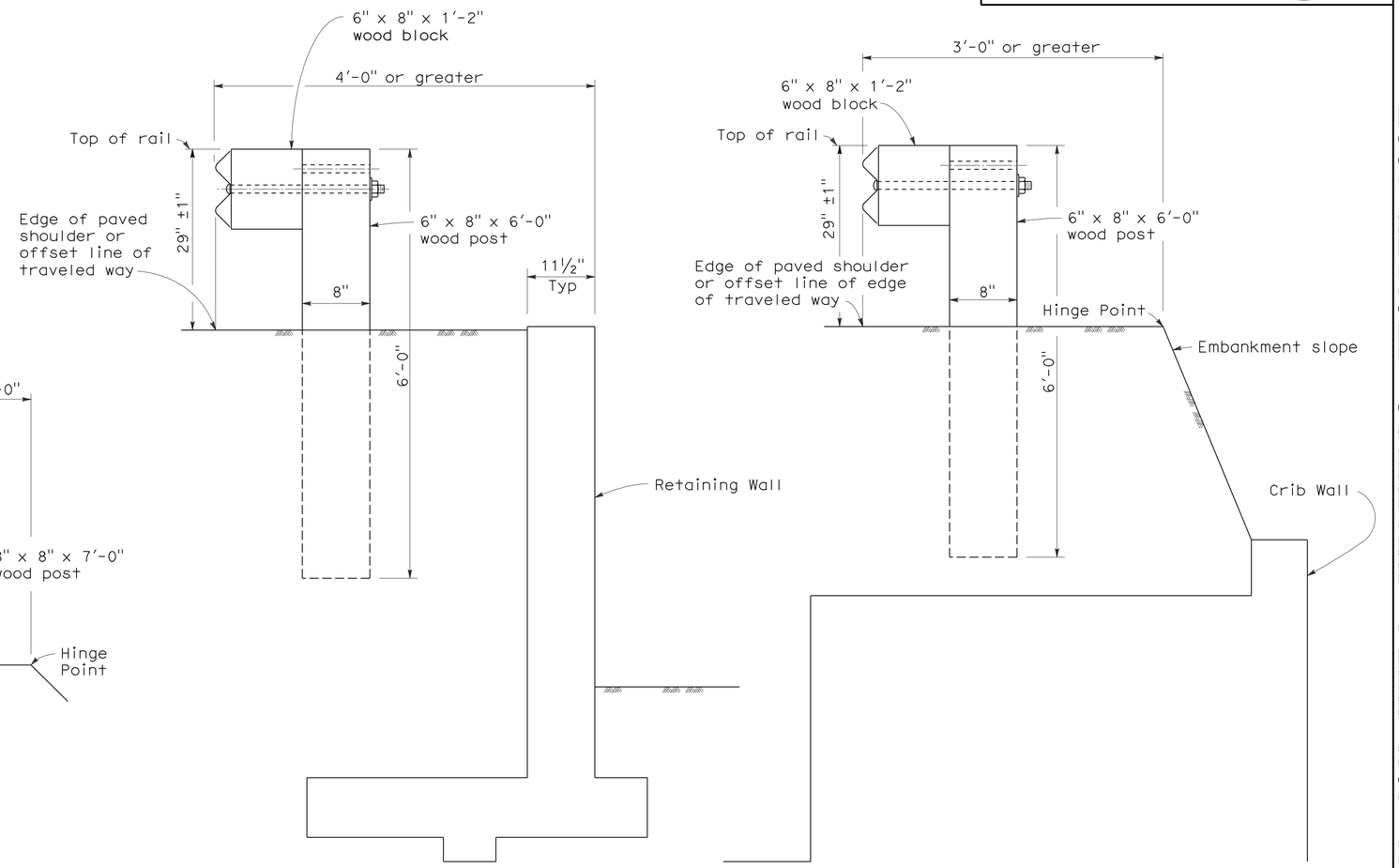

DETAIL C

DETAIL D

INSTALLATION AT EARTH RETAINING WALLS

NOTES:

1. These installation details also applicable to steel line post installations. For Detail A, C, and D, where steel line post installations are constructed, W6 x 9 steel post, 6'-0" in length, with 6" x 8" x 1'-2" notched wood blocks or notched recycled plastic blocks are to be used in place of the size of wood post and wood block shown. For Detail B, where steel line post installations are constructed, W6 x 9 steel post, 7'-0" in length, with 6" x 8" x 1'-2" notched wood blocks or notched recycled plastic blocks are to be used in place of the size of wood post and wood block shown. For additional installation details, see Standard Plans A77A1 and A77A2.
2. Where the distance between the face of the rail and the hinge point is less than 2'-0", see the Project Plans for special details.
3. For dike positioning with guard railing installations, see Standard Plan A77C4.

STATE OF CALIFORNIA
DEPARTMENT OF TRANSPORTATION

METAL BEAM GUARD RAILING TYPICAL LINE POST EMBEDMENT AND HINGE POINT OFFSET DETAILS

NO SCALE

RSP A77C3 DATED MAY 20, 2011 SUPERSEDES STANDARD PLAN A77C3
DATED MAY 1, 2006 - PAGE 46 OF THE STANDARD PLANS BOOK DATED MAY 2006.

REVISED STANDARD PLAN RSP A77C3

2006 REVISED STANDARD PLAN RSP A77C3

3-10-11

Dist	COUNTY	ROUTE	POST MILES TOTAL PROJECT	SHEET No.	TOTAL SHEETS
11	SD	5	R10.0,R10.7	93	132

Randell D. Hiatt
REGISTERED CIVIL ENGINEER

May 20, 2011
PLANS APPROVAL DATE

REGISTERED PROFESSIONAL ENGINEER
Randell D. Hiatt
No. C50200
Exp. 6-30-11
CIVIL
STATE OF CALIFORNIA

The State of California or its officers or agents shall not be responsible for the accuracy or completeness of electronic copies of this plan sheet.

To accompany plans dated 2-21-12

NOTES:

1. When necessary to place dike in front of face of guard railing, only Type C dike may be used. For dike details, see Standard Plan A87B.
2. For standard railing post embedment, see Standard Plans A77C3.
3. Guard railing delineation to be used where shown on the Project Plans.
4. When dike or curb is placed under guard railing, the maximum height of the dike or curb shall be 4". Mountable dike should not be used. For dike and curb details, see Standard Plans A87A and A87B.
5. For details of typical distance between the face of rail and hinge point, see Standard Plan A77C3.
6. For steel line posts, use ¼ - 20 self-tapping screws in 0.22" diameter holes or ¼" bolts in 9/32" diameter holes.

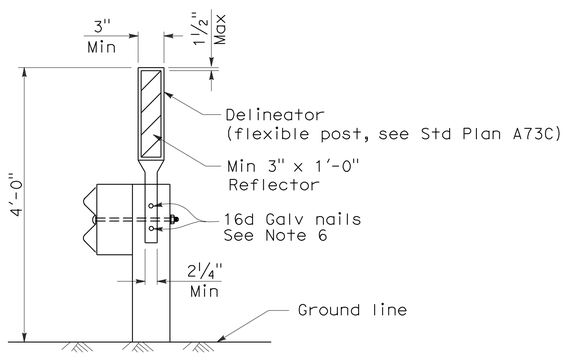

GUARD RAILING DELINEATION

See Note 3

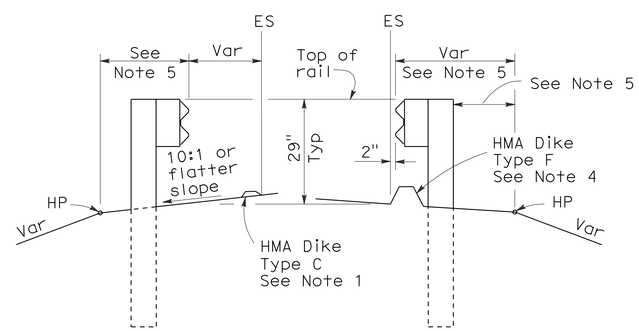

DIKE POSITIONING

See Note 1

STATE OF CALIFORNIA
DEPARTMENT OF TRANSPORTATION

METAL BEAM GUARD RAILING TYPICAL RAILING DELINEATION AND DIKE POSITIONING DETAILS

NO SCALE

RSP A77C4 DATED MAY 20, 2011 SUPERSEDES RSP A77C4 DATED JUNE 6, 2008 AND STANDARD PLAN A77C4 DATED MAY 1, 2006 - PAGE 47 OF THE STANDARD PLANS BOOK DATED MAY 2006.

REVISED STANDARD PLAN RSP A77C4

2006 REVISED STANDARD PLAN RSP A77C4

3-10-11

DIST	COUNTY	ROUTE	POST MILES TOTAL PROJECT	SHEET NO.	TOTAL SHEETS
11	SD	5	R10.0,R10.7	94	132

Randell D. Hiatt
REGISTERED CIVIL ENGINEER

June 6, 2008
PLANS APPROVAL DATE

REGISTERED PROFESSIONAL ENGINEER
Randell D. Hiatt
No. C50200
Exp. 6-30-09
CIVIL
STATE OF CALIFORNIA

The State of California or its officers or agents shall not be responsible for the accuracy or completeness of electronic copies of this plan sheet.

To accompany plans dated 2-21-12

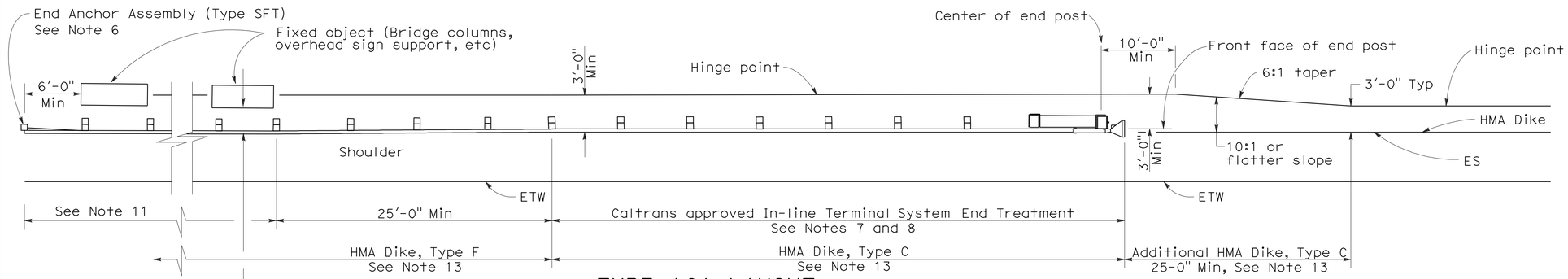

TYPE 16A LAYOUT

(GUARD RAILING INSTALLATION AT ROADSIDE FIXED OBJECT OR OBJECTS WITH AN IN-LINE END TREATMENT AT TRAFFIC APPROACH END OF RAILING)
See Notes 12 and 13

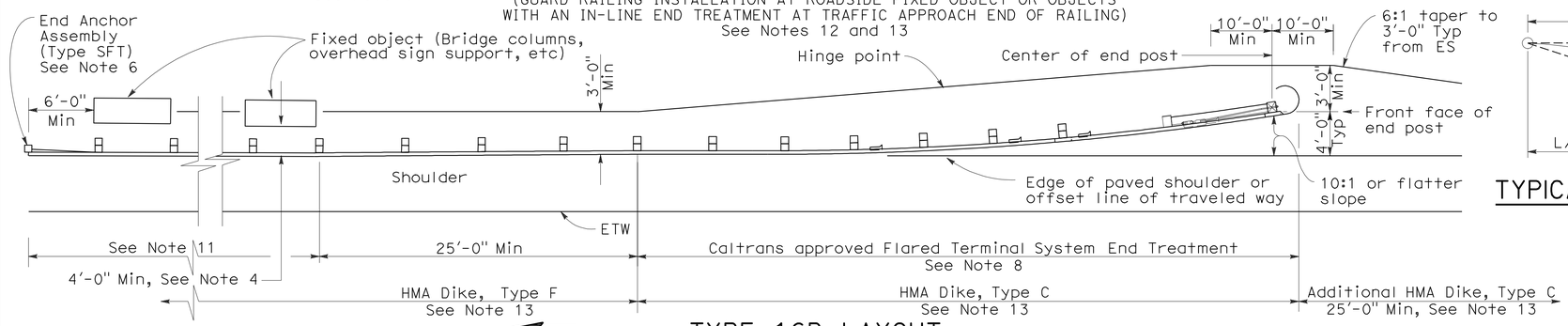

TYPE 16B LAYOUT

(GUARD RAILING INSTALLATION AT ROADSIDE FIXED OBJECT OR OBJECTS WITH A FLARED END TREATMENT AT TRAFFIC APPROACH END OF RAILING)
See Notes 12 and 13

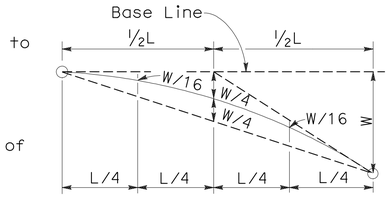

TYPICAL PARABOLIC LAYOUT

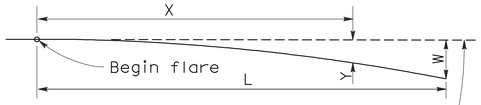

Base Line (Edge of paved shoulder or offset line of edge of traveled way)

$$Y = \frac{WX^2}{L^2}$$

Y = Offset from base line
W = Maximum offset
X = Distance along base line
L = Length of flare

PARABOLIC FLARE OFFSETS

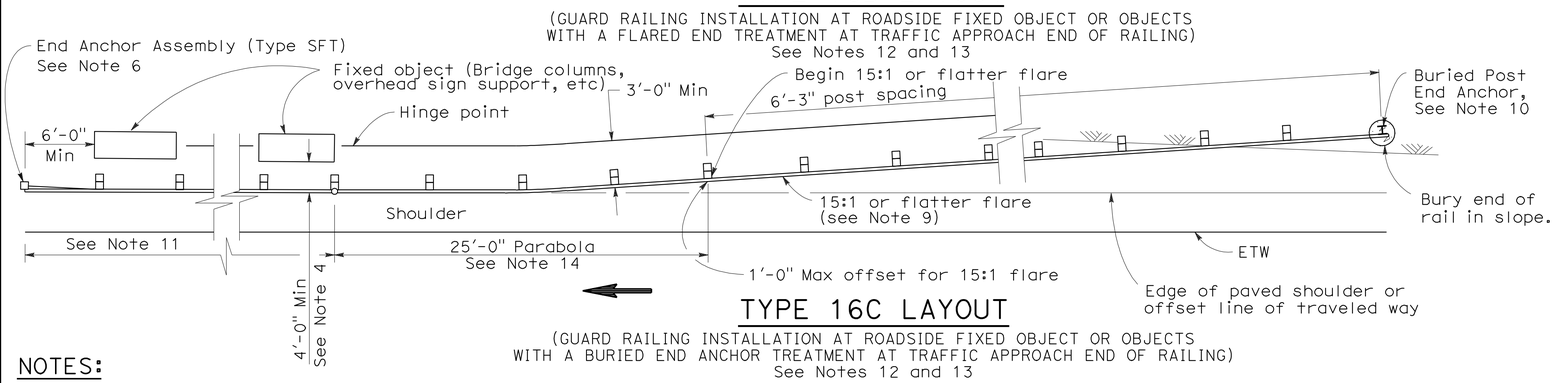

TYPE 16C LAYOUT

(GUARD RAILING INSTALLATION AT ROADSIDE FIXED OBJECT OR OBJECTS WITH A BURIED END ANCHOR TREATMENT AT TRAFFIC APPROACH END OF RAILING)
See Notes 12 and 13

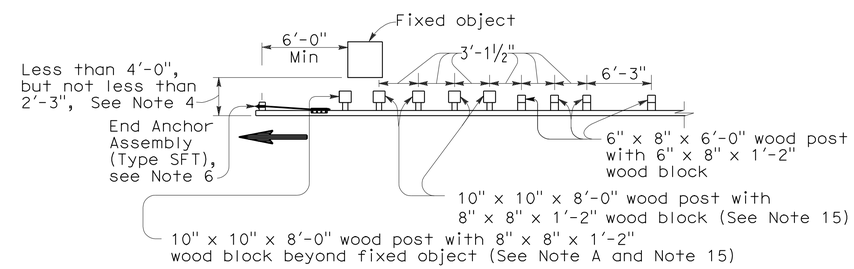

NOTE A: For a series of fixed objects (bridge columns, overhead sign supports, etc.) additional 10" x 10" x 8'-0" wood post with 8" x 8" x 1'-2" wood blocks at 3'-1½" center to center spacing are to be used between fixed objects.

STRENGTHENED RAILING SECTIONS FOR FIXED OBJECT

Use strengthened railing sections with Types 16A, 16B or 16C Layouts where minimum clearance between the face of the guard railing and fixed object(s) is less than 4'-0", but not less than 2'-3". See Note 4

NOTES:

1. Line post, blocks and hardware to be used are shown on Revised Standard Plans A77A1, A77A2, A77B1, A77C1 and A77C2.
2. Guard railing post spacing to be 6'-3" center to center, except as otherwise noted.
3. Except as noted, line posts are 6" x 8" x 6'-0" wood with 6" x 8" x 1'-2" wood blocks. W6 x 9 steel posts, 6'-0" in length, with 6" x 8" x 1'-2" notched wood blocks or notched recycled plastic blocks may be used for 6" x 8" x 6'-0" wood line posts with 6" x 8" x 1'-2" wood blocks where applicable and when specified.
4. A 4'-0" minimum clearance is required between the face of the railing and the face of a fixed object located directly behind standard guard railing sections with post spacing of 6'-3". Construct guard railing as shown in the detail "Strengthened Railing Sections for Fixed Objects" on this plan, where the clearance between the face of the railing and the face of a fixed object is less than 4'-0", but not less than 2'-3". Where the clearance is less than 2'-3", a concrete wall or barrier should be constructed to shield the fixed object(s).
5. Direction of adjacent traffic indicated by ⟶.
6. For End Anchor Assembly (Type SFT) details, see Standard Plan A77H1.
7. In-line Terminal System End Treatments are used where site conditions will not accommodate a flared end treatment.
8. The type of terminal system to be used will be shown on the Project Plans.
9. The 15:1 or flatter flare used with Type 16C Layout is based on the edge of the paved shoulder or offset line of edge of the traveled way. The length of guard railing within the 15:1 or flatter flare is based on site conditions and should be a length equal to multiples of 12'-6".
10. For details of the Buried Post End Anchor used with Type 16C Layout, see Standard Plan A77I2.
11. As site conditions dictate, construct additional guard railing to shield fixed object(s). Additional guard railing length equal to multiples of 12'-6". Post spacing at 6'-3" except as specified in Note 4.
12. Layout Types 16A, 16B or 16C are typically used where guard railing is recommended to shield roadside fixed object(s) and a crashworthy end treatment is required for only one direction of traffic.
13. Where placement of dike is required with guard railing, see Revised Standard Plan RSP A77C4 for dike positioning details.
14. For typical flare offsets for 25'-0" length parabola with maximum offset of 1'-0", see Revised Standard Plan RSP A77E1.
15. W6 x 15 steel post, 8'-0" in length, with 8" x 8" x 1'-2" notched wood block or notched recycled plastic blocks may be used in place of the 10" x 10" x 8'-0" wood post with 8" x 8" x 1'-2" wood block shown in the "Strengthened Railing Sections Detail".

STATE OF CALIFORNIA
DEPARTMENT OF TRANSPORTATION

METAL BEAM GUARD RAILING TYPICAL LAYOUTS FOR ROADSIDE FIXED OBJECTS

NO SCALE

RSP A77G3 DATED JUNE 6, 2008 SUPERSEDES STANDARD PLAN A77G3 DATED MAY 1, 2006 - PAGE 61 OF THE STANDARD PLANS BOOK DATED MAY 2006.

REVISED STANDARD PLAN RSP A77G3

2006 REVISED STANDARD PLAN RSP A77G3

12-10-07

Dist	COUNTY	ROUTE	POST MILES TOTAL PROJECT	SHEET No.	TOTAL SHEETS
11	SD	5	R10.0,R10.7	95	132

Randell D. Hiatt
REGISTERED CIVIL ENGINEER

May 20, 2011
PLANS APPROVAL DATE

REGISTERED PROFESSIONAL ENGINEER
Randell D. Hiatt
No. C50200
Exp. 6-30-11
CIVIL
STATE OF CALIFORNIA

The State of California or its officers or agents shall not be responsible for the accuracy or completeness of electronic copies of this plan sheet.

To accompany plans dated 2-21-12

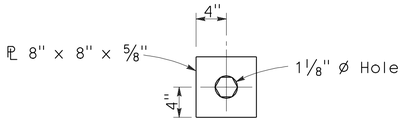

DETAIL A
CABLE CONNECTION
END PLATE

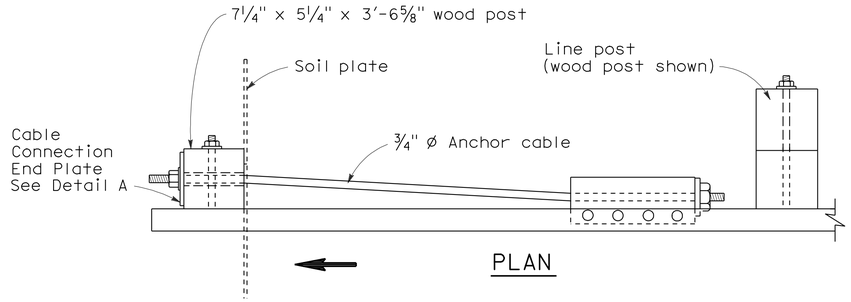

PLAN

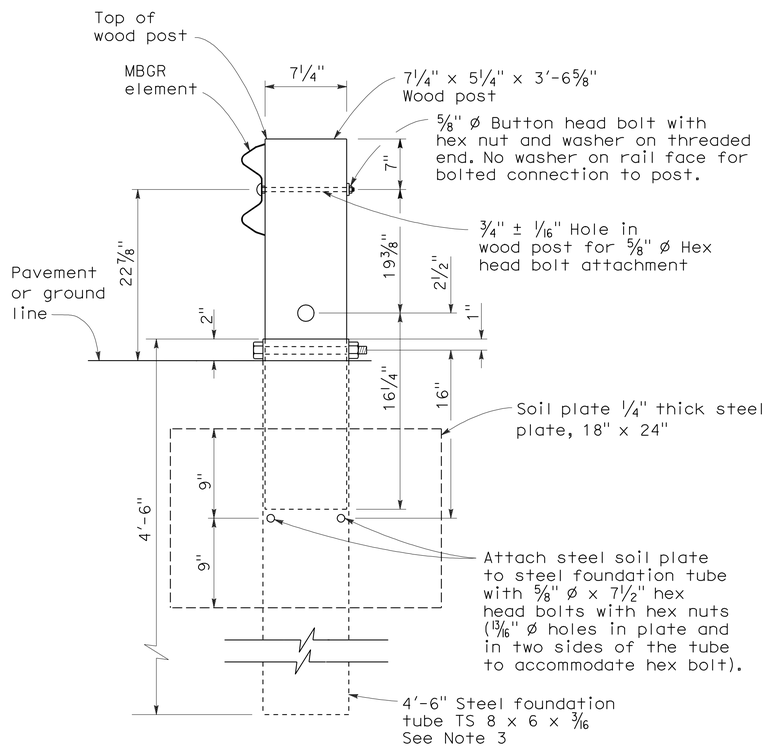

SECTION A-A

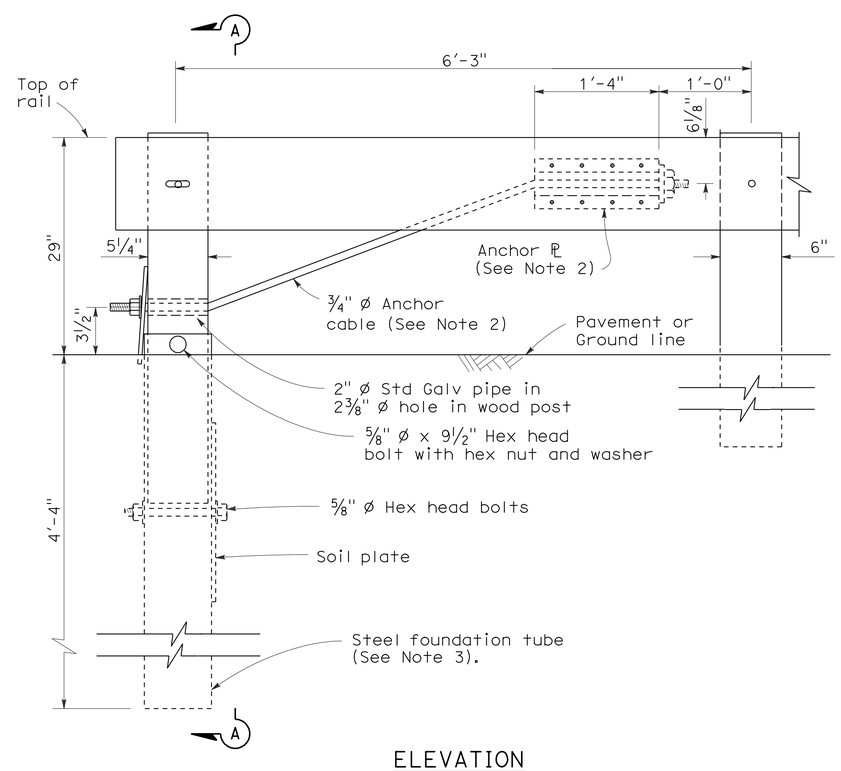

ELEVATION
END ANCHOR
ASSEMBLY (TYPE SFT)
See Note 1

NOTES:

1. See the A77E, A77F and A77G series of Standard Plans for typical use of End Anchor Assembly (Type SFT).
2. For details of the anchor plate and 3/4" cable, see Standard Plan A77H3.
3. A 6'-0" length steel foundation tube, TS 8 x 6 x 3/16, without a soil plate, may be furnished and installed in place of the 4'-6" length steel foundation tube and soil plate shown. Minimum embedment of the 6'-0" length tube shall be 5'-9". A 5/8" Ø hex head bolt and nut shall be installed in the hole in the 6'-0" length tube to keep the wood post from dropping into the tube.
4. Direction of traffic indicated by ⟹.
5. Install line post, steel foundation tube and soil plate in soil.

STATE OF CALIFORNIA
DEPARTMENT OF TRANSPORTATION

METAL RAILING END ANCHOR ASSEMBLY (TYPE SFT)

NO SCALE

RSP A77H1 DATED MAY 20, 2011 SUPERSEDES STANDARD PLAN A77H1
DATED MAY 1, 2006 - PAGE 67 OF THE STANDARD PLANS BOOK DATED MAY 2006.

REVISED STANDARD PLAN RSP A77H1

2006 REVISED STANDARD PLAN RSP A77H1

2-10-07

Dist	COUNTY	ROUTE	POST MILES TOTAL PROJECT	SHEET No.	TOTAL SHEETS
11	SD	5	R10.0,R10.7	96	132

Randell D. Hiatt
REGISTERED CIVIL ENGINEER

May 20, 2011
PLANS APPROVAL DATE

REGISTERED PROFESSIONAL ENGINEER
Randell D. Hiatt
No. C50200
Exp. 6-30-11
CIVIL
STATE OF CALIFORNIA

The State of California or its officers or agents shall not be responsible for the accuracy or completeness of electronic copies of this plan sheet.

To accompany plans dated 2-21-12

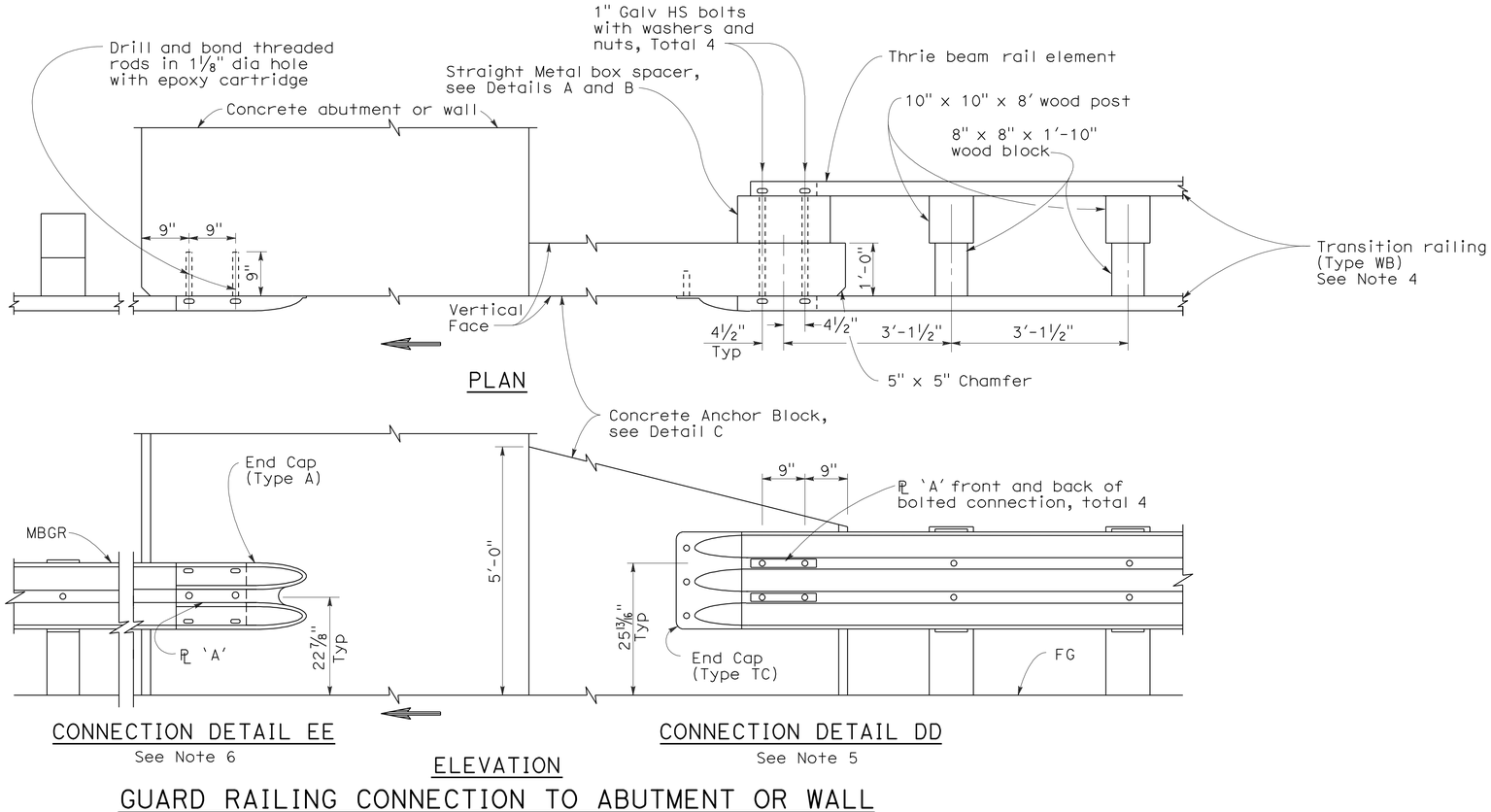

GUARD RAILING CONNECTION TO ABUTMENT OR WALL

NOTES:

1. These connection details apply to abutments and walls.
2. Additional details of posts, blocks and hardware are shown on Standard Plans A77B1, A77C1 and A77C2.
3. Direction of adjacent traffic indicated by ➡.
4. For additional details of Transition Railing (Type WB), see Standard Plan A77J4 Transition Railing (Type WB) transitions the 12 gage w-beam standard railing section of guard railing to a heavier gage nested thrie beam railing section which is connected to the concrete anchor block.
5. For typical use of Connection Details DD, See Layout Types 12A and 12B on Standard Plan A77F1 and Layout Types 12C and 12D on Standard Plan A77F2.
6. For typical use of Connection Detail EE, see Layout Type 12D on Standard Plan A77F2 and Layout Type 12DD on Standard Plan A77F5.

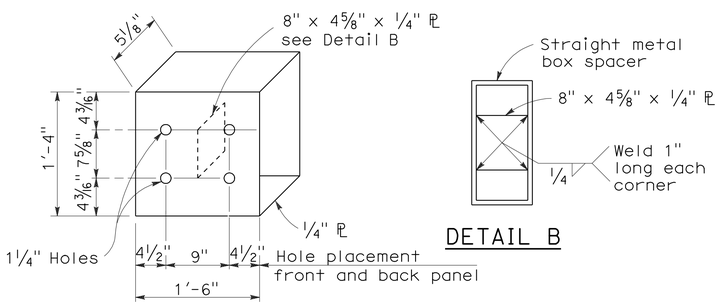

DETAIL A

STRAIGHT METAL BOX SPACER

DETAIL B

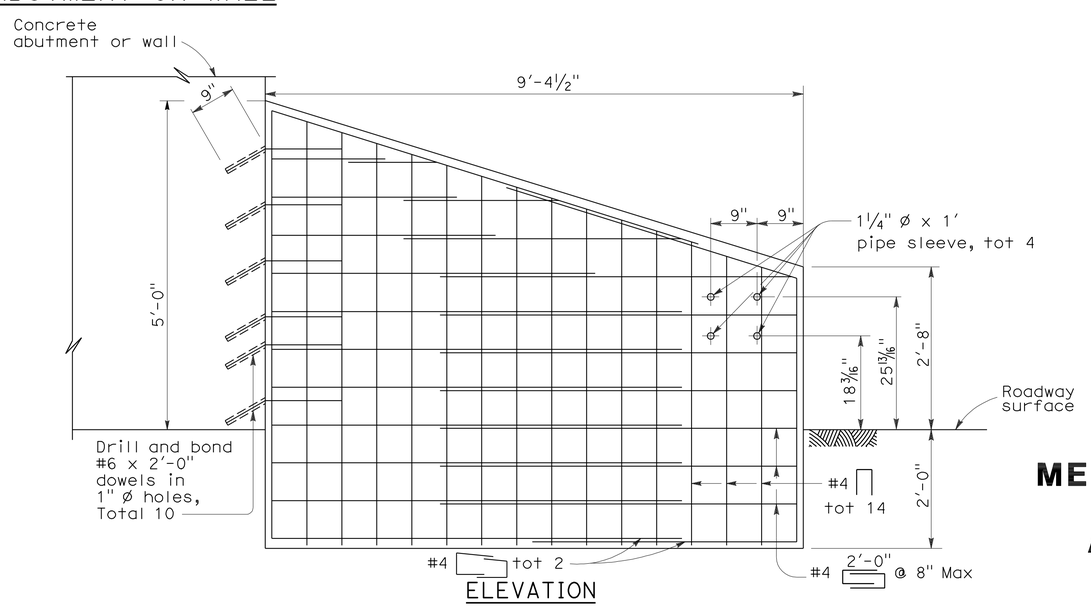

ELEVATION

ANCHOR BLOCK FOR TRANSITION RAILING CONNECTION

DETAIL C

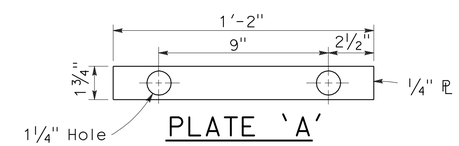

PLATE 'A'

STATE OF CALIFORNIA
DEPARTMENT OF TRANSPORTATION

METAL BEAM GUARD RAILING CONNECTIONS TO ABUTMENTS AND WALLS

NO SCALE

RSP A77J3 DATED MAY 20, 2011 SUPERSEDES STANDARD PLAN A77J3 DATED MAY 1, 2006 - PAGE 74 OF THE STANDARD PLANS BOOK DATED MAY 2006.

REVISED STANDARD PLAN RSP A77J3

2006 REVISED STANDARD PLAN RSP A77J3

3-10-11

DIST	COUNTY	ROUTE	POST MILES TOTAL PROJECT	SHEET NO.	TOTAL SHEETS
11	SD	5	R10.0,R10.7	97	132

Randell D. Hiatt
REGISTERED CIVIL ENGINEER

October 20, 2006
PLANS APPROVAL DATE

REGISTERED PROFESSIONAL ENGINEER
Randell D. Hiatt
No. C50200
Exp. 6-30-07
CIVIL
STATE OF CALIFORNIA

The State of California or its officers or agents shall not be responsible for the accuracy or completeness of electronic copies of this plan sheet.

To accompany plans dated 2-21-12

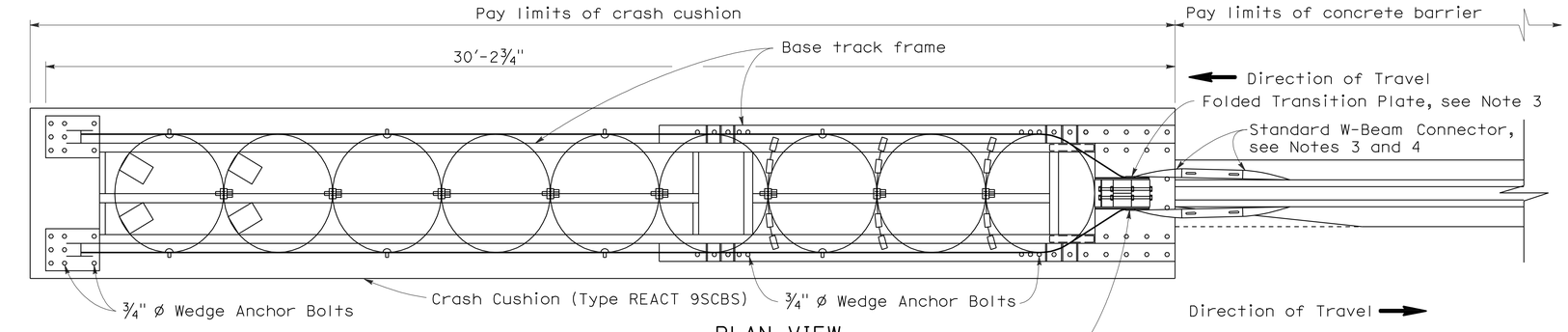

PLAN VIEW

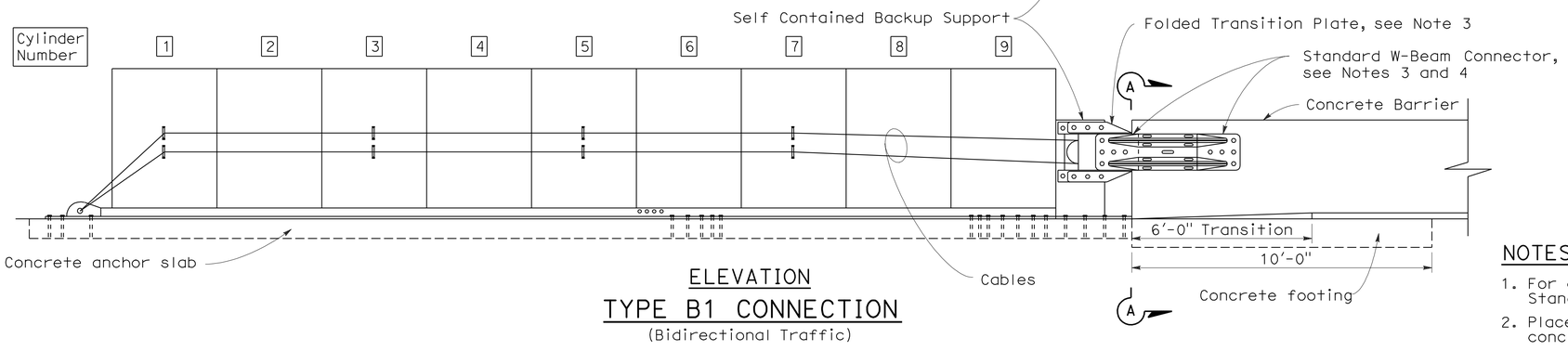

ELEVATION

TYPE B1 CONNECTION

(Bidirectional Traffic)

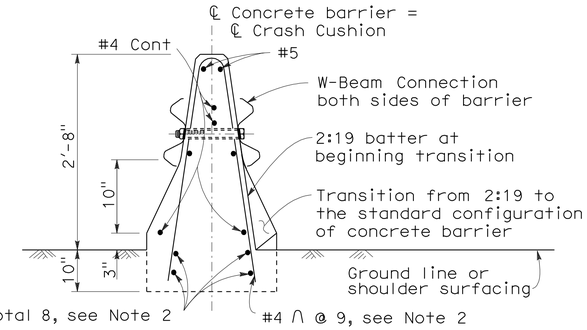

SECTION A-A

(Type 50 Barrier shown)

NOTES:

1. For additional details of Crash Cushion (Type REACT 9SCBS), see Standard Plan A82D1.
2. Place this reinforcement for the full 10'-0" length of the terminus of the concrete barrier.
3. Attach manufacturer supplied folded transition plates and W-Beam connectors to backup support with manufacturer supplied bolts.
4. Attach W-Beam Connectors to barrier with manufacturer supplied anchor bolts in the manner recommended by the manufacturer.

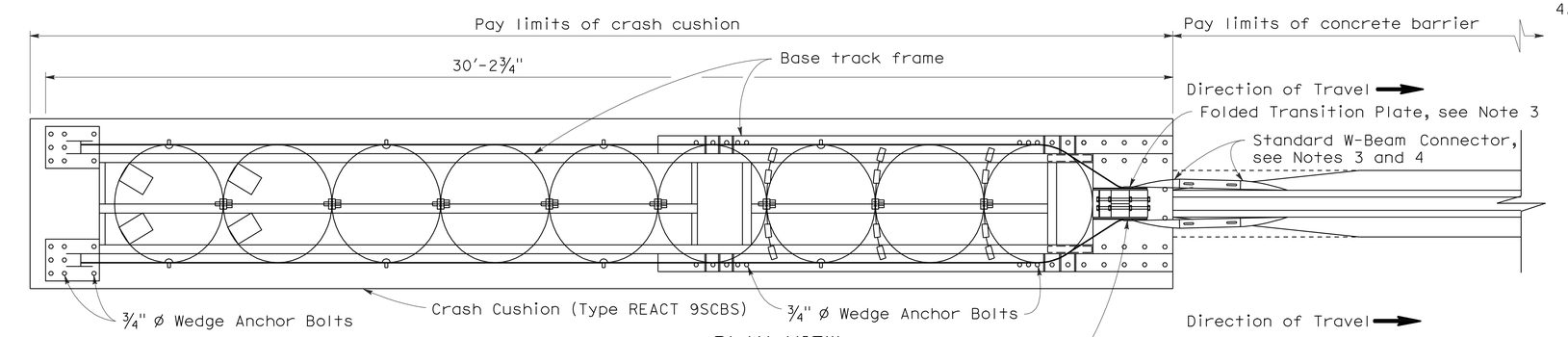

PLAN VIEW

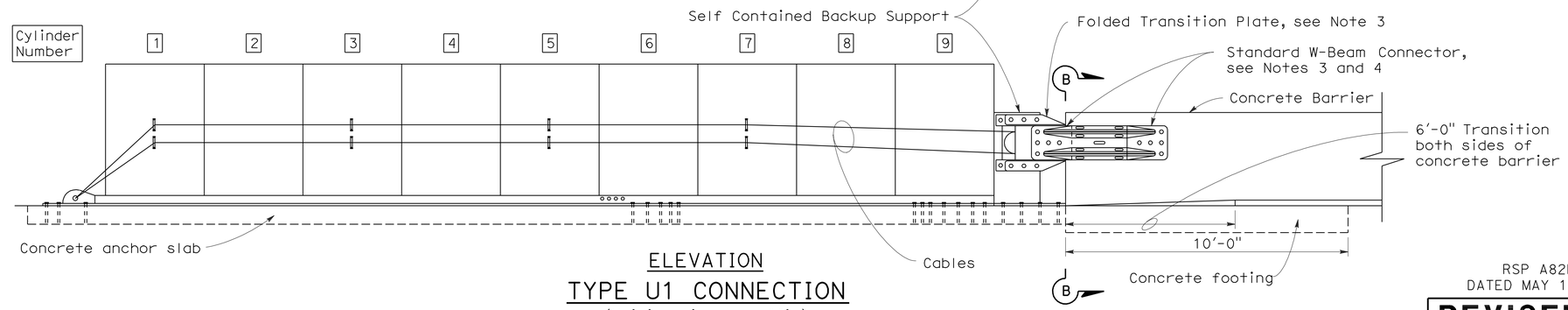

ELEVATION

TYPE U1 CONNECTION

(Unidirectional Traffic)

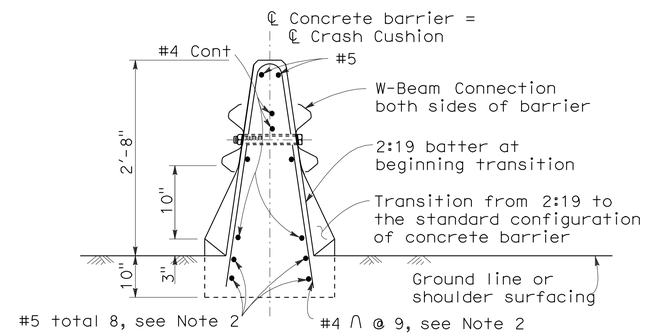

SECTION B-B

(Type 50 Barrier shown)

STATE OF CALIFORNIA
DEPARTMENT OF TRANSPORTATION

CRASH CUSHION (TYPE REACT 9SCBS) CONNECTION TO CONCRETE BARRIER

NO SCALE

RSP A82D2 DATED OCTOBER 20, 2006 SUPERSEDES STANDARD PLAN A82D2 DATED MAY 1, 2006 - PAGE 108 OF THE STANDARD PLANS BOOK DATED MAY 2006.

REVISED STANDARD PLAN RSP A82D2

2006 REVISED STANDARD PLAN RSP A82D2

9-13-06

DIST	COUNTY	ROUTE	POST MILES TOTAL PROJECT	SHEET NO.	TOTAL SHEETS
11	SD	5	R10.0,R10.7	98	132

REGISTERED CIVIL ENGINEER

November 17, 2006
PLANS APPROVAL DATE

REGISTERED PROFESSIONAL ENGINEER Michael Janzen No. 44788 Exp. 03-31-08 CIVIL STATE OF CALIFORNIA

The State of California or its officers or agents shall not be responsible for the accuracy or completeness of electronic copies of this plan sheet.

To accompany plans dated 2-21-12

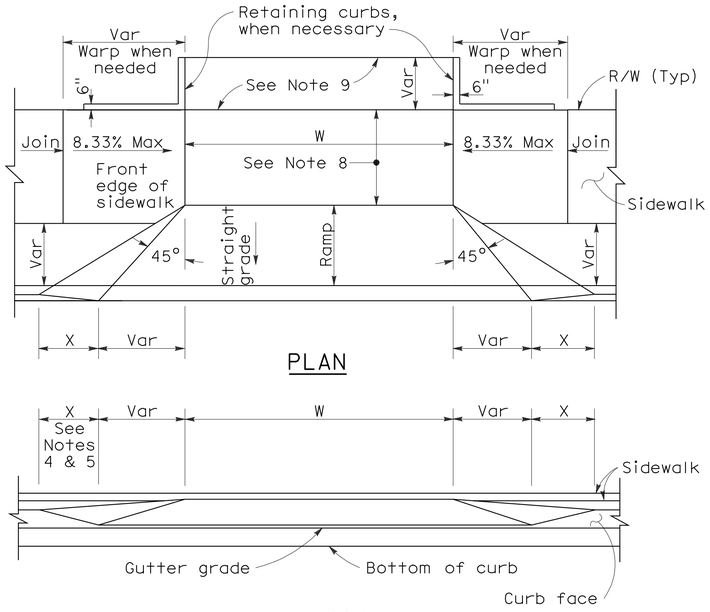

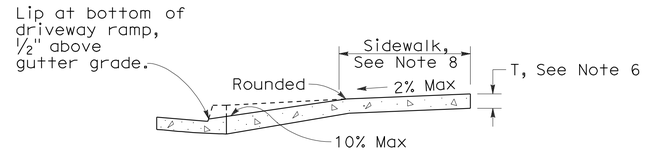

CASE A

Typical driveway, sidewalk not depressed

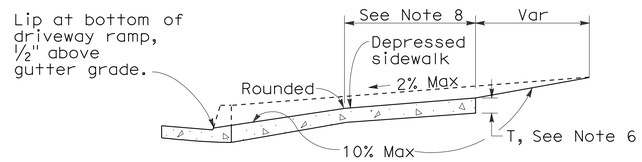

CASE B

Driveway with depressed sidewalk

SECTIONS

CURB QUANTITIES

TYPE	CUBIC YARDS PER LINEAR FOOT
A1-6	0.02585
A1-8	0.03084
A2-6	0.05903
A2-8	0.06379
A3-6	0.01036
A3-8	0.01435
B1-4	0.02185
B1-6	0.02930
B2-4	0.05515
B2-6	0.06171
B3-4	0.00641
B3-6	0.01074
B4	0.05709
D-4	0.04083
D-6	0.06804
E	0.06661

TABLE A

CURB TYPE	DIMENSIONS "H1"	"H2"	"W1"	"W2"
A1-6	1'-2"	6"	7½"	1½"
A1-8	1'-4"	8"	8"	2"
A2-6	1'-0"	6"	2'-7½"	1½"
A2-8	1'-2"	8"	2'-8"	2"
A3-6	6"	5"	7¼"	1¼"
A3-8	8"	7"	7¾"	1¾"
B1-4	1'-0"	4"	7½"	2½"
B1-6	1'-2"	6"	9"	4"
B2-4	10"	4"	2'-7½"	2½"
B2-6	1'-0"	6"	2'-9"	4"
B3-4	4"	3"	7"	2"
B3-6	6"	5"	8½"	3½"
D-4	10"	4"	1'-6"	1'-1"
D-6	1'-0"	6"	2'-2"	1'-8"

DRIVEWAYS

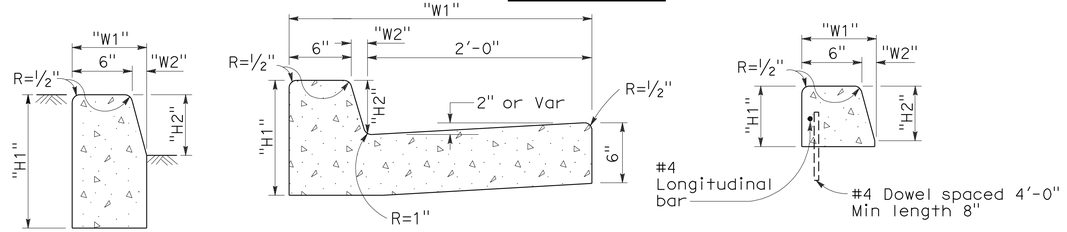

TYPE A1 CURBS
See Table A

TYPE A2 CURBS
See Table A

TYPE A3 CURBS
Superimposed on existing pavement
See Table A

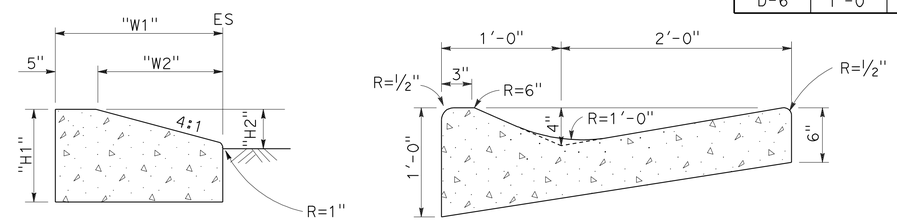

TYPE D CURBS
See Table A

TYPE E CURB

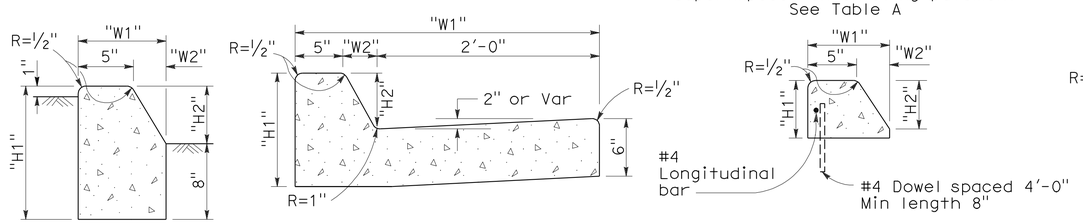

TYPE B1 CURBS
See Table A

TYPE B2 CURBS
See Table A

TYPE B3 CURBS
Superimposed on existing pavement
See Table A

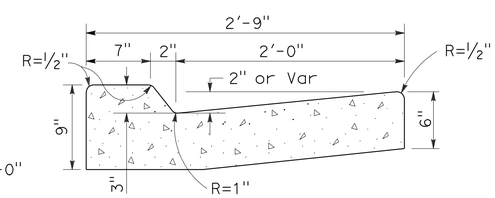

TYPE B4 CURBS

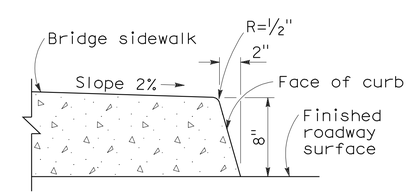

TYPE H CURB
On Bridges

CURBS

NOTES:

1. Case A driveway section typically applies.
2. Use Case B driveway section when ramp slopes would exceed 10% in Case A.
3. Use Case B driveway section when sidewalk cross slope would exceed 2% in Case A.
4. X=3'-0" except for curb heights over 10" where 4:1 slopes shall be used on curb slope.
5. X is a variable when sidewalk is located where wheelchairs may traverse the surface. Slopes shall not exceed 8.33%.
6. Sidewalk and ramp thickness "T" at driveway shall be 4" for residental and 6" for commercial.
7. Difference in slope of the driveway ramp and the slope of a line between the gutter and a point on the roadway 5'-0" from gutter line shall not exceed 15%. Reduce driveway ramp slope, not gutter slope, where required.
8. Minimum width of clear passageway for sidewalk shall be 4'-0".
9. Retaining curbs and acquisition of construction easement may be necessary for narrow sidewalks or curb heights in excess of 6".
10. Across the pedestrian route at curb ramp locations, the gutter pan slope shall not exceed 1" of depth for each 2'-0" of width.

STATE OF CALIFORNIA
DEPARTMENT OF TRANSPORTATION

CURBS AND DRIVEWAYS

NO SCALE

RSP A87A DATED NOVEMBER 17, 2006 SUPERSEDES STANDARD PLAN A87A DATED MAY 1, 2006 - PAGE 113 OF THE STANDARD PLANS BOOK DATED MAY 2006.

REVISED STANDARD PLAN RSP A87A

2006 REVISED STANDARD PLAN RSP A87A

10-25-06

DIST	COUNTY	ROUTE	POST MILES TOTAL PROJECT	SHEET NO.	TOTAL SHEETS
11	SD	5	R10.0,R10.7	99	132

REGISTERED CIVIL ENGINEER

September 1, 2006
PLANS APPROVAL DATE

REGISTERED PROFESSIONAL ENGINEER
Hector David Cordova
No. C41957
Exp. 3-31-08
CIVIL
STATE OF CALIFORNIA

The State of California or its officers or agents shall not be responsible for the accuracy or completeness of electronic copies of this plan sheet.

To accompany plans dated 2-21-12

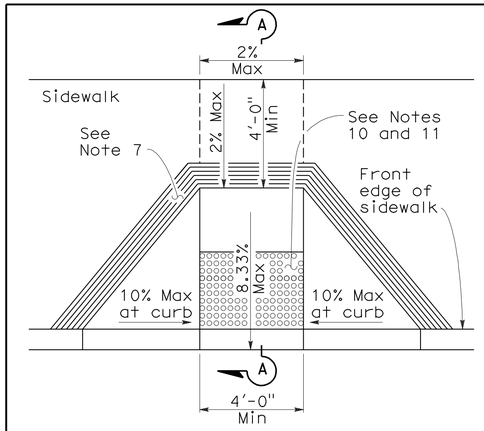

CASE A

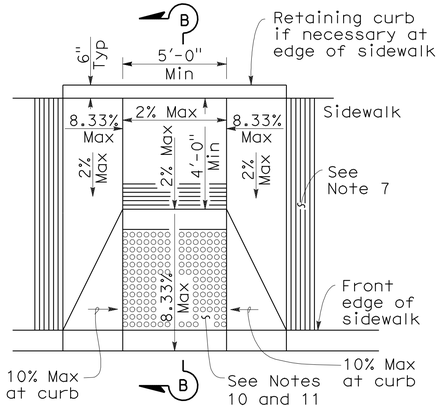

CASE B

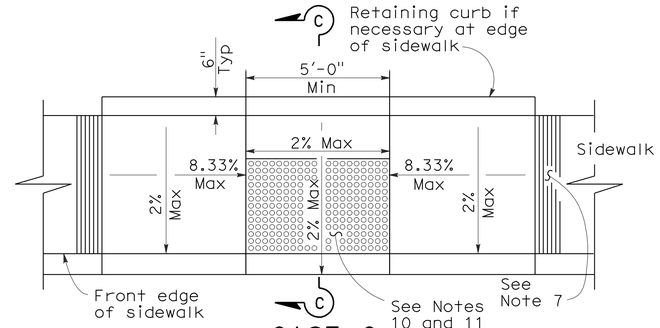

CASE C

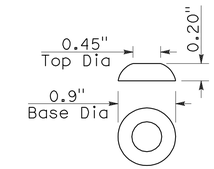

RAISED TRUNCATED DOME

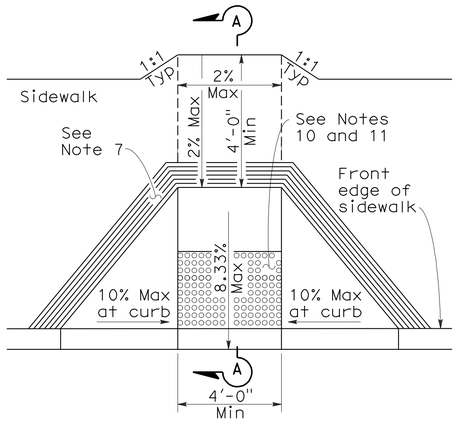

CASE D

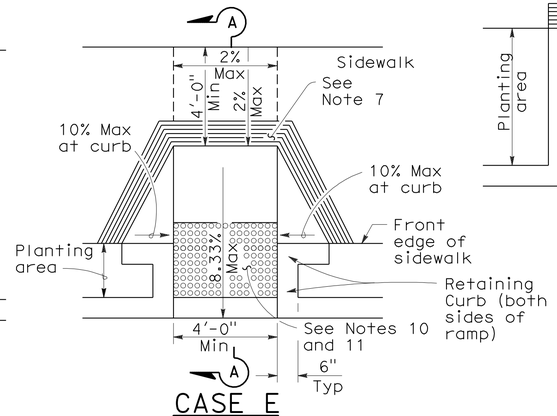

CASE E

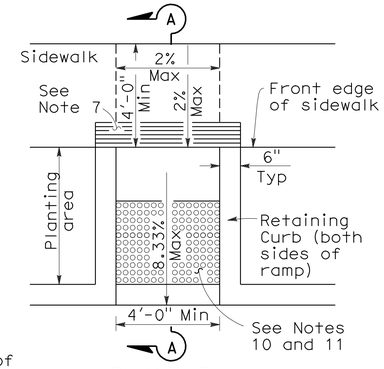

CASE F

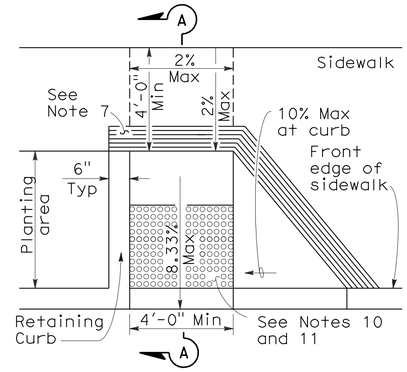

CASE G

See Note 4

SECTION A-A

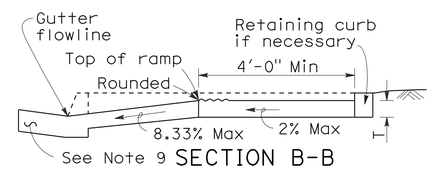

SECTION B-B

Depress entire sidewalk as required

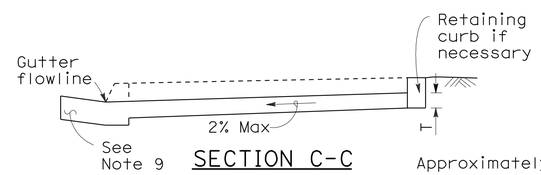

SECTION C-C

NOTES:

1. As site conditions dictate, Case A through Case G curb ramps may be used for corner installations similar to those shown in Detail A and Detail B. The case of curb ramps used in Detail A do not have to be the same. Case A through Case G curb ramps also may be used at mid block locations, as site conditions dictate.
2. If distance from curb to back of sidewalk is too short to accommodate ramp and 4'-0" platform (landing) as shown in Case A, the sidewalk may be depressed longitudinally as in Case B, or C or may be widened as in Case D.
3. When ramp is located in center of curb return, crosswalk configuration must be similar to that shown for Detail B.
4. As site conditions dictate, the retaining curb side and the flared side of the Case G ramp shall be constructed in reversed position.
5. If located on a curve, the sides of the ramp need not be parallel, but the minimum width of the ramp shall be 4'-0".
6. Side slope of ramp flares vary uniformly from a maximum of 10% at curb to conform with longitudinal sidewalk slope adjacent to top of the ramp, except in Case C and Case F.
7. The curb ramp shall be outlined, as shown, with a 1'-0" wide border with 1/4" grooves approximately 3/4" on center. See grooving detail.
8. Transitions from ramps and landing to walks, gutters or streets shall be flush and free of abrupt changes.
9. Maximum slopes of adjoining gutters, the road surface immediately adjacent to the curb ramp or accessible route shall not exceed 5 percent within 4'-0" of the top and bottom of the curb ramp.
10. Curb ramps shall have a detectable warning surface that extends the full width and 3'-0" depth of the ramp. Detectable Warning Surfaces shall conform to the details on this plan and the requirements in the Special Provisions.
11. The edge of the detectable warning surface nearest the street shall be between 6" and 8" from the gutter flowline.
12. Sidewalk and ramp thickness, "T", shall be 3 1/2" minimum.
13. Utility pull boxes, manholes, vaults and all other utility facilities within the boundaries of the curb ramp will be relocated or adjusted to grade by the owner prior to, or in conjunction with, curb ramp construction.
14. For retrofit conditions, removal and replacement of curb apron will be at the Contractor's option, unless otherwise shown on project plans.

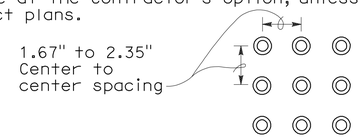

RAISED TRUNCATED DOME PATTERN (IN-LINE)

DETECTABLE WARNING SURFACE

See Note 10

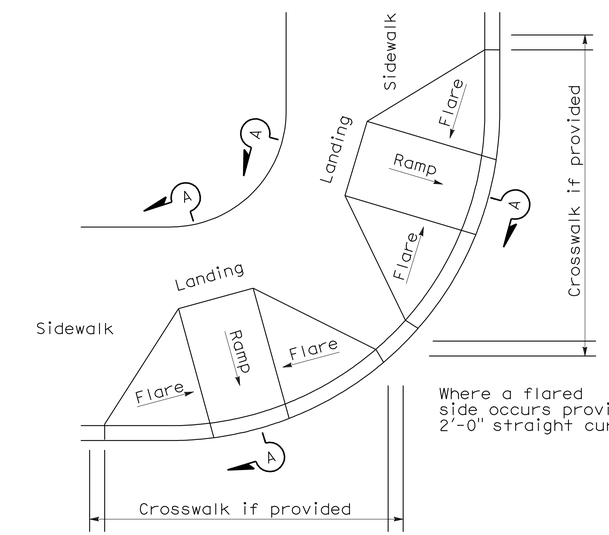

DETAIL A

TYPICAL TWO-RAMP CORNER INSTALLATION

See Note 1

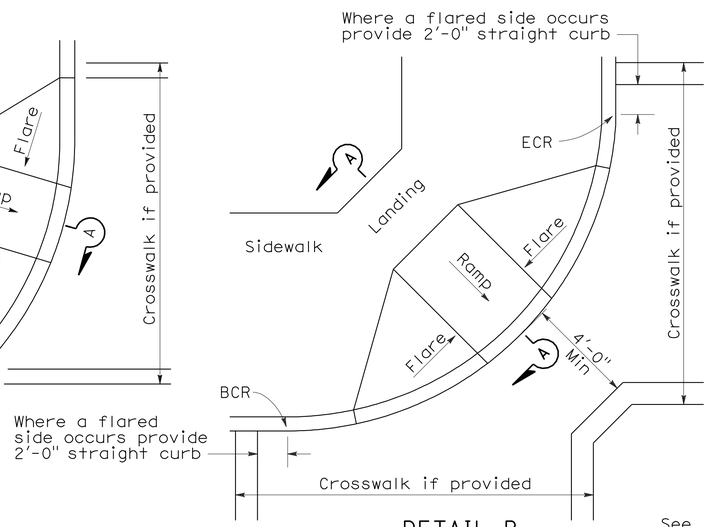

DETAIL B

TYPICAL ONE-RAMP CORNER INSTALLATION

See Notes 1 and 3

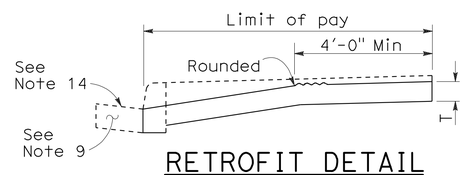

RETROFIT DETAIL

Existing curb and sidewalk

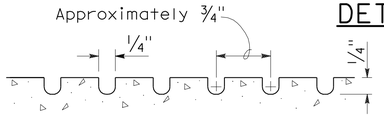

GROOVING DETAIL

STATE OF CALIFORNIA
DEPARTMENT OF TRANSPORTATION

CURB RAMP DETAILS

NO SCALE

RSP A88A DATED SEPTEMBER 1, 2006 SUPERSEDES STANDARD PLAN A88A DATED MAY 1, 2006 - PAGE 115 OF THE STANDARD PLANS BOOK DATED MAY 2006.

REVISED STANDARD PLAN RSP A88A

2006 REVISED STANDARD PLAN RSP A88A

8-3-06

DIST	COUNTY	ROUTE	POST MILES TOTAL PROJECT	SHEET NO.	TOTAL SHEETS
11	SD	5	R10.0,R10.7	100	132

LICENSED LANDSCAPE ARCHITECT

April 3, 2009
PLANS APPROVAL DATE

The State of California or its officers or agents shall not be responsible for the accuracy or completeness of electronic copies of this plan sheet.

LICENSED LANDSCAPE ARCHITECT — Robert B. Schott — Signature — 11-30-10 Renewal Date — 2-25-09 Date — STATE OF CALIFORNIA

To accompany plans dated 2-21-12

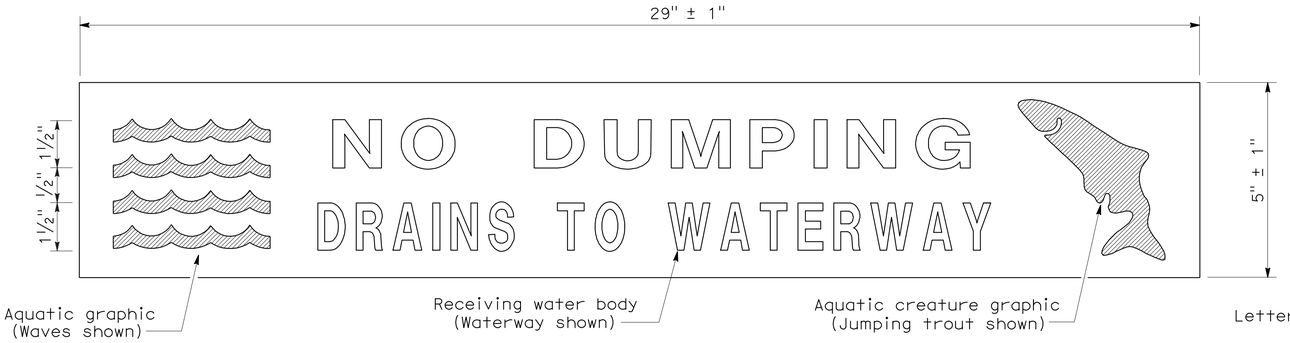

PLAN
DRAINAGE INLET MARKER
(PREFABRICATED THERMOPLASTIC)

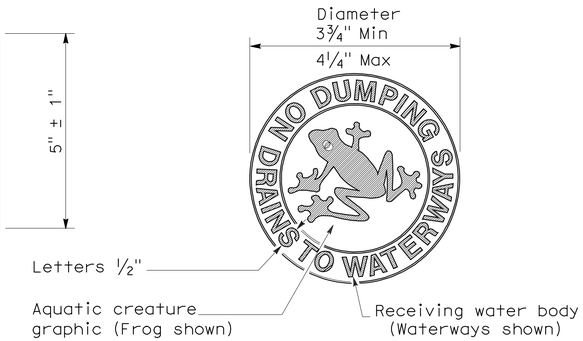

PLAN
DRAINAGE INLET MARKER
(MEDALLION)

PLAN
DRAINAGE INLET MARKER
(STAMPED CONCRETE IMPRINT)

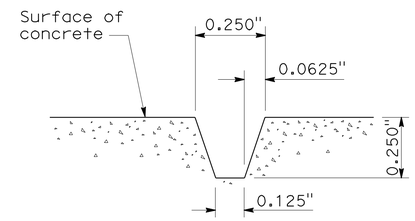

SECTION A-A
STAMPED CONCRETE
IMPRINT DETAIL

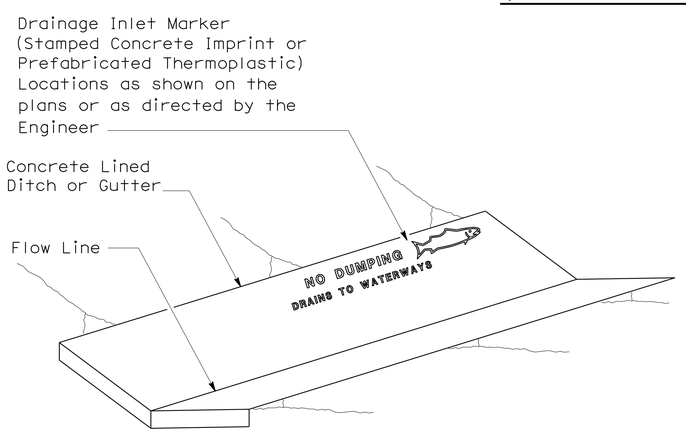

PERSPECTIVE
DRAINAGE INLET MARKER ON
CONCRETE LINED DITCH

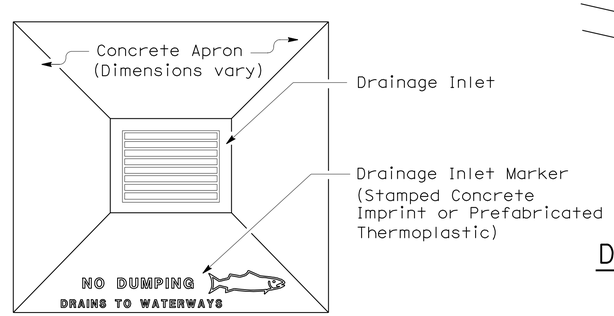

PLAN
DRAINAGE INLET MARKER ON
DRAINAGE INLET APRON

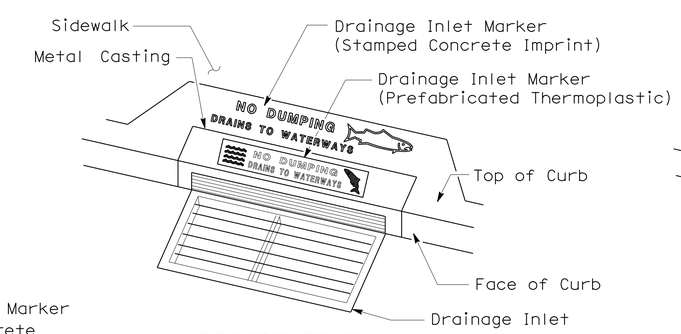

PERSPECTIVE
DRAINAGE INLET MARKER ON
DRAINAGE INLET

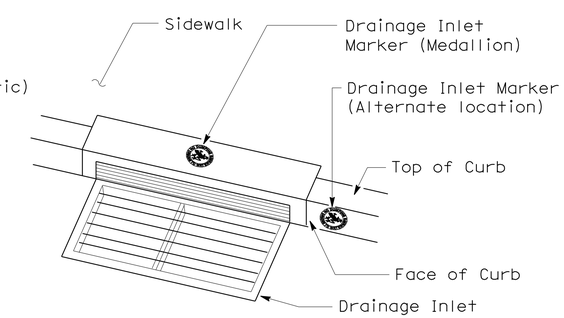

PERSPECTIVE
DRAINAGE INLET MARKER (MEDALLION)
ON DRAINAGE INLET

STATE OF CALIFORNIA
DEPARTMENT OF TRANSPORTATION

DRAINAGE INLET MARKERS

NO SCALE

NSP D71 DATED APRIL 3, 2009 SUPPLEMENTS
THE STANDARD PLANS BOOK DATED MAY 2006.

NEW STANDARD PLAN NSP D71

2006 NEW STANDARD PLAN NSP D71

7-24-08