FOR CONTRACT NO.: 11-294804
PROJECT ID: 1100020250

INFORMATION HANDOUT

AGREEMENTS

QUECHAN TRIBE (TRIBE)

1. TRIBAL EMPLOYMENT RIGHTS ORDINANCE (TERO) REQUIREMENTS:

    1.1. MEMORANDUM OF UNDERSTANDING (MOU) WITH DISTRICT 11
    1.2. TERO HIGHWAY CONSTRUCTION PERMIT (THCP) APPLICATION
    1.3. TERO COMPLIANCE PLAN
    1.4. TERO COMPLIANCE PLAN APPLICATION

2. TRIBAL PERMIT TO ENTER AND CONSTRUCT:

    2.1. APPLICATION FOR BUSINESS PERMIT
    2.2. WAIVER OF LIABILITY

MATERIALS INFORMATION

GEOTECHNICAL DESIGN REPORT FOR STATE ROUTE 186 ANDRADE BORDER CROSSING PEDESTRIAN PROJECT, DATED MARCH 12, 2013

ROUTE: 11-IMP-186, 0.0/0.4

QUECHAN INDIAN TRIBE
Ft. Yuma Indian Reservation
Office of Tribal Administration
P.O. Box 1899
Yuma, Arizona 85366-1899
Phone (760) 572-0213
Fax (760) 572-2102

RESOLUTION

R-100-13

A RESOLUTION TO APPROVE A MEMORANDUM OF UNDERSTANDING WITH THE CALIFORNIA DEPARTMENT OF TRANSPORTATION REGARDING THE TRIBAL EMPLOYMENT RIGHTS ORDINANCE OF THE QUECHAN INDIAN TRIBE.

WHEREAS: THE QUECHAN INDIAN TRIBE OF THE FORT YUMA INDIAN RESERVATION IS A FEDERALLY RECOGNIZED INDIAN TRIBE ORGANIZED UNDER A CONSTITUTION AND BYLAWS RATIFIED BY THE TRIBE ON NOVEMBER 28, 1936, AND APPROVED BY THE SECRETARY OF THE INTERIOR ON DECEMBER 18, 1936, WITH REVISED AMENDMENTS APPROVED ON NOVEMBER 18, 1974, AND MAY 21, 1997; AND

WHEREAS: THE TRIBAL COUNCIL OF THE QUECHAN INDIAN TRIBE RECOGNIZES THAT PROJECTS MANAGED BY THE CALIFORNIA DEPARTMENT OF TRANSPORTATION (CALTRANS) PRESENT MEANINGFUL OPPORTUNITIES FOR TRIBAL MEMBERS AND INDIAN-OWNED ENTERPRISES TO GAIN EMPLOYMENT AND BUSINESS EXPERIENCE AND INCOME; AND

WHEREAS: CALTRANS DESIRES TO COOPERATE WITH THE TRIBE TO IMPLEMENT THE TRIBE'S TRIBAL EMPLOYMENT RIGHTS ORDINANCE (TERO) THROUGH A MEMORANDUM OF UNDERSTANDING WITH THE TRIBE FOR THE PURPOSE OF FACILITATING THE APPLICATION OF THE TRIBE'S TERO FOR CALTRANS PROJECTS ON TRIBAL LAND AND TO ESTABLISH ROLES AND RESPONSIBILITIES OF THE TRIBE AND CALTRANS IN THIS PROCESS; AND

WHEREAS: GENERAL COUNCIL TO THE TRIBE, FRANK JOZWIAK, REVIEWED THE TERMS AND CONDITIONS OF THE MEMORANDUM OF UNDERSTANDING AND DOES NOT HAVE ANY LEGAL OBJECTION TO THE FORM OF THE MEMORANDUM (ATTACHMENT A); AND

WHEREAS: THE TRIBAL COUNCIL FINDS THAT THE PURPOSE, TERMS AND CONDITIONS OF THE MEMORANDUM OF UNDERSTANDING ARE REASONABLE AND APPROPRIATE; AND

NOW, THEREFORE BE IT RESOLVED: THAT THE QUECHAN TRIBAL COUNCIL HEREBY APPROVES THE MEMORANDUM OF UNDERSTANDING WITH CALTRANS, UNDER THE TERMS AND CONDITIONS CONTAINED IN ATTACHMENT 1, ATTACHED HERETO AND INCORPORATED HEREIN BY THIS REFERENCE; AND

THEREFORE BE IT FINALLY RESOLVED: THAT THE PRESIDENT, OR IN HIS ABSENCE THE VICE-PRESIDENT, IS THE AUTHORIZED OFFICIAL TO EXECUTE ALL APPLICABLE DOCUMENTS.

CERTIFICATION

THE FOREGOING RESOLUTION WAS PRESENTED AT A **REGULAR COUNCIL MEETING** CONVENED ON **APRIL 02, 2013**, DULY APPROVED BY A VOTE OF: **3** FOR, **0** AGAINST, **1** ABSTAINED, **2** ABSENT, BY THE TRIBAL COUNCIL OF THE QUECHAN INDIAN TRIBE PURSUANT TO THE AUTHORITY VESTED IN IT BY SECTION 16 OF THE INDIAN REORGANIZATION ACT OF JUNE 18, 1934 (48 STAT. 984) AS AMENDED, AND BY ARTICLE IV OF THE QUECHAN TRIBAL CONSTITUTION AND BYLAWS. THIS RESOLUTION IS EFFECTIVE AS OF THE DATE OF ITS APPROVAL.

QUECHAN TRIBE

BY:

RONDA AGUERRO, VICE-PRESIDENT
QUECHAN TRIBAL COUNCIL

ERNA JACKSON, INTERIM SECRETARY
QUECHAN TRIBAL COUNCIL

MEMORANDUM OF UNDERSTANDING
Between
CALIFORNIA DEPARTMENT OF TRANSPORTATION DISTRICT 11
and
Quechan Tribe of the Fort Yuma Indian Reservation (TRIBE)

1. PURPOSE AND RECITALS

The California Department of Transportation (Caltrans) desires to implement Tribal Employment Rights Ordinances on transportation projects and work cooperatively with federally recognized California Native American Tribes (Tribal Governments) to increase Native American employment opportunities. Caltrans pays Tribal Employment Rights Ordinance (TERO) fees for the portions of the projects on tribal lands. Caltrans honors tribal ordinances pursuant to the law and follows TERO provisions on Hiring Preferences for Contracted State Highway Work conducted on tribal lands or on any State highway included in a TERO tribe's Indian Reservation Road (IRR) inventory when a portion of the project is on tribal lands. To this end, on December 15, 2010, Caltrans adopted Deputy Directive DD-74-R2 in accord with 23 USC § 140(d) and California Attorney General Opinion No. 07-304.[1]

Pursuant to Deputy Directive DD-74-R2, Caltrans District 11 and the Quechan Tribe of the Fort Yuma Indian Reservation (Tribe) are engaging in this Memorandum of Understanding (TERO MOU) to facilitate the application of the Tribe's TERO for Caltrans projects on Tribal Land and to delineate the roles and responsibilities of the Tribe and Caltrans in this process.

This TERO MOU covers all applicable projects. A Project Fact Sheet with project specific information will be developed for each individual project (Attachment A).

This TERO MOU represents the present intention of the parties, but it is not intended to be used as a sole basis for authorizing funding and it is not a legally binding contract between the parties unless a TERO fee is paid by Caltrans to the Tribe.

Caltrans and the Tribe presently understand that:

2. MEETINGS

Caltrans

(A) The District Director, with appropriate Caltrans staff, including the District Native American Liaison (DNAL), will seek to hold at least two meetings a year with Tribes in the District to discuss upcoming projects and priorities, including those with TERO requirements. All tribes, including the Quechan Tribe, will be invited to participate, and Caltrans may discuss information on employment

[1] Per suggestions at TERO Workgroup meeting 9/6/12, TERO fee language placed in second sentence of paragraph (up front). Language in sentence regarding hiring preference left the same since taken from DD-74-R2. Bullet points removed and references to law and AG's opinion added pursuant to workgroup meeting 10/30/12.

opportunities; eligibility requirements for Native American-owned firms to become Disadvantaged Business Enterprises; and other information important to working in conjunction with the Tribe's TERO.[2]

(B) The Residential Engineer (RE), DNAL, and/or other appropriate Caltrans staff will invite the Tribe's TERO Officer to project pre-construction meetings. Five business days' notice will be given to the Tribe prior to the meeting.

(C) The RE, DNAL, and/or other appropriate Caltrans Staff will inform the TERO Officer of tailgate safety or other meetings when projects with TERO requirements are in construction.[3]

Tribe

(D) The TERO Officer and/or other officials the Tribe deems appropriate will attend project preconstruction meetings.

(E) If the TERO Officer and/or other officials cannot attend meetings described in (A) and (C) above, they will make arrangements with the DNAL, RE, or other appropriate Caltrans staff to obtain the information imparted at said meetings.

(F) The Tribe will notify Caltrans of information regarding TEROs; Tribal Land boundaries; the IRR inventory list; personnel; or any other information that may be important to facilitating projects with TERO requirements at the aforesaid meetings, and will work with the DNAL to ensure Caltrans has this information through other mediums and channels as appropriate (teleconferences, videoconferences, emails, meetings at Tribal offices, etc.).[4]

3. INFORMATION SHARING BETWEEN CALTRANS AND TRIBE

Caltrans

(A) The DNAL will be the first point of contact for information regarding Caltrans TERO policies and procedures within the District unless the Tribe is otherwise notified by the District.

(B) The DNAL will maintain a list of Tribes with TEROs in the District and include the Quechan Tribe on it. Location information with postmiles for Tribal Land on which State Highway is located will be included and provided to the District Director and other Caltrans staff as appropriate. The list will be included in this MOU as Scope of Memorandum (Attachment D).

(C) The DNAL will work with the Tribe to obtain copies of the Tribe's TERO, IRR inventory list, TERO Highway Construction Permit (THCP), and other documents and/or information necessary for implementing projects with TERO requirements.

---

[2] Corresponds to Guidance re: biannual meetings (pgs. 16, 22)

[3] Corresponds with Guidance regarding preconstruction conference (pg. 18); "tailgate meetings" as well as (B) and (C) added pursuant to conversations with Lonora.

[4] Corresponds with Guidance (pg. 19) though Guidance not explicit about information to be discussed at meetings by tribe; "personnel," "any other information," and "other mediums" language added in.

(D) The DNAL will be included in Project Development Team (PDT) meetings for projects with TERO requirements.[5]

(E) The DNAL, RE, or other appropriate Caltrans staff will inform the TERO Officer of project construction schedules, safety requirements, and/or any changes to a project that may impact labor force needs or other TERO requirements while it is in construction.

Tribe

(F) The TERO Officer or other tribal members (as deemed appropriate by the TERO Officer or other designee) will ensure the DNAL has a copy of the Tribe's most recent TERO; information on Tribal Lands and boundaries, including relevant portions of the Tribe's IRR inventory list; and other documents and/or information necessary for implementing projects with TERO requirements.[6]

(G) The TERO Officer or other tribal representatives (as deemed appropriate by the TERO Officer or other designee) will contact the RE prior to visiting construction sites.

4. TRIBAL HIGHWAY CONSTRUCTION PERMIT (THCP)

Caltrans

(A) A THCP application will be attached to this MOU and included in a Supplemental Information Handout accompanying the special provisions for projects with TERO requirements.

(B) Caltrans will include Special Provisions (Attachment C) directing contractors to:

a. Submit a THCP application to the Tribe within five (5) business days of contract approval and submit a copy to the Caltrans Residential Engineer (RE) at the same time.
b. Submit an executed THCP to the RE within ten (10) business days after receipt from the Tribe.
c. Not begin work until the RE receives a complete THCP from contractor.[7]

Tribe

(C) The Tribe will maintain a database of personnel trained to industry standards appropriate for each labor category and refer a list of qualified personnel to contractors and subcontractors after receiving a THCP application.

(D) The Tribe will return a completed THCP to the contractor within 30 days of receiving a THCP application.[8]

---

[5] (A), (B), (C), and (D), and (E) corresponds with Guidance pgs. 10, 17-18. (E) language on safety and schedules included pursuant to workgroup suggestions 9/6/12 . Labor force needs added pursuant to suggestion of workgroup 10/30/12.

[6] Corresponds with Guidance (pg. 19).

[7] (A) and (B) consistent with Guidance pg. 15.

[8] (C) and (D) consistent with Guidance pgs. 16, 19. "Complete" may need to be better defined in THCP template.

5. TERO TAX/FEE

Caltrans will pay a TERO fee of one-half percent (0.5%) on the total bid amount for portions of projects on Tribal Lands.[9] If a TERO Fee is paid, this MOU shall become a binding agreement and the covenants whereby the parties will seek to perform certain actions or may elect to perform certain actions shall become binding obligations of the respective parties, and the parties agree to perform such actions.

If a TERO fee is paid:

Caltrans

(A) The RE, DNAL, or other appropriate Caltrans staff will notify the TERO Officer when a contract with TERO requirements is approved.
(B) Upon receipt of a complete THCP, the RE will provide all documentation necessary so that the Tribe can properly invoice Caltrans for the amount of a contract subject to the TERO Tax/Fee.
(C) Caltrans will pay the Tribe within 45 days upon receipt of the invoice by the RE, pursuant to the Prompt Payment Act (Government Code 927, et seq.).
(D) The RE will forward the TERO invoice to Caltrans Accounting within 7 days of receiving a TERO invoice in accordance with established Construction payment procedures.[10]

Tribe

(E) The Tribe will properly invoice Caltrans for the TERO fee within 15 days after the RE provides documentation of the amount of the contract subject to the fee.
(F) The invoice will be given to a project's RE.[11]
(G) The Tribe will use the fee to support the Tribe's economic development and employment programs, as described in the Tribe's TERO.

6. TERO INFORMATION IN CONTRACT AND BID DOCUMENTS

(A) Caltrans will inform prospective bidders of projects with TERO requirements by including a Special Notice in construction contracts.
(B) Caltrans will notify the contractor of a minimum 90-day delayed start to allow for processing of the THCP as indicated in item 4.
(C) Caltrans will direct the contractor to the TERO Requirements Information Handout under Supplemental Project Information. The following will be included in the Information Handout:

---

[9] "Total Bid amount" added in pursuant to email from Jill Sewell, to comport with language in 2010 specs.
[10] (A), (B), (C), and (D) consistent with Guidance pgs. 14, 16, though minor aspects inferred, such as the RE providing the documentation/calculations for the tax/fee. Per Accounting, if a tribe is considered a non-small business vender and it takes 45 days for a check to be cut. Provision added to clarify meaning of "prompt payment" per Workgroup Meeting 9/6/12.
[11] Adapted from Guidance pgs. 16, 18-19—Note: Guidance needs clarity on when invoicing occurs.

a. This MOU
b. Appropriate TERO provisions pertaining to the Contracted State Highway Work done within that TERO tribe's jurisdiction, included in the MOU.
c. Project Fact Sheet (MOU Attachment A)
d. THCP Application or equivalent (MOU Attachment B)
e. Project-Specific TERO Special Provisions including THCP related provisions noted in Stipulation 4 (MOU Attachment C).[12]
f. Scope of Memorandum (MOU Attachment D).

7. HIRING PROCESS

Caltrans

(A) To the extent permitted by Federal and State law, contractors will be directed to follow hiring preference provisions of Tribal Law as defined by the Tribe's TERO, in regard to Hiring Preferences when undertaking Contracted State Highway Work on Tribal Lands.

(B) To the extent that the terms of this MOU are applicable, the DNAL will work with the Tribe in order to incorporate the Tribe's TERO (as set forth in this MOU) within Contracted State Highway Work.

[Note: The following terms related to hiring preference may appear in a Tribe's TERO and may need to be discussed during the development of the MOU:. They may or may not be included in the MOU.

"Applicability"
"Compliance/Indian Preference Plan"
"Core Employee"
"Covered Positions"
"Eligible Indian"
"Employee"
"Indian Preference"
"Industry Standards"
"Qualified Indian"
"Threshold/Hiring Criteria"]

TRIBE

(C) The Tribe will work with the Caltrans in order to incorporate the Tribe's TERO (as set forth in this MOU) within Contracted State Highway Work, including the provisions set forth above.

8. DEFINITIONS

Caltrans and the Tribe

---

[12] Adapted from Guidance pgs. 14-16; e. inferred from Guidance. Guidance says minimum 55-day delayed start, but D-1 has been using a minimum 45 days. Is there a preference?

(A) The following definitions, taken from or adapted in accordance with DD-74-R2, are incorporated herein:

a. Contracted State Highway Work means non-emergency Caltrans projects, construction and contracted maintenance, conducted on tribal lands or on any State highway included in the Tribe's IRR inventory when a portion of the project is on its tribal lands.
b. Federally Recognized Tribe – A tribal government and members of any tribe, band, pueblo, nation or other organized group that is acknowledged by the Federal Government to constitute a tribe with a government-to-government relationship with the U.S. and eligible for programs, services, and other relationships established by the U.S. for Indians because of their political status as Indians (U.S. Department of Transportation Order DOT 5301.1 dated November 16, 1999), or community including any Alaska Native village or region pursuant to the Alaska Native Claims Settlement Act (43 U.S.C. 1601 et seq.).
c. Hiring Preference – In addition to other federal laws requiring Indian preference in employment, Congress has expressly authorized states to implement Indian hiring preferences for highway work conducted on tribal lands. Implementation of Indian hiring preferences is in recognition of, and with reference to, Congress' fiduciary responsibility to advance tribal economic development and self sufficiency.
   Hiring preferences are predicated upon membership in a Federally Recognized Tribe, so the term "federally recognized Indian" is a political classification for the purposes of this Memorandum. TERO Hiring Preferences are only available to enrolled members of Federally Recognized Tribes, and the Department cannot favor one tribe over another in implementing a Hiring Preference. Qualified job applicants will be provided to Caltrans contractors by the Tribe's designated TERO representative
d. Indian Reservation Road (IRR) – A public road that is located within or provides access to an Indian reservation, Indian trust land, or restricted Indian land (23 U.S.C. §101(a)(12)). These roads are important to the overall public transportation needs to the reservation, and are recommended to the Bureau of Indian Affairs (BIA) for inclusion in the IRR inventory by the Tribe. Approval for inclusion of these routes must be given by BIA. Revised route sheets and updated documents are submitted to the Federal Lands Highway Program Administrator so the IRR inventory can be updated.
e. Tribal Employment Rights Ordinance (TERO) – A legislative act adopted by the governing body of a Federally Recognized Tribe.
f. Tribal Lands – Lands within a reservation, lands held in trust by BIA, or lands otherwise under the direct ownership of the Tribe.[13]

[13] Definitions included per suggestions of workgroup 9/6/12.

9. DURATION AND AMENDMENTS

Caltrans and the Tribe

> This MOU may only be amended by a written agreement between the parties, and it may be terminated by either party upon at least thirty (30) days prior written notice to the other party. In the event of termination, unless otherwise mutually agreed by the parties, the provisions of this MOU will remain in force with respect to contracts for Contracted State Highway Work that were executed before the MOU was terminated.[14]

The parties hereto have agreed to the Stipulations cited in this document and have further approved this MOU for signature by their duly authorized representatives.

For the Quechan Tribe of the Fort Yuma Indian Reservation:

Keeny Escalanti

Keeny Escalanti, Sr., President

Date: 04/23/2013

For the California Department of Transportation:

Bill Figge for Laurie Berman

District Director, District 11

Date: 4-29-2013

[14] Provision (A) originally language taken from pre-DD-74-R2 TERO MOUs and added per suggestion of Workgroup Meeting 9/6/12. Legal updated language in this draft to include written notification.

State of California
DEPARTMENT OF TRANSPORTATION

Business, Transportation and Housing Agency

Memorandum

Flex your power!
Be energy efficient!

To: BILL FIGGE
Deputy District Director of Planning
Department of Transportation

Date: **April 26, 2013**

From: **LAURIE BERMAN**
District Director
District 11

Subject: Confirmation and Delegation of Authority to William "Bill" Figge

Pursuant to the authority vested in me by the Director of Transportation, you are hereby delegated my full authority in my absence from Monday, April 29, 2013, through Monday, April 29, 2013 to sign documents on my behalf in District 11.

Attachment A
Project Fact Sheet
Caltrans and Quechan Tribe MOU executed on April 29, 2013.

Project Fact Sheet

The following State highway construction project(s) have TERO requirements that must be followed pursuant to the provisions in the MOU signed by the Quechan Tribe and Caltrans on April 29, 2013:

Project EA and Project ID No.	County-Route-Postmile(s) of project	Project Description	Bridge Number [*if bridge work included*]	IRR Inventory Postmiles for IHP	TERO fee Postmiles
1100020250	Imp-186, 0.0-.04	Pedestrian/Transit Facilities	N/A	SR-186, 0.00-2.13	Imp-186, 0.0-0.04

Contacts:

Caltrans:	Phone Numbers:
District Director: Laurie Berman	(619) 688-6668
DNAL: Gus Silva	(619) 208-1104
Project Manager: Sam Amen	(619) 718-7835
RE: Shawn Rizzutto	(760) 355-0430 or Cell (760) 594-2032
Const. Inspector [*if assigned*]:	

Tribal Contacts:	Phone Numbers:
TERO Officer/Director: Melvin Miguel	(760) 572-4274, ext. 231
Tribal Administrator: Brian Golding	(760) 572-5270

Quechan Tribe
Tribal Highway Construction Permit
P.O. Box 1899 Yuma, Arizona 85366-1899

Name of Project: Andrade Pedestrian/Transit Facilities-(TE)

Caltrans Project Expenditure Authorization (EA) Number: 294801

The Quechan Indian Tribe of Fort Yuma Indian Reservation , issues this permit in accordance with its Tribal Employment Rights Ordinance, enacted by the federally recognized governing body of the tribe, the Quechan Tribal Council. This permit sets forth the terms and conditions under which a Contractor [and Subcontractors] are authorized to conduct work on California Department of Transportation (Caltrans) projects that occur on Tribal Land.

Terms and Conditions:

1. **Contractor/Employer:** Within 5 days of contract approval, Contractor will file a Labor Force Projection Form (attached) with the Tribe's TERO Officer. Contractor will describe the types of work to be preformed and skills needed to undertake such work. [Work to be performed by subcontractors will be included on [a/the] Labor Force Projection Form.]
2. **Core Crew:** Contractor [and Subcontractors] will identify key employees, generally supervisory in nature that have worked continuously for many seasons and are <u>not</u> recently hired for this specific project on the Labor Force Project form.
3. **Indian Preference:** If available, qualified Indians must be hired in preference to non-Indians. Employer shall neither recruit nor hire any non-Indians for any covered position until the tribal TERO Officer has provided notice that no qualified Indians are available to fill such covered position. The TERO Officer maintains an Indian Skills-Bank to assist Employers to meet the Indian preference requirements of the Tribal Employment Rights Ordinance. Covered positions are defined in the Ordinance. Each waiver issued is only for that particular position/task and the employee <u>cannot</u> be transferred to another position once that job is done.
4. **Labor Force Changes and Curtailment:** Contractor will inform the TERO Officer of any potential changes to a project that could impact the labor force while construction is ongoing. Potential changes could be the result of additional work being needed to complete a project, among other things. Where a reduction in force is necessary, excepting Core Crew members, Indians hired pursuant to Indian preference will have the priority in retention.

5. **Compliance Inspections:** The TERO Officer or other designated staff will make periodic visits to project sites to ensure employment and safety rules are adhered to. [The Officer will contact the Contractor and RE prior to site visits.] To facilitate the inspections, the Contractor will share work schedules, contact information, and information on safety or other meetings with the TERO Officer at the preconstruction meeting or other venues as arranged.
6. [**Maintaining Employment Records:** Contractors will maintain accurate employment records on all employees and all applicants for employment; regardless of length and category or employment, hired, fired, or laid-off. The files shall reflect: name, address and employment category for which applicant performed or applied to perform. If applicant was contacted but not hired, hired and fired, all data should reflect action taken by that firm. Such informational records shall be made available to the TERO Officer, upon reasonable notice.]
7. **Assistance:** If a Contractor deems that an Indian employee's performance is such that he or she is jeopardizing and endangering job loss, suspension, or termination, the Contractor may contact the TERO Officer to provide assistance toward resolving of that issue.
8. [**Tribal Holidays and Ceremonial Customs:** It is further understood that the Contractor recognizes operations are taking place within a unique cultural setting. To the extent possible the Contractor, in consultation with the TERO Officer, should consider Tribal Holidays and ceremonial customs and accommodate Indian employees requesting certain leave of absences for religious purposes.]
9. **Duration and Scope of Permit:** This permit will terminate upon project completion but may be revoked by the TERO Officer in the case that the aforementioned conditions are not met.

_____ _____

Melvin Miguel
TERO Director Date
Quechan Tribe

_____ _____

Contractor Date

Labor Force Projection Form

This form must be completed and filed with the Quechan TERO Officer. Attach additional sheets if necessary.

Contractor/Subcontractor Name: _____
Mailing Address: _____
City, State, and Zip Code: _____
Phone Number _____
Cell # _____
Contact: _____
Contracting With: Caltrans
Expenditure Authorization (EA): 294801

Briefly describe the project and basic tasks and types of work to be performed:

_____
_____
_____
_____
_____
_____
_____
_____

Please list types of skills and categories which will be required towards performing said contract:

1.	2.
3.	4.
5.	6.
7.	8.
9.	10.
11.	12.
13.	14.
15.	16.
17.	18.
19.	20.
21.	22.
23.	24.
25.	26.

Indian Preference shall be accorded at every Tier Level. Please list the names and positions of your Core Crew (Core Crew members are typically supervisory and members you depend on every day). All other persons needed on this job will go through the TERO Skills Bank.

Please use as many sheets as necessary for explaining your on-site employment related projection.

NAME	JOB TITLE
1.	
2.	
3.	
4.	
5.	
6.	
7.	
8.	
9.	
10.	
11.	
12.	
13.	
14.	
15.	
16.	

_____ _____

Contractor Date

_____ _____

Melvin Miguel
TERO Director Date
Quechan Tribe

State Contract 11-294804
Project ID 1100020250
Date April 29, 2013

ATTACHMENT C

Project-Specific Special Provisions For Quechan Tribe TERO MOU
TERO Resolution Number R-100-13

SPECIAL NOTICE:

- This project includes Tribal Employment Rights Ordinance (TERO) requirements. See section 5-1.20E and 8-1.04C for TERO submittal requirements.

SSP 2-1.06B SUPPLEMENTAL PROJECT INFORMATION

The Department makes the following supplemental project information available:

Supplemental Project Information

Means	Description
Included in *Information Handout*	1. Quechan Tribe TERO Requirements: 1.1. Memorandum of Understanding (MOU) 1.2. TERO Highway Construction Permit (THCP) Application. 1.3. Compliance Plan. 1.4. Compliance Plan Application.

INFORMATION HANDOUT:
Quechan Tribe TERO MOU Information contains:

1. Signed one-time MOU between the Quechan Tribe and the Department.
2. Attachment A Project-Fact Sheet.
3. Attachment B TERO Highway Construction Permit Application (THCP).
4. Attachment C project-specific TERO special provisions.
5. Attachment D Scope of Memorandum.

SSP 5-1.20E Tribal Employment Rights Ordinance Requirements:

Within 5 days after contract approval, apply to the Quechan Tribe (the Tribe) for a TERO Highway Construction Permit (THCP) and a TERO Compliance Plan using the forms in the Information Handout. Pay the Tribe a fee of $500.00 plus $500.00 per subcontractor with the TERO Compliance Plan application. Submit copies of these applications to the Engineer.

Submit copies of the executed TERO Compliance Plan and the THCP within 10 days after you receive them from the Tribe.

SSP 8-1.04C:

Use a minimum 90-day delayed start after contract approval.
Do not start job site activities until the Department authorizes or accepts your submittal for:

Executed Quechan Tribe TERO Highway Construction Permit (THCP)
Executed Quechan Tribal TERO Compliance Plan Application

Do not start other job site activities until all the submittals from the above list are authorized or accepted and the following information is received by the Engineer:

Copy of the executed Quechan Tribe TERO Highway Construction Permit (THCP).
Copy of the executed Quechan Tribe TERO Compliance Plan Application.

Attachment D
Scope of Memorandum
Caltrans and Quechan Tribe MOU executed on April 29, 2013.

Scope of Memorandum

Projects within the following areas have TERO requirements that must be followed pursuant to the provisions in the MOU signed by the Quechan Tribe and Caltrans on April 29, 2013:

County	Route	Begin Postmile	End Postmile	Assessor's Parcel Number (APN)	Tribal Land Ownership Status
Imperial	186	0.0	0.4		Reservation

TERO MOU Date: April 29, 2013
ATTACHMENT B
TERO Highway Construction Permit (THCP)

Quechan Tribe
Tribal Highway Construction Permit
P.O. Box 1899 Yuma, Arizona 85366-1899

Name of Project: Andrade Pedestrian/Transit Facilities-(TE)

Caltrans Project Expenditure Authorization (EA) Number: 294801

The Quechan Indian Tribe of Fort Yuma Indian Reservation , issues this permit in accordance with its Tribal Employment Rights Ordinance, enacted by the federally recognized governing body of the tribe, the Quechan Tribal Council. This permit sets forth the terms and conditions under which a Contractor [and Subcontractors] are authorized to conduct work on California Department of Transportation (Caltrans) projects that occur on Tribal Land.

Terms and Conditions:

1. **Contractor/Employer:** Within 5 days of contract approval, Contractor will file a Labor Force Projection Form (attached) with the Tribe's TERO Officer. Contractor will describe the types of work to be preformed and skills needed to undertake such work. [Work to be performed by subcontractors will be included on [a/the] Labor Force Projection Form.]
2. **Core Crew:** Contractor [and Subcontractors] will identify key employees, generally supervisory in nature that have worked continuously for many seasons and are <u>not</u> recently hired for this specific project on the Labor Force Project form.
3. **Indian Preference:** If available, qualified Indians must be hired in preference to non-Indians. Employer shall neither recruit nor hire any non-Indians for any covered position until the tribal TERO Officer has provided notice that no qualified Indians are available to fill such covered position. The TERO Officer maintains an Indian Skills-Bank to assist Employers to meet the Indian preference requirements of the Tribal Employment Rights Ordinance. Covered positions are defined in the Ordinance. Each waiver issued is only for that particular position/task and the employee <u>cannot</u> be transferred to another position once that job is done.
4. **Labor Force Changes and Curtailment:** Contractor will inform the TERO Officer of any potential changes to a project that could impact the labor force while construction is ongoing. Potential changes could be the result of additional work being needed to complete a project, among other things. Where a reduction in force is necessary, excepting Core Crew members, Indians hired pursuant to Indian preference will have the priority in retention.

5. **Compliance Inspections:** The TERO Officer or other designated staff will make periodic visits to project sites to ensure employment and safety rules are adhered to. [The Officer will contact the Contractor and RE prior to site visits.] To facilitate the inspections, the Contractor will share work schedules, contact information, and information on safety or other meetings with the TERO Officer at the preconstruction meeting or other venues as arranged.
6. [**Maintaining Employment Records:** Contractors will maintain accurate employment records on all employees and all applicants for employment; regardless of length and category or employment, hired, fired, or laid-off. The files shall reflect: name, address and employment category for which applicant performed or applied to perform. If applicant was contacted but not hired, hired and fired, all data should reflect action taken by that firm. Such informational records shall be made available to the TERO Officer, upon reasonable notice.]
7. **Assistance:** If a Contractor deems that an Indian employee's performance is such that he or she is jeopardizing and endangering job loss, suspension, or termination, the Contractor may contact the TERO Officer to provide assistance toward resolving of that issue.
8. [**Tribal Holidays and Ceremonial Customs:** It is further understood that the Contractor recognizes operations are taking place within a unique cultural setting. To the extent possible the Contractor, in consultation with the TERO Officer, should consider Tribal Holidays and ceremonial customs and accommodate Indian employees requesting certain leave of absences for religious purposes.]
9. **Duration and Scope of Permit:** This permit will terminate upon project completion but may be revoked by the TERO Officer in the case that the aforementioned conditions are not met.

_____ _____

Melvin Miguel
TERO Director Date
Quechan Tribe

_____ _____

Contractor Date

Labor Force Projection Form

This form must be completed and filed with the Quechan TERO Officer. Attach additional sheets if necessary.

Contractor/Subcontractor Name: _____
Mailing Address: _____
City, State, and Zip Code: _____
Phone Number _____
Cell # _____
Contact: _____
Contracting With: Caltrans
Expenditure Authorization (EA): 294801

Briefly describe the project and basic tasks and types of work to be performed:

_____
_____
_____
_____
_____
_____
_____
_____

Please list types of skills and categories which will be required towards performing said contract:

1.	2.
3.	4.
5.	6.
7.	8.
9.	10.
11.	12.
13.	14.
15.	16.
17.	18.
19.	20.
21.	22.
23.	24.
25.	26.

Indian Preference shall be accorded at every Tier Level. Please list the names and positions of your Core Crew (Core Crew members are typically supervisory and members you depend on every day). All other persons needed on this job will go through the TERO Skills Bank.

Please use as many sheets as necessary for explaining your on-site employment related projection.

NAME	JOB TITLE
1.	
2.	
3.	
4.	
5.	
6.	
7.	
8.	
9.	
10.	
11.	
12.	
13.	
14.	
15.	
16.	

_____ _____

Contractor Date

_____ _____

Melvin Miguel
TERO Director Date
Quechan Tribe

Tribal Employment Rights Office
T.E.R.O.

COMPLIANCE PLAN

Melvin Miguel, TERO Director
P.O. Box 1899
Yuma, Arizona 85366
(760) 572-0213, ext 231 Office
(760) 572-4274 Fax

Table of Contents

1. Welcome Letter
2. TERO Notice
3. TERO Guidelines
    - I. Coverage
    - II. Publications
    - III. Specific Indian Preference Obligations of Covered Employees
        - a) Minimum numerical goals and timetables for employment of Indians (*required, unless numerical goals were waived)*
        - b) Training
        - c) Unions
        - d) Job Qualifications
        - e) Tribal Hiring Hall
        - f) Counseling and support Programs
        - g) Preference in Subcontracting to Tribal and Indian-Owned Firms
        - h) Layoffs
        - i) Promotions
        - j) Summer Students
4. Sub-Contractors
5. Compliance Plans
6. Reporting and On-Site Inspections
7. Compliance and Hearing Procedures
8. Sanctions
9. Appeals
10. Individual Complaint Procedures
11. TERO Fee Payment Schedule Form *(required, unless TERO fees were waived)*
12. Employers Employment Request for qualified Applicants with Indian Preference

QUECHAN INDIAN TRIBE
Ft. Yuma Indian Reservation
P.O. Box 1899
Yuma, Arizona 85366-1899
Phone (760) 572-0213 x231
Fax (760) 572-4274

Welcome!

The Tribal Employment Rights Office (TERO) is the central reference point for all private employment on the FT. Yuma Indian Reservation.

We assist individuals in all phases of the employment process. This includes assisting employers in locating qualified Quechan men and women. We advertise positions; prescreen applicants to meet the specific needs of the employers. We require that all employers contact our office for all their employment needs. Your specific job requirements will be matched with individual qualifications.

The individual and/or the employer will be issued a referral slip as proof that he/she has been prescreened and meets your requirements.

We request that you hire only those individuals who have been issued a referral slip from the TERO. *(attachment a)*

To enable the TERO to effectively execute its duties and to provide you with assistance, we request the following information prior to commencing work on the FT. Yuma Indian Reservation:

1) The prime company contractor for this project including a list of all Subcontractors/or suppliers, if any; types of work to be performed, and the key employees by name, title and duration of individuals needed for this project.
2) A list of employment needs, approximate number and type(s) of workforce needed, i.e., Construction Laborers; Crane Operators, etc.
3) Bona fide minimum occupational requirements to fill a position.
4) Approximate start date, duration of work and a bar chart of scheduled work.
5) After commencement of work, certified payroll records are to be submitted on a weekly basis.

This Compliance Plan is required prior to commencing any work of the Quechan Reservation.

Failure to provide this data will only generate uncertainty and confusion for all parties involved. The TERO will monitor this project and will be available to assist you in meeting your employment obligations.

We would appreciate your promptness in providing this information and hope your business on the Fort Yuma Indian Reservation is both enjoyable and profitable.

Respectfully,

Melvin Miguel, Director
Tribal Rights Employment Office

QUECHAN INDIAN TRIBE

Ft. Yuma Indian Reservation

P.O. Box 1899
Yuma, Arizona 85366-1899
Phone (760) 572-0213, ext 231
Fax (760) 572-4274

TERO NOTICE

TO: All contractors, subcontractors, employers, and contract award agencies located or engaging in commercial business or employment activity on the Fort Yuma Indian Reservation.

NOTICE IS HEREBY GIVEN that the Quechan Indian Tribe has a Tribal Employment Rights Ordinance (TERO) in effect which requires Indian preference in all construction employment, other employment, training and contracting on Fort Yuma Indian Reservation.

BE ADVISED that the Ordinance requires one-half of one percent (0.5%) of the total contract award as the Employment Administration fee on each employment contract performed on the Reservation, unless the fee has been waived by Tribal Council.

All contractors and/or subcontractors are urged to contact the Quechan TERO Office for full information prior to bidding or performing work on the Reservation.

Contact: Melvin Miguel, TERO Director
P.O. Box 1899
Yuma, AZ 85366-1899

NOTE: Any contractor or subcontractor not submitting a Compliance Plan Agreement will be denied the right to commence work or continue any work in progress until said Plan is submitted, reviewed and approved by the TERO Officer.

TERO GUIDELINES

The following guidelines are issued pursuant to the authority granted to the Quechan Tribal Employment Rights Office hereinafter called the "Office" by Tribal Resolution R-23-79, which requires preferential employment of Indians by all employers operating within the exterior boundaries of the Quechan Reservation.

1. COVERAGE:

The guidelines shall be binding on all existing and future employers within the exterior boundaries of the Quechan Reservation, hereinafter called "the Reservation". "Employer" means any person, company, contractor, sub-contractor or other entity that is located or otherwise engaged in work on the Reservation, and that employs five or more persons. The term "Employer" does not include Federal, State, County, or other governmental agencies. It does include contractor or sub-contractor of a governmental company, if at least five of its employees spend a majority of their time performing work within the exterior boundaries of the Reservation on a continuing basis.

If an employer is engaged in work of the Reservation, these guidelines shall also apply to any other facilities of the employer that are located within the reasonable commuting distance from the Reservation. Where covered employer has already agreed, in contract or other document, to give preference to Indians, these guidelines shall define the specific obligations of that employer assumed in such agreement. The Office, reserves the right to phase in the requirements set out in these guidelines by first applying them to select types of employers. For example, the Office may determine if it's appropriate to apply them only to construction contractors during the first period of the employers operation.

2. PUBLICATIONS

The obligation of all employers to comply with Trial Employment Rights requirements shall be made known to all existing and future employers. All bid announcements issued by any Tribal, Federal, State or other private or public agency will be obligated to comply with these guidelines and that a bidder may contact this office to obtain additional information.

Those agencies responsible for issuing business permits for the Reservation or otherwise engaged in activities involving contact with prospective employers on the Reservation shall be responsible

for informing such prospective employers of their obligations under these guidelines. Within one month of the effective date of these guidelines, the Office shall send copies of the guidelines to every employer presently operating on the Reservation. It shall be the responsibility of the Office to send copies of any amendments or revisions of the guidelines to all covered employers.

3. SPECIFIC INDIAN PREFERNCE OBLIGATIONS OF COVERED EMPLOYERS:

a. Minimum numerical goals and timetables for the employment of Indians.

The Office, will establish the minimum number of Indian person that each employer must employ on its work force during any year that its employees work on the Reservation, in order for that employers to be in compliance with its Indian Preference obligations. If agreed upon, numerical goals shall be set for each craft, skill area, job classification, etc. used by the employer and shall include administrative, supervisory and professional categories. The goals shall be expressed in terms of man-hours of Indian employment as a percentage of the total man-hours worked on the employer's work force in that classification. (e.g., no less than 50% of all carpenter man-hours shall be worked by Indian carpenters). The goals shall be realistic and shall be based on surveys of the available Indian man-hour pool and of projected employment opportunities.

For new employers, the goals shall be established for the entire work force. The employer shall meet with the Office as much before it actually begins work as is possible e.g., immediately after a bid is accepted and a contract signed. The employer shall provide the Office with a precise list of number and kinds of employees it projects it will need. The Office shall then set specific goals and timelines for that employer after considering any special factors or circumstances that the employer wishes to present. The employers shall incorporate the goals into its plan for complying with the guidelines (as provided in paragraph 5 of these guidelines), and shall agree in writing to meet these goals. An employer who fails to provide such a written statement will not be permitted to commence work on the Reservation. For existing employers on the Reservation, the goals shall be a percentage of the new employees projected to be employed during the forthcoming year by that employer. The employer shall agree to said goals in writing and they shall be incorporated into the Plan provided for in paragraph 5 of these guidelines.

Each employer shall meet its minimum goals for the employment of Indians or shall demonstrate that it has made a best effort to meet

its goals. The Office shall have the right to issue a notice of non-compliance any time during the year, when based on reports submitted by the employer is not meeting, or is not making good faith effort to meet its goals. Upon receipt of such notice, an employer shall be entitled to a hearing as provided for in paragraph 7 of these guidelines.

The burden shall then shift to the employer to demonstrate that an employer has failed or is failing to meet its goals. The employer must demonstrate that it made a best effort to meet its goals. It shall be no excuse that the Union(s) with which the employer has a collective bargaining agreement providing for exclusive referral, failed to refer Indians. An employer who is found to be out of compliance because it failed or is failing to meet its goals, and who is unable to demonstrate that it made a best effort to do so shall be subjected to the sanctions provided for in paragraph 5 of these guidelines.

b. **Training**

All employers, as requested by the Office, shall participate in training programs to assist Indians become more qualified in the various job classifications used by the employer. Employers engaged in construction shall employ the maximum number of trainees or apprentices possible. The ratio of trainees to fully qualified workers shall be set by the Office after discussions with the employer. For construction projects, the number shall be no less than the minimum ratio established by the Department of Labor and generally shall be greater. All trainees or apprentices shall be Indian. Where an employer is not presently participating in a Union Apprenticeship Program, the Tribe shall make a best effort to bear the cost of such training programs but employers may be required to also bear part of the costs. Employers with collective bargaining agreements with the Unions shall be required to obtain agreement from the Unions to agree to establish advanced apprenticeship and journeyman upgrade programs.

c. **Unions**

Employers with collective bargaining agreements shall be required to obtain written agreement from all signatory unions, stating the Union will comply with the Tribe's Indian Preference requirements, before the employer will be permitted to commence work on the Reservation. Such agreement shall be subject to the approval of the Office. The Union must agree to give absolute preference to Indians in referral, regardless of which Union referral list they are on; to cooperate with the Tribal Hiring Hall; and to establish mechanisms so that Indians do not have to travel great distances

on a regular basis, to retain their place on the Union lists (this would involve phone or mail registration, or a Union sub-office on the Reservation); to establish journeyman upgrade and advanced apprenticeship programs; to indenture and refer only Indian apprentices to the Employer; to blanket into the Union all Indians who qualify for journeyman status and who wish to join the Union; to grant temporary work permits to Indian who do not wish to join the Union; and to meet such other requirements as the Office may deem necessary to carry the Tribe's Indian preference program.

The Office's participation in written agreement with a Union in no way constitutes official tribal recognition of the Union or tribal endorsement of any recruiting activities conducted by the Union.

d. Job **Qualifications and Personnel Requirements**:

An employer may use no job qualification criteria or personnel requirements which serves as a barrier to the employment of Indians and which is not required by business necessity. The burden shall be on the Office to demonstrate that a criteria or personnel requirement is a barrier to the Indian employment. The burden will then be on the Employer to demonstrate that such criteria or requirement is required by business necessity. If the employer fails to meet this burden, he will be required to eliminate the criteria or personnel requirement at issue. Employers shall also make reasonable accommodation to the religious beliefs of Indian workers in implementing these requirements; the Office shall be guided by the principles established by the EEOC guidelines, particularly 29 CFR Parts 1604 through 1607. However, the Office retains the rights to go beyond the EEOC principles in order to address employment barriers that are unique to Indians.

Where the Office and employer are unable to reach an agreement on the matters covered in this paragraph, a hearing, as provided for in paragraph 7 shall be held. The Director shall make a determination on the issues and shall order such actions as he deems necessary to bring the employer into compliance with the paragraph. The employer may appeal the decision under the procedure provided for in paragraph 9.

e. **Tribal Hiring Hall**:

The employer may recruit and hire workers from whatever sources are available to him and by whatever process he so chooses, provided that he may not hire a non-Indian until he has given the Office a reasonable time to locate a qualified Indian. For the purpose of this section "reasonable time" shall be defined as follows: For construction jobs, the Office shall have 48 hours to

locate and an additional 12 hours to refer a qualified Indian; for all other kinds of employment, the Office shall have five working days. However, the Office shall consider waivers of these time periods upon showing by the employer that such time periods impose an undue burden on the employer. An employer with collective bargaining agreements with a Union(s) shall not be required to follow this procedure if the Unions agree to place on their referral lists all names that are called into them by the Office (see model union agreement). However, if a Union fails to meet its obligations to refer Indians, the Office reserves the right to require the employer to accept Indian referrals from sources other than the Union.

Any non-Indian worker found to be employed in a job which has not first cleared through this hiring hall procedure shall be subject to summary removal from the job by the Office and the employer shall be subject to a fine of $500.00 for each violation except that the employer is entitled to a hearing and appeal in accordance with provisions of paragraph 7 and 9 of the guidelines.

f. **Counseling and Support Programs**

The Office, in conjunction with other Tribal and Federal Offices, will provide counseling and other support services to Indians employed by covered employers to assist such Indian retain employment. Employers shall be required to cooperate with such counseling and support services.

g. **Preference in Subcontracting to Tribal and Indian-Owned Firms:**

Employers shall give reference in the award of sub-contracts to tribally-owned and other Indian-owned firms and enterprises. An Indian-owned firm is one that has qualified as such under the BIA Self-Determination regulations. The Office shall maintain a list of such firms and the employer shall make use of said list. Employers shall not be required to take any extra ordinary measure on their own to identify or locate Indian-owned Enterprises.

h. **Layoffs:**

In all layoffs and reductions-in-force, no Indian worker shall be terminated if a non-Indian in the same craft is still employed. The non-Indian shall be terminated first so long as there are non-Indians in the same craft employed elsewhere on the job-site.

i. **Promotions:**

The employer shall give Indians preferential consideration for all promotion opportunities and shall encourage Indians to seek such opportunities. For all supervisory positions filled by non-Indians, the employer shall file a report with the Office stating what Indians, if any, applied for the job, the reasons why they were not given the job, and what efforts were made to inform Indian workers about the opportunity.

j. **Summer Students:**

Indians shall be given preference in the hiring of summer student help. The employer shall make every effort to promote after-school, summer and vacation employment for Indian youth.

4. **SUB-CONTRACTORS**

The Indian preference requirements contained in these guidelines shall be binding on all sub-contractors of covered employers, regardless of their Tier, and shall be deemed a part of all resulting subcontract specifications. The employer shall have the initial and primary responsibility for insuring that all sub-contractors comply with these requirements and the Office reserves the right to impose sanctions on the employer, as well as on the sub-contractor, if sub-contractor fails to comply.

5. **COMPLIANCE PLANS**

From the effective date of these guidelines, no new employer may commence work on the Reservation until it has met with this Office and develop an acceptable plan for meeting its obligations under these guidelines.

6. **REPORTING AND ON-SITE INSPECTIONS**

7. COMPLIANCE AND HEARING PROCEDURE:

If the Director of the Office believes that an employer (including a sub-contractor) has failed to comply with any of these requirements set out in these guidelines, he or she shall so notify the employer in writing specifying in detail the alleged violation(s). The employers shall then be entitled to a hearing before the Director. Hearing procedures shall comply with the requirements of due process but will not be bound by the formal rules of evidence. The employer

shall be entitled to present evidence and to call witnesses to demonstrate that the employer has complied with the requirements of these guidelines or that the employer made a best effort to do so and therefore should not be subject to sanctions. The Director shall have the right to subpoena witnesses and documents, to put witnesses under oath, to call witnesses and present evidence in the Tribe's behalf, and to take such other steps as are necessary to insure a fair and complete hearing on the issues. On the basis of evidence presented at the hearing and the information collected by the Office, the director shall determine whether or not the employer(s) complied with its Indian Preference requirements.

If the Director determines that the employer is out of compliance and has not made a best effort to comply, the Director shall impose one or more of the sanctions provided for in paragraph 8 of these guidelines, as appropriate, and shall order the employer to take such corrective action as is necessary to remedy any harm done to the tribe or to individual Indians by the employer's non-compliance. The Director shall send written notice of the decision to the employer.

8. SANCTIONS:

In the event that an employer is found to be out of compliance with the requirements of these guidelines, the Director shall be entitled to impose any or all of the following sanctions, as appropriate, after considering such mitigating factors as the employer's effort to comply and its effort to remedy any harm done by its non-compliance.

a. Impose monetary fines
b. Suspend the employer's operation until corrective action is taken or a plan for corrective action is developed
c. Terminate the employer's operation
d. Prohibit the employer from engaging in any future operations on the Reservation
e. Require the employer to remove certain workers and/or to hire certain workers
f. Provide back pay, employment, promotion, training and/or other relief to Indians who were harmed by the employer's non-compliance.
g. Require the employer to make such changes in its procedures as is necessary in order to comply with these requirements.

9. APPEALS:

The employer shall have the right to appeal any decision of the Director to the Quechan Tribal President. An appeal must be filed within twenty (20) days after receipt of notice of the Director's decision. The Director shall represent the interest of the Tribe during the appeal.

10. INDIVIDUAL COMPLIANT PROCEDURE:

Any Indian, group of Indians, or representatives of a class of Indians who believe that an employer has failed to comply with these guidelines or who believe that they have been discriminated against by a covered employer because they are Indian, may file a complaint with the Office. Persons may file whether or not they can show that they were personally harmed by the employer's non-compliance. Upon receipt of a complaint the Office shall conduct an investigation of the charge and shall attempt to achieve an informal settlement of the matter. If voluntary conciliation cannot be achieved, the Director shall hold a hearing on the matter, shall make a determination on the validity of the charge, and shall order such relief as is necessary to make whole an Indian who was harmed by the employer's non-compliance if discriminatory behavior.

The decision shall be in writing and shall be sent to all parties.

Either part shall have the right to appeal the decision of the Director to the Tribal Court as provided for in paragraph 9. Such appeal must be filed within twenty (20) days after receipt of the decision notice from the Director. In conducting the hearing provided for in this paragraph, the Director shall have the same powers, and shall be bound by the same requirements, as those set out in regards to the hearing provided for in paragraph 7 of these guidelines.

T.E.R.O.

Council for Tribal Employment Rights

QUECHAN INDIAN TRIBE

TRIBAL EMPLOYMENT RIGHTS OFFICE

COMPLIANCE PLAN CONDITIONS

COMPANY:_____

PROJECT:_____

TRIBAL BUSINESS PERMIT:_____

DATE: _____

ANY EMPLOYER NOT SUBMITTING AN ACCEPTABLE COMPLIANCE PLAN MAY BE DENIED THE RIGHT TO COMMENCE OR CONTINUE DOING BUSINESS ON THE FT YUMA INDIAN RESERVATION

Ordinance Given: ( ) Yes ( ) No Given on Prior Project

TERO Fee Payment Schedule is (0.5) of **1% of overall contract award**.

Date:_____N/A_____Date:_____N/A_____

Date:_____N/A_____Date:_____N/A_____

Notes:

__Payment of the TERO Fee for project 11-294801 is covered by the _____

__Memorandum of Understanding (MOU) between the California Departement of

__Transportation (Caltrans) and The Quechan Tribe of the Fort Yuma Indian___

__Reservation. Caltrans will pay the TERO Fee directly to the Tribe._____

Please state your Sub-contractor Plan showing documentation that Indian Preference has been addressed as per this Project:

List the identified Indian Preference Sub-contractors for this Project:

Company	Area of Work	Contact Person(s)

I have read the TERO COMPLIANCE PLAN AGREEMENT and agree to abide by the stated conditions:

Employer's
Signature: _____ Date: _____

TERO Official
Signature: _____ Date: _____

Contract Amount: _____N/A_____ TERO Fee @ ½ of 1% (N/A)

Company: _____ Project: _____

Supt.: _____ Phone: _____

Mailing Address:

_____

_____

_____

Project Start Date: _____ Project End Date: _____

CORE CREW DEFINITION: A member of a contractor's or subcontractors crew who is a regular, permanent employee and is in a supervisor or other key position such that the employer would face a serious financial loss if that position were filled by a person who had not previously worked for that employer.

Core Crew – Name	Job Classification
_____	_____
_____	_____
_____	_____
_____	_____
_____	_____

ESTIMATED NUMBER OF WORKERS NEEDED AND JOB TITLES:

_____

_____

_____

_____

_____

_____

_____

Employer's
Signature: _____ Date: _____

TERO Official
Signature: _____ Date: _____

TRIBAL EMPLOYMENT RIGHTS OFFICER
REFERRAL SLIP

Date:

To:

From: Melvin Miguel, T.E.R.O.

Project:

Per Contractors request, the following skill/trades are requested**: (#TERO USE ONLY)**

_____

PERSON BEING REFFERED:

Name: Telephone #:

Date & Time Contact Made By TERO:

*******TERO USE ONLY********

Quechen Tribal Member Enrollment Number: _____**N/A**_____

Other Tribal Member Enrollment Number: _____
Tribe Name: _____

Non-Tribal Member:_____(Supporter of an Indian family, i.e. Spouse or children)

Date of Hire:_____Rate of Pay: Salary:_____Hourly:_____

Job Site:_____

Tools (if applicable):_____
On-The-Job-Training: Yes___ No___

Reason if not hired:_____
_____
_____

CONTRACTORS EMPLOYMENT REQUEST
FOR QUALIFIED APPLICANTS
WITH INDIAN PREFERENCE

FAX MEMORANDUM (760) 572-4274

Date of Request: _____

From: _____

Project: _____

To: Mr. Melvin Miguel, TERO

1. Request referrals for the following skills and/or trades necessary to complete the above mentioned project.

a. _____

b. _____

c. _____

d. _____

e. _____

2. If you have any questions, please contact _____.

QUECHAN INDIAN TRIBE

Fort Yuma Indian Reservation

P. O. Box 1899
YUMA, ARIZONA 85366-1899
Phone (760) 572-0213
FAX (760) 572-0519
ATTN: Brandy Cachora, EDA Assistant Planner

BUSINESS PERMIT APPLICATION

CONTRACTING FIRM/BUSINESS NAME: _____

CURRENT DRIVERS LICENSE NO. AND CLASS: _____

FEDERAL EMPLOYER/TAX PAYER I. D. NUMBER: _____

BUSINESS ADDRESS: _____ PHONE: _____

_____ FAX: _____

MAILING ADDRESS: _____

_____

FULL DESCRIPTION OF BUSINESS ACTIVITY: _____

_____

OWNER / PARTNERS OR CORPORATE OFFICERS:

_____ ADDRESS: _____

_____ ADDRESS: _____

_____ ADDRESS: _____

BY AFFIXING SIGNATURE BELOW, WE AGREE TO ABIDE BY TRIBAL RESOLUTION R-23-79 (T. E. R. O. RESOLUTION) AND ORDINANCE QT-02-94, (TRIBAL LICENSE FEES AND TAXES) AND ANY OTHER APPLICABLE TRIBAL ORDINANCES.

SIGNED: _____ TITLE: _____

DATE: _____

FOR OFFICE USE ONLY

FEES: _____ CHECK NO. _____ CASH _____ RECEIPT NO. _____

RECEIVED BY: _____ EXPIRATION DATE: _____

QUECHAN INDIAN TRIBE

Fort Yuma Indian Reservation

P. O. Box 1899
YUMA, ARIZONA 85366-1899
Phone (760) 572-0213
FAX (760) 572-0519

WAIVER OF LIABILITY

The undersigned hereby agrees to waive any and all claims against the Quechan Indian Tribe and its employees or agents for any theft, damages, or injuries that are a result of the operation of any business, vending or other company, having been issued a business permit from the Quechan Indian Tribe to operate such business within the exterior boundaries of the Fort Yuma Indian Reservation.

The undersigned seeks to become licensed and permitted pursuant to the Code of Federal Regulations (CFR) 25 Section 251 and Article IV, Section 6, of the Constitution and Bylaws of the Quechan Indian Tribe of the Fort Yuma Indian Reservation.

The Quechan Indian Tribe shall declare this waiver null and void at the date of expiration of the permit.

Having read and fully understand this waiver, as owner or authorizing signature and witness, I hereby agree to the terms and conditions as stated in the above recitals.

_____
Owner / Authorizing Signature

Dated this _____ Day of _____ 2013

_____
Witness

Dated this _____ Day of _____ 2013

GEOTECHNICAL DESIGN REPORT

State Route 186 Andrade Border Crossing Pedestrian Project

11-IMP-186 /PM 0.0/0.4

EA 11-294801
EFIS 1100020250

March 12, 2013

Prepared By:

OFFICE OF GEOTECHNICAL DESIGN-SOUTH 2, BRANCH-D
7177 OPPORTUNITY ROAD
SAN DIEGO, CA 92111

State of California
DEPARTMENT OF TRANSPORTATION

Business, Transportation and Housing Agency

Memorandum

Flex your power!
Be energy efficient!

To: Mr. Marvin Adolfo Canton Jr.
District 11 Project Engineer

Date: March 12, 2013

File: 11-IMP-186-(PM) 0.0/0.4
EA 11-294801
EFIS 1100020250

From: DIVISION OF ENGINEERING SERVICES
Geotechnical Services
Office of Geotechnical Design-South 2, Branch-D

Subject: Geotechnical Design Report for the State Route 186 Andrade Border Crossing Pedestrian Project.

Pursuant to your request, the Office of Geotechnical Design-South 2 (OGDS2), Branch-D has prepared this Geotechnical Design Report (GDR) for the State Route 186 Andrade Border Crossing Pedestrian Project Imperial County, California.

Two (2) memoranda were previously submitted for this project. The memorandum dated May 31, 2012 was prepared to document the prevailing site conditions and provide specific recommendations for five (5) infiltration basins and a three-foot (3.0ft) high two hundred fifty-foot (250.0ft) long retaining wall. The memorandum dated August 10, 2012 was prepared to document the prevailing site conditions and provide specific recommendations for three (3) shade structures and twenty two (22) electrolier (a.k.a. luminaire). OGDS2 staff was informed December 19, 2012 that the design of RW-1 had been changed from a three-foot (3.0ft) high seat wall type retaining wall to a Caltrans Standard Type-1 retaining wall with a design height of six-feet (6.0ft). There were also modifications to the shade structures and the grading, which changed the number of infiltration basins.

Due to the evolution of the design, OGDS2 staff determined that it is appropriate to document the prevailing site conditions and provide specific recommendations for all of the project elements in one GDR. The information provided in this GDR supersedes the information provided in the memorandum dated May 31, 2012 and August 10, 2012.

This GDR documents the prevailing site conditions and provides specific recommendations for RW-1, three (3) shade structures, twenty two (22) electrolier, and seven (7) infiltration basins. The report defines the geotechnical conditions as evaluated from field investigations data and used in the geotechnical analyses and design. This report provides recommendations for project design and construction.

Please ensure that this GDR is included in the District Resident Engineer (RE) Pending File. OGDS2 staff will be available for further assistance. Should you have any questions or comments regarding this report, please contact OGDS2, Branch-D.

Richard Rusnak P.E.
Transportation Engineer (Civil)
(858) 467-4065

Brian Hinman P.E.
Senior Transportation Engineer (Civil)
(858) 467-4051

REGISTERED PROFESSIONAL ENGINEER
RICHARD RUSNAK
C 69228
EXP 6/30/14
CIVIL
STATE OF CALIFORNIA

REGISTERED PROFESSIONAL ENGINEER
BRIAN K. HINMAN
No. 55654
Exp. 12/31/14
CIVIL
STATE OF CALIFORNIA

CARBON COPY (CC) LIST

Art Padilla	District Materials Engineer
Abbas Abghari	Office Chief, OGDS2
Shawn Wei	Senior, OGDS2
Catalina Flores	District 11 Landscape Architecture
http://svgcgeodog.dot.ca.gov/	Geotechnical Archive
RE_Pending_File@dot.ca.gov	Structure Construction R.E. Pending File
OGDS2 File Room	7177 Opportunity Road, San Diego, CA 92111

TABLE OF CONTENTS

Section **Page**

Title Sheet i
Letter of Transmittal ii
Carbon Copy List iii
Table of Contents iv
List of Figures vi
List of Tables vi
List of Appendices vi

1.0 INTRODUCTION 1

2.0 EXISTING FACILITIES AND PROPOSED IMPROVEMENTS 1
2.1 Existing Facilities 2
2.2 Proposed Improvements 2

3.0 PERTINENT REPORTS AND INVESTIGATIONS 3

4.0 PHYSICAL SETTING 3
4.1 Climate 3
4.2 Topography & Drainage 3
4.3 Man-Made and Natural Features of Engineering and Construction Significance 3
4.4 Regional Geology and Seismicity 4
4.5 Soil Survey Mapping 4

5.0 EXPLORATION 4
5.1 Drilling and Sampling 4
5.2 Geologic Mapping 4
5.3 Geophysical Studies 5
5.4 Instrumentation 5
5.5 Exploration Notes 5

6.0 GEOTECHNICAL TESTING 5
6.1 In Situ Testing 5
6.2 Laboratory Testing 5

7.0 GEOTECHNICAL CONDITIONS 5
7.1 Site Geology 5
7.1.1 Lithology 5
7.1.2 Structure 6
7.1.3 Existing Slope Stability 6
7.2 Subsurface Conditions 6
7.2.1 Soil 6
7.2.2 Groundwater 6
7.2.3 Corrosion 6
7.3 Surface Water 7
7.3.1 Scour 7
7.3.2 Erosion 7
7.3.3 Tsunamis 7
7.4 Site Seismicity 7

TABLE OF CONTENTS (continued)

Section **Page**

8.0 GEOTECHNICAL ANALYSIS AND DESIGN 7
8.1 Dynamic Analysis 7
8.2 Liquefaction Analysis 8
8.3 Cuts and Excavations 8
8.3.1 Stability 8
8.3.2 Rippability 8
8.3.3 Grading Factors 8
8.4 Embankments 9
8.5 Retaining Wall-1 9
8.6 Culvert Foundations 9
8.7 Soundwall Foundations 9
8.8 Overhead Sign Foundations 9
8.9 Barrier Foundations 9
8.10 Electrolier Foundations 9
8.11 Shade Structure Foundations 9
8.12 Infiltration Basins 10
9.0 MATERIAL SOURCES 10
10.0 MATERIAL DISPOSAL 10
11.0 RECOMMENDATIONS 10
12.0 DESIGN ADVISORIES 10
13.0 CONSTRUCTION CONSIDERATIONS 11
14.0 ACTUAL VS. REPORTED SITE CONDITIONS 11
15.0 REFERENCES 12

FIGURES

Figure 1: Project Location Map and Aerial Photograph

Figure 2A-2D: Project Layout Plans

Figure 3A-3B: RW-1 Profile and Typical Cross Section

Figure 4A-4D: Shade Structures Construction Details

Figure 5: Geologic Overview Map

TABLES

Table 1: Climate Data for Yuma (Yuma Airport), 1948-2011

Table 2: Regional Active Faults

Table 3: Geotechnical Design Parameters for the Sedimentary Deposits

Table 4: Percolation Test Results

Table 5: Retaining Wall Design Parameters

APPENDICES

Appendix I: Log of Test Boring and Site Data

Appendix II: Field Exploration Data

Appendix III: Laboratory Test Data

Appendix IV: Analyses and Calculations

1.0 INTRODUCTION

This Geotechnical Design Report (GDR) has been prepared by the Office of Geotechnical Design South-2 (OGDS2), Branch-D to address the geotechnical design considerations for the State Route 186 (SR-186) Andrade Border Crossing Pedestrian Project in Imperial County, California, hereafter referred to as the project. Figure 1 depicts the project location and aerial photograph of the project site.

The purpose of this GDR is to document subsurface geotechnical conditions, provide engineering evaluation of site conditions, and provide recommendations relevant to the design and construction of specific project elements. This report establishes a geotechnical baseline to be used in assessing the existence and scope of changed site conditions.

Two (2) memoranda were previously submitted for this project. The memorandum dated May 31, 2012 was prepared to document the prevailing site conditions and provide specific recommendations for five (5) infiltration basins and a three-foot (3.0ft) high two hundred fifty-foot long seat wall type retaining wall. The memorandum dated August 10, 2012 was prepared to document the prevailing site conditions and provide specific recommendations for three (3) shade structures and twenty two (22) electrolier (a.k.a. luminaire).

OGDS2 staff received an updated shade structures plan on October 26, 2012. OGDS2 staff was informed on December 19, 2012 that the design of the retaining wall had been changed from a three-foot (3.0ft) high retaining wall to a Caltrans Standard Type-1 retaining wall (RW-1) with a design height of six-feet (6.0ft). There were also modifications to the shade structures and grading, which changed the number of infiltration basins.

Due to the evolution of the design, OGDS2 staff determined that it is appropriate to document the prevailing site conditions and provides specific recommendations in a single GDR. This GDR documents the prevailing site conditions and provides specific recommendations for RW-1, three (3) shade structures, twenty two (22) electrolier, and seven (7) infiltration basins. The report defines the geotechnical conditions as evaluated from field investigations data and used in the geotechnical analyses and design. This report provides recommendations for project design and construction.

The geotechnical information, evaluation, recommendations, and advisories contained in this GDR supersede any information that may have been previously conveyed through correspondences or documents concerning the project features addressed herein. The information provided in this GDR supersedes the information provided in the memorandum dated May 31, 2012 and August 10, 2012.

This GDR is based on site reconnaissance, research of archived resources, subsurface exploration, and engineering analyses. This GDR was prepared in accordance with the guidelines set forth in the *Caltrans: Guidelines for Preparing Geotechnical Design Report (GDR), Version 1.3, December 2006.*

Project layout plans, profile plans, and cross sections were provided by Caltrans District 11 Design. Unless otherwise noted: all units referenced in this document are United States (U.S) Customary units; all elevations referenced in this report are in feet and referenced to the NAVD88 vertical datum; and all Stations are referenced to the “Imp-186” Line.

2.0 EXISTING FACILITIES AND PROPOSED IMPROVEMENTS

SR-186 is located in Imperial County and runs from the United Sates/Mexico International Border north to Interstate-8 (I-8). The proposed project is between Post Mile (PM) 0.0 and PM 0.4. The project extends from Station 35+50 to Station 49+00. Project layout plans are provided in Figure 2A through Figure 2D.

2.1 Existing Facilities

SR-186 is a two-lane asphalt paved road with paved shoulders. Existing facilities at the project location include: the Andrade United States Port of Entry (Andrade U.S. POE), a paved parking lot with entry and exit driveways, a truck turnaround, a sidewalk, a masonry retaining wall (RW-M), a pedestrian ramp, and utilities.

The Andrade U.S. POE is located to the east of SR-186. The facility extends from the United States (U.S.)/Mexico Border to approximate Station 37+50. The Andrade U.S. POE includes multiple buildings, sidewalks, fences, driveways, and parking areas. The United States Customs and Border Protection (CBP) operate the Andrade U.S. POE.

The parking lot is located to the west of SR-186. It extends from the United States/Mexico Border to approximate Station 48+75. There is an unpaved area between SR-186 and the parking lot. The exit driveway connects to SR-186 between approximate Station 38+70 and Station 39+70. The entrance driveway connects to SR-186 between approximate Station 47+75 and Station 49+00. The parking lot is located on Fort Yuma Quechan Indian Reservation property. The parking lot is operated and maintained by the Quechan Tribe. The driveways are located in Caltrans right-of-way.

The truck turnaround is a circular paved area within the lanes of SR-186. It is located between approximate Station 37+50 and Station 38+70.

The sidewalk is located in an unpaved area between SR-186 and the parking lot. The sidewalk varies in width and extends from the U.S./Mexico Border to the exit driveway.

RW-M retains a portion of the embankment between the sidewalk and the parking lot. RW-M extends from Station 37+18.33 to Station 38+58.33. RW-M is tallest in the middle and tapers at both ends. The top elevation is one hundred twenty-four and sixty-five one hundredths-feet (124.65ft). The lowest elevation of the south and north ends of RW-M are one hundred twenty-two and sixty-two one hundredths-feet (122.62ft). The lowest elevation in the middle of RW-M is one hundred nineteen and ninety-five one hundredths-feet (119.95ft). As-built plans for RW-M are included in Appendix I.

The pedestrian ramp is located between approximate Station 35+25 and 35+75. The pedestrian ramp provides access between the sidewalk and the parking lot above.

Utilities present within the project area include telecommunication and overhead electrical lines.

2.2 Proposed Improvements

The project proposes to reconfigure the existing vehicle turnaround, sidewalk and ramp, and construct RW-1, three (3) seating areas with shade structures, twenty two (22) electrolier, and seven (7) infiltration basins.

The project will remove a portion of the existing sidewalk and replace it with a sidewalk that is ten-feet (10.0ft) wide. The project will also extend the sidewalk from where it currently ends at the exit driveway to approximate Station 48+00. The sidewalk extension will be eight-feet (8.0ft) wide. The existing pedestrian ramp will be removed and replaced with another pedestrian ramp. Two (2) additional pedestrian ramps will also be constructed

RW-1 will retain a portion of the embankment between SR-186 and the existing sidewalk. RW-1 will extend from Station 5+65 to Station 8+07.6 along the DSW line. RW-1 is proposed to be a Caltrans Standard Plan Type 1 retaining wall with a design height of six-feet (6.0ft). The retaining wall profile and cross sections are depicted on Figure 3A and Figure 3B.

The project will construct three (3) seating areas. The seating areas will include cantilevered and braced, rectangular, shade structures supported on steel columns. Each shade structure will have two (2) columns. The steel columns will have six-foot (6.0ft) deep, cast-in-drilled-hole (CIDH) pile foundations.

The shade structures will be located at approximate Stations 41+50, Station 44+00, and Station 46+50. Shade structure construction details are provided in Figure 4A through Figure 4D.

The project will construct twenty-two (22) electrolier. The electrolier will be constructed approximately sixty-feet (60ft) apart and be located adjacent to and to the west of the sidewalk. The electrolier are proposed to be constructed with CIDH pile foundations.

The seven (7) infiltration basins are proposed to be constructed within the unpaved area between SR-186 and the parking lot. The infiltration basins will be located between approximate Station 38+50 and Station 48+00.

No culverts, soundwalls, overhead signs or barriers are proposed for this project.

3.0 PERTINENT REPORTS AND INVESTIGATIONS

A geotechnical report prepared by NEI Geotechnical for a project to construct additions to the Andrade U.S. Port of Entry (Andrade POE Additions Report) was obtained by Caltrans Landscape Architecture and provided to OGDS2. The summary of the Soil Boring Logs from the Andrade POE Report is included in Appendix I. Additional references utilized in the preparation of this report are described in Section 15.0.

4.0 PHYSICAL SETTING

The following section describes the physical setting of the project including: the climate; topography and drainage; man-made and natural features of engineering and construction significance; regional geology and seismicity; and soil survey mapping.

4.1 Climate

Yuma is an arid desert climate with hot summers and warm winters. The average high and low temperatures in July are one hundred seven-degrees Fahrenheit (107°F) and eighty-one-degrees Fahrenheit (81°F), respectively. The average high and low temperature in January are sixty-nine-degrees Fahrenheit (69°F) and forty-five-degrees Fahrenheit (45°F), respectively. The highest recorded temperature is one hundred twenty-four-degrees Fahrenheit (124°F). The lowest recorded temperature is thirteen-degrees Fahrenheit (13°F). Yuma receives an average annual rainfall of approximately three-inches (3.0in). Table 1 includes monthly climate data.

4.2 Topography & Drainage

The project is located between the parking lot to the west and the banks of the Alamo Canal to the east. With the exception of the embankment between the parking lot and SR-186, the project area is relatively flat. There is roughly a six-foot (6.0ft) grade separation between the planar parking lot and SR-186 that diminishes to the north The Alamo Canal (a.k.a The Imperial Canal) is located to the east of the project area. The area between SR-186 and the canal is unpaved and relatively flat.

Drainage from the parking lot flows west and south and collects into a drainage system that ultimately discharges to the south of the United States/Mexico International Border. Drainage from the roadway flows south and east and collects into a drainage system comprised of curbs and gutters that discharges into the Alamo Canal.

4.3 Man-made and Natural Features of Engineering and Construction Significance

Ancient landslides, deep compressible soils, waterways, and massive adjoining structures are examples of natural and man-made features that often present unusual engineering and construction challenges for freeway projects. No man-made or natural features that would present an unusual engineering or construction challenge were found to exist within the project limits.

4.4 Regional Geology and Seismicity

The project is located in the Colorado Desert (a.k.a. Low Desert). The Colorado Desert is a sub-region of the Sonoran Desert. The Colorado Desert is located between the Peninsular Ranges to the west, the Transverse Range/Mojave Desert (a.k.a. High Desert) to the north, and the Colorado Mesa/Colorado River to the east.

This low region bounded by the mountain ranges and mesas is considered a great basin. The basin is actively forming as a rift feature between tectonic plates. As the Pacific Plate pulls away from the North American Plate a long broad rift is resulting as the earth's crust is subjected to extension and subsidence. The resulting depression extends nearly eight hundred seventy-miles (870mi) to the southern end of the Gulf of California to the Coachella Valley. The northern section of the rift is commonly referred to as the Salton Trough. The Salton Trough is an extension of the Gulf of California physiographic province that has been isolated from the gulf by the build-up of the deltaic cone of the Colorado River. The sedimentary stratigraphy of the trough and delta represents a continuous deposition of continental clastic and marine sediments from Pleistocene time to present.

The region is seismically active influenced by the San Andreas Rift and Fault systems at the plate boundary. Seismically, the Algodones Fault Zone, the Elsinore Fault Zone (Laguna Salada Section), and the San Andres Fault Zone (Coachella Section) impact the region. Data pertaining to the regional active faults are included in Table 2.

4.5 Soil Survey Mapping

The United States Department of Agriculture (USDA), National Resources Conservation Service (NRCS), Web Soil Survey and the University of California (UC) Agriculture and Natural Resource-NRCS/UC Davis website were used to evaluate soil survey mapping conducted for this area. No soil survey digital data was available for the project site.

5.0 EXPLORATION

Limited subsurface exploration and geologic mapping along the project alignment was conducted to verify previously mapped site geology and to delineate the soil conditions anticipated to impact the design and construction of project features.

5.1 Drilling and Sampling

A total of five (5) exploratory borings were developed for the project. Three (3) exploratory borings using a hand auger were developed within the project limits in 2012. These exploratory borings were developed to evaluate the geology and determine the characteristics of the soils within the project location for the development of the five infiltration basins and the shade structures. The exploratory borings were excavated using a six-inch (6.0in) diameter hand auger advanced to a depth of approximately five-feet (5.0ft) below the existing ground surface. Two (2) exploratory borings using a hand auger were developed within the project limits in 2013. These exploratory borings were developed to evaluate the geology and determine the characteristics of the soils relevant to the design of RW-1. The exploratory borings were excavated using a four-inch (4.0in) diameter hand auger advanced to a depth of approximately nine-feet (9.0ft) below the existing ground surface. The Log of Test Boring (LOTB) in Appendix I depict the locations of the exploratory borings.

5.2 Geologic Mapping

Limited geologic mapping was conducted along the project alignment to verify previously mapped site geology and to delineate the soil conditions anticipated to impact the design and construction of project features. The project site geologic overview map is presented in Figure 5. The geologic map is a modified version of the *United States Department of Interior Geologic Survey: Geologic Map of Yuma, Arizona and California*. The map depicts an overview of the geologic formations present at the project

site and surrounding area. The map does not display the approximate project alignment or the extent of fill observed during the field investigation.

5.3 Geophysical Studies

No geophysical studies were conducted for the preparation of this GDR.

5.4 Instrumentation

No geotechnical instrumentation was installed for the preparation of this GDR.

5.5 Exploration Notes

All boring were backfilled with native material. No potentially hazardous waste was identified during this study.

6.0 GEOTECHNICAL TESTING

The sections below describe the in-situ and laboratory testing program performed for the proposed project. Soil strength parameters for the geologic units present within the project limits are based on archival data and an understanding of the soil strength parameters of similar geologic units. These soil strength parameters have been used for the engineering evaluation presented in this report.

6.1 In Situ Testing

A geotechnical report prepared by NEI Geotechnical for a project to construct additions to the Andrade U.S. Port of Entry was obtained by Caltrans Landscape Architecture and provided to OGDS2. The Andrade POE Report includes a summary of Soil Boring Logs for four (4) exploratory borings developed for that report. The summary of the Soil Boring Logs describes the materials encountered and includes blow counts from Standard Penetration Tests (SPT) conducted. OGDS2 is uncertain whether or not the blow counts were corrected for energy, rod length, liner, borehole diameter, anvil, or blow count frequency correction factors. OGDS2 considers the soil description accurate and SPT values reported as reasonable and applicable to the design of the project features. The summary of the Soil Boring Logs from the Andrade POE Report is included in Appendix I.

Three (3) Percolation Tests (PT) were conducted on April 25, 2012. The PT were conducted to determine the hydrogeologic conditions relevant to the proposed infiltration basins. PT-1 was conducted in HA-12-001, PT-2 was conducted in HA-12-002, and PT-3 was conducted in HA-12-003. Percolation test data is included in Table 3 and Appendix II.

6.2 Laboratory Testing

Mechanical Analyses tests were performed on samples collected from HA-12-001 and HA-12-003. The tests were performed to determine gradation curves for the soil types observed in the exploratory borings. Laboratory test data are included in Appendix III.

7.0 GEOTECHNICAL CONDITIONS

The following section describes geotechnical conditions that will affect the project.

7.1 Site Geology

The project area includes locally derived Engineered Fill underlain by Quaternary Sedimentary Deposits. A geologic overview map is depicted on Figure 5. LOTB are provided in Appendix I.

7.1.1 Lithology

The *Engineered Fill* is derived locally from the hills and sedimentary deposits adjacent to the project area. The engineered fill encountered is pale brown, dry to moist, silty sand with gravel. The engineered fill is

comprised of silt, fine to coarse sand, and fine to coarse, angular to sub-angular gravel. Hard igneous and metamorphic cobbles were observed in the exploratory borings.

The *Quaternary Sedimentary Deposits* encountered are a succession of moist silt layers, including: light yellowish-brown, low plasticity, silt with sand; dark brown medium plasticity silt with sand; and pale brown, low plasticity, sandy silt.

Igneous and metamorphic boulders up to thirty-inches (30.0in) in any one dimension were observed at the ground surface within the project area. Photographs of the boulders are included in Appendix I.

7.1.2 Structure

The structure in the area consists of fill of variable thickness overlying a relatively level surface of braided fluvial deposits.

7.1.3 Existing Slope Stability

There are no steep slopes within the project area. The embankment between the parking lot and the sidewalk is approximately three horizontal to one vertical (3H:1V). The embankment is stable and performing well. There are no known landslides within or adjacent to the project alignment.

7.2 Subsurface Conditions

The following sections describe the relevant geotechnical conditions that impact project design and excavations.

7.2.1 Soil

The project alignment is underlain by engineered fill and sedimentary deposits. It is anticipated that the thickness of the engineered fill overlying the sedimentary deposits will increase from the south to the north. Since the depth of the engineered fill overlying the sedimentary deposits will be variable within the project area, it will be prudent to design for the less competent of the soils in the area, in this case the sedimentary deposits.

The geotechnical design parameters for the sedimentary deposits and soil strength parameters used in the evaluations are presented in Table 4.

7.2.2 Groundwater

The Alamo Canal is adjacent to and runs roughly parallel to SR-186. The canal is one hundred ten to two hundred fifty-feet (110.0-250.0ft) to the east of SR-186. The elevation of SR-186 is approximately one hundred twenty five-feet (125.0ft). The surface elevation of the water in the canal is approximately one hundred twelve-feet (112.0ft) and likely fluctuates. The groundwater elevation is anticipated to be slightly higher than or mimic the surface elevation of the adjacent canal. Therefore, groundwater is anticipated to be encountered at a depth of ten to fifteen-feet (10.0-15.0ft) below the ground surface. The anticipated depth of the groundwater is corroborated by the Andrade POE Report.

7.2.3 Corrosion

Caltrans currently considers a site to be corrosive to foundation elements if one or more of the following conditions exist: Chloride concentration is greater than or equal to five hundred-parts per million (500ppm), sulfate concentration is greater than or equal to two thousand-parts per million (2,000ppm), or the pH is five and one-half (5.5) or less.

No corrosion testing was performed at the project site. A site specific corrosion analysis can be performed; however, this will require an additional field investigation. In general, agricultural irrigation practices in the Imperial Valley have rendered the groundwater and lowland soils corrosive. The project site soils should be considered corrosive.

7.3 Surface Water

The Alamo Canal is adjacent to and runs roughly parallel to SR-186. The canal is one hundred ten to two hundred fifty-feet (110.0-250.0ft) to the east of SR-186. The surface elevation of the water in the Alamo canal is approximately one hundred twelve-feet (112.0ft) and likely fluctuates.

7.3.1 Scour

No project features are proposed to be constructed adjacent to the canal. A scour evaluation for the project features in not warranted.

7.3.2 Erosion

Field observations indicate that embankment along the proposed project is easily eroded if exposed to concentrated flow.

7.3.3 Tsunamis

There is no potential for the project site to be impacted by a tsunami.

7.4 Site Seismicity

No known active fault trace crosses the project alignment. However, the project is located in proximity to several active fault zones. Ground motion caused by nearby and distant seismic events should be anticipated during the life of the facilities. Earthquakes caused by movement along nearby active faults are likely to result in ground motion impacting project features. The closest active fault zone is the Algodones Fault Zone, trending in a northwesterly direction to the west of the project site.

The project is located outside of any State of California Alquist Priolo Special Study Zone. Since no known active fault trace crosses the project alignment, ground surface rupture caused by active faulting is considered unlikely.

Features that would create a potential for seismically induced instability in the form of landslides, mudslides, and/or rockslides as it relates to the safety and performance of the project features do not exist at the project site.

8.0 GEOTECHNICAL ANALYSIS AND DESIGN

The following section describes the geotechnical analyses, parameters, and design criteria that should be utilized by project designers in the continued development of the project.

8.1 Dynamic Analysis

This section describes the seismic parameters selected and dynamic analysis developed for the project.

The Caltrans Acceleration Response Spectra (ARS) Online Tool Version 2.0 (Caltrans ARS Online Tool) was used to determine pertinent seismic data. The Caltrans ARS Online Tool is a web based tool that calculates both deterministic and probabilistic ARS for any location in California based on the criteria set in *Caltrans, Seismic Design Criteria (SDC) Version 1.6, November 2010, Appendix B.*

According to the *Seismic Design Criteria (SDC)Version 1.6, November 2010 Appendix B, Figure B.12*, soils with the number of blows per twelve-inches (12in) less than fifteen (N<15) are considered to be Soil Profile Type E or F. Based on the soil description and blow counts acquired from archived data the soil is considered Soil Profile Type E.

The latitude and longitude input into the Caltrans ARS Online Tool were 32.718699 and –114.728122, respectively. The shear wave velocity used in the Caltrans ARS Online Tool was one hundred and eighty-meters per second (180m/s), which correspond to Soil Profile Type E. The closest regional active fault as indicated by the Caltrans ARS Online Tool is the Algodones Fault Zone. Data pertaining to the regional active faults are provided in Table 2.

The anticipated Peak Ground Acceleration (PGA) for the project site using the Algodones Fault Zone is twelve one hundredths-gravity (0.12g). The PGA corresponds to the Spectral Acceleration at a period of zero-seconds (0sec). The horizontal acceleration factor (K_h) recommended for design is one-half (1/2) the PGA developed for the site or approximately six one hundredths (0.06). The results produced by the Caltrans ARS Online Tool are included in Appendix IV.

8.2 Liquefaction Analysis

Liquefaction involves the sudden loss of shear strength of a saturated, cohesionless soil subjected to cyclic loading produced by an earthquake. The cyclic loading and loss of shear strength cause the soil to temporarily exhibit the strength characteristic of a fluid mass. Typically, liquefaction occurs in areas where groundwater is less than fifty-feet (50ft) from the surface and where the soils are predominantly comprised of poorly consolidated poorly graded fine sands, silty sands, and non plastic silts.

This report is not intended to convey a detailed liquefaction analysis, however, the project features are underlain by non-cohesive sedimentary deposits and the groundwater table is within fifty-feet (50.0ft) of the ground surface, therefore, there is potential for liquefaction at the project site. There is also potential for seismically induced settlement and lateral spreading.

8.3 Cuts and Excavations

Existing and proposed slopes were briefly described in Section 2.0 and 7.0. This section presents the analyses used to determine the stability, rippability, and grading factors of materials in proposed cuts or excavations.

8.3.1 Stability

Temporary cut slopes may be defined as slopes that exist for a limited duration to facilitate construction of project features. The placement of RW-1 will require temporary back cuts to facilitate construction. The exact configurations of temporary excavations are proposed by the Contractor and subject to the approval of the Engineer.

Excavations of shafts are likely to experience some caving of the silt. The placed volume of the foundation concrete may be increased to account for caving during excavation.

8.3.2 Rippability

The apparent density of the engineered fill is estimated to range from loose to medium dense. The consistency of the sedimentary deposits is estimated to range between very soft and soft.

Generally, the materials within the project area are rippable and may be excavated by conventional heavy duty grading equipment. Additionally, footing and drilled shaft excavations greater than eighteen-inches (18 in) in minimum dimension should be readily accomplished using conventional equipment. Difficult excavation conditions may be mitigated by the selection of appropriate excavation methods and by increasing material quantity estimates to allow for the ragged walls or caving of footings and shafts.

8.3.3 Grading Factors

Earthwork factors relate the in place volume of material to be excavated to the in place volume of material after placement as fill. The factors are defined as in place volume of compacted fill divided by in place volume of material to be excavated.

$$G_f = V_{fill}/V_{exc}$$

An estimated grading factor of ninety eight one hundredths (0.98) may be used for material generated from cuts within existing fill and one and five one hundredths (1.05) may be used for the material generated from cuts within the sedimentary deposits.

8.4 Embankments

No significant embankments are proposed for this project.

8.5 Retaining Wall-1

The project will incorporate RW-1 where the planned sidewalk is constrained by limited right-of-way and topography.

RW-1 will be a Caltrans Standard Type 1 retaining wall located along the west side of SR-186. The wall will parallel SR-186 along the "DSW" line between Station 5+65 and Station 8+07.80. The wall will be two hundred forty-two and eight tenths-feet (242.8ft) in length with a maximum design height of six-feet (6.0ft). RW-1 will retain embankment fill and sedimentary deposits upon which the sidewalk will be constructed. The RW-1 alignment is depicted on Figure 3A.

It is anticipated that the fill and sedimentary deposits within the project alignment will be suitable for placement of RW-1. RW-1 design parameters are summarized in Table 4.

Global stability evaluations were not performed. There is no complex slope/wall geometry or exceedingly weak foundation soils that warrant the evaluation of global failure scenarios.

The bearing capacity of the materials that will host the RW-1 satisfies the strength criteria detailed in the Standard Plan. Settlement is expected to be low. It is estimated that total settlements will not exceed one-inch (1.0in). If settlement does occur it is expected to occur rapidly.

8.6 Culvert Foundations

The proposed project does not include the construction of large culverts in potentially adverse foundation conditions.

8.7 Soundwall Foundations

No soundwalls are proposed for this project.

8.8 Overhead Sign Foundations

No overhead signs are proposed for this project.

8.9 Barrier Foundations

No barriers are proposed for this project.

8.10 Electrolier Foundations

It is anticipated that the fill and sedimentary deposits within the project alignment will be suitable for placement of the electrolier foundations. Removal and re-compaction or replacement of soil to accommodate the electrolier is not anticipated. It is anticipated that no significant groundwater will be encountered during pile excavation for the electrolier. Caving may occur during pile excavation within sedimentary deposits. Cobble present within the fill may produce ragged and uneven excavation walls.

8.11 Shade Structure Foundations

The project will construct three (3) cantilevered and braced, rectangular, shade structures supported on steel columns. Each shade structure will have two (2) columns. The steel columns will be set in, six-foot (6.0ft) deep CIDH pile foundations. The shade structures will be located at approximate Stations 41+50, Station 44+00, and Station 46+50.

It is anticipated that the fill and sedimentary deposits within the project alignment will be suitable for placement of the shade structure foundations. It is anticipated that no significant groundwater will be encountered during pile excavation for the shade structures. Caving may occur during pile excavation

within sedimentary deposits. Cobble present within the fill may produce ragged and uneven excavation walls.

8.12 Infiltration Basins

Seven (7) infiltration basins are proposed to be constructed within the unpaved section between SR-186 and the parking lot. The infiltration basins will be located between approximate Station 38+50 and Station 48+00. Four (4) of the infiltration basins will be between SR-186 and the proposed sidewalk. Three (3) of these infiltration basins will collect water from SR-186 via overside drains. The fourth will collect sheet flow from the sidewalk and entrance driveway. The other three (3) infiltration basins will be located between the parking lot and the sidewalk. These will be relatively smaller and collect sheet flow from the sidewalk, shade structures and a small portion of the parking lot between Station 38+50 and Station 48+00. Results of the Percolation Tests indicate that the percolation rate of the sedimentary deposits is more rapid than the engineered fill. Percolation test results are provided in Table 3 and Appendix II.

9.0 MATERIAL SOURCES

No off-site material source has been identified for this project. Material generated from on-site excavations will consist primarily of sand, silt, gravel, and cobble derived from the sedimentary formation and engineered fill. The material generated on-site is anticipated to be suitable for use as roadway embankment and structure backfill.

Occasional boulders will be encountered within the fill near or at the surface. The boulders observed on the surface within the project limits are anticipated to be incorporated as landscape features.

10.0 MATERIAL DISPOSAL

Examples of material unsuitable for embankment subgrade or fill include organic mud, highly expansive clay, stockpiled trash, and debris. The geotechnical site review suggests that unsuitable material will not be encountered.

Material generated during construction that is found to be unsuitable for use as roadway subgrade, embankment fill, or topsoil should be placed in a suitable location within the projects limits or properly disposed. Boulders encountered can be incorporated as landscape features.

11.0 RECOMMENDATIONS

The information presented on Section 8.0 of this report should be thoroughly reviewed by project planners and designers.

Concentrated storm runoff should be controlled with appropriate drainage features to reduce the potential for erosion.

12.0 DESIGN ADVISORIES

Structures supported on vertically loaded structural elements joined and supported by mat foundations tend to perform better when subjected to liquefaction induced settlement or lateral spreading than structures supported on vertically loaded elements supported by individual foundations. Consider joining and supporting the vertically loaded structural elements of the shade structures with mat foundations.

If the percolation rate of the engineered fill is not sufficient, consider replacing the engineered fill with a more permeable material in contact with the underlying sedimentary deposit to increase the percolation rate.

No corrosion testing was performed at the project site. A site specific corrosion analysis can be performed; however, this will require an additional field investigation. In general, agricultural irrigation

practices in the Imperial Valley have rendered the groundwater and lowland soils corrosive. The project site soils should be considered corrosive.

The material derived from sedimentary deposits and engineered fills within the project will be suitable for use as embankment fill.

The subsurface condition at the proposed location for RW-1, the shade structures, and electrolier are suitable for the proposed foundations.

Project designers should consider that temporary slopes inclined at one horizontal to one vertical (1.0H:1.0V) from the back of the footing will likely be utilized to facilitate wall construction. Potential conflicts between excavations and existing or proposed features should be evaluated.

13.0 CONSTRUCTION CONSIDERATIONS

The on-site soils may generally be excavated with conventional heavy grading equipment. It should be anticipated that the presence of cobble may create occasional difficulties during drilling and grading operations. The drilling and grading methods utilized should be capable of excavating through hard cobble.

Caving may occur in the non-cohesive sedimentary deposits. Drilled shafts that tend to cave may be cased or the placed volume of concrete may be increased.

Due to the gradation of the engineered fill, excavation walls will be ragged and uneven. Project elements constructed within the engineered fill may require additional concrete.

Groundwater is anticipated to be encountered at a depth of ten to fifteen-feet (10.0-15.0ft) below the ground surface. Project elements constructed below ten-feet (10.0ft) will likely encounter groundwater.

Settlement is expected to be low. It is estimated that total settlement of proposed project features will not exceed one-inch (1.0in). If settlement does occur it is expected to occur rapidly.

Concentrated storm runoff should be controlled with appropriate drainage features to reduce erosion.

14.0 ACTUAL VS. REPORTED SITE CONDITIONS

The characterizations of geotechnical conditions along the project alignment and presented in this report are based on the review of the design information provided, proposed project features, as-built plans, geologic maps, geologic literature, archival reports, exploration, and laboratory testing. The evaluations and recommendations contained in this report are based on the information discovered and data gathered. Should project design features vary significantly from those described in this report an updated GDR should be prepared by OGDS2 Branch D to address the geotechnical considerations related to those features. If conditions are encountered during the project that appear to differ from the conditions conveyed in this report, or if construction difficulties related to soil conditions are encountered, a representative of OGDS2 Branch D should be consulted to assist with the assessment of the prevailing geotechnical conditions and to assist in formulating appropriate strategies to facilitate project completion.

15.0 REFERENCES

Caltrans, *Corrosion Guidelines*, Version 1.0, September 2003

Caltrans, *Memorandum, Slope Soil Classification*, April 1995

Caltrans, *Geotechnical Services Design Manual*, Version 1.0, August 2009

Caltrans, *Memorandum to Designers 20-10, Surface Fault Rupture Displacement Hazard Investigations*, January 2007

Caltrans, *Seismic Design Criteria Version 1.6, Appendix B*, November 2010

Caltrans, *Soil and Rock Logging, Classification and Presentation Manual*, 2010

Caltrans, Division of Engineering Services, Geotechnical Services, (2009), *Geotechnical Services Design Manual v.1.0, Section 1: Seismic Design Recommendation.*

Caltrans, Division of Engineering Services, Geotechnical Services, (2009), *Geotechnical Services Design Manual v.1.0, Appendix B.*

GSTABLE7 with STEDwin v.2.

United States Department of Interior Geologic Survey: *Geologic Map of Yuma, Arizona and California Project Location* http://ngmdb.usgs.gov/Prodesc/proddesc_4493.htm

http://websoilsurvey.nrcs.usda.gov/app/WebSoilSurvey.aspx

http://casoilresource.lawr.ucdavis.edu/gmap/

http://mrdata.usgs.gov/sgmc/ca.html

http://mrdata.usgs.gov/geology/state/sgmc-unit.php?unit=CAQ;0

http://mrdata.usgs.gov/geology/state/sgmc-unit.php?unit=CApCAc;0

FIGURES

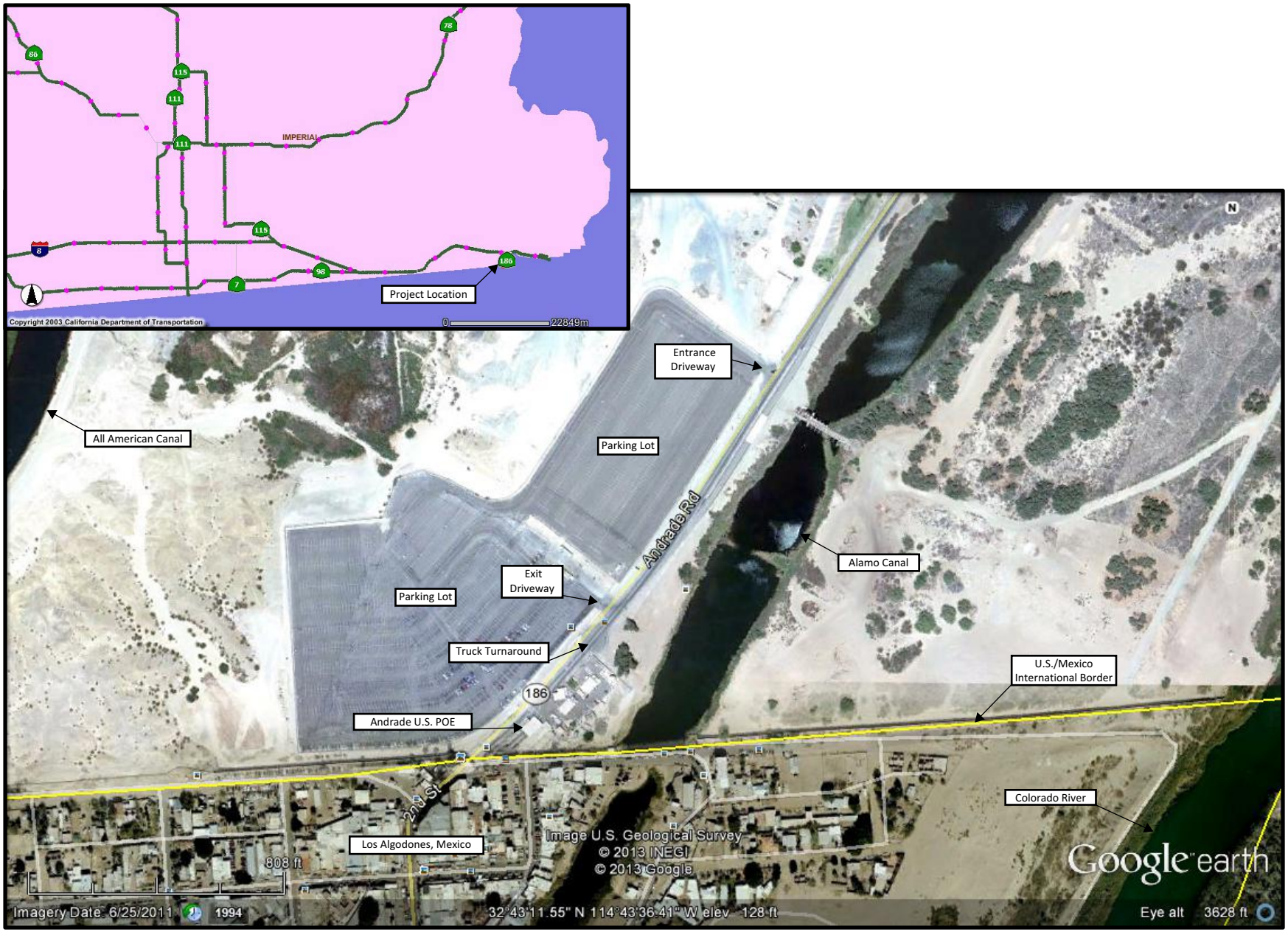

FIGURE 1: PROJECT LOCATION MAP AND AERIAL PHOTOGRAPH

Dist	COUNTY	ROUTE	POST MILES TOTAL PROJECT	SHEET No.	TOTAL SHEETS
11	Imp	186	0.0/0.4		

REGISTERED CIVIL ENGINEER DATE

PLANS APPROVAL DATE

REGISTERED PROFESSIONAL ENGINEER MARVIN A. CANTON No. C69855 Exp 09-30-14 CIVIL STATE OF CALIFORNIA

THE STATE OF CALIFORNIA OR ITS OFFICERS OR AGENTS SHALL NOT BE RESPONSIBLE FOR THE ACCURACY OR COMPLETENESS OF SCANNED COPIES OF THIS PLAN SHEET.

NOTES:

1. FOR ACCURATE RIGHT OF WAY DATA, CONTACT RIGHT OF WAY ENGINEERING AT THE DISTRICT OFFICE.
2. FOR LOCATIONS OF INSTALL DEPT FURNISHED TREE GRATES, SEE CONSTRUCTION DETAILS
3. FOR LOCATION OF RELOCATE BOULDER WORK SEE CONSTRUCTION DETAILS AND PLANTING PLANS.
4. UTILITY OWNERSHIP:
   ELECTRICAL - IMPERIAL IRRIGATION DISTRICT (IID).
5. TELEPHONE - TELEPHONE AND DATA SYSTEM, INC. (TDS).

ABBREVIATIONS:

ICO IRRIGATION CROSSOVER
IS IRRIGATION SLEEVES

LEGEND:

COLD PLANE/ HMA OVERLAY

HMA, OVERSIDE DRAIN

SEE TYPICAL CROSS SECTION FOR STRUCTURAL SECTION

--- PTEC (PERMIT TO ENTER AND CONSTRUCT)

REMOVE EXISTING CONCRETE

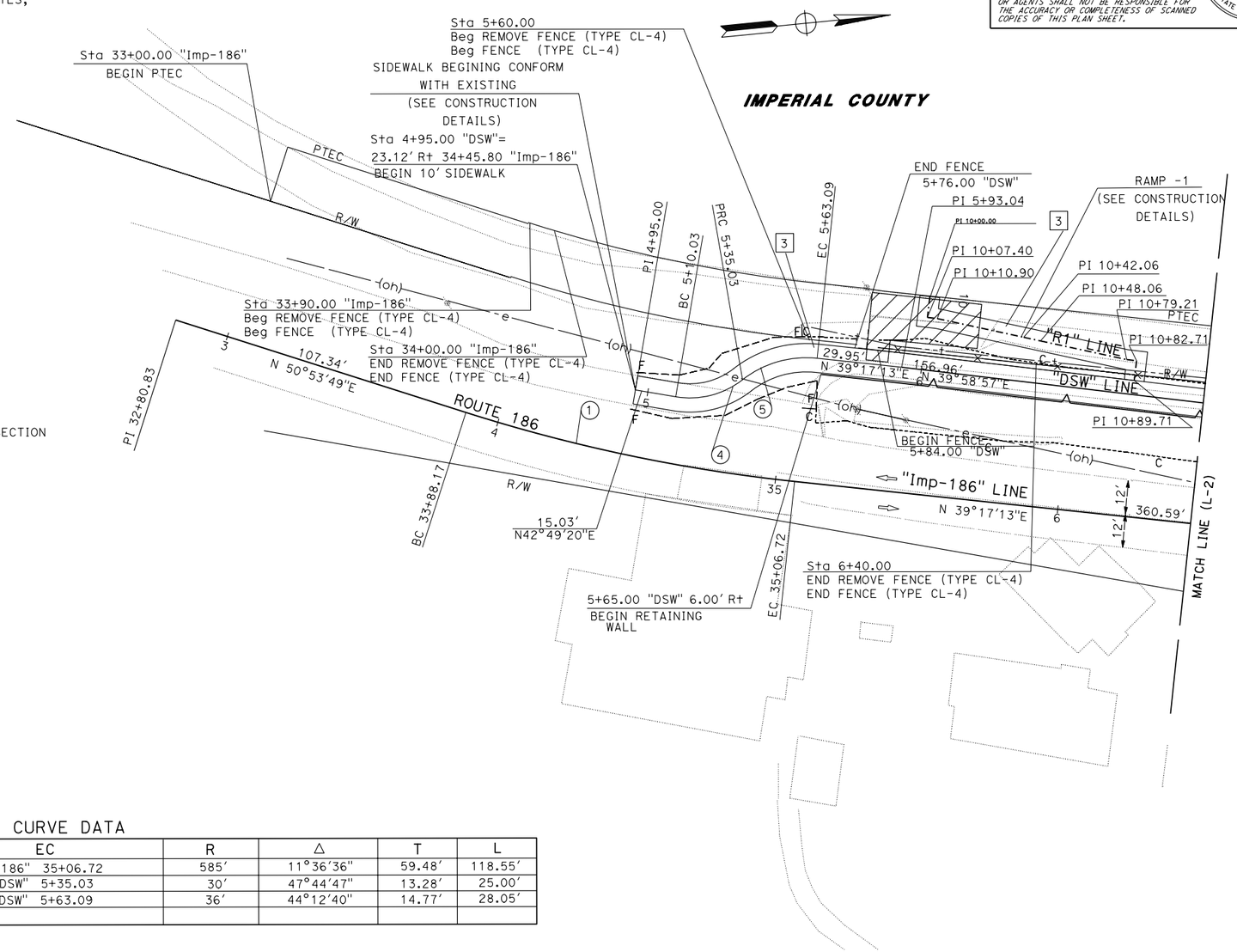

CURVE DATA

No. (X)	BC	EC	R	Δ	T	L
1	"Imp-186" 33+88.17	"Imp-186" 35+06.72	585'	11°36'36"	59.48'	118.55'
4	"DSW" 5+10.03	"DSW" 5+35.03	30'	47°44'47"	13.28'	25.00'
5	"DSW" 5+35.03	"DSW" 5+63.09	36'	44°12'40"	14.77'	28.05'

SCALE: 1"= 20'

LAYOUT L-1

STATE OF CALIFORNIA - DEPARTMENT OF TRANSPORTATION
Caltrans PROJECT DEVELOPMENT

FUNCTIONAL SUPERVISOR: KAZIM MAMDANI
CALCULATED-DESIGNED BY: JIM ALSHEIKH
CHECKED BY: MARVIN A. CANTON
REVISED BY / DATE REVISED

LAST REVISION 01-23-13
DATE PLOTTED => 18-MAR-2013
TIME PLOTTED => 14:32

BORDER LAST REVISED 7/2/2010 | USERNAME => s128404 DGN FILE => 1100020250ea001.dgn | RELATIVE BORDER SCALE IS IN INCHES 0 1 2 3 | UNIT 2786 | PROJECT NUMBER & PHASE 11000202501

FIGURE 2A

Dist	COUNTY	ROUTE	POST MILES TOTAL PROJECT	SHEET No.	TOTAL SHEETS
11	Imp	186	0.0/0.4		

REGISTERED CIVIL ENGINEER DATE

PLANS APPROVAL DATE

REGISTERED PROFESSIONAL ENGINEER MARVIN A. CANTON No. C69855 Exp 09-30-14 CIVIL STATE OF CALIFORNIA

THE STATE OF CALIFORNIA OR ITS OFFICERS OR AGENTS SHALL NOT BE RESPONSIBLE FOR THE ACCURACY OR COMPLETENESS OF SCANNED COPIES OF THIS PLAN SHEET.

NOTE:
FOR ACCURATE RIGHT OF WAY AND ACCESS DATA,
CONTACT RIGHT OF WAY ENGINEERING AT THE DISTRICT OFFICE.

No. (X)	BC	EC	R	Δ	T	L
2	"Imp-186" 38+67.31	"Imp-186" 43+99.08	3500′	08°42′17"	266.40′	531.77′
7	"DSW" 11+00.72	"DSW" 11+19.33	104′	10°14′57"	9.33′	18.60′
8	"DSW" 11+26.00	"DSW" 12+47.94	251′	27°50′06"	62.20′	121.94′
6	"DSW" 9+44.10	"DSW" 9+67.38	2037′	00°39′17"	11.64′	23.28′
14	29.72′ R+ "Imp-186" 37+66.06	36.82 R+ "Imp-186" 37+32.27	47′	87°35′11"	44.76′	71.36′

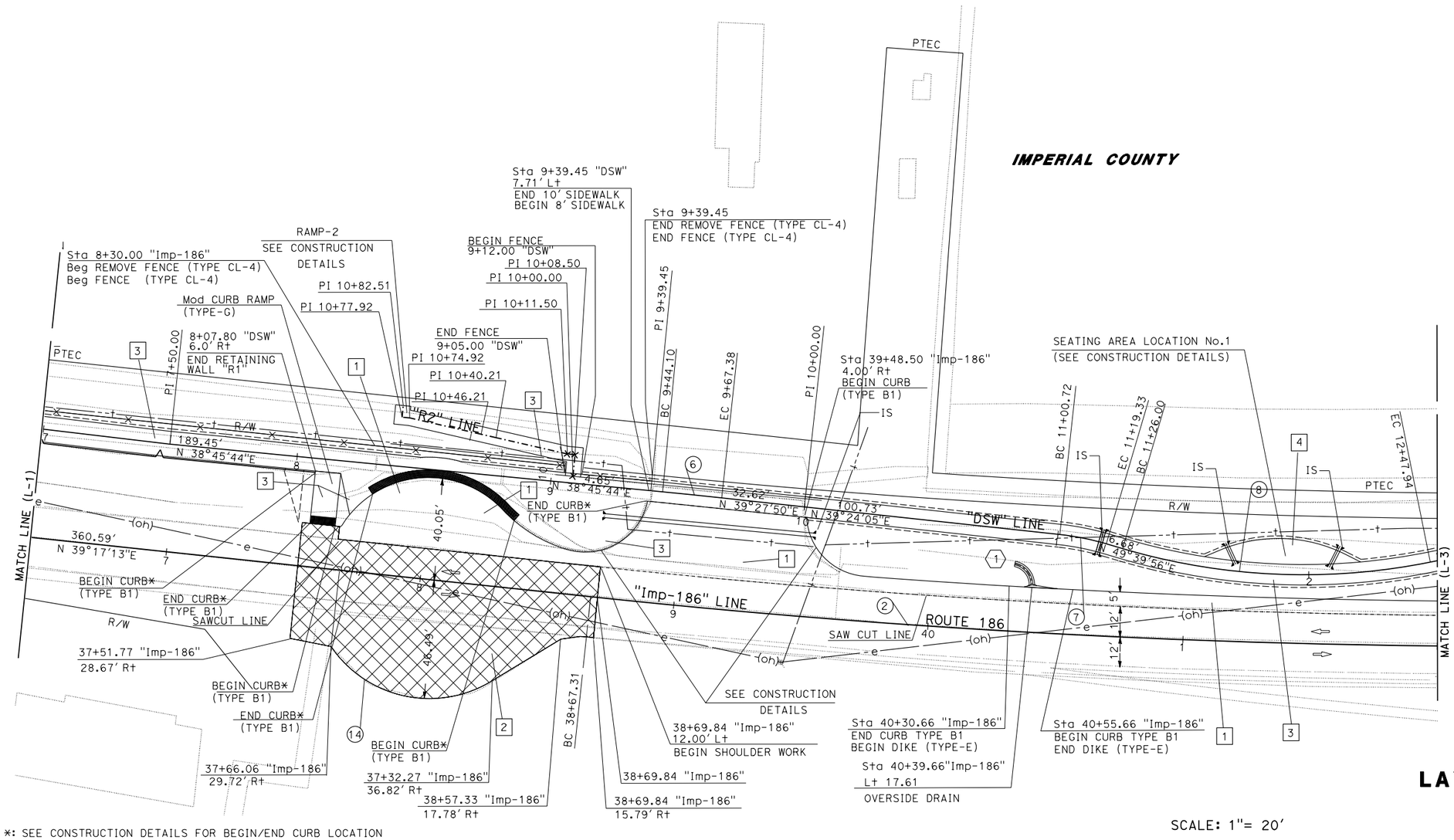

*: SEE CONSTRUCTION DETAILS FOR BEGIN/END CURB LOCATION

STATE OF CALIFORNIA - DEPARTMENT OF TRANSPORTATION
Caltrans PROJECT DEVELOPMENT

FUNCTIONAL SUPERVISOR: KAZIM MANDANI
CALCULATED-DESIGNED BY: JIM ALSHEIKH
CHECKED BY: MARVIN A. CANTON
REVISED BY
DATE REVISED

LAST REVISION 01-23-13
DATE PLOTTED => 18-MAR-2013
TIME PLOTTED => 14:33

BORDER LAST REVISED 7/2/2010
USERNAME => s128404
DGN FILE => 1100020250ea002.dgn
RELATIVE BORDER SCALE IS IN INCHES 0 1 2 3
UNIT 2786
PROJECT NUMBER & PHASE 11000202501

FIGURE 2B

Dist	COUNTY	ROUTE	POST MILES TOTAL PROJECT	SHEET No.	TOTAL SHEETS
11	Imp	186	0.0/0.4		

REGISTERED CIVIL ENGINEER DATE

PLANS APPROVAL DATE

THE STATE OF CALIFORNIA OR ITS OFFICERS OR AGENTS SHALL NOT BE RESPONSIBLE FOR THE ACCURACY OR COMPLETENESS OF SCANNED COPIES OF THIS PLAN SHEET.

REGISTERED PROFESSIONAL ENGINEER MARVIN A. CANTON No. C69855 Exp 09-30-14 CIVIL STATE OF CALIFORNIA

NOTE:
FOR ACCURATE RIGHT OF WAY AND ACCESS DATA,
CONTACT RIGHT OF WAY ENGINEERING AT THE DISTRICT OFFICE.

IMPERIAL COUNTY

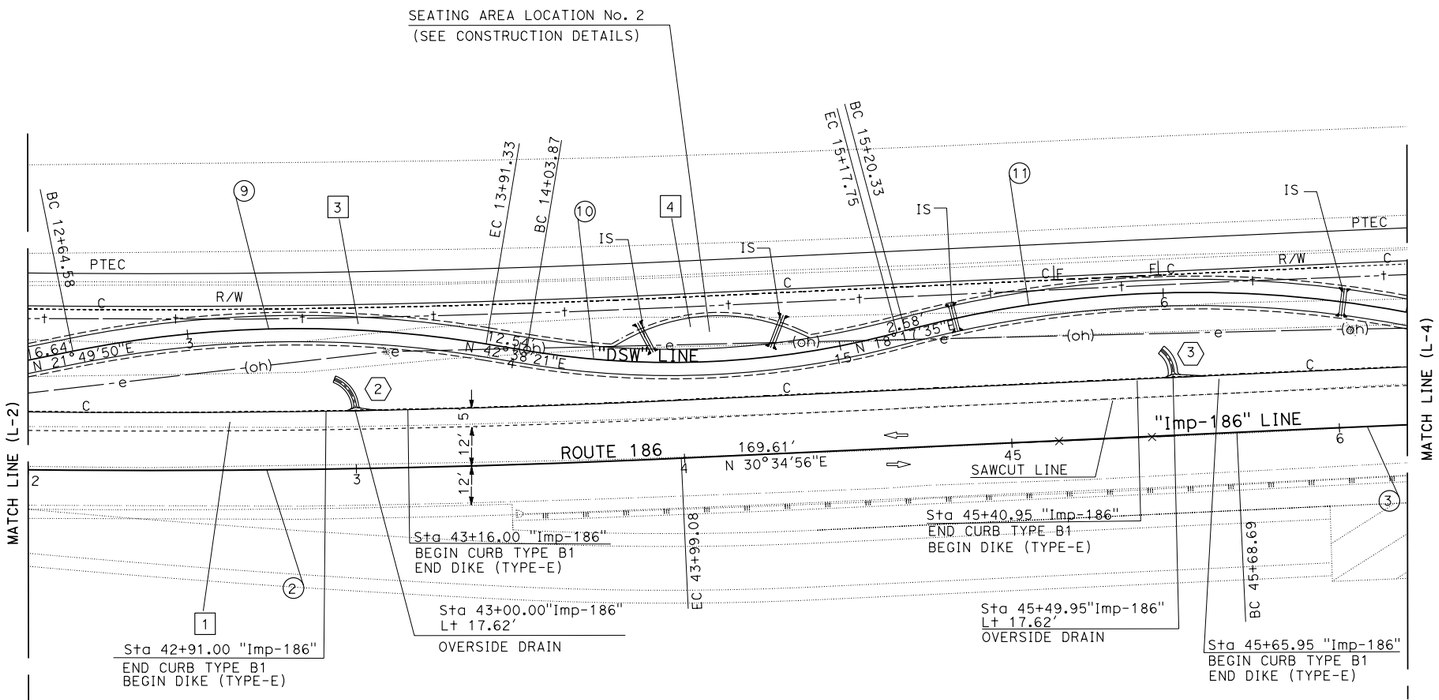

CURVE DATA

No. (X)	BC	EC	R	Δ	T	L
9	"DSW" 12+64.58	"DSW" 13+91.33	349′	20°48′20"	64.08′	126.75′
10	"DSW" 14+03.87	"DSW" 15+17.75	268′	24°20′46"	57.81′	113.88′
11	"DSW" 15+20.33	"DSW" 16+74.33	344′	25°38′59"	78.31′	154.00′
3	"Imp-186" 45+68.69	"Imp-186" 49+53.05	13995′	01°34′25"	192.19′	384.36′

SCALE: 1"= 20′

LAYOUT L-3

STATE OF CALIFORNIA - DEPARTMENT OF TRANSPORTATION
Caltrans PROJECT DEVELOPMENT

FUNCTIONAL SUPERVISOR: KAZIM MAMDANI
CALCULATED-DESIGNED BY: JIM ALSHEIKH
CHECKED BY: MARVIN A. CANTON
REVISED BY
DATE REVISED

LAST REVISION 01-23-13 | DATE PLOTTED => 18-MAR-2013 | TIME PLOTTED => 14:33

BORDER LAST REVISED 7/2/2010 | USERNAME => s128404 | DGN FILE => 1100020250ea003.dgn | RELATIVE BORDER SCALE IS IN INCHES 0 1 2 3 | UNIT 2786 | PROJECT NUMBER & PHASE 11000202501

Dist	COUNTY	ROUTE	POST MILES TOTAL PROJECT	SHEET No.	TOTAL SHEETS
11	Imp	186	0.0/0.4		

REGISTERED CIVIL ENGINEER DATE

PLANS APPROVAL DATE

THE STATE OF CALIFORNIA OR ITS OFFICERS OR AGENTS SHALL NOT BE RESPONSIBLE FOR THE ACCURACY OR COMPLETENESS OF SCANNED COPIES OF THIS PLAN SHEET.

REGISTERED PROFESSIONAL ENGINEER MARVIN A. CANTON No. C69855 Exp 09-30-14 CIVIL STATE OF CALIFORNIA

NOTE:
FOR ACCURATE RIGHT OF WAY AND ACCESS DATA,
CONTACT RIGHT OF WAY ENGINEERING AT THE DISTRICT OFFICE.

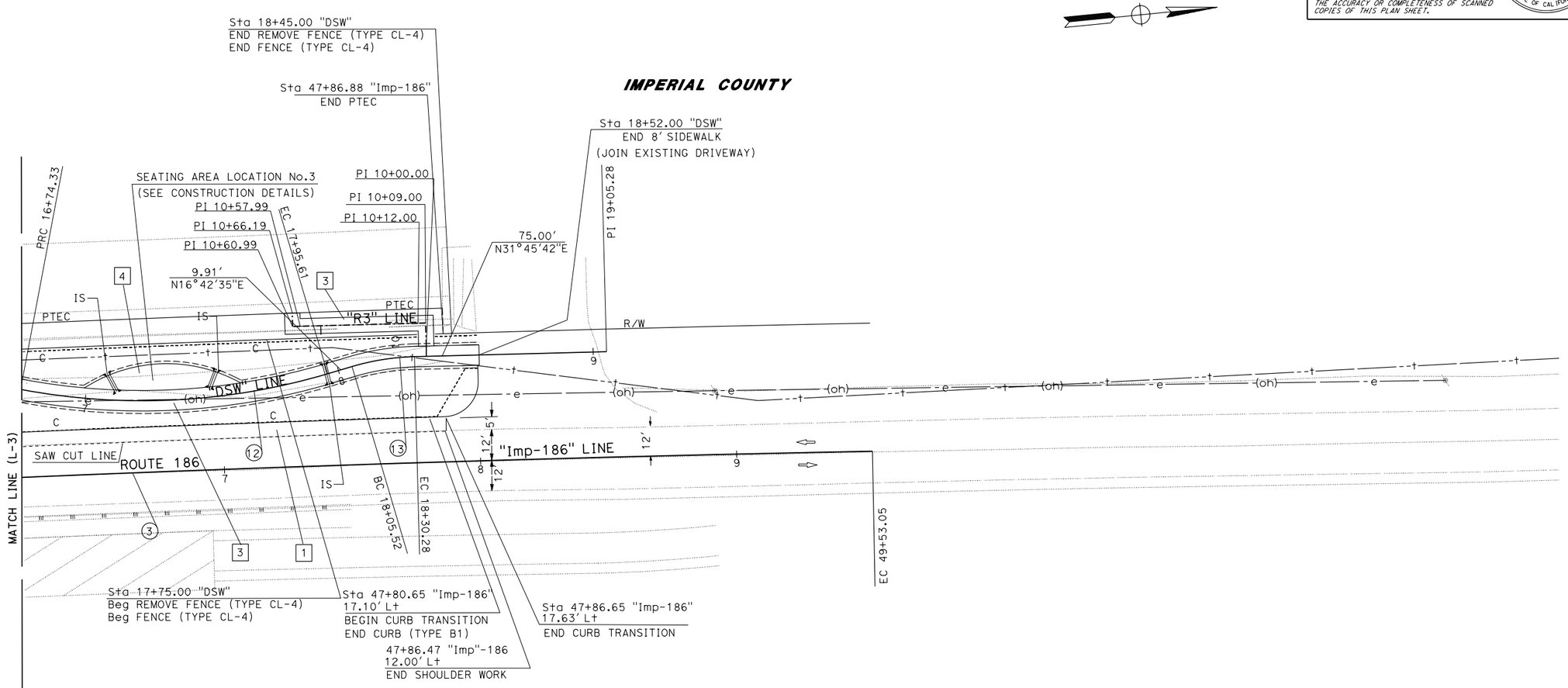

CURVE DATA

No. (X)	BC	EC	R	Δ	T	L
12	"DSW" 16+74.33	"DSW" 17+95.61	255'	27°16'58"	61.77'	121.20'
13	"DSW" 18+05.52	"DSW" 18+30.28	94'	15°03'08"	12.45'	24.76'
3	"Imp-186" 45+68.69	"Imp-186" 49+53.05	13995'	01°34'25"	192.19'	384.36'

SCALE: 1"= 20'

LAYOUT L-4

STATE OF CALIFORNIA - DEPARTMENT OF TRANSPORTATION
Caltrans PROJECT DEVELOPMENT

FUNCTIONAL SUPERVISOR: KAZIM MAMDANI
CALCULATED-DESIGNED BY: JIM ALSHEIKH
CHECKED BY: MARVIN A. CANTON
REVISED BY / DATE REVISED

LAST REVISION 01-23-13 | DATE PLOTTED => 18-MAR-2013 | TIME PLOTTED => 14:33

BORDER LAST REVISED 7/2/2010 | USERNAME => s128404 | DGN FILE => 1100020250ea004.dgn | RELATIVE BORDER SCALE IS IN INCHES 0 1 2 3 | UNIT 2786 | PROJECT NUMBER & PHASE 11000202501

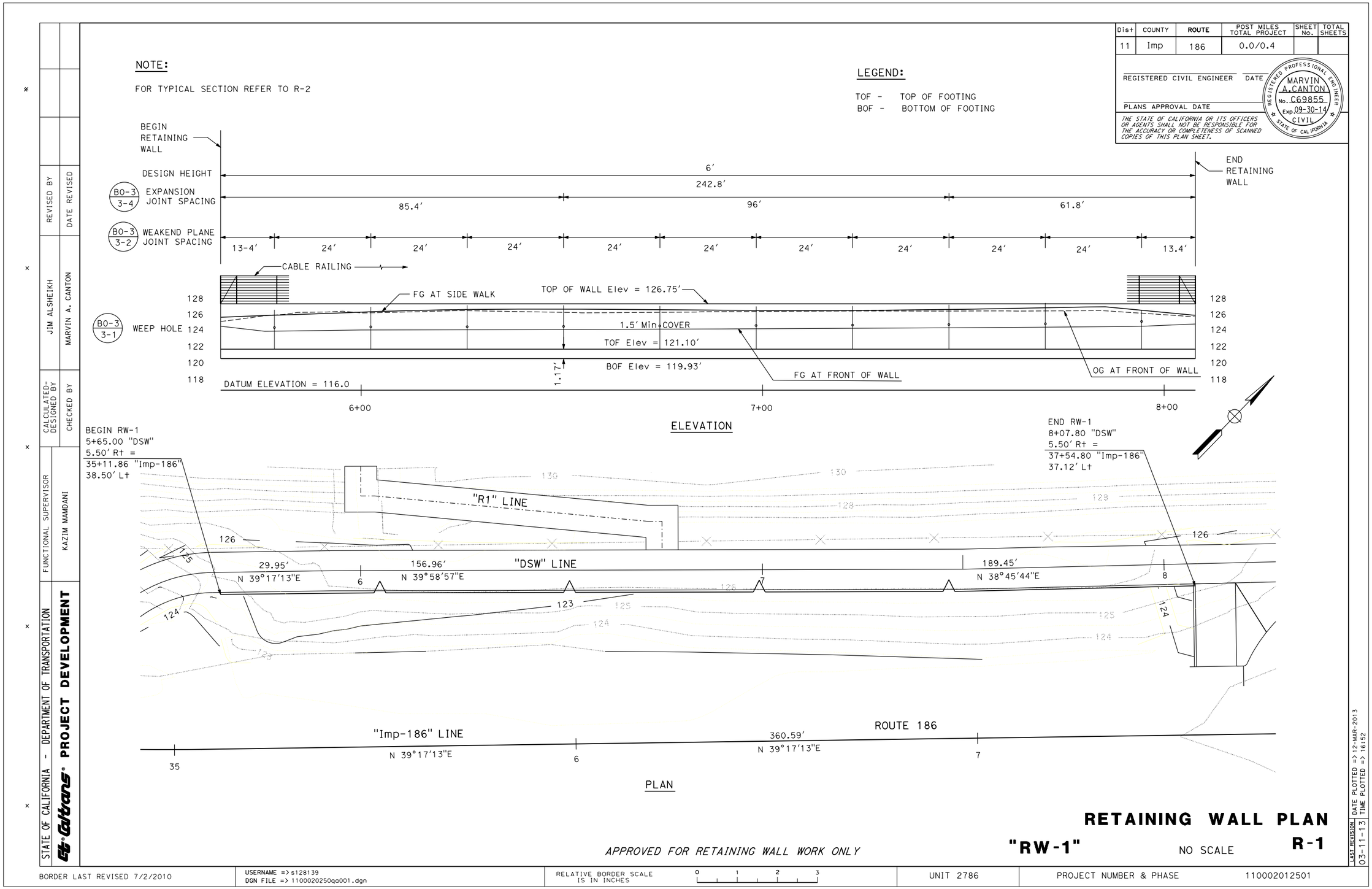
NOTE:
FOR TYPICAL SECTION REFER TO R-2
LEGEND:
TOF - TOP OF FOOTING
BOF - BOTTOM OF FOOTING
Dist | COUNTY | ROUTE | POST MILES TOTAL PROJECT | SHEET No. | TOTAL SHEETS
11 | Imp | 186 | 0.0/0.4
REGISTERED CIVIL ENGINEER DATE
PLANS APPROVAL DATE
THE STATE OF CALIFORNIA OR ITS OFFICERS OR AGENTS SHALL NOT BE RESPONSIBLE FOR THE ACCURACY OR COMPLETENESS OF SCANNED COPIES OF THIS PLAN SHEET.
REGISTERED PROFESSIONAL ENGINEER
MARVIN A.CANTON
No. C69855
Exp. 09-30-14
CIVIL
STATE OF CALIFORNIA
BEGIN RETAINING WALL
END RETAINING WALL
DESIGN HEIGHT
6'
242.8'
B0-3 3-4 EXPANSION JOINT SPACING
85.4'
96'
61.8'
B0-3 3-2 WEAKEND PLANE JOINT SPACING
13-4' 24' 24' 24' 24' 24' 24' 24' 24' 24' 13.4'
CABLE RAILING
FG AT SIDE WALK
TOP OF WALL Elev = 126.75'
B0-3 3-1 WEEP HOLE
1.5' Min COVER
TOF Elev = 121.10'
BOF Elev = 119.93'
1.17'
FG AT FRONT OF WALL
OG AT FRONT OF WALL
DATUM ELEVATION = 116.0
128 126 124 122 120 118
6+00 7+00 8+00
ELEVATION
BEGIN RW-1
5+65.00 "DSW"
5.50' Rt =
35+11.86 "Imp-186"
38.50' Lt
END RW-1
8+07.80 "DSW"
5.50' Rt =
37+54.80 "Imp-186"
37.12' Lt
"R1" LINE
"DSW" LINE
29.95'
N 39°17'13"E
156.96'
N 39°58'57"E
189.45'
N 38°45'44"E
"Imp-186" LINE
N 39°17'13"E
360.59'
N 39°17'13"E
ROUTE 186
35 6 7 8
PLAN
RETAINING WALL PLAN
"RW-1"
NO SCALE
R-1
APPROVED FOR RETAINING WALL WORK ONLY
STATE OF CALIFORNIA - DEPARTMENT OF TRANSPORTATION
Caltrans PROJECT DEVELOPMENT
FUNCTIONAL SUPERVISOR KAZIM MAMDANI
CALCULATED-DESIGNED BY JIM ALSHEIKH
CHECKED BY MARVIN A. CANTON
REVISED BY
DATE REVISED
LAST REVISION 03-11-13
DATE PLOTTED => 12-MAR-2013
TIME PLOTTED => 16:52
BORDER LAST REVISED 7/2/2010
USERNAME => s128139
DGN FILE => 1100020250qa001.dgn
RELATIVE BORDER SCALE IS IN INCHES 0 1 2 3
UNIT 2786
PROJECT NUMBER & PHASE 1100020012501

FIGURE 3A

Dist	COUNTY	ROUTE	POST MILES TOTAL PROJECT	SHEET No.	TOTAL SHEETS
11	Imp	186	0.0/0.4		

REGISTERED CIVIL ENGINEER DATE

PLANS APPROVAL DATE

REGISTERED PROFESSIONAL ENGINEER MARVIN A. CANTON No. C69855 Exp. 09-30-14 CIVIL STATE OF CALIFORNIA

THE STATE OF CALIFORNIA OR ITS OFFICERS OR AGENTS SHALL NOT BE RESPONSIBLE FOR THE ACCURACY OR COMPLETENESS OF SCANNED COPIES OF THIS PLAN SHEET.

RETAINING WALL TYPE A1

WALL	LINE	STATION	SIDE L	SIDE R	[N] LENGTH LF	STRUCTURAL CONCRETE RETAINING WALL CY	BAR REINFORCING STEEL (RETAINING WALL) LB	STRUCTURE EXCAVATION (RETAINING WALL) CY	STRUCTURE BACKFILL (RETAINING WALL) CY	PERVIOUS BACKFILL MATERIAL (RETAINING WALL) CY	CABLE RAILING (MODIFIED) LF
R1	"DSW"	5+65.00 TO 8+07.80		X	242.8	132.46	9108.88	774.04	635.08	10.36	242.8
		TOTAL				132.46	9108.88	774.04	635.08	10.36	242.8

(N) - NOT A SEPARATE PAY ITEM, FOR INFORMATION ONLY

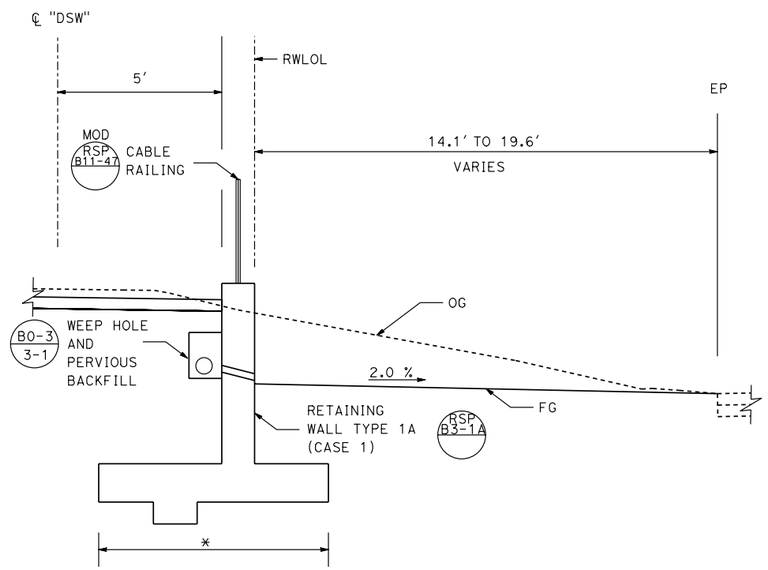

TYPICAL SECTION

NOTES:

* FOR DAIMENTIONS SEE STD PLANS

APPROVED FOR RETAINING WALL WORK ONLY

RETAINING WALL QUANTITIES

"RW-1" NO SCALE **R-2**

STATE OF CALIFORNIA - DEPARTMENT OF TRANSPORTATION
Caltrans® PROJECT DEVELOPMENT

FUNCTIONAL SUPERVISOR: KAZIM MAMDANI
CALCULATED-DESIGNED BY: JIM ALSHEIKH
CHECKED BY: MARVIN A. CANTON
REVISED BY
DATE REVISED

LAST REVISION 03-11-13
DATE PLOTTED => 12-MAR-2013
TIME PLOTTED => 16:52

BORDER LAST REVISED 7/2/2010
USERNAME => s128139
DGN FILE => 1100020250qa002.dgn
RELATIVE BORDER SCALE IS IN INCHES 0 1 2 3
UNIT 2786
PROJECT NUMBER & PHASE 110002012501

Dist	COUNTY	ROUTE	POST MILES TOTAL PROJECT	SHEET No.	TOTAL SHEETS
11	Imp	186	0.0/0.4		

REGISTERED CIVIL ENGINEER DATE

PLANS APPROVAL DATE

REGISTERED PROFESSIONAL ENGINEER FU SUN No. 64991 Exp. 06-30-13 CIVIL STATE OF CALIFORNIA

THE STATE OF CALIFORNIA OR ITS OFFICERS OR AGENTS SHALL NOT BE RESPONSIBLE FOR THE ACCURACY OR COMPLETENESS OF SCANNED COPIES OF THIS PLAN SHEET.

CH2M HILL
402 W. BROADWAY,
SUITE 1450
SAN DIEGO, CA 92101

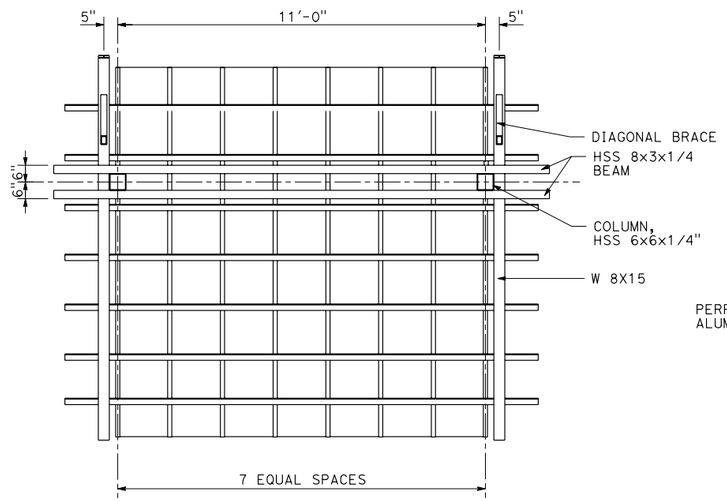

REFLECTED CEILING PLAN
SCALE: 1"=2'

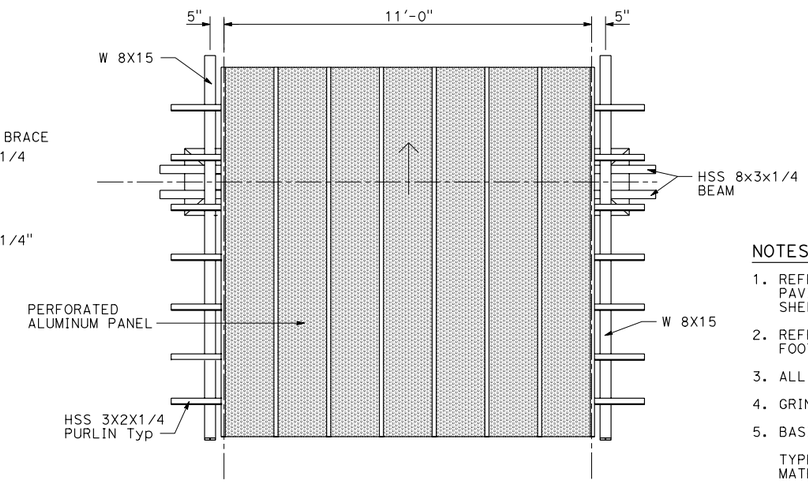

ROOF PLAN
SCALE: 1"=2'

NOTES:

1. REFER TO LAYOUT SHEETS AND LANDSCAPE PLANS FOR ACTUAL PAVING DESIGN AND DIMENSIONS AS WELL AS FOR LOCATION OF SHELTERS AND OTHER AMENITIES ALONG PEDESTRIAN CORRIDOR.
2. REFER TO CONSTRUCTION DETAILS FOR STEEL MEMBERS, FOOTINGS SIZES, CONNECTION DETAILS AND SPECIFICATIONS.
3. ALL STEEL COMPONENTS SHALL BE GALVANIZED.
4. GRIND ALL WELDS TO HAVE SMOOTH / FLUSH SURFACE.
5. BASIS OF DESIGN FOR PERFORATED METAL PANEL IS:

TYPE	: QUALITY ROUND PERFORATED
MATERIAL	: ALUMINUM
CLASS	: ROUND HOLE
THICKNESS	: .125 (1/8")
HOLE SIZE	: 0.1875 (3/16")
HOLE CENTERS	: 0.3125 (5/16")
HOLE PATTERN	: STAGGERED
OPEN AREA	: 33 %
MARGINS	: 2 INCH Min (PARALLEL TO LENGTH)
INTERMEDIATE MARGINGS	: 3 INCH Min @ 18.8 INCHES ON CENTER
FINISH	: POWDER COATED
COLOR	: SILVER STRAND SW 7057

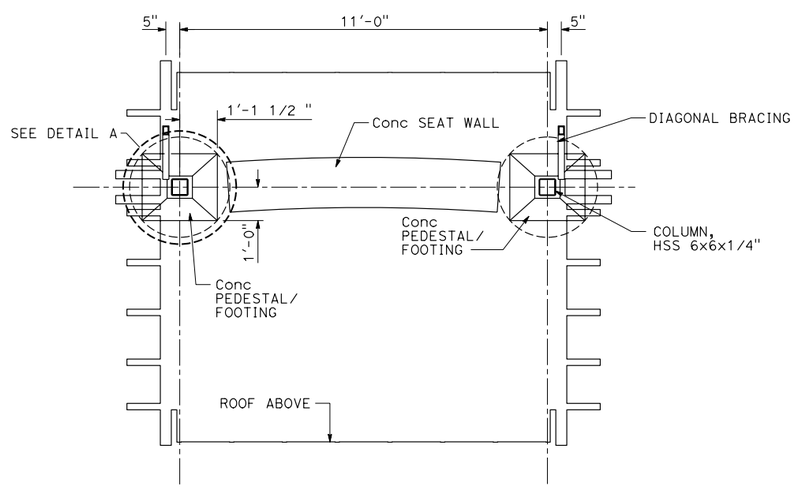

PLAN
SCALE: 1"=2'

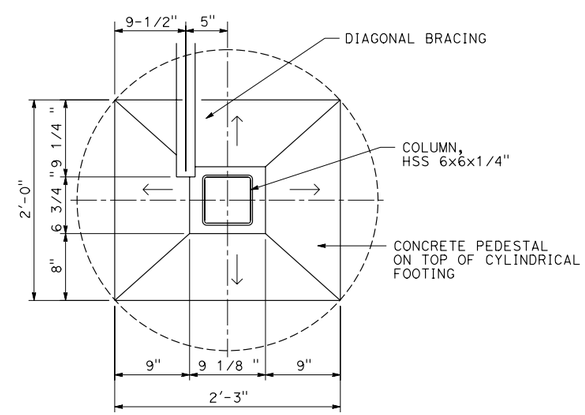

DETAIL A
NO SCALE

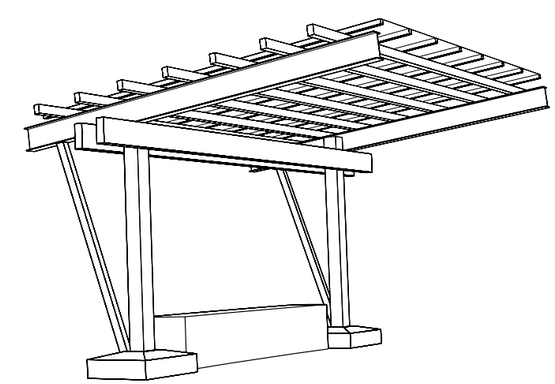

PERSPECTIVE
NO SCALE

SHELTER CONSTRUCTION DETAIL PLANS

CONSTRUCTION DETAILS
SCALE AS SHOWN

C-15

STATE OF CALIFORNIA - DEPARTMENT OF TRANSPORTATION
Caltrans®

CONSULTANT FUNCTIONAL SUPERVISOR: HANY HAROUN
CALCULATED-DESIGNED BY: NELSON CAMARGO
CHECKED BY: FU SUN
REVISED BY
DATE REVISED

LAST REVISION 1-8-13
DATE PLOTTED => 22-JAN-2013
TIME PLOTTED => 17:10

BORDER LAST REVISED 7/2/2010 | USERNAME => s128139 DGN FILE => 1100020250ga015.dgn | RELATIVE BORDER SCALE IS IN INCHES 0 1 2 3 | UNIT 2833 | PROJECT NUMBER & PHASE 11000202501

Dist	COUNTY	ROUTE	POST MILES TOTAL PROJECT	SHEET No.	TOTAL SHEETS
11	Imp	186	0.0/0.4		

REGISTERED CIVIL ENGINEER DATE

PLANS APPROVAL DATE

REGISTERED PROFESSIONAL ENGINEER FU SUN No. 64991 Exp. 06-30-13 CIVIL STATE OF CALIFORNIA

THE STATE OF CALIFORNIA OR ITS OFFICERS OR AGENTS SHALL NOT BE RESPONSIBLE FOR THE ACCURACY OR COMPLETENESS OF SCANNED COPIES OF THIS PLAN SHEET.

CH2M HILL
402 W. BROADWAY,
SUITE 1450
SAN DIEGO, CA 92101

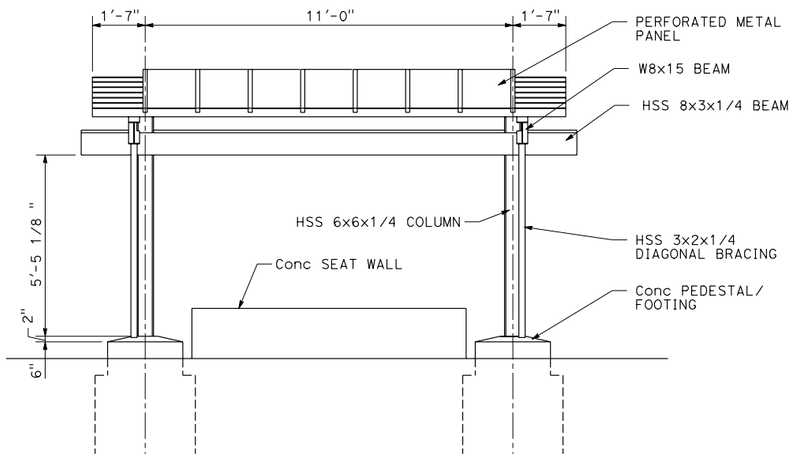

REAR ELEVATION
SCALE: 1"=2'

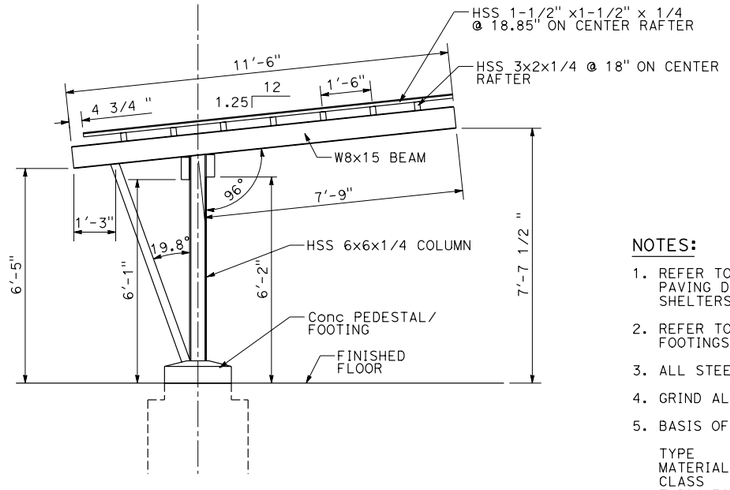

SIDE ELEVATION
SCALE: 1"=2'

NOTES:

1. REFER TO LAYOUT SHEETS AND LANDSCAPE PLANS FOR ACTUAL PAVING DESIGN AND DIMENSIONS AS WELL AS FOR LOCATION OF SHELTERS AND OTHER AMENITIES ALONG PEDESTRIAN CORRIDOR.
2. REFER TO CONSTRUCTION DETAILS FOR STEEL MEMBERS, FOOTINGS SIZES, CONNECTION DETAILS AND SPECIFICATIONS.
3. ALL STEEL COMPONENTS SHALL BE GALVANIZED.
4. GRIND ALL WELDS TO HAVE SMOOTH / FLUSH SURFACE.
5. BASIS OF DESIGN FOR PERFORATED METAL PANEL IS:

TYPE	: QUALITY ROUND PERFORATED
MATERIAL	: ALUMINUM
CLASS	: ROUND HOLE
THICKNESS	: .125 (1/8")
HOLE SIZE	: 0.1875 (3/16")
HOLE CENTERS	: 0.3125 (5/16")
HOLE PATTERN	: STAGGERED
OPEN AREA	: 33 %
MARGINS	: 2 INCH Min (PARALLEL TO LENGTH)
INTERMEDIATE MARGINGS	: 3 INCH Min @ 18.8 INCHES ON CENTER
FINISH	: POWDER COATED
COLOR	: SILVER STRAND SW 7057

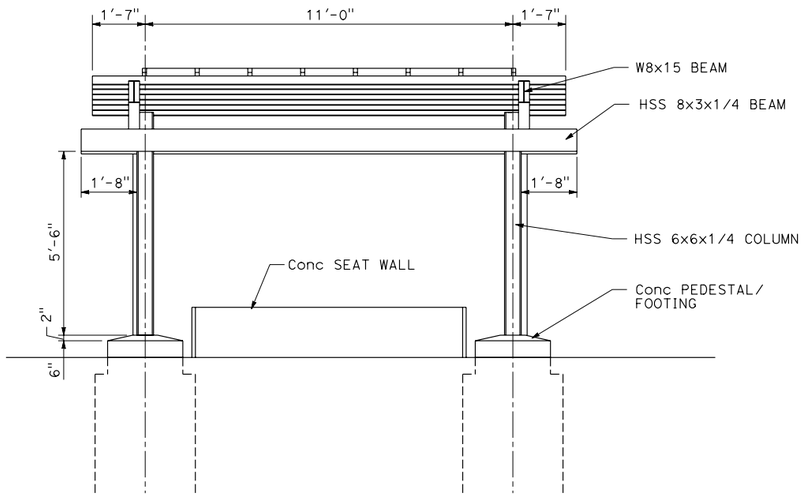

FRONT ELEVATION
SCALE: 1"=2'

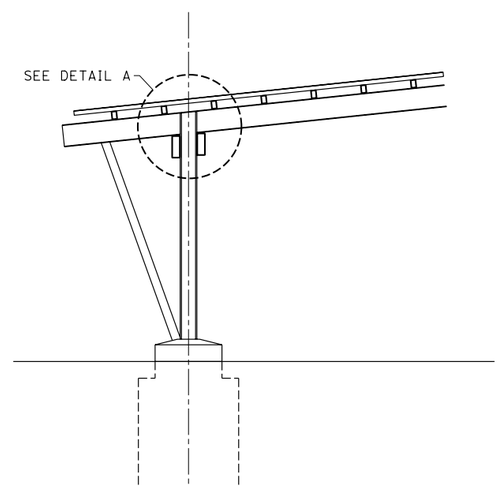

CROSS SECTION
SCALE: 1"=2'

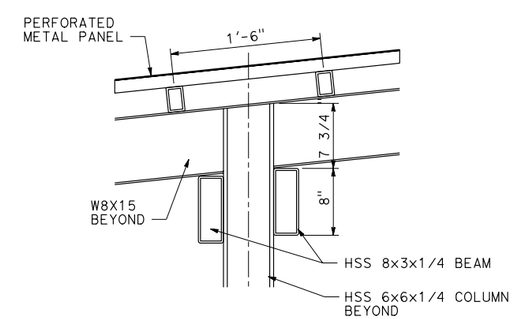

DETAIL A
NO SCALE

SHELTER CONSTRUCTION DETAIL PLANS

CONSTRUCTION DETAILS
AS SHOWN

C-16

STATE OF CALIFORNIA - DEPARTMENT OF TRANSPORTATION
Caltrans®
CONSULTANT FUNCTIONAL SUPERVISOR: HANY HAROUN
CALCULATED-DESIGNED BY: NELSON CAMARGO
CHECKED BY: FU SUN
REVISED BY
DATE REVISED
LAST REVISION 1-8-13
DATE PLOTTED => 22-JAN-2013
TIME PLOTTED => 17:10

BORDER LAST REVISED 7/2/2010 | USERNAME => s128139 DGN FILE => 1100020250ga016.dgn | RELATIVE BORDER SCALE IS IN INCHES 0 1 2 3 | UNIT 2833 | PROJECT NUMBER & PHASE 11000202501

FIGURE 4B

Dist	COUNTY	ROUTE	POST MILES TOTAL PROJECT	SHEET No.	TOTAL SHEETS
11	Imp	186	0.0/0.4		

REGISTERED STRUCTURAL ENGINEER DATE

PLANS APPROVAL DATE

REGISTERED PROFESSIONAL ENGINEER ERIC NG No. 3583 Exp. 03-31-13 STRUCTURAL STATE OF CALIFORNIA

THE STATE OF CALIFORNIA OR ITS OFFICERS OR AGENTS SHALL NOT BE RESPONSIBLE FOR THE ACCURACY OR COMPLETENESS OF SCANNED COPIES OF THIS PLAN SHEET.

SIMON WONG ENGINEERING
9968 HIBERT STREET,
SAN DIEGO, CA 92131

GENERAL NOTES:

DESIGN BASIS:

CODE: 2010 CALIFORNIA BUILDING CODE, CALIFORNIA CODE OF REGULATIONS, TITLE 24, PART 2.

GRAVITY LOADS:

1. FLAT ROOF LIVE LOAD : 20 psf (REDUCIBLE)

LATERAL LOADS:

1. EARTHQUAKE DESIGN DATA :
   OCCUPANCY CATEGORY = II
   SITE CLASS = E
   SMS = 0.908
   SM1 = 0.805
   Fa = 1.267
   Fv = 2.883
   R = 2.0
   OMEGA = 2.0
   Cd = 2.0
   ANALYSIS PROCEDURE USED:
   EQUIVALENT LATERAL FORCE PROCEDURE
2. WIND DESIGN DATA: FOR OPEN BUILDING WITH MONOSLOPE ROOF
   BASIC WIND SPEED 85 mph
   EXPOSUREC
   WIND IMPORTANCE FACTOR, Iw = 1.0

SPECIAL LOADS:

1. SOIL BEARING PRESSURE = 2000 psf
2. SOIL LATERAL LOADS:
   AT-REST PRESSURE = 60 psf/ft
   PASSIVE PRESSURE = 360 psf/ft
   ACTIVE PRESSURE = 40 psf/ft

REINFORCED CONCRETE:

fy = 60 ksi
f'c = 5 ksi
PROVIDE CONCRETE MIX DESIGN FOR CORROSIVE ENVIRONMENT ACCORDING TO CALTRANS 2010 STANDARD SPECIFICATION.

STRUCTURAL STEEL:

WIDE FLANGES	ASTM A992 GRADE 50
PLATES	ASTM A36
HSS (SQUARE & RECTANGULAR)	ASTM A500, GRADE B (fy=46 ksi)
WELDED SHEAR CONNECTORS	ASTM A108 GRADE 1015 THROUGH 1020

ALL STEEL SHALL BE GALVANIZED

ABBREVIATIONS:

SMS1	THE MAXIMUM CONSIDERED EARTHQUAKE, 5 PERCENT DAMPED, SPECTRAL RESPONSE ACCELERATION AT SHORT PERIODS ADJUSTED FOR SITE CLASS EFFECTS
SM1	THE MAXIMUM CONSIDERED EARTHQUAKE, 5 PERCENT DAMPED, SPECTRAL RESPONSE ACCELERATION AT A PERIOD OF 1 SECOND ADJUSTED FOR SITE CLASS EFFECTS
Fa	SHORT - PERIOD SITE COEFFICIENT (AT 0.2 SECOND - PERIOD)
Fv	LONG - PERIOD SITE COEFFICIENT (AT 1.0 SECOND - PERIOD)
R	RESPONSE MODIFICATION COEFFICIENT
OMEGA	OVERSTRENGTH FACTOR
Cd	DEFLECTION AMPLIFICATION FACTOR
HSS	HOLLOW STRUCTURAL SECTIONS

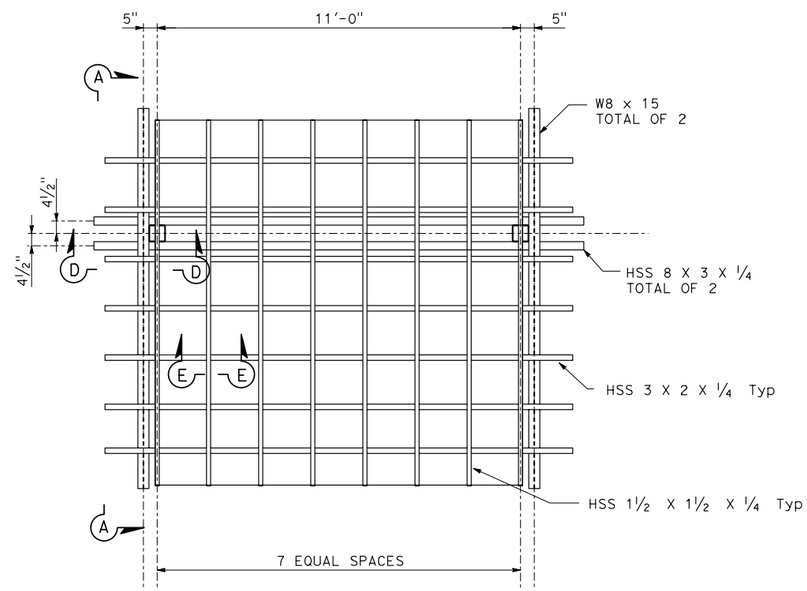

NOTE:
PROVIDE WELDED ¼" CAP PLATES AT EACH END OF ALL TUBE SECTIONS.

ROOF FRAMING PLAN

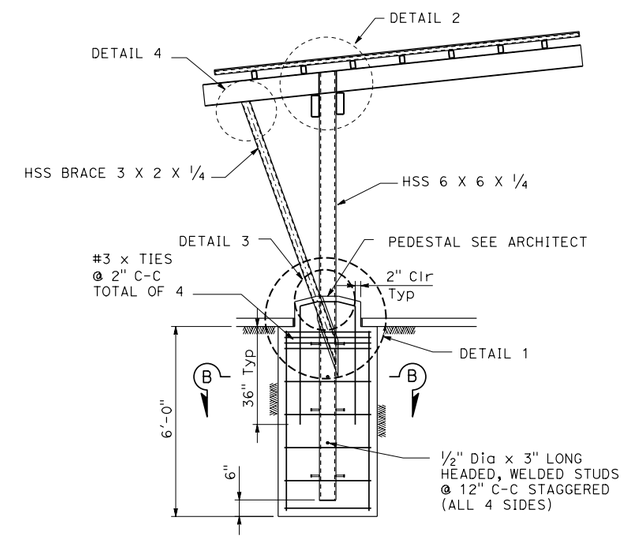

SECTION A-A

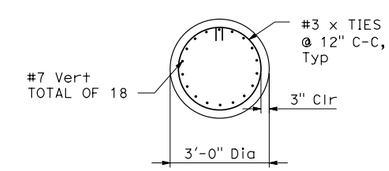

SECTION B-B

CONSTRUCTION DETAILS

NO SCALE

C-17

STATE OF CALIFORNIA - DEPARTMENT OF TRANSPORTATION
Caltrans

CONSULTANT FUNCTIONAL SUPERVISOR: JAMES FROST
CALCULATED-DESIGNED BY: JENNIFER HSU
CHECKED BY: ERIC NG
REVISED BY
DATE REVISED

LAST REVISION 1-8-13
DATE PLOTTED => 22-JAN-2013
TIME PLOTTED => 17:10

BORDER LAST REVISED 7/2/2010
USERNAME => s128139
DGN FILE => 1100020250ga017.dgn
RELATIVE BORDER SCALE IS IN INCHES 0 1 2 3
UNIT 2833
PROJECT NUMBER & PHASE 11000202501

FIGURE 4C

Dist	COUNTY	ROUTE	POST MILES TOTAL PROJECT	SHEET No.	TOTAL SHEETS
11	Imp	186	0.0/0.4		

REGISTERED STRUCTURAL ENGINEER DATE

PLANS APPROVAL DATE

REGISTERED PROFESSIONAL ENGINEER ERIC NG No. 3583 Exp. 03-31-13 STRUCTURAL STATE OF CALIFORNIA

THE STATE OF CALIFORNIA OR ITS OFFICERS OR AGENTS SHALL NOT BE RESPONSIBLE FOR THE ACCURACY OR COMPLETENESS OF SCANNED COPIES OF THIS PLAN SHEET.

SIMON WONG ENGINEERING
9968 HIBERT STREET,
SAN DIEGO, CA 92131

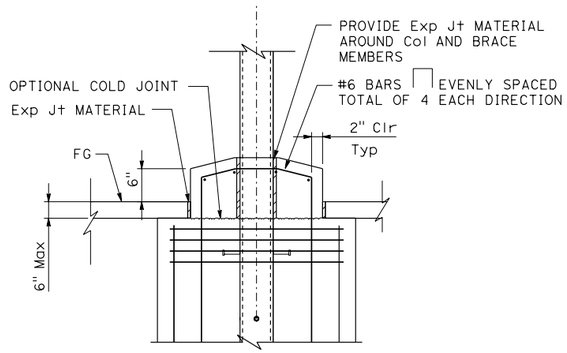

DETAIL 1

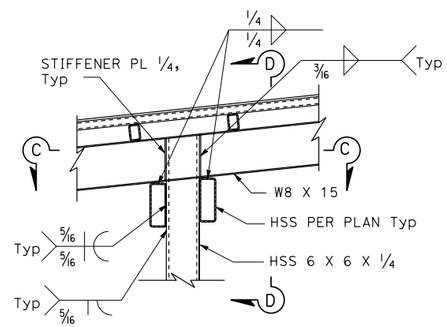

DETAIL 2

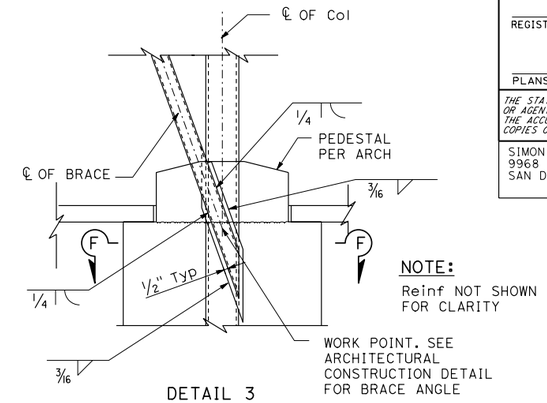

NOTE:
Reinf NOT SHOWN FOR CLARITY

DETAIL 3

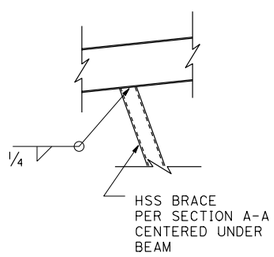

DETAIL 4

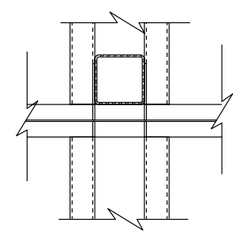

SECTION C-C

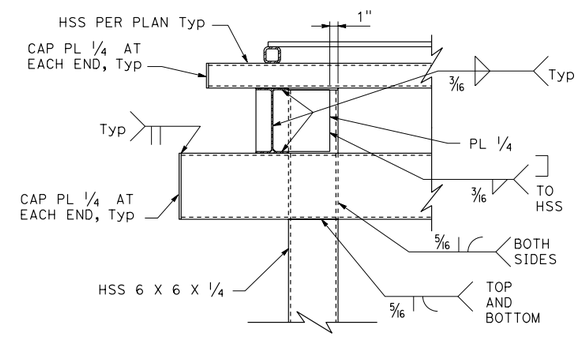

SECTION D-D

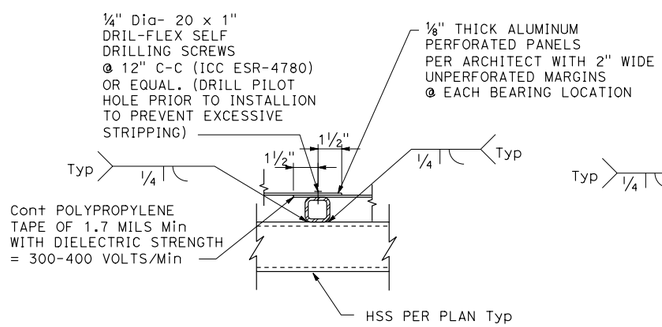

OVERLAP PANEL

NOTE:
SEE OVERLAP PANEL SECTION FOR NOTES NOT SHOWN

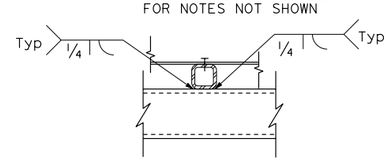

CONTINUOUS PANEL

SECTION E-E

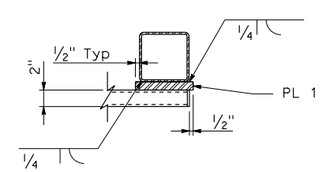

SECTION F-F

CONSTRUCTION DETAILS

NO SCALE

C-18

STATE OF CALIFORNIA - DEPARTMENT OF TRANSPORTATION
Caltrans®

CONSULTANT FUNCTIONAL SUPERVISOR: JAMES FROST
CALCULATED-DESIGNED BY: JENNIFER HSU
CHECKED BY: ERIC NG
REVISED BY
DATE REVISED

LAST REVISION 1-8-13
DATE PLOTTED => 22-JAN-2013
TIME PLOTTED => 17:11

BORDER LAST REVISED 7/2/2010 | USERNAME => s128139 | DGN FILE => 1100020250ga018.dgn | RELATIVE BORDER SCALE IS IN INCHES 0 1 2 3 | UNIT 2833 | PROJECT NUMBER & PHASE 11000202501

FIGURE 4D

Source: United States Department of Interior Geologic Survey: Geologic Map of Yuma, Arizona and California
http://ngmdb.usgs.gov/Prodesc/proddesc_4493.htm

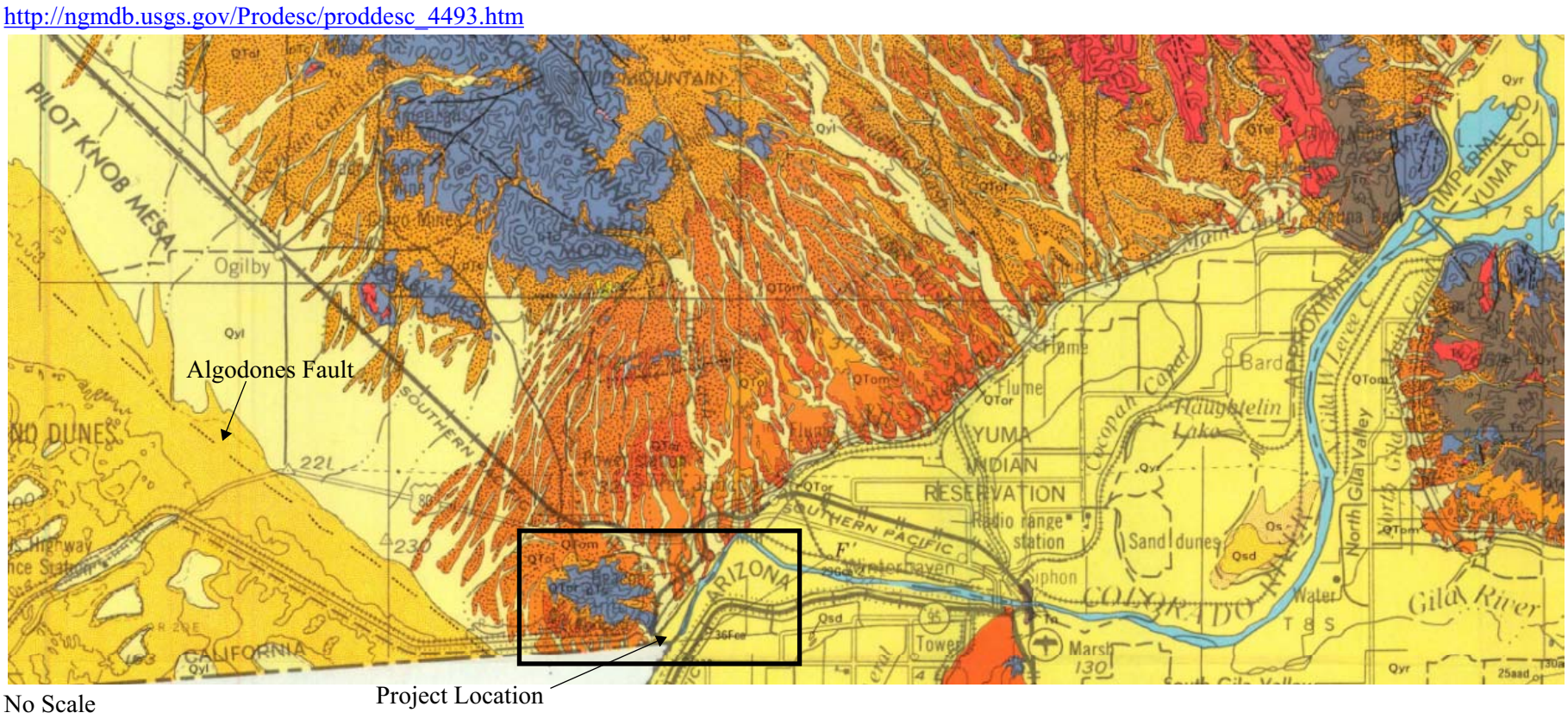

No Scale

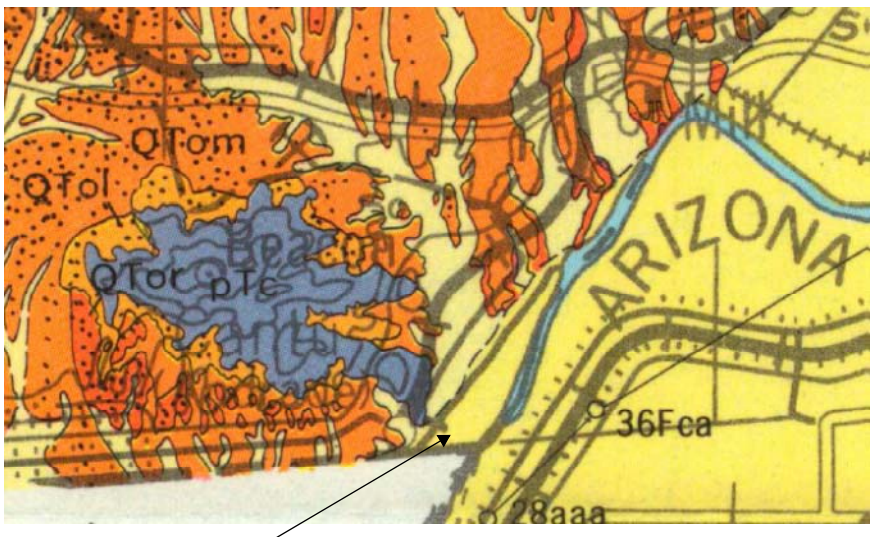

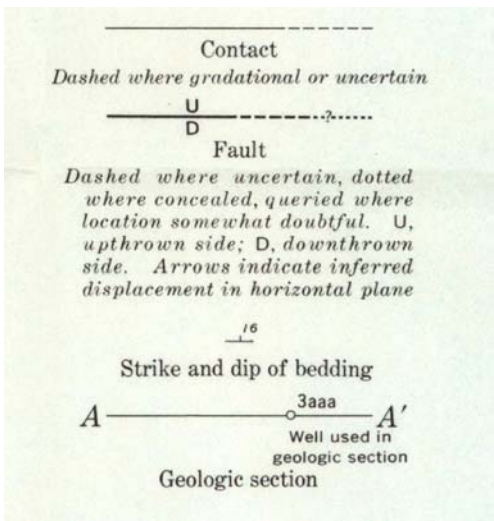

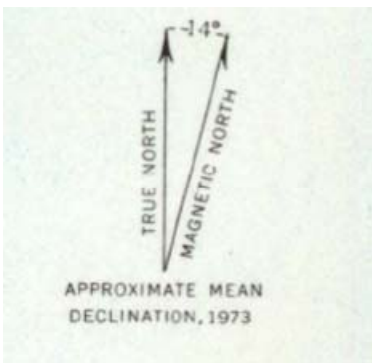

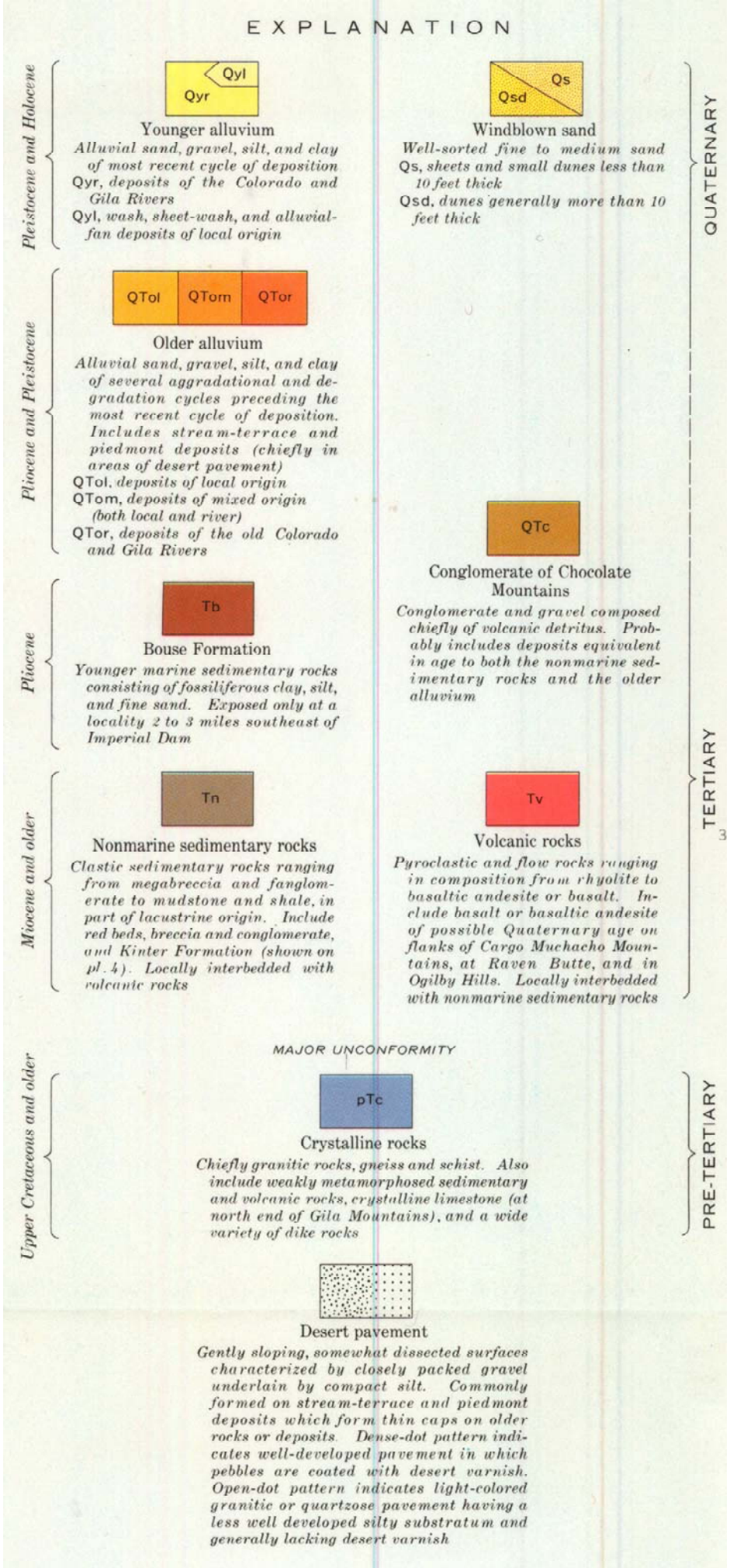

FIGURE 5
GEOLOGIC OVERVIEW MAP

TABLES

TABLE 1: CLIMATE DATA FOR YUMA (YUMA AIRPORT), 1948-2011

Month	Jan	Feb	Mar	Apr	May	Jun	Jul	Aug	Sep	Oct	Nov	Dec	Year
Record high °F	88	97	102	107	116	122	124	120	123	112	98	94	124
Average high °F	68.9	73.8	79.3	86.4	94.4	103.3	107.1	105.9	101.6	90.7	77.7	68.8	88.2
Average low °F	44.9	47.6	51.8	57.4	64.7	72.8	81.0	80.6	74.6	63.1	51.8	44.9	61.3
Record low °F	24	28	32	41	46	54	63	63	53	35	30	27	24
Rainfall inches	0.42	0.29	0.25	0.13	0.04	0.04	0.23	0.47	0.27	0.27	0.19	0.38	2.98
Avg. rainy days (≥ 0.01 inch)	2	2	2	1	0	0	1	2	1	1	1	2	15
Mean monthly sunshine hours	272	283	341	375	419	420	403	395	360	334	293	279	4,174

Notes: Acquired 2012-12-07 from **http://en.wikipedia.org/wiki/Yuma,_Arizona**. Source: WRCC ^ "YUMA WSO AP, ARIZONA (029652)". Western Regional Climate Center. http://www.wrcc.dri.edu/cgi-bin/cliMAIN.pl?az9652.

TABLE 2: REGIONAL ACTIVE FAULTS

Fault Name	FID	M_{MAX}	Fault Type	Fault Dip	Dip Direction	Z_{BOT}	Z_{TOR}	R_{RUP}	R_{JB}	R_X	F_{NM}	F_{RV}
Algodones Fault Zone	442	6.6	N	50º	NE	9.3mi (15.0km)	0.0km	15.2mi (24.5km)	15.2mi (24.5km)	0.12mi (0.2km)	1	0
Elsinore Fault Zone (Laguna Salada Section)	410	7.7	SS	90º	Vertical	8.1mi (13.0km)	0.0km	50.8mi (81.8km)	50.8mi (81.8km)	48.5mi (78.0km)	0	0
San Andres Fault Zone (Cochella Section)	396	7.9	SS	90º	Vertical	8.1mi (13.1km)	0.0km	72.3mi (116.4km)	72.3mi (116.4km)	26.2mi 42.2km)	0	0

Notes: FID = Fault Identification Number (FID), used to identify a fault trace on the Caltrans Deterministic PGA Map.
M_{MAX} = Maximum Moment Magnitude: Defined as the largest earthquake a fault is capable of generating.
Fault Type = Normal (N), Strike Slip (SS)
Fault Dip = The angle between the fault plane and the horizontal plane.
Dip Direction = The direction the fault dips.
Z_{BOT} = The depth to the bottom of the rupture plane.
Z_{TOR} = The depth to the top of the rupture plane.
R_{RUP} = The closest distance to the fault rupture plane.
R_{JB} = The shortest horizontal distance to the surface projection of the rupture area (a.k.a. Joyner-Boone Distance).
R_X = The horizontal distance to the fault trace or surface projection of the top of the rupture plane.
F_{NM} = The faults identified as a normal fault.
F_{RV} = The faults identified as a reverse fault.

TABLE 3: PERCOLATION TEST RESULTS

Percolation Test No.	PT-1	PT-2	PT-3
Percolation Rate (min/in)	4.2	17.3	18.0

TABLE 4: GEOTECHNICAL DESIGN PARAMETERS FOR THE SEDIMENTARY DEPOSITS

Design Parameter	**Value**
Unit Weight (γ)	120pcf
Friction Angle (φ)	30°
Cohesion (C)	0psf
Coefficient of Friction (δ)	0.36
Maximum Allowable Soil Bearing Pressure (q_A)	2,000psf
Lateral Soil Pressure Passive Condition (k_p)	360psf/ft
Lateral Soil Pressure Active Condition (k_a)	40psf/ft
Lateral Soil Pressure At-Rest Condition (k_o)	60psf/ft
Site Class	E

Notes: For the maximum allowable soil bearing pressure provided the total settlement is not expected to exceed one-inch (1.0in).

TABLE 5: RETAINING WALL DESIGN PARAMETERS

Retaining Wall	**Wall Type**	**Beginning Station DSW Line**	**Ending Station DSW Line**	**L (ft)**	**H_{MAX} (ft)**	**Slope Below**	**Slope Above**	**Wall Batter**	**Cut/Fill**
RW-1	Type 1	5+65	8+07.80	242.8	6	Varies	Horizontal	Vertical	Cut

APPENDICES

APPENDIX I

LOG OF TEST BORING AND SITE DATA

DIST	COUNTY	ROUTE	POST MILES TOTAL PROJECT	SHEET No	TOTAL SHEETS
11	Imp	186	0.0/0.4		

REGISTERED CIVIL ENGINEER DATE

PLANS APPROVAL DATE

REGISTERED PROFESSIONAL ENGINEER RICHARD RUSNAK No. C69228 Exp. 6/30/2014 CIVIL STATE OF CALIFORNIA

The State of California or its officers or agents shall not be responsible for the accuracy or completeness of electronic copies of this plan sheet.

BENCH MARK

STATION DESIGNATION	ORDER	NORTHING	EASTING	ELEVATION	DESCRIPTION
186 03	3RD	1845385.69	7030343.63	129.31	PK & WASHER FLUSH IN ASPHALT

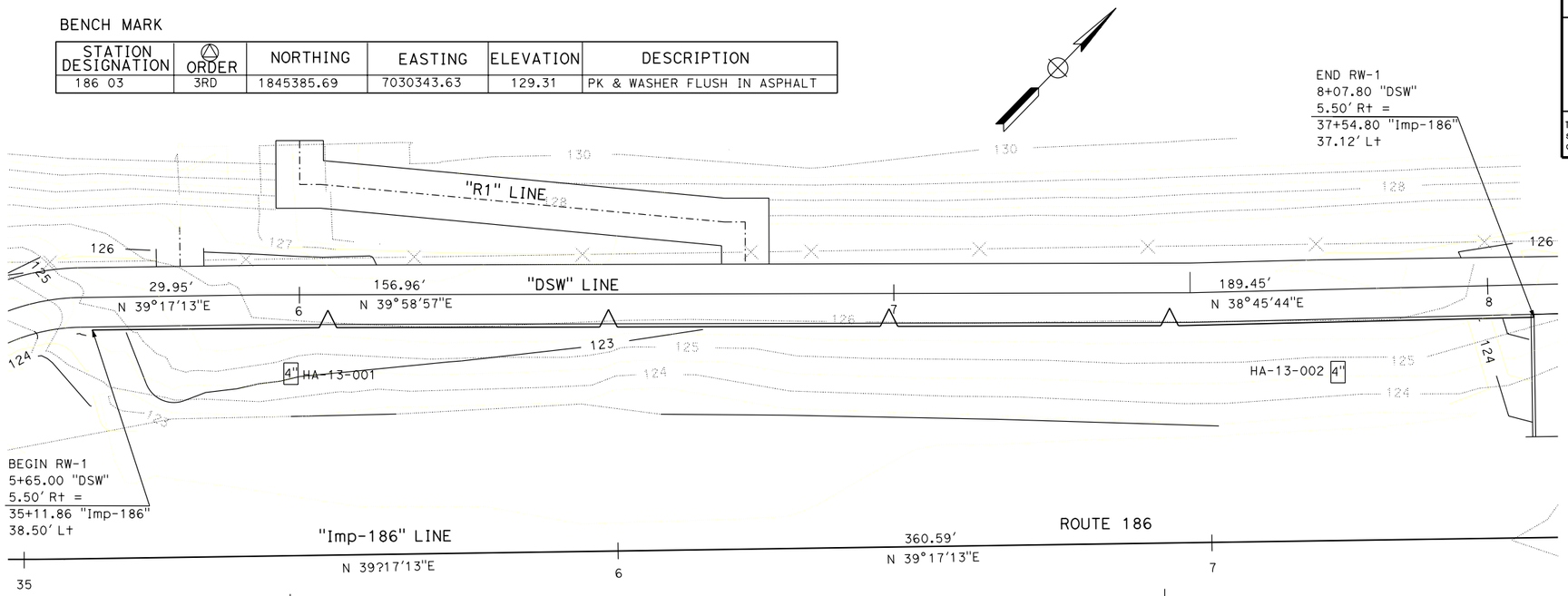

PLAN VIEW

SCALE 1" = 10'

NOTE:

1. THIS LOTB WAS PREPARED IN ACCORDANCE WITH THE CALTRANS SOIL & ROCK LOGGING, CLASSIFICATION, AND PRESENTATION MANUAL (2010).

2. CHAOTIC BOULDERS UP TO 30 INCHES IN ANY ONE DIMENSION PRESENT AT THE GROUND SURFACE WITHIN THE PROJECT AREA.

30.05' Lt STA 35+44.75 C/L "Imp-186"

HA-13-001 4"

SILTY SAND WITH GRAVEL AND COBBLE (SM); pale brown; dry; from fine to coarse SAND; some FINES; little from fine to coarse, from angular to Sub rounded GRAVEL; 15% igneous and metamorphic COBBLES, hard 3-6 inches; FILL; estimated loose to medium dense.

SILT WITH SAND (ML); light yellowish brown; moist; low plasticity; estimated very soft to soft.

ELASTIC SILT WITH SAND (MH); dark brown; moist; medium plasticity; estimated very soft to soft.

SANDY SILT (ML); pale brown; moist; low plasticity; estimated very soft to soft.

01/16/2013

TERMINATED AT Elev 115.54'

PROFILE VIEW

SCALE: Vert 1" = 2'
Horiz 1" = 10'

27.76' Lt STA 37+21.50 C/L "Imp-186"

HA-13-002 4"

SILTY SAND WITH GRAVEL AND COBBLE (SM); pale brown; dry; from fine to coarse SAND; some FINES; little from fine to coarse, from angular to Sub rounded GRAVEL; 15% igneous and metamorphic COBBLES, hard 3-6 inches; FILL; estimate loose to medium dense.

SILT WITH SAND (ML); light yellowish brown; moist; low plasticity; estimated very soft to soft.

ELASTIC SILT WITH SAND (MH); dark brown; moist; medium plasticity; estimated very soft to soft.

SANDY SILT (ML); pale brown; moist; low plasticity; estimated very soft to soft.

01/16/2013

TERMINATED AT Elev 115.50'

ENGINEERING SERVICES	GEOTECHNICAL SERVICES	STATE OF CALIFORNIA DEPARTMENT OF TRANSPORTATION	DIVISION OF ENGINEERING SERVICES STRUCTURE DESIGN DESIGN BRANCH	BRIDGE NO. / POST MILES	Andrade SR-186 LOG OF TEST BORINGS
FUNCTIONAL SUPERVISOR NAME: SHAWN WEI	DRAWN BY: MARVIN CANTON CHECKED BY: BRIAN HINMAN	FIELD INVESTIGATION BY: RICHARD RUSNAK	CU EA 294801		

OGS CIVIL LOG OF TEST BORINGS SHEET

ORIGINAL SCALE IN INCHES FOR REDUCED PLANS 0 1 2 3

DISREGARD PRINTS BEARING EARLIER REVISION DATES

REVISION DATES SHEET OF

FILE => 1100020250qa003.dgn

USERNAME => s128139 DATE PLOTTED => 12-MAR-2013 TIME PLOTTED => 16:52

DIST	COUNTY	ROUTE	POST MILES TOTAL PROJECT	SHEET No	TOTAL SHEETS
11	Imp	186	0.0/0.4		

REGISTERED CIVIL ENGINEER DATE

PLANS APPROVAL DATE

REGISTERED PROFESSIONAL ENGINEER RICHARD RUSNAK No. C69228 Exp. 6/30/2014 CIVIL STATE OF CALIFORNIA

The State of California or its officers or agents shall not be responsible for the accuracy or completeness of electronic copies of this plan sheet.

BENCH MARK

STATION DESIGNATION	ORDER	NORTHING	EASTING	ELEVATION	DESCRIPTION
186 03	3RD	1845385.69	7030343.63	129.31	PK & WASHER FLUSH IN ASPHALT

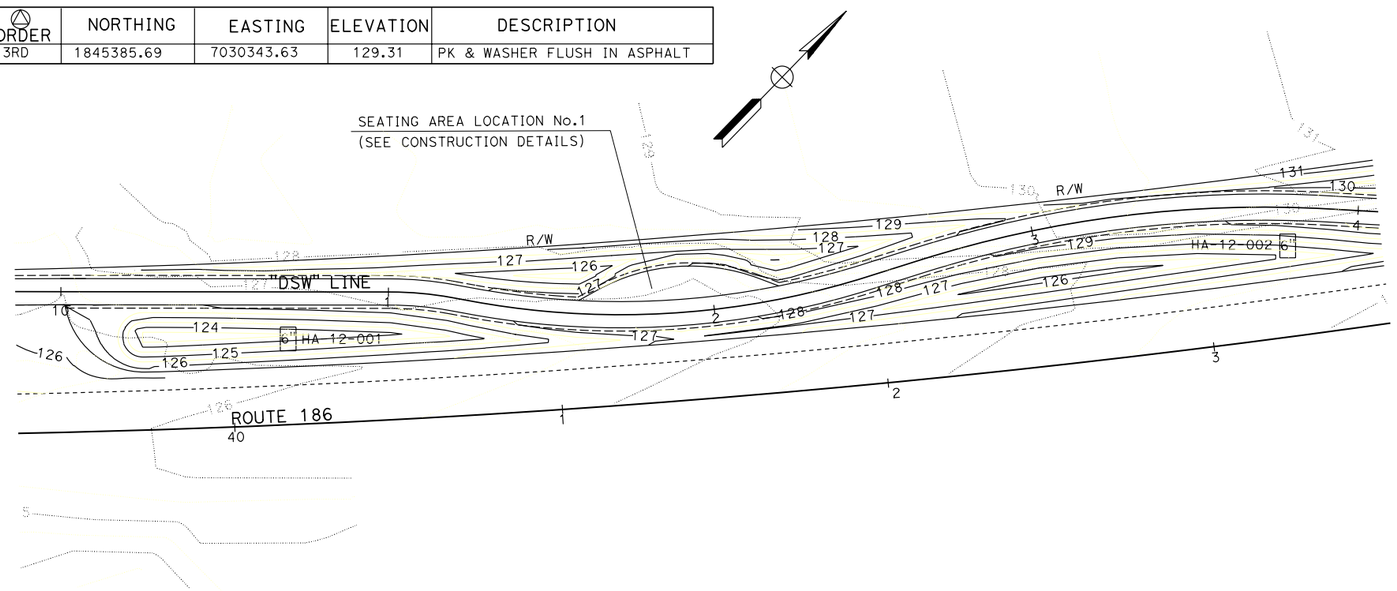

PLAN VIEW
SCALE 1" = 20'

NOTE:

1. THIS LOTB WAS PREPARED IN ACCORDANCE WITH THE CALTRANS SOIL & ROCK LOGGING, CLASSIFICATION, AND PRESENTATION MANUAL (2010).

2. CHAOTIC BOULDERS UP TO 30 INCHES IN ANY ONE DIMENSION PRESENT AT THE GROUND SURFACE WITHIN THE PROJECT AREA.

26.30' Lt STA 40+17.00
C/L "Imp-186"

HA-12-001

6"

SILTY SAND WITH GRAVEL AND COBBLE (SM); pale brown; dry; from fine to coarse SAND; some FINES; little from fine to coarse, from angular to Sub rounded GRAVEL; 15% igneous and metamorphic COBBLES, hard 3-6 inches; FILL; estimated loose to medium dense.

SILT WITH SAND (ML); light yellowish brown; moist; low plasticity; estimated very soft to soft.

04/12/2012
TERMINATED AT Elev 121.40'

27.50' Lt STA 43+26.40
C/L "Imp-186"

HA-12-002

6"

SILTY SAND WITH GRAVEL AND COBBLE (SM); pale brown; dry; from fine to coarse SAND; some FINES; little from fine to coarse, from angular to Sub rounded GRAVEL; 15% igneous and metamorphic COBBLES, hard 3-6 inches; FILL; estimated loose to medium dense.

SILT WITH SAND (ML); light yellowish brown; moist; low plasticity; estimated very soft to soft.

04/12/2012
TERMINATED AT Elev 123.50'

130 129 128 127 126 125 124 123 122 121 120

PROFILE VIEW
SCALE:Vert 1" = 2'
Horiz 1" = 20'

ENGINEERING SERVICES	GEOTECHNICAL SERVICES	STATE OF CALIFORNIA DEPARTMENT OF TRANSPORTATION	DIVISION OF ENGINEERING SERVICES STRUCTURE DESIGN DESIGN BRANCH	BRIDGE NO. / POST MILES	Andrade SR-186 LOG OF TEST BORINGS
FUNCTIONAL SUPERVISOR NAME: SHAWN WEI	DRAWN BY: MARVIN CANTON CHECKED BY: BRIAN HINMAN	FIELD INVESTIGATION BY: RICHARD RUSNAK			

OGS CIVIL LOG OF TEST BORINGS SHEET

ORIGINAL SCALE IN INCHES FOR REDUCED PLANS 0 1 2 3

CU EA 294801

FILE => 1100020250ga004.dgn

DISREGARD PRINTS BEARING EARLIER REVISION DATES

REVISION DATES SHEET OF

USERNAME => s128139 DATE PLOTTED => 12-MAR-2013 TIME PLOTTED => 16:52

DIST	COUNTY	ROUTE	POST MILES TOTAL PROJECT	SHEET No	TOTAL SHEETS
11	Imp	186	0.0/0.4		

REGISTERED CIVIL ENGINEER DATE

PLANS APPROVAL DATE

REGISTERED PROFESSIONAL ENGINEER RICHARD RUSNAK No. C69228 Exp. 6/30/2014 CIVIL STATE OF CALIFORNIA

The State of California or its officers or agents shall not be responsible for the accuracy or completeness of electronic copies of this plan sheet.

BENCH MARK

STATION DESIGNATION	ORDER	NORTHING	EASTING	ELEVATION	DESCRIPTION
186 03	3RD	1845385.69	7030343.63	129.31	PK & WASHER FLUSH IN ASPHALT

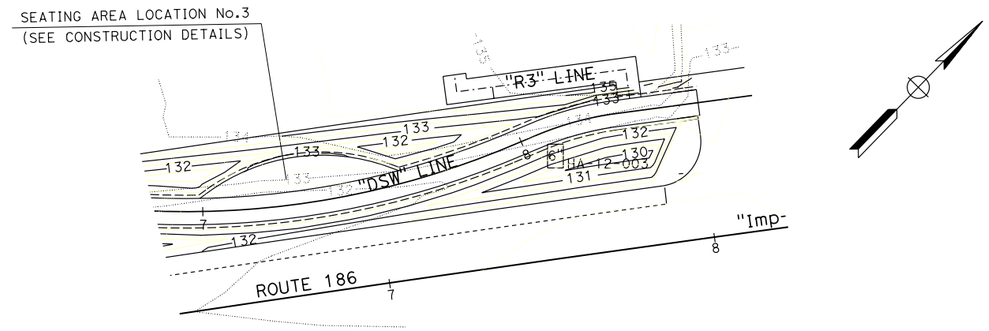

NOTE:

1. THIS LOT B WAS PREPARED IN ACCORDANCE WITH THE CALTRANS SOIL & ROCK LOGGING, CLASSIFICATION, AND PRESENTATION MANUAL (2010).

2. CHAOTIC BOULDERS UP TO 30 INCHES IN ANY ONE DIMENSION PRESENT AT THE GROUND SURFACE WITHIN THE PROJECT AREA.

PLAN VIEW
SCALE 1" = 20'

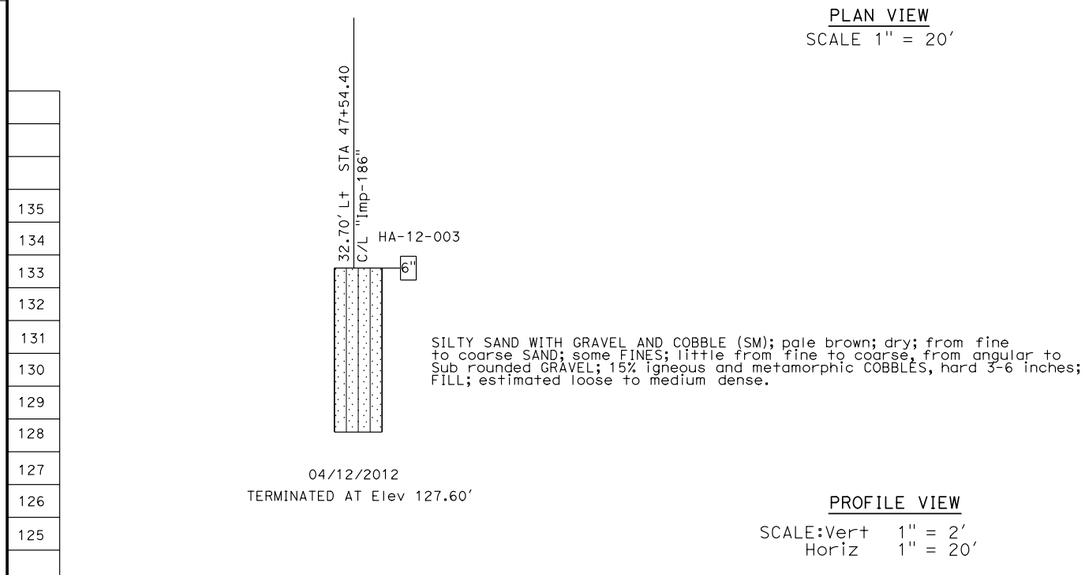

PROFILE VIEW
SCALE:Vert 1" = 2'
Horiz 1" = 20'

ENGINEERING SERVICES	GEOTECHNICAL SERVICES	STATE OF CALIFORNIA DEPARTMENT OF TRANSPORTATION	DIVISION OF ENGINEERING SERVICES STRUCTURE DESIGN DESIGN BRANCH	BRIDGE NO. / POST MILES	Andrade SR-186 LOG OF TEST BORINGS
FUNCTIONAL SUPERVISOR NAME: SHAWN WEI	DRAWN BY: MARVIN CANTON / CHECKED BY: BRIAN HINMAN	FIELD INVESTIGATION BY: RICHARD RUSNAK	CU EA 294801	DISREGARD PRINTS BEARING EARLIER REVISION DATES	REVISION DATES / SHEET / OF

OGS CIVIL LOG OF TEST BORINGS SHEET

ORIGINAL SCALE IN INCHES FOR REDUCED PLANS 0 1 2 3

FILE => 1100020250qa005.dgn

USERNAME => s128139 DATE PLOTTED => 12-MAR-2013 TIME PLOTTED => 16:52

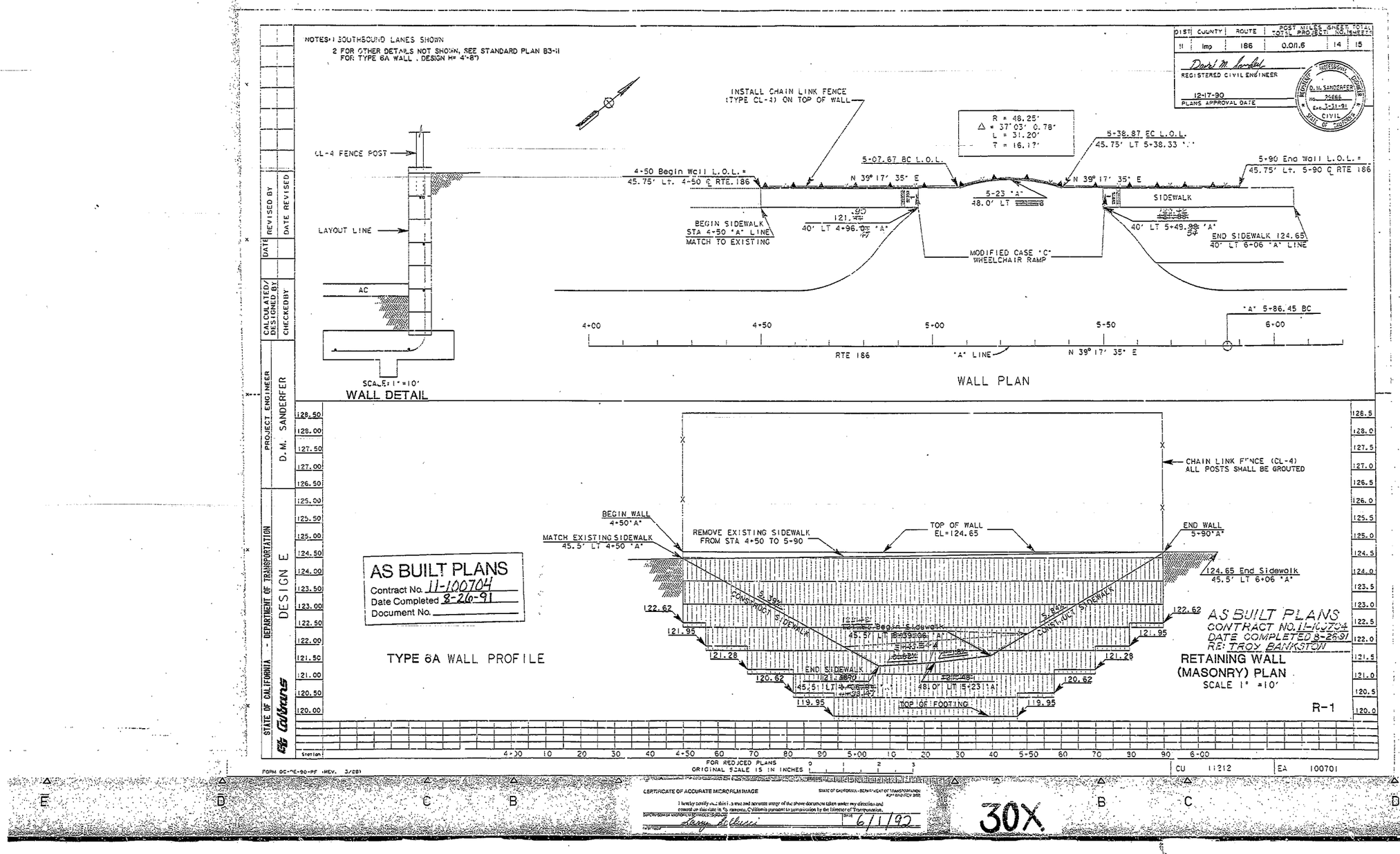
NOTES: 1 SOUTHBOUND LANES SHOWN
2 FOR OTHER DETAILS NOT SHOWN, SEE STANDARD PLAN B3-1 FOR TYPE 6A WALL, DESIGN H= 4'-8")
DIST 11 | COUNTY Imp | ROUTE 186 | POST MILES 0.0/1.6 | SHEET TOTAL 14 | TOTAL PROJECT NO. SHEETS 15
REGISTERED CIVIL ENGINEER
12-17-90
PLANS APPROVAL DATE
D. M. SANDERFER
No. 25686
Exp. 3-31-91
CIVIL
STATE OF CALIFORNIA
INSTALL CHAIN LINK FENCE (TYPE CL-4) ON TOP OF WALL
R = 48.25'
Δ = 37°03' 0.78"
L = 31.20'
T = 16.17'
5-38.87 EC L.O.L.
45.75' LT 5+38.33 "A"
5-07.67 BC L.O.L.
N 39° 17' 35" E
4-50 Begin Wall L.O.L. =
45.75' Lt. 4-50 ℄ RTE. 186
5-90 End Wall L.O.L. =
45.75' Lt. 5-90 ℄ RTE 186
CL-4 FENCE POST
LAYOUT LINE
AC
SCALE: 1" = 10'
WALL DETAIL
5-23 "A"
48.0' LT
SIDEWALK
BEGIN SIDEWALK
STA 4+50 "A" LINE
MATCH TO EXISTING
40' LT 4+96.90 "A"
40' LT 5+49.99 "A"
END SIDEWALK 124.65
40' LT 6-06 "A" LINE
MODIFIED CASE "C" WHEELCHAIR RAMP
"A" 5-86.45 BC
4+00
4+50
5+00
5+50
6+00
RTE 186
"A" LINE
N 39° 17' 35" E
WALL PLAN
CHAIN LINK FENCE (CL-4)
ALL POSTS SHALL BE GROUTED
BEGIN WALL
4+50 "A"
MATCH EXISTING SIDEWALK
45.5' LT 4+50 "A"
REMOVE EXISTING SIDEWALK
FROM STA 4+50 TO 5+90
TOP OF WALL
EL=124.65
END WALL
5+90 "A"
124.65 End Sidewalk
45.5' LT 6+06 "A"
CONSTRUCT SIDEWALK
Begin Sidewalk
END SIDEWALK
TOP OF FOOTING
122.62
121.95
121.28
120.62
119.95
AS BUILT PLANS
Contract No. 11-100704
Date Completed 8-26-91
Document No.
TYPE 6A WALL PROFILE
AS BUILT PLANS
CONTRACT NO. 11-100704
DATE COMPLETED 8-26-91
RE: TROY BANKSTON
RETAINING WALL
(MASONRY) PLAN
SCALE 1" = 10'
R-1
PROJECT ENGINEER D. M. SANDERFER
DESIGN E
CALCULATED/DESIGNED BY
CHECKED BY
DATE
REVISED BY
DATE REVISED
FOR REDUCED PLANS ORIGINAL SCALE IS IN INCHES
CU 11212
EA 100701
CERTIFICATE OF ACCURATE MICROFILM IMAGE
DATE 6/1/92
30X

SOILS INVESTIGATION

FOR

ANDRADE U. S. PORT OF ENTRY ADDITION

in

ANDRADE, CALIFORNIA 92283

JULY 2005

Job No. G05-075
Lab No. 2552

REGISTERED PROFESSIONAL ENGINEER
ELDON V. NICKLAUS
NO. 31217
CIVIL
9/30/05
STATE OF CALIFORNIA

Prepared for
ASCG, Inc.
6501 Americas Pkwy. NE, Suite 400
Albuquerque, NM 87110-5372

Prepared by
NEI Geotechnical
2211 E. Palo Verde Street
Yuma, AZ 85365
Phone: (928) 344-8374

LEGEND

BH#3 BORING LOCATION

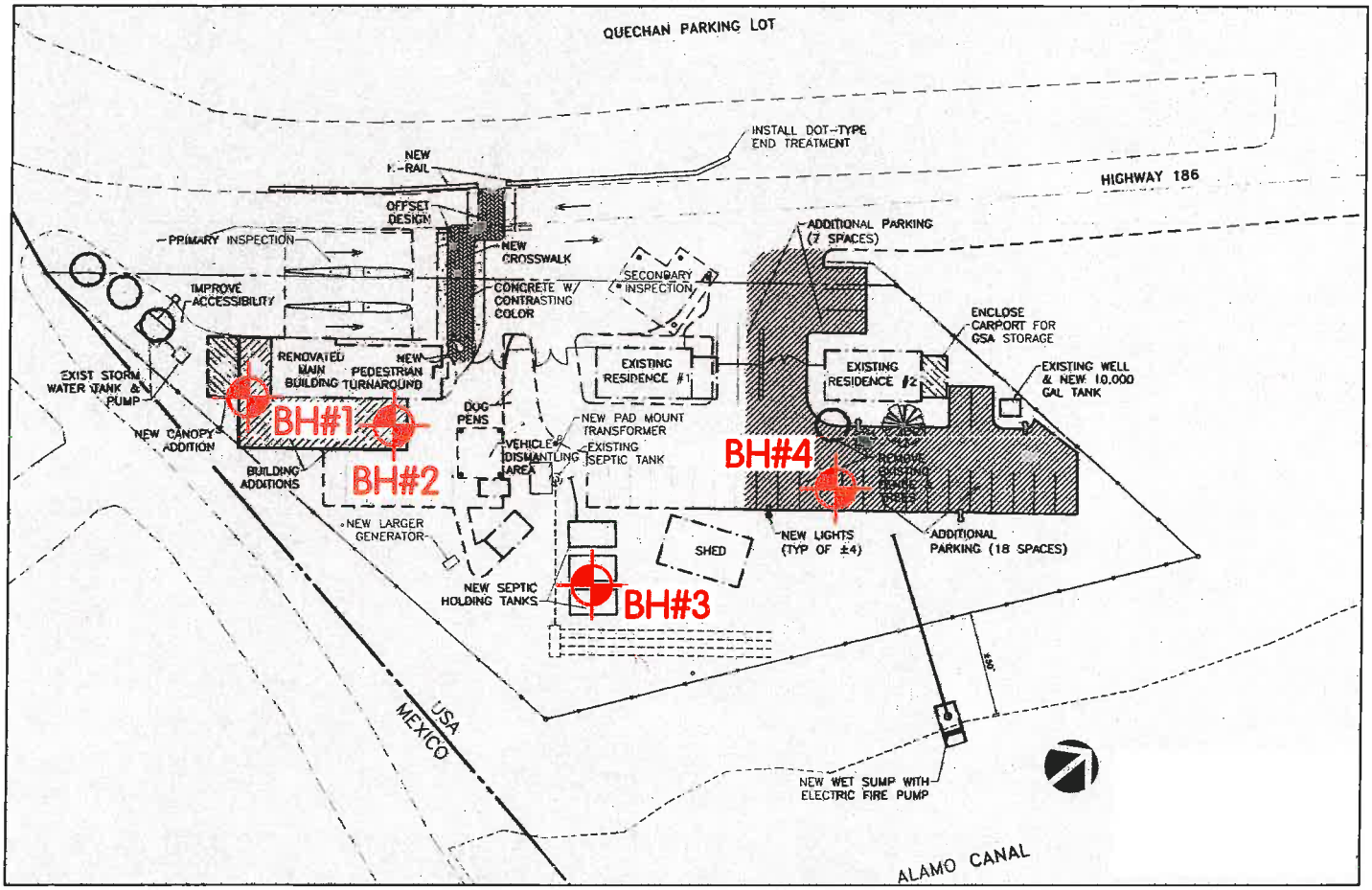

PLATE C

BORING LOCATION MAP

ANDRADE U.S. PORT OF ENTRY ADDITION
JOB # G05-075
LAB # 2552

NEI GEOTECHNICAL
1881 West 24th Street P.O. Box 6029
YUMA, ARIZONA 85364 (928)344-8374
Email: nei@neiaz.com

IDENTIFICATION, CLASSIFICATION AND DESCRIPTION OF SOILS

UNIFIED SOIL CLASSIFICATION SYSTEM

MAJOR DIVISIONS & SUBDIVISIONS			STANDARD NAMES AND SOIL GROUP DESCRIPTIONS	SYMB.	DESCRIPTIVE INFORMATION TO BE ADDED TO THE STANDARD NAMES FOR DESCRIPTION
COARSE GRAINED SOILS Less than one-half the total soil passing the 200 mesh sieve.	GRAVELLY SOILS Less than one-half the coarse grains passing the No. 4 sieve	GRAVELS "clean" material Little or no fines	WELL GRADED GRAVEL (GW) Well-graded gravels or gravel-sand mixtures, little or no fines.		Maximum size, angularity and surface conditions, friability or hardness, and approximate percentage of sand, if any.
			POORLY GRADED GRAVEL (GP) Poorly graded gravels or sand-gravel mixtures, little or no fines.		Maximum size, predominant size, angularity, surface conditions, friability or hardness, and approximate percentage of sand, if any.
		GRAVEL WITH FINES "dirty" material Apprec. amount of fines	SILTY GRAVEL (GM) Silty gravels, or poorly graded gravel-sand-silt mixtures.		Maximum size, predominant size, friability or hardness; describe fines as being very silty, moderately silty, or slightly silty.
			CLAYEY GRAVEL (GC) Clayey gravels or gravel-sand-clay mixtures.		Well or poorly graded, maximum size, predominant size if poorly graded, angularity, friability or hardness; describe fines as slightly, moderately, or very clayey or type of binder in well graded gravels with clay binder.
	SANDY SOILS More than one-half the coarse grains passing the No. 4 sieve.	SANDS "clean" material Little fines	WELL GRADED SAND (SW) Well graded sands or gravelly sands, little or no fines.		Angularity, particle shape, friability or hardness, approximate color, percentage of gravel, if any.
			POORLY GRADED SAND (SP) Poorly graded sands or gravelly sands, little or no fines.		Coarse, medium, or fine particle, particle shape, clean or slightly dirty, approximate percentage of gravel, if any.
		SANDS WITH FINES "dirty" material Apprec. amount of fines	SILTY SAND (SM) Silty sands or poorly graded sand-silt mixtures.		Fine, medium, or coarse particles, shape and hardness of particles, large, medium or small proportion of silt, color, approximate percentage of gravel, if any.
			CLAYEY SAND (SC) Clayey sands or sand-clay mixture.		Well graded or poorly graded, predominant size if poorly graded, quality of binder if well graded, large medium, or small amount of clay, color, approximate percentage of gravel, if any.
FINE GRAINED SOILS More than one-half the total soil passing the 200 mesh sieve.	SILT AND CLAY SOILS with low compressibility		SILT (ML) Inorganic silts and very fine sand, silty or clayey fine sands.		Presence of clay or sand, and color, degree of plasticity, if any.
			LEAN CLAY (CL) Inorganic clays of low to medium plasticity, gravelly or sandy.		Degree of plasticity, silt, sand, or gravel content, and color.
			ORGANIC SILT (OL) Organic silts and organic silt-clays of low plasticity.		Visibility of organic material, odor, plasticity, and color.
	SILT AND CLAY SOILS with high compressibility		ELASTIC SILT (MH) Very compressible silts, micaceous or diatomaceous sandy or silt soil.		Presence of clay, degree of plasticity, and color.
			FAT CLAY (CH) Very compressible clays, inorganic clays of high plasticity.		Color, presence of gravel and other significant factors.
			ORGANIC CLAY (OH) Organic clays of medium to high plasticity, very compressible.		Odor, degree of plasticity, and color.
ORGANIC SOILS			PEAT (PT) Peat and other highly organic swamp soils.		Odor, presence of fibrous material, color.

NEI GEOTECHNICAL
A geotechnical & testing division of NICKLAUS ENGINEERING, INC.

Summary of Soil Boring Logs
Andrade Port of Entry Additions
NEI Job No. G05-075/Lab No. 2552

Bore Hole No. Location				
1	0-5' Sandy silt, brown, no rock, wet (ML) N = 5 @ 5'	5-10' Sandy silty, trace clay, brown, wet (ML) N = 7 @ 10'	10-15' Silt, brown, saturated (ML) GW @ 13'	
2	0-1' 3" AC on 12" ABC (Parking lot)	1-5' Sandy silt, brown, set (ML) N = 4 @ 5'	5-10' Sandy silt, brown, wet (ML) N = 5 @ 10'	10-15' Sandy silt, tan-brown, saturated (ML) GW @ 13'
3	0-1' Metal debris, possibly an old metal sign, garbage/waste just below surface.	0-5' Sandy silt, brown, no rock (ML) N = 5 @ 5'	5-10' Silt w/sand, tan-brown, wet (ML) N = 6 @ 10'	10-15' Silt, brown, saturated (ML) N = 6 @ 10' GW @ 10'
4	0-5' Sandy silt, tan-brown, damp (ML) N = 7 @ 5'			

BORING LOG **PROJECT:** Andrade U.S. Port of Entry Addition (#20639)
NEI Job No. G05-075/Lab No. 2552

BORE NO. 1 **LOCATION:** See Boring Location Plate

DEPTH	DESCRIPTION	CLASSIFICATION	N VALUE
0-5'	Sandy silt, brown, no rock, wet	ML	5 @ 5'
5-10'	Sandy silt, trace clay, brown, wet	ML	7 @ 10'
10-15'	Silt, brown, saturated	ML	
	Groundwater level @ 13'		

BORING LOG **PROJECT:** Andrade U.S. Port of Entry Addition (#20639)
NEI Job No. G05-075/Lab No. 2552

BORE NO. 2 **LOCATION:** See Boring Location Plate

DEPTH	DESCRIPTION	CLASSIFICATION	N VALUE
0-1'	3" AC on 12" ABC	parking lot	
1-5'	Sandy silt, brown, wet	ML	4 @ 5'
5-10'	Sandy silt, brown, wet	ML	5 @ 10'
10-15'	Sandy silt, tan-brown, saturated	ML	
	Groundwater level @ 13'		

BORING LOG **PROJECT:** Andrade U.S. Port of Entry Addition (#20639)
NEI Job No. G05-075/Lab No. 2552

BORE NO. 3 **LOCATION:** See Boring Location Plate

DEPTH	DESCRIPTION	CLASSIFICATION	N VALUE
0-1'	Metal debris encountered, possibly metal sign, garbage or waste just below surface.		
0-5'	Sandy silt, brown, no rock	ML	5 @ 5'
5-10'	Silt w/sand, tan-brown, wet	ML	6 @ 10'
10-15'	Silt, brown, saturated	ML	
	Groundwater level @ 10'		

BORING LOG **PROJECT:** Andrade U.S. Port of Entry Addition (#20639)
NEI Job No. G05-075/Lab No. 2552

BORE NO. 4 **LOCATION:** See Boring Location Plate

DEPTH	DESCRIPTION	CLASSIFICATION	N VALUE
0-5'	Sandy silt, tan-brown, damp	ML	7 @ 5'

5-10

NO STOPPING
ANY TIME
NO PARKING
ANY TIME
MINIMUM
FINE $199
LAST U-TURN
USA
750 FEET

U TURN
USA
750 FEET

CURRENCY OR NEGOTIABLE
INSTRUMENTS OVER $10,000
US DOLLARS MUST BE
DECLARED TO US CUSTOM
MAS DE $10,000 DOLARES E
EN EFECTIVO O INSTRUMENT
NEGOCIABLES TENDRAN QU
DECLARARSE A LA ADUAN
AMERICANA
NO STOPPING
ANY TIME
NO PARKING
ANY TIME
MINIMUM
FINE $199

NO STOPPING
ANY TIME
NO PARKING
ANY TIME
MINIMUM
FINE $199

CURRENCY OR NEGOTIABLE INSTRUMENTS OVER $10000 US DOLLARS MUST BE DECLARED TO US CUSTOMS
MAS DE $10000 DOLARES EUA EN EFECTIVO O INSTRUMENTOS NEGOCIABLES TENDRAN QUE DECLARARSE A LA ADUANA AMERICANA
NO PARKING ANY TIME

APPENDIX II

FIELD EXPLORATION DATA

PERCOLATION TEST

GEOTECHNICAL DESIGN SOUTH -2

PROJECT	SR-186 ANDRADE BORDER CROSSING
E-Fis (ID)	11 0002 0250
DATE	4/24-25/2012
TEST MADE BY	EG
AMBIENT TEMP	60-70 deg
WEATHER CONDITION	CLOUDY
SOAKING PERIOD	24 hrs
TYPE OF SOIL	SILTY SAND AND GRAVELLY SAND with some CLAY

CONVERSION FACTOR (K) =0.27 + 8.7/D

CORRECTION FACTOR © = n [1-(O/D)²] + (I/D)²

n = Porosity	0.49
D = Actual Dia of Test Hole (in)	
O = Outside Dia of Perforated Pipe (in)	6
I = Inside Dia of Perforated Pipe (in)	5.75

SITE LAYOUT

Not to Scale

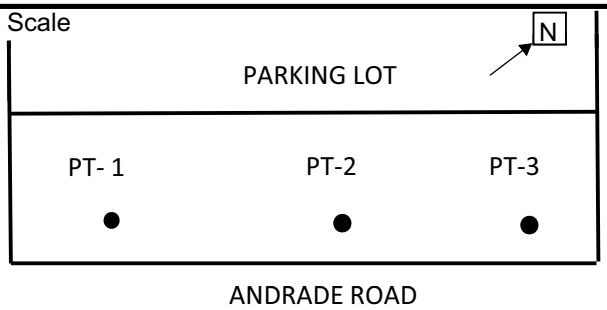

HOLE NO.	PT-1	HOLE NO.	PT-2	HOLE NO.	PT-3
HOLE DEPTH (in)	68	HOLE DEPTH (in)	62	HOLE DEPTH (in)	61
HOLE DIA. (in)	7	HOLE DIA. (in)	8	HOLE DIA. (in)	10
TIME	READININGS	TIME	READININGS	TIME	READININGS
1min56sec	8" - 7"	6min53sec	8" - 7"	9min02sec	8" - 7"
2min03sec	8" - 7"	8min32sec	8" - 7"	9min32sec	8" - 7"
2min06sec	8" - 7"	9min12sec	8" - 7"	10min02sec	8" - 7"
2min10sec	8" - 7"	9min10sec	8" - 7"	10min04sec	8" - 7"
2min14sec	8" - 7"	9min10sec	8" - 7"	10min15sec	8" - 7"
2min18sec	8" - 7"	9min13sec	8" - 7"	10min08sec	8" - 7"
R = Average Percolation Rate		R = Average Percolation Rate		R = Average Percolation Rate	
Ave of last 3 (min/in)=	2.23	Ave of last 3 (min/in)=	9.18	Ave of last 3 (min/in)=	10.15
REMARKS:		REMARKS:		REMARKS:	
Time measurements taken for a 1" drop.		Time measurements taken for a 1" drop.		Time measurements taken for a 1" drop.	
CORRECTION FACTOR (C)	0.80	CORRECTION FACTOR (C)	0.80	CORRECTION FACTOR (C)	0.64
CONVERSION FACTOR (K)	1.51	CONVERSION FACTOR (K)	1.51	CONVERSION FACTOR (K)	1.14
PERCOLATION RATE CALC.		PERCOLATION RATE CALC.		PERCOLATION RATE CALC.	
P = K x R/C		P = K x R/C		P = K x R/C	
4.19		17.26		17.96	
P = PERCOLATION RATE (min/in)	**4.2**	**P = PERCOLATION RATE (min/in)**	**17.3**	**P = PERCOLATION RATE (min/in)**	**18.0**

APPENDIX III
LABORATORY TEST DATA

Engineered Fill

PARTICLE DIAMETER	% PASSING	STD SIEVE
63.5	100	
50.8	96	
38.1	94	
25.4	82	
19.05	76	
12.7	66	
9.525	60	
4.76	49	#4
2.36	43	#8
1.18	40	#16
0.6	36	#30
0.3	25	#50
0.15	16	#100
0.074	12	#200
0.005	8	5u
0.001	6	1u

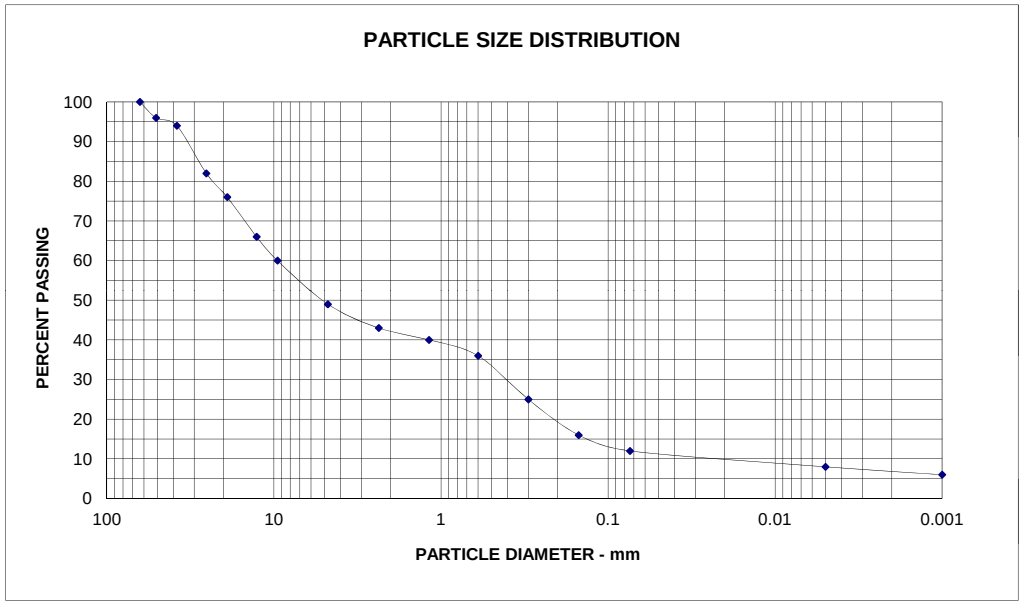

Sedimentary Deposits

PARTICLE DIAMETER	% PASSING	STD SIEVE
4.76		#4
2.36		#8
1.18		#16
0.6		#30
0.3		#50
0.15	100	#100
0.074	83	#200
0.005	13	5u
0.001	9	1u

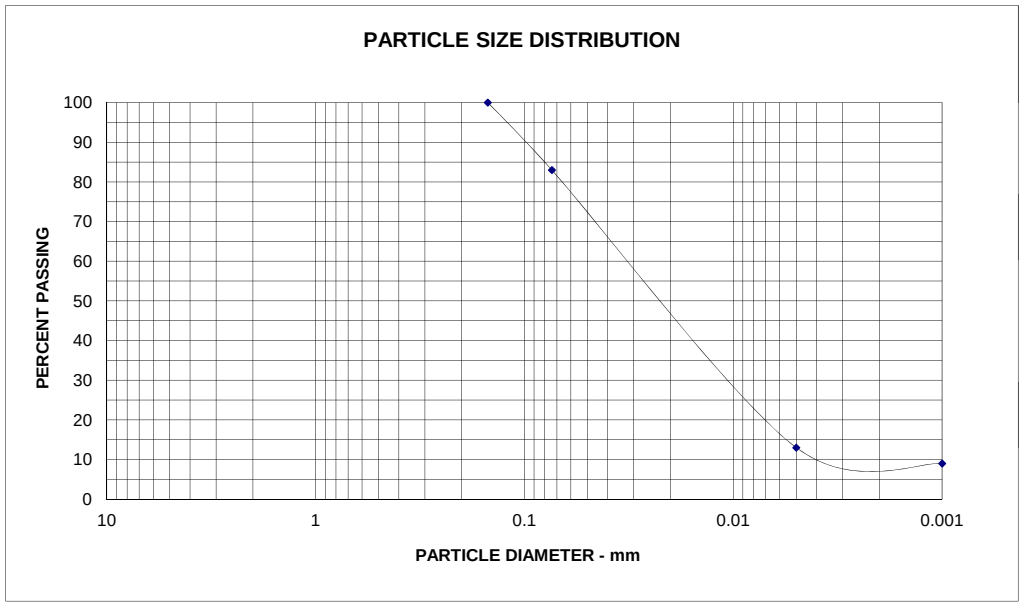

APPENDIX IV
ANALYSES AND CALCULATION

CALIFORNIA DEPARTMENT OF
TRANSPORTATION

Caltrans ARS Online (v2.0)

This web-based tool calculates both deterministic and probabilistic acceleration response spectra for any location in California based on criteria provided in *Appendix B of Caltrans Seismic Design Criteria*. More...

SELECT SITE LOCATION

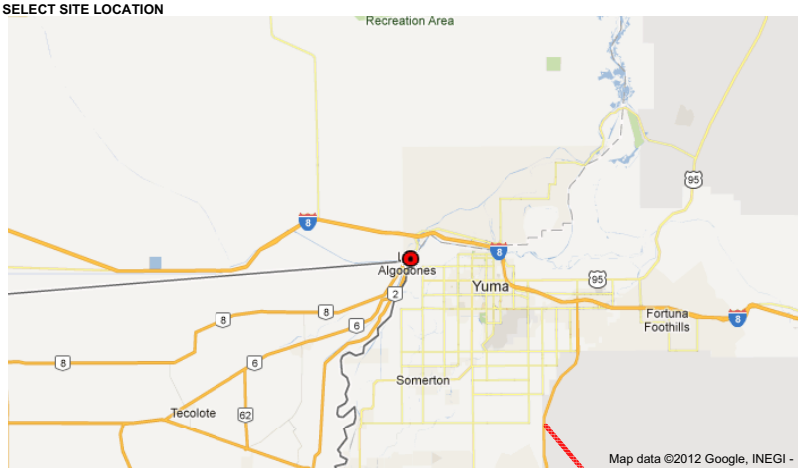

Latitude: 32.71869922 **Longitude:** -114.72812176 ***Vs30:*** 180 m/s Calculate

BASIN LEGEND

Depth to Vs = 1.0 km/s	**400 m**	**500 m**	**600 m**	**700 m**	**800 m**	**1000 m**
Depth to Vs = 2.5 km/s	**3.0 km**	**3.5 km**	**4.0 km**	**5.0 km**	**6.0 km**	
Eastern Shear Zone						

CALCULATED SPECTRA Display Curves: 3 Printer Friendly View

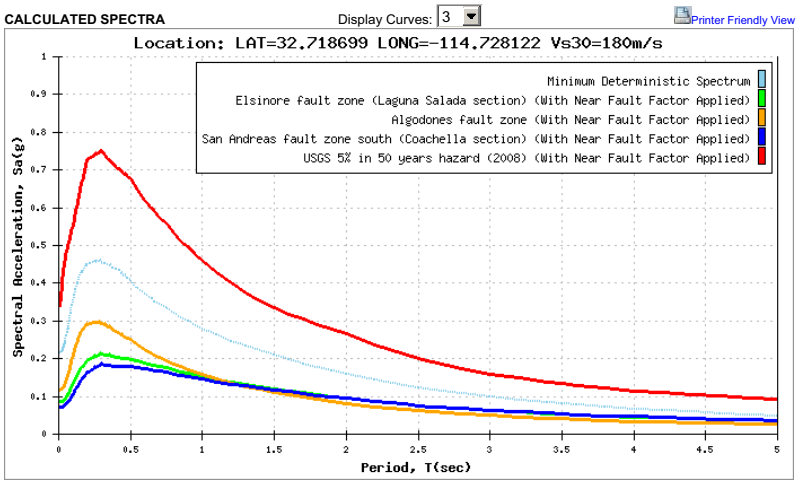

Tabular Data Envelope Only Hide Near Fault Axis Scale Show Basin

Apply Near Fault Adjustment To:
NOTE: Caltrans SDC requires application of a Near Fault Adjustment factor for sites less than 25 km (Rrup) from the causative fault.

☑ Deterministic Spectrum Using

81.82 Km Elsinore fault zone (Laguna Salada section)
24.52 Km Algodones fault zone
116.41 Km San Andreas fault zone south (Coachella section)

☑ Probabilistic Spectrum Using

24.52 Km (Recommend Performing Deaggregation To Verify)

◉ Show Spectrum with Adjustment Only
○ Show Spectrum with and without near fault Adjustment

OK

SITE DATA (ARS Online Version 2.0)

Shear Wave Velocity, V_{S30}:	180 m/s
Latitude:	32.718699
Longitude:	-114.728122
Depth to Vs = 1.0 km/s:	498 m
Depth to Vs = 2.5 km/s:	2.00 km

DETERMINISTIC

Elsinore fault zone (Laguna Salada section)

Fault ID:	410
Maximum Magnitude (MMax):	7.7
Fault Type:	SS
Fault Dip:	90 Deg
Dip Direction:	V
Bottom of Rupture Plane:	13.00 km
Top of Rupture Plane(Ztor):	0.00 km
Rrup	81.82 km
Rjb:	81.82 km
Rx:	77.97 km
Fnorm:	0
Frev:	0

Period	SA (Base Spectrum)	Basin Factor	Near Fault Factor (Applied)	SA (Final Spectrum)
0.01	0.086	1.000	1.000	0.086
0.05	0.097	1.000	1.000	0.097
0.1	0.134	1.000	1.000	0.134
0.15	0.170	1.000	1.000	0.170
0.2	0.194	1.000	1.000	0.194
0.25	0.206	1.000	1.000	0.206
0.3	0.212	1.000	1.000	0.212
0.4	0.203	1.000	1.000	0.203
0.5	0.199	1.000	1.000	0.199
0.6	0.188	1.002	1.000	0.188
0.7	0.179	1.010	1.000	0.181
0.85	0.166	1.023	1.000	0.169
1	0.153	1.036	1.000	0.158
1.2	0.138	1.049	1.000	0.145
1.5	0.121	1.060	1.000	0.128
2	0.096	1.069	1.000	0.102
3	0.063	1.072	1.000	0.067
4	0.046	1.069	1.000	0.049
5	0.036	1.064	1.000	0.038

Algodones fault zone

Fault ID:	442
Maximum Magnitude (MMax):	6.6
Fault Type:	N
Fault Dip:	50 Deg

Dip Direction:	ne
Bottom of Rupture Plane:	15.00 km
Top of Rupture Plane(Ztor):	0.00 km
Rrup	24.52 km
Rjb:	24.52 km
Rx:	0.18 km
Fnorm:	1
Frev:	0

Period	SA (Base Spectrum)	Basin Factor	Near Fault Factor (Applied)	SA (Final Spectrum)
0.01	0.118	1.000	1.000	0.118
0.05	0.139	1.000	1.000	0.139
0.1	0.209	1.000	1.000	0.209
0.15	0.267	1.000	1.000	0.267
0.2	0.291	1.000	1.000	0.291
0.25	0.296	1.000	1.000	0.296
0.3	0.294	1.000	1.000	0.294
0.4	0.273	1.000	1.000	0.273
0.5	0.250	1.000	1.000	0.250
0.6	0.224	1.001	1.002	0.225
0.7	0.203	1.009	1.004	0.206
0.85	0.178	1.022	1.007	0.183
1	0.157	1.035	1.010	0.164
1.2	0.134	1.049	1.010	0.142
1.5	0.110	1.062	1.010	0.118
2	0.081	1.072	1.010	0.087
3	0.049	1.076	1.010	0.053
4	0.034	1.074	1.010	0.037
5	0.025	1.068	1.010	0.027

San Andreas fault zone south (Coachella section)

Fault ID:	396
Maximum Magnitude (MMax):	7.9
Fault Type:	ss
Fault Dip:	90 Deg
Dip Direction:	V
Bottom of Rupture Plane:	13.10 km
Top of Rupture Plane(Ztor):	0.00 km
Rrup	116.41 km
Rjb:	116.41 km
Rx:	42.20 km
Fnorm:	0
Frev:	0

Period	SA (Base Spectrum)	Basin Factor	Near Fault Factor (Applied)	SA (Final Spectrum)
0.01	0.072	1.000	1.000	0.072

0.05	0.079	1.000	1.000	0.079
0.1	0.106	1.000	1.000	0.106
0.15	0.138	1.000	1.000	0.138
0.2	0.161	1.000	1.000	0.161
0.25	0.176	1.000	1.000	0.176
0.3	0.184	1.000	1.000	0.184
0.4	0.180	1.000	1.000	0.180
0.5	0.179	1.000	1.000	0.179
0.6	0.172	1.002	1.000	0.173
0.7	0.167	1.010	1.000	0.168
0.85	0.156	1.023	1.000	0.159
1	0.146	1.036	1.000	0.151
1.2	0.133	1.049	1.000	0.140
1.5	0.118	1.060	1.000	0.125
2	0.095	1.068	1.000	0.101
3	0.063	1.071	1.000	0.068
4	0.046	1.069	1.000	0.050
5	0.037	1.063	1.000	0.039

PROBABILISTIC

Probabilistic Model
USGS Seismic Hazard Map(2008) 975 Year Return Period

Period	SA (Base Spectrum)	Basin Factor	Near Fault Factor (Applied)	SA (Final Spectrum)
0.01	0.338	1.000	1.000	0.338
0.05	0.475	1.000	1.000	0.475
0.1	0.550	1.000	1.000	0.550
0.15	0.648	1.000	1.000	0.648
0.2	0.727	1.000	1.000	0.727
0.25	0.739	1.000	1.000	0.739
0.3	0.749	1.000	1.000	0.749
0.4	0.707	1.000	1.000	0.707
0.5	0.677	1.000	1.000	0.677
0.6	0.616	1.004	1.002	0.620
0.7	0.568	1.008	1.004	0.575
0.85	0.501	1.017	1.007	0.513
1	0.445	1.028	1.010	0.461
1.2	0.381	1.038	1.010	0.400
1.5	0.316	1.052	1.010	0.335
2	0.248	1.069	1.010	0.268
3	0.147	1.078	1.010	0.160
4	0.105	1.081	1.010	0.114
5	0.085	1.082	1.010	0.093

Printer Friendly View

Envelope Data

Period	SA
0.01	0.338
0.05	0.475
0.1	0.550
0.15	0.648
0.2	0.727
0.25	0.739
0.3	0.749
0.4	0.707
0.5	0.677
0.6	0.620
0.7	0.575
0.85	0.513
1	0.461
1.2	0.400
1.5	0.335
2	0.268
3	0.160
4	0.114
5	0.093

http://dap3.dot.ca.gov/shake_stable/v2/print_view_tab.php?x=494.70615096476154&y=-57... 8/9/2012