Dist	COUNTY	ROUTE	POST MILES TOTAL PROJECT	SHEET No.	TOTAL SHEETS
11	SD	5, 805	R40.1, 18.6/18.8	1	56

ACIM-X073(090)E

STATE OF CALIFORNIA
DEPARTMENT OF TRANSPORTATION

PROJECT PLANS FOR CONSTRUCTION ON
STATE HIGHWAY
IN SAN DIEGO COUNTY IN ENCINITAS ON ROUTE 5 AT MACKINNON AVENUE OVERCROSSING AND IN SAN DIEGO ON ROUTE 805 FROM 0.3 MILE TO 0.1 MILE SOUTH OF MURRAY RIDGE ROAD OVERCROSSING

TO BE SUPPLEMENTED BY STANDARD PLANS DATED MAY 2006

INDEX OF PLANS

Sheet No.	Description
1	Title and Location Map
2	Project Control
3-4	Layout
5-7	Construction Details
8-10	Temporary Water Pollution Control Plan and Quantities
11-13	Erosion Control Plan, Details and Quantities
14-18	Contour Grading and Drainage Plan, Profile, Details and Quantities
19	Construction Area Signs
20-23	Traffic Handling Plans and Quantities
24-25	Pavement Delineation and Sign Plan and Quantities
26	Summary of Quantities
27	Plant List
28-29	Planting Plan
30-31	Irrigation Removal Plan
32-33	Irrigation Plans
34-35	Landscape Details
36-37	Existing Utilities Plan
38-56	Revised and New Standard Plans

THE STANDARD PLANS LIST APPLICABLE TO THIS CONTRACT IS INCLUDED IN THE NOTICE TO BIDDERS AND SPECIAL PROVISIONS BOOK.

LOCATION MAP

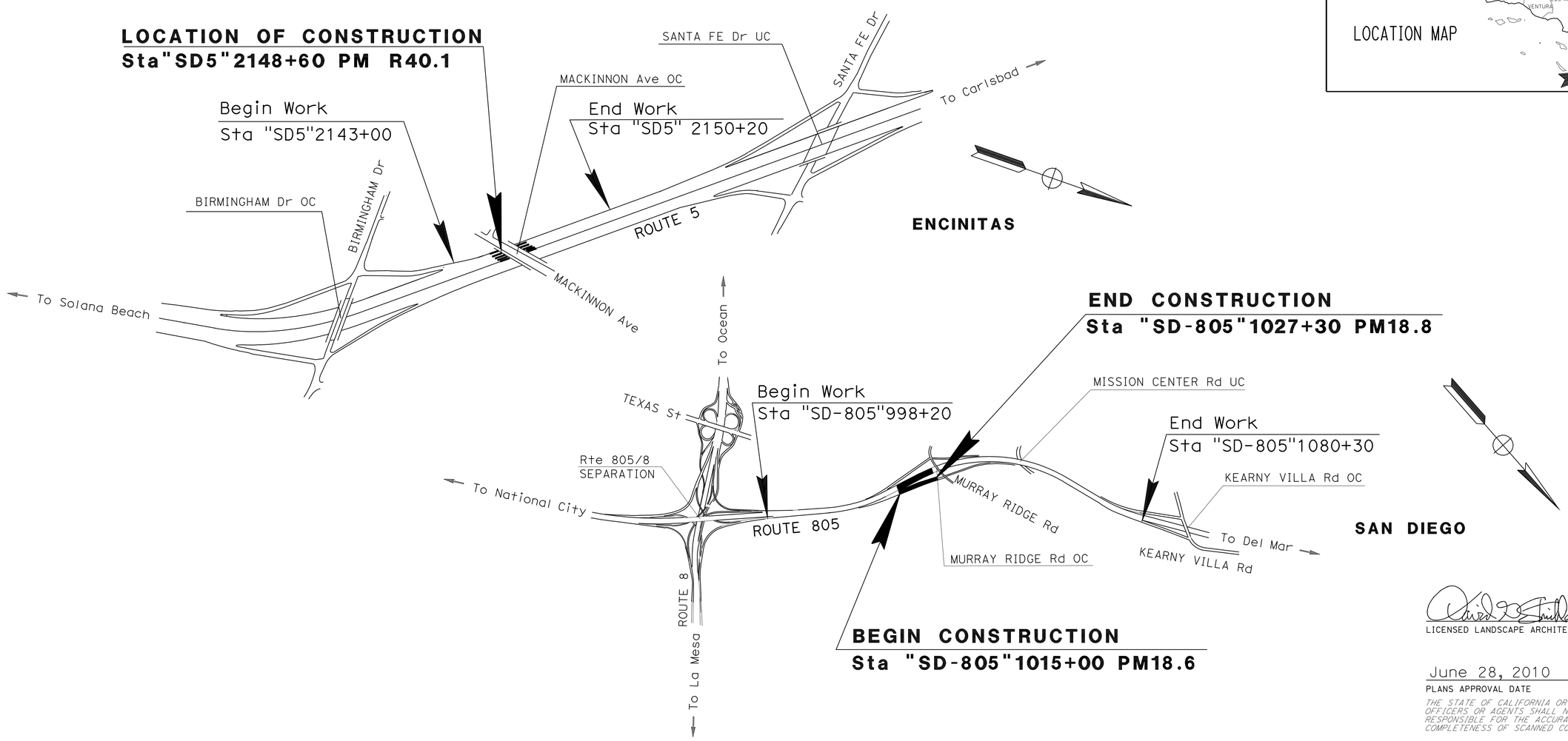

LICENSED LANDSCAPE ARCHITECT

June 28, 2010
PLANS APPROVAL DATE

LICENSED LANDSCAPE ARCHITECT — DAVID A. STROUD — No. 3013 — Original Date 3/31/12 — Renewal Date 05-09-10 — STATE OF CALIFORNIA

THE STATE OF CALIFORNIA OR ITS OFFICERS OR AGENTS SHALL NOT BE RESPONSIBLE FOR THE ACCURACY OR COMPLETENESS OF SCANNED COPIES OF THIS PLAN SHEET.

THE CONTRACTOR SHALL POSSESS THE CLASS (OR CLASSES) OF LICENSE AS SPECIFIED IN THE "NOTICE TO BIDDERS."

NO SCALE

CONTRACT No.	11-292404
PROJECT ID	1100000372

PROJECT MANAGER: STEPHEN ALVAREZ
SENIOR LANDSCAPE ARCHITECT: TOM HAM

LAST REVISION 06-29-10 | DATE PLOTTED => 02-JUL-2010 | TIME PLOTTED => 14:59

Dist	COUNTY	ROUTE	POST MILES TOTAL PROJECT	SHEET No.	TOTAL SHEETS
11	SD	5, 805	R40.1, 18.6/18.8	2	56

PROFESSIONAL LAND SURVEYOR — DATE 06-16-10

PROFESSIONAL LAND SURVEYOR GEORGE J. SCHUH No. 7121 Exp. 12-31-10 STATE OF CALIFORNIA

06-28-10
PLANS APPROVAL DATE

THE STATE OF CALIFORNIA OR ITS OFFICERS OR AGENTS SHALL NOT BE RESPONSIBLE FOR THE ACCURACY OR COMPLETENESS OF SCANNED COPIES OF THIS PLAN SHEET.

NOTES:

CONTACT DISTRICT 11 OFFICE OF LAND SURVEYS, PHONE (858) 487-4305, FOR ADDITIONAL INFORMATION OR QUERIES REGARDING THIS SURVEY PROJECT CONTROL.

BASIS OF BEARINGS AND COORDINATES

FOR THIS PROJECT IS THE CALIFORNIA COORDINATE SYSTEM OF 1983, HPGN EPOCH ADJUSTMENTS [CCS 83 (1991.35], ZONE 6. 3RD ORDER PROJECT CONTROL STATIONS WERE ESTABLISHED IN JUNE 1997 ACCORDING TO CRITERIA SET FORTH IN THE FEDERAL GEODETIC CONTROL SUBCOMMITTEE'S "GEOMETRIC GEODETIC ACCURACY STANDARDS AND SPECIFICATIONS FOR USING GPS RELATIVE POSITIONING TECHNIQUES" REPRINTED AUGUST 1, 1989.

Rte 5 AT SANTA FE DRIVE

BASIS OF COORDINATES

THIS GPS FAST STATIC SURVEY WAS CONSTRAINED TO THE HPGN 1ST ORDER STATION "HPGN CA D 11 DC" AND "CALTRANS" 2ND ORDER STATION "5-40.2".

BASIS OF ELEVATIONS

FOR THIS PROJECT IS THE NORTH AMERICAN VERTICAL DATUM OF 1988 (NAVD 88). ELEVATIONS ARE ESTABLISHED BY GPS FAST STATIC CONSTRAINING TO "HPGN CA D 11 DC".

Rte 805 AT MURRAY RIDGE Rd

BASIS OF COORDINATES

THIS GPS RTK SURVEY WAS CONSTRAINED TO THE CITY OF SAN DIEGO 2ND ORDER STATION "8-KP7.0" AND CALTRANS 1ST ORDER RTN BASE STATION "KMSA".

BASIS OF ELEVATIONS

THIS GPS RTK SURVEY WAS CONSTRAINED TO THE CITY OF SAN DIEGO 2ND ORDER STATION "8-KP7.0"

ABBREVIATIONS:

CADT - CALIFORNIA DEPARTMENT OF TRANSPORTATION
CDH - CALIFORNIA DIVISION OF HIGHWAYS
RTK - REAL TIME KINEMATIC
HPGN - HIGH PRECISION GEODETIC NETWORK

LEGEND:

(1) 1ST ORDER STATION
(2) 2ND ORDER STATION
(3) 3RD ORDER STATION

CONTROL FOR DESIGN AND CONSTRUCTION

STATION DESIGNATION	ORDER	NORTHING	EASTING	ELEVATION	DESCRIPTION
HPGN CA D 11 DC	1ST	1956319.83	6246846.56	231.66	3 1/4" CADT ALUMINUM DISK
KMSA	1ST	1881131.16	6281444.25	416.53	RTN BASE STATION
5-40.2	2ND	1956453.30	6246527.29		2" CDH DISK
8-KP7.0	2ND	1864181.63	6288984.99	194.14	2 1/4" BRASS DISK
WP54063	3RD	1958438.39	6245439.97	198.10	1" IRON PIPE W/PLASTIC PLUG
WP805-18.01	3RD	1866330.88	6287348.68	320.78	60d SPIKE
WP805-18.02	3RD	1866632.86	6286461.35	351.94	CHISELED "X" IN SIDEWALK

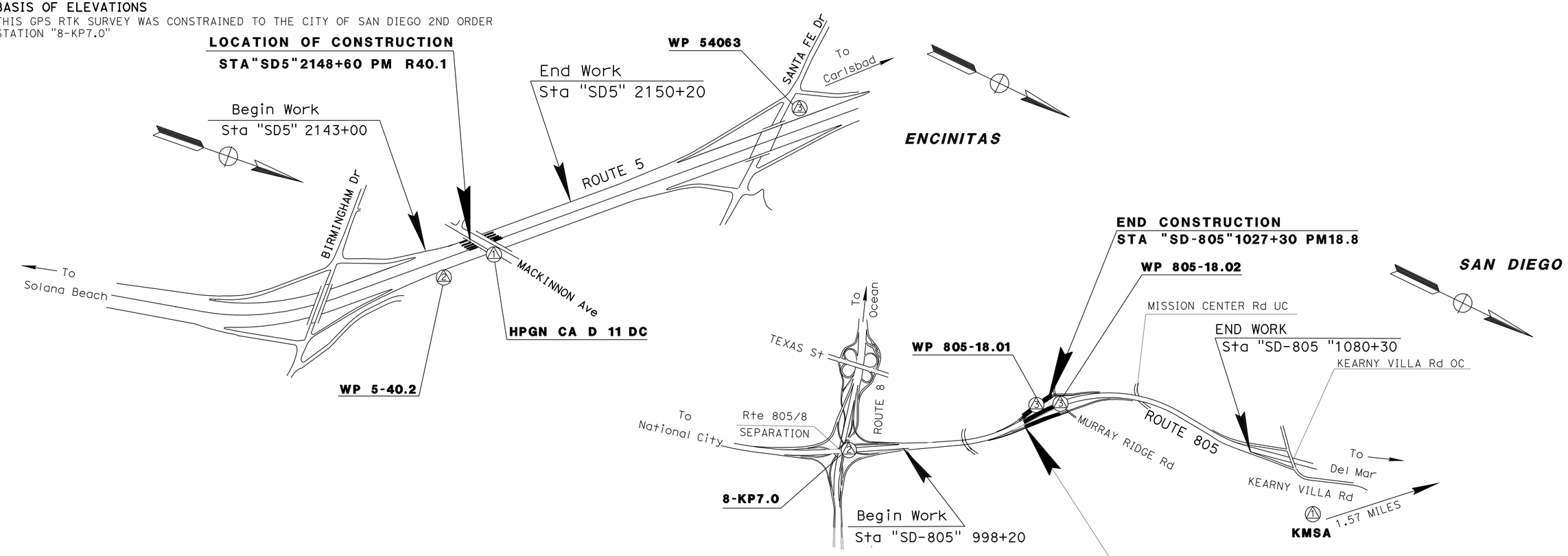

THIS PLAN ACCURATE FOR PROJECT CONTROL INFORMATION ONLY

PROJECT CONTROL

NO SCALE

PC-1

STATE OF CALIFORNIA - DEPARTMENT OF TRANSPORTATION
Caltrans® OFFICE OF LAND SURVEYS

FUNCTIONAL SUPERVISOR: BRUCE URQUHART
CALCULATED-DESIGNED BY: GEORGE SCHUH
CHECKED BY: NED SALMAN
REVISED BY
DATE REVISED

LAST REVISION 06-29-10
DATE PLOTTED => 02-JUL-2010
TIME PLOTTED => 14:59

Dist	COUNTY	ROUTE	POST MILES TOTAL PROJECT	SHEET No.	TOTAL SHEETS
11	SD	5,805	R40.1 18.6/18.8	3	56

Bahman Yazdani 06-09-10
REGISTERED CIVIL ENGINEER DATE

06-28-10
PLANS APPROVAL DATE

REGISTERED PROFESSIONAL ENGINEER BAHMAN YAZDANI No. C58322 Exp. 06-30-12 CIVIL STATE OF CALIFORNIA

THE STATE OF CALIFORNIA OR ITS OFFICERS OR AGENTS SHALL NOT BE RESPONSIBLE FOR THE ACCURACY OR COMPLETENESS OF SCANNED COPIES OF THIS PLAN SHEET.

NOTE:

1. FOR ACCURATE RIGHT OF WAY AND ACCESS DATA, CONTACT RIGHT OF WAY ENGINEERING AT THE DISTRICT OFFICE.
2. SEE CONSTRUCTION DETAILS FOR SECTION VIEWS.

LEGEND

- SLOPE REPAIR WITH IMPORTED TOPSOIL & COMPOST (INCORPORATE) (SEE CONSTRUCTION DETAIL SHEETS)
- SLOPE REPAIR (SEE CONSTRUCTION DETAIL SHEETS)
- MBGR
- IRRIGATION CROSSOVER
- EXISTING TREES

CURVE DATA

No.	R	Δ	T	L
1	5000.00′	4°2′58"	176.76′	353.38′
2	4000.16	5°8′49"	179.79′	359.34′

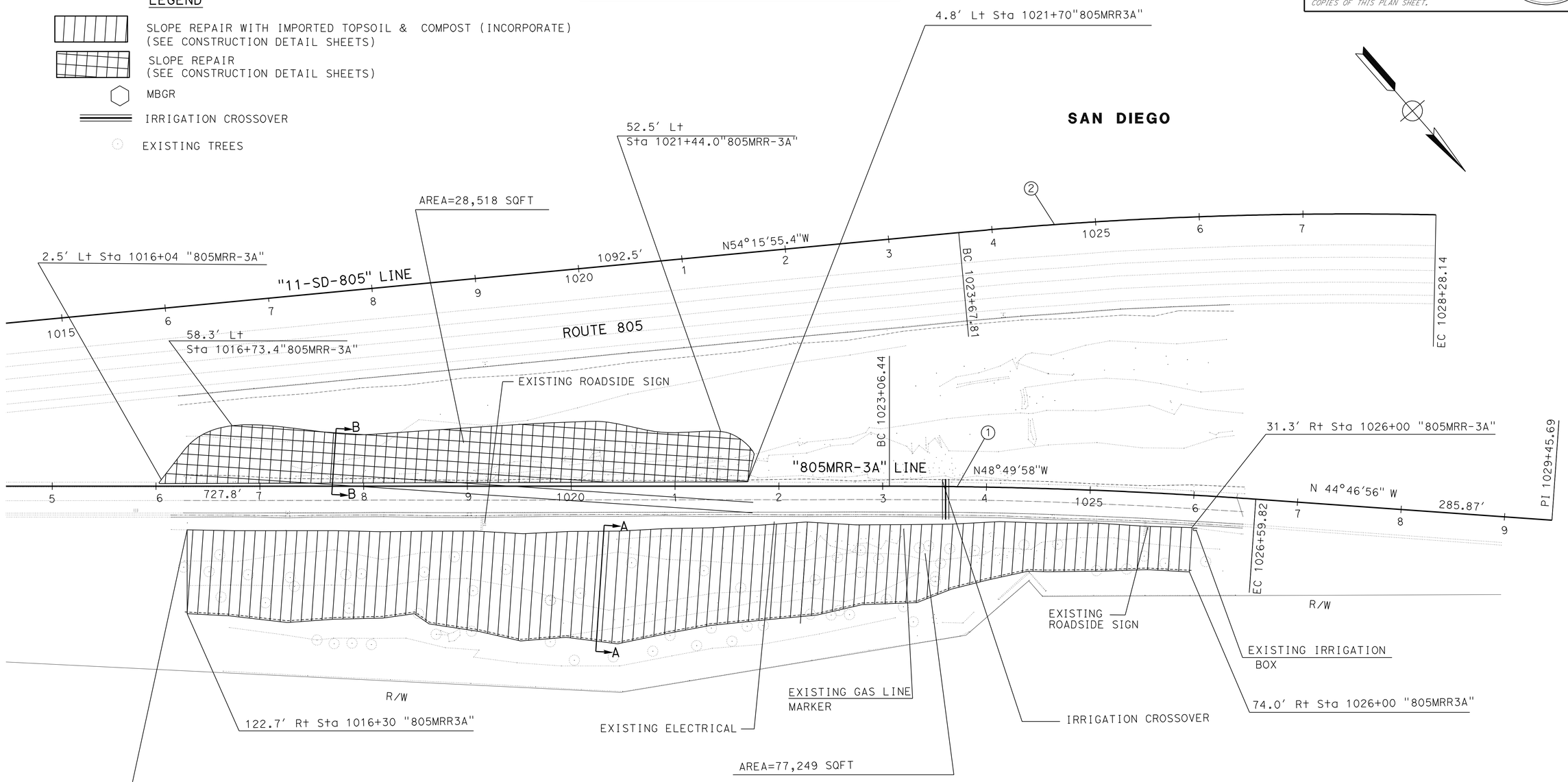

LAYOUT

SCALE: 1" = 50′ **L-1**

STATE OF CALIFORNIA - DEPARTMENT OF TRANSPORTATION
Caltrans® **DESIGN**

FUNCTIONAL SUPERVISOR: CHRIS M THOMAS
CALCULATED-DESIGNED BY: BAHMAN YAZDANI
CHECKED BY: RICARDO PADILLA
REVISED BY / DATE REVISED

LAST REVISION 06-29-10
DATE PLOTTED => 02-JUL-2010
TIME PLOTTED => 14:59

Dist	COUNTY	ROUTE	POST MILES TOTAL PROJECT	SHEET No.	TOTAL SHEETS
11	SD	5,805	R40.1 18.6/18.8	4	56

Bahman Yazdani 06-09-10
REGISTERED CIVIL ENGINEER DATE

06-28-10
PLANS APPROVAL DATE

REGISTERED PROFESSIONAL ENGINEER BAHMAN YAZDANI No. C58322 Exp. 06-30-12 CIVIL STATE OF CALIFORNIA

THE STATE OF CALIFORNIA OR ITS OFFICERS OR AGENTS SHALL NOT BE RESPONSIBLE FOR THE ACCURACY OR COMPLETENESS OF SCANNED COPIES OF THIS PLAN SHEET.

NOTE:

1. FOR ACCURATE RIGHT OF WAY AND ACCESS DATA, CONTACT RIGHT OF WAY ENGINEERING AT THE DISTRICT OFFICE.

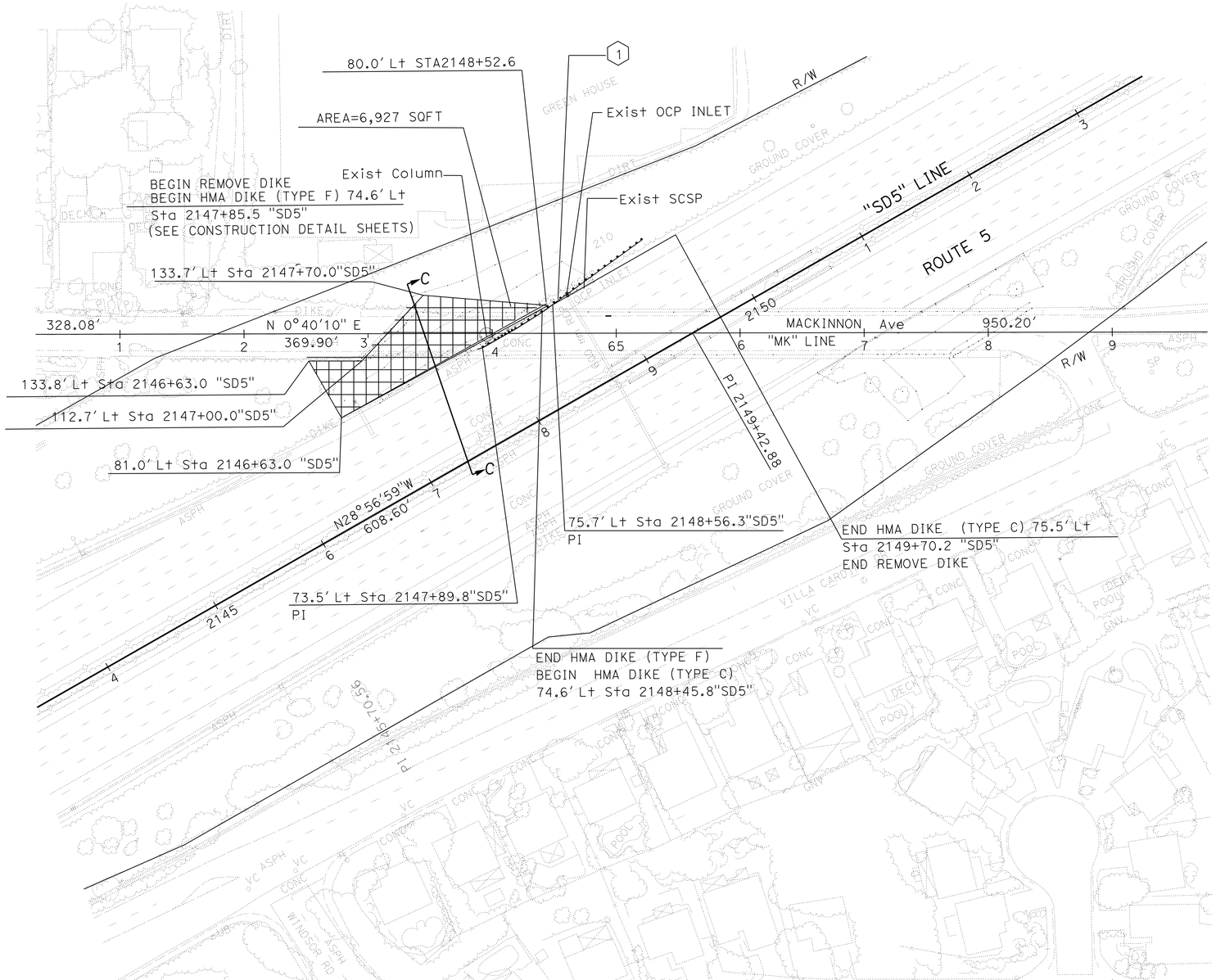

ENCINITAS

LAYOUT

SCALE 1" = 50'

L-2

REVISED BY	DATE REVISED
BAHMAN YAZDANI	RICARDO PADILLA
CALCULATED-DESIGNED BY	CHECKED BY
FUNCTIONAL SUPERVISOR	CHRIS M THOMAS

STATE OF CALIFORNIA - DEPARTMENT OF TRANSPORTATION
Caltrans DESIGN

LAST REVISION 06-29-10
DATE PLOTTED => 02-JUL-2010
TIME PLOTTED => 14:59

Dist	COUNTY	ROUTE	POST MILES TOTAL PROJECT	SHEET No.	TOTAL SHEETS
11	SD	5,805	R40.1 18.6/18.8	5	56

Bahman Yazdani 06-09-10
REGISTERED CIVIL ENGINEER DATE

06-28-10
PLANS APPROVAL DATE

REGISTERED PROFESSIONAL ENGINEER BAHMAN YAZDANI No. C58322 Exp. 06-30-12 CIVIL STATE OF CALIFORNIA

THE STATE OF CALIFORNIA OR ITS OFFICERS OR AGENTS SHALL NOT BE RESPONSIBLE FOR THE ACCURACY OR COMPLETENESS OF SCANNED COPIES OF THIS PLAN SHEET.

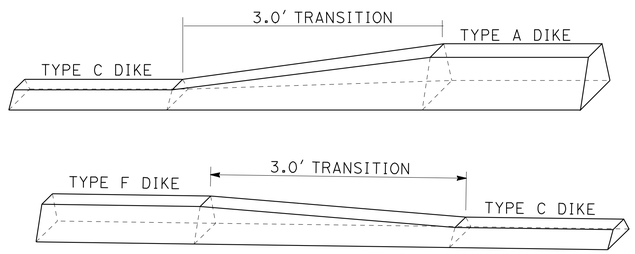

DIKE TRANSITION DETAILS

NO SCALE

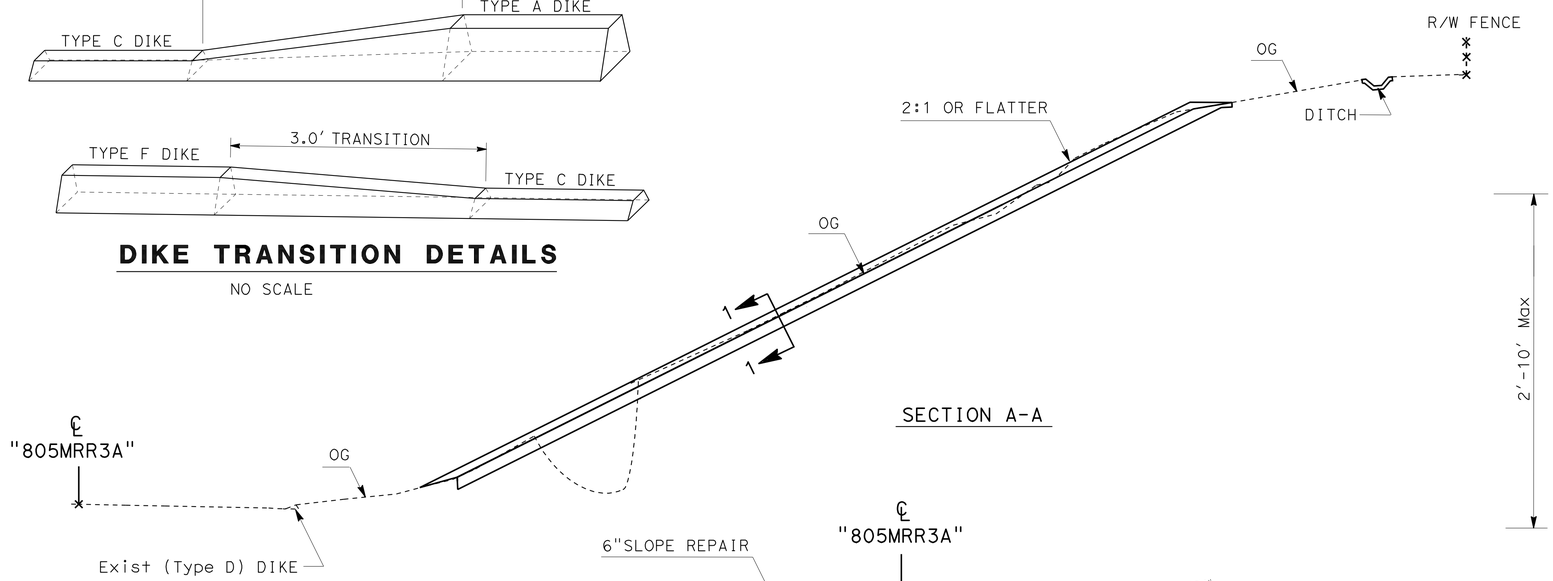

SECTION A-A

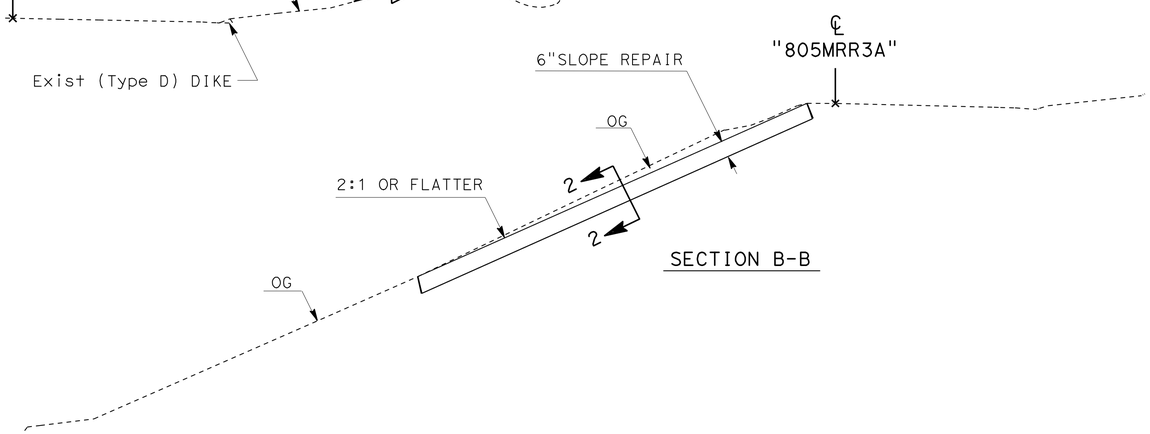

SECTION B-B

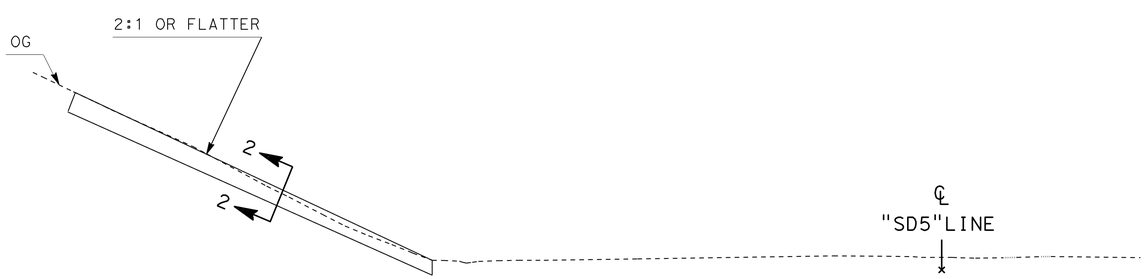

SECTION C-C

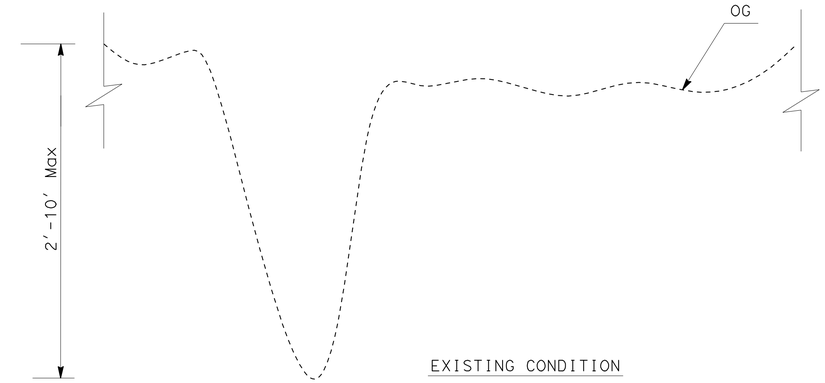

EXISTING CONDITION

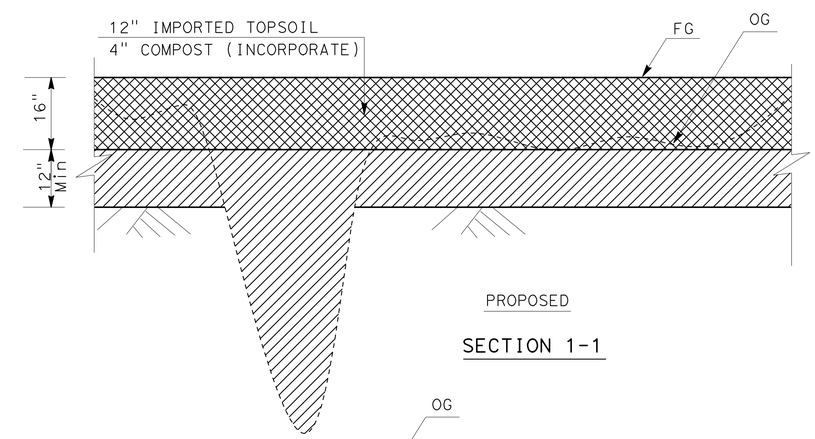

PROPOSED

SECTION 1-1

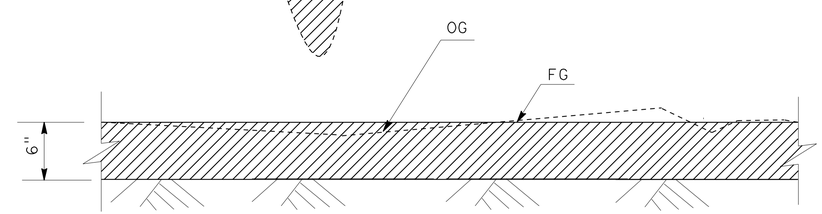

SECTION 2-2

IMPORTED TOPSOIL
EMBANKMENT

SLOPE REPAIR

CONSTRUCTION DETAILS

NO SCALE

C-1

STATE OF CALIFORNIA - DEPARTMENT OF TRANSPORTATION
Caltrans DESIGN

FUNCTIONAL SUPERVISOR: CHRIS M THOMAS
CALCULATED-DESIGNED BY: BAHMAN YAZDANI
CHECKED BY: RICARDO PADILLA
REVISED BY
DATE REVISED

LAST REVISION 06-29-10 | DATE PLOTTED => 02-JUL-2010 | TIME PLOTTED => 15:00

Dist	COUNTY	ROUTE	POST MILES TOTAL PROJECT	SHEET No.	TOTAL SHEETS
11	SD	5,805	R40.1 18.6/18.8	6	56

Bahman Yazdani 06-09-10
REGISTERED CIVIL ENGINEER DATE

06-28-10
PLANS APPROVAL DATE

REGISTERED PROFESSIONAL ENGINEER BAHMAN YAZDANI No. C58322 Exp. 06-30-12 CIVIL STATE OF CALIFORNIA

THE STATE OF CALIFORNIA OR ITS OFFICERS OR AGENTS SHALL NOT BE RESPONSIBLE FOR THE ACCURACY OR COMPLETENESS OF SCANNED COPIES OF THIS PLAN SHEET.

NOTES:

1. FOR STANDARD RAILING POST EMBEDMENT, SEE STANDARD PLANS A77C3.

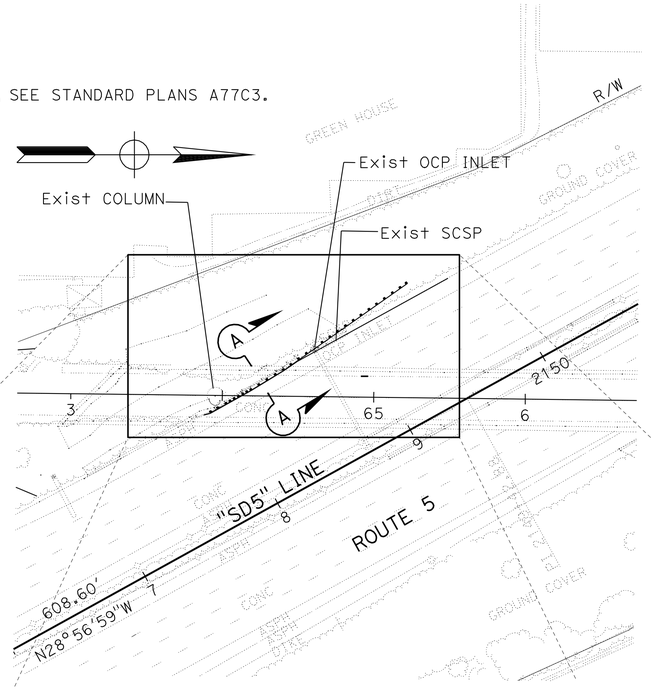

METAL BEAM GUARD RAIL LAYOUT

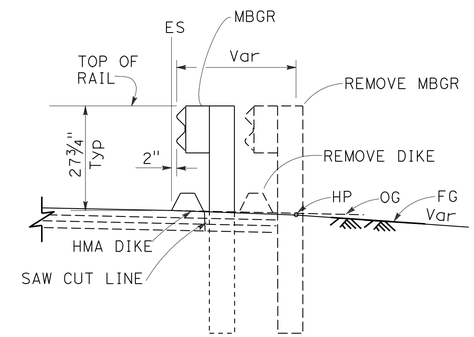

SECTION A-A

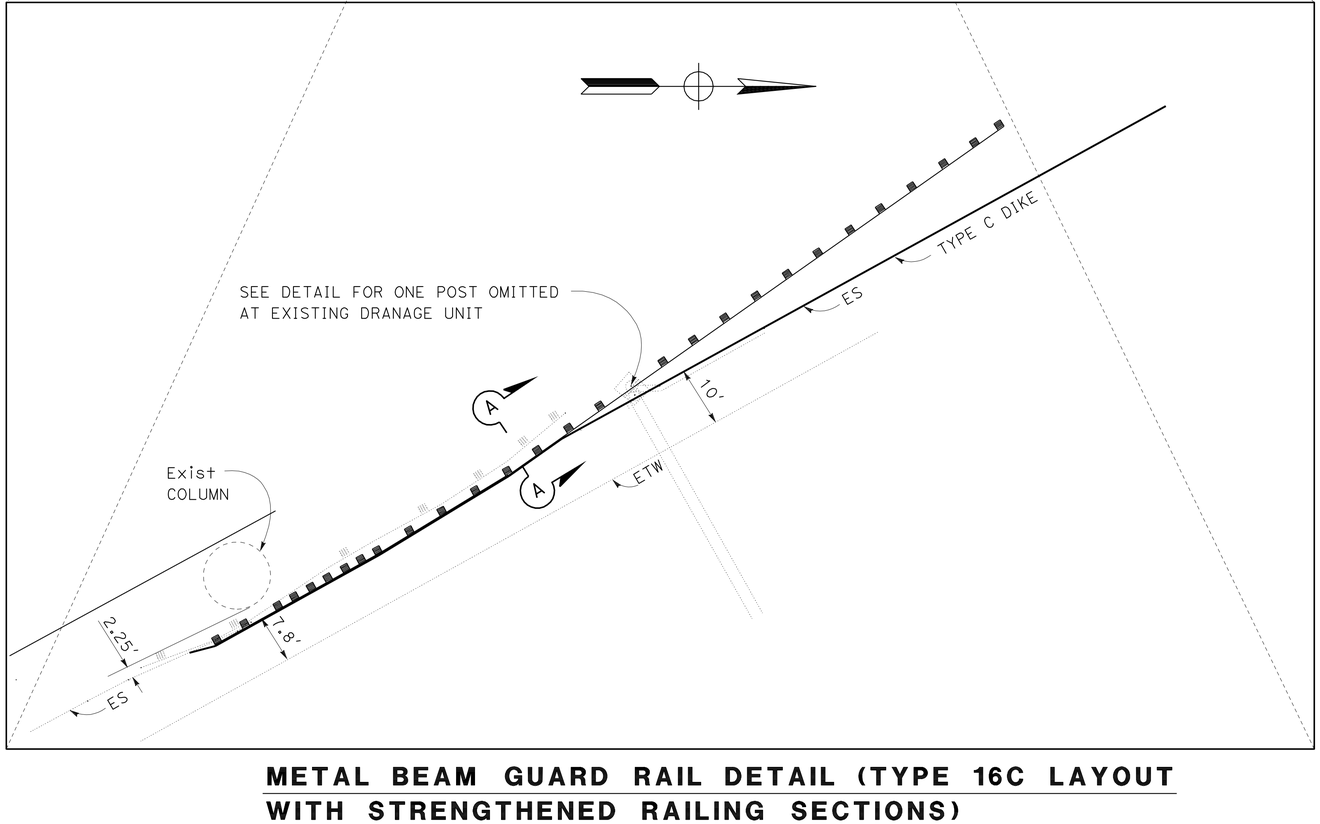

METAL BEAM GUARD RAIL DETAIL (TYPE 16C LAYOUT WITH STRENGTHENED RAILING SECTIONS)

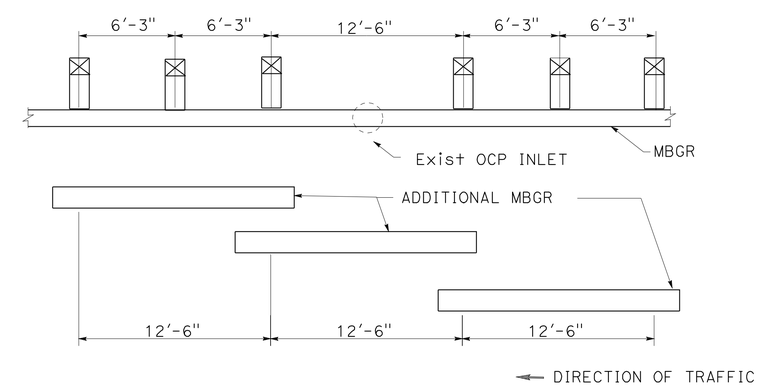

ONE POST OMITTED AT EXISTING DRAINAGE UNIT (SPLICE AT POST) DOUBLE MBGR

CONSTRUCTION DETAILS

NO SCALE

C-2

REVISED BY | DATE REVISED
BAHMAN YAZDANI | RICARDO PADILLA
CALCULATED-DESIGNED BY | CHECKED BY
FUNCTIONAL SUPERVISOR | CHRIS M THOMAS
STATE OF CALIFORNIA - DEPARTMENT OF TRANSPORTATION
Caltrans® DESIGN

LAST REVISION 06-29-10 | DATE PLOTTED => 02-JUL-2010 | TIME PLOTTED => 15:00

Dist	COUNTY	ROUTE	POST MILES TOTAL PROJECT	SHEET No.	TOTAL SHEETS
11	SD	5,805	R40.1 18.6/18.8	7	56

Bahman Yazdani 06-09-10
REGISTERED CIVIL ENGINEER DATE

06-28-10
PLANS APPROVAL DATE

REGISTERED PROFESSIONAL ENGINEER BAHMAN YAZDANI No. C58322 Exp. 06-30-12 CIVIL STATE OF CALIFORNIA

THE STATE OF CALIFORNIA OR ITS OFFICERS OR AGENTS SHALL NOT BE RESPONSIBLE FOR THE ACCURACY OR COMPLETENESS OF SCANNED COPIES OF THIS PLAN SHEET.

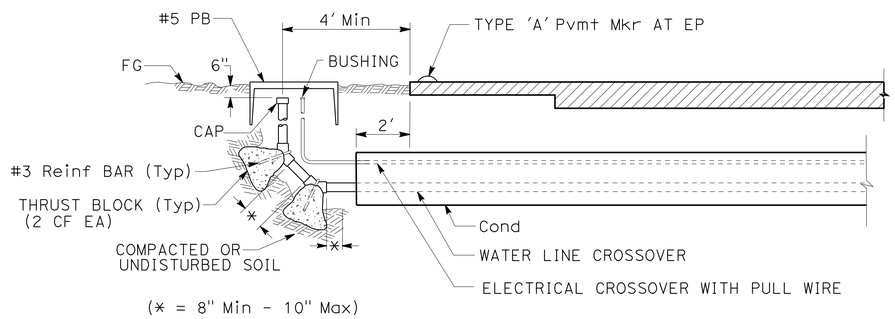

SECTION

IRRIGATION CROSSOVER

(MODIFIED)

CONSTRUCTION DETAILS

NO SCALE

C-3

STATE OF CALIFORNIA - DEPARTMENT OF TRANSPORTATION

Caltrans® **DESIGN**

FUNCTIONAL SUPERVISOR: CHRIS M THOMAS

CALCULATED-DESIGNED BY: BAHMAN YAZDANI

CHECKED BY: RICARDO PADILLA

REVISED BY

DATE REVISED

LAST REVISION 06-29-10

DATE PLOTTED => 02-JUL-2010

TIME PLOTTED => 15:00

NOTE:

FOR ACCURATE RIGHT OF WAY AND ACCESS DATA,
CONTACT RIGHT OF WAY ENGINEERING AT THE DISTRICT OFFICE.

Dist	COUNTY	ROUTE	POST MILES TOTAL PROJECT	SHEET No.	TOTAL SHEETS
11	SD	5,805	R40.1 18.6/18.8	8	56

LICENSED LANDSCAPE ARCHITECT

06-28-10
PLANS APPROVAL DATE

LICENSED LANDSCAPE ARCHITECT
DAVID G. STRICKLAND NO. 3403
Signature
3/31/12
Renewal Date
06-09-10
Date
STATE OF CALIFORNIA

THE STATE OF CALIFORNIA OR ITS OFFICERS OR AGENTS SHALL NOT BE RESPONSIBLE FOR THE ACCURACY OR COMPLETENESS OF SCANNED COPIES OF THIS PLAN SHEET.

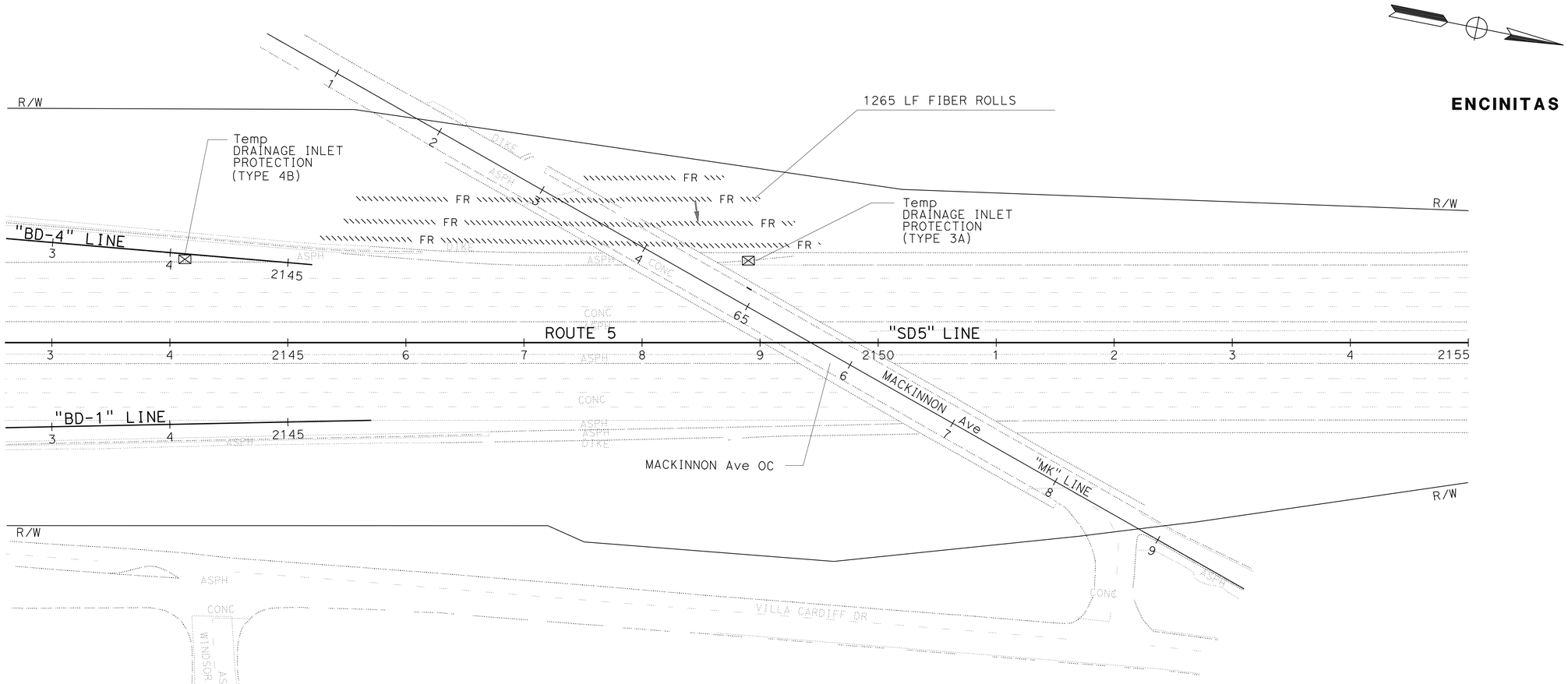

LEGEND:

EC	EROSION CONTROL
FR	FIBER ROLLS
	CHECK DAM (EROSION CONTROL) (20 LF EACH)
	Temp CONSTRUCTION ENTRANCE (TYPE 2)
	SLOPE DOWN DIRECTION
	Temp DRAINAGE INLET PROTECTION
	DRAINAGE INLET PROTECTION (EROSION CONTROL)
	ROLLED EROSION CONTROL PRODUCT (RECP) (JUTE MESH)
	EC (PUNCHED STRAW)
	EC (HYDROSEED)

TEMPORARY WATER POLLUTION CONTROL PLAN

SCALE 1" = 50'

WPC-1

THIS PLAN ACCURATE FOR TEMPORARY WATER POLLUTION CONTROL WORK ONLY

STATE OF CALIFORNIA - DEPARTMENT OF TRANSPORTATION
Caltrans® LANDSCAPE ARCHITECTURE

SENIOR LANDSCAPE ARCHITECT: STEPHEN ALVAREZ
CALCULATED-DESIGNED BY: DAVID STRICKLAND
CHECKED BY: JOHN NEWLON
REVISED BY: X
DATE REVISED: MM-DD-YY

LAST REVISION 06-29-10
DATE PLOTTED => 02-JUL-2010
TIME PLOTTED => 15:00

Dist	COUNTY	ROUTE	POST MILES TOTAL PROJECT	SHEET No.	TOTAL SHEETS
11	SD	5,805	R40.1 18.6/18.8	9	56

LICENSED LANDSCAPE ARCHITECT

06-28-10
PLANS APPROVAL DATE

THE STATE OF CALIFORNIA OR ITS OFFICERS OR AGENTS SHALL NOT BE RESPONSIBLE FOR THE ACCURACY OR COMPLETENESS OF SCANNED COPIES OF THIS PLAN SHEET.

LICENSED LANDSCAPE ARCHITECT
DAVID G. STRICKLAND NO. 3403
Signature
3/31/12
Renewal Date
06-09-10
Date
STATE OF CALIFORNIA

NOTE:

FOR ACCURATE RIGHT OF WAY AND ACCESS DATA,
CONTACT RIGHT OF WAY ENGINEERING AT THE DISTRICT OFFICE.

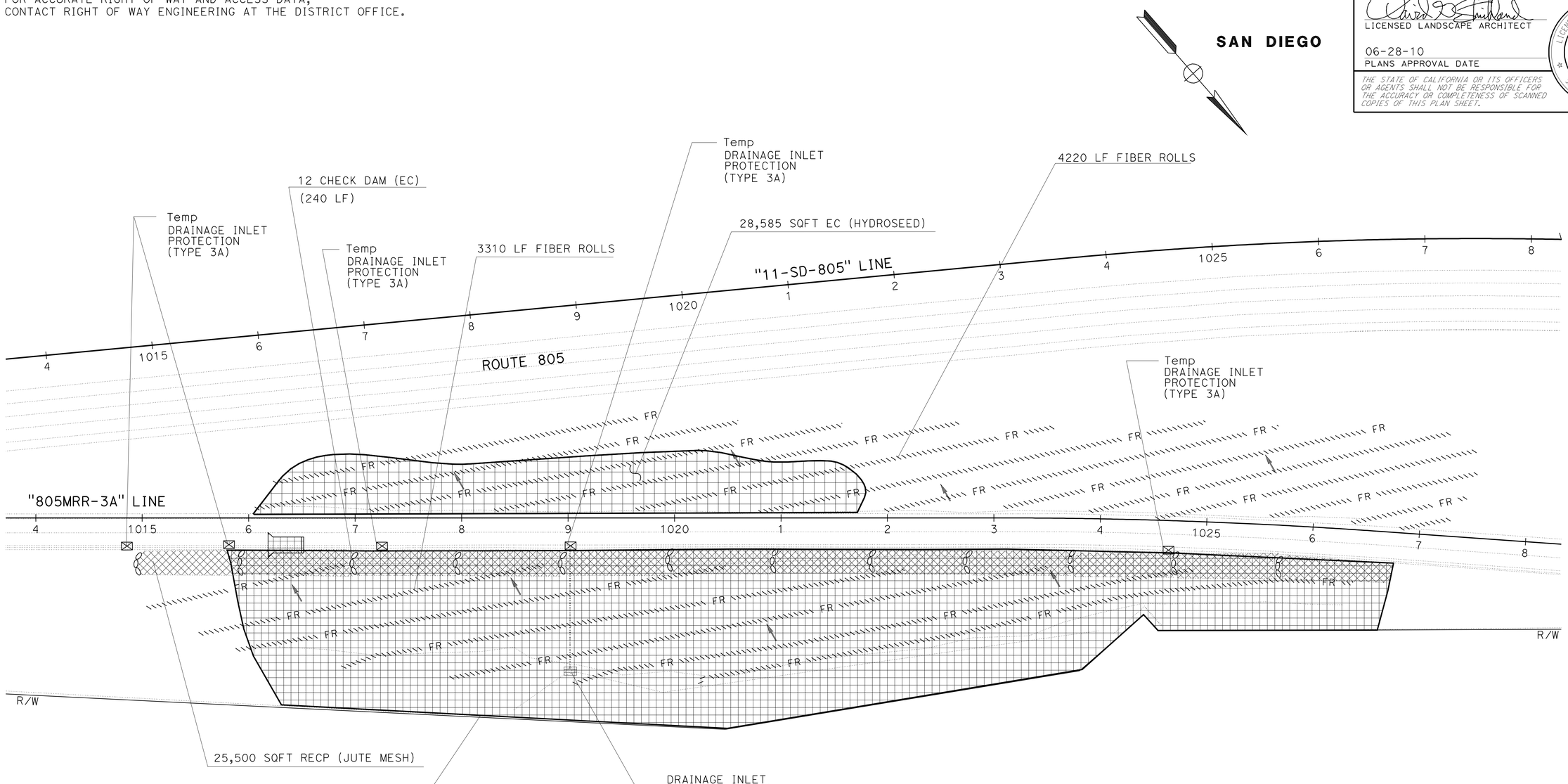

TEMPORARY WATER POLLUTION CONTROL PLAN

SCALE 1" = 50'

WPC-2

THIS PLAN ACCURATE FOR TEMPORARY WATER POLLUTION CONTROL WORK ONLY

STATE OF CALIFORNIA - DEPARTMENT OF TRANSPORTATION
Caltrans® LANDSCAPE ARCHITECTURE

SENIOR LANDSCAPE ARCHITECT: STEPHEN ALVAREZ
CALCULATED-DESIGNED BY: DAVID STRICKLAND
CHECKED BY: JOHN NEWLON
REVISED BY
DATE REVISED

LAST REVISION 06-29-10
DATE PLOTTED => 02-JUL-2010
TIME PLOTTED => 15:00

Dist	COUNTY	ROUTE	POST MILES TOTAL PROJECT	SHEET No.	TOTAL SHEETS
11	SD	5,805	R40.1 18.6/18.8	10	56

LICENSED LANDSCAPE ARCHITECT

06-28-10
PLANS APPROVAL DATE

LICENSED LANDSCAPE ARCHITECT
DAVID A. STRICKLAND No. 3423
Expiration Date
3/31/12
Registered Landscape Architect
06-09-10
Date
STATE OF CALIFORNIA

THE STATE OF CALIFORNIA OR ITS OFFICERS OR AGENTS SHALL NOT BE RESPONSIBLE FOR THE ACCURACY OR COMPLETENESS OF SCANNED COPIES OF THIS PLAN SHEET.

FIBER ROLLS

SHEET	LF
WPC-1	1265
WPC-2	7,530
TOTAL	8,795

ROLLED EROSION CONTROL PRODUCT (JUTE MESH)

SHEET	SQFT
WPC-2	25,500
TOTAL	25,500

Temp CONSTRUCTION ENTRANCE

(TYPE 2)

SHEET	EA
WPC-2	1
TOTAL	1

Temp DRAINAGE INLET PROTECTION

SHEET	(TYPE 3A)	(TYPE 4B)
	EA	EA
WPC-1	1	1
WPC-2	5	-
TOTAL	7	

CHECK DAM (EROSION CONTROL)

SHEET	LF
WPC-2	240
TOTAL	240

EROSION CONTROL (HYDROSEED)

SHEET	SQFT
WPC-2	28,585
TOTAL	28,585

DRAINAGE INLET PROTECTION (EROSION CONTROL)

SHEET	EA
WPC-2	1
TOTAL	1

EROSION CONTROL (PUNCHED STRAW)(SQFT)

SHEET	SQFT
WPC-2	137,160
TOTAL	137,160

WATER POLLUTION CONTROL QUANTITIES
WPCQ-1

STATE OF CALIFORNIA - DEPARTMENT OF TRANSPORTATION
Caltrans® LANDSCAPE ARCHITECTURE

SENIOR LANDSCAPE ARCHITECT: STEPHEN ALVAREZ
CALCULATED-DESIGNED BY: DAVID STRICKLAND
CHECKED BY: JOHN NEWLON
REVISED BY
DATE REVISED

LAST REVISION 06-29-10
DATE PLOTTED => 02-JUL-2010
TIME PLOTTED => 15:00

Dist	COUNTY	ROUTE	POST MILES TOTAL PROJECT	SHEET No.	TOTAL SHEETS
11	SD	5,805	R40.1 18.6/18.8	11	56

LICENSED LANDSCAPE ARCHITECT

06-28-10
PLANS APPROVAL DATE

THE STATE OF CALIFORNIA OR ITS OFFICERS OR AGENTS SHALL NOT BE RESPONSIBLE FOR THE ACCURACY OR COMPLETENESS OF SCANNED COPIES OF THIS PLAN SHEET.

LICENSED LANDSCAPE ARCHITECT
DAVID G. STRICKLAND NO. 3403
Signature
3/31/12
Renewal Date
06-09-10
Date
STATE OF CALIFORNIA

NOTE:

FOR ACCURATE RIGHT OF WAY AND ACCESS DATA,
CONTACT RIGHT OF WAY ENGINEERING AT THE DISTRICT OFFICE.

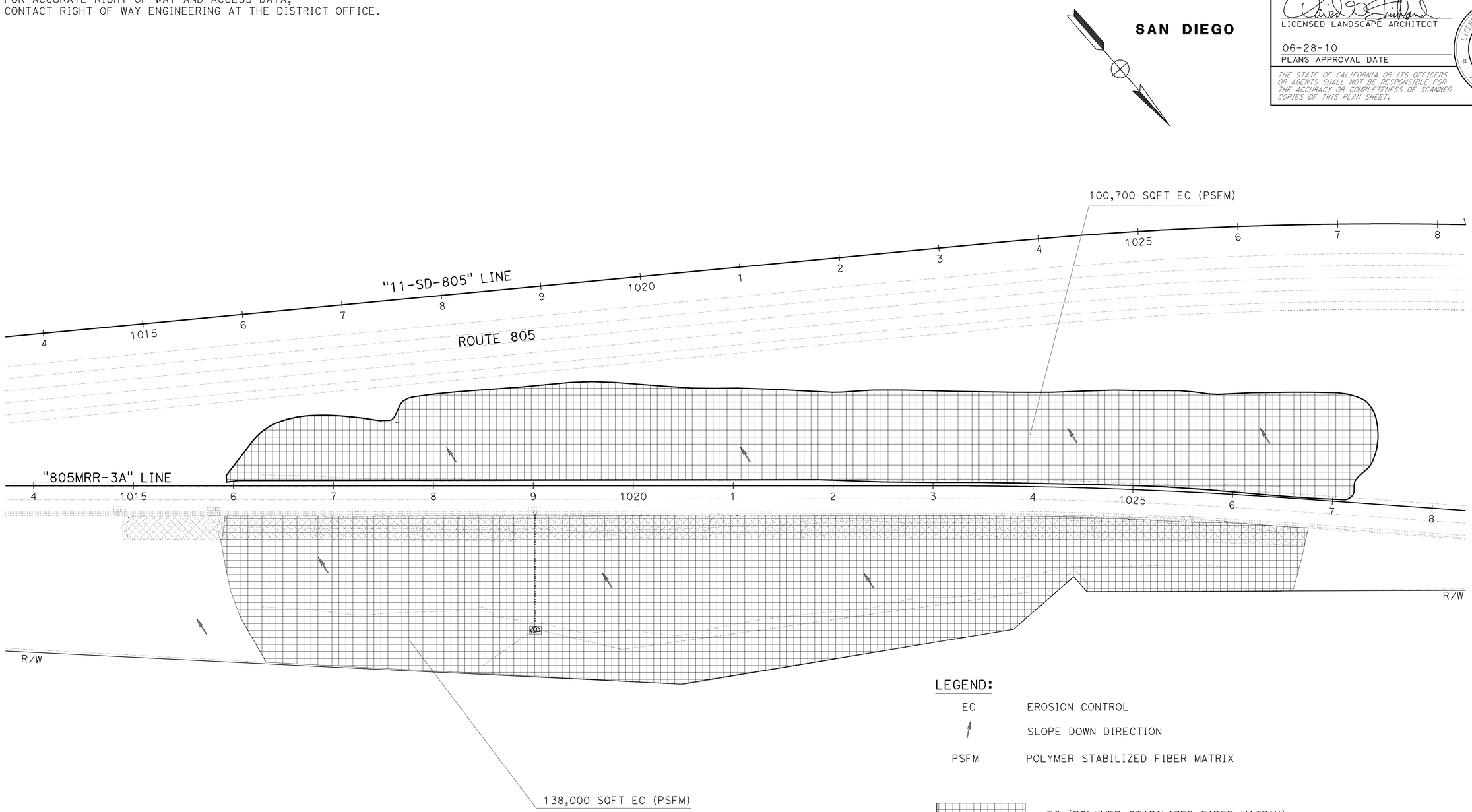

LEGEND:

EC	EROSION CONTROL
	SLOPE DOWN DIRECTION
PSFM	POLYMER STABILIZED FIBER MATRIX
	EC (POLYMER STABILIZED FIBER MATRIX)

EROSION CONTROL PLAN

SCALE 1" = 50'

EC-1

THIS PLAN ACCURATE FOR EROSION CONTROL WORK ONLY

STATE OF CALIFORNIA - DEPARTMENT OF TRANSPORTATION
Caltrans® LANDSCAPE ARCHITECTURE

SENIOR LANDSCAPE ARCHITECT: STEPHEN ALVAREZ
CALCULATED-DESIGNED BY: DAVID STRICKLAND
CHECKED BY: JOHN NEWLON
REVISED BY
DATE REVISED

LAST REVISION 06-29-10
DATE PLOTTED => 02-JUL-2010
TIME PLOTTED => 15:00

Dist	COUNTY	ROUTE	POST MILES TOTAL PROJECT	SHEET No.	TOTAL SHEETS
11	SD	5,805	R40.1 18.6/18.8	12	56

LICENSED LANDSCAPE ARCHITECT

06-28-10
PLANS APPROVAL DATE

LICENSED LANDSCAPE ARCHITECT DAVID R. STRICKLAND No. 3052 STATE OF CALIFORNIA
Registration Expiration Date 3/31/12
Renewal Date 06-09-10
Date

THE STATE OF CALIFORNIA OR ITS OFFICERS OR AGENTS SHALL NOT BE RESPONSIBLE FOR THE ACCURACY OR COMPLETENESS OF SCANNED COPIES OF THIS PLAN SHEET.

NOTE:

1. SPILLWAY DEPTH 'D' SHALL BE MAINTAINED TO PREVENT FLANKING OF CONCENTRATED FLOW AROUND THE ENDS OF EACH CHECK DAM.

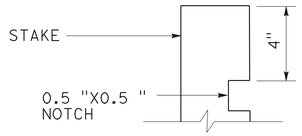

ELEVATION

STAKE NOTCH DETAIL

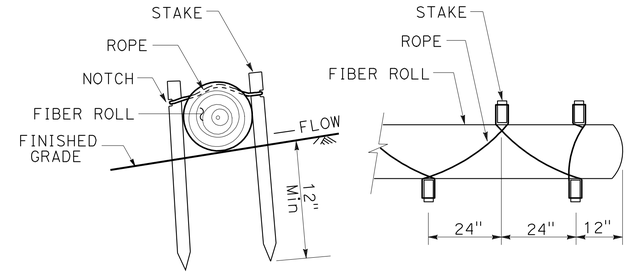

SECTION PLAN

STAKING AND LASHING DETAIL

NOTE:

FOR CLARITY, PERSPECTIVE VIEW DOES NOT SHOW ALL STAPLES.

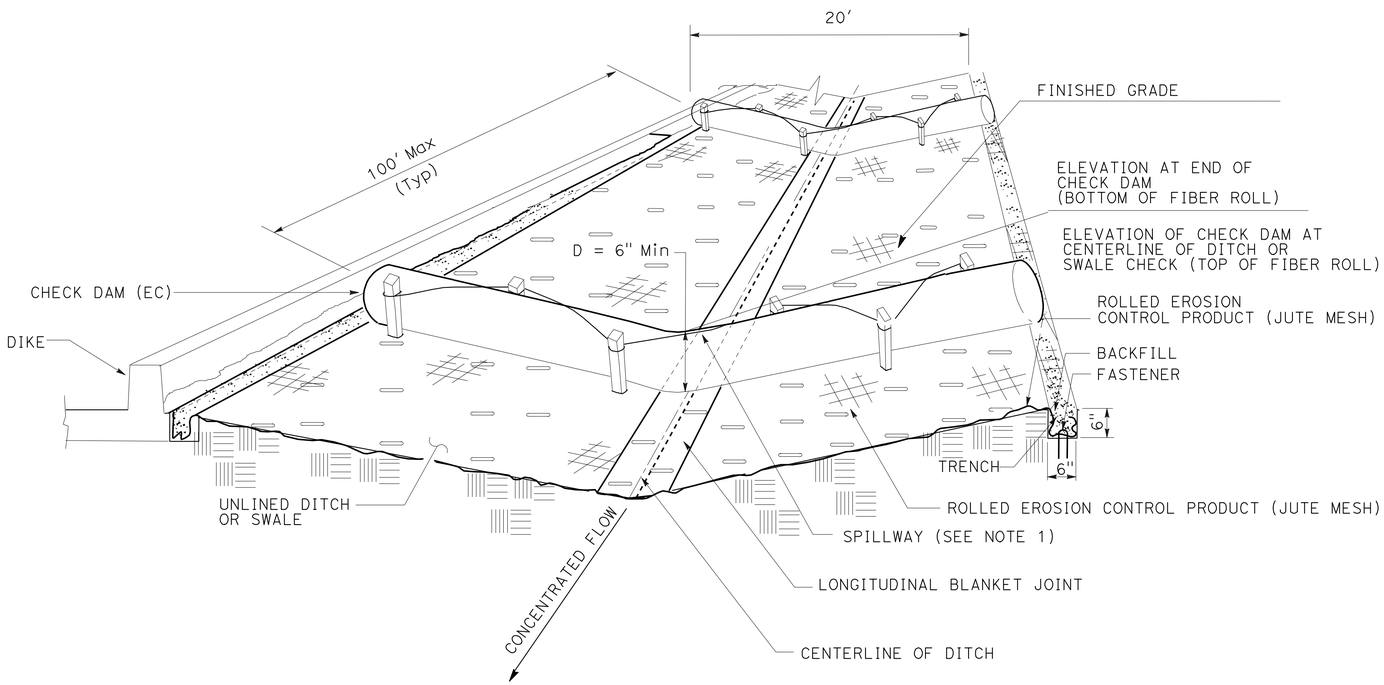

PERSPECTIVE

CHECK DAM (EROSION CONTROL)

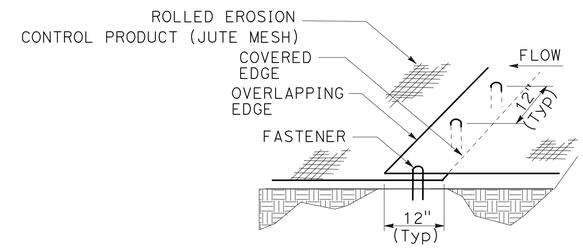

PERSPECTIVE
DETAIL B

LONGITUDINAL BLANKET JOINT

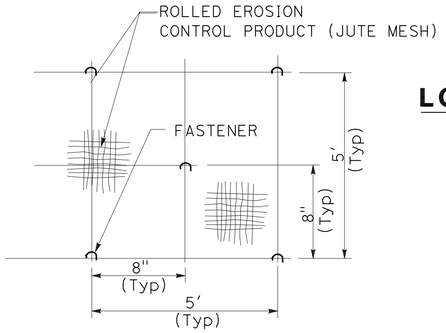

PLAN
DETAIL A

STAPLE PATTERN

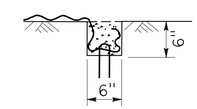

SECTION
DETAIL C

KEY TRENCH

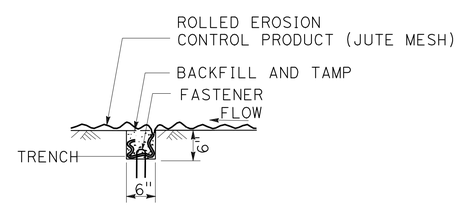

SECTION
DETAIL D

TRANSVERSE BLANKET JOINT

EROSION CONTROL DETAILS

NO SCALE

ECD-1

STATE OF CALIFORNIA - DEPARTMENT OF TRANSPORTATION
Caltrans® LANDSCAPE ARCHITECTURE

SENIOR LANDSCAPE ARCHITECT: STEPHEN ALVAREZ
CALCULATED-DESIGNED BY: DAVID STRICKLAND
CHECKED BY: JOHN NEWLON
REVISED BY
DATE REVISED

LAST REVISION 06-29-10
DATE PLOTTED => 02-JUL-2010
TIME PLOTTED => 15:00

Dist	COUNTY	ROUTE	POST MILES TOTAL PROJECT	SHEET No.	TOTAL SHEETS
11	SD	5,805	R40.1 18.6/18.8	13	56

LICENSED LANDSCAPE ARCHITECT

06-28-10
PLANS APPROVAL DATE

THE STATE OF CALIFORNIA OR ITS OFFICERS OR AGENTS SHALL NOT BE RESPONSIBLE FOR THE ACCURACY OR COMPLETENESS OF SCANNED COPIES OF THIS PLAN SHEET.

LICENSED LANDSCAPE ARCHITECT
DAVID G. STRICKLAND NO. 3403
Signature
3/31/12
Renewal Date
06-09-10
Date
STATE OF CALIFORNIA

NOTES:

1. EROSION CONTROL BLANKET/ GEOTEXTILE FABRIC IS NOT REQUIRED IF THE AREA ADJACENT TO THE DRAINAGE INLET IS VEGETATED.

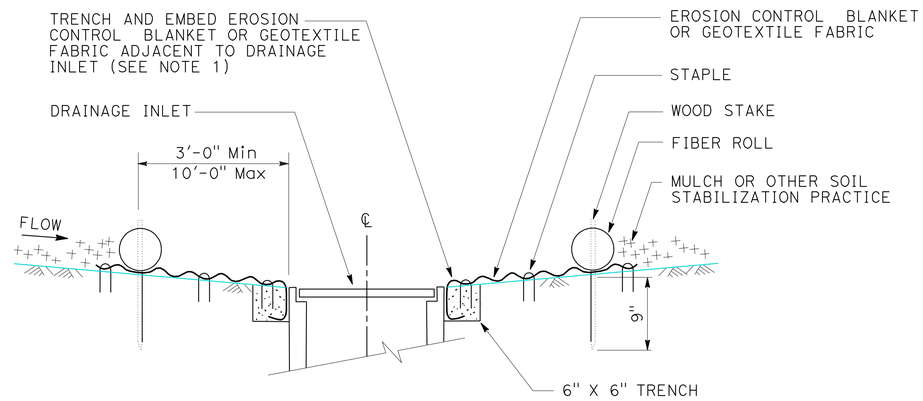

SECTION A-A

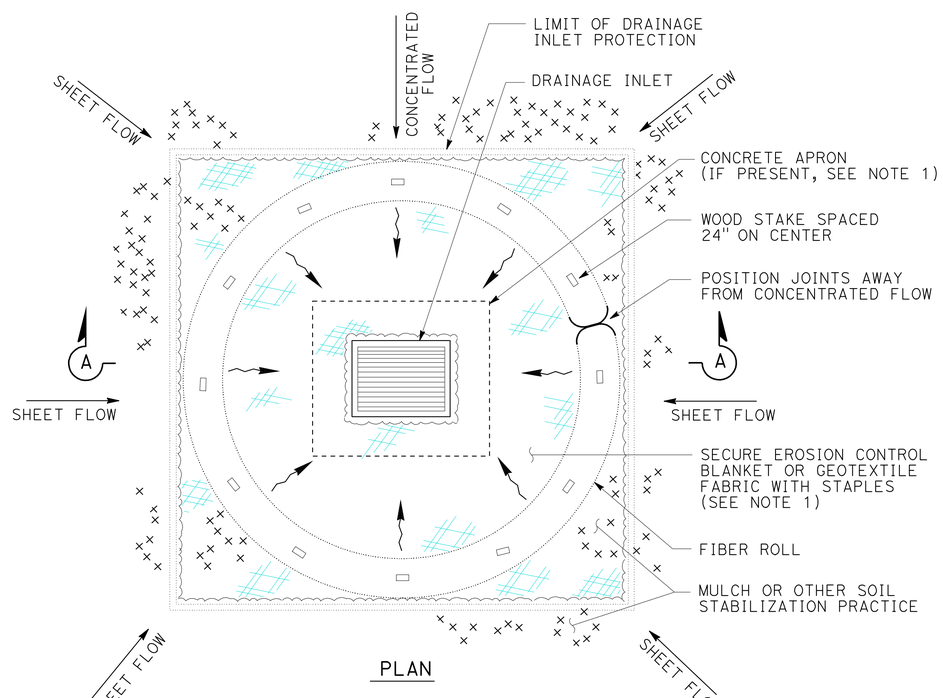

PLAN

DRAINAGE INLET PROTECTION (EROSION CONTROL)

EROSION CONTROL (PSFM)	
SHEET	SQFT
EC-1	238,700
TOTAL	238,700

EROSION CONTROL DETAILS AND QUANTITIES

NO SCALE

ECD-2

STATE OF CALIFORNIA - DEPARTMENT OF TRANSPORTATION
Caltrans® LANDSCAPE ARCHITECTURE

SENIOR LANDSCAPE ARCHITECT: STEPHEN ALVAREZ
CALCULATED-DESIGNED BY: DAVID STRICKLAND
CHECKED BY: JOHN NEWLON
REVISED BY
DATE REVISED

LAST REVISION 06-29-10
DATE PLOTTED => 02-JUL-2010
TIME PLOTTED => 15:00

Dist	COUNTY	ROUTE	POST MILES TOTAL PROJECT	SHEET No.	TOTAL SHEETS
11	SD	5,805	R40.1 18.6/18.8	14	56

Bahman Yazdani 06-09-10
REGISTERED CIVIL ENGINEER DATE

06-28-10
PLANS APPROVAL DATE

REGISTERED PROFESSIONAL ENGINEER BAHMAN YAZDANI No. C58322 Exp. 06-30-12 CIVIL STATE OF CALIFORNIA

THE STATE OF CALIFORNIA OR ITS OFFICERS OR AGENTS SHALL NOT BE RESPONSIBLE FOR THE ACCURACY OR COMPLETENESS OF SCANNED COPIES OF THIS PLAN SHEET.

NOTE:

FOR ACCURATE RIGHT OF WAY AND ACCESS DATA, CONTACT RIGHT OF WAY ENGINEERING AT THE DISTRICT OFFICE.

X DRAINAGE SYSTEM

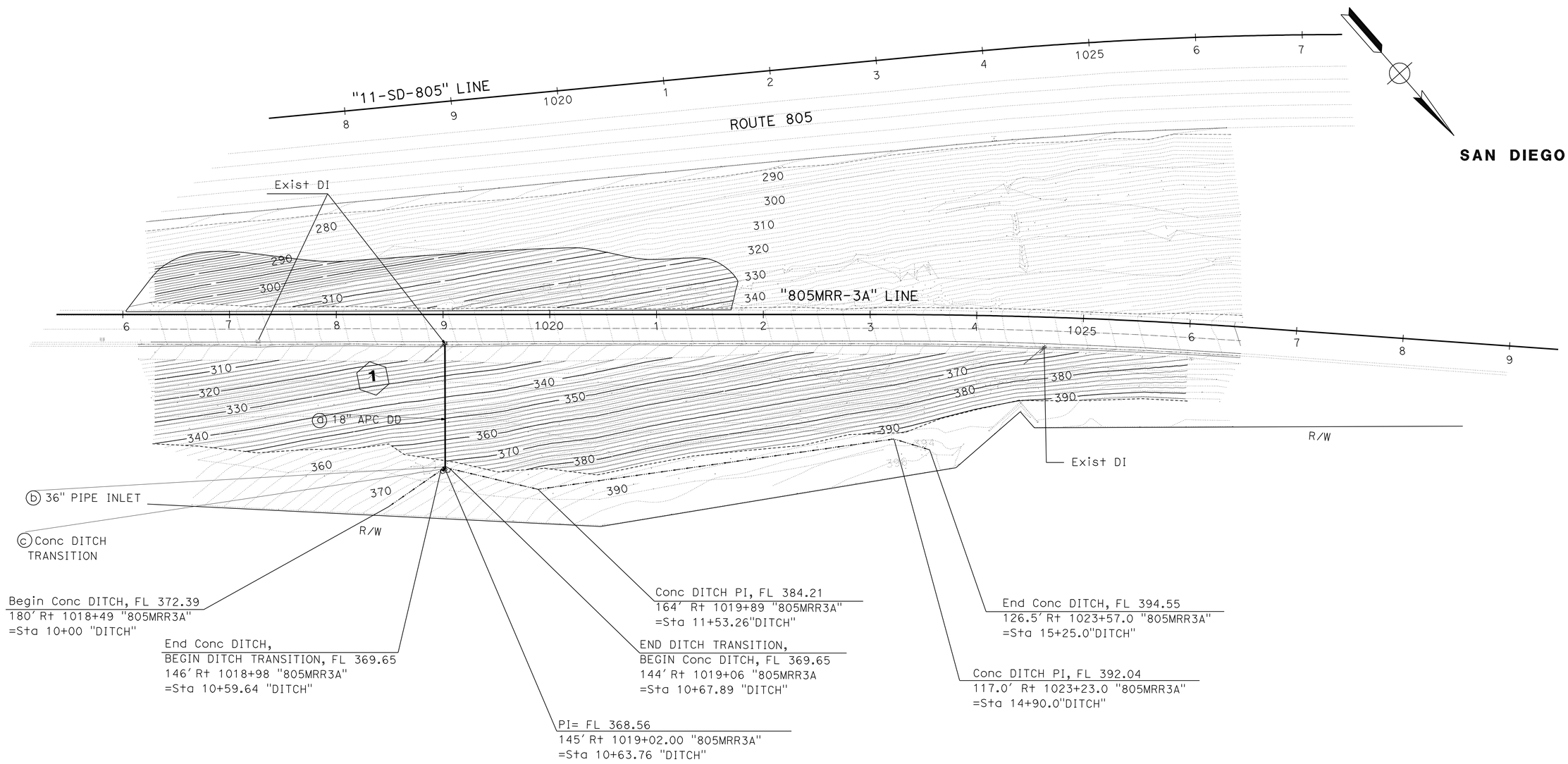

THIS PLAN ACCURATE FOR DRAINAGE WORK AND CONTOUR GRADING ONLY.

CONTOUR GRADING AND DRAINAGE PLAN

SCALE 1" = 50'

G-1

STATE OF CALIFORNIA - DEPARTMENT OF TRANSPORTATION
Caltrans DESIGN

FUNCTIONAL SUPERVISOR: CHRIS M THOMAS
CALCULATED-DESIGNED BY: BAHMAN YAZDANI
CHECKED BY: RICARDO PADILLA
REVISED BY
DATE REVISED

LAST REVISION 06-29-10 | DATE PLOTTED => 02-JUL-2010 | TIME PLOTTED => 15:00

Dist	COUNTY	ROUTE	POST MILES TOTAL PROJECT	SHEET No.	TOTAL SHEETS
11	SD	5,805	R40.1 18.6/18.8	15	56

Bahman Yazdani 06-09-10
REGISTERED CIVIL ENGINEER DATE

06-28-10
PLANS APPROVAL DATE

REGISTERED PROFESSIONAL ENGINEER BAHMAN YAZDANI No. C58322 Exp. 06-30-12 CIVIL STATE OF CALIFORNIA

THE STATE OF CALIFORNIA OR ITS OFFICERS OR AGENTS SHALL NOT BE RESPONSIBLE FOR THE ACCURACY OR COMPLETENESS OF SCANNED COPIES OF THIS PLAN SHEET.

NOTE:

1. FOR ACCURATE RIGHT OF WAY AND ACCESS DATA, CONTACT RIGHT OF WAY ENGINEERING AT THE DISTRICT OFFICE.

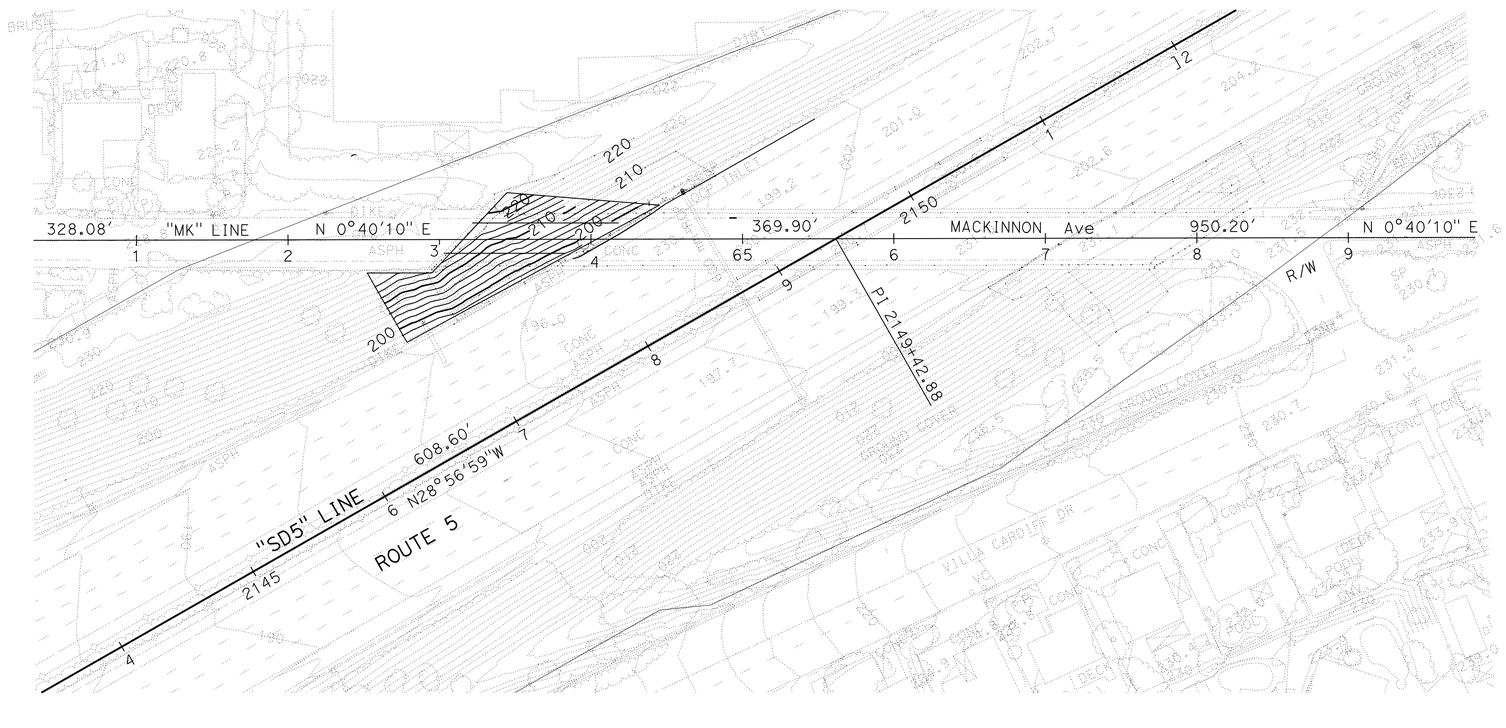

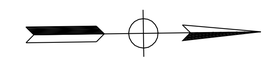

ENCINITAS

THIS PLAN ACCURATE FOR CONTOUR GRADING ONLY.

CONTOUR GRADING PLAN

SCALE 1" = 50'

G-2

STATE OF CALIFORNIA - DEPARTMENT OF TRANSPORTATION
Caltrans® **DESIGN**

FUNCTIONAL SUPERVISOR: CHRIS M THOMAS

CALCULATED-DESIGNED BY: BAHMAN YAZDANI
CHECKED BY: RICARDO PADILLA

REVISED BY
DATE REVISED

LAST REVISION 06-29-10
DATE PLOTTED => 02-JUL-2010
TIME PLOTTED => 15:01

Dist	COUNTY	ROUTE	POST MILES TOTAL PROJECT	SHEET No.	TOTAL SHEETS
11	SD	5,805	R40.1 18.6/18.8	16	56

Bahman Yazdani 06-09-10
REGISTERED CIVIL ENGINEER DATE

06-28-10
PLANS APPROVAL DATE

REGISTERED PROFESSIONAL ENGINEER BAHMAN YAZDANI No. C58322 Exp. 06-30-12 CIVIL STATE OF CALIFORNIA

THE STATE OF CALIFORNIA OR ITS OFFICERS OR AGENTS SHALL NOT BE RESPONSIBLE FOR THE ACCURACY OR COMPLETENESS OF SCANNED COPIES OF THIS PLAN SHEET.

DRAINAGE SYSTEM 1

(a) 18" x 126.4' AP DD WITH TYPE L-3 COLLAR (SEE DRAINAGE DETAILS)

(b) 36" OCP INLET
H= 4.3'

(c) CONCRETE DITCH TRANSITION (SEE DRAINAGE DETAILS)

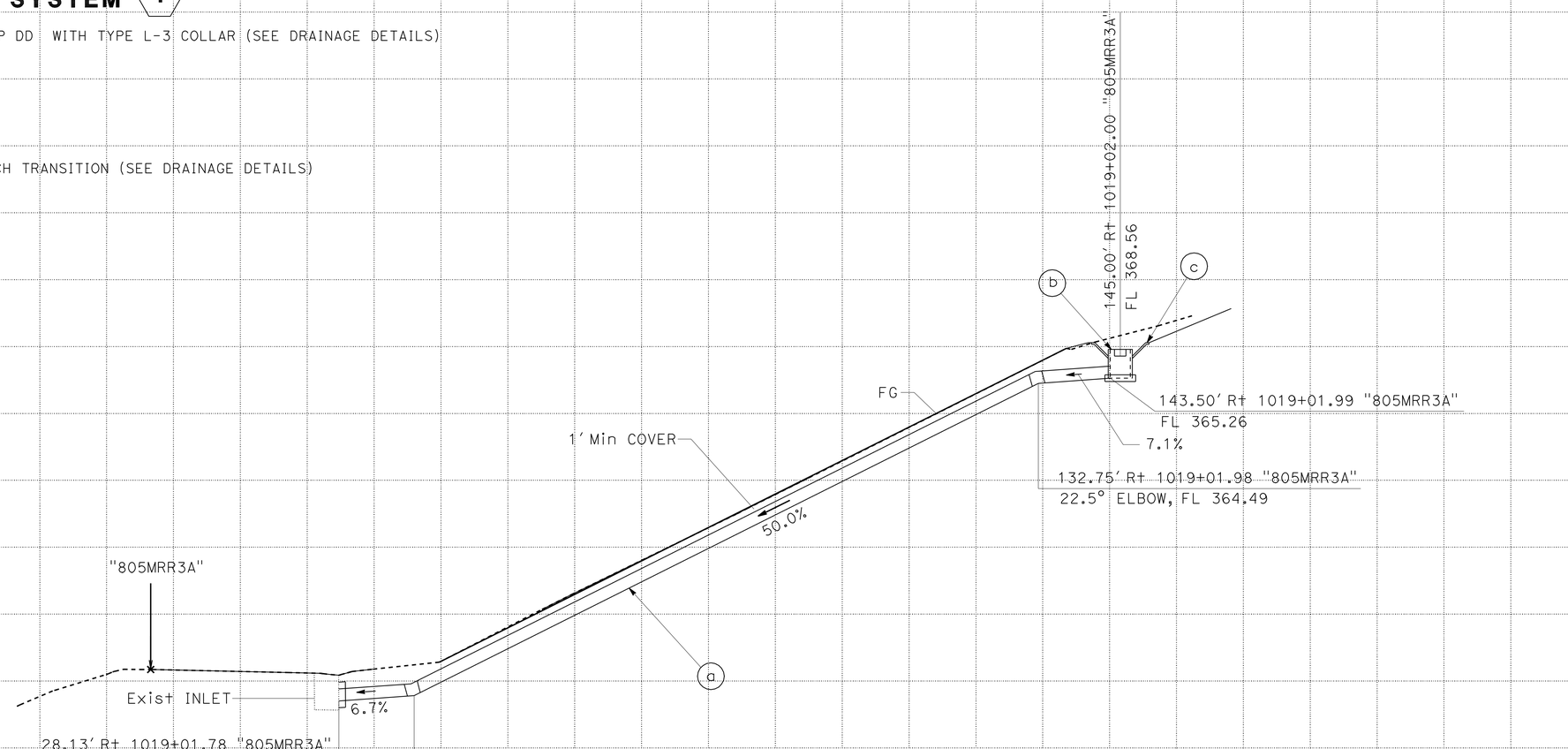

DRAINAGE PROFILE

SCALE 1" = 50'

DP-1

STATE OF CALIFORNIA - DEPARTMENT OF TRANSPORTATION
Caltrans DESIGN

FUNCTIONAL SUPERVISOR: CHRIS M THOMAS
CALCULATED-DESIGNED BY: BAHMAN YAZDANI
CHECKED BY: RICARDO PADILLA
REVISED BY
DATE REVISED

LAST REVISION 06-29-10
DATE PLOTTED => 02-JUL-2010
TIME PLOTTED => 15:01

Dist	COUNTY	ROUTE	POST MILES TOTAL PROJECT	SHEET No.	TOTAL SHEETS
11	SD	5,805	R40.1 18.6/18.8	17	56

Bahman Yazdani 06-09-10
REGISTERED CIVIL ENGINEER DATE

06-28-10
PLANS APPROVAL DATE

REGISTERED PROFESSIONAL ENGINEER BAHMAN YAZDANI No. C58322 Exp. 06-30-12 CIVIL STATE OF CALIFORNIA

THE STATE OF CALIFORNIA OR ITS OFFICERS OR AGENTS SHALL NOT BE RESPONSIBLE FOR THE ACCURACY OR COMPLETENESS OF SCANNED COPIES OF THIS PLAN SHEET.

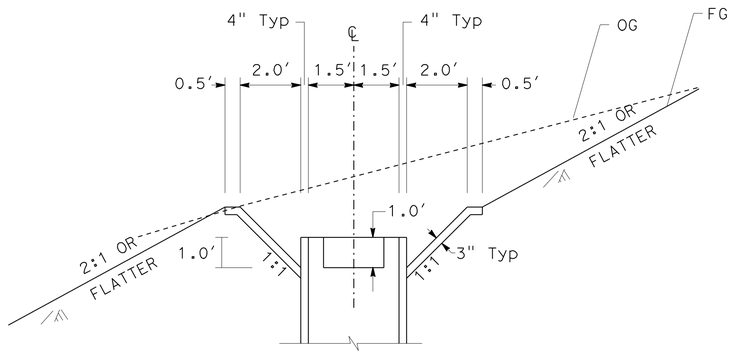

SECTION A-A

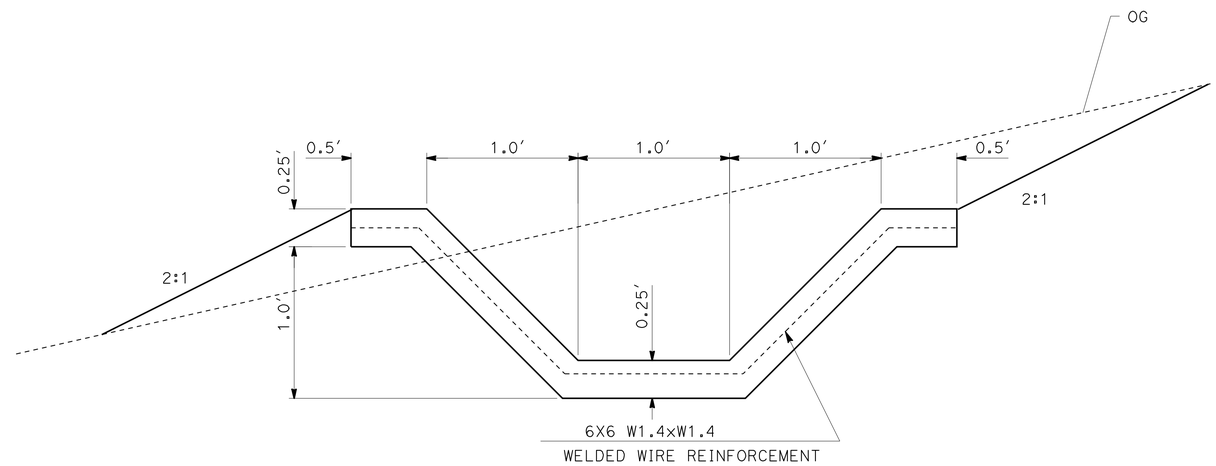

CONCRETE LINED DITCH

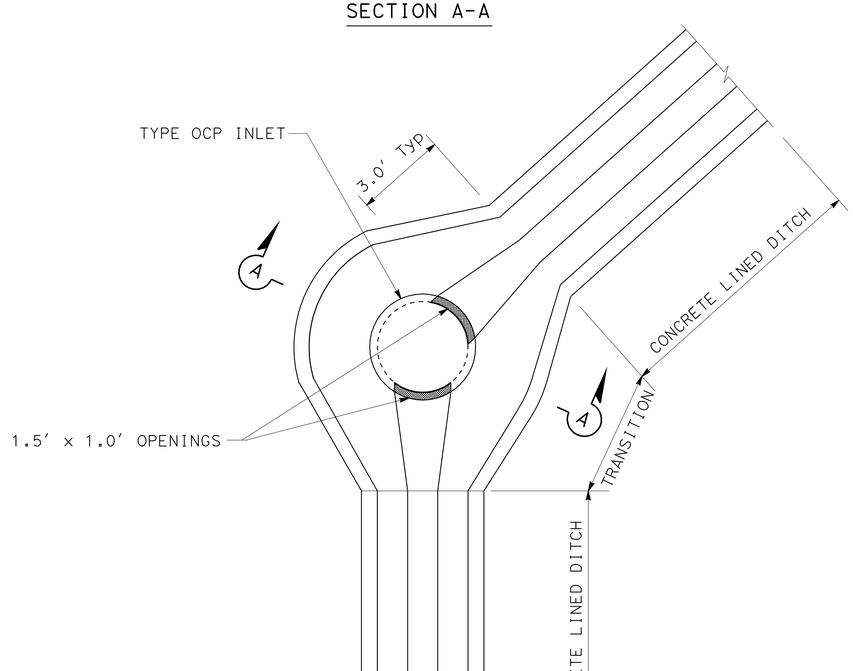

PLAN

CONCRETE DITCH TRANSITION

1 C

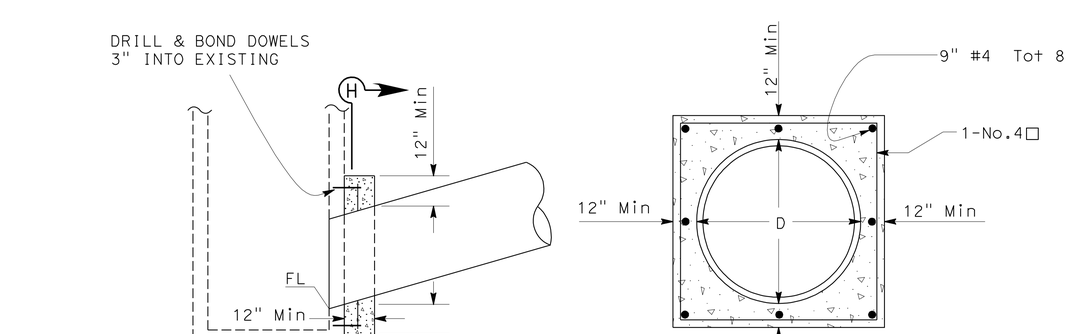

SECTION H-H

NOTE: BEND EXPOSED REINFORCED BAR INTO CONCRETE COLLAR.

TYPE L-3 COLLAR

DRAINAGE DETAILS

NO SCALE

DD-1

STATE OF CALIFORNIA - DEPARTMENT OF TRANSPORTATION
Caltrans® DESIGN

FUNCTIONAL SUPERVISOR: CHRIS M THOMAS
CALCULATED-DESIGNED BY: BAHMAN YAZDANI
CHECKED BY: RICARDO PADILLA
REVISED BY
DATE REVISED

LAST REVISION 06-29-10
DATE PLOTTED => 02-JUL-2010
TIME PLOTTED => 15:01

Dist	COUNTY	ROUTE	POST MILES TOTAL PROJECT	SHEET No.	TOTAL SHEETS
11	SD	5,805	R40.1 18.6/18.8	18	56

Bahman Yazdani 06-09-10
REGISTERED CIVIL ENGINEER DATE

06-28-10
PLANS APPROVAL DATE

REGISTERED PROFESSIONAL ENGINEER
BAHMAN YAZDANI
No. C58322
Exp. 06-30-12
CIVIL
STATE OF CALIFORNIA

THE STATE OF CALIFORNIA OR ITS OFFICERS OR AGENTS SHALL NOT BE RESPONSIBLE FOR THE ACCURACY OR COMPLETENESS OF SCANNED COPIES OF THIS PLAN SHEET.

DRAINAGE SYSTEM No	UNIT No	PLAN SHEET NO	MISCELLANEOUS IRON AND STEEL LB	18" ALTERNATIVE PIPE DOWNDRAIN LF	CONCRETE (DITCH LINING) CY	DITCH EXCAVATION CY	MINOR CONCRETE (MINOR STRUCTURE) CY	CONCRETE COLLAR(N) EA	36" PRECAST CONCRETE PIPE INLET LF	PIPE JOINT CLASSIFICATION (N)	MAXIMUM COVER (N)	DESCRIPTION	STATION	PLAN SHEET No	DRAINAGE SYSTEM No	DRAINAGE UNIT No
1	a	D-1		126.4				1		D	3.1	18" AP DOWNDRAIN WITH TYPE L3 COLLAR		D-1	1	a
	b		112				0.5		4.8			36" OCP PIPE INLET, H=4.3' W/ STEEL PLATE COVER	"805MRR3A" 1019+02.00			b
	c				0.4	1.4						CONCRETE DITCH TRANSITION (L=9')				c
	-				23.1	77.6						CONCRETE LINED DITCH (L=516')	10+00 "DITCH" TO 15+25 "DITCH"			-
TOTAL			112	126.4	23.5	79.0	0.5		4.8							

NOTES: 1. JOINT TYPE: P=POSITIVE, D-DOWNDRAIN, S=STANDARD [N] NOT A SEPARATE ITEM. FOR INFORMATION ONLY.

AP DD ALLOWABLE PIPE MATERIAL

DESCRIPTION	TYPE		
	CSP (1) (14 Ga)	HDPE TYPE C	CSSRP (2) (3/4" X 3/4") 7.5" PITCH
	SIZE	SIZE	SIZE
18" AP	18"	18"	18"

NOTES:
1. ALLOWABLE COATING:
   BITUMINOUS COATING
   POLYMERIC SHEET COATING
2. COMPOSITE STEEL SPIRAL RIB PIPE (16 GA.) (CSSRP)

DRAINAGE QUANTITIES
DQ-1

BAHMAN YAZDANI — REVISED BY
RICARDO PADILLA — DATE REVISED
CALCULATED-DESIGNED BY
CHECKED BY
FUNCTIONAL SUPERVISOR
CHRIS M THOMAS
STATE OF CALIFORNIA - DEPARTMENT OF TRANSPORTATION
Caltrans DESIGN

LAST REVISION 06-29-10 | DATE PLOTTED => 02-JUL-2010 | TIME PLOTTED => 15:01

Dist	COUNTY	ROUTE	POST MILES TOTAL PROJECT	SHEET No.	TOTAL SHEETS
11	SD	5,805	R40.1 18.6/18.8	19	56

06-10-10
REGISTERED CIVIL ENGINEER DATE

06-28-10
PLANS APPROVAL DATE

REGISTERED PROFESSIONAL ENGINEER SHAHIN T. ADIBI No. 54839 Exp. 06-30-12 CIVIL STATE OF CALIFORNIA

THE STATE OF CALIFORNIA OR ITS OFFICERS OR AGENTS SHALL NOT BE RESPONSIBLE FOR THE ACCURACY OR COMPLETENESS OF ELECTRONIC COPIES OF THIS PLAN SHEET.

NOTES:

1. EXACT LOCATION OF SIGNS TO BE DETERMINED BY THE ENGINEER.

LEGEND

X - CONSTRUCTION AREA SIGN

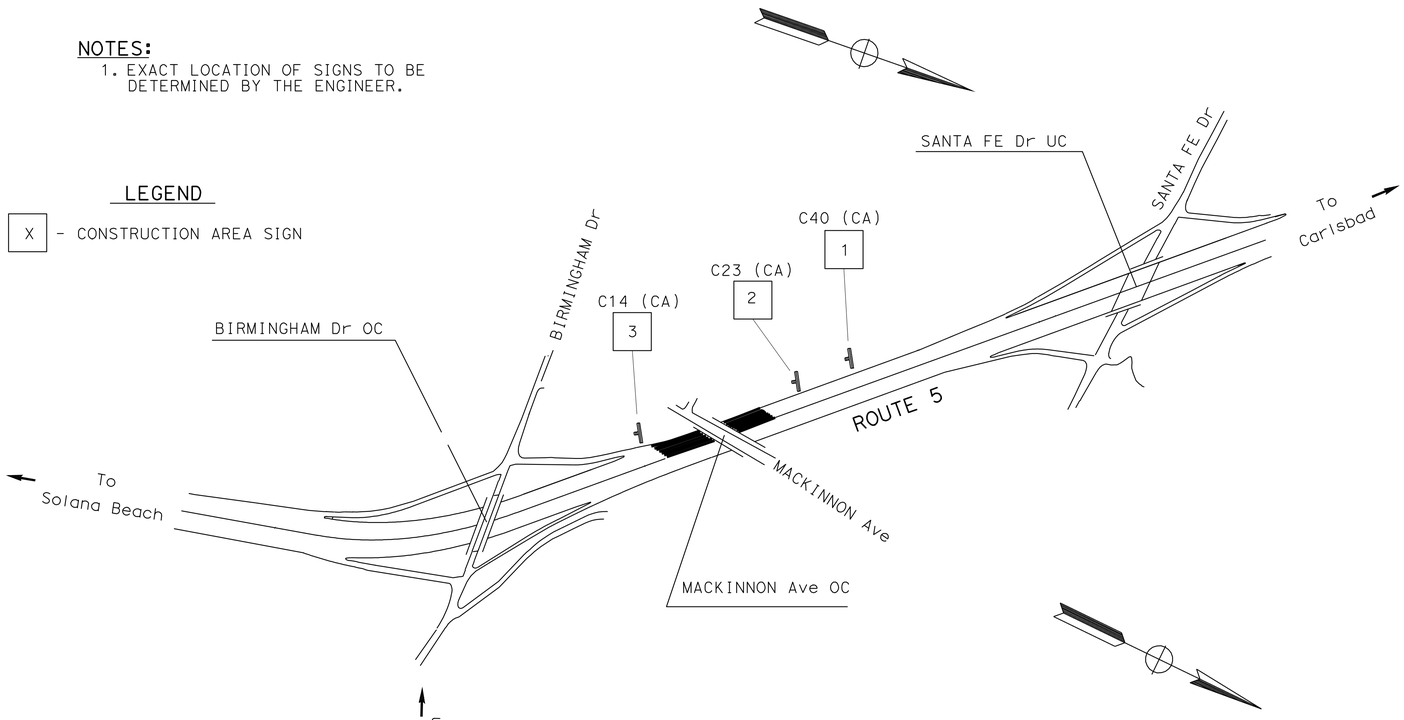

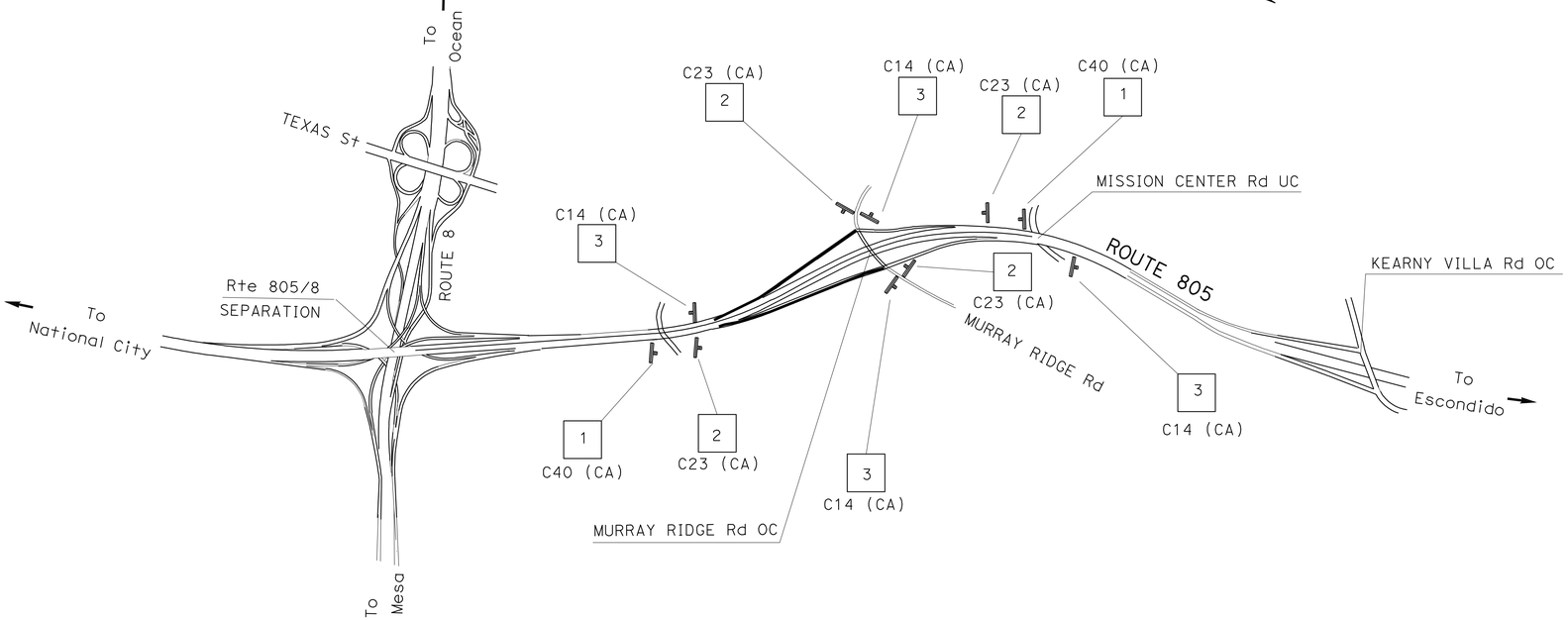

TYPICAL- PLACEMENT OF TRAFFIC PLASTIC DRUM

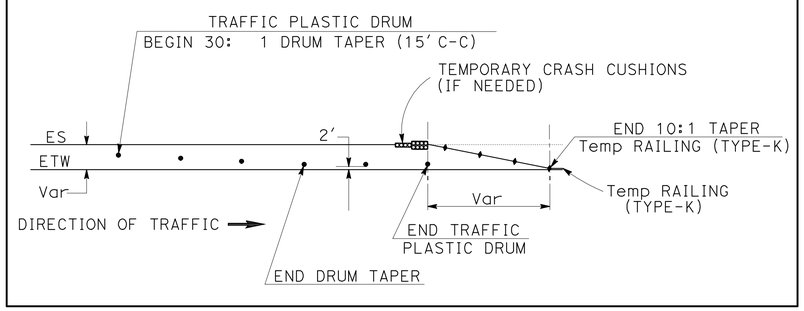

CONSTRUCTION AREA SIGNS

SIGN No.	TYPE	PANEL SIZE (INCH)	No. OF POST AND SIZE (INCH)	No. OF SIGNS
1	C40 (CA)	108 X 42	2 - 4 x 6 (s)	3
2	C23 (CA)	48 X 48	1 - 4 x 6 (s)	5
3	C14 (CA)	48 X 24	1 - 4 x 6 (s)	5
4	W21-5bR (AHEAD)	48 X 48	1 - 4 x 6 (s)	4*
5	C31A (CA)	48 X 48	1 - 4 x 6 (s)	2*
			TOTAL	19

(s) DENOTES STATIONARY SIGN.

* SEE TRAFFIC HANDLING PLANS FOR SIGN LOCATION.

THIS PLAN ACCURATE FOR CONSTRUCTION AREA SIGNS WORK ONLY.

CONSTRUCTION AREA SIGNS

NO SCALE

CS-1

STATE OF CALIFORNIA - DEPARTMENT OF TRANSPORTATION
Caltrans
TRAFFIC

FUNCTIONAL SUPERVISOR: CAMILLE ABOUFADEL
CALCULATED-DESIGNED BY: NOEL TAPIA
CHECKED BY: SHAHIN T ADIBI
REVISED BY
DATE REVISED

LAST REVISION 06-29-10
DATE PLOTTED => 02-JUL-2010
TIME PLOTTED => 15:01

Dist	COUNTY	ROUTE	POST MILES TOTAL PROJECT	SHEET No.	TOTAL SHEETS
11	SD	5,805	R40.1 18.6/18.8	20	56

Bahman Yazdani 06-09-10
REGISTERED CIVIL ENGINEER DATE

06-28-10
PLANS APPROVAL DATE

REGISTERED PROFESSIONAL ENGINEER BAHMAN YAZDANI No. C58322 Exp. 06-30-12 CIVIL STATE OF CALIFORNIA

THE STATE OF CALIFORNIA OR ITS OFFICERS OR AGENTS SHALL NOT BE RESPONSIBLE FOR THE ACCURACY OR COMPLETENESS OF SCANNED COPIES OF THIS PLAN SHEET.

NOTE:

1. FOR ACCURATE RIGHT OF WAY AND ACCESS DATA, CONTACT RIGHT OF WAY ENGINEERING AT THE DISTRICT OFFICE.

LEGEND

- WORK AREA
- (XX) = PERMANENT PAVEMENT DELINEATION DETAIL
- BR(XX) = BEGIN REMOVE PAVEMENT DELINEATION DETAIL
- ER(XX) = END REMOVE PAVEMENT DELINEATION DETAIL
- BT(XX) = BEGIN TEMPORARY PAVEMENT DELINEATION DETAIL
- ET(XX) = END TEMPORARY PAVEMENT DELINEATION DETAIL
- Temp CRASH CUSHION

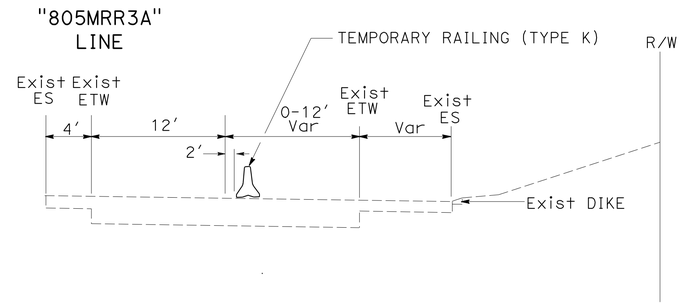

SECTION A-A
NO SCALE

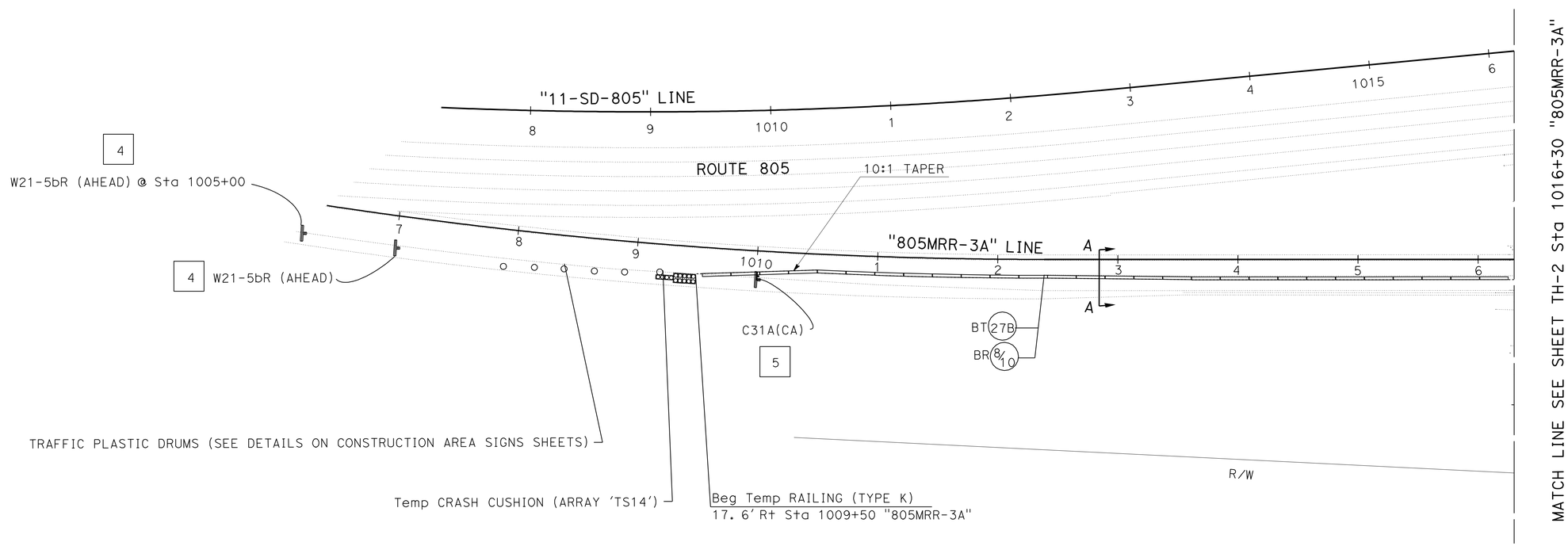

THIS PLAN ACCURATE FOR TRAFFIC HANDLING WORK ONLY

TRAFFIC HANDLING PLAN

SCALE 1" = 50'

TH-1

STATE OF CALIFORNIA - DEPARTMENT OF TRANSPORTATION
Caltrans® DESIGN

FUNCTIONAL SUPERVISOR: CHRIS M THOMAS
CALCULATED-DESIGNED BY: BAHMAN YAZDANI
CHECKED BY: RICARDO PADILLA
REVISED BY / DATE REVISED

LAST REVISION 06-29-10
DATE PLOTTED => 02-JUL-2010
TIME PLOTTED => 15:01

Dist	COUNTY	ROUTE	POST MILES TOTAL PROJECT	SHEET No.	TOTAL SHEETS
11	SD	5,805	R40.1 18.6/18.8	21	56

Bahman Yazdani 06-09-10
REGISTERED CIVIL ENGINEER DATE

06-28-10
PLANS APPROVAL DATE

REGISTERED PROFESSIONAL ENGINEER BAHMAN YAZDANI No. C58322 Exp. 06-30-12 CIVIL STATE OF CALIFORNIA

THE STATE OF CALIFORNIA OR ITS OFFICERS OR AGENTS SHALL NOT BE RESPONSIBLE FOR THE ACCURACY OR COMPLETENESS OF SCANNED COPIES OF THIS PLAN SHEET.

NOTE:

1. FOR ACCURATE RIGHT OF WAY AND ACCESS DATA, CONTACT RIGHT OF WAY ENGINEERING AT THE DISTRICT OFFICE.

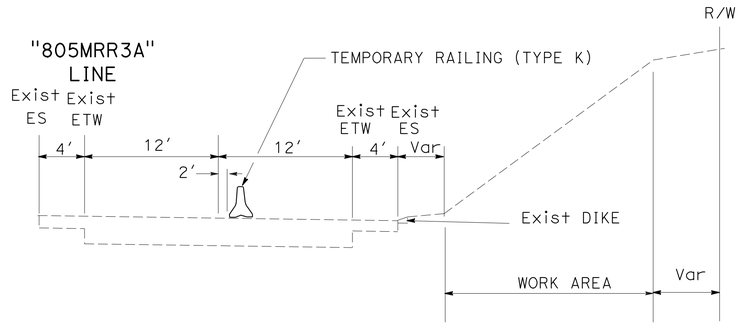

SECTION A-A
NO SCALE

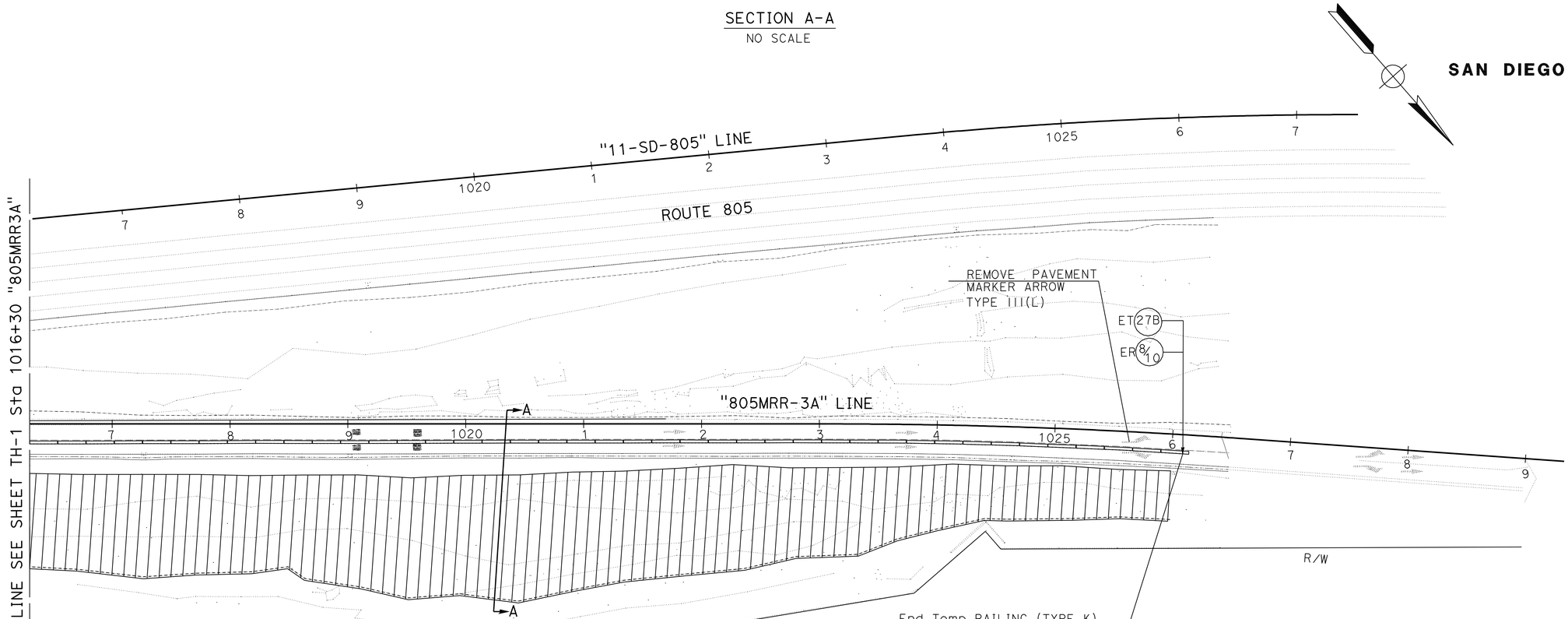

THIS PLAN ACCURATE FOR TRAFFIC HANDLING WORK ONLY

TRAFFIC HANDLING PLAN

SCALE 1" = 50'

TH-2

STATE OF CALIFORNIA - DEPARTMENT OF TRANSPORTATION
Caltrans® DESIGN

FUNCTIONAL SUPERVISOR: CHRIS M THOMAS
CALCULATED-DESIGNED BY: BAHMAN YAZDANI
CHECKED BY: RICARDO PADILLA
REVISED BY
DATE REVISED

LAST REVISION 06-29-10
DATE PLOTTED => 02-JUL-2010
TIME PLOTTED => 15:01

Dist	COUNTY	ROUTE	POST MILES TOTAL PROJECT	SHEET No.	TOTAL SHEETS
11	SD	5,805	R40.1 18.6/18.8	22	56

Bahman Yazdani 06-09-10
REGISTERED CIVIL ENGINEER DATE

06-28-10
PLANS APPROVAL DATE

REGISTERED PROFESSIONAL ENGINEER BAHMAN YAZDANI No. C58322 Exp. 06-30-12 CIVIL STATE OF CALIFORNIA

THE STATE OF CALIFORNIA OR ITS OFFICERS OR AGENTS SHALL NOT BE RESPONSIBLE FOR THE ACCURACY OR COMPLETENESS OF SCANNED COPIES OF THIS PLAN SHEET.

NOTE:

1. FOR ACCURATE RIGHT OF WAY AND ACCESS DATA, CONTACT RIGHT OF WAY ENGINEERING AT THE DISTRICT OFFICE.

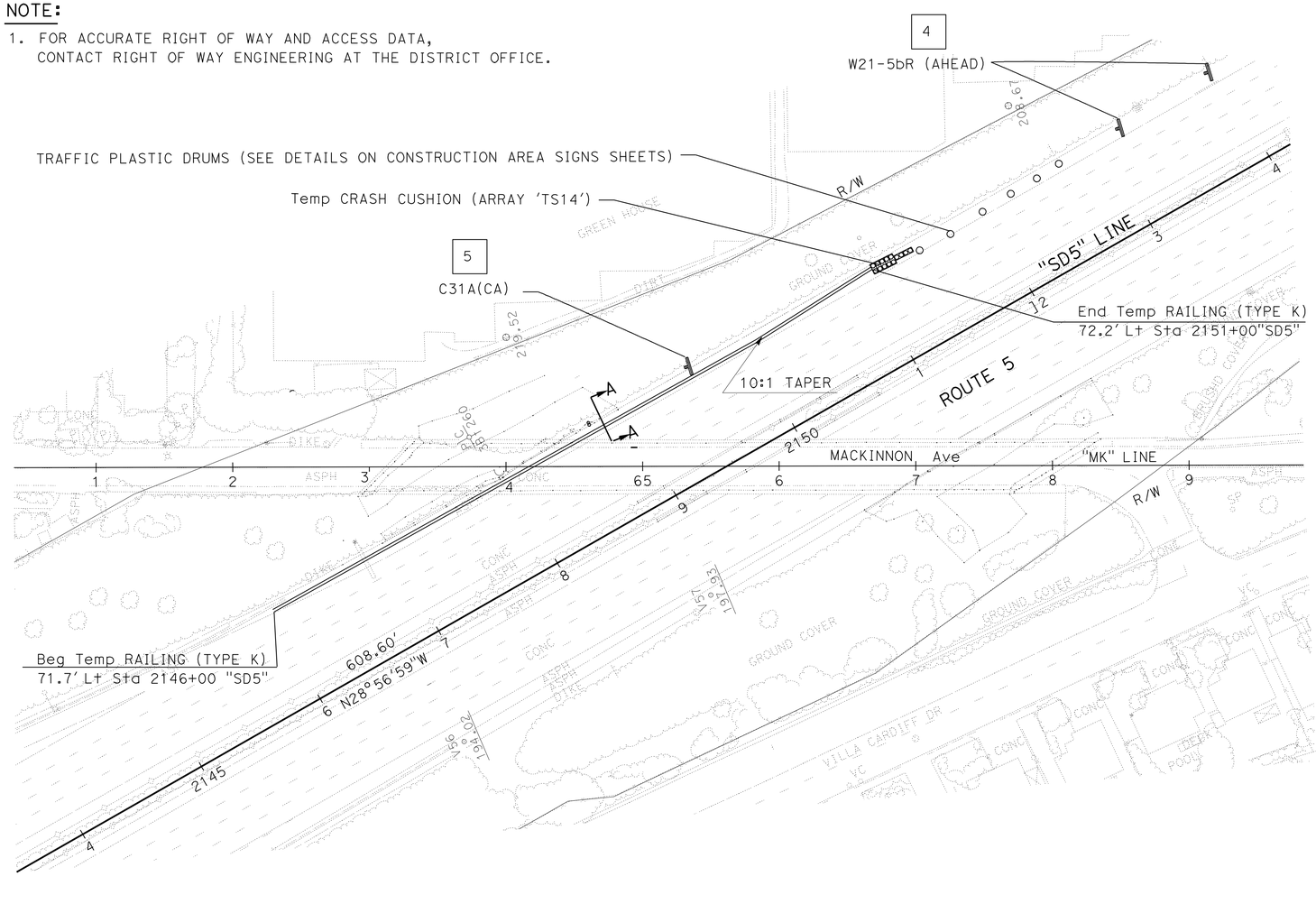

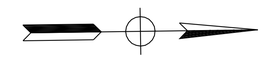

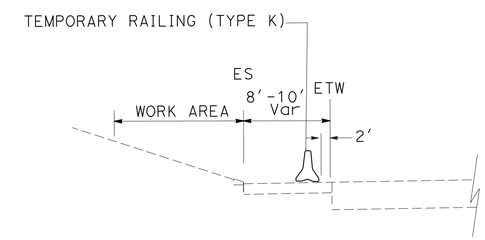

SECTION A-A
NO SCALE

THIS PLAN ACCURATE FOR TRAFFIC HANDLING WORK ONLY

TRAFFIC HANDLING PLAN

SCALE 1" = 50'

TH-3

STATE OF CALIFORNIA - DEPARTMENT OF TRANSPORTATION
Caltrans® DESIGN

FUNCTIONAL SUPERVISOR: CHRIS M THOMAS
CALCULATED-DESIGNED BY: BAHMAN YAZDANI
CHECKED BY: RICARDO PADILLA
REVISED BY
DATE REVISED

LAST REVISION 06-29-10
DATE PLOTTED => 02-JUL-2010
TIME PLOTTED => 15:01

Dist	COUNTY	ROUTE	POST MILES TOTAL PROJECT	SHEET No.	TOTAL SHEETS
11	SD	5,805	R40.1 18.6/18.8	23	56

Bahman Yazdani 06-09-10
REGISTERED CIVIL ENGINEER DATE

06-28-10
PLANS APPROVAL DATE

REGISTERED PROFESSIONAL ENGINEER BAHMAN YAZDANI No. C58322 Exp. 06-30-12 CIVIL STATE OF CALIFORNIA

THE STATE OF CALIFORNIA OR ITS OFFICERS OR AGENTS SHALL NOT BE RESPONSIBLE FOR THE ACCURACY OR COMPLETENESS OF SCANNED COPIES OF THIS PLAN SHEET.

REMOVE PAINTED TRAFFIC STRIPE

SHEET	LINE	STATION	DETAIL	Temp TRAFFIC STRIPE (LF)	EXISTING TRAFFIC STRIPE (LF)
TH-1, TH-2	"805MRR-3A"	1012+38 TO 1026+10	8/10		401
TH-1, TH-2	"805MRR-3A"	1012+38 TO 1026+10	27B	1372	
TOTAL				1773*	

* SEE PDQ SHEETS FOR ADDITIONAL QUANTITIES.

TEMPORARY PAVEMENT DELINEATION

DESCRIPITION				TEMPORARY TRAFFIC STRIPE (PAINT) (LF)
SHEET	LINE	STATION	DETAIL	
TH-1, TH-2	"805MRR-3A"	1012+38 TO 1026+10	27B	1372
TOTAL				1372

REMOVE THERMOPLASTIC PAVEMENT MARKING

SHEET	LINE	Sta	ARROW TYPE III(L) SQFT
TH-2	"805MRR-3A"	1025+70	42
TOTAL			42*

* SEE PDQ SHEETS FOR ADDITIONAL QUANTITIES.

REMOVE PAVEMENT MARKER

DESCRIPITION				
SHEET	LINE	STATION	DETAIL	EACH
TH-1, TH-2	"805MRR-3A"	1012+38 TO 1026+10	8/10	202
TOTAL				202*

* SEE PDQ SHEETS FOR ADDITIONAL QUANTITIES.

TRAFFIC PLASTIC DRUM

SHEET	EACH
TH-1	6
TH-3	6
TOTAL	12

TEMPORARY CRASH CUSHION MODULE

LINE	SIDE	STATION LIMITS	QUANTITY (EA)
"805MRR3A"	R†	1009+50	14
"SD5"	L†	2151+00	14
		TOTAL	28

TEMPORARY RAILING (TYPE K)

LINE	SIDE	STATION LIMITS	LENGTH (LF)
"805MRR3A"	R†	1009+50 TO 1026+10	1660
"SD5"	L†	2146+00 TO 2151+00	500
		TOTAL	2160

TRAFFIC HANDLING QUANTITIES
THQ-1

STATE OF CALIFORNIA - DEPARTMENT OF TRANSPORTATION
Caltrans DESIGN

FUNCTIONAL SUPERVISOR: CHRIS M THOMAS
CALCULATED-DESIGNED BY: BAHMAN YAZDANI
CHECKED BY: RICARDO PADILLA
REVISED BY
DATE REVISED

LAST REVISION 06-29-10
DATE PLOTTED => 02-JUL-2010
TIME PLOTTED => 15:01

Dist	COUNTY	ROUTE	POST MILES TOTAL PROJECT	SHEET No.	TOTAL SHEETS
11	SD	5,805	R40.1 18.6/18.8	24	56

REGISTERED CIVIL ENGINEER 06-10-10 DATE

06-28-10
PLANS APPROVAL DATE

REGISTERED PROFESSIONAL ENGINEER SHAHIN T. ADIBI No. 54839 Exp. 06-30-12 CIVIL STATE OF CALIFORNIA

THE STATE OF CALIFORNIA OR ITS OFFICERS OR AGENTS SHALL NOT BE RESPONSIBLE FOR THE ACCURACY OR COMPLETENESS OF ELECTRONIC COPIES OF THIS PLAN SHEET.

NOTES:

1. FOR ACCURATE RIGHT OF WAY AND ACCESS DATA, CONTACT RIGHT OF WAY ENGINEERING AT THE DISTRICT OFFICE.
2. ALL STRIPING ARE TO BE REPLACED IN KIND OR REFRESHED UNLESS OTHERWISE SHOWN ON THE PLANS.

LEGEND :

- = CHANGE OF PAVEMENT DELINEATION DETAIL
- (XX) = PAVEMENT DELINEATION DETAIL
- BR (XX) = BEGIN REMOVE PAVEMENT DELINEATION DETAIL
- ER (XX) = END REMOVE PAVEMENT DELINEATION DETAIL

SAN DIEGO

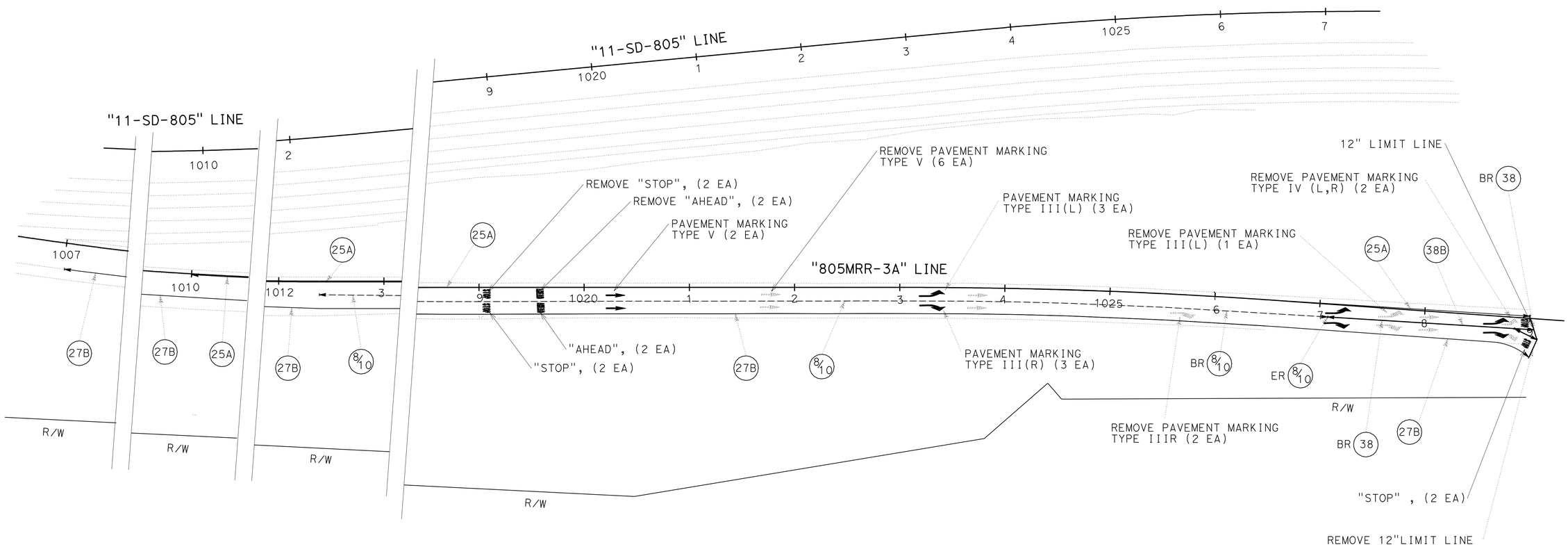

THIS PLAN ACCURATE FOR PAVEMENT DELINEATION AND SIGN WORK ONLY

PAVEMENT DELINEATION AND SIGN PLAN

SCALE: 1"=50'

PD-1

REVISED BY	DATE REVISED

CALCULATED-DESIGNED BY	CHECKED BY
NOEL TAPIA	SHAHIN T. ADIBI

FUNCTIONAL SUPERVISOR: CAMILLE ABOUFADEL

STATE OF CALIFORNIA - DEPARTMENT OF TRANSPORTATION

Caltrans **TRAFFIC DESIGN**

LAST REVISION 06-29-10 | DATE PLOTTED => 02-JUL-2010 | TIME PLOTTED => 15:01

Dist	COUNTY	ROUTE	POST MILES TOTAL PROJECT	SHEET No.	TOTAL SHEETS
11	SD	5,805	R40.1 18.6/18.8	25	56

REGISTERED CIVIL ENGINEER 06-10-10 DATE

06-28-10
PLANS APPROVAL DATE

REGISTERED PROFESSIONAL ENGINEER
SHAHIN T. ADIBI
No. 54839
Exp. 06-30-12
CIVIL
STATE OF CALIFORNIA

THE STATE OF CALIFORNIA OR ITS OFFICERS OR AGENTS SHALL NOT BE RESPONSIBLE FOR THE ACCURACY OR COMPLETENESS OF SCANNED COPIES OF THIS PLAN SHEET.

PAVEMENT MARKER AND TRAFFIC STRIPE SUMMARY

ROUTE	DETAIL No.	PAVEMENT MARKER (EA) NON-REFLECTIVE TYPE A WHITE	PAVEMENT MARKER (EA) RETRO-REFLECTIVE TYPE G CLEAR	PAINT TRAFFIC STRIPE (2 COAT) (LF)	8" THERMOPLASTIC TRAFFIC STRIPE (LF) SOLID	REMARKS
SD-805, MURRAY RIDGE OFFRAMP	25A			1900		REFRESH
	27B			2250		REFRESH
	38B		20		210	
	8/10	183	32	1462		REPLACE IN KIND
SUBTOTAL			52	5612	210	
TOTAL		183	52	5612	210	

REMOVE THERMOPLASTIC PAVEMENT MARKING

LOCATION	LIMIT LINE 12 in SQFT	ARROW TYPE III(R) SQFT	ARROW TYPE III(L) SQFT	ARROW TYPE IV(L,R) SQFT	ARROW TYPE V SQFT	AHEAD SQFT	STOP SQFT
NB-805, MURRAY RIDGE OFR	53.0	84.0	42.0	30.0	132.0	62.0	88.0
TOTAL	491						

* SEE THQ SHEET FOR ADDITIONAL QUANTITIES.

REMOVE TRAFFIC STRIPE

DETAIL NO.	REMOVE PAINTED TRAFFIC STRIPE (LF) 4" STRIPE	REMOVE THERMOPLASTIC TRAFFIC STRIPE (LF) 8" STRIPE	REMARKS
38		420	L = 210 LF
8/10	27		
TOTAL	27 *	420	

* SEE THQ SHEET FOR ADDITIONAL QUANTITIES.

THERMOPLASTIC PAVEMENT MARKING

LOCATION	LIMIT LINE 12 in SQFT	ARROW TYPE III(R) SQFT	ARROW TYPE III(L) SQFT	ARROW TYPE V SQFT	AHEAD SQFT	STOP SQFT
NB-805, MURRAY RIDGE OFR	53.0	126.0	126.0	66.0	62.0	88.00
TOTAL	521.0					

REMOVE PAVEMENT MARKER

LOCATION	DETAIL	TYPE	QUANTITY (EA)
MURRAY RIDGE OFFRAMP	8/10	A, G	13
	38	G	10
		TOTAL	23 *

* SEE THQ FOR ADDITIONAL QUANTITIES.

PAVEMENT DELINEATION QUANTITIES

PDQ-1

REVISED BY | DATE REVISED
NOEL TAPIA | SHAHIN ADIBI
CALCULATED-DESIGNED BY | CHECKED BY
FUNCTIONAL SUPERVISOR
CAMILLE ABOUFADEL
STATE OF CALIFORNIA - DEPARTMENT OF TRANSPORTATION
Caltrans DESIGN

LAST REVISION 06-29-10 | DATE PLOTTED => 02-JUL-2010 | TIME PLOTTED => 15:02

Dist	COUNTY	ROUTE	POST MILES TOTAL PROJECT	SHEET No.	TOTAL SHEETS
11	SD	5,805	R40.1 18.6/18.8	26	56

Bahman Yazdani 06-09-10
REGISTERED CIVIL ENGINEER DATE

06-28-10
PLANS APPROVAL DATE

REGISTERED PROFESSIONAL ENGINEER BAHMAN YAZDANI No. C58322 Exp. 06-30-12 CIVIL STATE OF CALIFORNIA

THE STATE OF CALIFORNIA OR ITS OFFICERS OR AGENTS SHALL NOT BE RESPONSIBLE FOR THE ACCURACY OR COMPLETENESS OF SCANNED COPIES OF THIS PLAN SHEET.

LINE	SIDE	STATION LIMITS	SLOPE REPAIR SQFT	IMPORTED TOPSOIL CY	COMPOST (INCORPORATE) SQYD
"805MRR-3A"	R†	1016+30-1026+00	77,249	2,862	954
"805MRR-3A"	L†	1016+04-1021+70	28,518		
"SD5"	L†	2146+60-2148+40	6,927		
		TOTAL	112,694	2,862	954

HMA DIKE

LINE	SIDE	STATION LIMITS	TYPE	PLACE HMA DIKE LENGTH (LF)	MINOR HMA (TON)
"SD5"	L†	2147+85.5 - 2148+45.8	F	60.3	0.78
"SD5"	L†	2148+45.8 - 2149+70.2	C	124.5	0.95
			TOTAL	184.8	1.73

REMOVE ASPHALT CONCRETE DIKE

LINE	SIDE	STATION LIMITS	LENGTH (LF)
"SD5"	L†	2147+85.5 - 2149+70.2	184.7
		TOTAL	184.7

METAL BEAM GUARD RAILING

MBGR No.	SHEET No.	LAYOUT TYPE (N)	MBGR LF	END ANCHOR ASSEMBLY (TYPE SFT) EA	REMOVE MBGR LF	BURIED POST END ANCHOR (N) EA	GUARD RAILING DELINEATOR EA	REMARKS
1	L-2	16C	156.0	1	82.0	1	3	2147+89.8"SD-5" 73.6 L† TO 2149+45.2" SD-5" 85.5 L†
TOTALS			156.0	1	82.0		3	

IRRIGATION CROSSOVERS

LOCATION	STATION	SIDE R†	SIDE L†	WSP Cond (0.25" THICK) SIZE (In)	WSP Cond (0.25" THICK) LENGTH (LF)	(N) WATER LINE CROSSOVER SIZE (In)	(N) SPRINKLER CONTROL CROSSOVER SIZE (In)
				8"			
"805MMR - 3A"	1023+60	-	-	-	40	3"	2"
	TOTAL			X	40		

(N) = NOT A SEPARATE PAY ITEM. FOR INFORMATION ONLY

SUMMARY OF QUANTITIES

Q-1

REVISED BY | DATE REVISED
BAHMAN YAZDANI | RICARDO PADILLA
CALCULATED-DESIGNED BY | CHECKED BY
FUNCTIONAL SUPERVISOR: CHRIS M THOMAS
STATE OF CALIFORNIA - DEPARTMENT OF TRANSPORTATION
Caltrans® DESIGN

LAST REVISION 06-29-10 | DATE PLOTTED => 02-JUL-2010 | TIME PLOTTED => 15:02

Dist	COUNTY	ROUTE	POST MILES TOTAL PROJECT	SHEET No.	TOTAL SHEETS
11	SD	5,805	R40.1 18.6/18.8	27	56

LICENSED LANDSCAPE ARCHITECT

06-28-10
PLANS APPROVAL DATE

LICENSED LANDSCAPE ARCHITECT — DAVID & STRICKLAND — No. 3422 — STATE OF CALIFORNIA — Registration Expiration Date 3/31/12 — 06-09-10 DATE

THE STATE OF CALIFORNIA OR ITS OFFICERS OR AGENTS SHALL NOT BE RESPONSIBLE FOR THE ACCURACY OR COMPLETENESS OF SCANNED COPIES OF THIS PLAN SHEET.

ABBREVIATIONS

AMEND — AMENDMENT
B&B — BALLED AND BURLAPPED
Dia — DIAMETER
EA — EACH
lb — POUND
Oz — OUNCE
Ft — FOOT/FEET
SQFT — SQUARE FOOT
CF — CUBIC FOOT
SQYD — SQUARE YARD
CY — CUBIC YARD
Max — MAXIMUM
Min — MINIMUM
NCN — NO COMMON NAME
NTS — NOT TO SCALE
No. — NUMBER
Pkt — PACKET
PLT ESTB — PLANT ESTABLISHMENT
Pvmt — PAVEMENT
R/W — RIGHT OF WAY
SF — STATE-FURNISHED
TAB — TABLET(S)
TRVD — TRAVELED

APPLICABLE WHEN CIRCLED:

1 - QUANTITIES SHOWN ARE 'PER PLANT' UNLESS SHOWN AS SQFT APPLICATION RATES.
2 - SUFFICIENT TO RECEIVE ROOT BALL.
3 - DOES NOT APPLY TO MULCH AREAS.
4 - AS SHOWN ON PLANS.
5 - UNLESS OTHERWISE SHOWN ON PLANS.
6 - SEE DETAIL.
7 - SEE SPECIAL PROVISIONS.
8 - MULCH (3" DEEP).
9 - THE ENTIRE FLAT OF PEL PEL SHALL BE PLANTED WITHIN THE CAR EDU AT 15' ON CENTER.
10 - PLANT 36 PEL PEL IN A 5' Dia area. SPACE 5' Dia AREAS 15' ON CENTER WITHIN THE DESIGNATED AREA.
11 - RANDOMLY SPACED IN AREAS SHOWN ON PLANS.
12 - C-2 SPRINKLER REQUIRED

PLANT LIST AND PLANTING SPECIFICATIONS

PLANT GROUP	PLANT No.	SYMBOL	BOTANICAL NAME	COMMON NAME	SIZE	QUANTITY EACH	HOLE SIZE (INCH) Dia	HOLE SIZE (INCH) DEPTH	BASIN TYPE	IRON SULFATE 1 (lb)	SOIL Amend 1 (lb)	COMMERCIAL FERTILIZER 1 PLANTING	COMMERCIAL FERTILIZER 1 PLT ESTB	BASIN MULCH 1 (CY)	STAKING	PLANTING LIMITS MINIMUM DISTANCE (Ft) FROM TRVD WAY	Pvmt	FENCE	WALL	PAVED DITCH	EARTH DITCH	ON CENTER (FT)	REMARKS
A	1		ARTEMESIA CALIFORNICA	CALIFORNIA SAGEBRUSH	No. 1	1085	2	2	1	0.08	-	1 Pkt	-	0.03	-	-	5	6	6	8	8	15	SHRUB 11
	2		BACCHARIS PILULARIS 'PIGEON POINT'	COYOTE BRUSH	No. 1	435	2	2	1	0.08	-	1 Pkt	-	0.03	-	-	5	6	6	8	8	25	SHRUB 11
	3		ENCELIA CALIFORNICA	COASTAL SUNFLOWER	No. 1	655	2	2	1	0.08	-	1 Pkt	-	0.03	-	-	5	6	6	8	8	20	SHRUB 11
	4		HETEROMELES ARBUTIFOLIA	TOYON	No. 1	217	2	2	1	0.08	-	1 Pkt	-	0.03	-	-	5	6	6	8	8	20	SHRUB 11
	5		MALOSMA LAURINA	LAUREL SUMAC	No. 1	26	2	2	1	0.08	-	1 Pkt	-	0.03	-	-	5	6	6	8	8	4	SHRUB 12
	6		QUERCUS AGRIFOLIA	COAST LIVE OAK	No. 1	58	2	2	1	0.08	-	1 Pkt	-	0.03	-	-	5	6	6	8	8	4	TREE 12
	7		SALVIA APIANA	WHITE SAGE	No. 1	655	2	2	1	0.08	-	1 Pkt	-	0.03	-	-	5	6	6	8	8	20	SHRUB 11
	8		SALVIA MELLIFERA	BLACK SAGE	No. 1	655	2	2	1	0.08	-	1 Pkt	-	0.03	-	-	5	6	6	8	8	20	SHRUB 11
	9		SAMBUCUS MEXICANA	MEXICAN ELDERBERRY	No. 1	25	2	2	1	0.08	-	1 Pkt	-	0.03	-	-	5	6	6	8	8	4	SHRUB 12
	10		VIGUIERA LACINIATA	SAN DIEGO SUNFLOWER	No. 1	1085	2	2	1	0.08	-	1 Pkt	-	0.03	-	-	5	6	6	8	8	15	SHRUB 11
B	11		EUCALYPTUS FICIFOLIA	RED FLOWERING GUM	No. 5	33	2	2	2	0.25	-	2 Pkt	-	0.03	-	-	5	6	6	8	8	4	TREE 12
	12		MALOSMA LAURINA	LAUREL SUMAC	No. 5	60	2	2	2	0.25	-	2 Pkt	-	0.03	-	-	5	6	6	8	8	4	SHRUB 12
	13		QUERCUS AGRIFOLIA	COAST LIVE OAK	No. 5	14	2	2	2	0.25	-	2 Pkt	-	0.03	-	-	5	6	6	8	8	4	TREE 12
	14		SAMBUCUS MEXICANA	MEXICAN ELDERBERRY	No. 5	33	2	2	2	0.25	-	2 Pkt	-	0.03	-	-	5	6	6	8	8	4	SHRUB 12
	15		SCHINUS MOLLE	CALIFORNIA PEPPER	No. 5	65	2	2	2	0.25	-	2 Pkt	-	0.03	-	-	5	6	6	8	8	4	TREE 12
F	16		PELARGONIUM PELTATUM	IVY GERANIUM	IN FLATS	5545	-	-	-	-	-	4LB/1000 SQFT	4LB/1000 SQFT	-	-	-	-	-	-	-	-	10	GROUND COVER
-	17		VINCA MINOR	DWARF PERIWINKLE	IN FLATS	4450	-	-	-	-	-	4LB/1000 SQFT	4LB/1000 SQFT	-	-	-	-	-	-	-	-	12"	GROUND COVER
H	18		CARPOBROTUS EDULIS	HOT 'N TOT FIG	CUTTINGS	15,705	-	-	-	-	-	4LB/1000 SQFT	4LB/1000 SQFT	-	-	-	-	-	-	-	-	18"	GROUND COVER

MAINTAIN EXISTING PLANTED AREAS

EXISTING TREES TO REMAIN

NOTE:

UNDERLINED PORTIONS OF BOTANICAL NAMES INDICATE ABBREVIATIONS USED ON PLANTING PLANS.

PLANT LIST
PL-1

REVISED BY | DATE REVISED
DAVID STRICKLAND | JOHN NEWLON
CALCULATED-DESIGNED BY | CHECKED BY
SENIOR LANDSCAPE ARCHITECT | STEPHEN ALVAREZ

STATE OF CALIFORNIA - DEPARTMENT OF TRANSPORTATION
Caltrans LANDSCAPE ARCHITECTURE

LAST REVISION 06-29-10 | DATE PLOTTED => 02-JUL-2010 | TIME PLOTTED => 15:02

Dist	COUNTY	ROUTE	POST MILES TOTAL PROJECT	SHEET No.	TOTAL SHEETS
11	SD	5,805	R40.1 18.6/18.8	28	56

LICENSED LANDSCAPE ARCHITECT

06-28-10

PLANS APPROVAL DATE

THE STATE OF CALIFORNIA OR ITS OFFICERS OR AGENTS SHALL NOT BE RESPONSIBLE FOR THE ACCURACY OR COMPLETENESS OF SCANNED COPIES OF THIS PLAN SHEET.

LICENSED LANDSCAPE ARCHITECT DAVID G. STRICKLAND NO. 3403 STATE OF CALIFORNIA

Signature 3/31/12 Renewal Date 06-09-10 Date

NOTE:

1. FOR ACCURATE RIGHT OF WAY AND ACCESS DATA, CONTACT RIGHT OF WAY ENGINEERING AT THE DISTRICT OFFICE.
2. MAINTAIN TREES, SHRUBS AND GROUND COVERS IN EXISTING PLANTED AREAS.

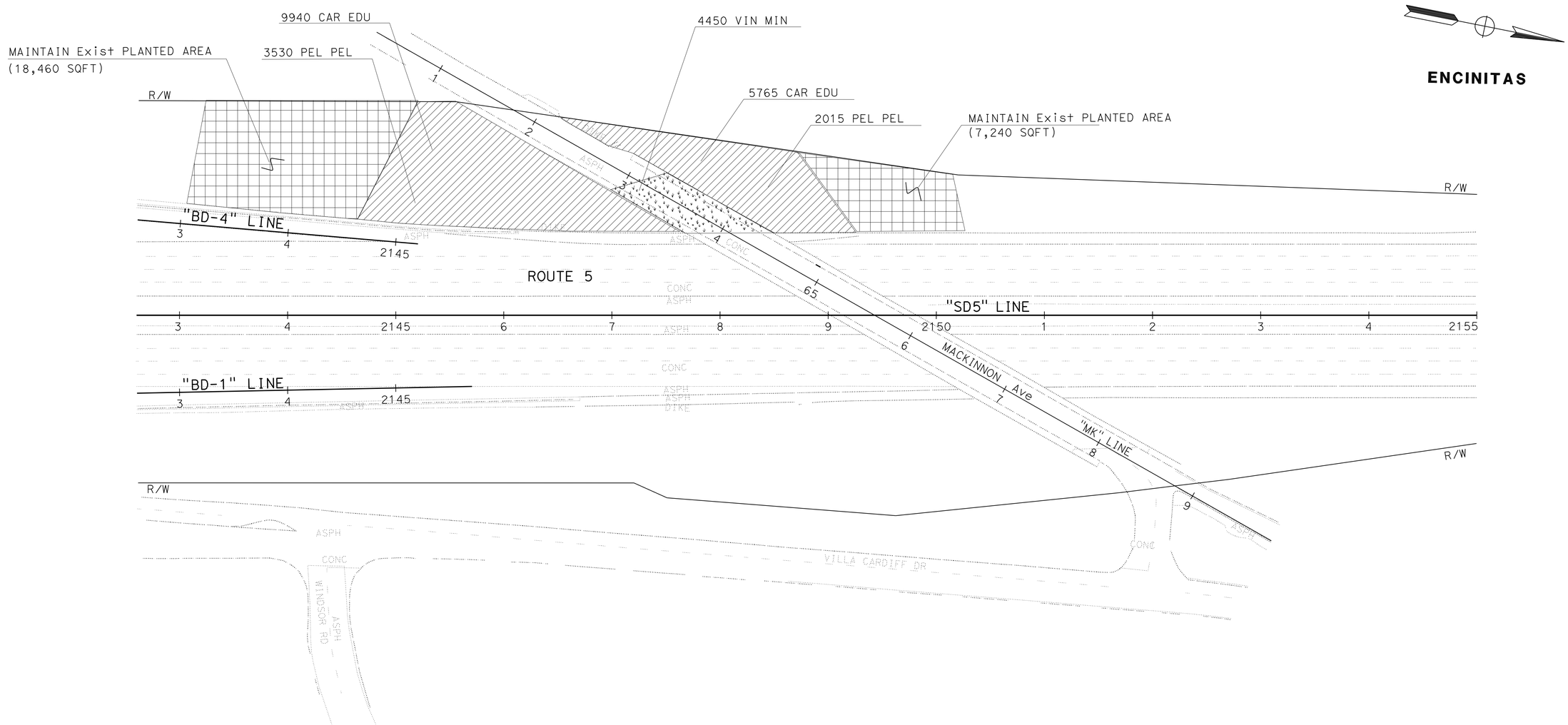

PLANTING PLAN

SCALE 1" = 50'

PP-1

THIS PLAN ACCURATE FOR PLANTING WORK ONLY.

STATE OF CALIFORNIA - DEPARTMENT OF TRANSPORTATION

Caltrans® LANDSCAPE ARCHITECTURE

SENIOR LANDSCAPE ARCHITECT: STEPHEN ALVAREZ

CALCULATED-DESIGNED BY: DAVID STRICKLAND

CHECKED BY: JOHN NEWLON

REVISED BY

DATE REVISED

LAST REVISION 06-29-10

DATE PLOTTED => 02-JUL-2010

TIME PLOTTED => 15:02

Dist	COUNTY	ROUTE	POST MILES TOTAL PROJECT	SHEET No.	TOTAL SHEETS
11	SD	5,805	R40.1 18.6/18.8	29	56

LICENSED LANDSCAPE ARCHITECT

06-28-10
PLANS APPROVAL DATE

LICENSED LANDSCAPE ARCHITECT
DAVID R. STRICKLAND No. 3062
Registration Expiration Date
3/31/12
Renewal Date
06-09-10
Date
STATE OF CALIFORNIA

THE STATE OF CALIFORNIA OR ITS OFFICERS OR AGENTS SHALL NOT BE RESPONSIBLE FOR THE ACCURACY OR COMPLETENESS OF SCANNED COPIES OF THIS PLAN SHEET.

NOTE:

1. FOR ACCURATE RIGHT OF WAY AND ACCESS DATA, CONTACT RIGHT OF WAY ENGINEERING AT THE DISTRICT OFFICE.

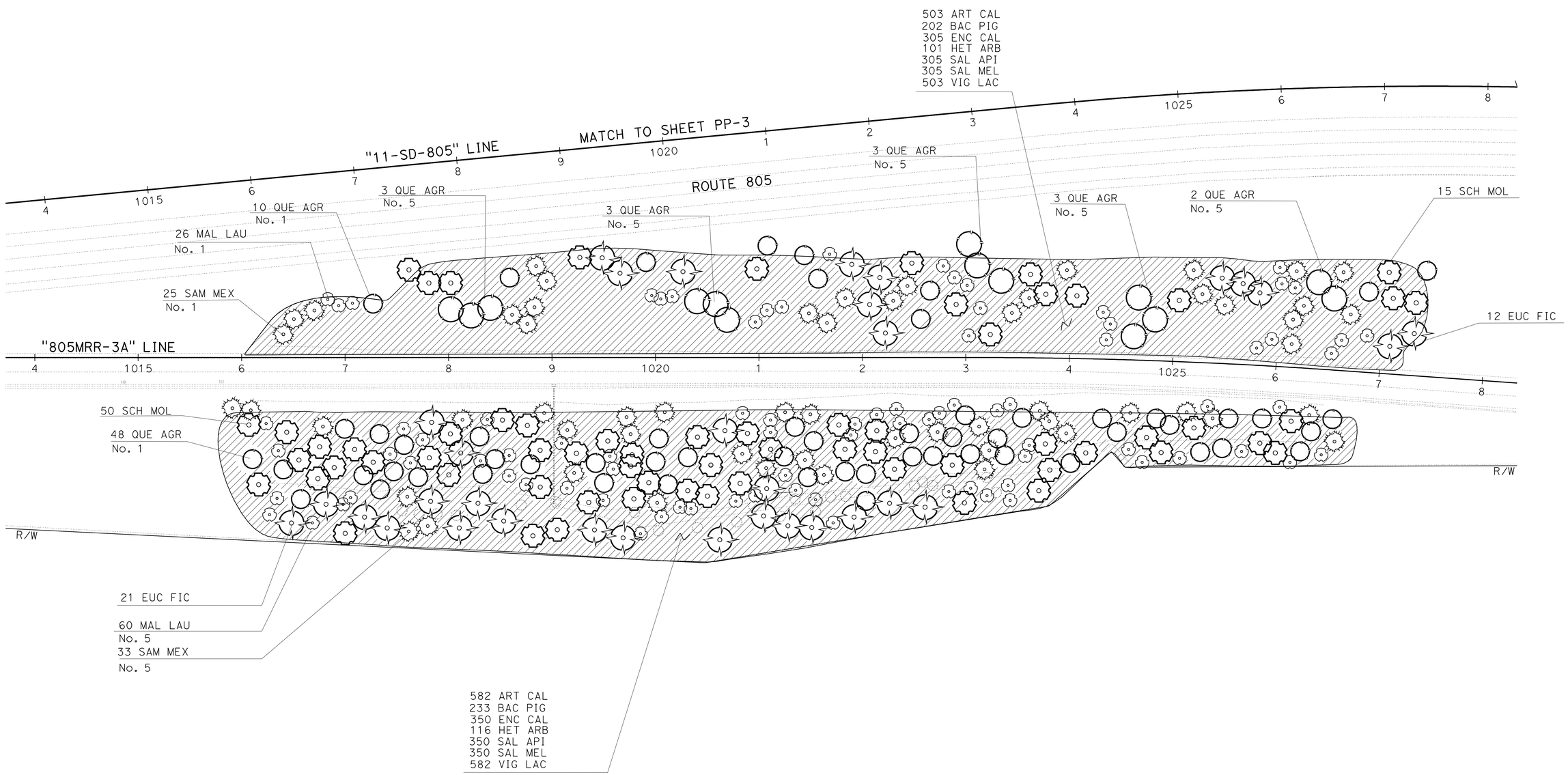

THIS PLAN ACCURATE FOR PLANTING WORK ONLY.

PLANTING PLAN

SCALE 1" = 50'

PP-2

REVISED BY | DATE REVISED
DAVID STRICKLAND | JOHN NEWLON
CALCULATED-DESIGNED BY | CHECKED BY
SENIOR LANDSCAPE ARCHITECT
STEPHEN ALVAREZ

STATE OF CALIFORNIA - DEPARTMENT OF TRANSPORTATION
Caltrans® LANDSCAPE ARCHITECTURE

LAST REVISION 06-29-10 | DATE PLOTTED => 02-JUL-2010 | TIME PLOTTED => 15:02

Dist	COUNTY	ROUTE	POST MILES TOTAL PROJECT	SHEET No.	TOTAL SHEETS
11	SD	5,805	R40.1 18.6/18.8	30	56

LICENSED LANDSCAPE ARCHITECT

06-28-10
PLANS APPROVAL DATE

THE STATE OF CALIFORNIA OR ITS OFFICERS OR AGENTS SHALL NOT BE RESPONSIBLE FOR THE ACCURACY OR COMPLETENESS OF SCANNED COPIES OF THIS PLAN SHEET.

LICENSED LANDSCAPE ARCHITECT DAVID G. STRICKLAND NO. 3403 STATE OF CALIFORNIA
Signature
3/31/12
Renewal Date
06-09-10
Date

NOTE:

1. FOR ACCURATE RIGHT OF WAY AND ACCESS DATA, CONTACT RIGHT OF WAY ENGINEERING AT THE DISTRICT OFFICE.
2. Exist ICC-"20(3)" IS LOCATED IN THE SOUTHEAST QUADRANT AT BIRMINGHAM DRIVE AND Rte 5.

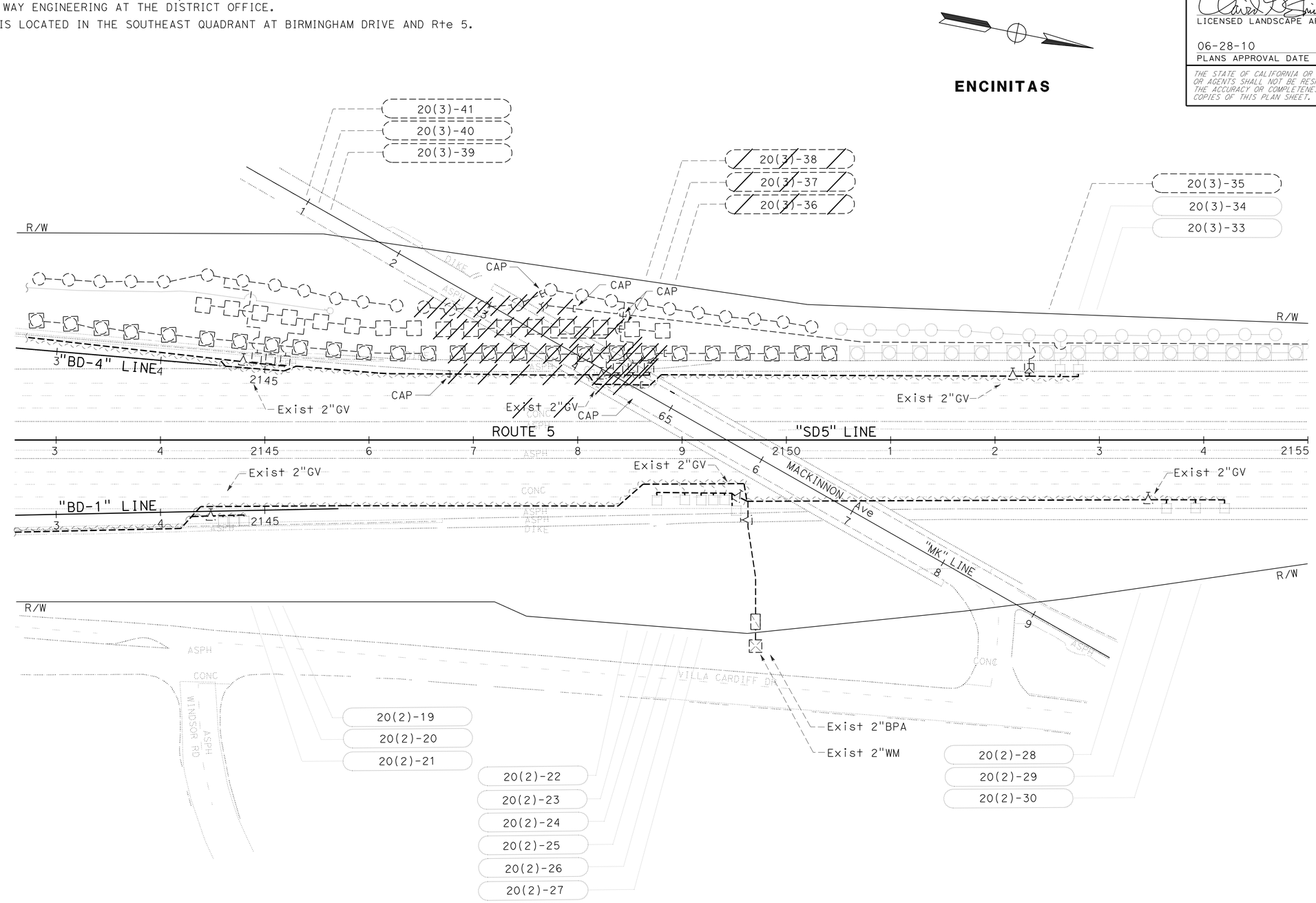

IRRIGATION REMOVAL PLAN

SCALE 1" = 50'

IR-1

THIS PLAN ACCURATE FOR IRRIGATION REMOVAL WORK ONLY.

STATE OF CALIFORNIA - DEPARTMENT OF TRANSPORTATION
Caltrans® LANDSCAPE ARCHITECTURE

SENIOR LANDSCAPE ARCHITECT: STEPHEN ALVAREZ
CALCULATED-DESIGNED BY: DAVID STRICKLAND
CHECKED BY: JOHN NEWLON
REVISED BY
DATE REVISED

LAST REVISION 06-29-10
DATE PLOTTED => 02-JUL-2010
TIME PLOTTED => 15:02

Dist	COUNTY	ROUTE	POST MILES TOTAL PROJECT	SHEET No.	TOTAL SHEETS
11	SD	5,805	R40.1 18.6/18.8	31	56

LICENSED LANDSCAPE ARCHITECT

06-28-10
PLANS APPROVAL DATE

THE STATE OF CALIFORNIA OR ITS OFFICERS OR AGENTS SHALL NOT BE RESPONSIBLE FOR THE ACCURACY OR COMPLETENESS OF SCANNED COPIES OF THIS PLAN SHEET.

LICENSED LANDSCAPE ARCHITECT DAVID G. STRICKLAND NO. 3403 Signature 3/31/12 Renewal Date 06-09-10 Date STATE OF CALIFORNIA

NOTE:

1. FOR ACCURATE RIGHT OF WAY AND ACCESS DATA, CONTACT RIGHT OF WAY ENGINEERING AT THE DISTRICT OFFICE.
2. Exist ICC "A","B","C" & "D" IS LOCATED IN THE NORTHEAST QUADRANT OF MURRAY RIDGE RD AND Rte 805.
3. Exist RCV'S "C-1" THROUGH "C-8" ON THIS MAIN LINE.

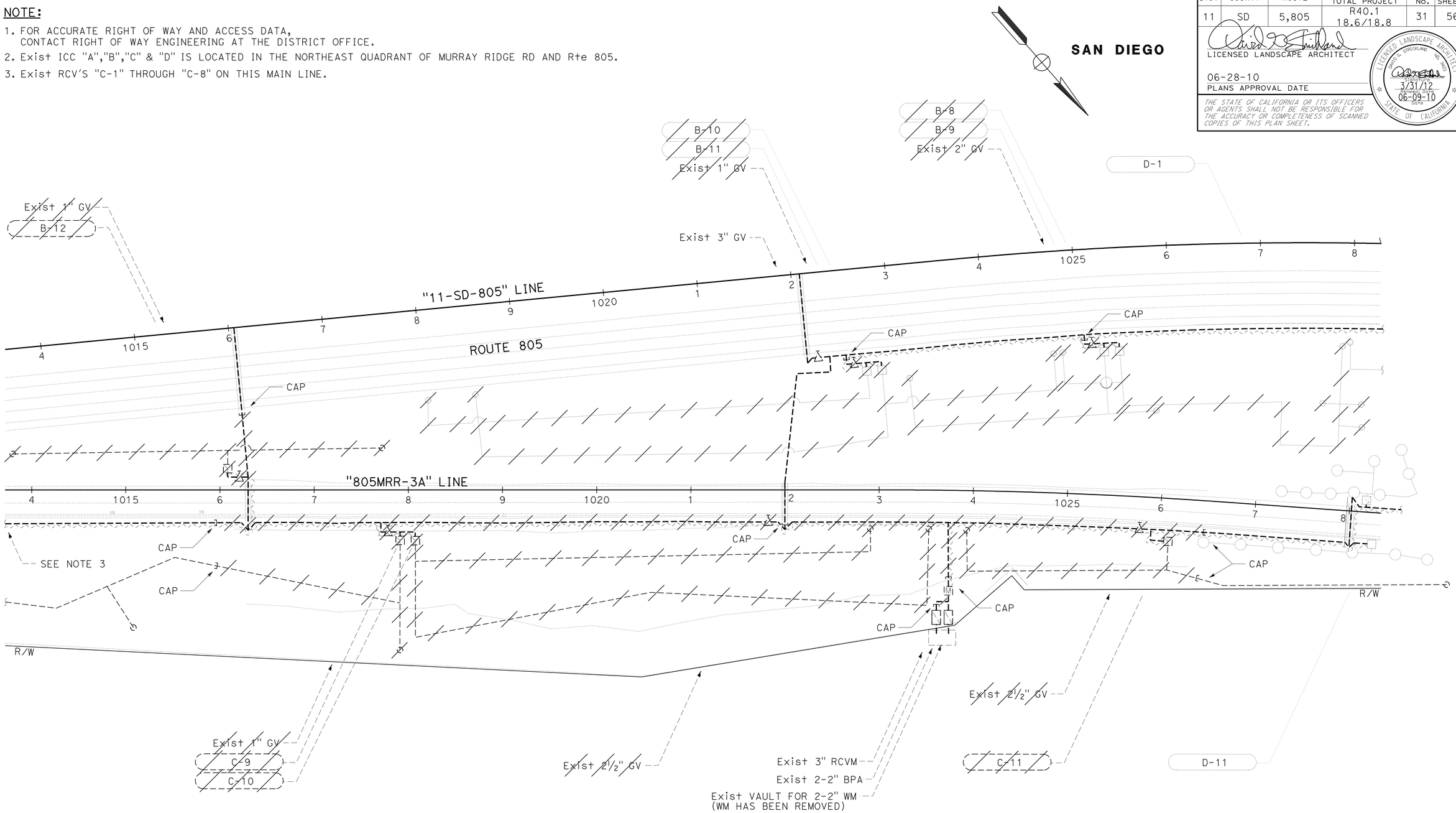

IRRIGATION REMOVAL PLAN

SCALE 1" = 50'

IR-2

THIS PLAN ACCURATE FOR IRRIGATION REMOVAL WORK ONLY.

STATE OF CALIFORNIA - DEPARTMENT OF TRANSPORTATION
Caltrans® LANDSCAPE ARCHITECTURE

SENIOR LANDSCAPE ARCHITECT: STEPHEN ALVAREZ
CALCULATED-DESIGNED BY: DAVID STRICKLAND
CHECKED BY: JOHN NEWLON
REVISED BY
DATE REVISED

LAST REVISION 06-29-10
DATE PLOTTED => 02-JUL-2010
TIME PLOTTED => 15:02

Dist	COUNTY	ROUTE	POST MILES TOTAL PROJECT	SHEET No.	TOTAL SHEETS
11	SD	5,805	R40.1 18.6/18.8	32	56

LICENSED LANDSCAPE ARCHITECT

06-28-10
PLANS APPROVAL DATE

THE STATE OF CALIFORNIA OR ITS OFFICERS OR AGENTS SHALL NOT BE RESPONSIBLE FOR THE ACCURACY OR COMPLETENESS OF SCANNED COPIES OF THIS PLAN SHEET.

LICENSED LANDSCAPE ARCHITECT
DAVID G. STRICKLAND
NO. 3403
Signature
3/31/12
Renewal Date
06-09-10
Date
STATE OF CALIFORNIA

NOTE:

1. FOR ACCURATE RIGHT OF WAY AND ACCESS DATA, CONTACT RIGHT OF WAY ENGINEERING AT THE DISTRICT OFFICE.
2. Exist ICC-"20(3)" IS LOCATED IN THE SOUTHEAST QUADRANT AT BIRMINGHAM DRIVE AND Rte 5.

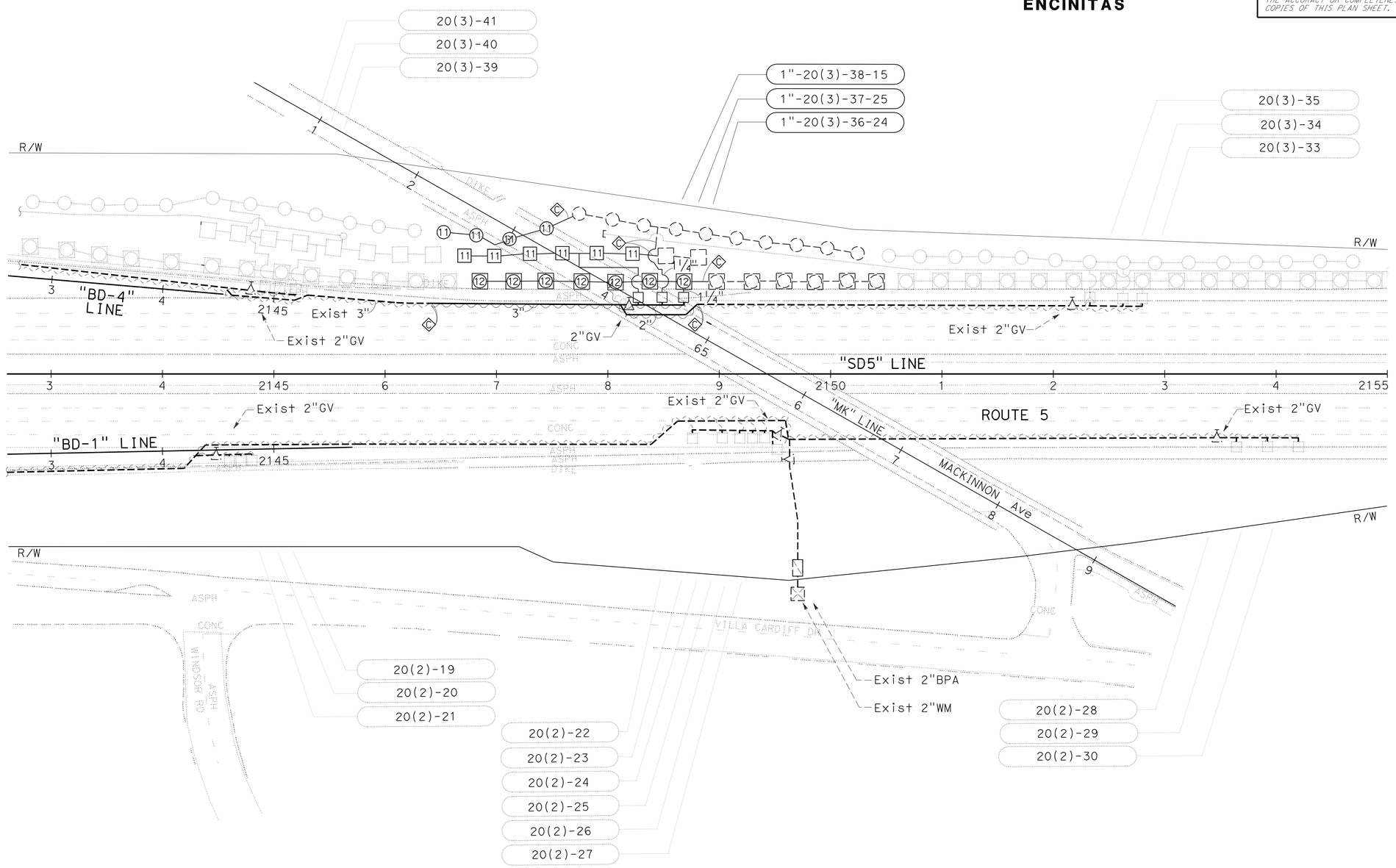

IRRIGATION PLAN

SCALE 1" = 50'

IP-1

THIS PLAN ACCURATE FOR IRRIGATION WORK ONLY.

STATE OF CALIFORNIA - DEPARTMENT OF TRANSPORTATION
Caltrans® LANDSCAPE ARCHITECTURE

SENIOR LANDSCAPE ARCHITECT: STEPHEN ALVAREZ
CALCULATED-DESIGNED BY: DAVID STRICKLAND
CHECKED BY: JOHN NEWLON
REVISED BY
DATE REVISED

LAST REVISION 06-29-10
DATE PLOTTED => 02-JUL-2010
TIME PLOTTED => 15:02

Dist	COUNTY	ROUTE	POST MILES TOTAL PROJECT	SHEET No.	TOTAL SHEETS
11	SD	5,805	R40.1 18.6/18.8	33	56

LICENSED LANDSCAPE ARCHITECT

06-28-10
PLANS APPROVAL DATE

LICENSED LANDSCAPE ARCHITECT
DAVID R. STRICKLAND
No. 5052
EXPIRATION DATE 3/31/12
ARCHITECT DATE 06-09-10
DATE
STATE OF CALIFORNIA

THE STATE OF CALIFORNIA OR ITS OFFICERS OR AGENTS SHALL NOT BE RESPONSIBLE FOR THE ACCURACY OR COMPLETENESS OF SCANNED COPIES OF THIS PLAN SHEET.

NOTE:

1. FOR ACCURATE RIGHT OF WAY AND ACCESS DATA, CONTACT RIGHT OF WAY ENGINEERING AT THE DISTRICT OFFICE.
2. Exist ICC "A","B","C" & "D" IS LOCATED IN THE NORTHEAST QUADRANT OF MURRAY RIDGE RD AND Rte 805.
3. Exist RCV'S "C-1" THROUGH "C-8" ON THIS MAIN LINE.
4. MANUALLY FILL LINES WITH WATER AND PRESSURE TEST USING METHOD "A" TESTING PROCEDURES.

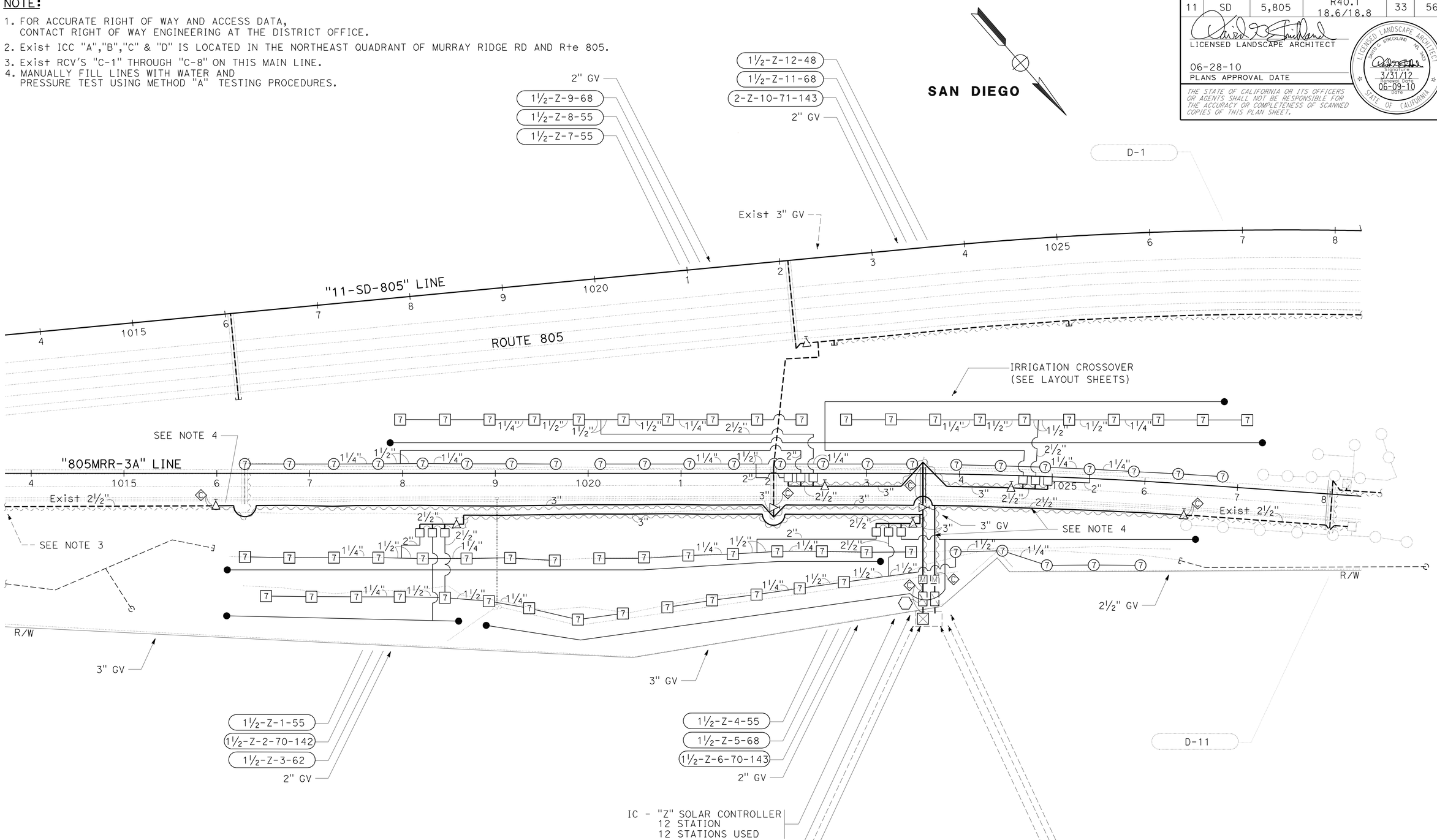

IRRIGATION PLAN

SCALE 1" = 50'

IP-2

THIS PLAN ACCURATE FOR IRRIGATION WORK ONLY.

STATE OF CALIFORNIA - DEPARTMENT OF TRANSPORTATION
Caltrans® LANDSCAPE ARCHITECTURE

SENIOR LANDSCAPE ARCHITECT: STEPHEN ALVAREZ

CALCULATED-DESIGNED BY: DAVID STRICKLAND
CHECKED BY: JOHN NEWLON

REVISED BY
DATE REVISED

LAST REVISION 06-29-10
DATE PLOTTED => 02-JUL-2010
TIME PLOTTED => 15:02

Dist	COUNTY	ROUTE	POST MILES TOTAL PROJECT	SHEET No.	TOTAL SHEETS
11	SD	5,805	R40.1 18.6/18.8	34	56

LICENSED LANDSCAPE ARCHITECT

06-28-10
PLANS APPROVAL DATE

LICENSED LANDSCAPE ARCHITECT — DAVID R. STRICKLAND — No. 3062 — SIGNATURE — 3/31/12 EXPIRATION DATE — 06-09-10 DATE — STATE OF CALIFORNIA

THE STATE OF CALIFORNIA OR ITS OFFICERS OR AGENTS SHALL NOT BE RESPONSIBLE FOR THE ACCURACY OR COMPLETENESS OF SCANNED COPIES OF THIS PLAN SHEET.

SPRINKLER SCHEDULE

SYMBOL	TYPE	DESCRIPTION	SPRAY PATTERN	OPERATING PRESSURE (PSI)	PRESSURE COMPENSATING	PLUS / MINUS 5% ② DISCHARGE: GALLONS PER SECOND (GPS)	GALLONS PER MINUTE (GPM)	GALLONS PER HOUR (GPH)	RADIUS (F+)	WIDTH x LENGTH (F+)	MATERIAL	NOZZLE SIZE (INCH)	INLET CONNECTION (NPT) (DN IN INCHES)(INCH)	POSITIVE-LOCKING ADJ ARC STOP	BACKSPLASH PREVENTER	DIFFUSER PIN	DISTANCE CONTROL FLAP	ADJ DISCHARGE	RISER: TYPE	MATERIAL: PLASTIC	GALVANIZED	SIZE (IPS) (INCH)	HEIGHT (INCH)	FLOW SHUTOFF DEVICE	SWING JOINT (TYPE)	RISER SUPPORT	SPRINKLER PROTECTOR (TYPE)	REMARKS
⑦	A-7	GEAR DRIVEN	P	50	-	-	6.8	-	48	-	PL	-	¾	-	-	X	-	-	I	X	-	¾	6	-	1	-	-	③⑦
[11]	A-11	GEAR DRIVEN	F	50	-	-	1.8	-	25	-	PL	-	¾	-	-	X	-	-	I	X	-	¾	6	-	1	-	-	③
⑪	A-11	GEAR DRIVEN	P	50	-	-	1.8	-	25	-	PL	-	¾	-	-	X	-	-	I	X	-	¾	6	-	1	-	-	③⑦
⑫	A-12	GEAR DRIVEN	P	50	-	-	1.8	-	25	-	PL	-	¾	-	-	X	-	-	-	-	-	-	-	-	1	-	1	③⑦ 12" POP-UP
●	C-2	FLOOD BUBBLER	-	30	X	-	0.5	-	-	-	PL	-	½	-	-	-	-	-	6	6	-	½	6	-	1	⑥	-	④⑨⑩

X IN BOX DENOTES REQUIREMENT

APPLICABLE WHEN CIRCLED BELOW:

1 - SEE SPECIAL PROVISIONS.
② - IF A PRESSURE COMPENSATING DEVICE IS SPECIFIED, THE DISCHARGE AND RADII SHOWN REFLECT ITS USE.
③ - SHALL HAVE AN INTERNAL OR EXTERNAL CHECK VALVE.
④ - NON-ADJUSTABLE DISCHARGE RATE.
5 - REQUIRED ADJACENT TO SHOULDERS, CURBS, SIDEWALKS, AND DIKES.
⑥ - SEE DETAIL
⑦ - ADJUSTABLE ARC.
8 - MATCHED PRECIPITATION RATE NOZZLES.
⑨ - REFER TO PIPE SIZING CHARTS.
⑩ - INSTALL ONE C-2 FOR EACH 1-GAL TREE, 1-GAL SHRUB AND 5-GAL SHRUB. INSTALL TWO C-2 FOR EACH 5-GAL TREE. (AS SHOWN ON THE PLANT LIST).

ABBREVIATIONS

ADJ — ADJUSTABLE
B/B — BRASS/BRONZE
B/B/PL — BRASS/BRONZE/PLASTIC
B/PL — BRASS/PLASTIC
CST — CENTER STRIP
DN — DIAMETER NOMINAL
EST — END STRIP
F+ — FEET
F — FULL CIRCLE
F/P — FULL/PART CIRCLE
GPH — GALLONS PER HOUR
GPM — GALLONS PER MINUTE
GPS — GALLONS PER SECOND
H — HALF CIRCLE
IPS — IRON PIPE SIZE
NPT — NATIONAL PIPE THREAD
P — PART CIRCLE
PL — PLASTIC
PSI — POUNDS PER SQUARE INCH
Q — QUARTER CIRCLE
SST — SIDE STRIP
T — THIRD CIRCLE
TQ — THREE QUARTER CIRCLE
TT — TWO THIRDS CIRCLE

NOTES:

1. ALL LATERAL PIPE NOT LABELED SHALL BE 1 INCH, OR AS SHOWN ON PIPE SIZING CHARTS.

LEGEND

[M] REMOTE CONTROL VALVE (MASTER)

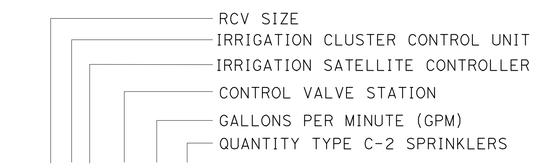

VALVE CODE

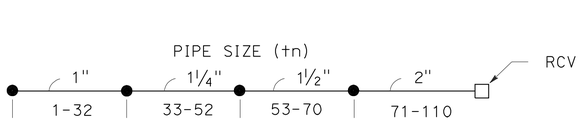

PIPE SIZING CHART
TYPE C-2 SPRINKLERS

LEGEND

X-X(X)-XX-XX-XX — EXISTING IRRIGATION SYSTEM TO REMAIN (NO WORK)

X-X(X)-XX-XX-XX — PROPOSED IRRIGATION VALVE

X-X(X)-XX-XX-XX — EXISTING IRRIGATION SYSTEM TO BE MODIFIED (VALVE TO REMAIN)

X-X(X)-XX-XX-XX — EXISTING IRRIGATION SYSTEM TO BE MODIFIED (VALVE TO BE REMOVED)

EXISTING IRRIGATION TO BE REMOVED

LANDSCAPE DETAILS
LD-1

STATE OF CALIFORNIA - DEPARTMENT OF TRANSPORTATION
Caltrans® LANDSCAPE ARCHITECTURE

SENIOR LANDSCAPE ARCHITECT: STEPHEN ALVAREZ
CALCULATED-DESIGNED BY: DAVID STRICKLAND
CHECKED BY: JOHN NEWLON
REVISED BY
DATE REVISED

LAST REVISION 06-29-10
DATE PLOTTED => 02-JUL-2010
TIME PLOTTED => 15:02

Dist	COUNTY	ROUTE	POST MILES TOTAL PROJECT	SHEET No.	TOTAL SHEETS
11	SD	5,805	R40.1 18.6/18.8	35	56

LICENSED LANDSCAPE ARCHITECT

06-28-10
PLANS APPROVAL DATE

THE STATE OF CALIFORNIA OR ITS OFFICERS OR AGENTS SHALL NOT BE RESPONSIBLE FOR THE ACCURACY OR COMPLETENESS OF SCANNED COPIES OF THIS PLAN SHEET.

LICENSED LANDSCAPE ARCHITECT — DAVID G. STRICKLAND — NO. 3403 — Registered Date 3/31/12 — Renewal Date 06-09-10 — Date — STATE OF CALIFORNIA

THRUST BLOCK DETAIL

INSTALLATION	TYPE FITTING	INSTALLATION	TYPE FITTING
	90° ELL	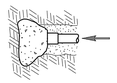	DEAD END
	BEND 45° 22.5° 11.25°		GATE VALVE
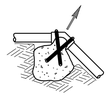	TEE		VERTICAL BEND (TYPE I) 45° 22.5° 11.25° OR VERTICAL BEND (TYPE II) 45° 22.5° 11.25°

NOTES:
Min 1 CF PCC FOR PIPE 1½" AND SMALLER.
Min 2 CF PCC FOR PIPE 2" AND LARGER.
USE #3 REINFORCING BAR WHERE SHOWN (Ω).

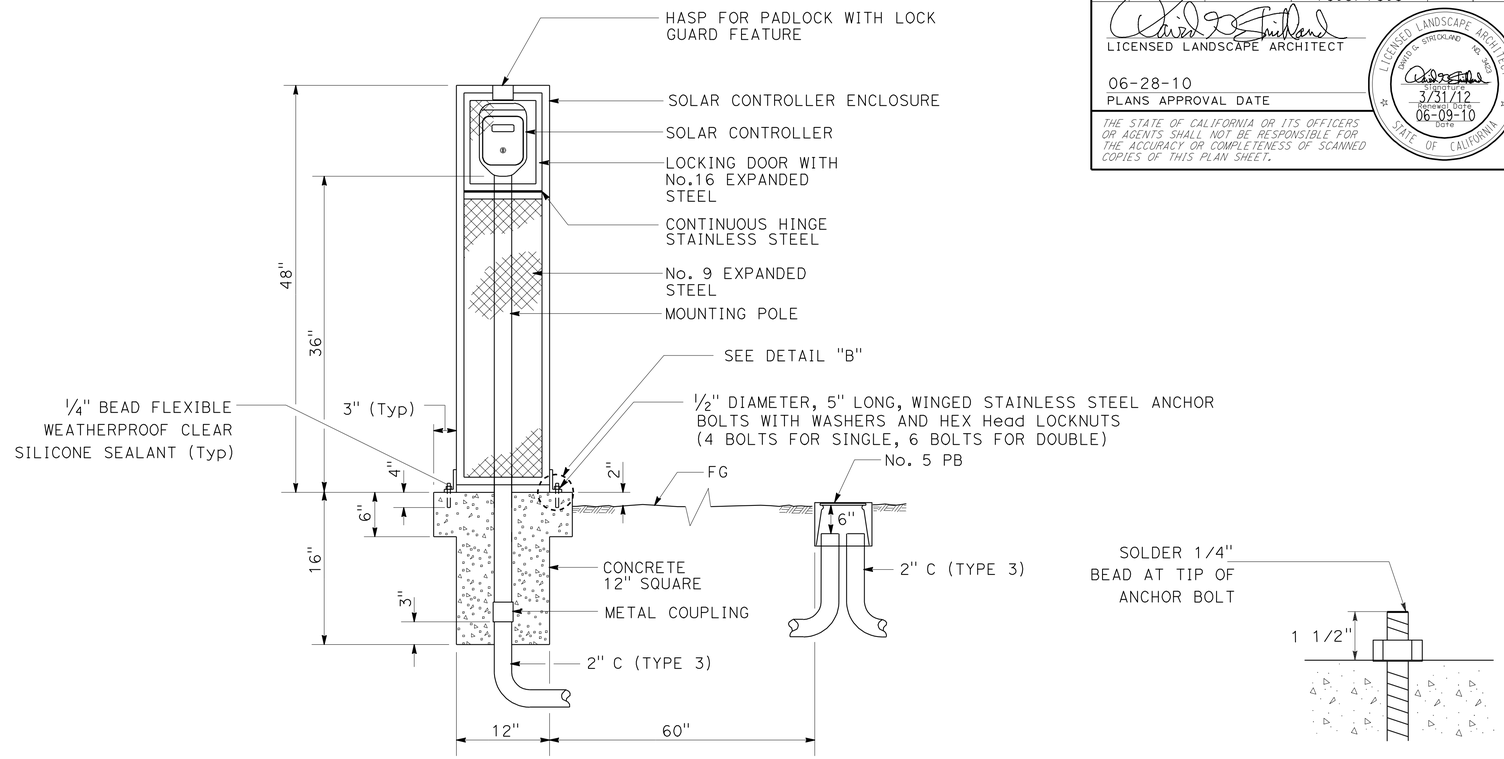

DETAIL "B"

SOLAR IRRIGATION CONTROLLER (POLE MOUNTED) (IN ENCLOSURE)

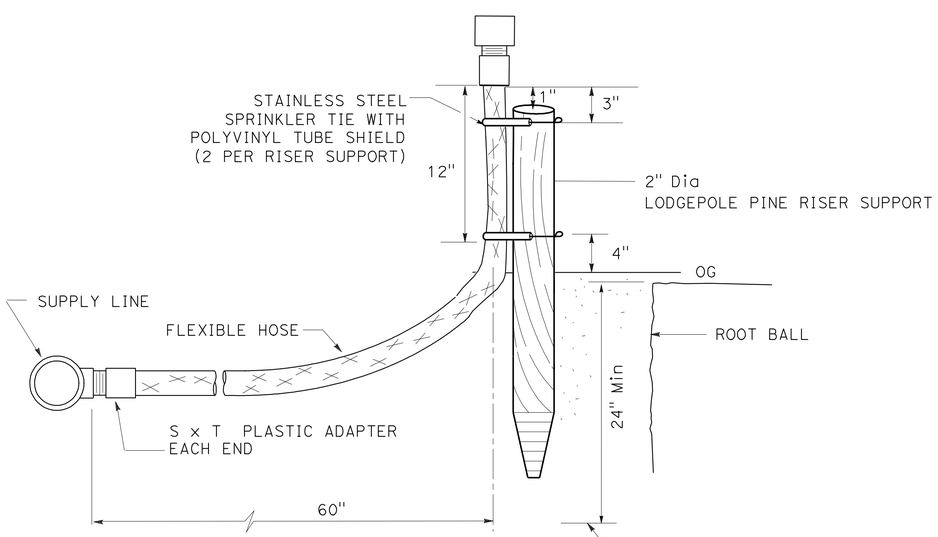

ELEVATION

MODIFIED RISER

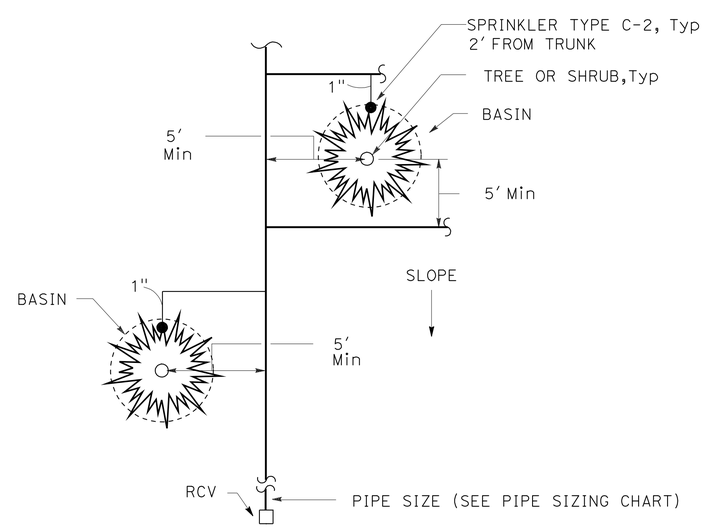

TYPE C-2 SPRINKLER INSTALLATION

NOTES:

1. INSTALL SPRINKLER TYPE C-2 ON UP-HILL SIDE OF PLANT WHEN ON SLOPE.
2. INSTALL SPRINKLER WITHIN TREE BASIN

NO SCALE

LANDSCAPE DETAILS LD-2

STATE OF CALIFORNIA - DEPARTMENT OF TRANSPORTATION
Caltrans® LANDSCAPE ARCHITECTURE
SENIOR LANDSCAPE ARCHITECT: STEPHEN ALVAREZ
CALCULATED-DESIGNED BY: DAVID STRICKLAND
CHECKED BY: JOHN NEWLON
REVISED BY
DATE REVISED

LAST REVISION 06-29-10
DATE PLOTTED => 02-JUL-2010
TIME PLOTTED => 15:02

Dist	COUNTY	ROUTE	POST MILES TOTAL PROJECT	SHEET No.	TOTAL SHEETS
11	SD	5/805	R40.1 18.6/18.8	36	56

REGISTERED CIVIL ENGINEER 06-09-10 DATE

06-28-10
PLANS APPROVAL DATE

REGISTERED PROFESSIONAL ENGINEER MICHAEL PEDERSEN No. C74073 Exp. 06-30-11 CIVIL STATE OF CALIFORNIA

THE STATE OF CALIFORNIA OR ITS OFFICERS OR AGENTS SHALL NOT BE RESPONSIBLE FOR THE ACCURACY OR COMPLETENESS OF SCANNED COPIES OF THIS PLAN SHEET.

NOTE:

FOR ACCURATE RIGHT OF WAY AND ACCESS DATA,
CONTACT RIGHT OF WAY ENGINEERING AT THE DISTRICT OFFICE.

UTILITY LEGEND:

SYMBOL	UTILITY	OWNER
—— t —— —— —— t ——	TELEPHONE	AT&T
—— -g —— - —— -g —	GAS	SDG&E
—— - e —— —— -(oh)-	ELECTRIC	SDG&E

ENCINITAS

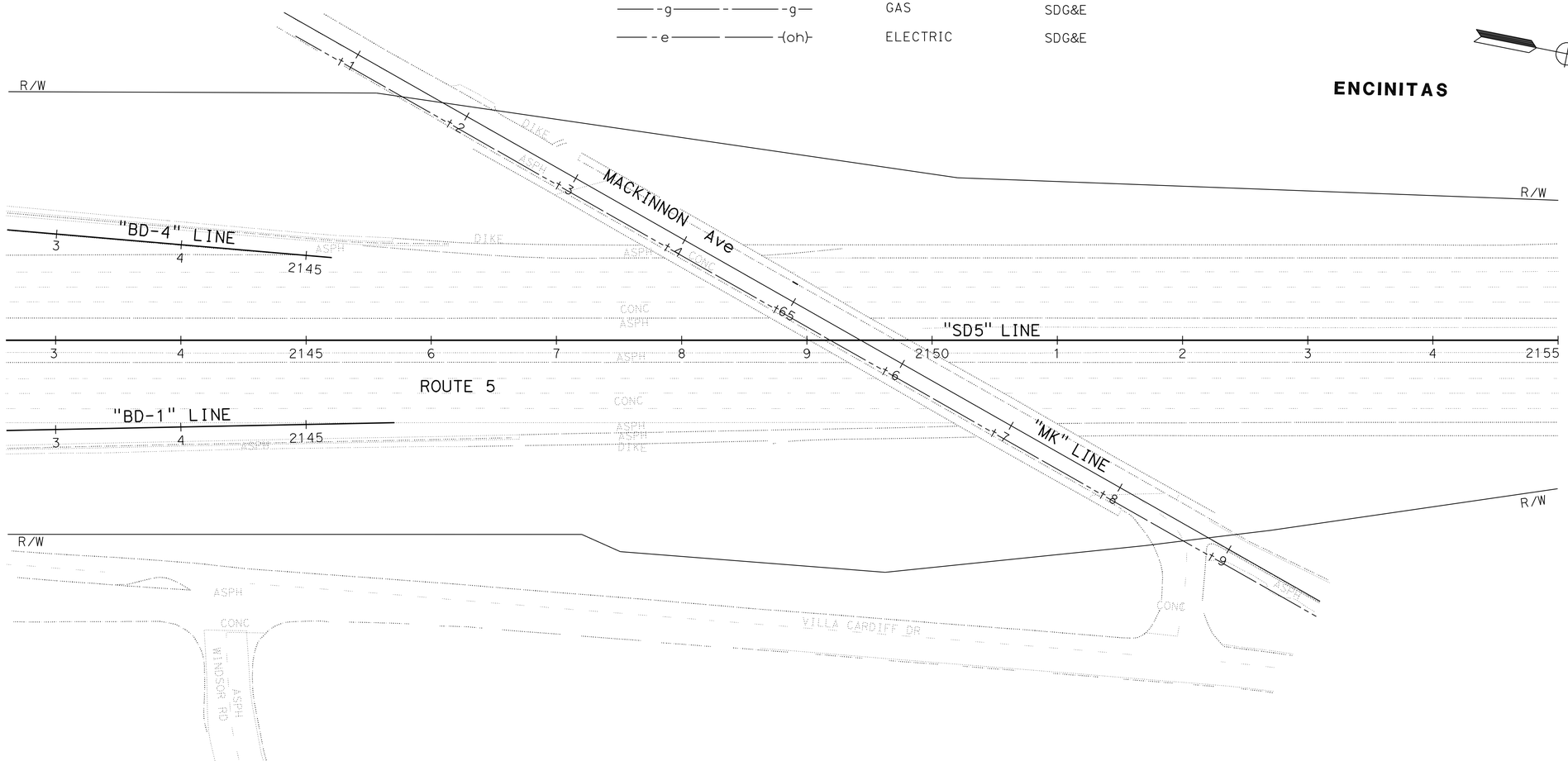

THIS PLAN ACCURATE FOR EXISTING UTILITY WORK ONLY.

EXISTING UTILITIES PLAN

SCALE 1" = 50'

EU-1

STATE OF CALIFORNIA - DEPARTMENT OF TRANSPORTATION
Caltrans ENGINEERING SERVICES

FUNCTIONAL SUPERVISOR: ABU-BAKR H AL-JAFRI

MICHAEL PEDERSEN
DAVID STRICKLAND

CALCULATED-DESIGNED BY
CHECKED BY

REVISED BY
DATE REVISED

LAST REVISION 06-29-10
DATE PLOTTED => 02-JUL-2010
TIME PLOTTED => 15:03

Dist	COUNTY	ROUTE	POST MILES TOTAL PROJECT	SHEET No.	TOTAL SHEETS
11	SD	5/805	R40.1 18.6/18.8	37	56

REGISTERED CIVIL ENGINEER 06-09-10 DATE

06-28-10
PLANS APPROVAL DATE

REGISTERED PROFESSIONAL ENGINEER MICHAEL PEDERSEN No. C74073 Exp. 06-30-11 CIVIL STATE OF CALIFORNIA

THE STATE OF CALIFORNIA OR ITS OFFICERS OR AGENTS SHALL NOT BE RESPONSIBLE FOR THE ACCURACY OR COMPLETENESS OF SCANNED COPIES OF THIS PLAN SHEET.

NOTE:

FOR ACCURATE RIGHT OF WAY AND ACCESS DATA,
CONTACT RIGHT OF WAY ENGINEERING AT THE DISTRICT OFFICE.

POTHOLING INFORMATION:

⟨X⟩	UTILITY	LINE	STATION	OFFSET	NORTHING	EASTING	UTILITY Elev	DEPTH
1	20" STEEL GAS	"MRR3A"	1023+20.38	33.26′	1866637.660	6287062.710	350.393	5′5"
2	20" STEEL GAS	"MRR3A"	1023+34.19	143.96′	1866740.374	6287132.983	391.700	5′0"

SAN DIEGO

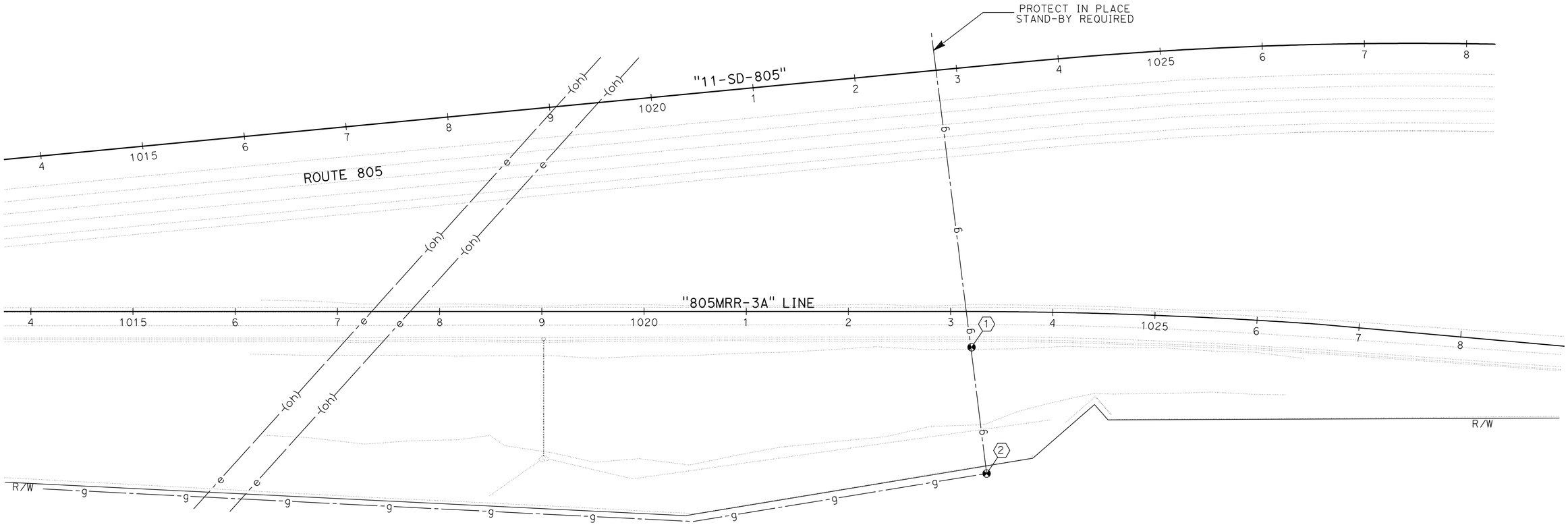

THIS PLAN ACCURATE FOR EXISTING UTILITY WORK ONLY.

EXISTING UTILITIES PLAN

SCALE 1" = 50′

EU-2

STATE OF CALIFORNIA - DEPARTMENT OF TRANSPORTATION
Caltrans® ENGINEERING SERVICES

FUNCTIONAL SUPERVISOR: ABU-BAKR H AL-JAFRI
CALCULATED-DESIGNED BY: MICHAEL PEDERSEN
CHECKED BY: DAVID STRICKLAND
REVISED BY
DATE REVISED

LAST REVISION 06-29-10
DATE PLOTTED => 02-JUL-2010
TIME PLOTTED => 15:03

DIST	COUNTY	ROUTE	POST MILES TOTAL PROJECT	SHEET NO.	TOTAL SHEETS
11	SD	5, 805	R40.1 18.6/18.8	38	56

Gregory A. Balzer
LICENSED LANDSCAPE ARCHITECT

June 5, 2009
PLANS APPROVAL DATE

LICENSED LANDSCAPE ARCHITECT
Gregory A. Balzer 2576
Signature
2-28-11
Renewal Date
5-14-09
Date
STATE OF CALIFORNIA

The State of California or its officers or agents shall not be responsible for the accuracy or completeness of electronic copies of this plan sheet.

To accompany plans dated 06-28-10

NOTE:

1. Fiber Roll/Compost Sock shown for reference purposes only.
2. If transverse rolled erosion control product joints are required on slopes, see Detail B.

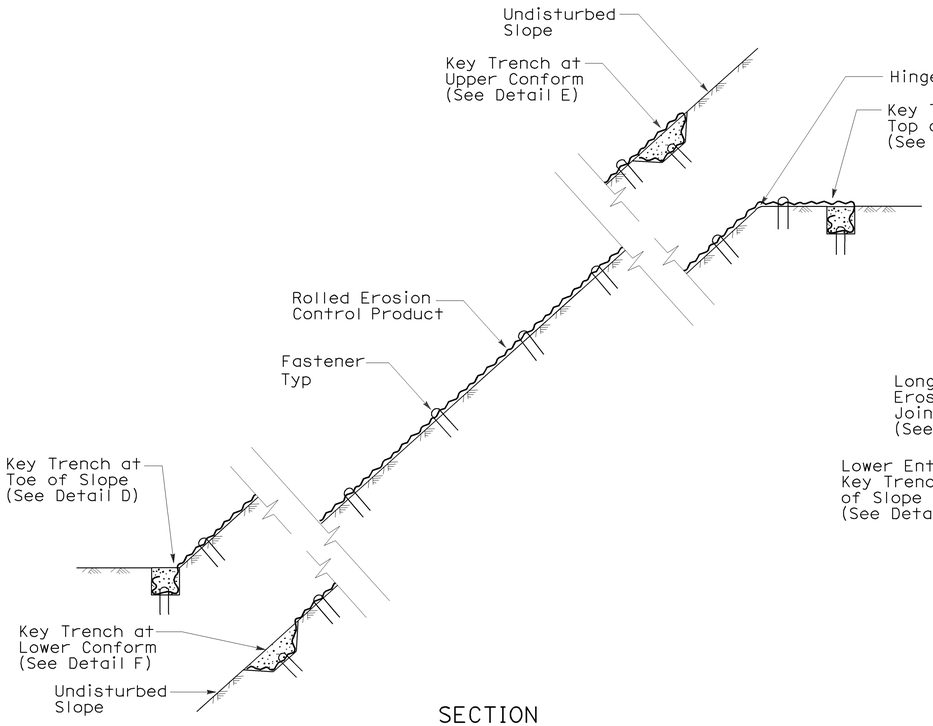

SECTION

ROLLED EROSION CONTROL PRODUCT
ON SLOPE WITH VARIOUS KEY ENTRENCHMENTS

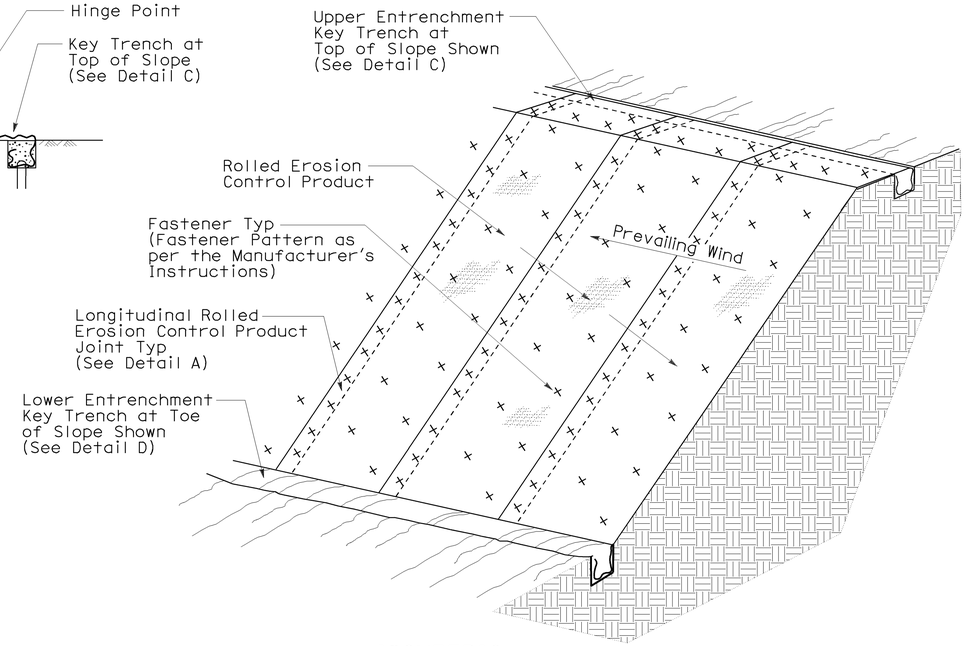

ISOMETRIC

ROLLED EROSION CONTROL PRODUCT
ON SLOPE

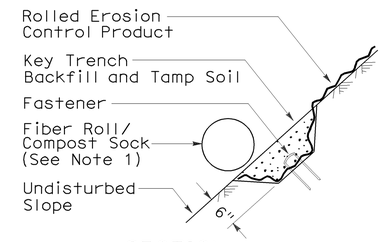

SECTION

DETAIL F
KEY TRENCH AT
LOWER CONFORM

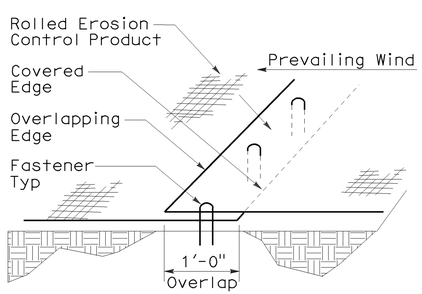

PERSPECTIVE

DETAIL A
LONGITUDINAL ROLLED EROSION
CONTROL PRODUCT JOINT

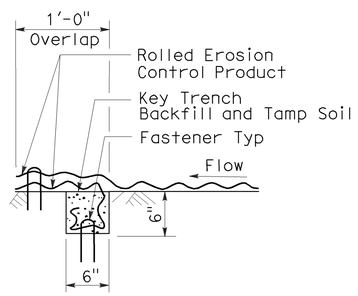

SECTION

DETAIL B
TRANSVERSE ROLLED EROSION
CONTROL PRODUCT JOINT

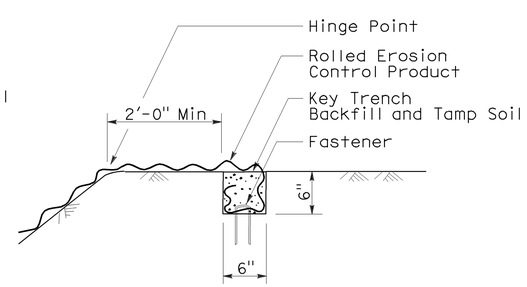

SECTION

DETAIL C
KEY TRENCH AT
TOP OF SLOPE

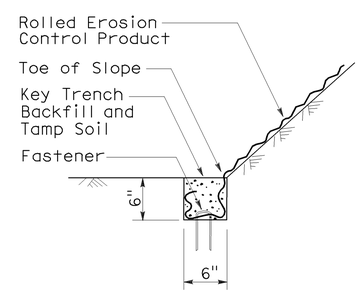

SECTION

DETAIL D
KEY TRENCH AT
TOE OF SLOPE

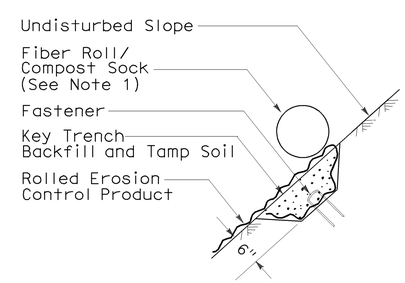

SECTION

DETAIL E
KEY TRENCH AT
UPPER CONFORM

STATE OF CALIFORNIA
DEPARTMENT OF TRANSPORTATION

ROLLED EROSION CONTROL PRODUCT

NO SCALE

NSP H53 DATED JUNE 5, 2009 SUPPLEMENTS
THE STANDARD PLANS BOOK DATED MAY 2006.

NEW STANDARD PLAN NSP H53

2006 NEW STANDARD PLAN NSP H53

3-4-09

DIST	COUNTY	ROUTE	POST MILES TOTAL PROJECT	SHEET NO.	TOTAL SHEETS
11	SD	5, 805	R40.1 18.6/18.8	39	56

LICENSED LANDSCAPE ARCHITECT

August 15, 2008
PLANS APPROVAL DATE

The State of California or its officers or agents shall not be responsible for the accuracy or completeness of electronic copies of this plan sheet.

LICENSED LANDSCAPE ARCHITECT Robert B. Schott 3635 Signature 11-04-08 Renewal Date 08-11-08 Date STATE OF CALIFORNIA

To accompany plans dated 06-28-10

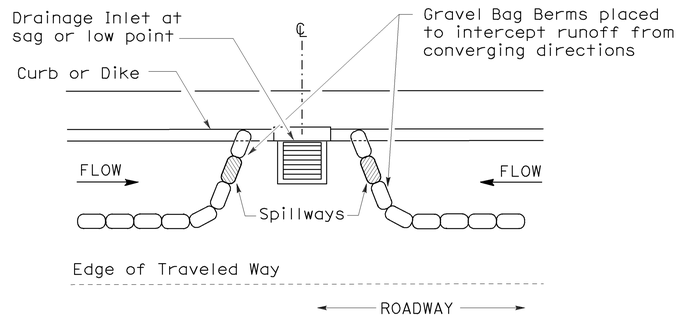

PLAN

CONFIGURATION FOR SAG POINT INLET (GRAVEL BAG BERM)

GRAVEL BAG BERM (TYPE 3A) SPACING TABLE

SLOPE OF ROADWAY (PERCENT)	1 to 3.9	4 to 5.9	6 to 7.9	8 to 10	10+
INTERVAL BETWEEN BERM	100′	75′	50′	25′	12′

For slope of less than 1%, install barriers only if erosion/sediment is prevalent

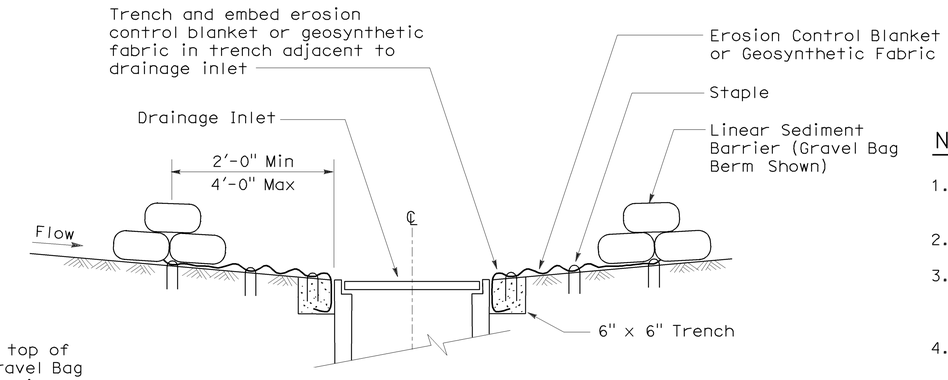

SECTION A-A

NOTES:

1. Place safety cones adjacent to drainage inlet protection.
2. Dimensions may vary to fit field conditions.
3. Install a minimum of 3 gravel bag berms upstream of each drainage inlet to be protected.
4. Position erosion control blanket or geosynthetic fabric at edge of concrete apron and secure in trench.
5. Erosion control blanket or geosynthetic fabric is not required if the area adjacent to the drainage inlet is vegetated or paved.

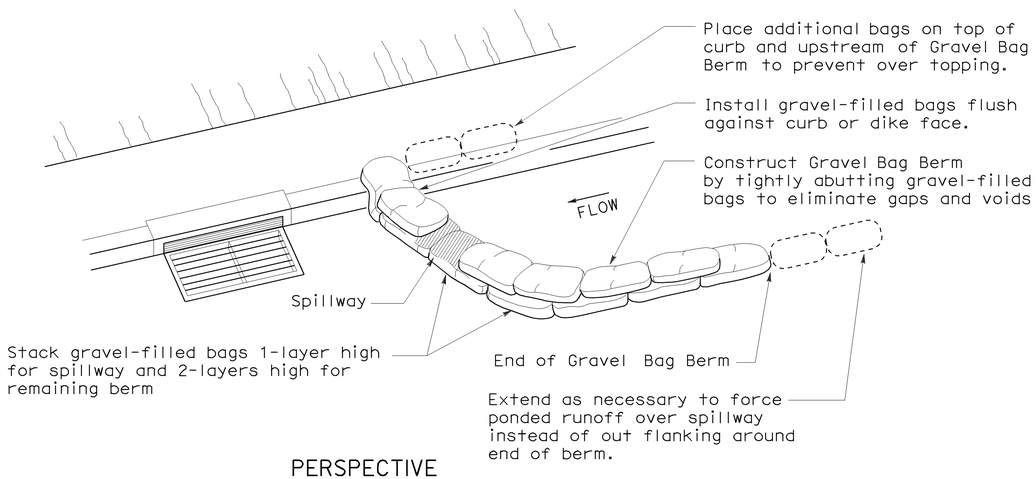

PERSPECTIVE

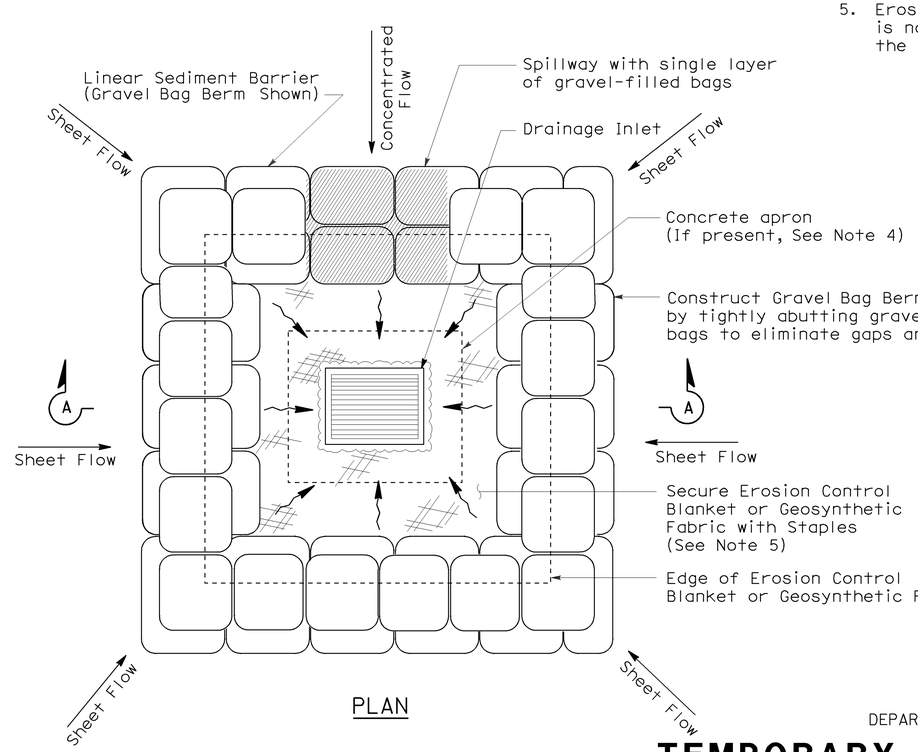

PLAN

TEMPORARY DRAINAGE INLET PROTECTION (TYPE 3B)

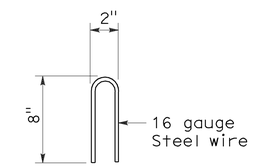

STAPLE DETAIL

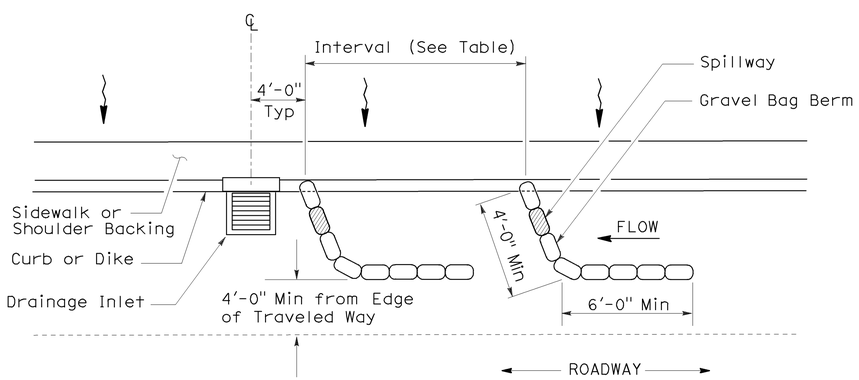

PLAN

TEMPORARY DRAINAGE INLET PROTECTION (TYPE 3A) (GRAVEL BAG BERM)

STATE OF CALIFORNIA
DEPARTMENT OF TRANSPORTATION

TEMPORARY WATER POLLUTION CONTROL DETAILS (TEMPORARY DRAINAGE INLET PROTECTION)

NO SCALE

NSP T62 DATED AUGUST 15, 2008 SUPPLEMENTS THE STANDARD PLANS BOOK DATED MAY 2006.

NEW STANDARD PLAN NSP T62

2006 NEW STANDARD PLAN NSP T62

7-11-08

DIST	COUNTY	ROUTE	POST MILES TOTAL PROJECT	SHEET NO.	TOTAL SHEETS
11	SD	5, 805	R40.1 18.6/18.8	40	56

LICENSED LANDSCAPE ARCHITECT

August 15, 2008
PLANS APPROVAL DATE

The State of California or its officers or agents shall not be responsible for the accuracy or completeness of electronic copies of this plan sheet.

LICENSED LANDSCAPE ARCHITECT
Robert B. Schott 3695
Signature
11-04-08
Renewal Date
08-11-08
Date
STATE OF CALIFORNIA

To accompany plans dated 06-28-10

FLEXIBLE SEDIMENT BARRIER SPACING TABLE

SLOPE OF ROADWAY (PERCENT)	0 to 0.9	1 to 1.9	2 to 2.9	3 to 4	5+
INTERVAL BETWEEN BARRIERS	50′	35′	30′	25′	20′
ANGLE FROM FACE OF CURB	70°	70°	70°	45°	45°
SUGGESTED BARRIER LENGTH	6′	6′	6′	6′	6′

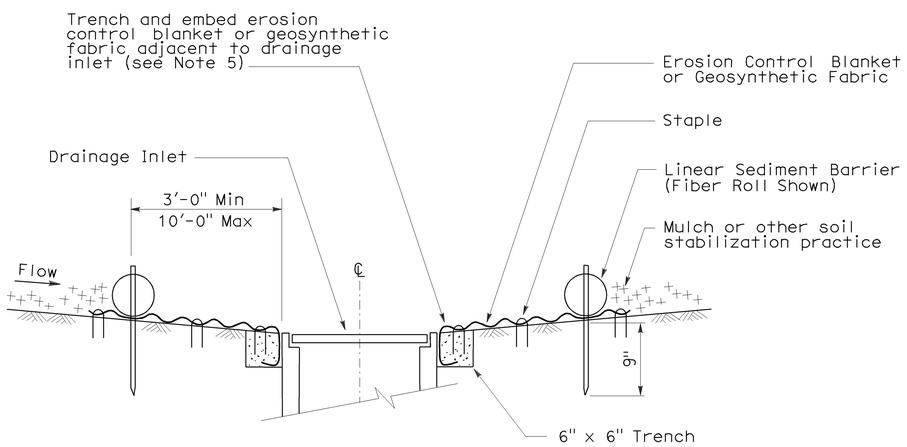

SECTION A-A

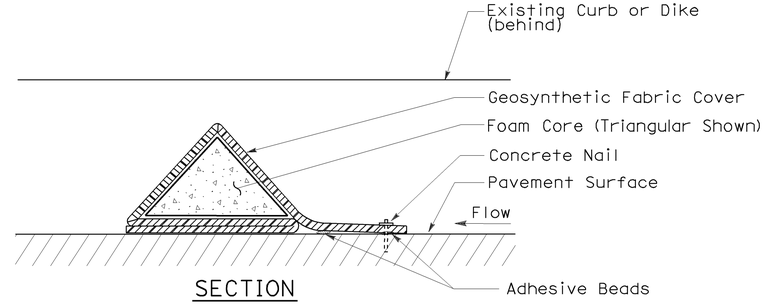

SECTION

FLEXIBLE SEDIMENT BARRIER DETAIL
(FOAM BARRIER SHOWN)

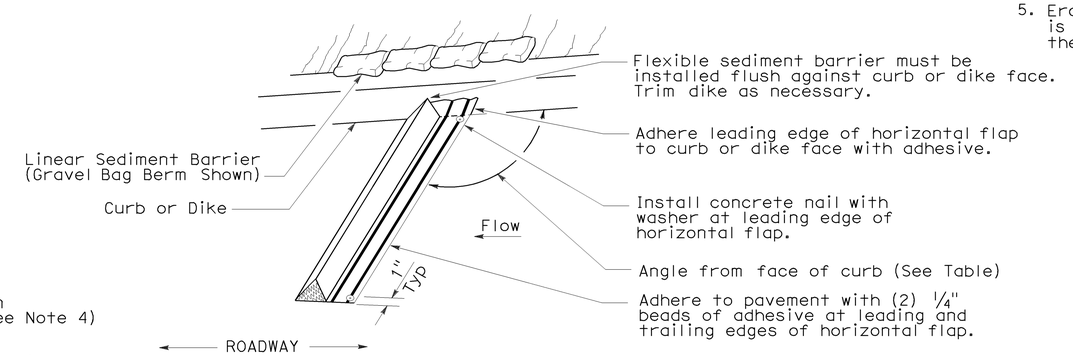

PERSPECTIVE

NOTES:

1. See Standard Plan T51 for Temporary Silt Fence.
2. Dimensions may vary to fit field conditions.
3. Install a minimum of 3 flexible sediment barriers upstream of each drainage inlet to be protected.
4. Position erosion control blanket or geosynthetic fabric at edge of concrete apron and secure in trench.
5. Erosion control blanket or geosynthetic fabric is not required if the area adjacent to the drainage inlet is vegetated.

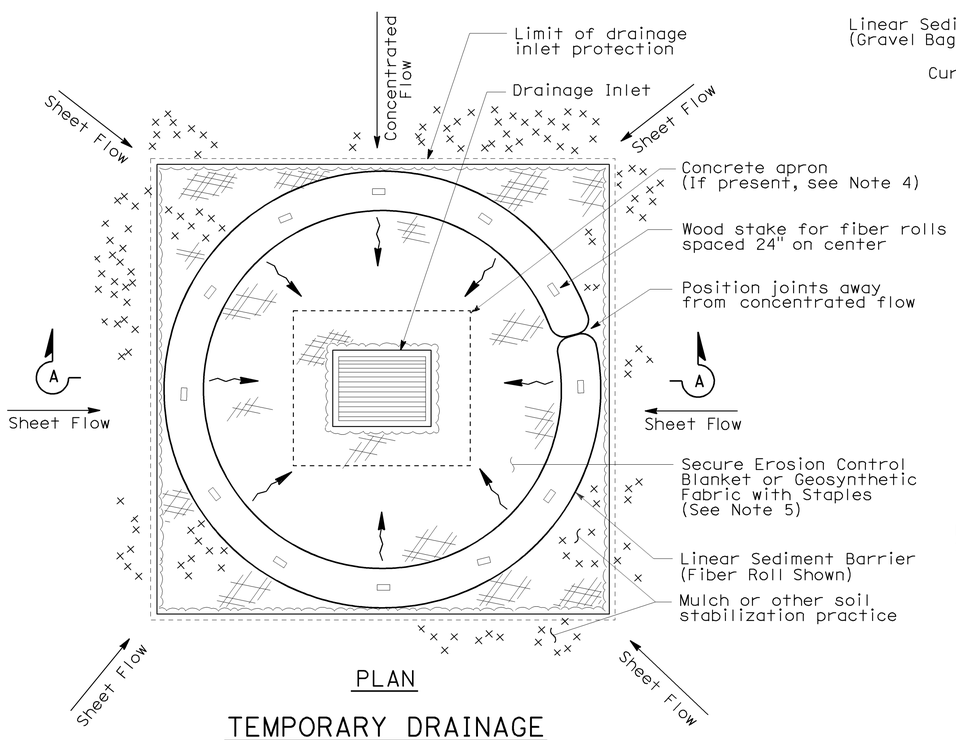

PLAN

TEMPORARY DRAINAGE
INLET PROTECTION (TYPE 4A)

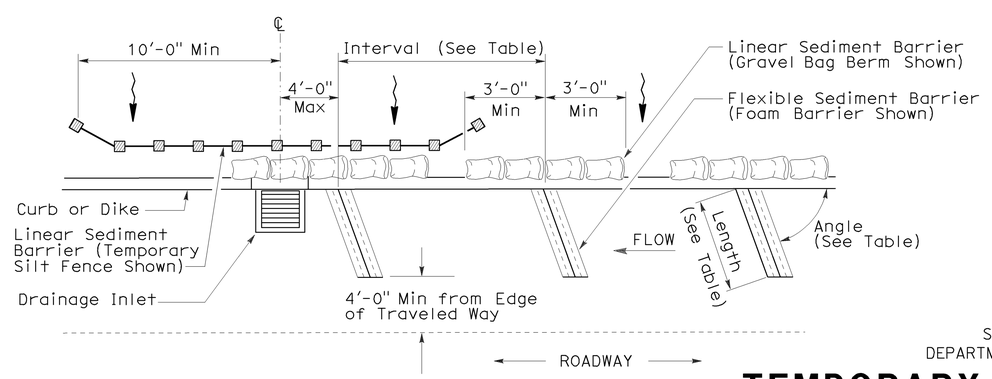

PLAN

TEMPORARY DRAINAGE
INLET PROTECTION (TYPE 4B)
FLEXIBLE SEDIMENT BARRIER

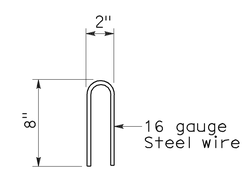

STAPLE DETAIL

STATE OF CALIFORNIA
DEPARTMENT OF TRANSPORTATION

TEMPORARY WATER POLLUTION CONTROL DETAILS (TEMPORARY DRAINAGE INLET PROTECTION)

NO SCALE

NSP T63 DATED AUGUST 15, 2008 SUPPLEMENTS
THE STANDARD PLANS BOOK DATED MAY 2006.

NEW STANDARD PLAN NSP T63

2006 NEW STANDARD PLAN NSP T63

7-11-08

DIST	COUNTY	ROUTE	POST MILES TOTAL PROJECT	SHEET NO.	TOTAL SHEETS
11	SD	5, 805	R40.1 18.6/18.8	41	56

Gregory A. Balzer
LICENSED LANDSCAPE ARCHITECT

April 3, 2009
PLANS APPROVAL DATE

LICENSED LANDSCAPE ARCHITECT
Gregory A. Balzer 2576
Signature
02-28-11
Renewal Date
03-04-09
Date
STATE OF CALIFORNIA

The State of California or its officers or agents shall not be responsible for the accuracy or completeness of electronic copies of this plan sheet.

To accompany plans dated 06-28-10

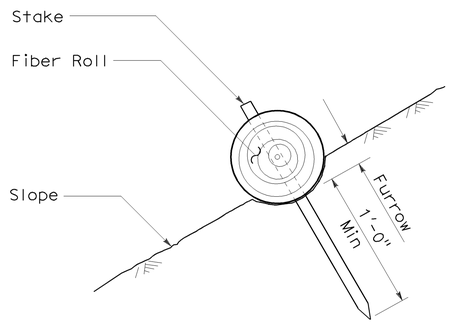

SECTION

FIBER ROLL (TYPE 1)

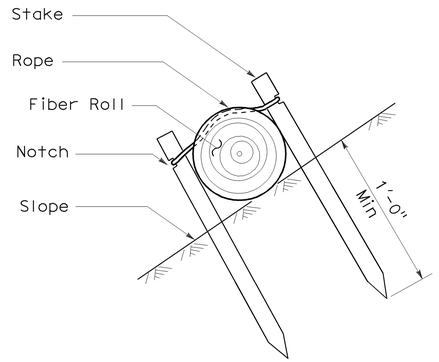

SECTION

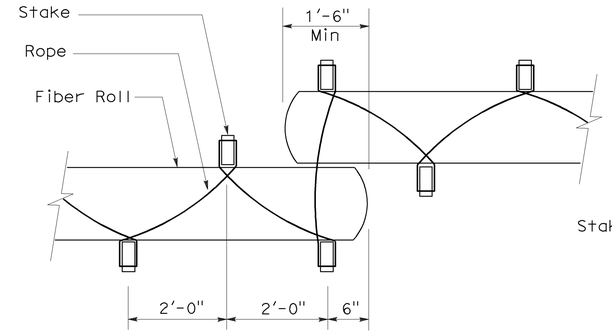

PLAN

FIBER ROLL (TYPE 2)

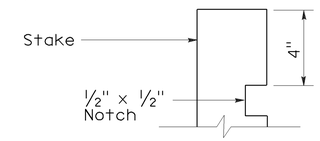

ELEVATION

STAKE NOTCH DETAIL

NOTES:

1. Fiber roll spacing varies depending upon slope inclination.
2. Installations shown in the perspectives are for slope inclination of 10:1 and steeper.

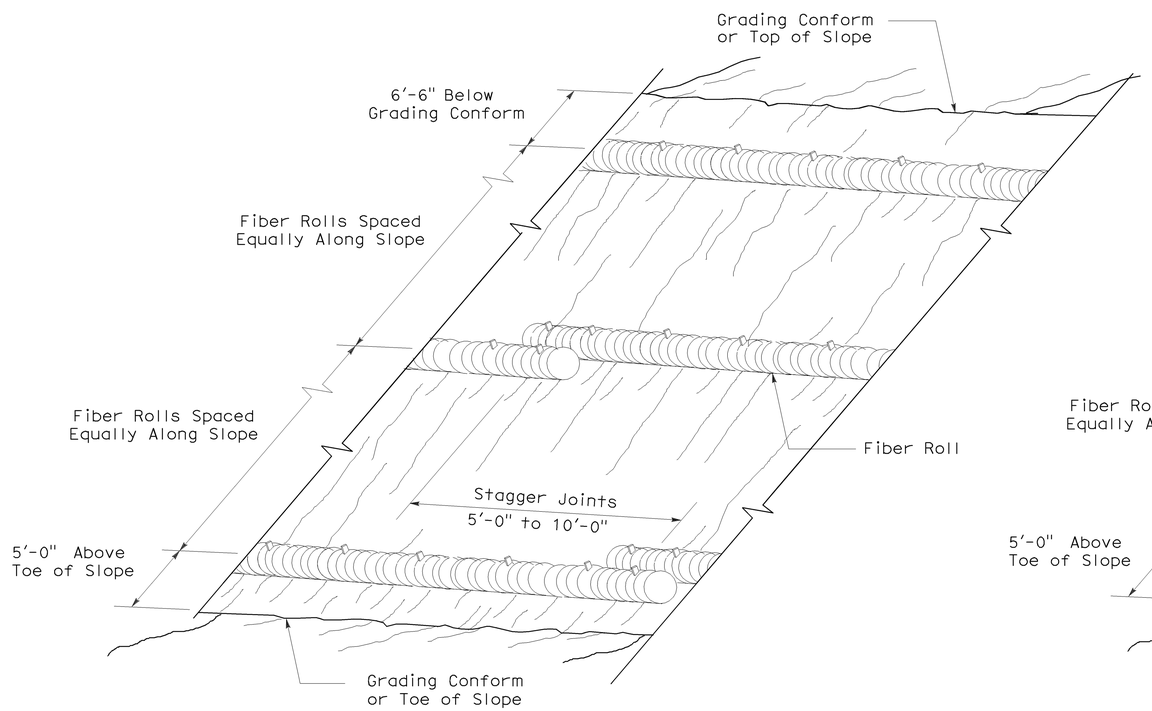

PERSPECTIVE

FIBER ROLL (TYPE 1)

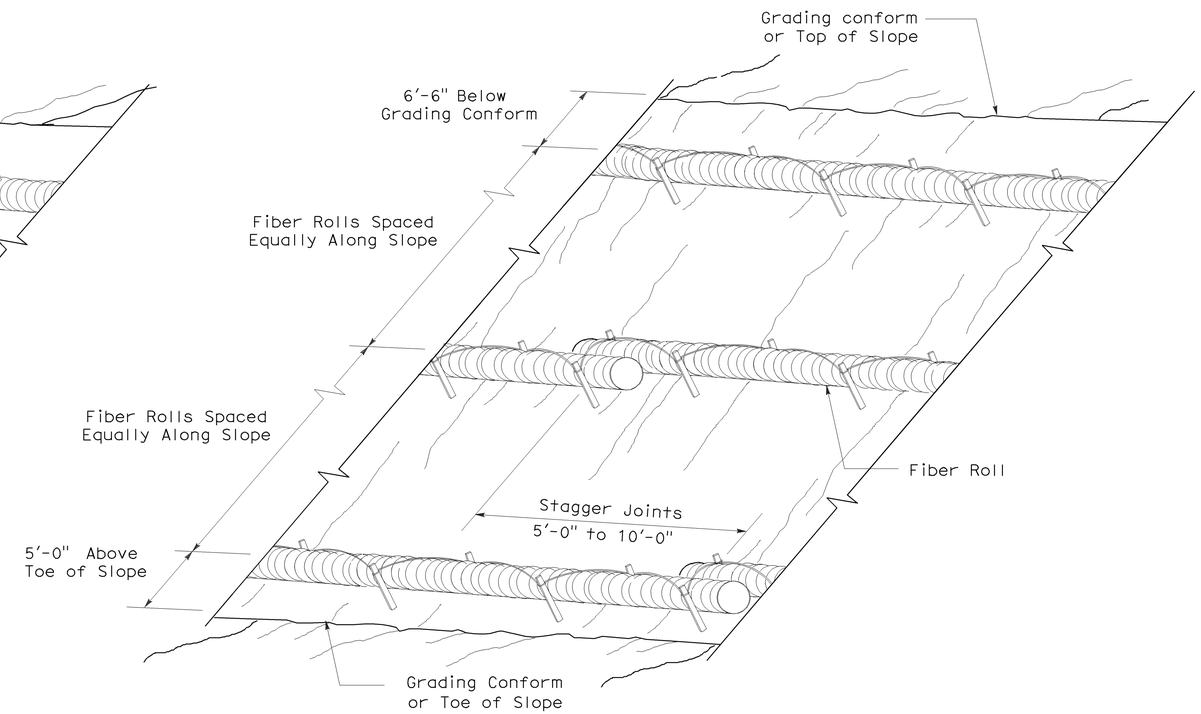

PERSPECTIVE

FIBER ROLL (TYPE 2)

STATE OF CALIFORNIA
DEPARTMENT OF TRANSPORTATION

EROSION CONTROL DETAILS (FIBER ROLL)

NO SCALE

RNSP H51 DATED APRIL 3, 2009 SUPERSEDES NSP H51 DATED DECEMBER 1, 2006 THAT SUPPLEMENTS THE STANDARD PLANS BOOK DATED MAY 2006.

REVISED NEW STANDARD PLAN RNSP H51

2006 REVISED NEW STANDARD PLAN RNSP H51

3-4-09

DIST	COUNTY	ROUTE	POST MILES TOTAL PROJECT	SHEET NO.	TOTAL SHEETS
11	SD	5, 805	R40.1 18.6/18.8	42	56

REGISTERED CIVIL ENGINEER

November 17, 2006
PLANS APPROVAL DATE

REGISTERED PROFESSIONAL ENGINEER Dallas Forester No. C37765 Exp. 12-31-06 CIVIL STATE OF CALIFORNIA

The State of California or its officers or agents shall not be responsible for the accuracy or completeness of electronic copies of this plan sheet.

To accompany plans dated 06-28-10

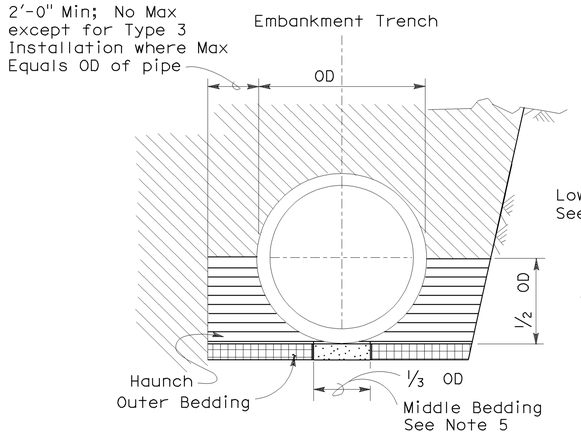

BACKFILL

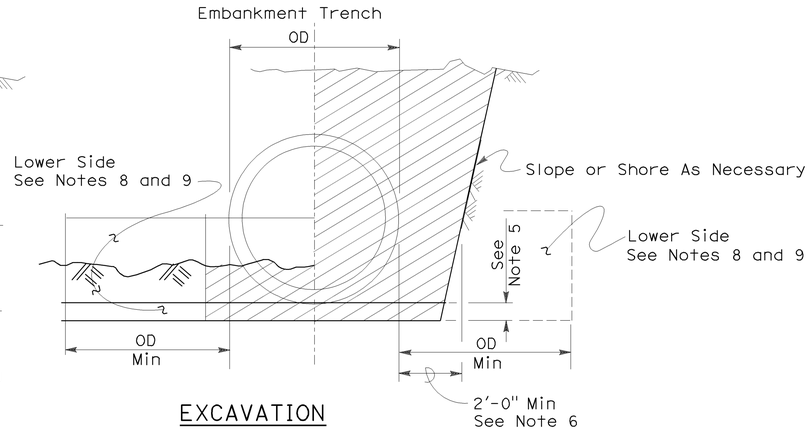

EXCAVATION

Roadway Embankment

Structure Backfill (Culvert) See Note 6

Structure Backfill (Culvert) See Note 6

Loose Backfill

Excavation Structure (Culvert)

TYPE 1 INSTALLATION:

The haunch and outer bedding shall be compacted to a minimum 90 percent relative compaction. In addition, the minimum sand equivalent in these areas shall be 30 and the maximum percentage passing the 75 μm sieve size shall be 12.

TYPE 2 INSTALLATION:

The haunch and outer bedding shall be compacted to a minimum 90 percent relative compaction. In addition, the minimum sand equivalent in these areas shall be 25.

TYPE 3 INSTALLATION:

The haunch and outer bedding shall be compacted to a minimum 85 percent relative compaction. 90 percent relative compaction will be required where the fill over the pipe is less than 4'-0" or 1/2 OD.

NOTES:

1. Unless otherwise shown on the plans or specified in the special provision, the Contractor shall have the option of selecting the class of RCP and the type of installation to be used, provided the height of cover does not exceed the value shown for the RCP selected.
   Example: 24" RCP culvert with maximum cover of 19'-0" the options are:
   a) Class II or stronger with Installation Type 1.
   b) Class III Special or stronger with Installation Type 2.
   c) Class IV Special or stronger with Installation Type 3.
   Cover is defined as the maximum vertical distance from top of the pipe to finished grade within the length of any given culvert.
2. The class of RCP and Installation Type selected shall be the same throughout the length of any given culvert.
3. The "length of any culvert" is defined as the culvert between:
   a) Successive drainage structure (inlets, junction boxes, headwalls, etc.).
   b) A drainage structure and the inlet or outlet end of the culvert.
   c) The inlet and outlet end of the culvert when there are no intervening drainage structures.
4. Oval and arch shaped RCP shall not be used.
5. 1/25 OD Min, not less than 3".
6. Slurry cement backfill may be substituted for backfill in the outer bedding and haunch areas. If slurry is used the outer and middle beddings shall be omitted. Prior to installation the soil under the middle 1/3 of the outside diameter of the pipe shall be softened by scarifying or other means to a minimum depth of 1/25 OD, but not less than 3". Where slurry cement backfill is used clear distance to trench wall may be reduced as set forth in Section 19-3.062 of the Standard Specifications.
7. Backfill shall be placed full width of excavation except where dimensions are shown for backfill width or thickness. Dimensions shown are minimums.
8. Lower side shall be suitable material as determined by the Engineer. Otherwise it shall be considered unsuitable as set forth in Section 19-2.02 of the Standard Specifications. See Note 9.
9. Where the pipe is placed in a trench, if the trench walls are sloped at 5 vertical to 1 horizontal or steeper for at least 90 percent of the trench height or up to not less than 12" from the grading plane, the firmness of the soil in the lower side need not be considered.
10. Non-reinforced precast concrete pipe sizes 3'-0" or smaller may be placed under installation Types 1, 2 or 3.

INSTALLATION TYPE 1

MINIMUM CLASS AND D-LOAD	COVER	
	108" Dia AND SMALLER	OVER 108" Dia
Class II 1000D	14.9'	12.9'
Class III 1350D	15.0' - 20.9'	13.0' - 18.9'
Class III Special 1700D	21.0' - 26.9'	19.0' - 24.9'
Class IV 2000D	27.0' - 31.9'	25.0' - 29.9'
Class IV Special 2500D	32.0' - 40.9'	30.0' - 38.9'
Class V 3000D	41.0' - 49.9'	39.0' - 46.9'
Class V Special 3600D	50.0' - 59.0'	47.0' - 58.0'

INSTALLATION TYPE 2

MINIMUM CLASS AND D-LOAD	COVER
Class II 1000D	9.9'
Class III 1350D	10.0'- 14.9'
Class III Special 1700D	15.0' - 19.9'
Class IV 2000D	20.0' - 24.9'
Class IV Special 2500D	25.0' - 31.9'
Class V 3000D	32.0' - 38.9'
Class V Special 3600D	39.0' - 47.0'

INSTALLATION TYPE 3

MINIMUM CLASS AND D-LOAD	COVER	
	48" Dia AND SMALLER	OVER 48" Dia
Class II 1000D	7.9'	5.9'
Class III 1350D	8.0' - 10.9'	6.0' - 8.9'
Class III Special 1700D	11.0' - 14.9'	9.0' - 12.9'
Class IV 2000D	15.0' - 17.9'	13.0' - 15.9'
Class IV Special 2500D	18.0' - 21.9'	16.0' - 19.9'
Class V 3000D	22.0' - 26.9'	20.0' - 24.9'
Class V Special 3600D	30.0' - 33.0'	25.0' - 31.0'

STATE OF CALIFORNIA
DEPARTMENT OF TRANSPORTATION

EXCAVATION AND BACKFILL CONCRETE PIPE CULVERTS

NO SCALE

RSP A62DA DATED NOVEMBER 17, 2006 SUPERSEDES STANDARD PLAN A62DA DATED MAY 1, 2006 - PAGE 20 OF THE STANDARD PLANS BOOK DATED MAY 2006.

REVISED STANDARD PLAN RSP A62DA

2006 REVISED STANDARD PLAN RSP A62DA

10-26-06

DIST	COUNTY	ROUTE	POST MILES TOTAL PROJECT	SHEET NO.	TOTAL SHEETS
11	SD	5, 805	R40.1 18.6/18.8	43	56

Randell D. Hiatt
REGISTERED CIVIL ENGINEER

June 6, 2008
PLANS APPROVAL DATE

REGISTERED PROFESSIONAL ENGINEER
Randell D. Hiatt
No. C50200
Exp. 6-30-09
CIVIL
STATE OF CALIFORNIA

The State of California or its officers or agents shall not be responsible for the accuracy or completeness of electronic copies of this plan sheet.

To accompany plans dated 06-28-10

NOTES:

1. When necessary to place dike in front of face of guard railing, only Type C dike may be used. For dike details, see Standard Plan A87B.
2. For standard railing post embedment, see Standard Plans A77C3.
3. Guard railing delineation to be used where shown on the Project Plans.
4. When dike or curb is placed under guard railing, the maximum height of the dike or curb shall be 4". Mountable dike should not be used. For dike and curb details, see Revised Standard Plans RSP A87A and Standard Plan A87B.
5. For details of typical distance between the face of rail and hinge point, see Standard Plan A77C3.

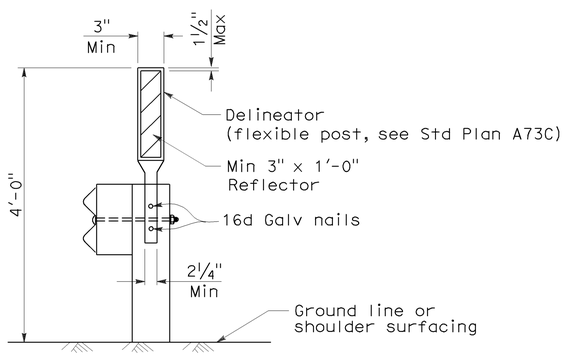

GUARD RAILING DELINEATION

See Note 3

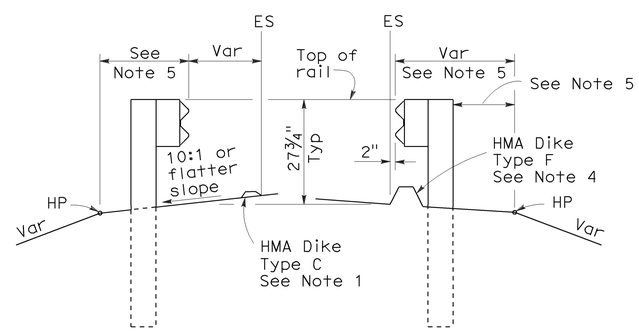

DIKE POSITIONING

See Note 1

STATE OF CALIFORNIA
DEPARTMENT OF TRANSPORTATION

METAL BEAM GUARD RAILING TYPICAL RAILING DELINEATION AND DIKE POSITIONING DETAILS

NO SCALE

RSP A77C4 DATED JUNE 6, 2008 SUPERSEDES STANDARD PLAN A77C4
DATED MAY 1, 2006 - PAGE 47 OF THE STANDARD PLANS BOOK DATED MAY 2006.

REVISED STANDARD PLAN RSP A77C4

2006 REVISED STANDARD PLAN RSP A77C4

12-10-07

DIST	COUNTY	ROUTE	POST MILES TOTAL PROJECT	SHEET NO.	TOTAL SHEETS
11	SD	5, 805	R40.1 18.6/18.8	44	56

Randell D. Hiatt
REGISTERED CIVIL ENGINEER

June 6, 2008
PLANS APPROVAL DATE

REGISTERED PROFESSIONAL ENGINEER
Randell D. Hiatt
No. C50200
Exp. 6-30-09
CIVIL
STATE OF CALIFORNIA

The State of California or its officers or agents shall not be responsible for the accuracy or completeness of electronic copies of this plan sheet.

To accompany plans dated 06-28-10

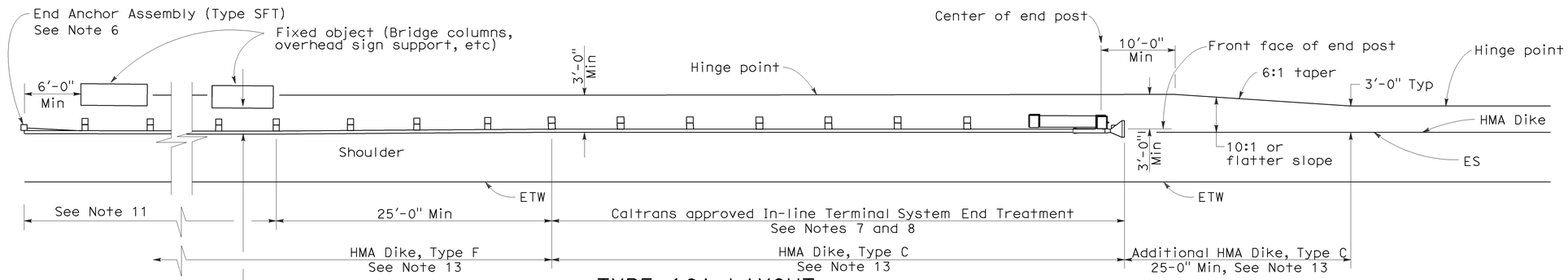

TYPE 16A LAYOUT

(GUARD RAILING INSTALLATION AT ROADSIDE FIXED OBJECT OR OBJECTS WITH AN IN-LINE END TREATMENT AT TRAFFIC APPROACH END OF RAILING)
See Notes 12 and 13

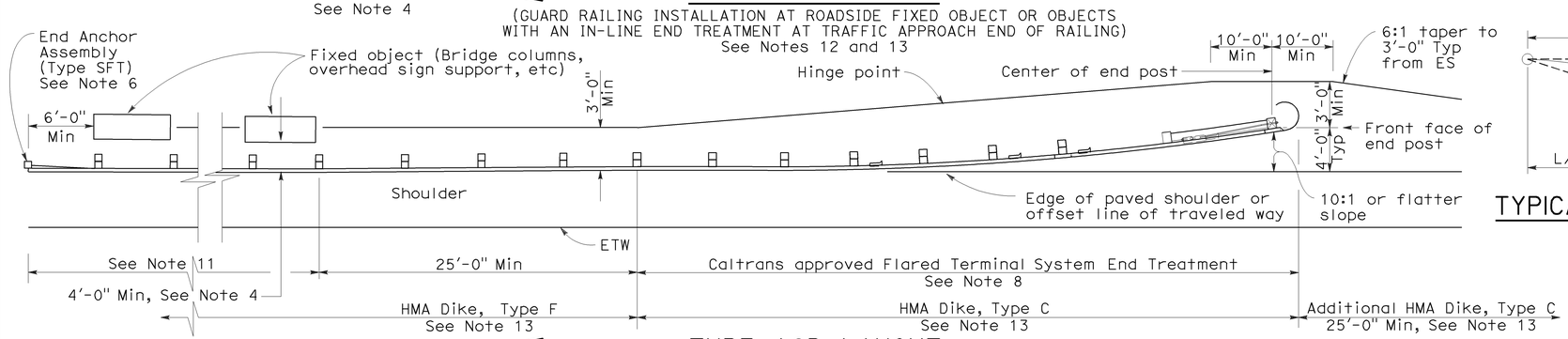

TYPE 16B LAYOUT

(GUARD RAILING INSTALLATION AT ROADSIDE FIXED OBJECT OR OBJECTS WITH A FLARED END TREATMENT AT TRAFFIC APPROACH END OF RAILING)
See Notes 12 and 13

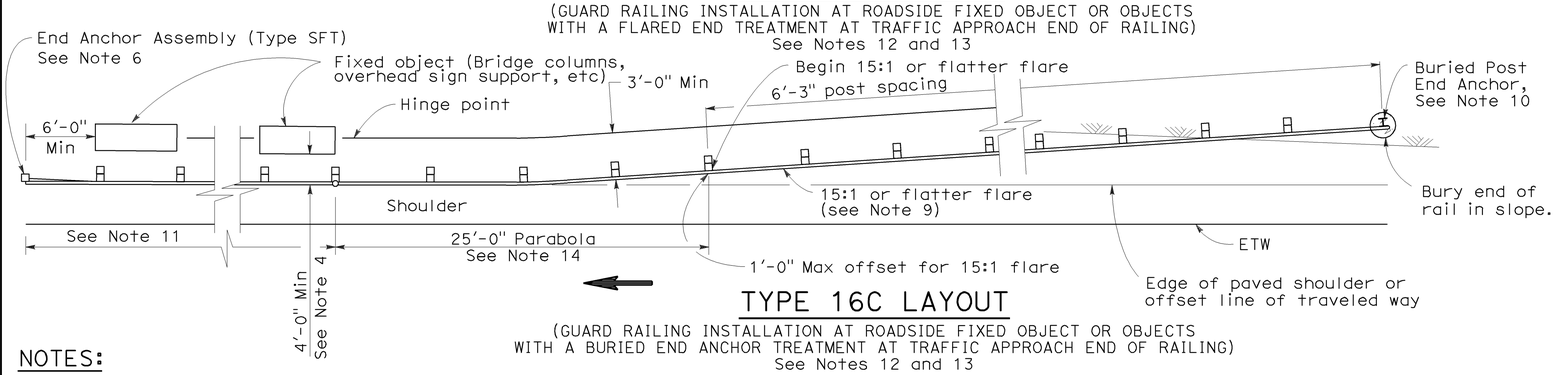

TYPE 16C LAYOUT

(GUARD RAILING INSTALLATION AT ROADSIDE FIXED OBJECT OR OBJECTS WITH A BURIED END ANCHOR TREATMENT AT TRAFFIC APPROACH END OF RAILING)
See Notes 12 and 13

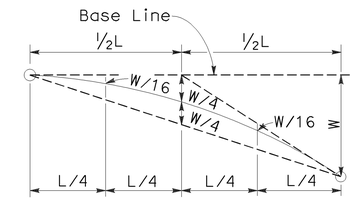

TYPICAL PARABOLIC LAYOUT

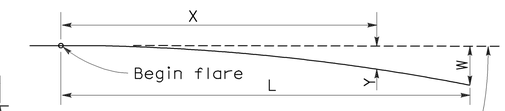

Base Line (Edge of paved shoulder or offset line of edge of traveled way)

$$Y = \frac{WX^2}{L^2}$$

Y = Offset from base line
W = Maximum offset
X = Distance along base line
L = Length of flare

PARABOLIC FLARE OFFSETS

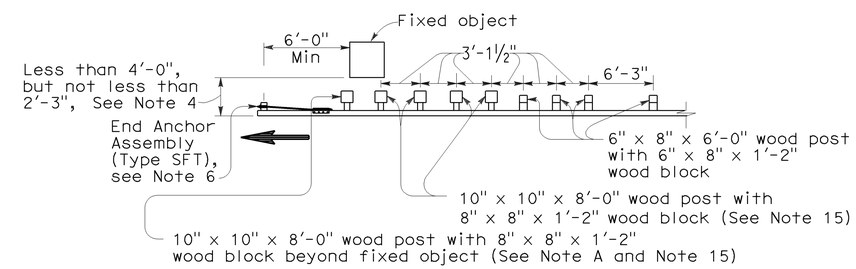

NOTE A: For a series of fixed objects (bridge columns, overhead sign supports, etc.) additional 10" x 10" x 8'-0" wood post with 8" x 8" x 1'-2" wood blocks at 3'-1½" center to center spacing are to be used between fixed objects.

STRENGTHENED RAILING SECTIONS FOR FIXED OBJECT

Use strengthened railing sections with Types 16A, 16B or 16C Layouts where minimum clearance between the face of the guard railing and fixed object(s) is less than 4'-0", but not less than 2'-3". See Note 4

NOTES:

1. Line post, blocks and hardware to be used are shown on Revised Standard Plans A77A1, A77A2, A77B1, A77C1 and A77C2.
2. Guard railing post spacing to be 6'-3" center to center, except as otherwise noted.
3. Except as noted, line posts are 6" x 8" x 6'-0" wood with 6" x 8" x 1'-2" wood blocks. W6 x 9 steel posts, 6'-0" in length, with 6" x 8" x 1'-2" notched wood blocks or notched recycled plastic blocks may be used for 6" x 8" x 6'-0" wood line posts with 6" x 8" x 1'-2" wood blocks where applicable and when specified.
4. A 4'-0" minimum clearance is required between the face of the railing and the face of a fixed object located directly behind standard guard railing sections with post spacing of 6'-3". Construct guard railing as shown in the detail "Strengthened Railing Sections for Fixed Objects" on this plan, where the clearance between the face of the railing and the face of a fixed object is less than 4'-0", but not less than 2'-3". Where the clearance is less than 2'-3", a concrete wall or barrier should be constructed to shield the fixed object(s).
5. Direction of adjacent traffic indicated by ⟶.
6. For End Anchor Assembly (Type SFT) details, see Standard Plan A77H1.
7. In-line Terminal System End Treatments are used where site conditions will not accommodate a flared end treatment.
8. The type of terminal system to be used will be shown on the Project Plans.
9. The 15:1 or flatter flare used with Type 16C Layout is based on the edge of the paved shoulder or offset line of edge of the traveled way. The length of guard railing within the 15:1 or flatter flare is based on site conditions and should be a length equal to multiples of 12'-6".
10. For details of the Buried Post End Anchor used with Type 16C Layout, see Standard Plan A77I2.
11. As site conditions dictate, construct additional guard railing to shield fixed object(s). Additional guard railing length equal to multiples of 12'-6". Post spacing at 6'-3" except as specified in Note 4.
12. Layout Types 16A, 16B or 16C are typically used where guard railing is recommended to shield roadside fixed object(s) and a crashworthy end treatment is required for only one direction of traffic.
13. Where placement of dike is required with guard railing, see Revised Standard Plan RSP A77C4 for dike positioning details.
14. For typical flare offsets for 25'-0" length parabola with maximum offset of 1'-0", see Revised Standard Plan RSP A77E1.
15. W6 x 15 steel post, 8'-0" in length, with 8" x 8" x 1'-2" notched wood block or notched recycled plastic blocks may be used in place of the 10" x 10" x 8'-0" wood post with 8" x 8" x 1'-2" wood block shown in the "Strengthened Railing Sections Detail".

STATE OF CALIFORNIA
DEPARTMENT OF TRANSPORTATION

METAL BEAM GUARD RAILING TYPICAL LAYOUTS FOR ROADSIDE FIXED OBJECTS

NO SCALE

RSP A77G3 DATED JUNE 6, 2008 SUPERSEDES STANDARD PLAN A77G3 DATED MAY 1, 2006 - PAGE 61 OF THE STANDARD PLANS BOOK DATED MAY 2006.

REVISED STANDARD PLAN RSP A77G3

2006 REVISED STANDARD PLAN RSP A77G3

12-10-07

DIST	COUNTY	ROUTE	POST MILES TOTAL PROJECT	SHEET NO.	TOTAL SHEETS
11	SD	5, 805	R40.1 18.6/18.8	45	56

REGISTERED CIVIL ENGINEER

June 6, 2008
PLANS APPROVAL DATE

REGISTERED PROFESSIONAL ENGINEER Raymond Don Tsztoo No. C37332 Exp. 6-30-08 CIVIL STATE OF CALIFORNIA

The State of California or its officers or agents shall not be responsible for the accuracy or completeness of electronic copies of this plan sheet.

To accompany plans dated 06-28-10

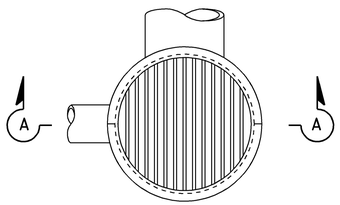

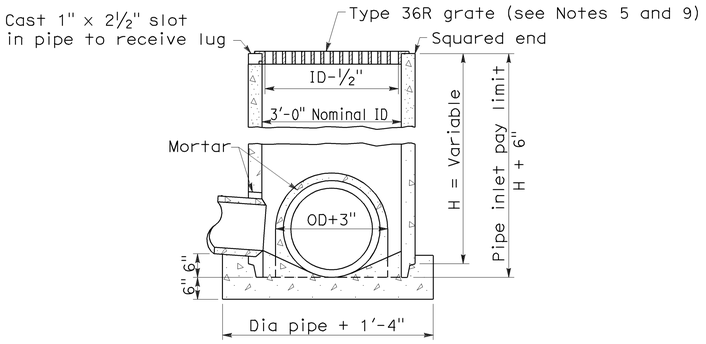

SECTION A-A

TYPE GCP

CONCRETE PIPE INLET WITH GRATE

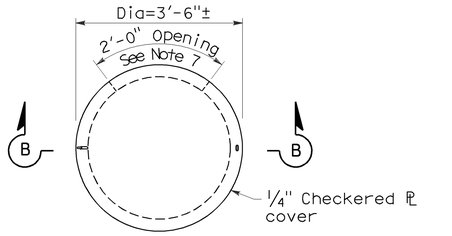

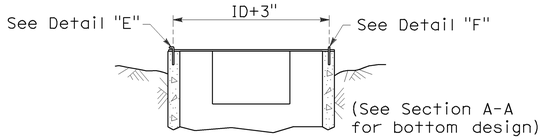

SECTION B-B

TYPE OCP or OCPI

CONCRETE PIPE INLET WITH STEEL COVER
(See Note 6)

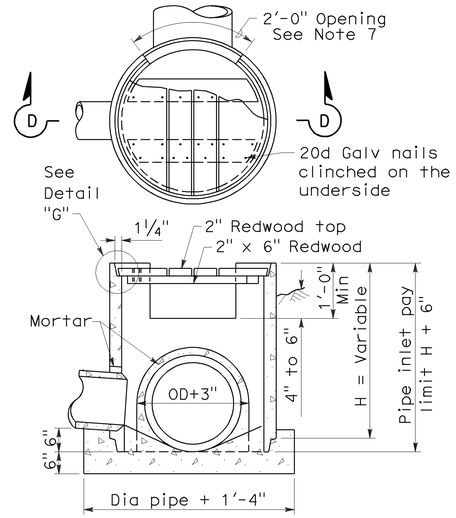

SECTION D-D

TYPE OCP or OCPI

CONCRETE PIPE INLET WITH REDWOOD COVER
(See Notes 6 and 10)

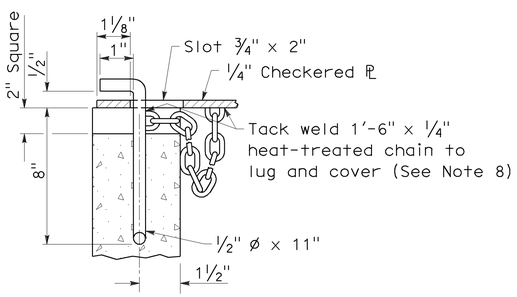

DETAIL "E"

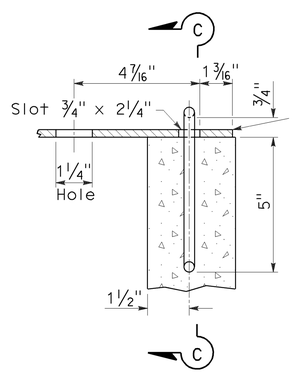

DETAIL "F"

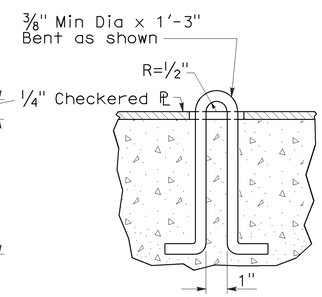

SECTION C-C

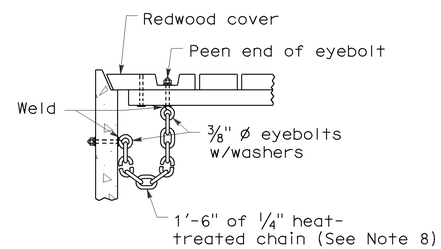

DETAIL "G"

NOTES:

1. For details of steel pipe inlets, see Standard Plan D75A.
2. For details of ladder and steps and when ladder or steps are required, see Standard Plan D75C.
3. Inlet pipes shall not protrude into basin.
4. Except for inlets used for junction boxes, basin floors shall have minimum slope of 4:1 from all directions toward outlet pipe, and a wood trowel finish.
5. See Revised Standard Plan RSP D77A and Standard Plan D77B for Grate and Frame Details and Weights of Miscellaneous Iron and Steel.
6. Designation of Type OCPI pipe inlets on plans indicates trash racks are to be furnished and installed on all side openings. See Standard Plan D75C for Trash Rack details.
7. More than one side opening may be required. Location and number as ordered by the Engineer. Opening may be cast in pipe.
8. Chain to be provided when specified.
9. Place pipe so bars of grate will be parallel with main surface flow.
10. Redwood covers shall only be placed at locations designated on the plans.

STATE OF CALIFORNIA
DEPARTMENT OF TRANSPORTATION

CONCRETE PIPE INLETS

NO SCALE

RSP D75B DATED JUNE 6, 2008 SUPERSEDES STANDARD PLAN D75B
DATED MAY 1, 2006 - PAGE 153 OF THE STANDARD PLANS BOOK DATED MAY 2006.

REVISED STANDARD PLAN RSP D75B

2006 REVISED STANDARD PLAN RSP D75B

5-20-08

DIST	COUNTY	ROUTE	POST MILES TOTAL PROJECT	SHEET NO.	TOTAL SHEETS
11	SD	5, 805	R40.1 18.6/18.8	46	56

Raymond Don Tsztoo
REGISTERED CIVIL ENGINEER

January 18, 2008
PLANS APPROVAL DATE

REGISTERED PROFESSIONAL ENGINEER Raymond Don Tsztoo No. C37332 Exp. 6-30-08 CIVIL STATE OF CALIFORNIA

The State of California or its officers or agents shall not be responsible for the accuracy or completeness of electronic copies of this plan sheet.

To accompany plans dated 06-28-10

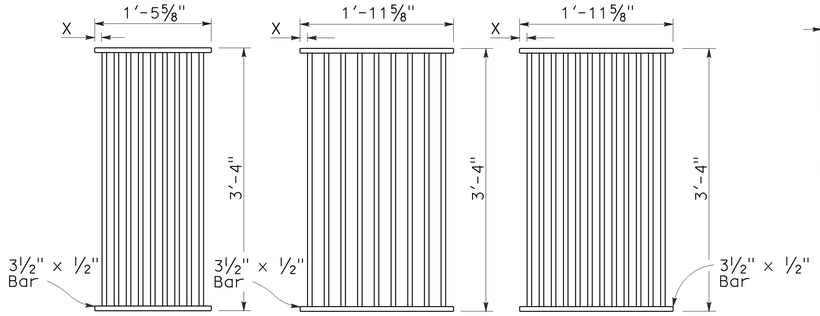

TYPE 18-9

1⅜" Clear spacing. Use within the roadbed on highways where bicycles and pedestrians are excluded.

TYPE 24-9

2" Clear spacing. Use in locations off the roadbed on all types of highways.

TYPE 24-12

1⅜" Clear spacing. Use within the roadbed on highways where bicycles and pedestrians are excluded.

RECTANGULAR GRATE DETAILS

(See table below)

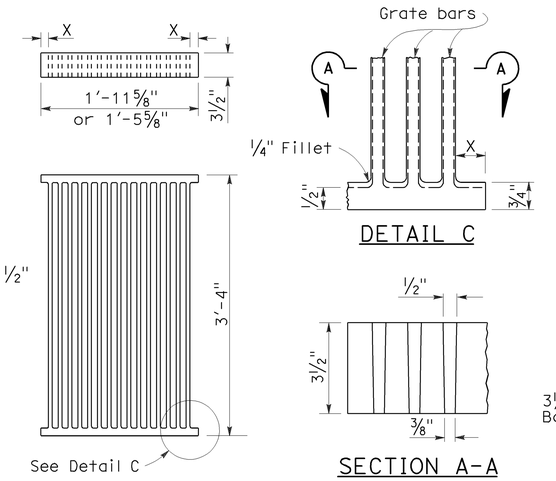

DETAIL C

SECTION A-A

ALTERNATIVE CAST NODULAR IRON GRATE OR CAST STEEL GRATE

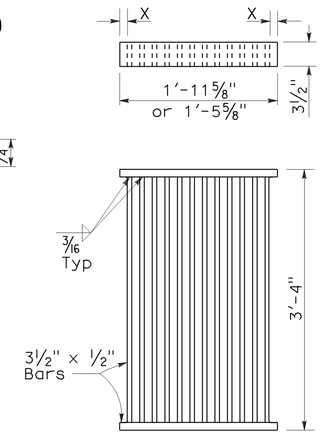

ALTERNATIVE WELDED GRATE

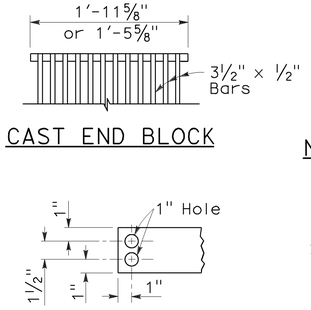

CAST END BLOCK

END OF BAR

NOTES:

1. Grate type numbers refer to approximate width of grate in inches and number of bars, respectively.
2. Contractor has the option of using cast nodular iron, cast steel, welded, bolted, or cast end block grate.
3. See Special Provisions for requirements pertaining to galvanizing or asphalt dipping of grates and frames.
4. Rounded top of bars optional on all grates.
5. Pipe inlets with a grate shall be placed so that bars parallel direction of principle surface flow.
6. Full penetration butt welds may be substituted for the fillet welds on all anchors.
7. Standard square, hexagon, round or equivalent headed anchors may be substituted for the right angle hooks on the anchors shown on this plan.
8. Grate and frame weights are based on welded grates (weights of face angles, steps, protection bars, etc. are not included).

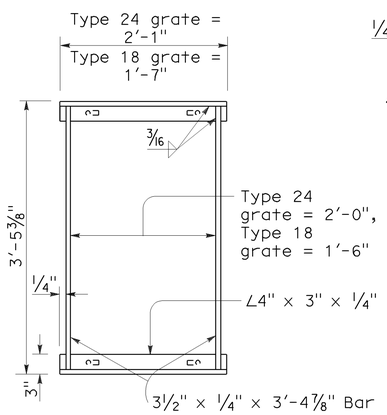

TYPICAL FRAME

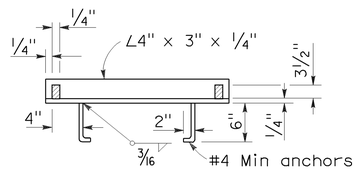

CROSS SECTION

(Thru frame)

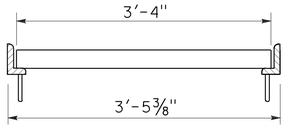

LONGITUDINAL SECTION

(Thru frame and grate)

RECTANGULAR FRAME DETAILS

(For all rectangular grates)

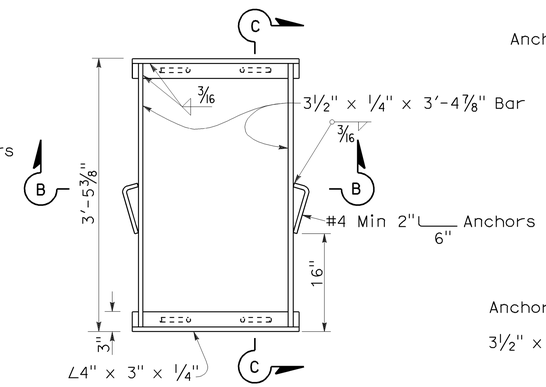

TYPICAL FRAME

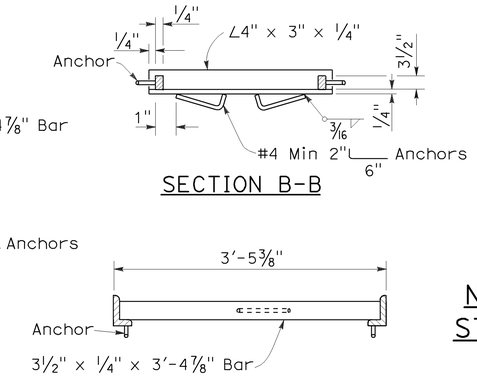

SECTION B-B

SECTION C-C

ALTERNATIVE ANCHOR FOR RECTANGULAR FRAME

(For details not shown, See Rectangular Frame Details)

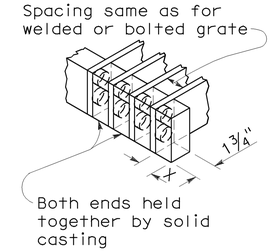

ALTERNATIVE CAST NODULAR IRON OR CAST STEEL END BLOCK GRATE

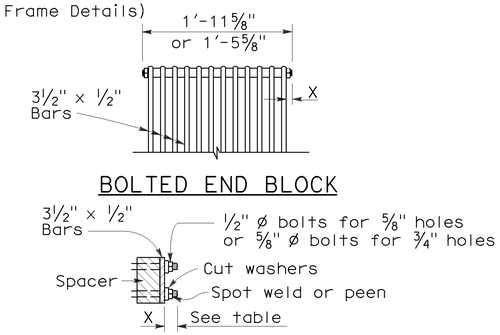

BOLTED END BLOCK

BOLTING DETAIL

ALTERNATIVE BOLTED GRATE

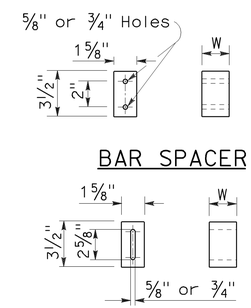

BAR SPACER

ALTERNATIVE SPACER

W = 1⅜" or 2"

GRATE BAR SPACING TABLE

TYPE	No. OF BARS	CLEAR BAR SPACING	X
18-9	9	1⅜"	1 1/16"
24-9	9	2"	1 9/16"
24-12	12	1⅜"	1¼"

INLET TYPE	COVER TYPE	WEIGHT LB
OS	PLATE	174
OL-7	PLATE	170
OL-10	PLATE	170
OL-14	PLATE	170
OL-21	PLATE	170
OCP	PLATE	112
OCPI	PLATE	112
OCPI	REDWOOD	42
OMP	PLATE	177
OMPI	PLATE	177

INLET TYPE	GRATE TYPE	No. OF GRATES	WEIGHT LB
GDO	24-12	2	634
GOL-7	24-12	1	326
GOL-10	24-12	1	326
GO,G1,G2,G3,G4 (TYPE 24)	24-9	1	263
	24-12	1	326
G4 (TYPE 18),G5,G6	18-9	1	249
GT1	18-9	2	498
GT2	18-9	2	498
GT3	24-12	2	652
GT4	24-12	2	652
TRASH RACK			22

BASIS FOR MISC IRON & STEEL FINAL PAY WEIGHTS FOR DRAINAGE INLETS

(See General Notes, No 8)

STATE OF CALIFORNIA
DEPARTMENT OF TRANSPORTATION

GRATE DETAILS

NO SCALE

RSP D77A DATED JANUARY 18, 2008 SUPERSEDES STANDARD PLAN D77A DATED MAY 1, 2006 - PAGE 155 OF THE STANDARD PLANS BOOK DATED MAY 2006.

REVISED STANDARD PLAN RSP D77A

2006 REVISED STANDARD PLAN RSP D77A

12-14-07

DIST	COUNTY	ROUTE	POST MILES TOTAL PROJECT	SHEET NO.	TOTAL SHEETS
11	SD	5, 805	R40.1 18.6/18.8	47	56

Raymond Don Tsztoo
REGISTERED CIVIL ENGINEER

June 6, 2008
PLANS APPROVAL DATE

REGISTERED PROFESSIONAL ENGINEER
Raymond Don Tsztoo
No. C37332
Exp. 6-30-08
CIVIL
STATE OF CALIFORNIA

The State of California or its officers or agents shall not be responsible for the accuracy or completeness of electronic copies of this plan sheet.

To accompany plans dated 06-28-10

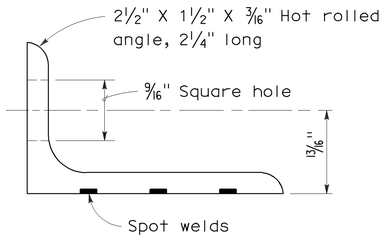

ANGLE

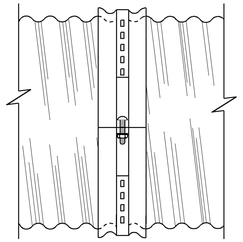

SIDE VIEW
ANGLE

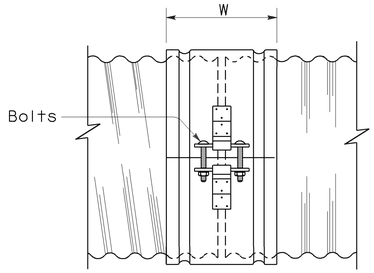

SIDE VIEW
SINGLE BAR AND STRAP

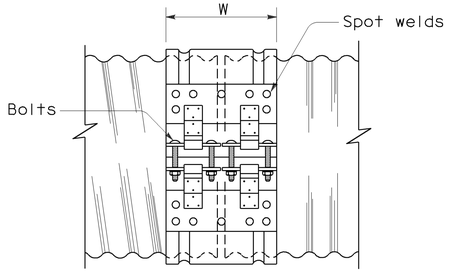

SIDE VIEW
DOUBLE BAR AND STRAP

NOTES:

1. All ferrous metal coupling band connection hardware shall be galvanized or electroplated in accordance with the Standard Specifications.
2. Dimensions and thicknesses shown are minimum.
3. Spot welds shall develop minimum required strength of strap.
4. Fillet welds of equivalent strength may be substituted for spot welds or rivets.
5. Dimension depends upon whether end condition is lips up or lips down.

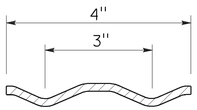

SECTION

H-4 HUGGER BAND

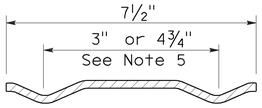

SECTION

H-7 HUGGER BAND

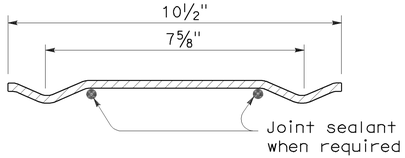

SECTION

H-10 HUGGER BAND

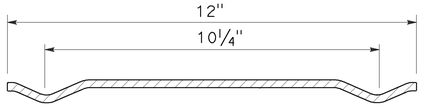

SECTION

H-12 HUGGER BAND

HUGGER COUPLING BANDS

STATE OF CALIFORNIA
DEPARTMENT OF TRANSPORTATION

CORRUGATED METAL PIPE COUPLING DETAILS No. 4 HUGGER COUPLING BANDS

NO SCALE

RSP D97D DATED JUNE 6, 2008 SUPERSEDES STANDARD PLAN D97D
DATED MAY 1, 2006 - PAGE 186 OF THE STANDARD PLANS BOOK DATED MAY 2006.

REVISED STANDARD PLAN RSP D97D

2006 REVISED STANDARD PLAN RSP D97D

3-24-08

DIST	COUNTY	ROUTE	POST MILES TOTAL PROJECT	SHEET NO.	TOTAL SHEETS
11	SD	5, 805	R40.1 18.6/18.8	48	56

Raymond Don Tsztoo
REGISTERED CIVIL ENGINEER

June 6, 2008
PLANS APPROVAL DATE

REGISTERED PROFESSIONAL ENGINEER Raymond Don Tsztoo No. C37332 Exp. 6-30-08 CIVIL STATE OF CALIFORNIA

The State of California or its officers or agents shall not be responsible for the accuracy or completeness of electronic copies of this plan sheet.

To accompany plans dated 06-28-10

ANNULAR AND HELICAL PROFILE

COUPLING TYPE	PIPE CORRUGATION	PIPE SIZE	W OR A	PIPE WALL THICKNESS		BAND THICKNESS		BAR AND STRAP (CSP ONLY)			ANGLE						
											DIMENSIONS		BOLTS (No.- Dia)		RIVETS ANGLE TO BAND		SPOT WELDS ANGLE TO BAND
				CSP	CAP	CSP	CAP	STRAP THICKNESS	BOLTS Dia	BAR Dia	CSP	CAP	CSP	CAP	CSP	CAP	CSP
TWO PIECE INTEGRAL FLANGE	1½′ × ¼″	6″	7″	0.064″-0.168″		0.052″							3-⅜″				
	1½′ × ¼″	8″-10″	7″	0.064″-0.168″	0.060″-0.164″	0.064″	0.060″						3-⅜″	3-⅜″			
ANNULAR	2⅔″ × ½″	THROUGH 24″	12″	0.064″-0.168″	0.060″-0.164″	0.064″	0.060″				2″ × 2″ × 3⁄16″	2″ × 2″ × 3⁄16″	3-½″	3-½″	3-⅜″	3-⅜″	3-½″
HUGGER	2⅔″ × ½″ REROLLED END	THROUGH 24″	10½″	0.064″-0.168″		0.064″		0.079″	½″	⅞″							

SPIRAL RIB PROFILE

COUPLING TYPE	PIPE CORRUGATION	PIPE SIZE	W	PIPE WALL THICKNESS		BAND THICKNESS		BAR AND STRAP (SSRP ONLY)			ANGLE						
											DIMENSIONS		BOLTS (No.- Dia)		RIVETS ANGLE TO BAND		SPOT WELDS ANGLE TO BAND
				SSRP	ASRP	SSRP	ASRP	STRAP THICKNESS	BOLTS Dia	BAR Dia	SSRP	ASRP	SSRP	ASRP	SSRP	ASRP	SSRP
ANNULAR	2⅔″ × ½″ * REROLLED END	24″	12″	0.064″-0.168″	0.060″-0.164″	0.064″	0.060″				2″ × 2″ × 3⁄16″	2″ × 2″ × 3⁄16″	3-½″	3-½″	3-⅜″	3-⅜″	3-½″
HUGGER	2⅔″ × ½″ * REROLLED END	24″	10½″	0.064″-0.168″		0.064″		0.079″	½″	⅞″							

* See Note 12.

NOTES:

1. All ferrous metal coupling band connection hardware shall be galvanized or electro-plated in accordance with the Standard Specifications.
2. For helically corrugated coupling bands, the connection angles may be oriented parallel to the pipe axis, provided connecting holes are slotted lengthwise sufficiently to allow adjustment for the helix angle.
3. Tension strap may be connected to band with either spot welds or fillet welds that develop minimum required strength of strap.
4. Use 1¼″ gage line dimension on attached angle leg for rivets and spot welds.
5. Band thickness shall not be less than:
   a. 3 standard thicknesses lighter than the thickness of the pipe for Corrugated Steel Pipe.
   b. 2 standard thicknesses lighter than the thickness of the pipe and in no case lighter than 0.060″ for Corrugated Aluminum Pipe.
6. Dimensions, thicknesses and strengths shown are minimum.
7. For pipe arches use same width band as for round pipe of equal periphery.
8. Fillet welds of equivalent strenght may be substituted for spot welds or rivets.
9. Spot welds shall develop minimum required strength of strap.
10. Pipe with rerolled ends having at least two 2⅔″ × ½″ annular corrugations at each end with or without an upturned flange may be connected with any of the annular coupling bands shown for pipe of the same diameter and wall thickness and having 2⅔″ × ½″ corrugations.
11. For downdrain applications, two piece integral flange couplers shall have factory applied sleeve type rubber gaskets with a minimum length of 7″ measured along the length of the pipe.
12. All profiles of Spiral Rib Pipe (¾″ × ¾″ ribs at 7½″ pitch and ¾″ × 1″ ribs at 11½″ pitch in both steel and aluminum and ¾″ × 1″ ribs at 8½″ pitch in steel only) shall be manufactured with rerolled ends. Corrugation profile of the rerolled ends shall be 2⅔″ × ½″ annual corrugations with a minimum of two full corrugations at each end.

STATE OF CALIFORNIA
DEPARTMENT OF TRANSPORTATION

CORRUGATED METAL PIPE COUPLING DETAILS No. 7 DOWNDRAIN

NO SCALE

RSP D97G DATED JUNE 6, 2008 SUPERSEDES STANDARD PLAN D97G
DATED MAY 1, 2006 - PAGE 189 OF THE STANDARD PLANS BOOK DATED MAY 2006.

REVISED STANDARD PLAN RSP D97G

2006 REVISED STANDARD PLAN RSP D97G

4-4-08

DIST	COUNTY	ROUTE	POST MILES TOTAL PROJECT	SHEET NO.	TOTAL SHEETS
11	SD	5, 805	R40.1 18.6/18.8	49	56

LICENSED LANDSCAPE ARCHITECT

June 5, 2009
PLANS APPROVAL DATE

The State of California or its officers or agents shall not be responsible for the accuracy or completeness of electronic copies of this plan sheet.

LICENSED LANDSCAPE ARCHITECT
Gregory A. Balzer 2576
10-31-09
Renewal Date
2-28-11
Renewal Date
5-14-09
Date
STATE OF CALIFORNIA

To accompany plans dated 06-28-10

A

AB	aggregate base
ABS	acrylonitrile-butadiene-styrene
AC	asphalt concrete
Adj	adjacent/adjustable
AIC	auxiliary irrigation controller
Alt	alternative
AMEND	amendment
ARV	air release valve
AUTO	automatic
AUX	auxiliary
AVB	atmospheric vacuum breaker

B

B&B	balled and burlapped
B/B	brass/bronze
B/B/PL	brass/bronze/plastic
B/PL	brass/plastic
BFM	bonded fiber matrix
Bit Ctd	bituminous coated
BP	booster pump
BPA	backflow preventer assembly
BPAE	backflow preventer assembly in enclosure
BPE	backflow preventer enclosure
BV	ball valve

C

CAP	corrugated aluminum pipe
CARV	combination air release valve
CCA	cam coupler assembly
CEC	controller enclosure cabinet
CHDPE	corrugated high density polyethylene
CL	chain link
CNC	control and neutral conductors
Conc	concrete
Cond	conduit
CSP	corrugated steel pipe
CST	center strip
CV	check valve

D

Dia	diameter
DIP	ductile iron pipe
DN	diameter nominal

E

EA	each
Elect	electric/electrical
Elev	elevation
ENCL	enclosure
EP	edge of pavement
ES	edge of shoulder
EST	end strip
ESTB	establishment
ETW	edge of traveled way

F

F	full circle
F/P	full/part circle
FAU	filter assembly unit
FCV	flow control valve
FERT	fertilizer
FG	finished grade
FIPT	female iron pipe thread
FIS	fertilizer injector system
FL	flow line
FM	flow monitor
FS	flow sensor
Ft	foot/feet
FV	flush valve

G

GAL	Gallon(s)
Galv	galvanized
GARV	garden valve
GPH	gallons per hour
GPM	gallons per minute
GSP	galvanized steel pipe
GV	gate valve

H

H	half circle
HB	hose bib
HDPE	high density polyethylene
HP	horsepower/hinge point
HPL	high pressure line
Hwy	highway

I

IC	irrigation controller
ICC	irrigation controller(s) in controller enclosure cabinet
ID	inside diameter
In	inches
IFS	irrigation filtration system
IPS	iron pipe size
IPT	iron pipe thread
Irr	irrigation

L

L	length
LF	linear foot

M

Max	maximum
MBGR	metal beam guard railing
MCV	manual control valve
MIC	master irrigation controller
Min	minimum
MIPT	male iron pipe thread
Misc	miscellaneous
Mtl	material
MVP	maintenance vehicle pullout

N

NCN	no common name
NL	nozzle line
No.	number
NPT	national pipe thread

O

O/C	on center
OD	outside diameter
Oz	ounce

P

P	part circle
PB	pull box
PCC	portland cement concrete
PE	polyethylene
Pkt	packet
PL	plastic
PLT	plant/planting
PLT ESTB	plant establishment
PM	post mile
PR	pressure rated
PRLV	pressure relief valve
PSFM	polymer stabilized fiber matrix
PSI	pounds per square inch
PRV	pressure reducing valve
PVC	polyvinyl chloride
Pvmt	pavement

Q

Q	quarter circle
QCV	quick coupling valve

R

R	radius
RCP	reinforced concrete pipe
RCV	remote control valve
RCVM	remote control valve (master)
RCVMF	remote control valve (master) w/ flow meter
RCW	recycled/reclaimed water
RECP	rolled erosion control product
REQ	required
R/W	right of way

S

S	slip
SCC	sprinkler control conduit
SCH	schedule
SF	state-furnished
Shld	shoulder
SQFT	square foot/feet
SQYD	square yard(s)
SST	side strip
Sta	station
Std	standard
SW	sidewalk/sound wall

T

T	third circle/thread
TLS	truck loading standpipe
TQ	three quarter circle
TRM	turf reinforcement mat
TRVD	traveled
TT	two third circle
Typ	typical

U

UG	underground

V

VAU	valve assembly unit

W

W	width
W/	with
WM	water meter
WS	wye strainer
WSP	welded steel pipe
WWM	welded wire mesh

NOTE:

FOR ADDITIONAL ABBREVIATIONS, SEE STANDARD PLANS A10A AND A10B.

STATE OF CALIFORNIA
DEPARTMENT OF TRANSPORTATION

PLANTING AND IRRIGATION ABBREVIATIONS

NO SCALE

RSP H1 DATED JUNE 5, 2009 SUPERSEDES STANDARD PLAN H1
DATED MAY 1, 2006 - PAGE 201 OF THE STANDARD PLANS BOOK DATED MAY 2006.

REVISED STANDARD PLAN RSP H1

2006 REVISED STANDARD PLAN RSP H1

DIST	COUNTY	ROUTE	POST MILES TOTAL PROJECT	SHEET NO.	TOTAL SHEETS
11	SD	5, 805	R40.1 18.6/18.8	50	56

Gregory A. Balzer
LICENSED LANDSCAPE ARCHITECT

June 5, 2009
PLANS APPROVAL DATE

LICENSED LANDSCAPE ARCHITECT
Gregory A. Balzer 2576
Signature
2-28-11
Renewal Date
5-14-09
Date
STATE OF CALIFORNIA

The State of California or its officers or agents shall not be responsible for the accuracy or completeness of electronic copies of this plan sheet.

To accompany plans dated 06-28-10

EXISTING	PROPOSED	ITEM DESCRIPTION
		WATER METER (WM)
		BACKFLOW PREVENTER ASSEMBLY (BPA)
		BACKFLOW PREVENTER ASSEMBLY IN ENCLOSURE (BPAE)
		BACKFLOW PREVENTER ENCLOSURE (BPE)
		BOOSTER PUMP (BP)
		TRUCK LOADING STANDPIPE (TLS)
FS	FS	FLOW SENSOR (FS)
X	X	MASTER IRRIGATION CONTROLLER (MIC)
		AUXILIARY IRRIGATION CONTROLLER (AIC)
		IRRIGATION CONTROLLER (IC)/ IRRIGATION CONTROLLER (IC) (BATTERY) IRRIGATION CONTROLLER (IC) (SOLAR)
		IRRIGATION CONTROLLER(S) IN CONTROLLER ENCLOSURE CABINET (ICC)
		CONTROL AND NEUTRAL CONDUCTORS (CNC)
SCC	SCC	SPRINKLER CONTROL CONDUIT (SCC)
		IRRIGATION CROSSOVER
		EXTEND IRRIGATION CROSSOVER
		IRRIGATION SLEEVE
dip	DIP	DUCTILE IRON PIPE (SUPPLY LINE) (MAIN) (DIP)
		GALVANIZED STEEL PIPE (SUPPLY LINE) (MAIN) (GSP)
		GALVANIZED STEEL PIPE (SUPPLY LINE) (LATERAL) (GSP)
		PLASTIC PIPE (PR 200) (SUPPLY LINE) (MAIN)
		PLASTIC PIPE (PR 200) (SUPPLY LINE) (LATERAL)
		PLASTIC PIPE (IRRIGATION LINE)
		REMOTE CONTROL VALVE (RCV) REMOTE CONTROL VALVE (MASTER) (RCVM) REMOTE CONTROL VALVE (MASTER) W/FLOW METER (RCVMF)
		MANUAL CONTROL VALVE (MCV)
		VALVE ASSEMBLY UNIT (VAU)
		WYE STRAINER (WS)
		FILTER ASSEMBLY UNIT (FAU)
		GATE VALVE (GV)
		BALL VALVE (BV)

EXISTING	PROPOSED	ITEM DESCRIPTION
		QUICK COUPLING VALVE (QCV)
		CAM COUPLER ASSEMBLY (CCA)
		PRESSURE REDUCING VALVE (PRV)
		PRESSURE RELIEF VALVE (PRLV)
		FLOW CONTROL VALVE (FCV)
		COMBINATION AIR RELEASE VALVE (CARV)
		CHECK VALVE (CV)
		FLUSH VALVE (FV)
		NOZZLE LINE W/TURNING UNION
		IRRIGATION SYSTEM
		IRRIGATION SYSTEM TO BE REMOVED
		CHAIN LINK GATE
		QUICK COUPLING VALVE W/SPRINKLER PROTECTOR
3	3	SPRINKLER W/SPRINKLER PROTECTOR
	C	CONNECT TO EXISTING SYSTEM
		CAP
		CAP EXISTING

VALVE CODE

RCV SIZE
IRRIGATION CONTROLLER
CONTROLLER STATION
VALVE IN PARALLEL (IF APPLICABLE)
GPM
QUANTITY OF SPRINKLERS (WHEN SHOWN)

* 2½"-A-2b-40 -60

MCV SIZE
VALVE NUMBER
GPM
QUANTITY OF TYPE SPRINKLERS (WHEN SHOWN)

* 2"-3-30 -50

* VALVE CODES FOR EXISTING VALVES ARE SHOWN IN A DASHED ENCLOSURE.

STATE OF CALIFORNIA
DEPARTMENT OF TRANSPORTATION

PLANTING AND IRRIGATION SYMBOLS

NO SCALE

RSP H2 DATED JUNE 5, 2009 SUPERSEDES RSP H2 DATED MARCH 7, 2008 AND STANDARD PLAN H2 DATED MAY 1, 2006 - PAGE 202 OF THE STANDARD PLANS BOOK DATED MAY 2006.

REVISED STANDARD PLAN RSP H2

2006 REVISED STANDARD PLAN RSP H2

5-11-09

DIST	COUNTY	ROUTE	POST MILES TOTAL PROJECT	SHEET NO.	TOTAL SHEETS
11	SD	5, 805	R40.1 18.6/18.8	51	56

Gregory A. Balzer
LICENSED LANDSCAPE ARCHITECT

June 5, 2009
PLANS APPROVAL DATE

LICENSED LANDSCAPE ARCHITECT
Gregory A. Balzer 2576
Signature
2-28-11
Renewal Date
5-14-09
Date
STATE OF CALIFORNIA

The State of California or its officers or agents shall not be responsible for the accuracy or completeness of electronic copies of this plan sheet.

To accompany plans dated 06-28-10

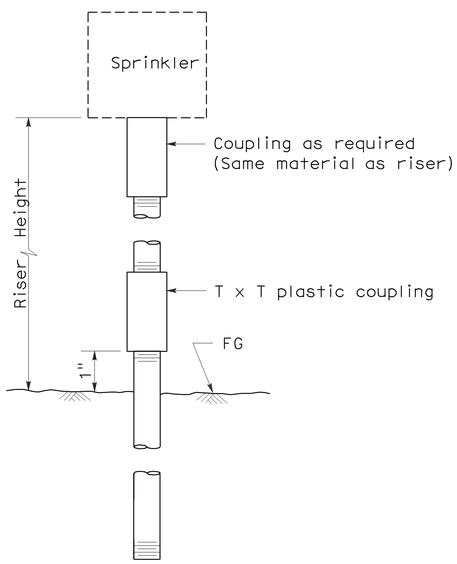

ELEVATION
RISER TYPE I

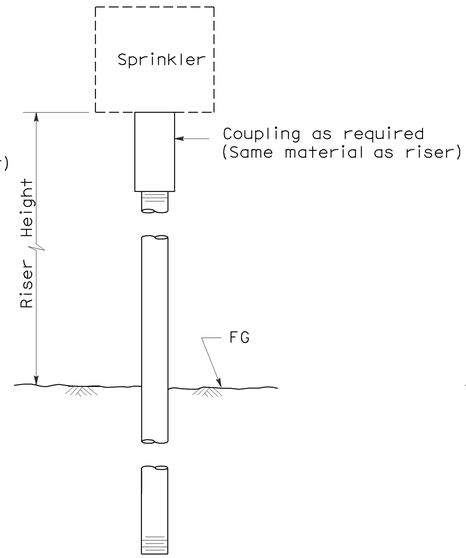

ELEVATION
RISER TYPE II

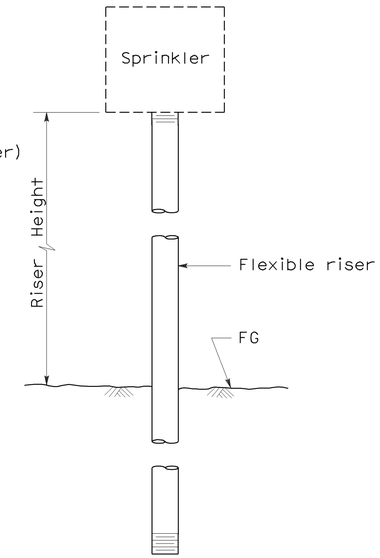

ELEVATION
RISER TYPE III

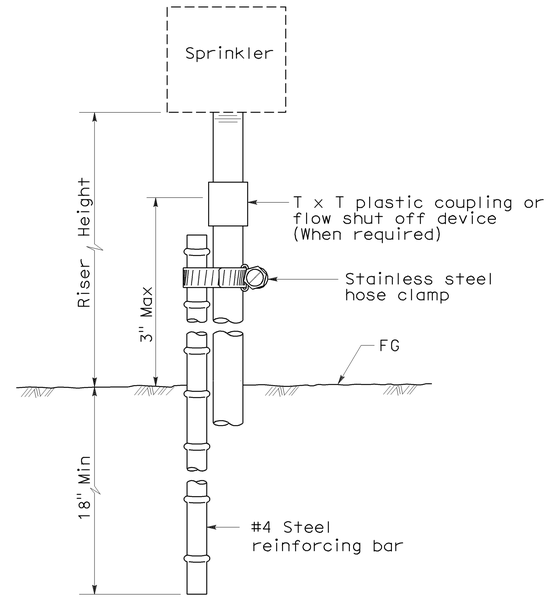

ELEVATION
RISER TYPE IV

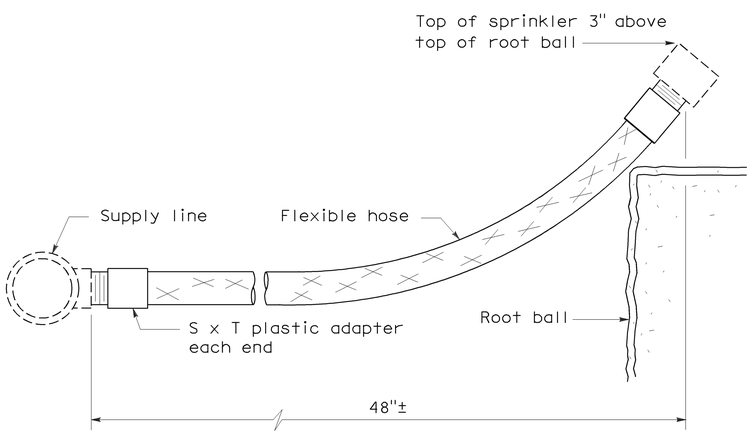

ELEVATION
RISER TYPE V

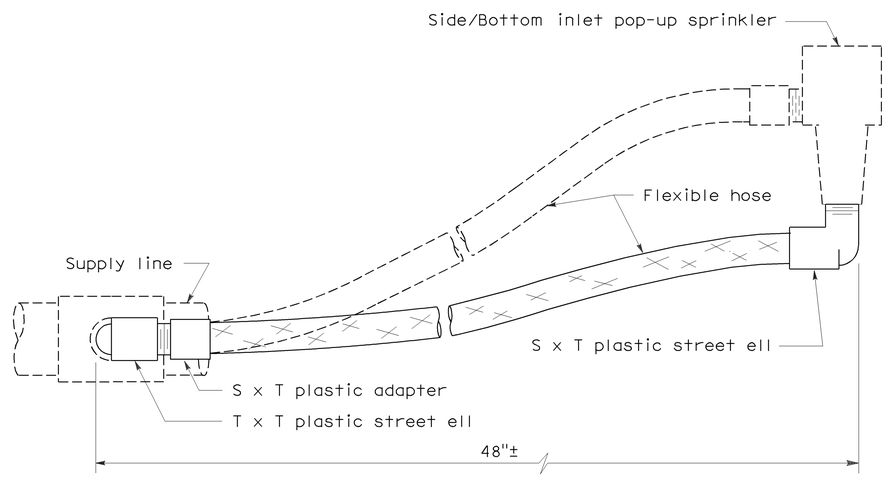

ELEVATION
RISER TYPE VI

STATE OF CALIFORNIA
DEPARTMENT OF TRANSPORTATION

PLANTING AND IRRIGATION DETAILS

NO SCALE

RSP H5 DATED JUNE 5, 2009 SUPERSEDES STANDARD PLAN H5
DATED MAY 1, 2006 - PAGE 205 OF THE STANDARD PLANS BOOK DATED MAY 2006.

REVISED STANDARD PLAN RSP H5

2006 REVISED STANDARD PLAN RSP H5

5-28-09

DIST	COUNTY	ROUTE	POST MILES TOTAL PROJECT	SHEET NO.	TOTAL SHEETS
11	SD	5, 805	R40.1 18.6/18.8	52	56

Gregory A. Balzer
LICENSED LANDSCAPE ARCHITECT

June 5, 2009
PLANS APPROVAL DATE

LICENSED LANDSCAPE ARCHITECT
Gregory A. Balzer 2576
Signature
2-28-11
Renewal Date
5-14-09
Date
STATE OF CALIFORNIA

The State of California or its officers or agents shall not be responsible for the accuracy or completeness of electronic copies of this plan sheet.

To accompany plans dated 06-28-10

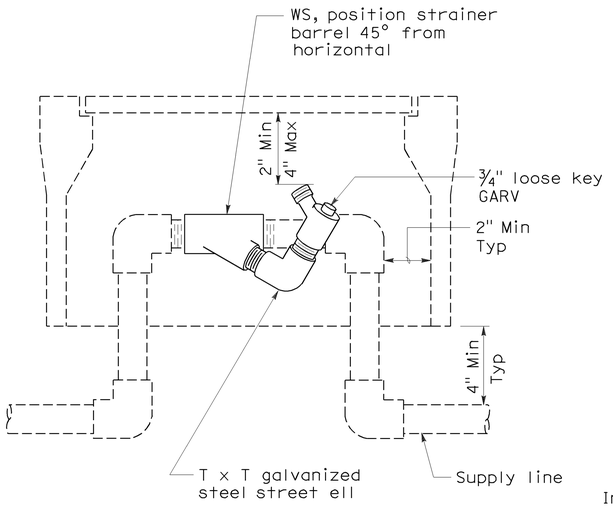

ELEVATION
WYE STRAINER

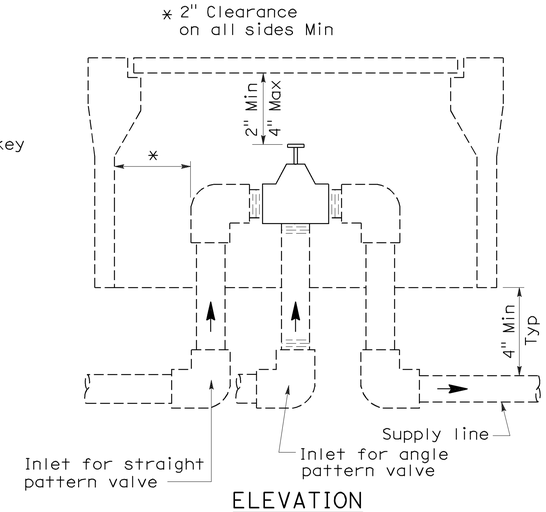

ELEVATION
VALVE

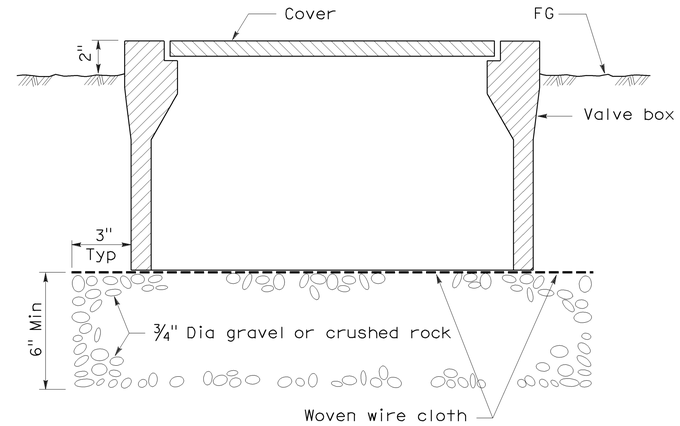

SECTION
VALVE BOX

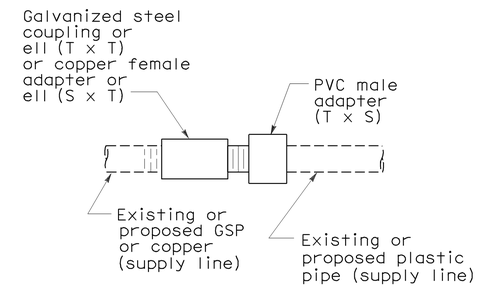

PLAN
GALVANIZED OR COPPER PIPE CONNECTION TO PLASTIC PIPE

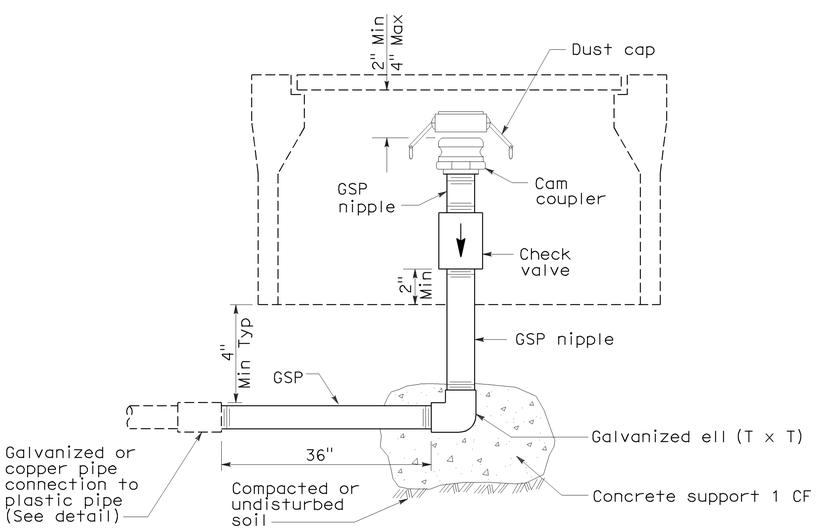

ELEVATION
CAM COUPLER ASSEMBLY

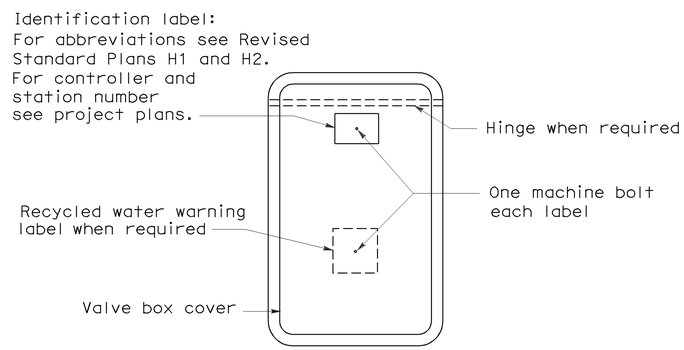

PLAN

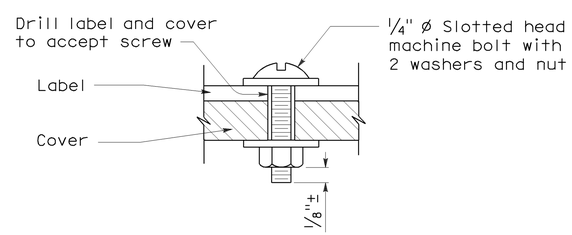

SECTION
VALVE BOX IDENTIFICATION

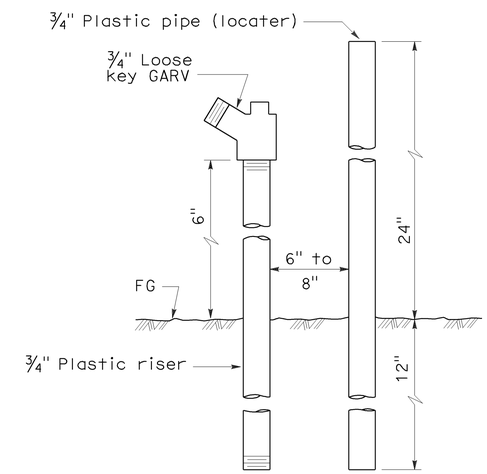

ELEVATION
FLUSH VALVE

STATE OF CALIFORNIA
DEPARTMENT OF TRANSPORTATION

PLANTING AND IRRIGATION DETAILS

NO SCALE

RSP H7 DATED JUNE 5, 2009 SUPERSEDES STANDARD PLAN H7
DATED MAY 1, 2006 - PAGE 207 OF THE STANDARD PLANS BOOK DATED MAY 2006.

REVISED STANDARD PLAN RSP H7

2006 REVISED STANDARD PLAN RSP H7

5-28-09

DIST	COUNTY	ROUTE	POST MILES TOTAL PROJECT	SHEET NO.	TOTAL SHEETS
11	SD	5, 805	R40.1 18.6/18.8	53	56

Randell D. Hiatt
REGISTERED CIVIL ENGINEER

June 6, 2008
PLANS APPROVAL DATE

REGISTERED PROFESSIONAL ENGINEER
Randell D. Hiatt
No. C50200
Exp. 6-30-09
CIVIL
STATE OF CALIFORNIA

The State of California or its officers or agents shall not be responsible for the accuracy or completeness of electronic copies of this plan sheet.

To accompany plans dated 06-28-10

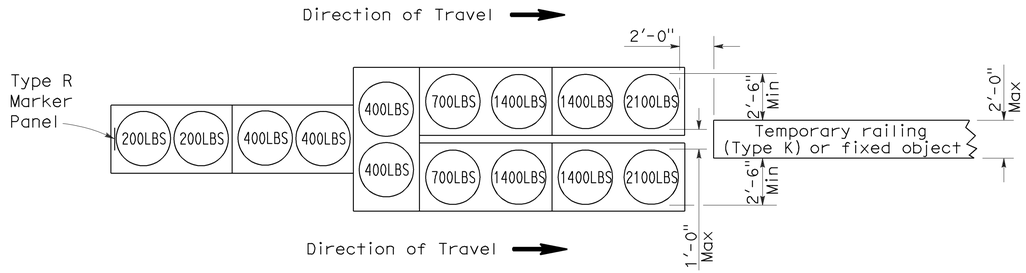

ARRAY 'TU14'

Approach speed 45 mph or more

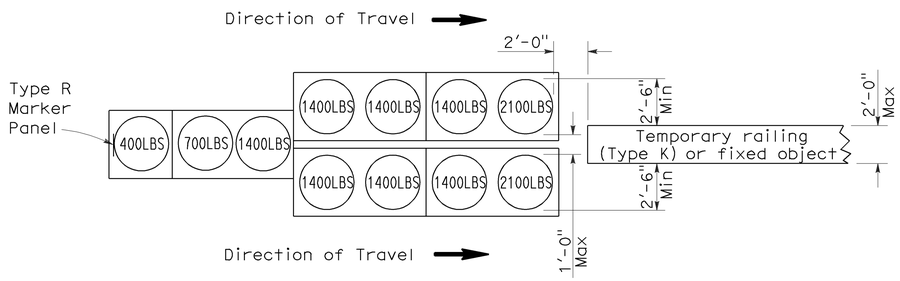

ARRAY 'TU11'

Approach speed less than 45 mph

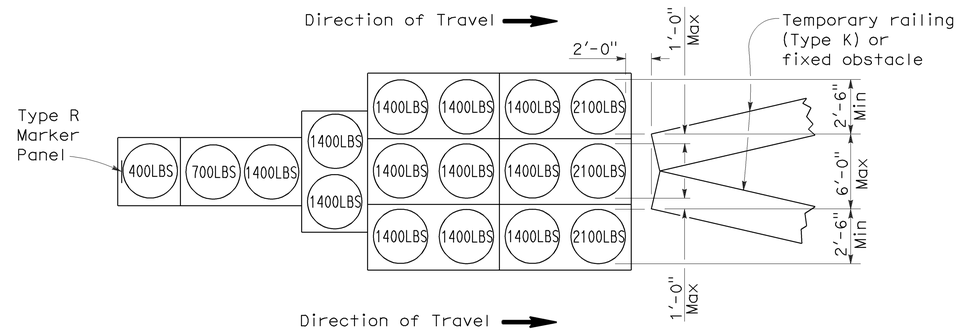

ARRAY 'TU17'

Approach speed less than 45 mph

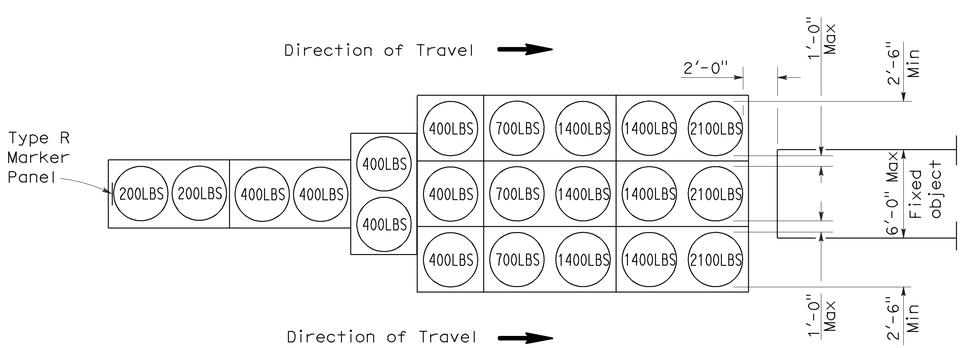

ARRAY 'TU21'

Approach speed 45 mph or more

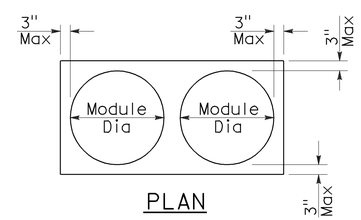

PLAN

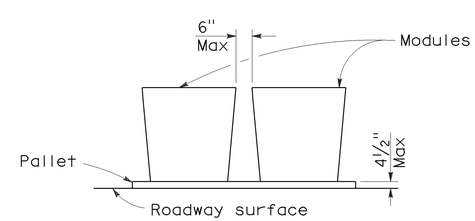

ELEVATION

CRASH CUSHION PALLET DETAIL

See Note 7

NOTES:

1. (XXX) Indicates sand filled module location and weight of sand in pounds for each module. Module spacing is based on the greater diameter of the module.
2. All sand weights are nominal.
3. Temporary crash cushion arrays shall not encroach on the traveled way.
4. Place the top of Type R marker panel 1" below the module lid.
5. Refer to Standard Plan A73B for marker details.
6. Approach speeds indicated conform to NCHRP 350 Report criteria.
7. Use of pallets is optional.

STATE OF CALIFORNIA
DEPARTMENT OF TRANSPORTATION

TEMPORARY CRASH CUSHION, SAND FILLED (UNIDIRECTIONAL)

NO SCALE

RSP T1A DATED JUNE 6, 2008 SUPERSEDES STANDARD PLAN T1A
DATED MAY 1, 2006 - PAGE 211 OF THE STANDARD PLANS BOOK DATED MAY 2006.

REVISED STANDARD PLAN RSP T1A

2006 REVISED STANDARD PLAN RSP T1A

DIST	COUNTY	ROUTE	POST MILES TOTAL PROJECT	SHEET NO.	TOTAL SHEETS
11	SD	5, 805	R40.1 18.6/18.8	54	56

Randell D. Hiatt
REGISTERED CIVIL ENGINEER

June 6, 2008
PLANS APPROVAL DATE

REGISTERED PROFESSIONAL ENGINEER
Randell D. Hiatt
No. C50200
Exp. 6-30-09
CIVIL
STATE OF CALIFORNIA

The State of California or its officers or agents shall not be responsible for the accuracy or completeness of electronic copies of this plan sheet.

To accompany plans dated 06-28-10

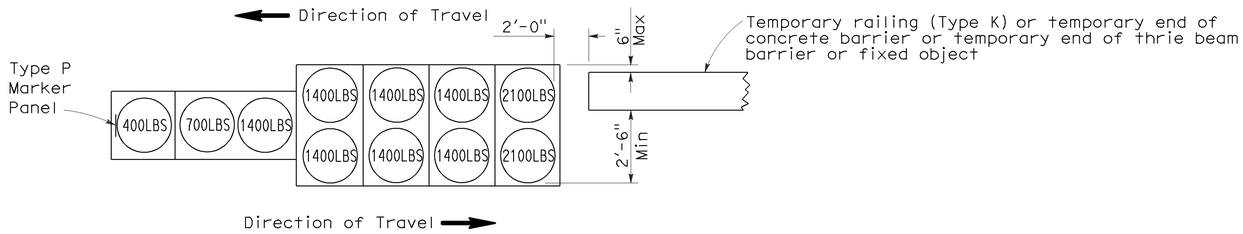

ARRAY 'TB11'

Approach speed less than 45 mph

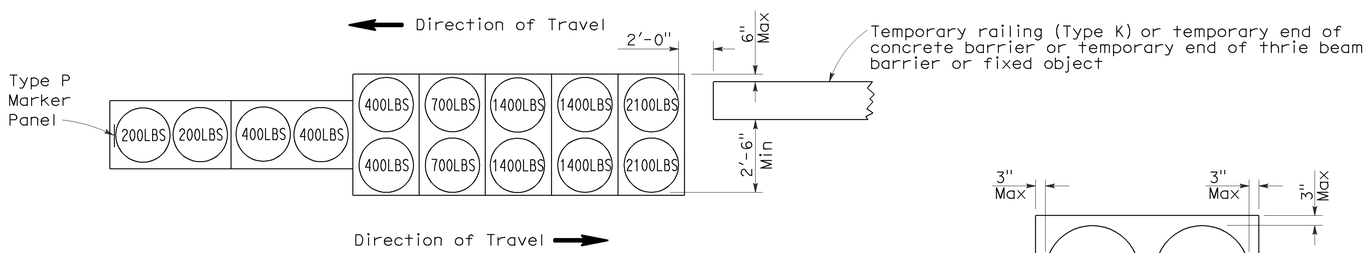

ARRAY 'TB14'

Approach speed 45 mph or more

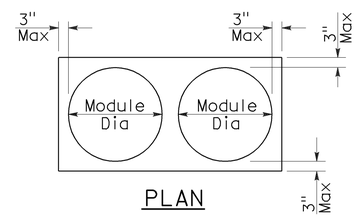

PLAN

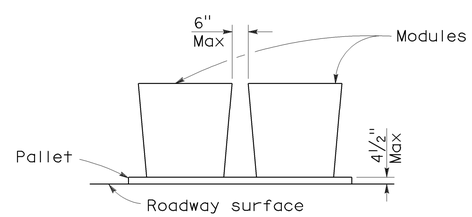

ELEVATION

CRASH CUSHION PALLET DETAIL

See Note 7

NOTES:

1. (XXX) Indicates sand filled module location and weight of sand in pounds for each module. Module spacing is based on the greater diameter of the module.
2. All sand weights are nominal.
3. Temporary crash cushion arrays shall not encroach on the traveled way.
4. Place the Type P marker panel so that the bottom of the panel rests upon the pallet.
5. Refer to Standard Plan A73B for marker details.
6. Approach speeds indicated conform to NCHRP 350 Report criteria.
7. Use of pallets is optional.

STATE OF CALIFORNIA
DEPARTMENT OF TRANSPORTATION

TEMPORARY CRASH CUSHION, SAND FILLED (BIDIRECTIONAL)

NO SCALE

RSP T1B DATED JUNE 6, 2008 SUPERSEDES STANDARD PLAN T1B
DATED MAY 1, 2006 - PAGE 212 OF THE STANDARD PLANS BOOK DATED MAY 2006.

REVISED STANDARD PLAN RSP T1B

2006 REVISED STANDARD PLAN RSP T1B

5-15-08

DIST	COUNTY	ROUTE	POST MILES TOTAL PROJECT	SHEET NO.	TOTAL SHEETS
11	SD	5, 805	R40.1 18.6/18.8	55	56

Randell D. Hiatt
REGISTERED CIVIL ENGINEER

June 6, 2008
PLANS APPROVAL DATE

REGISTERED PROFESSIONAL ENGINEER
Randell D. Hiatt
No. C50200
Exp. 6-30-09
CIVIL
STATE OF CALIFORNIA

The State of California or its officers or agents shall not be responsible for the accuracy or completeness of electronic copies of this plan sheet.

To accompany plans dated 06-28-10

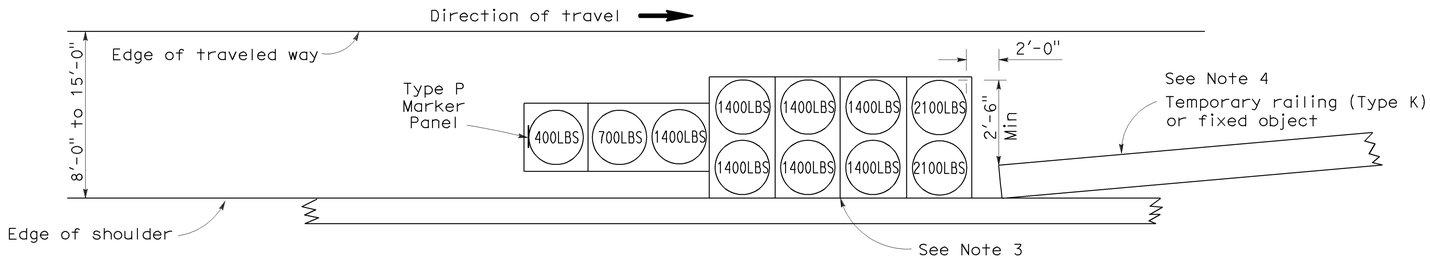

ARRAY 'TS11'

Approach speed less than 45 mph
See Note 9

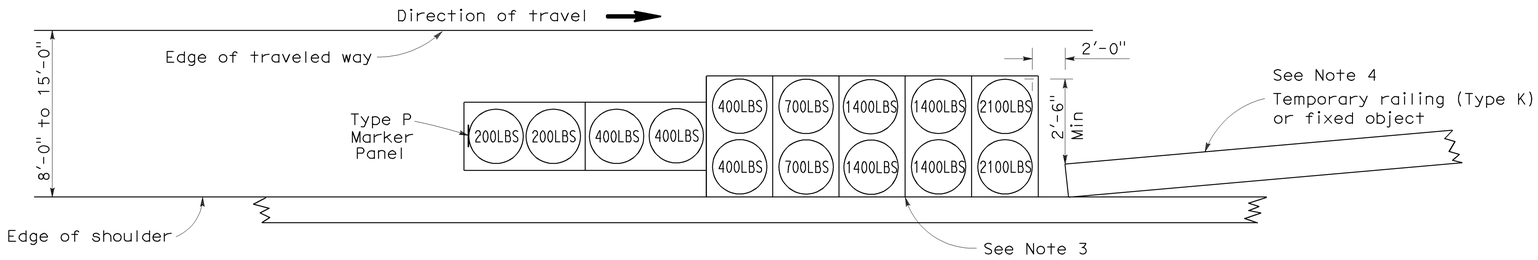

ARRAY 'TS14'

Approach speed 45 mph or more
See Note 9

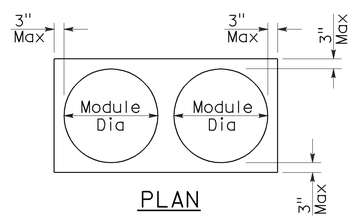

PLAN

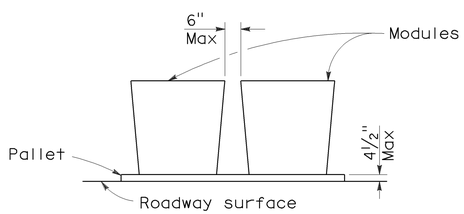

ELEVATION

CRASH CUSHION PALLET DETAIL

See Note 11

NOTES:

1. (XXX) Indicates sand filled module location and weight of sand in pounds for each module. Module spacing is based on the greater diameter of the module.
2. All sand weights are nominal.
3. The temporary crash cushion arrays shown on this plan shall be used only in locations where there will be traffic on one side of the temporary crash cushion array.
4. If the fixed object or approach end of the temporary railing is less than 15'-0" from the edge of traveled way, a temporary crash cushion is required in a construction or work zone.
5. Temporary crash cushion arrays shall not encroach on the traveled way.
6. Arrays for median shoulders shall conform to details shown on this plan for outside shoulders.
7. Place the Type P marker panel so that the bottom of the panel rests upon the pallet and faces traffic.
8. Refer to Standard Plan A73B for marker details.
9. For shoulder widths less than 8'-0", appropriate approved crash cushion protection, other than sand filled modules, shall be provided at fixed objects and at approach ends of temporary railing. The specific type of crash cushion shall be as shown on the project plans or as specified in the Special Provisions, or if not shown on the project plans or specified in the Special Provisions, shall be as approved by the Engineer.
10. Approach speeds indicated conform to NCHRP 350 Report criteria.
11. Use of pallets is optional.

STATE OF CALIFORNIA
DEPARTMENT OF TRANSPORTATION

TEMPORARY CRASH CUSHION, SAND FILLED (SHOULDER INSTALLATIONS)

NO SCALE

RSP T2 DATED JUNE 6, 2008 SUPERSEDES STANDARD PLAN T2
DATED MAY 1, 2006 - PAGE 213 OF THE STANDARD PLANS BOOK DATED MAY 2006.

REVISED STANDARD PLAN RSP T2

2006 REVISED STANDARD PLAN RSP T2

5-15-08

DIST	COUNTY	ROUTE	POST MILES TOTAL PROJECT	SHEET NO.	TOTAL SHEETS
11	SD	5, 805	R40.1 18.6/18.8	56	56

Greg W. Edwards
REGISTERED CIVIL ENGINEER

November 17, 2006
PLANS APPROVAL DATE

REGISTERED PROFESSIONAL ENGINEER
Greg W. Edwards
No. C36386
Exp. 6-30-08
CIVIL
STATE OF CALIFORNIA

The State of California or its officers or agents shall not be responsible for the accuracy or completeness of electronic copies of this plan sheet.

To accompany plans dated 06-28-10

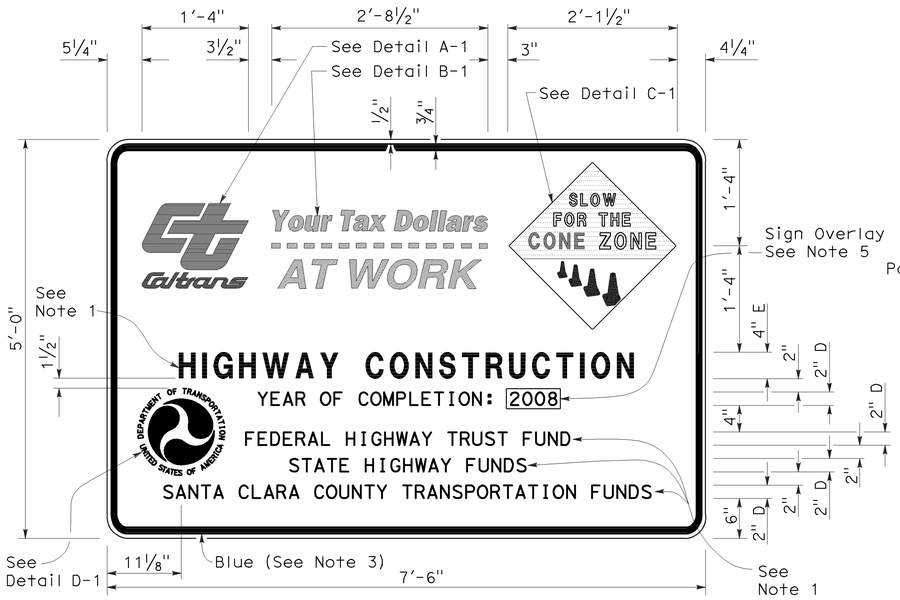

TYPE 1

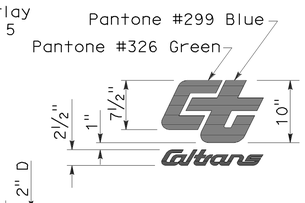

DETAIL A-1

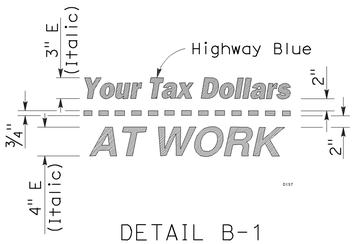

DETAIL B-1
(See Note 3)

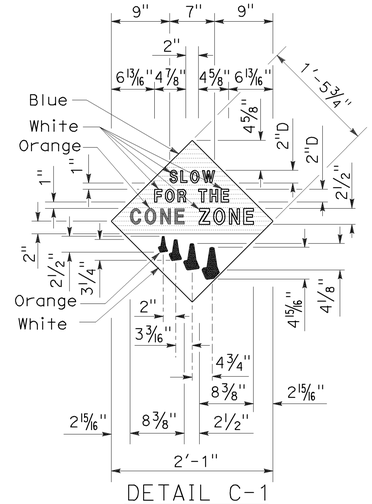

DETAIL C-1
(See Note 4)

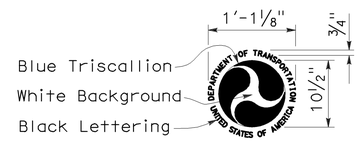

DETAIL D-1
(See Note 6)

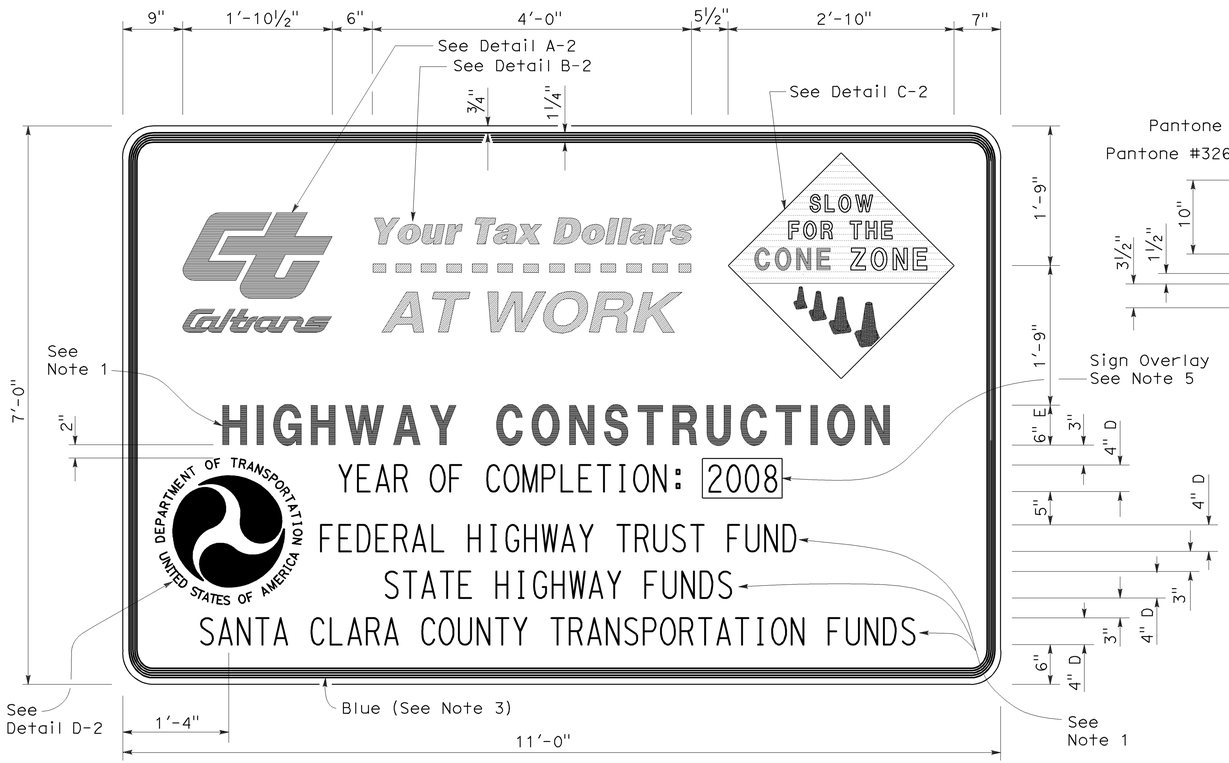

TYPE 2

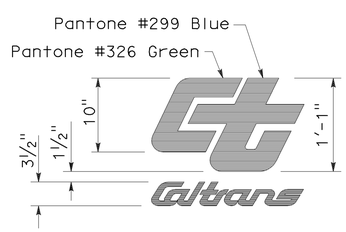

DETAIL A-2

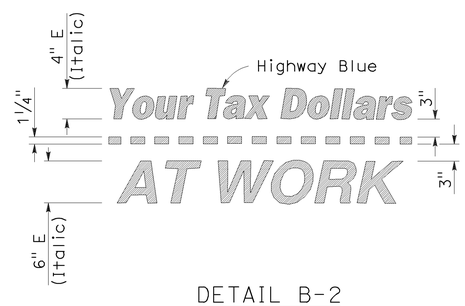

DETAIL B-2
(See Note 3)

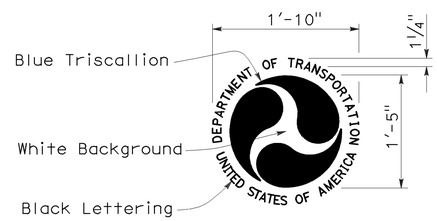

DETAIL D-2
(See Note 6)

NOTES:

1. The sign messages shown for type of project and fund types are examples only. See the Special Provisions for the applicable type of project and fund type messages to be used.
2. Except as otherwise shown, the legend of sign shall be black on a white background (non-reflective).
3. The border of the signs and details "B-1" and "B-2" shall be blue (non-reflective).
4. The diamond in details "C-1" and "C-2" shall be blue for the background of message, " SLOW FOR THE CONE ZONE", and white background for the orange cones. The color and type of font for the "SLOW FOR THE CONE ZONE" message shall be: "SLOW" white D; "FOR THE" white D; "CONE" orange Arial font; "ZONE" white Arial font.
5. Year of completion of project construction shown on the overlay is an example only. See the Special Provisions.
6. Use when the Project involves Federal Highway Trust Fund.

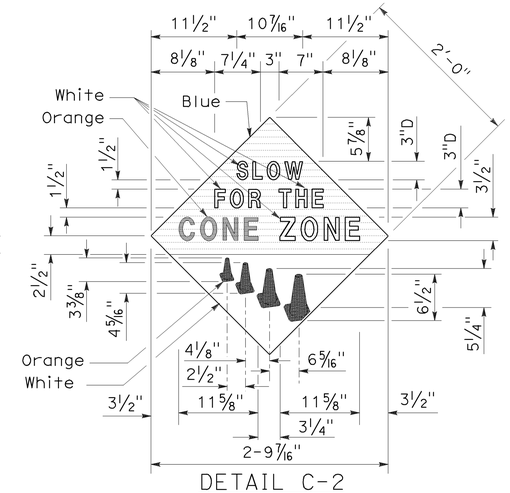

DETAIL C-2
(See Note 4)

STATE OF CALIFORNIA
DEPARTMENT OF TRANSPORTATION

CONSTRUCTION PROJECT FUNDING IDENTIFICATION SIGNS

NO SCALE

RSP T7 DATED NOVEMBER 17, 2006 SUPERSEDES STANDARD PLAN T7
DATED MAY 1, 2006 - PAGE 217 OF THE STANDARD PLANS BOOK DATED MAY 2006.

REVISED STANDARD PLAN RSP T7

2006 REVISED STANDARD PLAN RSP T7

9-7-06