ACSTP-X073(089)E

Dist	COUNTY	ROUTE	POST MILES TOTAL PROJECT	SHEET No.	TOTAL SHEETS
11	SD	15,163, 805	Var	1	64

STATE OF CALIFORNIA

DEPARTMENT OF TRANSPORTATION

PROJECT PLANS FOR CONSTRUCTION ON

STATE HIGHWAY

IN SAN DIEGO COUNTY AT VARIOUS LOCATIONS

TO BE SUPPLEMENTED BY STANDARD PLANS DATED MAY 2006

INDEX OF PLANS

SHEET No.	DESCRIPTION
1	TITLE AND LOCATION MAP
2-8	TEMPORARY WATER POLLUTION CONTROL PLANS AND QUANTITIES
9	PLANT LIST
10-15	PLANT REMOVAL AND IRRIGATION REMOVAL PLANS
16-21	PLANTING PLANS
22-26	IRRIGATION PLANS
27-40	LANDSCAPE DETAILS
41-42	IRRIGATION QUANTITIES
43-47	EXISTING UTILITIES PLANS
48-50	CONSTRUCTION AREA SIGNS
51-64	REVISED AND NEW STANDARD PLANS

THE STANDARD PLANS LIST APPLICABLE TO THIS CONTRACT IS INCLUDED IN THE NOTICE TO BIDDERS AND SPECIAL PROVISIONS BOOK.

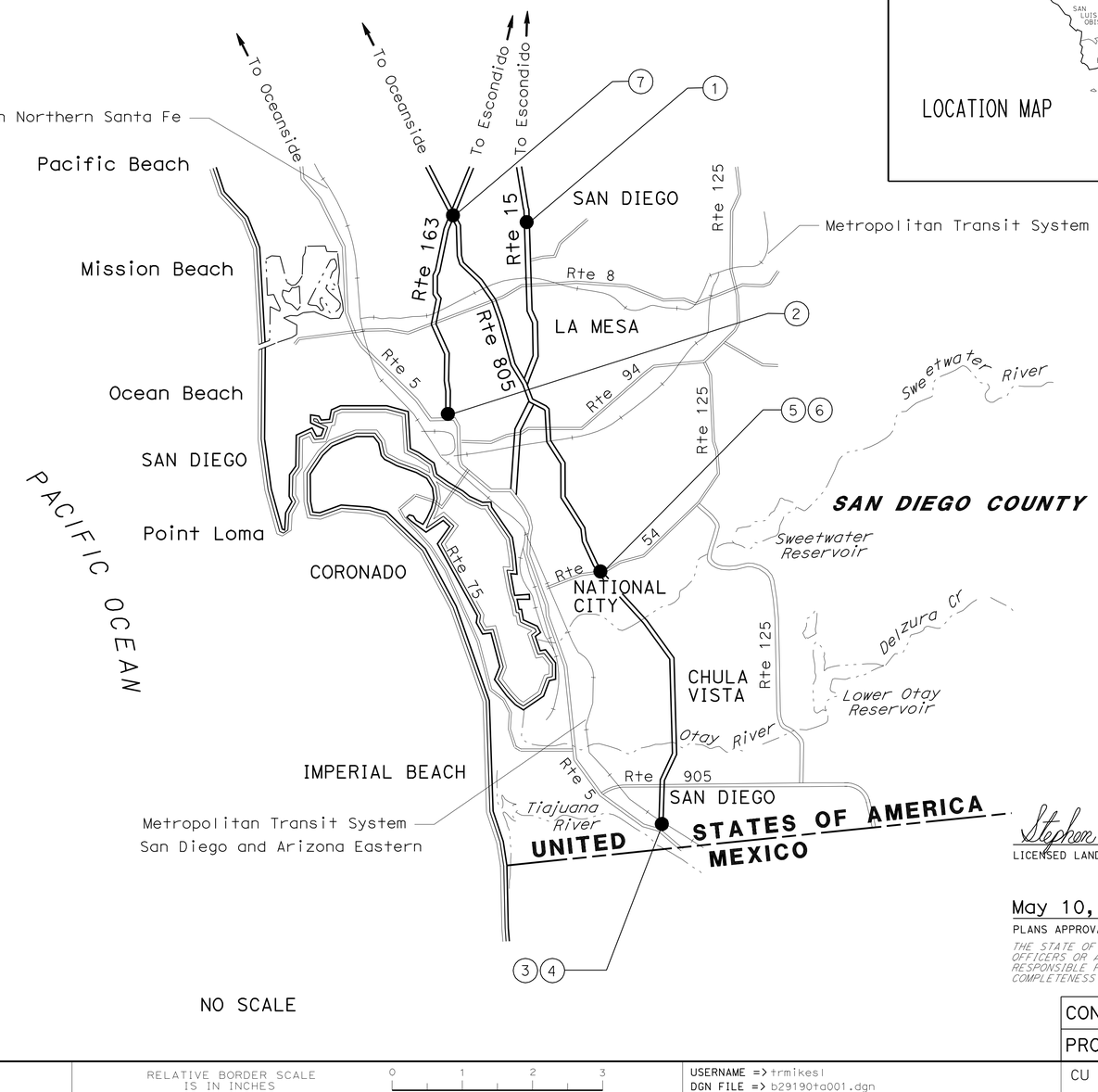

NO SCALE

LOCATIONS OF CONSTRUCTION

Loc	Rte	PM	DESCRIPTION
1	15	R8.4	AT AERO DRIVE OC (BRIDGE No. 57-0877)
2	163	0.6	AT 0.3 MILE NORTH OF 10TH AVENUE
3	805	0.6	AT SAN YSIDRO Blvd UC (BRIDGE No. 57-0776 L/R)
4	805	0.9	AT HALL AVENUE Ped OC (BRIDGE No. 57-0864)
5	805	8.7	AT SWEETWATER RIVER (BRIDGE No. 57-0638 L/R), N805-E54 CONNECTOR (BRIDGE No. 57-0638G)
6	805	9.1	AT SWEETWATER ROAD (BRIDGE No. 57-0639 L/R)
7	805	20.6	AT ROUTE 163/805 SEPARATION (BRIDGE No. 57-0674R)

THE CONTRACTOR SHALL POSSESS THE CLASS (OR CLASSES) OF LICENSE AS SPECIFIED IN THE "NOTICE TO BIDDERS."

PROJECT MANAGER STEPHEN ALVAREZ

SENIOR LANDSCAPE ARCHITECT STEPHEN WARREN

Stephen P. Warren
LICENSED LANDSCAPE ARCHITECT

May 10, 2010
PLANS APPROVAL DATE

THE STATE OF CALIFORNIA OR ITS OFFICERS OR AGENTS SHALL NOT BE RESPONSIBLE FOR THE ACCURACY OR COMPLETENESS OF SCANNED COPIES OF THIS PLAN SHEET.

LICENSED LANDSCAPE ARCHITECT STEPHEN P. WARREN No. 3412 Signature 10-31-10 Renewal Date 03-16-10 Date STATE OF CALIFORNIA

CONTRACT No.	11-291904
PROJECT ID	1100000371

LAST REVISION 03-24-10 | DATE PLOTTED => 22-JUN-2010 | TIME PLOTTED => 10:16

Dist	COUNTY	ROUTE	POST MILES TOTAL PROJECT	SHEET No.	TOTAL SHEETS
11	SD	15,163, 805	Var	2	64

Stephen P. Warren
LICENSED LANDSCAPE ARCHITECT

5-10-10
PLANS APPROVAL DATE

LICENSED LANDSCAPE ARCHITECT
STEPHEN P. WARREN No. 3442
Signature
10-31-10
Renewal Date
03-16-10
Date
STATE OF CALIFORNIA

THE STATE OF CALIFORNIA OR ITS OFFICERS OR AGENTS SHALL NOT BE RESPONSIBLE FOR THE ACCURACY OR COMPLETENESS OF SCANNED COPIES OF THIS PLAN SHEET.

NOTE:

1. FOR ACCURATE RIGHT OF WAY AND ACCESS DATA, CONTACT RIGHT OF WAY ENGINEERING AT THE DISTRICT OFFICE.

LEGEND:

- TFR — Temp FIBER ROLL
- Temp CONSTRUCTION ENTRANCE (TYPE 2)
- 1:2 — SURFACE FLOW DIRECTION (Vert:Horiz)
- Temp DRAINAGE INLET PROTECTION
- ESA — ENVIRONMENTALLY SENSITIVE AREA (ESA)
- AREA OF WORK

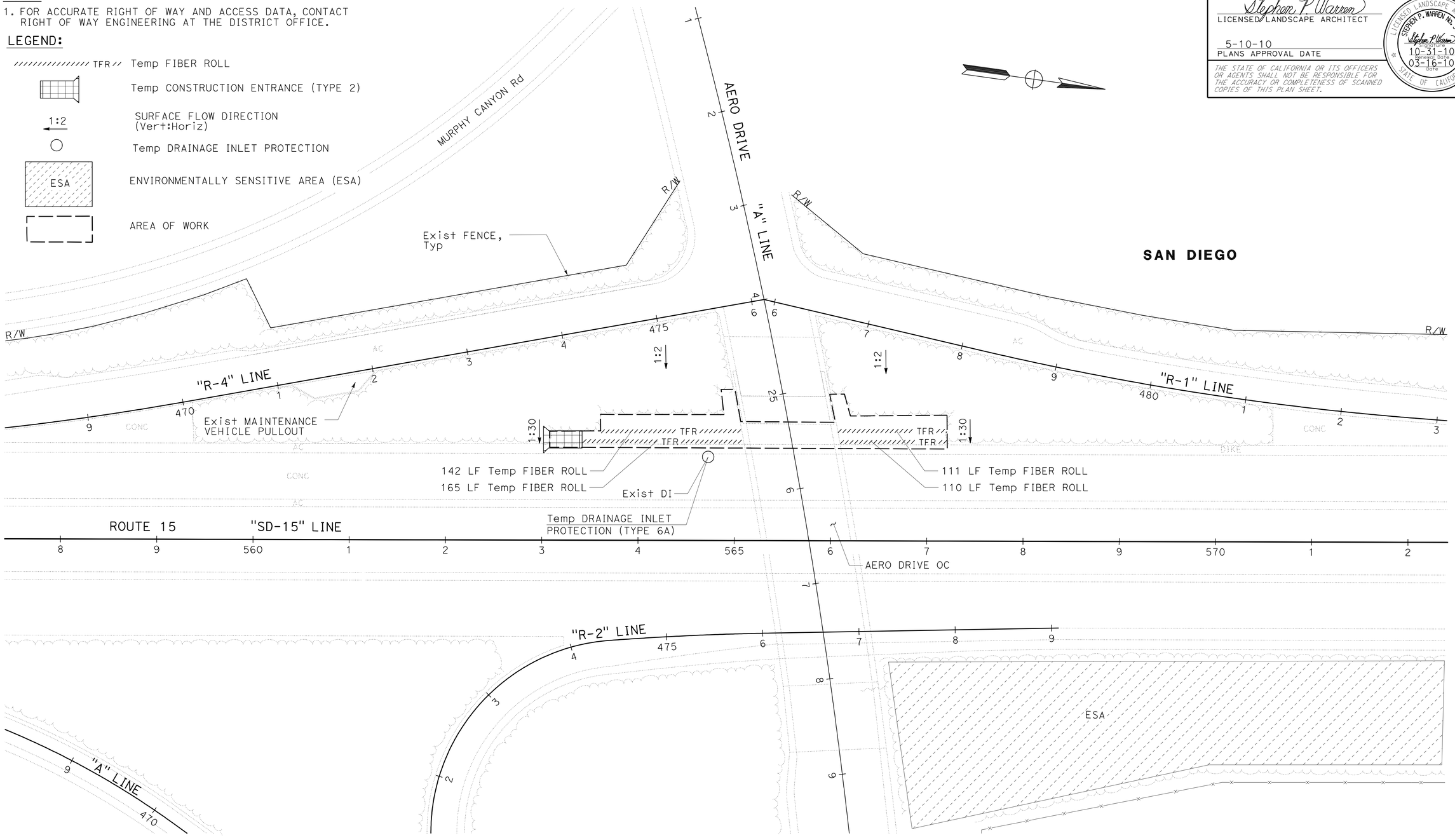

THIS PLAN ACCURATE FOR TEMPORARY WATER POLLUTION CONTROL WORK ONLY.

TEMPORARY WATER POLLUTION CONTROL PLAN

LOCATION 1

SCALE: 1" = 50'

WPC-1

REVISED BY	DATE REVISED

DANIELLE ZHANG — STEPHEN WARREN
CALCULATED-DESIGNED BY — CHECKED BY
SENIOR LANDSCAPE ARCHITECT — STEPHEN ALVAREZ

STATE OF CALIFORNIA - DEPARTMENT OF TRANSPORTATION
Caltrans® LANDSCAPE ARCHITECTURE

LAST REVISION 03-24-10 | DATE PLOTTED => 13-MAY-2010 | TIME PLOTTED => 10:17

Dist	COUNTY	ROUTE	POST MILES TOTAL PROJECT	SHEET No.	TOTAL SHEETS
11	SD	15,163, 805	Var	3	64

Stephen P. Warren
LICENSED LANDSCAPE ARCHITECT

5-10-10
PLANS APPROVAL DATE

LICENSED LANDSCAPE ARCHITECT
STEPHEN P. WARREN No. 3442
Signature 10-31-10
Renewal Date
03-16-10
Date
STATE OF CALIFORNIA

THE STATE OF CALIFORNIA OR ITS OFFICERS OR AGENTS SHALL NOT BE RESPONSIBLE FOR THE ACCURACY OR COMPLETENESS OF SCANNED COPIES OF THIS PLAN SHEET.

NOTE:

1. FOR ACCURATE RIGHT OF WAY AND ACCESS DATA, CONTACT RIGHT OF WAY ENGINEERING AT THE DISTRICT OFFICE.

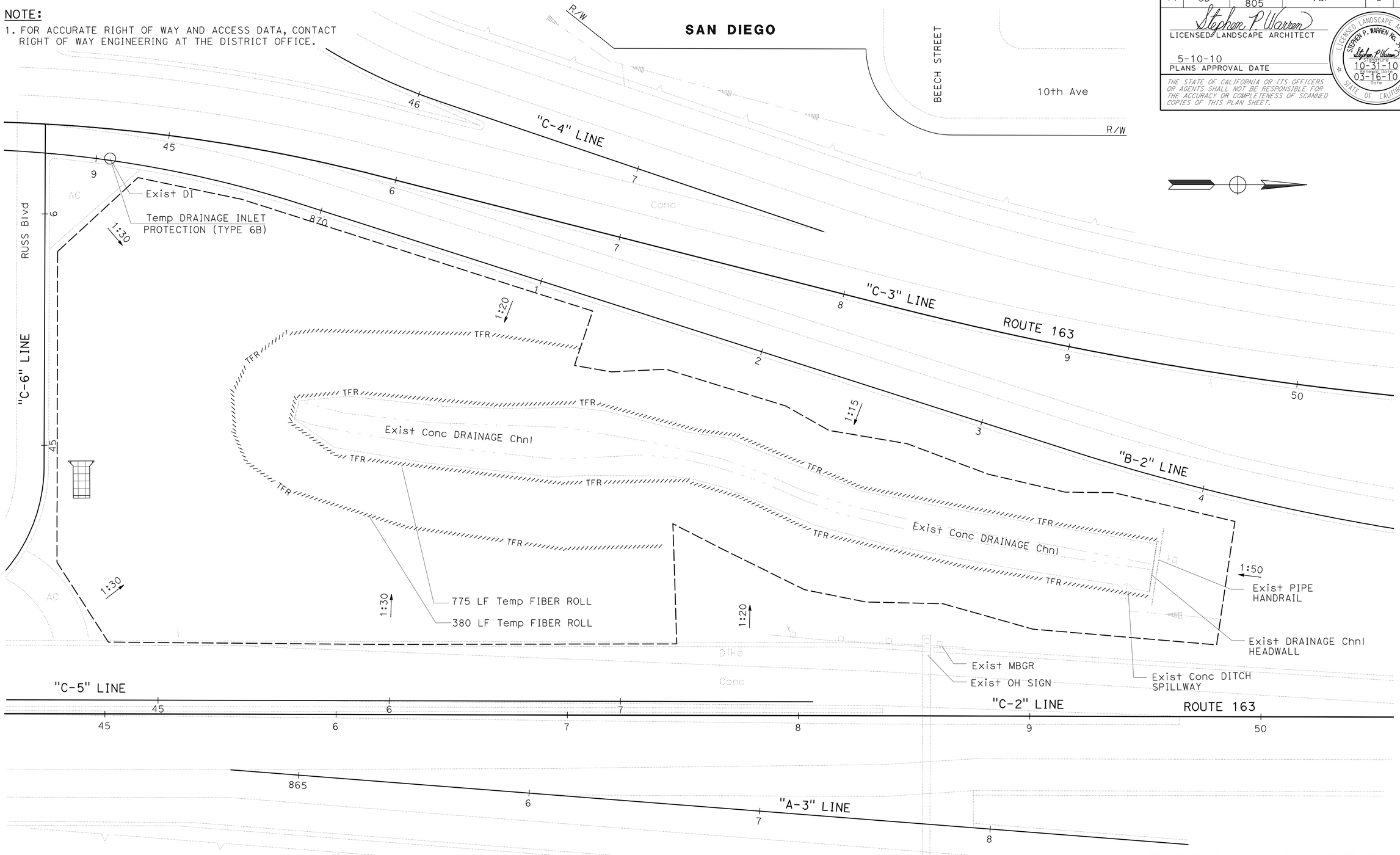

THIS PLAN ACCURATE FOR TEMPORARY WATER POLLUTION CONTROL WORK ONLY.

TEMPORARY WATER POLLUTION CONTROL PLAN
LOCATION 2

SCALE: 1" = 20'

WPC-2

STATE OF CALIFORNIA - DEPARTMENT OF TRANSPORTATION
Caltrans® LANDSCAPE ARCHITECTURE

SENIOR LANDSCAPE ARCHITECT: STEPHEN ALVAREZ
CALCULATED-DESIGNED BY: DANIELLE ZHANG
CHECKED BY: STEPHEN WARREN
REVISED BY
DATE REVISED

LAST REVISION 03-24-10
DATE PLOTTED => 13-MAY-2010
TIME PLOTTED => 10:17

Dist	COUNTY	ROUTE	POST MILES TOTAL PROJECT	SHEET No.	TOTAL SHEETS
11	SD	15,163, 805	Var	4	64

Stephen P. Warren
LICENSED LANDSCAPE ARCHITECT

5-10-10
PLANS APPROVAL DATE

LICENSED LANDSCAPE ARCHITECT
STEPHEN P. WARREN No. 3442
Stephen P. Warren
Signature
10-31-10
Renewal Date
03-16-10
Date
STATE OF CALIFORNIA

THE STATE OF CALIFORNIA OR ITS OFFICERS OR AGENTS SHALL NOT BE RESPONSIBLE FOR THE ACCURACY OR COMPLETENESS OF SCANNED COPIES OF THIS PLAN SHEET.

NOTE:

1. FOR ACCURATE RIGHT OF WAY AND ACCESS DATA, CONTACT RIGHT OF WAY ENGINEERING AT THE DISTRICT OFFICE.

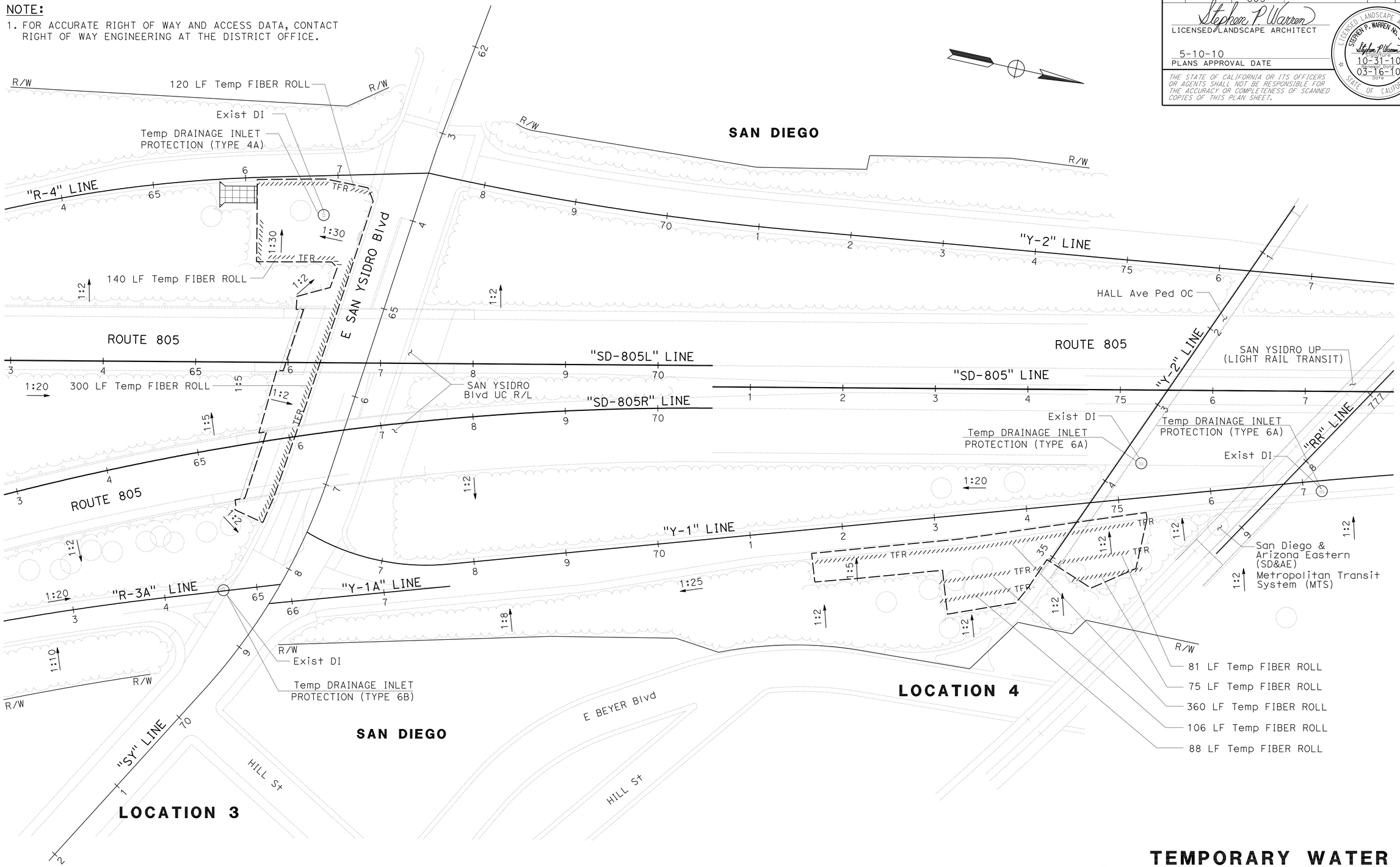

THIS PLAN ACCURATE FOR TEMPORARY WATER POLLUTION CONTROL WORK ONLY.

TEMPORARY WATER POLLUTION CONTROL PLAN

LOCATIONS 3 & 4

SCALE: 1" = 50'

WPC-3

STATE OF CALIFORNIA - DEPARTMENT OF TRANSPORTATION
Caltrans® LANDSCAPE ARCHITECTURE

SENIOR LANDSCAPE ARCHITECT: STEPHEN ALVAREZ

CALCULATED-DESIGNED BY: DANIELLE ZHANG
CHECKED BY: STEPHEN WARREN

REVISED BY
DATE REVISED

LAST REVISION 03-24-10
DATE PLOTTED => 13-MAY-2010
TIME PLOTTED => 10:17

Dist	COUNTY	ROUTE	POST MILES TOTAL PROJECT	SHEET No.	TOTAL SHEETS
11	SD	15,163, 805	Var	5	64

Stephen P. Warren
LICENSED LANDSCAPE ARCHITECT

5-10-10
PLANS APPROVAL DATE

LICENSED LANDSCAPE ARCHITECT
STEPHEN P. WARREN No. 3442
Stephen P. Warren
10-31-10 (renewal date)
03-16-10 date
STATE OF CALIFORNIA

THE STATE OF CALIFORNIA OR ITS OFFICERS OR AGENTS SHALL NOT BE RESPONSIBLE FOR THE ACCURACY OR COMPLETENESS OF SCANNED COPIES OF THIS PLAN SHEET.

NOTE:

1. FOR ACCURATE RIGHT OF WAY AND ACCESS DATA, CONTACT RIGHT OF WAY ENGINEERING AT THE DISTRICT OFFICE.

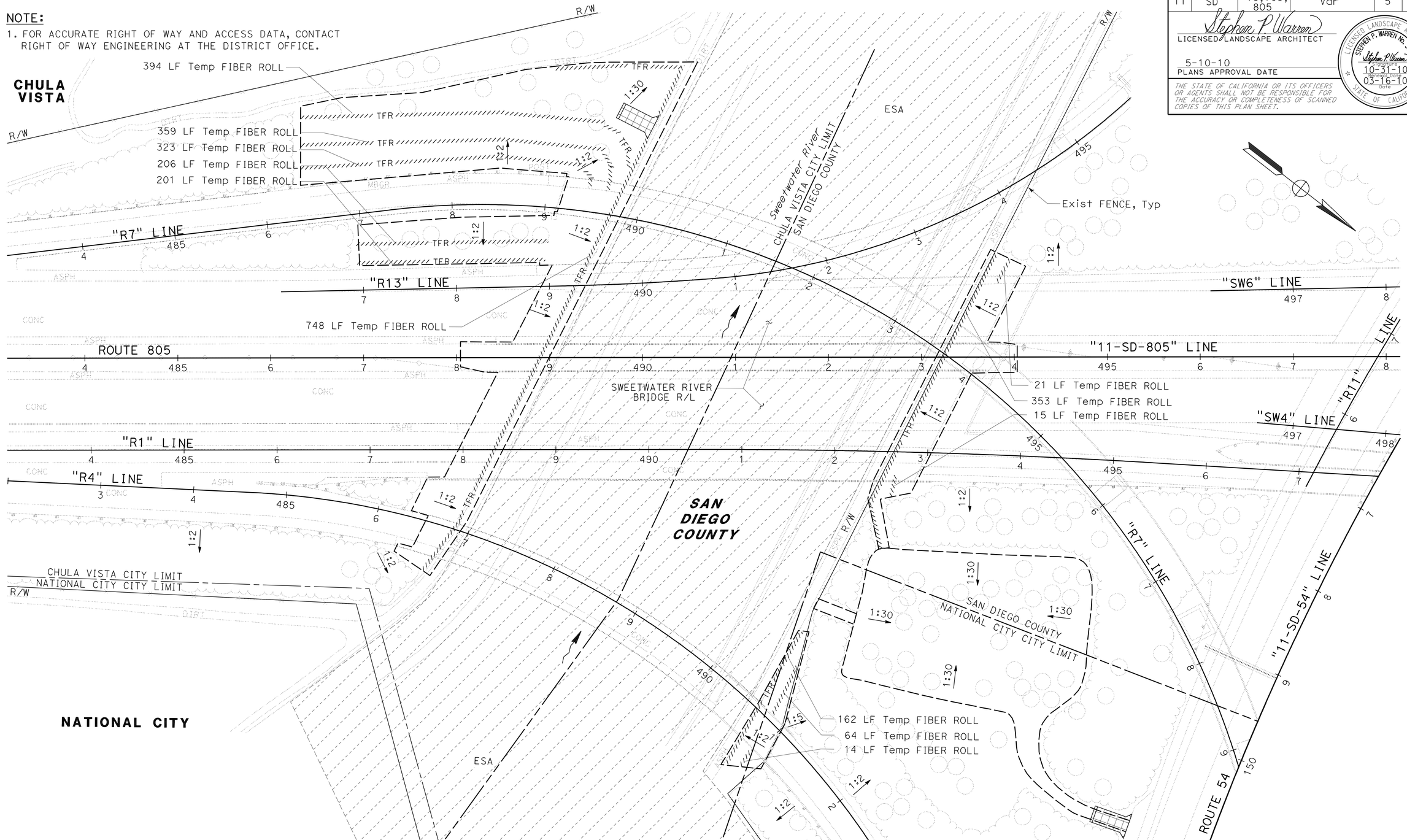

THIS PLAN ACCURATE FOR TEMPORARY WATER POLLUTION CONTROL WORK ONLY.

TEMPORARY WATER POLLUTION CONTROL PLAN

LOCATION 5

SCALE: 1" = 50'

WPC-4

REVISED BY	DATE REVISED

DANIELLE ZHANG — STEPHEN WARREN

CALCULATED-DESIGNED BY — CHECKED BY

SENIOR LANDSCAPE ARCHITECT — STEPHEN ALVAREZ

STATE OF CALIFORNIA - DEPARTMENT OF TRANSPORTATION
Caltrans® LANDSCAPE ARCHITECTURE

LAST REVISION 03-24-10 — DATE PLOTTED => 13-MAY-2010 — TIME PLOTTED => 10:18

Dist	COUNTY	ROUTE	POST MILES TOTAL PROJECT	SHEET No.	TOTAL SHEETS
11	SD	15,163, 805	Var	6	64

Stephen P. Warren
LICENSED LANDSCAPE ARCHITECT

5-10-10
PLANS APPROVAL DATE

LICENSED LANDSCAPE ARCHITECT
STEPHEN P. WARREN No. 3442
Stephen P. Warren
Original Date 10-31-10
Renewal Date 03-16-10
Date
STATE OF CALIFORNIA

THE STATE OF CALIFORNIA OR ITS OFFICERS OR AGENTS SHALL NOT BE RESPONSIBLE FOR THE ACCURACY OR COMPLETENESS OF SCANNED COPIES OF THIS PLAN SHEET.

NOTE:

1. FOR ACCURATE RIGHT OF WAY AND ACCESS DATA, CONTACT RIGHT OF WAY ENGINEERING AT THE DISTRICT OFFICE.

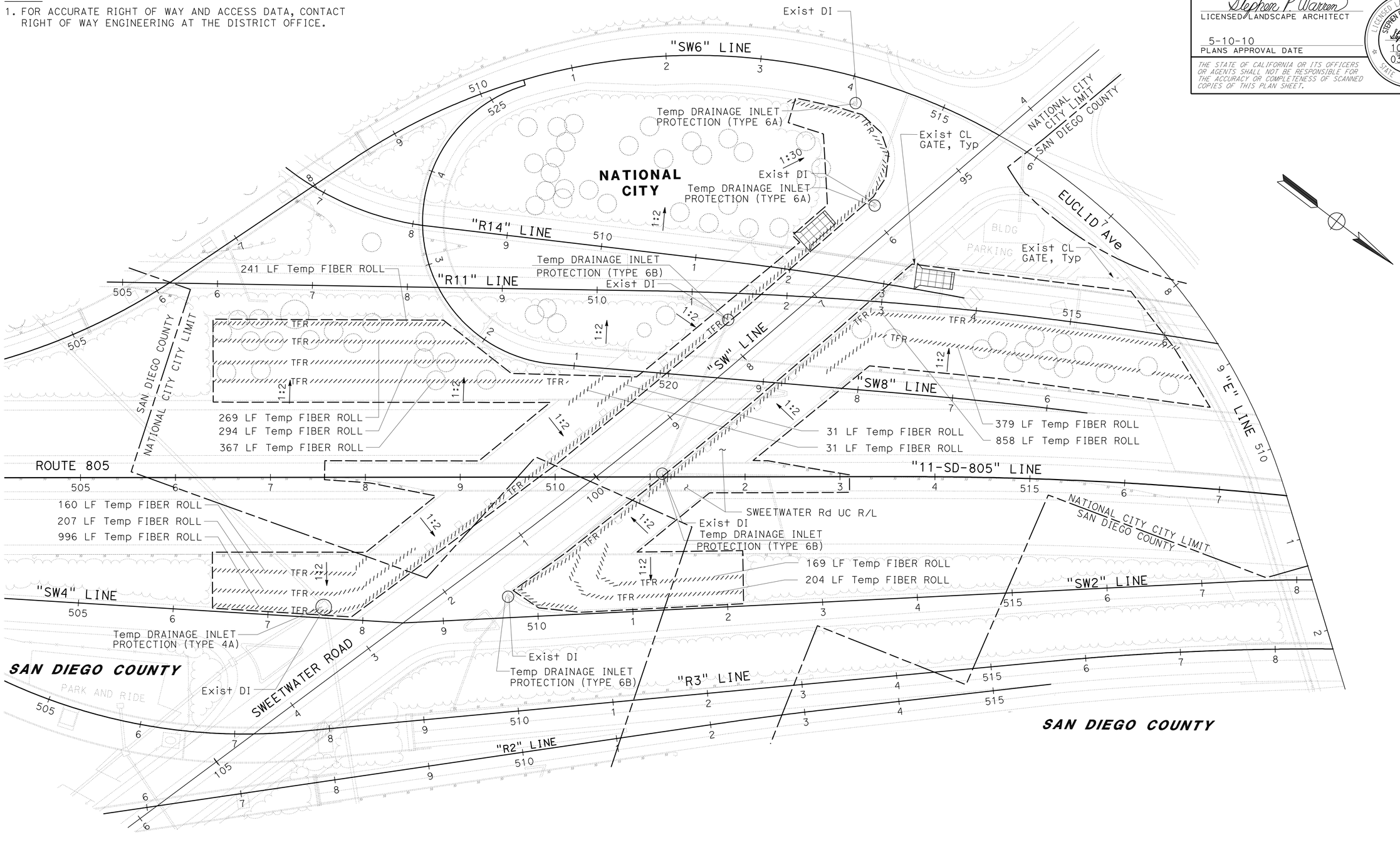

THIS PLAN ACCURATE FOR TEMPORARY WATER POLLUTION CONTROL WORK ONLY.

TEMPORARY WATER POLLUTION CONTROL PLAN

LOCATION 6

SCALE: 1" = 50'

WPC-5

STATE OF CALIFORNIA - DEPARTMENT OF TRANSPORTATION
Caltrans® LANDSCAPE ARCHITECTURE

SENIOR LANDSCAPE ARCHITECT: STEPHEN ALVAREZ

CALCULATED-DESIGNED BY: DANIELLE ZHANG
CHECKED BY: STEPHEN WARREN

REVISED BY
DATE REVISED

LAST REVISION 03-24-10
DATE PLOTTED => 13-MAY-2010
TIME PLOTTED => 10:18

Dist	COUNTY	ROUTE	POST MILES TOTAL PROJECT	SHEET No.	TOTAL SHEETS
11	SD	15,163, 805	Var	7	64

Stephen P. Warren
LICENSED LANDSCAPE ARCHITECT

5-10-10
PLANS APPROVAL DATE

LICENSED LANDSCAPE ARCHITECT
STEPHEN P. WARREN No. 3442
Stephen P. Warren
Registered Date
10-31-10
Renewal Date
03-16-10
Date
STATE OF CALIFORNIA

THE STATE OF CALIFORNIA OR ITS OFFICERS OR AGENTS SHALL NOT BE RESPONSIBLE FOR THE ACCURACY OR COMPLETENESS OF SCANNED COPIES OF THIS PLAN SHEET.

NOTE:

1. FOR ACCURATE RIGHT OF WAY AND ACCESS DATA, CONTACT RIGHT OF WAY ENGINEERING AT THE DISTRICT OFFICE.

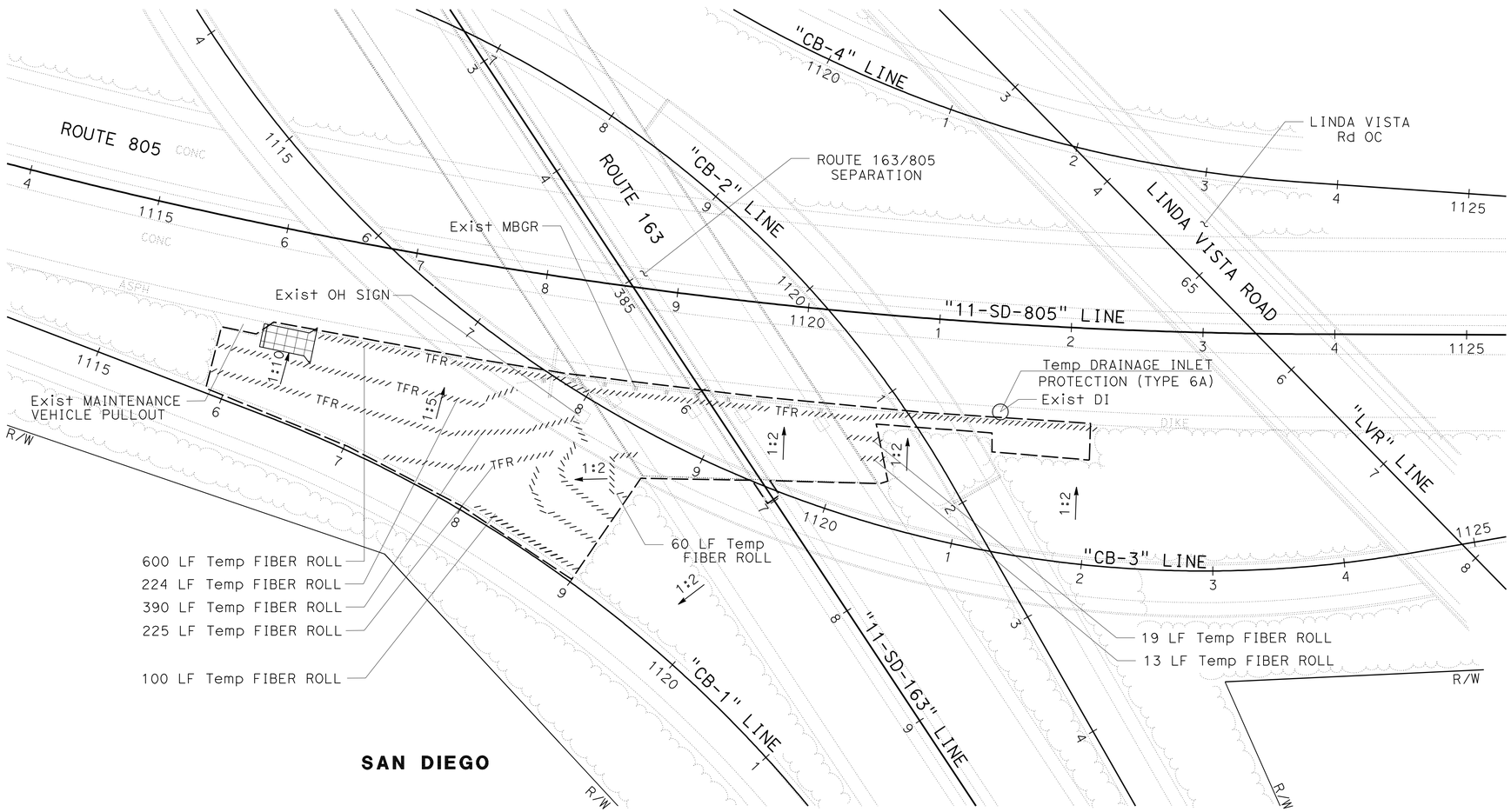

SAN DIEGO

THIS PLAN ACCURATE FOR TEMPORARY WATER POLLUTION CONTROL WORK ONLY.

TEMPORARY WATER POLLUTION CONTROL PLAN

LOCATION 7

SCALE: 1" = 50'

WPC-6

STATE OF CALIFORNIA - DEPARTMENT OF TRANSPORTATION
Caltrans® LANDSCAPE ARCHITECTURE

SENIOR LANDSCAPE ARCHITECT: STEPHEN ALVAREZ
CALCULATED-DESIGNED BY: DANIELLE ZHANG
CHECKED BY: STEPHEN WARREN
REVISED BY
DATE REVISED

LAST REVISION 03-24-10
DATE PLOTTED => 13-MAY-2010
TIME PLOTTED => 10:18

Dist	COUNTY	ROUTE	POST MILES TOTAL PROJECT	SHEET No.	TOTAL SHEETS
11	SD	15,163, 805	Var	8	64

Stephen P. Warren
LICENSED LANDSCAPE ARCHITECT

5-10-10
PLANS APPROVAL DATE

LICENSED LANDSCAPE ARCHITECT
STEPHEN P. WARREN, NO.
Stephen P. Warren
signature
10-31-10
renewal date
03-16-10
date
STATE OF CALIFORNIA

THE STATE OF CALIFORNIA OR ITS OFFICERS OR AGENTS SHALL NOT BE RESPONSIBLE FOR THE ACCURACY OR COMPLETENESS OF SCANNED COPIES OF THIS PLAN SHEET.

Temp FIBER ROLL	
SHEET	LF
WPC-1	528
WPC-2	1,155
WPC-3	1,270
WPC-4	2,860
WPC-5	4,206
WPC-6	1,631
TOTAL	11,650

Temp CONSTRUCTION ENTRANCE (TYPE 2)	
SHEET	EA
WPC-1	1
WPC-2	1
WPC-3	1
WPC-4	2
WPC-5	2
WPC-6	1
TOTAL	8

Temp DRAINAGE INLET PROTECTION			
SHEET	(TYPE 4A)	(TYPE 6A)	(TYPE 6B)
	EA	EA	EA
WPC-1	0	1	0
WPC-2	0	0	1
WPC-3	1	2	1
WPC-4	0	0	0
WPC-5	1	2	3
WPC-6	0	1	0
SUB-TOTAL	2	5	6
TOTAL	13		

TEMPORARY WATER POLLUTION CONTROL QUANTITIES

WPCQ-1

STATE OF CALIFORNIA - DEPARTMENT OF TRANSPORTATION
Caltrans® LANDSCAPE ARCHITECTURE

SENIOR LANDSCAPE ARCHITECT: STEPHEN ALVAREZ
CALCULATED-DESIGNED BY: DANIELLE ZHANG
CHECKED BY: STEPHEN WARREN
REVISED BY
DATE REVISED

LAST REVISION 03-24-10
DATE PLOTTED => 13-MAY-2010
TIME PLOTTED => 10:18

Dist	COUNTY	ROUTE	POST MILES TOTAL PROJECT	SHEET No.	TOTAL SHEETS
11	SD	15,163, 805	Var	9	64

LICENSED LANDSCAPE ARCHITECT

5-10-10
PLANS APPROVAL DATE

LICENSED LANDSCAPE ARCHITECT STEPHEN P. WARREN NO. 3442 STATE OF CALIFORNIA
Signature 10-31-10
Renewal Date 03-16-10
Date

THE STATE OF CALIFORNIA OR ITS OFFICERS OR AGENTS SHALL NOT BE RESPONSIBLE FOR THE ACCURACY OR COMPLETENESS OF SCANNED COPIES OF THIS PLAN SHEET.

ABBREVIATIONS:

AMEND — AMENDMENT
B&B — BALLED AND BURLAPPED
Dia — DIAMETER
EA — EACH
EC — EROSION CONTROL
lb — POUND
Ft — FOOT/FEET
SQFT — SQUARE FOOT
CF — CUBIC FOOT
SQYD — SQUARE YARD
CY — CUBIC YARD
EMCL — EARTH MATERIAL CONTAINING LEAD
NCN — NO COMMON NAME
No. — NUMBER
Pkt — PACKET
PLT ESTB — PLANT ESTABLISHMENT
Pvmt — PAVEMENT
RC — ROADSIDE CLEARING
RECP — ROLLED EROSION CONTROL PRODUCT
R/W — RIGHT OF WAY
SF — STATE-FURNISHED
TAB — TABLET(S)
TRVD — TRAVELED
VCCL — VINYL CLAD CHAIN LINK

APPLICABLE WHEN CIRCLED:

1 - QUANTITIES SHOWN ARE 'PER PLANT' UNLESS SHOWN AS SQYD APPLICATION RATES.
2 - SUFFICIENT TO RECEIVED ROOT BALL.
3 - DOES NOT APPLY TO MULCH AREAS.
4 - AS SHOWN ON PLANS.
5 - UNLESS OTHERWISE SHOWN ON PLANS.
6 - SEE DETAIL.
7 - SEE SPECIAL PROVISIONS.
8 - MULCH (3" DEEP).

PLANT LIST AND PLANTING SPECIFICATIONS

PLANT GROUP	PLANT No.	SYMBOL	BOTANICAL NAME	COMMON NAME	SIZE	QUANTITY EACH	HOLE SIZE (INCH) Dia	HOLE SIZE (INCH) DEPTH	BASIN TYPE	GYPSUM 1	SOIL Amend 1	COMMERCIAL FERTILIZER 1 PLANTING	COMMERCIAL FERTILIZER 1 PLT ESTB	BASIN MULCH (CY)	STAKING	PLANTING LIMITS MINIMUM DISTANCE (Ft) FROM TRVD WAY	Pvmt	FENCE	WALL	PAVED DITCH	EARTH DITCH	ON CENTER (Ft)	REMARKS
F	1		DELOSPERMA ALBA	DISNEYLAND ICEPLANT	IN FLATS	53,862	-	-	-	-	-	8 lb/ 1000SQFT	4 lb/ 1000SQFT	-	-	20	7	7	7	3	3	1	GROUND COVER
H	2		CARPOBROTUS EDULIS	HOTTENTOT FIG	ROOTED CUTTINGS	69,195	-	-	-	-	-	8 lb/ 1000SQFT	4 lb/ 1000SQFT	-	-	20	7	7	7	3	3	1	GROUND COVER
T	3		TURF- FESTUCA ELATIOR	TALL FESCUE "MEDALLION PLUS"	SOD	30,000 SQFT	-	-	-	100 lb/ 1000SQFT	3 CY/ 1000SQFT	8 lb/ 1000SQFT	4 lb/ 1000SQFT	-	-	10	1	3	1	1	1	-	7 LAWN

NOTE:

UNDERLINED PORTIONS OF BOTANICAL NAMES INDICATE ABBREVIATIONS USED ON PLANTING PLANS.

LEGEND:

Exist PLANTING TO REMAIN

Exist TREES TO REMAIN (SYMBOL DIAMETER VARIES)

ROADSIDE CLEARING

EROSION CONTROL (HYDROSEED)
ROLLED EROSION CONTROL PRODUCT (RECP)(NETTING)
EROSION CONTROL (COMPOST BLANKET)

REMOVE GROUNDCOVER (RC)

REMOVE SHRUB AND GROUNDCOVER (RC)

REMOVE TURF (RC)

REMOVE TREE (RC)

REMOVE PALM TREE (RC)

REMOVE SHRUB (RC)

MINOR CONCRETE (Misc Const)

MINOR CONCRETE (TEXTURED PAVING)

SLOPE PAVING (Conc)

ROCK BLANKET

ROCK MULCH

MULCH (3" DEEP)

REMOVE CONCRETE (Misc)

COLD PLANE AC PAVEMENT (0.15' Max)
REMOVE AC DIKE (TYPE PER PLAN)
PLACE HMA DIKE
0.15' MINOR HMA

DECOMPOSED GRANITE (Misc AREAS) (4" DEEP)

ESA — ENVIRONMENTALLY SENSITIVE AREA (ESA)

EMCL

CULTIVATE

FR — FIBER ROLL

ASPHALTIC EMULSION FOG SEAL COAT

1:2 — SLOPE DOWN DIRECTION VERTICAL:HORIZONTAL

NO SCALE

PLANT LIST PL-1

STATE OF CALIFORNIA - DEPARTMENT OF TRANSPORTATION
Caltrans LANDSCAPE ARCHITECTURE

SENIOR LANDSCAPE ARCHITECT: STEPHEN ALVAREZ
CALCULATED-DESIGNED BY: JOEL HORTIZUELA
CHECKED BY: STEPHEN WARREN
REVISED BY / DATE REVISED

LAST REVISION 03-24-10
DATE PLOTTED => 13-MAY-2010
TIME PLOTTED => 10:18

Dist	COUNTY	ROUTE	POST MILES TOTAL PROJECT	SHEET No.	TOTAL SHEETS
11	SD	15,163, 805	Var	10	64

LICENSED LANDSCAPE ARCHITECT

5-10-10
PLANS APPROVAL DATE

LICENSED LANDSCAPE ARCHITECT STEPHEN P. WARREN No. 3442 STATE OF CALIFORNIA
Registration Date 10-31-10
Expiration Date 03-16-10
DATE

THE STATE OF CALIFORNIA OR ITS OFFICERS OR AGENTS SHALL NOT BE RESPONSIBLE FOR THE ACCURACY OR COMPLETENESS OF SCANNED COPIES OF THIS PLAN SHEET.

NOTES:

1. FOR ACCURATE RIGHT OF WAY AND ACCESS DATA, CONTACT RIGHT OF WAY ENGINEERING AT THE DISTRICT OFFICE.
2. Exist IRRIGATION SYSTEM IS PART OF A RECYCLED IRRIGATION SYSTEM.

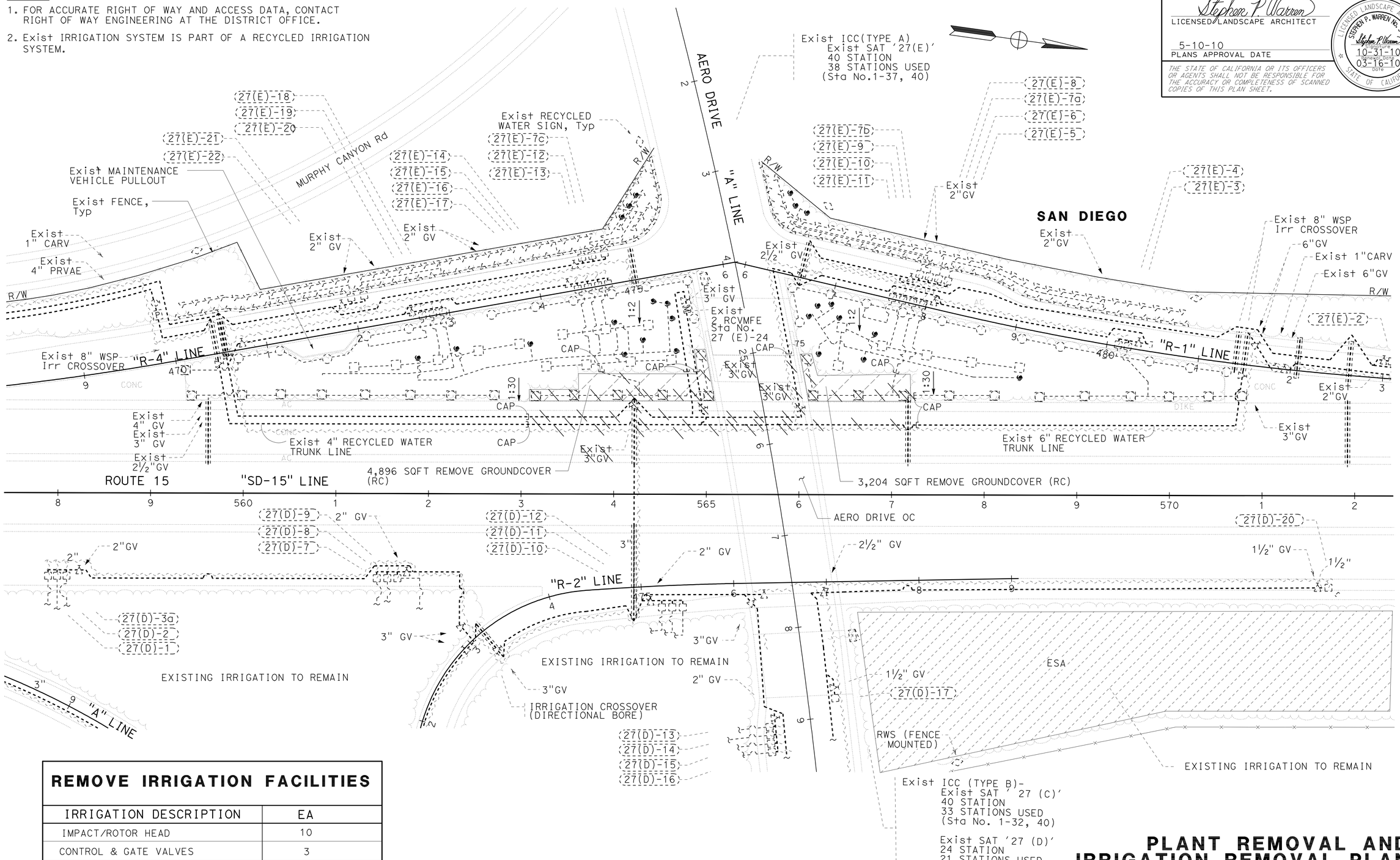

REMOVE IRRIGATION FACILITIES

IRRIGATION DESCRIPTION	EA
IMPACT/ROTOR HEAD	10
CONTROL & GATE VALVES	3

THIS PLAN ACCURATE FOR PLANT REMOVAL AND IRRIGATION REMOVAL WORK ONLY.

PLANT REMOVAL AND IRRIGATION REMOVAL PLAN

LOCATION 1

SCALE: 1" = 50'

PR-1

STATE OF CALIFORNIA - DEPARTMENT OF TRANSPORTATION
Caltrans LANDSCAPE ARCHITECTURE
SENIOR LANDSCAPE ARCHITECT STEPHEN ALVAREZ
CALCULATED-DESIGNED BY JOEL HORTIZUELA
CHECKED BY STEPHEN WARREN
REVISED BY
DATE REVISED

LAST REVISION 03-24-10
DATE PLOTTED => 13-MAY-2010
TIME PLOTTED => 10:23

Dist	COUNTY	ROUTE	POST MILES TOTAL PROJECT	SHEET No.	TOTAL SHEETS
11	SD	15,163, 805	Var	11	64

Stephen P. Warren
LICENSED LANDSCAPE ARCHITECT

5-10-10
PLANS APPROVAL DATE

LICENSED LANDSCAPE ARCHITECT
STEPHEN P. WARREN No. 3442
Stephen P. Warren
Registered 10-31-10
Renewal Date 03-16-10
DATE
STATE OF CALIFORNIA

THE STATE OF CALIFORNIA OR ITS OFFICERS OR AGENTS SHALL NOT BE RESPONSIBLE FOR THE ACCURACY OR COMPLETENESS OF SCANNED COPIES OF THIS PLAN SHEET.

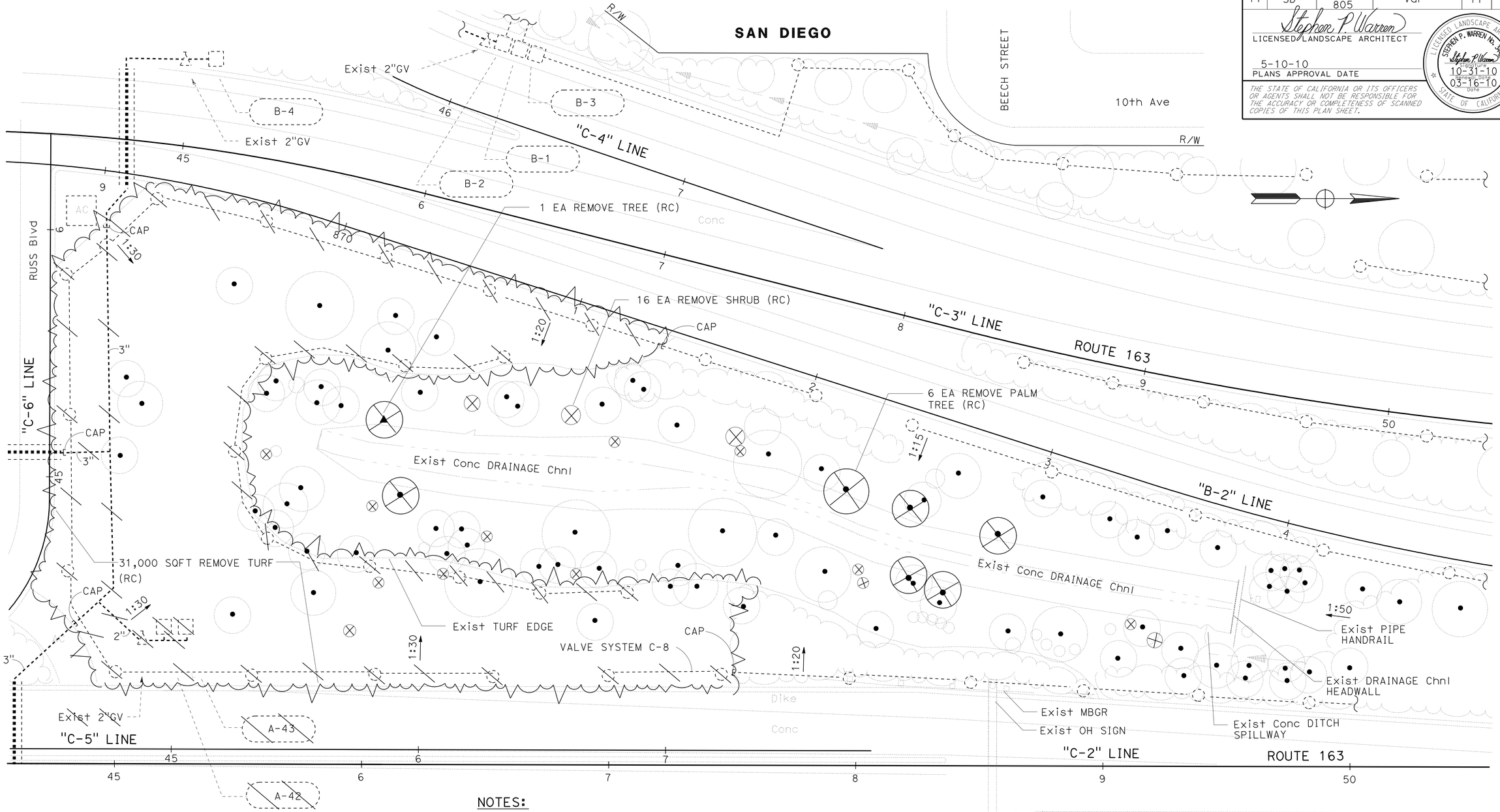

REMOVE IRRIGATION FACILITIES

IRRIGATION DESCRIPTION	EA
IMPACT/ROTOR HEAD	23
CONTROL & GATE VALVES	3

NOTES:

1. FOR ACCURATE RIGHT OF WAY AND ACCESS DATA, CONTACT RIGHT OF WAY ENGINEERING AT THE DISTRICT OFFICE.
2. Exist 4" WATER METER AND BPA IS LOCATED AT THE "C-2" LINE APPROXIMATE STATION 44 (R).
3. Exist ICC AND IRRIGATION CONTROLLERS "A,B,C & D" ARE LOCATED AT THE "C-6" LINE APPROXIMATE STATION 45+27 (L).
4. Exist IRRIGATION CROSSOVERS ARE 8" CMP.

THIS PLAN ACCURATE FOR PLANT REMOVAL AND IRRIGATION REMOVAL WORK ONLY.

PLANT REMOVAL AND IRRIGATION REMOVAL PLAN
LOCATION 2

SCALE: 1" = 20'

PR-2

STATE OF CALIFORNIA - DEPARTMENT OF TRANSPORTATION
Caltrans® LANDSCAPE ARCHITECTURE

SENIOR LANDSCAPE ARCHITECT: STEPHEN ALVAREZ
CALCULATED-DESIGNED BY: JOEL HORTIZUELA
CHECKED BY: STEPHEN WARREN
REVISED BY / DATE REVISED

LAST REVISION 03-24-10 | DATE PLOTTED => 13-MAY-2010 | TIME PLOTTED => 10:23

Dist	COUNTY	ROUTE	POST MILES TOTAL PROJECT	SHEET No.	TOTAL SHEETS
11	SD	15,163, 805	Var	12	64

Stephen P. Warren
LICENSED LANDSCAPE ARCHITECT

5-10-10
PLANS APPROVAL DATE

LICENSED LANDSCAPE ARCHITECT
STEPHEN P. WARREN No. 3442
Stephen P. Warren
10-31-10
03-16-10
STATE OF CALIFORNIA

THE STATE OF CALIFORNIA OR ITS OFFICERS OR AGENTS SHALL NOT BE RESPONSIBLE FOR THE ACCURACY OR COMPLETENESS OF SCANNED COPIES OF THIS PLAN SHEET.

NOTE:

1. FOR ACCURATE RIGHT OF WAY AND ACCESS DATA, CONTACT RIGHT OF WAY ENGINEERING AT THE DISTRICT OFFICE.

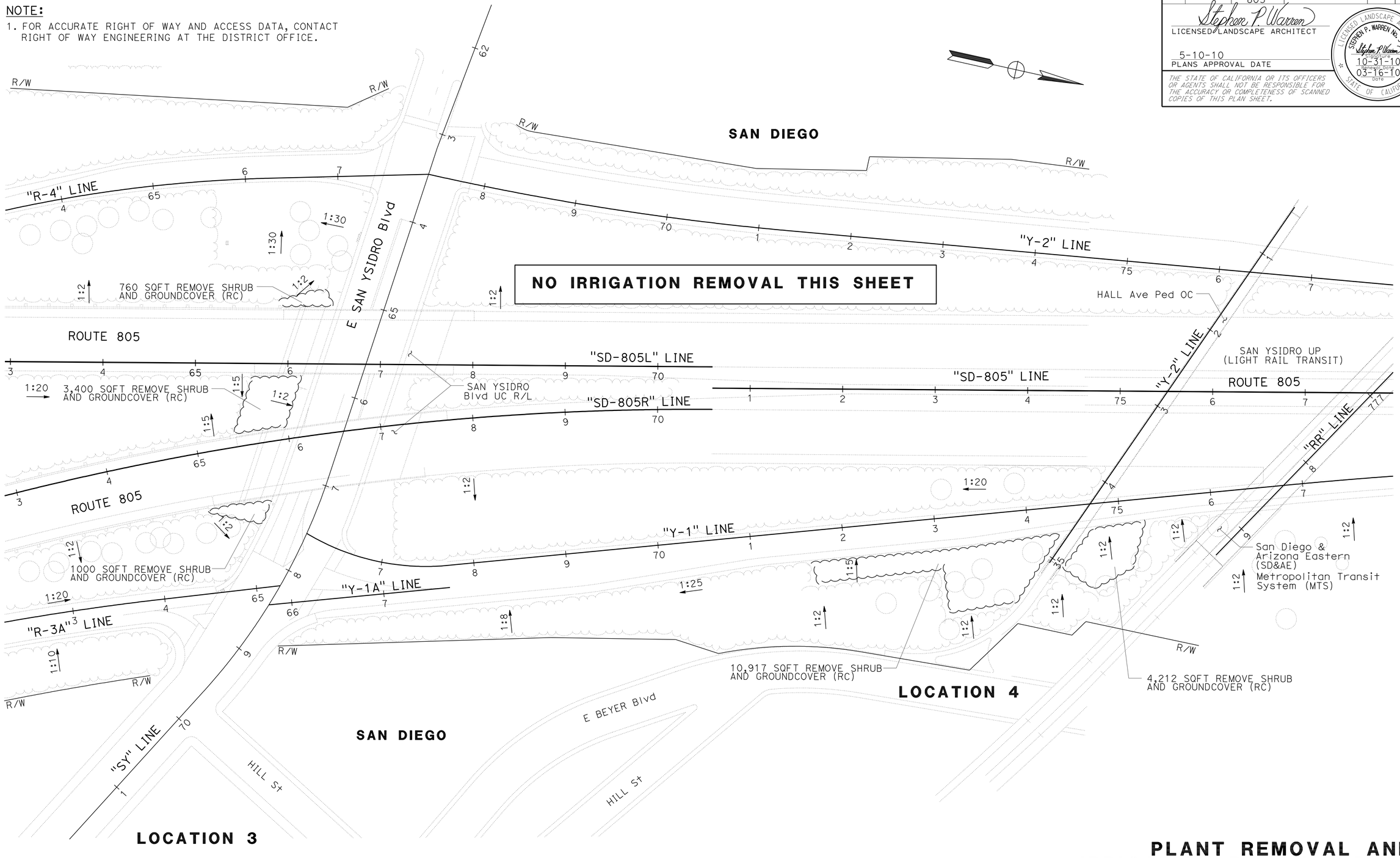

THIS PLAN ACCURATE FOR PLANT REMOVAL WORK ONLY.

PLANT REMOVAL AND IRRIGATION REMOVAL PLAN

LOCATIONS 3 & 4

SCALE: 1" = 50'

PR-3

STATE OF CALIFORNIA - DEPARTMENT OF TRANSPORTATION
Caltrans® LANDSCAPE ARCHITECTURE

SENIOR LANDSCAPE ARCHITECT: STEPHEN ALVAREZ
CALCULATED-DESIGNED BY: JOEL HORTIZUELA
CHECKED BY: STEPHEN WARREN
REVISED BY
DATE REVISED

LAST REVISION 03-24-10
DATE PLOTTED => 13-MAY-2010
TIME PLOTTED => 10:23

Dist	COUNTY	ROUTE	POST MILES TOTAL PROJECT	SHEET No.	TOTAL SHEETS
11	SD	15,163, 805	Var	13	64

Stephen P. Warren
LICENSED LANDSCAPE ARCHITECT

5-10-10
PLANS APPROVAL DATE

LICENSED LANDSCAPE ARCHITECT
STEPHEN P. WARREN No. 3442
Stephen P. Warren
Registered Date 10-31-10
Renewal Date 03-16-10
Date
STATE OF CALIFORNIA

THE STATE OF CALIFORNIA OR ITS OFFICERS OR AGENTS SHALL NOT BE RESPONSIBLE FOR THE ACCURACY OR COMPLETENESS OF SCANNED COPIES OF THIS PLAN SHEET.

REMOVE IRRIGATION FACILITIES

IRRIGATION DESCRIPTION	EA
IMPACT/ROTOR HEAD	15
CONTROL & GATE VALVES	0

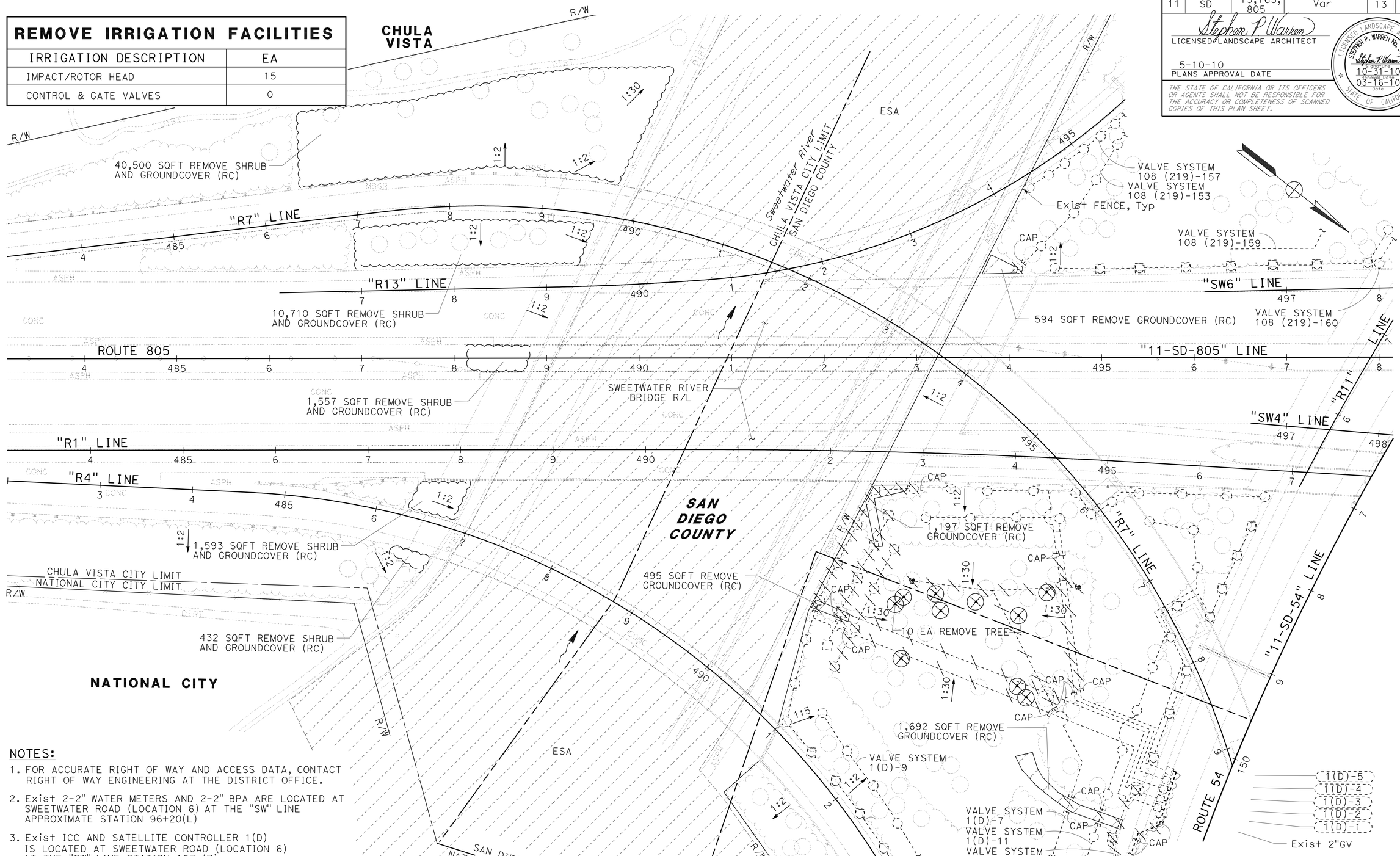

NOTES:

1. FOR ACCURATE RIGHT OF WAY AND ACCESS DATA, CONTACT RIGHT OF WAY ENGINEERING AT THE DISTRICT OFFICE.
2. Exist 2-2" WATER METERS AND 2-2" BPA ARE LOCATED AT SWEETWATER ROAD (LOCATION 6) AT THE "SW" LINE APPROXIMATE STATION 96+20(L)
3. Exist ICC AND SATELLITE CONTROLLER 1(D) IS LOCATED AT SWEETWATER ROAD (LOCATION 6) AT THE "SW" LINE STATION 107 (R).
4. Exist ICC AND MOTOROLA IC '108' IS LOCATED AT THE SOUTHSIDE OF WB ROUTE 54 ("SD-54-L" LINE) AT APPROXIMATE STATION 120+30 (200' EAST OF EDGEMERE Ave).

THIS PLAN ACCURATE FOR PLANT REMOVAL AND IRRIGATION REMOVAL WORK ONLY.

PLANT REMOVAL AND IRRIGATION REMOVAL PLAN

LOCATION 5

SCALE: 1" = 50'

PR-4

STATE OF CALIFORNIA - DEPARTMENT OF TRANSPORTATION
Caltrans® LANDSCAPE ARCHITECTURE

SENIOR LANDSCAPE ARCHITECT: STEPHEN ALVAREZ

CALCULATED-DESIGNED BY: JOEL HORTIZUELA
CHECKED BY: STEPHEN WARREN

REVISED BY | DATE REVISED

LAST REVISION 03-24-10 | DATE PLOTTED => 13-MAY-2010 | TIME PLOTTED => 10:23

Dist	COUNTY	ROUTE	POST MILES TOTAL PROJECT	SHEET No.	TOTAL SHEETS
11	SD	15,163, 805	Var	14	64

Stephen P. Warren
LICENSED LANDSCAPE ARCHITECT

5-10-10
PLANS APPROVAL DATE

LICENSED LANDSCAPE ARCHITECT
STEPHEN P. WARREN No. 3442
Stephen P. Warren
Registered Date
10-31-10
Expiration Date
03-16-10
Date
STATE OF CALIFORNIA

THE STATE OF CALIFORNIA OR ITS OFFICERS OR AGENTS SHALL NOT BE RESPONSIBLE FOR THE ACCURACY OR COMPLETENESS OF SCANNED COPIES OF THIS PLAN SHEET.

NOTES:

1. FOR ACCURATE RIGHT OF WAY AND ACCESS DATA, CONTACT RIGHT OF WAY ENGINEERING AT THE DISTRICT OFFICE.
2. Exist ICC AND SATELLITE CONTROLLERS 1(D) & 1(E) ARE LOCATED AT SWEETWATER ROAD (LOCATION 6) AT THE "SW" LINE STATION 107 (R).
3. Exist ICC AND SATELLITE CONTROLLERS 1(B) & 1(C) ARE LOCATED AT SWEETWATER ROAD (LOCATION 6) AT THE "SW" LINE STATION 96+50 (R).

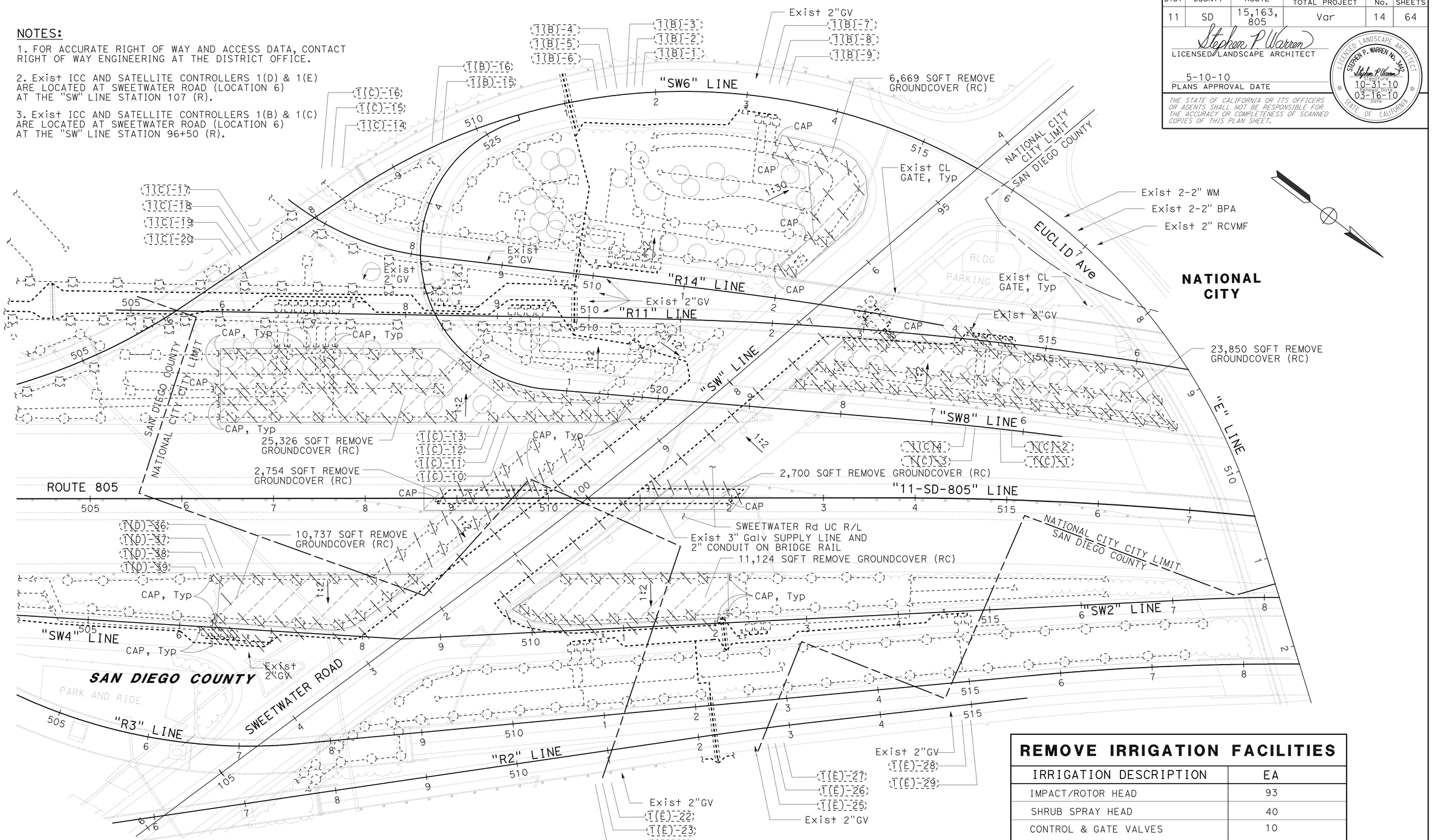

REMOVE IRRIGATION FACILITIES

IRRIGATION DESCRIPTION	EA
IMPACT/ROTOR HEAD	93
SHRUB SPRAY HEAD	40
CONTROL & GATE VALVES	10

THIS PLAN ACCURATE FOR PLANT REMOVAL AND IRRIGATION REMOVAL WORK ONLY.

PLANT REMOVAL AND IRRIGATION REMOVAL PLAN

LOCATION 6

SCALE: 1" = 50'

PR-5

STATE OF CALIFORNIA - DEPARTMENT OF TRANSPORTATION
Caltrans® LANDSCAPE ARCHITECTURE

SENIOR LANDSCAPE ARCHITECT: STEPHEN ALVAREZ
CALCULATED-DESIGNED BY: JOEL HORTIZUELA
CHECKED BY: STEPHEN WARREN
REVISED BY / DATE REVISED

LAST REVISION 03-24-10
DATE PLOTTED => 13-MAY-2010
TIME PLOTTED => 10:23

Dist	COUNTY	ROUTE	POST MILES TOTAL PROJECT	SHEET No.	TOTAL SHEETS
11	SD	15,163, 805	Var	15	64

Stephen P. Warren
LICENSED LANDSCAPE ARCHITECT

5-10-10
PLANS APPROVAL DATE

LICENSED LANDSCAPE ARCHITECT
STEPHEN P. WARREN No. 3442
Stephen P. Warren
Registration
10-31-10
Expiration Date
03-16-10
Date
STATE OF CALIFORNIA

THE STATE OF CALIFORNIA OR ITS OFFICERS OR AGENTS SHALL NOT BE RESPONSIBLE FOR THE ACCURACY OR COMPLETENESS OF SCANNED COPIES OF THIS PLAN SHEET.

NOTES:

1. FOR ACCURATE RIGHT OF WAY AND ACCESS DATA, CONTACT RIGHT OF WAY ENGINEERING AT THE DISTRICT OFFICE.

2. Exist 3" WATER METER AND 3" BPA ARE LOCATED AT THE "11-SD-805" LINE, APPROXIMATE STATION 1128 (R) ON THE NORTHSIDE OF THE LINDA VISTA ROAD OC.

3. Exist ICC AND IRRIGATION CONTROLLERS "H,I,J AND K" ARE LOCATED AT THE "11-SD-163" LINE AT APPROXIMATE STATION 380 (R).

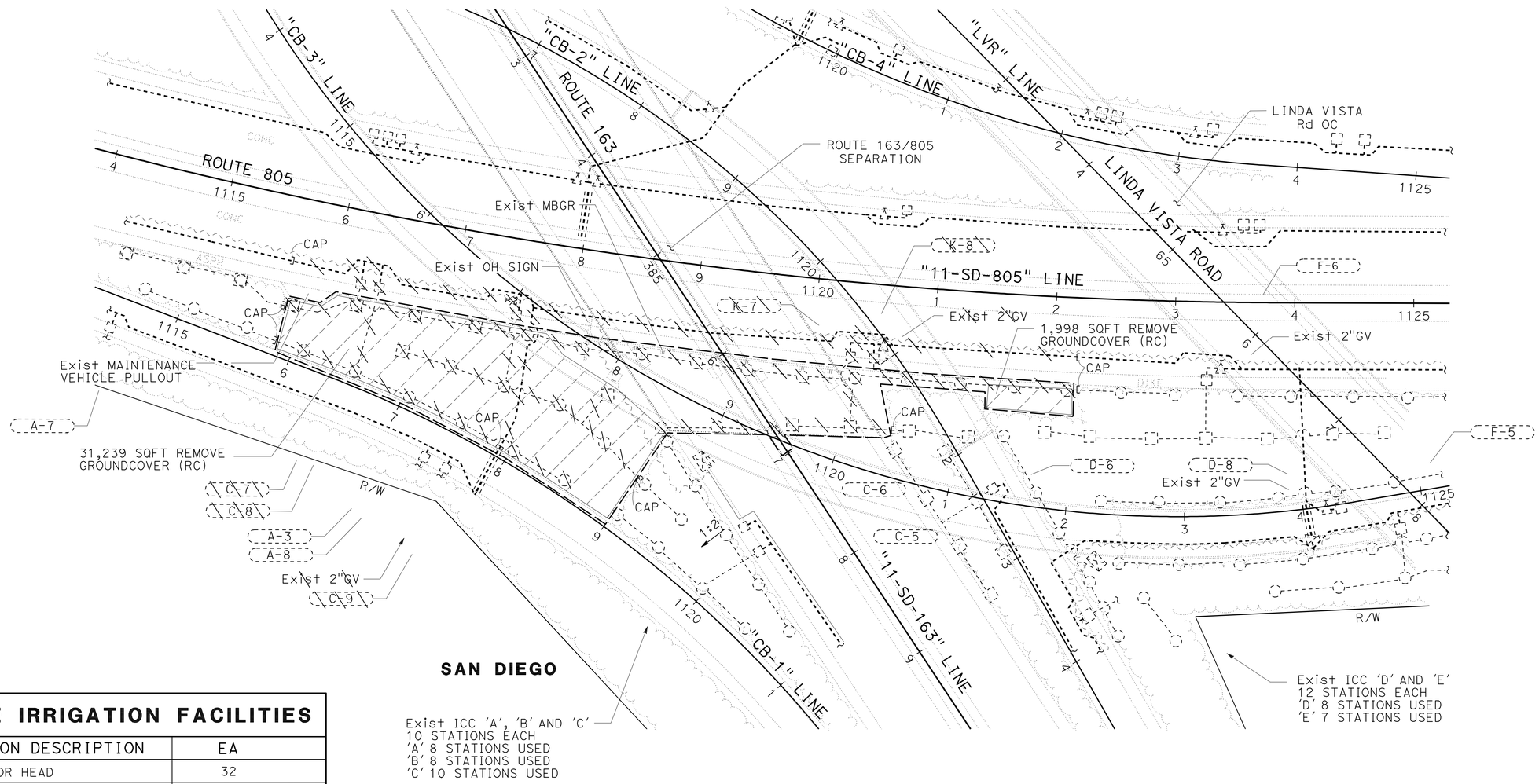

REMOVE IRRIGATION FACILITIES	
IRRIGATION DESCRIPTION	EA
IMPACT/ROTOR HEAD	32
CONTROL & GATE VALVES	7

THIS PLAN ACCURATE FOR PLANT REMOVAL AND IRRIGATION REMOVAL WORK ONLY.

PLANT REMOVAL AND IRRIGATION REMOVAL PLAN

LOCATION 7

SCALE: 1" = 50'

PR-6

STATE OF CALIFORNIA - DEPARTMENT OF TRANSPORTATION
Caltrans LANDSCAPE ARCHITECTURE
SENIOR LANDSCAPE ARCHITECT: STEPHEN ALVAREZ
CALCULATED-DESIGNED BY: JOEL HORTIZUELA
CHECKED BY: STEPHEN WARREN
REVISED BY
DATE REVISED

LAST REVISION 03-24-10
DATE PLOTTED => 13-MAY-2010
TIME PLOTTED => 10:23

Dist	COUNTY	ROUTE	POST MILES TOTAL PROJECT	SHEET No.	TOTAL SHEETS
11	SD	15,163, 805	Var	16	64

Stephen P. Warren
LICENSED LANDSCAPE ARCHITECT

5-10-10
PLANS APPROVAL DATE

LICENSED LANDSCAPE ARCHITECT
STEPHEN P. WARREN No. 3442
Signature 10-31-10 Renewal Date
03-16-10 Date
STATE OF CALIFORNIA

THE STATE OF CALIFORNIA OR ITS OFFICERS OR AGENTS SHALL NOT BE RESPONSIBLE FOR THE ACCURACY OR COMPLETENESS OF SCANNED COPIES OF THIS PLAN SHEET.

NOTE:

1. FOR ACCURATE RIGHT OF WAY AND ACCESS DATA, CONTACT RIGHT OF WAY ENGINEERING AT THE DISTRICT OFFICE.

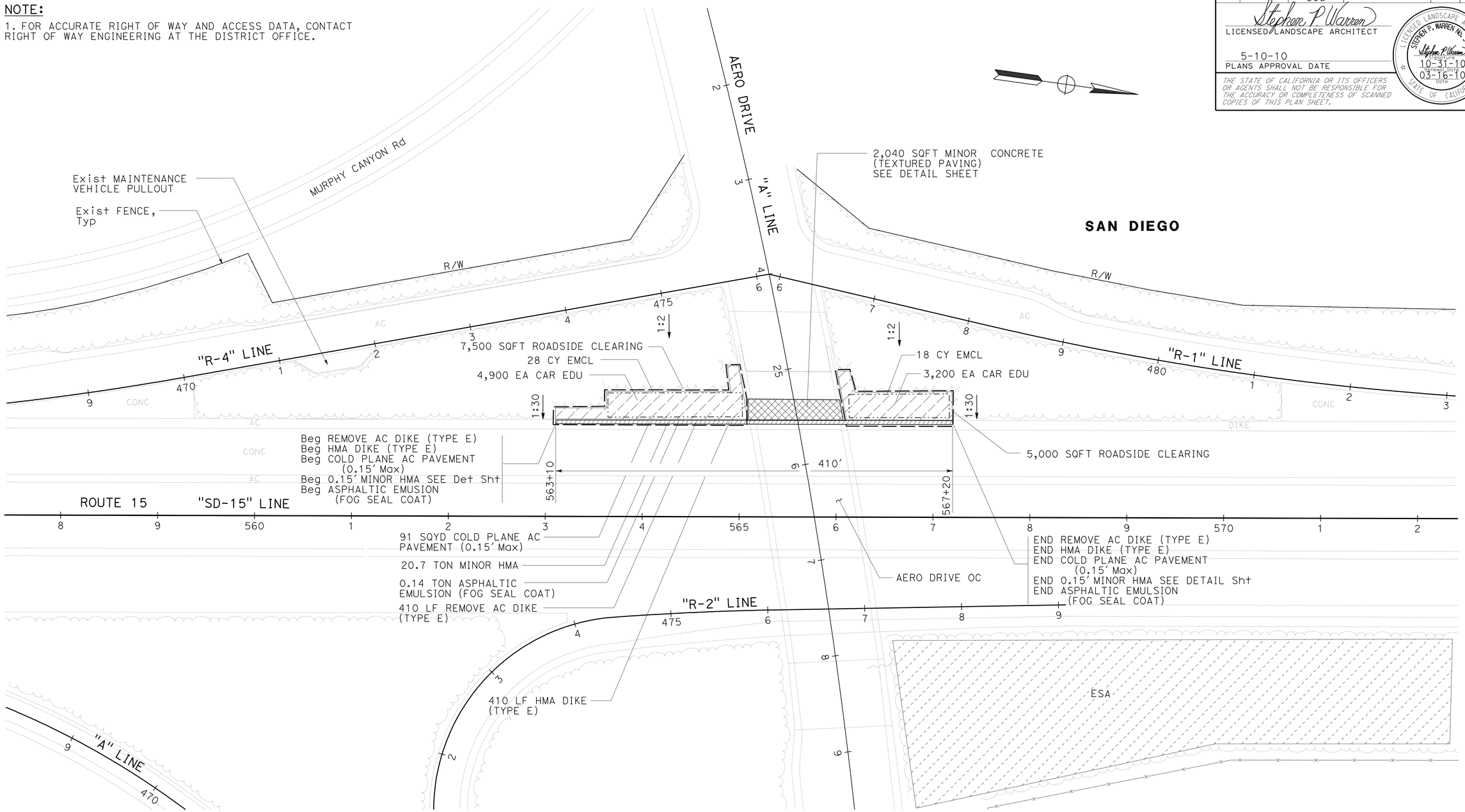

THIS PLAN ACCURATE FOR PLANTING WORK ONLY.

PLANTING PLAN
LOCATION 1

SCALE: 1" = 50'

PP-1

STATE OF CALIFORNIA - DEPARTMENT OF TRANSPORTATION
Caltrans® LANDSCAPE ARCHITECTURE

SENIOR LANDSCAPE ARCHITECT: STEPHEN ALVAREZ
CALCULATED-DESIGNED BY: JOEL HORTIZUELA
CHECKED BY: STEPHEN WARREN
REVISED BY
DATE REVISED

LAST REVISION 03-24-10
DATE PLOTTED => 13-MAY-2010
TIME PLOTTED => 10:23

Dist	COUNTY	ROUTE	POST MILES TOTAL PROJECT	SHEET No.	TOTAL SHEETS
11	SD	15,163, 805	Var	17	64

Stephen P. Warren
LICENSED LANDSCAPE ARCHITECT

5-10-10
PLANS APPROVAL DATE

LICENSED LANDSCAPE ARCHITECT
STEPHEN P. WARREN No. 3442
Stephen P. Warren
10-31-10
03-16-10
STATE OF CALIFORNIA

THE STATE OF CALIFORNIA OR ITS OFFICERS OR AGENTS SHALL NOT BE RESPONSIBLE FOR THE ACCURACY OR COMPLETENESS OF SCANNED COPIES OF THIS PLAN SHEET.

NOTE:

1. FOR ACCURATE RIGHT OF WAY AND ACCESS DATA, CONTACT RIGHT OF WAY ENGINEERING AT THE DISTRICT OFFICE.

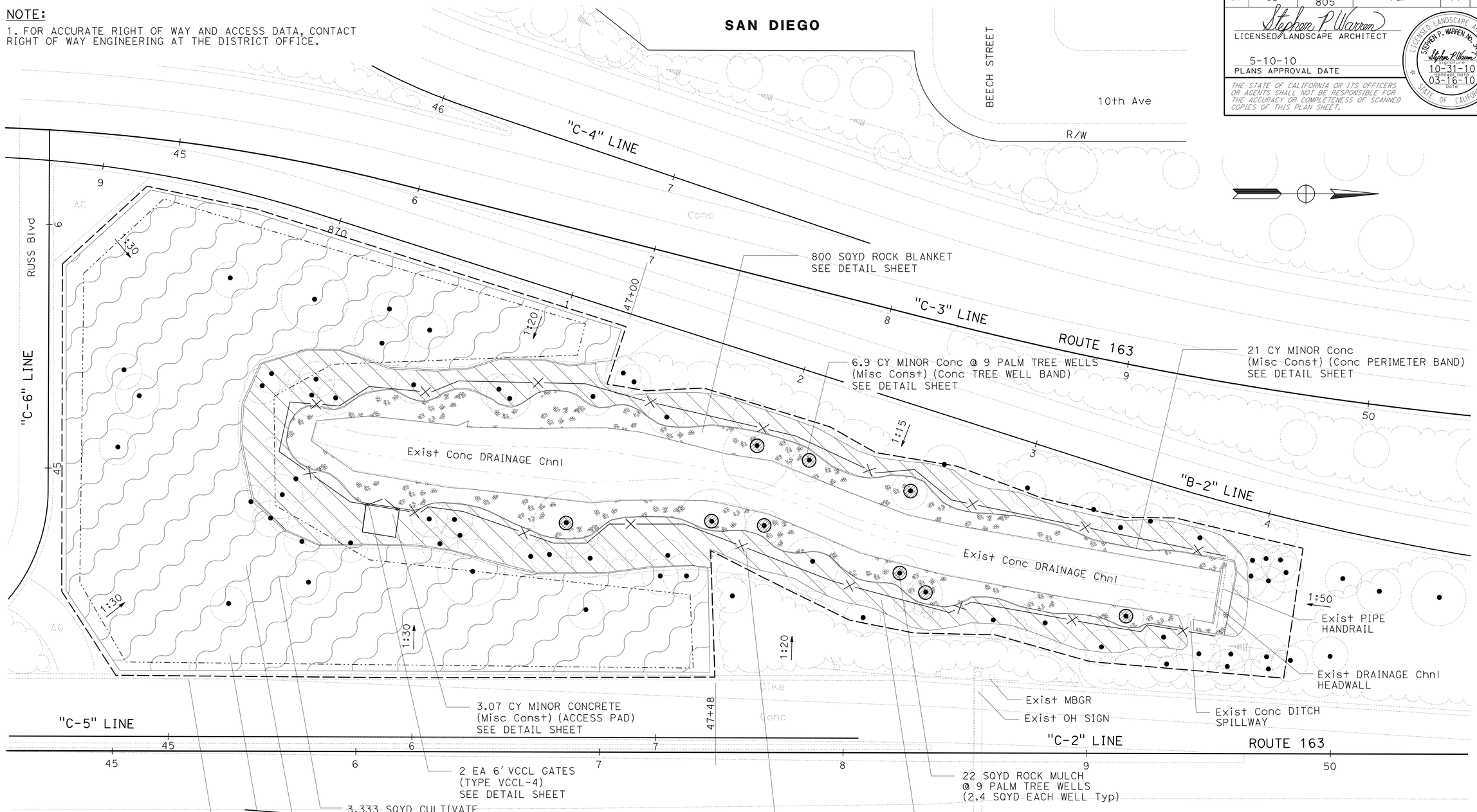

THIS PLAN ACCURATE FOR PLANTING WORK ONLY.

PLANTING PLAN
LOCATION 2

SCALE: 1" = 20'

PP-2

STATE OF CALIFORNIA - DEPARTMENT OF TRANSPORTATION
Caltrans® LANDSCAPE ARCHITECTURE

SENIOR LANDSCAPE ARCHITECT: STEPHEN ALVAREZ
CALCULATED-DESIGNED BY: JOEL HORTIZUELA
CHECKED BY: STEPHEN WARREN
REVISED BY
DATE REVISED

LAST REVISION 03-24-10
DATE PLOTTED => 13-MAY-2010
TIME PLOTTED => 10:24

Dist	COUNTY	ROUTE	POST MILES TOTAL PROJECT	SHEET No.	TOTAL SHEETS
11	SD	15,163, 805	Var	18	64

Stephen P. Warren
LICENSED LANDSCAPE ARCHITECT

5-10-10
PLANS APPROVAL DATE

LICENSED LANDSCAPE ARCHITECT
STEPHEN P. WARREN No. 3442
Stephen P. Warren
Registered
10-31-10
Expiration Date
03-16-10
Date
STATE OF CALIFORNIA

THE STATE OF CALIFORNIA OR ITS OFFICERS OR AGENTS SHALL NOT BE RESPONSIBLE FOR THE ACCURACY OR COMPLETENESS OF SCANNED COPIES OF THIS PLAN SHEET.

NOTE:

1. FOR ACCURATE RIGHT OF WAY AND ACCESS DATA, CONTACT RIGHT OF WAY ENGINEERING AT THE DISTRICT OFFICE.

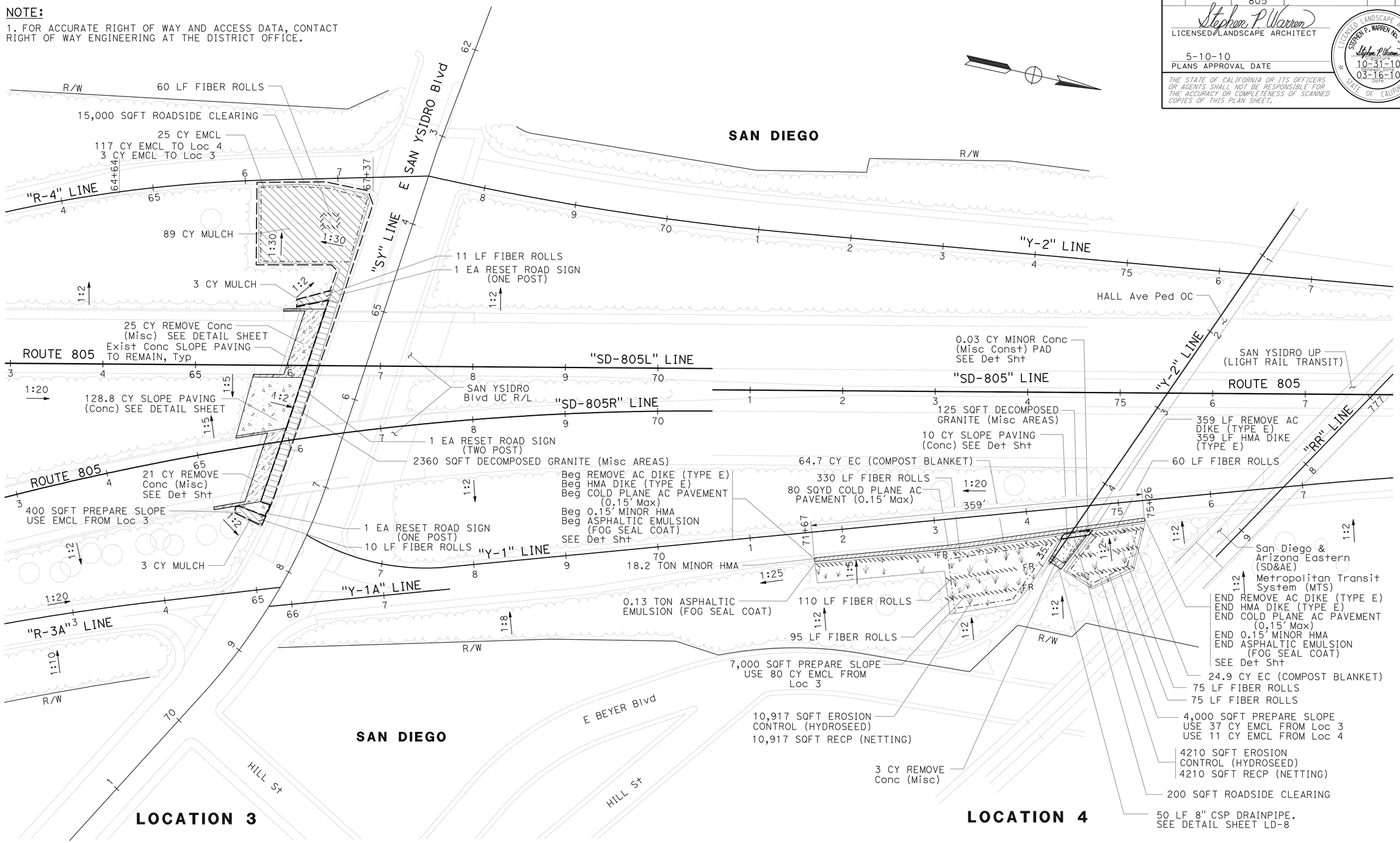

THIS PLAN ACCURATE FOR PLANTING WORK ONLY.

PLANTING PLAN
LOCATIONS 3 & 4

SCALE: 1" = 50'

PP-3

STATE OF CALIFORNIA - DEPARTMENT OF TRANSPORTATION
Caltrans® LANDSCAPE ARCHITECTURE

SENIOR LANDSCAPE ARCHITECT: STEPHEN ALVAREZ
CALCULATED-DESIGNED BY: JOEL HORTIZUELA
CHECKED BY: STEPHEN WARREN
REVISED BY / DATE REVISED

LAST REVISION 03-24-10
DATE PLOTTED => 13-MAY-2010
TIME PLOTTED => 10:24

Dist	COUNTY	ROUTE	POST MILES TOTAL PROJECT	SHEET No.	TOTAL SHEETS
11	SD	15,163, 805	Var	19	64

Stephen P. Warren
LICENSED LANDSCAPE ARCHITECT

5-10-10
PLANS APPROVAL DATE

LICENSED LANDSCAPE ARCHITECT
STEPHEN P. WARREN No. 3442
Stephen P. Warren
Expiration Date
10-31-10
Renewal Date
03-16-10
Date
STATE OF CALIFORNIA

THE STATE OF CALIFORNIA OR ITS OFFICERS OR AGENTS SHALL NOT BE RESPONSIBLE FOR THE ACCURACY OR COMPLETENESS OF SCANNED COPIES OF THIS PLAN SHEET.

NOTE:

1. FOR ACCURATE RIGHT OF WAY AND ACCESS DATA, CONTACT RIGHT OF WAY ENGINEERING AT THE DISTRICT OFFICE.

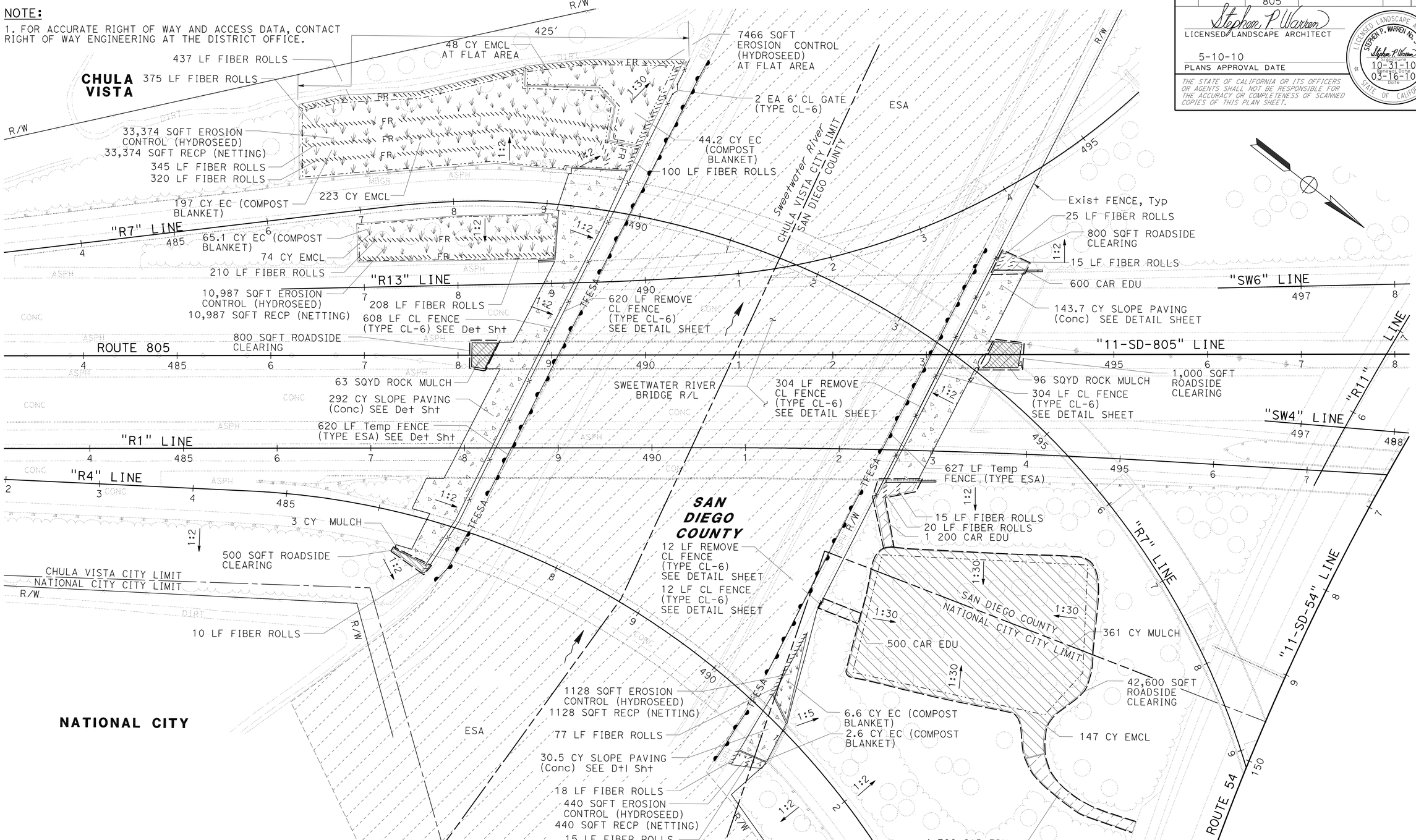

THIS PLAN ACCURATE FOR PLANTING WORK ONLY.

PLANTING PLAN
LOCATION 5

SCALE: 1" = 50'

PP-4

REVISED BY	DATE REVISED
JOEL HORTIZUELA	STEPHEN WARREN
CALCULATED-DESIGNED BY	CHECKED BY
SENIOR LANDSCAPE ARCHITECT	STEPHEN ALVAREZ

STATE OF CALIFORNIA - DEPARTMENT OF TRANSPORTATION
Caltrans® LANDSCAPE ARCHITECTURE

LAST REVISION 03-24-10
DATE PLOTTED => 13-MAY-2010
TIME PLOTTED => 10:24

Dist	COUNTY	ROUTE	POST MILES TOTAL PROJECT	SHEET No.	TOTAL SHEETS
11	SD	15,163, 805	Var	20	64

Stephen P. Warren
LICENSED LANDSCAPE ARCHITECT

5-10-10
PLANS APPROVAL DATE

LICENSED LANDSCAPE ARCHITECT
STEPHEN P. WARREN No. 3442
Stephen P. Warren
Registered
10-31-10
Expiration Date
03-16-10
Date
STATE OF CALIFORNIA

THE STATE OF CALIFORNIA OR ITS OFFICERS OR AGENTS SHALL NOT BE RESPONSIBLE FOR THE ACCURACY OR COMPLETENESS OF SCANNED COPIES OF THIS PLAN SHEET.

NOTE:

1. FOR ACCURATE RIGHT OF WAY AND ACCESS DATA, CONTACT RIGHT OF WAY ENGINEERING AT THE DISTRICT OFFICE.

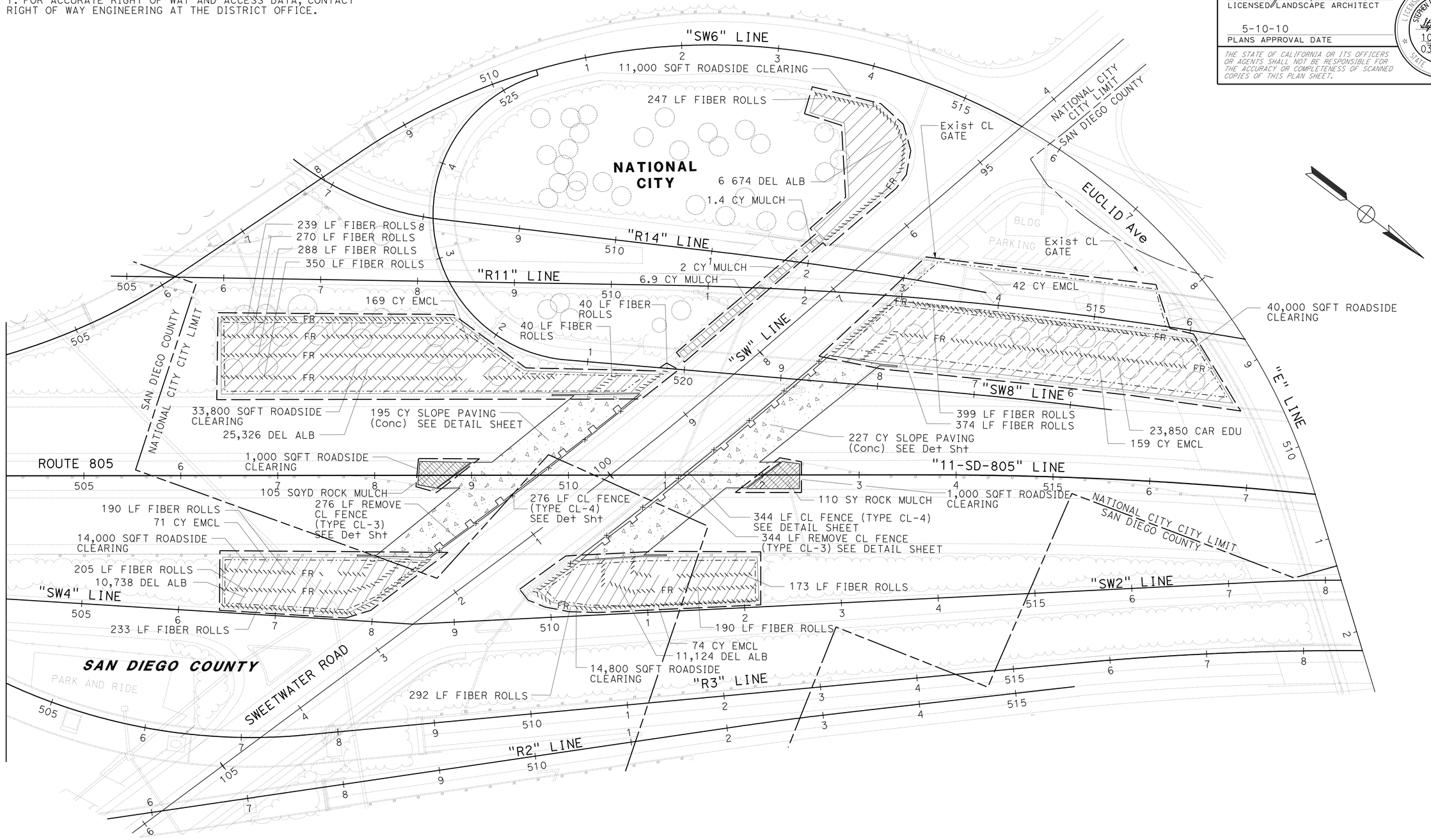

THIS PLAN ACCURATE FOR PLANTING WORK ONLY.

PLANTING PLAN
LOCATION 6

SCALE: 1" = 50'

PP-5

STATE OF CALIFORNIA - DEPARTMENT OF TRANSPORTATION
Caltrans LANDSCAPE ARCHITECTURE

SENIOR LANDSCAPE ARCHITECT: STEPHEN ALVAREZ
CALCULATED-DESIGNED BY: JOEL HORTIZUELA
CHECKED BY: STEPHEN WARREN
REVISED BY
DATE REVISED

LAST REVISION 03-24-10
DATE PLOTTED => 13-MAY-2010
TIME PLOTTED => 10:24

Dist	COUNTY	ROUTE	POST MILES TOTAL PROJECT	SHEET No.	TOTAL SHEETS
11	SD	15,163, 805	Var	21	64

Stephen P. Warren
LICENSED LANDSCAPE ARCHITECT

5-10-10
PLANS APPROVAL DATE

LICENSED LANDSCAPE ARCHITECT
STEPHEN P. WARREN No. 3442
Stephen P. Warren
Registered Date
10-31-10
Renewal Date
03-16-10
Date
STATE OF CALIFORNIA

THE STATE OF CALIFORNIA OR ITS OFFICERS OR AGENTS SHALL NOT BE RESPONSIBLE FOR THE ACCURACY OR COMPLETENESS OF SCANNED COPIES OF THIS PLAN SHEET.

NOTE:

1. FOR ACCURATE RIGHT OF WAY AND ACCESS DATA, CONTACT RIGHT OF WAY ENGINEERING AT THE DISTRICT OFFICE.

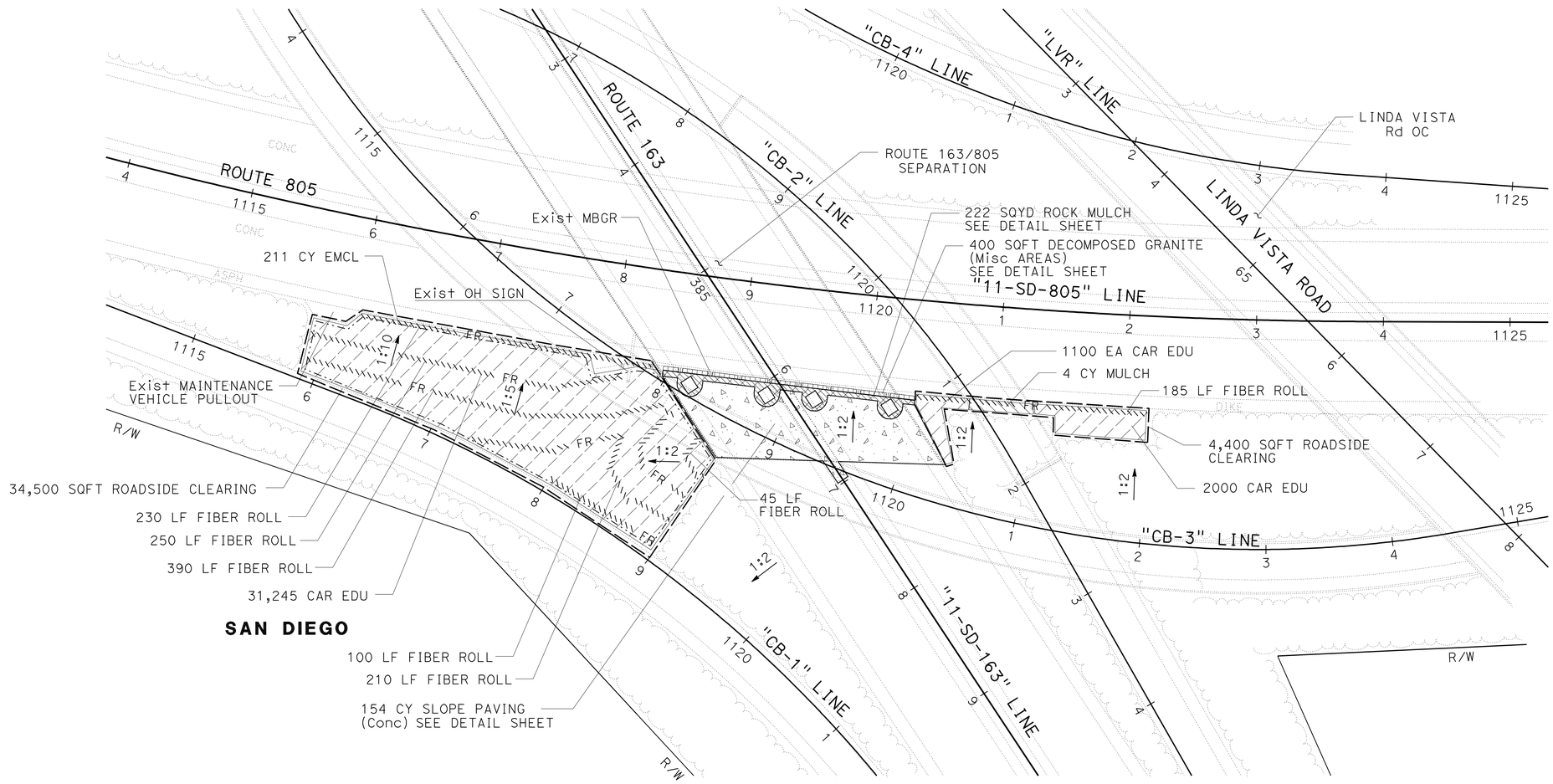

THIS PLAN ACCURATE FOR PLANTING WORK ONLY.

PLANTING PLAN
LOCATION 7

SCALE: 1" = 50'

PP-6

STATE OF CALIFORNIA - DEPARTMENT OF TRANSPORTATION
Caltrans® LANDSCAPE ARCHITECTURE

SENIOR LANDSCAPE ARCHITECT: STEPHEN ALVAREZ

CALCULATED-DESIGNED BY: JOEL HORTIZUELA
CHECKED BY: STEPHEN WARREN

REVISED BY
DATE REVISED

LAST REVISION 03-24-10
DATE PLOTTED => 13-MAY-2010
TIME PLOTTED => 10:24

Dist	COUNTY	ROUTE	POST MILES TOTAL PROJECT	SHEET No.	TOTAL SHEETS
11	SD	15,163, 805	Var	22	64

Stephen P. Warren
LICENSED LANDSCAPE ARCHITECT

5-10-10
PLANS APPROVAL DATE

LICENSED LANDSCAPE ARCHITECT
STEPHEN P. WARREN No. 3442
Stephen P. Warren
Registered
10-31-10
Renewal Date
03-16-10
Date
STATE OF CALIFORNIA

THE STATE OF CALIFORNIA OR ITS OFFICERS OR AGENTS SHALL NOT BE RESPONSIBLE FOR THE ACCURACY OR COMPLETENESS OF SCANNED COPIES OF THIS PLAN SHEET.

NOTES:

1. FOR ACCURATE RIGHT OF WAY AND ACCESS DATA, CONTACT RIGHT OF WAY ENGINEERING AT THE DISTRICT OFFICE.

2. Exist IRRIGATION SYSTEM IS PART OF A RECYCLED IRRIGATION SYSTEM.

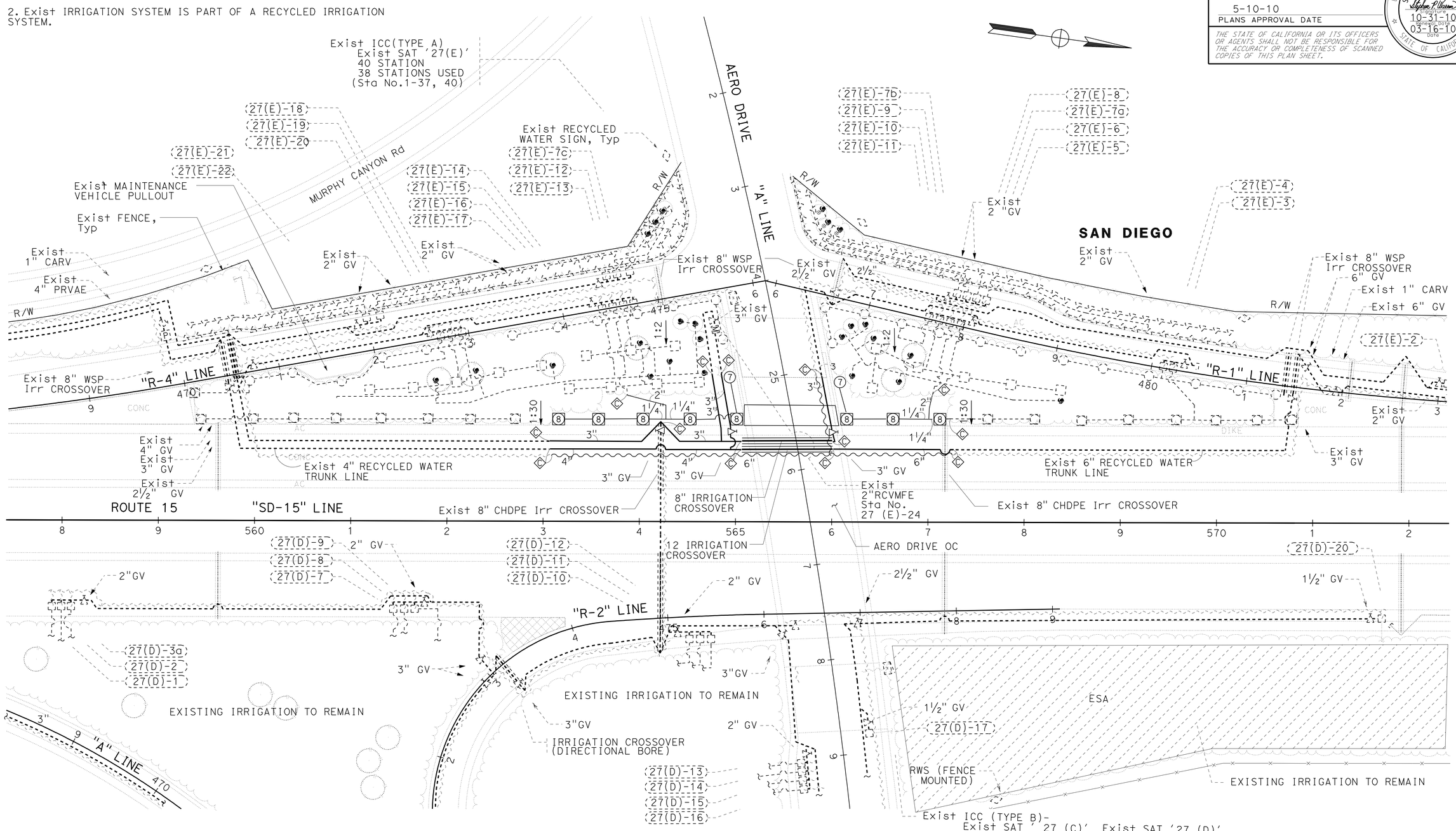

THIS PLAN ACCURATE FOR IRRIGATION WORK ONLY.

IRRIGATION PLAN
LOCATION 1

SCALE: 1" = 50'

IP-1

REVISED BY	DATE REVISED
JOEL HORTIZUELA	STEPHEN WARREN
CALCULATED-DESIGNED BY	CHECKED BY
SENIOR LANDSCAPE ARCHITECT	STEPHEN ALVAREZ

STATE OF CALIFORNIA - DEPARTMENT OF TRANSPORTATION
Caltrans® LANDSCAPE ARCHITECTURE

LAST REVISION 03-24-10
DATE PLOTTED => 13-MAY-2010
TIME PLOTTED => 10:24

Dist	COUNTY	ROUTE	POST MILES TOTAL PROJECT	SHEET No.	TOTAL SHEETS
11	SD	15,163, 805	Var	23	64

Stephen P. Warren
LICENSED LANDSCAPE ARCHITECT

5-10-10
PLANS APPROVAL DATE

LICENSED LANDSCAPE ARCHITECT
STEPHEN P. WARREN No. 3442
Expiration Date 10-31-10
Renewal Date 03-16-10
Date
STATE OF CALIFORNIA

THE STATE OF CALIFORNIA OR ITS OFFICERS OR AGENTS SHALL NOT BE RESPONSIBLE FOR THE ACCURACY OR COMPLETENESS OF SCANNED COPIES OF THIS PLAN SHEET.

NOTES:

1. FOR ACCURATE RIGHT OF WAY AND ACCESS DATA, CONTACT RIGHT OF WAY ENGINEERING AT THE DISTRICT OFFICE.

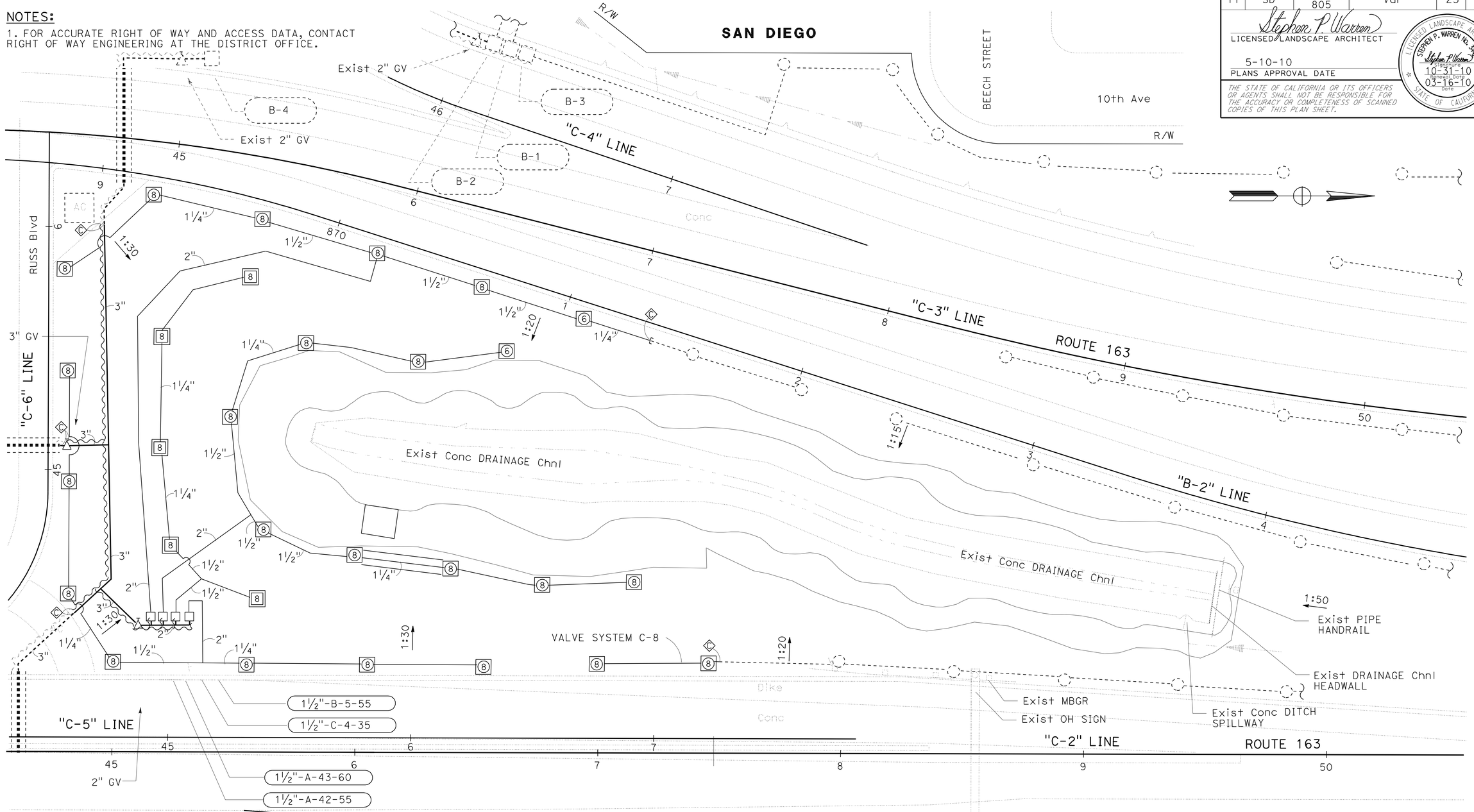

NOTES (CONTINUED):

2. Exist 4" WATER METER AND BPA IS LOCATED AT THE "C-2" LINE APPOROXIMATE STATION 44 (R).

3. Exist ICC AND IRRIGATION CONTROLLERS "A,B,C & D" ARE LOCATED AT THE "C-6" LINE APPROXIMATE STATION 45+27 (L).

4. Exist IRRIGATION CROSSOVERS ARE 8" CMP.

THIS PLAN ACCURATE FOR IRRIGATION WORK ONLY.

IRRIGATION PLAN
LOCATION 2

SCALE: 1" = 20'

IP-2

STATE OF CALIFORNIA - DEPARTMENT OF TRANSPORTATION
Caltrans® LANDSCAPE ARCHITECTURE

SENIOR LANDSCAPE ARCHITECT: STEPHEN ALVAREZ
CALCULATED-DESIGNED BY: JOEL HORTIZUELA
CHECKED BY: STEPHEN WARREN
REVISED BY
DATE REVISED

LAST REVISION 03-24-10
DATE PLOTTED => 13-MAY-2010
TIME PLOTTED => 10:25

Dist	COUNTY	ROUTE	POST MILES TOTAL PROJECT	SHEET No.	TOTAL SHEETS
11	SD	15,163, 805	Var	24	64

Stephen P. Warren
LICENSED LANDSCAPE ARCHITECT

5-10-10
PLANS APPROVAL DATE

LICENSED LANDSCAPE ARCHITECT
STEPHEN P. WARREN No. 3442
Stephen P. Warren
10-31-10
03-16-10
STATE OF CALIFORNIA

THE STATE OF CALIFORNIA OR ITS OFFICERS OR AGENTS SHALL NOT BE RESPONSIBLE FOR THE ACCURACY OR COMPLETENESS OF SCANNED COPIES OF THIS PLAN SHEET.

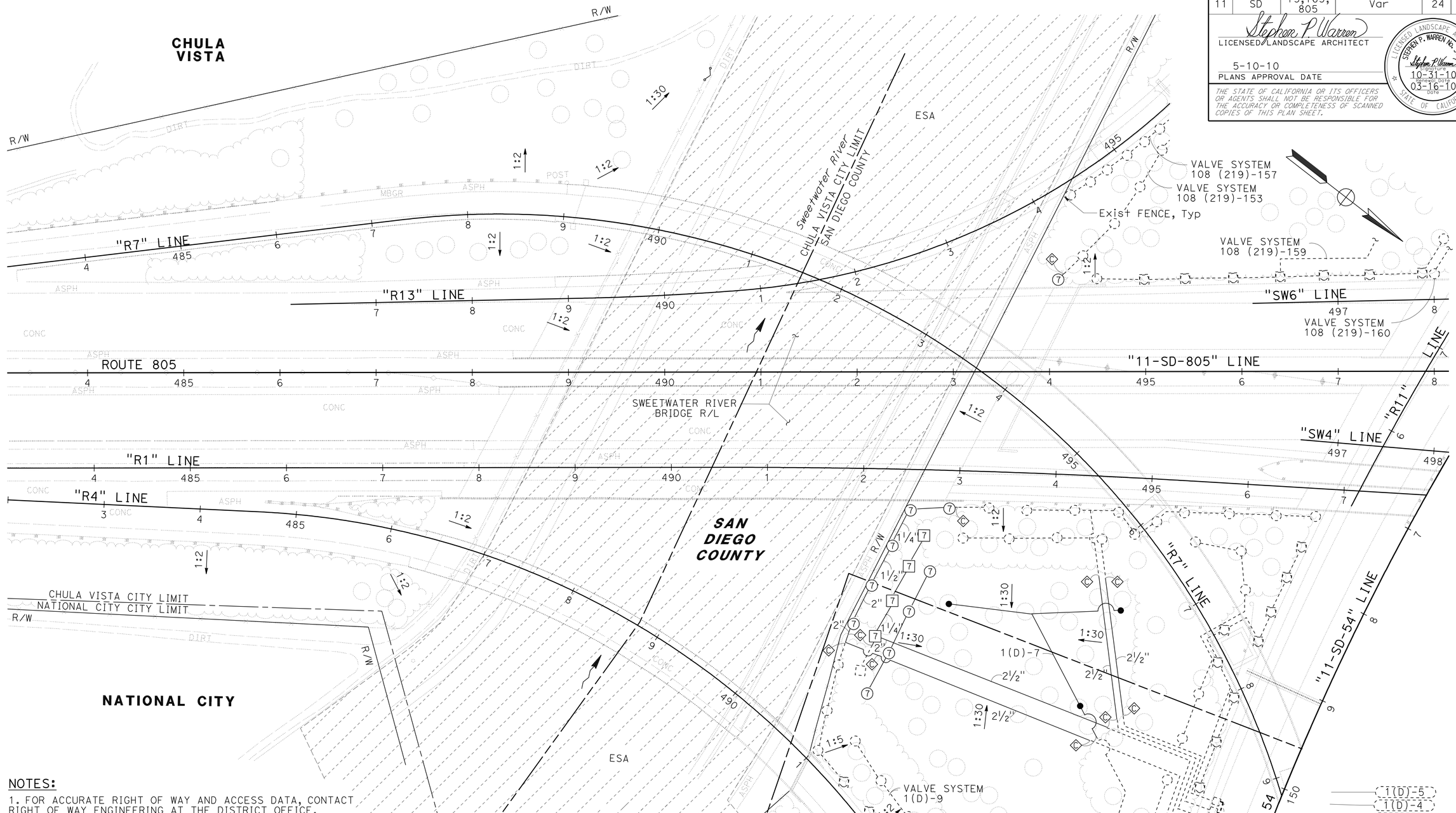

NOTES:

1. FOR ACCURATE RIGHT OF WAY AND ACCESS DATA, CONTACT RIGHT OF WAY ENGINEERING AT THE DISTRICT OFFICE.

2. Exist 2-2" WATER METERS AND 2-2" BPA ARE LOCATED AT SWEETWATER ROAD (LOCATION 6) AT THE "SW" LINE APPROXIMATE STATION 96+20(L).

3. Exist ICC AND SATELLITE CONTROLLER 1(D) IS LOCATED AT SWEETWATER ROAD (LOCATION 6) AT THE "SW" LINE STATION 107 (R).

4. Exist ICC AND MOTOROLA IC '108' IS LOCATED AT THE SOUTHSIDE OF WB ROUTE 54 ("SD-54-L" LINE) AT APPROXIMATE STATION 120+30 (200' EAST OF EDGEMERE Ave).

THIS PLAN ACCURATE FOR IRRIGATION WORK ONLY.

IRRIGATION PLAN
LOCATION 5

SCALE: 1" = 50'

IP-3

REVISED BY | DATE REVISED
JOEL HORTIZUELA | STEPHEN WARREN
CALCULATED-DESIGNED BY | CHECKED BY
SENIOR LANDSCAPE ARCHITECT | STEPHEN ALVAREZ

STATE OF CALIFORNIA - DEPARTMENT OF TRANSPORTATION
Caltrans® LANDSCAPE ARCHITECTURE

LAST REVISION 03-24-10 | DATE PLOTTED => 13-MAY-2010 | TIME PLOTTED => 10:25

Dist	COUNTY	ROUTE	POST MILES TOTAL PROJECT	SHEET No.	TOTAL SHEETS
11	SD	15,163, 805	Var	25	64

Stephen P. Warren
LICENSED LANDSCAPE ARCHITECT

5-10-10
PLANS APPROVAL DATE

LICENSED LANDSCAPE ARCHITECT STEPHEN P. WARREN No. 3442 Stephen P. Warren Registered 10-31-10 Renewal Date 03-16-10 Date STATE OF CALIFORNIA

THE STATE OF CALIFORNIA OR ITS OFFICERS OR AGENTS SHALL NOT BE RESPONSIBLE FOR THE ACCURACY OR COMPLETENESS OF SCANNED COPIES OF THIS PLAN SHEET.

NOTES:

1. FOR ACCURATE RIGHT OF WAY AND ACCESS DATA, CONTACT RIGHT OF WAY ENGINEERING AT THE DISTRICT OFFICE.

2. Exist ICC AND SATELLITE CONTROLLERS 1(D) & 1(E) ARE LOCATED AT SWEETWATER ROAD (LOCATION 6) AT THE "SW" LINE STATION 107 (R).

3. Exist ICC AND SATELLITE CONTROLLERS 1(B) & 1(C) ARE LOCATED AT SWEETWATER ROAD (LOCATION 6) AT THE "SW" LINE STATION 96+50 (R).

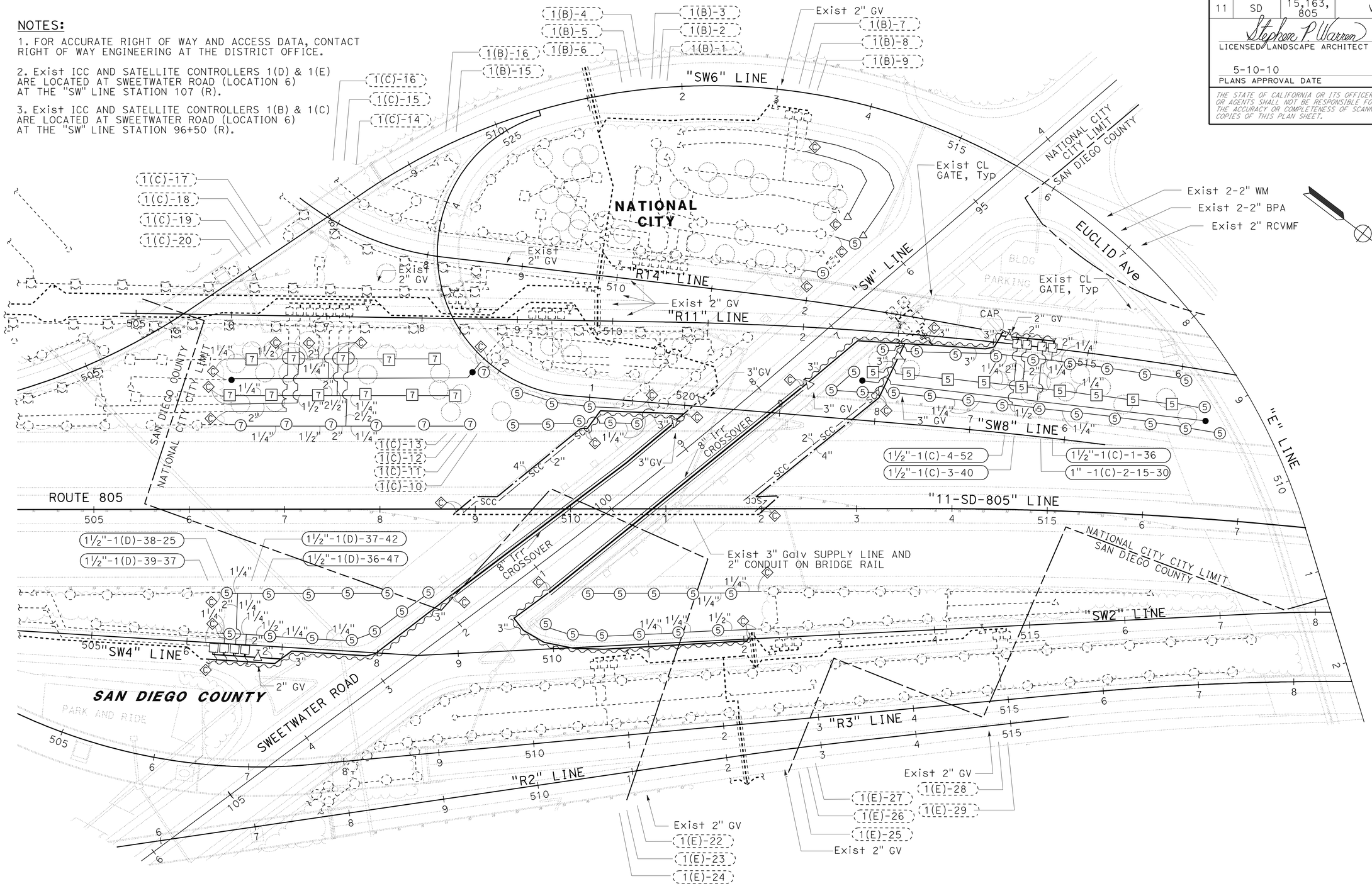

THIS PLAN ACCURATE FOR IRRIGATION WORK ONLY.

IRRIGATION PLAN

LOCATION 6

SCALE: 1" = 50'

IP-4

STATE OF CALIFORNIA - DEPARTMENT OF TRANSPORTATION
Caltrans® LANDSCAPE ARCHITECTURE

SENIOR LANDSCAPE ARCHITECT: STEPHEN ALVAREZ
CALCULATED-DESIGNED BY: JOEL HORTIZUELA
CHECKED BY: STEPHEN WARREN
REVISED BY
DATE REVISED

LAST REVISION 03-24-10
DATE PLOTTED => 13-MAY-2010
TIME PLOTTED => 10:25

Dist	COUNTY	ROUTE	POST MILES TOTAL PROJECT	SHEET No.	TOTAL SHEETS
11	SD	15,163, 805	Var	26	64

Stephen P. Warren
LICENSED LANDSCAPE ARCHITECT

5-10-10
PLANS APPROVAL DATE

LICENSED LANDSCAPE ARCHITECT
STEPHEN P. WARREN No. 3442
Stephen P. Warren
Registration Date
10-31-10
Expiration Date
03-16-10
Date
STATE OF CALIFORNIA

THE STATE OF CALIFORNIA OR ITS OFFICERS OR AGENTS SHALL NOT BE RESPONSIBLE FOR THE ACCURACY OR COMPLETENESS OF SCANNED COPIES OF THIS PLAN SHEET.

NOTES:

1. FOR ACCURATE RIGHT OF WAY AND ACCESS DATA, CONTACT RIGHT OF WAY ENGINEERING AT THE DISTRICT OFFICE.
2. Exist 3" WATER METER AND 3" BPA ARE LOCATED AT THE "11-SD-805" LINE, APPROXIMATE STATION 1128 (R) ON THE NORTHSIDE OF THE LINDA VISTA Rd OC.
3. Exist ICC AND IRRIGATION CONTROLLERS "H, I, J AND K" ARE LOCATED AT THE "11-SD-163" LINE AT APPROXIMATE STATION 380 (R).

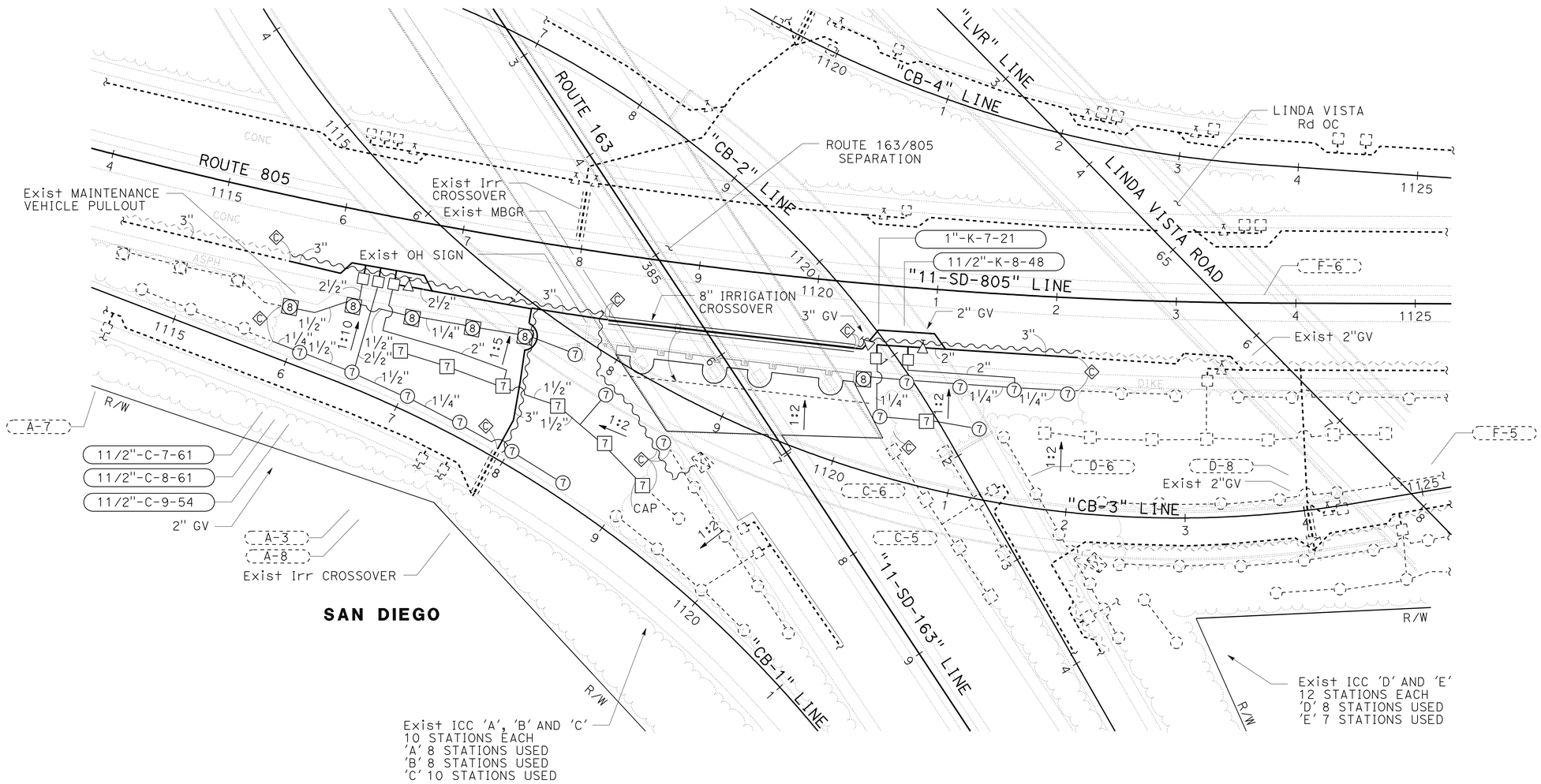

THIS PLAN ACCURATE FOR IRRIGATION WORK ONLY.

IRRIGATION PLAN
LOCATION 7

SCALE: 1" = 50'

IP-5

STATE OF CALIFORNIA - DEPARTMENT OF TRANSPORTATION
Caltrans® LANDSCAPE ARCHITECTURE

SENIOR LANDSCAPE ARCHITECT: STEPHEN ALVAREZ
CALCULATED-DESIGNED BY: JOEL HORTIZUELA
CHECKED BY: STEPHEN WARREN
REVISED BY
DATE REVISED

LAST REVISION 03-24-10
DATE PLOTTED => 13-MAY-2010
TIME PLOTTED => 10:39

Dist	COUNTY	ROUTE	POST MILES TOTAL PROJECT	SHEET No.	TOTAL SHEETS
11	SD	15,163, 805	Var	27	64

LICENSED LANDSCAPE ARCHITECT

5-10-10
PLANS APPROVAL DATE

LICENSED LANDSCAPE ARCHITECT — STEPHEN P. WARREN No. 3442 — Expiration Date 10-31-10 — Renewal Date 03-16-10 — STATE OF CALIFORNIA

THE STATE OF CALIFORNIA OR ITS OFFICERS OR AGENTS SHALL NOT BE RESPONSIBLE FOR THE ACCURACY OR COMPLETENESS OF SCANNED COPIES OF THIS PLAN SHEET.

SPRINKLER SCHEDULE

SYMBOL	TYPE	DESCRIPTION	SPRAY PATTERN	OPERATING PRESSURE (PSI)	PRESSURE COMPENSATING	PLUS / MINUS 5% ② DISCHARGE: GALONS PER SECOND (GPS)	GALONS PER MINUTE (GPM)	GALONS PER HOUR (GPH)	RADIUS (Ft)	WIDTH x LENGTH (Ft)	MATERIAL	NOZZLE SIZE (INCH)	INLET CONNECTION (NPT) (DN IN INCHES)(INCH)	POSITIVE-LOCKING ADJ ARC STOP	BACKSPLASH PREVENTER	DIFFUSER PIN	DISTANCE CONTROL FLAP	ADJ DISCHARGE	RISER: TYPE	MATERIAL: PLASTIC	GALVANIZED	SIZE (IPS) (INCH)	HEIGHT (INCH)	FLOW SHUTOFF DEVICE	SWING JOINT (TYPE)	RISER SUPPORT	SPRINKLER PROTECTOR (TYPE)	REMARKS
[5]	A-5	GEAR DRIVEN	F	50	-	-	4	-	40	-	PL	-	¾	-	-	X	-	-	I	X	-	¾	6	-	1	-	-	③
⑤	A-5	GEAR DRIVEN	P	50	-	-	4	-	40	-	PL	-	¾	-	-	X	-	-	I	X	-	¾	6	-	1	-	-	③⑦
⑥	A-6	GEAR DRIVEN	P	50	-	-	4	-	40	-	PL	-	¾	-	-	X	-	-	-	-	-	-	-	-	1	-	I	③⑦ 12" POP-UP
[7]	A-7	GEAR DRIVEN	F	50	-	-	6.8	-	48	-	PL	-	¾	-	-	X	-	-	I	X	-	¾	6	-	1	-	-	③
⑦	A-7	GEAR DRIVEN	P	50	-	-	6.8	-	48	-	PL	-	¾	-	-	X	-	-	I	X	-	¾	6	-	1	-	-	③⑦
[8]	A-8	GEAR DRIVEN	F	50	-	-	6.8	-	48	-	PL	-	¾	-	-	X	-	-	I	X	-	¾	6	-	1	-	I	③⑦ 12" POP-UP
⑧	A-8	GEAR DRIVEN	P	50	-	-	6.8	-	48	-	PL	-	¾	-	-	X	-	-	-	-	-	-	-	-	1	-	I	③⑦ 12" POP-UP
△	B-1	SHRUB SPRAY	F	30	-	-	3.7	-	15	-	PL	-	½	-	-	X	-	X	I	X	-	½	12	-	1	-	-	⑧⑨
△	B-1	SHRUB SPRAY	H	30	-	-	1.8	-	15	-	PL	-	½	-	-	X	-	X	I	X	-	½	12	-	1	-	-	⑧⑨
△	B-1	SHRUB SPRAY	Q	30	-	-	0.9	-	15	-	PL	-	½	-	-	X	-	X	I	X	-	½	12	-	1	-	-	⑧⑨
●	C-2 Mod	MODIFIED FLOOD BUBBLER	-	30	X	-	0.5	-	-	-	PL	-	½	-	-	-	-	-	⑩	X	-	½	-	-	1	-	-	④⑨

APPLICABLE WHEN CIRCLED BELOW:

X IN BOX DENOTES REQUIREMENT

1 - SEE SPECIAL PROVISIONS.
② - IF A PRESSURE COMPENSATING DEVICE IS SPECIFIED, THE DISCHARGE AND RADII SHOWN REFLECT ITS USE.
③ - SHALL HAVE AN INTERNAL OR EXTERNAL CHECK VALVE.
④ - NON-ADJUSTABLE DISCHARGE RATE.
5 - REQUIRED ADJACENT TO SHOULDERS, CURBS, SIDEWALKS, AND DIKES.
6 - UNLESS OTHERWISE SHOWN ON PLANS.
⑦ - ADJUSTABLE ARC.
⑧ - MATCHED PRECIPITATION RATE NOZZLES.
⑨ - REFER TO PIPE SIZING CHARTS.
⑩ - SEE DETAIL

ABBREVIATIONS:

Adj — ADJUSTABLE
B/B — BRASS/BRONZE
B/B/PL — BRASS/BRONZE/PLASTIC
B/PL — BRASS/PLASTIC
CST — CENTER STRIP
DN — DIAMETER NOMINAL
EST — END STRIP
EQ — EQUAL
Ft — FEET
F — FULL CIRCLE
F/P — FULL/PART CIRCLE
GPH — GALONS PER HOUR
GPM — GALONS PER MINUTE
GPS — GALONS PER SECOND
H — HALF CIRCLE
IPS — IRON PIPE SIZE
NPT — NATIONAL PIPE THREAD
P — PART CIRCLE
PL — PLASTIC
PSI — POUNDS PER SQUARE INCH
Q — QUARTER CIRCLE
SST — SIDE STRIP
T — THIRD CIRCLE
TQ — THREE QUARTER CIRCLE
TT — TWO THIRDS CIRCLE

NOTES:

1. ALL LATERAL PIPE NOT LABELED SHALL BE 1 INCH, OR AS SHOWN ON PIPE SIZING CHARTS.

2. ALL SPRINKLER HEADS, VALVES AND MAINLINE SHOWN NEAR MVP LOCATIONS ARE TO BE INSTALLED OUTSIDE OF THE PAVED MVP AREA. VALVES TO BE INSTALLED AT EXITING END OF THE MPV.

LEGEND:

—SCC— —— —SCC— GSP SCC

—·——·— GSP SUPPLY LINE

[6] [8] SPRINKLER PROTECTOR

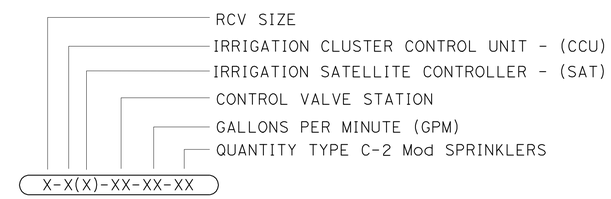

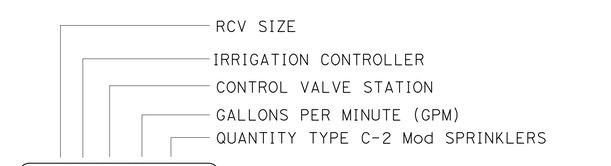

VALVE CODE

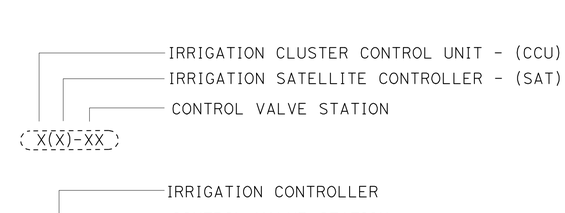

Exist VALVE CODE NO CHANGE

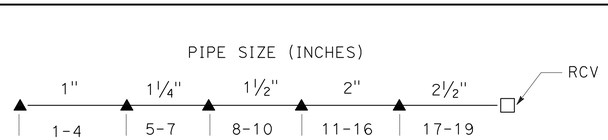

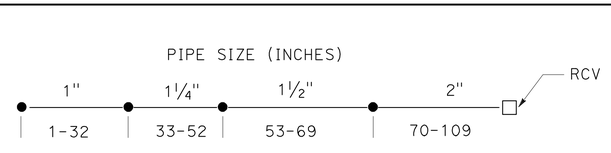

PIPE SIZING CHART
C-2 (Mod) SPRINKLERS
(FLOOD BUBBLER)

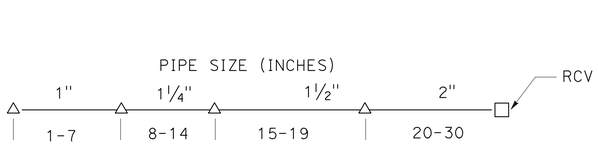

PIPE SIZING CHART
B-1 SHRUB SPRAY

LANDSCAPE DETAILS
LD-1

STATE OF CALIFORNIA - DEPARTMENT OF TRANSPORTATION
Caltrans® LANDSCAPE ARCHITECTURE
SENIOR LANDSCAPE ARCHITECT: STEPHEN ALVAREZ
CALCULATED-DESIGNED BY: JOEL HORTIZUELA
CHECKED BY: STEPHEN WARREN
REVISED BY / DATE REVISED

LAST REVISION 03-24-10
DATE PLOTTED => 13-MAY-2010
TIME PLOTTED => 10:37

Dist	COUNTY	ROUTE	POST MILES TOTAL PROJECT	SHEET No.	TOTAL SHEETS
11	SD	15,163, 805	Var	28	64

Stephen P. Warren
LICENSED LANDSCAPE ARCHITECT

5-10-10
PLANS APPROVAL DATE

LICENSED LANDSCAPE ARCHITECT
STEPHEN P. WARREN No. 3442
Stephen P. Warren
Registered
10-31-10
Renewal Date
03-16-10
Date
STATE OF CALIFORNIA

THE STATE OF CALIFORNIA OR ITS OFFICERS OR AGENTS SHALL NOT BE RESPONSIBLE FOR THE ACCURACY OR COMPLETENESS OF SCANNED COPIES OF THIS PLAN SHEET.

NOTES:

1. INSTALL SPRINKLER TYPE C-2 Mod ON UP-HILL SIDE OF PLANT WHEN ON SLOPE.
2. INSTALL SPRINKLER WITHIN TREE BASIN.

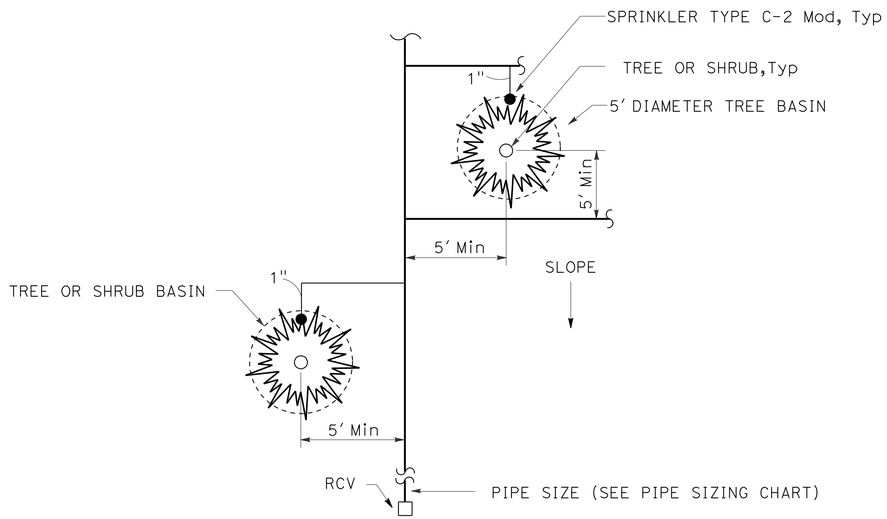

PLAN

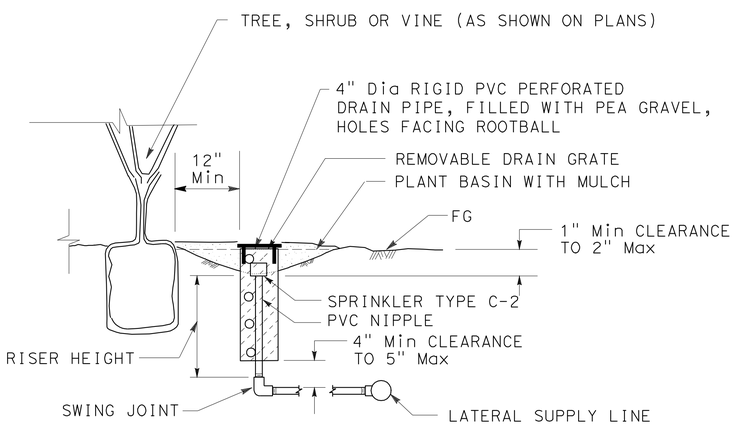

SECTION

SPRINKLER TYPE C-2 Mod INSTALLATION

THRUST BLOCK DETAIL

INSTALLATION	TYPE FITTING	INSTALLATION	TYPE FITTING
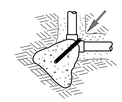	90° ELL	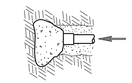	DEAD END
	BEND 45° 22.5° 11.25°		GATE VALVE
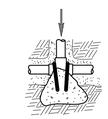	TEE		VERTICAL BEND (TYPE I) 45° 22.5° 11.25°
			OR VERTICAL BEND (TYPE II) 45° 22.5° 11.25°

NOTES:

Min 1 CF PCC FOR 1½" PIPE SIZE AND SMALLER.
Min 2 CF PCC FOR 2" PIPE SIZE.
Min 3 CF PCC FOR 3" AND 4" PIPE SIZE.
USE #3 REINFORCING BAR WHERE SHOWN.

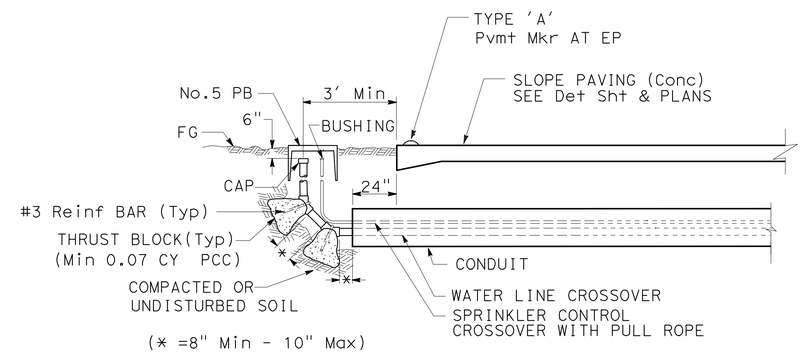

LONGITUDINAL SECTION

IRRIGATION CROSSOVER (MODIFIED)

LANDSCAPE DETAILS

NO SCALE

LD-2

STATE OF CALIFORNIA - DEPARTMENT OF TRANSPORTATION
Caltrans® LANDSCAPE ARCHITECTURE

SENIOR LANDSCAPE ARCHITECT: STEPHEN ALVAREZ
CALCULATED-DESIGNED BY: JOEL HORTIZUELA
CHECKED BY: STEPHEN WARREN
REVISED BY
DATE REVISED

LAST REVISION 03-24-10
DATE PLOTTED => 13-MAY-2010
TIME PLOTTED => 10:45

Dist	COUNTY	ROUTE	POST MILES TOTAL PROJECT	SHEET No.	TOTAL SHEETS
11	SD	15,163, 805	Var	29	64

Stephen P. Warren
LICENSED LANDSCAPE ARCHITECT

5-10-10
PLANS APPROVAL DATE

LICENSED LANDSCAPE ARCHITECT
STEPHEN P. WARREN No. 3442
Stephen P. Warren
Registered Expires Date
10-31-10
Renewal Date
03-16-10
Date
STATE OF CALIFORNIA

THE STATE OF CALIFORNIA OR ITS OFFICERS OR AGENTS SHALL NOT BE RESPONSIBLE FOR THE ACCURACY OR COMPLETENESS OF SCANNED COPIES OF THIS PLAN SHEET.

NOTES:

1. SEE DETAIL PLANS FOR LIMITS AT EACH LOCATION. LIMITS OF SLOPE PAVING WILL BE VERIFIED ON SITE.
2. SEE SHEET LD-2 FOR IRRIGATION CROSSOVER UNDER SLOPE PAVING DETAIL FOR PLACEMENT.
3. REINFORCING BAR TO HAVE 12" Min OVERLAP.

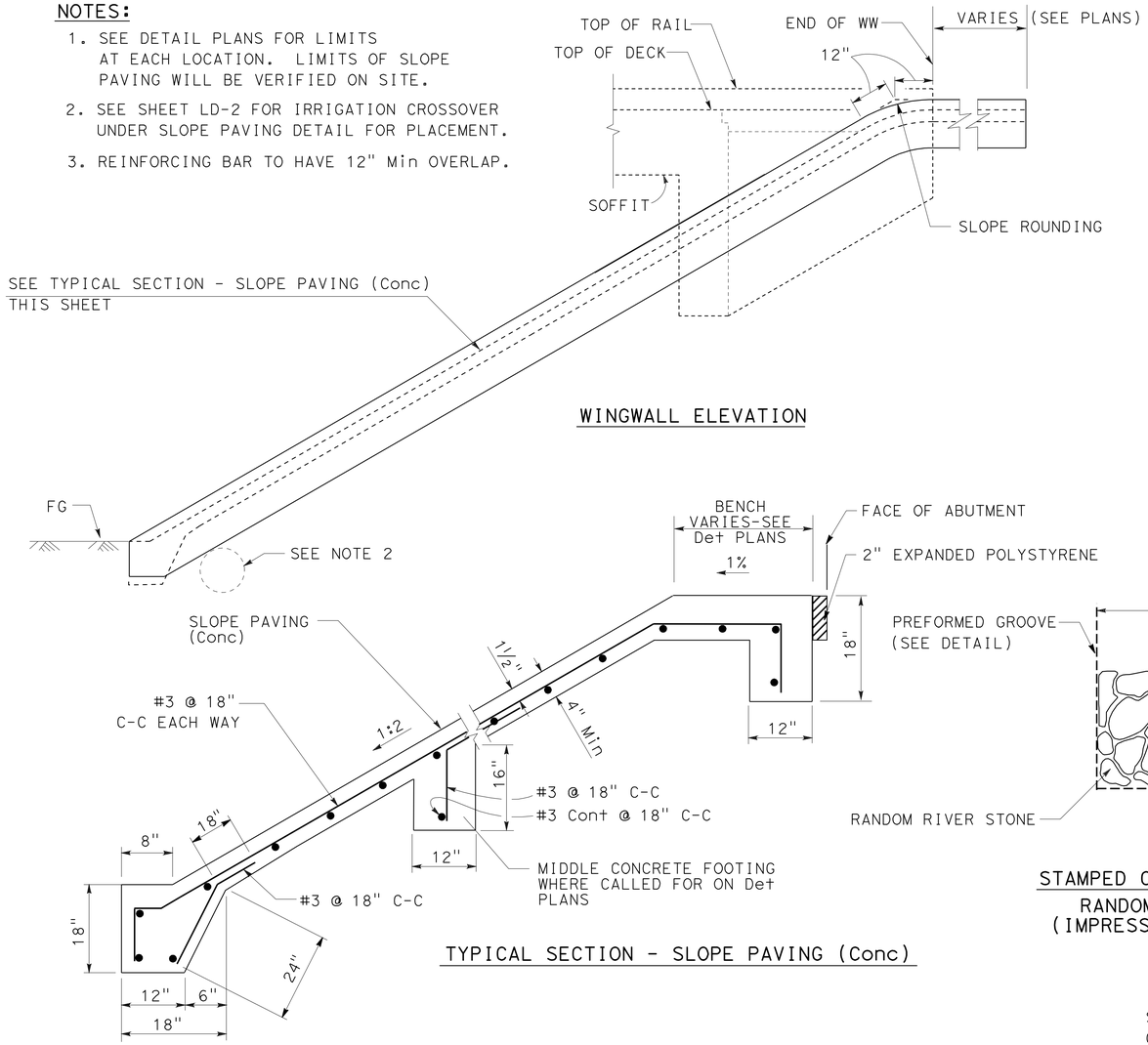

WINGWALL ELEVATION

TYPICAL SECTION - SLOPE PAVING (Conc)

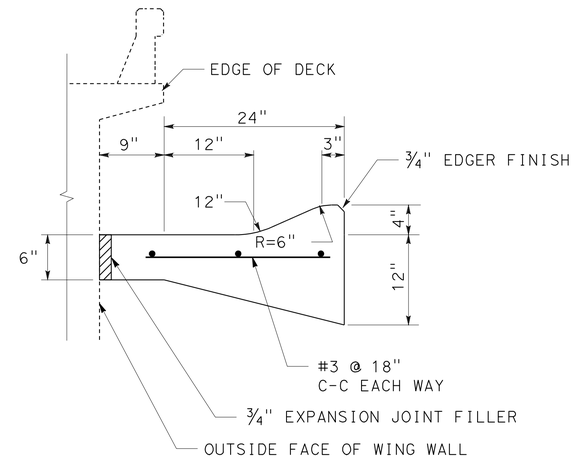

SECTION B-B

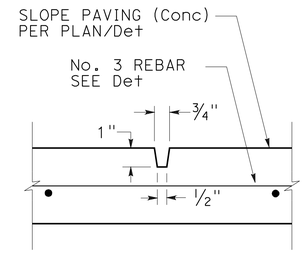

DETAIL
PREFORMED GROOVE

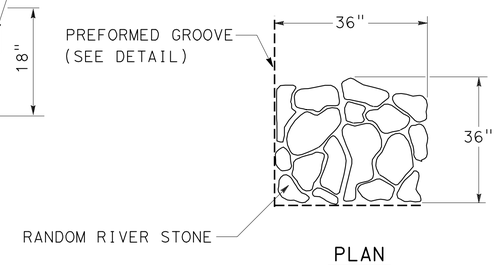

PLAN

STAMPED CONCRETE PATTERN
RANDOM RIVER STONE
(IMPRESSION DEPTH 0.25")

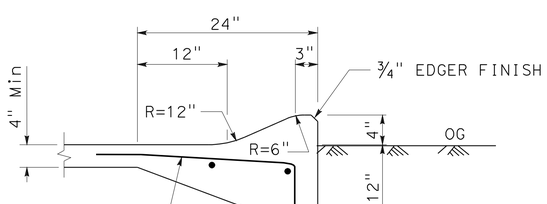

SECTION A-A

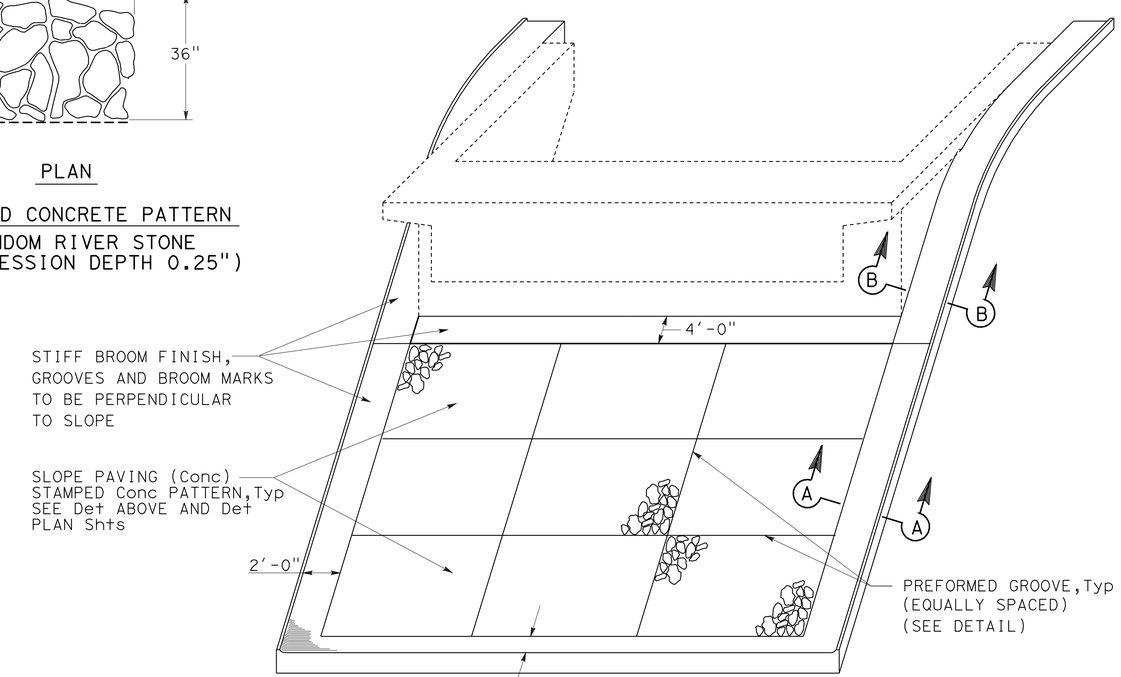

TYPICAL INSTALLATION

SLOPE PAVING (CONCRETE)

LANDSCAPE DETAILS

NO SCALE

LD-3

STATE OF CALIFORNIA - DEPARTMENT OF TRANSPORTATION
Caltrans LANDSCAPE ARCHITECTURE

SENIOR LANDSCAPE ARCHITECT: STEPHEN ALVAREZ

CALCULATED-DESIGNED BY: JOEL HORTIZUELA
CHECKED BY: STEPHEN WARREN

REVISED BY
DATE REVISED

LAST REVISION 03-24-10
DATE PLOTTED => 13-MAY-2010
TIME PLOTTED => 10:37

Dist	COUNTY	ROUTE	POST MILES TOTAL PROJECT	SHEET No.	TOTAL SHEETS
11	SD	15,163, 805	Var	30	64

Stephen P. Warren
LICENSED LANDSCAPE ARCHITECT

5-10-10
PLANS APPROVAL DATE

LICENSED LANDSCAPE ARCHITECT
STEPHEN P. WARREN No. 3442
Stephen P. Warren
Registered Date
10-31-10
Renewal Date
03-16-10
Date
STATE OF CALIFORNIA

THE STATE OF CALIFORNIA OR ITS OFFICERS OR AGENTS SHALL NOT BE RESPONSIBLE FOR THE ACCURACY OR COMPLETENESS OF SCANNED COPIES OF THIS PLAN SHEET.

NOTES:

1. SEE DETAIL PLANS FOR LIMITS AT EACH LOCATION. LIMITS OF SLOPE PAVING WILL BE VERIFIED ON SITE.
2. SEE DETAIL SHEET FOR IRRIGATION CROSSOVER UNDER SLOPE PAVING DETAIL FOR PLACEMENT.
3. REINFORCING BAR TO HAVE 12" Min OVERLAP.

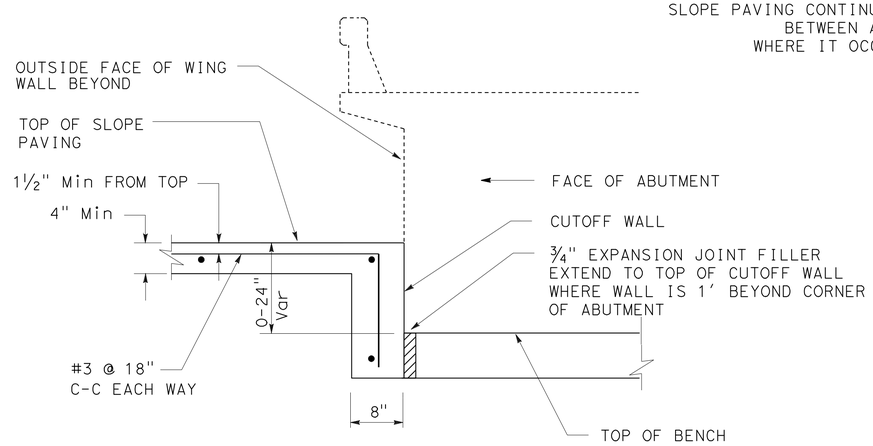

SECTION D-D
CUTOFF WALL

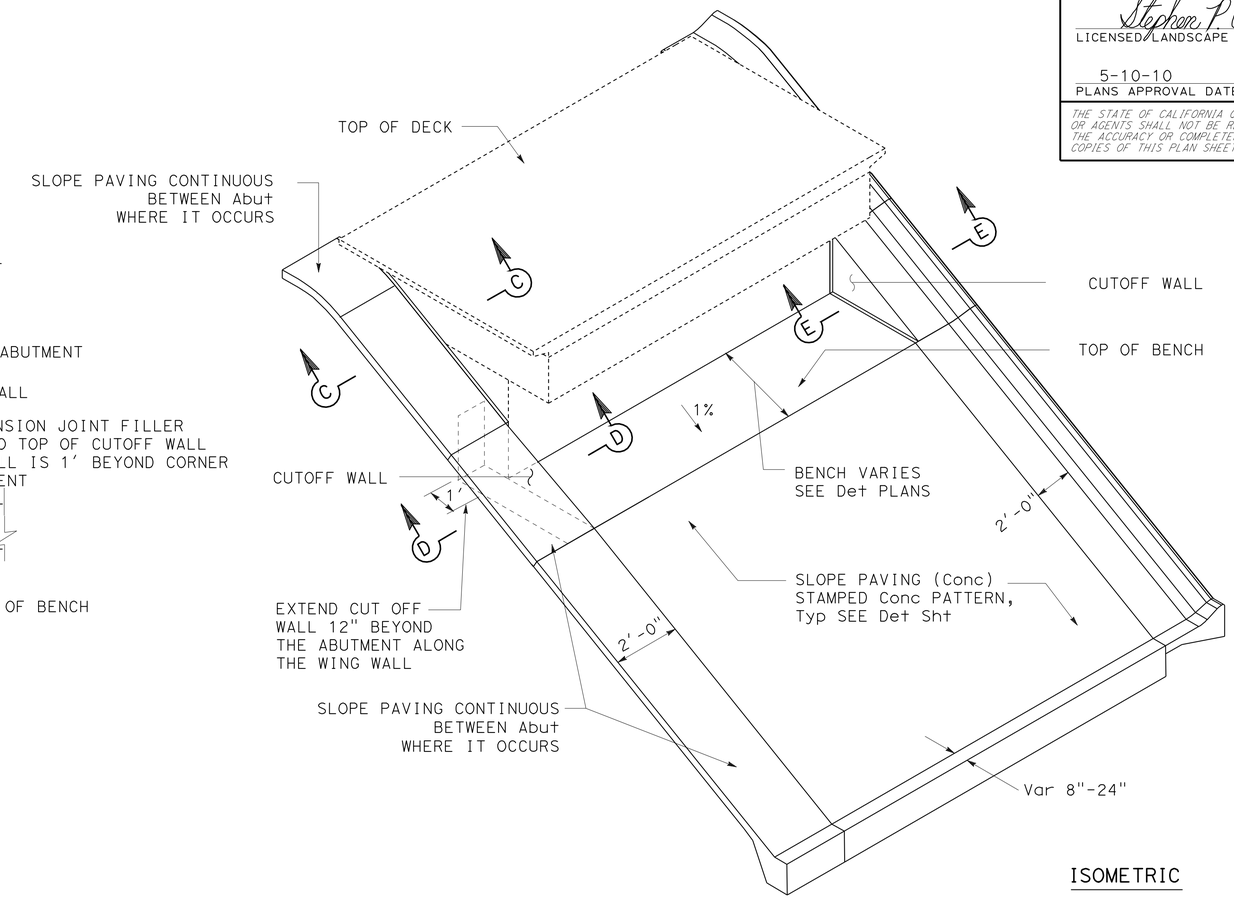

ISOMETRIC

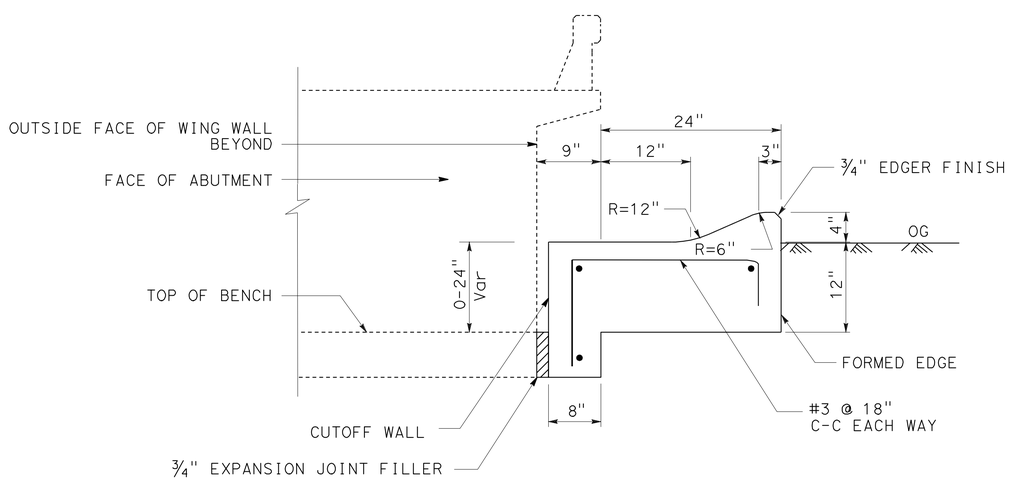

SECTION E-E
CUTOFF WALL

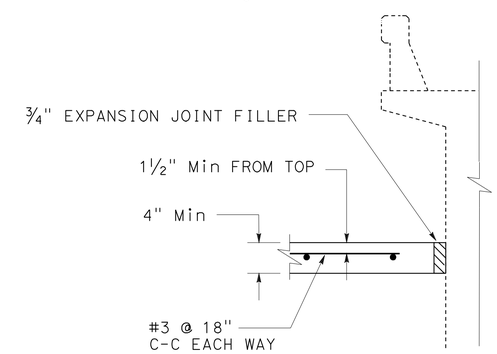

SECTION C-C

SLOPE PAVING (CONCRETE)

LANDSCAPE DETAILS

NO SCALE

LD-4

STATE OF CALIFORNIA - DEPARTMENT OF TRANSPORTATION
Caltrans® LANDSCAPE ARCHITECTURE

SENIOR LANDSCAPE ARCHITECT: STEPHEN ALVAREZ
CALCULATED-DESIGNED BY: JOEL HORTIZUELA
CHECKED BY: STEPHEN WARREN
REVISED BY
DATE REVISED

LAST REVISION 03-24-10
DATE PLOTTED => 13-MAY-2010
TIME PLOTTED => 10:37

Dist	COUNTY	ROUTE	POST MILES TOTAL PROJECT	SHEET No.	TOTAL SHEETS
11	SD	15,163, 805	Var	31	64

Stephen P. Warren
LICENSED LANDSCAPE ARCHITECT

5-10-10
PLANS APPROVAL DATE

LICENSED LANDSCAPE ARCHITECT STEPHEN P. WARREN No. 3442 Stephen P. Warren Expiration Date 10-31-10 Renewal Date 03-16-10 Date STATE OF CALIFORNIA

THE STATE OF CALIFORNIA OR ITS OFFICERS OR AGENTS SHALL NOT BE RESPONSIBLE FOR THE ACCURACY OR COMPLETENESS OF SCANNED COPIES OF THIS PLAN SHEET.

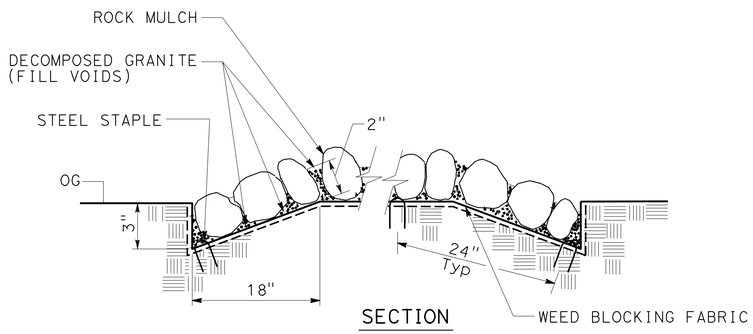

SECTION

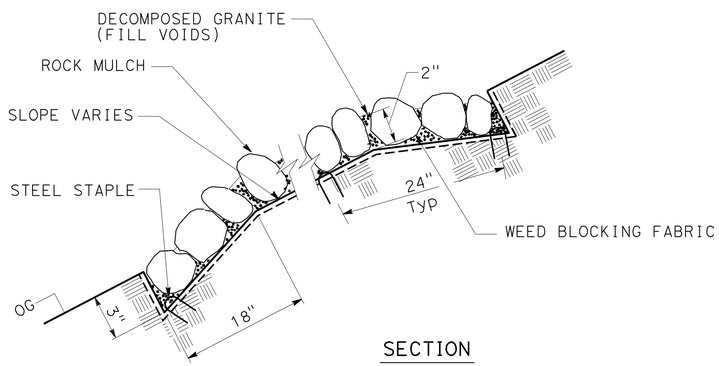

SECTION
ON SLOPE

ROCK MULCH

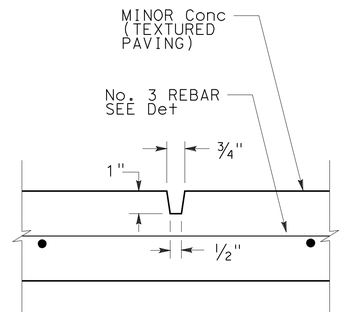

SECTION

PREFORMED GROOVE
(Typ)

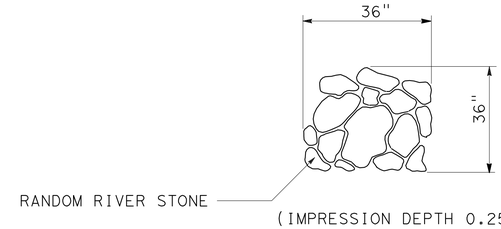

STAMPED CONCRETE PATTERN
RANDOM RIVER STONE

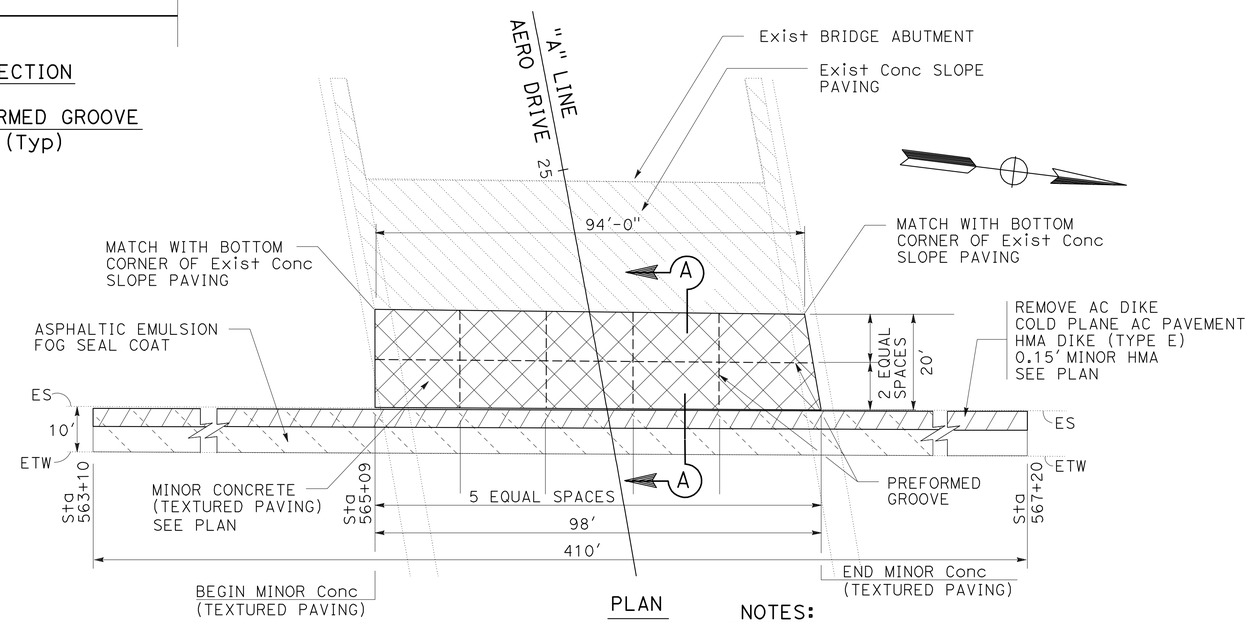

PLAN

NOTES:

1. REINFORCING BAR TO HAVE 12" Min OVERLAP.
2. ASPHALTIC EMULSION FOG SEAL COAT SHALL BE APPLIED TO Exist AC Shld WITHIN THE LIMITS SHOWN.

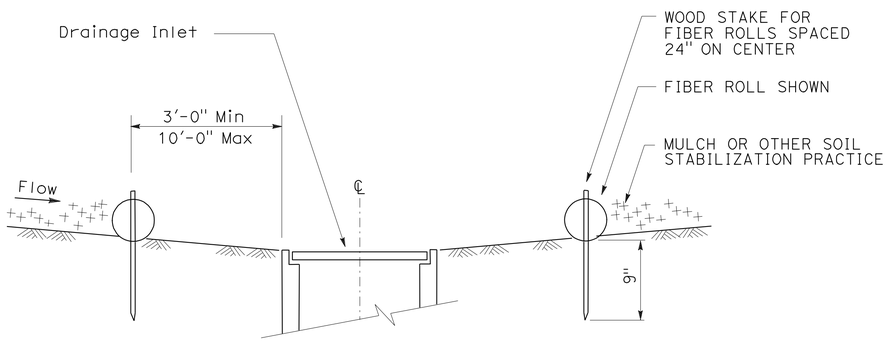

FIBER ROLL

LOCATION 3 AT DRAIN INLET

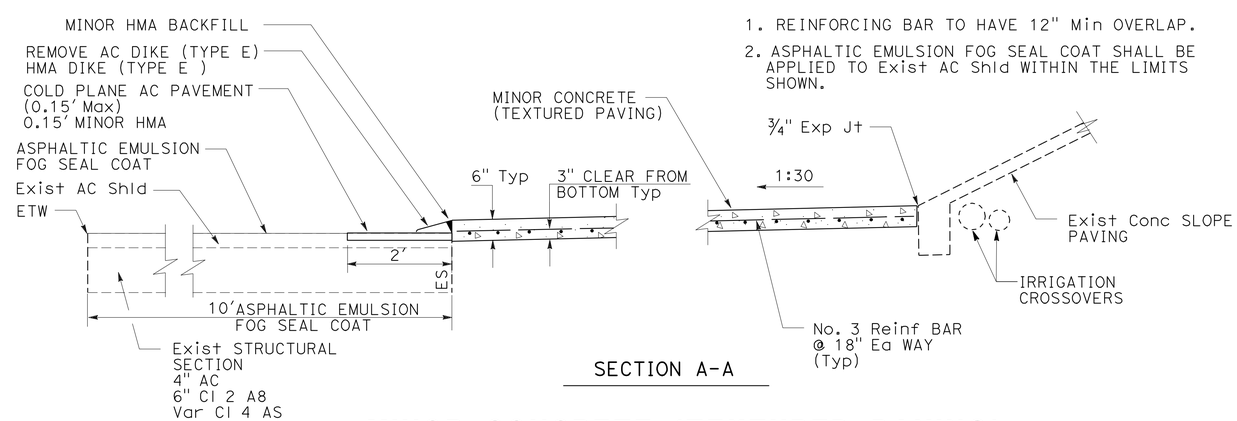

SECTION A-A

MINOR CONCRETE (TEXTURED PAVING)

LOCATION 1

LANDSCAPE DETAILS

NO SCALE

LD-5

REVISED BY | DATE REVISED
JOEL HORTIZUELA | STEPHEN WARREN
CALCULATED-DESIGNED BY | CHECKED BY
SENIOR LANDSCAPE ARCHITECT | STEPHEN ALVAREZ

STATE OF CALIFORNIA - DEPARTMENT OF TRANSPORTATION
Caltrans® LANDSCAPE ARCHITECTURE

LAST REVISION 03-24-10 | DATE PLOTTED => 13-MAY-2010 | TIME PLOTTED => 10:37

Dist	COUNTY	ROUTE	POST MILES TOTAL PROJECT	SHEET No.	TOTAL SHEETS
11	SD	15,163, 805	Var	32	64

Stephen P. Warren
LICENSED LANDSCAPE ARCHITECT

5-10-10
PLANS APPROVAL DATE

LICENSED LANDSCAPE ARCHITECT
STEPHEN P. WARREN No. 3442
Stephen P. Warren
Registration Date
10-31-10
Renewal Date
03-16-10
Date
STATE OF CALIFORNIA

THE STATE OF CALIFORNIA OR ITS OFFICERS OR AGENTS SHALL NOT BE RESPONSIBLE FOR THE ACCURACY OR COMPLETENESS OF SCANNED COPIES OF THIS PLAN SHEET.

NOTE:

1. ALL OFFSET DIMENSIONS ARE PERPENDICULAR TO THE FACE OF THE Exist Conc DRAINAGE CHANNEL.

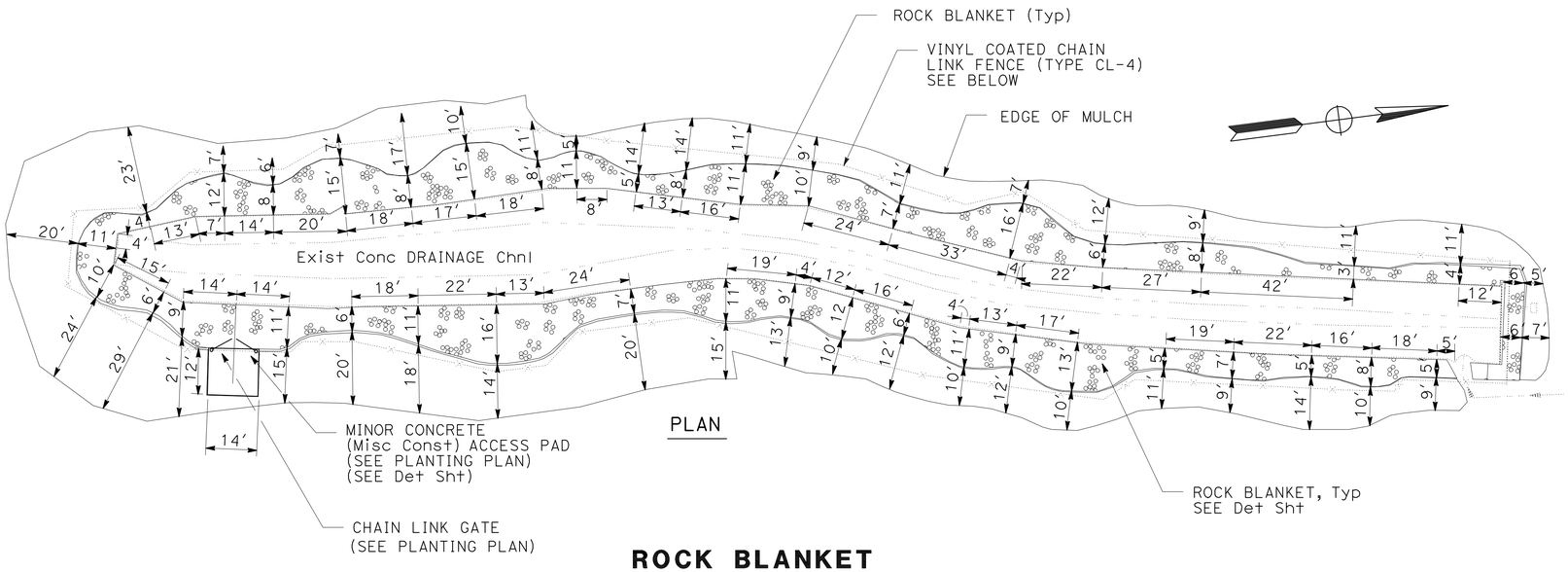

PLAN

ROCK BLANKET

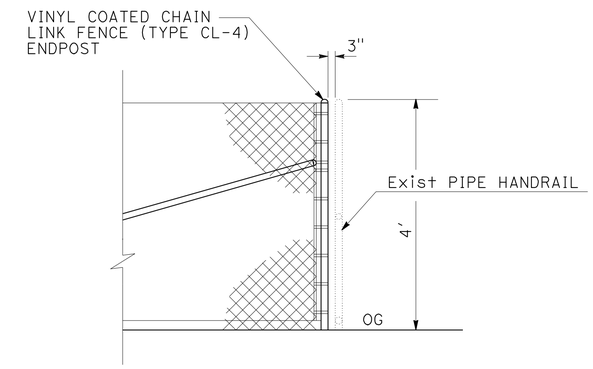

ELEVATION

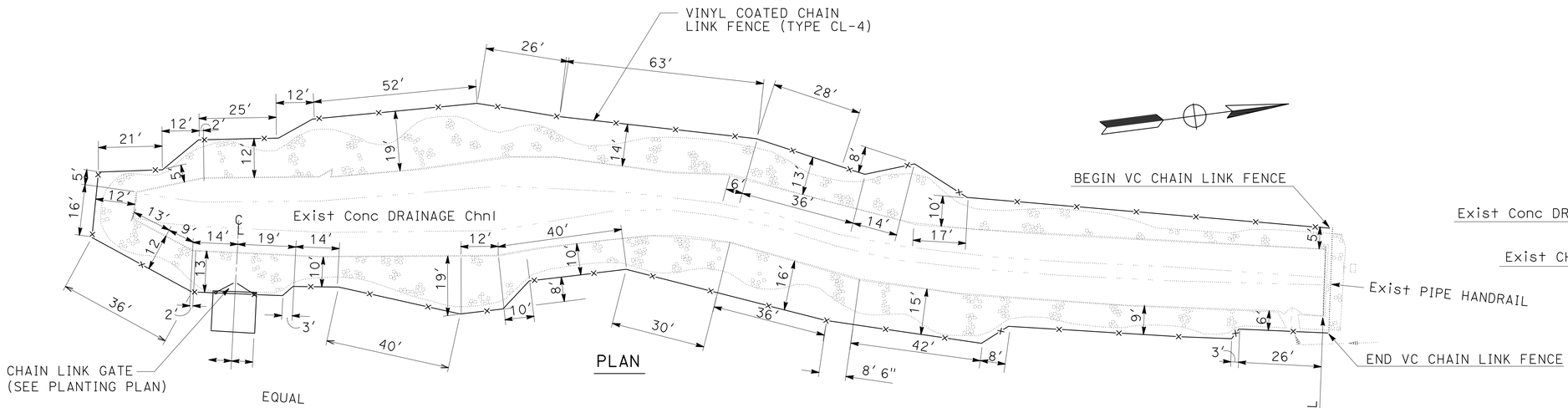

PLAN

VINYL COATED CHAIN LINK FENCE (TYPE CL-4)

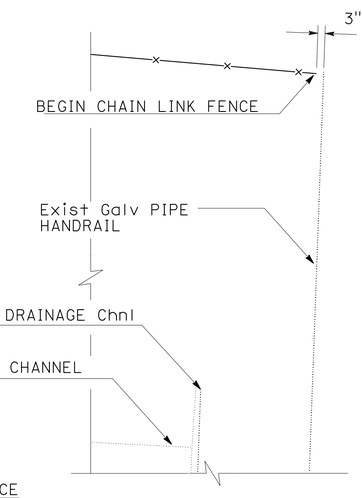

PLAN

TYPE CL-4 ENDPOST AT Exist Galv PIPE RAILING Typ

VINYL COATED CHAIN LINK FENCE (TYPE CL-4)

LANDSCAPE DETAILS
LOCATION 2

NO SCALE

LD-6

STATE OF CALIFORNIA - DEPARTMENT OF TRANSPORTATION
Caltrans® LANDSCAPE ARCHITECTURE
SENIOR LANDSCAPE ARCHITECT: STEPHEN ALVAREZ
CALCULATED-DESIGNED BY: JOEL HORTIZUELA
CHECKED BY: STEPHEN WARREN
REVISED BY
DATE REVISED

LAST REVISION 03-24-10
DATE PLOTTED => 13-MAY-2010
TIME PLOTTED => 10:38

Dist	COUNTY	ROUTE	POST MILES TOTAL PROJECT	SHEET No.	TOTAL SHEETS
11	SD	15,163, 805	Var	33	64

Stephen P. Warren
LICENSED LANDSCAPE ARCHITECT

5-10-10
PLANS APPROVAL DATE

LICENSED LANDSCAPE ARCHITECT STEPHEN P. WARREN No. 3442 STATE OF CALIFORNIA
Expiration Date 10-31-10
Renewal Date 03-16-10
Date

THE STATE OF CALIFORNIA OR ITS OFFICERS OR AGENTS SHALL NOT BE RESPONSIBLE FOR THE ACCURACY OR COMPLETENESS OF SCANNED COPIES OF THIS PLAN SHEET.

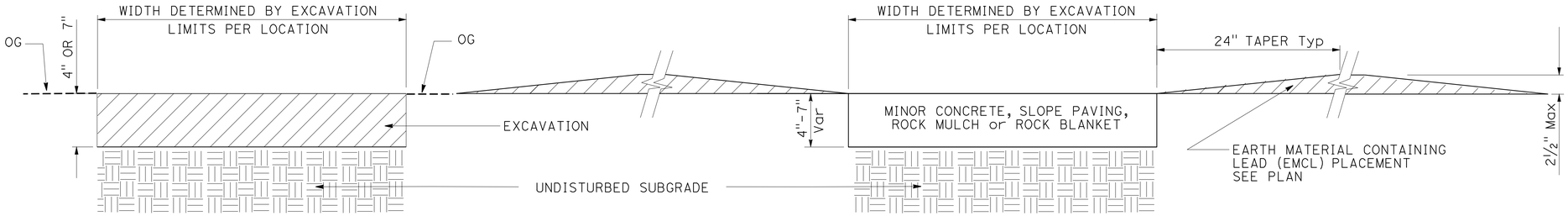

EXISTING CONDITION - ROADWAY EXCAVATION

EARTH MATERIAL CONTAINING LEAD (EMCL) PLACEMENT

MINOR CONCRETE, SLOPE PAVING, ROCK MULCH, ROCK BLANKET (Misc Const)

EARTHWORK

ALL LOCATIONS

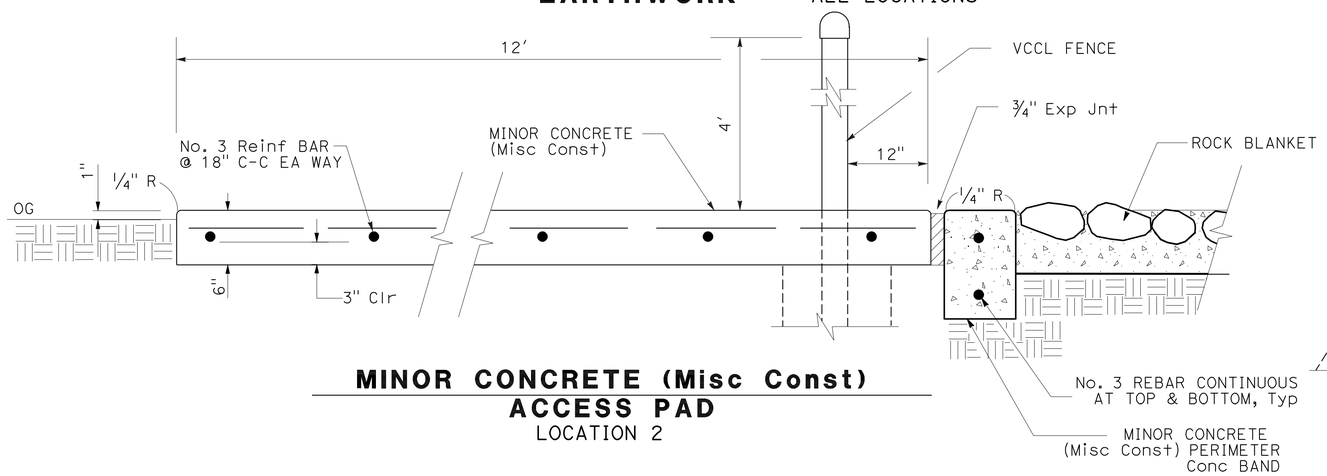

MINOR CONCRETE (Misc Const) ACCESS PAD

LOCATION 2

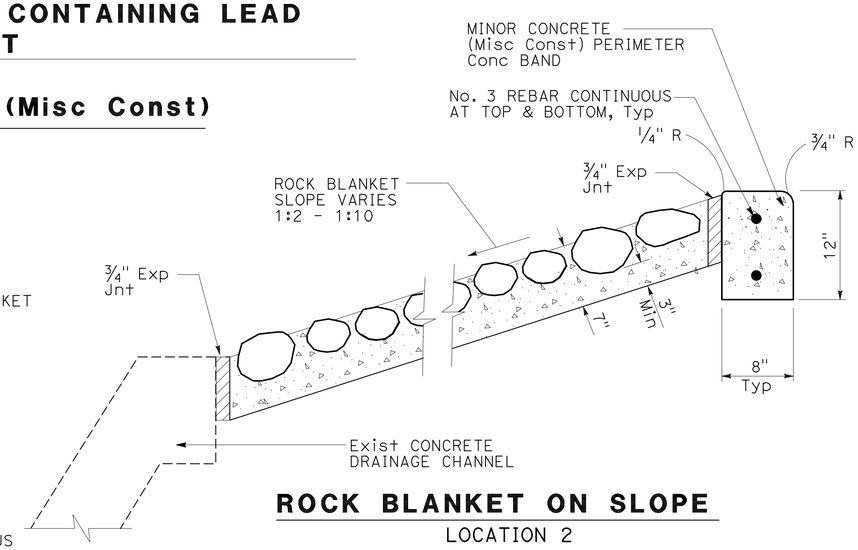

ROCK BLANKET ON SLOPE

LOCATION 2

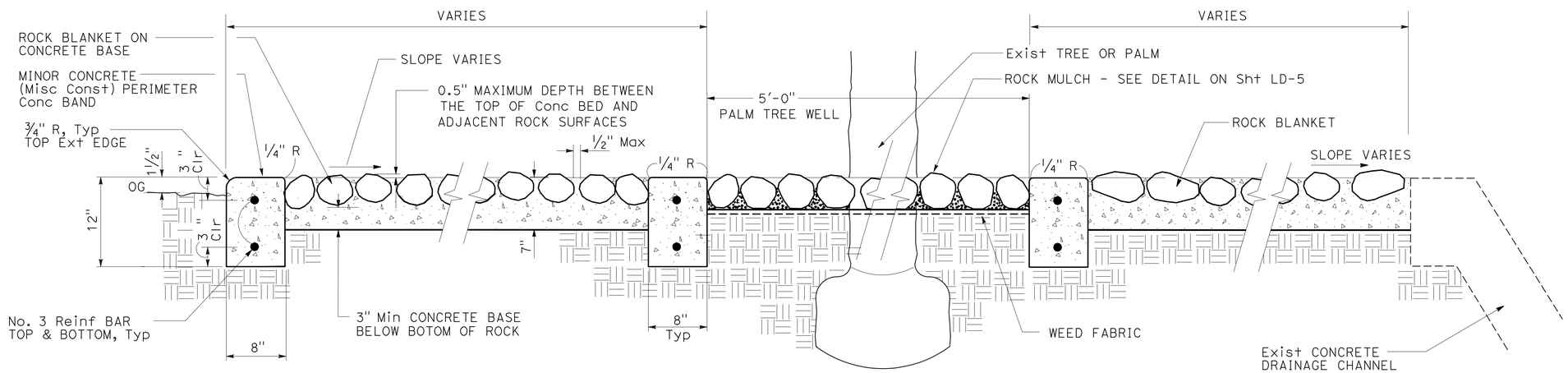

ROCK BLANKET

LOCATION 2

LANDSCAPE DETAILS

LOCATION 2

NO SCALE

LD-7

STATE OF CALIFORNIA - DEPARTMENT OF TRANSPORTATION
Caltrans® LANDSCAPE ARCHITECTURE

SENIOR LANDSCAPE ARCHITECT: STEPHEN ALVAREZ

CALCULATED-DESIGNED BY: JOEL HORTIZUELA
CHECKED BY: STEPHEN WARREN

REVISED BY
DATE REVISED

LAST REVISION 03-24-10
DATE PLOTTED => 13-MAY-2010
TIME PLOTTED => 10:38

Dist	COUNTY	ROUTE	POST MILES TOTAL PROJECT	SHEET No.	TOTAL SHEETS
11	SD	15,163, 805	Var	34	64

LICENSED LANDSCAPE ARCHITECT

5-10-10
PLANS APPROVAL DATE

LICENSED LANDSCAPE ARCHITECT — STEPHEN P. WARREN No. 3442 — Signature 10-31-10 Renewal Date — 03-16-10 Date — STATE OF CALIFORNIA

THE STATE OF CALIFORNIA OR ITS OFFICERS OR AGENTS SHALL NOT BE RESPONSIBLE FOR THE ACCURACY OR COMPLETENESS OF SCANNED COPIES OF THIS PLAN SHEET.

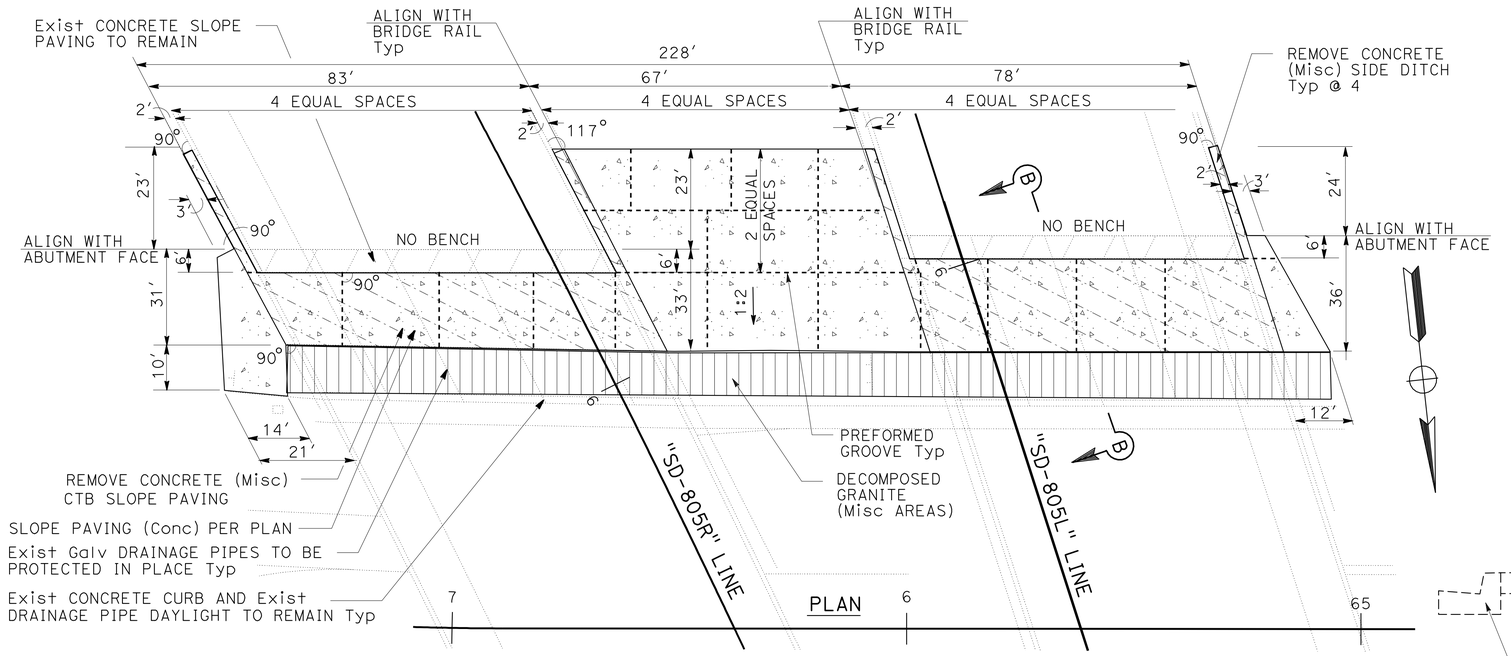

SLOPE PAVING (Conc)

LOCATION 3

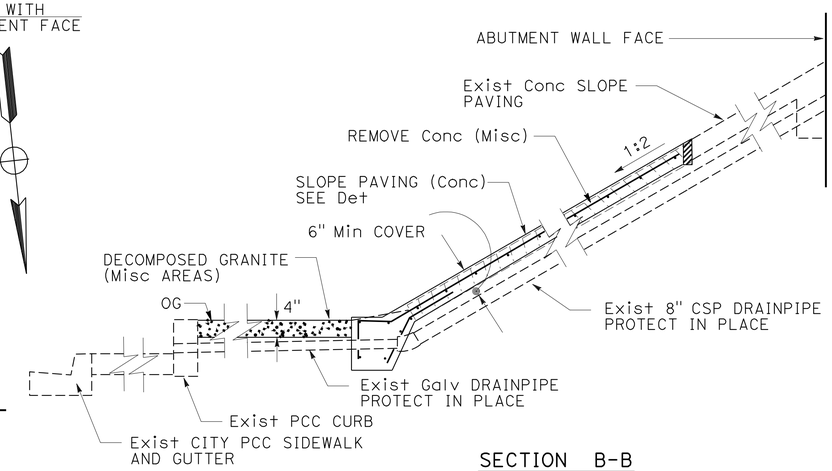

SECTION B-B

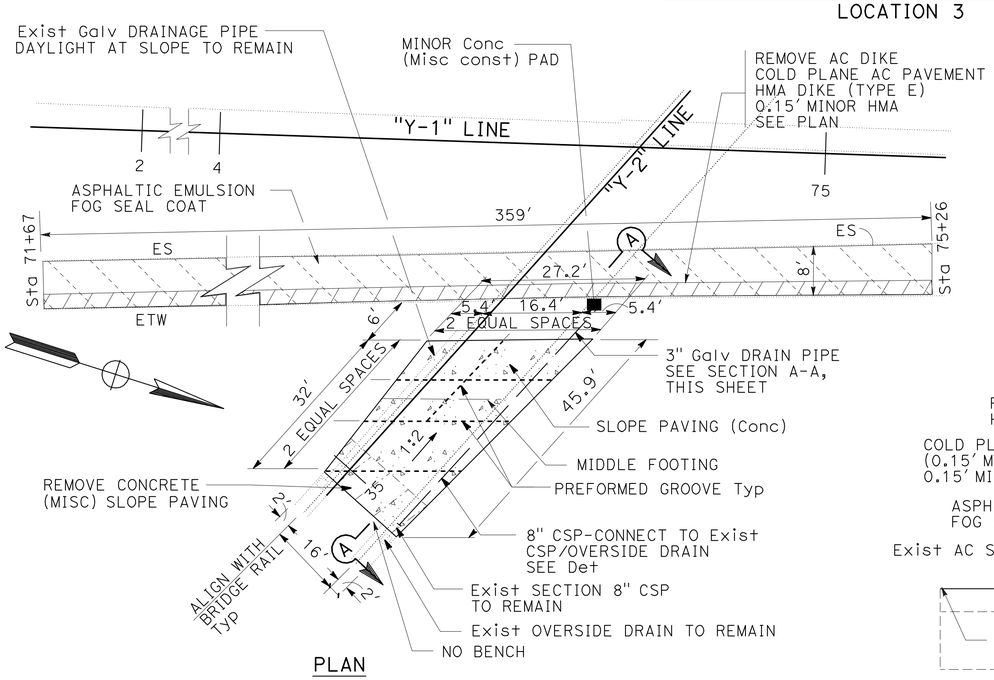

PLAN

SLOPE PAVING (Conc)/ 8" CSP

LOCATION 4

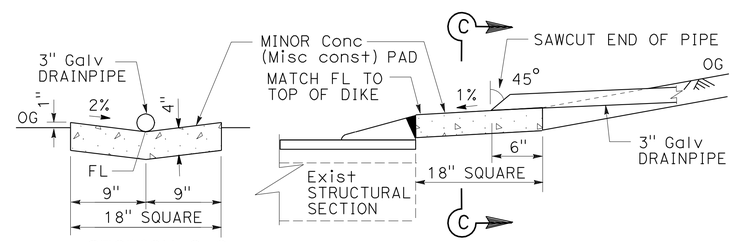

SECTION C-C

END PIPE ENLARGEMENT DETAIL

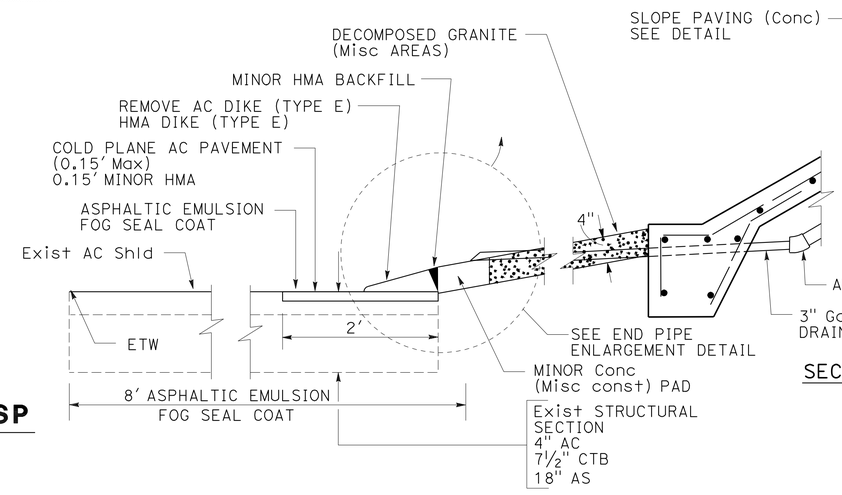

SECTION A-A

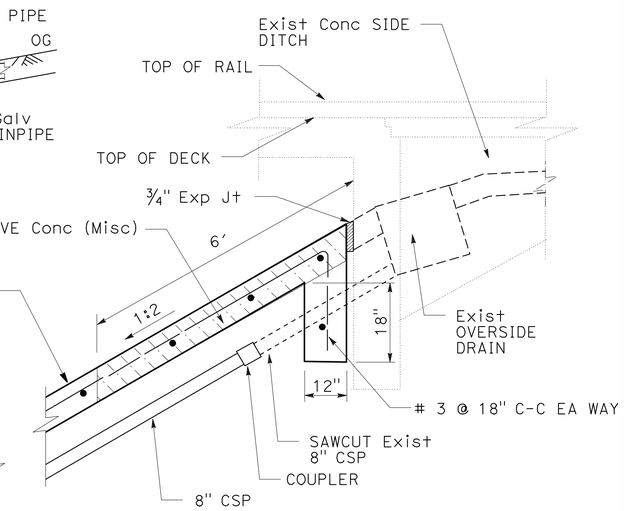

NOTE:

1. ASPHALTIC EMULSION FOG SEAL COAT SHALL BE APPLIED TO Exist AC Shld WITHIN THE LIMITS SHOWN.

LANDSCAPE DETAILS
LOCATION 3 & 4

NO SCALE

LD-8

REVISED BY	DATE REVISED
JOEL HORTIZUELA	STEPHEN WARREN
CALCULATED-DESIGNED BY	CHECKED BY
SENIOR LANDSCAPE ARCHITECT	STEPHEN ALVAREZ

STATE OF CALIFORNIA - DEPARTMENT OF TRANSPORTATION
Caltrans® LANDSCAPE ARCHITECTURE

LAST REVISION 03-24-10 | DATE PLOTTED => 13-MAY-2010 | TIME PLOTTED => 10:38

Dist	COUNTY	ROUTE	POST MILES TOTAL PROJECT	SHEET No.	TOTAL SHEETS
11	SD	15,163, 805	Var	35	64

Stephen P. Warren
LICENSED LANDSCAPE ARCHITECT

5-10-10
PLANS APPROVAL DATE

LICENSED LANDSCAPE ARCHITECT STEPHEN P. WARREN No. 3442 Expiration Date 10-31-10 Renewal Date 03-16-10 Date STATE OF CALIFORNIA

THE STATE OF CALIFORNIA OR ITS OFFICERS OR AGENTS SHALL NOT BE RESPONSIBLE FOR THE ACCURACY OR COMPLETENESS OF SCANNED COPIES OF THIS PLAN SHEET.

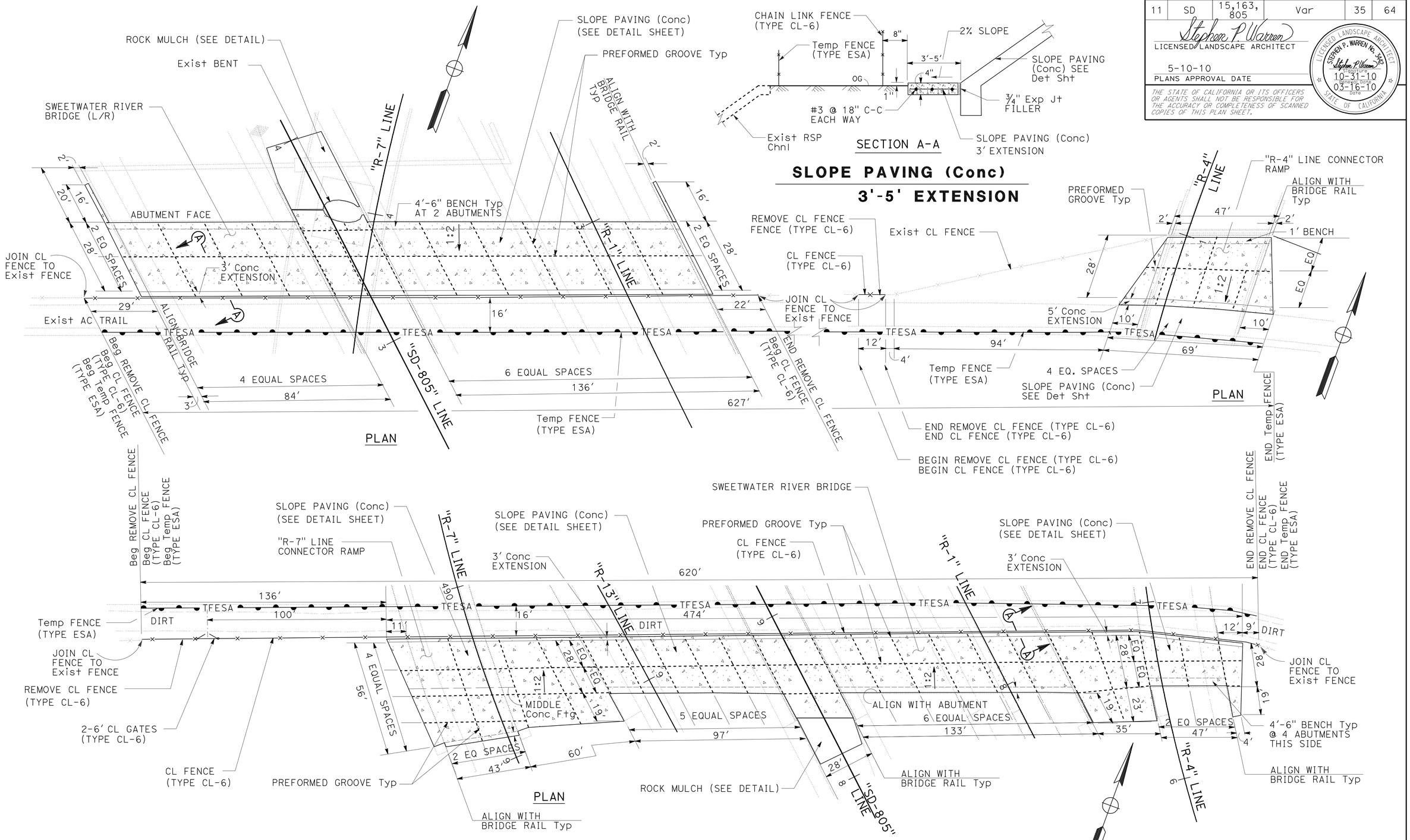

SLOPE PAVING (Conc)
LOCATION 5

LANDSCAPE DETAILS
LOCATION 5

NO SCALE

LD-9

STATE OF CALIFORNIA - DEPARTMENT OF TRANSPORTATION
Caltrans® LANDSCAPE ARCHITECTURE

SENIOR LANDSCAPE ARCHITECT: STEPHEN ALVAREZ
CALCULATED-DESIGNED BY: JOEL HORTIZUELA
CHECKED BY: STEPHEN WARREN
REVISED BY / DATE REVISED

LAST REVISION 03-24-10
DATE PLOTTED => 18-MAY-2010
TIME PLOTTED => 06:04

Dist	COUNTY	ROUTE	POST MILES TOTAL PROJECT	SHEET No.	TOTAL SHEETS
11	SD	15,163, 805	Var	36	64

Stephen P. Warren
LICENSED LANDSCAPE ARCHITECT

5-10-10
PLANS APPROVAL DATE

LICENSED LANDSCAPE ARCHITECT
STEPHEN P. WARREN No. 3442
Stephen P. Warren
Registered Date
10-31-10
Expiration Date
03-16-10
Date
STATE OF CALIFORNIA

THE STATE OF CALIFORNIA OR ITS OFFICERS OR AGENTS SHALL NOT BE RESPONSIBLE FOR THE ACCURACY OR COMPLETENESS OF SCANNED COPIES OF THIS PLAN SHEET.

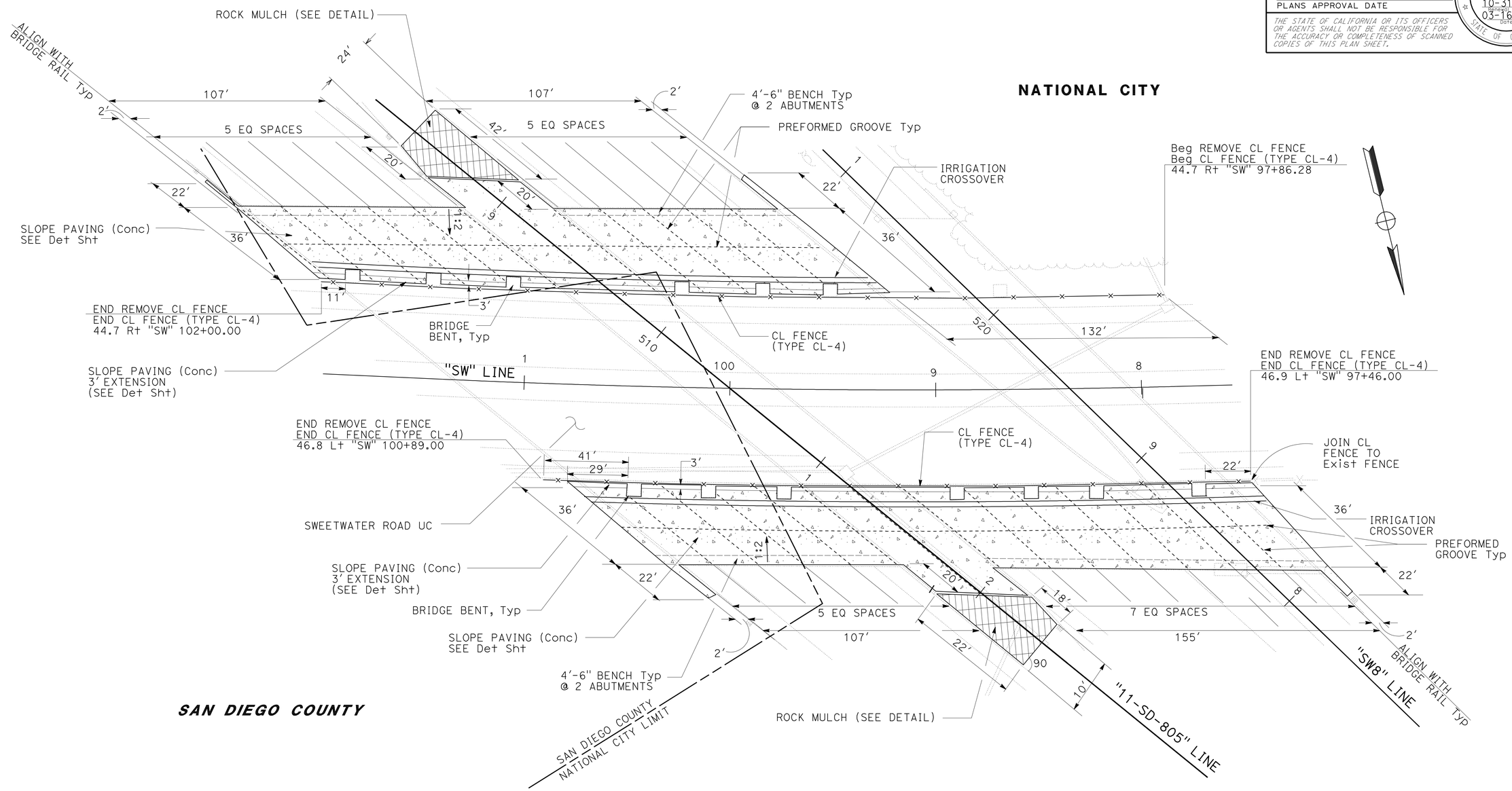

LANDSCAPE DETAILS
LOCATION 6

NO SCALE

LD-10

STATE OF CALIFORNIA - DEPARTMENT OF TRANSPORTATION
Caltrans® LANDSCAPE ARCHITECTURE

SENIOR LANDSCAPE ARCHITECT: STEPHEN ALVAREZ
CALCULATED-DESIGNED BY: JOEL HORTIZUELA
CHECKED BY: STEPHEN WARREN
REVISED BY
DATE REVISED

LAST REVISION 03-24-10
DATE PLOTTED => 18-MAY-2010
TIME PLOTTED => 06:05

Dist	COUNTY	ROUTE	POST MILES TOTAL PROJECT	SHEET No.	TOTAL SHEETS
11	SD	15,163, 805	Var	37	64

Stephen P. Warren
LICENSED LANDSCAPE ARCHITECT

5-10-10
PLANS APPROVAL DATE

LICENSED LANDSCAPE ARCHITECT
STEPHEN P. WARREN No. 3442
Stephen P. Warren
10-31-10 Expiration Date
03-16-10 Date
STATE OF CALIFORNIA

THE STATE OF CALIFORNIA OR ITS OFFICERS OR AGENTS SHALL NOT BE RESPONSIBLE FOR THE ACCURACY OR COMPLETENESS OF SCANNED COPIES OF THIS PLAN SHEET.

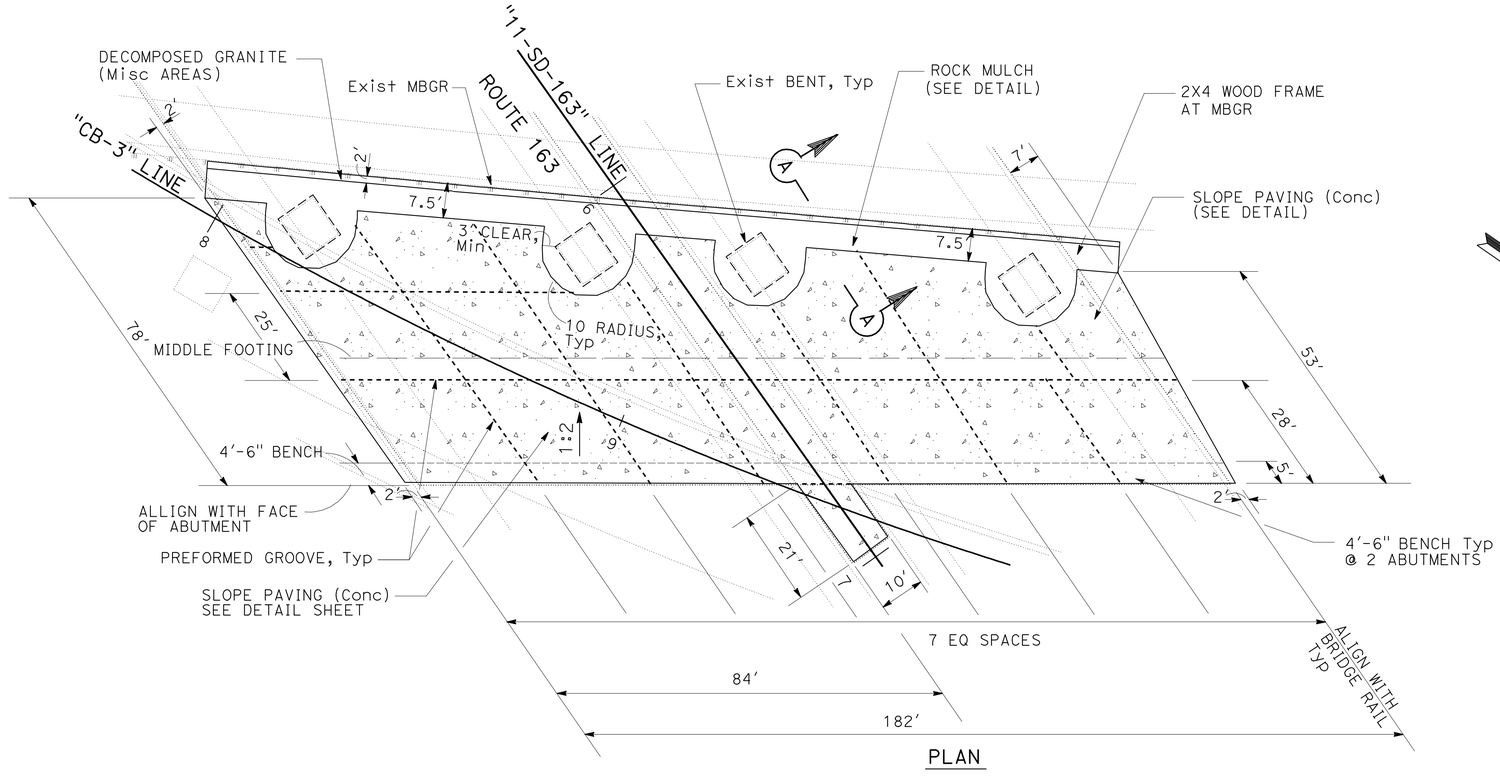

PLAN

SLOPE PAVING (Conc)

LOCATION 7

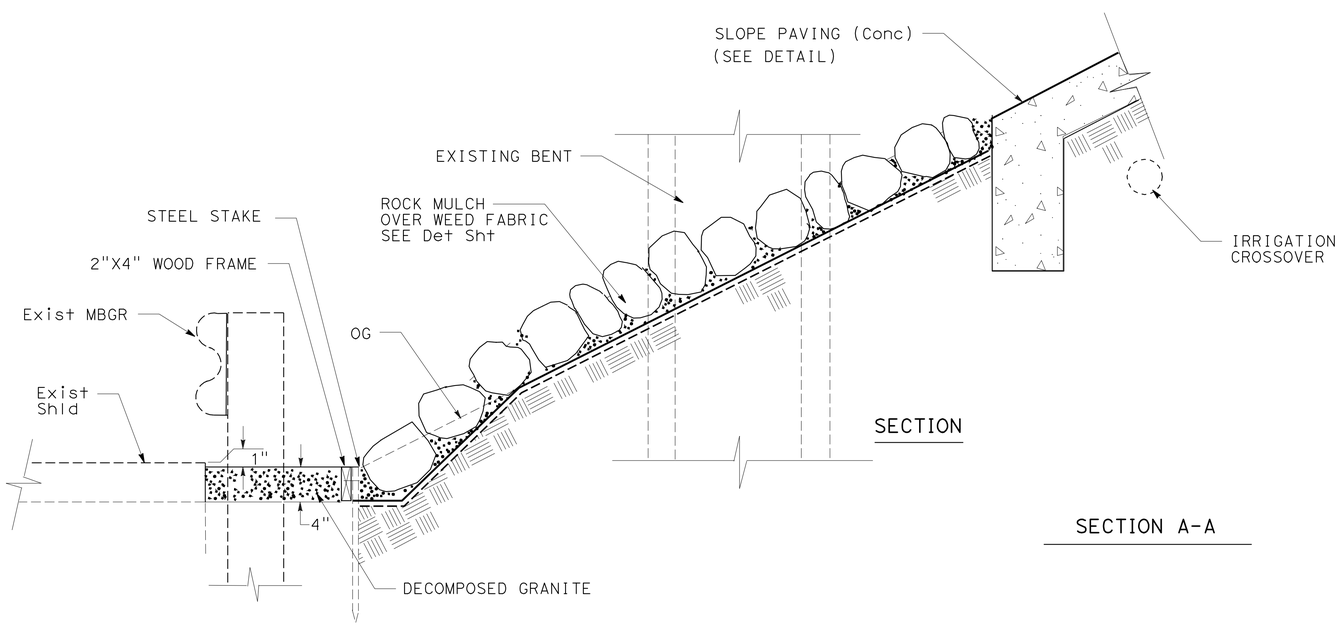

SECTION

SECTION A-A

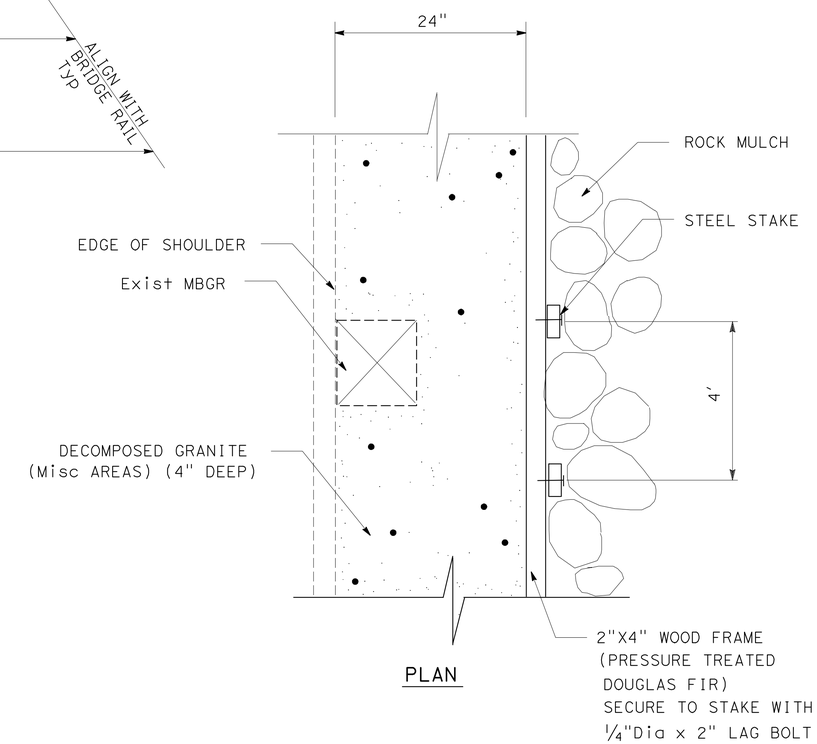

PLAN

LANDSCAPE DETAILS
LOCATION 7

NO SCALE

LD-11

STATE OF CALIFORNIA - DEPARTMENT OF TRANSPORTATION
Caltrans® LANDSCAPE ARCHITECTURE

SENIOR LANDSCAPE ARCHITECT: STEPHEN ALVAREZ
CALCULATED-DESIGNED BY: JOEL HORTIZUELA
CHECKED BY: STEPHEN WARREN
REVISED BY
DATE REVISED

LAST REVISION 03-24-10
DATE PLOTTED => 13-MAY-2010
TIME PLOTTED => 10:39

Dist	COUNTY	ROUTE	POST MILES TOTAL PROJECT	SHEET No.	TOTAL SHEETS
11	SD	15,163, 805	Var	38	64

Stephen P. Warren
LICENSED LANDSCAPE ARCHITECT

5-10-10
PLANS APPROVAL DATE

LICENSED LANDSCAPE ARCHITECT
STEPHEN P. WARREN No. 3442
Stephen P. Warren
Registered Date
10-31-10
Expiration Date
03-16-10
Date
STATE OF CALIFORNIA

THE STATE OF CALIFORNIA OR ITS OFFICERS OR AGENTS SHALL NOT BE RESPONSIBLE FOR THE ACCURACY OR COMPLETENESS OF SCANNED COPIES OF THIS PLAN SHEET.

IRRIGATION CROSSOVERS

SHEET	LINE	STATION	SIDE		SIZE OF CONDUIT CHDPE		(N) WATER LINE CROSSOVER SIZE	(N) SPRINKLER CONTROL CROSSOVER SIZE
			R†	L†	8"	12"		
IP-1	"SD-15"	565	-	X	110	-	3"	2"
IP-1	"SD-15"	565	-	X	-	110	6"	3"
IP-4	"SW"	99	X	-	290	-	3"	2"
IP-4	"SW"	99		X	340	-	3"	2"
IP-5	"SD-805"	1118+30	X	-	210	-	3"	2"
			TOTAL		950	110		

ROLLED EROSION CONTROL PRODUCT (NETTING)

SHEET	Loc	SQFT
PP-3	4	15,127
PP-4	5	45,929
TOTAL		61,056

EROSION CONTROL (HYDROSEED) COMPONENTS

	AREA		TACKIFIER	FIBER	PURE LIVE SEED	COMMERCIAL FERTILIZER
	SF	Ac	LB (N)	LB (N)	LB (N)	LB (N)
HYDROSEED 1 APPLICATION 1	68,522	1.57	-	1,264	115	711
HYDROSEED 1 APPLICATION 2	68,522	1.57	316	-	-	-
TOTAL			316	1,264	115	711

ROCK BLANKET

SHEET	SQYD
PP-2	800
TOTAL	800

EROSION CONTROL (HYDROSEED)

SHEET NUMBER	SQFT
PP-3	15,127
PP-4	53,395
TOTAL	68,522

MINOR CONCRETE (Misc Const)

SHEET	CY			
	ACCESS PAD	PAD	PERIMETER CONCRETE BAND	CONCRETE TREE WELL BAND
PP-2	3.07	-	21	6.9
PP-3	-	0.03	-	-
TOTAL	31			

REMOVE CHAIN LINK FENCE

SHEET	LF	
	(TYPE CL-3)	(TYPE CL-6)
PP-4	-	936
PP-5	620	-
TOTAL	1,556	

REMOVE CONCRETE (Misc)

SHEET	Loc	CY
PP-3	3	46
PP-3	4	3
TOTAL		49

CHAIN LINK FENCE

SHEET	LF		
	(TYPE CL-4)	(TYPE CL-4, VINYL-CLAD)	(TYPE CL-6)
PP-2	-	820	-
PP-4	-	-	924
PP-5	620	-	-
TOTAL	620	820	924

REMOVE AC DIKE

SHEET	Loc	LF
PP-1	1	410
PP-3	4	359
TOTAL		769

ROCK MULCH

SHEET	SQYD	DECOMPOSED GRANITE CY (N)
PP-2	22	0.4
PP-4	159	2.5
PP-5	215	3.5
PP-6	222	3.6
TOTAL	618	

(N) - NOT A SEPARATE PAY ITEM, FOR INFORMATION ONLY

LANDSCAPE DETAILS (QUANTITIES)

LD-12

REVISED BY | DATE REVISED
JOEL HORTIZUELA | STEPHEN WARREN
CALCULATED-DESIGNED BY | CHECKED BY
SENIOR LANDSCAPE ARCHITECT | STEPHEN ALVAREZ

STATE OF CALIFORNIA - DEPARTMENT OF TRANSPORTATION
Caltrans® LANDSCAPE ARCHITECTURE

LAST REVISION 03-24-10 | DATE PLOTTED => 13-MAY-2010 | TIME PLOTTED => 10:39

Dist	COUNTY	ROUTE	POST MILES TOTAL PROJECT	SHEET No.	TOTAL SHEETS
11	SD	15,163, 805	Var	39	64

Stephen P. Warren
LICENSED LANDSCAPE ARCHITECT

5-10-10
PLANS APPROVAL DATE

LICENSED LANDSCAPE ARCHITECT
STEPHEN P. WARREN No. 3442
Stephen P. Warren
Original Date 10-31-10
Renewal Date 03-16-10
Date
STATE OF CALIFORNIA

THE STATE OF CALIFORNIA OR ITS OFFICERS OR AGENTS SHALL NOT BE RESPONSIBLE FOR THE ACCURACY OR COMPLETENESS OF SCANNED COPIES OF THIS PLAN SHEET.

MINOR HMA

SHEET	Loc	TON DIKE	TON OVERLAY
PP-1	1	11.8	8.9
PP-3	3	10.5	7.7
TOTAL		38.9	

6 FT CHAIN LINK GATE (TYPE CL-6)

SHEET	EACH
PP-4	2
TOTAL	2

6 FT CHAIN LINK GATE (TYPE CL-4, VINYL-CLAD)

SHEET	EACH
PP-2	2
TOTAL	2

EARTH MATERIAL CONTAINING LEAD (EMCL)

SHEET	PLACEMENT Loc	CY (N)
PP-1	1	46
PP-2	2	168
PP-3	3	145
PP-3	4	11
PP-4	5	492
PP-5	6	515
PP-6	7	211
TOTAL		1,588

SLOPE PAVING (Conc)

SHEET	Loc	CY
PP-3	3	128.8
PP-3	4	10
PP-4	5	466.2
PP-5	6	422
PP-6	7	154
TOTAL		1,181

8" CSP (0.079" THICK)

SHEET	LF
PP-3	50
TOTAL	50

HMA DIKE

SHEET	Loc	LF	TYPE
PP-1	1	410	E
PP-3	4	359	E
TOTAL		769	

MINOR CONCRETE (TEXTURED PAVING)

SHEET	Loc	SQFT
PP-1	1	2,040
TOTAL		2,040

COLD PLANE AC PAVEMENT

SHEET	Loc	SQYD
PP-1	1	91
PP-3	4	80
TOTAL		171

ASPHALTIC EMULSION (FOG SEAL COAT)

SHEET	Loc	TON
PP-1	1	0.14
PP-3	4	0.13
TOTAL		0.27

PREPARE SLOPE

SHEET	Loc	SQFT	EMCL PLACEMENT (N)
PP-3	3	400	3 CY *
PP-3	4	11,000	117 CY * 11 CY **
TOTAL		11,400	—

* MATERIAL FROM LOCATION 3
** MATERIAL FROM LOCATION 4

(N) NOT A SEPARATE PAY ITEM, FOR INFORMATION ONLY.

LANDSCAPE DETAILS (QUANTITIES)

LD-13

REVISED BY | DATE REVISED
JOEL HORTIZUELA | STEPHEN WARREN
CALCULATED-DESIGNED BY | CHECKED BY
SENIOR LANDSCAPE ARCHITECT
STEPHEN ALVAREZ
STATE OF CALIFORNIA - DEPARTMENT OF TRANSPORTATION
Caltrans® LANDSCAPE ARCHITECTURE

LAST REVISION 03-24-10
DATE PLOTTED => 13-MAY-2010
TIME PLOTTED => 10:39

Dist	COUNTY	ROUTE	POST MILES TOTAL PROJECT	SHEET No.	TOTAL SHEETS
11	SD	15,163, 805	Var	40	64

Stephen P. Warren
LICENSED LANDSCAPE ARCHITECT

5-10-10
PLANS APPROVAL DATE

LICENSED LANDSCAPE ARCHITECT
STEPHEN P. WARREN No. 3442
Signature
10-31-10
Renewal Date
03-16-10
Date
STATE OF CALIFORNIA

THE STATE OF CALIFORNIA OR ITS OFFICERS OR AGENTS SHALL NOT BE RESPONSIBLE FOR THE ACCURACY OR COMPLETENESS OF SCANNED COPIES OF THIS PLAN SHEET.

EROSION CONTROL (COMPOST BLANKET)

SHEET NUMBER	CY
PP-3	89.6
PP-4	315.5
TOTAL	405.1

TEMPORARY FENCE (TYPE ESA)

SHEET	LF
PP-4	1,247
TOTAL	1,247

FIBER ROLLS

SHEET	LF
PP-3	826
PP-4	2,190
PP-5	3,530
PP-6	1,410
TOTAL	7,956

MULCH

SHEET	CY
PP-2	105
PP-3	95
PP-4	364
PP-5	10.3
PP-6	4
TOTAL	578.3

DECOMPOSED GRANITE (Misc AREAS)

SHEET	SQFT
PP-3	2,485
PP-6	400
TOTAL	2,885

CULTIVATE

SHEET	SQYD
PP-2	3,333
TOTAL	3,333

RESET ROADSIDE SIGN

SHEET	EA	
	ONE POST	TWO POST
PP-3	2	1
TOTAL	3	

LANDSCAPE DETAILS (QUANTITIES)

LD-14

STATE OF CALIFORNIA - DEPARTMENT OF TRANSPORTATION
Caltrans® LANDSCAPE ARCHITECTURE

SENIOR LANDSCAPE ARCHITECT: STEPHEN ALVAREZ
CALCULATED-DESIGNED BY: JOEL HORTIZUELA
CHECKED BY: STEPHEN WARREN
REVISED BY
DATE REVISED

LAST REVISION 03-24-10
DATE PLOTTED => 13-MAY-2010
TIME PLOTTED => 10:39

Dist	COUNTY	ROUTE	POST MILES TOTAL PROJECT	SHEET No.	TOTAL SHEETS
11	SD	15,163, 805	Var	41	64

Stephen P. Warren
LICENSED LANDSCAPE ARCHITECT

5-10-10
PLANS APPROVAL DATE

LICENSED LANDSCAPE ARCHITECT
STEPHEN P. WARREN No. 3442
Stephen P. Warren
Registered Date 10-31-10
Expiration Date 03-16-10
Date
STATE OF CALIFORNIA

THE STATE OF CALIFORNIA OR ITS OFFICERS OR AGENTS SHALL NOT BE RESPONSIBLE FOR THE ACCURACY OR COMPLETENESS OF SCANNED COPIES OF THIS PLAN SHEET.

ABBREVIATIONS

CCU——CLUSTER CONTROL UNIT
SAT——FIELD SATELLITE
SCC——SPRINKLER CONTROL CONDUIT
Loc——LOCATION

SUBTOTALS PER VALVE ON LATERAL SUPPLY SIDE OF CONTROL VALVE

Loc 1			Loc 2						Loc 4							SUB TOTALS	UNIT	DESCRIPTION	
Exist SAT 27(E)			Exist IC 'A'		Exist IC 'B'		Exist IC 'C'		Exist SAT 1(D)										
6	16		42	43		5		4	8		1	2	3	4	7	10	11				
95	186		52	161		189		70	-		50	219	-	-	365	81	20	1488	LF	1"	PR 200 PLASTIC PIPE SUPPLY LINE
60	52		75	85		52		104	-		45	42	-	-	-	-	-	515	LF	1¼"	
-	-		139	99		37		35	-		48	22	-	150	-	-	-	530	LF	1½"	
27	58		260	71		30		-	-		79	-	-	-	-	-	-	525	LF	2"	
-	-		-	-		-		-	-		279	240	150	-	-	-	-	669	LF	2½"	
-	-		-	-		-		-	-		-	-	-	-	-	-	-	-	LF	3"	
-	-		-	-		-		-	-		-	-	-	-	-	-	-	-	EA	A-5	SPRINKLER TYPE
-	-		1	1		-		-	-		-	-	-	-	-	-	-	2	EA	A-6	
1	1		-	-		-		-	-		5	8	-	-	-	-	-	15	EA	A-7	
3	5		5	8		7		5	2		-	-	-	-	-	2	-	37	EA	A-8	
-	-		-	-		-		-	-		-	-	-	-	30	-	-	30	EA	C-2 Mod	

SUBTOTALS PER VALVE ON LATERAL SUPPLY SIDE OF CONTROL VALVE

Loc 6							SUB TOTALS	UNIT	DESCRIPTION	
Exist SAT 'C'				Exist SAT 'K'						
7	8	9		7	8					
90	103	202		87	82		564	LF	1"	PR 200 PLASTIC PIPE SUPPLY LINE
53	74	-		38	94		259	LF	1¼"	
108	100	76		-	-		284	LF	1½"	
-	-	148		-	100		248	LF	2"	
10	61	-		-	-		71	LF	2½"	
-	-	-		-	-		-	LF	3"	
-	-	-		-	-		-	EA	A-5	SPRINKLER TYPE
-	-	-		-	-		-	EA	A-6	
1	6	7		3	4		21	EA	A-7	
5	-	-		-	1		6	EA	A-8	
-	-	-		-	-		-	EA	C-2 Mod	

SUBTOTALS PER VALVE ON LATERAL SUPPLY SIDE OF CONTROL VALVE

VALVE OR ASSEMBLY NUMBER

DESCRIPTION		UNIT	LOCATION 5																										SUB TOTALS	UNIT	DESCRIPTION	
			SAT 1(B)					SAT 1(C)												SAT 1(D)												
			3	4	8	9		1	2	3	4	10	11	14	15	16	17	19	20	36	37	38	39									
PLASTIC PIPE SUPPLY LINE	PR 200	1"	LF	25	25	116	170		244	412	235	297	115	105	112	103	268	97	-	-	100	125	-	-							2549	LF	1"	PR 200 PLASTIC PIPE SUPPLY LINE
		1¼"	LF	-	-	-	-		80	-	119	119	-	51	81	74	-	51	-	-	114	50	-	-							739	LF	1¼"	
		1½"	LF	-	-	-	-		-	-	-	-	-	-	49	50	-	70	-	-	24	-	10	10							213	LF	1½"	
		2"	LF	-	-	-	-		10	-	40	65	-	-	16	20	-	10	127	127	10	50	-	-							475	LF	2"	
		2½"	LF	-	-	-	-		-	-	-	-	-	-	80	47	-	-	-	-	-	-	-	-							127	LF	2½"	
SPRINKLER TYPE		A-5	EA	1	1	-	-		9	-	10	13	3	5	-	-	-	-	-	-	7	5	-	-							54	EA	A-5	SPRINKLER TYPE
		A-6	EA	-	-	-	-		-	-	-	-	-	-	-	-	-	-	-	-	-	-	-	-							-	EA	A-6	
		A-7	EA	-	-	-	-		-	-	-	-	-	-	6	6	-	5	-	-	-	-	-	-							17	EA	A-7	
		A-8	EA	-	-	-	-		-	-	-	-	-	-	-	-	-	-	-	-	-	-	-	-							-	EA	A-8	
		B-1	EA	-	-	20	20		-	-	-	-	-	-	-	-	-	-	-	-	-	-	-	-							40	EA	B-1	
		C-2 Mod	EA	-	-	-	-		-	30	-	-	-	-	-	-	20	-	-	-	-	-	-	-							50	EA	C-2 Mod	

IRRIGATION QUANTITIES

IQ-1

STATE OF CALIFORNIA - DEPARTMENT OF TRANSPORTATION
Caltrans® LANDSCAPE ARCHITECTURE

SENIOR LANDSCAPE ARCHITECT: STEPHEN ALVAREZ
CALCULATED-DESIGNED BY: JOEL HORTIZUELA
CHECKED BY: STEPHEN WARREN
REVISED BY
DATE REVISED

LAST REVISION 03-24-10
DATE PLOTTED => 13-MAY-2010
TIME PLOTTED => 10:39

Dist	COUNTY	ROUTE	POST MILES TOTAL PROJECT	SHEET No.	TOTAL SHEETS
11	SD	15,163, 805	Var	42	64

Stephen P. Warren
LICENSED LANDSCAPE ARCHITECT

5-10-10
PLANS APPROVAL DATE

LICENSED LANDSCAPE ARCHITECT
STEPHEN P. WARREN No. 3442
Stephen P. Warren
Signature
10-31-10
Renewal Date
03-16-10
Date
STATE OF CALIFORNIA

THE STATE OF CALIFORNIA OR ITS OFFICERS OR AGENTS SHALL NOT BE RESPONSIBLE FOR THE ACCURACY OR COMPLETENESS OF SCANNED COPIES OF THIS PLAN SHEET.

SUBTOTALS PER PLAN SHEET ON MAIN SUPPLY SIDE OF CONTROL VALVE

DESCRIPTION			UNIT	SHEET NUMBER IP-1	IP-2	IP-3	IP-4	IP-5	SUBTOTALS
VALVES AND ASSEMBLIES	RCV	1"	EA	-	-	-	1	1	2
		1½"	EA	-	4	-	7	4	15
		2"	EA	-	-	-	-	-	-
	GV								
		1½"	EA	-	-	-	-	-	-
		2"	EA	-	1	-	2	2	5
		3"	EA	3	1	-	4	1	9
PLASTIC PIPE SUPPLY LINE	PR 200	1"	LF	-	-	-	-	-	-
		1¼"	LF	-	-	-	-	-	-
		1½"	LF	-	-	-	-	-	-
		2"	LF	-	-	-	-	-	-
		2½"	LF	-	-	-	-	-	-
	PR 315	2"	LF	-	20	-	40	20	80
		2½"	LF	-	-	40	-	30	70
		3"	LF	440	206	-	1045	563	2254
		4"	LF	190	-	-	-	-	190
		6"	LF	140	-	-	-	-	140
GSP SCC		2"	LF	-	-	-	410	-	410
GSP SUPPLY LINE		4"	LF	-	-	-	410	-	410

TOTAL IRRIGATION QUANTITIES

TOTALS	UNIT	DESCRIPTION		
2	EA	1"	RCV	VALVES AND ASSEMBLIES
15	EA	1½"		
-	EA	2"		
			GV	
-	EA	1½"		
5	EA	2"		
9	EA	3"		
4601	LF	1"	PR 200	PLASTIC PIPE SUPPLY LINE
1513	LF	1¼"		
1027	LF	1½"		
1248	LF	2"		
867	LF	2½"		
80	LF	2"	PR 315	
70	LF	2½"		
2254	LF	3"		
190	LF	4"		
140	LF	6"		
410	LF	2"	GSP SCC	
410	LF	4"	GSP SUPPLY LINE	
54	EA	A-5	SPRINKLER TYPE	
2	EA	A-6		
53	EA	A-7		
43	EA	A-8		
40	EA	B-1		
80	EA	C-2 Mod		

IRRIGATION QUANTITIES

IQ-2

STATE OF CALIFORNIA - DEPARTMENT OF TRANSPORTATION
Caltrans LANDSCAPE ARCHITECTURE

SENIOR LANDSCAPE ARCHITECT: STEPHEN ALVAREZ
CALCULATED-DESIGNED BY: JOEL HORTIZUELA
CHECKED BY: STEPHEN WARREN
REVISED BY
DATE REVISED

LAST REVISION 03-24-10
DATE PLOTTED => 13-MAY-2010
TIME PLOTTED => 10:39

Dist	COUNTY	ROUTE	POST MILES TOTAL PROJECT	SHEET No.	TOTAL SHEETS
11	SD	15,163, 805	Var	43	64

Simon Tse 03-17-10
REGISTERED CIVIL ENGINEER DATE

5-10-10
PLANS APPROVAL DATE

REGISTERED PROFESSIONAL ENGINEER SIMON TSE No. C66401 Exp. 06-30-10 CIVIL STATE OF CALIFORNIA

THE STATE OF CALIFORNIA OR ITS OFFICERS OR AGENTS SHALL NOT BE RESPONSIBLE FOR THE ACCURACY OR COMPLETENESS OF SCANNED COPIES OF THIS PLAN SHEET.

LEGEND:

EXISTING UTILITIES	FACILITY	OWNER
-——w—— ——w——	WATER	- CITY OF SAN DIEGO
——--s——-- ——--s——--—	SEWER	- CITY OF SAN DIEGO
——-g——- ——-g——-—	GAS	- SAN DIEGO GAS & ELECTRIC
——-e—— ——-e——	ELECTRIC	- SAN DIEGO GAS & ELECTRIC
——-e—— ——-(oh)——	OVERHEAD ELECTRIC	- SAN DIEGO GAS & ELECTRIC
—--tv—— ——--tv———	CABLE TV	- TIME WARNER CABLE (TWC)
——--t—— ——--t——	TELEPHONE	- ATT

NOTES:

1. FOR ACCURATE RIGHT OF WAY AND ACCESS DATA, CONTACT RIGHT OF WAY ENGINEERING AT THE DISTRICT OFFICE.
2. ALL UTILITIES TO BE FIELD VERIFIED.
3. LOCATION OF EXISTING UTILITY FACILITIES ARE LOCATED BASED ON OWNER'S RECORDS AND/OR STATE SURVEY.

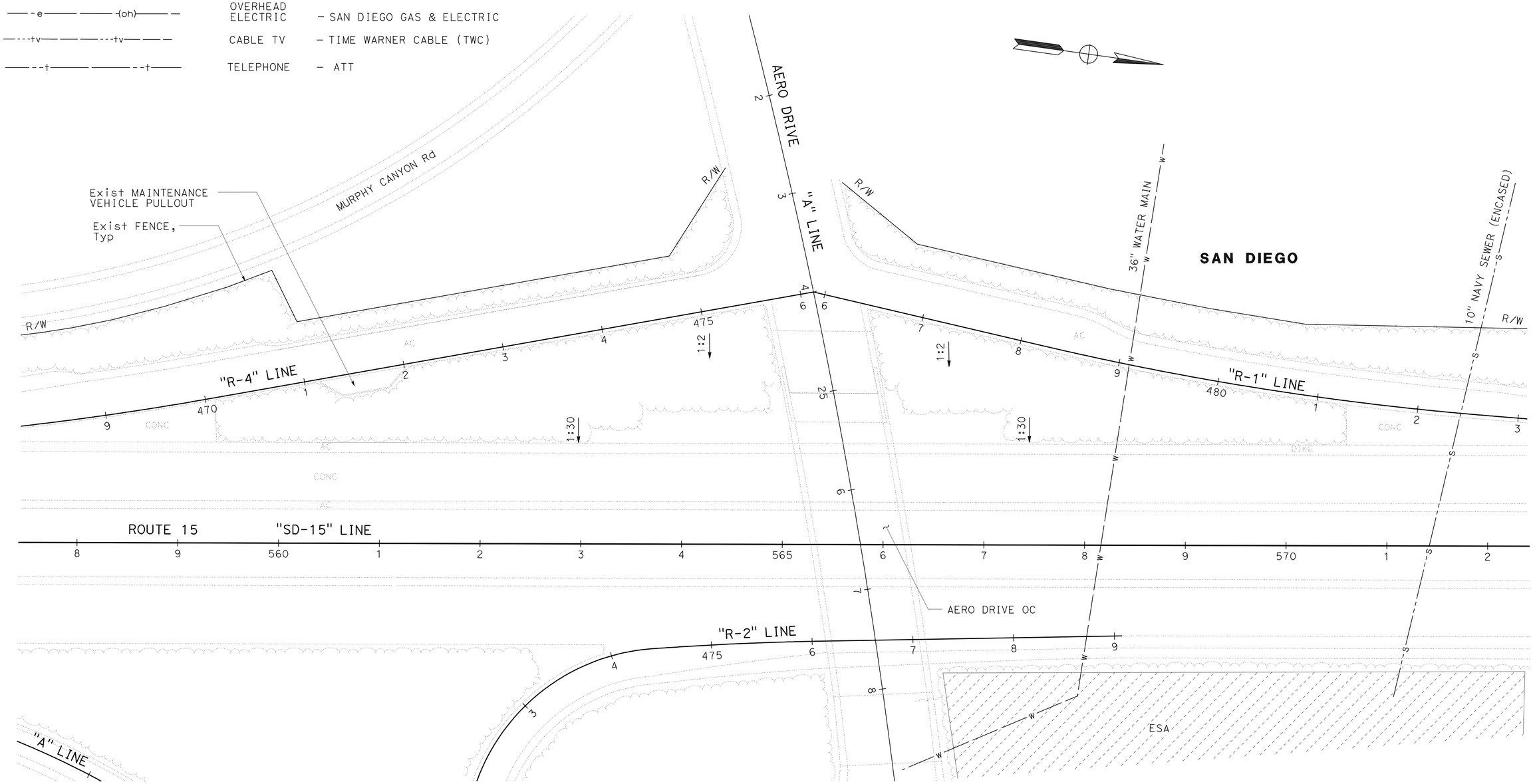

THIS PLAN ACCURATE FOR EXISTING UTILITIES ONLY.

EXISTING UTILITIES PLAN
LOCATION 1
SCALE: 1" = 50'

EU-1

REVISED BY | DATE REVISED
ANH HOANG | SIMON TSE
CALCULATED-DESIGNED BY | CHECKED BY
FUNCTIONAL SUPERVISOR: ABU-BAKR AL-JAFRI
Caltrans ENGINEERING SERVICES

LAST REVISION 03-24-10
DATE PLOTTED => 13-MAY-2010
TIME PLOTTED => 10:46

Dist	COUNTY	ROUTE	POST MILES TOTAL PROJECT	SHEET No.	TOTAL SHEETS
11	SD	15,163, 805	Var	44	64

Simon Tse 03-17-10
REGISTERED CIVIL ENGINEER DATE

5-10-10
PLANS APPROVAL DATE

REGISTERED PROFESSIONAL ENGINEER SIMON TSE No. C66401 Exp. 06-30-10 CIVIL STATE OF CALIFORNIA

THE STATE OF CALIFORNIA OR ITS OFFICERS OR AGENTS SHALL NOT BE RESPONSIBLE FOR THE ACCURACY OR COMPLETENESS OF SCANNED COPIES OF THIS PLAN SHEET.

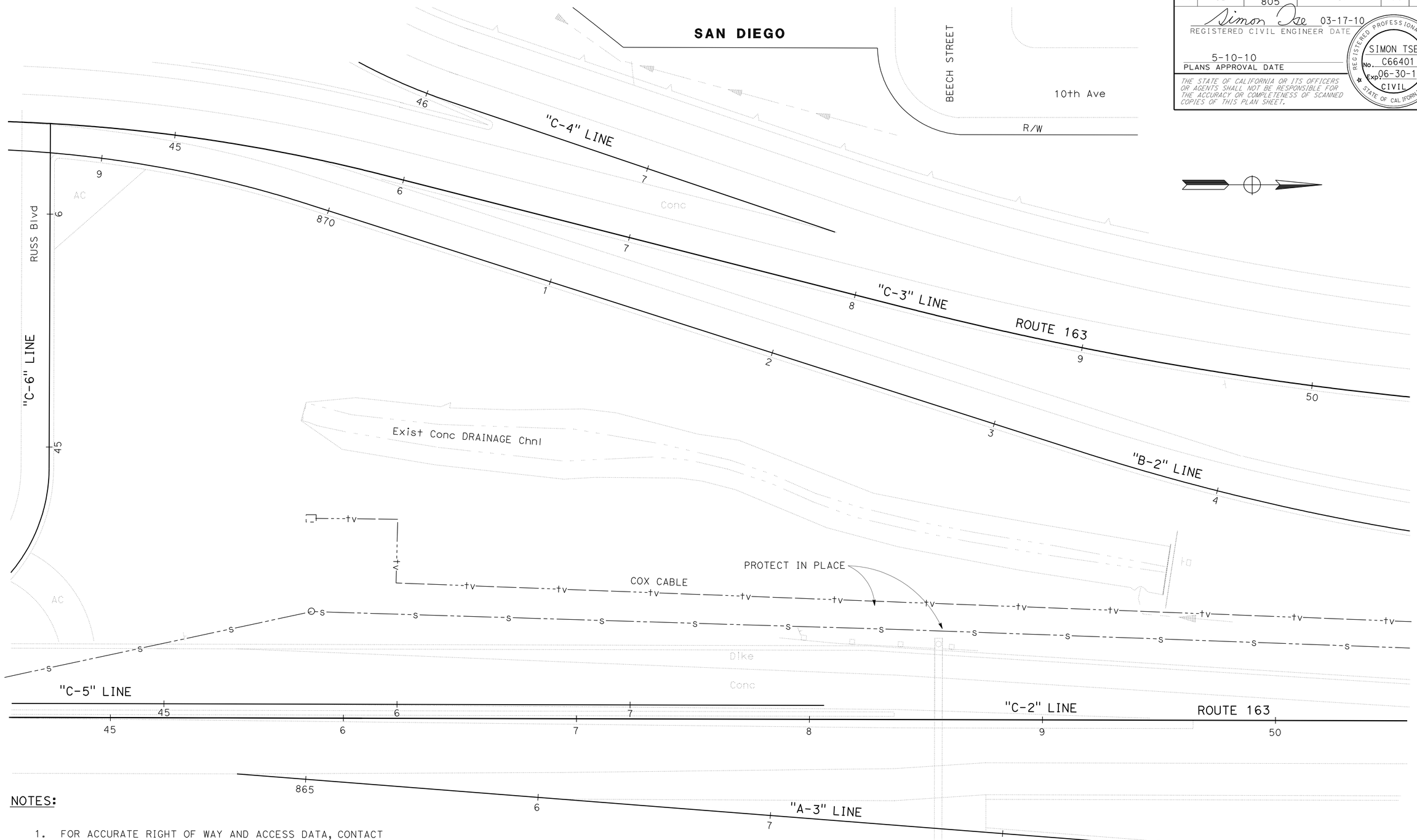

NOTES:

1. FOR ACCURATE RIGHT OF WAY AND ACCESS DATA, CONTACT RIGHT OF WAY ENGINEERING AT THE DISTRICT OFFICE.
2. ALL UTILITIES TO BE FIELD VERIFIED.
3. LOCATION OF EXISTING UTILITY FACILITIES ARE LOCATED BASED ON OWNER'S RECORDS AND/OR STATE SURVEY.

THIS PLAN ACCURATE FOR EXISTING UTILITIES ONLY.

EXISTING UTILITIES PLAN
LOCATION 2

SCALE: 1" = 20'

EU-2

STATE OF CALIFORNIA - DEPARTMENT OF TRANSPORTATION
Caltrans ENGINEERING SERVICES

FUNCTIONAL SUPERVISOR: ABU-BAKR AL-JAFRI
CALCULATED-DESIGNED BY: ANH HOANG
CHECKED BY: SIMON TSE
REVISED BY
DATE REVISED

LAST REVISION 03-24-10
DATE PLOTTED => 13-MAY-2010
TIME PLOTTED => 10:46

Dist	COUNTY	ROUTE	POST MILES TOTAL PROJECT	SHEET No.	TOTAL SHEETS
11	SD	15,163, 805	Var	45	64

Simon Tse 03-17-10
REGISTERED CIVIL ENGINEER DATE

5-10-10
PLANS APPROVAL DATE

REGISTERED PROFESSIONAL ENGINEER SIMON TSE No. C66401 Exp. 06-30-10 CIVIL STATE OF CALIFORNIA

THE STATE OF CALIFORNIA OR ITS OFFICERS OR AGENTS SHALL NOT BE RESPONSIBLE FOR THE ACCURACY OR COMPLETENESS OF SCANNED COPIES OF THIS PLAN SHEET.

NOTES:

1. FOR ACCURATE RIGHT OF WAY AND ACCESS DATA, CONTACT RIGHT OF WAY ENGINEERING AT THE DISTRICT OFFICE.
2. ALL UTILITIES TO BE FIELD VERIFIED.
3. LOCATION OF EXISTING UTILITY FACILITIES ARE LOCATED BASED ON OWNER'S RECORDS AND/OR STATE SURVEY.

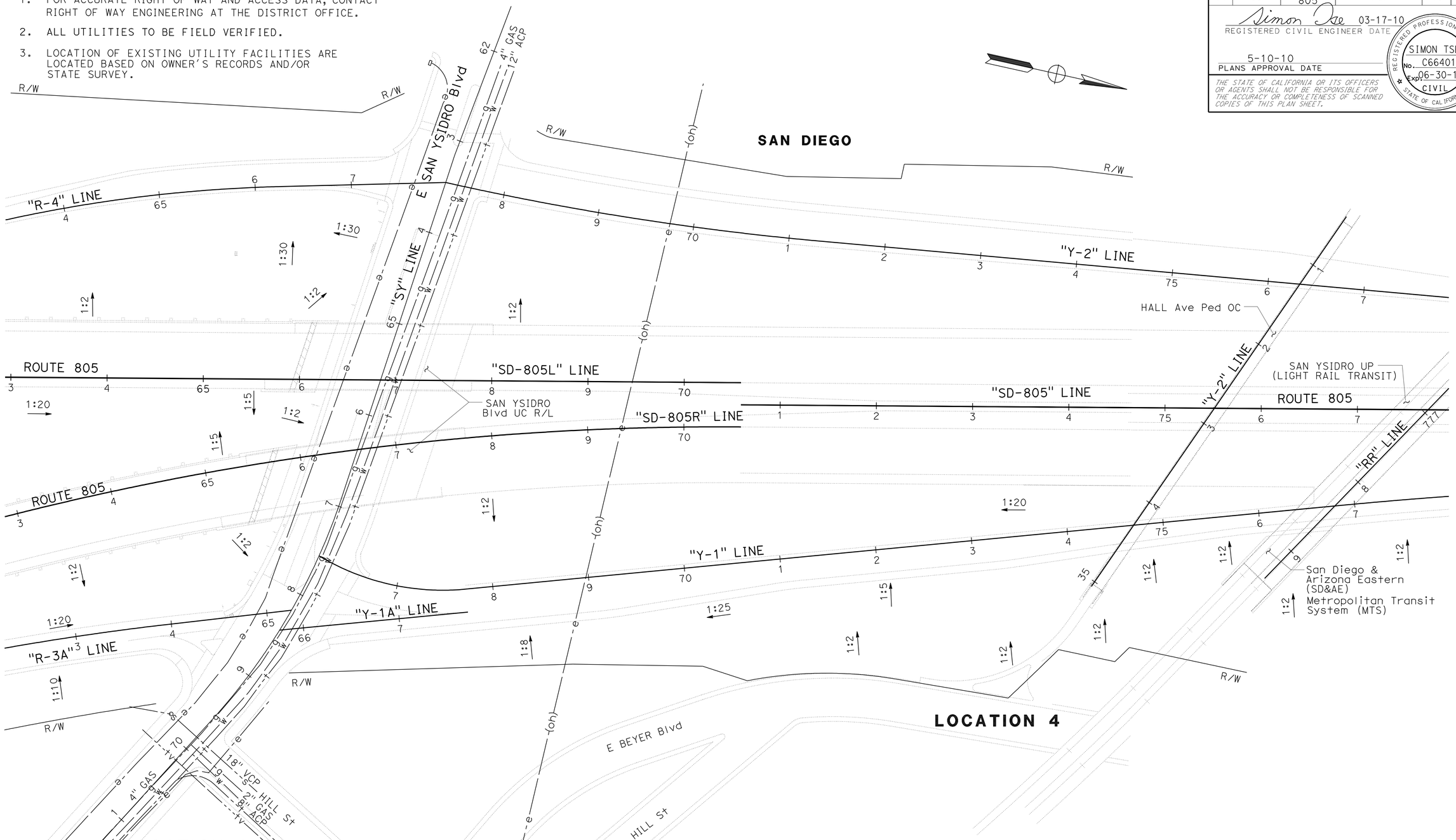

THIS PLAN ACCURATE FOR EXISTING UTILITIES ONLY.

EXISTING UTILITIES PLAN
LOCATIONS 3 & 4
SCALE: 1" = 50'

EU-3

STATE OF CALIFORNIA - DEPARTMENT OF TRANSPORTATION
Caltrans ENGINEERING SERVICES

FUNCTIONAL SUPERVISOR: ABU-BAKR AL-JAFRI
CALCULATED-DESIGNED BY: ANH HOANG
CHECKED BY: SIMON TSE
REVISED BY
DATE REVISED

LAST REVISION
DATE PLOTTED => 13-MAY-2010
TIME PLOTTED => 10:46
03-24-10

Dist	COUNTY	ROUTE	POST MILES TOTAL PROJECT	SHEET No.	TOTAL SHEETS
11	SD	15,163, 805	Var	46	64

Simon Tse 03-17-10
REGISTERED CIVIL ENGINEER DATE

5-10-10
PLANS APPROVAL DATE

REGISTERED PROFESSIONAL ENGINEER SIMON TSE No. C66401 Exp. 06-30-10 CIVIL STATE OF CALIFORNIA

THE STATE OF CALIFORNIA OR ITS OFFICERS OR AGENTS SHALL NOT BE RESPONSIBLE FOR THE ACCURACY OR COMPLETENESS OF SCANNED COPIES OF THIS PLAN SHEET.

NOTES:

1. FOR ACCURATE RIGHT OF WAY AND ACCESS DATA, CONTACT RIGHT OF WAY ENGINEERING AT THE DISTRICT OFFICE.
2. ALL UTILITIES TO BE FIELD VERIFIED.
3. LOCATION OF EXISTING UTILITY FACILITIES ARE LOCATED BASED ON OWNER'S RECORDS AND/OR STATE SURVEY.

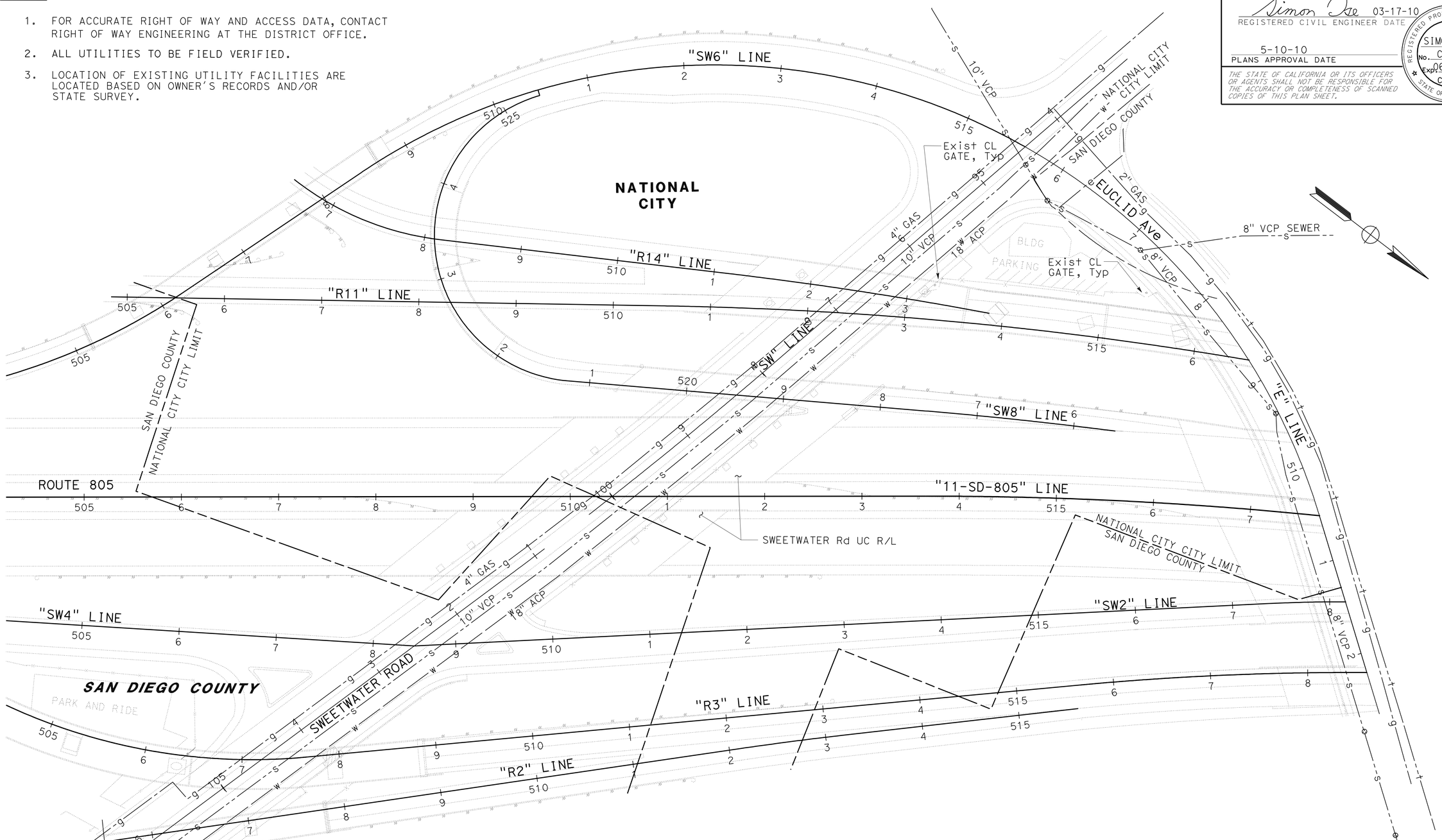

THIS PLAN ACCURATE FOR EXISTING UTILITIES ONLY.

EXISTING UTILITIES PLAN

LOCATION 6

SCALE: 1" = 50'

EU-4

STATE OF CALIFORNIA - DEPARTMENT OF TRANSPORTATION
Caltrans ENGINEERING SERVICES

FUNCTIONAL SUPERVISOR: ABU-BAKR AL-JAFRI
CALCULATED-DESIGNED BY: ANH HOANG
CHECKED BY: SIMON TSE
REVISED BY
DATE REVISED

LAST REVISION 03-24-10
DATE PLOTTED => 13-MAY-2010
TIME PLOTTED => 10:46

BORDER LAST REVISED 4/11/2008
RELATIVE BORDER SCALE IS IN INCHES 0 1 2 3
USERNAME => trlim
DGN FILE => b29190tq004.dgn
CU 11341
EA 291901

Dist	COUNTY	ROUTE	POST MILES TOTAL PROJECT	SHEET No.	TOTAL SHEETS
11	SD	15,163, 805	Var	47	64

Simon Tse 03-17-10
REGISTERED CIVIL ENGINEER DATE

5-10-10
PLANS APPROVAL DATE

REGISTERED PROFESSIONAL ENGINEER SIMON TSE No. C66401 Exp. 06-30-10 CIVIL STATE OF CALIFORNIA

THE STATE OF CALIFORNIA OR ITS OFFICERS OR AGENTS SHALL NOT BE RESPONSIBLE FOR THE ACCURACY OR COMPLETENESS OF SCANNED COPIES OF THIS PLAN SHEET.

NOTES:

1. FOR ACCURATE RIGHT OF WAY AND ACCESS DATA, CONTACT RIGHT OF WAY ENGINEERING AT THE DISTRICT OFFICE.
2. ALL UTILITIES TO BE FIELD VERIFIED.
3. LOCATION OF EXISTING UTILITY FACILITIES ARE LOCATED BASED ON OWNER'S RECORDS AND/OR STATE SURVEY.

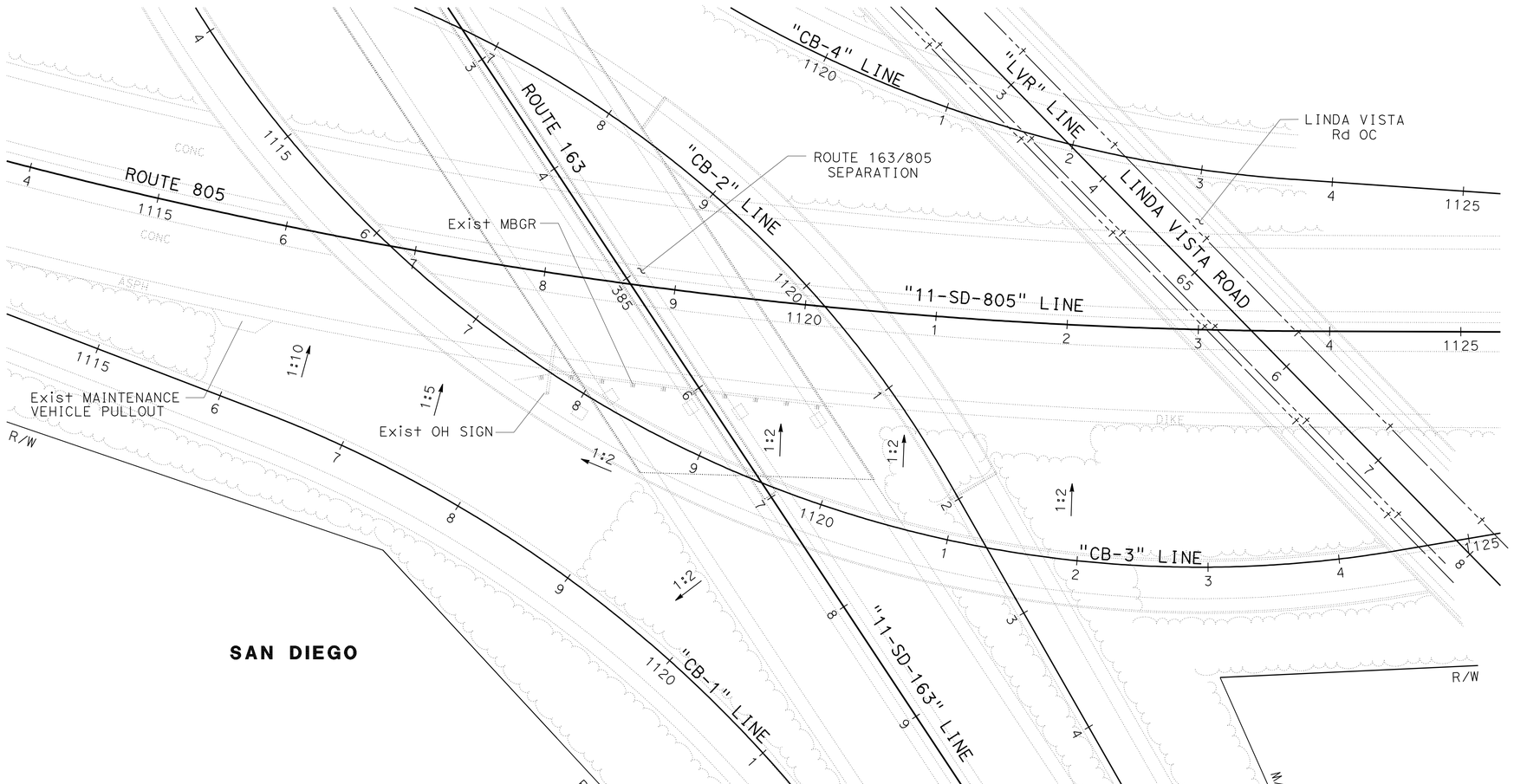

THIS PLAN ACCURATE FOR EXISTING UTILITIES ONLY.

EXISTING UTILITIES PLAN
LOCATION 7
SCALE: 1" = 50'

EU-5

STATE OF CALIFORNIA - DEPARTMENT OF TRANSPORTATION
Caltrans ENGINEERING SERVICES

FUNCTIONAL SUPERVISOR: ABU-BAKR AL-JAFRI
CALCULATED-DESIGNED BY: ANH HOANG
CHECKED BY: SIMON TSE
REVISED BY
DATE REVISED

LAST REVISION 03-24-10
DATE PLOTTED => 13-MAY-2010
TIME PLOTTED => 10:47

Dist	COUNTY	ROUTE	POST MILES TOTAL PROJECT	SHEET No.	TOTAL SHEETS
11	SD	15,163, 805	Var	48	64

REGISTERED CIVIL ENGINEER 03-17-10 DATE

5-10-10
PLANS APPROVAL DATE

REGISTERED PROFESSIONAL ENGINEER SHAHIN T ADIBI No. 66748 Exp. 09/30/10 CIVIL STATE OF CALIFORNIA

THE STATE OF CALIFORNIA OR ITS OFFICERS OR AGENTS SHALL NOT BE RESPONSIBLE FOR THE ACCURACY OR COMPLETENESS OF SCANNED COPIES OF THIS PLAN SHEET.

NOTE:

1. FOR ACCURATE RIGHT OF WAY AND ACCESS DATA, CONTACT RIGHT OF WAY ENGINEERING AT THE DISTRICT OFFICE.

LEGEND:

- ESA — ENVIRONMENTALLY SENSITIVE AREA
- XX — CONSTRUCTION AREA SIGN
- → — DIRECTION of TRAFFIC
- WORK AREA

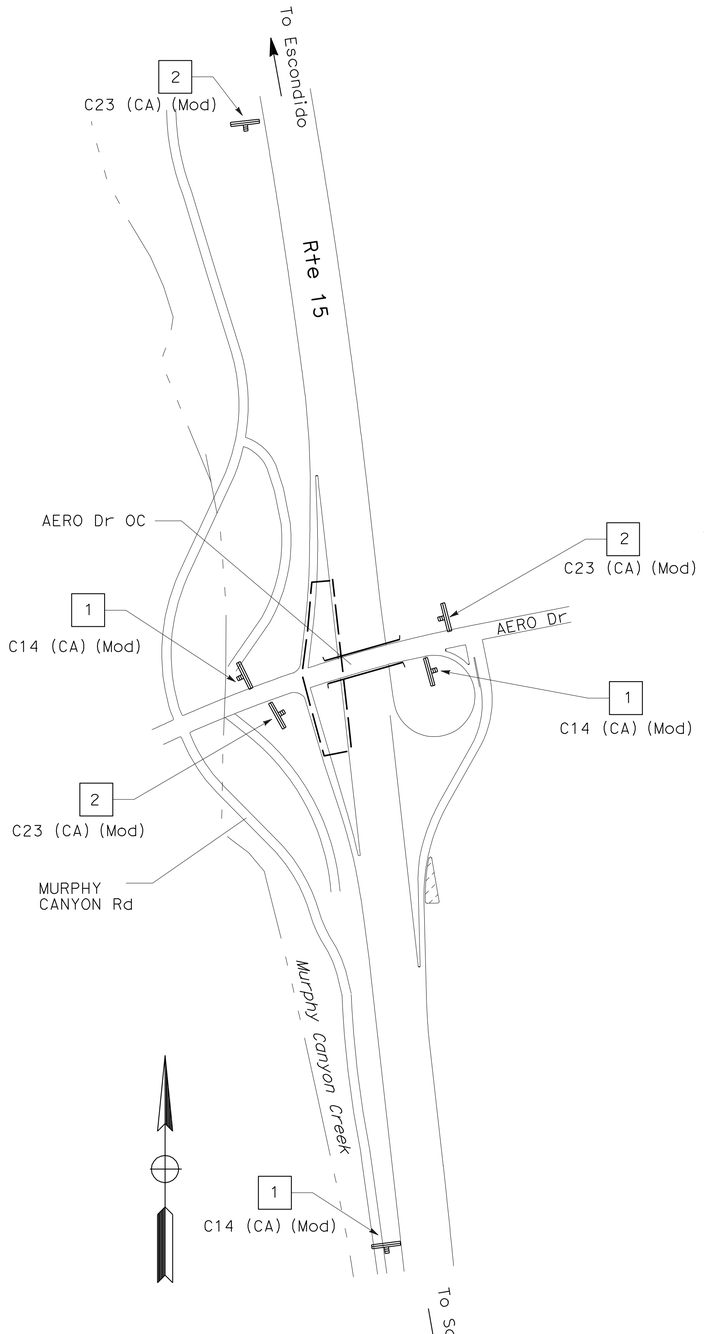

LOCATION 1

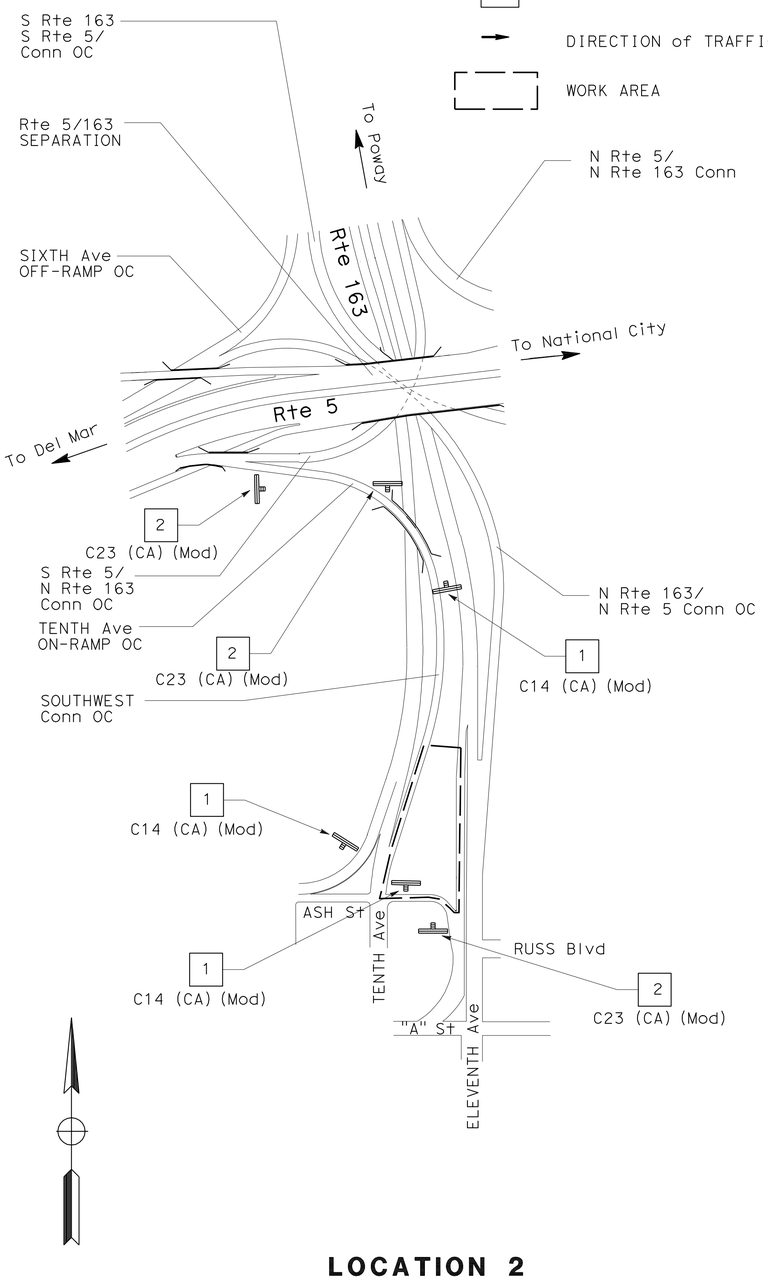

LOCATION 2

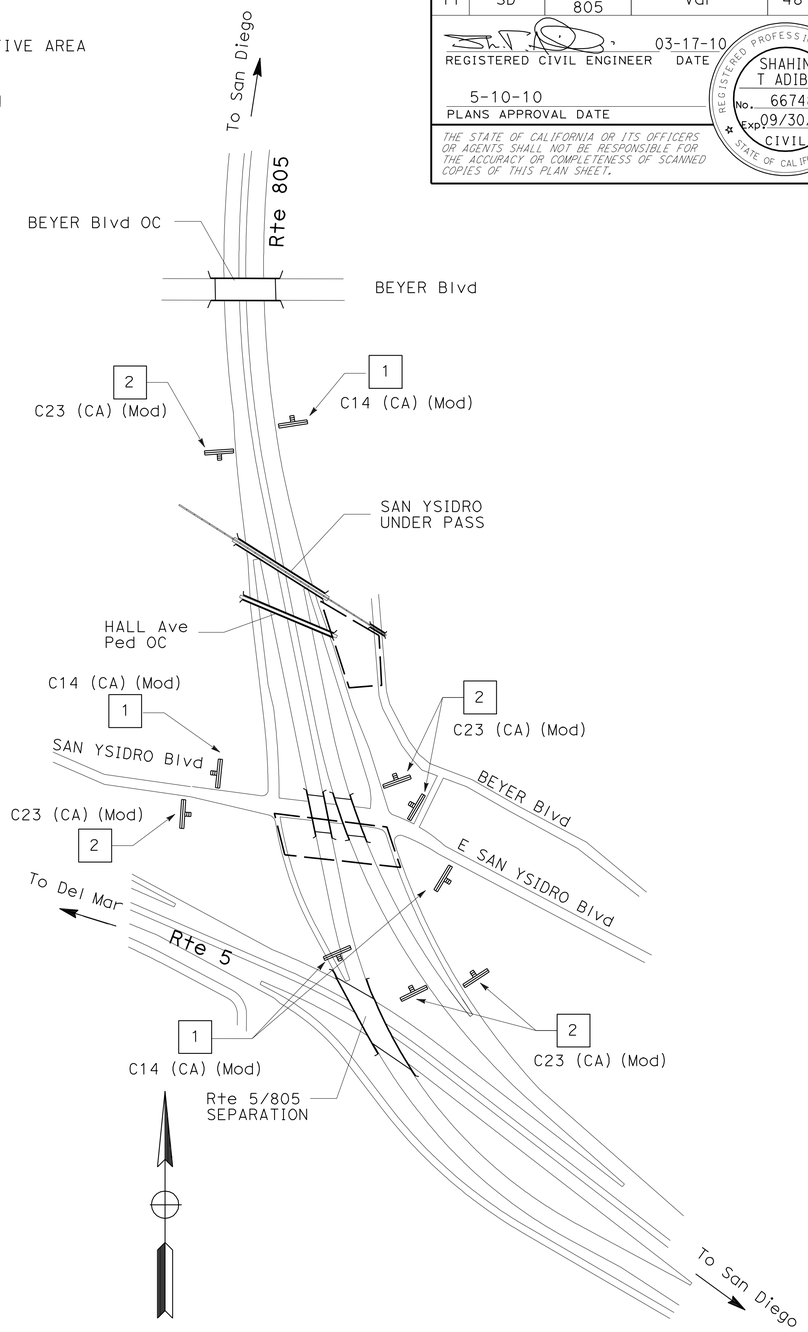

LOCATIONS 3 & 4

THIS PLAN ACCURATE FOR CONSTRUCTION AREA SIGNS ONLY.

CONSTRUCTION AREA SIGNS
LOCATIONS 1,2,3 & 4

NO SCALE

CS-1

STATE OF CALIFORNIA - DEPARTMENT OF TRANSPORTATION
Caltrans
TRAFFIC DESIGN

FUNCTIONAL SUPERVISOR: CAMILLE ABOUFADEL
CALCULATED-DESIGNED BY: MARY BETH HAYES
CHECKED BY: SHAHIN T. ADIBI
REVISED BY
DATE REVISED

LAST REVISION 03-24-10
DATE PLOTTED => 13-MAY-2010
TIME PLOTTED => 10:29

Dist	COUNTY	ROUTE	POST MILES TOTAL PROJECT	SHEET No.	TOTAL SHEETS
11	SD	15,163, 805	Var	49	64

REGISTERED CIVIL ENGINEER 03-17-10 DATE

5-10-10
PLANS APPROVAL DATE

REGISTERED PROFESSIONAL ENGINEER SHAHIN T ADIBI No. 66748 Exp. 09/30/10 CIVIL STATE OF CALIFORNIA

THE STATE OF CALIFORNIA OR ITS OFFICERS OR AGENTS SHALL NOT BE RESPONSIBLE FOR THE ACCURACY OR COMPLETENESS OF SCANNED COPIES OF THIS PLAN SHEET.

NOTE:

1. FOR ACCURATE RIGHT OF WAY AND ACCESS DATA, CONTACT RIGHT OF WAY ENGINEERING AT THE DISTRICT OFFICE.

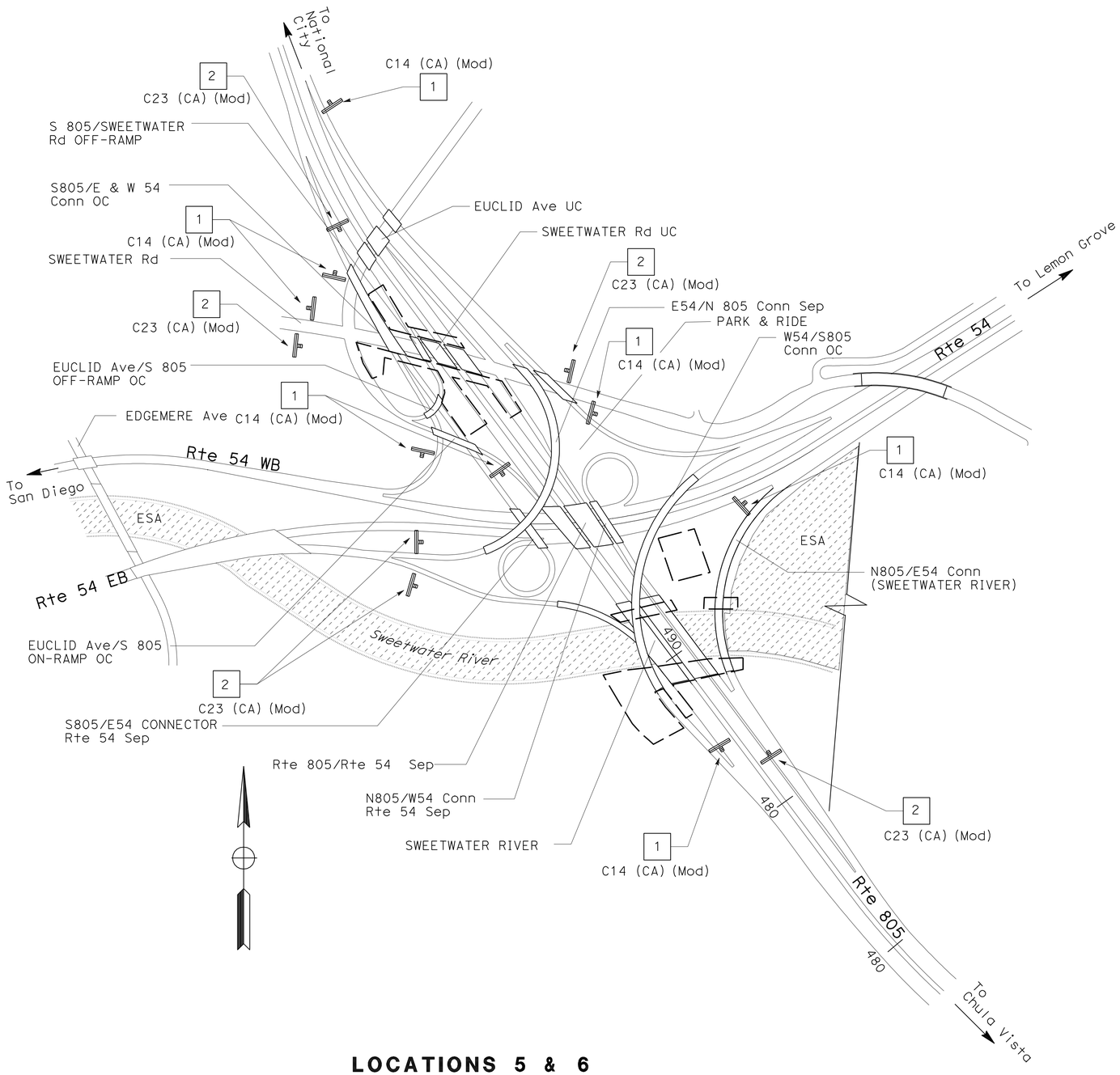

LOCATIONS 5 & 6

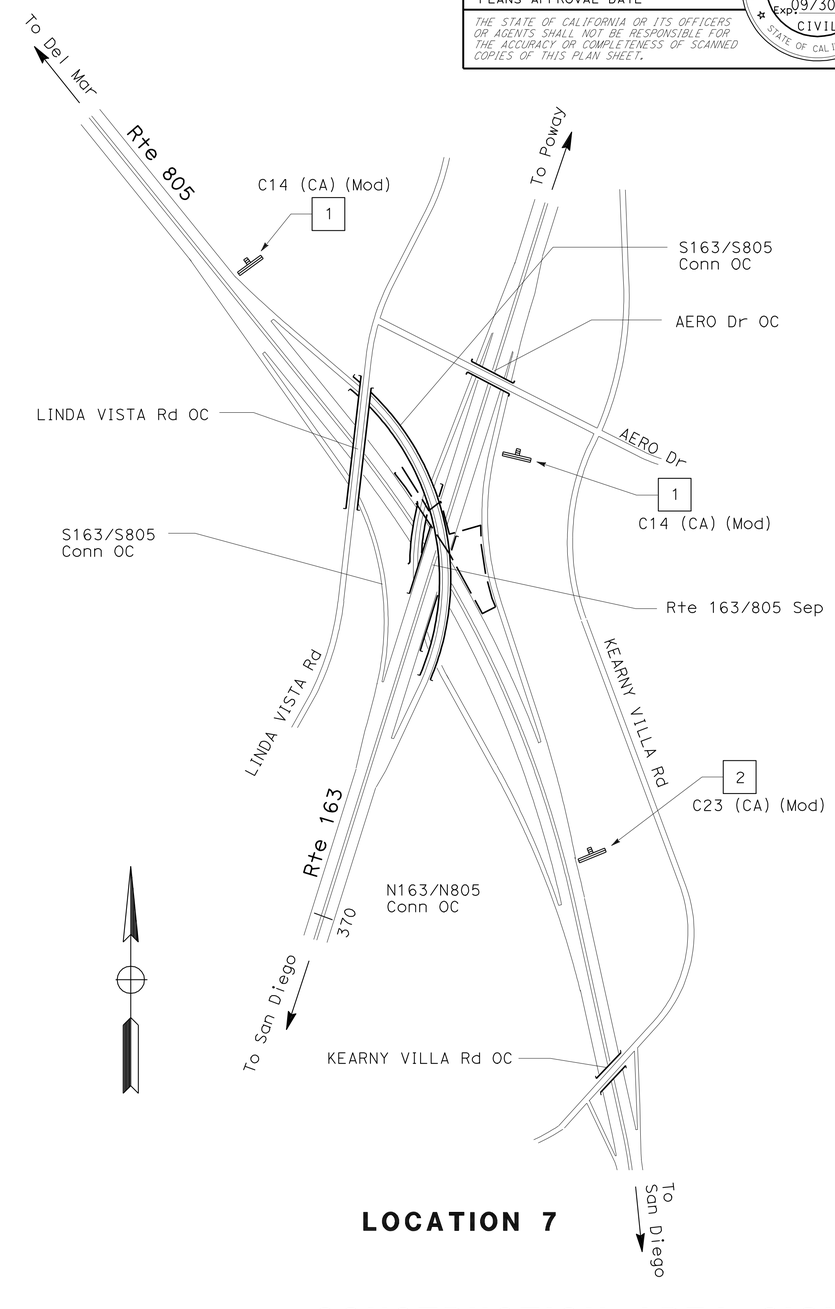

LOCATION 7

THIS PLAN ACCURATE FOR CONSTRUCTION AREA SIGNS ONLY.

CONSTRUCTION AREA SIGNS
LOCATION 5,6 & 7

NO SCALE

CS-2

STATE OF CALIFORNIA - DEPARTMENT OF TRANSPORTATION
Caltrans
TRAFFIC DESIGN

FUNCTIONAL SUPERVISOR: CAMILLE ABOUFADEL
CALCULATED-DESIGNED BY: SHAHIN T. ADIBI
CHECKED BY: MARY BETH HAYES
REVISED BY
DATE REVISED

LAST REVISION 03-24-10 | DATE PLOTTED => 13-MAY-2010 | TIME PLOTTED => 10:29

Dist	COUNTY	ROUTE	POST MILES TOTAL PROJECT	SHEET No.	TOTAL SHEETS
11	SD	15,163, 805	Var	50	64

REGISTERED CIVIL ENGINEER 03-17-10 DATE

5-10-10
PLANS APPROVAL DATE

REGISTERED PROFESSIONAL ENGINEER SHAHIN T ADIBI No. 66748 Exp. 09/30/10 CIVIL STATE OF CALIFORNIA

THE STATE OF CALIFORNIA OR ITS OFFICERS OR AGENTS SHALL NOT BE RESPONSIBLE FOR THE ACCURACY OR COMPLETENESS OF SCANNED COPIES OF THIS PLAN SHEET.

NOTE:

1. FOR ACCURATE RIGHT OF WAY AND ACCESS DATA, CONTACT RIGHT OF WAY ENGINEERING AT THE DISTRICT OFFICE.

CONSTRUCTION AREA SIGNS

SIGN No.	TYPE	PANEL SIZE (in)	No. OF POST AND SIZE (in)	NUMBER OF SIGNS	REMARKS
1	C14 (CA) (Mod)	48" X 24"	1-4" X 4" (S)	19	
2	C23 (CA) (Mod)	36" X 36"	1-4" X 4" (S)	19	
			TOTAL	38	

NOTES:

1. EXACT SIGN LOCATIONS TO BE DETERMINED BY THE ENGINEER.
2. (S) DENOTES STATIONARY MOUNTED SIGN.
3. (CA) INDICATES CALIFORNIA SIGN SPECS ARE USED
4. EXISTING UTILITIES HAVE NOT BEEN SHOWN ON THESE PLAN SHEETS. CONTRACTOR SHALL VERIFY LOCATIONS OF EXISTING UTILITIES AND AVOID IMPACTING THESE EXISTING UTILITIES BY ADJUSTING THE FIELD LOCATION OF SIGN POSTS IN CONSULTATION WITH ENGINEER.

C14 (CA) (Mod)

1

C23 (CA) (Mod)

2

TYPICAL- PLACEMENT OF TRAFFIC PLASTIC DRUM

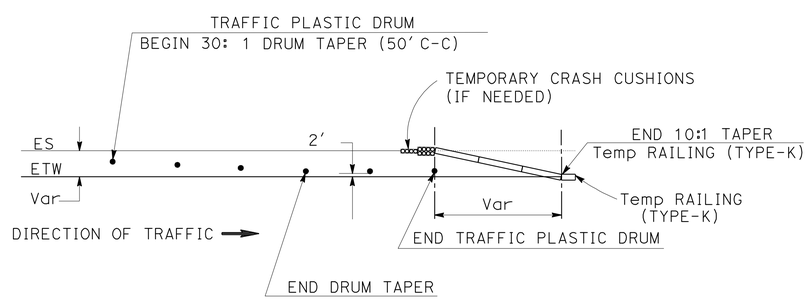

THIS PLAN ACCURATE FOR CONSTRUCTION AREA SIGNS ONLY

CONSTRUCTION AREA SIGNS

NO SCALE

CS-3

STATE OF CALIFORNIA - DEPARTMENT OF TRANSPORTATION
Caltrans® **TRAFFIC DESIGN**

FUNCTIONAL SUPERVISOR: CAMILLE ABOUFADEL
CALCULATED-DESIGNED BY: MARY BETH HAYES
CHECKED BY: SHAHIN T. ADIBI
REVISED BY
DATE REVISED

LAST REVISION 03-24-10
DATE PLOTTED => 13-MAY-2010
TIME PLOTTED => 10:29

DIST	COUNTY	ROUTE	POST MILES TOTAL PROJECT	SHEET NO.	TOTAL SHEETS
11	SD	15,163, 805	Var	51	64

Glenn DeCou
REGISTERED CIVIL ENGINEER

June 5, 2009
PLANS APPROVAL DATE

REGISTERED PROFESSIONAL ENGINEER Glenn DeCou No. C34547 Exp. 9-30-09 CIVIL STATE OF CALIFORNIA

The State of California or its officers or agents shall not be responsible for the accuracy or completeness of electronic copies of this plan sheet.

To accompany plans dated 5-10-10

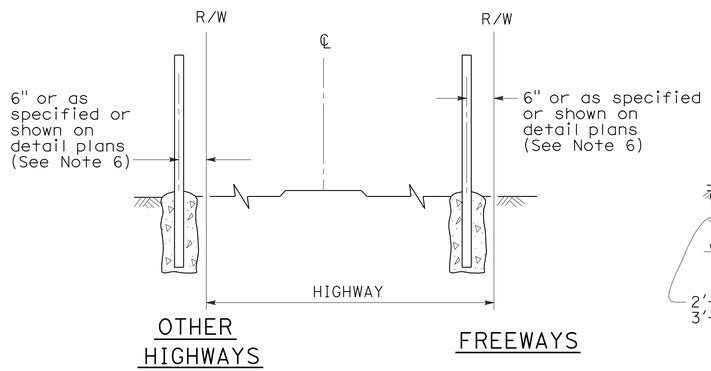

FENCE LOCATION

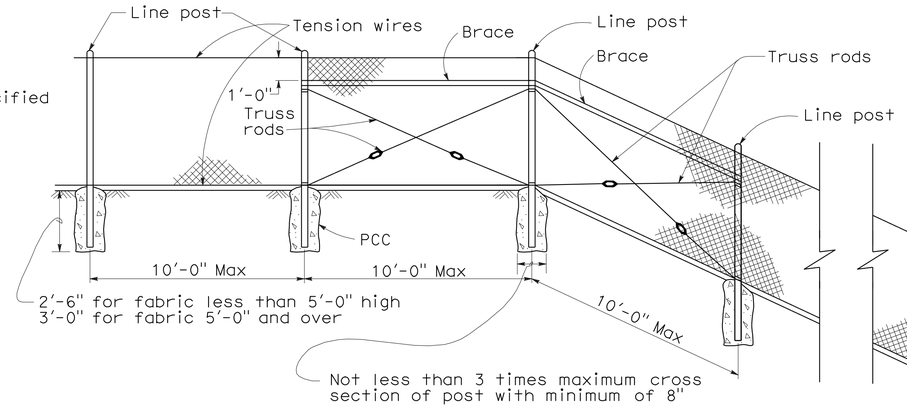

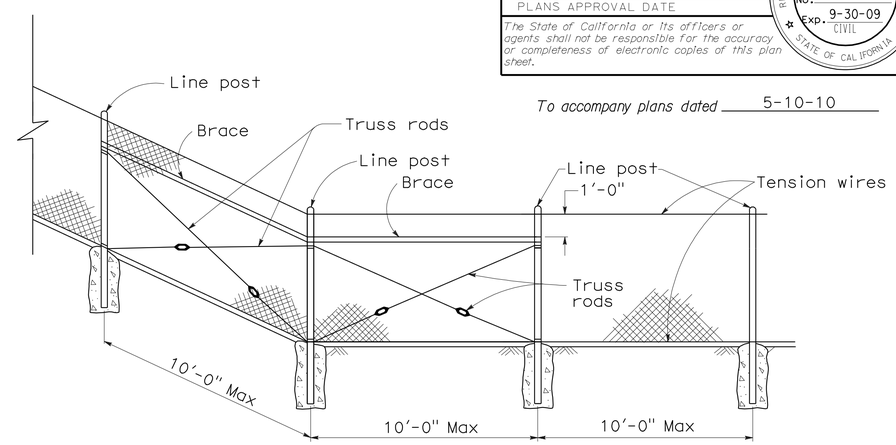

CHAIN LINK FENCE ON SHARP BREAK IN GRADE

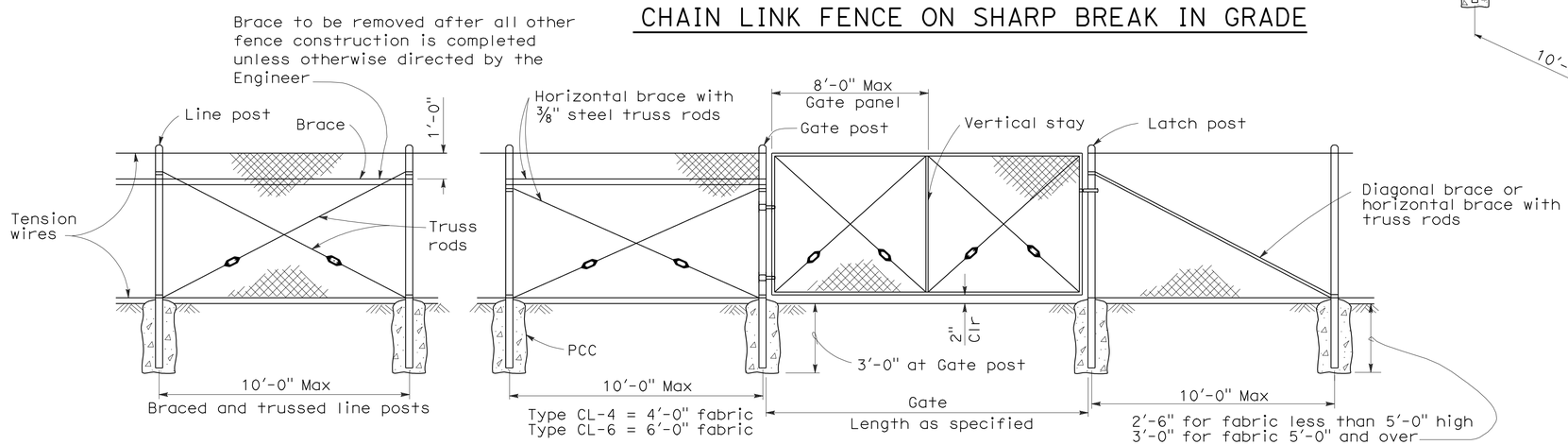

CHAIN LINK GATE INSTALLATION

GATE POST			
FENCE HEIGHT	GATE WIDTHS	NOMINAL ID	WEIGHT PER FOOT
6'-0" and Less	Up thru 6'-0"	2½"	4.95 LB
	Over 6'-0" thru 12'-0"	4"	10.79 LB
	Over 12'-0" thru 18'-0"	5"	14.62 LB
	Over 18'-0" to 24'-0" Max	6"	18.97 LB
Over 6'-0"	Up thru 6'-0"	3"	7.58 LB
	Over 6'-0" thru 12'-0"	5"	14.62 LB
	Over 12'-0" thru 18'-0"	6"	18.97 LB
	Over 18'-0" to 24'-0" Max	8"	28.55 LB

Above post dimensions and weights are minimums. Larger sizes may be used on approval of the Engineer.

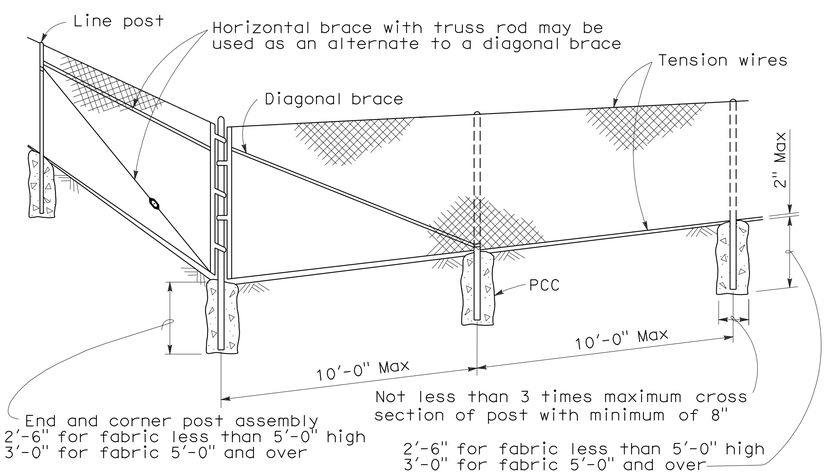

CORNER POST

NOTES:

1. The below table shows examples of post and brace sections which may comply with the Specifications.
2. Sections shown in the tables must also comply with the strength requirements and other provisions of the Specifications.
3. Other sections which comply with the strength requirements and other provisions of the Specifications may be used on approval of the Engineer.
4. Options exercised shall be uniform on any one project.
5. Dimensions shown are nominal.
6. Offset to be 2'-0" at monument locations, measured at right angles to R/W lines. Taper to achieve offset to be at least 20'-0" long.

TYPICAL MEMBER DIMENSIONS (See Notes)											
FENCE HEIGHT	LINE POSTS			END, LATCH & CORNER POSTS				BRACES			
	ROUND ID	H	ROLL FORMED	ROUND ID	ROLL FORMED			ROUND ID	H	ROLL FORMED	
6' & less	1½"	1⅞" × 1⅝"	1⅞" × 1⅝"	2"	3½" × 3½"	2" × 1¾"		1¼"	1½" × 1 5/16"	1⅝" × 1¼"	1¾" × 1¼"
Over 6'	2"	2¼" × 2"	2" × 1¾"	2½"	3½" × 3½"	2½" × 2½"		1¼"	1½" × 1 5/16"	1⅝" × 1¼"	1¾" × 1¼"

STATE OF CALIFORNIA
DEPARTMENT OF TRANSPORTATION

CHAIN LINK FENCE

NO SCALE

RSP A85 DATED JUNE 5, 2009 SUPERSEDES STANDARD PLAN A85
DATED MAY 1, 2006 - PAGE 111 OF THE STANDARD PLANS BOOK DATED MAY 2006.

REVISED STANDARD PLAN RSP A85

2006 REVISED STANDARD PLAN RSP A85

5-7-09

DIST	COUNTY	ROUTE	POST MILES TOTAL PROJECT	SHEET NO.	TOTAL SHEETS
11	SD	15,163, 805	Var	52	64

LICENSED LANDSCAPE ARCHITECT

June 5, 2009
PLANS APPROVAL DATE

LICENSED LANDSCAPE ARCHITECT
Gregory A. Balzer 2516
10 January
2-28-11
Renewal Date
5-14-09
Date
STATE OF CALIFORNIA

The State of California or its officers or agents shall not be responsible for the accuracy or completeness of electronic copies of this plan sheet.

To accompany plans dated 5-10-10

A

AB	aggregate base
ABS	acrylonitrile-butadiene-styrene
AC	asphalt concrete
Adj	adjacent/adjustable
AIC	auxiliary irrigation controller
Alt	alternative
AMEND	amendment
ARV	air release valve
AUTO	automatic
AUX	auxiliary
AVB	atmospheric vacuum breaker

B

B&B	balled and burlapped
B/B	brass/bronze
B/B/PL	brass/bronze/plastic
B/PL	brass/plastic
BFM	bonded fiber matrix
Bit Ctd	bituminous coated
BP	booster pump
BPA	backflow preventer assembly
BPAE	backflow preventer assembly in enclosure
BPE	backflow preventer enclosure
BV	ball valve

C

CAP	corrugated aluminum pipe
CARV	combination air release valve
CCA	cam coupler assembly
CEC	controller enclosure cabinet
CHDPE	corrugated high density polyethylene
CL	chain link
CNC	control and neutral conductors
Conc	concrete
Cond	conduit
CSP	corrugated steel pipe
CST	center strip
CV	check valve

D

Dia	diameter
DIP	ductile iron pipe
DN	diameter nominal

E

EA	each
Elect	electric/electrical
Elev	elevation
ENCL	enclosure
EP	edge of pavement
ES	edge of shoulder
EST	end strip
ESTB	establishment
ETW	edge of traveled way

F

F	full circle
F/P	full/part circle
FAU	filter assembly unit
FCV	flow control valve
FERT	fertilizer
FG	finished grade
FIPT	female iron pipe thread
FIS	fertilizer injector system
FL	flow line
FM	flow monitor
FS	flow sensor
Ft	foot/feet
FV	flush valve

G

GAL	Gallon(s)
Galv	galvanized
GARV	garden valve
GPH	gallons per hour
GPM	gallons per minute
GSP	galvanized steel pipe
GV	gate valve

H

H	half circle
HB	hose bib
HDPE	high density polyethylene
HP	horsepower/hinge point
HPL	high pressure line
Hwy	highway

I

IC	irrigation controller
ICC	irrigation controller(s) in controller enclosure cabinet
ID	inside diameter
In	inches
IFS	irrigation filtration system
IPS	iron pipe size
IPT	iron pipe thread
Irr	irrigation

L

L	length
LF	linear foot

M

Max	maximum
MBGR	metal beam guard railing
MCV	manual control valve
MIC	master irrigation controller
Min	minimum
MIPT	male iron pipe thread
Misc	miscellaneous
Mtl	material
MVP	maintenance vehicle pullout

N

NCN	no common name
NL	nozzle line
No.	number
NPT	national pipe thread

O

O/C	on center
OD	outside diameter
Oz	ounce

P

P	part circle
PB	pull box
PCC	portland cement concrete
PE	polyethylene
Pkt	packet
PL	plastic
PLT	plant/planting
PLT ESTB	plant establishment
PM	post mile
PR	pressure rated
PRLV	pressure relief valve
PSFM	polymer stabilized fiber matrix
PSI	pounds per square inch
PRV	pressure reducing valve
PVC	polyvinyl chloride
Pvmt	pavement

Q

Q	quarter circle
QCV	quick coupling valve

R

R	radius
RCP	reinforced concrete pipe
RCV	remote control valve
RCVM	remote control valve (master)
RCVMF	remote control valve (master) w/ flow meter
RCW	recycled/reclaimed water
RECP	rolled erosion control product
REQ	required
R/W	right of way

S

S	slip
SCC	sprinkler control conduit
SCH	schedule
SF	state-furnished
Shld	shoulder
SQFT	square foot/feet
SQYD	square yard(s)
SST	side strip
Sta	station
Std	standard
SW	sidewalk/sound wall

T

T	third circle/thread
TLS	truck loading standpipe
TQ	three quarter circle
TRM	turf reinforcement mat
TRVD	traveled
TT	two third circle
Typ	typical

U

UG	underground

V

VAU	valve assembly unit

W

W	width
W/	with
WM	water meter
WS	wye strainer
WSP	welded steel pipe
WWM	welded wire mesh

NOTE:

FOR ADDITIONAL ABBREVIATIONS, SEE STANDARD PLANS A10A AND A10B.

STATE OF CALIFORNIA
DEPARTMENT OF TRANSPORTATION

PLANTING AND IRRIGATION ABBREVIATIONS

NO SCALE

RSP H1 DATED JUNE 5, 2009 SUPERSEDES STANDARD PLAN H1
DATED MAY 1, 2006 - PAGE 201 OF THE STANDARD PLANS BOOK DATED MAY 2006.

REVISED STANDARD PLAN RSP H1

2006 REVISED STANDARD PLAN RSP H1

5-28-09

DIST	COUNTY	ROUTE	POST MILES TOTAL PROJECT	SHEET NO.	TOTAL SHEETS
11	SD	15,163, 805	Var	53	64

LICENSED LANDSCAPE ARCHITECT

June 5, 2009
PLANS APPROVAL DATE

The State of California or its officers or agents shall not be responsible for the accuracy or completeness of electronic copies of this plan sheet.

LICENSED LANDSCAPE ARCHITECT — Gregory A. Balzer — 2516 — 10 January 2-28-11 Renewal Date — 5-14-09 Date — STATE OF CALIFORNIA

To accompany plans dated 5-10-10

EXISTING	PROPOSED	ITEM DESCRIPTION
		WATER METER (WM)
		BACKFLOW PREVENTER ASSEMBLY (BPA)
		BACKFLOW PREVENTER ASSEMBLY IN ENCLOSURE (BPAE)
		BACKFLOW PREVENTER ENCLOSURE (BPE)
		BOOSTER PUMP (BP)
		TRUCK LOADING STANDPIPE (TLS)
FS	FS	FLOW SENSOR (FS)
X	X	MASTER IRRIGATION CONTROLLER (MIC)
		AUXILIARY IRRIGATION CONTROLLER (AIC)
		IRRIGATION CONTROLLER (IC)/ IRRIGATION CONTROLLER (IC) (BATTERY) IRRIGATION CONTROLLER (IC) (SOLAR)
		IRRIGATION CONTROLLER(S) IN CONTROLLER ENCLOSURE CABINET (ICC)
		CONTROL AND NEUTRAL CONDUCTORS (CNC)
SCC	SCC	SPRINKLER CONTROL CONDUIT (SCC)
		IRRIGATION CROSSOVER
		EXTEND IRRIGATION CROSSOVER
		IRRIGATION SLEEVE
dip	DIP	DUCTILE IRON PIPE (SUPPLY LINE) (MAIN) (DIP)
		GALVANIZED STEEL PIPE (SUPPLY LINE) (MAIN) (GSP)
		GALVANIZED STEEL PIPE (SUPPLY LINE) (LATERAL) (GSP)
		PLASTIC PIPE (PR 200) (SUPPLY LINE) (MAIN)
		PLASTIC PIPE (PR 200) (SUPPLY LINE) (LATERAL)
		PLASTIC PIPE (IRRIGATION LINE)
		REMOTE CONTROL VALVE (RCV) REMOTE CONTROL VALVE (MASTER) (RCVM) REMOTE CONTROL VALVE (MASTER) W/FLOW METER (RCVMF)
		MANUAL CONTROL VALVE (MCV)
		VALVE ASSEMBLY UNIT (VAU)
		WYE STRAINER (WS)
		FILTER ASSEMBLY UNIT (FAU)
		GATE VALVE (GV)
		BALL VALVE (BV)

EXISTING	PROPOSED	ITEM DESCRIPTION
		QUICK COUPLING VALVE (QCV)
		CAM COUPLER ASSEMBLY (CCA)
		PRESSURE REDUCING VALVE (PRV)
		PRESSURE RELIEF VALVE (PRLV)
		FLOW CONTROL VALVE (FCV)
		COMBINATION AIR RELEASE VALVE (CARV)
		CHECK VALVE (CV)
		FLUSH VALVE (FV)
		NOZZLE LINE W/TURNING UNION
		IRRIGATION SYSTEM
		IRRIGATION SYSTEM TO BE REMOVED
		CHAIN LINK GATE
		QUICK COUPLING VALVE W/SPRINKLER PROTECTOR
3	3	SPRINKLER W/SPRINKLER PROTECTOR
	C	CONNECT TO EXISTING SYSTEM
		CAP
		CAP EXISTING

VALVE CODE

RCV SIZE
IRRIGATION CONTROLLER
CONTROLLER STATION
VALVE IN PARALLEL (IF APPLICABLE)
GPM
QUANTITY OF SPRINKLERS (WHEN SHOWN)

* 2½"-A-2b-40 -60

MCV SIZE
VALVE NUMBER
GPM
QUANTITY OF TYPE SPRINKLERS (WHEN SHOWN)

* 2"-3-30 -50

* VALVE CODES FOR EXISTING VALVES ARE SHOWN IN A DASHED ENCLOSURE.

STATE OF CALIFORNIA
DEPARTMENT OF TRANSPORTATION

PLANTING AND IRRIGATION SYMBOLS

NO SCALE

RSP H2 DATED JUNE 5, 2009 SUPERSEDES RSP H2 DATED MARCH 7, 2008 AND STANDARD PLAN H2 DATED MAY 1, 2006 - PAGE 202 OF THE STANDARD PLANS BOOK DATED MAY 2006.

REVISED STANDARD PLAN RSP H2

2006 REVISED STANDARD PLAN RSP H2

DIST	COUNTY	ROUTE	POST MILES TOTAL PROJECT	SHEET NO.	TOTAL SHEETS
11	SD	15,163, 805	Var	54	64

LICENSED LANDSCAPE ARCHITECT

June 5, 2009
PLANS APPROVAL DATE

The State of California or its officers or agents shall not be responsible for the accuracy or completeness of electronic copies of this plan sheet.

LICENSED LANDSCAPE ARCHITECT
Gregory A. Balzer 2516
10 January
2-28-11
Renewal Date
5-14-09
Date
STATE OF CALIFORNIA

To accompany plans dated 5-10-10

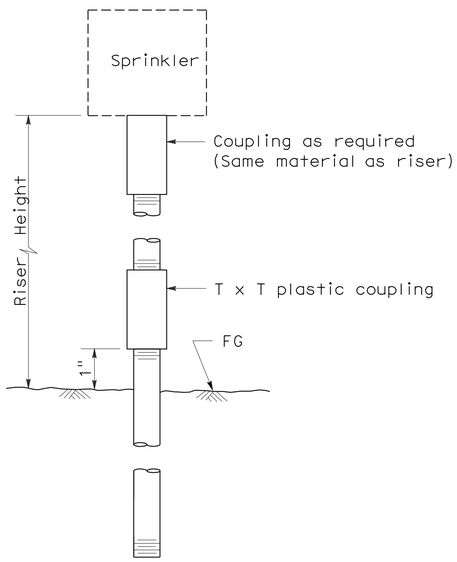

ELEVATION
RISER TYPE I

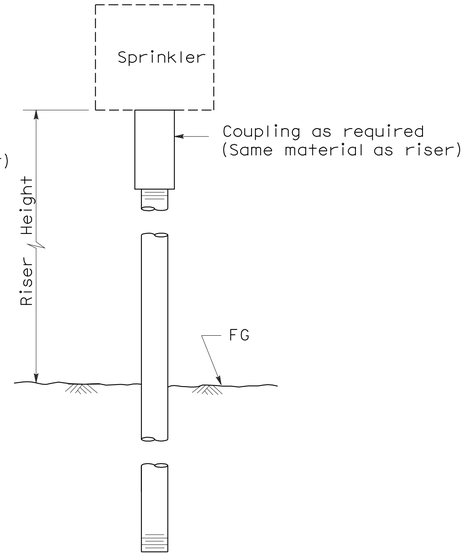

ELEVATION
RISER TYPE II

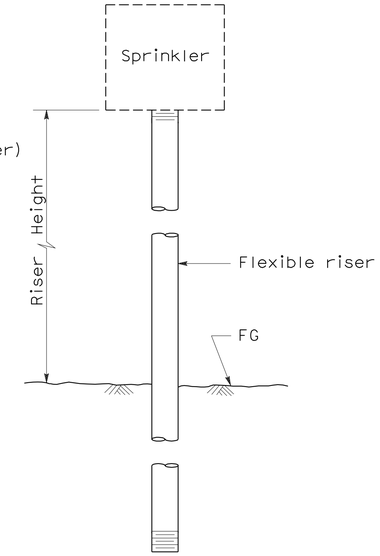

ELEVATION
RISER TYPE III

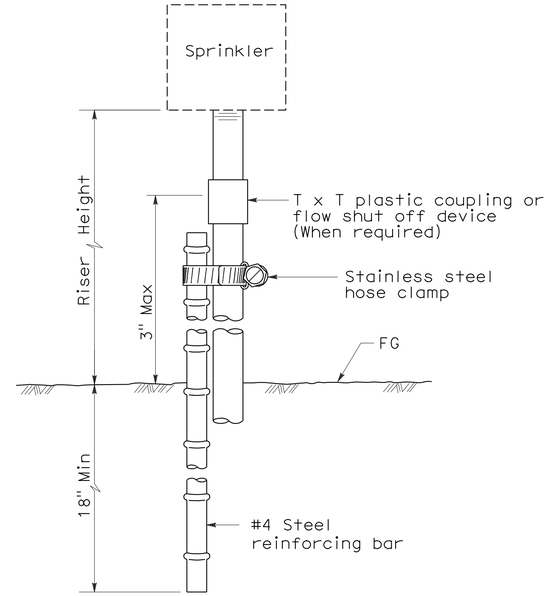

ELEVATION
RISER TYPE IV

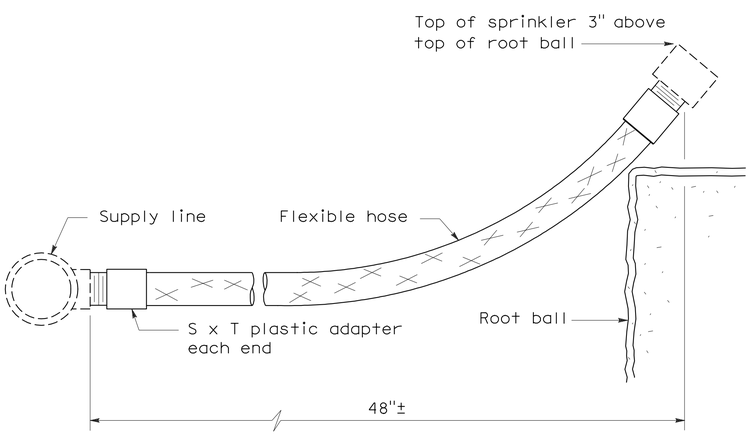

ELEVATION
RISER TYPE V

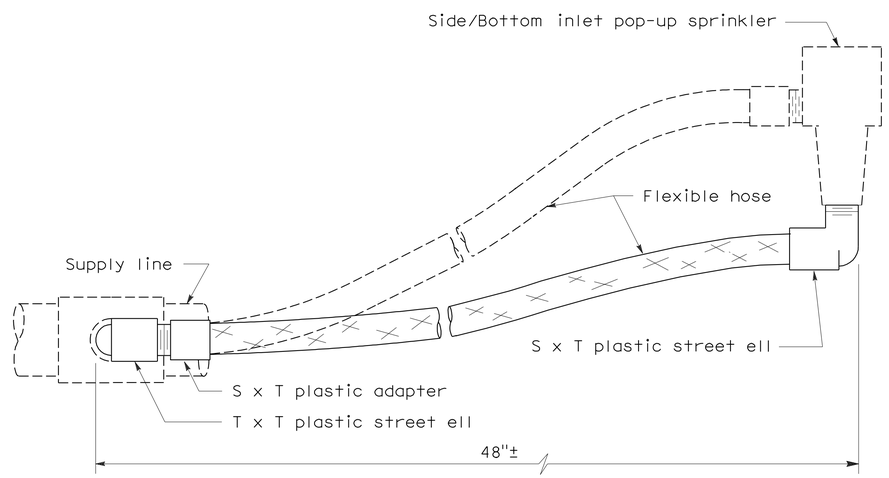

ELEVATION
RISER TYPE VI

STATE OF CALIFORNIA
DEPARTMENT OF TRANSPORTATION

PLANTING AND IRRIGATION DETAILS

NO SCALE

RSP H5 DATED JUNE 5, 2009 SUPERSEDES STANDARD PLAN H5
DATED MAY 1, 2006 - PAGE 205 OF THE STANDARD PLANS BOOK DATED MAY 2006.

REVISED STANDARD PLAN RSP H5

2006 REVISED STANDARD PLAN RSP H5

5-28-09

DIST	COUNTY	ROUTE	POST MILES TOTAL PROJECT	SHEET NO.	TOTAL SHEETS
11	SD	15,163, 805	Var	55	64

LICENSED LANDSCAPE ARCHITECT

June 5, 2009
PLANS APPROVAL DATE

LICENSED LANDSCAPE ARCHITECT Gregory A. Balzer 2576 STATE OF CALIFORNIA
10-January 2-28-11 (Renewal) Date 5-14-09 Date

The State of California or its officers or agents shall not be responsible for the accuracy or completeness of electronic copies of this plan sheet.

To accompany plans dated 5-10-10

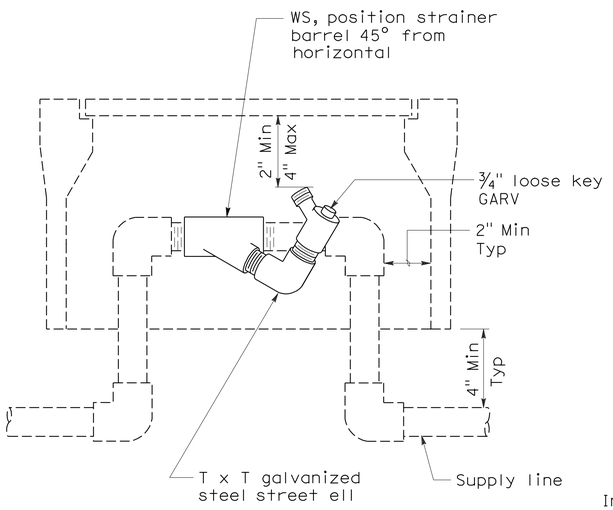

ELEVATION
WYE STRAINER

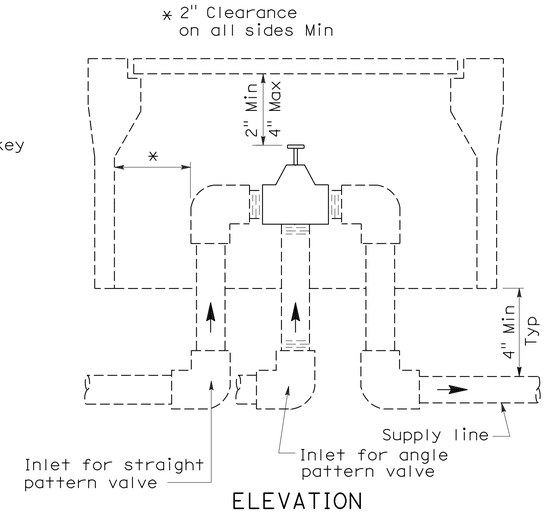

ELEVATION
VALVE

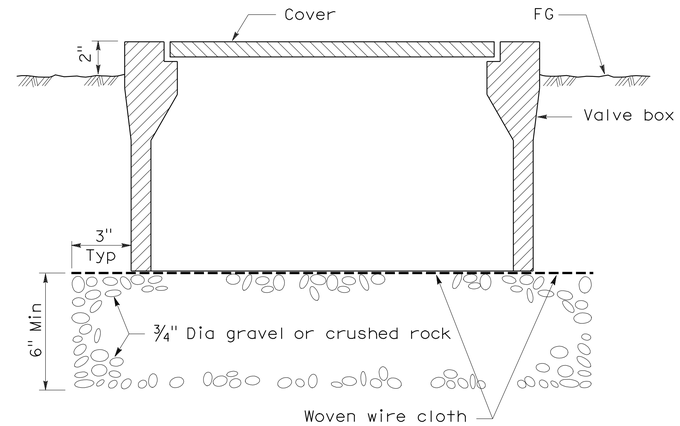

SECTION
VALVE BOX

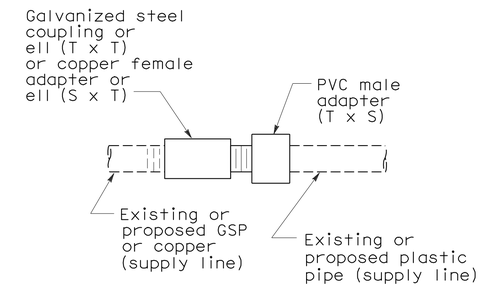

PLAN
GALVANIZED OR COPPER PIPE CONNECTION TO PLASTIC PIPE

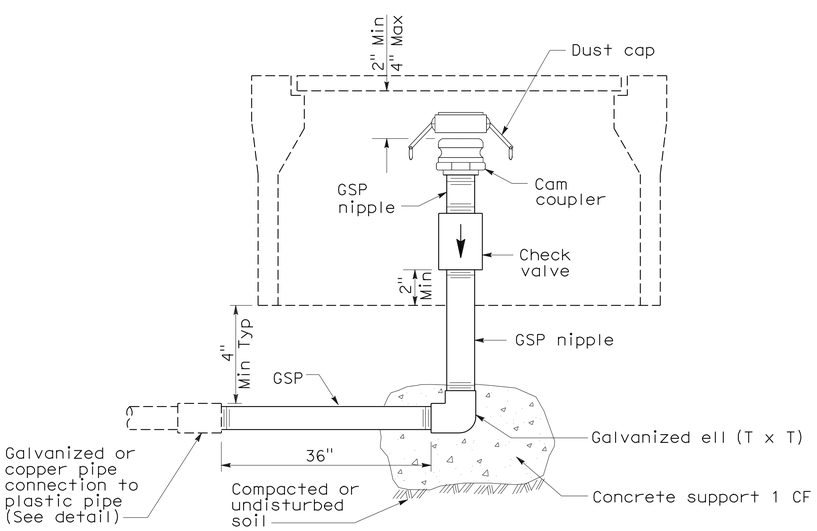

ELEVATION
CAM COUPLER ASSEMBLY

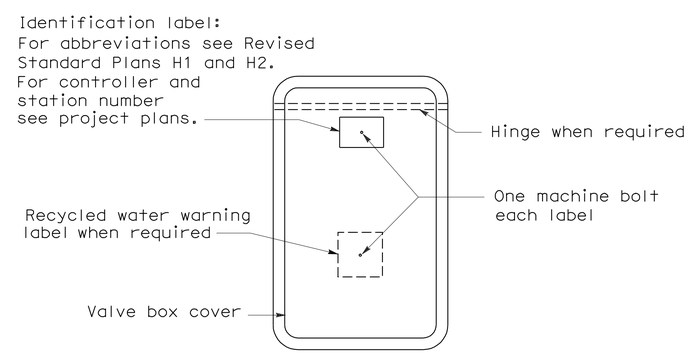

PLAN

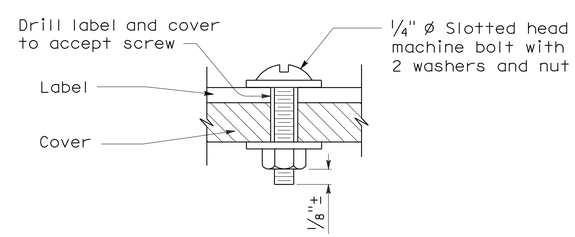

SECTION
VALVE BOX IDENTIFICATION

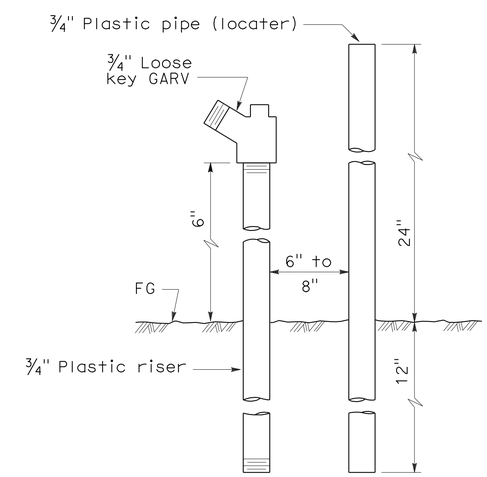

ELEVATION
FLUSH VALVE

STATE OF CALIFORNIA
DEPARTMENT OF TRANSPORTATION

PLANTING AND IRRIGATION DETAILS

NO SCALE

RSP H7 DATED JUNE 5, 2009 SUPERSEDES STANDARD PLAN H7
DATED MAY 1, 2006 - PAGE 207 OF THE STANDARD PLANS BOOK DATED MAY 2006.

REVISED STANDARD PLAN RSP H7

2006 REVISED STANDARD PLAN RSP H7

5-28-09

DIST	COUNTY	ROUTE	POST MILES TOTAL PROJECT	SHEET NO.	TOTAL SHEETS
11	SD	15,163, 805	Var	56	64

LICENSED LANDSCAPE ARCHITECT

April 3, 2009
PLANS APPROVAL DATE

The State of California or its officers or agents shall not be responsible for the accuracy or completeness of electronic copies of this plan sheet.

LICENSED LANDSCAPE ARCHITECT
Gregory A. Balzer
No. 3878
02-28-11
Renewal Date
03-04-09
Date
STATE OF CALIFORNIA

To accompany plans dated 5-10-10

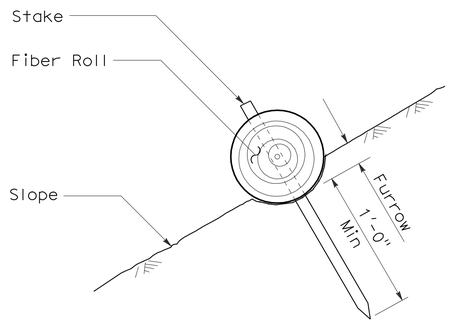

SECTION

FIBER ROLL (TYPE 1)

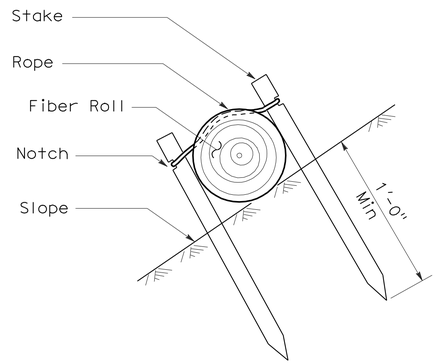

SECTION

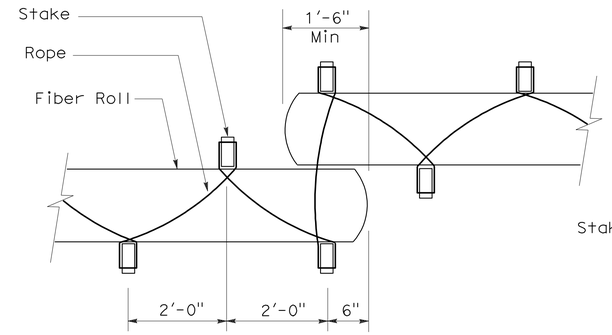

PLAN

FIBER ROLL (TYPE 2)

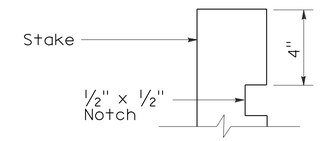

ELEVATION

STAKE NOTCH DETAIL

NOTES:

1. Fiber roll spacing varies depending upon slope inclination.
2. Installations shown in the perspectives are for slope inclination of 10:1 and steeper.

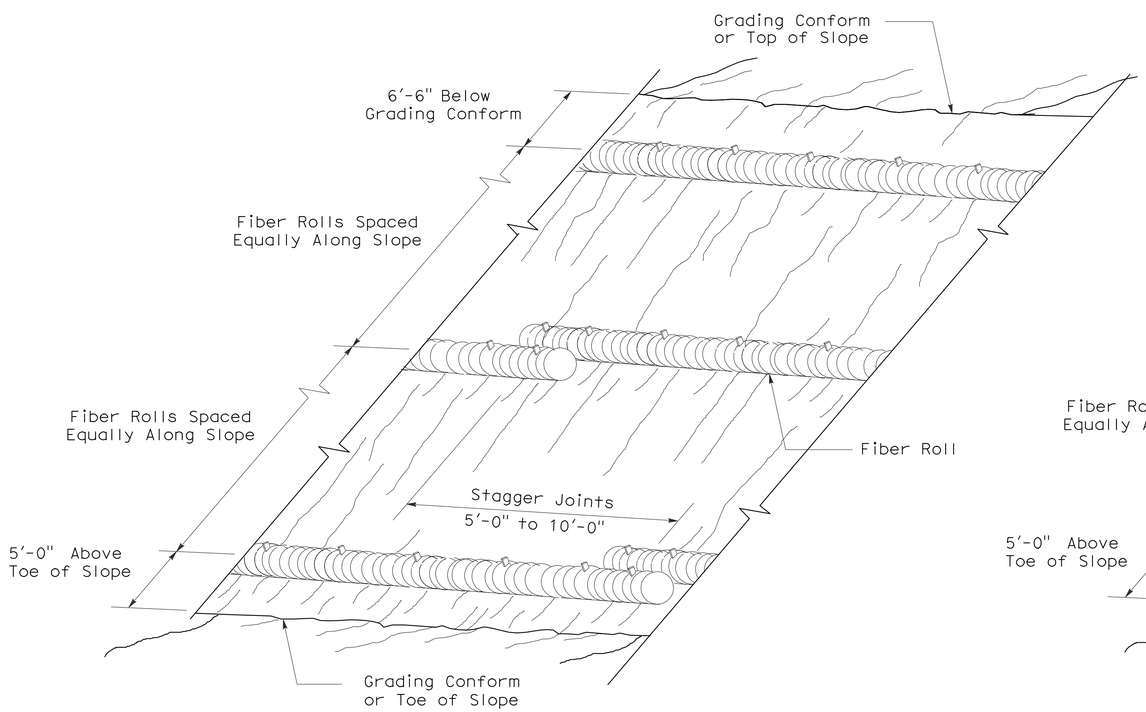

PERSPECTIVE

FIBER ROLL (TYPE 1)

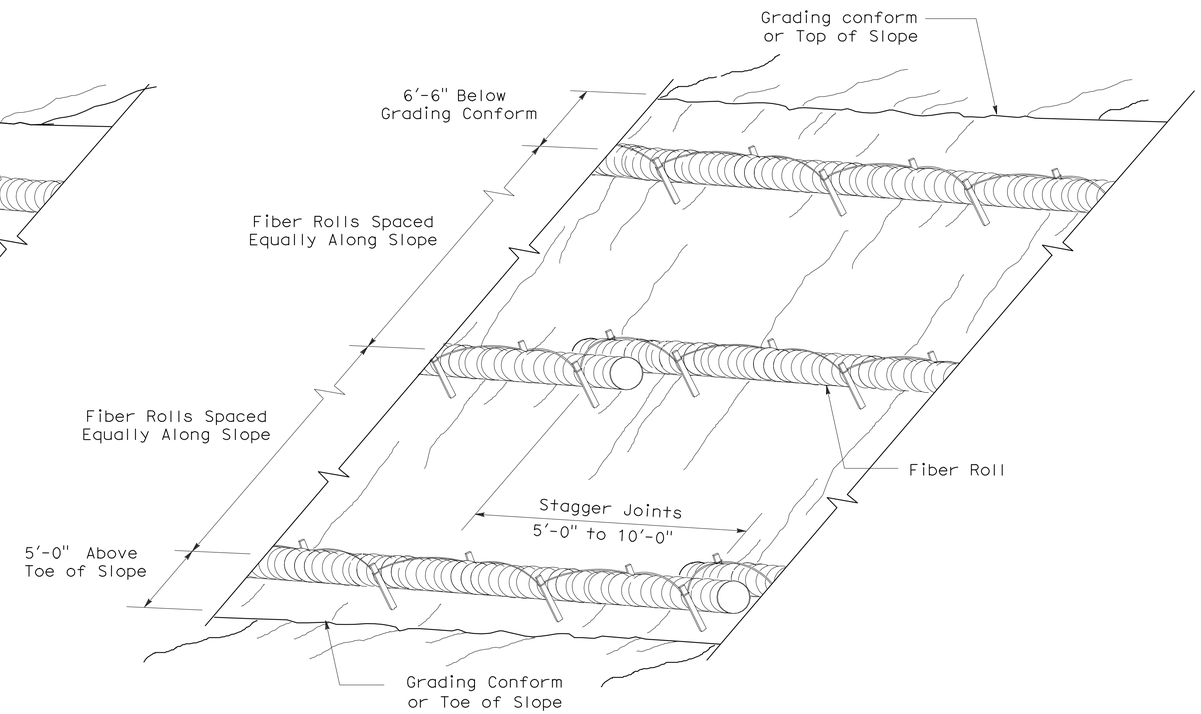

PERSPECTIVE

FIBER ROLL (TYPE 2)

STATE OF CALIFORNIA
DEPARTMENT OF TRANSPORTATION

EROSION CONTROL DETAILS (FIBER ROLL)

NO SCALE

RNSP H51 DATED APRIL 3, 2009 SUPERSEDES NSP H51 DATED DECEMBER 1, 2006 THAT SUPPLEMENTS THE STANDARD PLANS BOOK DATED MAY 2006.

REVISED NEW STANDARD PLAN RNSP H51

2006 REVISED NEW STANDARD PLAN RNSP H51

3-4-09

DIST	COUNTY	ROUTE	POST MILES TOTAL PROJECT	SHEET NO.	TOTAL SHEETS
11	SD	15,163, 805	Var	57	64

LICENSED LANDSCAPE ARCHITECT

June 5, 2009
PLANS APPROVAL DATE

The State of California or its officers or agents shall not be responsible for the accuracy or completeness of electronic copies of this plan sheet.

LICENSED LANDSCAPE ARCHITECT — Gregory A. Balzer — 5-9-09 Signature — 2-28-11 Renewal Date — 5-14-09 Date — STATE OF CALIFORNIA

To accompany plans dated 5-10-10

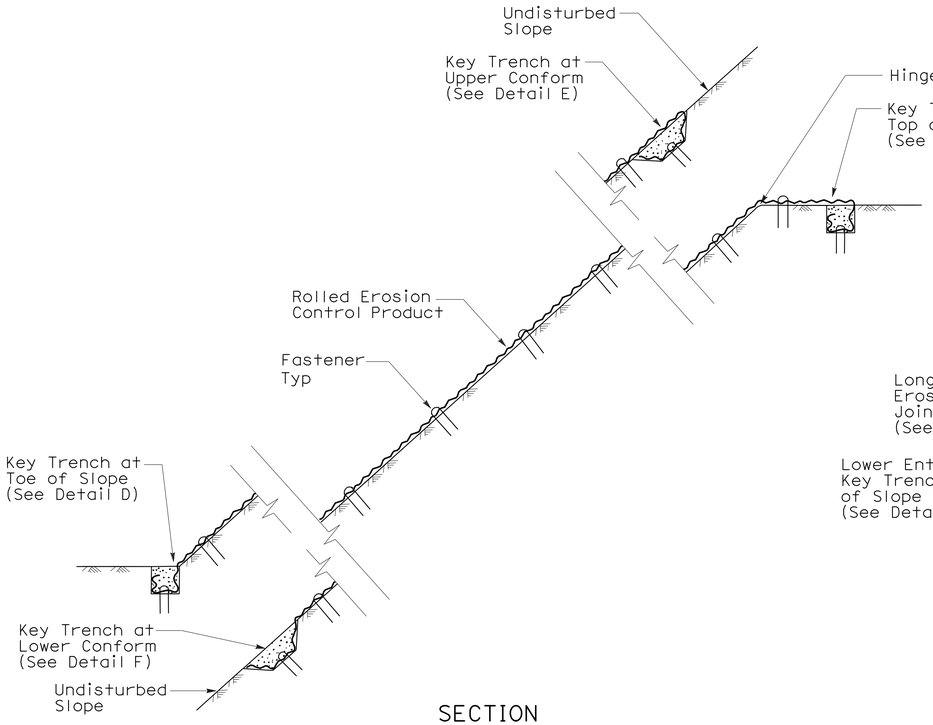

SECTION

ROLLED EROSION CONTROL PRODUCT ON SLOPE WITH VARIOUS KEY ENTRENCHMENTS

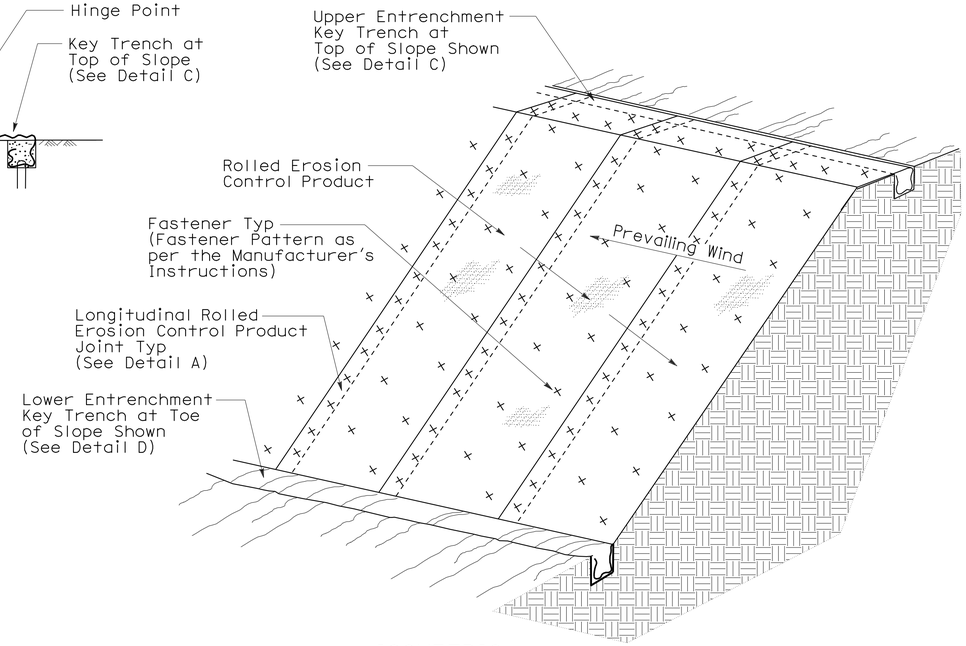

ISOMETRIC

ROLLED EROSION CONTROL PRODUCT ON SLOPE

NOTE:

1. Fiber Roll/Compost Sock shown for reference purposes only.
2. If transverse rolled erosion control product joints are required on slopes, see Detail B.

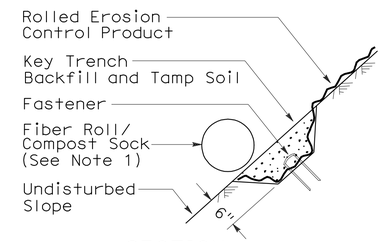

SECTION

DETAIL F
KEY TRENCH AT LOWER CONFORM

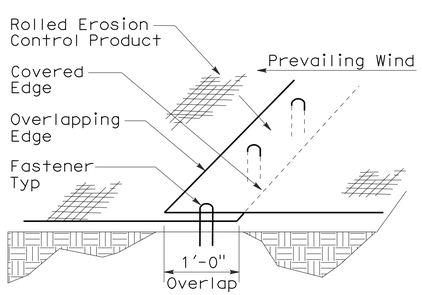

PERSPECTIVE

DETAIL A
LONGITUDINAL ROLLED EROSION CONTROL PRODUCT JOINT

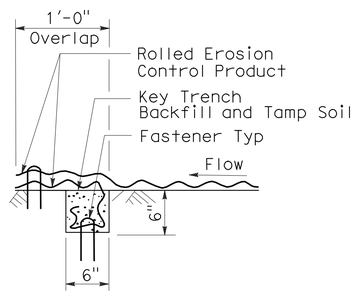

SECTION

DETAIL B
TRANSVERSE ROLLED EROSION CONTROL PRODUCT JOINT

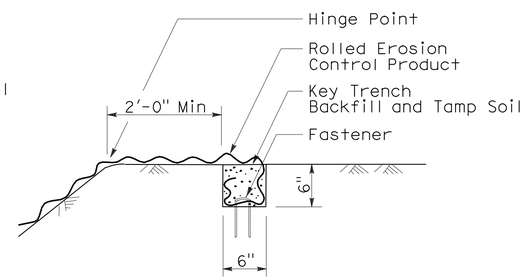

SECTION

DETAIL C
KEY TRENCH AT TOP OF SLOPE

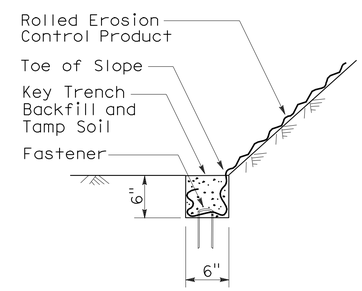

SECTION

DETAIL D
KEY TRENCH AT TOE OF SLOPE

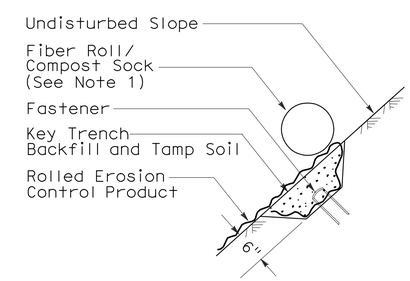

SECTION

DETAIL E
KEY TRENCH AT UPPER CONFORM

STATE OF CALIFORNIA
DEPARTMENT OF TRANSPORTATION

ROLLED EROSION CONTROL PRODUCT

NO SCALE

NSP H53 DATED JUNE 5, 2009 SUPPLEMENTS
THE STANDARD PLANS BOOK DATED MAY 2006.

NEW STANDARD PLAN NSP H53

2006 NEW STANDARD PLAN NSP H53

3-4-09

DIST	COUNTY	ROUTE	POST MILES TOTAL PROJECT	SHEET NO.	TOTAL SHEETS
11	SD	15,163, 805	Var	58	64

Randell D. Hiatt
REGISTERED CIVIL ENGINEER

June 6, 2008
PLANS APPROVAL DATE

REGISTERED PROFESSIONAL ENGINEER
Randell D. Hiatt
No. C50200
Exp. 6-30-09
CIVIL
STATE OF CALIFORNIA

The State of California or its officers or agents shall not be responsible for the accuracy or completeness of electronic copies of this plan sheet.

To accompany plans dated 5-10-10

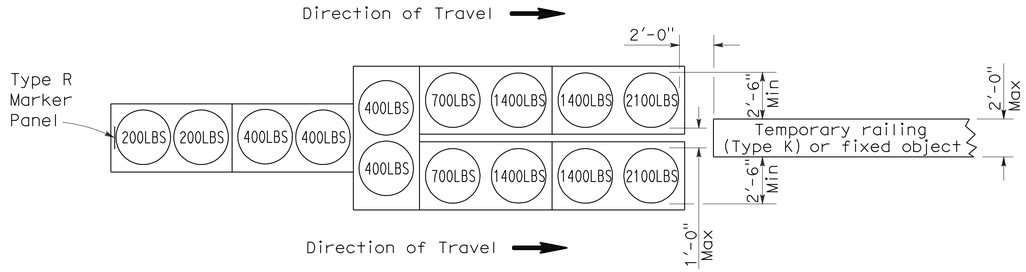

ARRAY 'TU14'

Approach speed 45 mph or more

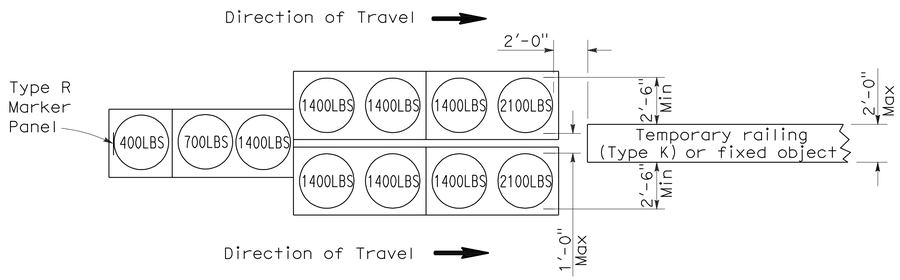

ARRAY 'TU11'

Approach speed less than 45 mph

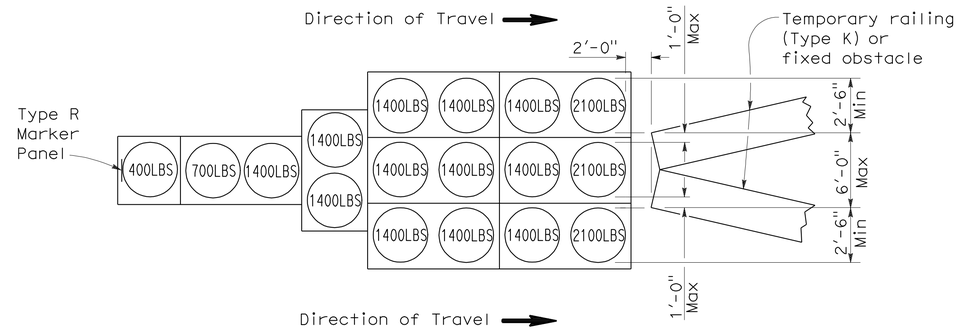

ARRAY 'TU17'

Approach speed less than 45 mph

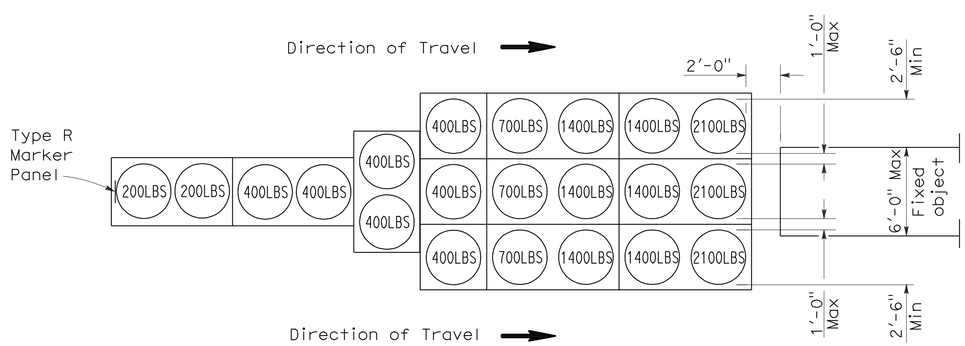

ARRAY 'TU21'

Approach speed 45 mph or more

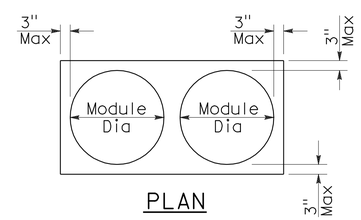

PLAN

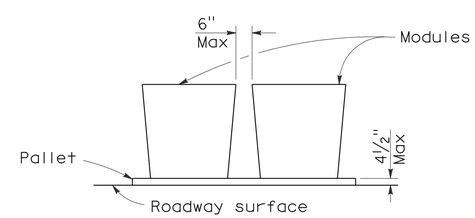

ELEVATION

CRASH CUSHION PALLET DETAIL

See Note 7

NOTES:

1. (XXX) Indicates sand filled module location and weight of sand in pounds for each module. Module spacing is based on the greater diameter of the module.
2. All sand weights are nominal.
3. Temporary crash cushion arrays shall not encroach on the traveled way.
4. Place the top of Type R marker panel 1" below the module lid.
5. Refer to Standard Plan A73B for marker details.
6. Approach speeds indicated conform to NCHRP 350 Report criteria.
7. Use of pallets is optional.

STATE OF CALIFORNIA
DEPARTMENT OF TRANSPORTATION

TEMPORARY CRASH CUSHION, SAND FILLED (UNIDIRECTIONAL)

NO SCALE

RSP T1A DATED JUNE 6, 2008 SUPERSEDES STANDARD PLAN T1A
DATED MAY 1, 2006 - PAGE 211 OF THE STANDARD PLANS BOOK DATED MAY 2006.

REVISED STANDARD PLAN RSP T1A

2006 REVISED STANDARD PLAN RSP T1A

DIST	COUNTY	ROUTE	POST MILES TOTAL PROJECT	SHEET NO.	TOTAL SHEETS
11	SD	15,163, 805	Var	59	64

Randell D. Hiatt
REGISTERED CIVIL ENGINEER

June 6, 2008
PLANS APPROVAL DATE

REGISTERED PROFESSIONAL ENGINEER
Randell D. Hiatt
No. C50200
Exp. 6-30-09
CIVIL
STATE OF CALIFORNIA

The State of California or its officers or agents shall not be responsible for the accuracy or completeness of electronic copies of this plan sheet.

To accompany plans dated 5-10-10

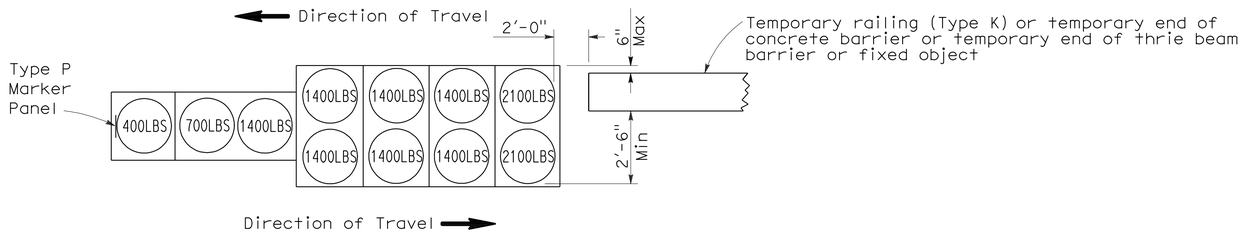

ARRAY 'TB11'

Approach speed less than 45 mph

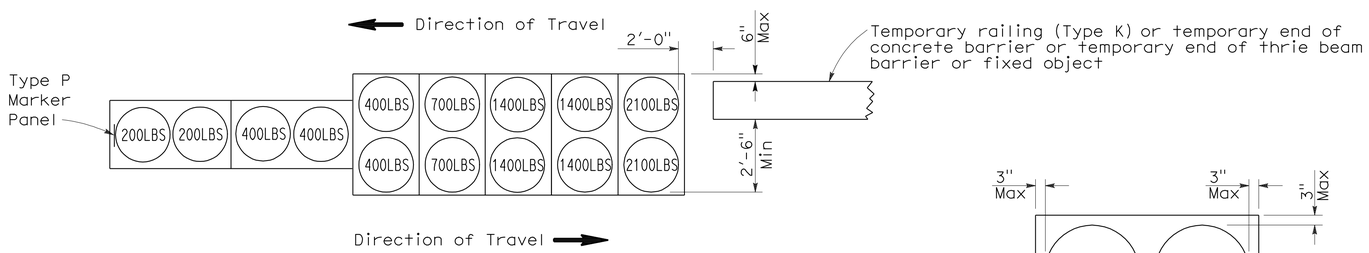

ARRAY 'TB14'

Approach speed 45 mph or more

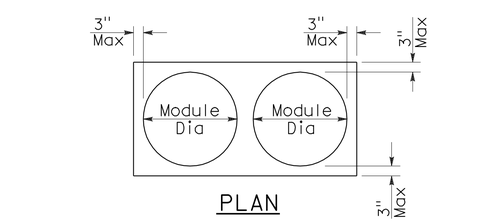

PLAN

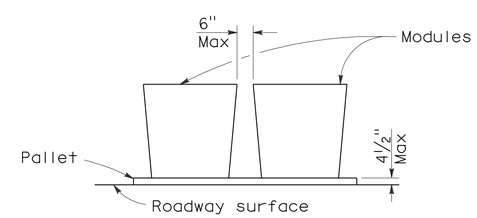

ELEVATION

CRASH CUSHION PALLET DETAIL

See Note 7

NOTES:

1. (XXX) Indicates sand filled module location and weight of sand in pounds for each module. Module spacing is based on the greater diameter of the module.
2. All sand weights are nominal.
3. Temporary crash cushion arrays shall not encroach on the traveled way.
4. Place the Type P marker panel so that the bottom of the panel rests upon the pallet.
5. Refer to Standard Plan A73B for marker details.
6. Approach speeds indicated conform to NCHRP 350 Report criteria.
7. Use of pallets is optional.

STATE OF CALIFORNIA
DEPARTMENT OF TRANSPORTATION

TEMPORARY CRASH CUSHION, SAND FILLED (BIDIRECTIONAL)

NO SCALE

RSP T1B DATED JUNE 6, 2008 SUPERSEDES STANDARD PLAN T1B
DATED MAY 1, 2006 - PAGE 212 OF THE STANDARD PLANS BOOK DATED MAY 2006.

REVISED STANDARD PLAN RSP T1B

2006 REVISED STANDARD PLAN RSP T1B

DIST	COUNTY	ROUTE	POST MILES TOTAL PROJECT	SHEET NO.	TOTAL SHEETS
11	SD	15,163, 805	Var	60	64

Randell D. Hiatt
REGISTERED CIVIL ENGINEER

June 6, 2008
PLANS APPROVAL DATE

REGISTERED PROFESSIONAL ENGINEER
Randell D. Hiatt
No. C50200
Exp. 6-30-09
CIVIL
STATE OF CALIFORNIA

The State of California or its officers or agents shall not be responsible for the accuracy or completeness of electronic copies of this plan sheet.

To accompany plans dated 5-10-10

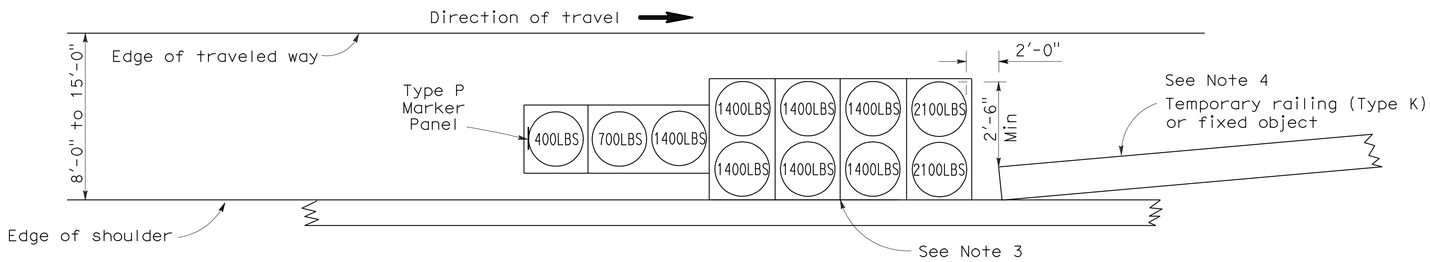

ARRAY 'TS11'

Approach speed less than 45 mph
See Note 9

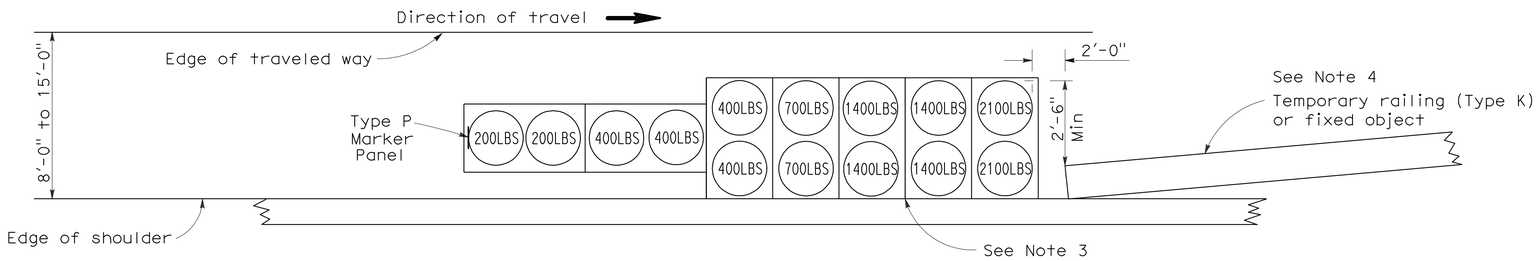

ARRAY 'TS14'

Approach speed 45 mph or more
See Note 9

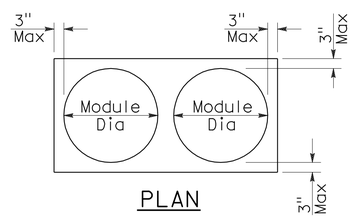

PLAN

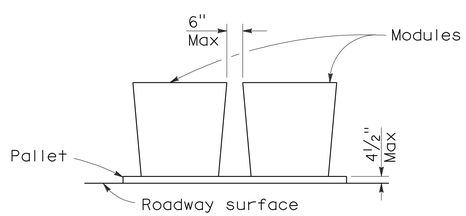

ELEVATION

CRASH CUSHION PALLET DETAIL

See Note 11

NOTES:

1. (XXX) Indicates sand filled module location and weight of sand in pounds for each module. Module spacing is based on the greater diameter of the module.
2. All sand weights are nominal.
3. The temporary crash cushion arrays shown on this plan shall be used only in locations where there will be traffic on one side of the temporary crash cushion array.
4. If the fixed object or approach end of the temporary railing is less than 15'-0" from the edge of traveled way, a temporary crash cushion is required in a construction or work zone.
5. Temporary crash cushion arrays shall not encroach on the traveled way.
6. Arrays for median shoulders shall conform to details shown on this plan for outside shoulders.
7. Place the Type P marker panel so that the bottom of the panel rests upon the pallet and faces traffic.
8. Refer to Standard Plan A73B for marker details.
9. For shoulder widths less than 8'-0", appropriate approved crash cushion protection, other than sand filled modules, shall be provided at fixed objects and at approach ends of temporary railing. The specific type of crash cushion shall be as shown on the project plans or as specified in the Special Provisions, or if not shown on the project plans or specified in the Special Provisions, shall be as approved by the Engineer.
10. Approach speeds indicated conform to NCHRP 350 Report criteria.
11. Use of pallets is optional.

STATE OF CALIFORNIA
DEPARTMENT OF TRANSPORTATION

TEMPORARY CRASH CUSHION, SAND FILLED (SHOULDER INSTALLATIONS)

NO SCALE

RSP T2 DATED JUNE 6, 2008 SUPERSEDES STANDARD PLAN T2
DATED MAY 1, 2006 - PAGE 213 OF THE STANDARD PLANS BOOK DATED MAY 2006.

REVISED STANDARD PLAN RSP T2

2006 REVISED STANDARD PLAN RSP T2

5-15-08

DIST	COUNTY	ROUTE	POST MILES TOTAL PROJECT	SHEET NO.	TOTAL SHEETS
11	SD	15,163, 805	Var	61	64

LICENSED LANDSCAPE ARCHITECT

April 3, 2009
PLANS APPROVAL DATE

The State of California or its officers or agents shall not be responsible for the accuracy or completeness of electronic copies of this plan sheet.

LICENSED LANDSCAPE ARCHITECT — Robert B. Schott 3895 — Signature — 11-30-10 Renewal Date — 2-25-09 Date — STATE OF CALIFORNIA

To accompany plans dated 5-10-10

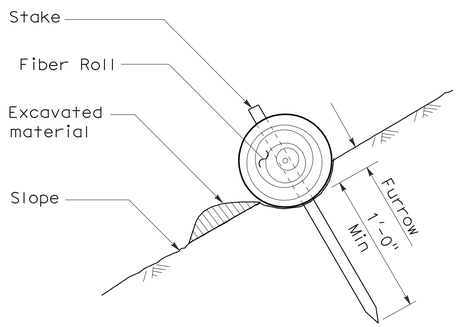

SECTION

TEMPORARY FIBER ROLL (TYPE 1)

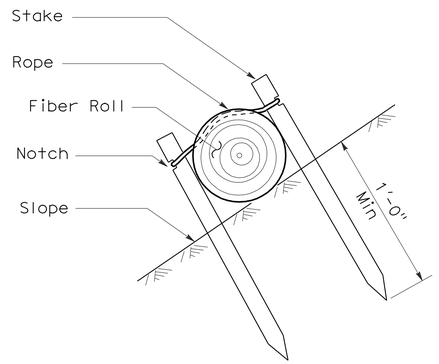

SECTION

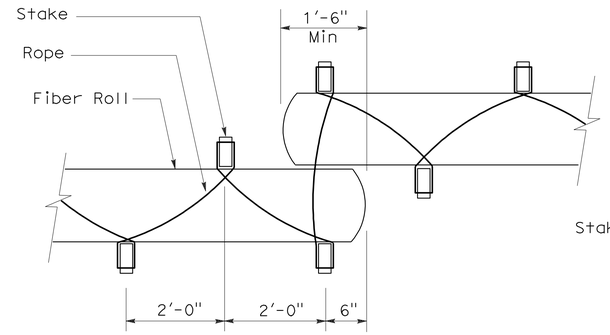

PLAN

TEMPORARY FIBER ROLL (TYPE 2)

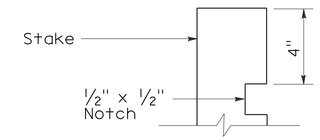

ELEVATION

STAKE NOTCH DETAIL

NOTES:

1. Temporary fiber roll spacing varies depending upon slope inclination.
2. Installations shown in the perspectives are for slope inclination of 10:1 and steeper.

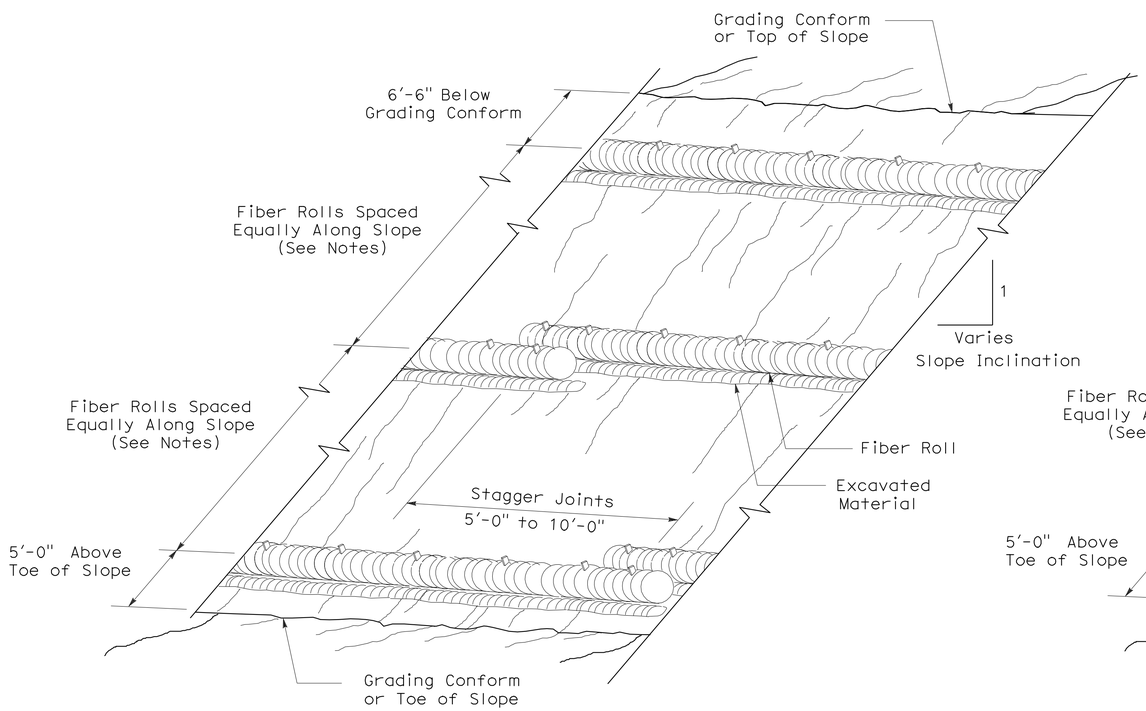

PERSPECTIVE

TEMPORARY FIBER ROLL (TYPE 1)

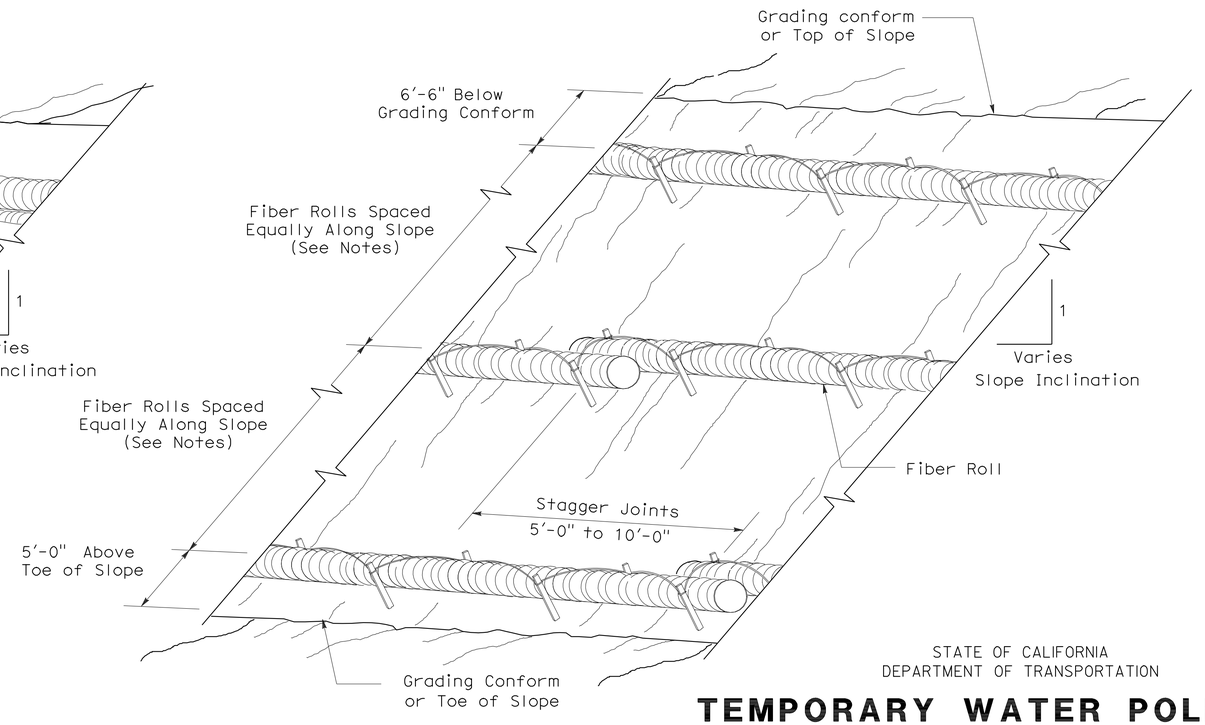

PERSPECTIVE

TEMPORARY FIBER ROLL (TYPE 2)

STATE OF CALIFORNIA
DEPARTMENT OF TRANSPORTATION

TEMPORARY WATER POLLUTION CONTROL DETAILS (TEMPORARY FIBER ROLL)

NO SCALE

RSP T56 DATED APRIL 3, 2009 SUPERSEDES STANDARD PLAN T56
DATED MAY 1, 2006 - PAGE 232 OF THE STANDARD PLANS BOOK DATED MAY 2006.

REVISED STANDARD PLAN RSP T56

2006 REVISED STANDARD PLAN RSP T56

DIST	COUNTY	ROUTE	POST MILES TOTAL PROJECT	SHEET NO.	TOTAL SHEETS
11	SD	15,163, 805	Var	62	64

LICENSED LANDSCAPE ARCHITECT

August 15, 2008
PLANS APPROVAL DATE

The State of California or its officers or agents shall not be responsible for the accuracy or completeness of electronic copies of this plan sheet.

LICENSED LANDSCAPE ARCHITECT — Robert B. Schott — Signature — 11-04-08 Renewal Date — 08-11-08 Date — STATE OF CALIFORNIA

To accompany plans dated 5-10-10

FLEXIBLE SEDIMENT BARRIER SPACING TABLE

SLOPE OF ROADWAY (PERCENT)	0 to 0.9	1 to 1.9	2 to 2.9	3 to 4	5+
INTERVAL BETWEEN BARRIERS	50′	35′	30′	25′	20′
ANGLE FROM FACE OF CURB	70°	70°	70°	45°	45°
SUGGESTED BARRIER LENGTH	6′	6′	6′	6′	6′

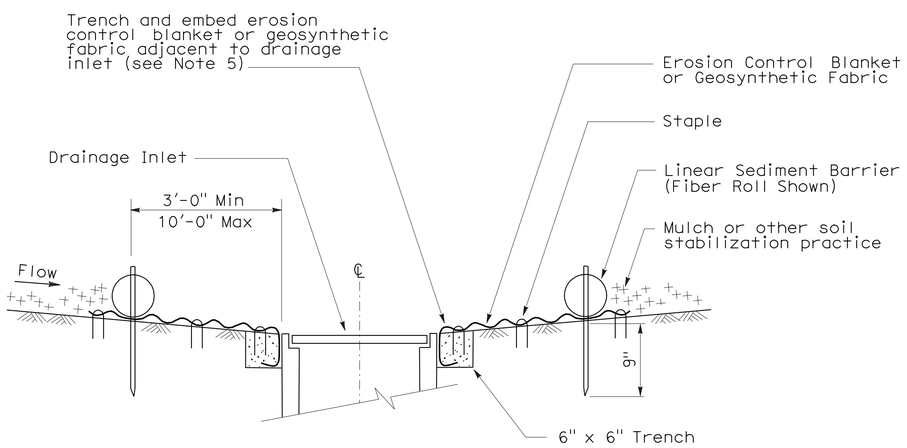

SECTION A-A

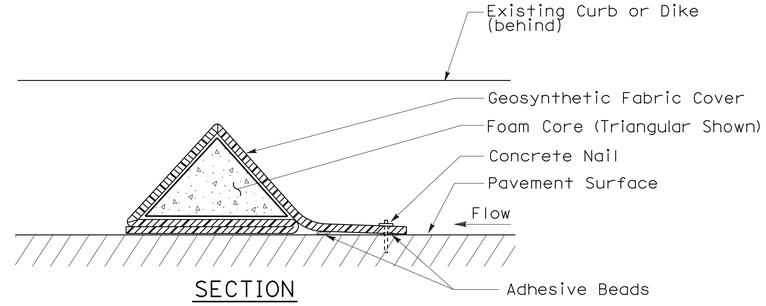

SECTION

FLEXIBLE SEDIMENT BARRIER DETAIL (FOAM BARRIER SHOWN)

NOTES:

1. See Standard Plan T51 for Temporary Silt Fence.
2. Dimensions may vary to fit field conditions.
3. Install a minimum of 3 flexible sediment barriers upstream of each drainage inlet to be protected.
4. Position erosion control blanket or geosynthetic fabric at edge of concrete apron and secure in trench.
5. Erosion control blanket or geosynthetic fabric is not required if the area adjacent to the drainage inlet is vegetated.

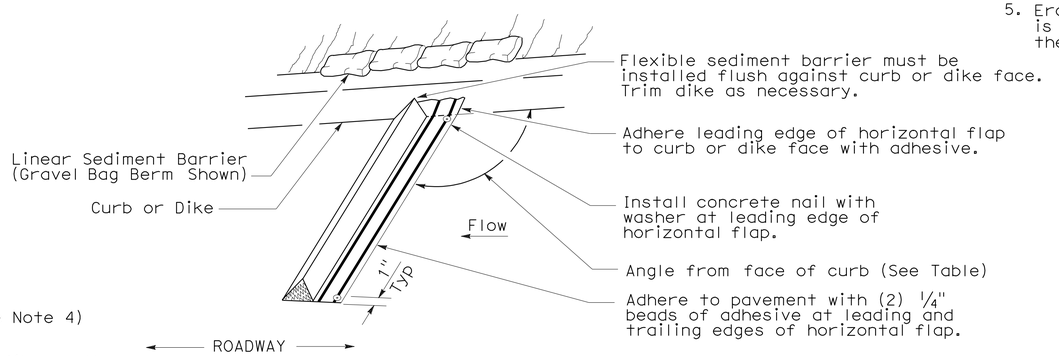

PERSPECTIVE

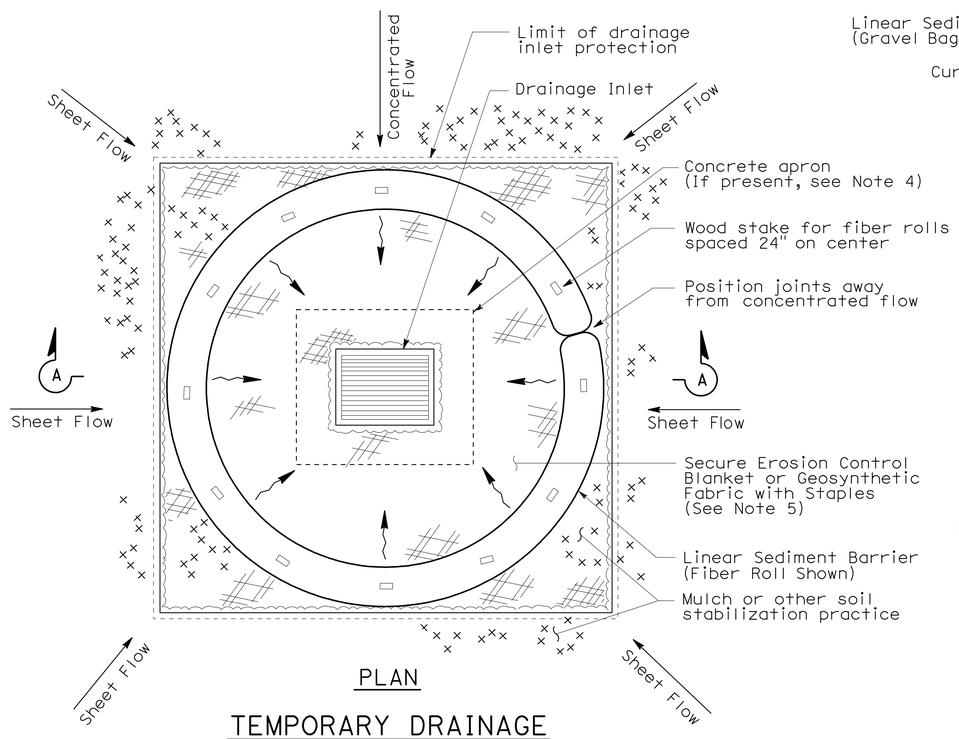

PLAN

TEMPORARY DRAINAGE INLET PROTECTION (TYPE 4A)

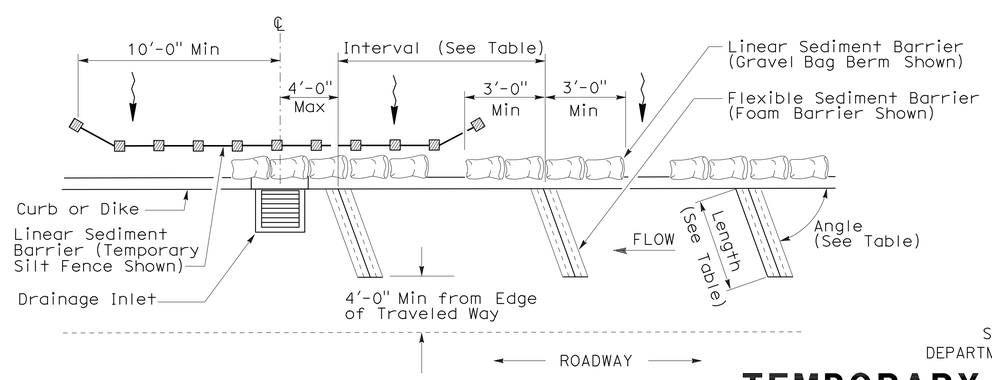

PLAN

TEMPORARY DRAINAGE INLET PROTECTION (TYPE 4B) FLEXIBLE SEDIMENT BARRIER

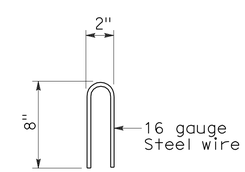

STAPLE DETAIL

STATE OF CALIFORNIA
DEPARTMENT OF TRANSPORTATION

TEMPORARY WATER POLLUTION CONTROL DETAILS (TEMPORARY DRAINAGE INLET PROTECTION)

NO SCALE

NSP T63 DATED AUGUST 15, 2008 SUPPLEMENTS THE STANDARD PLANS BOOK DATED MAY 2006.

NEW STANDARD PLAN NSP T63

2006 NEW STANDARD PLAN NSP T63

7-11-08

DIST	COUNTY	ROUTE	POST MILES TOTAL PROJECT	SHEET NO.	TOTAL SHEETS
11	SD	15,163, 805	Var	63	64

LICENSED LANDSCAPE ARCHITECT

August 15, 2008
PLANS APPROVAL DATE

The State of California or its officers or agents shall not be responsible for the accuracy or completeness of electronic copies of this plan sheet.

LICENSED LANDSCAPE ARCHITECT — Robert B. Schott 3625 — Signature — 11-04-08 Renewal Date — 08-11-08 Date — STATE OF CALIFORNIA

To accompany plans dated 5-10-10

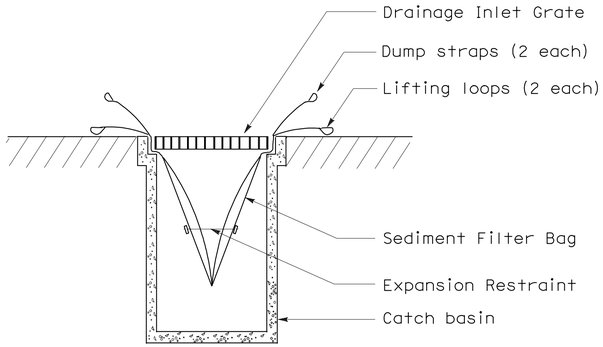

SECTION B-B

SEDIMENT FILTER BAG DETAIL

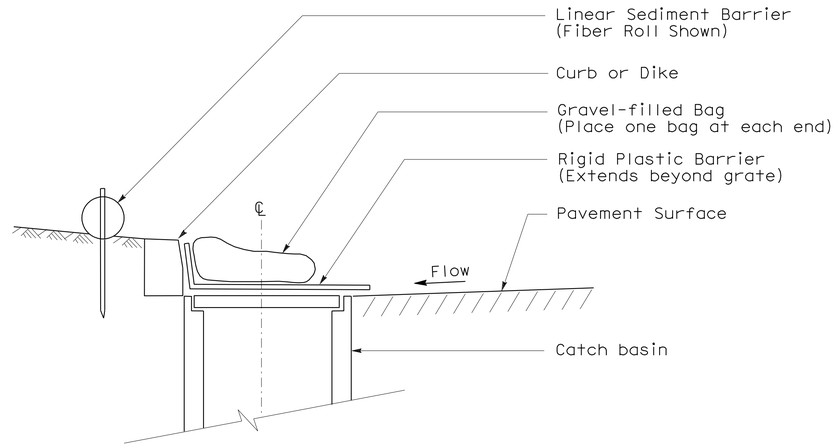

SECTION

TEMPORARY DRAINAGE INLET PROTECTION (TYPE 6A) (CATCH BASIN WITH GRATE)

NOTES:

1. See Standard Plan T51 for Temporary Silt Fence.
2. Dimensions may vary to fit field conditions.

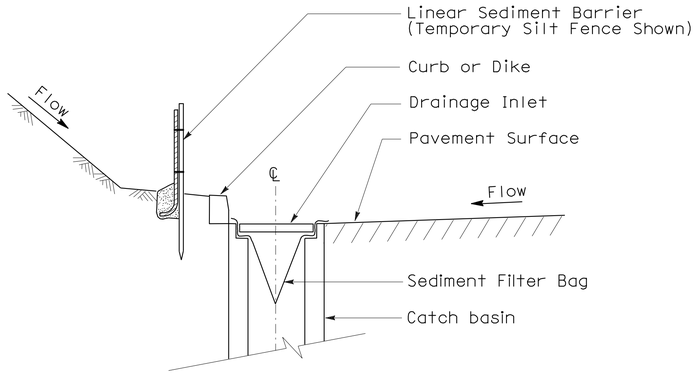

SECTION A-A

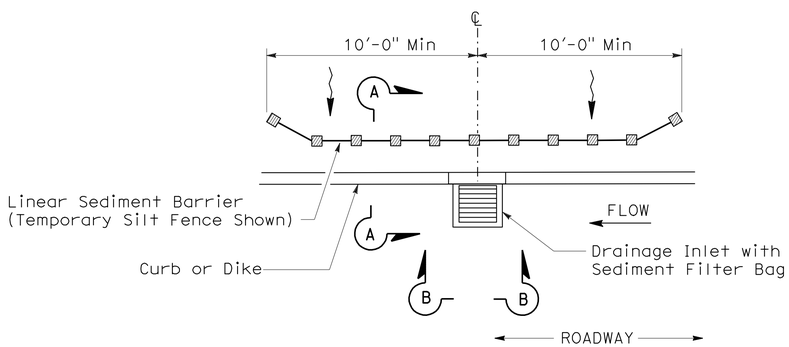

PLAN

TEMPORARY DRAINAGE INLET PROTECTION (TYPE 5) (SEDIMENT FILTER BAG)

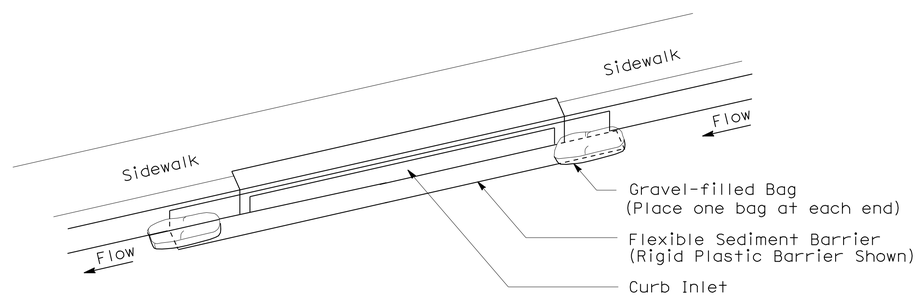

PERSPECTIVE

TEMPORARY DRAINAGE INLET PROTECTION (TYPE 6B) (CURB INLET WITHOUT GRATE)

STATE OF CALIFORNIA
DEPARTMENT OF TRANSPORTATION

TEMPORARY WATER POLLUTION CONTROL DETAILS (TEMPORARY DRAINAGE INLET PROTECTION)

NO SCALE

NSP T64 DATED AUGUST 15, 2008 SUPPLEMENTS THE STANDARD PLANS BOOK DATED MAY 2006.

NEW STANDARD PLAN NSP T64

2006 NEW STANDARD PLAN NSP T64

7-11-08

DIST	COUNTY	ROUTE	POST MILES TOTAL PROJECT	SHEET NO.	TOTAL SHEETS
11	SD	15,163, 805	Var	64	64

LICENSED LANDSCAPE ARCHITECT

April 3, 2009
PLANS APPROVAL DATE

The State of California or its officers or agents shall not be responsible for the accuracy or completeness of electronic copies of this plan sheet.

LICENSED LANDSCAPE ARCHITECT
Robert B. Schott 3025
Signature
11-30-10
Renewal Date
2-25-09
Date
STATE OF CALIFORNIA

To accompany plans dated 5-10-10

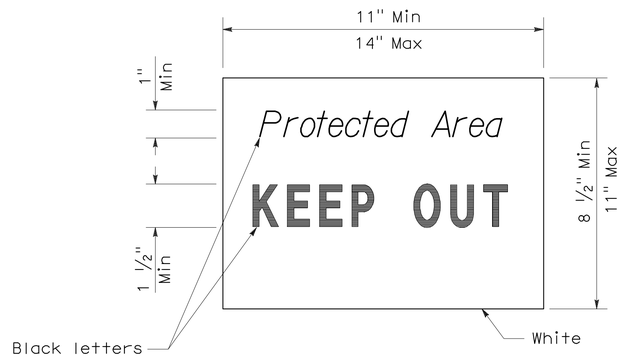

SIGN DETAIL

NOTE:

1. Temporary silt fence and temporary straw bale barrier shown for reference purposes only.

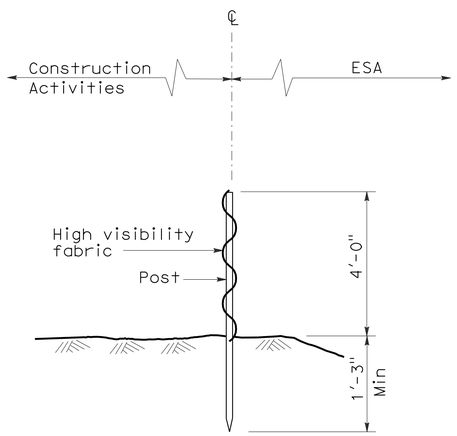

SECTION
TEMPORARY FENCE (TYPE ESA)

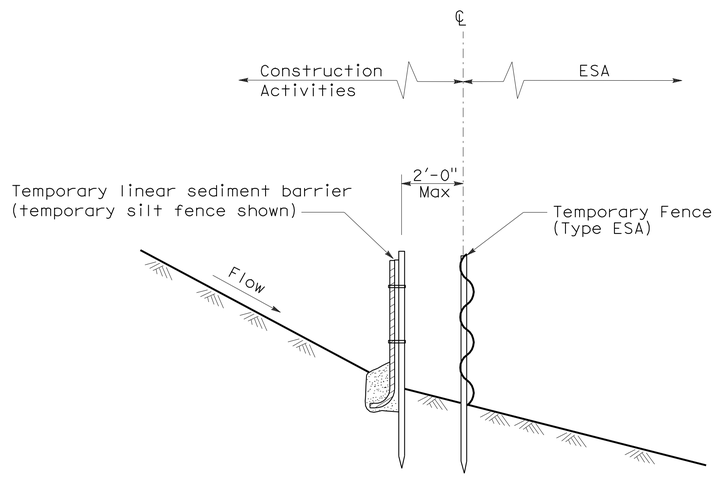

SECTION
PLACEMENT DETAIL
FOR TEMPORARY LINEAR SEDIMENT BARRIER
USED WITH TEMPORARY
FENCE (TYPE ESA)
(See Note 1)

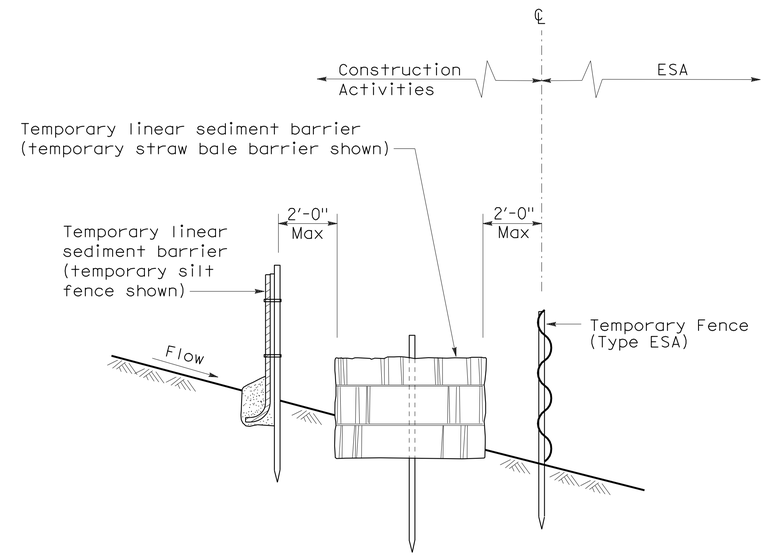

SECTION
PLACEMENT DETAIL
FOR TEMPORARY SILT FENCE
AND TEMPORARY STRAW BALE BARRIER
USED WITH TEMPORARY FENCE (TYPE ESA)
(See Note 1)

STATE OF CALIFORNIA
DEPARTMENT OF TRANSPORTATION

TEMPORARY WATER POLLUTION CONTROL DETAILS [TEMPORARY FENCE (TYPE ESA)]

NO SCALE

NSP T65 DATED APRIL 3, 2009 SUPPLEMENTS
THE STANDARD PLANS BOOK DATED MAY 2006.

NEW STANDARD PLAN NSP T65

2006 NEW STANDARD PLAN NSP T65