HSSTPG-P078(113)E

Dist	COUNTY	ROUTE	POST MILES TOTAL PROJECT	SHEET No.	TOTAL SHEETS
11	SD	78	20.6/35.5	1	63

STATE OF CALIFORNIA
DEPARTMENT OF TRANSPORTATION

PROJECT PLANS FOR CONSTRUCTION ON
STATE HIGHWAY

IN SAN DIEGO COUNTY
IN AND NEAR SAN DIEGO FROM
BEAR VALLEY PARKWAY TO ROUTE 67

TO BE SUPPLEMENTED BY STANDARD PLANS DATED MAY 2006

INDEX OF PLANS

SHEET NO.	DESCRIPTION
1	TITLE AND LOCATION MAP
2	TYPICAL CROSS SECTIONS
3	PROJECT CONTROL
4-16	CONSTRUCTION DETAILS
17-19	DRAINAGE PLAN, PROFILES,QUANTITIES
20-22	UTILITY PLAN
23	CONSTRUCTION AREA SIGNS
24	STAGE CONSTRUCTION
25	TRAFFIC HANDLING PLAN
26-27	PAVEMENT DELINEATION DETAILS AND QUANTITIES
28-30	SUMMARY OF QUANTITIES
31-63	NEW AND REVISED STANDARD PLANS

THE STANDARD PLANS LIST APPLICABLE TO THIS CONTRACT IS INCLUDED IN THE NOTICE TO BIDDERS AND SPECIAL PROVISIONS BOOK.

LOCATION MAP

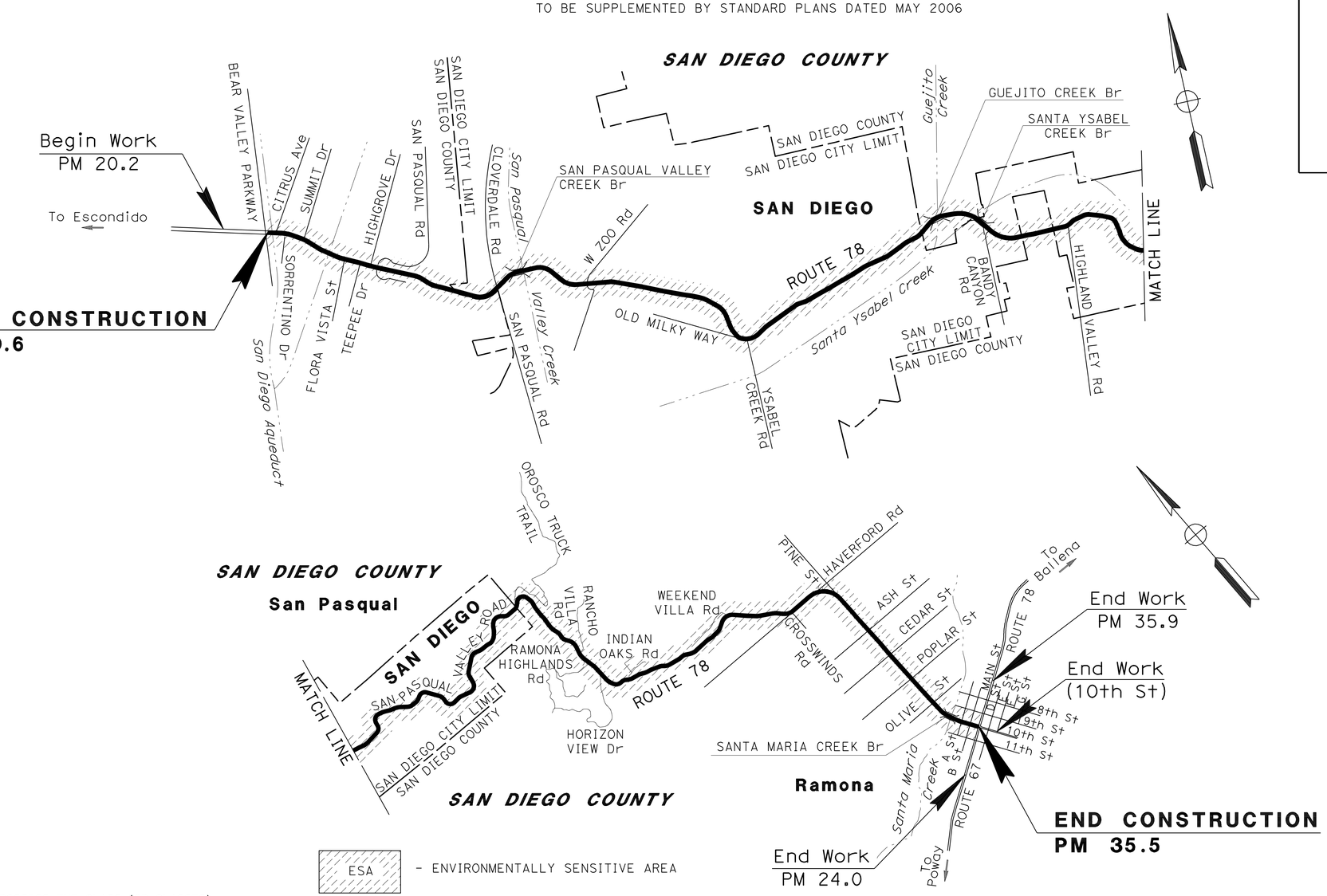

THE CONTRACTOR SHALL POSSESS THE CLASS (OR CLASSES) OF LICENSE AS SPECIFIED IN THE "NOTICE TO BIDDERS."

PROJECT MANAGER RICHARD ESTRADA

DESIGN ENGINEER MANUEL REYES

Manuel Reyes 07-08-11
PROJECT ENGINEER DATE
REGISTERED CIVIL ENGINEER

August 15, 2011
PLANS APPROVAL DATE

REGISTERED PROFESSIONAL ENGINEER MANUEL REYES No. 58621 Exp. 12-31-12 CIVIL STATE OF CALIFORNIA

THE STATE OF CALIFORNIA OR ITS OFFICERS OR AGENTS SHALL NOT BE RESPONSIBLE FOR THE ACCURACY OR COMPLETENESS OF SCANNED COPIES OF THIS PLAN SHEET.

CONTRACT No.	11-280804
PROJECT ID	1100000304

LAST REVISION 07-20-11
DATE PLOTTED => 18-AUG-2011
TIME PLOTTED => 09:37

Dist	COUNTY	ROUTE	POST MILES TOTAL PROJECT	SHEET No.	TOTAL SHEETS
11	SD	78	20.6/35.5	2	63

Manuel Reyes 07-08-11
REGISTERED CIVIL ENGINEER DATE

08-15-11
PLANS APPROVAL DATE

REGISTERED PROFESSIONAL ENGINEER
MANUEL REYES
No. 58621
Exp. 12-31-12
CIVIL
STATE OF CALIFORNIA

THE STATE OF CALIFORNIA OR ITS OFFICERS OR AGENTS SHALL NOT BE RESPONSIBLE FOR THE ACCURACY OR COMPLETENESS OF SCANNED COPIES OF THIS PLAN SHEET.

NOTES:

1. DIMENSIONS OF THE PAVEMENT STRUCTURES (STRUCTURAL SECTIONS) ARE SUBJECT TO TOLERANCES SPECIFIED IN THE STANDARD SPECIFICATIONS.
2. FOR MBGR WORK, SEE CONSTRUCTION DETAILS AND SUMMARY OF QUANTITIES SHEETS.
3. CENTERLINE RUMBLE STRIP (AC, GROUND-IN INDENTATIONS) SHALL NOT BE PLACED IN INTERSECTIONS (SEE CONSTRUCTION DETAILS).

DESIGN DESIGNATION

PM 20.6/35.5	
ADT (2009)	19,700
ADT (2030)	24,200
DHV	2,160
T	6.0%
V	N/A

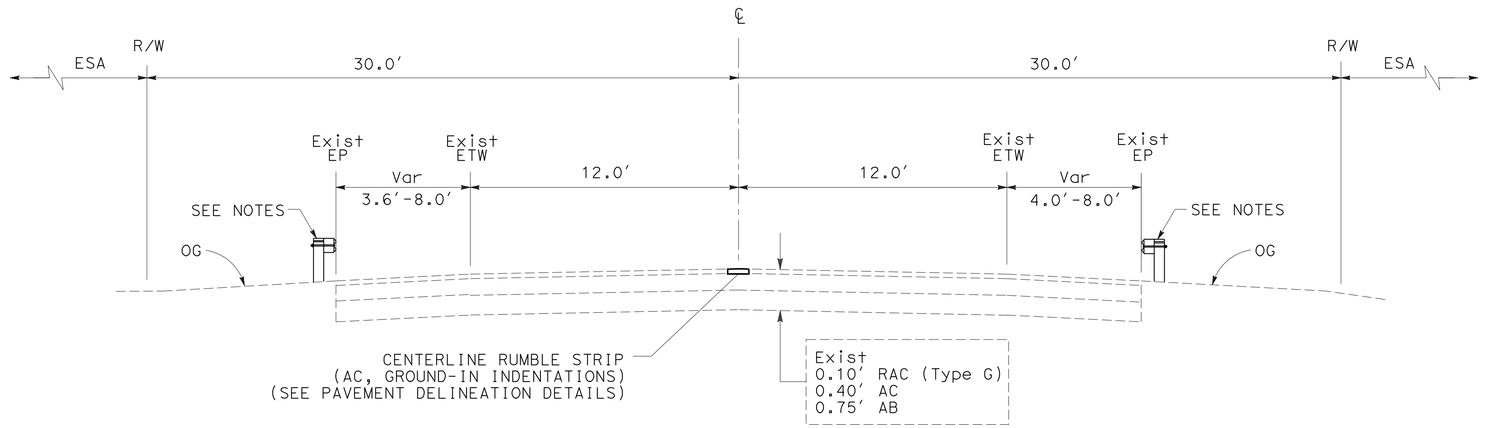

ROUTE 78
PM 27.60 TO 35.50

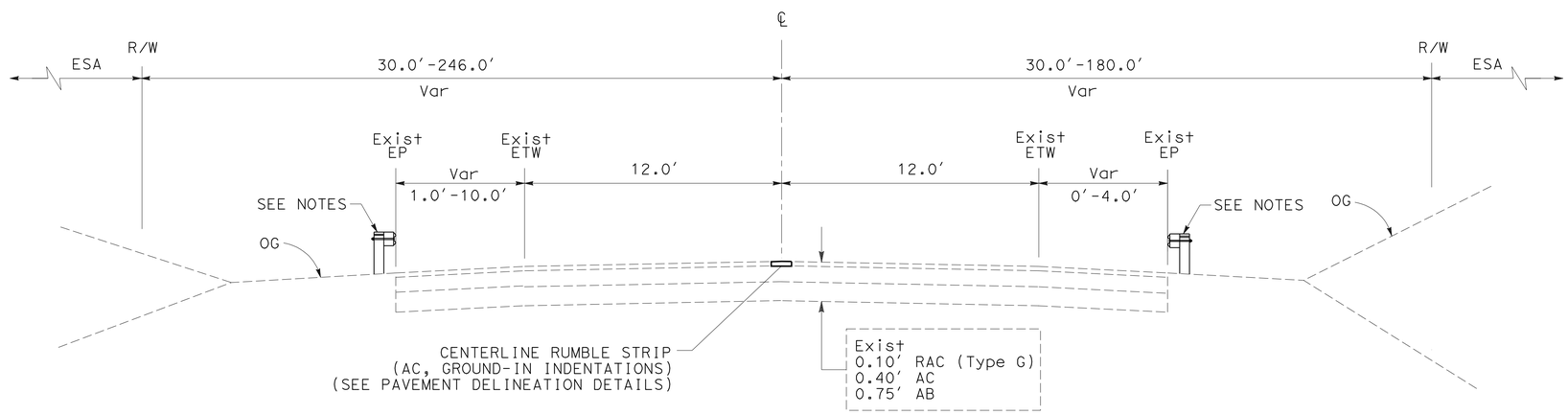

ROUTE 78
PM 20.60 TO 27.60

LEGEND:

RAC - RUBBERIZED ASPHALT CONCRETE
ESA - ENVIRONMENTALLY SENSITIVE AREA

TYPICAL CROSS SECTIONS

NO SCALE

X-1

STATE OF CALIFORNIA - DEPARTMENT OF TRANSPORTATION
Caltrans PROJECT DEVELOPMENT
TRAFFIC

FUNCTIONAL SUPERVISOR: RICHARD ESTRADA
CALCULATED-DESIGNED BY: VAN D. CALLANTA
CHECKED BY: MANUEL REYES
REVISED BY
DATE REVISED

LAST REVISION 07-20-11
DATE PLOTTED => 18-AUG-2011
TIME PLOTTED => 09:37

Dist	COUNTY	ROUTE	POST MILES TOTAL PROJECT	SHEET No.	TOTAL SHEETS
11	SD	78	20.6-35.5	3	63

PROFESSIONAL LAND SURVEYOR DATE 07-08-11

08-15-11
PLANS APPROVAL DATE

PROFESSIONAL LAND SURVEYOR MARK D. PHELAN L.S.7111 EXP:12-31-12 STATE OF CALIFORNIA

THE STATE OF CALIFORNIA OR ITS OFFICERS OR AGENTS SHALL NOT BE RESPONSIBLE FOR THE ACCURACY OR COMPLETENESS OF SCANNED COPIES OF THIS PLAN SHEET.

NOTES:

1. CONTACT DISTRICT 11'S LAND SURVEY DIVISION, PHONE (858)467-4305, FOR ADDITIONAL INFORMATION OR QUERIES REGARDING THIS SURVEY PROJECT CONTROL.
2. **BASIS OF BEARINGS AND COORDINATES**
   FOR THIS PROJECT IS THE CALIFORNIA COORDINATE SYSTEM OF 1983, HPGN EPOCH ADJUSTMENT [CCS 83 (1991.35)], ZONE 6. PROJECT CONTROL STATIONS WERE ESTABLISHED ACCORDING TO CRITERIA SET FORTH IN THE FEDERAL GEODETIC CONTROL SUBCOMMITTEE'S "GEOMETRIC GEODETIC ACCURACY STANDARDS AND SPECIFICATIONS FOR USING GPS RELATIVE POSITIONING TECHNIQUES" REPRINTED AUGUST 1, 1989.

   THIS REAL TIME KINEMATIC GPS SURVEY WAS CONSTRAINED TO 2ND ORDER STATION "ROCKWOOD" AND STATION "78-33.6R"
3. **BASIS OF ELEVATIONS**
   FOR THIS PROJECT IS THE NORTH AMERICAN VERTICAL DATUM OF 1988 (NAVD88). ELEVATIONS ARE ESTABLISHED BY DIFFERENTIAL LEVELING CONSTRAINING TO 2ND ORDER STATION "ROCKWOOD" AND "78-33.6R".

CONTROL FOR DESIGN AND CONSTRUCTION

STATION DESIGNATION	ORDER	NORTHING	EASTING	ELEVATION	DESCRIPTION
ROCKWOOD	2ND	1,978,223.78	6,342,997.43	440.41	3½" CADT BRASS DISK IN Conc Mon
78-33.6R	2ND	1,968,145.59	6,369,222.88	1456.27	2¼" CADT BRASS DISK IN 2" IP
WP 110561	3RD	1,978,473.43	6,343,302.71	444.65	SET 2X2 AND TACK BEHIND DIKE
WP 110562	3RD	1,978,624.63	6,343,503.87	438.62	SET 2X2 AND TACK BEHIND DIKE
WP 110563	3RD	1,978,739.52	6,343,696.76	433.25	SET PK & WASHER IN OVERSIDE DRAIN
WP 110564	3RD	1,969,499.71	6,366,486.55	1359.57	FD PK & SHINER IN EB AC SHOULDER
WP 110565	3RD	1,969,531.30	6,366,639.47	1366.29	SET PK & WASHER IN EB AC SHOULDER
WP 110566	3RD	1,969,790.47	6,367,137.75	1384.88	SET PK & WASHER IN WB AC SHOULDER

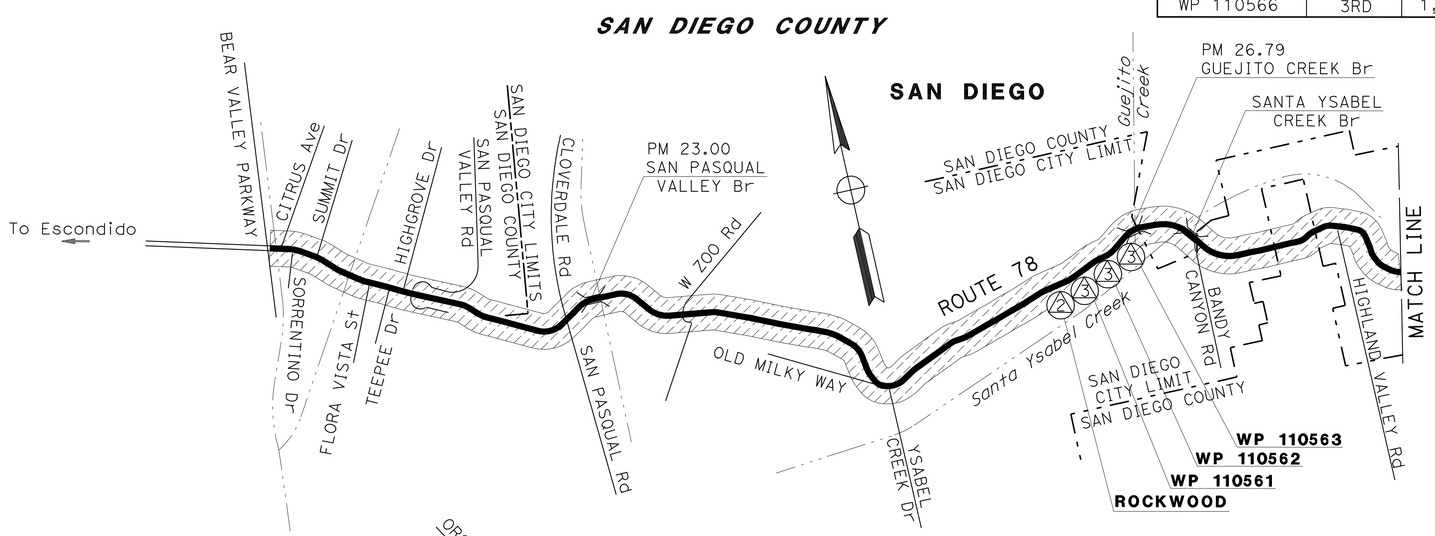

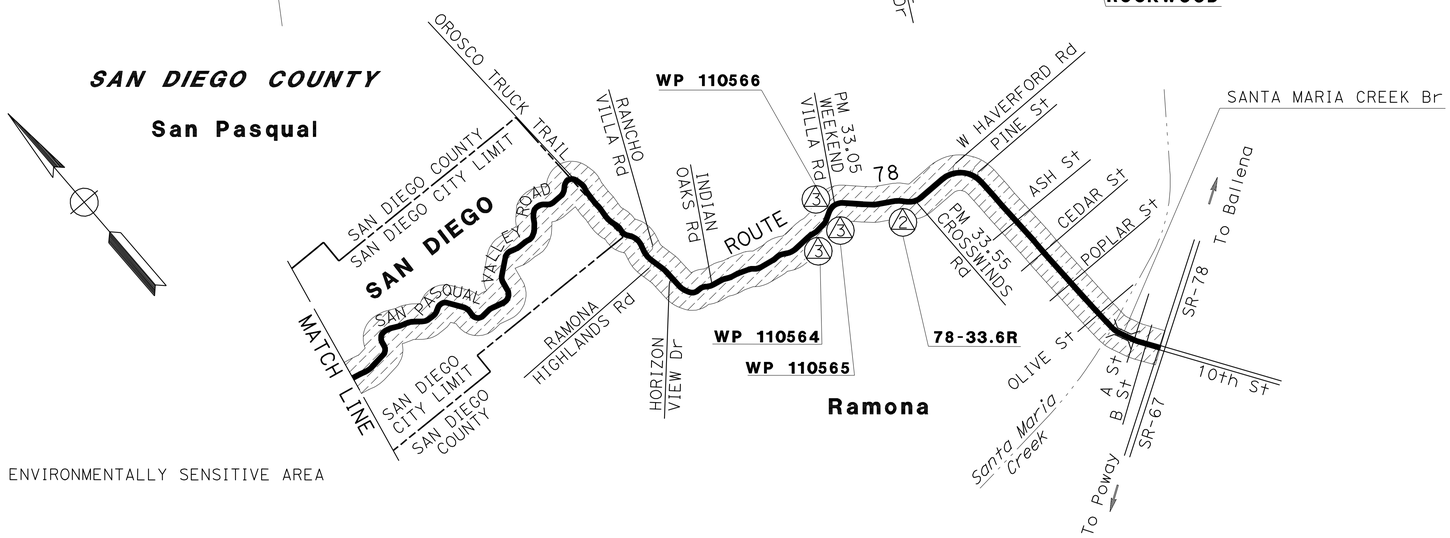

ENVIRONMENTALLY SENSITIVE AREA

ABBREVIATIONS:

CADT CALIFORNIA DEPARTMENT OF TRANSPORTATION
IP IRON PIPE
PK PARKER-KALON

LEGEND:

(2) 2ND ORDER STATION
(3) 3RD ORDER STATION

PROJECT CONTROL

NO SCALE

PC-1

STATE OF CALIFORNIA - DEPARTMENT OF TRANSPORTATION
Caltrans LAND SURVEYS DIVISION

FUNCTIONAL SUPERVISOR: BRUCE URQUHART
CALCULATED-DESIGNED BY: MARK PHELAN
CHECKED BY: NED SALMAN
REVISED BY
DATE REVISED

LAST REVISION 07-20-11
DATE PLOTTED => 18-AUG-2011
TIME PLOTTED => 09:37

Dist	COUNTY	ROUTE	POST MILES TOTAL PROJECT	SHEET No.	TOTAL SHEETS
11	SD	78	20.6/35.5	4	63

Manuel Reyes 07-08-11
REGISTERED CIVIL ENGINEER DATE

08-15-11
PLANS APPROVAL DATE

REGISTERED PROFESSIONAL ENGINEER
MANUEL REYES
No. 58621
Exp. 12-31-12
CIVIL
STATE OF CALIFORNIA

THE STATE OF CALIFORNIA OR ITS OFFICERS OR AGENTS SHALL NOT BE RESPONSIBLE FOR THE ACCURACY OR COMPLETENESS OF SCANNED COPIES OF THIS PLAN SHEET.

NOTES:

1. SEE SUMMARY OF QUANTITIES SHEETS, FOR ADDITIONAL MBGR AND DIKE INFORMATION.
2. FOR TERMINAL SYSTEM (TYPE X-TENSION) DETAILS, SEE SHEET C-14.
3. FOR ADDITIONAL MBGR LAYOUT INFORMATION, SEE STANDARD PLANS.
4. FOR VEGETATION CONTROL DETAILS NOT SHOWN, SEE STANDARD PLANS.

MBGR LOCATIONS

Rte	Loc	DIRECTION	POSTMILE FROM	POSTMILE TO
78	1	WB	R21.32	R21.36
	2	WB	R21.84	R21.97
	3	EB	R21.93	R21.97
	4	EB	22.98	22.99
	5	WB	22.98	23.00
	6	EB	23.05	23.06
	7	WB	23.05	23.06
	8	EB	24.89	24.95
	9	EB	24.94	25.02
	10	EB	R26.77	R26.78
	11	EB	R26.82	R26.84
	12	WB	R26.78	R26.79
	13	WB	R26.83	R26.84
	14	EB	R27.13	R27.16
	15	EB	R27.22	R27.24
	16	WB	R27.15	R27.16
	17	WB	R27.22	R27.25
	18	WB	28.39	28.41
	19	WB	28.47	28.49
	20	WB	29.84	29.85
	21	WB	29.90	29.98
	22	WB	30.07	30.08
	23	EB	30.03	30.08
	24	WB	32.82	32.90
	25	EB	33.03	33.06
	26	WB	33.12	33.15
	27	EB	33.36	33.39
	28	EB	35.25	35.26
	29	EB	35.31	35.33
	30	WB	35.25	35.26
	31	WB	35.31	35.33

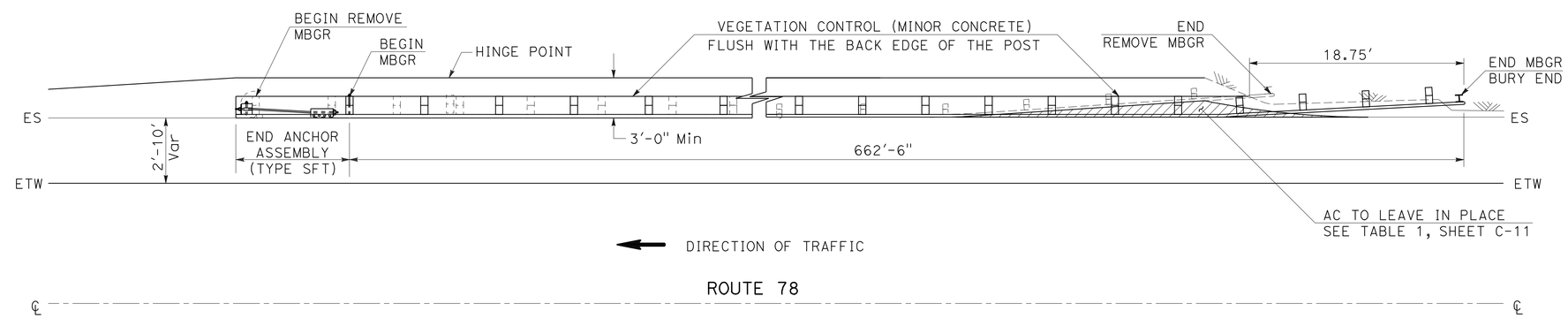

MBGR LAYOUT

LOCATION 2

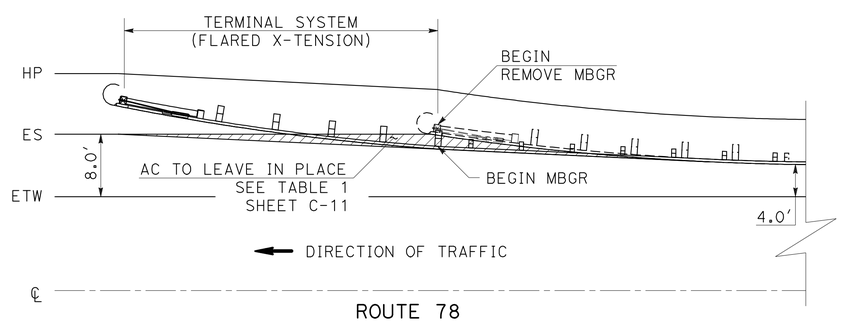

DEPART

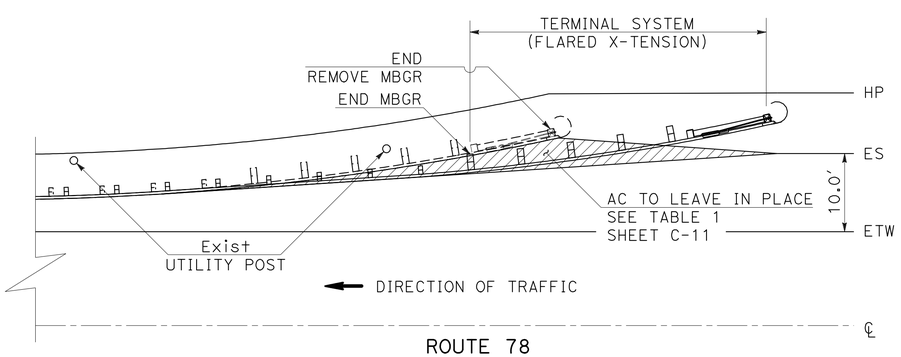

APPROACH

MBGR LAYOUT

LOCATION 1

LEGEND:

- ASPHALT CONCRETE TO LEAVE IN PLACE

CONSTRUCTION DETAILS

NO SCALE

C-1

STATE OF CALIFORNIA - DEPARTMENT OF TRANSPORTATION
Caltrans PROJECT DEVELOPMENT
TRAFFIC

FUNCTIONAL SUPERVISOR: RICHARD ESTRADA
CALCULATED-DESIGNED BY: VAN D. CALLANTA
CHECKED BY: MANUEL REYES
REVISED BY
DATE REVISED

LAST REVISION 07-20-11
DATE PLOTTED => 18-AUG-2011
TIME PLOTTED => 09:38

Dist	COUNTY	ROUTE	POST MILES TOTAL PROJECT	SHEET No.	TOTAL SHEETS
11	SD	78	20.6/35.5	5	63

Manuel Reyes 07-08-11
REGISTERED CIVIL ENGINEER DATE

08-15-11
PLANS APPROVAL DATE

REGISTERED PROFESSIONAL ENGINEER
MANUEL REYES
No. 58621
Exp. 12-31-12
CIVIL
STATE OF CALIFORNIA

THE STATE OF CALIFORNIA OR ITS OFFICERS OR AGENTS SHALL NOT BE RESPONSIBLE FOR THE ACCURACY OR COMPLETENESS OF SCANNED COPIES OF THIS PLAN SHEET.

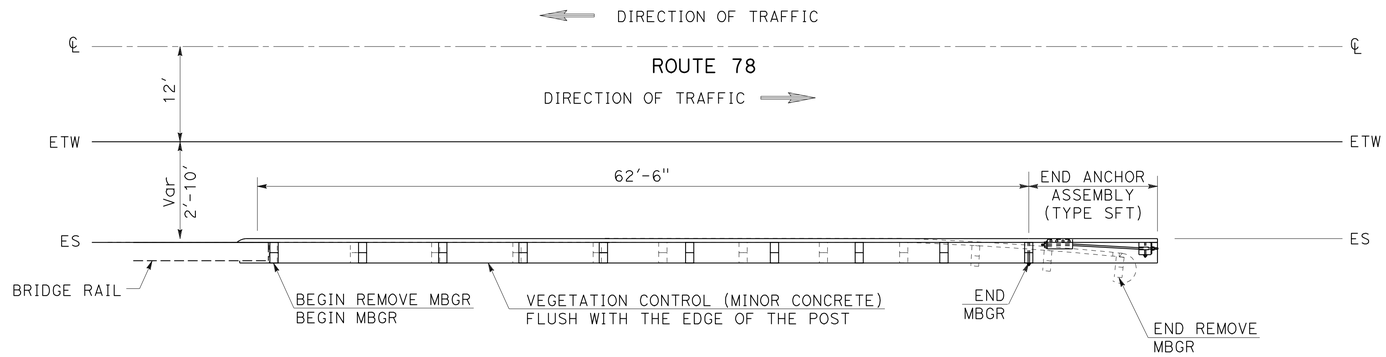

TYPICAL MBGR LAYOUT

LOCATIONS (5) (12) (30)

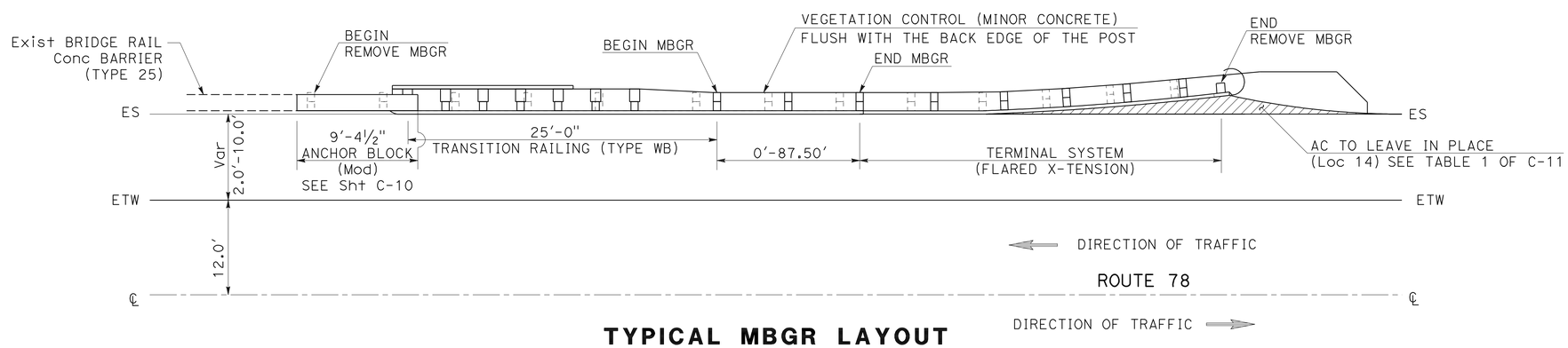

TYPICAL MBGR LAYOUT

LOCATIONS (4) (7) (14)

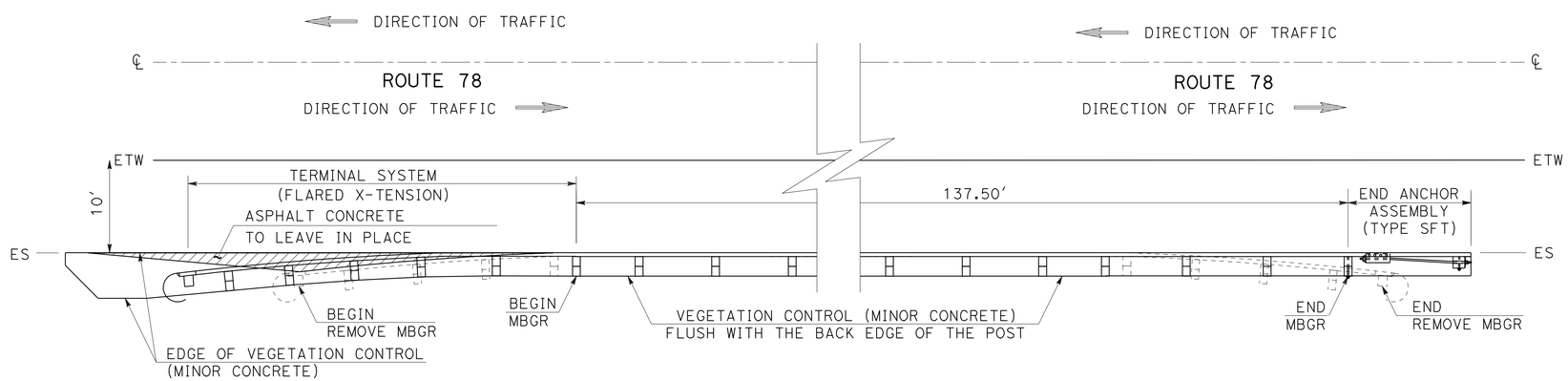

MBGR LAYOUT

LOCATIONS (3)

CONSTRUCTION DETAILS

NO SCALE

C-2

STATE OF CALIFORNIA - DEPARTMENT OF TRANSPORTATION
Caltrans TRAFFIC PROJECT DEVELOPMENT

FUNCTIONAL SUPERVISOR: RICHARD ESTRADA
CALCULATED-DESIGNED BY: VAN D. CALLANTA
CHECKED BY: MANUEL REYES
REVISED BY
DATE REVISED

LAST REVISION 07-21-11
DATE PLOTTED => 18-AUG-2011
TIME PLOTTED => 09:38

Dist	COUNTY	ROUTE	POST MILES TOTAL PROJECT	SHEET No.	TOTAL SHEETS
11	SD	78	20.6/35.5	6	63

Manuel Reyes 07-08-11
REGISTERED CIVIL ENGINEER DATE

08-15-11
PLANS APPROVAL DATE

REGISTERED PROFESSIONAL ENGINEER MANUEL REYES No. 58621 Exp. 12-31-12 CIVIL STATE OF CALIFORNIA

THE STATE OF CALIFORNIA OR ITS OFFICERS OR AGENTS SHALL NOT BE RESPONSIBLE FOR THE ACCURACY OR COMPLETENESS OF SCANNED COPIES OF THIS PLAN SHEET.

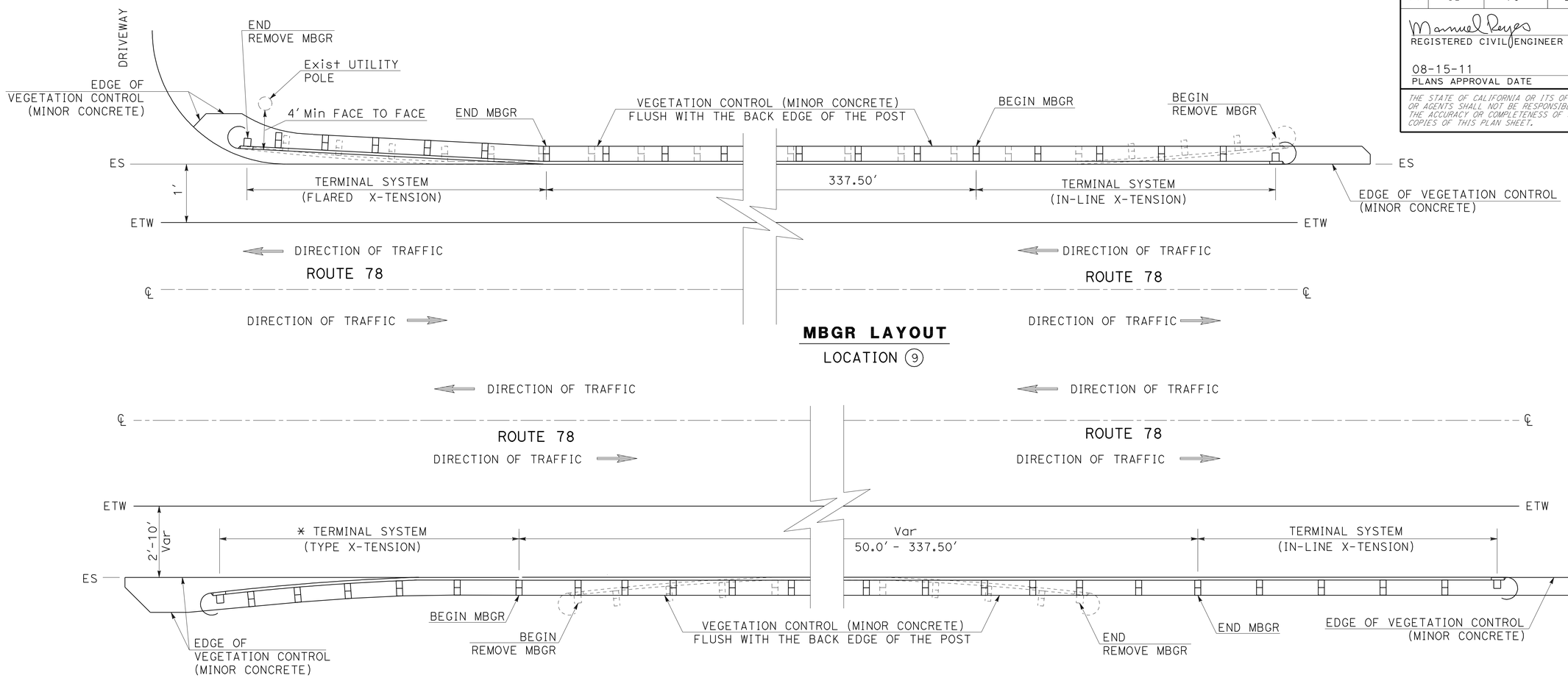

MBGR LAYOUT
LOCATION (9)

TYPICAL MBGR LAYOUT
LOCATIONS (8) (24) (25) (26) (27)

*** TERMINAL SYSTEM**

Loc (8) - (IN-LINE X-TENSION)
Loc (24) - (FLARED X-TENSION)
Loc (25) - (FLARED X-TENSION)
Loc (26) - (IN-LINE X-TENSION)
Loc (27) - (FLARED X-TENSION)

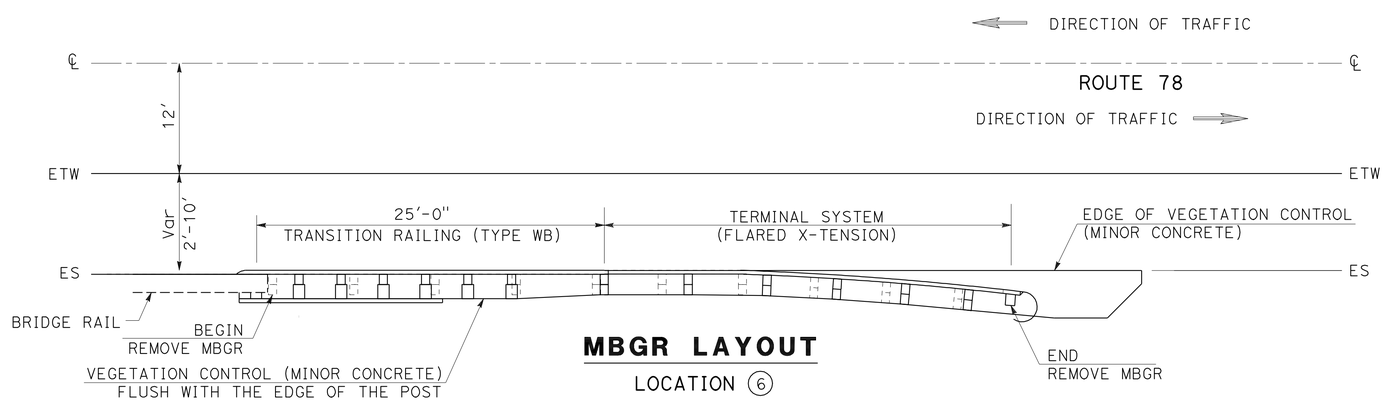

MBGR LAYOUT
LOCATION (6)

CONSTRUCTION DETAILS
NO SCALE

C-3

STATE OF CALIFORNIA - DEPARTMENT OF TRANSPORTATION
Caltrans PROJECT DEVELOPMENT
TRAFFIC

FUNCTIONAL SUPERVISOR: RICHARD ESTRADA
CALCULATED-DESIGNED BY: VAN D. CALLANTA
CHECKED BY: MANUEL REYES
REVISED BY
DATE REVISED

LAST REVISION 07-21-11
DATE PLOTTED => 18-AUG-2011
TIME PLOTTED => 09:38

Dist	COUNTY	ROUTE	POST MILES TOTAL PROJECT	SHEET No.	TOTAL SHEETS
11	SD	78	20.6/35.5	7	63

Manuel Reyes 07-08-11
REGISTERED CIVIL ENGINEER DATE

08-15-11
PLANS APPROVAL DATE

REGISTERED PROFESSIONAL ENGINEER MANUEL REYES No. 58621 Exp. 12-31-12 CIVIL STATE OF CALIFORNIA

THE STATE OF CALIFORNIA OR ITS OFFICERS OR AGENTS SHALL NOT BE RESPONSIBLE FOR THE ACCURACY OR COMPLETENESS OF SCANNED COPIES OF THIS PLAN SHEET.

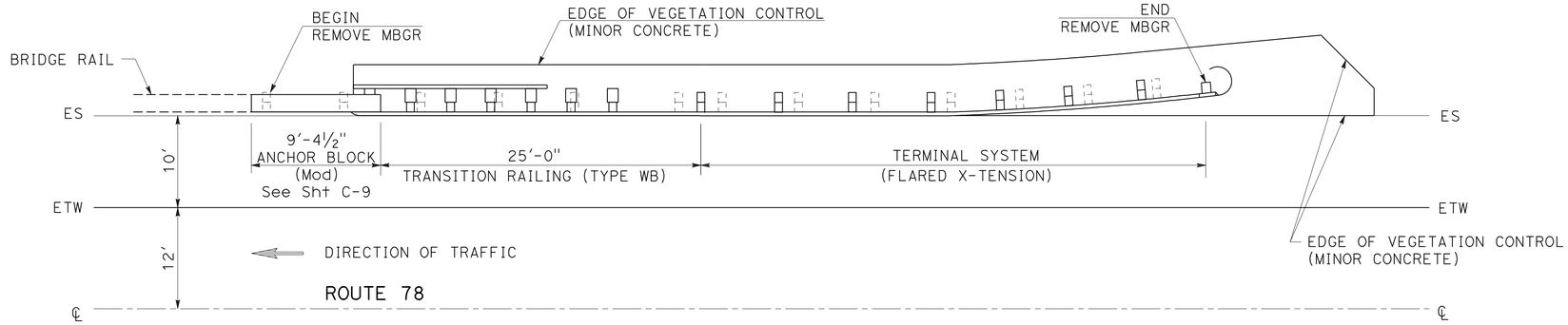

DIRECTION OF TRAFFIC →

MBGR LAYOUT

LOCATION (13)

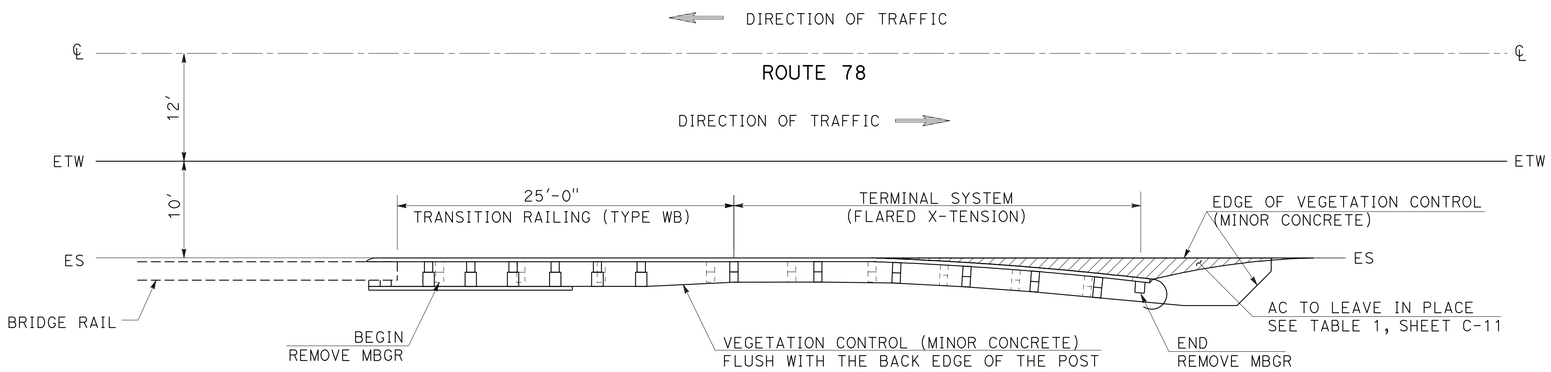

MBGR LAYOUT

LOCATION (11)

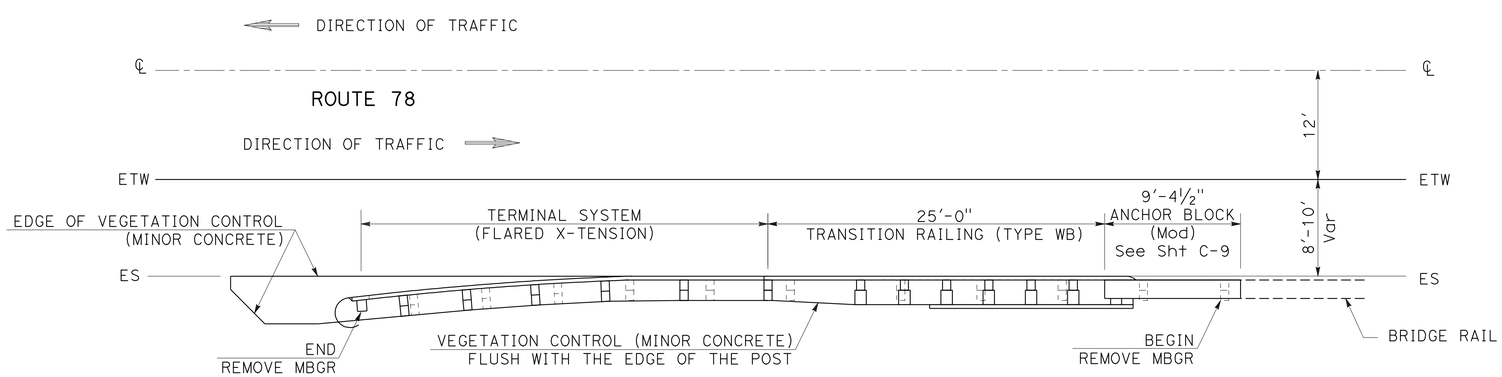

MBGR LAYOUT

LOCATION (10)

CONSTRUCTION DETAILS

NO SCALE

C-4

STATE OF CALIFORNIA - DEPARTMENT OF TRANSPORTATION
TRAFFIC PROJECT DEVELOPMENT

FUNCTIONAL SUPERVISOR: RICHARD ESTRADA
CALCULATED-DESIGNED BY: VAN D. CALLANTA
CHECKED BY: MANUEL REYES
REVISED BY
DATE REVISED

LAST REVISION 07-20-11
DATE PLOTTED => 18-AUG-2011
TIME PLOTTED => 09:38

Dist	COUNTY	ROUTE	POST MILES TOTAL PROJECT	SHEET No.	TOTAL SHEETS
11	SD	78	20.6/35.5	8	63

Manuel Reyes 07-08-11
REGISTERED CIVIL ENGINEER DATE

08-15-11
PLANS APPROVAL DATE

REGISTERED PROFESSIONAL ENGINEER
MANUEL REYES
No. 58621
Exp. 12-31-12
CIVIL
STATE OF CALIFORNIA

THE STATE OF CALIFORNIA OR ITS OFFICERS OR AGENTS SHALL NOT BE RESPONSIBLE FOR THE ACCURACY OR COMPLETENESS OF SCANNED COPIES OF THIS PLAN SHEET.

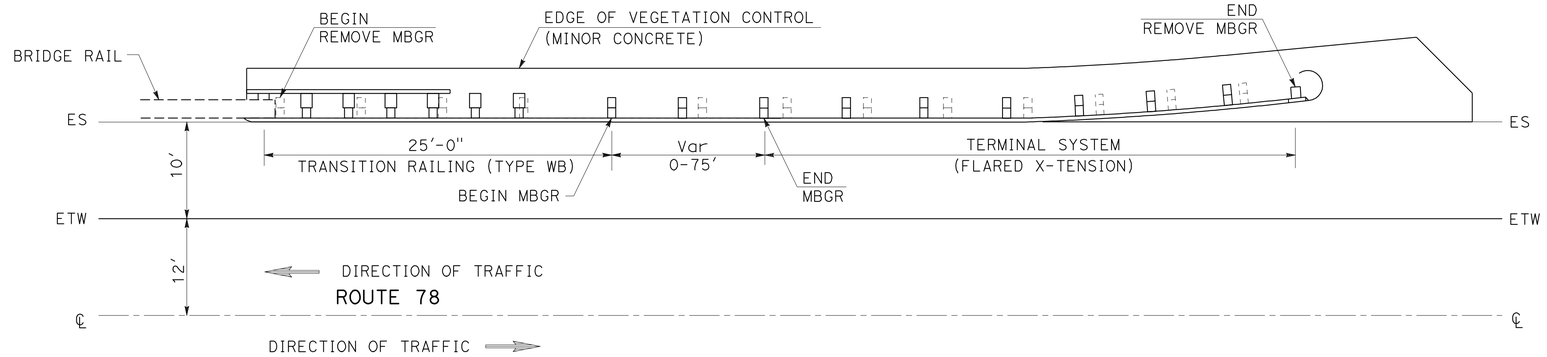

TYPICAL MBGR LAYOUT

LOCATIONS (17) (28)

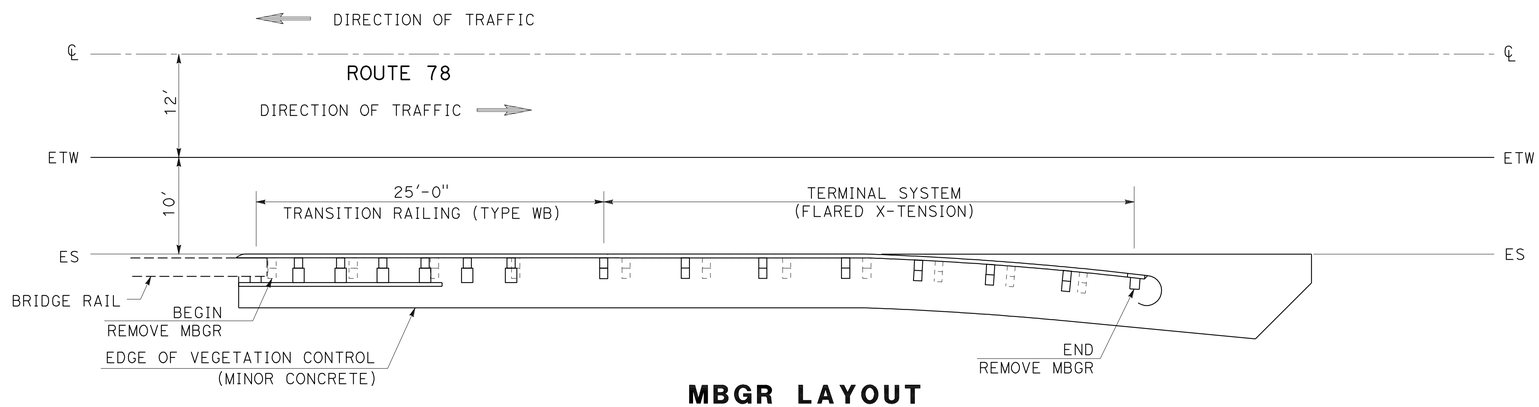

MBGR LAYOUT

LOCATION (16)

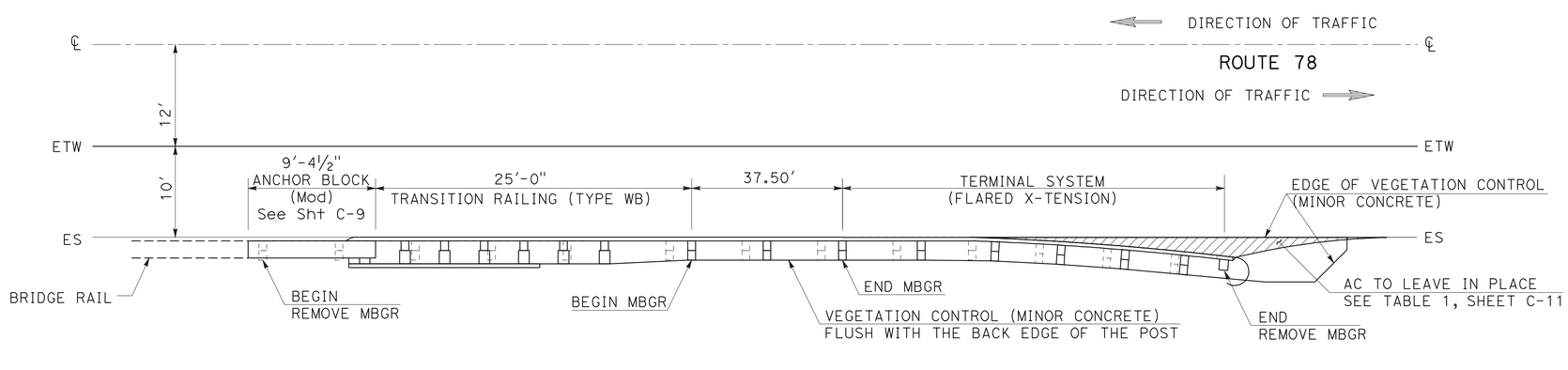

MBGR LAYOUT

LOCATION (15)

CONSTRUCTION DETAILS

NO SCALE

C-5

STATE OF CALIFORNIA - DEPARTMENT OF TRANSPORTATION
Caltrans PROJECT DEVELOPMENT
TRAFFIC

FUNCTIONAL SUPERVISOR: RICHARD ESTRADA
CALCULATED-DESIGNED BY: VAN D. CALLANTA
CHECKED BY: MANUEL REYES
REVISED BY
DATE REVISED

LAST REVISION 07-20-11
DATE PLOTTED => 18-AUG-2011
TIME PLOTTED => 09:38

Dist	COUNTY	ROUTE	POST MILES TOTAL PROJECT	SHEET No.	TOTAL SHEETS
11	SD	78	20.6/35.5	9	63

Manuel Reyes 07-08-11
REGISTERED CIVIL ENGINEER DATE

08-15-11
PLANS APPROVAL DATE

REGISTERED PROFESSIONAL ENGINEER
MANUEL REYES
No. 58621
Exp. 12-31-12
CIVIL
STATE OF CALIFORNIA

THE STATE OF CALIFORNIA OR ITS OFFICERS OR AGENTS SHALL NOT BE RESPONSIBLE FOR THE ACCURACY OR COMPLETENESS OF SCANNED COPIES OF THIS PLAN SHEET.

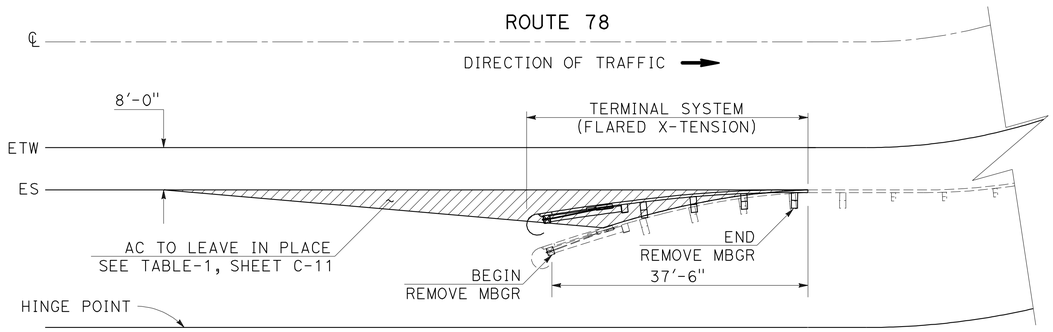

APPROACH

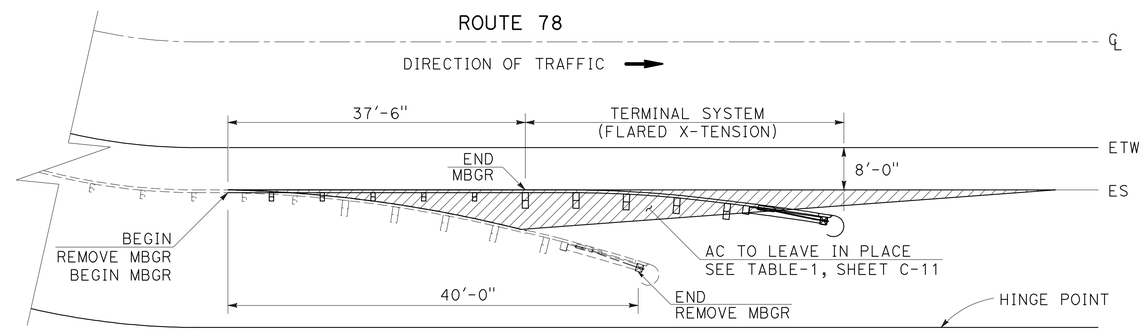

DEPART

MBGR LAYOUT

LOCATION (21)

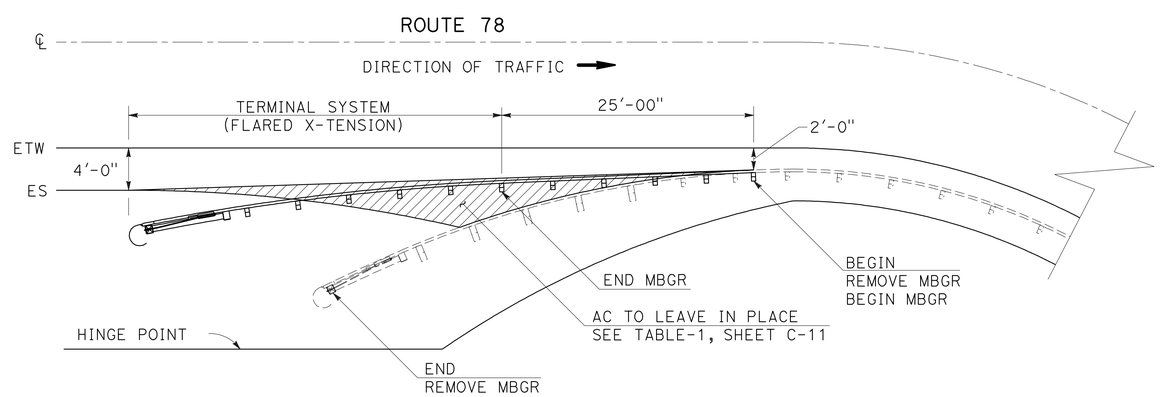

MBGR LAYOUT

LOCATION (20)

CONSTRUCTION DETAILS

NO SCALE

C-6

STATE OF CALIFORNIA - DEPARTMENT OF TRANSPORTATION
Caltrans TRAFFIC PROJECT DEVELOPMENT

FUNCTIONAL SUPERVISOR: RICHARD ESTRADA
CALCULATED-DESIGNED BY: VAN D. CALLANTA
CHECKED BY: MANUEL REYES
REVISED BY
DATE REVISED

LAST REVISION 07-20-11
DATE PLOTTED => 18-AUG-2011
TIME PLOTTED => 09:38

Dist	COUNTY	ROUTE	POST MILES TOTAL PROJECT	SHEET No.	TOTAL SHEETS
11	SD	78	20.6/35.5	10	63

Manuel Reyes 07-08-11
REGISTERED CIVIL ENGINEER DATE

08-15-11
PLANS APPROVAL DATE

REGISTERED PROFESSIONAL ENGINEER
MANUEL REYES
No. 58621
Exp. 12-31-12
CIVIL
STATE OF CALIFORNIA

THE STATE OF CALIFORNIA OR ITS OFFICERS OR AGENTS SHALL NOT BE RESPONSIBLE FOR THE ACCURACY OR COMPLETENESS OF SCANNED COPIES OF THIS PLAN SHEET.

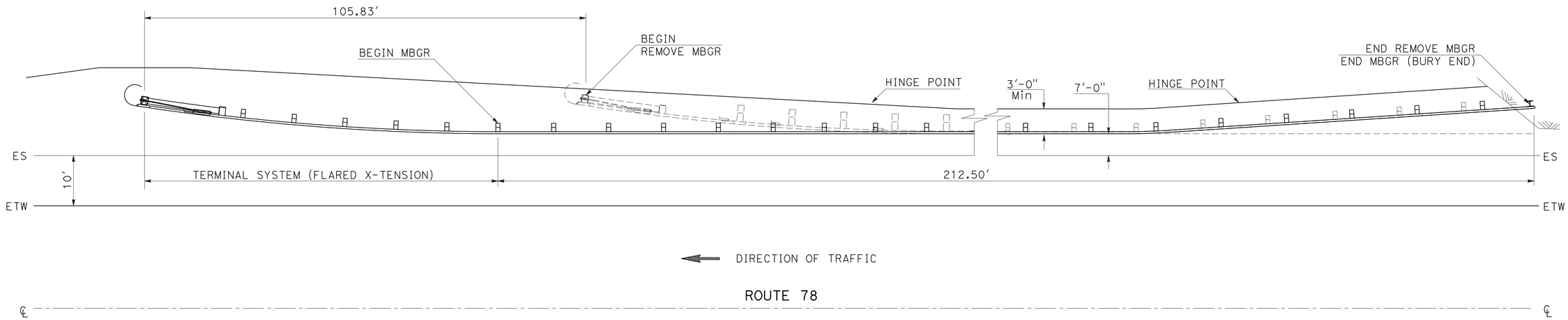

MBGR LAYOUT

LOCATION (23)

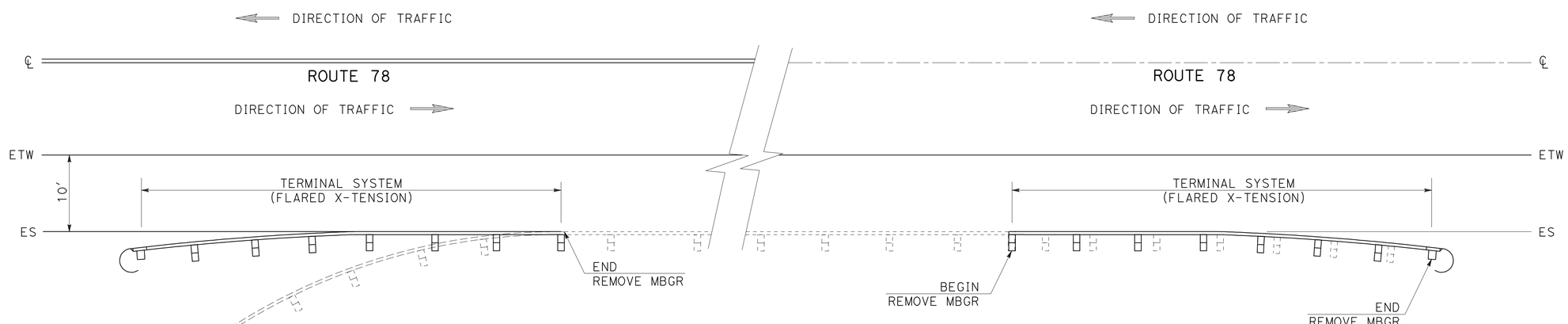

MBGR LAYOUT

LOCATION (22)

CONSTRUCTION DETAILS

NO SCALE

C-7

STATE OF CALIFORNIA - DEPARTMENT OF TRANSPORTATION
Caltrans PROJECT DEVELOPMENT
TRAFFIC

FUNCTIONAL SUPERVISOR: RICHARD ESTRADA
CALCULATED-DESIGNED BY: VAN D. CALLANTA
CHECKED BY: MANUEL REYES
REVISED BY
DATE REVISED

LAST REVISION 07-20-11
DATE PLOTTED => 18-AUG-2011
TIME PLOTTED => 09:38

Dist	COUNTY	ROUTE	POST MILES TOTAL PROJECT	SHEET No.	TOTAL SHEETS
11	SD	78	20.6/35.5	11	63

Manuel Reyes 07-08-11
REGISTERED CIVIL ENGINEER DATE

08-15-11
PLANS APPROVAL DATE

REGISTERED PROFESSIONAL ENGINEER
MANUEL REYES
No. 58621
Exp. 12-31-12
CIVIL
STATE OF CALIFORNIA

THE STATE OF CALIFORNIA OR ITS OFFICERS OR AGENTS SHALL NOT BE RESPONSIBLE FOR THE ACCURACY OR COMPLETENESS OF SCANNED COPIES OF THIS PLAN SHEET.

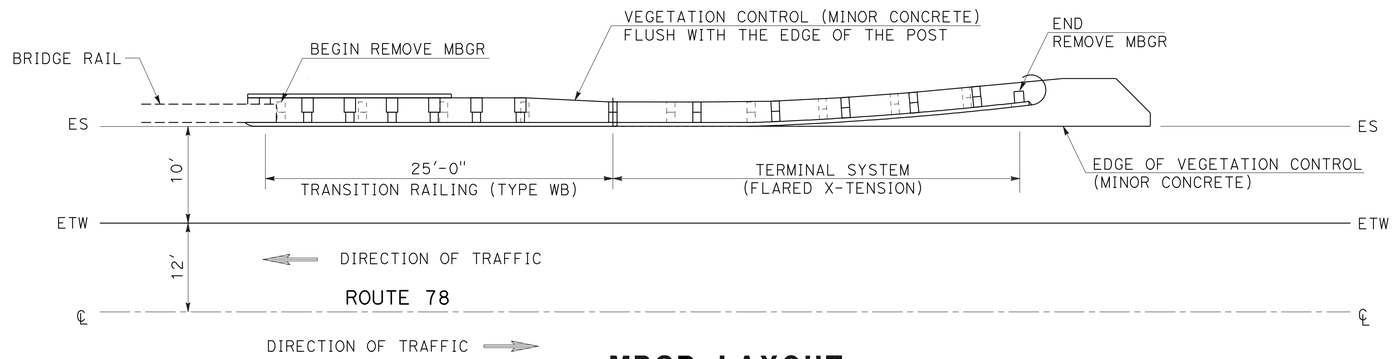

MBGR LAYOUT

LOCATION (31)

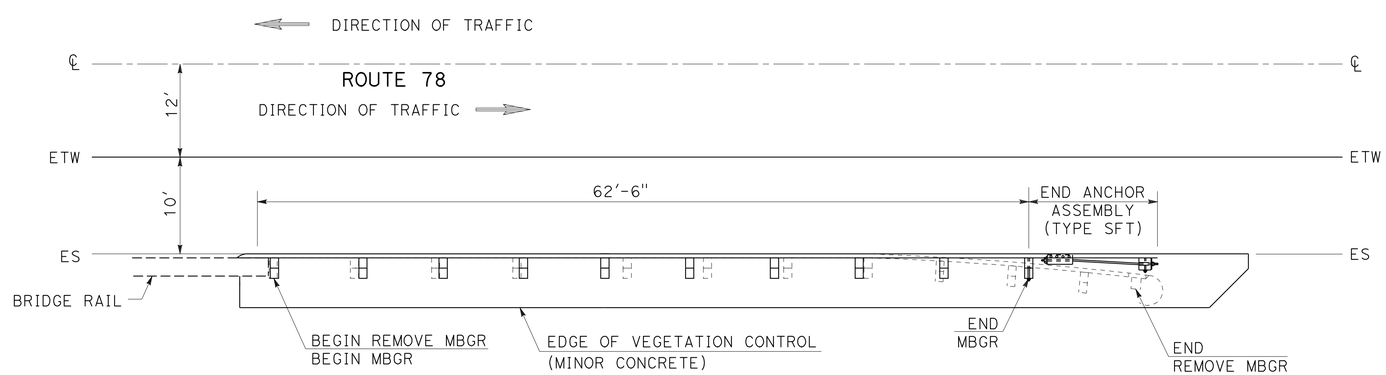

MBGR LAYOUT

LOCATION (29)

CONSTRUCTION DETAILS

NO SCALE

C-8

STATE OF CALIFORNIA - DEPARTMENT OF TRANSPORTATION
Caltrans TRAFFIC PROJECT DEVELOPMENT

FUNCTIONAL SUPERVISOR: RICHARD ESTRADA
CALCULATED-DESIGNED BY: VAN D. CALLANTA
CHECKED BY: MANUEL REYES
REVISED BY
DATE REVISED

LAST REVISION 07-20-11
DATE PLOTTED => 18-AUG-2011
TIME PLOTTED => 09:38

Dist	COUNTY	ROUTE	POST MILES TOTAL PROJECT	SHEET No.	TOTAL SHEETS
11	SD	78	20.6/35.5	12	63

Manuel Reyes 07-08-11
REGISTERED CIVIL ENGINEER DATE

08-15-11
PLANS APPROVAL DATE

REGISTERED PROFESSIONAL ENGINEER MANUEL REYES No. 58621 Exp. 12-31-12 CIVIL STATE OF CALIFORNIA

THE STATE OF CALIFORNIA OR ITS OFFICERS OR AGENTS SHALL NOT BE RESPONSIBLE FOR THE ACCURACY OR COMPLETENESS OF SCANNED COPIES OF THIS PLAN SHEET.

NOTE:

1. FOR ADDITIONAL INFORMATION, SEE STANDARD PLANS.

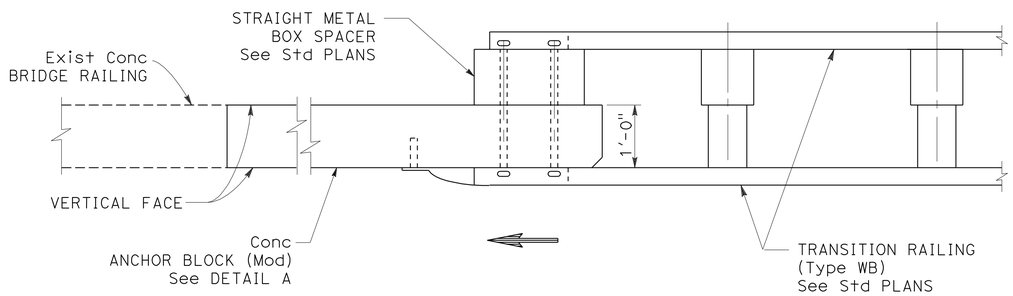

PLAN

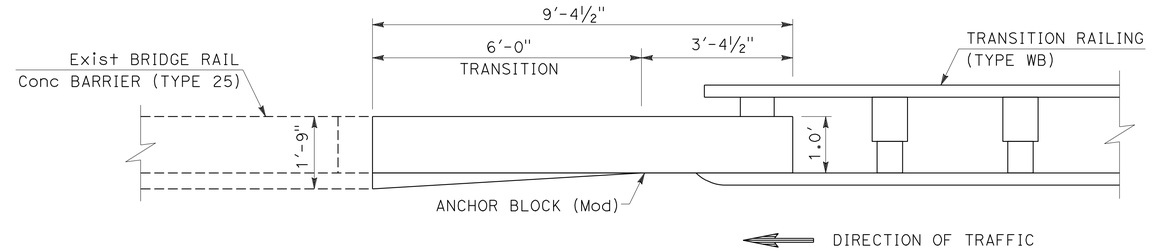

TYPICAL DETAIL
ANCHOR BLOCK (Mod) FOR TRANSITION RAILING CONNECTION

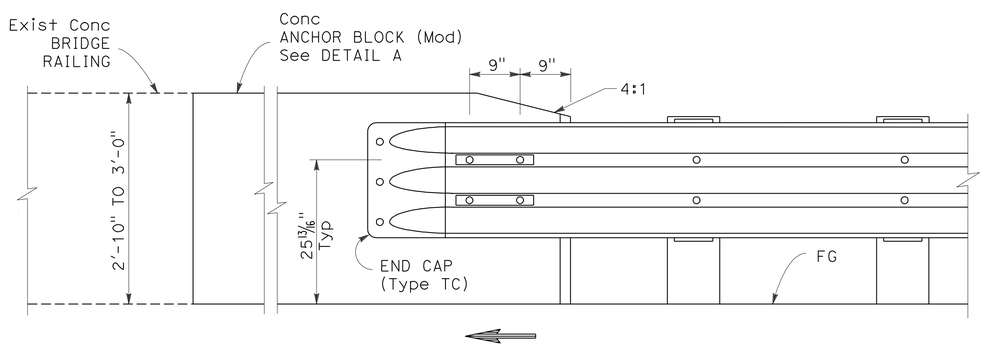

ELEVATION

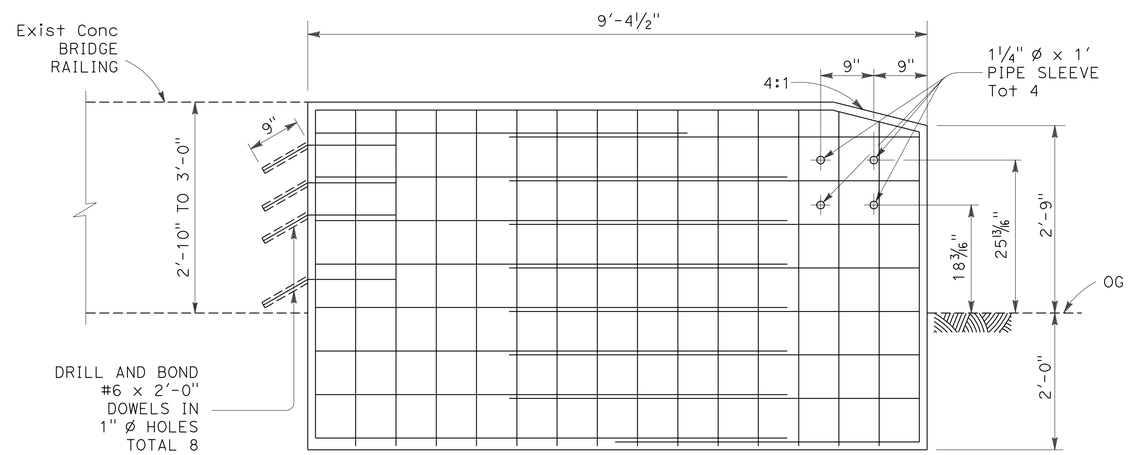

DETAIL A

ANCHOR BLOCK (Mod) FOR TRANSITION RAILING CONNECTION

LOCATIONS (10) (13) (15)

CONSTRUCTION DETAILS

NO SCALE

C-9

STATE OF CALIFORNIA - DEPARTMENT OF TRANSPORTATION
Caltrans PROJECT DEVELOPMENT
TRAFFIC

FUNCTIONAL SUPERVISOR: RICHARD ESTRADA
CALCULATED-DESIGNED BY: VAN D. CALLANTA
CHECKED BY: MANUEL REYES
REVISED BY
DATE REVISED

LAST REVISION 07-20-11
DATE PLOTTED => 18-AUG-2011
TIME PLOTTED => 09:38

Dist	COUNTY	ROUTE	POST MILES TOTAL PROJECT	SHEET No.	TOTAL SHEETS
11	SD	78	20.6/35.5	13	63

Manuel Reyes 07-08-11
REGISTERED CIVIL ENGINEER DATE

08-15-11
PLANS APPROVAL DATE

REGISTERED PROFESSIONAL ENGINEER
MANUEL REYES
No. 58621
Exp. 12-31-12
CIVIL
STATE OF CALIFORNIA

THE STATE OF CALIFORNIA OR ITS OFFICERS OR AGENTS SHALL NOT BE RESPONSIBLE FOR THE ACCURACY OR COMPLETENESS OF SCANNED COPIES OF THIS PLAN SHEET.

NOTE:

1. FOR ADDITIONAL INFORMATION, SEE STANDARD PLANS.

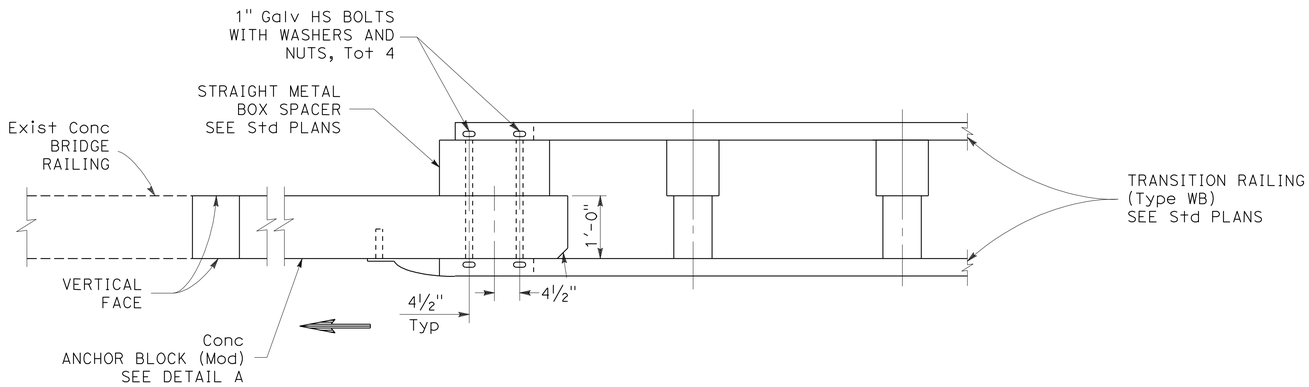

PLAN

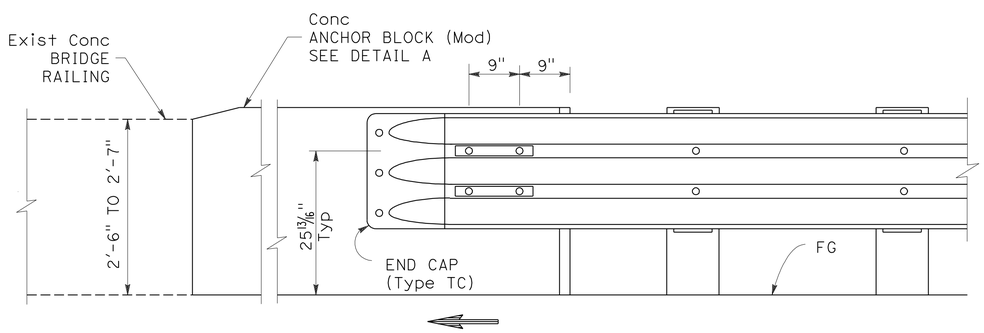

ELEVATION

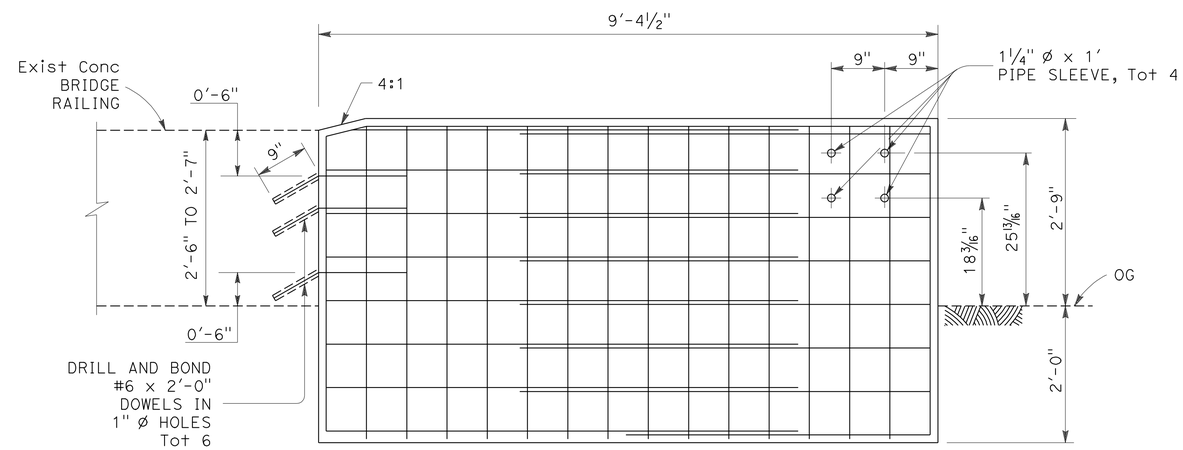

DETAIL A

ANCHOR BLOCK (Mod) FOR TRANSITION RAILING CONNECTION

LOCATIONS (4) (7) (14)

CONSTRUCTION DETAILS

NO SCALE

C-10

STATE OF CALIFORNIA - DEPARTMENT OF TRANSPORTATION
Caltrans PROJECT DEVELOPMENT
TRAFFIC

FUNCTIONAL SUPERVISOR: RICHARD ESTRADA
CALCULATED-DESIGNED BY: VAN D. CALLANTA
CHECKED BY: MANUEL REYES
REVISED BY
DATE REVISED

LAST REVISION 07-20-11
DATE PLOTTED => 18-AUG-2011
TIME PLOTTED => 09:38

Dist	COUNTY	ROUTE	POST MILES TOTAL PROJECT	SHEET No.	TOTAL SHEETS
11	SD	78	20.6/35.5	14	63

Manuel Reyes 07-08-11
REGISTERED CIVIL ENGINEER DATE

08-15-11
PLANS APPROVAL DATE

REGISTERED PROFESSIONAL ENGINEER
MANUEL REYES
No. 58621
Exp. 12-31-12
CIVIL
STATE OF CALIFORNIA

THE STATE OF CALIFORNIA OR ITS OFFICERS OR AGENTS SHALL NOT BE RESPONSIBLE FOR THE ACCURACY OR COMPLETENESS OF SCANNED COPIES OF THIS PLAN SHEET.

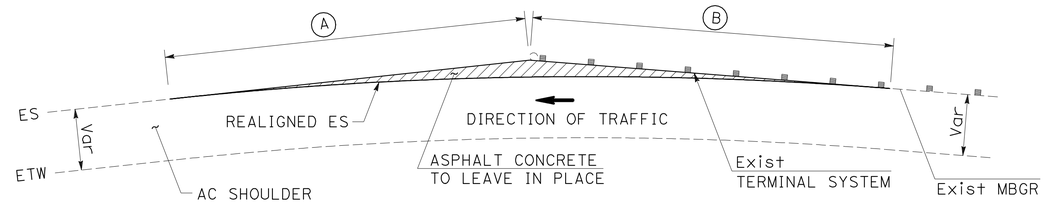

LOCATIONS
1 2 15 20 21

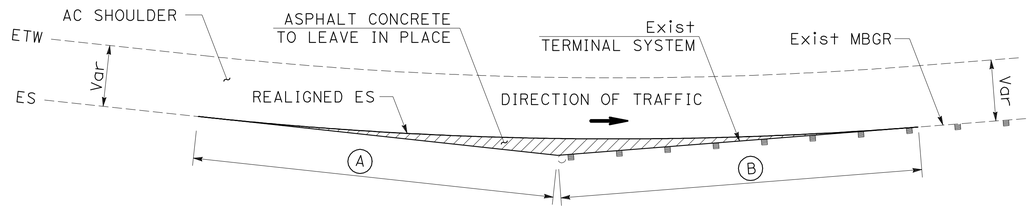

LOCATIONS
3 11 14

REALIGNED EDGE OF SHOULDER

TABLE 1 - REALIGNED EDGE OF SHOULDER

LOCATION	LENGTH (LF)	
	A	B
1 - APPROACH	51.31	31.50
1 - DEPART	40.00	35.82
2	33.30	55.67
3	57.60	47.74
11	40.25	25.77
14	34.94	33.04
15	34.28	21.47
20	40.70	25.20
21 - APPROACH	26.30	27.30
21 - DEPART	42.70	25.90

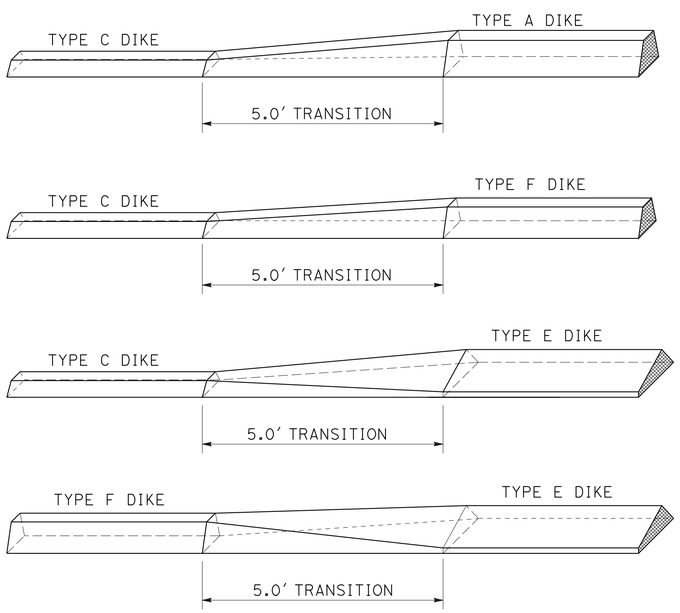

DIKE TRANSITION DETAILS

(ISOMETRIC)

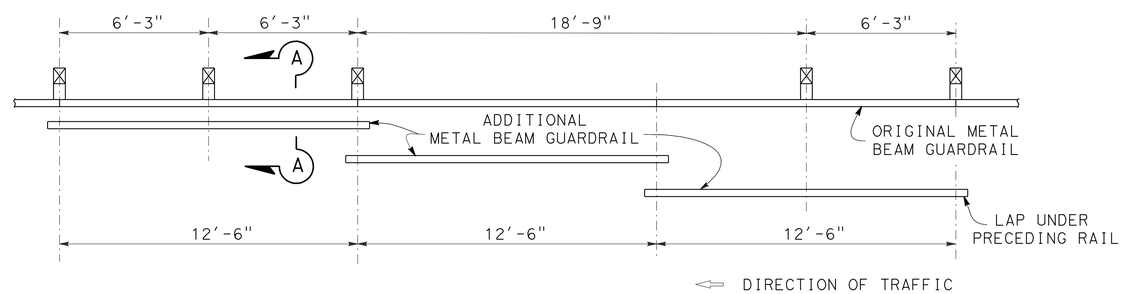

PLAN

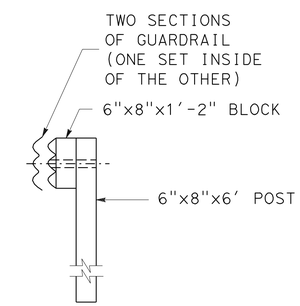

SECTION A-A

METAL BEAM GUARDRAIL
TWO POST OMITTED FOR CULVERT CROSSING

LOCATIONS 4 7

CONSTRUCTION DETAILS

NO SCALE

C-11

STATE OF CALIFORNIA - DEPARTMENT OF TRANSPORTATION
Caltrans
TRAFFIC
PROJECT DEVELOPMENT

FUNCTIONAL SUPERVISOR: RICHARD ESTRADA
CALCULATED-DESIGNED BY: VAN D. CALLANTA
CHECKED BY: MANUEL REYES
REVISED BY
DATE REVISED

LAST REVISION 07-20-11
DATE PLOTTED => 18-AUG-2011
TIME PLOTTED => 09:39

Dist	COUNTY	ROUTE	POST MILES TOTAL PROJECT	SHEET No.	TOTAL SHEETS
11	SD	78	20.6/35.5	15	63

Manuel Reyes 07-08-11
REGISTERED CIVIL ENGINEER DATE

08-15-11
PLANS APPROVAL DATE

REGISTERED PROFESSIONAL ENGINEER
MANUEL REYES
No. 58621
Exp. 12-31-12
CIVIL
STATE OF CALIFORNIA

THE STATE OF CALIFORNIA OR ITS OFFICERS OR AGENTS SHALL NOT BE RESPONSIBLE FOR THE ACCURACY OR COMPLETENESS OF SCANNED COPIES OF THIS PLAN SHEET.

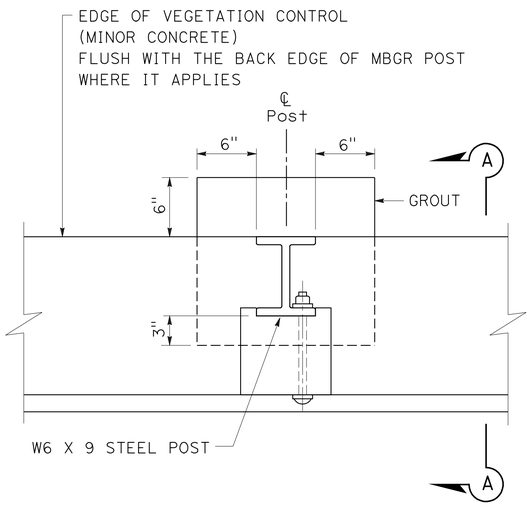

PLAN

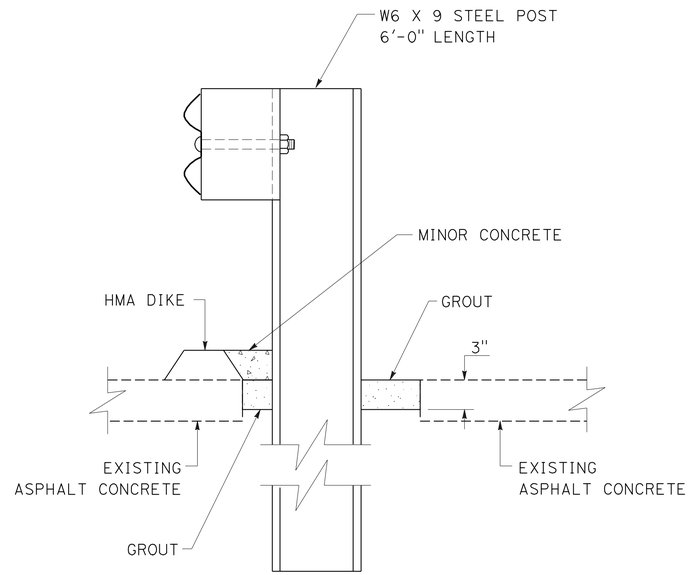

SECTION A-A

TYPICAL STEEL LINE POST INSTALLATION ON EXISTING ASPHALT CONCRETE

FOR MBGR LOCATIONS 1 2 3 11 14 15 20 21

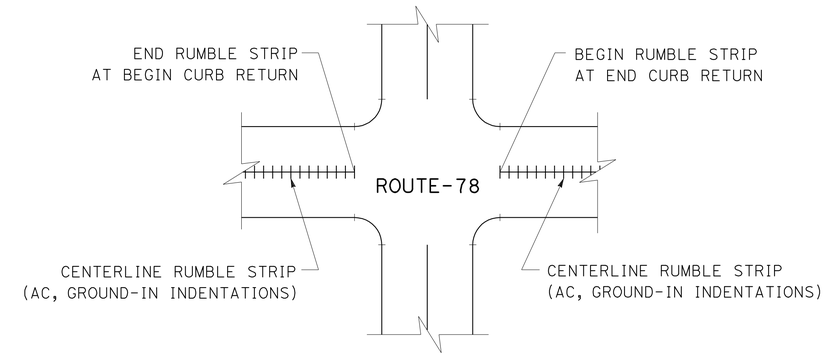

TYPICAL RUMBLE STRIP PLACEMENT AT INTERSECTIONS

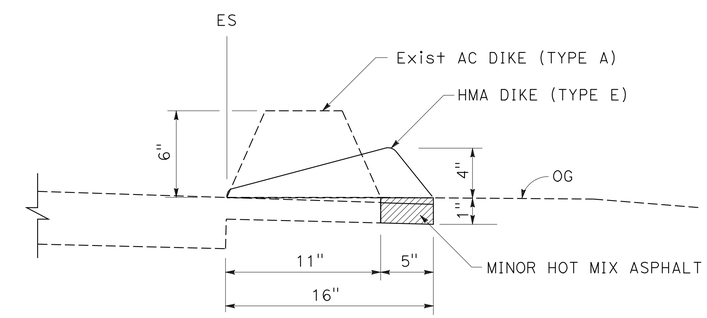

MINOR HOT MIX ASPHALT UNDER HMA DIKE (TYPE E)

Sta 101+37.79 TO 106+21.00
(SEE DRAINAGE PLAN)

CONSTRUCTION DETAILS

NO SCALE

C-12

STATE OF CALIFORNIA - DEPARTMENT OF TRANSPORTATION
Caltrans PROJECT DEVELOPMENT
TRAFFIC

FUNCTIONAL SUPERVISOR: RICHARD ESTRADA
CALCULATED-DESIGNED BY: VAN D. CALLANTA
CHECKED BY: MANUEL REYES
REVISED BY
DATE REVISED

LAST REVISION 07-20-11
DATE PLOTTED => 18-AUG-2011
TIME PLOTTED => 09:39

Dist	COUNTY	ROUTE	POST MILES TOTAL PROJECT	SHEET No.	TOTAL SHEETS
11	SD	78	20.6/35.5	16	63

Manuel Reyes 07-08-11
REGISTERED CIVIL ENGINEER DATE

08-15-11
PLANS APPROVAL DATE

REGISTERED PROFESSIONAL ENGINEER MANUEL REYES No. 58621 Exp. 12-31-12 CIVIL STATE OF CALIFORNIA

THE STATE OF CALIFORNIA OR ITS OFFICERS OR AGENTS SHALL NOT BE RESPONSIBLE FOR THE ACCURACY OR COMPLETENESS OF SCANNED COPIES OF THIS PLAN SHEET.

NOTES:

1. SEE MANUFACTURER PLANS FOR ADDITIONAL DETAILS AND DIMENSIONS NOT SHOWN ON PLANS.
2. SYSTEM TO BE INSTALLED PER MANUFACTURER SPECIFICATIONS.
3. ONLY TIGHTEN THE CABLE ASSEMBLIES USING THE NUTS AT THE CABLE BRACKET (SEE DETAIL 'D'). DO NOT TIGHTEN THE CABLES AT THE FRONT OF THE GROUND ANCHOR.
4. WHEN DRIVING STEEL POST, ENSURE THAT A DRIVING CAP WITH TIMBER OR PLASTIC INSERT IS USED TO PREVENT DAMAGE TO THE GALVANIZING TO THE TOP OF THE STEEL POST.

LEGEND:

ITEM	DESCRIPTION
1	X-TENSION TERMINAL SYSTEM COMPONENT KIT
2	X-TENSION TERMINAL SYSTEM HARDWARE KIT
3	X-TENSION TERMINAL SYSTEM GUARDRAIL COMPONENT KIT 1

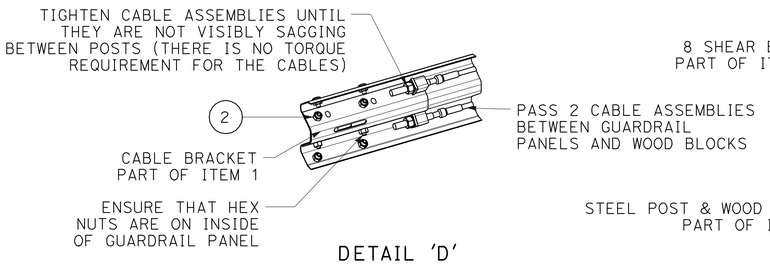

DETAIL 'D'

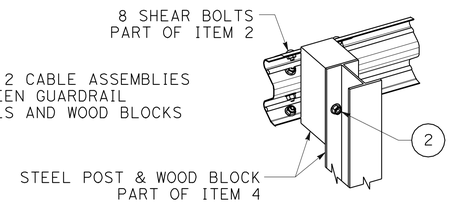

DETAIL 'C'

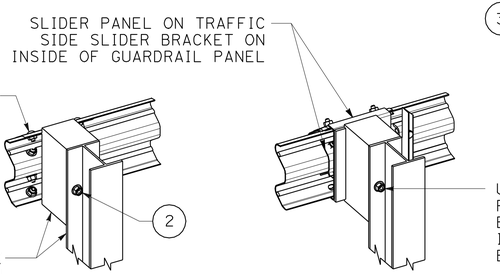

DETAIL 'B-2'

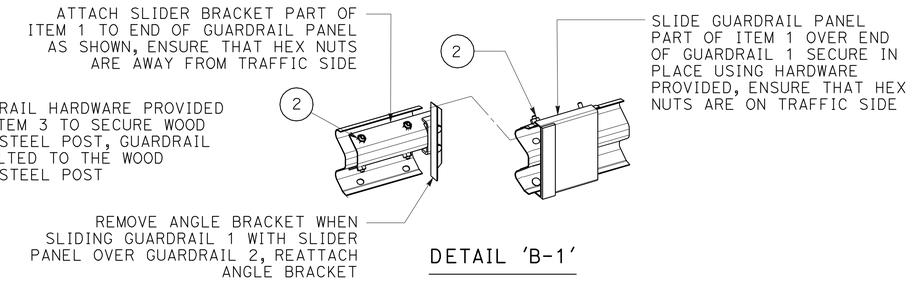

DETAIL 'B-1'

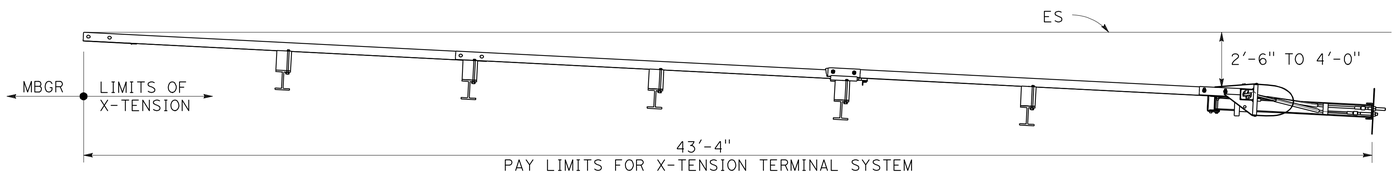

FLARED X-TENSION

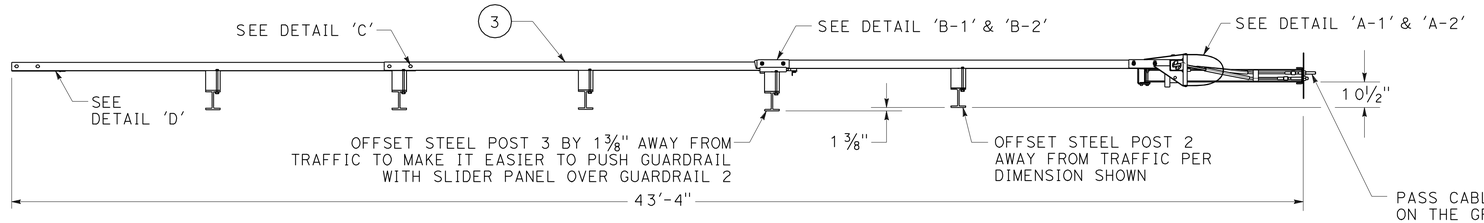

IN-LINE X-TENSION

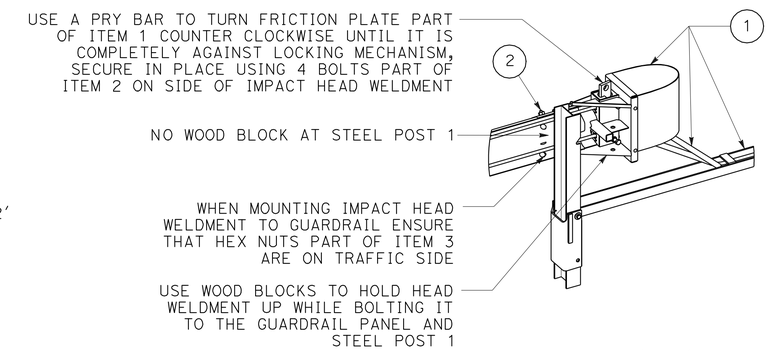

DETAIL 'A-1'

PASS CABLE ASSEMBLY UNDER THE STEEL STRAP ON THE GROUND STRUT AND FORWARD THROUGH THE HOLES AT FRONT END OF GROUND STRUT. THEN PASS CABLE ASSEMBLY THROUGH LOWER HOLE IN IMPACT HEAD WELDMENT AND THROUGH FRICTION PLATE AND OUT THE BACK SIDE OF THE IMPACT HEAD. (REPEAT FOR SECOND CABLE ASSEMBLY TO PASS THROUGH UPPER HOLE IN IMPACT HEAD WELDMENT)

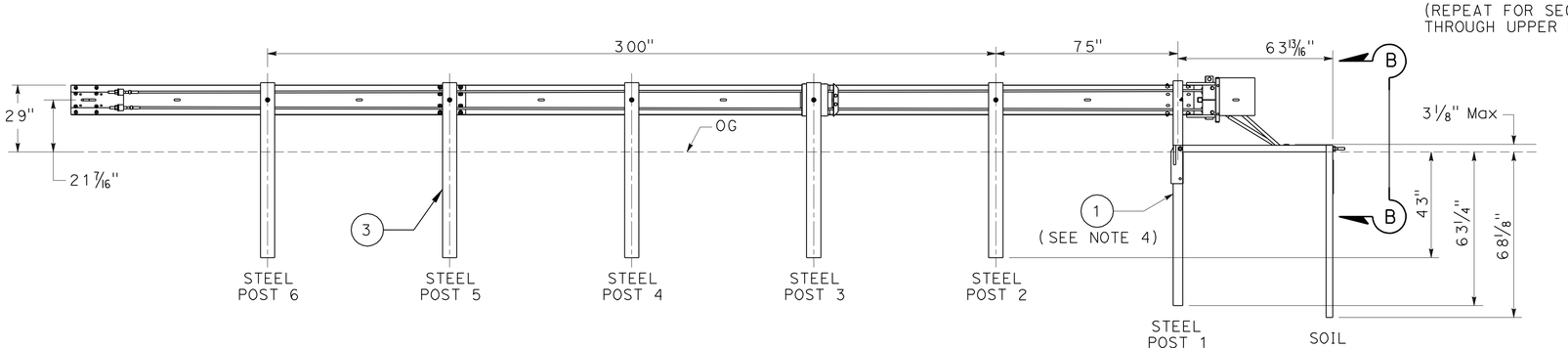

ELEVATION

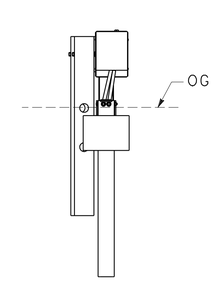

SECTION B-B

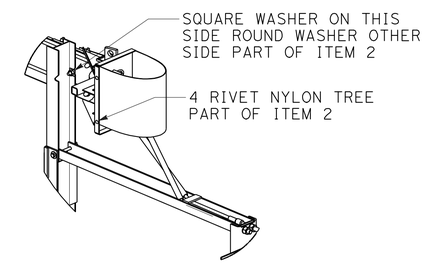

DETAIL 'A-2'

TERMINAL SYSTEM (TYPE X-TENSION)

CONSTRUCTION DETAILS

NO SCALE

C-13

STATE OF CALIFORNIA - DEPARTMENT OF TRANSPORTATION
Caltrans PROJECT DEVELOPMENT
TRAFFIC

FUNCTIONAL SUPERVISOR: RICHARD ESTRADA
CALCULATED-DESIGNED BY: VAN D. CALLANTA
CHECKED BY: MANUEL REYES
REVISED BY
DATE REVISED

LAST REVISION 07-20-11
DATE PLOTTED => 18-AUG-2011
TIME PLOTTED => 09:39

Dist	COUNTY	ROUTE	POST MILES TOTAL PROJECT	SHEET No.	TOTAL SHEETS
11	SD	78	20.6/35.5	17	63

Manuel Reyes 07-08-11
REGISTERED CIVIL ENGINEER DATE

08-15-11
PLANS APPROVAL DATE

REGISTERED PROFESSIONAL ENGINEER
MANUEL REYES
No. 58621
Exp. 12-31-12
CIVIL
STATE OF CALIFORNIA

THE STATE OF CALIFORNIA OR ITS OFFICERS OR AGENTS SHALL NOT BE RESPONSIBLE FOR THE ACCURACY OR COMPLETENESS OF SCANNED COPIES OF THIS PLAN SHEET.

SAN DIEGO

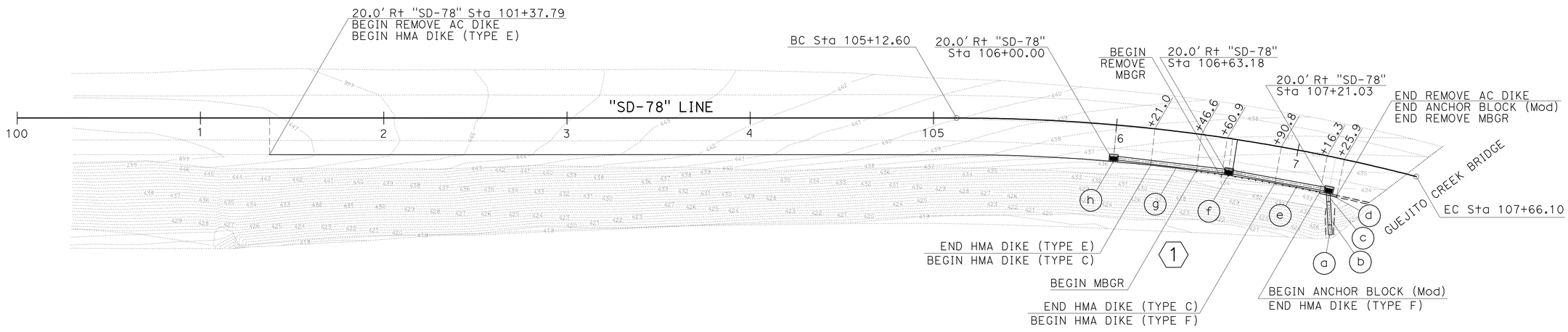

DRAINAGE PLAN

MBGR LOCATION (10)

THIS PLAN ACCURATE FOR DRAINAGE WORK ONLY.

DRAINAGE PLAN

SCALE: 1" = 50'

D-1

REVISED BY	DATE REVISED

CALCULATED-DESIGNED BY	CHECKED BY
VAN D. CALLANTA	MANUEL REYES

FUNCTIONAL SUPERVISOR: RICHARD ESTRADA

STATE OF CALIFORNIA - DEPARTMENT OF TRANSPORTATION
Caltrans TRAFFIC PROJECT DEVELOPMENT

LAST REVISION 07-20-11
DATE PLOTTED => 18-AUG-2011
TIME PLOTTED => 09:39

Dist	COUNTY	ROUTE	POST MILES TOTAL PROJECT	SHEET No.	TOTAL SHEETS
11	SD	78	20.6/35.5	18	63

Manuel Reyes 07-08-11
REGISTERED CIVIL ENGINEER DATE

08-15-11
PLANS APPROVAL DATE

REGISTERED PROFESSIONAL ENGINEER
MANUEL REYES
No. 58621
Exp. 12-31-12
CIVIL
STATE OF CALIFORNIA

THE STATE OF CALIFORNIA OR ITS OFFICERS OR AGENTS SHALL NOT BE RESPONSIBLE FOR THE ACCURACY OR COMPLETENESS OF SCANNED COPIES OF THIS PLAN SHEET.

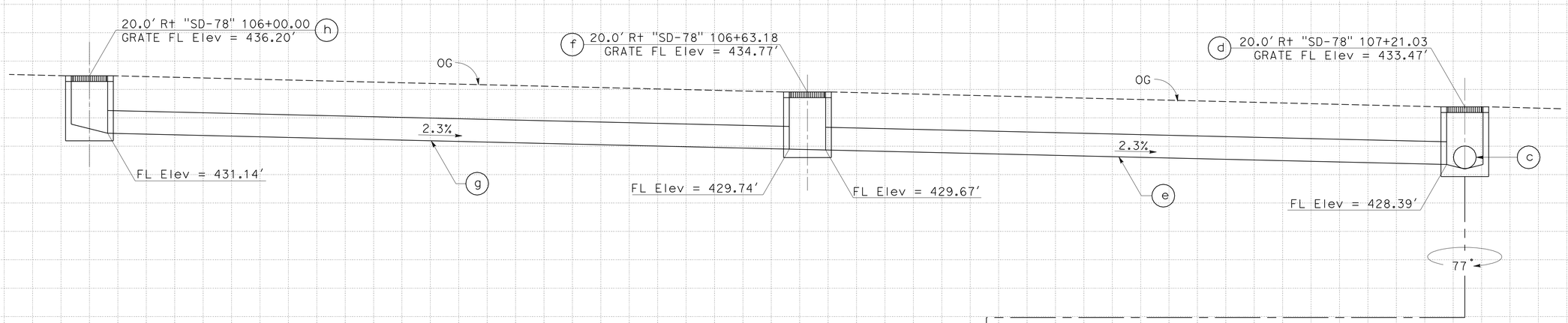

DRAINAGE SYSTEM 1
"SD-78" Sta 106+00.00

- (a) 24" X 5.0' AP CULVERT
- (b) 24" X 13.5' AP DOWNDRAIN WITH ELBOWS
- (C) 24" X 5.0' AP CULVERT
- (d) G2 INLET WITH TYPE 24-12X GRATE; H=5.48'
- (e) 24" X 54.7' AP CULVERT
- (f) G2 INLET WITH TYPE 24-12X GRATE; H=5.10'
- (g) 24" X 60.0' AP CULVERT
- (h) G2 INLET WITH TYPE 24-12X GRATE; H=5.06'

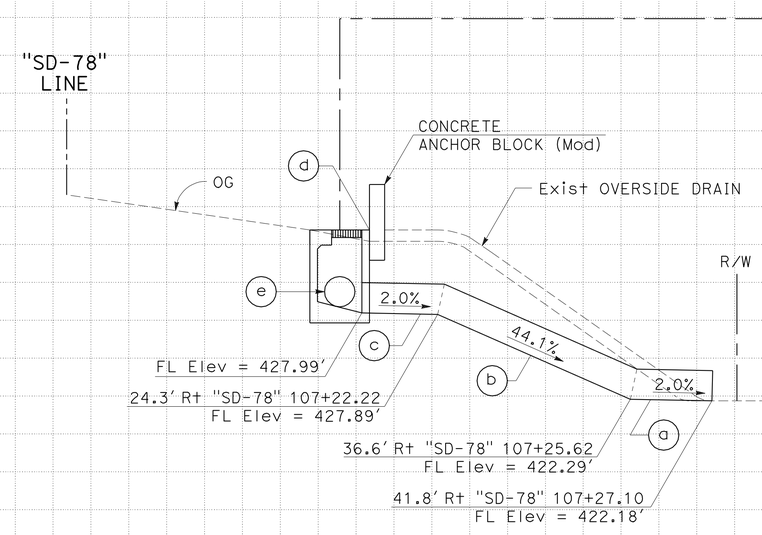

DRAINAGE PROFILES

SCALE: Horiz 1"=5'
Vert 1"=5'

DP-1

REVISED BY | DATE REVISED
VAN D. CALLANTA | MANUEL REYES
CALCULATED-DESIGNED BY | CHECKED BY
FUNCTIONAL SUPERVISOR: RICHARD ESTRADA

STATE OF CALIFORNIA - DEPARTMENT OF TRANSPORTATION
Caltrans TRAFFIC PROJECT DEVELOPMENT

LAST REVISION 07-20-11 | DATE PLOTTED => 18-AUG-2011 | TIME PLOTTED => 09:39

Dist	COUNTY	ROUTE	POST MILES TOTAL PROJECT	SHEET No.	TOTAL SHEETS
11	SD	78	20.6/35.5	19	63

Manuel Reyes 07-08-11
REGISTERED CIVIL ENGINEER DATE

08-15-11
PLANS APPROVAL DATE

REGISTERED PROFESSIONAL ENGINEER
MANUEL REYES
No. 58621
Exp. 12-31-12
CIVIL
STATE OF CALIFORNIA

THE STATE OF CALIFORNIA OR ITS OFFICERS OR AGENTS SHALL NOT BE RESPONSIBLE FOR THE ACCURACY OR COMPLETENESS OF SCANNED COPIES OF THIS PLAN SHEET.

DRAINAGE QUANTITIES

DRAINAGE PLAN SHEET No.	DRAINAGE SYSTEM No.	DRAINAGE UNIT	MINOR CONCRETE (MINOR STRUCTURE)	FRAME AND GRATE (TYPE 24-12X) (N)	MISCELLANEOUS IRON AND STEEL	HEIGHT OF INLET "H" (N)	MAXIMUM COVER (N)	24" AP CULVERT	24" AP DOWNDRAIN	JOINT CLASSIFICATION (N)	ELBOW (N)	DESCRIPTION	STATION	DRAINAGE SYSTEM No.	DRAINAGE UNIT
	⬡	○	CY	EA	LB	LF	LF	LF	LF					⬡	○
D-1	1	a					0.96	5.0		DD		24" x 5.0' AP CULVERT		1	a
		b					2.76		13.5	DD	2.0	24" x 13.5' AP DOWNDRAIN WITH ELBOWS			b
		c					3.49	5.0		DD		24" x 5.0' AP CULVERT			c
		d	1.94	1	239	5.48						G2 INLET WITH TYPE 24-12X GRATE	20.0' Rt "SD-78" Sta 107+21.03		d
		e					3.12	54.7		S		24" x 54.7' AP CULVERT			e
		f	1.85	1	239	5.10						G2 INLET WITH TYPE 24-12X GRATE	20.0' Rt "SD-78" Sta 106+63.18		f
		g					3.06	60.0		S		24" x 60.0' AP CULVERT			g
		h	1.84	1	239	5.06						G2 INLET WITH TYPE 24-12X GRATE	20.0' Rt "SD-78" Sta 106+00.00		h
TOTALS			5.63*		717			124.7	13.5						

NOTES:

1. (N) = NOT A SEPARATE PAY ITEM, FOR INFORMATION ONLY.
2. S = STANDARD PIPE JOINT TYPE
3. * = FOR ADDITIONAL QUANTITIES, SEE SUMMARY OF QUANTITIES SHEETS.
4. DD = DOWNDRAIN JOINT TYPE

APC ALLOWABLE PIPE MATERIALS

DESIGNATION	RCP	METAL PIPES		PLASTIC PIPES
		B		C
	SIZE (in)	SIZE (in)	THICKNESS (in)	SIZE (in)
24" APC	24	24	0.109	24
24" APC DD		24	0.109	24

B - CSP WITH BITUMINOUS COATING
C - HDPE (HIGH DENSITY POLYETHYLENE)-RIBBED OR CORRUGATED TYPE C

DRAINAGE QUANTITIES
DQ-1

STATE OF CALIFORNIA - DEPARTMENT OF TRANSPORTATION
Caltrans TRAFFIC PROJECT DEVELOPMENT

FUNCTIONAL SUPERVISOR: RICHARD ESTRADA
CALCULATED-DESIGNED BY: VAN D. CALLANTA
CHECKED BY: MANUEL REYES
REVISED BY
DATE REVISED

LAST REVISION 07-20-11
DATE PLOTTED => 18-AUG-2011
TIME PLOTTED => 09:39

Dist	COUNTY	ROUTE	POST MILES TOTAL PROJECT	SHEET No.	TOTAL SHEETS
11	SD	78	20.6/35.5	20	63

REGISTERED CIVIL ENGINEER 07-08-11 DATE

08-15-11
PLANS APPROVAL DATE

REGISTERED PROFESSIONAL ENGINEER VASANT KALE No. 61372 Exp. 06-30-13 CIVIL STATE OF CALIFORNIA

THE STATE OF CALIFORNIA OR ITS OFFICERS OR AGENTS SHALL NOT BE RESPONSIBLE FOR THE ACCURACY OR COMPLETENESS OF SCANNED COPIES OF THIS PLAN SHEET.

NOTES:

1. FOR ACCURATE RIGHT OF WAY DATA, CONTACT RIGHT OF WAY ENGINEERING AT THE DISTRICT OFFICE.
2. LOCATION OF UTILITY FACILITIES SHOWN ON THESE PLANS WERE OBTAINED FROM OWNERS' RECORDS AND/OR FROM FIELD SURVEYS.
3. CONTRACTOR WILL VERIFY LOCATIONS OF EXISTING UTILITIES AND AVOID IMPACTING EXISTING UTILITIES BY ADJUSTING LOCATIONS OF POSTS IN FIELD IN CONSULTATION WITH THE ENGINEER.

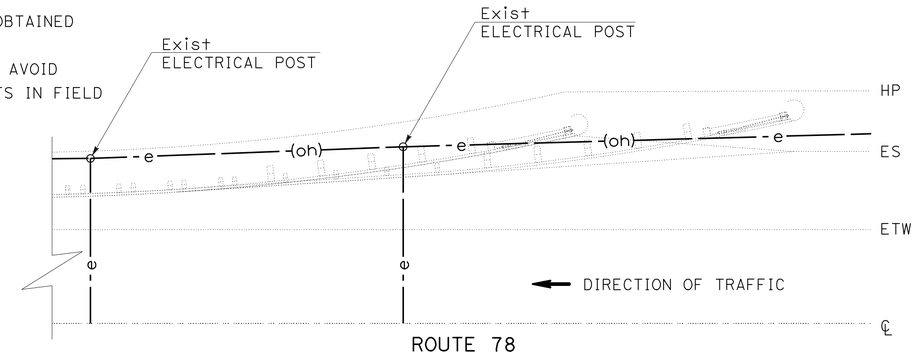

MBGR LOCATION (1)
PM R21.32 TO R21.36

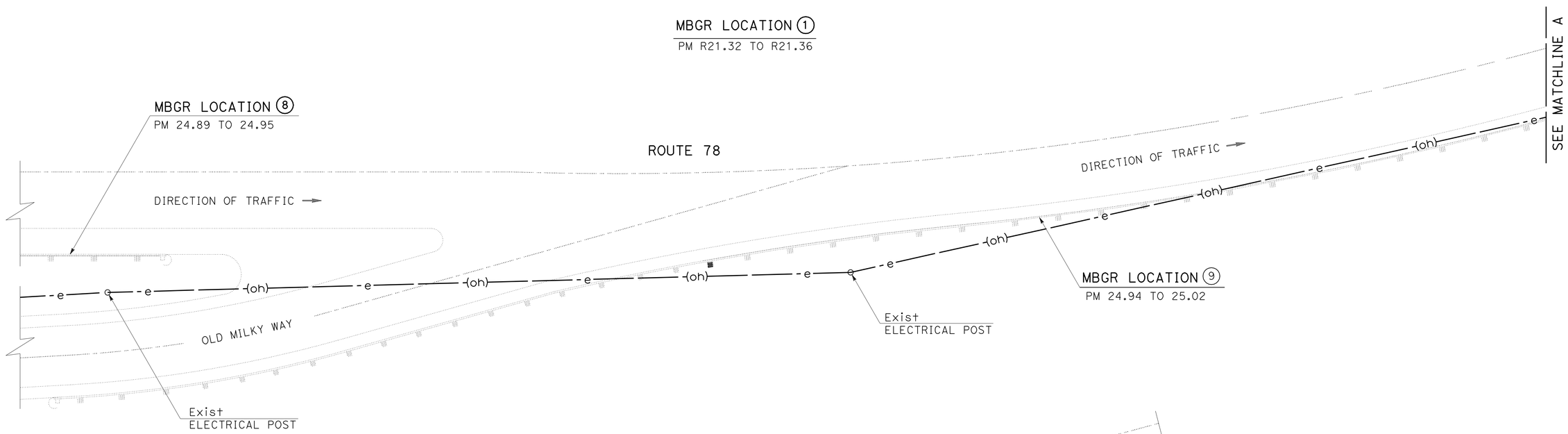

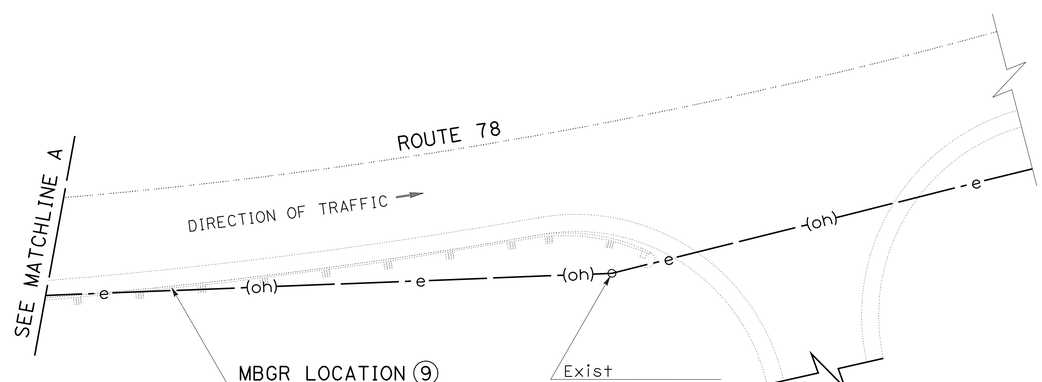

LEGEND:

—— - e ——— ——— -(oh)— EXISTING OVERHEAD ELECTRICAL LINE
—— - - t ——— ——— - - t —— EXISTING AT&T UNDERGROUND LINE
—— - - t ——— ——— - -(oh)— EXISTING AT&T OVERHEAD LINE

THIS PLAN FOR UTILITY INFORMATION ONLY.

UTILITY PLAN

NO SCALE **U-1**

STATE OF CALIFORNIA - DEPARTMENT OF TRANSPORTATION
Caltrans PROJECT DEVELOPMENT

FUNCTIONAL SUPERVISOR: ABU-BAKR AL-JAFRI
CALCULATED-DESIGNED BY: ARTURO REYES
CHECKED BY: VASANT KALE
REVISED BY
DATE REVISED

LAST REVISION 07-20-11
DATE PLOTTED => 18-AUG-2011
TIME PLOTTED => 09:39

Dist	COUNTY	ROUTE	POST MILES TOTAL PROJECT	SHEET No.	TOTAL SHEETS
11	SD	78	20.6/35.5	21	63

REGISTERED CIVIL ENGINEER 07-08-11 DATE

08-15-11
PLANS APPROVAL DATE

REGISTERED PROFESSIONAL ENGINEER
VASANT KALE
No. 61372
Exp. 06-30-13
CIVIL
STATE OF CALIFORNIA

THE STATE OF CALIFORNIA OR ITS OFFICERS OR AGENTS SHALL NOT BE RESPONSIBLE FOR THE ACCURACY OR COMPLETENESS OF SCANNED COPIES OF THIS PLAN SHEET.

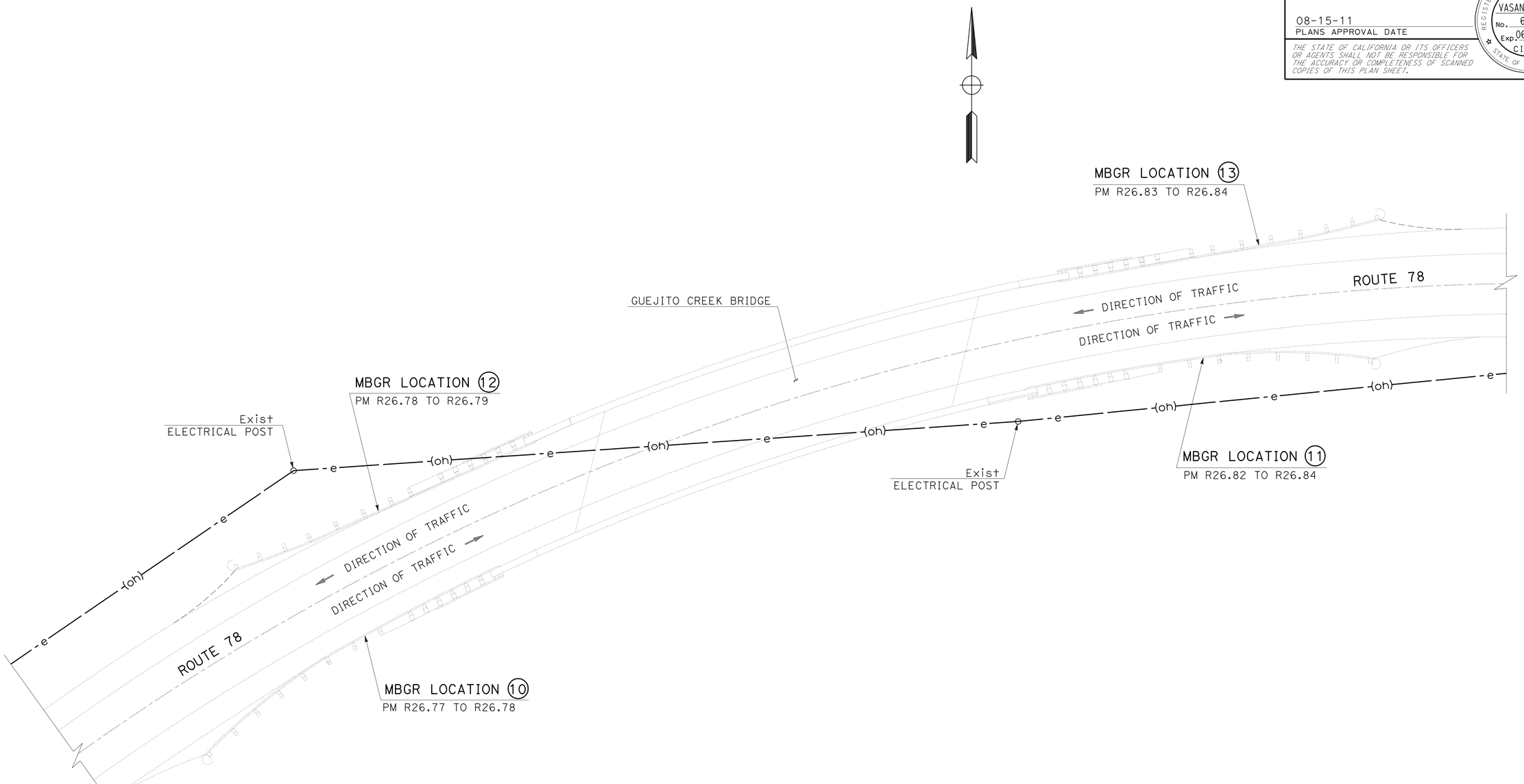

THIS PLAN FOR UTILITY INFORMATION ONLY.

UTILITY PLAN

NO SCALE

U-2

STATE OF CALIFORNIA - DEPARTMENT OF TRANSPORTATION
Caltrans PROJECT DEVELOPMENT

FUNCTIONAL SUPERVISOR: ABU-BAKR AL-JAFRI
CALCULATED-DESIGNED BY: ARTURO REYES
CHECKED BY: VASANT KALE
REVISED BY
DATE REVISED

LAST REVISION 07-20-11
DATE PLOTTED => 18-AUG-2011
TIME PLOTTED => 09:39

Dist	COUNTY	ROUTE	POST MILES TOTAL PROJECT	SHEET No.	TOTAL SHEETS
11	SD	78	20.6/35.5	22	63

REGISTERED CIVIL ENGINEER 07-08-11 DATE

08-15-11
PLANS APPROVAL DATE

REGISTERED PROFESSIONAL ENGINEER
VASANT KALE
No. 61372
Exp. 06-30-13
CIVIL
STATE OF CALIFORNIA

THE STATE OF CALIFORNIA OR ITS OFFICERS OR AGENTS SHALL NOT BE RESPONSIBLE FOR THE ACCURACY OR COMPLETENESS OF SCANNED COPIES OF THIS PLAN SHEET.

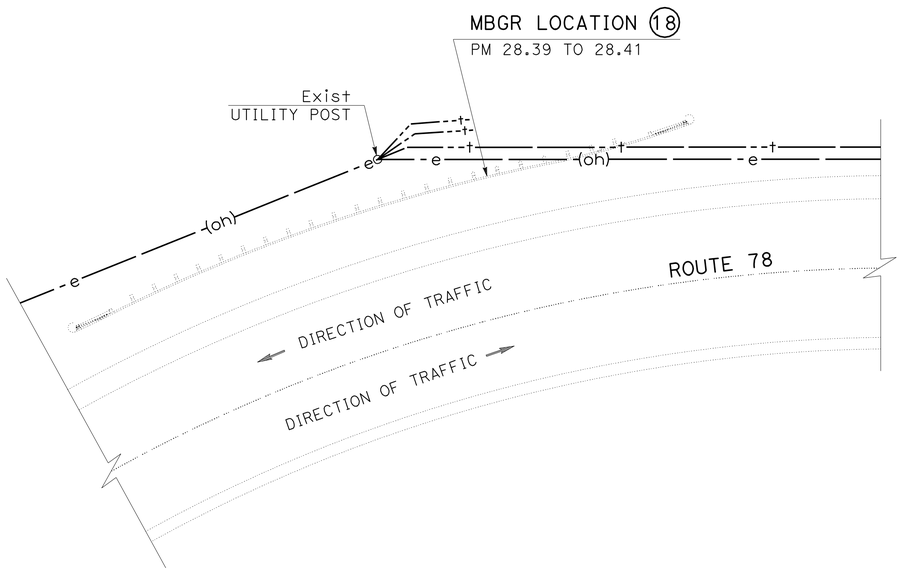

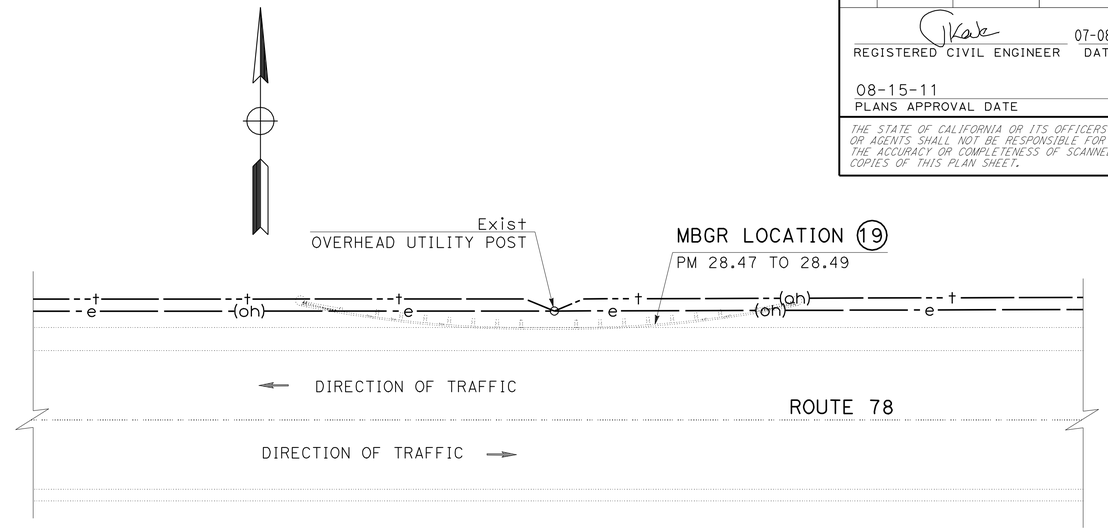

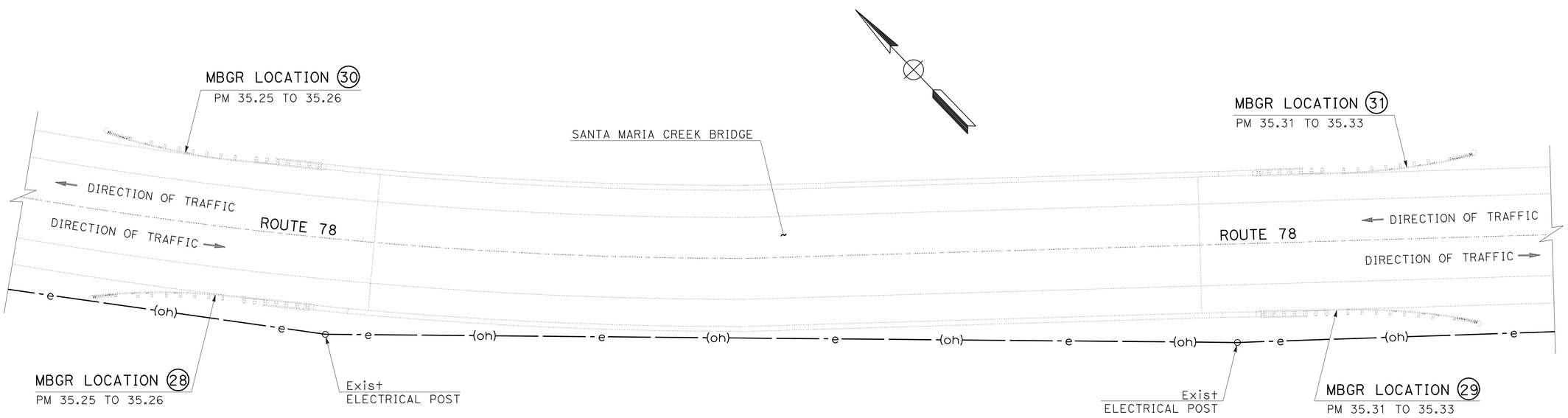

THIS PLAN FOR UTILITY INFORMATION ONLY.

UTILITY PLAN

NO SCALE **U-3**

STATE OF CALIFORNIA - DEPARTMENT OF TRANSPORTATION
Caltrans PROJECT DEVELOPMENT

FUNCTIONAL SUPERVISOR: ABU-BAKR AL-JAFRI
CALCULATED-DESIGNED BY: ARTURO REYES
CHECKED BY: VASANT KALE
REVISED BY
DATE REVISED

LAST REVISION 07-20-11
DATE PLOTTED => 18-AUG-2011
TIME PLOTTED => 09:39

Dist	COUNTY	ROUTE	POST MILES TOTAL PROJECT	SHEET No.	TOTAL SHEETS
11	SD	78	20.6/35.5	23	63

REGISTERED CIVIL ENGINEER 07-11-11 DATE

08-15-11
PLANS APPROVAL DATE

REGISTERED PROFESSIONAL ENGINEER SHAHIN T ADIBI No. 54839 Exp. 06-30-12 CIVIL STATE OF CALIFORNIA

THE STATE OF CALIFORNIA OR ITS OFFICERS OR AGENTS SHALL NOT BE RESPONSIBLE FOR THE ACCURACY OR COMPLETENESS OF SCANNED COPIES OF THIS PLAN SHEET.

NOTES:

1. EXACT LOCATION OF CONSTRUCTION AREA SIGNS WILL BE DETERMINED BY THE ENGINEER.
2. FEDERAL MANUAL ON UNIFORM TRAFFIC CONTROL DEVICES (MUTCD) SIGN CODES ARE SHOWN UNLESS DESIGNATED BY (CA), INDICATING CALIFORNIA MUTCD.
3. SEE STAGE CONSTRUCTION AND TRAFFIC HANDLING PLANS FOR ADDITIONAL CONSTRUCTION AREA SIGNS.
4. EXISTING UTILITIES ARE NOT SHOWN ON THESE PLAN SHEETS. THE CONTRACTOR SHALL VERIFY LOCATIONS OF EXISTING UTILITIES AND ADJUST THE FIELD LOCATION OF SIGN POSTS IN CONSULTATION WITH THE ENGINEER.

LEGEND:

XX = CONSTRUCTION AREA SIGN

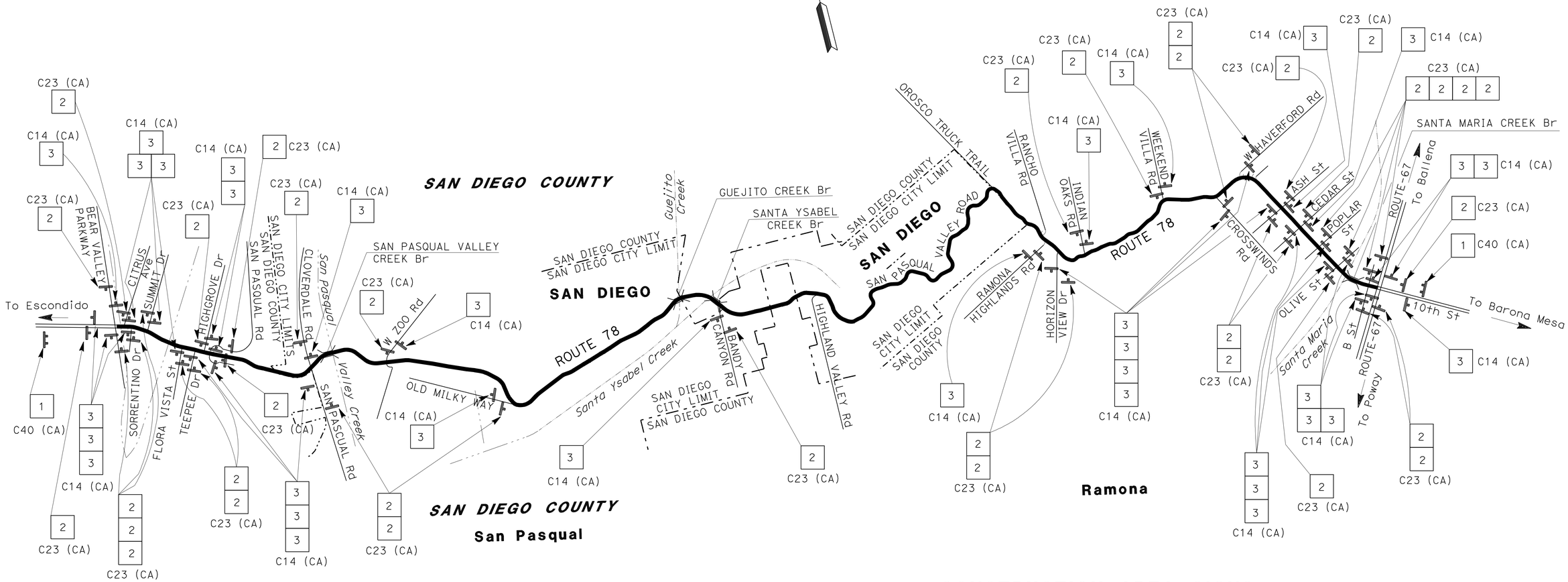

TYPICAL PLACEMENT OF TRAFFIC PLASTIC DRUM

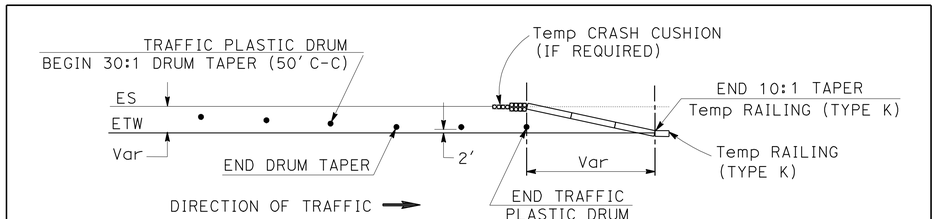

CONSTRUCTION AREA SIGNS

SIGN No.	CODE	PANEL SIZE (In)	No. OF POST AND SIZE (In)	No. OF SIGNS
1	C40 (CA)	108 X 42	2-4 X 6 (S)	2
2	C23 (CA)	48 X 48	1-4 X 6 (S)	39
3	C14 (CA)	48 X 24	1-4 X 4 (S)	39
4	C30A (CA)	30 X 30	1-4 X 6	3
5	W11-1	24 X 24	PORTABLE	5
	W16-1	18 X 24		
			TOTAL	88

(S) DENOTES STATIONARY MOUNTED SIGN

THIS PLAN ACCURATE FOR CONSTRUCTION AREA SIGNS WORK ONLY

CONSTRUCTION AREA SIGNS

NO SCALE

CS-1

REVISED BY | DATE REVISED
THANH NGUYEN | SHAHIN T ADIBI
CALCULATED-DESIGNED BY | CHECKED BY
FUNCTIONAL SUPERVISOR: CAMILLE ABOUFADEL
STATE OF CALIFORNIA - DEPARTMENT OF TRANSPORTATION
Caltrans® TRAFFIC DESIGN

LAST REVISION 07-20-11 | DATE PLOTTED => 18-AUG-2011 | TIME PLOTTED => 09:39

Dist	COUNTY	ROUTE	POST MILES TOTAL PROJECT	SHEET No.	TOTAL SHEETS
11	SD	78	20.6/35.5	24	63

Manuel Reyes 07-08-11
REGISTERED CIVIL ENGINEER DATE

08-15-11
PLANS APPROVAL DATE

REGISTERED PROFESSIONAL ENGINEER MANUEL REYES No. 58621 Exp. 12-31-12 CIVIL STATE OF CALIFORNIA

THE STATE OF CALIFORNIA OR ITS OFFICERS OR AGENTS SHALL NOT BE RESPONSIBLE FOR THE ACCURACY OR COMPLETENESS OF SCANNED COPIES OF THIS PLAN SHEET.

NOTES:

1. EXACT LOCATION OF CONSTRUCTION AREA SIGNS TO BE DETERMINED BY ENGINEER.
2. FEDERAL MUTCD SIGN CODES ARE SHOWN UNLESS DESIGNATED (CA) INDICATING STANDARD SPECIFICATIONS ARE USED.
3. CONTRACTOR WILL VERIFY LOCATIONS OF EXISTING UTILITIES AND AVOID IMPACTING EXISTING UTILITIES BY ADJUSTING LOCATIONS OF POSTS IN FIELD IN CONSULTATION WITH THE ENGINEER.
4. SEE CONSTRUCTION AREA SIGNS AND TRAFFIC HANDLING PLANS FOR ADDITIONAL CONSTRUCTION AREA SIGNS.

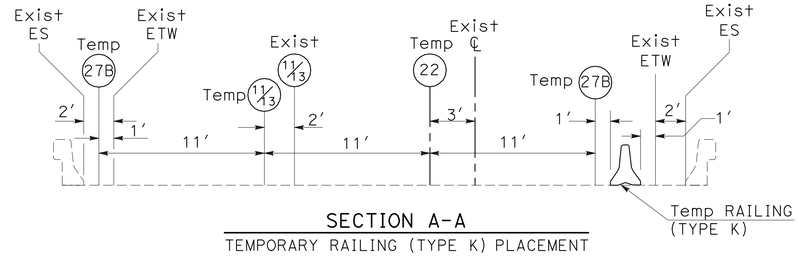

SECTION A-A
TEMPORARY RAILING (TYPE K) PLACEMENT
NO SCALE

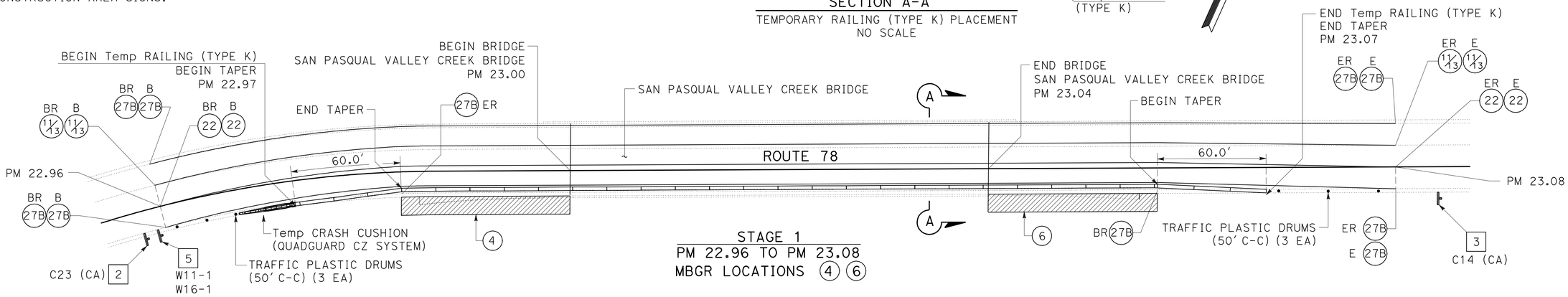

STAGE 1
PM 22.96 TO PM 23.08
MBGR LOCATIONS 4 6

STAGE CONSTRUCTION QUANTITIES

MBGR LOCATION	Temp RAILING (TYPE-K) (LF)	Temp CRASH CUSHION (QUADGUARD CZ SYSTEM) (EA)	TRAFFIC PLASTIC DRUM (EA)	Temp TRAFFIC STRIPE(PAINT) (LF)			Temp PAVEMENT MARKER (EA)			REMOVE PAVEMENT MARKER (N) (EA)	REMOVE PAINTED TRAFFIC STRIPE (LF)
				DETAIL No. 11/13	DETAIL No. 22	DETAIL No. 27B	NON-REFLECTIVE TYPE A	RETROREFLECTIVE TYPE D	RETROREFLECTIVE TYPE G		
4 & 6	540	1	6	634	634	1268	53	55	14	122	2,285
5 & 7	540	1	6	634	634	1268	53	55	14	122	2,285
SUB-TOTALS	1,080	2	12	1,268	1,268	2,536	106	110	28		4,570
TOTALS	1,080**	2**	12**	5,072**			244				4,570*

(N) = NOT A SEPARATE PAY ITEM, FOR INFORMATION ONLY.
* = FOR ADDITIONAL QUANTITIES, SEE PAVEMENT DELINEATION QUANTITIES AND TRAFFIC HANDLING PLANS.
** = FOR ADDITIONAL QUANTITIES, SEE TRAFFIC HANDLING PLANS.

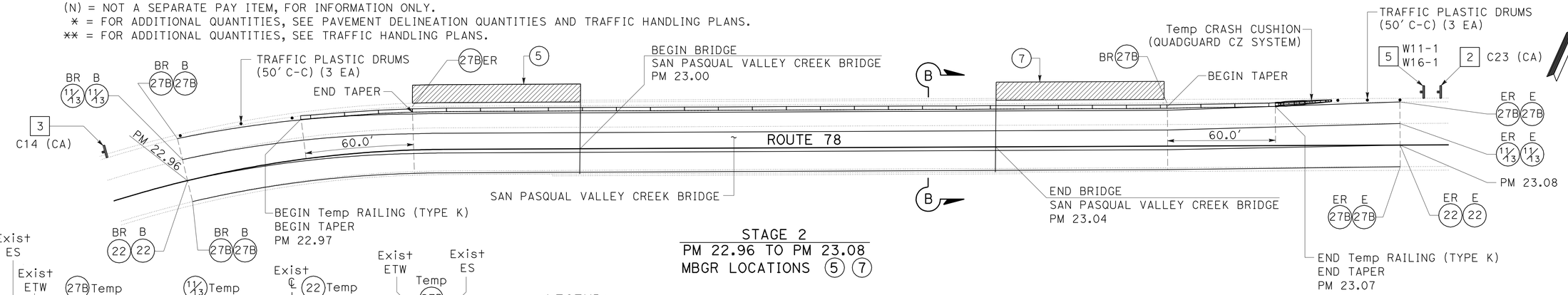

STAGE 2
PM 22.96 TO PM 23.08
MBGR LOCATIONS 5 7

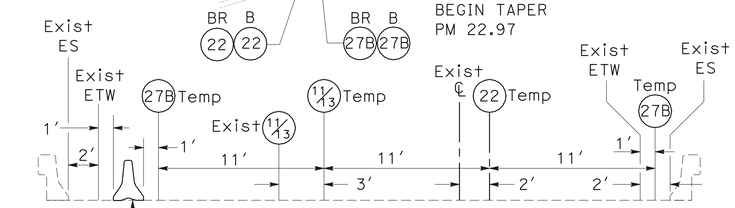

SECTION B-B
TEMPORARY RAILING (TYPE K) PLACEMENT
NO SCALE

THIS PLAN IS ACCURATE FOR STAGE CONSTRUCTION WORK ONLY.

LEGEND:

- WORK AREA
- Temp RAILING (TYPE K)
- TRAFFIC PLASTIC DRUM
- X — CONSTRUCTION AREA SIGN
- X — MBGR LOCATION
- B XX — BEGIN TEMPORARY TRAFFIC STRIPE (PAINT)
- BR XX — BEGIN REMOVE PAVEMENT DELINEATION
- E XX — END TEMPORARY TRAFFIC STRIPE (PAINT)
- ER XX — END REMOVE PAVEMENT DELINEATION

STAGE CONSTRUCTION

SCALE: 1" = 30′

SC-1

STATE OF CALIFORNIA - DEPARTMENT OF TRANSPORTATION
Caltrans PROJECT DEVELOPMENT
TRAFFIC

FUNCTIONAL SUPERVISOR: RICHARD ESTRADA
CALCULATED-DESIGNED BY: VAN D. CALLANTA
CHECKED BY: MANUEL REYES
REVISED BY
DATE REVISED

LAST REVISION 07-20-11
DATE PLOTTED => 18-AUG-2011
TIME PLOTTED => 09:39

Dist	COUNTY	ROUTE	POST MILES TOTAL PROJECT	SHEET No.	TOTAL SHEETS
11	SD	78	20.6/35.5	25	63

Manuel Reyes 07-08-11
REGISTERED CIVIL ENGINEER DATE

08-15-11
PLANS APPROVAL DATE

REGISTERED PROFESSIONAL ENGINEER MANUEL REYES No. 58621 Exp. 12-31-12 CIVIL STATE OF CALIFORNIA

THE STATE OF CALIFORNIA OR ITS OFFICERS OR AGENTS SHALL NOT BE RESPONSIBLE FOR THE ACCURACY OR COMPLETENESS OF SCANNED COPIES OF THIS PLAN SHEET.

NOTES:

1. EXACT LOCATION OF CONSTRUCTION AREA SIGNS TO BE DETERMINED BY ENGINEER.
2. FEDERAL MUTCD SIGN CODES ARE SHOWN UNLESS DESIGNATED (CA) INDICATING STANDARD SPECIFICATIONS ARE USED.
3. CONTRACTOR WILL VERIFY LOCATIONS OF EXISTING UTILITIES AND AVOID IMPACTING EXISTING UTILITIES BY ADJUSTING LOCATIONS OF POSTS IN FIELD IN CONSULTATION WITH THE ENGINEER.
4. SEE CONSTRUCTION AREA SIGNS AND STAGE CONSTRUCTION SHEETS FOR ADDITIONAL CONSTRUCTION AREA SIGNS.

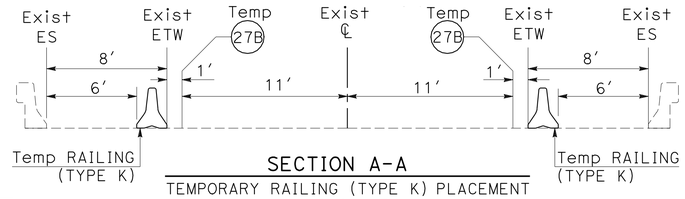

SECTION A-A
TEMPORARY RAILING (TYPE K) PLACEMENT
NO SCALE

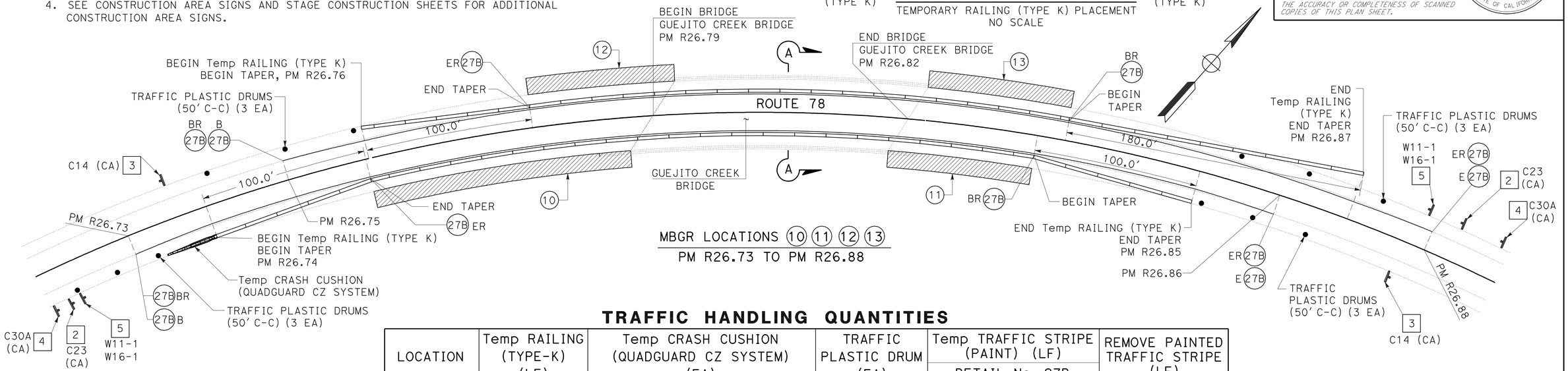

MBGR LOCATIONS 10 11 12 13
PM R26.73 TO PM R26.88

TRAFFIC HANDLING QUANTITIES

LOCATION	Temp RAILING (TYPE-K) (LF)	Temp CRASH CUSHION (QUADGUARD CZ SYSTEM) (EA)	TRAFFIC PLASTIC DRUM (EA)	Temp TRAFFIC STRIPE (PAINT) (LF) DETAIL No. 27B	REMOVE PAINTED TRAFFIC STRIPE (LF)
10 & 11	580	1	6	686	306
12 & 13	580		6	686	386
14 & 15	800		6	900	366
SUB-TOTALS	1,960	1	18	2,272	1,058
TOTALS	1,960**	1**	18**	2,272**	1,058*

* = FOR ADDITIONAL QUANTITIES, SEE PAVEMENT DELINEATION QUANTITIES AND STAGE CONSTRUCTION SHEETS.
** = FOR ADDITIONAL QUANTITIES, SEE STAGE CONSTRUCTION SHEET.

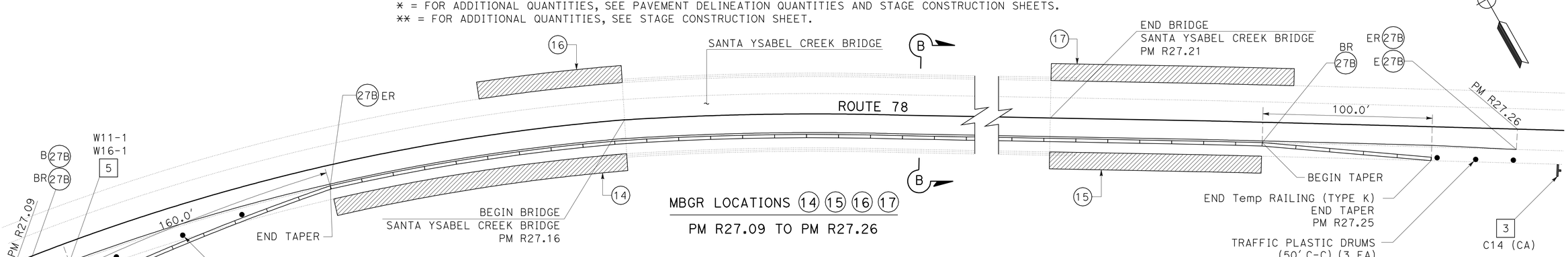

MBGR LOCATIONS 14 15 16 17
PM R27.09 TO PM R27.26

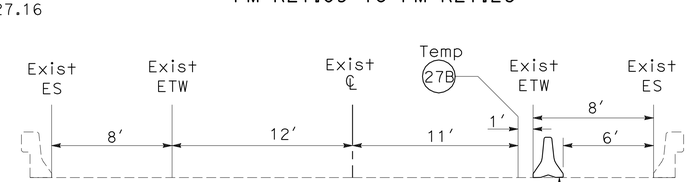

SECTION B-B
TEMPORARY RAILING (TYPE K) PLACEMENT
NO SCALE

THIS PLAN IS ACCURATE FOR TRAFFIC HANDLING WORK ONLY.

TRAFFIC HANDLING PLAN

SCALE: 1" = 30′

TH-1

STATE OF CALIFORNIA - DEPARTMENT OF TRANSPORTATION
Caltrans PROJECT DEVELOPMENT TRAFFIC

FUNCTIONAL SUPERVISOR: RICHARD ESTRADA
CALCULATED-DESIGNED BY: VAN D. CALLANTA
CHECKED BY: MANUEL REYES
REVISED BY
DATE REVISED

LAST REVISION 07-20-11
DATE PLOTTED => 18-AUG-2011
TIME PLOTTED => 09:40

Dist	COUNTY	ROUTE	POST MILES TOTAL PROJECT	SHEET No.	TOTAL SHEETS
11	SD	78	20.6/35.5	26	63

REGISTERED CIVIL ENGINEER 07-11-11 DATE

08-15-11
PLANS APPROVAL DATE

REGISTERED PROFESSIONAL ENGINEER SHAHIN T ADIBI No. 54839 Exp. 06-30-12 CIVIL STATE OF CALIFORNIA

THE STATE OF CALIFORNIA OR ITS OFFICERS OR AGENTS SHALL NOT BE RESPONSIBLE FOR THE ACCURACY OR COMPLETENESS OF SCANNED COPIES OF THIS PLAN SHEET.

NOTES:

1. EXISTING PAVEMENT DELINEATION SHALL BE REMOVED PRIOR TO PLACING GROUND-IN RUMBLE STRIP.
2. 4" THERMOPLASTIC TRAFFIC STRIPE SHALL BE PLACED OVER GROUND-IN RUMBLE STRIP.
3. SEE STANDARD PLAN A40B FOR RUMBLE STRIP (AC GROUND-IN INDENTATION) DIMENSIONS.

DETAIL 27B (6") Mod

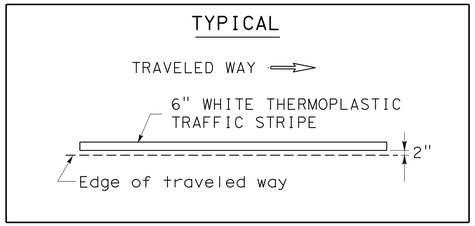

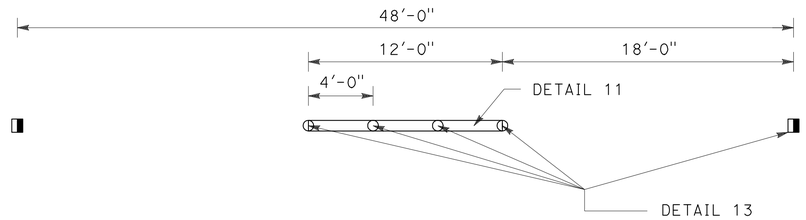

DETAIL 11/13

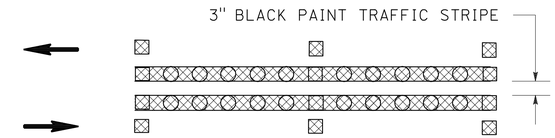

DETAIL 22/23

PM 23.00 TO 23.04; 26.79 TO 26.82
PM 27.16 TO 27.21; 35.27 TO 35.31

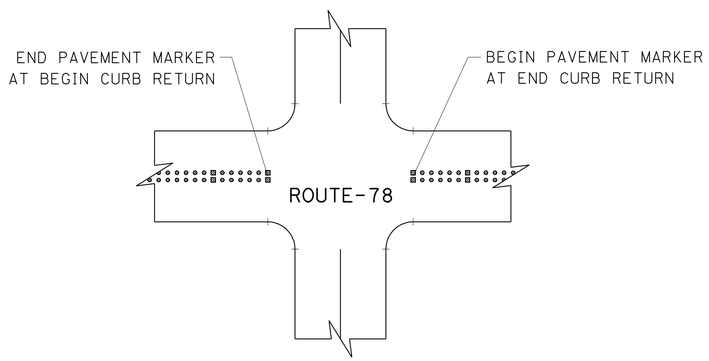

TYPICAL PAVEMENT MARKER PLACEMENT AT INTERSECTIONS

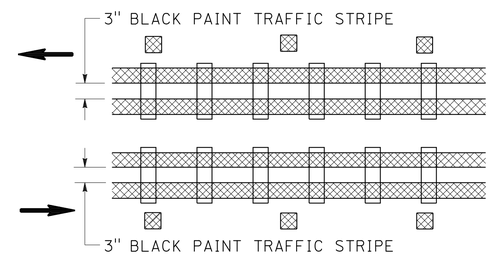

DETAIL 29 (WITH RUMBLE STRIP)

PM 20.60 TO 21.00; 22.41 TO 22.49
PM 22.65 TO 22.72; 24.00 TO 24.44
PM 25.05 TO 25.10; 31.84 TO 31.89
PM 32.99 TO 33.12; 33.70 TO 33.78
PM 33.84 TO 33.93; 34.38 TO 34.45

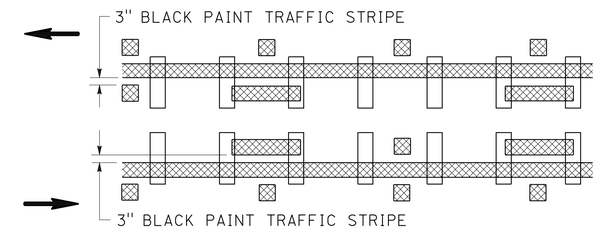

DETAIL 32 (WITH RUMBLE STRIP)

PM 21.58 TO 21.66; 21.68 TO 21.73
PM 24.98 TO 25.05

LEGEND:

- → = DIRECTION OF TRAVEL
- = CENTERLINE RUMBLE STRIP (AC, GROUND-IN INDENTATIONS)
- = PAVEMENT MARKER (TYPE A)
- = PAVEMENT MARKER (TYPE D)
- = PAVEMENT MARKER (TYPE G)
- = PAVEMENT MARKER (TYPE H)
- = PAVEMENT MARKER (TYPE AY)
- = 4" WHITE THERMOPLASTIC TRAFFIC STRIPE
- = 4" YELLOW THERMOPLASTIC TRAFFIC STRIPE

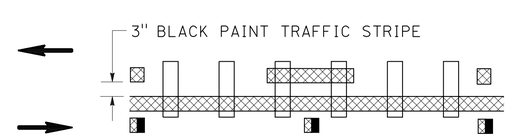

DETAIL 19 (WITH RUMBLE STRIP)

PM 25.90 TO 26.29

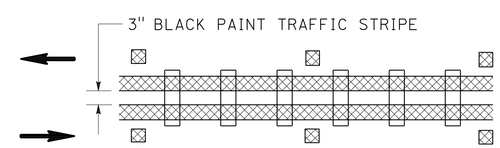

DETAIL 22 (WITH RUMBLE STRIP)

PM 21.00 TO 21.58; 21.66 TO 21.68; 21.73 TO 22.41
PM 22.49 TO 22.65; 22.72 TO 23.00; 23.04 TO 24.00
PM 24.44 TO 24.98; 25.10 TO 25.90; 26.29 TO 26.79
PM 26.82 TO 27.16: 27.21 TO 31.84; 31.89 TO 32.99
PM 33.12 TO 33.70; 33.78 TO 33.84; 33.93 TO 34.38
PM 34.45 TO 35.27; 35.31 TO 35.50

PAVEMENT DELINEATION DETAILS

NO SCALE

PDD-1

STATE OF CALIFORNIA - DEPARTMENT OF TRANSPORTATION
Caltrans® TRAFFIC DESIGN
FUNCTIONAL SUPERVISOR: CAMILLE ABOUFADEL
CALCULATED-DESIGNED BY: THANH NGUYEN
CHECKED BY: SHAHIN T ADIBI
REVISED BY / DATE REVISED

LAST REVISION 08-17-11 | DATE PLOTTED => 18-AUG-2011 | TIME PLOTTED => 09:40

Dist	COUNTY	ROUTE	POST MILES TOTAL PROJECT	SHEET No.	TOTAL SHEETS
11	SD	78	20.6/35.5	27	63

REGISTERED CIVIL ENGINEER 07-11-11 DATE

08-15-11
PLANS APPROVAL DATE

REGISTERED PROFESSIONAL ENGINEER SHAHIN T ADIBI No. 54839 Exp. 06-30-12 CIVIL STATE OF CALIFORNIA

THE STATE OF CALIFORNIA OR ITS OFFICERS OR AGENTS SHALL NOT BE RESPONSIBLE FOR THE ACCURACY OR COMPLETENESS OF SCANNED COPIES OF THIS PLAN SHEET.

NOTE:

1. ALL PAVEMENT DELINEATION TO BE REPLACED IN-KIND UNLESS NOTED OTHERWISE.

PAVEMENT MARKER SUMMARY

ROUTE	LOCATION	DETAIL No.	REMOVE PAVEMENT MARKER (N)	NON-REFLECTIVE		RETROREFLECTIVE		
				TYPE A	TYPE AY	TYPE D	TYPE G	TYPE H
			EA	EA	EA	EA	EA	EA
78	PM 20.6	19	131			44		87
		11/13	67	53			14	
		22	5,612			5,612		
		22/23	84		380	168		
		27B (6" Mod)						
		29	662			662		
	PM 35.5	32	119			119		
SUB-TOTALS				53	380	6,605	14	87
TOTALS				433		6,706		

TRAFFIC STRIPE SUMMARY

REMOVE PAINTED TRAFFIC STRIPE	PAINT (1 COAT)	THERMOPLASTIC			REMARKS
	3" (BLACK)	6"	4"	4" (BROKEN 36-12)	
LF	LF	LF	LF	LF	
2,574	2,059		2,059	2,059	
158				634	
133,878	66,939		133,878		
1,818	909		1,818		
157,344		157,344			EASTBOUND AND WESTBOUND
30,835	15,418		30,835		
2,640	2,112		2,112	2,112	
329,247	87,437	157,344	170,702	4,805	
329,247*	87,437	157,344	170,702	4,805	

(N) = NOT A SEPARATE PAY ITEM, FOR INFORMATION ONLY.

* = FOR ADDITONAL QUANTITIES, SEE STAGE CONSTRUCTION AND TRAFFIC HANDLING PLAN SHEETS.

MILEPOST MARKER

ROUTE	DIRECTION	POSTMILES	Qty (EA)
78	WB	25.5, R26.932BK, 27.581AH, 28.50, 29.0, 29.5, 30.0, 31.5, 32.0	9
	EB	26.0, 26.5, R26.932BK, 27.590AH, 30.0, 30.5, 31.5, 32.5	8
		TOTAL	17

NOTE: THE EXCAVATION REQUIRED FOR THE INSTALLATION OF THE MILEPOST MARKERS SHALL BE DONE BY HAND.

PAVEMENT DELINEATION QUANTITIES

PDQ-1

REVISED BY | DATE REVISED
THANH NGUYEN | SHAHIN T ADIBI
CALCULATED-DESIGNED BY | CHECKED BY
FUNCTIONAL SUPERVISOR | CAMILLE ABOUFADEL

STATE OF CALIFORNIA - DEPARTMENT OF TRANSPORTATION
Caltrans TRAFFIC DESIGN

LAST REVISION 07-20-11 | DATE PLOTTED => 18-AUG-2011 | TIME PLOTTED => 09:40

Dist	COUNTY	ROUTE	POST MILES TOTAL PROJECT	SHEET No.	TOTAL SHEETS
11	SD	78	20.6/35.5	28	63

Manuel Reyes 07-08-11
REGISTERED CIVIL ENGINEER DATE

08-15-11
PLANS APPROVAL DATE

REGISTERED PROFESSIONAL ENGINEER MANUEL REYES No. 58621 Exp. 12-31-12 CIVIL STATE OF CALIFORNIA

THE STATE OF CALIFORNIA OR ITS OFFICERS OR AGENTS SHALL NOT BE RESPONSIBLE FOR THE ACCURACY OR COMPLETENESS OF SCANNED COPIES OF THIS PLAN SHEET.

RUMBLE STRIP

ROUTE	BEGIN POST MILE	END POST MILE	LENGTH (LF) (N)	CENTERLINE RUMBLE STRIP (AC, GROUND-IN INDENTATIONS) (LF) (N)		CENTERLINE RUMBLE STRIP (AC, GROUND-IN INDENTATIONS) (Sta)	ASPHALTIC EMULSION (FOG SEAL COAT) (TON) (N)
				SINGLE	DOUBLE		
78	20.60	21.00	2112		4224	42.24	0.15
	21.00	R21.58	3062	3062		30.62	0.11
	R21.58	R21.66	422		844	8.44	0.03
	R21.66	R21.68	106	106		1.06	0.00
	R21.68	R21.73	264		528	5.28	0.02
	R21.73	R22.41	3590	3590		35.90	0.13
	22.41	22.49	422		844	8.44	0.03
	22.49	22.65	845	845		8.45	0.03
	22.65	22.72	370		740	7.40	0.03
	22.72	23.00	1478	1478		14.78	0.05
	23.00	23.04	232	SAN PASQUAL CREEK BRIDGE			
	23.04	24.00	5069	5069		50.69	0.18
	24.00	24.44	2323		4646	46.46	0.16
	24.44	24.98	2851	2851		28.51	0.10
	24.98	25.05	370		740	7.40	0.03
	25.05	25.10	264		528	5.28	0.02
	25.10	25.90	4224	4224		42.24	0.15
	25.90	26.29	2059	2059		20.59	0.07
	26.29	26.79	2640	2640		26.40	0.09
	R26.79	R26.82	156	GUEJITO CREEK BRIDGE			
	R26.82	R27.16	1795	1795		17.95	0.06
	R27.16	R27.21	280	SANTA YSABEL CREEK BRIDGE			
	R27.21	31.84	24446	24446		244.46	0.86
	31.84	31.89	264		528	5.28	0.02
	31.89	32.99	5808	5808		58.08	0.20
	32.99	33.12	686		1372	13.72	0.05
	33.12	33.70	3062	3062		30.62	0.11
	33.70	33.78	422		844	8.44	0.03
	33.78	33.84	317	317		3.17	0.01
	33.84	33.93	475		950	9.50	0.03
	33.93	34.38	2376	2376		23.76	0.08
	34.38	34.45	370		740	7.40	0.03
	34.45	35.27	4330	4330		43.30	0.15
	35.27	35.31	241	SANTA MARIA CREEK BRIDGE			
	35.31	35.50	1003	1003		10.03	0.04
					TOTALS	865.91	

(N) = NOT A SEPARATE PAY ITEM, FOR INFORMATION ONLY.

SUMMARY OF QUANTITIES
Q-1

STATE OF CALIFORNIA - DEPARTMENT OF TRANSPORTATION
Caltrans PROJECT DEVELOPMENT
TRAFFIC

FUNCTIONAL SUPERVISOR: RICHARD ESTRADA
CALCULATED-DESIGNED BY: VAN D. CALLANTA
CHECKED BY: MANUEL REYES
REVISED BY
DATE REVISED

LAST REVISION 07-20-11
DATE PLOTTED => 18-AUG-2011
TIME PLOTTED => 09:40

Dist	COUNTY	ROUTE	POST MILES TOTAL PROJECT	SHEET No.	TOTAL SHEETS
11	SD	78	20.6/35.5	29	63

Manuel Reyes 07-08-11
REGISTERED CIVIL ENGINEER DATE

08-15-11
PLANS APPROVAL DATE

REGISTERED PROFESSIONAL ENGINEER
MANUEL REYES
No. 58621
Exp. 12-31-12
CIVIL
STATE OF CALIFORNIA

THE STATE OF CALIFORNIA OR ITS OFFICERS OR AGENTS SHALL NOT BE RESPONSIBLE FOR THE ACCURACY OR COMPLETENESS OF SCANNED COPIES OF THIS PLAN SHEET.

METAL BEAM GUARD RAILING

ROUTE	LOCATION	Beg POST MILE	END POST MILE	DIRECTION	LAYOUT TYPE (N)	REMOVE MBGR	MBGR (STEEL POST)	TERMINAL SYSTEM (TYPE X-TENSION)		END ANCHOR ASSEMBLY (TYPE SFT)	END CAP		TRANSITION RAILING (TYPE WB)	REMOVE TERMINAL SYSTEM (N)		REMOVE CABLE ANCHOR ASSEMBLY (N)	BURIED POST END ANCHOR (N)	GUARD RAILING DELINEATOR	REMARKS
								IN-LINE	FLARED		(TYPE TC)	(TYPE A)		TYPE ET	TYPE SRT			(TYPE F)	
						LF	LF	EA	EA	EA	EA	EA	EA	EA	EA	EA	EA	EA	
78	1	R21.32	R21.36	WB	16E	126.00	112.50		2						2	2		2	
	2	R21.84	R21.97	WB	11C	650.00	662.50			1				1		1	1	7	
	3	R21.93	R21.97	EB	11B	160.00	137.50		1	1				1	1	2		2	
	4	22.98	22.99	EB	12B	62.50			1		1		1		1	1			
	5	22.98	23.00	WB	12DD	64.00	62.50			1		1			1	1			
	6	23.05	23.06	EB	12BB	62.50			1		1		1		1	1			
	7	23.05	23.06	WB	12B	64.00			1		1		1		1	1			
	8	24.89	24.95	EB	11D	200.00	212.50	2						1	1	2		3	
	9	24.94	25.02	EB	11J	420.00	337.50	1	1						2	2		4	
	10	R26.77	R26.78	EB	12B	64.00			1		1		1		1	1			
	11	R26.82	R26.84	EB	12BB	64.00			1		1		1		1	1			
	12	R26.78	R26.79	WB	12DD	64.00	62.50			1		1			1	1			
	13	R26.83	R26.84	WB	12B	62.50			1		1		1		1	1			
	14	R27.13	R27.16	EB	12B	100.00	87.50		1		1		1		1	1		2	
	15	R27.22	R27.24	EB	12BB	100.00	37.50		1		1		1		1	1		1	
	16	R27.15	R27.16	WB	12BB	62.50			1		1		1		1	1			
	17	R27.22	R27.25	WB	12B	62.50	75.00		1		1		1		1	1			
	18	28.39	28.41	WB	16H	100.00	25.00	1	1						2	2		1	
	19	28.47	28.49	WB	16E	125.00									2	2			
	20	29.84	29.85	WB	11E	43.50	25.00		1						1	1		1	
	21	29.90	29.98	WB	11E	77.50	37.50		2						2	2		1	
	22	30.07	30.08	WB	11E	75.00			2						2	2			
	23	30.03	30.08	EB	11L	150.00	212.50		1						1	1	1	3	
	24	32.82	32.90	WB	11H	250.00	337.50	1	1						2	2		4	
	25	33.03	33.06	EB	11H	127.00	50.00	1	1						2	2		1	
	26	33.12	33.15	WB	11D	137.00	62.50	2							2	2		1	
	27	33.36	33.39	EB	11H	38.00	75.00	1	1					1	1	2		1	
	28	35.25	35.26	EB	12B	62.50			1		1		1		1	1			
	29	35.31	35.33	EB	12DD	62.50	62.50			1		1			1	1			
	30	35.25	35.26	WB	12DD	64.00	62.50			1		1			1	1			
	31	35.31	35.33	WB	12B	64.00			1		1		1		1	1			
SUB-TOTALS						3764.50	2737.50	9	26	6	12	4	12					34	
TOTALS						3764.50	2737.50	35		6	16		12					34	

(N) = NOT A SEPARATE PAY ITEM, FOR INFORMATION ONLY.

SUMMARY OF QUANTITIES
Q-2

STATE OF CALIFORNIA - DEPARTMENT OF TRANSPORTATION
Caltrans PROJECT DEVELOPMENT
TRAFFIC

FUNCTIONAL SUPERVISOR: RICHARD ESTRADA
CALCULATED-DESIGNED BY: VAN D. CALLANTA
CHECKED BY: MANUEL REYES
REVISED BY
DATE REVISED

LAST REVISION 07-21-11
DATE PLOTTED => 18-AUG-2011
TIME PLOTTED => 09:40

Dist	COUNTY	ROUTE	POST MILES TOTAL PROJECT	SHEET No.	TOTAL SHEETS
11	SD	78	20.6/35.5	30	63

Manuel Reyes 07-08-11
REGISTERED CIVIL ENGINEER DATE

08-15-11
PLANS APPROVAL DATE

REGISTERED PROFESSIONAL ENGINEER MANUEL REYES No. 58621 Exp. 12-31-12 CIVIL STATE OF CALIFORNIA

THE STATE OF CALIFORNIA OR ITS OFFICERS OR AGENTS SHALL NOT BE RESPONSIBLE FOR THE ACCURACY OR COMPLETENESS OF SCANNED COPIES OF THIS PLAN SHEET.

MINOR CONCRETE

ROUTE	LOCATION	Beg POST MILE	END POST MILE	DIRECTION	ANCHOR BLOCK (Mod) MINOR CONCRETE (MINOR STRUCTURE) (CY)	VEGETATION CONTROL (MINOR CONCRETE) (SQYD)
78	2	R21.84	R21.97	WB		127.51
	3	R21.93	R21.97	EB		45.49
	4	22.98	22.99	EB	1.67	21.25
	5	22.98	23.00	WB		14.85
	6	23.05	23.06	EB		21.25
	7	23.05	23.06	WB	1.67	21.25
	8	24.89	24.95	EB		59.90
	9	24.94	25.02	EB		83.53
	10	R26.77	R26.78	EB	1.74	21.25
	11	R26.82	R26.84	EB		21.25
	12	R26.78	R26.79	WB		14.85
	13	R26.83	R26.84	WB	1.74	38.14
	14	R27.13	R27.16	EB	1.67	37.68
	15	R27.22	R27.24	EB	1.74	28.29
	16	R27.15	R27.16	WB		38.14
	17	R27.22	R27.25	WB		52.22
	24	32.82	32.90	WB		89.93
	25	33.03	33.06	EB		35.94
	26	33.12	33.15	WB		31.74
	27	33.36	33.39	EB		40.64
	28	35.25	35.26	EB		38.14
	29	35.31	35.33	EB		32.85
	30	35.25	35.26	WB		14.85
	31	35.31	35.33	WB		21.25
				TOTALS	10.23*	952.17

NOTE:

* = FOR ADDITIONAL QUANTITIES, SEE DRAINAGE QUANTITIES.

ASPHALT CONCRETE

ROUTE	LOCATION	Beg POST MILE	END POST MILE	DIRECTION	REMOVE AC DIKE TYPE A (LF)	REMOVE AC DIKE TYPE C (LF)	REMOVE AC DIKE TYPE E (LF)	REMOVE AC DIKE TYPE F (LF)	PLACE HOT MIX ASPHALT DIKE TYPE C (LF)	PLACE HOT MIX ASPHALT DIKE TYPE E (LF)	PLACE HOT MIX ASPHALT DIKE TYPE F (LF)	MINOR HOT MIX ASPHALT HMA DIKE (TON)	MINOR HOT MIX ASPHALT UNDER HMA DIKE (TYPE E) (TON)
78	1	R21.32	R21.36	WB			123.16	126.00	136.66		112.50	2.52	
	2	R21.84	R21.97	WB			43.75	650.00	31.25		662.50	8.98	
	3	R21.93	R21.97	EB		160.00	77.08		99.58		137.50	2.57	
	4	22.98	22.99	EB	93.33				68.33		25.00	0.85	
	6	23.05	23.06	EB			93.33		68.33		25.00	0.85	
	7	23.05	23.06	WB			93.33		68.33		25.00	0.85	
	10	R26.77	R26.78	EB	494.78		29.33	64.00	68.33	494.78	25.00	13.71	1.24
	11	R26.82	R26.84	EB	64.00		29.33		68.33		25.00	0.85	
	14	R27.13	R27.16	EB	100.00		80.83		68.33		112.50	2.00	
	15	R27.22	R27.24	EB	100.00		30.83		68.33		62.50	1.34	
	20	29.84	29.85	WB	43.50		49.83		68.33		25.00	0.85	
	21	29.90	29.98	WB			96.66	77.50	136.66		37.50	1.53	
	22	30.07	30.08	WB			61.66	75.00	136.66			1.04	
	24	32.82	32.90	WB	474.16				136.66		337.50	5.49	
	30	35.25	35.26	WB				93.75	31.25		62.50	1.06	
	31	35.31	35.33	WB		93.33			68.33		25.00	0.85	
				SUB-TOTALS	1369.77	253.33	809.12	1086.25	1323.69	494.78	1700.00	45.34	1.24
				TOTALS	3518.47				3518.47			46.58	

SUMMARY OF QUANTITIES
Q-3

STATE OF CALIFORNIA - DEPARTMENT OF TRANSPORTATION
Caltrans TRAFFIC PROJECT DEVELOPMENT

VAN D. CALLANTA — CALCULATED-DESIGNED BY
MANUEL REYES — CHECKED BY
RICHARD ESTRADA — FUNCTIONAL SUPERVISOR
REVISED BY — DATE REVISED

LAST REVISION 07-20-11 | DATE PLOTTED => 18-AUG-2011 | TIME PLOTTED => 09:40

DIST	COUNTY	ROUTE	POST MILES TOTAL PROJECT	SHEET NO.	TOTAL SHEETS
11	SD	78	20.6/35.5	31	63

REGISTERED CIVIL ENGINEER

November 17, 2006
PLANS APPROVAL DATE

REGISTERED PROFESSIONAL ENGINEER Dallas Forester No. C37765 Exp. 12-31-06 CIVIL STATE OF CALIFORNIA

The State of California or its officers or agents shall not be responsible for the accuracy or completeness of electronic copies of this plan sheet.

To accompany plans dated 08-15-11

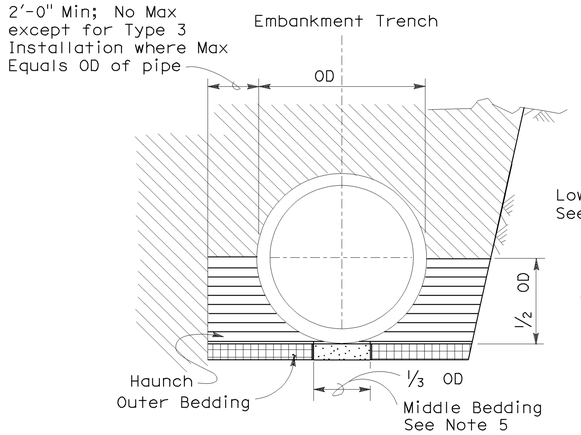

BACKFILL

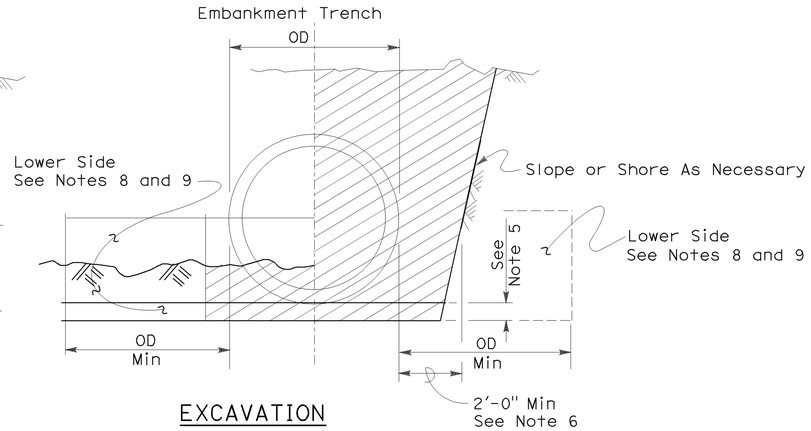

EXCAVATION

Roadway Embankment

Structure Backfill (Culvert) See Note 6

Structure Backfill (Culvert) See Note 6

Loose Backfill

Excavation Structure (Culvert)

TYPE 1 INSTALLATION:

The haunch and outer bedding shall be compacted to a minimum 90 percent relative compaction. In addition, the minimum sand equivalent in these areas shall be 30 and the maximum percentage passing the 75 μm sieve size shall be 12.

TYPE 2 INSTALLATION:

The haunch and outer bedding shall be compacted to a minimum 90 percent relative compaction. In addition, the minimum sand equivalent in these areas shall be 25.

TYPE 3 INSTALLATION:

The haunch and outer bedding shall be compacted to a minimum 85 percent relative compaction. 90 percent relative compaction will be required where the fill over the pipe is less than 4'-0" or 1/2 OD.

NOTES:

1. Unless otherwise shown on the plans or specified in the special provision, the Contractor shall have the option of selecting the class of RCP and the type of installation to be used, provided the height of cover does not exceed the value shown for the RCP selected.
   Example: 24" RCP culvert with maximum cover of 19'-0" the options are:
   a) Class II or stronger with Installation Type 1.
   b) Class III Special or stronger with Installation Type 2.
   c) Class IV Special or stronger with Installation Type 3.
   Cover is defined as the maximum vertical distance from top of the pipe to finished grade within the length of any given culvert.
2. The class of RCP and Installation Type selected shall be the same throughout the length of any given culvert.
3. The "length of any culvert" is defined as the culvert between:
   a) Successive drainage structure (inlets, junction boxes, headwalls, etc.).
   b) A drainage structure and the inlet or outlet end of the culvert.
   c) The inlet and outlet end of the culvert when there are no intervening drainage structures.
4. Oval and arch shaped RCP shall not be used.
5. 1/25 OD Min, not less than 3".
6. Slurry cement backfill may be substituted for backfill in the outer bedding and haunch areas. If slurry is used the outer and middle beddings shall be omitted. Prior to installation the soil under the middle 1/3 of the outside diameter of the pipe shall be softened by scarifying or other means to a minimum depth of 1/25 OD, but not less than 3". Where slurry cement backfill is used clear distance to trench wall may be reduced as set forth in Section 19-3.062 of the Standard Specifications.
7. Backfill shall be placed full width of excavation except where dimensions are shown for backfill width or thickness. Dimensions shown are minimums.
8. Lower side shall be suitable material as determined by the Engineer. Otherwise it shall be considered unsuitable as set forth in Section 19-2.02 of the Standard Specifications. See Note 9.
9. Where the pipe is placed in a trench, if the trench walls are sloped at 5 vertical to 1 horizontal or steeper for at least 90 percent of the trench height or up to not less than 12" from the grading plane, the firmness of the soil in the lower side need not be considered.
10. Non-reinforced precast concrete pipe sizes 3'-0" or smaller may be placed under installation Types 1, 2 or 3.

INSTALLATION TYPE 1

MINIMUM CLASS AND D-LOAD	COVER	
	108" Dia AND SMALLER	OVER 108" Dia
Class II 1000D	14.9'	12.9'
Class III 1350D	15.0' - 20.9'	13.0' - 18.9'
Class III Special 1700D	21.0' - 26.9'	19.0' - 24.9'
Class IV 2000D	27.0' - 31.9'	25.0' - 29.9'
Class IV Special 2500D	32.0' - 40.9'	30.0' - 38.9'
Class V 3000D	41.0' - 49.9'	39.0' - 46.9'
Class V Special 3600D	50.0' - 59.0'	47.0' - 58.0'

INSTALLATION TYPE 2

MINIMUM CLASS AND D-LOAD	COVER
Class II 1000D	9.9'
Class III 1350D	10.0'- 14.9'
Class III Special 1700D	15.0' - 19.9'
Class IV 2000D	20.0' - 24.9'
Class IV Special 2500D	25.0' - 31.9'
Class V 3000D	32.0' - 38.9'
Class V Special 3600D	39.0' - 47.0'

INSTALLATION TYPE 3

MINIMUM CLASS AND D-LOAD	COVER	
	48" Dia AND SMALLER	OVER 48" Dia
Class II 1000D	7.9'	5.9'
Class III 1350D	8.0' - 10.9'	6.0' - 8.9'
Class III Special 1700D	11.0' - 14.9'	9.0' - 12.9'
Class IV 2000D	15.0' - 17.9'	13.0' - 15.9'
Class IV Special 2500D	18.0' - 21.9'	16.0' - 19.9'
Class V 3000D	22.0' - 26.9'	20.0' - 24.9'
Class V Special 3600D	30.0' - 33.0'	25.0' - 31.0'

STATE OF CALIFORNIA
DEPARTMENT OF TRANSPORTATION

EXCAVATION AND BACKFILL CONCRETE PIPE CULVERTS

NO SCALE

RSP A62DA DATED NOVEMBER 17, 2006 SUPERSEDES STANDARD PLAN A62DA DATED MAY 1, 2006 - PAGE 20 OF THE STANDARD PLANS BOOK DATED MAY 2006.

REVISED STANDARD PLAN RSP A62DA

2006 REVISED STANDARD PLAN RSP A62DA

10-26-06

Dist	COUNTY	ROUTE	POST MILES TOTAL PROJECT	SHEET No.	TOTAL SHEETS
11	SD	78	20.6/35.5	32	63

Randell D. Hiatt
REGISTERED CIVIL ENGINEER

May 20, 2011
PLANS APPROVAL DATE

REGISTERED PROFESSIONAL ENGINEER Randell D. Hiatt No. C50200 Exp. 6-30-11 CIVIL STATE OF CALIFORNIA

The State of California or its officers or agents shall not be responsible for the accuracy or completeness of electronic copies of this plan sheet.

To accompany plans dated 08-15-11

2006 REVISED STANDARD PLAN RSP A77A2

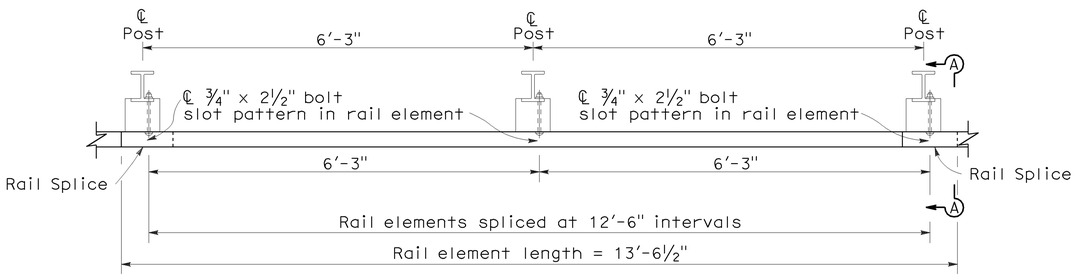

PLAN

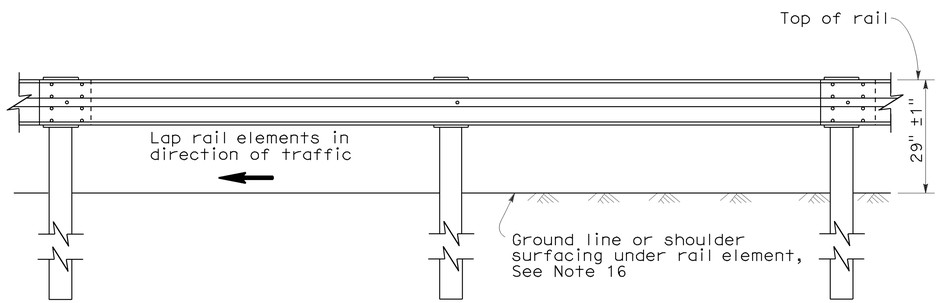

ELEVATION

METAL BEAM GUARD RAILING WITH STEEL POSTS AND NOTCHED WOOD OR NOTCHED RECYCLED PLASTIC BLOCKS

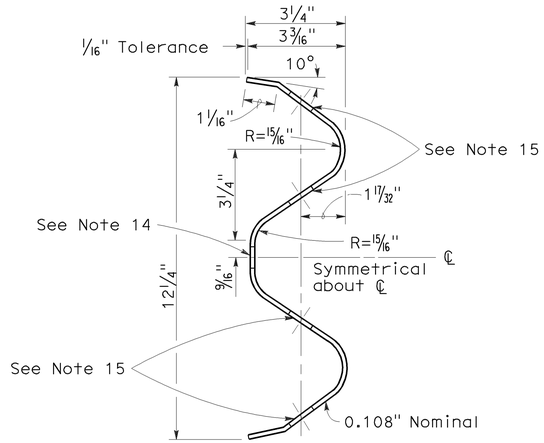

SECTION THRU RAIL ELEMENT

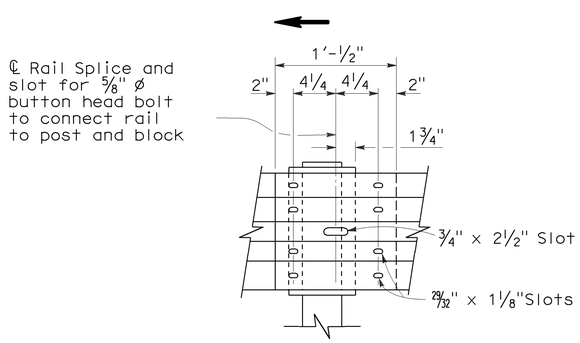

ELEVATION

RAIL ELEMENT SPLICE DETAIL

a) Connect the over lapped end of the rail elements with ⅝" ø x 1⅜" button head oval shoulder splice bolts inserted into the 29⁄₃₂" x 1⅛" slots and bolted together with ⅝" ø recessed hex nuts. Recess of hex nut points toward rail element. A total of 8 bolts and nuts are to be used at each rail splice connection.

b) The ends of the rail elements are to be overlapped in the direction of traffic (see details).

c) Where end cap is to be attached to the end of a rail element, a total of 4 of the above described splice bolts and nuts are to be used.

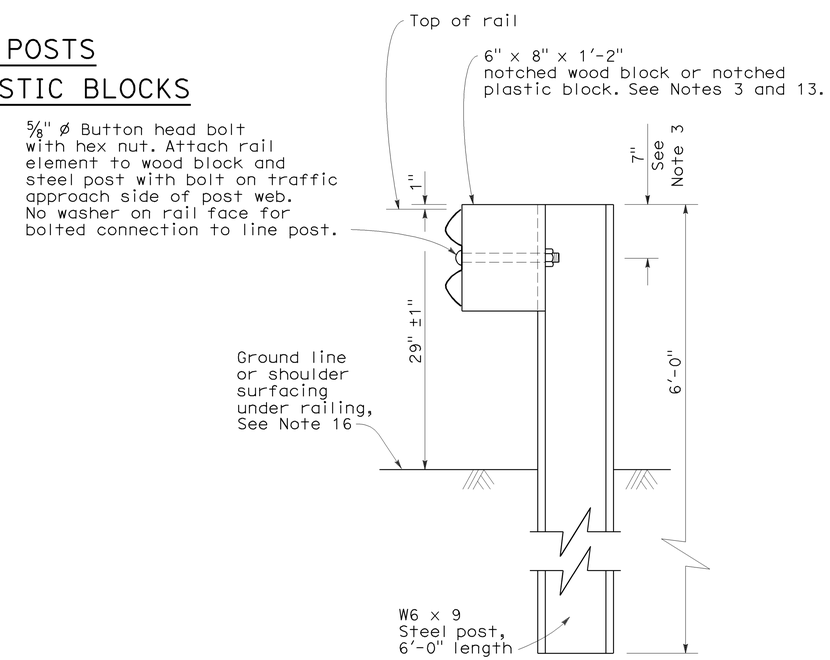

SECTION A-A

TYPICAL STEEL LINE POST INSTALLATION

See Note 4

NOTES:

1. For details of wood post installations, see Standard Plan A77A1.
2. For details of standard hardware used to construct guard railing, see Standard Plan A77B1.
3. For details of steel posts and notched wood blocks used to construct guard railing, see Standard Plan A77C2.
4. For additional installation details, see Standard Plan A77C3.
5. Guard railing post spacing to be 6'-3" center to center, except as otherwise noted.
6. For guard railing typical layouts, see the A77E, A77F and A77G Series of Standard Plans.
7. For terminal system end treatment details, see the A77L Series of Standard Plans. To connect railing to terminal system end treatment, transition the top of railing height at a ratio of 120:1 to terminal system end treatment height plus one 12'-6" standard railing section at the transitioned height for a horizontal connection to the end treatment.
8. For guard railing end anchor details, see Standard Plans A77H1 and A77I2.
9. For details of guard railing transition to bridge railing, see Standard Plan A77J4.
10. For additional details of guard railing connection to bridge railings, see Standard Plans A77J1, A77J2 and A77K1.
11. For dike positioning and guard railing delineation details, see Standard Plan A77C4.
12. Direction of adjacent traffic indicated by → .
13. Notched face of block faces steel post.
14. Slotted hole for bolted connection of rail element to block and post. See "Section Thru Rail Element".
15. Slotted holes for splice bolts to overlap ends of rail element. See "Section Thru Rail Element".
16. Install posts in soil.

STATE OF CALIFORNIA
DEPARTMENT OF TRANSPORTATION

METAL BEAM GUARD RAILING STANDARD RAILING SECTION (STEEL POST WITH NOTCHED WOOD OR NOTCHED RECYCLED PLASTIC BLOCK)

NO SCALE

RSP A77A2 DATED MAY 20, 2011 SUPERSEDES STANDARD PLAN A77A2 DATED MAY 1, 2006 - PAGE 42 OF THE STANDARD PLANS BOOK DATED MAY 2006.

REVISED STANDARD PLAN RSP A77A2

5-4-11

To accompany plans dated 08-15-11

Dist	COUNTY	ROUTE	POST MILES TOTAL PROJECT	SHEET No.	TOTAL SHEETS
11	SD	78	20.6/35.5	33	63

Randell D. Hiatt
REGISTERED CIVIL ENGINEER

May 20, 2011
PLANS APPROVAL DATE

REGISTERED PROFESSIONAL ENGINEER
Randell D. Hiatt
No. C50200
Exp. 6-30-11
CIVIL
STATE OF CALIFORNIA

The State of California or its officers or agents shall not be responsible for the accuracy or completeness of electronic copies of this plan sheet.

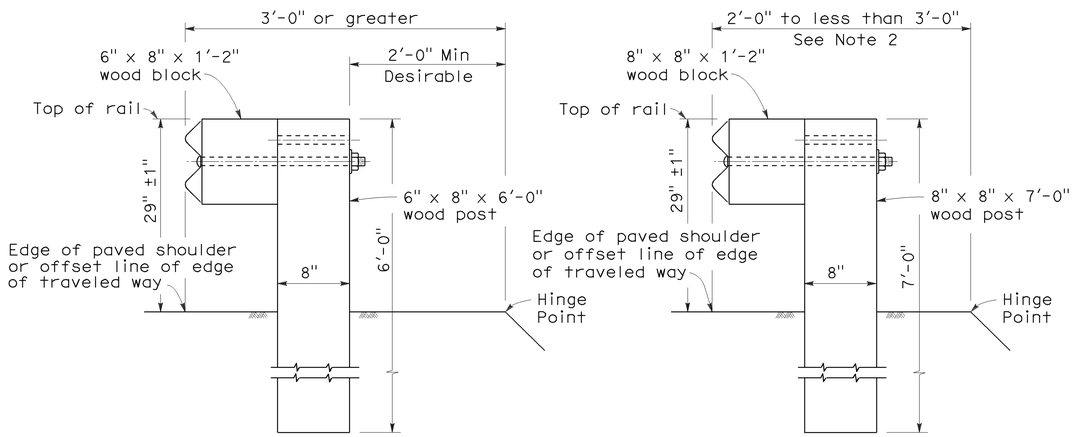

DETAIL A
TYPICAL ROADWAY INSTALLATION
See Note 1

DETAIL B
NARROW ROADWAY INSTALLATION
See Note 1

POST EMBEDMENT

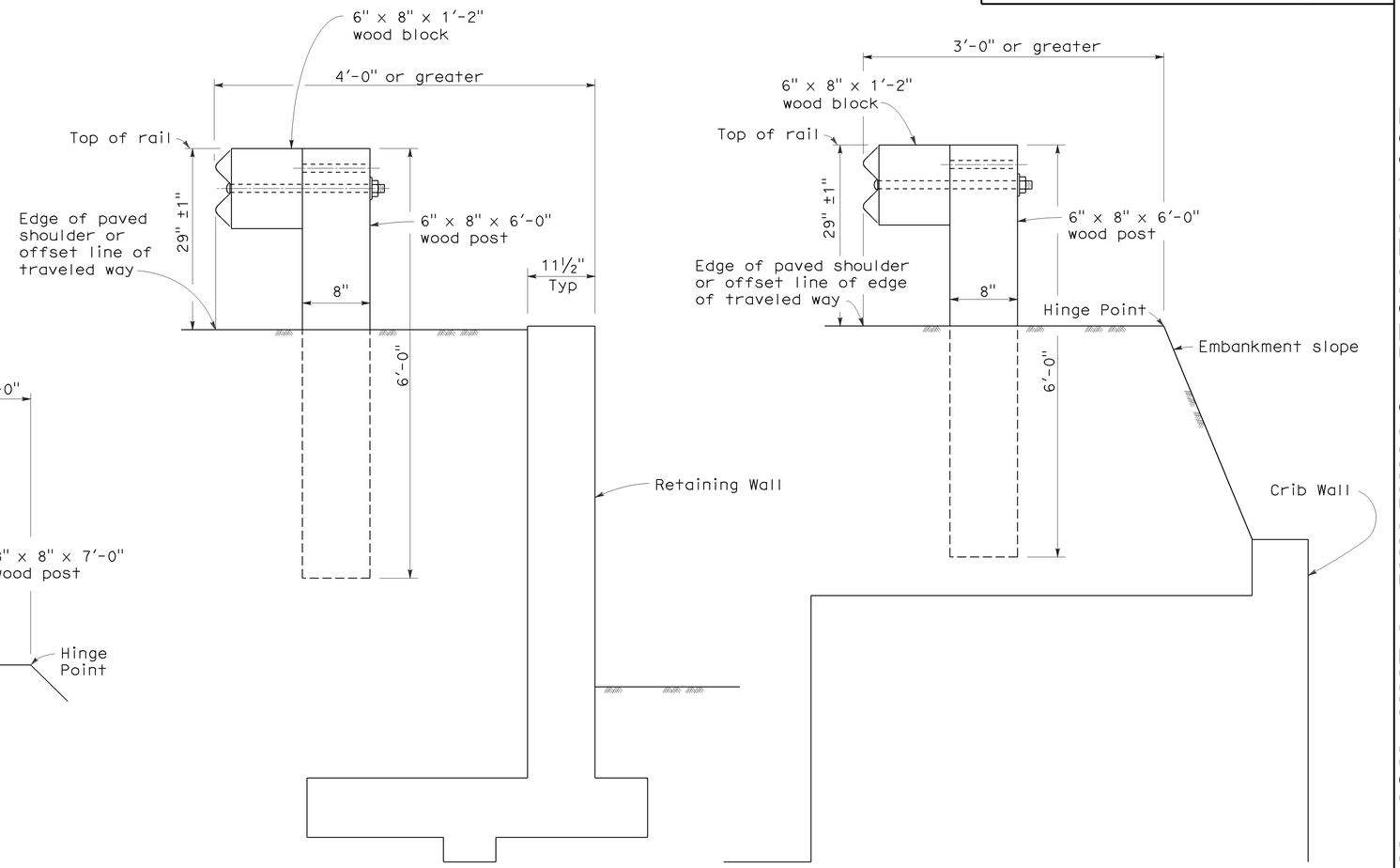

DETAIL C

DETAIL D

INSTALLATION AT EARTH RETAINING WALLS

NOTES:

1. These installation details also applicable to steel line post installations. For Detail A, C, and D, where steel line post installations are constructed, W6 x 9 steel post, 6'-0" in length, with 6" x 8" x 1'-2" notched wood blocks or notched recycled plastic blocks are to be used in place of the size of wood post and wood block shown. For Detail B, where steel line post installations are constructed, W6 x 9 steel post, 7'-0" in length, with 6" x 8" x 1'-2" notched wood blocks or notched recycled plastic blocks are to be used in place of the size of wood post and wood block shown. For additional installation details, see Standard Plans A77A1 and A77A2.
2. Where the distance between the face of the rail and the hinge point is less than 2'-0", see the Project Plans for special details.
3. For dike positioning with guard railing installations, see Standard Plan A77C4.

STATE OF CALIFORNIA
DEPARTMENT OF TRANSPORTATION

METAL BEAM GUARD RAILING TYPICAL LINE POST EMBEDMENT AND HINGE POINT OFFSET DETAILS

NO SCALE

RSP A77C3 DATED MAY 20, 2011 SUPERSEDES STANDARD PLAN A77C3
DATED MAY 1, 2006 - PAGE 46 OF THE STANDARD PLANS BOOK DATED MAY 2006.

REVISED STANDARD PLAN RSP A77C3

2006 REVISED STANDARD PLAN RSP A77C3

3-10-11

Dist	COUNTY	ROUTE	POST MILES TOTAL PROJECT	SHEET No.	TOTAL SHEETS
11	SD	78	20.6/35.5	34	63

Randell D. Hiatt
REGISTERED CIVIL ENGINEER

May 20, 2011
PLANS APPROVAL DATE

REGISTERED PROFESSIONAL ENGINEER
Randell D. Hiatt
No. C50200
Exp. 6-30-11
CIVIL
STATE OF CALIFORNIA

The State of California or its officers or agents shall not be responsible for the accuracy or completeness of electronic copies of this plan sheet.

To accompany plans dated 08-15-11

NOTES:

1. When necessary to place dike in front of face of guard railing, only Type C dike may be used. For dike details, see Standard Plan A87B.
2. For standard railing post embedment, see Standard Plans A77C3.
3. Guard railing delineation to be used where shown on the Project Plans.
4. When dike or curb is placed under guard railing, the maximum height of the dike or curb shall be 4". Mountable dike should not be used. For dike and curb details, see Standard Plans A87A and A87B.
5. For details of typical distance between the face of rail and hinge point, see Standard Plan A77C3.
6. For steel line posts, use 1/4 - 20 self-tapping screws in 0.22" diameter holes or 1/4" bolts in 9/32" diameter holes.

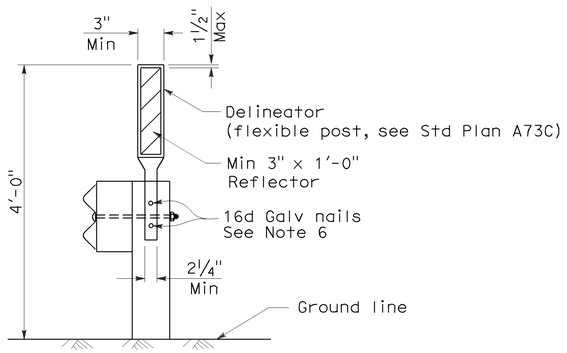

GUARD RAILING DELINEATION

See Note 3

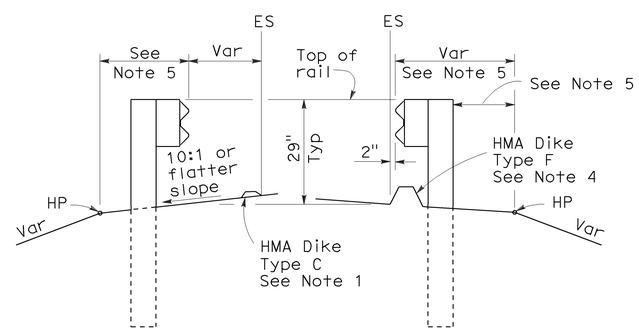

DIKE POSITIONING

See Note 1

STATE OF CALIFORNIA
DEPARTMENT OF TRANSPORTATION

METAL BEAM GUARD RAILING TYPICAL RAILING DELINEATION AND DIKE POSITIONING DETAILS

NO SCALE

RSP A77C4 DATED MAY 20, 2011 SUPERSEDES RSP A77C4 DATED JUNE 6, 2008 AND STANDARD PLAN A77C4 DATED MAY 1, 2006 - PAGE 47 OF THE STANDARD PLANS BOOK DATED MAY 2006.

REVISED STANDARD PLAN RSP A77C4

2006 REVISED STANDARD PLAN RSP A77C4

3-10-11

DIST	COUNTY	ROUTE	POST MILES TOTAL PROJECT	SHEET NO.	TOTAL SHEETS
11	SD	78	20.6/35.5	35	63

Randell D. Hiatt
REGISTERED CIVIL ENGINEER

October 20, 2006
PLANS APPROVAL DATE

REGISTERED PROFESSIONAL ENGINEER
Randell D. Hiatt
No. C50200
Exp. 6-30-07
CIVIL
STATE OF CALIFORNIA

The State of California or its officers or agents shall not be responsible for the accuracy or completeness of electronic copies of this plan sheet.

To accompany plans dated 08-15-11

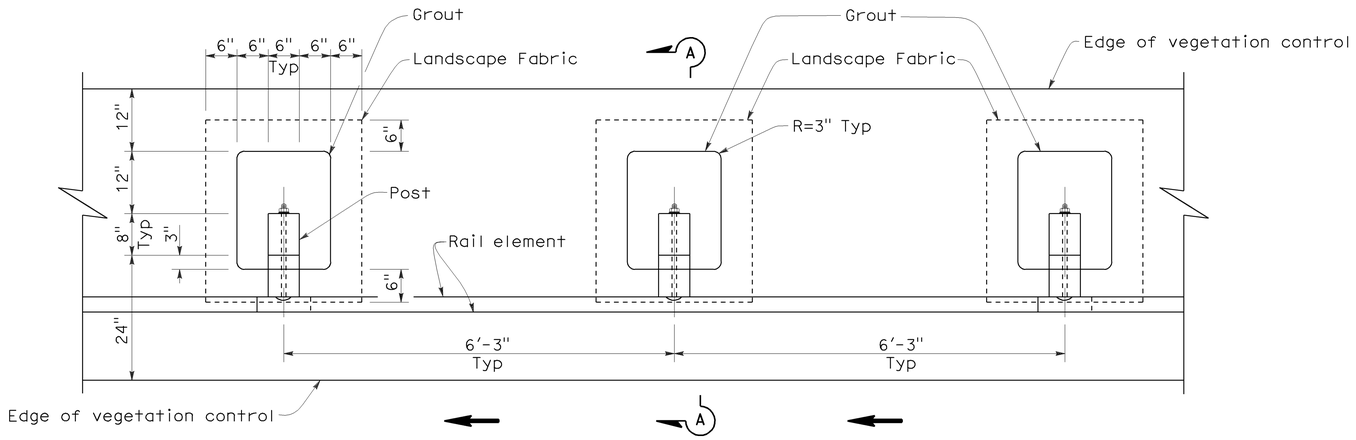

PLAN

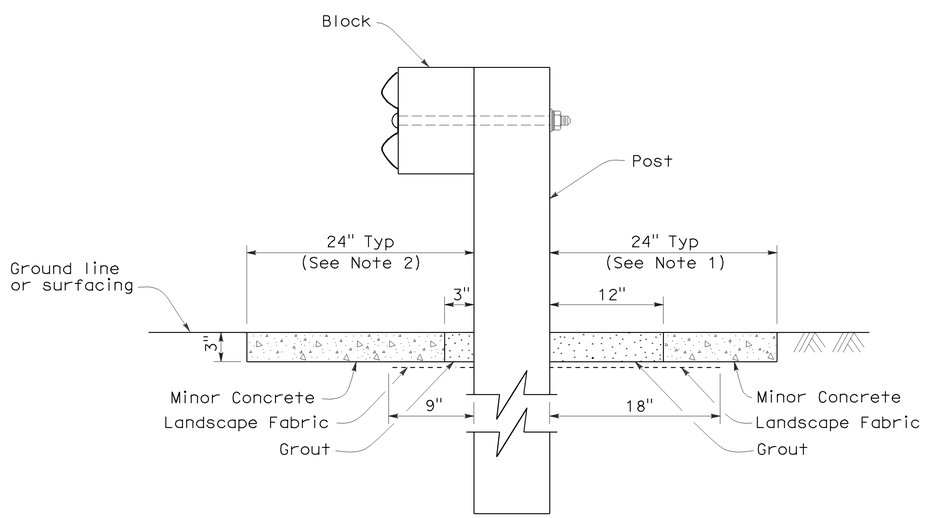

SECTION A-A

NOTES:

1. Where the distance between back of post and hinge point is less than 24", vegetation control to be constructed flush with the back edge of the post.
2. Where dike is constructed under railing, construct vegetation control to back edge of dike. Where paved shoulder is constructed within 24" in front of the post, construct vegetation control to the edge of paved shoulder.
3. Direction of adjacent traffic indicated by ← .

STATE OF CALIFORNIA
DEPARTMENT OF TRANSPORTATION

METAL BEAM GUARD RAILING TYPICAL VEGETATION CONTROL STANDARD RAILING SECTION

NO SCALE

NSP A77C5 DATED OCTOBER 20, 2006 SUPPLEMENTS THE STANDARD PLANS BOOK DATED MAY 2006.

NEW STANDARD PLAN NSP A77C5

2006 NEW STANDARD PLAN NSP A77C5

DIST	COUNTY	ROUTE	POST MILES TOTAL PROJECT	SHEET NO.	TOTAL SHEETS
11	SD	78	20.6/35.5	36	63

Randell D. Hiatt
REGISTERED CIVIL ENGINEER

October 20, 2006
PLANS APPROVAL DATE

REGISTERED PROFESSIONAL ENGINEER
Randell D. Hiatt
No. C50200
Exp. 6-30-07
CIVIL
STATE OF CALIFORNIA

The State of California or its officers or agents shall not be responsible for the accuracy or completeness of electronic copies of this plan sheet.

To accompany plans dated 08-15-11

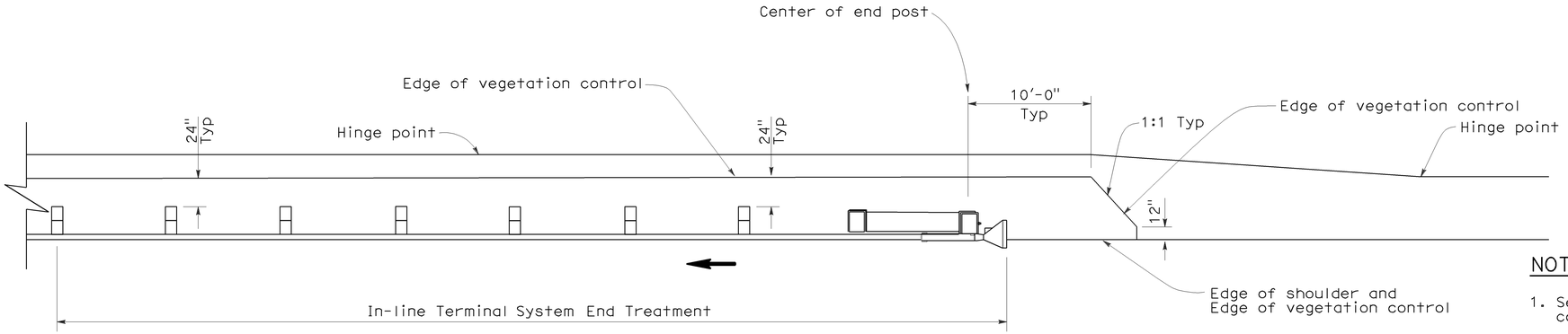

PLAN

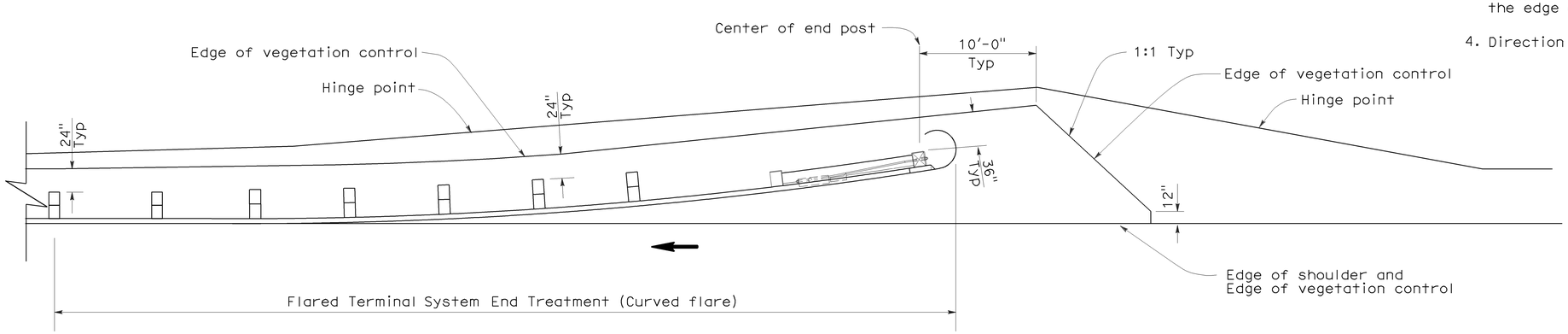

PLAN

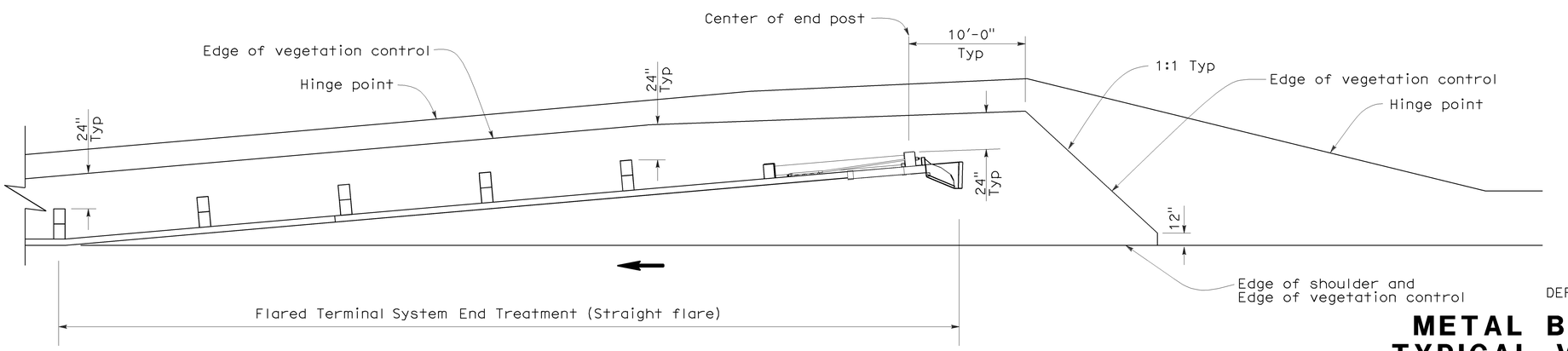

PLAN

NOTES:

1. See New Standard Plan NSP A77C5 for additional vegetation control details.
2. Where the distance between back of post and hinge point is less than 24", vegetation control to be constructed flush with the back edge of the post.
3. Where dike is constructed under railing, construct vegetation control to back edge of dike. Where paved shoulder is constructed within 24" in front of the post, construct vegetation control to the edge of paved shoulder.
4. Direction of adjacent traffic indicated by ←.

STATE OF CALIFORNIA
DEPARTMENT OF TRANSPORTATION

METAL BEAM GUARD RAILING TYPICAL VEGETATION CONTROL FOR TERMINAL SYSTEM END TREATMENTS

NO SCALE

NSP A77C6 DATED OCTOBER 20, 2006 SUPPLEMENTS THE STANDARD PLANS BOOK DATED MAY 2006.

NEW STANDARD PLAN NSP A77C6

2006 NEW STANDARD PLAN NSP A77C6

7-17-06

DIST	COUNTY	ROUTE	POST MILES TOTAL PROJECT	SHEET NO.	TOTAL SHEETS
11	SD	78	20.6/35.5	37	63

Randell D. Hiatt
REGISTERED CIVIL ENGINEER

October 20, 2006
PLANS APPROVAL DATE

REGISTERED PROFESSIONAL ENGINEER
Randell D. Hiatt
No. C50200
Exp. 6-30-07
CIVIL
STATE OF CALIFORNIA

The State of California or its officers or agents shall not be responsible for the accuracy or completeness of electronic copies of this plan sheet.

To accompany plans dated 08-15-11

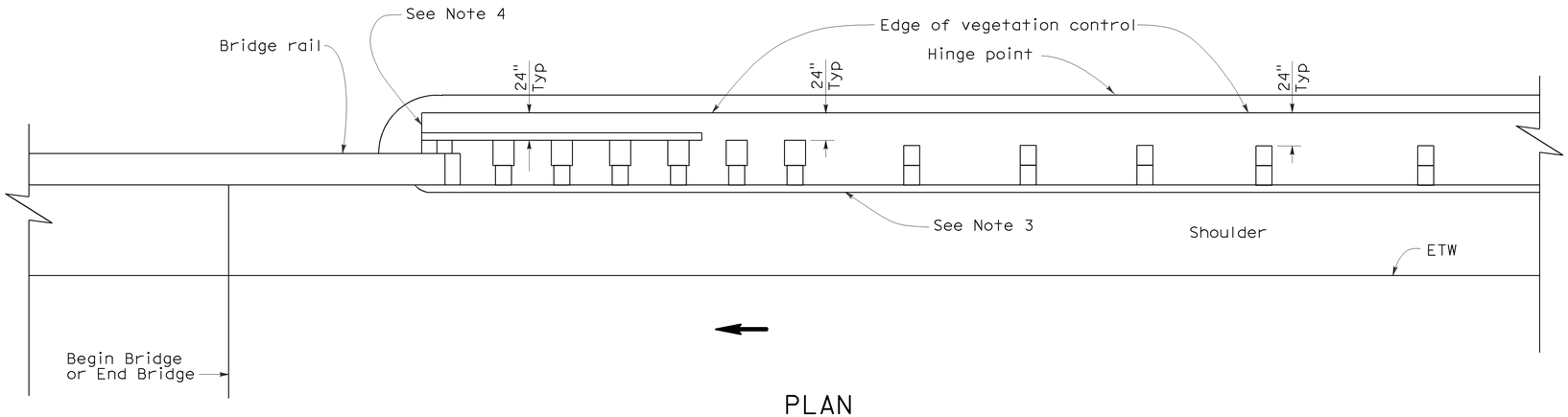

PLAN

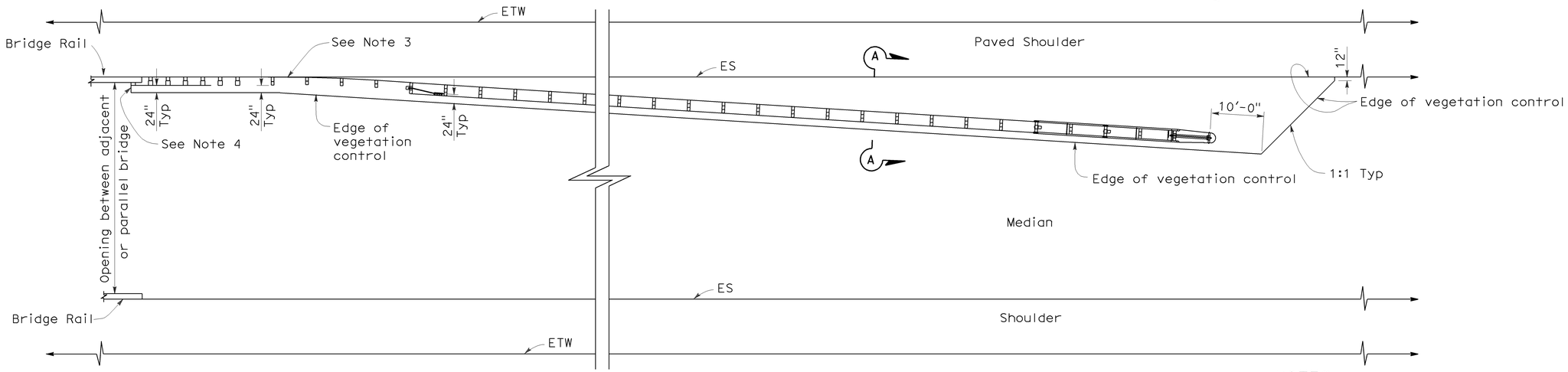

PLAN

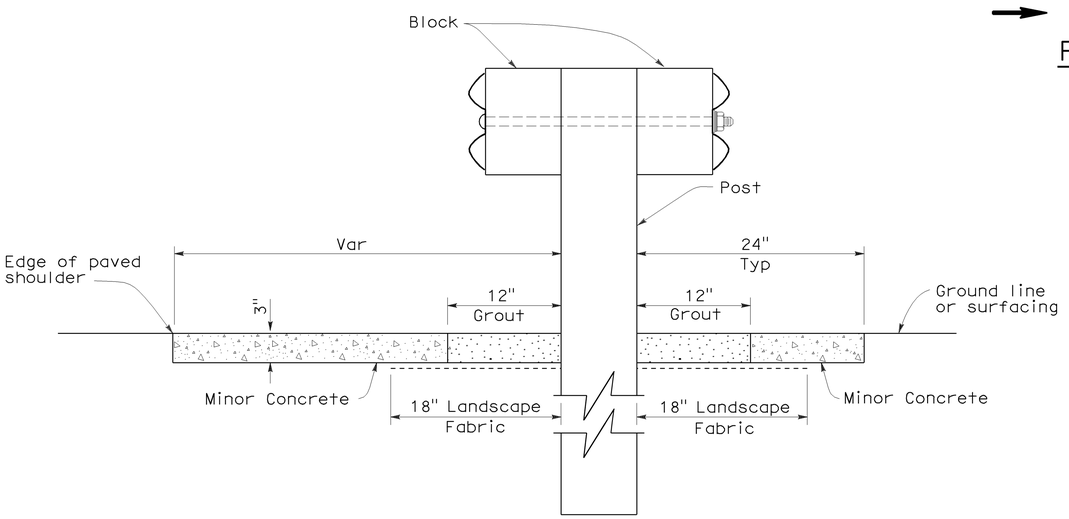

SECTION A-A

NOTES:

1. See New Standard Plan NSP A77C5 for additional vegetation control details.
2. Where the distance between back of post and hinge point is less than 24", vegetation control to be constructed flush with the back edge of the post.
3. Where dike is constructed under railing, construct vegetation control to back edge of dike. Where paved shoulder is constructed within 24" in front of the post, construct vegetation control to the edge of paved shoulder.
4. End vegetation control at end of backside rail element.
5. Direction of adjacent traffic indicated by ←.

STATE OF CALIFORNIA
DEPARTMENT OF TRANSPORTATION

METAL BEAM GUARD RAILING TYPICAL VEGETATION CONTROL AT STRUCTURE APPROACH AND DEPARTURE

NO SCALE

NSP A77C7 DATED OCTOBER 20, 2006 SUPPLEMENTS THE STANDARD PLANS BOOK DATED MAY 2006.

NEW STANDARD PLAN NSP A77C7

2006 NEW STANDARD PLAN NSP A77C7

7-17-06

DIST	COUNTY	ROUTE	POST MILES TOTAL PROJECT	SHEET NO.	TOTAL SHEETS
11	SD	78	20.6/35.5	38	63

Randell D. Hiatt
REGISTERED CIVIL ENGINEER

October 20, 2006
PLANS APPROVAL DATE

REGISTERED PROFESSIONAL ENGINEER
Randell D. Hiatt
No. C50200
Exp. 6-30-07
CIVIL
STATE OF CALIFORNIA

The State of California or its officers or agents shall not be responsible for the accuracy or completeness of electronic copies of this plan sheet.

To accompany plans dated 08-15-11

NOTES:

1. See New Standard Plan NSP A77C5 for additional vegetation control details.
2. Where the distance between back of post and hinge point is less than 24", vegetation control to be constructed flush with the back edge of the post.
3. Where dike is constructed under railing, construct vegetation control to back edge of dike. Where paved shoulder is constructed within 24" in front of the post, construct vegetation control to the edge of paved shoulder.
4. Direction of adjacent traffic indicated by ←.

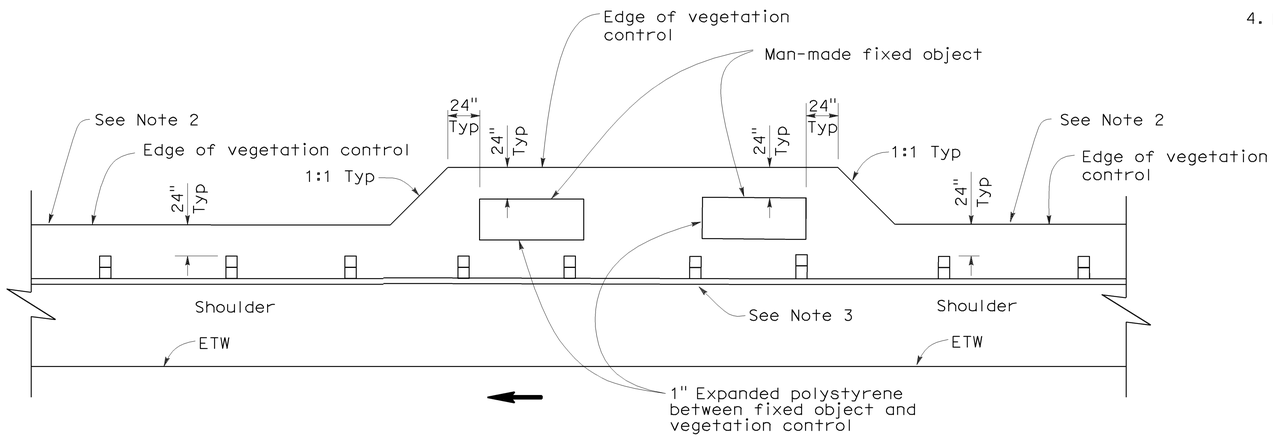

PLAN

FIXED OBJECT(S) ON SHOULDER

STATE OF CALIFORNIA
DEPARTMENT OF TRANSPORTATION

METAL BEAM GUARD RAILING TYPICAL VEGETATION CONTROL AT FIXED OBJECT

NO SCALE

NSP A77C8 DATED OCTOBER 20, 2006 SUPPLEMENTS THE STANDARD PLANS BOOK DATED MAY 2006.

NEW STANDARD PLAN NSP A77C8

2006 NEW STANDARD PLAN NSP A77C8

7-17-06

DIST	COUNTY	ROUTE	POST MILES TOTAL PROJECT	SHEET NO.	TOTAL SHEETS
11	SD	78	20.6/35.5	39	63

Randell D. Hiatt
REGISTERED CIVIL ENGINEER

October 20, 2006
PLANS APPROVAL DATE

REGISTERED PROFESSIONAL ENGINEER
Randell D. Hiatt
No. C50200
Exp. 6-30-07
CIVIL
STATE OF CALIFORNIA

The State of California or its officers or agents shall not be responsible for the accuracy or completeness of electronic copies of this plan sheet.

To accompany plans dated 08-15-11

NOTES:

1. See New Standard Plan NSP A77C5 for additional vegetation control details.
2. Where dike is constructed under railing, construct vegetation control to back edge of dike. Where paved shoulder is constructed within 24" in front of the post, construct vegetation control to the edge of paved shoulder.
3. Direction of adjacent traffic indicated by ← .

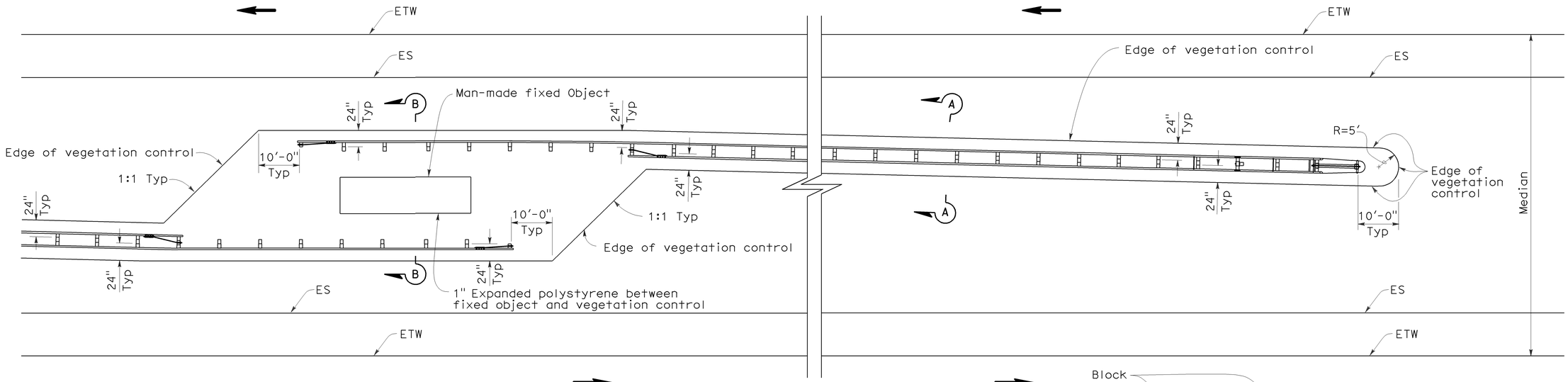

PLAN

FIXED OBJECT(S) IN MEDIAN

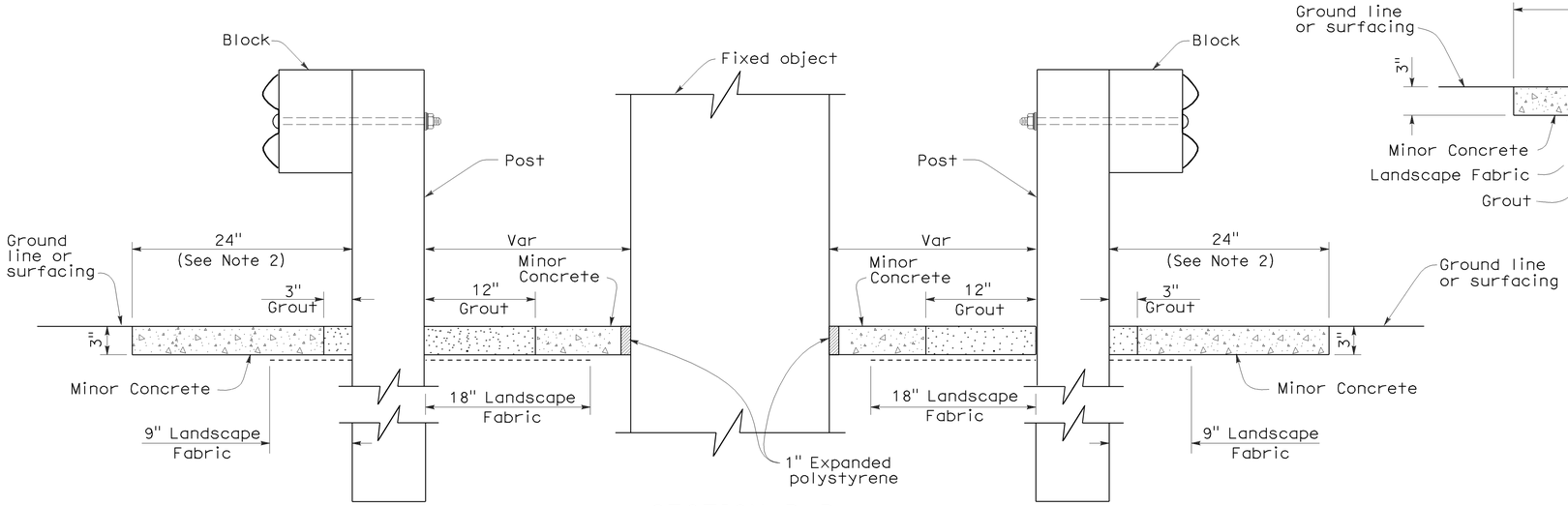

SECTION B-B

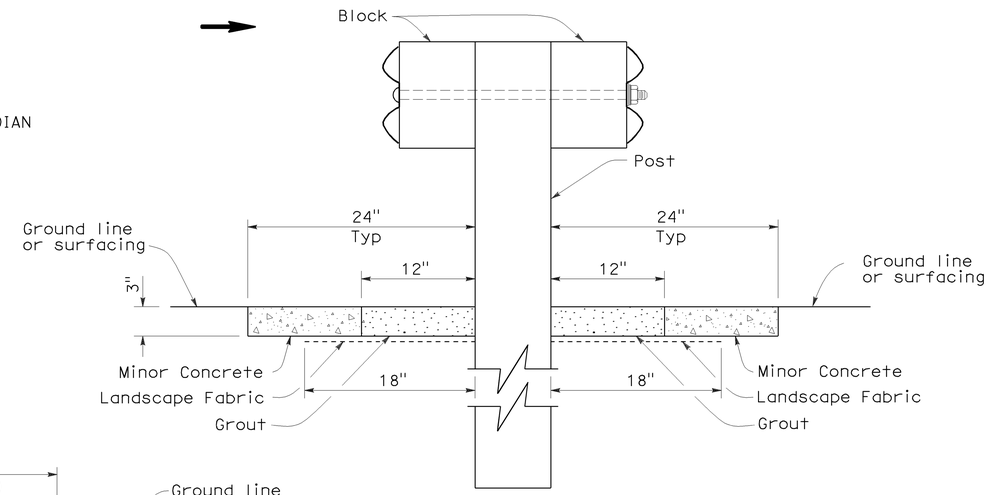

SECTION A-A

STATE OF CALIFORNIA
DEPARTMENT OF TRANSPORTATION

METAL BEAM GUARD RAILING TYPICAL VEGETATION CONTROL AT FIXED OBJECT

NO SCALE

NSP A77C9 DATED OCTOBER 20, 2006 SUPPLEMENTS THE STANDARD PLANS BOOK DATED MAY 2006.

NEW STANDARD PLAN NSP A77C9

2006 NEW STANDARD PLAN NSP A77C9

7-17-06

DIST	COUNTY	ROUTE	POST MILES TOTAL PROJECT	SHEET NO.	TOTAL SHEETS
11	SD	78	20.6/35.5	40	63

Randell D. Hiatt
REGISTERED CIVIL ENGINEER

October 20, 2006
PLANS APPROVAL DATE

REGISTERED PROFESSIONAL ENGINEER
Randell D. Hiatt
No. C50200
Exp. 6-30-07
CIVIL
STATE OF CALIFORNIA

The State of California or its officers or agents shall not be responsible for the accuracy or completeness of electronic copies of this plan sheet.

To accompany plans dated 08-15-11

NOTES:

1. See New Standard Plan NSP A77C5 for additional vegetation control details.
2. Where dike is constructed under railing, construct vegetation control to back edge of dike. Where paved shoulder is constructed within 24" in front of the post, construct vegetation control to the edge of paved shoulder.
3. Direction of adjacent traffic indicated by ←.

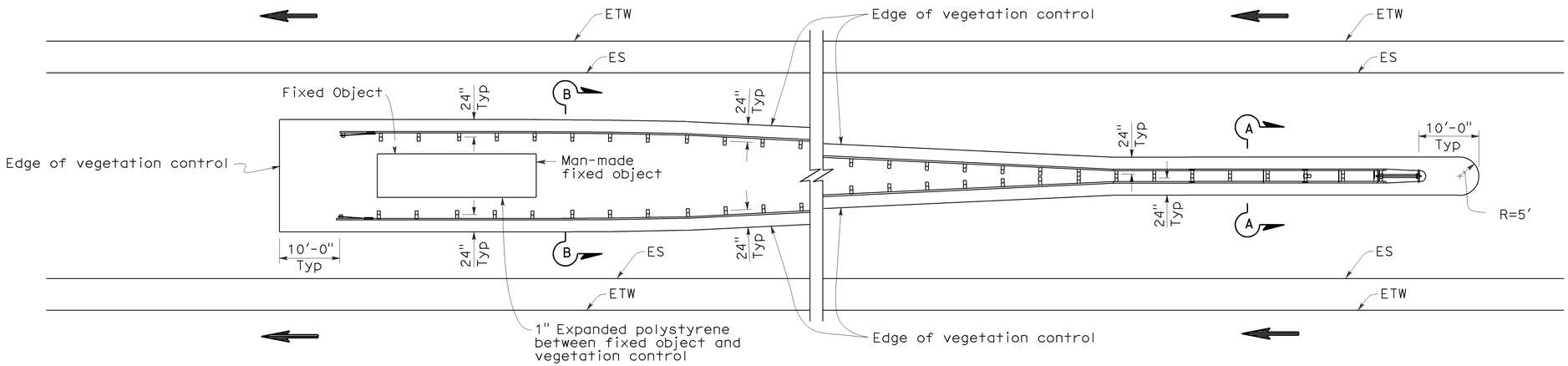

PLAN

FIXED OBJECT(S) BETWEEN SEPARATE ROADBEDS
(ONE-WAY TRAFFIC)

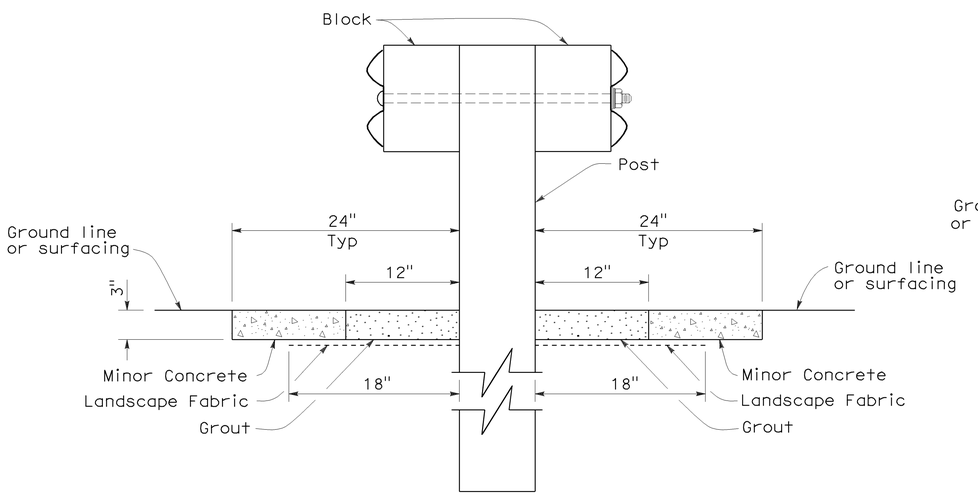

SECTION A-A

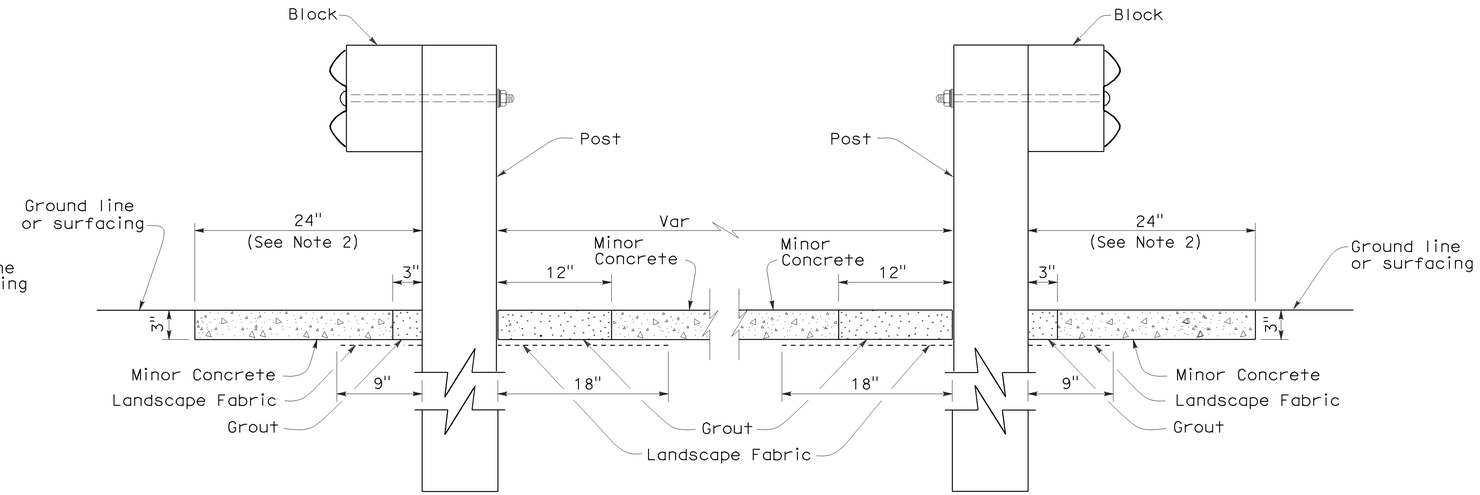

SECTION B-B

STATE OF CALIFORNIA
DEPARTMENT OF TRANSPORTATION

METAL BEAM GUARD RAILING TYPICAL VEGETATION CONTROL AT FIXED OBJECT

NO SCALE

NSP A77C10 DATED OCTOBER 20, 2006 SUPPLEMENTS THE STANDARD PLANS BOOK DATED MAY 2006.

NEW STANDARD PLAN NSP A77C10

2006 NEW STANDARD PLAN NSP A77C10

7-17-06

DIST	COUNTY	ROUTE	POST MILES TOTAL PROJECT	SHEET NO.	TOTAL SHEETS
11	SD	78	20.6/35.5	41	63

Randell D. Hiatt
REGISTERED CIVIL ENGINEER

June 6, 2008
PLANS APPROVAL DATE

REGISTERED PROFESSIONAL ENGINEER
Randell D. Hiatt
No. C50200
Exp. 6-30-09
CIVIL
STATE OF CALIFORNIA

The State of California or its officers or agents shall not be responsible for the accuracy or completeness of electronic copies of this plan sheet.

To accompany plans dated 08-15-11

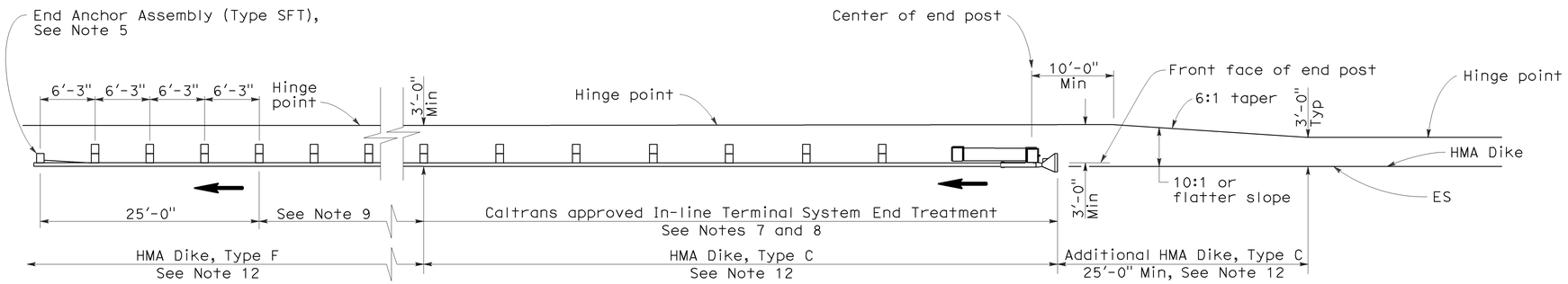

TYPE 11A LAYOUT

(EMBANKMENT GUARD INSTALLATION WITH IN-LINE END TREATMENT AT TRAFFIC APPROACH END OF RAILING)
See Note 6

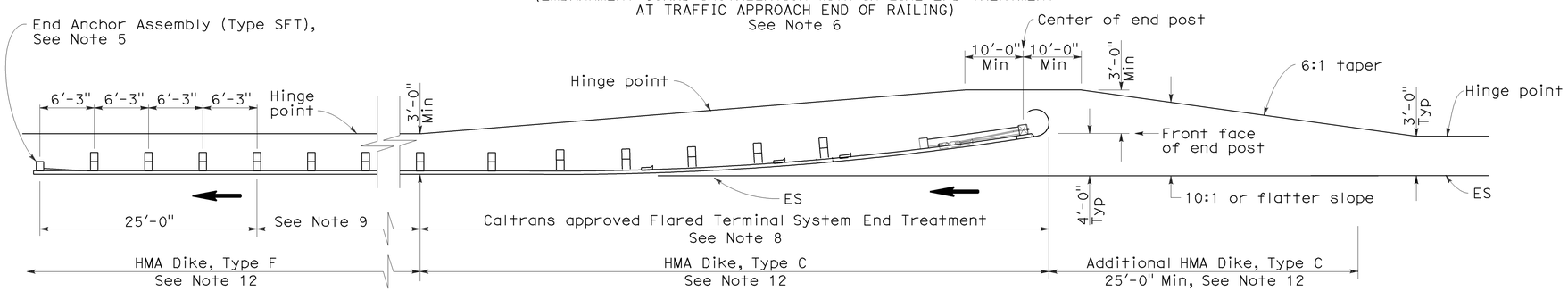

TYPE 11B LAYOUT

(EMBANKMENT GUARD RAILING INSTALLATION WITH FLARED END TREATMENT AT TRAFFIC APPROACH END OF RAILING)
See Note 6

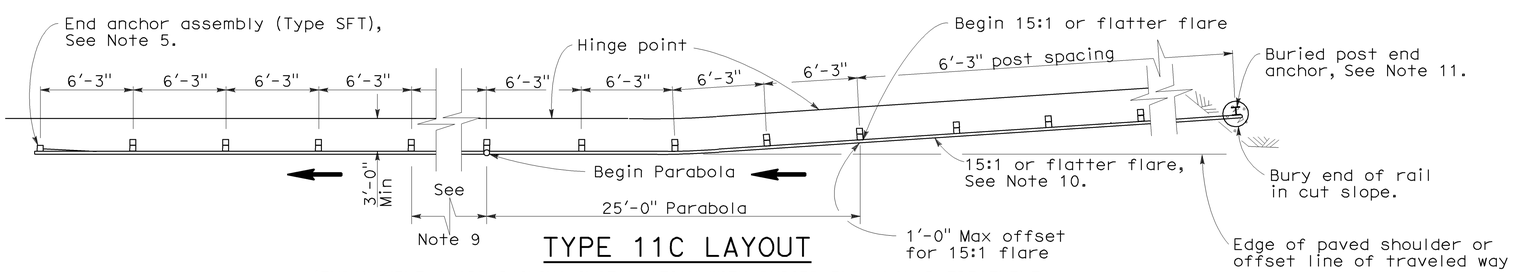

TYPE 11C LAYOUT

(EMBANKMENT GUARD RAILING INSTALLATION WITH BURIED END ANCHOR TREATMENT AT TRAFFIC APPROACH END OF RAILING)
See Notes 6 and 12

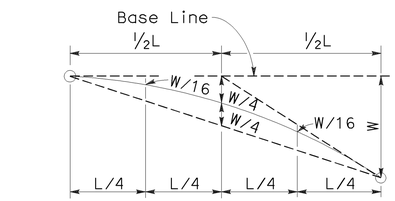

TYPICAL PARABOLIC LAYOUT

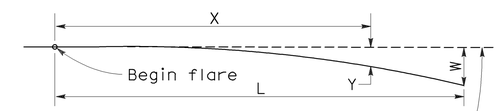

Base Line (Edge of paved shoulder or offset line of edge of traveled way)

$$Y = \frac{WX^2}{L^2}$$

Y = Offset from base line
W = Maximum offset
X = Distance along base line
L = Length of flare

PARABOLIC FLARE OFFSETS

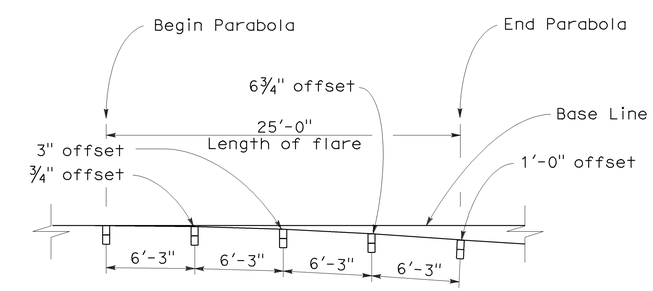

TYPICAL FLARE OFFSETS FOR 1 FOOT MAX END OFFSET

NOTES:

1. Line post, blocks and hardware to be used are shown on Standard Plans A77A1, A77A2, A77B1, A77C1, and A77C2.
2. Guard rail post spacing to be 6'-3" center to center, except as otherwise noted.
3. Except as noted, line posts are 6" x 8" x 6'-0" wood with 6" x 8" x 1'-2" wood blocks. W6 x 9 steel posts, 6'-0" in length, with 6" x 8" x 1'-2" notched wood blocks or recycled plastic blocks may be used for 6" x 8" x 6'-0" wood post with 6" x 8" x 1'-2" wood blocks where applicable and when specified.
4. Direction of adjacent traffic indicated by ⟶.
5. For End Anchor Assembly (Type SFT) details, see Standard Plan A77H1.
6. Layout Types 11A, 11B or 11C are typically used where guard railing is recommended to shield embankment slopes and a crashworthy end treatment is required for only one direction of traffic.
7. In-line Terminal System End Treatments are used where site conditions will not accommodate a flared end treatment.
8. The type of terminal system end treatment to be used will be shown on the Project Plans.
9. Dependent on site conditions (embankment height and side slope), construction of additional guard railing (length equal to multiples of 12'-6" with 6'-3" post spacing) may be advisable.
10. The 15:1 or flatter flare used with buried end anchors is based on the edge of the paved shoulder or offset line of edge of the traveled way. The length of guard railing within the 15:1 or flatter flare is based on site conditions and should be a length equal to multiples of 12'-6".
11. For details of the buried post end anchor used with Type 11C Layout, see Standard Plan A77I2.
12. Where placement of dike is required with guard railing installations, see Revised Standard Plan RSP A77C4 for dike positioning details.

STATE OF CALIFORNIA
DEPARTMENT OF TRANSPORTATION

METAL BEAM GUARD RAILING TYPICAL LAYOUTS FOR EMBANKMENTS

NO SCALE

RSP A77E1 DATED JUNE 6, 2008 SUPERSEDES STANDARD PLAN A77E1 DATED MAY 1, 2006 - PAGE 48 OF THE STANDARD PLANS BOOK DATED MAY 2006.

REVISED STANDARD PLAN RSP A77E1

2006 REVISED STANDARD PLAN RSP A77E1

12-10-07

DIST	COUNTY	ROUTE	POST MILES TOTAL PROJECT	SHEET NO.	TOTAL SHEETS
11	SD	78	20.6/35.5	42	63

Randell D. Hiatt
REGISTERED CIVIL ENGINEER

June 6, 2008
PLANS APPROVAL DATE

REGISTERED PROFESSIONAL ENGINEER
Randell D. Hiatt
No. C50200
Exp. 6-30-09
CIVIL
STATE OF CALIFORNIA

The State of California or its officers or agents shall not be responsible for the accuracy or completeness of electronic copies of this plan sheet.

To accompany plans dated 08-15-11

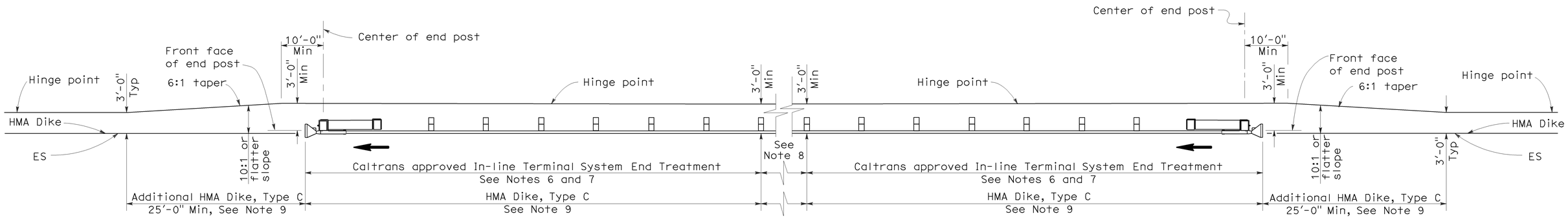

TYPE 11D LAYOUT

(EMBANKMENT GUARD RAILING INSTALLATION WITH IN-LINE END TREATMENT AT EACH END OF RAILING)
See Note 5

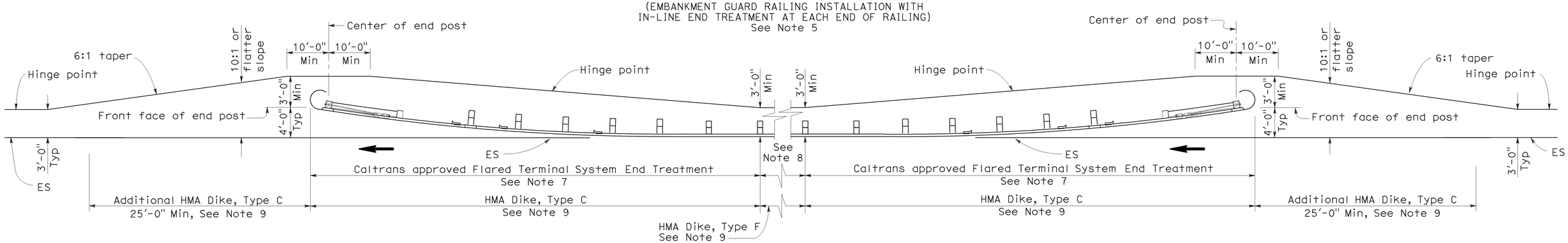

TYPE 11E LAYOUT

(EMBANKMENT GUARD RAILING INSTALLATION WITH FLARED END TREATMENT AT EACH END OF RAILING)
See Note 5

NOTES:

1. Line post, blocks and hardware to be used are shown on Standard Plans A77A1, A77A2, A77B1, A77C1 and A77C2.
2. Guard rail post spacing to be 6'-3" center to center, except as otherwise noted.
3. Except as noted, line posts are 6" x 8" x 6'-0" wood with 6" x 8" x 1'-2" wood blocks. W6 x 9 steel posts, 6'-0" in length, with 6" x 8" x 1'-2" notched wood blocks or plastic blocks may be used for 6" x 8" x 6'-0" wood post with 6" x 8" x 1'-2" wood blocks where applicable and when specified.
4. Direction of adjacent traffic indicated by ⟶.
5. Layout Types 11D through 11L, shown on the A77E Series of Revised Standard Plans, are typically used where guard railing is recommended to shield embankment slopes and a crashworthy end treatment is required for both directions of traffic.
6. In-line Terminal System End Treatments are used where site conditions will not accommodate a flared end treatment.
7. The type of terminal system end treatment to be used will be shown on the Project Plans.
8. Dependent on site conditions (embankment height and side slope), construction of additional guard railing (length equal to multiples of 12'-6" with 6'-3" post spacing) may be advisable.
9. Where placement of dike is required with guard railing installations, see Revised Standard Plan RSP A77C4 for dike positioning details.

STATE OF CALIFORNIA
DEPARTMENT OF TRANSPORTATION

METAL BEAM GUARD RAILING TYPICAL LAYOUTS FOR EMBANKMENTS

NO SCALE

RSP A77E2 DATED JUNE 6, 2008 SUPERSEDES STANDARD PLAN A77E2
DATED MAY 1, 2006 - PAGE 49 OF THE STANDARD PLANS BOOK DATED MAY 2006.

REVISED STANDARD PLAN RSP A77E2

2006 REVISED STANDARD PLAN RSP A77E2

12-10-07

DIST	COUNTY	ROUTE	POST MILES TOTAL PROJECT	SHEET NO.	TOTAL SHEETS
11	SD	78	20.6/35.5	43	63

Randell D. Hiatt
REGISTERED CIVIL ENGINEER

June 6, 2008
PLANS APPROVAL DATE

REGISTERED PROFESSIONAL ENGINEER
Randell D. Hiatt
No. C50200
Exp. 6-30-09
CIVIL
STATE OF CALIFORNIA

The State of California or its officers or agents shall not be responsible for the accuracy or completeness of electronic copies of this plan sheet.

To accompany plans dated 08-15-11

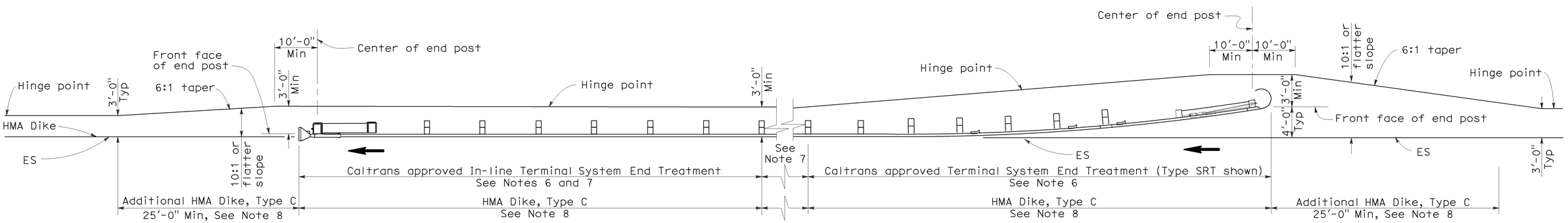

TYPE 11H LAYOUT

(EMBANKMENT GUARD RAILING INSTALLATION WITH FLARED END TREATMENT
AND AN IN-LINE TREATMENT AT THE ENDS OF RAILING)
See Notes 5 and 8

NOTES:

1. Line post, blocks and hardware to be used are shown on Standard Plans A77A1, A77A2, A77B1, A77C1 and A77C2.
2. Guard rail post spacing to be 6'-3" center to center, except as otherwise noted.
3. Except as noted, line posts are 6" x 8" x 6'-0" wood with 6" x 8" x 1'-2" wood blocks. W6 x 9 steel posts, 6'-0" in length, with 6" x 8" x 1'-2" notched wood blocks or plastic blocks may be used for 6" x 8" x 6'-0" wood post with 6" x 8" x 1'-2" wood blocks where applicable and when specified.
4. Direction of adjacent traffic indicated by ⟶.
5. Layout Types 11D through 11L, shown on the A77E Series of Revised Standard Plans, are typically used where guard railing is recommended to shield embankment slopes and a crashworthy end treatment is required for both directions of traffic.
6. The type of terminal system end treatment to be used will be shown on the Project Plans.
7. Dependent on site conditions (embankment height and side slope), construction of additional guard railing (length equal to multiples of 12'-6" with 6'-3" post spacing) may be advisable.
8. Where placement of dike is required with guard railing installations, see Revised Standard Plan RSP A77C4 for dike positioning details.

STATE OF CALIFORNIA
DEPARTMENT OF TRANSPORTATION

METAL BEAM GUARD RAILING TYPICAL LAYOUTS FOR EMBANKMENTS

NO SCALE

RSP A77E4 DATED JUNE 6, 2008 SUPERSEDES STANDARD PLAN A77E4
DATED MAY 1, 2006 - PAGE 51 OF THE STANDARD PLANS BOOK DATED MAY 2006.

REVISED STANDARD PLAN RSP A77E4

2006 REVISED STANDARD PLAN RSP A77E4

12-10-07

DIST	COUNTY	ROUTE	POST MILES TOTAL PROJECT	SHEET NO.	TOTAL SHEETS
11	SD	78	20.6/35.5	44	63

Randell D. Hiatt
REGISTERED CIVIL ENGINEER

June 6, 2008
PLANS APPROVAL DATE

REGISTERED PROFESSIONAL ENGINEER
Randell D. Hiatt
No. C50200
Exp. 6-30-09
CIVIL
STATE OF CALIFORNIA

The State of California or its officers or agents shall not be responsible for the accuracy or completeness of electronic copies of this plan sheet.

To accompany plans dated 08-15-11

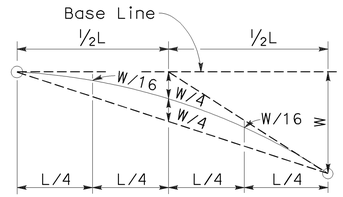

TYPICAL PARABOLIC LAYOUT

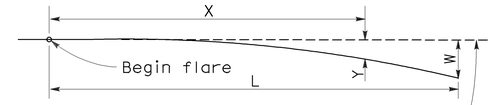

Base Line (Edge of paved shoulder or offset line of edge of traveled way)

$$Y = \frac{WX^2}{L^2}$$

Y = Offset from base line
W = Maximum offset
X = Distance along base line
L = Length of flare

PARABOLIC FLARE OFFSETS

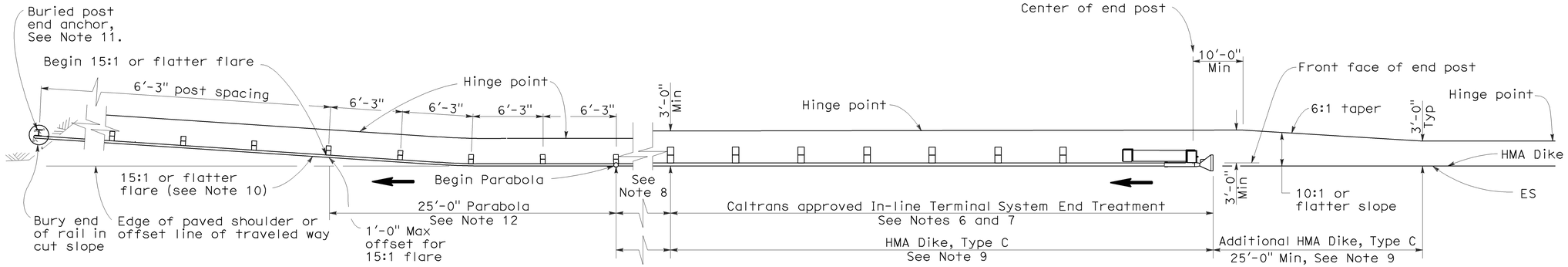

TYPE 11I LAYOUT

(EMBANKMENT GUARD RAILING INSTALLATION WITH IN-LINE END TREATMENT AND A BURIED END ANCHOR TREATMENT AT THE ENDS OF RAILING)
See Note 5

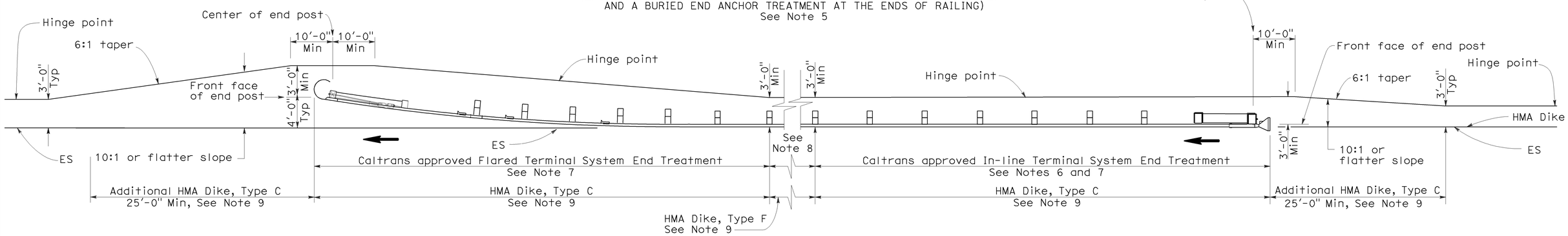

TYPE 11J LAYOUT

(EMBANKMENT GUARD RAILING INSTALLATION WITH IN-LINE END TREATMENT AND FLARED END TREATMENT AT THE ENDS OF RAILING)
See Note 5

NOTES:

1. Line post, blocks and hardware to be used are shown on Standard Plans A77A1, A77A2, A77B1, A77C1 and A77C2.
2. Guard rail post spacing to be 6'-3" center to center, except as otherwise noted.
3. Except as noted, line posts are 6" x 8" x 6'-0" wood with 6" x 8" x 1'-2" wood blocks. W6 x 9 steel posts, 6'-0" in length, with 6" x 8" x 1'-2" notched wood blocks or plastic blocks may be used for 6" x 8" x 6'-0" wood post with 6" x 8" x 1'-2" wood blocks where applicable and when specified.
4. Direction of adjacent traffic indicated by ⟶.
5. Layout Types 11D through 11L, shown on the A77E Series of Revised Standard Plans, are typically used where guard railing is recommended to shield embamkment slopes and a crashworthy end treatment is required for both directions of traffic.
6. In-line Terminal System End Treatments are used where site conditions will not accommodate a flared end treatment.
7. The type of terminal system end treatment to be used will be shown on the Project Plans.
8. Dependent on site conditions (embankment height and side slope), construction of additional guard railing (length equal to multiples of 12'-6" with 6'-3" post spacing) may be advisable.
9. Where placement of dike is required with guard railing installations, see Revised Standard Plan RSP A77C4 for dike positioning details.
10. The 15:1 or flatter flare used with buried end anchors is based on the edge of the paved shoulder or offset line of edge of the traveled way. The length of guard railing within the 15:1 or flatter flare is based on site conditions and should be a length equal to multiples of 12'-6".
11. For details of the buried post end anchor used with Type 11I Layout, see Standard Plan A77I2.
12. For typical flare offsets for 25'-0" length parabola with maximum offset of 1'-0", see Revised Standard Plan RSP A77E1.

STATE OF CALIFORNIA
DEPARTMENT OF TRANSPORTATION

METAL BEAM GUARD RAILING TYPICAL LAYOUTS FOR EMBANKMENTS

NO SCALE

RSP A77E5 DATED JUNE 6, 2008 SUPERSEDES STANDARD PLAN A77E5 DATED MAY 1, 2006 - PAGE 52 OF THE STANDARD PLANS BOOK DATED MAY 2006.

REVISED STANDARD PLAN RSP A77E5

2006 REVISED STANDARD PLAN RSP A77E5

12-10-07

DIST	COUNTY	ROUTE	POST MILES TOTAL PROJECT	SHEET NO.	TOTAL SHEETS
11	SD	78	20.6/35.5	45	63

Randell D. Hiatt
REGISTERED CIVIL ENGINEER

June 6, 2008
PLANS APPROVAL DATE

REGISTERED PROFESSIONAL ENGINEER
Randell D. Hiatt
No. C50200
Exp. 6-30-09
CIVIL
STATE OF CALIFORNIA

The State of California or its officers or agents shall not be responsible for the accuracy or completeness of electronic copies of this plan sheet.

To accompany plans dated 08-15-11

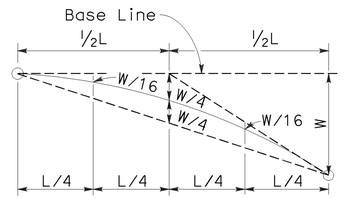

TYPICAL PARABOLIC LAYOUT

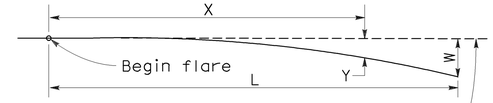

Base Line (Edge of paved shoulder or offset line of edge of traveled way)

$$Y = \frac{WX^2}{L^2}$$

Y = Offset from base line
W = Maximum offset
X = Distance along base line
L = Length of flare

PARABOLIC FLARE OFFSETS

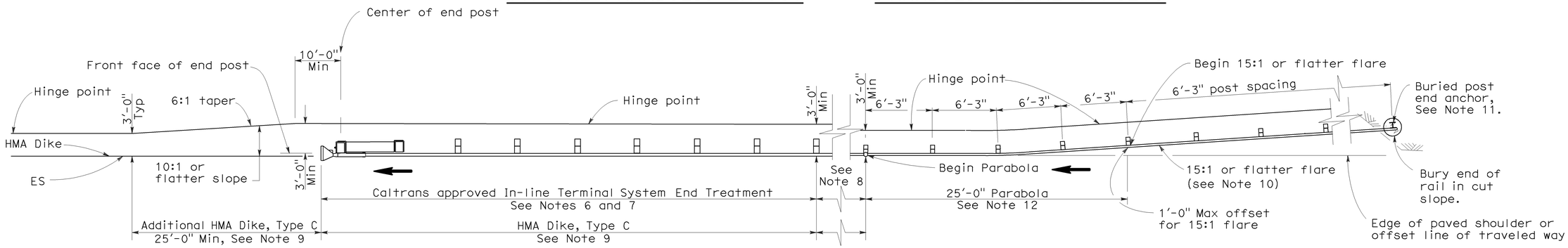

TYPE 11K LAYOUT

(EMBANKMENT GUARD RAILING INSTALLATION WITH A BURIED END ANCHOR TREATMENT AND AN IN-LINE END TREATMENT AT THE ENDS OF RAILING)
See Note 5

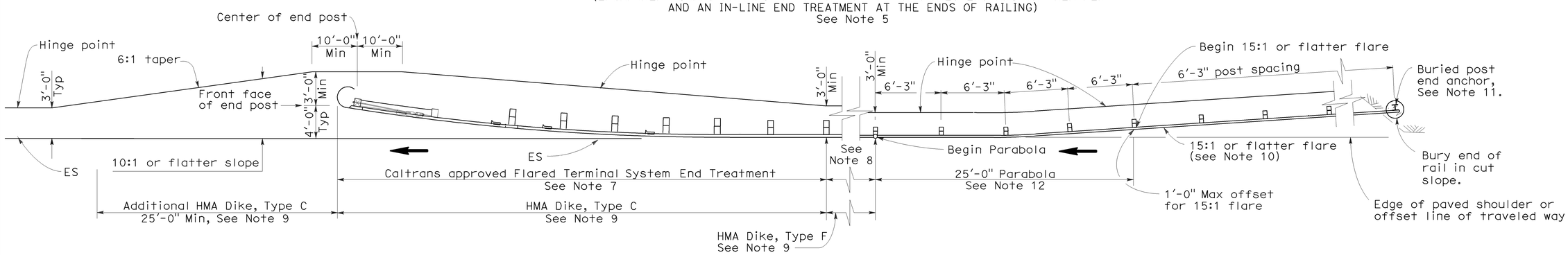

TYPE 11L LAYOUT

(EMBANKMENT GUARD RAILING INSTALLATION WITH A BURIED END ANCHOR TREATMENT AND A FLARED END TREATMENT AT THE ENDS OF RAILING)
See Note 5

NOTES:

1. Line post, blocks and hardware to be used are shown on Standard Plans A77A1, A77A2, A77B1, A77C1 and A77C2.
2. Guard rail post spacing to be 6'-3" center to center, except as otherwise noted.
3. Except as noted, line posts are 6" x 8" x 6'-0" wood with 6" x 8" x 1'-2" wood blocks. W6 x 9 steel posts, 6'-0" in length, with 6" x 8" x 1'-2" notched wood blocks or plastic blocks may be used for 6" x 8" x 6'-0" wood post with 6" x 8" x 1'-2" wood blocks where applicable and when specified.
4. Direction of adjacent traffic indicated by ⟶.
5. Layout Types 11D through 11L, shown on the A77E Series of Revised Standard Plans, are typically used where guard railing is recommended to shield embamkment slopes and a crashworthy end treatment is required for both directions of traffic.
6. In-line Terminal System End Treatments are used where site conditions will not accommodate a flared end treatment.
7. The type of terminal system end treatment to be used will be shown on the Project Plans.
8. Dependent on site conditions (embankment height and side slope), construction of additional guard railing (length equal to multiples of 12'-6" with 6'-3" post spacing) may be advisable.
9. Where placement of dike is required with guard railing installations, see Revised Standard Plan RSP A77C4 for dike positioning details.
10. The 15:1 or flatter flare used with buried end anchors is based on the edge of the paved shoulder or offset line of edge of the traveled way. The length of guard railing within the 15:1 or flatter flare is based on site conditions and should be a length equal to multiples of 12'-6".
11. For details of the buried post end anchor used with Type 11K and 11L Layouts, see Standard Plan A77I2.
12. For typical flare offsets for 25'-0" length parabola with maximum offset of 1'-0", see Revised Standard Plan RSP A77E1.

STATE OF CALIFORNIA
DEPARTMENT OF TRANSPORTATION

METAL BEAM GUARD RAILING TYPICAL LAYOUTS FOR EMBANKMENTS

NO SCALE

RSP A77E6 DATED JUNE 6, 2008 SUPERSEDES STANDARD PLAN A77E6
DATED MAY 1, 2006 - PAGE 53 OF THE STANDARD PLANS BOOK DATED MAY 2006.

REVISED STANDARD PLAN RSP A77E6

2006 REVISED STANDARD PLAN RSP A77E6

12-10-07

DIST	COUNTY	ROUTE	POST MILES TOTAL PROJECT	SHEET NO.	TOTAL SHEETS
11	SD	78	20.6/35.5	46	63

Randell D. Hiatt
REGISTERED CIVIL ENGINEER

June 6, 2008
PLANS APPROVAL DATE

REGISTERED PROFESSIONAL ENGINEER Randell D. Hiatt No. C50200 Exp. 6-30-09 CIVIL STATE OF CALIFORNIA

The State of California or its officers or agents shall not be responsible for the accuracy or completeness of electronic copies of this plan sheet.

To accompany plans dated 08-15-11

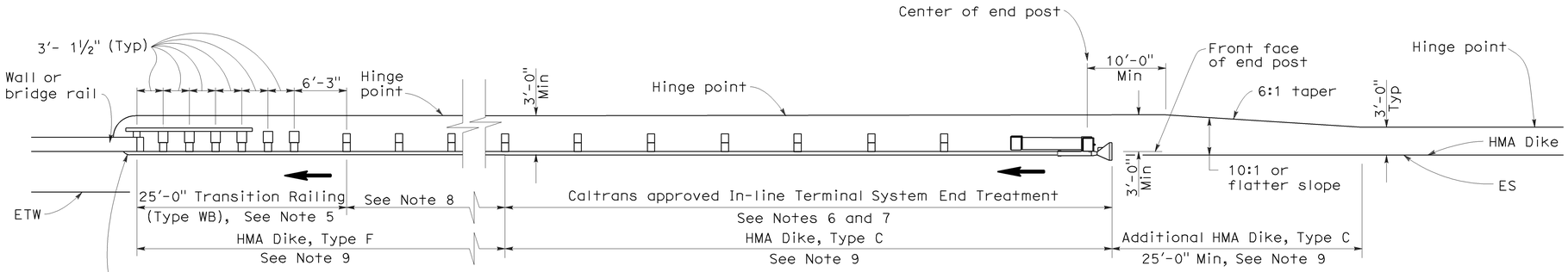

TYPE 12A LAYOUT

(GUARD RAILING INSTALLATION AT STRUCTURE APPROACH WITH AN IN-LINE END TREATMENT AT TRAFFIC APPROACH END OF RAILING)
See Notes 10

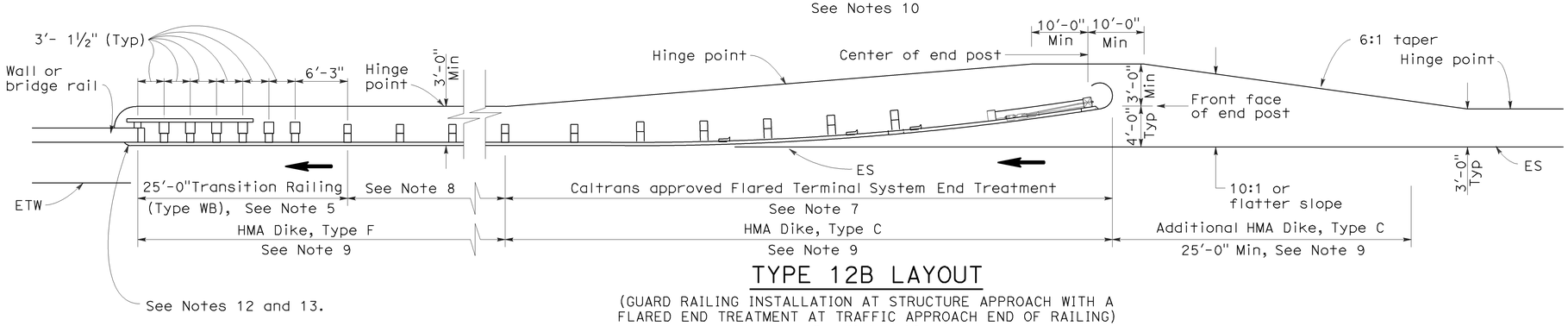

TYPE 12B LAYOUT

(GUARD RAILING INSTALLATION AT STRUCTURE APPROACH WITH A FLARED END TREATMENT AT TRAFFIC APPROACH END OF RAILING)
See Notes 10

NOTES:

1. Line post, blocks and hardware to be used are shown on Standard Plans A77A1, A77A2, A77B1, A77C1 and A77C2.
2. Guard rail post spacing to be 6'-3" center to center, except as otherwise noted.
3. Except as noted, line posts are 6" x 8" x 6'-0" wood with 6" x 8" x 1'-2" wood blocks. W6 x 9 steel posts, 6'-0" in length, with 6" x 8" x 1'-2" notched wood blocks or plastic blocks may be used for 6" x 8" x 6'-0" wood posts with 6" x 8" x 1'-2" wood blocks where applicable and when specified.
4. Direction of adjacent traffic indicated by ➡.
5. For Transition Railing (Type WB) details for Types 12A and 12B Layouts, see Standard Plan A77J4.
6. In-line Terminal System End Treatments are used where site conditions will not accommodate a flared end treatment.
7. The type of terminal system end treatment to be used will be shown on the Project Plans.
8. Dependent on site conditions (embankment height, side slopes, or other fixed objects), it may be advisable to construct additional guard railing (a length equal to multiples of 12'-6" with 6'-3" post spacing) between the transition railing and end treatment.
9. Where placement of dike is required with guard railing installations, see Revised Standard Plan RSP A77C4 for dike positioning details.
10. Type 12A or Type 12B Layouts are typically used:
    a. To the right of approaching traffic, at the end of a structure, on two-lane conventional highway where the roadbed width across the structure is less than 40 feet.
    b. To the left of approaching traffic, at the end of a structure, on two-lane conventional highway where the roadbed width across the structure is less than 40 feet.
    c. To the right of approaching traffic at the end of each structure on multilane freeways or expressways with separate adjacent or parallel bridges.
    d. To the right of approaching traffic at the end of the structure on multilane freeways or expressways with decked median on the bridge.
11. See Revised Standard Plan RSP A77F3 for typical layout used left of approaching traffic at the ends of each structure on multilane freeways or expressways with separate adjacent or parallel bridges.
12. For additional details of typical connections to bridge rail, see Connection Detail AA on Revised Standard Plans RSP A77J1 and RSP A77J2 and Connection Detail FF on Standard Plans A77K1 and A77K2.
13. For additional details of a typical connection to walls or abutments, see Standard Plan A77J3.

STATE OF CALIFORNIA
DEPARTMENT OF TRANSPORTATION

METAL BEAM GUARD RAILING TYPICAL LAYOUTS FOR STRUCTURE APPROACH

NO SCALE

RSP A77F1 DATED JUNE 6, 2008 SUPERSEDES STANDARD PLAN A77F1
DATED MAY 1, 2006 - PAGE 54 OF THE STANDARD PLANS BOOK DATED MAY 2006.

REVISED STANDARD PLAN RSP A77F1

2006 REVISED STANDARD PLAN RSP A77F1

DIST	COUNTY	ROUTE	POST MILES TOTAL PROJECT	SHEET NO.	TOTAL SHEETS
11	SD	78	20.6/35.5	47	63

Randell D. Hiatt
REGISTERED CIVIL ENGINEER

June 6, 2008
PLANS APPROVAL DATE

REGISTERED PROFESSIONAL ENGINEER
Randell D. Hiatt
No. C50200
Exp. 6-30-09
CIVIL
STATE OF CALIFORNIA

The State of California or its officers or agents shall not be responsible for the accuracy or completeness of electronic copies of this plan sheet.

To accompany plans dated 08-15-11

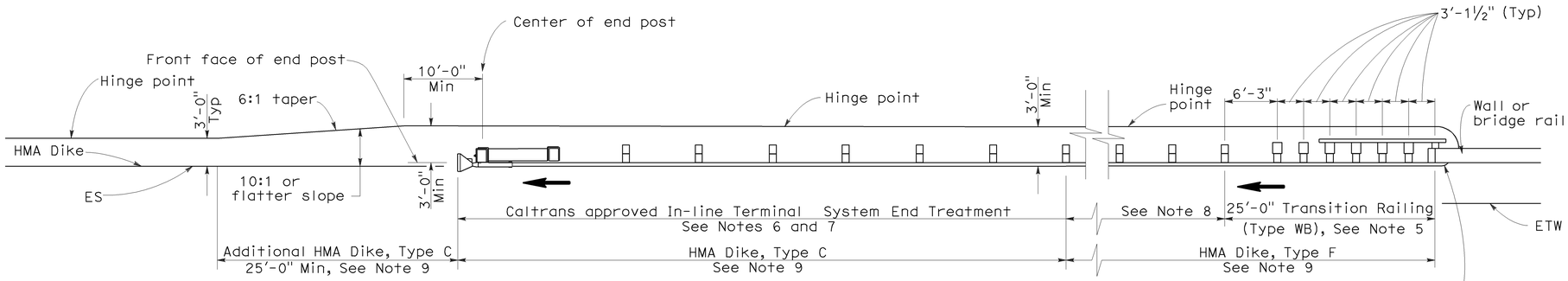

TYPE 12AA LAYOUT

(GUARD RAILING INSTALLATION AT STRUCTURE DEPARTURE WITH AN IN-LINE END TREATMENT AT TRAILING END OF RAILING)
See Notes 9 and 10

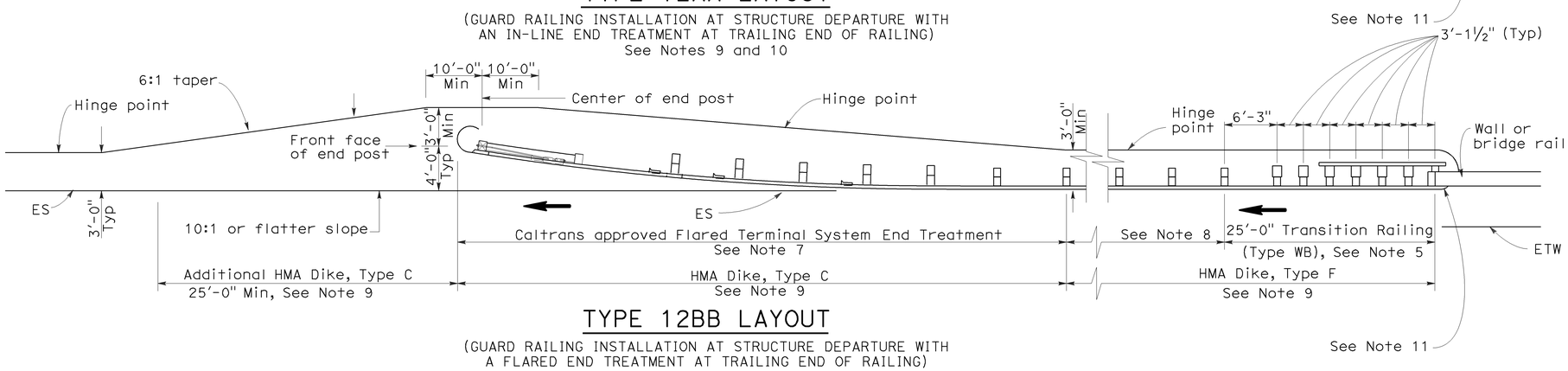

TYPE 12BB LAYOUT

(GUARD RAILING INSTALLATION AT STRUCTURE DEPARTURE WITH A FLARED END TREATMENT AT TRAILING END OF RAILING)
See Notes 9 and 10

NOTES:

1. Line post, blocks and hardware to be used are shown on Standard Plans A77A1, A77A2, A77B1, A77C1 and A77C2.
2. Guard rail post spacing to be 6'-3" center to center, except as otherwise noted.
3. Except as noted, line posts are 6" x 8" x 6'-0" wood with 6" x 8" x 1'-2" wood blocks. W6 x 9 steel posts, 6'-0" in length, with 6" x 8" x 1-2" notched wood blocks or notched recycled plastic blocks may be used for 6" x 8" x 6'-0" wood posts with 6" x 8" x 1'-2" wood blocks where applicable and when specified.
4. Direction of adjacent traffic indicated by ➡.
5. For Transition Railing (Type WB) details for Types 12AA and 12BB Layouts, see Standard Plan A77J4.
6. In-line Terminal System Treatments are used where site conditions will not accommodate a flared end treatment.
7. The type of terminal system to be used will be shown on the Project Plans.
8. Dependent on site conditions (embankment height, side slopes, other fixed objects), it may be advisable to construct additional guard railing (a length equal to multiples of 12'-6" with 6'-3" post spacing) between the transition railing and end treatments.
9. Where placement of dike is required with guard railing installations, see Revised Standard Plan RSP A77C4 for dike positioning details.
10. Type 12AA or Type 12BB Layouts are typically used to the right of traffic departing a structure on two-way conventional highways where the roadbed width across the structure is less than 40 feet.
11. For additional details of typical connections to bridge rail, see Connection Detail CC on Revised Standard Plan RSP A77J2 and Connection Detail HH on Standard Plans A77k2.

STATE OF CALIFORNIA
DEPARTMENT OF TRANSPORTATION

METAL BEAM GUARD RAILING TYPICAL LAYOUTS FOR STRUCTURE DEPARTURE

NO SCALE

RSP A77F4 DATED JUNE 6, 2008 SUPERSEDES STANDARD PLAN A77F4
DATED MAY 1, 2006 - PAGE 57 OF THE STANDARD PLANS BOOK DATED MAY 2006.

REVISED STANDARD PLAN RSP A77F4

2006 REVISED STANDARD PLAN RSP A77F4

12-10-07

DIST	COUNTY	ROUTE	POST MILES TOTAL PROJECT	SHEET NO.	TOTAL SHEETS
11	SD	78	20.6/35.5	48	63

Randell D. Hiatt
REGISTERED CIVIL ENGINEER

June 6, 2008
PLANS APPROVAL DATE

REGISTERED PROFESSIONAL ENGINEER
Randell D. Hiatt
No. C50200
Exp. 6-30-09
CIVIL
STATE OF CALIFORNIA

The State of California or its officers or agents shall not be responsible for the accuracy or completeness of electronic copies of this plan sheet.

To accompany plans dated 08-15-11

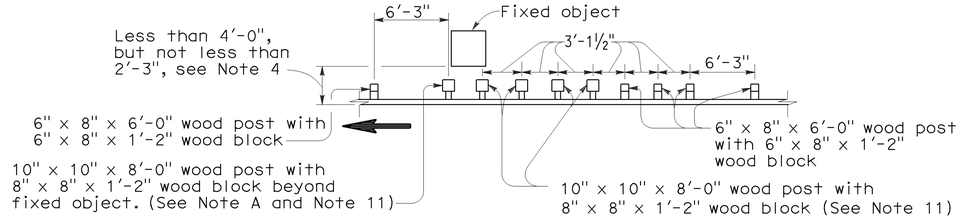

NOTE A: For a series of fixed objects (bridge columns, overhead sign supports, etc.) additional 10" x 10" x 8'-0" wood post with 8" x 8" x 1'-2" wood blocks at 3'-1½" center to center spacing are to be used between fixed object(s).

STRENGTHENED RAILING SECTIONS FOR FIXED OBJECT

Use strengthened railing sections with Layout Types 16D or 16E where minimum clearance between the guard railing and fixed object(s) is less than 4'-0", but not less than 2'-3". See Note 4.

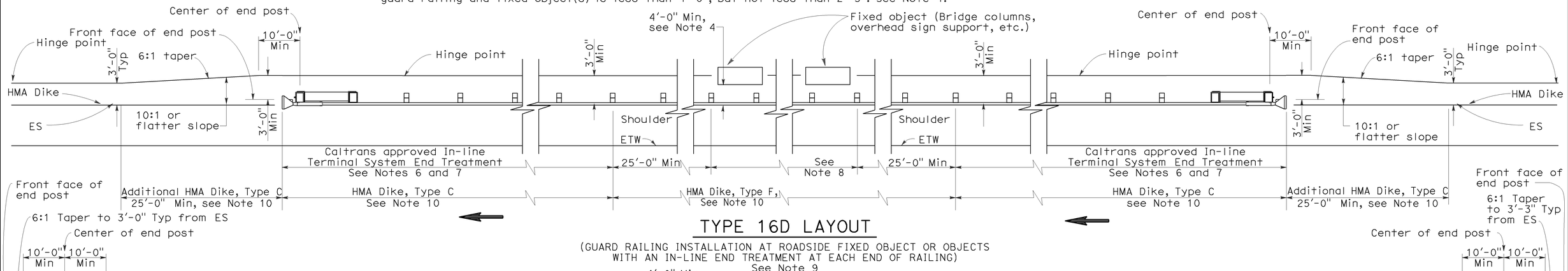

TYPE 16D LAYOUT

(GUARD RAILING INSTALLATION AT ROADSIDE FIXED OBJECT OR OBJECTS WITH AN IN-LINE END TREATMENT AT EACH END OF RAILING)
See Note 9

TYPE 16E LAYOUT

(GUARD RAILING INSTALLATION AT ROADSIDE FIXED OBJECT OR OBJECTS WITH A FLARED END TREATMENT AT EACH END OF RAILING)
See Note 9

NOTES:

1. Line post, blocks and hardware to be used are shown on Standard Plans A77A1, A77A2, A77B1, A77C1 and A77C2.
2. Guard railing post spacing to be 6'-3" center to center, except as otherwise noted.
3. Except as noted, line posts are 6" x 8" x 6'-0" wood with 6" x 8" x 1'-2" wood blocks. W6 x 9 steel posts, 6'-0" in length, with 6" x 8" x 1'-2" notched wood blocks or notched recycled plastic blocks may be used for 6" x 8" x 6'-0" wood line posts with 6" x 8" x 1'-2" wood blocks where applicable and when specified.
4. A 4'-0" minimum clearance is required between the face of the railing and the face of a fixed object located directly behind standard guard railing sections with post spacing at 6'-3". Construct guard railing as shown in the detail "Strengthened Railing Sections for Fixed Objects" on this plan, where the clearance between the face of the railing and the face of a fixed object is less than 4'-0", but not less than 2'-3". Where the clearance is less than 2'-3", a concrete wall or barrier should be constructed to shield the fixed object(s).
5. Direction of adjacent traffic indicated by ⟶ .
6. In-line Terminal System End Treatments are used where site conditions will not accommodate a flared end treatment.
7. The type of terminal system to be used will be shown on the Project Plans.
8. As site conditions dictate, construct additional guard railing to shield fixed object(s). Additional guard railing length equal to multiples of 12'-6". Post spacing at 6'-3", except as specified in Note 4.
9. Layout Types 16D through 16L, shown on the A77G Series of Revised Standard Plans, are typically used where guard railing is recommended to shield roadside fixed object(s) and a crashworthy end treatment is required for both directions of traffic.
10. Where placement of dike is required with guard railing, see Revised Standard Plan RSP A77C4 for dike positioning details.
11. W6 x 15 steel post, 8'-0" in length, with 8" x 8" x 1'-2" notched wood block or notched recycled plastic block may be used in place of the 10" x 10" x 8'-0" wood post with 8" x 8" x 1'-2" wood block shown in the "Strengthened Railing Sections Detail."

STATE OF CALIFORNIA
DEPARTMENT OF TRANSPORTATION

METAL BEAM GUARD RAILING TYPICAL LAYOUTS FOR ROADSIDE FIXED OBJECTS

NO SCALE

RSP A77G4 DATED JUNE 6, 2008 SUPERSEDES STANDARD PLAN A77G4
DATED MAY 1, 2006 - PAGE 62 OF THE STANDARD PLANS BOOK DATED MAY 2006.

REVISED STANDARD PLAN RSP A77G4

2006 REVISED STANDARD PLAN RSP A77G4

12-10-07

DIST	COUNTY	ROUTE	POST MILES TOTAL PROJECT	SHEET NO.	TOTAL SHEETS
11	SD	78	20.6/35.5	49	63

Randell D. Hiatt
REGISTERED CIVIL ENGINEER

June 6, 2008
PLANS APPROVAL DATE

REGISTERED PROFESSIONAL ENGINEER
Randell D. Hiatt
No. C50200
Exp. 6-30-09
CIVIL
STATE OF CALIFORNIA

The State of California or its officers or agents shall not be responsible for the accuracy or completeness of electronic copies of this plan sheet.

To accompany plans dated 08-15-11

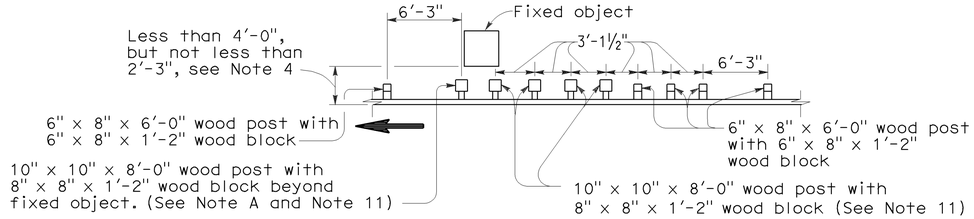

Note A. For a series of fixed objects (bridge columns, overhead sign supports, etc.) additional 10" x 10" x 8'-0" wood post with 8" x 8" x 1'-2" wood blocks at 3'-1½" center to center spacing are to be used between fixed object(s).

STRENGTHENED RAILING SECTIONS FOR FIXED OBJECT

Use strengthened railing sections with Layout Type 16H where minimum clearance between the face of the guard railing and fixed object(s) is less than 4'-0", but not less than 2'-3". See Note 4.

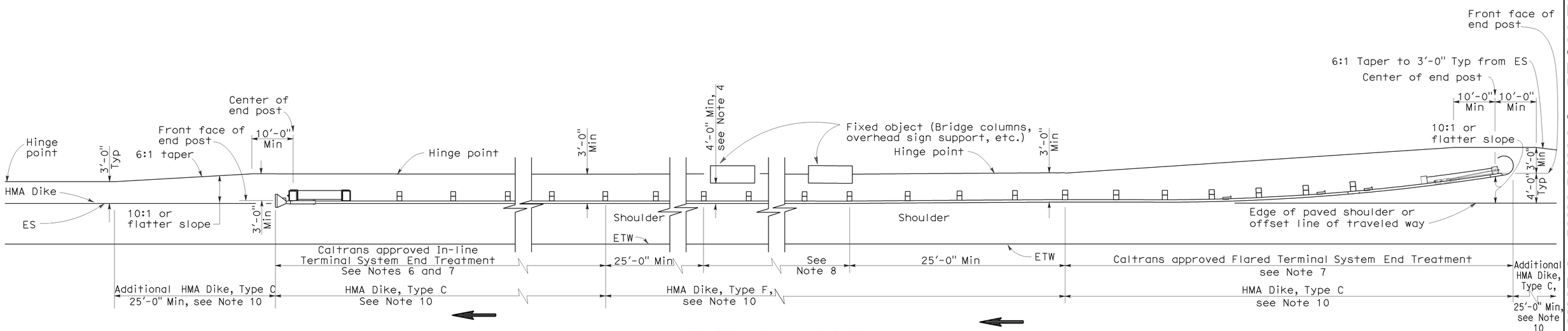

TYPE 16H LAYOUT

(GUARD RAILING INSTALLATION AT ROADSIDE FIXED OBJECT OR OBJECTS WITH A FLARED END TREATMENT AND AN IN-LINE TREATMENT AT THE ENDS OF RAILING)
See Note 9

NOTES:

1. Line post, blocks and hardware to be used are shown on Standard Plans A77A1, A77A2, A77B1, A77C1 and A77C2.
2. Guard railing post spacing to be 6'-3" center to center, except as otherwise noted.
3. Except as noted, line posts are 6" x 8" x 6'-0" wood with 6" x 8" x 1'-2" wood blocks. W6 x 9 steel posts, 6'-0" in length, with 6" x 8" x 1'-2" notched wood blocks or notched recycled plastic blocks may be used for 6" x 8" x 6'-0" wood posts with 6" x 8" x 1'-2" wood blocks where applicable and when specified.
4. A 4'-0" minimum clearance is required between the face of the railing and the face of a fixed object located directly behind standard guard railing sections with post spacing at 6'-3". Construct guard railing as shown in the detail "Strengthened Railing Sections for Fixed Objects" on this plan, where the clearance between the face of the railing and the face of a fixed object is less than 4'-0", but not less than 2'-3". Where the clearance is less than 2'-3", a concrete wall or barrier should be constructed to shield the fixed object(s).
5. Direction of adjacent traffic indicated by ⟶ .
6. In-line Terminal System End Treatments are used where site conditions will not accommodate a flared end treatment.
7. The type of terminal system to be used will be shown on the Project Plans.
8. As site conditions dictate, construct additional guard railing to shield fixed object(s). Additional guard railing length equal to multiples of 12'-6". Post spacing at 6'-3", except as specified in Note 4.
9. Layout Types 16D through 16L, shown on the A77G Series of Revised Standard PLans, typically used where guard railing is recommended to shield roadside fixed object(s) and a crashworthy end treatment is required for both directions of traffic.
10. Where placement of dike is required with guard railing, see Revised Standard Plan RSP A77C4 for dike positioning details.
11. W6 x 15 steel post, 8'-0" in length, with 8" x 8" x 1'-2" notched wood block or notched recycled plastic blocks may be used in place of the 10" x 10" x 8'-0" wood post with 8" x 8" x 1'-2" wood block shown in the "Strengthened Railing Sections Detail".

STATE OF CALIFORNIA
DEPARTMENT OF TRANSPORTATION

METAL BEAM GUARD RAILING TYPICAL LAYOUTS FOR ROADSIDE FIXED OBJECTS

NO SCALE

RSP A77G6 DATED JUNE 6, 2008 SUPERSEDES STANDARD PLAN A77G6
DATED MAY 1, 2006 - PAGE 64 OF THE STANDARD PLANS BOOK DATED MAY 2006.

REVISED STANDARD PLAN RSP A77G6

2006 REVISED STANDARD PLAN RSP A77G6

12-10-07

Dist	COUNTY	ROUTE	POST MILES TOTAL PROJECT	SHEET No.	TOTAL SHEETS
11	SD	78	20.6/35.5	50	63

Randell D. Hiatt
REGISTERED CIVIL ENGINEER

May 20, 2011
PLANS APPROVAL DATE

REGISTERED PROFESSIONAL ENGINEER
Randell D. Hiatt
No. C50200
Exp. 6-30-11
CIVIL
STATE OF CALIFORNIA

The State of California or its officers or agents shall not be responsible for the accuracy or completeness of electronic copies of this plan sheet.

To accompany plans dated 08-15-11

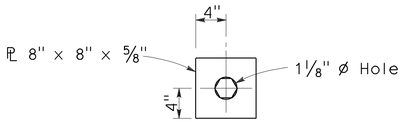

DETAIL A
CABLE CONNECTION
END PLATE

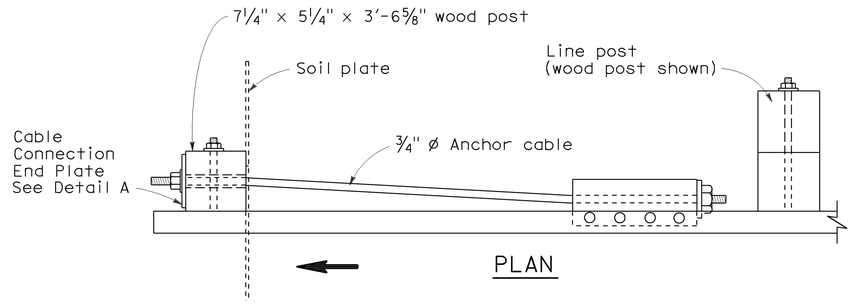

PLAN

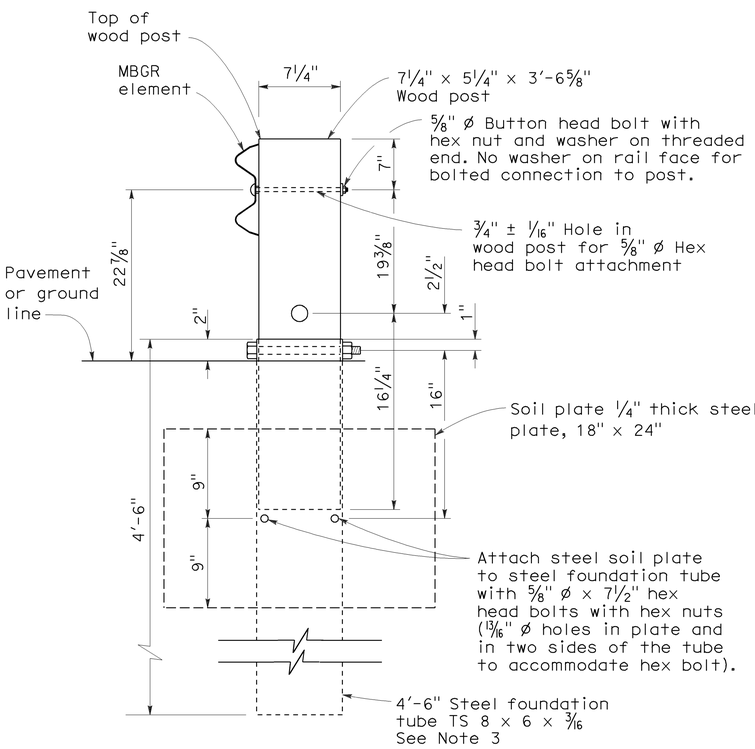

SECTION A-A

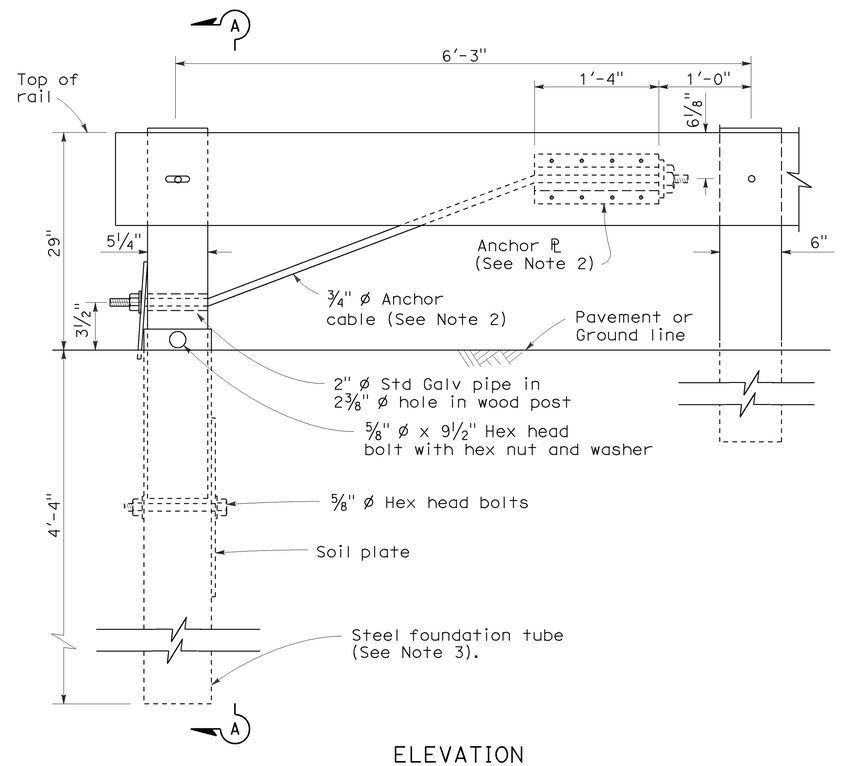

ELEVATION
END ANCHOR
ASSEMBLY (TYPE SFT)
See Note 1

NOTES:

1. See the A77E, A77F and A77G series of Standard Plans for typical use of End Anchor Assembly (Type SFT).
2. For details of the anchor plate and 3/4" cable, see Standard Plan A77H3.
3. A 6'-0" length steel foundation tube, TS 8 x 6 x 3/16, without a soil plate, may be furnished and installed in place of the 4'-6" length steel foundation tube and soil plate shown. Minimum embedment of the 6'-0" length tube shall be 5'-9". A 5/8" Ø hex head bolt and nut shall be installed in the hole in the 6'-0" length tube to keep the wood post from dropping into the tube.
4. Direction of traffic indicated by ⟹.
5. Install line post, steel foundation tube and soil plate in soil.

STATE OF CALIFORNIA
DEPARTMENT OF TRANSPORTATION

METAL RAILING END ANCHOR ASSEMBLY (TYPE SFT)

NO SCALE

RSP A77H1 DATED MAY 20, 2011 SUPERSEDES STANDARD PLAN A77H1
DATED MAY 1, 2006 - PAGE 67 OF THE STANDARD PLANS BOOK DATED MAY 2006.

REVISED STANDARD PLAN RSP A77H1

2006 REVISED STANDARD PLAN RSP A77H1

3-10-07

Dist	COUNTY	ROUTE	POST MILES TOTAL PROJECT	SHEET No.	TOTAL SHEETS
11	SD	78	20.6/35.5	51	63

Randell D. Hiatt
REGISTERED CIVIL ENGINEER

May 20, 2011
PLANS APPROVAL DATE

REGISTERED PROFESSIONAL ENGINEER
Randell D. Hiatt
No. C50200
Exp. 6-30-11
CIVIL
STATE OF CALIFORNIA

The State of California or its officers or agents shall not be responsible for the accuracy or completeness of electronic copies of this plan sheet.

To accompany plans dated 08-15-11

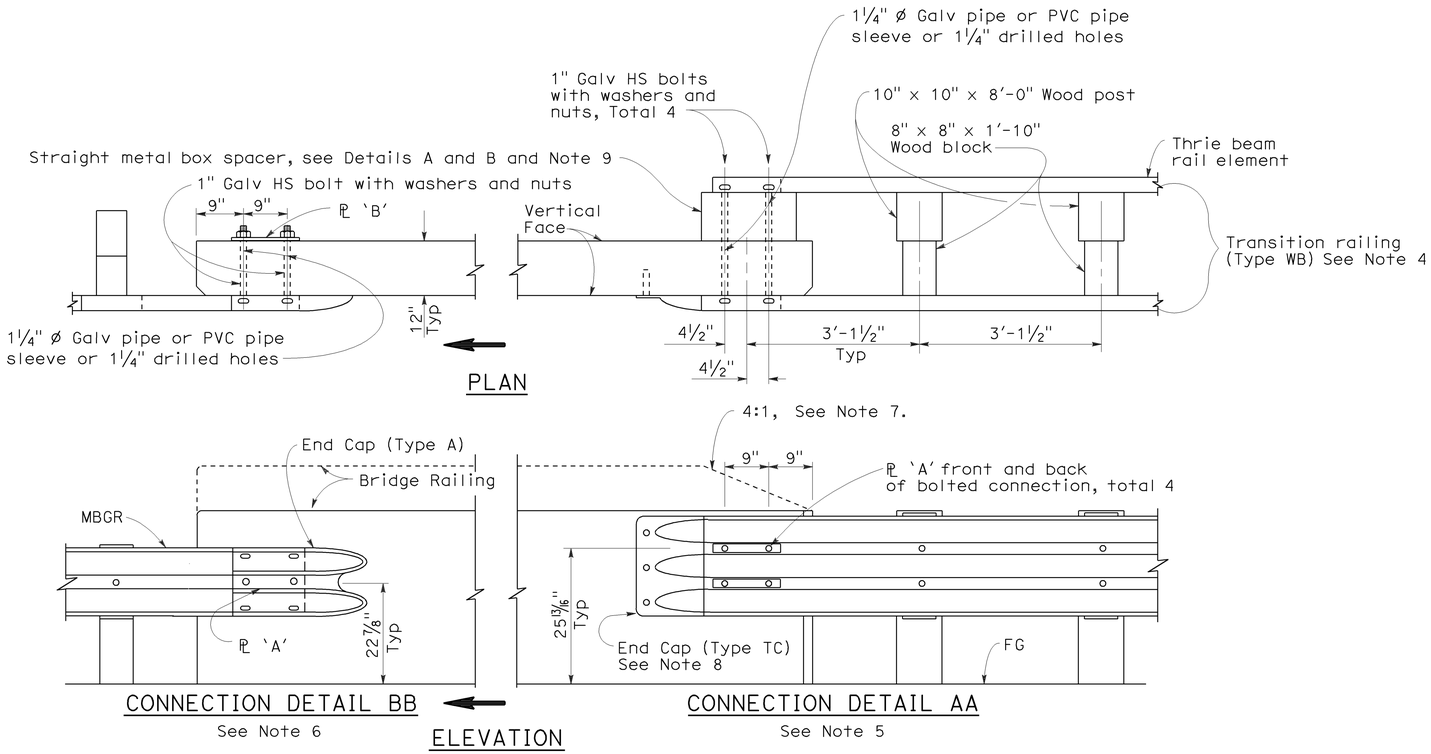

GUARD RAILING CONNECTION TO BRIDGE RAILING WITHOUT SIDEWALK

NOTES:

1. See Revised Standard Plan RSP A77J2 for additional connection details to bridges without sidewalks.
2. Additional details of posts, blocks and hardware are shown on Standard Plan A77B1, A77C1 and A77C2.
3. Direction of adjacent traffic indicated by ➡.
4. For additional details of Transition Railing (Type WB), see Standard Plan A77J4. Transition Railing (Type WB) transitions the 12 gage w-beam standard railing section of guard railing to a heavier gage nested thrie beam railing section which is connected to the concrete bridge railing.
5. For typical use of Connection Detail AA, see Layout Types 12A and 12B on Revised Standard Plan RSP A77F1, Layout Types 12C and 12D on Standard Plan A77F2, and Layout Type 12E on Revised Standard Plan RSP A77F3.
6. For typical use of Connection Detail BB, see Layout Type 12D (structure departure railing connection) on Standard Plan A77F2 and Layout Type 12DD on Standard Plan A77F5.
7. Where the height of the bridge railing exceeds the height of the thrie beam railing by more than 1" at Connection Detail AA, taper the top of the end of the bridge railing at 4:1 to match the top elevation of the thrie beam rail.
8. For details of End Cap (Type TC), see Standard Plan A77J4.
9. See Standard Plan A77J4 for additional details regarding depth dimension for straight metal box spacer.

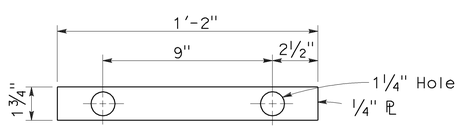

PLATE 'A'

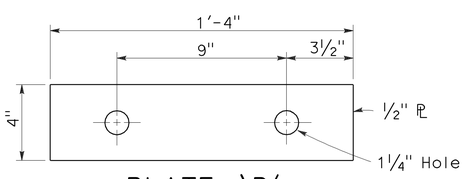

PLATE 'B'
(For backside of connection BB)

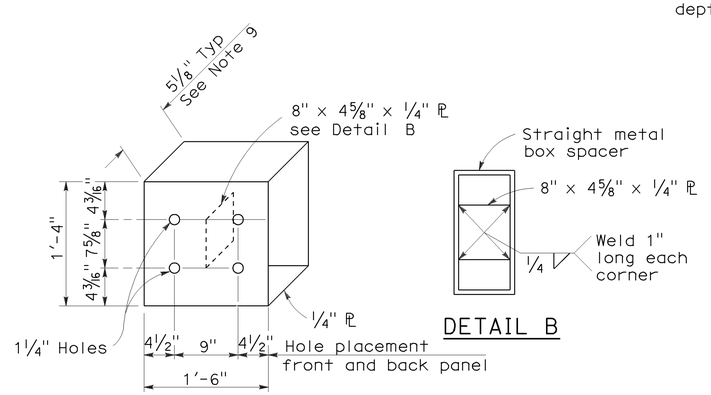

DETAIL A

DETAIL B

STRAIGHT METAL BOX SPACER

STATE OF CALIFORNIA
DEPARTMENT OF TRANSPORTATION

METAL BEAM GUARD RAILING CONNECTIONS TO BRIDGE RAILINGS WITHOUT SIDEWALKS DETAILS No.1

NO SCALE

RSP A77J1 DATED MAY 20, 2011 SUPERSEDES RSP A77J1 DATED JUNE 6, 2008 AND STANDARD PLAN A77J1 DATED MAY 1, 2006 - PAGE 72 OF THE STANDARD PLANS BOOK DATED MAY 2006.

REVISED STANDARD PLAN RSP A77J1

2006 REVISED STANDARD PLAN RSP A77J1

3-10-11

DIST	COUNTY	ROUTE	POST MILES TOTAL PROJECT	SHEET NO.	TOTAL SHEETS
11	SD	78	20.6/35.5	52	63

Randell D. Hiatt
REGISTERED CIVIL ENGINEER

June 6, 2008
PLANS APPROVAL DATE

REGISTERED PROFESSIONAL ENGINEER
Randell D. Hiatt
No. C50200
Exp. 6-30-09
CIVIL
STATE OF CALIFORNIA

The State of California or its officers or agents shall not be responsible for the accuracy or completeness of electronic copies of this plan sheet.

To accompany plans dated 08-15-11

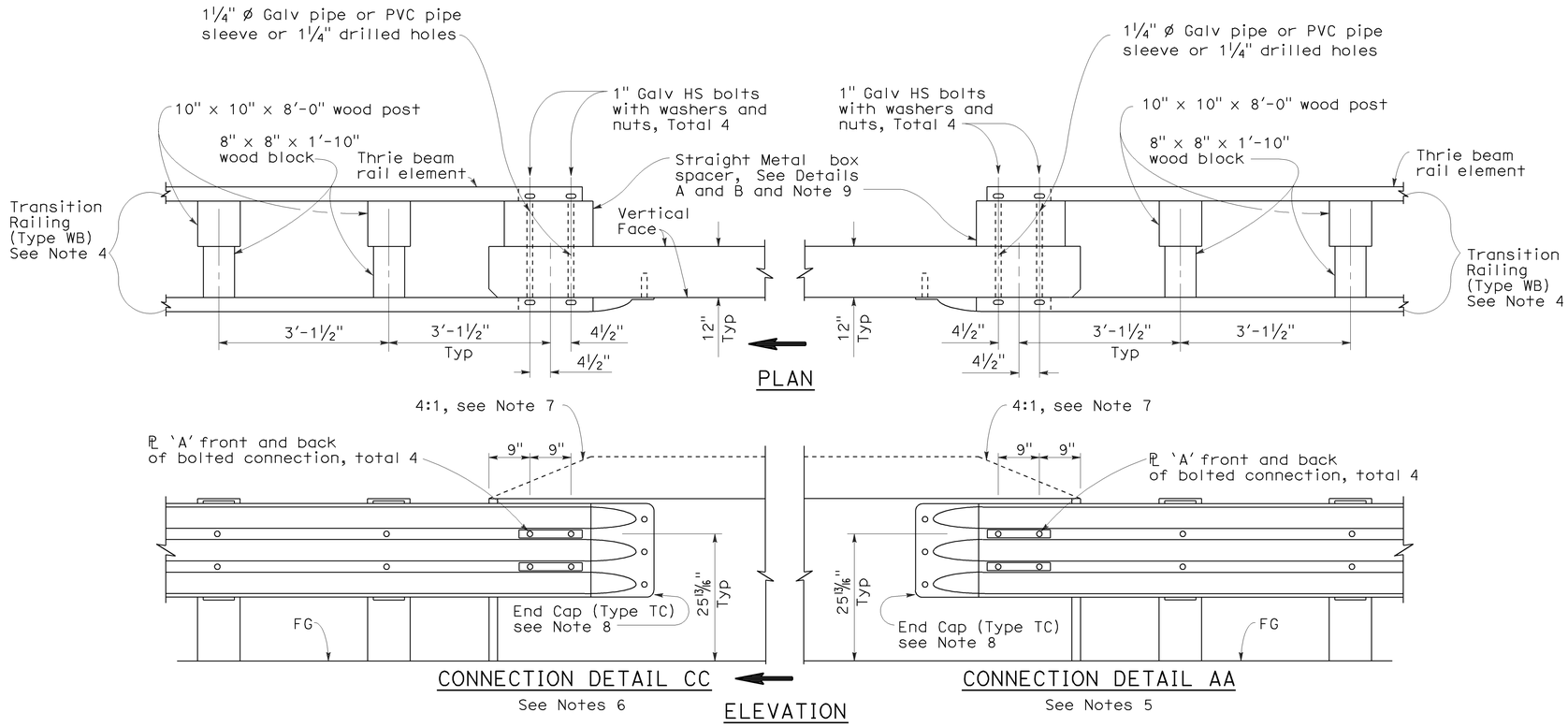

GUARD RAILING CONNECTION TO BRIDGE RAILING WITHOUT SIDEWALK

NOTES:

1. See Revised Standard Plan RSP A77J1 for additional connection details to bridges without sidewalks.
2. Additional details of posts, blocks and hardware are shown on Standard Plan A77B1, A77C1 and A77C2.
3. Direction of adjacent traffic indicated by ⟹.
4. For additional details of Transition Railing (Type WB), see Standard Plan A77J4. Transition Railing (Type WB) transitions the 12 gage w-beam standard railing section of guard railing to a heavier gage nested thrie beam railing section which is connected to the concrete bridge railing.
5. For typical use of Connection Detail AA, see Layout Types 12A and 12B on Revised Standard Plan RSP A77F1, Layout Types 12C and 12D on Standard Plan A77F2, and Layout Type 12E on Revised Standard Plan RSP A77F3.
6. For typical use of Connection Detail CC, see Layout Types 12AA and 12BB on Standard Plan A77F4 and Layout Type 12CC on Standard Plan A77F5.
7. Where the height of the bridge railing exceeds the height of the thrie beam railing by more than 1" at Connection Detail AA and connection Detail CC, taper the top of the end of the bridge railing at 4:1 to match the top elevation of the thrie beam railing.
8. For details of End Cap (Type TC), see Standard Plans A77J4.
9. See Standard Plans A77J4 for additional details regarding depth dimension for straight metal box spacer.

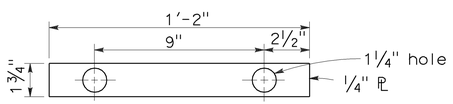

PLATE 'A'

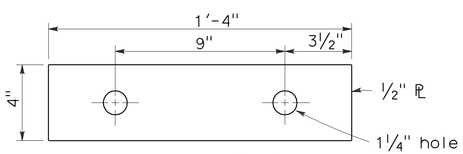

PLATE 'B'
(For backside of connection BB)

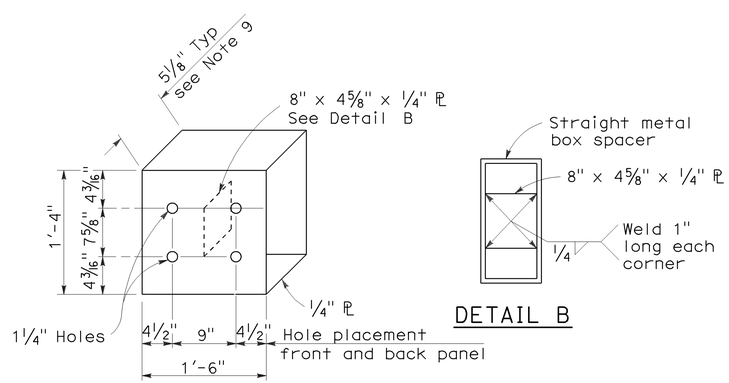

DETAIL A

DETAIL B

STRAIGHT METAL BOX SPACER

STATE OF CALIFORNIA
DEPARTMENT OF TRANSPORTATION

METAL BEAM GUARD RAILING CONNECTIONS TO BRIDGE RAILINGS WITHOUT SIDEWALKS DETAILS No.2

NO SCALE

RSP A77J2 DATED JUNE 6, 2008 SUPERSEDES STANDARD PLAN A77J2 DATED MAY 1, 2006 - PAGE 73 OF THE STANDARD PLANS BOOK DATED MAY 2006.

REVISED STANDARD PLAN RSP A77J2

2006 REVISED STANDARD PLAN RSP A77J2

12-10-07

Dist	COUNTY	ROUTE	POST MILES TOTAL PROJECT	SHEET No.	TOTAL SHEETS
11	SD	78	20.6/35.5	53	63

Randell D. Hiatt
REGISTERED CIVIL ENGINEER

May 20, 2011
PLANS APPROVAL DATE

REGISTERED PROFESSIONAL ENGINEER
Randell D. Hiatt
No. C50200
Exp. 6-30-11
CIVIL
STATE OF CALIFORNIA

The State of California or its officers or agents shall not be responsible for the accuracy or completeness of electronic copies of this plan sheet.

To accompany plans dated 08-15-11

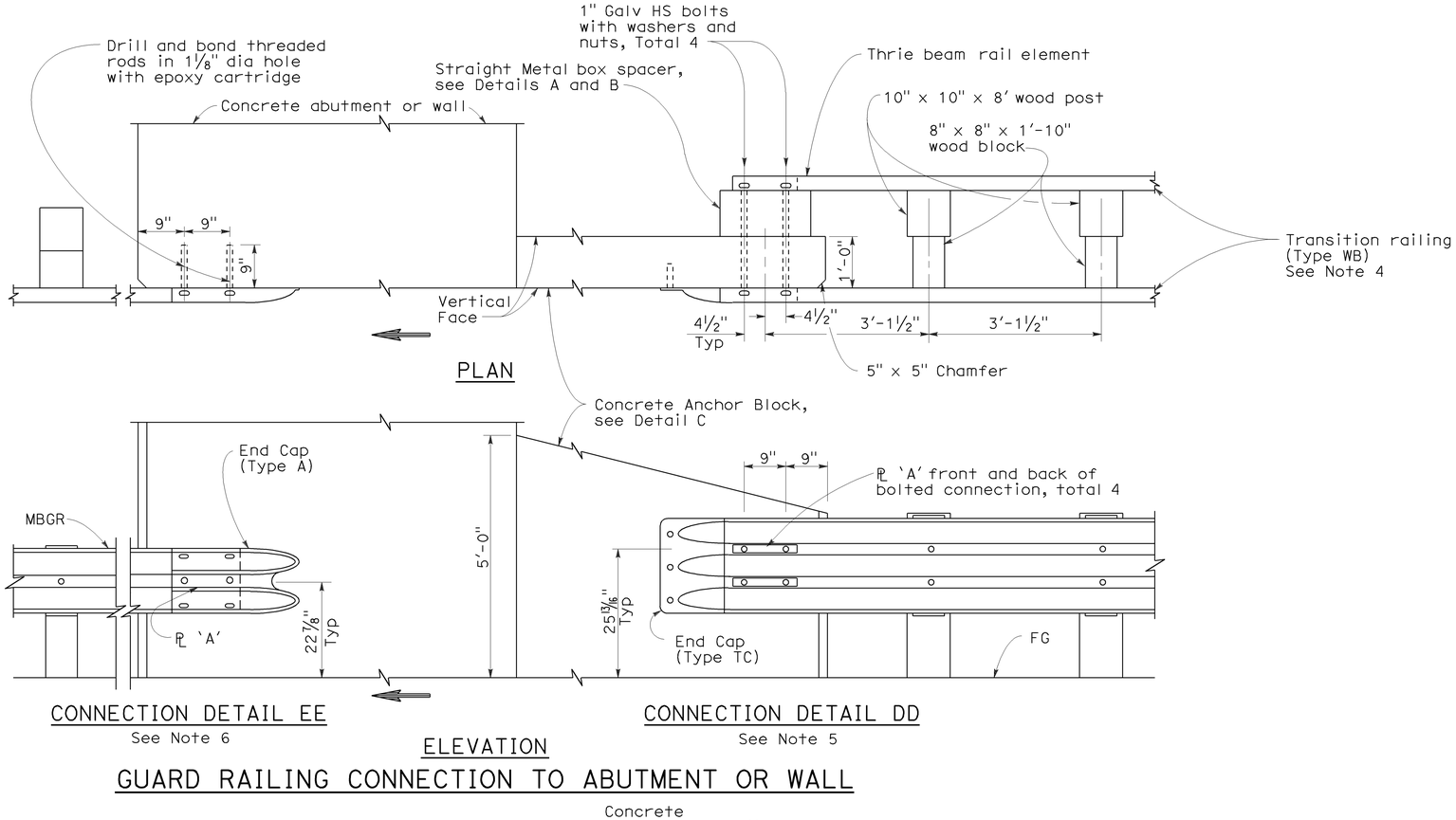

GUARD RAILING CONNECTION TO ABUTMENT OR WALL

NOTES:

1. These connection details apply to abutments and walls.
2. Additional details of posts, blocks and hardware are shown on Standard Plans A77B1, A77C1 and A77C2.
3. Direction of adjacent traffic indicated by ➡.
4. For additional details of Transition Railing (Type WB), see Standard Plan A77J4 Transition Railing (Type WB) transitions the 12 gage w-beam standard railing section of guard railing to a heavier gage nested thrie beam railing section which is connected to the concrete anchor block.
5. For typical use of Connection Details DD, See Layout Types 12A and 12B on Standard Plan A77F1 and Layout Types 12C and 12D on Standard Plan A77F2.
6. For typical use of Connection Detail EE, see Layout Type 12D on Standard Plan A77F2 and Layout Type 12DD on Standard Plan A77F5.

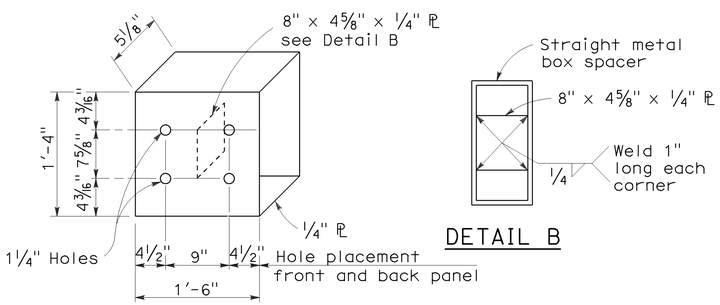

DETAIL A

STRAIGHT METAL BOX SPACER

DETAIL B

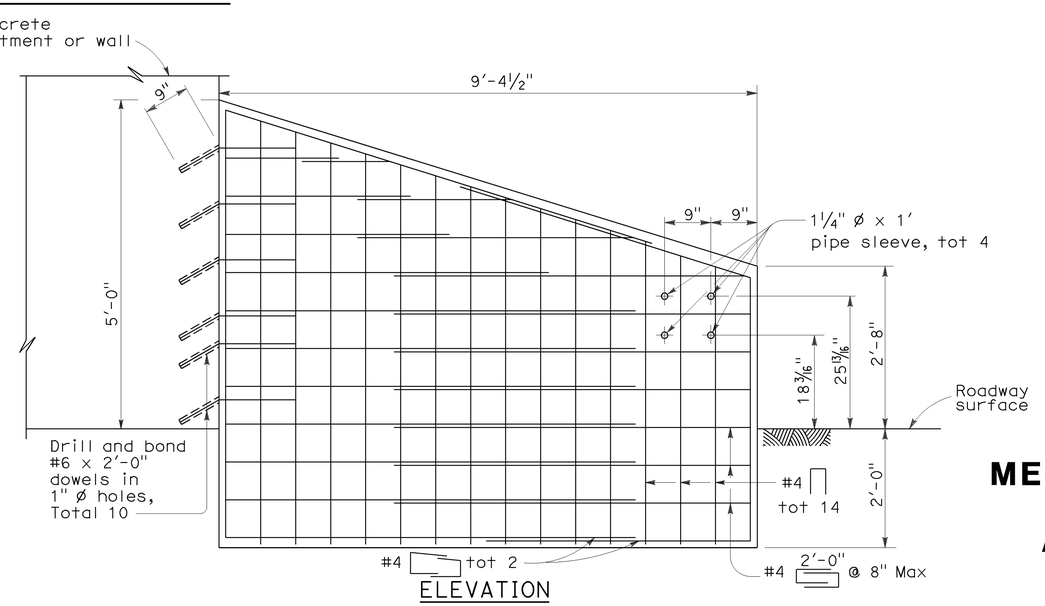

ELEVATION

ANCHOR BLOCK FOR TRANSITION RAILING CONNECTION

DETAIL C

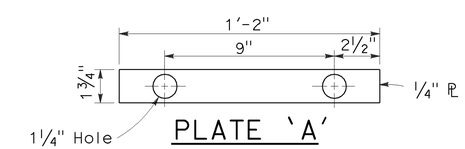

PLATE 'A'

STATE OF CALIFORNIA
DEPARTMENT OF TRANSPORTATION

METAL BEAM GUARD RAILING CONNECTIONS TO ABUTMENTS AND WALLS

NO SCALE

RSP A77J3 DATED MAY 20, 2011 SUPERSEDES STANDARD PLAN A77J3 DATED MAY 1, 2006 - PAGE 74 OF THE STANDARD PLANS BOOK DATED MAY 2006.

REVISED STANDARD PLAN RSP A77J3

2006 REVISED STANDARD PLAN RSP A77J3

3-10-11

Dist	COUNTY	ROUTE	POST MILES TOTAL PROJECT	SHEET No.	TOTAL SHEETS
11	SD	78	20.6/35.5	54	63

Randell D. Hiatt
REGISTERED CIVIL ENGINEER

May 20, 2011
PLANS APPROVAL DATE

To accompany plans dated 08-15-11

REGISTERED PROFESSIONAL ENGINEER Randell D. Hiatt No. C50200 Exp. 6-30-11 CIVIL STATE OF CALIFORNIA

The State of California or its officers or agents shall not be responsible for the accuracy or completeness of electronic copies of this plan sheet.

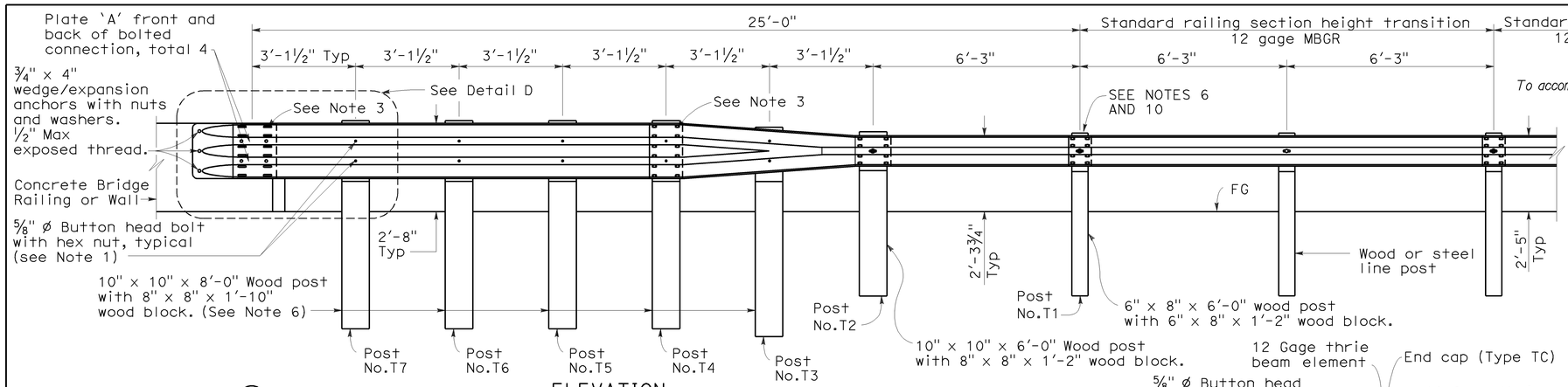

ELEVATION

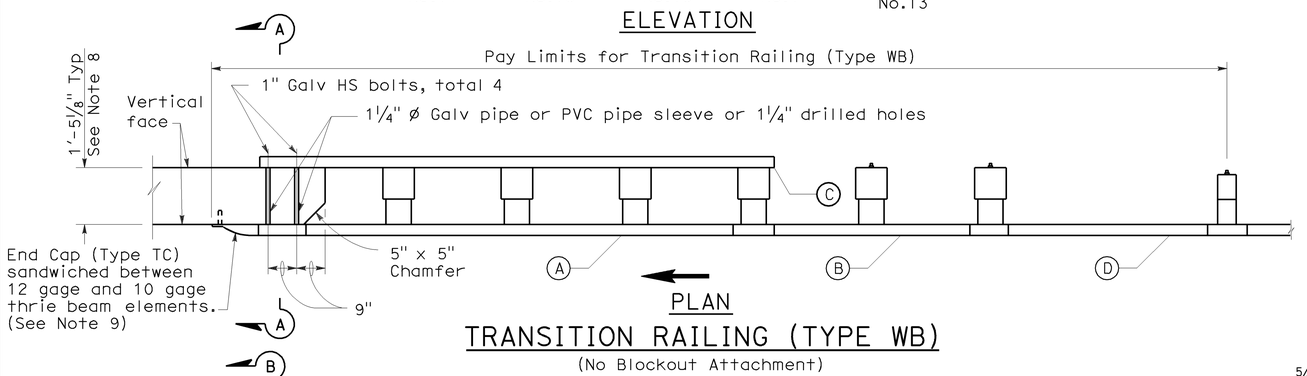

PLAN

TRANSITION RAILING (TYPE WB)

(No Blockout Attachment)

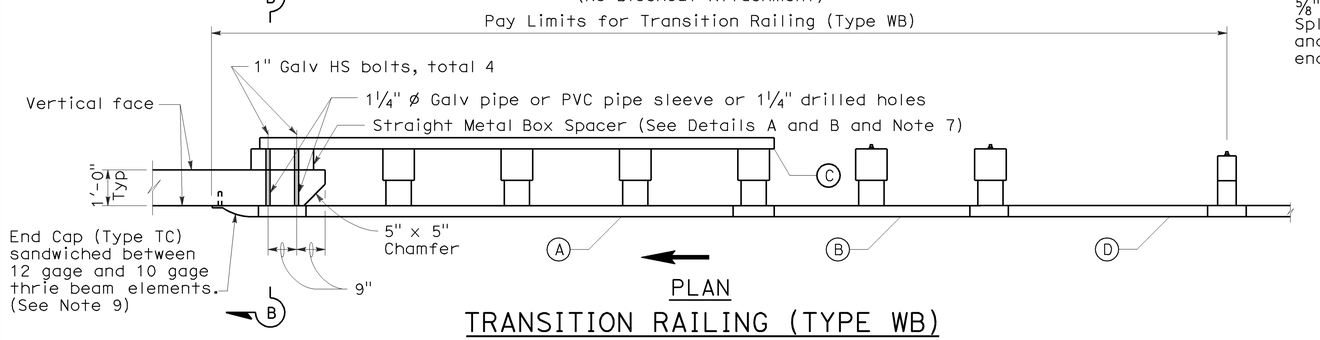

PLAN

TRANSITION RAILING (TYPE WB)

(Blockout Attachment)

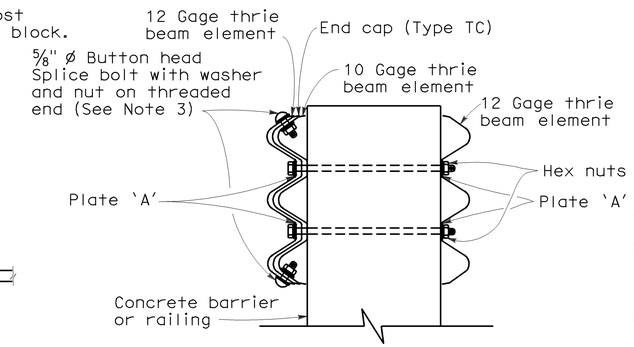

SECTION A-A

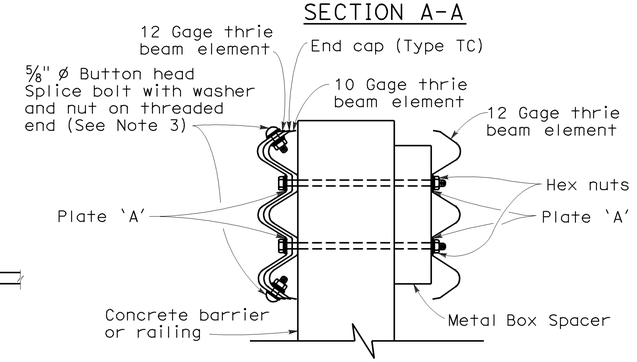

SECTION B-B

LEGEND

(A) Nested thrie beam elements (one 12 gage element nested over one 10 gage element).

(B) One 10 gage "W" beam to thrie beam element.

(C) One 12 gage thrie beam element.

(D) One 10 gage "W" beam rail element (7'-3½" length)

10 gage = 0.135" thick

12 gage = 0.108" thick

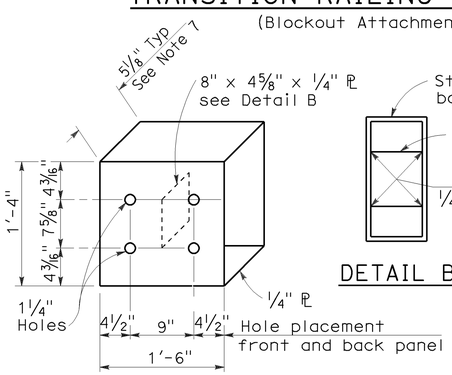

DETAIL A

STRAIGHT METAL BOX SPACER

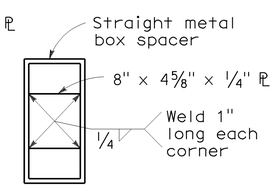

DETAIL B

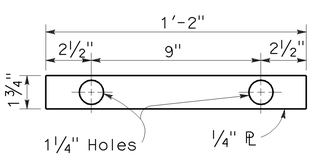

DETAIL C

PLATE 'A'

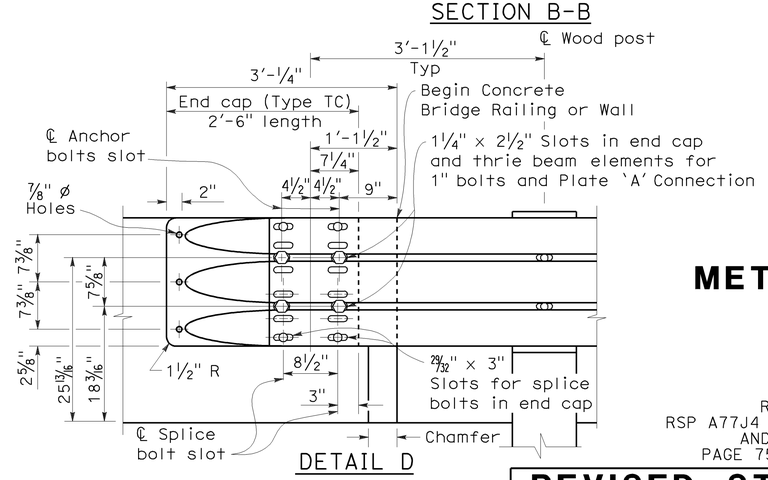

DETAIL D

NOTES:

1. Use ⅝" ø Button head bolts and hex nuts for connections to posts. No washer on rail face for bolted connections to post.
2. The nested rail elements, end cap, and 'W' beam to thrie beam element may be spliced together prior to bolting the elements to the wood post and concrete barrier or railing.
3. Exterior splice bolt holes for rail element splices at Post No. T4 and the connection to the concrete barrier or railing shall be the standard 29⁄32" x 1⅛" slot size. Interior splice bolt holes at these locations may be increased up to 1¼" ø. Only the top 2 and the bottom 2 splice bolts with washers and nuts are required for rail splices at Post No. T4 and the connection to the concrete barrier or railing.
4. Direction of adjacent traffic indicated by ➡.
5. The top elevation of Posts No. T2 through No. T7 shall not project more than 1" above the top elevation of the rail element.
6. Typically, the railing connected to Transition Railing (Type WB) will be either standard railing section of metal beam guard railing with height transition ratio of 120:1 or an approved Caltrans end treatment attached to Post No. T1.
7. The depth of the metal box spacer varies from the 5⅛" to 1½" and is dependent on the width of the concrete railing or wall. The combined dimension for the depth of the metal box spacer plus the width of railing or wall is typically 17⅛". Where the space between the backside of the concrete railing or wall and the rear thrie beam element is less than 1½", metal plates similar to Plate 'A' are to be used as spacers.
8. Where the width of the concrete railing or wall is greater than 17⅛", wood blocks are to be used to fill the space created between the backside of Posts No. T4 through No. T7 and the rear thrie beam element. These wood blocks shall be 8" in width and 1'-2" in length. The dimension between the front thrie beam element and the rear thrie beam element is to match the width of the concrete railing or wall.
9. End cap may be installed over 12 gage and 10 gage thrie beam elements where transition railing is installed on the departure end of bridge railing.
10. Conform standard railing section height to 2'-3¾" at Post No. T1 using height transition ratio of 120:1.

STATE OF CALIFORNIA
DEPARTMENT OF TRANSPORTATION

METAL BEAM GUARD RAILING TRANSITION RAILING (TYPE WB)

NO SCALE

RSP A77J4 DATED MAY 20, 2011 SUPERSEDES
RSP A77J4 DATED JUNE 5, 2009, RSP A77J4 DATED JUNE 6, 2008
AND STANDARD PLAN A77J4 DATED MAY 1, 2006 -
PAGE 75 OF THE STANDARD PLANS BOOK DATED MAY 2006.

REVISED STANDARD PLAN RSP A77J4

2006 REVISED STANDARD PLAN RSP A77J4

5-14-09

DIST	COUNTY	ROUTE	POST MILES TOTAL PROJECT	SHEET NO.	TOTAL SHEETS
11	SD	78	20.6/35.5	55	63

Raymond Don Tsztoo
REGISTERED CIVIL ENGINEER

January 18, 2008
PLANS APPROVAL DATE

REGISTERED PROFESSIONAL ENGINEER
Raymond Don Tsztoo
No. C37332
Exp. 6-30-08
CIVIL
STATE OF CALIFORNIA

The State of California or its officers or agents shall not be responsible for the accuracy or completeness of electronic copies of this plan sheet.

To accompany plans dated 08-15-11

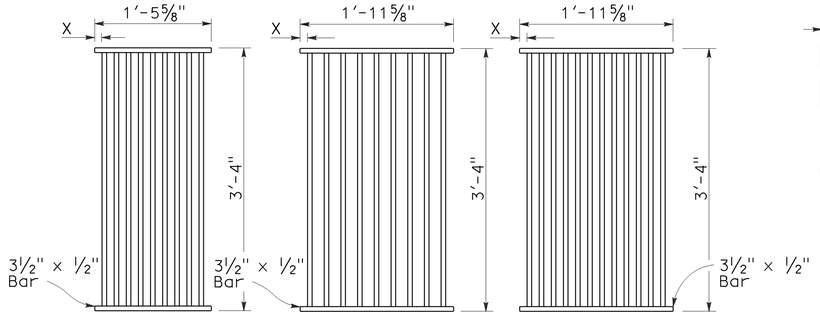

TYPE 18-9

1⅜" Clear spacing. Use within the roadbed on highways where bicycles and pedestrians are excluded.

TYPE 24-9

2" Clear spacing. Use in locations off the roadbed on all types of highways.

TYPE 24-12

1⅜" Clear spacing. Use within the roadbed on highways where bicycles and pedestrians are excluded.

RECTANGULAR GRATE DETAILS

(See table below)

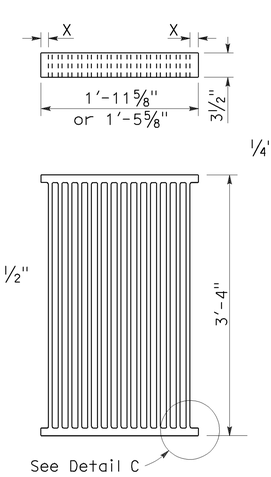

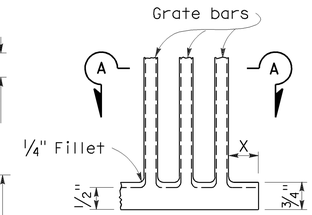

DETAIL C

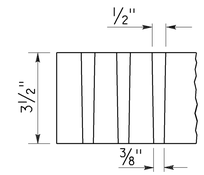

SECTION A-A

ALTERNATIVE CAST NODULAR IRON GRATE OR CAST STEEL GRATE

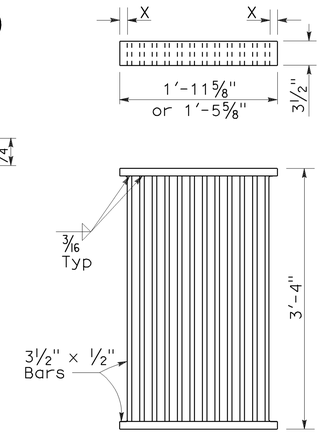

ALTERNATIVE WELDED GRATE

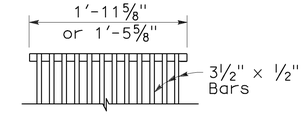

CAST END BLOCK

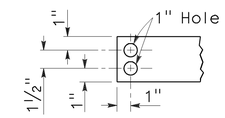

END OF BAR

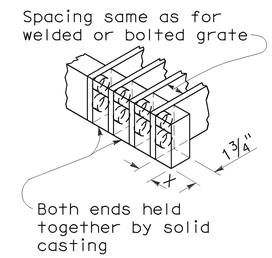

ALTERNATIVE CAST NODULAR IRON OR CAST STEEL END BLOCK GRATE

NOTES:

1. Grate type numbers refer to approximate width of grate in inches and number of bars, respectively.
2. Contractor has the option of using cast nodular iron, cast steel, welded, bolted, or cast end block grate.
3. See Special Provisions for requirements pertaining to galvanizing or asphalt dipping of grates and frames.
4. Rounded top of bars optional on all grates.
5. Pipe inlets with a grate shall be placed so that bars parallel direction of principle surface flow.
6. Full penetration butt welds may be substituted for the fillet welds on all anchors.
7. Standard square, hexagon, round or equivalent headed anchors may be substituted for the right angle hooks on the anchors shown on this plan.
8. Grate and frame weights are based on welded grates (weights of face angles, steps, protection bars, etc. are not included).

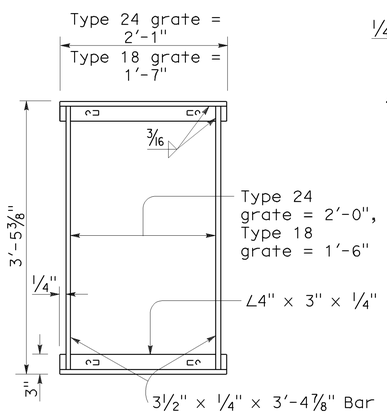

TYPICAL FRAME

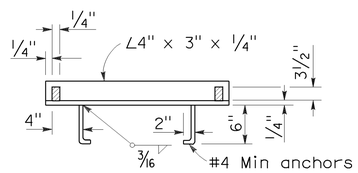

CROSS SECTION

(Thru frame)

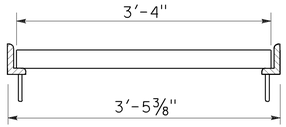

LONGITUDINAL SECTION

(Thru frame and grate)

RECTANGULAR FRAME DETAILS

(For all rectangular grates)

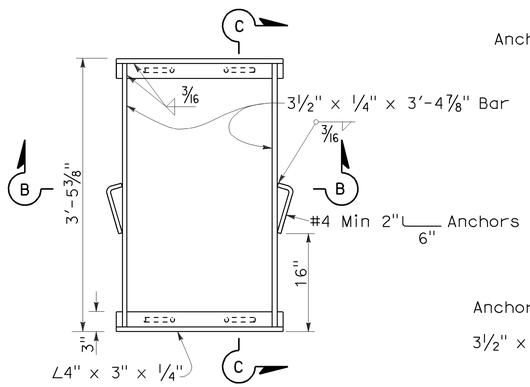

TYPICAL FRAME

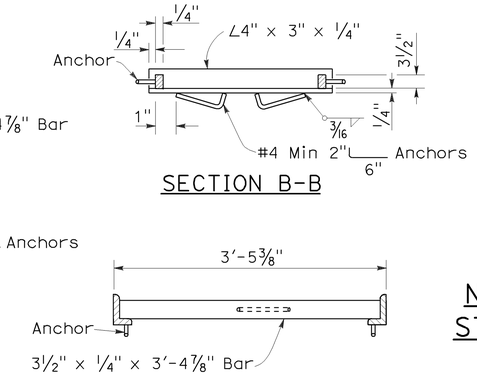

SECTION B-B

SECTION C-C

ALTERNATIVE ANCHOR FOR RECTANGULAR FRAME

(For details not shown, See Rectangular Frame Details)

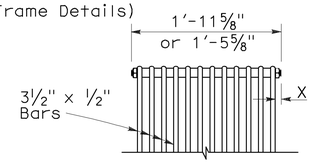

BOLTED END BLOCK

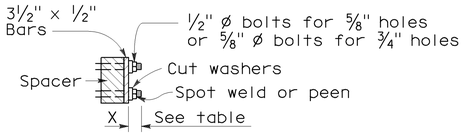

BOLTING DETAIL

ALTERNATIVE BOLTED GRATE

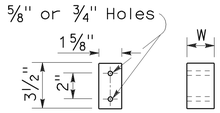

BAR SPACER

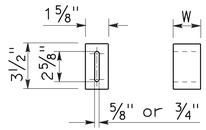

ALTERNATIVE SPACER

W = 1⅜" or 2"

GRATE BAR SPACING TABLE

TYPE	No. OF BARS	CLEAR BAR SPACING	X
18-9	9	1⅜"	1 1/16"
24-9	9	2"	1 9/16"
24-12	12	1⅜"	1¼"

INLET TYPE	COVER TYPE	WEIGHT LB
OS	PLATE	174
OL-7	PLATE	170
OL-10	PLATE	170
OL-14	PLATE	170
OL-21	PLATE	170
OCP	PLATE	112
OCPI	PLATE	112
OCPI	REDWOOD	42
OMP	PLATE	177
OMPI	PLATE	177

INLET TYPE	GRATE TYPE	No. OF GRATES	WEIGHT LB
GDO	24-12	2	634
GOL-7	24-12	1	326
GOL-10	24-12	1	326
GO,G1,G2,G3,G4 (TYPE 24)	24-9	1	263
	24-12	1	326
G4 (TYPE 18),G5,G6	18-9	1	249
GT1	18-9	2	498
GT2	18-9	2	498
GT3	24-12	2	652
GT4	24-12	2	652
TRASH RACK			22

BASIS FOR MISC IRON & STEEL FINAL PAY WEIGHTS FOR DRAINAGE INLETS

(See General Notes, No 8)

STATE OF CALIFORNIA
DEPARTMENT OF TRANSPORTATION

GRATE DETAILS

NO SCALE

RSP D77A DATED JANUARY 18, 2008 SUPERSEDES STANDARD PLAN D77A DATED MAY 1, 2006 - PAGE 155 OF THE STANDARD PLANS BOOK DATED MAY 2006.

REVISED STANDARD PLAN RSP D77A

2006 REVISED STANDARD PLAN RSP D77A

12-14-07

DIST	COUNTY	ROUTE	POST MILES TOTAL PROJECT	SHEET NO.	TOTAL SHEETS
11	SD	78	20.6/35.5	56	63

Raymond Don Tsztoo
REGISTERED CIVIL ENGINEER

June 6, 2008
PLANS APPROVAL DATE

REGISTERED PROFESSIONAL ENGINEER
Raymond Don Tsztoo
No. C37332
Exp. 6-30-08
CIVIL
STATE OF CALIFORNIA

The State of California or its officers or agents shall not be responsible for the accuracy or completeness of electronic copies of this plan sheet.

To accompany plans dated 08-15-11

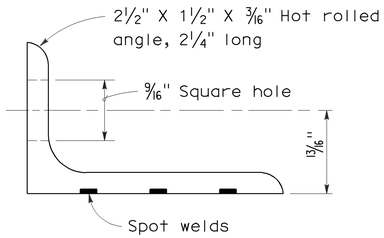

ANGLE

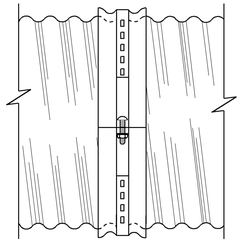

SIDE VIEW
ANGLE

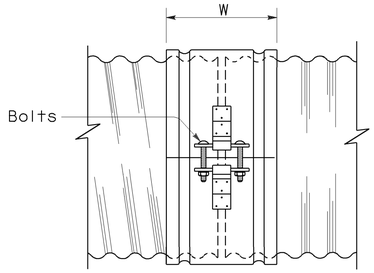

SIDE VIEW
SINGLE BAR AND STRAP

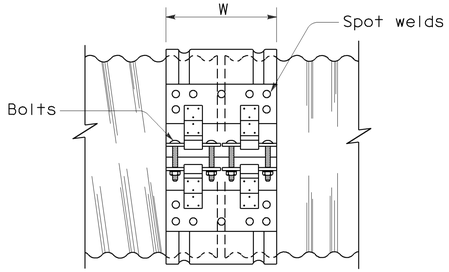

SIDE VIEW
DOUBLE BAR AND STRAP

NOTES:

1. All ferrous metal coupling band connection hardware shall be galvanized or electroplated in accordance with the Standard Specifications.
2. Dimensions and thicknesses shown are minimum.
3. Spot welds shall develop minimum required strength of strap.
4. Fillet welds of equivalent strength may be substituted for spot welds or rivets.
5. Dimension depends upon whether end condition is lips up or lips down.

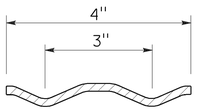

SECTION

H-4 HUGGER BAND

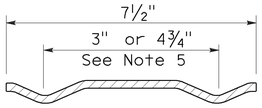

SECTION

H-7 HUGGER BAND

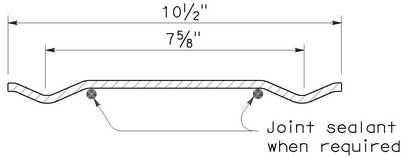

SECTION

H-10 HUGGER BAND

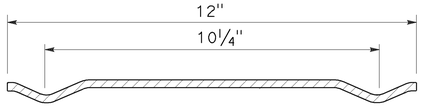

SECTION

H-12 HUGGER BAND

HUGGER COUPLING BANDS

STATE OF CALIFORNIA
DEPARTMENT OF TRANSPORTATION

CORRUGATED METAL PIPE COUPLING DETAILS No. 4 HUGGER COUPLING BANDS

NO SCALE

RSP D97D DATED JUNE 6, 2008 SUPERSEDES STANDARD PLAN D97D
DATED MAY 1, 2006 - PAGE 186 OF THE STANDARD PLANS BOOK DATED MAY 2006.

REVISED STANDARD PLAN RSP D97D

2006 REVISED STANDARD PLAN RSP D97D

3-24-08

DIST	COUNTY	ROUTE	POST MILES TOTAL PROJECT	SHEET NO.	TOTAL SHEETS
11	SD	78	20.6/35.5	57	63

Raymond Don Tsztoo
REGISTERED CIVIL ENGINEER

June 6, 2008
PLANS APPROVAL DATE

REGISTERED PROFESSIONAL ENGINEER Raymond Don Tsztoo No. C37332 Exp. 6-30-08 CIVIL STATE OF CALIFORNIA

The State of California or its officers or agents shall not be responsible for the accuracy or completeness of electronic copies of this plan sheet.

ANNULAR AND HELICAL PROFILE

COUPLING TYPE	PIPE CORRUGATION	PIPE SIZE	W OR A	PIPE WALL THICKNESS CSP	PIPE WALL THICKNESS CAP	BAND THICKNESS CSP	BAND THICKNESS CAP	BAR AND STRAP (CSP ONLY) STRAP THICKNESS	BOLTS Dia	BAR Dia	BAR YIELD STRENGTH	ANGLE DIMENSIONS CSP	ANGLE DIMENSIONS CAP	BOLTS (No.- Dia) CSP	BOLTS (No.- Dia) CAP	RIVETS ANGLE TO BAND CSP	RIVETS ANGLE TO BAND CAP	SPOT WELDS ANGLE TO BAND CSP
TWO PIECE INTEGRAL FLANGE	1½′ × ¼"	6"-10"	7"	0.052"-0.079"	0.048"-0.060"	0.052"	0.060"							2-⅜"	2-⅜"			
		12"-18"	7"	0.052"-0.079"		0.064"								2-½"				
	2⅔" × ½"	12"-24"	7"	0.052"-0.079"	0.060"-0.105"	0.064"	0.060"							2-½"	2-½"			
UNIVERSAL	2⅔" × ½"	THROUGH 36"	12"	0.052"-0.138"	0.060"-0.135"	0.052"	0.060"					2" × 2" × 3/16"	2" × 2" × 3/16"	3-½"	3-½"	3-⅜"	3-⅜"	3-½"
		42"-60"	12"	0.052"-0.168"	0.075"-0.164"	0.052"	0.060"					2" × 2" × 3/16"	2" × 2" × 3/16"	3-½"	3-½"	3-⅜"	3-⅜"	5-½"
		THROUGH 72"	12"	0.052"-0.168"	0.164"	0.052"	0.105"	0.079"	½"	⅞"	32 ksi	2" × 2" × 3/16"	2" × 2" × 3/16"	3-½"	3-½"	3-⅜"	3-⅜"	5-½"
		78"-84"	16¼"	0.168"		0.079"		DOUBLE 0.079"	½"	⅞"	32 ksi							
ANNULAR	2⅔" × ½"	THROUGH 36"	7"	0.064"-0.138"	0.060"-0.135"	0.052"	0.060"	0.079"	½"	⅞"	32 ksi	2" × 2" × 3/16"	2" × 2" × 3/16"	2-½"	2-½"	3-⅜"	3-⅜"	3-½"
		42"-72"	12"	0.064"-0.168"	0.075"-0.164"	0.052"	0.105"	0.079"	½"	⅞"	32 ksi	2" × 2" × 3/16"	2" × 2" × 3/16"	3-½"	3-½"	3-⅜"	3-⅜"	5-½"
		78"-84"	12"	0.168"		0.079"		0.109"	½"	⅞"	45 ksi	2" × 2" × 3/16"		3-½"		3-⅜"		5-½"
	3" × 1"	48"-90"	14"	0.064"-0.109"		0.052"		0.079"	½"	⅞"	32 ksi	2" × 2" × 3/16"		3-½"		3-⅜"		5-½"
		96"-120"	14"	0.079"-0.109"		0.052"		0.109"	½"	⅞"	45 ksi	2" × 2" × 3/16"		3-½"		4-⅜"		
		42"-108"	14"		0.060"-0.135"		0.060"						2" × 2" × 3/16"		3-½"		3-⅜"	
HELICAL	2⅔" × ½"	THROUGH 36"	12"	0.052"-0.138"	0.060"-0.135"	0.052"	0.060"	0.079"	½"	⅞"	32 ksi	2" × 2" × 3/16"	2" × 2" × 3/16"	3-½"	3-½"	3-⅜"	3-⅜"	3-½"
		42"-72"	12"	0.052"-0.168"	0.075"-0.164"	0.052"	0.060"	0.079"	½"	⅞"	32 ksi	2" × 2" × 3/16"	2" × 2" × 3/16"	3-½"	3-½"	3-⅜"	3-⅜"	5-½"
		78"-84"	12"	0.168"		0.079"		0.109"	½"	⅞"	45 ksi	2" × 2" × 3/16"		3-½"		3-⅜"		5-½"
	3" × 1"	48"-90"	14"	0.064"-0.109"		0.052"		0.079"	½"	⅞"	32 ksi	2" × 2" × 3/16"		3-½"		3-⅜"		5-½"
		96"-120"	14"	0.079"-0.109"		0.052"		0.109"	½"	⅞"	45 ksi	2" × 2" × 3/16"		3-½"		4-⅜"		
		42"-108"	14"		0.060"-0.135"		0.060"						2" × 2" × 3/16"		3-½"		3-⅜"	
HUGGER	2⅔" × ½" REROLLED END	12"-54"	4"	0.052"-0.109"		0.052"						2½" × 1½" × 3/16"	2½" × 1½" × 3/16"	1-½"				3-½"
		60"-66"	4"	0.109"		0.064"						2½" × 1½" × 3/16"	2½" × 1½" × 3/16"	1-½"				3-½"
		36"-48"	4"	0.138"		0.064"						2½" × 1½" × 3/16"	2½" × 1½" × 3/16"	1-½"				3-½"
		THROUGH 72"	10½"	0.052"-0.168"		0.052"		0.079"	½"	⅞"	32 ksi							
		78"-84"	10½"	0.168"		0.079"		0.109"	½"	⅞"	45 ksi							
	3" × 1" REROLLED END	48"-90"	10½"	0.064"-0.109"		0.052"		0.079"	½"	⅞"	32 ksi							
		96"-120"	10½"	0.079"-0.109"		0.052"		0.109"	½"	⅞"	45 ksi							
	5" × 1" REROLLED END	48"-66"	7½"	0.064"-0.109"		0.064"		0.079"	½"	⅞"	32 ksi	2½" × 1½" × 3/16"	2½" × 1½" × 3/16"	1-½"				3-½"
		72"-90"	7½"	0.064"-0.079"		0.064"		0.079"	½"	⅞"	32 ksi	2½" × 1½" × 3/16"	2½" × 1½" × 3/16"	1-½"				3-½"
		48"-90"	7½"	0.064"-0.138"		0.064"		0.079"	½"	⅞"	32 ksi							
		48"-120"	12" SEE	0.064"-0.109"		0.064"		0.079"	½"	⅞"	32 ksi							
		48"-84"	12" NOTE	0.138"		0.064"		0.079"	½"	⅞"	32 ksi							
		90"-120"	12" 11	0.138"		0.064"		DOUBLE 0.079"	½"	⅞"	32 ksi							

SPIRAL RIB PROFILE

COUPLING TYPE	PIPE CORRUGATION	PIPE SIZE	W	PIPE WALL THICKNESS SSRP	PIPE WALL THICKNESS ASRP	BAND THICKNESS SSRP	BAND THICKNESS ASRP	BAR AND STRAP (SSRP ONLY) STRAP THICKNESS	BOLTS Dia	BAR Dia	BAR YIELD STRENGTH	ANGLE DIMENSIONS SSRP	ANGLE DIMENSIONS ASRP	BOLTS (No.- Dia) SSRP	BOLTS (No.- Dia) ASRP	RIVETS ANGLE TO BAND SSRP	RIVETS ANGLE TO BAND ASRP	SPOT WELDS ANGLE TO BAND SSRP
ANNULAR	2⅔" × ½" * REROLLED END	24"-36"	12"	0.064"-0.109"	0.060"-0.105"	0.052"	0.060"	0.079"	½"	⅞"	32 ksi	2" × 2" × 3/16"	2" × 2" × 3/16"	3-½"	3-½"	3-⅜"	3-⅜"	5-½"
		42"-60"	12"	0.064"-0.109"	0.075"-0.105"	0.052"	0.105"	0.079"	½"	⅞"	32 ksi	2" × 2" × 3/16"	2" × 2" × 3/16"	3-½"	3-½"	3-⅜"	3-⅜"	5-½"
		66"-72"	12"	0.064"-0.109"		0.052"		0.079"	½"	⅞"	32 ksi	2" × 2" × 3/16"	2" × 2" × 3/16"	3-½"	3-½"	3-⅜"	3-⅜"	5-½"
		78"-114"	12"	0.079"-0.109"		0.079"		0.109"	½"	⅞"	45 ksi	2" × 2" × 3/16"	2" × 2" × 3/16"	3-½"	3-½"	3-⅜"	3-⅜"	5-½"
HUGGER	2⅔" × ½" * REROLLED END	24"-72"	10½"	0.064"-0.109"		0.052"		0.079"	½"	⅞"	32 ksi							
		78"-84"	10½"	0.109"		0.079"		0.109"	½"	⅞"	45 ksi							

* See Note 14.

14. All profiles of Spiral Rib Pipe (¾" × ¾" ribs at 7½" pitch and ¾" × 1" ribs at 11½" pitch in both steel and aluminum and ¾" × 1" ribs at 8½" pitch in steel only) shall be manufactured with rerolled ends. Corrugation profile of the rerolled ends shall be 2⅔" × ½" annual corrugations with a minimum of two full corrugations at each end.

NOTES:

To accompany plans dated 08-15-11

1. All ferrous metal coupling band connection hardware shall be galvanized or electro-plated in accordance with the Standard Specifications.
2. For helically corrugated coupling bands, the connection angles may be oriented parallel to the pipe axis, provided connecting holes are slotted lengthwise sufficiently to allow adjustment for the helix angle.
3. Tension strap may be connected to band with either spot welds or fillet welds that develop minimum required strength of strap.
4. Use 1¼" gage line dimension on attached angle leg for rivets and spot welds.
5. Band thickness shall not be less than:
   a. 3 standard thicknesses lighter than the thickness of the pipe for Corrugated Steel Pipe.
   b. 2 standard thicknesses lighter than the thickness of the pipe and in no case lighter than 0.060" for Corrugated Aluminum Pipe.
6. Dimensions, thicknesses and strengths shown are minimum.
7. For pipe arches use same width band as for round pipe of equal periphery.
8. Fillet welds of equivalent strenght may be substituted for spot welds or rivets.
9. Spot welds shall develop minimum required strength of strap.
10. Pipe with rerolled ends having at least two 2⅔" × ½" annular corrugations at each end with or without an upturned flange may be connected with any of the annular coupling bands shown for pipe of the same diameter and wall thickness and having 2⅔" × ½" corrugations.
11. In the case of H-12 huggerbands, two piece bands are required for diameters through 96" and three piece bands are required for diameters 102" through 120".
12. Two piece bands are required for pipes greater than 42" diameter.
13. The 2¼" × 2" × 0.109" thick galvanized die-formed angle connector may be used in lieu of the 2" × 2" × 3/16" angle connector for standard joints only on pipes through 72" diameter.

STATE OF CALIFORNIA
DEPARTMENT OF TRANSPORTATION

CORRUGATED METAL PIPE COUPLING DETAILS No. 5 STANDARD JOINT

NO SCALE

RSP D97E DATED JUNE 6, 2008 SUPERSEDES STANDARD PLAN D97E DATED MAY 1, 2006 - PAGE 187 OF THE STANDARD PLANS BOOK DATED MAY 2006.

REVISED STANDARD PLAN RSP D97E

2006 REVISED STANDARD PLAN RSP D97E

4-2-08

DIST	COUNTY	ROUTE	POST MILES TOTAL PROJECT	SHEET NO.	TOTAL SHEETS
11	SD	78	20.6/35.5	58	63

Raymond Don Tsztoo
REGISTERED CIVIL ENGINEER

June 6, 2008
PLANS APPROVAL DATE

REGISTERED PROFESSIONAL ENGINEER
Raymond Don Tsztoo
No. C37332
Exp. 6-30-08
CIVIL
STATE OF CALIFORNIA

The State of California or its officers or agents shall not be responsible for the accuracy or completeness of electronic copies of this plan sheet.

To accompany plans dated 08-15-11

ANNULAR AND HELICAL PROFILE

COUPLING TYPE	PIPE CORRUGATION	PIPE SIZE	W OR A	PIPE WALL THICKNESS		BAND THICKNESS		BAR AND STRAP (CSP ONLY)			ANGLE						
											DIMENSIONS		BOLTS (No.- Dia)		RIVETS ANGLE TO BAND		SPOT WELDS ANGLE TO BAND
				CSP	CAP	CSP	CAP	STRAP THICKNESS	BOLTS Dia	BAR Dia	CSP	CAP	CSP	CAP	CSP	CAP	CSP
TWO PIECE INTEGRAL FLANGE	1½′ × ¼"	6"	7"	0.064"-0.168"		0.052"							3-⅜"				
	1½′ × ¼"	8"-10"	7"	0.064"-0.168"	0.060"-0.164"	0.064"	0.060"						3-⅜"	3-⅜"			
ANNULAR	2⅔" × ½"	THROUGH 24"	12"	0.064"-0.168"	0.060"-0.164"	0.064"	0.060"				2" × 2" × 3/16"	2" × 2" × 3/16"	3-½"	3-½"	3-⅜"	3-⅜"	3-½"
HUGGER	2⅔" × ½" REROLLED END	THROUGH 24"	10½"	0.064"-0.168"		0.064"		0.079"	½"	⅞"							

SPIRAL RIB PROFILE

COUPLING TYPE	PIPE CORRUGATION	PIPE SIZE	W	PIPE WALL THICKNESS		BAND THICKNESS		BAR AND STRAP (SSRP ONLY)			ANGLE						
											DIMENSIONS		BOLTS (No.- Dia)		RIVETS ANGLE TO BAND		SPOT WELDS ANGLE TO BAND
				SSRP	ASRP	SSRP	ASRP	STRAP THICKNESS	BOLTS Dia	BAR Dia	SSRP	ASRP	SSRP	ASRP	SSRP	ASRP	SSRP
ANNULAR	2⅔" × ½" * REROLLED END	24"	12"	0.064"-0.168"	0.060"-0.164"	0.064"	0.060"				2" × 2" × 3/16"	2" × 2" × 3/16"	3-½"	3-½"	3-⅜"	3-⅜"	3-½"
HUGGER	2⅔" × ½" * REROLLED END	24"	10½"	0.064"-0.168"		0.064"		0.079"	½"	⅞"							

* See Note 12.

12. All profiles of Spiral Rib Pipe (¾" × ¾" ribs at 7½" pitch and ¾" × 1" ribs at 11½" pitch in both steel and aluminum and ¾" × 1" ribs at 8½" pitch in steel only) shall be manufactured with rerolled ends. Corrugation profile of the rerolled ends shall be 2⅔" × ½" annual corrugations with a minimum of two full corrugations at each end.

NOTES:

1. All ferrous metal coupling band connection hardware shall be galvanized or electro-plated in accordance with the Standard Specifications.
2. For helically corrugated coupling bands, the connection angles may be oriented parallel to the pipe axis, provided connecting holes are slotted lengthwise sufficiently to allow adjustment for the helix angle.
3. Tension strap may be connected to band with either spot welds or fillet welds that develop minimum required strength of strap.
4. Use 1¼" gage line dimension on attached angle leg for rivets and spot welds.
5. Band thickness shall not be less than:
   a. 3 standard thicknesses lighter than the thickness of the pipe for Corrugated Steel Pipe.
   b. 2 standard thicknesses lighter than the thickness of the pipe and in no case lighter than 0.060" for Corrugated Aluminum Pipe.
6. Dimensions, thicknesses and strengths shown are minimum.
7. For pipe arches use same width band as for round pipe of equal periphery.
8. Fillet welds of equivalent strenght may be substituted for spot welds or rivets.
9. Spot welds shall develop minimum required strength of strap.
10. Pipe with rerolled ends having at least two 2⅔" × ½" annular corrugations at each end with or without an upturned flange may be connected with any of the annular coupling bands shown for pipe of the same diameter and wall thickness and having 2⅔" × ½" corrugations.
11. For downdrain applications, two piece integral flange couplers shall have factory applied sleeve type rubber gaskets with a minimum length of 7" measured along the length of the pipe.

STATE OF CALIFORNIA
DEPARTMENT OF TRANSPORTATION

CORRUGATED METAL PIPE COUPLING DETAILS No. 7 DOWNDRAIN

NO SCALE

RSP D97G DATED JUNE 6, 2008 SUPERSEDES STANDARD PLAN D97G
DATED MAY 1, 2006 - PAGE 189 OF THE STANDARD PLANS BOOK DATED MAY 2006.

REVISED STANDARD PLAN RSP D97G

2006 REVISED STANDARD PLAN RSP D97G

4-4-08

DIST	COUNTY	ROUTE	POST MILES TOTAL PROJECT	SHEET NO.	TOTAL SHEETS
11	SD	78	20.6/35.5	59	63

Randell D. Hiatt
REGISTERED CIVIL ENGINEER

June 6, 2008
PLANS APPROVAL DATE

REGISTERED PROFESSIONAL ENGINEER
Randell D. Hiatt
No. C50200
Exp. 6-30-09
CIVIL
STATE OF CALIFORNIA

The State of California or its officers or agents shall not be responsible for the accuracy or completeness of electronic copies of this plan sheet.

To accompany plans dated 08-15-11

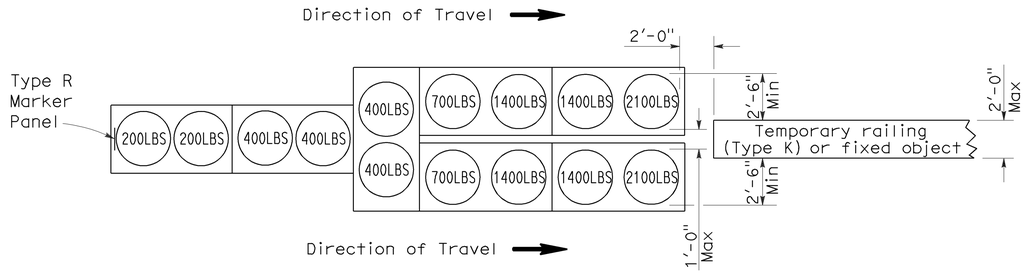

ARRAY 'TU14'

Approach speed 45 mph or more

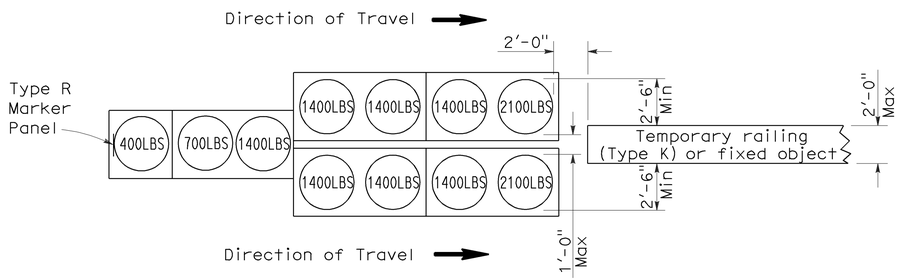

ARRAY 'TU11'

Approach speed less than 45 mph

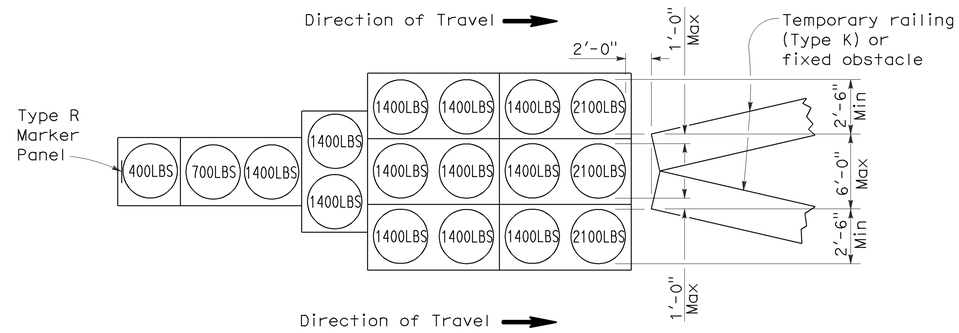

ARRAY 'TU17'

Approach speed less than 45 mph

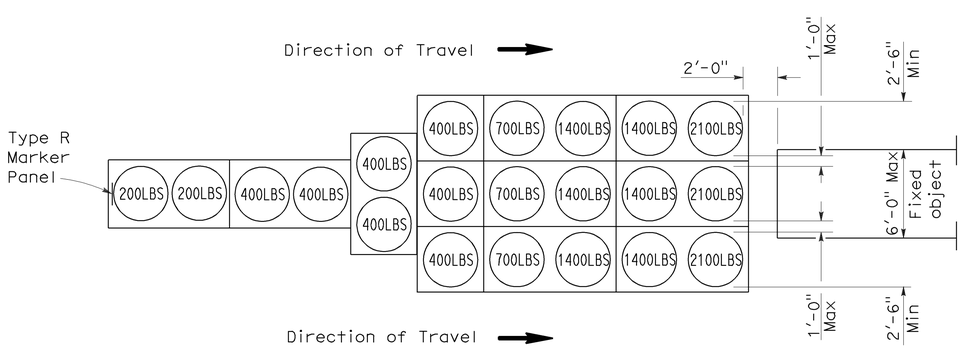

ARRAY 'TU21'

Approach speed 45 mph or more

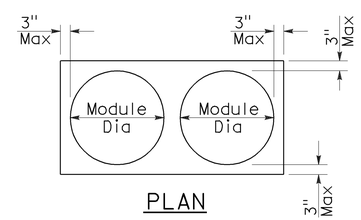

PLAN

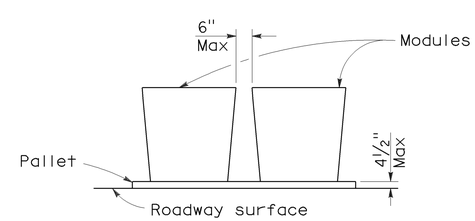

ELEVATION

CRASH CUSHION PALLET DETAIL

See Note 7

NOTES:

1. (XXX) Indicates sand filled module location and weight of sand in pounds for each module. Module spacing is based on the greater diameter of the module.
2. All sand weights are nominal.
3. Temporary crash cushion arrays shall not encroach on the traveled way.
4. Place the top of Type R marker panel 1" below the module lid.
5. Refer to Standard Plan A73B for marker details.
6. Approach speeds indicated conform to NCHRP 350 Report criteria.
7. Use of pallets is optional.

STATE OF CALIFORNIA
DEPARTMENT OF TRANSPORTATION

TEMPORARY CRASH CUSHION, SAND FILLED (UNIDIRECTIONAL)

NO SCALE

RSP T1A DATED JUNE 6, 2008 SUPERSEDES STANDARD PLAN T1A
DATED MAY 1, 2006 - PAGE 211 OF THE STANDARD PLANS BOOK DATED MAY 2006.

REVISED STANDARD PLAN RSP T1A

2006 REVISED STANDARD PLAN RSP T1A

DIST	COUNTY	ROUTE	POST MILES TOTAL PROJECT	SHEET NO.	TOTAL SHEETS
11	SD	78	20.6/35.5	60	63

Randell D. Hiatt
REGISTERED CIVIL ENGINEER

June 6, 2008
PLANS APPROVAL DATE

REGISTERED PROFESSIONAL ENGINEER
Randell D. Hiatt
No. C50200
Exp. 6-30-09
CIVIL
STATE OF CALIFORNIA

The State of California or its officers or agents shall not be responsible for the accuracy or completeness of electronic copies of this plan sheet.

To accompany plans dated 08-15-11

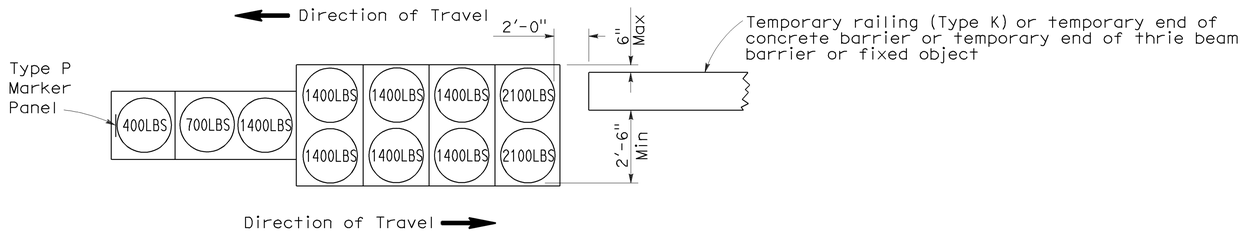

ARRAY 'TB11'

Approach speed less than 45 mph

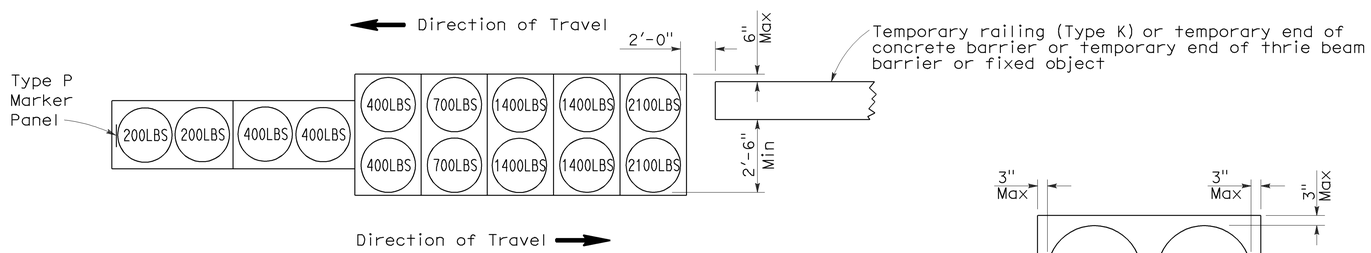

ARRAY 'TB14'

Approach speed 45 mph or more

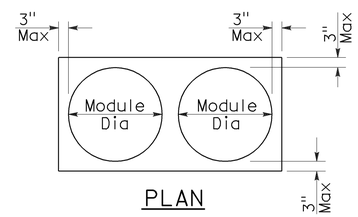

PLAN

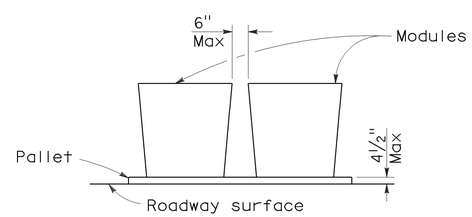

ELEVATION

CRASH CUSHION PALLET DETAIL

See Note 7

NOTES:

1. (XXX) Indicates sand filled module location and weight of sand in pounds for each module. Module spacing is based on the greater diameter of the module.
2. All sand weights are nominal.
3. Temporary crash cushion arrays shall not encroach on the traveled way.
4. Place the Type P marker panel so that the bottom of the panel rests upon the pallet.
5. Refer to Standard Plan A73B for marker details.
6. Approach speeds indicated conform to NCHRP 350 Report criteria.
7. Use of pallets is optional.

STATE OF CALIFORNIA
DEPARTMENT OF TRANSPORTATION

TEMPORARY CRASH CUSHION, SAND FILLED (BIDIRECTIONAL)

NO SCALE

RSP T1B DATED JUNE 6, 2008 SUPERSEDES STANDARD PLAN T1B
DATED MAY 1, 2006 - PAGE 212 OF THE STANDARD PLANS BOOK DATED MAY 2006.

REVISED STANDARD PLAN RSP T1B

2006 REVISED STANDARD PLAN RSP T1B

5-15-08

DIST	COUNTY	ROUTE	POST MILES TOTAL PROJECT	SHEET NO.	TOTAL SHEETS
11	SD	78	20.6/35.5	61	63

Randell D. Hiatt
REGISTERED CIVIL ENGINEER

June 6, 2008
PLANS APPROVAL DATE

REGISTERED PROFESSIONAL ENGINEER
Randell D. Hiatt
No. C50200
Exp. 6-30-09
CIVIL
STATE OF CALIFORNIA

The State of California or its officers or agents shall not be responsible for the accuracy or completeness of electronic copies of this plan sheet.

To accompany plans dated 08-15-11

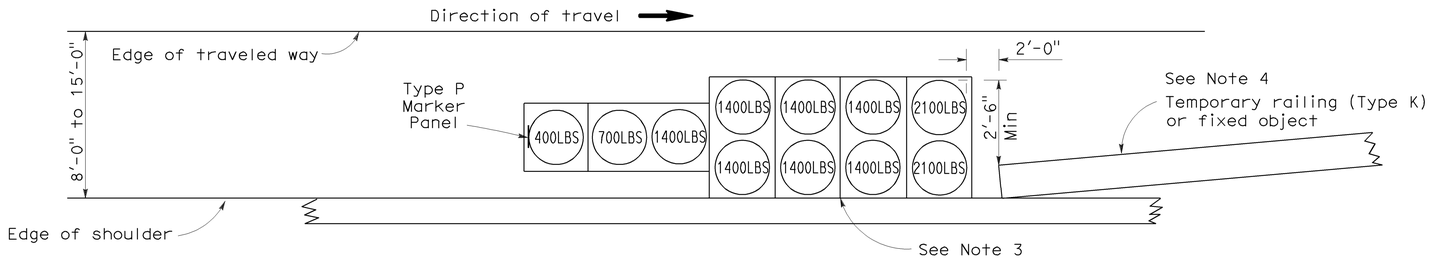

ARRAY 'TS11'

Approach speed less than 45 mph
See Note 9

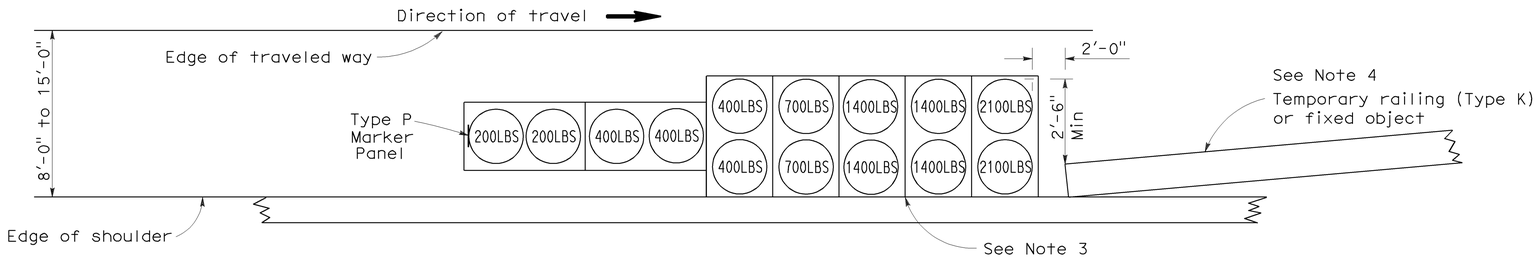

ARRAY 'TS14'

Approach speed 45 mph or more
See Note 9

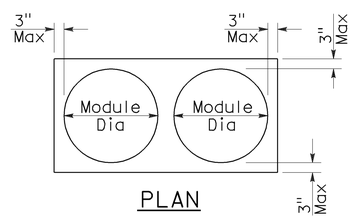

PLAN

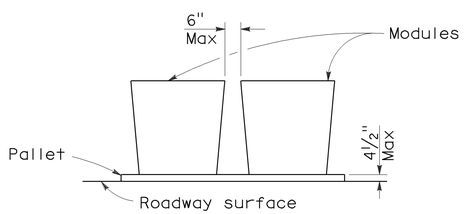

ELEVATION

CRASH CUSHION PALLET DETAIL

See Note 11

NOTES:

1. (XXX) Indicates sand filled module location and weight of sand in pounds for each module. Module spacing is based on the greater diameter of the module.
2. All sand weights are nominal.
3. The temporary crash cushion arrays shown on this plan shall be used only in locations where there will be traffic on one side of the temporary crash cushion array.
4. If the fixed object or approach end of the temporary railing is less than 15'-0" from the edge of traveled way, a temporary crash cushion is required in a construction or work zone.
5. Temporary crash cushion arrays shall not encroach on the traveled way.
6. Arrays for median shoulders shall conform to details shown on this plan for outside shoulders.
7. Place the Type P marker panel so that the bottom of the panel rests upon the pallet and faces traffic.
8. Refer to Standard Plan A73B for marker details.
9. For shoulder widths less than 8'-0", appropriate approved crash cushion protection, other than sand filled modules, shall be provided at fixed objects and at approach ends of temporary railing. The specific type of crash cushion shall be as shown on the project plans or as specified in the Special Provisions, or if not shown on the project plans or specified in the Special Provisions, shall be as approved by the Engineer.
10. Approach speeds indicated conform to NCHRP 350 Report criteria.
11. Use of pallets is optional.

STATE OF CALIFORNIA
DEPARTMENT OF TRANSPORTATION

TEMPORARY CRASH CUSHION, SAND FILLED (SHOULDER INSTALLATIONS)

NO SCALE

RSP T2 DATED JUNE 6, 2008 SUPERSEDES STANDARD PLAN T2
DATED MAY 1, 2006 - PAGE 213 OF THE STANDARD PLANS BOOK DATED MAY 2006.

REVISED STANDARD PLAN RSP T2

2006 REVISED STANDARD PLAN RSP T2

5-15-08

Dist	COUNTY	ROUTE	POST MILES TOTAL PROJECT	SHEET No.	TOTAL SHEETS
11	SD	78	20.6/35.5	62	63

Randell D. Hiatt
REGISTERED CIVIL ENGINEER

May 20, 2011
PLANS APPROVAL DATE

REGISTERED PROFESSIONAL ENGINEER
Randell D. Hiatt
No. C50200
Exp. 6-30-11
CIVIL
STATE OF CALIFORNIA

The State of California or its officers or agents shall not be responsible for the accuracy or completeness of electronic copies of this plan sheet.

To accompany plans dated 08-15-11

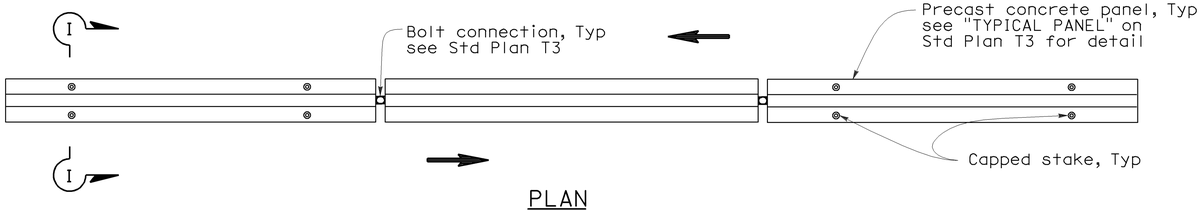

PLAN

RAILING STAKING CONFIGURATION FOR TWO-WAY TRAFFIC

See Note 1

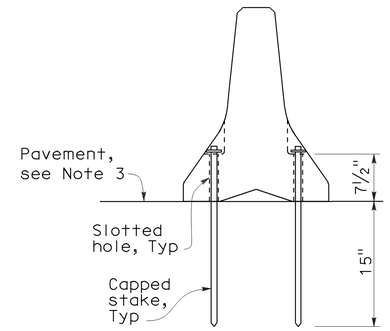

SECTION I-I

NOTES:

1. Where Type K Temporary Railing is placed as a temporary or long term barrier in two-way traffic on highways with less than 24" from the edge of traveled way, use four capped stakes per every other panel with end panels staked.
2. Where Type K Temporary Railing is placed 3" to 24" from the edge of an excavation on highways, use two capped stakes per panel along the traffic side.
3. Staked Type K Temporary Railing must be supported by at least 4" thick concrete, hot mix asphalt or existing asphalt concrete pavement.
4. The minimum yield strength for the washer must be 60,000 psi.
5. Direction of adjacent traffic indicated by ⟹.

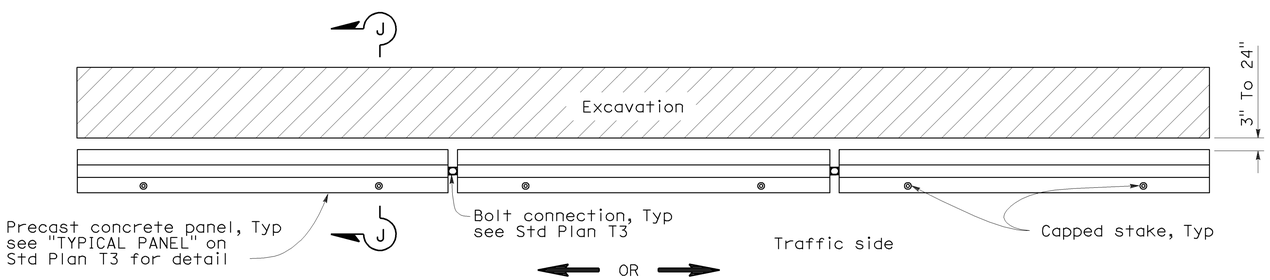

PLAN

RAILING STAKING CONFIGURATION ADJACENT TO AN EXCAVATION

See Note 2

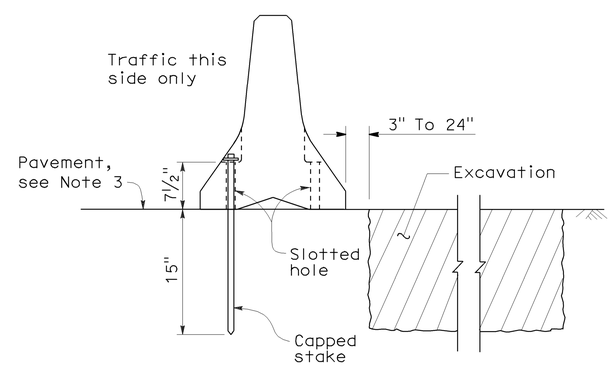

SECTION J-J

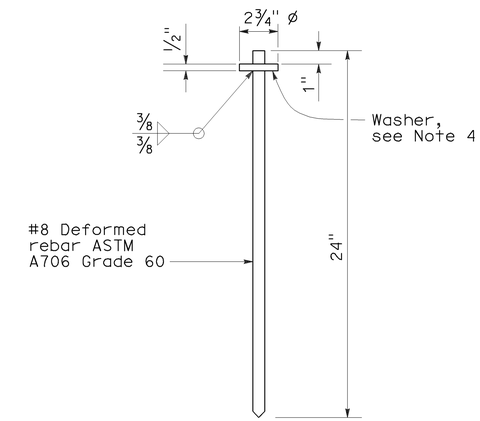

CAPPED STAKE DETAIL

STATE OF CALIFORNIA
DEPARTMENT OF TRANSPORTATION

TEMPORARY RAILING (TYPE K)

NO SCALE

NSP T3A DATED MAY 20, 2011 SUPPLEMENTS
THE STANDARD PLANS BOOK DATED MAY 2006.

NEW STANDARD PLAN NSP T3A

2006 NEW STANDARD PLAN NSP T3A

DIST	COUNTY	ROUTE	POST MILES TOTAL PROJECT	SHEET NO.	TOTAL SHEETS
11	SD	78	20.6/35.5	63	63

Greg W. Edwards
REGISTERED CIVIL ENGINEER

November 17, 2006
PLANS APPROVAL DATE

REGISTERED PROFESSIONAL ENGINEER
Greg W. Edwards
No. C36386
Exp. 6-30-08
CIVIL
STATE OF CALIFORNIA

The State of California or its officers or agents shall not be responsible for the accuracy or completeness of electronic copies of this plan sheet.

To accompany plans dated 08-15-11

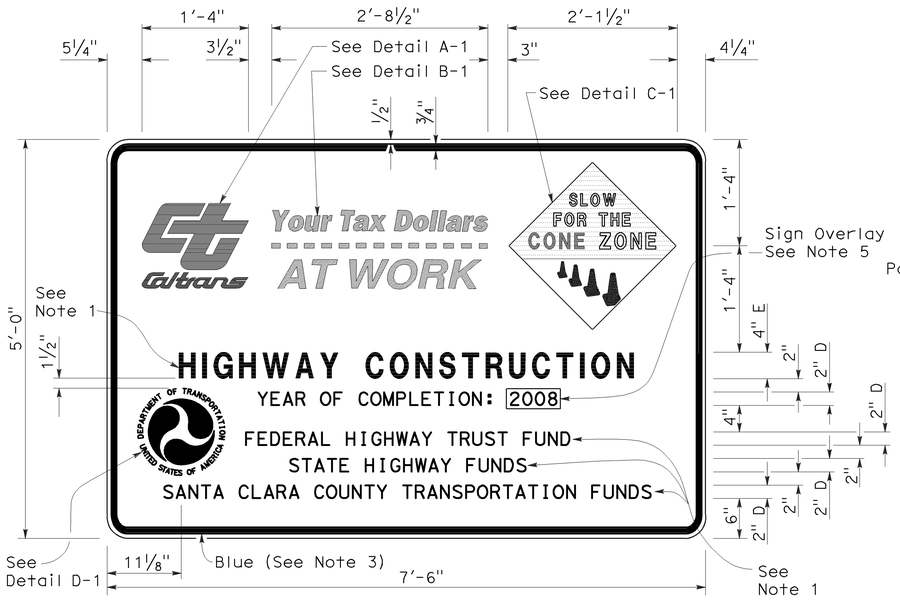

TYPE 1

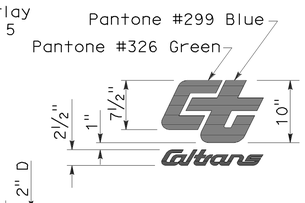

DETAIL A-1

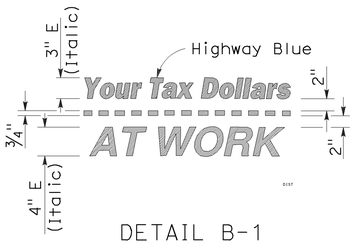

DETAIL B-1
(See Note 3)

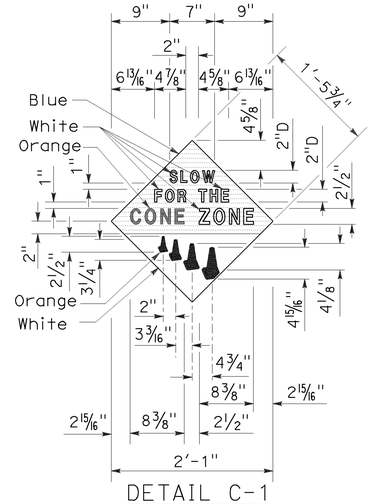

DETAIL C-1
(See Note 4)

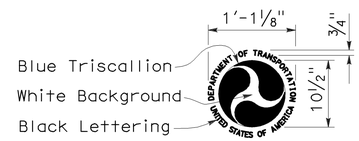

DETAIL D-1
(See Note 6)

NOTES:

1. The sign messages shown for type of project and fund types are examples only. See the Special Provisions for the applicable type of project and fund type messages to be used.
2. Except as otherwise shown, the legend of sign shall be black on a white background (non-reflective).
3. The border of the signs and details "B-1" and "B-2" shall be blue (non-reflective).
4. The diamond in details "C-1" and "C-2" shall be blue for the background of message, " SLOW FOR THE CONE ZONE", and white background for the orange cones. The color and type of font for the "SLOW FOR THE CONE ZONE" message shall be: "SLOW" white D; "FOR THE" white D; "CONE" orange Arial font; "ZONE" white Arial font.
5. Year of completion of project construction shown on the overlay is an example only. See the Special Provisions.
6. Use when the Project involves Federal Highway Trust Fund.

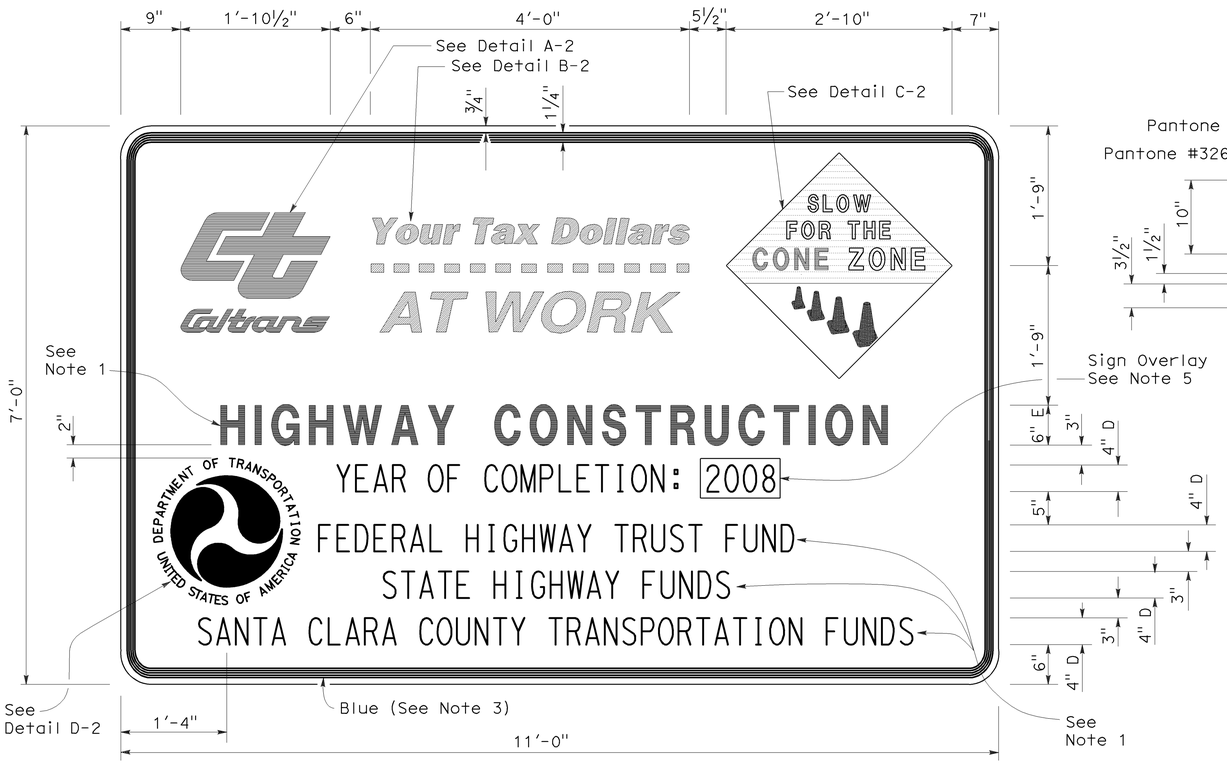

TYPE 2

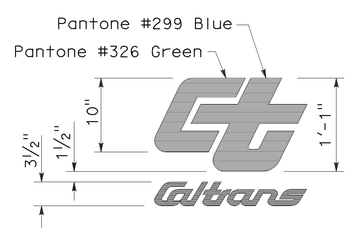

DETAIL A-2

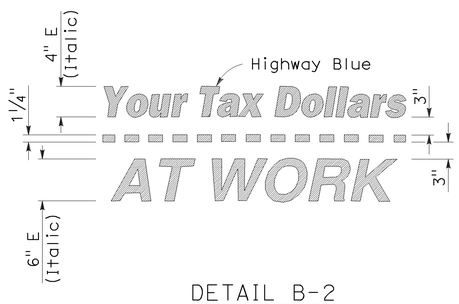

DETAIL B-2
(See Note 3)

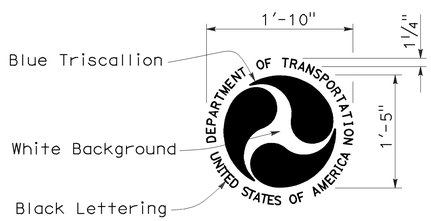

DETAIL D-2
(See Note 6)

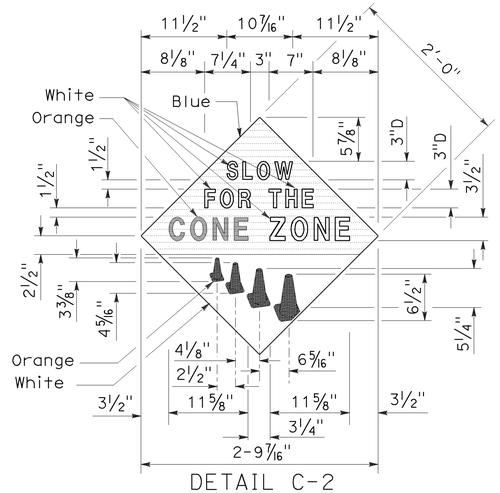

DETAIL C-2
(See Note 4)

STATE OF CALIFORNIA
DEPARTMENT OF TRANSPORTATION

CONSTRUCTION PROJECT FUNDING IDENTIFICATION SIGNS

NO SCALE

RSP T7 DATED NOVEMBER 17, 2006 SUPERSEDES STANDARD PLAN T7
DATED MAY 1, 2006 - PAGE 217 OF THE STANDARD PLANS BOOK DATED MAY 2006.

REVISED STANDARD PLAN RSP T7

2006 REVISED STANDARD PLAN RSP T7

9-7-06