Dist	COUNTY	ROUTE	POST MILES TOTAL PROJECT	SHEET No.	TOTAL SHEETS
11	SD	15	0.5/M4.0	8	116

Bahman Yazdani 07-29-11
REGISTERED CIVIL ENGINEER DATE

08-01-11
PLANS APPROVAL DATE

REGISTERED PROFESSIONAL ENGINEER BAHMAN YAZDANI No. 58322 Exp 06-30-12 CIVIL STATE OF CALIFORNIA

THE STATE OF CALIFORNIA OR ITS OFFICERS OR AGENTS SHALL NOT BE RESPONSIBLE FOR THE ACCURACY OR COMPLETENESS OF SCANNED COPIES OF THIS PLAN SHEET.

3 REVISED PER ADDENDUM No. 3 DATED DECEMBER 27, 2011

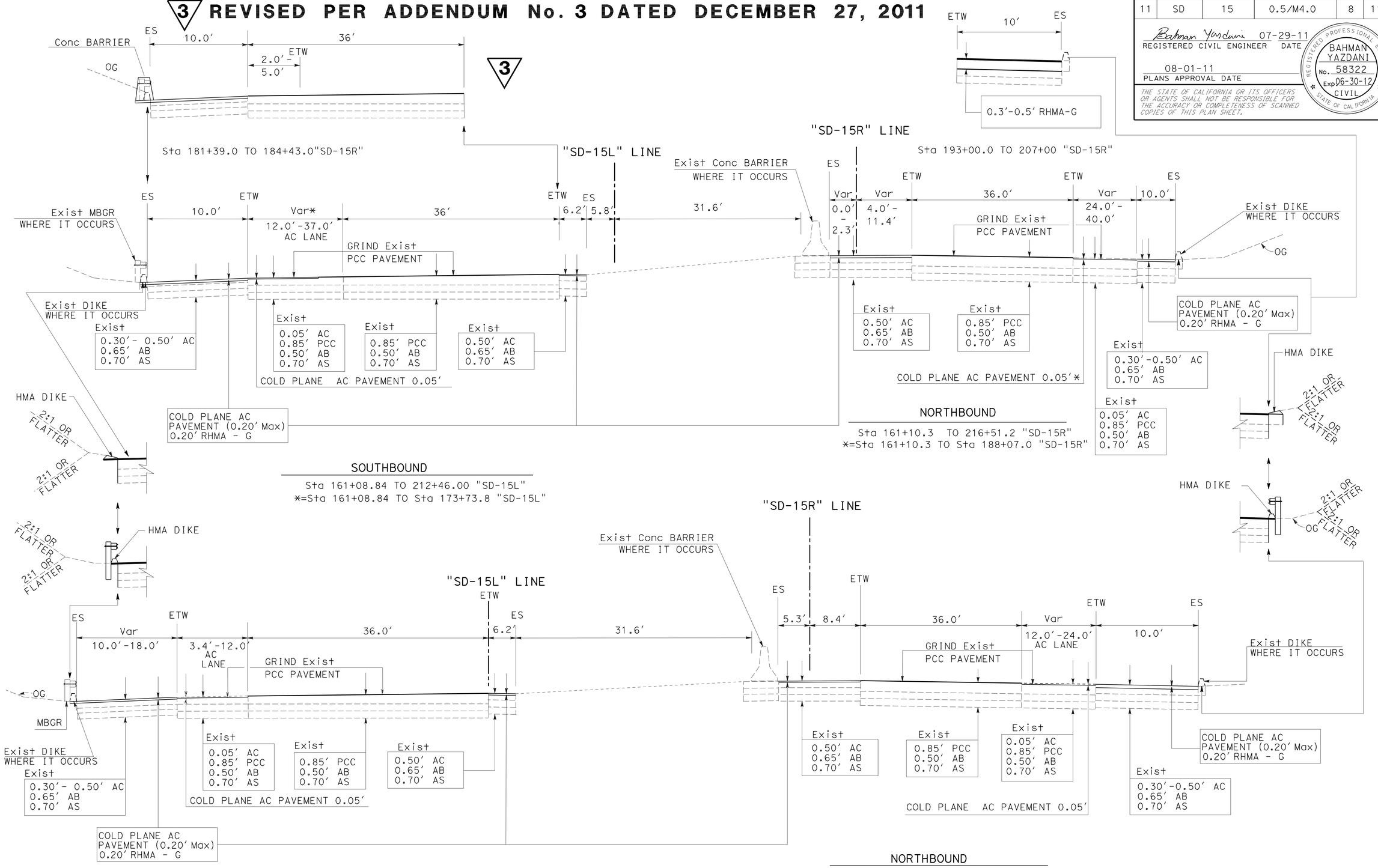

ROUTE 15

TYPICAL CROSS SECTIONS

NO SCALE

X-7

STATE OF CALIFORNIA - DEPARTMENT OF TRANSPORTATION
Caltrans
DESIGN

FUNCTIONAL SUPERVISOR: CHRIS M THOMAS
CALCULATED-DESIGNED BY: BAHMAN YAZDANI
CHECKED BY: RICARDO PADILA
REVISED BY
DATE REVISED

LAST REVISION 12-15-11
DATE PLOTTED => 27-DEC-2011
TIME PLOTTED => 10:04

3 REVISED PER ADDENDUM No. 3 DATED DECEMBER 27, 2011

Dist	COUNTY	ROUTE	POST MILES TOTAL PROJECT	SHEET No.	TOTAL SHEETS
11	SD	15	0.5/M4.0	25	116

Bahman Yazdani 07-29-11
REGISTERED CIVIL ENGINEER DATE

08-01-11
PLANS APPROVAL DATE

REGISTERED PROFESSIONAL ENGINEER BAHMAN YAZDANI No. 58322 Exp 06-30-12 CIVIL STATE OF CALIFORNIA

THE STATE OF CALIFORNIA OR ITS OFFICERS OR AGENTS SHALL NOT BE RESPONSIBLE FOR THE ACCURACY OR COMPLETENESS OF SCANNED COPIES OF THIS PLAN SHEET.

NOTE:

FOR ACCURATE RIGHT OF WAY DATA, CONTACT RIGHT OF WAY ENGINEERING AT THE DISTRICT OFFICE.

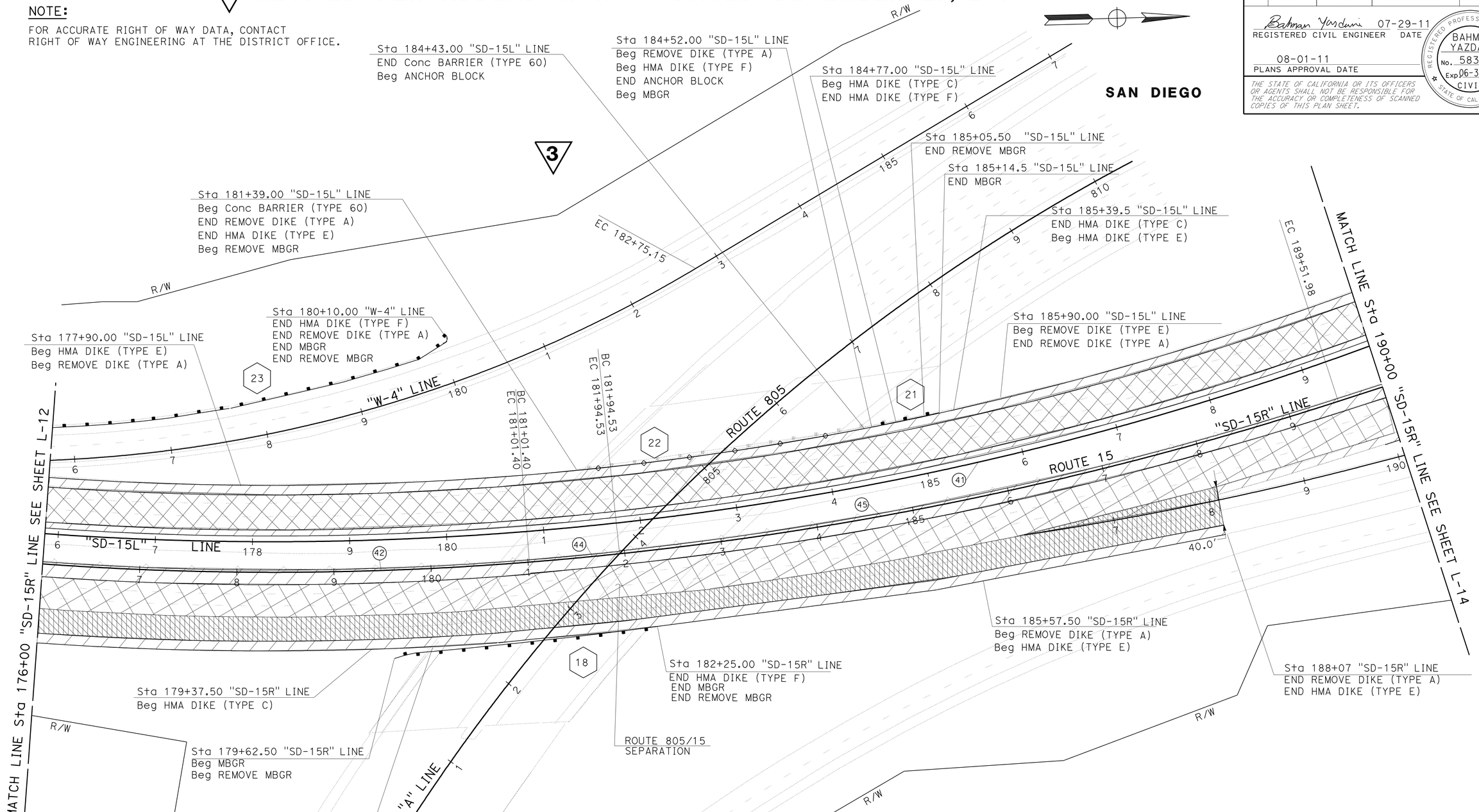

CURVE DATA

No.	R	Δ	T	L
42	3,300.02′	34°34′12"	1,026.90′	1,991.11′
44	3,667.89′	01°27′17"	46.57′	93.13′
45	3,650.29′	11°53′21"	380.09′	757.45′
41	3,270.00′	51°25′40"	1,574.72′	2,935.10′

SCALE: 1" = 50′

LAYOUT L-13

STATE OF CALIFORNIA - DEPARTMENT OF TRANSPORTATION
Caltrans® PROJECT DEVELOPMENT

FUNCTIONAL SUPERVISOR: CHRIS M THOMAS
CALCULATED-DESIGNED BY: BAHMAN YAZDANI
CHECKED BY: RICARDO PADILLA
REVISED BY
DATE REVISED

LAST REVISION 12-16-11
DATE PLOTTED => 27-DEC-2011
TIME PLOTTED => 10:04

Dist	COUNTY	ROUTE	POST MILES TOTAL PROJECT	SHEET No.	TOTAL SHEETS
11	SD	15	0.5/M4.0	32	116

Bahman Yazdani 07-29-11
REGISTERED CIVIL ENGINEER DATE

08-01-11
PLANS APPROVAL DATE

REGISTERED PROFESSIONAL ENGINEER BAHMAN YAZDANI No. 58322 Exp. 06-30-12 CIVIL STATE OF CALIFORNIA

THE STATE OF CALIFORNIA OR ITS OFFICERS OR AGENTS SHALL NOT BE RESPONSIBLE FOR THE ACCURACY OR COMPLETENESS OF SCANNED COPIES OF THIS PLAN SHEET.

3 REVISED PER ADDENDUM No. 3 DATED DECEMBER 27, 2011

NOTES:

1. FOR DETAILS NOT SHOWN, SEE REVISED STANDARD PLANS A77J4.
2. DEPENDENT DIMENSIONS WILL BE VERIFIED IN THE FIELD BEFORE FABRICATING ANY END CONNECTION TO CONFORM WITH EXISTING PAVED CONDITIONS.
3. ALL PLATES AND BOLTS ARE GALVANIZED.

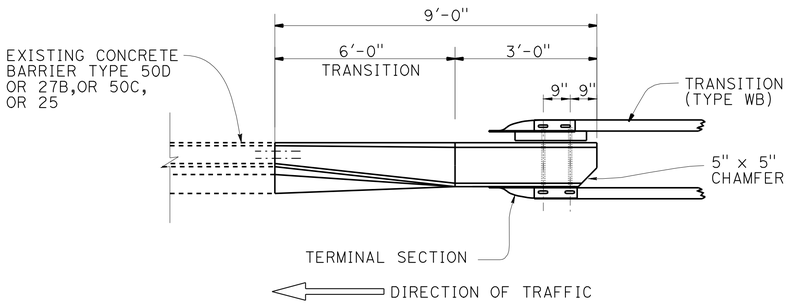

PLAN

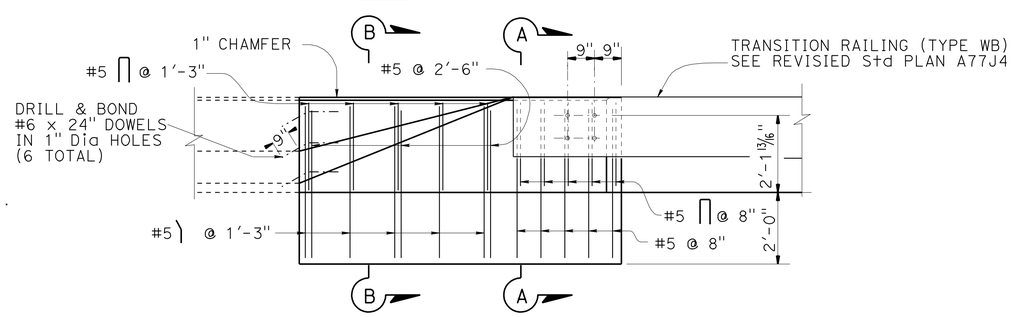

ELEVATION

ANCHOR BLOCK

NB 15 "D-7" FROM Sta 43+86.0 TO Sta 43+95.0
NB 15 "D-7" FROM Sta 43+86.0 TO Sta 43+95.0
NB 15 "SD-15" FROM Sta 81+51.0 TO Sta 81+60.0
NB 15 "SD-15" FROM Sta 88+19.0 TO Sta 88+28.0
NB 15 "SD-15" FROM Sta 100+86.0 TO Sta 100+95.0
NB 15 "MNB1" FROM Sta 101+39.5 TO Sta 101+48.5
NB 15 "MNB1" FROM Sta 101+39.5 TO Sta 101+48.5
NB 15 "SD-15" FROM Sta 114+32.0 TO Sta 114+41.0
NB 15 "SD-15" FROM Sta 119+67.6 TO Sta 119+77.0
NB 15 "SD-15" FROM Sta 122+69 TO Sta 122+78
SB 15 "SM12" FROM Sta 108+22.5 TO 108+31.5
SB 15 "22KPMS1" FROM Sta 99+60.0 TO Sta 99+69.0
SB 15 "04R" FROM Sta 70+06.0 TO 70+15.0
SB 15 "04R" FROM Sta 71+56.0 TO 71+65.0
SB 15 "03" FROM Sta 70+10.5 TO 70+19.5
SB 15 "SD-15" FROM Sta 64+80 TO 64+89
SB 15 "SD-15L" FROM Sta 184+43 TO 184+52
SB 15 "SD-15" FROM Sta 123+40 TO 123+49

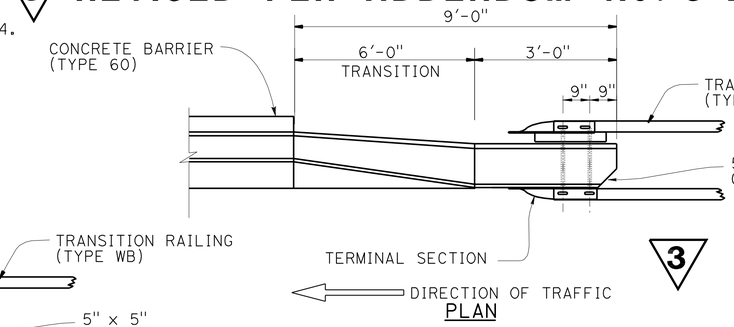

PLAN

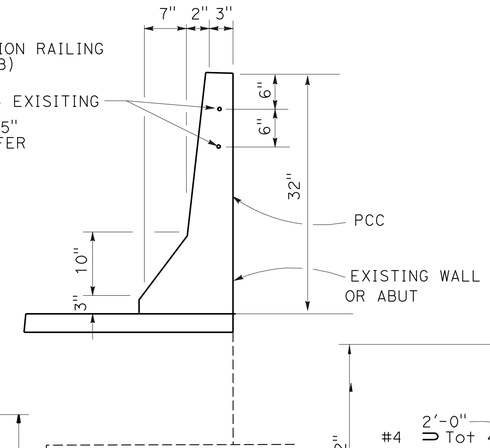

Exist CONCRETE BARRIER
TYPE 50D

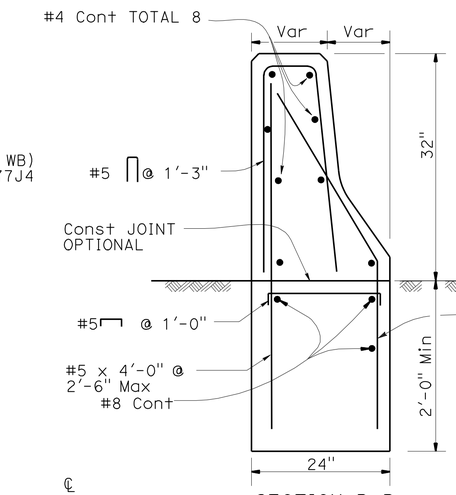

SECTION B-B

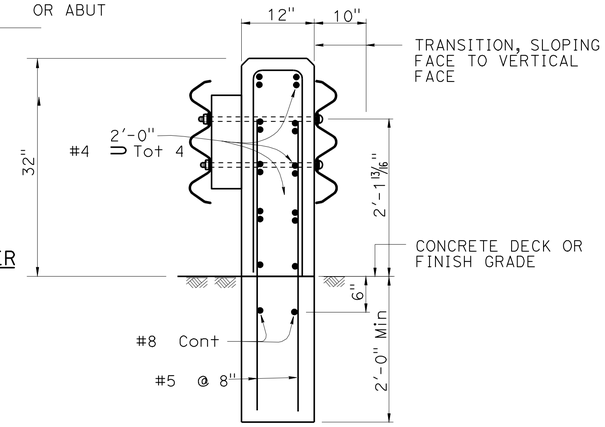

SECTION A-A

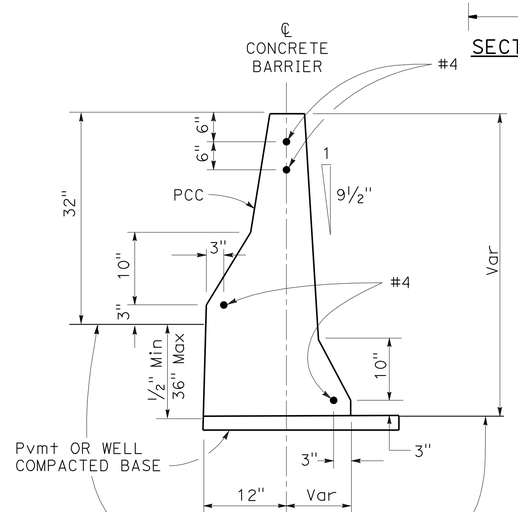

Exist CONCRETE BARRIER
TYPE 50C

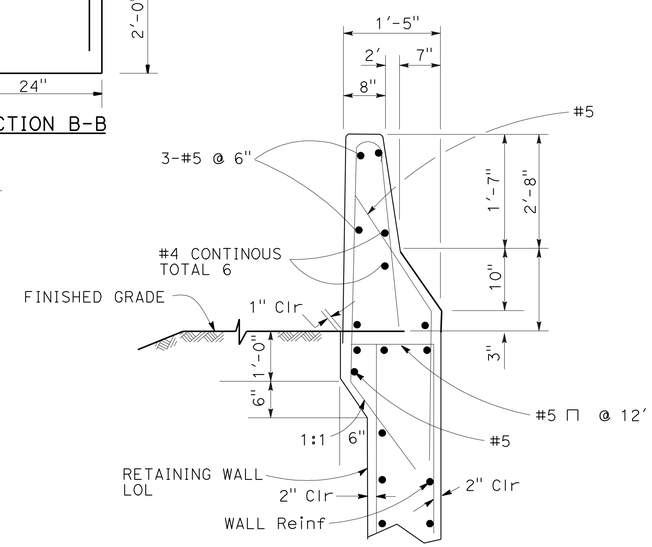

Exist TYPE 27B

CONSTRUCTION DETAILS

NO SCALE

C-5

STATE OF CALIFORNIA - DEPARTMENT OF TRANSPORTATION
Caltrans DESIGN
FUNCTIONAL SUPERVISOR: BRUCE LAMBERT
CALCULATED-DESIGNED BY: BAHMAN YAZDANI
CHECKED BY: DEBORAH YOST
REVISED BY
DATE REVISED

LAST REVISION 12-15-11
DATE PLOTTED =>
TIME PLOTTED => 10:04

Dist	COUNTY	ROUTE	POST MILES TOTAL PROJECT	SHEET No.	TOTAL SHEETS
11	SD	15	0.5/M4.0	72	116

Bahman Yazdani 07-29-11
REGISTERED CIVIL ENGINEER DATE

08-01-11
PLANS APPROVAL DATE

REGISTERED PROFESSIONAL ENGINEER BAHMAN YAZDANI No. 58322 Exp 06-30-12 CIVIL STATE OF CALIFORNIA

THE STATE OF CALIFORNIA OR ITS OFFICERS OR AGENTS SHALL NOT BE RESPONSIBLE FOR THE ACCURACY OR COMPLETENESS OF SCANNED COPIES OF THIS PLAN SHEET.

CONCRETE BARRIER

3

DIRECTION	Rte	LINE		STATION	(TYPE 60)
					LF
SB	15	SD-15L	L†	181+39.00 TO 184+43.00	304.0
SB	15	SD-15	L†	120+92.50 TO 122+65.00	172.5
				TOTALS	476.5

3 REVISED PER ADDENDUM No. 3 DATED DECEMBER 27, 2011

METAL BEAM GUARD RAILING

MBGR No.	SHEET No.	DIRECTION	Rte	LINE		STATION		LAYOUT TYPE (N)	REMOVE MBGR	MBGR	ALTER -NATIVE IN-LINE TERMINAL SYSTEM	ALTER -NATIVE FLARED TERMINAL SYSTEM	END ANCHOR ASSEMBLY (TYPE SFT)	TRANSITION RAILING (TYPE WB)	GURAD RAILING DELINEATOR	BURIED POST END ANCHOR (N)	MINOR CONCRETE (MINOR STRUCTURE)	END CAP (TYPE A)	REMARKS
									LF	LF	EA	EA	EA	EA	EA	EA	CY	EA	
1	L-1	NB	15	W	R†	28+31.70	30+62.00	12DD	230.3	230.3		-	1	-	5	-	-	1	
2	L-1	NB	15	D7	R†	35+55.00	36+30.00	16B	75.0	37.5		1	1	-	2	-	-	-	
3	L-1,2	NB	15	D7	L†	37+90.00	43+95.00	12B	605.0	533.5		1	-	1	12	-	1.6	-	
4	L-2	NB	15	D7	R†	40+45.00	43+95.00	12B	350.0	278.5		1	-	1	2	-	1.6	-	
5	L-5	NB	15	SD-15	R†	80+62.50	81+60.00	12C	88.5	63.5		-	-	1	2	1	1.6	-	
6	L-6	NB	15	SD-15	R†	87+56.50	88+28.00	12B	62.5	37.5		1	-	1	2	-	1.6	-	
7	L-6	NB	15	SD-15	R†	92+00.00	92+75.00	16B	75.0	37.5		1	1	-	2	-	-	-	
8	L-7	NB	15	SD-15	R†	100+23.50	100+95.00	12B	62.5	0.0		1	-	1	2	-	1.6	-	
9	L-7	NB	15	MNB1	R†	100+64.50	101+48.50	12B	75.0	12.5		1	-	1	2	-	1.6	-	ON RAMP Rte NB15 FROM MARKET STREET
10	L-7	NB	15	MNB1	L†	100+64.50	101+48.50	12B	75.0	12.5		1	-	1	2	-	1.6	-	ON RAMP Rte NB 15 FROM MARKET STREET
11	L-8	NB	15	SD-15	R†	113+19.50	114+41.00	12B	112.5	50.0		1	-	1	3	-	1.6	-	
12	L-8	NB	15	SD-15	R†	119+05.50	119+77.00	12B	62.5	0.0		1	-	1	2	-	2.1	-	
13	L-8,9	NB	15	SD-15	R†	121+38.00	122+78.00	12B	140.0	68.5		1	-	1	5	-	2.1	-	
14	L-8	EB	94	94SE1	R†	203+67.30	204+29.80	16B	62.5	31.0		1	1	-	4	-	-	-	ON RAMP Rte EB 94 FROM Rte NB 15
15	L-9,10	WB	94	WN10	R†	216+55.00	217+30.00	16B	75.0	37.5		1	1	-	4	-	-	-	ON RAMP Rte NB 15 FROM Rte WB 94
16	L-10	NB	15	SD-15R	R†	145+05.00	147+44.00	16C	200.0	239.0		-	1	-	6	1	-	-	
17	L-12	NB	15	SD-15R	R†	169+85.50	170+54.00	16B	68.5	31.0		1	1	-	4	-	-	-	
18	L-13	NB	15	SD-15R	R†	179+62.50	182+25.00	16B	262.5	225.0		1	1	-	7	-	-	-	
19	L-15	NB	15	SD-15R	R†	206+31.50	207+00.00	16B	68.5	31.0		1	1	-	4	-	-	-	
20	L-15	NB	15	SD-15R	R†	213+78.00	214+51.00	16B	73.0	35.5		1	1	-	4	-	-	-	
																	-	-	
21	L-13	SB	15	SD-15L	L†	184+83.00	185+90.0	12A	22.5	0.0	1	-	-	1	4	-	1.6	-	
22	L-13	SB	15	SD-15L	L†	181+39.00	184+83.00		344.0	0.0		-	-	-	-	-	-	-	
23	L-12,13	SB	805	W-4	L†	173+78.80	180+10.00	16B	631.2	593.7		1	-	-	13	-	-	-	
24	L-10-12	SB	15	SD-15L	L†	143+13.00	173+78.80	16B	3,065.8	3,065.8		-	1	-	62	-	-	-	
25	L-9,10	SB	15	SD-15L	L†	131+94.00	141+67.00	16B	973.0	935.5		1	-	-	20	-	-	-	
26	L-9	WB	94	NWX1	L†	196+45.90	208+43.90	16B	1,198.0	1,198.0		-	1	-	24	-	-	-	
27	L-7	SB	15	22KPMS1	L†	99+60.00	101+12.00	12B	152.0	80.5		1	-	1	3	-	1.6	-	ON RAMP Rte SB 15 FROM MARKET STREET
28	L-7	SB	15	SM12	L†	107+60.00	108+31.50	12B	62.5	0.0		1	-	1	4	-	1.6	-	OFF RAMP Rte SB 15 TO MARKET STREET
29	L-9	SB	15	SD-15	L†	123+40.00	124+53.50	12C	104.5	79.5		-	-	1	4	1	2.1	-	
30	L-9	SB	15	SD-15	L†	122+02.00	122+65.00		63.0	0.0		-	-	-	-	-	-	-	
31	L-4,5	SB	15	O4R	L†	69+97.00	71+65.00	12D	168.0	100.0		-	-	2	3	-	3.2	1	OFF RAMP Rte SB 15 TO OCEAN VIEW Blvd
32	L-4	SB	15	O4R	L†	66+39.00	68+64.00	12DD	225.0	225.0		-	1	-	7	-	-	1	OFF RAMP Rte SB 15 TO OCEAN VIEW Blvd
33	L-4	SB	15	O3	L†	70+19.50	70+91.00	12B	62.5	0.0		1	-	1	3	-	1.6	-	ON RAMP Rte SB 15 FROM OCEAN VIEW Blvd
34	L-4	SB	15	SD-15	L†	64+80.00	65+89.00	12B	100.0	37.5		1	-	1	3	-	1.6	-	
35	L-2	NB	15	D7	R†	38+93.60	39+45.00	16B	62.5	25.0		1	1	-	3	-	-	-	
36	L-1,2	NB	15	D7	L†	45+65.00	46+15.00	12DD	50.0	50.0		-	1	-	2	-	-	1	
37	L-2	NB	15	D7	R†	45+65.00	46+15.00	12DD	50.0	50.0		-	1	-	2	-	-	1	
								TOTALS	10,158.3	8,394.8	1	24	16	18	233	3	30.3	5	

3

SUMMARY OF QUANTITIES

Q-2

BAHMAN YAZDANI | RICARDO PADILA | CHRIS M THOMAS | REVISED BY | DATE REVISED | CALCULATED-DESIGNED BY | CHECKED BY | FUNCTIONAL SUPERVISOR

STATE OF CALIFORNIA - DEPARTMENT OF TRANSPORTATION
Caltrans
DESIGN

LAST REVISION 12-16-11 | DATE PLOTTED => 27-DEC-2011 | TIME PLOTTED => 10:04

Dist	COUNTY	ROUTE	POST MILES TOTAL PROJECT	SHEET No.	TOTAL SHEETS
11	SD	15	0.5/M4.0	77	116

Bahman Yazdani 07-29-11
REGISTERED CIVIL ENGINEER DATE

08-01-11
PLANS APPROVAL DATE

REGISTERED PROFESSIONAL ENGINEER BAHMAN YAZDANI No. 58322 Exp. 06-30-12 CIVIL STATE OF CALIFORNIA

THE STATE OF CALIFORNIA OR ITS OFFICERS OR AGENTS SHALL NOT BE RESPONSIBLE FOR THE ACCURACY OR COMPLETENESS OF SCANNED COPIES OF THIS PLAN SHEET.

3 REVISED PER ADDENDUM No. 3 DATED DECEMBER 27, 2011

HMA DIKE

DIRECTION	Rte	SIDE	LINE	Beg STATION	END STATION	TYPE	PLACE HMA DIKE (LF)	MINOR HMA HMA DIKE (TON)	RUBBERIZED HOT MIX ASPHALT (GAP GRADED) RHMA DIKE PAD (TON)	REMOVE AC DIKE LENGTH (LF)	REMARKS
NB	15	R+	"W"	28+31.70	29+24.00	F	92.3	1.2	1.7	92.3	NB Rte 15
NB	15	L+	"D7"	35+55.00	37+65.00	E	210.0	5.2	3.9	210.0	NB Rte 15
NB	15	L+	"D7"	37+65.00	37+85.00	C	20.0	0.1	0.2	20.0	NB Rte 15
NB	15	L+	"D7"	37+85.00	43+86.00	F	601.0	7.5	11.2	601.0	NB Rte 15
NB	15	L+	"D7"	45+65.00	45+90.00	F	25.0	0.3	0.2	25.0	NB Rte 15
NB	15	L+	"D7"	45+90.00	46+52.50	C	62.5	0.5	0.6	62.5	NB Rte 15
NB	15	L+	"D7"	46+52.50	48+45.00	E	192.5	4.8	3.6	192.5	NB Rte 15
NB	15	R+	"D7"/"SD-15"	47+27.00	60+99.37	E	1,372.4	33.9	25.7	1,372.4	NB Rte 15
NB	15	R+	"O2"	60+99.37	74+66.00	E	1,366.6	33.8	19.2	1,366.6	NB 15 OFF TO OCEAN VIEW Blvd
NB	15	R+	"O5RS"	64+34.00	74+55.59	E	1,021.6	25.2	14.3	1,021.6	NB 15 ON FROM OCEAN VIEW Blvd
NB	15	R+	"SD-15R"/"SD-15"	74+55.59	80+37.50	E	581.9	14.4	10.9	581.9	NB Rte 15
NB	15	R+	"SD-15"	80+37.50	81+26.00	C	88.5	0.6	0.8	88.5	NB Rte 15
NB	15	R+	"SD-15"	81+26.00	81+51.00	F	25.0	0.3	0.2	25.0	NB Rte 15
NB	15	R+	"SD-15"	87+31.50	87+94.00	C	62.5	0.5	0.6	62.5	NB Rte 15
NB	15	R+	"SD-15"	87+94.00	88+19.00	F	25.0	0.3	0.2	25.0	NB Rte 15
NB	15	R+	"SD-15"	89+53.00	90+55.00	E	113.0	2.8	2.1	113.0	NB Rte 15
NB	15	R+	"SD-15"	99+98.50	100+61.00	C	62.5	0.5	0.6	62.5	NB Rte 15
NB	15	R+	"SD-15"	100+61.00	100+86.00	F	25.0	0.3	0.2	25.0	NB Rte 15
NB	15	R+	"MNB1"	100+39.50	101+14.50	C	75.0	0.5	0.5	62.5	NB 15 ON FROM MARKET STREET
NB	15	R+	"MNB1"	101+14.50	101+39.50	F	25.0	0.3	0.2	25.0	NB 15 ON FROM MARKET STREET
NB	15	R+	"SD-15"	103+42.00	104+06.00	E	64.0	1.6	1.2	64.0	NB Rte 15
NB	15	R+	"SD-15"	108+24.00	111+55.00	E	331.0	8.2	6.2	331.0	NB Rte 15
NB	15	R+	"94SE1"	203+42.30	204+04.80	C	62.5	0.5	0.4	62.5	NB 15 OFF TO 94 EB
NB	15	R+	"94SE1"	204+04.80	204+29.80	F	25.0	0.3	0.2	25.0	NB 15 OFF TO 94 EB
NB	15	R+	"SD-15"	118+80.10	119+42.60	C	62.5	0.5	0.6	62.5	NB Rte 15
NB	15	R+	"SD-15"	119+42.60	119+67.60	F	25.0	0.3	0.2	25.0	NB Rte 15
NB	15	R+	"SD-15"	121+38.00	122+44.00	C	106.0	0.8	1.0	106.0	NB Rte 15
NB	15	R+	"SD-15"	122+44.00	122+69.00	F	25.0	0.3	0.2	25.0	NB Rte 15
NB	15	R+	"SD-15"	144+80.00	145+42.50	C	62.5	0.5	0.6	62.5	NB Rte 15
NB	15	R+	"SD-15"	145+42.50	147+44.00	F	201.5	2.5	1.9	201.5	NB Rte 15
NB	15	R+	"SD-15R"	150+62.70	162+80.00	E	1,217.3	30.1	22.8	1,217.3	NB Rte 15
NB	15	R+	"SD-15R"	169+60.50	170+23.00	C	62.5	0.5	0.6	62.5	NB Rte 15
NB	15	R+	"SD-15R"	170+23.00	170+54.00	F	31.0	0.4	0.3	31.0	NB Rte 15
NB	15	R+	"SD-15R"	179+37.50	180+00.00	C	62.5	0.5	0.6	62.5	NB Rte 15
NB	15	R+	"SD-15R"	180+00.00	182+25.00	F	225.0	2.8	2.1	225.0	NB Rte 15
NB	15	R+	"SD-15R"	185+57.50	188+07.00	E	249.5	6.2	4.7	249.5	NB Rte 15
NB	15	R+	"SD-15R"	193+00.00	206+06.50	E	1,306.5	32.3	24.5	1,306.5	NB Rte 15
NB	15	R+	"SD-15R"	206+06.50	206+69.00	C	62.5	0.5	0.6	62.5	NB Rte 15
NB	15	R+	"SD-15R"	206+69.00	207+00.00	F	31.0	0.4	0.3	31.0	NB Rte 15
NB	15	R+	"SD-15R"	207+00.00	213+92.00	E	692.0	17.1	13.0	692.0	NB Rte 15
NB	15	R+	"SD-15R"	213+92.00	214+26.00	C	34.0	0.2	0.3	34.0	NB Rte 15
NB	15	R+	"SD-15R"	214+26.00	214+51.00	F	25.0	0.3	0.2	25.0	NB Rte 15
NB	15	R+	"SD-15R"	214+51.00	216+51.20	E	200.2	4.9	3.7	200.2	NB Rte 15
SB	15	L+	"SD-15L"	207+38.00	211+30.00	E	392.0	9.7	7.3	392.0	SB Rte 15
SB	15	L+	"SD-15L"	185+39.50	197+60.00	E	1,220.5	30.1	22.8	1,220.5	SB Rte 15
SB	15	L+	"SD-15L"	184+77.00	185+39.50	C	62.5	0.5	0.6	62.5	SB Rte 15
SB	15	L+	"SD-15L"	184+52.00	184+77.00	F	25.0	0.3	0.2	25.0	SB Rte 15
SB	15	L+	"SD-15L"	177+90.00	181+39.00	E	349.0	8.6	6.5	349.0	SB Rte 15
SB	15	L+	"W-4"	173+73.80	180+10.00	F	636.2	8.0		636.2	SB Rte 805
SB	15	L+	"SD-15"	150+47.00	173+73.80	F	2,326.8	29.2	21.9	2,326.8	SB Rte 15
SB	15	L+	"SD-15"	141+67.00	150+47.00	C	880.0	6.4	8.3	880.0	SB Rte 15
SB	15	L+	"SD-15"	131+94.00	141+67.00	F	973.0	12.2	9.2	973.0	SB Rte 15
WB	94	L+	"NWX1"	196+45.90	208+43.90	F	1,198.0	15.0	8.5	1,198.0	WB Rte 94
SB	15	L+	"SD-15"	124+16.00	124+78.50	C	62.5	0.5	0.6	62.5	SB Rte 15
SB	15	L+	"SD-15"	123+49.00	124+16.00	F	67.0	0.8	0.6	67.0	SB Rte 15
SB	15	L+	"O4R"	70+06.00	71+56.00	F	150.0	1.9	1.1	150.0	SB 15 OFF TO OCEAN VIEW Blvd
SB	15	L+	"O4R"	63+36.00	65+50.00	E	214.0	5.3	3.0	214.0	SB 15 OFF TO OCEAN VIEW Blvd
SB	15	L+	"O3"	68+00.00	69+47.00	E	147.0	3.6	2.1	147.0	SB 15 ON RAMP FROM OCEAN VIEW Blvd
SB	15	L+	"O3"	70+19.50	70+44.50	F	25.0	0.3	0.2	25.0	SB 15 ON RAMP FROM OCEAN VIEW Blvd
SB	15	L+	"O3"	70+44.50	71+16.00	C	71.5	0.5	0.5	71.5	SB 15 ON RAMP FROM OCEAN VIEW Blvd
SB	15	L+	"O3"	71+16.00	75+00.00	E	384.0	9.5	5.4	384.0	SB 15 ON RAMP FROM OCEAN VIEW Blvd
SB	15	L+	"SD-15"	66+14.00	66+98.00	E	84.0	2.1	1.2	84.0	SB Rte 15
SB	15	L+	"SD-15"	65+14.00	66+14.00	C	100.0	0.7	0.9	100.0	SB Rte 15
SB	15	L+	"SD-15"	64+80.00	65+14.00	F	34.0	0.4	0.3	34.0	SB Rte 15
SB	15	L+	"W"	28+31.70	31+64.00	F	332.3	4.2	3.1	332.3	SB Rte 15
						TOTAL	20,945.6	394.1	287.8*	20,945.6	

* - FOR ADDIATIONAL QUANTITIES SEE ROADWAY QUANTITIES.

REMOVE CONCRETE

SHEET	Sta	(CY)	REMARKS
L-7	103+60 "NM1"	2.8	CURB RAMP
L-7	96+33 "MNB1"	3.6	CURB RAMP
L-7	110+12 "SM12"	3.0	CURB RAMP
L-7	110+16 "SM12"	3.6	CURB RAMP
	TOTAL	13.0	

MINOR CONCRETE MISCELLANEOUS CONSTRUCTION

SHEET	Sta	(CY)	REMARKS
L-7	103+60 "NM1"	3.0	CURB RAMP
L-7	96+33 "MNB1"	3.8	CURB RAMP
L-7	110+12 "SM12"	3.2	CURB RAMP
L-7	110+16 "SM12"	3.8	CURB RAMP
	TOTAL	13.8	

3

SUMMARY OF QUANTITIES

Q-7

STATE OF CALIFORNIA - DEPARTMENT OF TRANSPORTATION
Caltrans DESIGN
FUNCTIONAL SUPERVISOR CHRIS M THOMAS
CALCULATED-DESIGNED BY BAHMAN YAZDANI
CHECKED BY RICARDO PADILA
REVISED BY
DATE REVISED

LAST REVISION 12-19-11
DATE PLOTTED => 27-DEC-2011
TIME PLOTTED => 10:04