Dist	COUNTY	ROUTE	POST MILES TOTAL PROJECT	SHEET No.	TOTAL SHEETS
11	SD	163	1.4	1	147

STATE OF CALIFORNIA

DEPARTMENT OF TRANSPORTATION

BRLS-6211(089)

PROJECT PLANS FOR CONSTRUCTION ON

STATE HIGHWAY

IN SAN DIEGO COUNTY IN SAN DIEGO AT LAUREL STREET BRIDGE OVERCROSSING

TO BE SUPPLEMENTED BY STANDARD PLANS DATED 2010

INDEX OF PLANS

SHEET NO.	DESCRIPTION
1	TITLE AND LOCATION MAP
2-3	TYPICAL CROSS SECTIONS
4	PROJECT CONTROL
5-6	LAYOUT
7-9	CONSTRUCTION DETAILS
10-12	WATER POLLUTION CONTROL PLAN AND QUANTITIES
13-24	DRAINAGE PLAN, PROFILE, DETAILS AND QUANTITIES
25	UTILITY PLAN
26-27	CONSTRUCTION AREA SIGNS
28-34	STAGE CONSTRUCTION AND QUANTITIES
35-42	TRAFFIC HANDLING PLANS
43-44	PAVEMENT DELINEATION DETAILS AND QUANTITIES
45-46	SUMMARY OF QUANTITIES
47-50	HIGHWAY PLANTING
51-78	ELECTRICAL PLANS
79-82	TRAFFIC CONTROL SYSTEM
83-86	REVISED STANDARD PLANS

STRUCTURE PLANS

88	GENERAL PLAN
89	INDEX TO PLANS
90-95	DEMOLITION DETAILS
96-111	RETROFIT DETAILS
112-119	REHABILITATION PLAN, LAYOUT AND DETAILS
120-124	ACCESS DOOR GENERAL PLAN AND DETAILS
125	LADDERS, CATWALKS AND PLATFORMS
126	PIER LADDER PLAN
127	ANCHOR ARM LADDER PLAN
128-136	ABUTMENT CATWALK PLAN AND DETAILS
137	PLATFORM GRATING LAYOUT
138-139	LADDER DETAILS
140-145	DRAINAGE PLAN AND DETAILS
146-147	SLOPE REPAIR DETAILS

LOCATION MAP

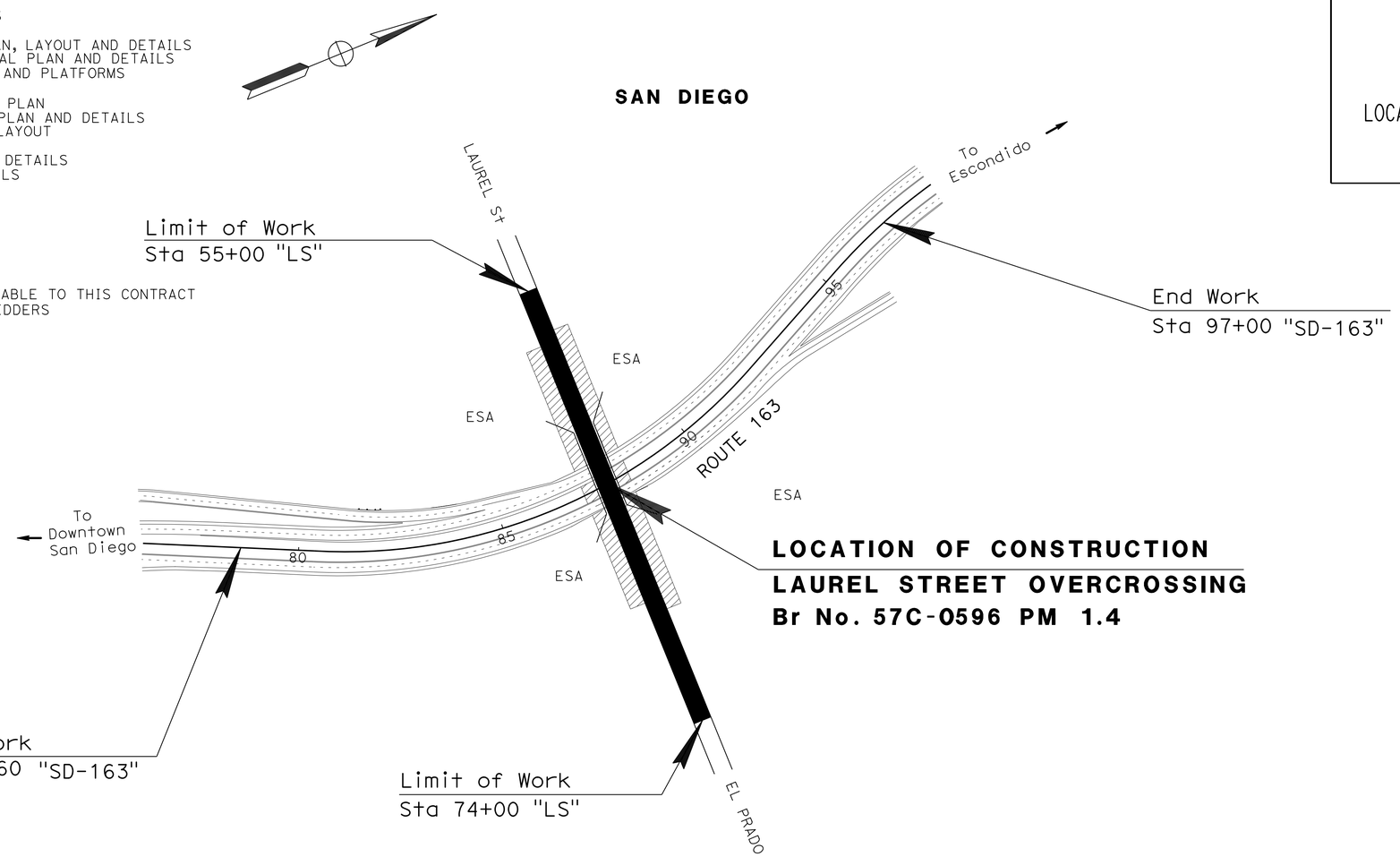

THE STANDARD PLANS LIST APPLICABLE TO THIS CONTRACT IS INCLUDED IN THE NOTICE TO BIDDERS AND SPECIAL PROVISIONS BOOK.

TEMPORARY CONSTRUCTION AREA

THE CONTRACTOR SHALL POSSESS THE CLASS (OR CLASSES) OF LICENSE AS SPECIFIED IN THE "NOTICE TO BIDDERS."

NO SCALE

PROJECT MANAGER: LOU MELENDEZ

DESIGN ENGINEER: CHRIS M. THOMAS

PROJECT ENGINEER REGISTERED CIVIL ENGINEER — DATE 03-04-13

March 04, 2013
PLANS APPROVAL DATE

REGISTERED PROFESSIONAL ENGINEER — RICARDO PADILLA — No. C58151 — Exp. 6-30-14 — CIVIL — STATE OF CALIFORNIA

THE STATE OF CALIFORNIA OR ITS OFFICERS OR AGENTS SHALL NOT BE RESPONSIBLE FOR THE ACCURACY OR COMPLETENESS OF SCANNED COPIES OF THIS PLAN SHEET.

CONTRACT No.	11-264114
PROJECT ID	1100000225

LAST REVISION 10-18-12

DATE PLOTTED => 14-MAR-2013
TIME PLOTTED => 09:44

Dist	COUNTY	ROUTE	POST MILES TOTAL PROJECT	SHEET No.	TOTAL SHEETS
11	SD	163	1.4	2	147

REGISTERED CIVIL ENGINEER 03-04-13 DATE

03-04-13
PLANS APPROVAL DATE

REGISTERED PROFESSIONAL ENGINEER RICARDO PADILLA No. C58151 Exp. 6-30-14 CIVIL STATE OF CALIFORNIA

THE STATE OF CALIFORNIA OR ITS OFFICERS OR AGENTS SHALL NOT BE RESPONSIBLE FOR THE ACCURACY OR COMPLETENESS OF SCANNED COPIES OF THIS PLAN SHEET.

NOTES:

1. DIMENSIONS OF THE PAVEMENT STRUCTURES (STRUCTURAL SECTIONS) ARE SUBJECT TO TOLERANCES SPECIFIED IN THE STANDARD SPECIFICATIONS.
2. SUPERELEVATIONS ARE AS SHOWN.
3. FOR DITCH FLOW LINE AND SLOPE, SEE DRAINAGE PLANS.
4. FOR Conc BARRIER AND METAL BEAM GUARD RAILING, SEE LAYOUTS.
5. PROTECT IN PLACE, NEW AT&T 4" Dia CONDUITS.
6. FOR SAWCUT LOCATIONS, SEE LAYOUTS.
7. OFFSET DIMENSIONS SHOWN ON LAYOUT SHEETS REFLECT DISTANCES TO THE FBARR

DESIGN DESIGNATION:

2008 ADT	=	170,000
2008 DHV	=	12,920
2030 ADT	=	220,000
2030 DHV	=	16720
D%	=	60% SB
TRUCK %	=	4.2% OF ADT
V (SPEED)	=	70 MPH

PAVEMENT CLIMATE REGION

SOUTH COAST

LEGEND:

PME = POLYMER MODIFIED EMULSION

FBARR = FACE OF BARRIER

1 — 0.25′ HMA (TYPE A)
0.87′ JPCP (Mod)

SEE BRIDGE PLANS

2 — COLD PLANE AC PAVEMENT 0.25′ Max
0.25′ HMA (TYPE A)

1 — 0.35′ AC
0.38′ AB
0.39′ AS

2 — 0.45′ AC
0.80′ AB

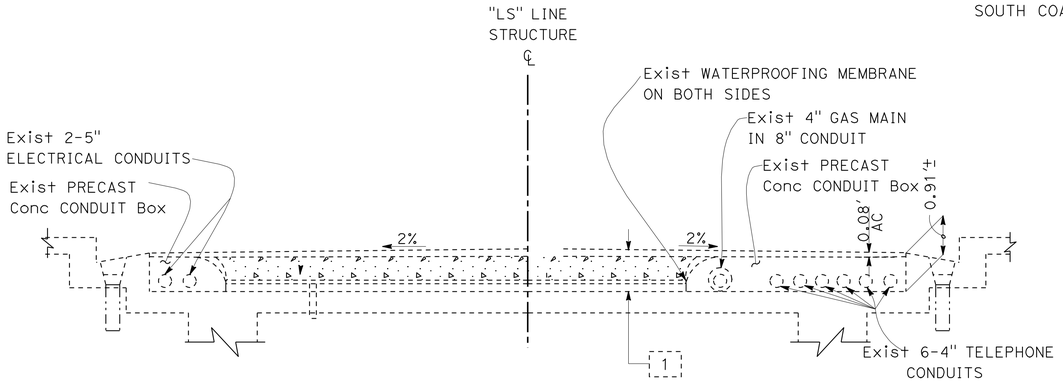

Exist BRIDGE ROADWAY SURFACE DETAILS

Sta 61+73.39 TO 69+41.82 "LS" LINE
SEE BRIDGE PLANS

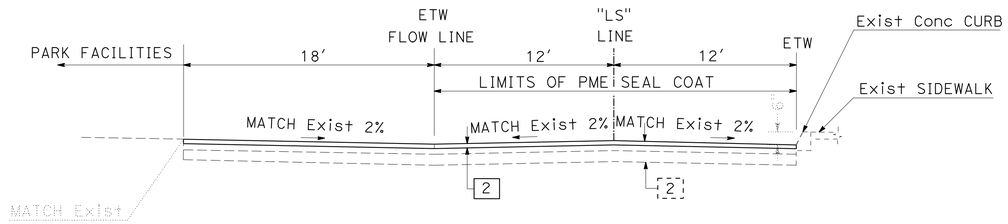

LAUREL STREET - EL PRADO STREET

Sta 71+05.00 TO 71+20.00 "LS" LINE

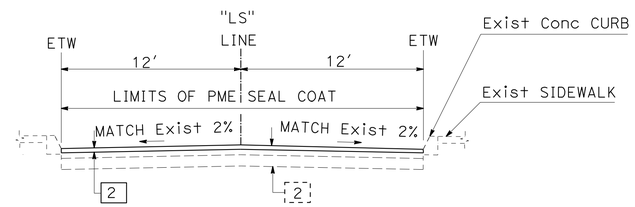

LAUREL STREET - EL PRADO STREET

Sta 69+41.82 TO 71+05.00 "LS" LINE

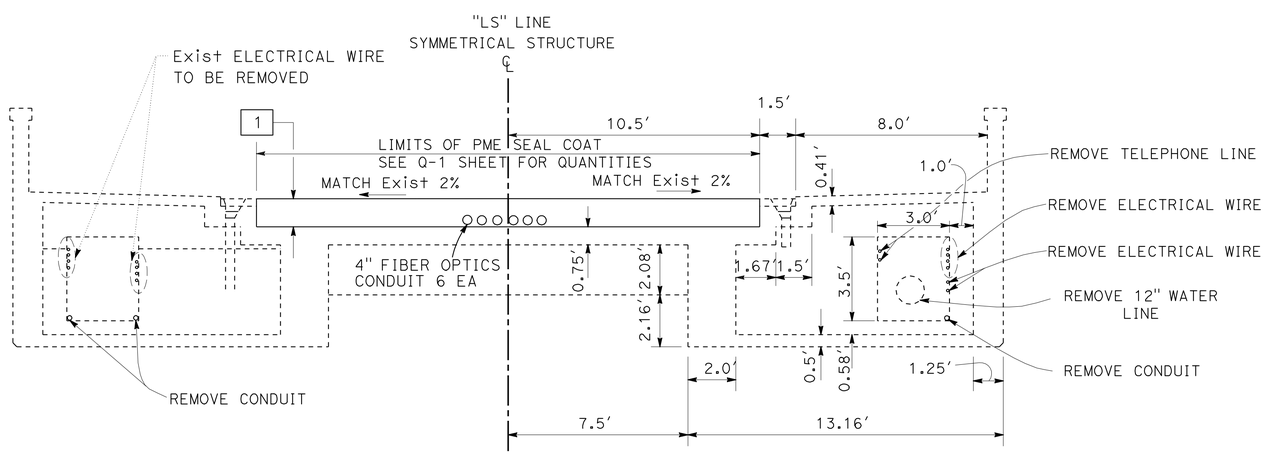

BRIDGE SECTION - ARCH MID - SPAN

Sta 61+73.39 TO 69+41.82 "LS" LINE
SEE BRIDGE PLANS

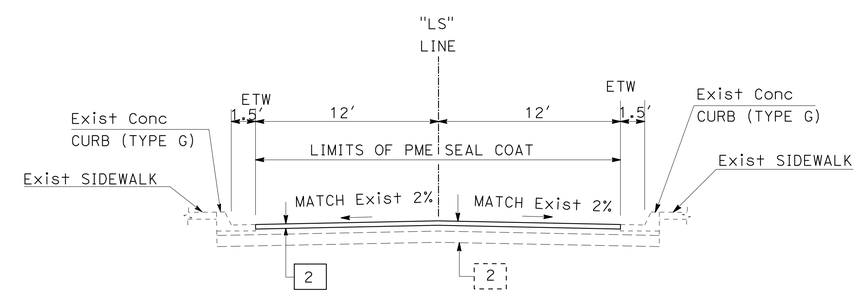

LAUREL STREET - EL PRADO STREET

Sta 55+45.00 TO 61+73.39 "LS" LINE

TYPICAL CROSS SECTIONS

NO SCALE

X-1

STATE OF CALIFORNIA - DEPARTMENT OF TRANSPORTATION
Caltrans® DESIGN

FUNCTIONAL SUPERVISOR: CHRIS M. THOMAS
CALCULATED-DESIGNED BY: RAMON JUAREZ
CHECKED BY: RICARDO PADILLA
REVISED BY
DATE REVISED

LAST REVISION 02-27-13
DATE PLOTTED => 13-MAR-2013
TIME PLOTTED => 22:15

Dist	COUNTY	ROUTE	POST MILES TOTAL PROJECT	SHEET No.	TOTAL SHEETS
11	SD	163	1.4	3	147

REGISTERED CIVIL ENGINEER 03-04-13 DATE

03-04-13
PLANS APPROVAL DATE

REGISTERED PROFESSIONAL ENGINEER
RICARDO PADILLA
No. C58151
Exp. 6-30-13
CIVIL
STATE OF CALIFORNIA

THE STATE OF CALIFORNIA OR ITS OFFICERS OR AGENTS SHALL NOT BE RESPONSIBLE FOR THE ACCURACY OR COMPLETENESS OF SCANNED COPIES OF THIS PLAN SHEET.

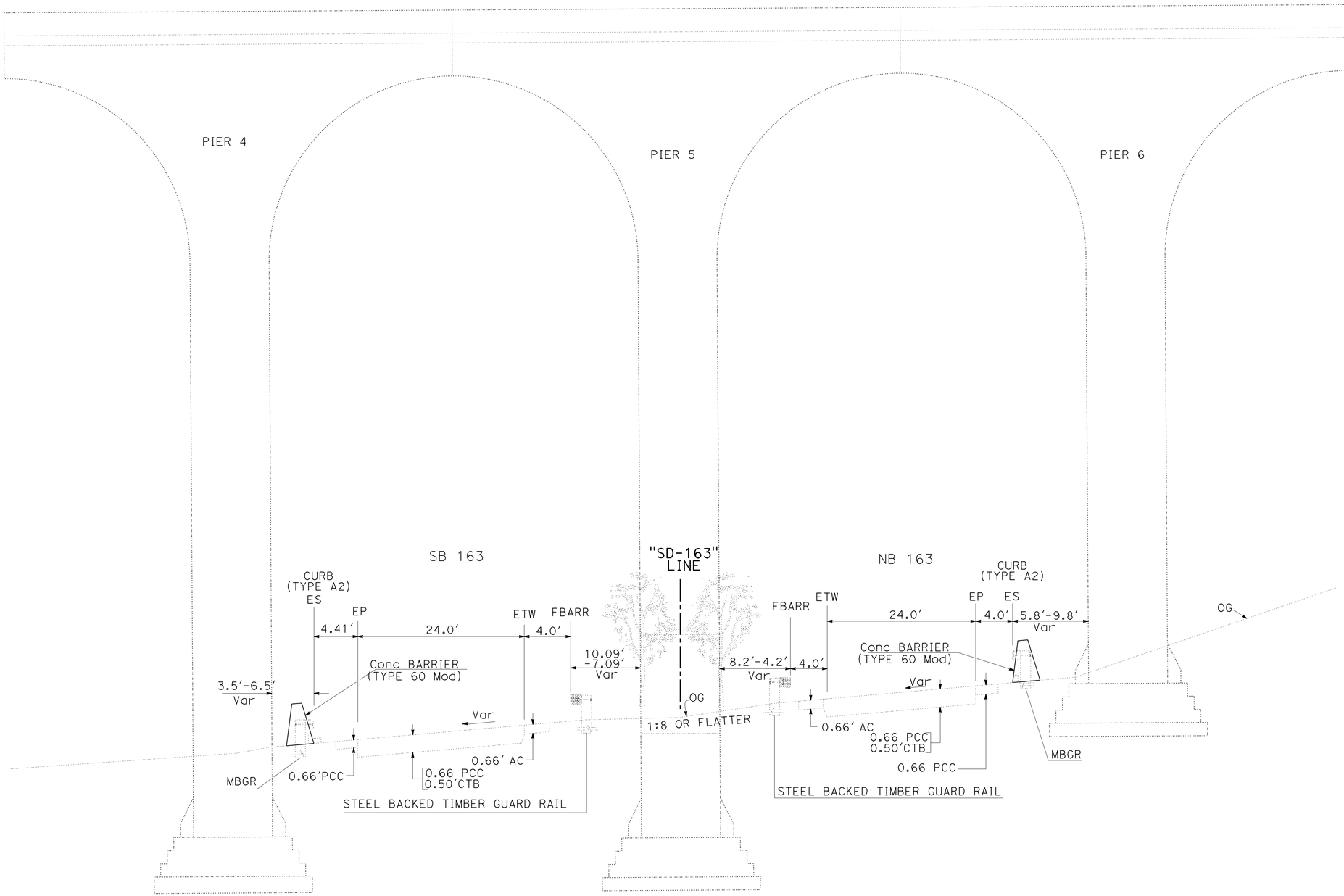

ROUTE 163

NB Sta 87+22 TO 88+00 "SD 163" LINE
SB Sta 87+40 TO 89+12 "SD 163" LINE

TYPICAL CROSS SECTIONS

NO SCALE

X-2

STATE OF CALIFORNIA - DEPARTMENT OF TRANSPORTATION
Caltrans
DESIGN

FUNCTIONAL SUPERVISOR: CHRIS M. THOMAS
CALCULATED-DESIGNED BY: RICARDO PADILLA
CHECKED BY: RAMON JUAREZ
REVISED BY
DATE REVISED

LAST REVISION 11-27-12
DATE PLOTTED => 13-MAR-2013
TIME PLOTTED => 22:16

Dist	COUNTY	ROUTE	POST MILES TOTAL PROJECT	SHEET No.	TOTAL SHEETS
11	SD	163	1.4	4	147

PROFESSIONAL LAND SURVEYOR DATE 03-04-13

03-04-13
PLANS APPROVAL DATE

PROFESSIONAL LAND SURVEYOR MARK D. PHELAN L.S.7111 EXP:12-31-12 STATE OF CALIFORNIA

THE STATE OF CALIFORNIA OR ITS OFFICERS OR AGENTS SHALL NOT BE RESPONSIBLE FOR THE ACCURACY OR COMPLETENESS OF SCANNED COPIES OF THIS PLAN SHEET.

NOTES:

FOR COMPLETE PROJECT CONTROL DATA, SEE THE SURVEY RECORDS ON FILE IN THE SURVEY DEPARTMENT AT THE DISTRICT OFFICE.

BASIS OF BEARINGS AND COORDINATES

FOR THIS PROJECT IT IS THE CALIFORNIA COORDINATE SYSTEM OF 1983, HPGN (1991.35 Epoch), ZONE 6. PROJECT CONTROL STATIONS WERE ESTABLISHED ACCORDING TO CRITERIA SET FORTH IN THE FEDERAL GEODETIC CONTROL SUBCOMMITTEE'S "GEOMETRIC GEODETIC ACCURACY STANDARDS AND SPECIFICATIONS FOR USING GPS RELATIVE POSITIONING TECHNIQUES" REPRINTED AUGUST 1, 1989.

BASIS OF ELEVATIONS

FOR THIS PROJECT IT IS THE NORTH AMERICAN VERTICAL DATUM OF 1988 (NAVD88).

IN THE EVENT GPS MACHINE CONTROL/GUIDANCE IS USED FOR THIS PROJECT, THE CONTRACTOR SHALL CONTACT OR MEET WITH DISTRICT 11'S LAND SURVEY DIVISION TO OBTAIN THE CONTROL NECESSARY TO ESTABLISH A PROJECT CALIBRATION COMPATIBLE FOR ALL USERS.

ABBREVIATIONS:

CDH CALIFORNIA DEPARTMENT OF HIGHWAYS

LEGEND:

(3) 3RD ORDER STATION

CONTROL FOR DESIGN AND CONSTRUCTION

STATION DESIGNATION	ORDER	NORTHING	EASTING	ELEVATION	DESCRIPTION
163 80+54.50	3RD	1,846,410.31	6,283,388.92	138.22	2¼" CDH BRASS DISK STAMPED "80+54.50 BC"
163 87+00.00	3RD	1,847,038.08	6,283,508.35	146.22	2¼" CDH BRASS DISK STAMPED "87+00 POC"
163 92+16.57	3RD	1,847,534.22	6,283,377.16	148.83	2¼" CDH BRASS DISK STAMPED "92+16.57 EC"
LRL CTR	3RD	1,847,129.07	6,283,510.16	253.47	CHISELED "X" IN SIDEWALK
LRL WST	3RD	1,847,128.86	6,282,685.33	253.74	CHISELED "X" IN SIDEWALK

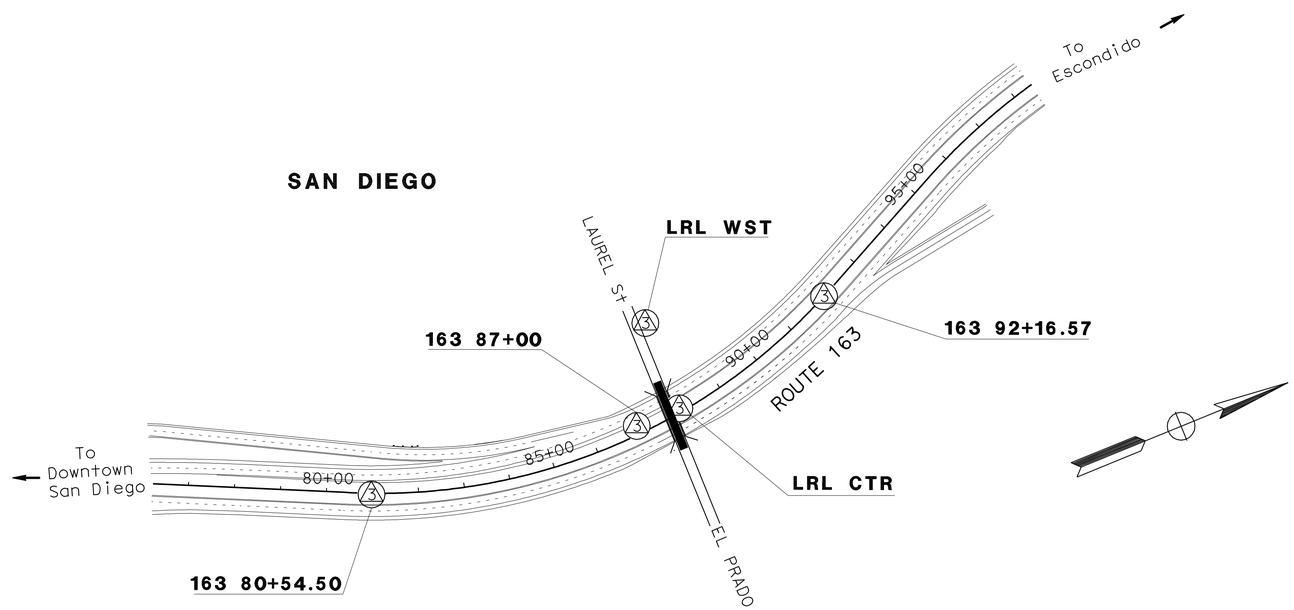

PROJECT CONTROL

NO SCALE

PC-1

APPROVED FOR PROJECT CONTROL INFORMATION ONLY

STATE OF CALIFORNIA - DEPARTMENT OF TRANSPORTATION
Caltrans LAND SURVEYS DIVISION

FUNCTIONAL SUPERVISOR: BRUCE URQUHART
CALCULATED-DESIGNED BY: MARK PHELAN
CHECKED BY: NED SALMAN
REVISED BY
DATE REVISED

LAST REVISION 10-23-12 | DATE PLOTTED => 13-MAR-2013 | TIME PLOTTED => 22:16

Dist	COUNTY	ROUTE	POST MILES TOTAL PROJECT	SHEET No.	TOTAL SHEETS
11	SD	163	1.4	5	147

REGISTERED CIVIL ENGINEER 03-04-13 DATE

03-04-13
PLANS APPROVAL DATE

REGISTERED PROFESSIONAL ENGINEER RICARDO PADILLA No. C58151 Exp. 6-30-14 CIVIL STATE OF CALIFORNIA

THE STATE OF CALIFORNIA OR ITS OFFICERS OR AGENTS SHALL NOT BE RESPONSIBLE FOR THE ACCURACY OR COMPLETENESS OF SCANNED COPIES OF THIS PLAN SHEET.

NOTE:

FOR ACCURATE RIGHT OF WAY DATA, CONTACT RIGHT OF WAY ENGINEERING AT THE DISTRICT OFFICE.

LEGEND:

- AREA FOR CONTRACTOR'S USE
- TEMPORARY CONSTRUCTION AREA
- Exist TRAIL
- COLD PLANE AC PAVEMENT (0.25' Max) 0.25' HMA (TYPE A)
- PROTECT EXISTING PALM TREES.

CURVE DATA

No.	R	Δ	T	L
1	1984.72'	5°33'08"	96.24'	192.33'
2	2180.10'	13°01'25"	248.84'	495.54'
3	4000.58'	8°16'49"	289.58'	578.15'
5	1300.26'	15°59'29"	182.64'	362.90'
4	999.95'	16°41'01"	146.62'	291.17'

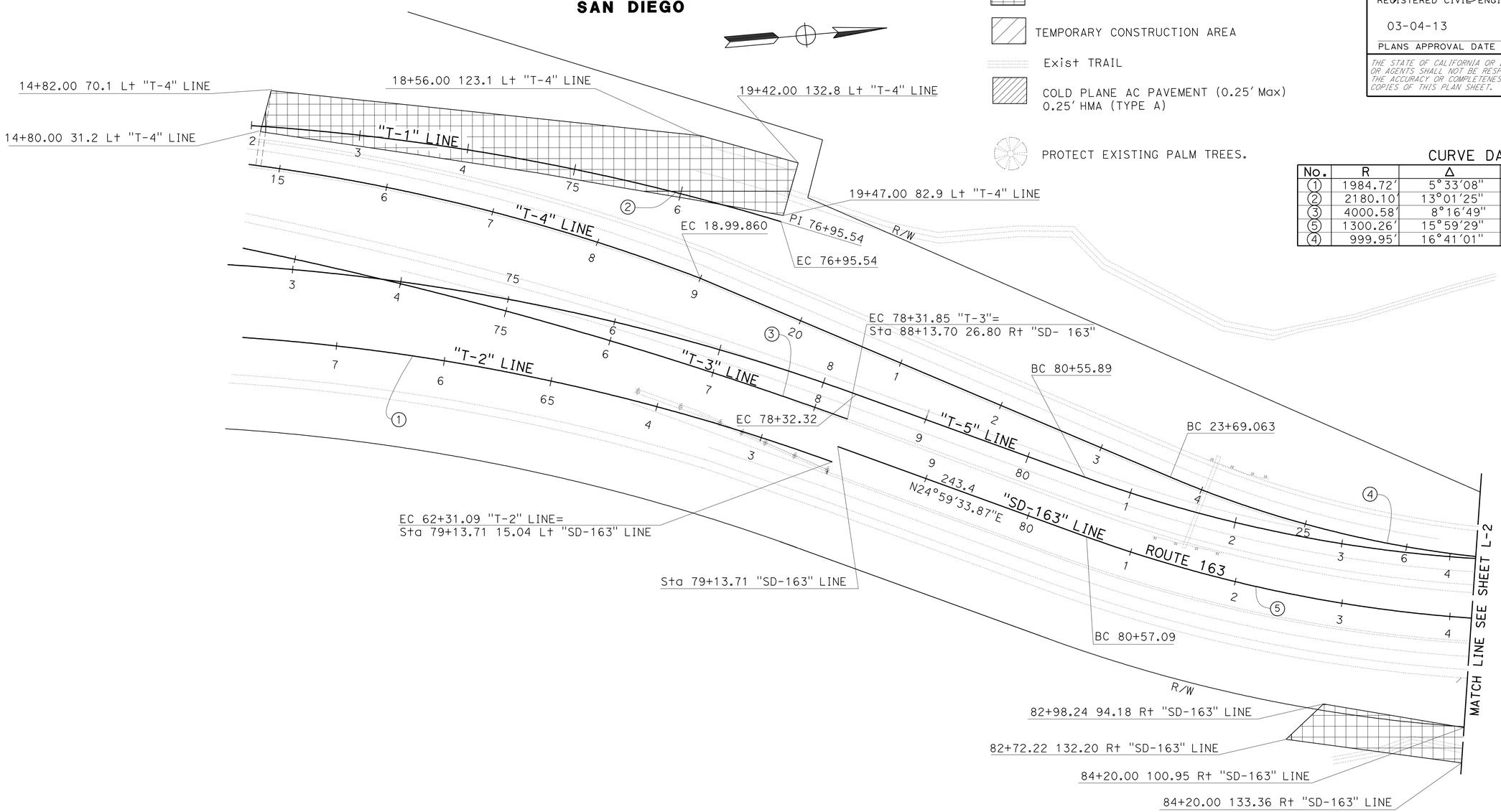

LAYOUT

SCALE 1" = 50'

L-1

STATE OF CALIFORNIA - DEPARTMENT OF TRANSPORTATION

Caltrans

DESIGN

FUNCTIONAL SUPERVISOR: CHRIS M. THOMAS

CALCULATED-DESIGNED BY: RICARDO PADILLA

CHECKED BY: RAMON JUAREZ

REVISED BY

DATE REVISED

LAST REVISION 11-27-12

DATE PLOTTED => 13-MAR-2013
TIME PLOTTED => 22:17

Dist	COUNTY	ROUTE	POST MILES TOTAL PROJECT	SHEET No.	TOTAL SHEETS
11	SD	163	1.4	6	147

REGISTERED CIVIL ENGINEER 03-04-13 DATE

03-04-13
PLANS APPROVAL DATE

REGISTERED PROFESSIONAL ENGINEER RICARDO PADILLA No. C58151 Exp. 6-30-14 CIVIL STATE OF CALIFORNIA

THE STATE OF CALIFORNIA OR ITS OFFICERS OR AGENTS SHALL NOT BE RESPONSIBLE FOR THE ACCURACY OR COMPLETENESS OF SCANNED COPIES OF THIS PLAN SHEET.

NOTE:

FOR ACCURATE RIGHT OF WAY DATA, CONTACT RIGHT OF WAY ENGINEERING AT THE DISTRICT OFFICE.

CURVE DATA

No.	R	Δ	T	L
5	1300.26′	33°29′23″	391.20′	760.01′
4	1289.09′	4°32′01″	51.03′	102.00′

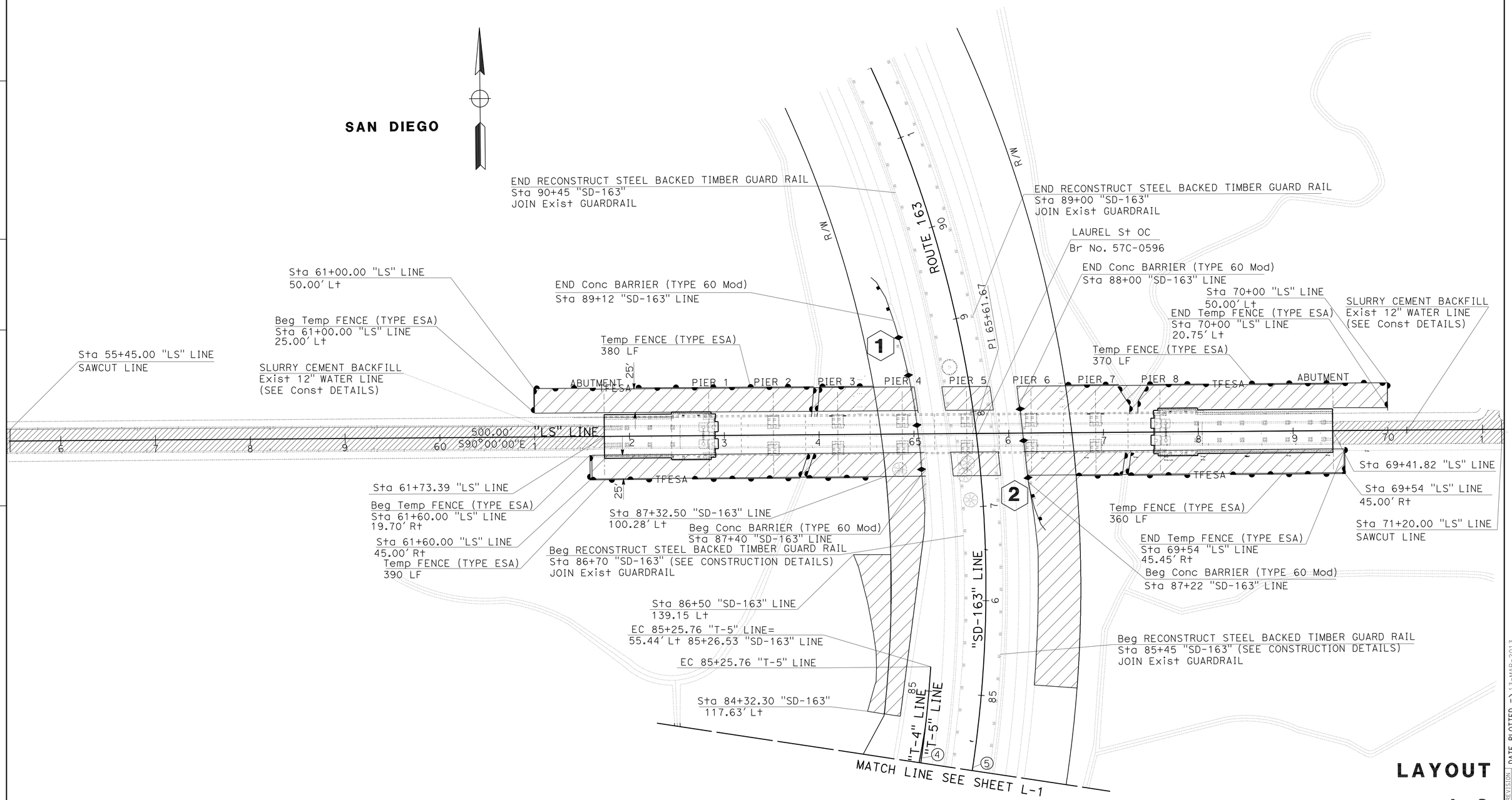

LAYOUT

SCALE: 1" = 50′

L-2

STATE OF CALIFORNIA - DEPARTMENT OF TRANSPORTATION
Caltrans
DESIGN

FUNCTIONAL SUPERVISOR: CHRIS M. THOMAS
CALCULATED-DESIGNED BY: RICARDO PADILLA
CHECKED BY: RAMON JUAREZ
REVISED BY
DATE REVISED

LAST REVISION 02-13-13
DATE PLOTTED => 13-MAR-2013
TIME PLOTTED => 22:17

Dist	COUNTY	ROUTE	POST MILES TOTAL PROJECT	SHEET No.	TOTAL SHEETS
11	SD	163	1.4	7	147

REGISTERED CIVIL ENGINEER 03-04-13 DATE

03-04-13
PLANS APPROVAL DATE

REGISTERED PROFESSIONAL ENGINEER RICARDO PADILLA No. C58151 Exp. 6-30-14 CIVIL STATE OF CALIFORNIA

THE STATE OF CALIFORNIA OR ITS OFFICERS OR AGENTS SHALL NOT BE RESPONSIBLE FOR THE ACCURACY OR COMPLETENESS OF SCANNED COPIES OF THIS PLAN SHEET.

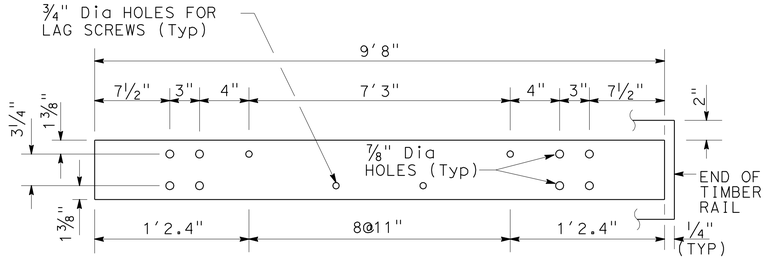

STEEL RAIL 6" x 3/8" x 4'9"

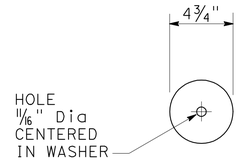

PLATE WASHER DETAIL
4 3/4" Dia x 15/64"

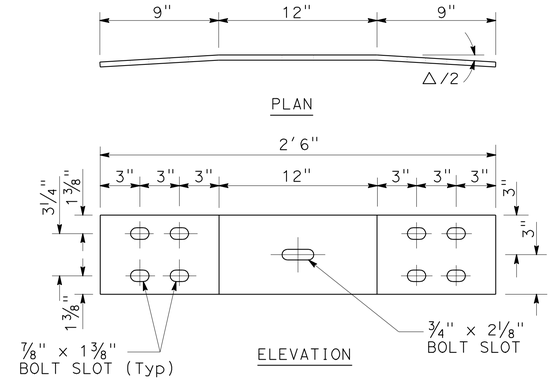

BENT SPLICE PLATE
6" x 3/8" x 2'6"

BEND AND END CUT TABLE		
RADIUS R (ft)	Δ/2 (DEGREES)	D (in)
16'05"	8.63	29/32"
26'03"	5.38	9/16"
32'10"	4.3	7/16"
39'05"	3.58	11/32"
45'11"	3.07	5/16"
52'06"	2.69	9/32"
59'00"	2.39	1/4"
65'07"	2.15	3/16"
72'02"	1.95	3/16"
OVER 72'02"	FLAT	0

BOLT LENGTHS TABLE	
TYPE A (BLOCK-OUT)	TYPE B (NO BLOCK-OUT)
1' 15/64"	10 53/64"

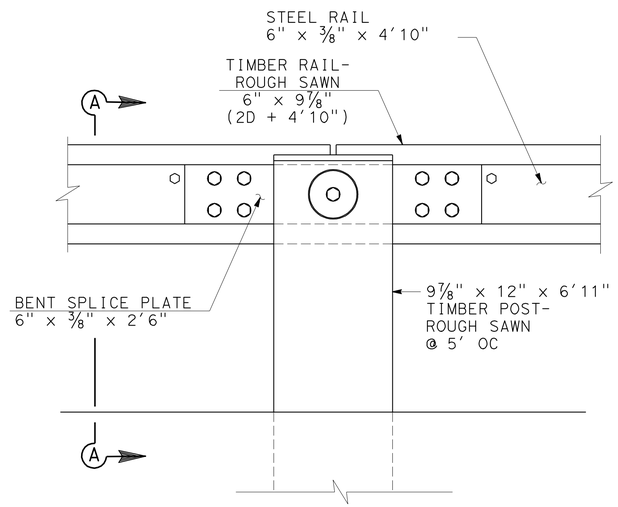

ELEVATION

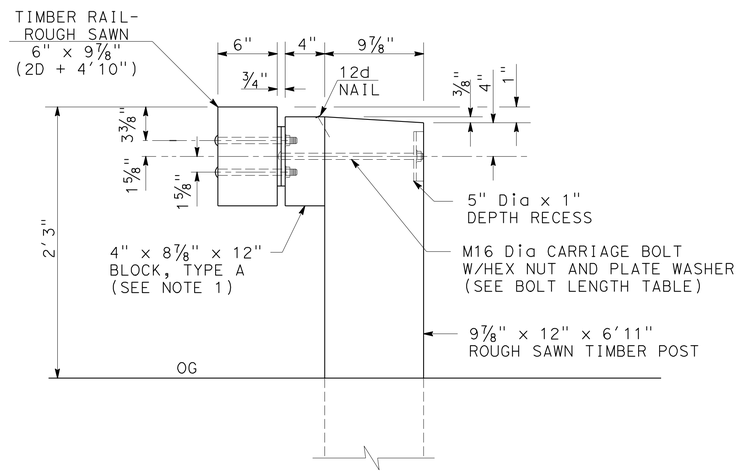

SECTION A-A

NOTES:

1. USE THE TYPE A, BLOCKED-OUT, SYSTEM AS SPECIFIED.
2. USE GALVANIZED STEEL FOR ALL STRUCTURAL STEEL AND FASTENER HARDWARE.
3. ALL STRUCTURAL STEEL AND FASTENER HARDWARE SHALL BE PAINTED BLACK OR A LOW GLOSS WOOD TONE.
4. FURNISH SHOP BENT SPLICE PLATES. USE THE MINIMUM BEND ANGLE SHOWN IN THE "BEND AND END CUT TABLE".
5. FURNISH HARDWARE IN THE METRIC SIZES SHOWN. EQUIVALENT IMPERIAL SIZES MAY BE USED WHEN METRIC SIZES ARE NOT AVAILABLE.

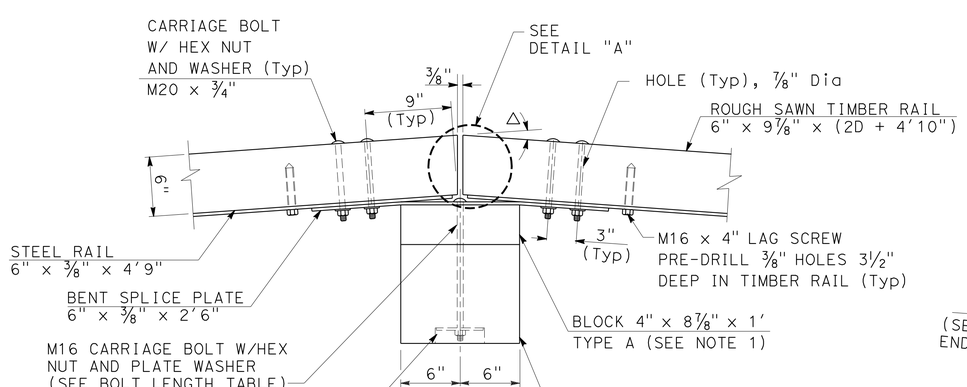

PLAN

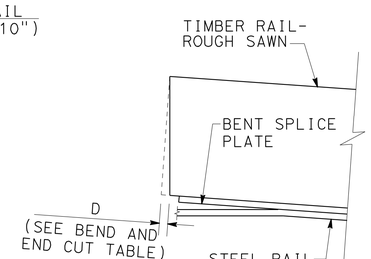

DETAIL "A"

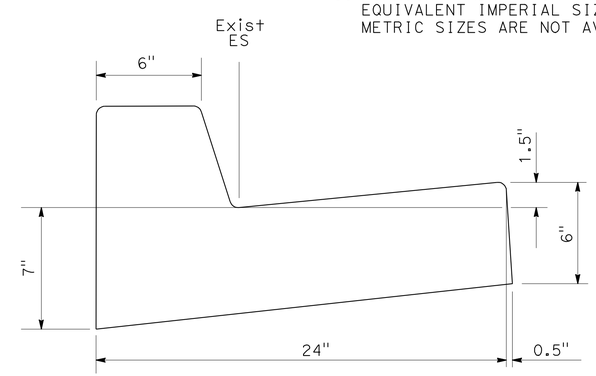

Exist CURB

NO SCALE

CONSTRUCTION DETAILS

C-1

STATE OF CALIFORNIA - DEPARTMENT OF TRANSPORTATION
Caltrans

FUNCTIONAL SUPERVISOR: CHRIS M. THOMAS
CALCULATED-DESIGNED BY: RICARDO PADILLA
CHECKED BY: RAMON JUAREZ
REVISED BY
DATE REVISED

LAST REVISION 10-24-12
DATE PLOTTED => 13-MAR-2013
TIME PLOTTED => 22:17

Dist	COUNTY	ROUTE	POST MILES TOTAL PROJECT	SHEET No.	TOTAL SHEETS
11	SD	163	1.4	8	147

REGISTERED CIVIL ENGINEER 03-04-13 DATE

03-04-13
PLANS APPROVAL DATE

REGISTERED PROFESSIONAL ENGINEER RICARDO PADILLA No. C58151 Exp. 6-30-14 CIVIL STATE OF CALIFORNIA

THE STATE OF CALIFORNIA OR ITS OFFICERS OR AGENTS SHALL NOT BE RESPONSIBLE FOR THE ACCURACY OR COMPLETENESS OF SCANNED COPIES OF THIS PLAN SHEET.

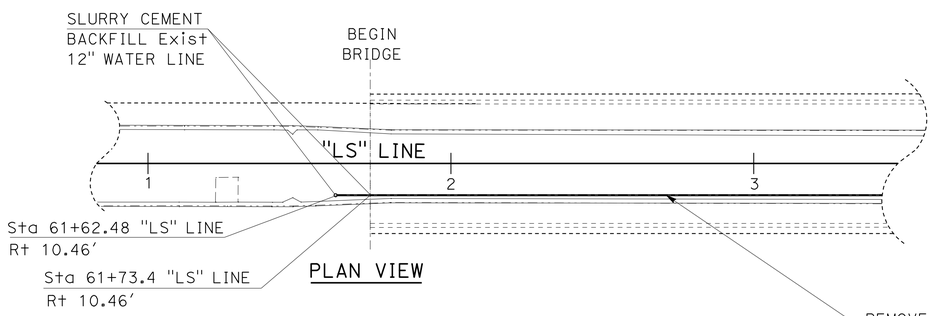

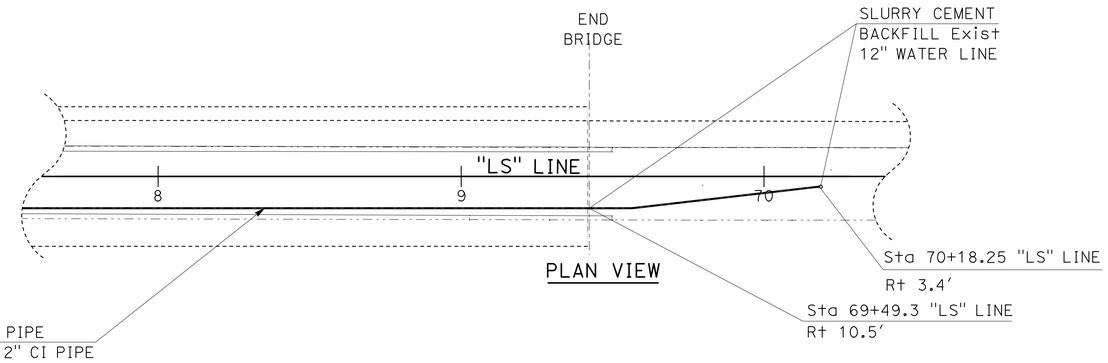

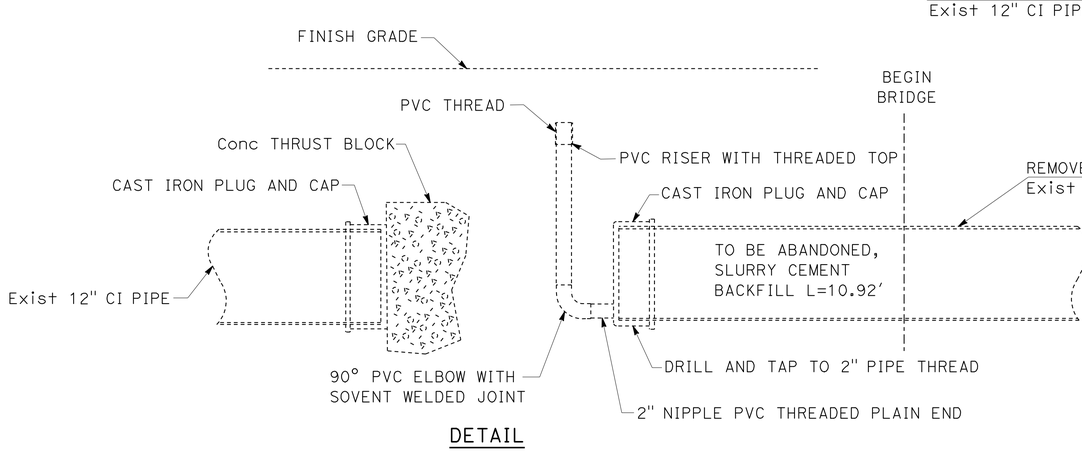

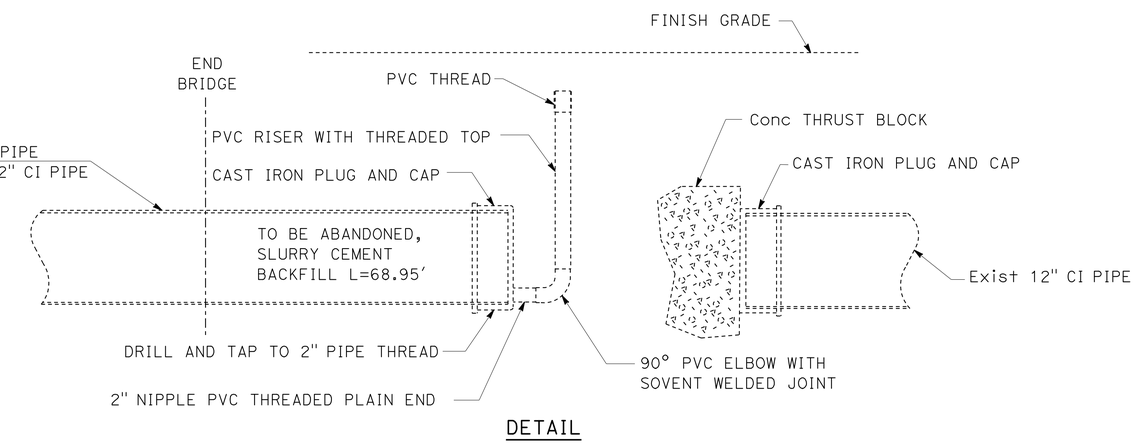

CONSTRUCTION DETAILS

NO SCALE

C-2

STATE OF CALIFORNIA - DEPARTMENT OF TRANSPORTATION
Caltrans® DESIGN

FUNCTIONAL SUPERVISOR: CHRIS M. THOMAS
CALCULATED-DESIGNED BY: RICARDO PADILLA
CHECKED BY: RAMON JUAREZ
REVISED BY
DATE REVISED

LAST REVISION 02-27-13
DATE PLOTTED => 13-MAR-2013
TIME PLOTTED => 22:18

Dist	COUNTY	ROUTE	POST MILES TOTAL PROJECT	SHEET No.	TOTAL SHEETS
11	SD	163	1.4	9	147

REGISTERED CIVIL ENGINEER 03-04-13 DATE

03-04-13
PLANS APPROVAL DATE

REGISTERED PROFESSIONAL ENGINEER RICARDO PADILLA No. C58151 Exp. 06-30-14 CIVIL STATE OF CALIFORNIA

THE STATE OF CALIFORNIA OR ITS OFFICERS OR AGENTS SHALL NOT BE RESPONSIBLE FOR THE ACCURACY OR COMPLETENESS OF SCANNED COPIES OF THIS PLAN SHEET.

NOTES:

1. REINFORCING STEEL SHALL EXTEND CONTINUOUS THROUGH CONSTRUCTION JOINTS.

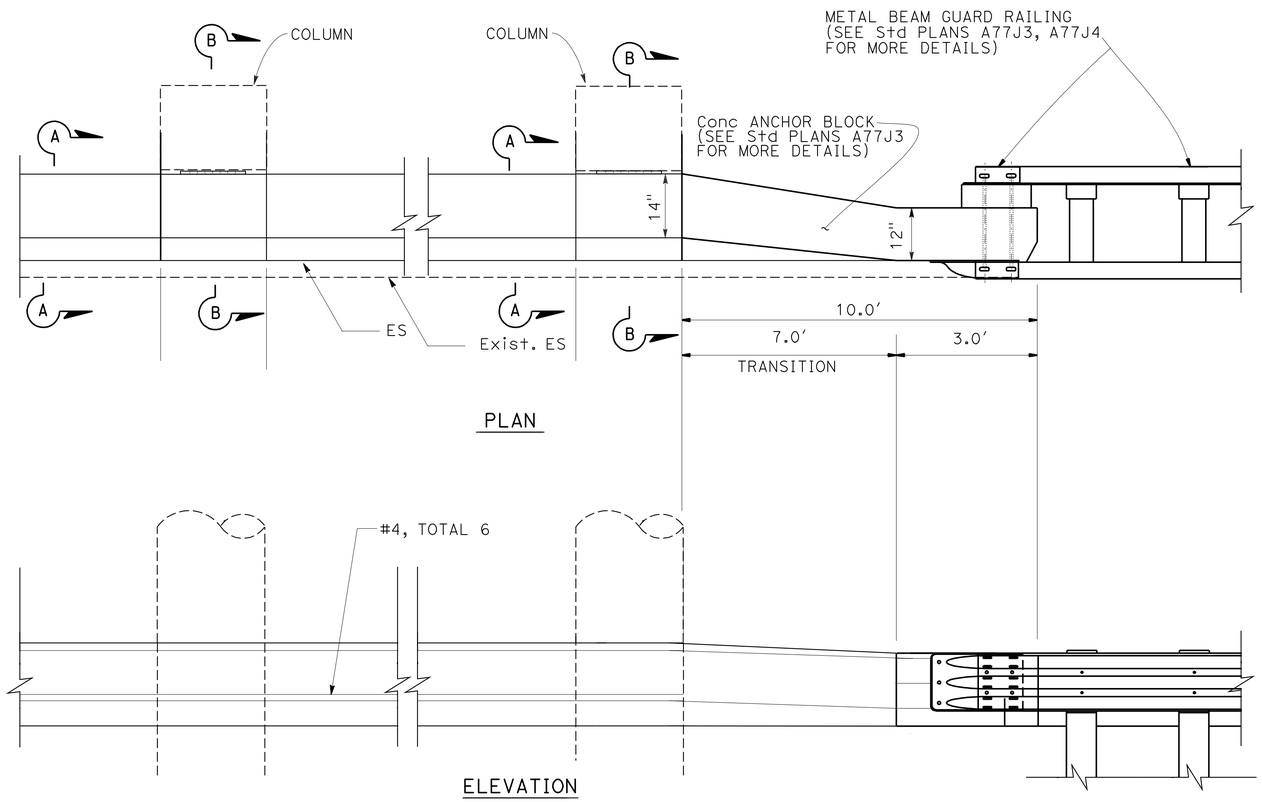

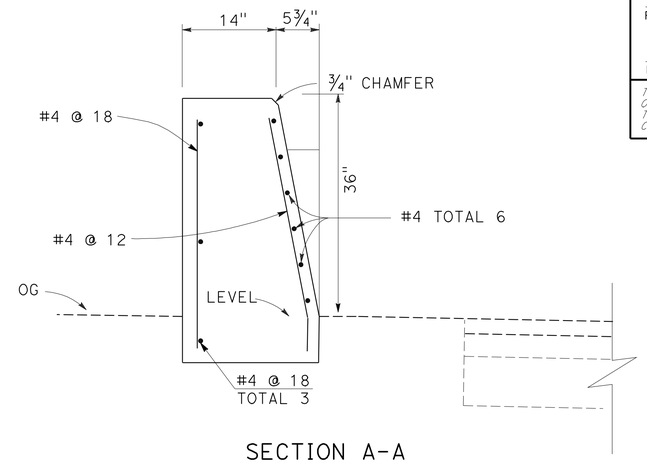

SECTION A-A

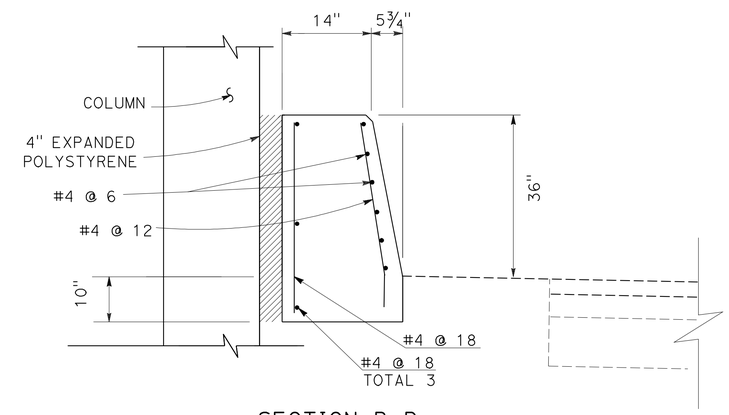

SECTION B-B

CONCRETE BARRIER (TYPE 60 Mod)
TRANSITION AT BRIDGE COLUMNS
SB DIRECTION Sta 87+40 TO 89+12 "SD-163"
NB DIRECTION Sta 87+22 TO 88+00 "SD-163"

CONSTRUCTION DETAILS
C-3

NO SCALE

REVISED BY | DATE REVISED
BAHMAN YAZDANI | RICARDO PADILLA
CALCULATED-DESIGNED BY | CHECKED BY
FUNCTIONAL SUPERVISOR | BRUCE LAMBERT
STATE OF CALIFORNIA - DEPARTMENT OF TRANSPORTATION
Caltrans
DESIGN

LAST REVISION 02-22-13 | DATE PLOTTED => 13-MAR-2013 | TIME PLOTTED => 22:18

Dist	COUNTY	ROUTE	POST MILES TOTAL PROJECT	SHEET No.	TOTAL SHEETS
11	SD	163	1.4	10	147

REGISTERED CIVIL ENGINEER 03-04-13 DATE

03-04-13
PLANS APPROVAL DATE

REGISTERED PROFESSIONAL ENGINEER RICARDO PADILLA No. C58151 Exp. 6-30-12 CIVIL STATE OF CALIFORNIA

THE STATE OF CALIFORNIA OR ITS OFFICERS OR AGENTS SHALL NOT BE RESPONSIBLE FOR THE ACCURACY OR COMPLETENESS OF SCANNED COPIES OF THIS PLAN SHEET.

LEGEND:

AREA FOR CONTRACTOR'S USE

BONDED FIBER MATRIX

Exist TRAIL

NOTE:

1. FOR ACCURATE RIGHT OF WAY DATA, CONTACT RIGHT OF WAY ENGINEERING AT THE DISTRICT OFFICE.
2. THE ONLY PERMANENT ITEM OF WORK IS BONDED FIBER MATRIX.

SAN DIEGO

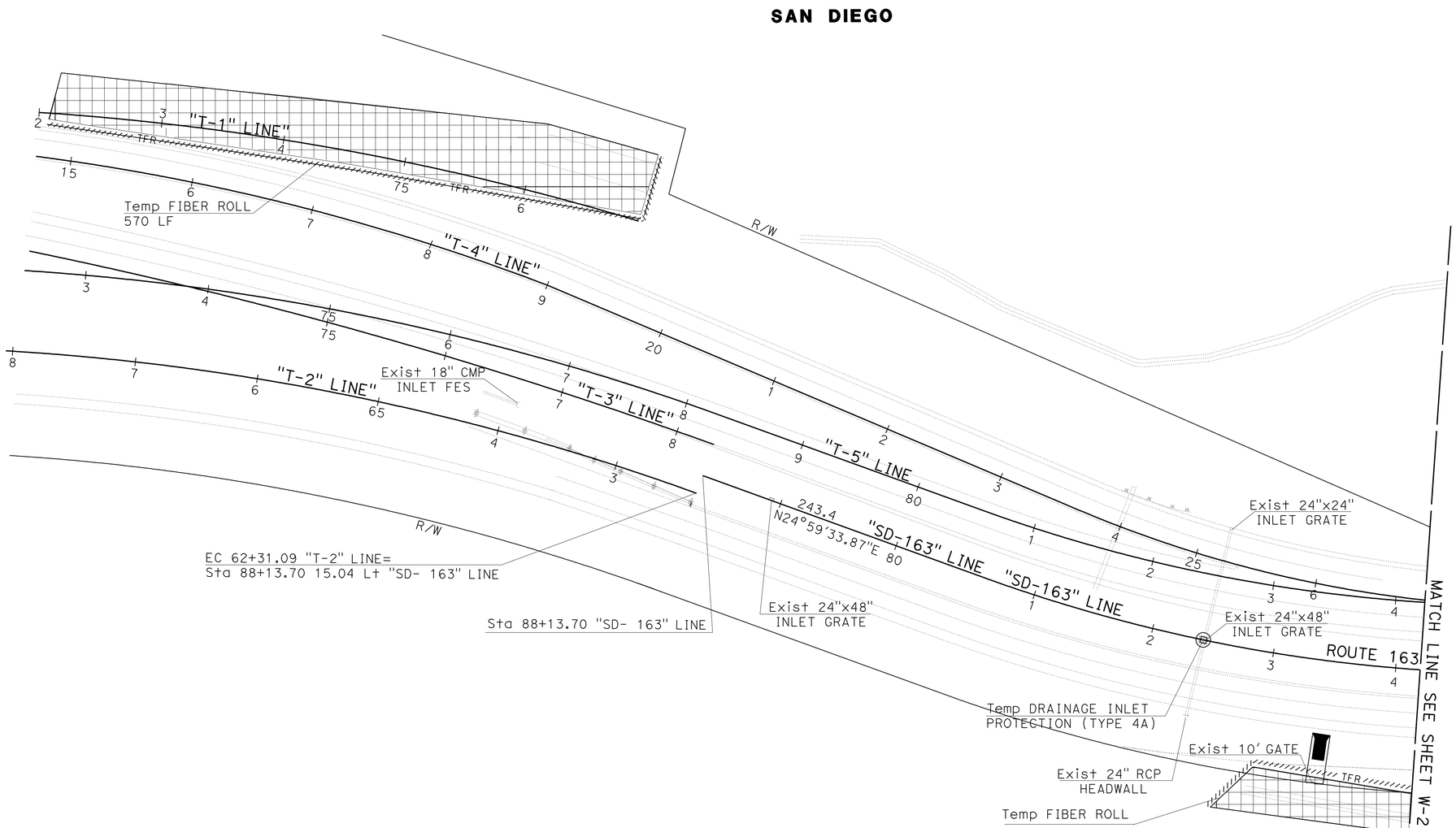

APPROVED FOR WATER POLLUTION CONTROL WORK ONLY

WATER POLLUTION CONTROL PLAN
TEMPORARY AND PERMANENT

SCALE 1" = 50'

W-1

STATE OF CALIFORNIA - DEPARTMENT OF TRANSPORTATION
Caltrans®
DESIGN

CONSULTANT FUNCTIONAL SUPERVISOR: CHRIS M. THOMAS
CALCULATED-DESIGNED BY: RICARDO PADILLA
CHECKED BY: RAMON JUAREZ
REVISED BY
DATE REVISED

LAST REVISION 11-28-12
DATE PLOTTED => 13-MAR-2013
TIME PLOTTED => 22:19

Dist	COUNTY	ROUTE	POST MILES TOTAL PROJECT	SHEET No.	TOTAL SHEETS
11	SD	163	1.4	11	147

REGISTERED CIVIL ENGINEER 03-04-13 DATE

03-04-13
PLANS APPROVAL DATE

REGISTERED PROFESSIONAL ENGINEER RICARDO PADILLA No. C58151 Exp. 6-30-14 CIVIL STATE OF CALIFORNIA

THE STATE OF CALIFORNIA OR ITS OFFICERS OR AGENTS SHALL NOT BE RESPONSIBLE FOR THE ACCURACY OR COMPLETENESS OF SCANNED COPIES OF THIS PLAN SHEET.

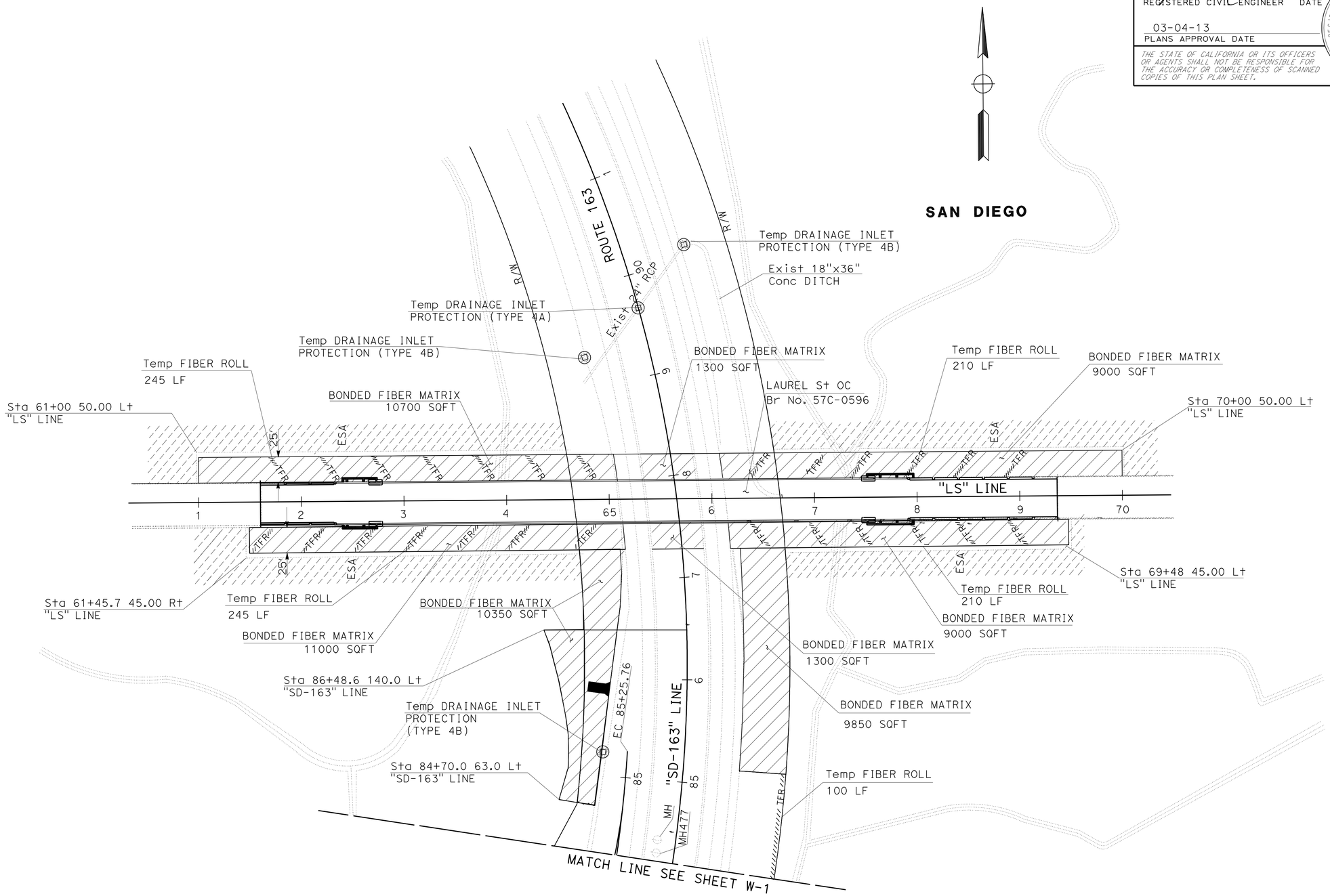

APPROVED FOR WATER POLLUTION CONTROL WORK ONLY

WATER POLLUTION CONTROL PLAN TEMPORARY AND PERMANENT

SCALE: 1" = 50'

W-2

STATE OF CALIFORNIA - DEPARTMENT OF TRANSPORTATION
Caltrans® DESIGN

FUNCTIONAL SUPERVISOR: CHRIS M. THOMAS
CALCULATED-DESIGNED BY: RICARDO PADILLA
CHECKED BY: RAMON JUAREZ
REVISED BY
DATE REVISED

LAST REVISION 11-28-12
DATE PLOTTED => 13-MAR-2013
TIME PLOTTED => 22:17

Dist	COUNTY	ROUTE	POST MILES TOTAL PROJECT	SHEET No.	TOTAL SHEETS
11	SD	163	1.4	12	147

REGISTERED CIVIL ENGINEER 03-04-13 DATE

03-04-13
PLANS APPROVAL DATE

REGISTERED PROFESSIONAL ENGINEER RICARDO PADILLA No. C58151 Exp. 6-30-14 CIVIL STATE OF CALIFORNIA

THE STATE OF CALIFORNIA OR ITS OFFICERS OR AGENTS SHALL NOT BE RESPONSIBLE FOR THE ACCURACY OR COMPLETENESS OF SCANNED COPIES OF THIS PLAN SHEET.

BONDED FIBER MATRIX

SEQUENCE	ITEM	MATERIAL DESCRIPTION	MATERIAL TYPE	APPLICATION RATE	REMARKS
STEP 1	BONDED FIBER MATRIX	FIBER	-	2500 LB/ACRE FOR SLOPES ≤ 4:1 (Horiz:Vert) 3000 LB/ACRE FOR SLOPES > 4:1 and ≤ 3:1 (Horiz:Vert) 3500 LB/ACRE FOR SLOPES > 3:1 and ≤ 2:1 (Horiz:Vert) 4000 LB/ACRE FOR SLOPES > 2:1 and ≤ 1:1 (Horiz:Vert) 4500 LB/ACRE FOR SLOPES > 1:1 (Horiz:Vert)	APPLICATION RATE IS FOR FIBER AND TACKIFIER COMBINED
		TACKIFIER	-		
STEP 2	BONDED FIBER MATRIX	FIBER	-	500 LB/ACRE	
		TACKIFIER	-		

TEMPORARY WATER POLLUTION CONTROL

SHEET	TEMPORARY FIBER ROLL	TEMPORARY CONSTRUCTION ENTRANCE	TEMPORARY DRAINAGE INLET PROTECTION	
			4A	4B
UNIT	LF	EA	EA	EA
W-1	760	1	1	-
W-2	1010	1	1	3
TOTAL	1770	2	5	

EROSION CONTROL

SHEET	BONDED FIBER MATRIX
UNIT	SQFT
W-1	-
W-2	62500
TOTAL	62500

WATER POLLUTION CONTROL QUANTITIES

WQ-1

STATE OF CALIFORNIA - DEPARTMENT OF TRANSPORTATION
Caltrans® DESIGN

FUNCTIONAL SUPERVISOR: CHRIS M. THOMAS
CALCULATED-DESIGNED BY: RICARDO PADILLA
CHECKED BY: RAMON JUAREZ
REVISED BY
DATE REVISED

LAST REVISION 11-29-12 | DATE PLOTTED => 13-MAR-2013 | TIME PLOTTED => 22:17

Dist	COUNTY	ROUTE	POST MILES TOTAL PROJECT	SHEET No.	TOTAL SHEETS
11	SD	163	1.4	13	147

REGISTERED CIVIL ENGINEER 03-04-13 DATE

03-04-13
PLANS APPROVAL DATE

REGISTERED PROFESSIONAL ENGINEER
RICARDO PADILLA
No. C58151
Exp. 6-30-14
CIVIL
STATE OF CALIFORNIA

THE STATE OF CALIFORNIA OR ITS OFFICERS OR AGENTS SHALL NOT BE RESPONSIBLE FOR THE ACCURACY OR COMPLETENESS OF SCANNED COPIES OF THIS PLAN SHEET.

NOTE:

1- FOR ACCURATE RIGHT OF WAY DATA, CONTACT RIGHT OF WAY ENGINEERING AT THE DISTRICT OFFICE.
2- SEE DRAINAGE DETAILS FOR ORIENTATION OF G1 DRAINAGE INLETS.

LEGEND:

(X) DRAINAGE SYSTEM

(X) DRAINAGE UNIT

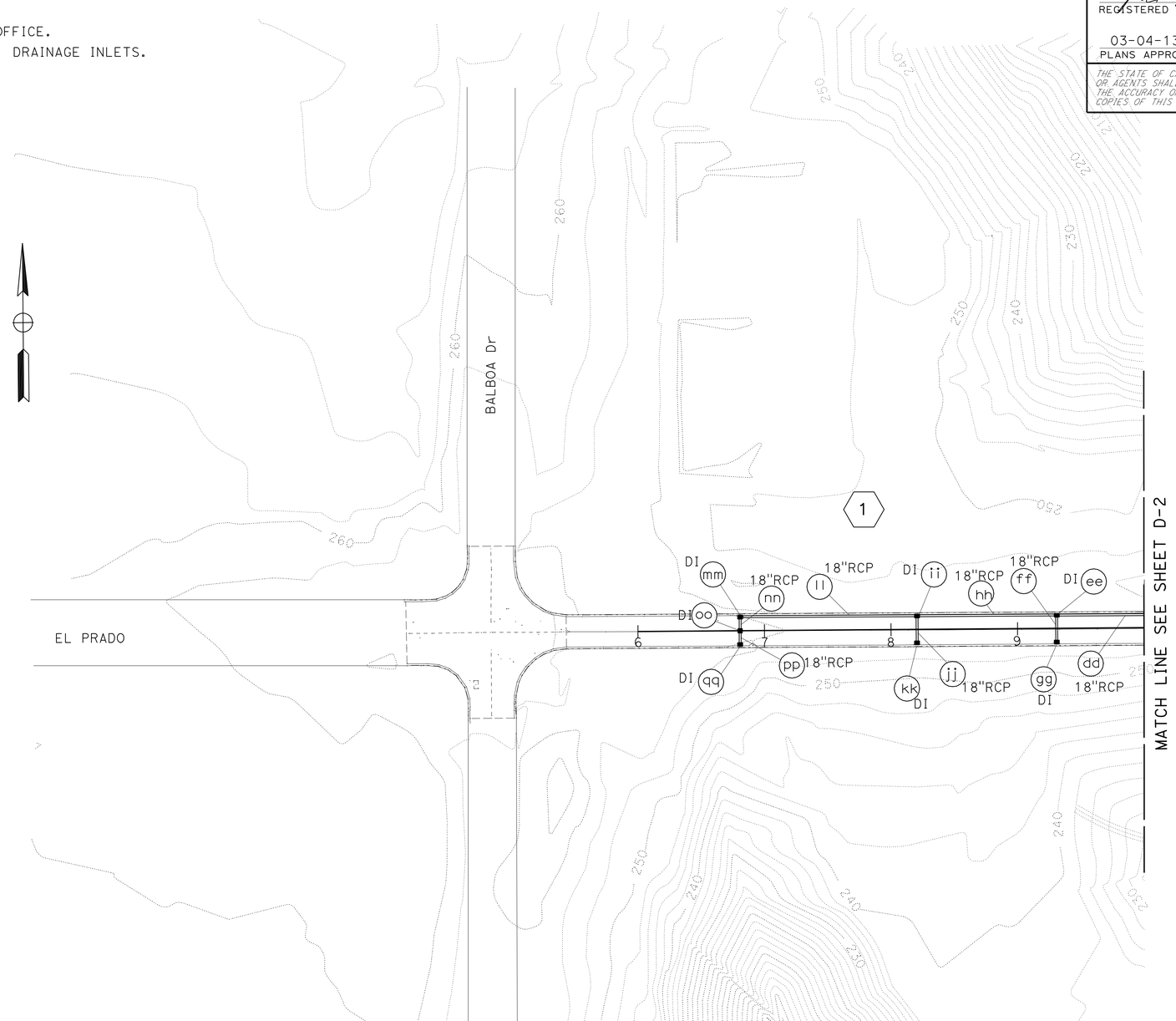

APPROVED FOR DRAINAGE AND CONTOUR GRADING WORK ONLY

DRAINAGE PLAN

SCALE: 1" = 50'

D-1

REVISED BY	DATE REVISED
RICARDO PADILLA	
RAMON JUAREZ	

CALCULATED-DESIGNED BY
CHECKED BY

FUNCTIONAL SUPERVISOR
CHRIS M. THOMAS

STATE OF CALIFORNIA - DEPARTMENT OF TRANSPORTATION
Caltrans
DESIGN

LAST REVISION 11-27-12
DATE PLOTTED => 13-MAR-2013
TIME PLOTTED => 22:17

Dist	COUNTY	ROUTE	POST MILES TOTAL PROJECT	SHEET No.	TOTAL SHEETS
11	SD	163	1.4	14	147

REGISTERED CIVIL ENGINEER 03-04-13 DATE

03-04-13
PLANS APPROVAL DATE

REGISTERED PROFESSIONAL ENGINEER RICARDO PADILLA No. C58151 Exp. 6-30-14 CIVIL STATE OF CALIFORNIA

THE STATE OF CALIFORNIA OR ITS OFFICERS OR AGENTS SHALL NOT BE RESPONSIBLE FOR THE ACCURACY OR COMPLETENESS OF SCANNED COPIES OF THIS PLAN SHEET.

NOTE:

FOR ACCURATE RIGHT OF WAY DATA, CONTACT RIGHT OF WAY ENGINEERING AT THE DISTRICT OFFICE.

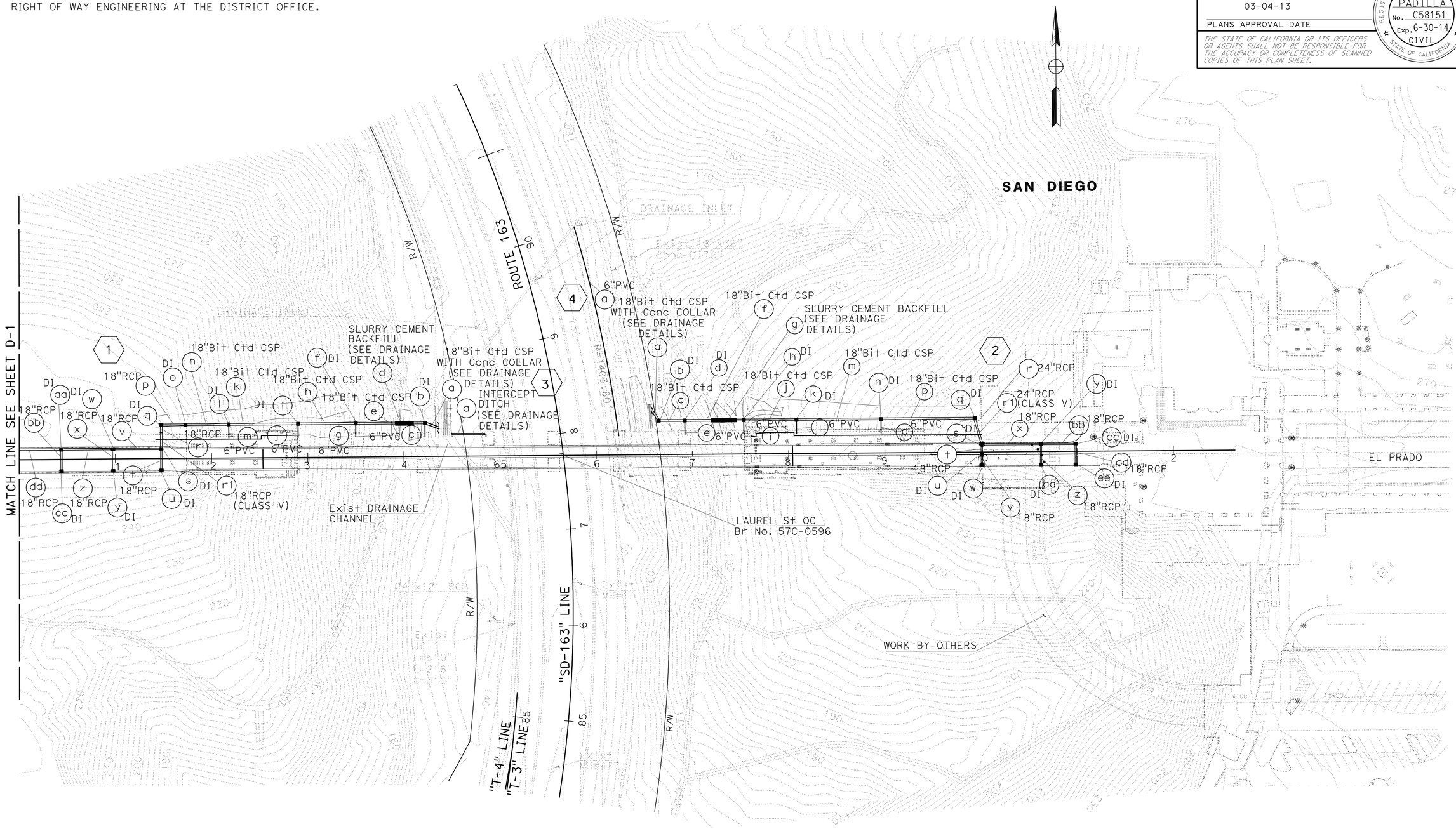

APPROVED FOR DRAINAGE AND CONTOUR GRADING WORK ONLY

DRAINAGE PLAN

SCALE: 1" = 50'

D-2

STATE OF CALIFORNIA - DEPARTMENT OF TRANSPORTATION

Caltrans

DESIGN

FUNCTIONAL SUPERVISOR: CHRIS M. THOMAS

CALCULATED-DESIGNED BY: RICARDO PADILLA

CHECKED BY: RAMON JUAREZ

REVISED BY

DATE REVISED

LAST REVISION 10-25-12

DATE PLOTTED => 13-MAR-2013
TIME PLOTTED => 22:18

Dist	COUNTY	ROUTE	POST MILES TOTAL PROJECT	SHEET No.	TOTAL SHEETS
11	SD	163	1.4	15	147

REGISTERED CIVIL ENGINEER 03-04-13 DATE

03-04-13
PLANS APPROVAL DATE

REGISTERED PROFESSIONAL ENGINEER RICARDO PADILLA No. C58151 Exp. 6-30-14 CIVIL STATE OF CALIFORNIA

THE STATE OF CALIFORNIA OR ITS OFFICERS OR AGENTS SHALL NOT BE RESPONSIBLE FOR THE ACCURACY OR COMPLETENESS OF SCANNED COPIES OF THIS PLAN SHEET.

NOTE:

PROTECT SIDEWALKS IN PLACE.

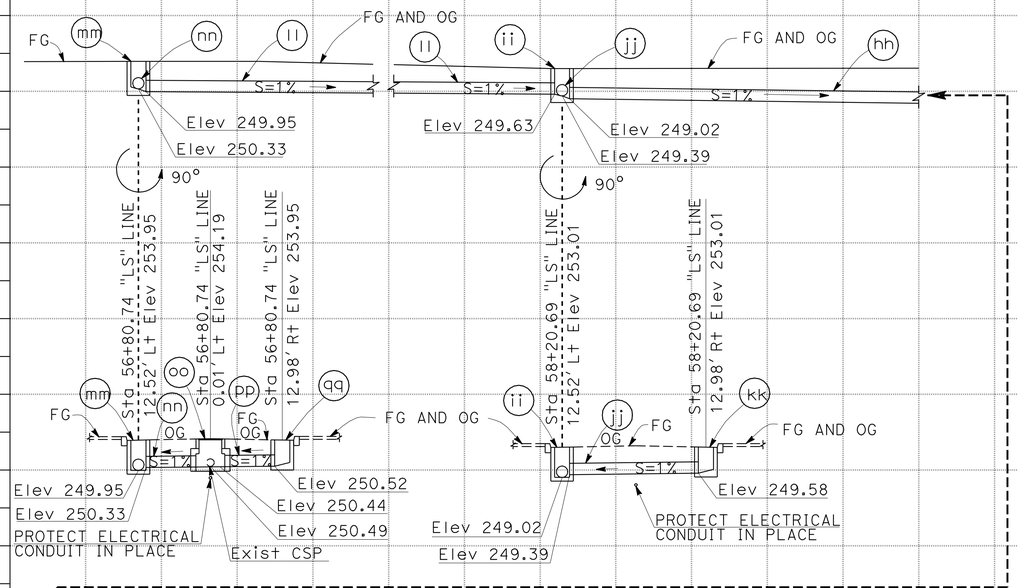

DRAINAGE SYSTEM 1

- (v) 18" X 47.15' RCP
- (w) G1 (Mod) INLET H=8.96' WITH GRATE TYPE 24-12X
- (x) 18" X 20.41' RCP
- (y) G1 (Mod) INLET H=8.39' WITH GRATE TYPE 24-12X
- (z) 18" X 50.68' RCP
- (aa) G1 (Mod) INLET H=7.67' WITH GRATE TYPE 24-12X
- (bb) 18" X 20.21' RCP
- (cc) G1 (Mod) INLET H=7.11' WITH GRATE TYPE 24-12X
- (dd) 18" X 109.17' RCP
- (ee) G1 (Mod) INLET H=5.84' WITH GRATE TYPE 24-12X
- (ff) 18" X 19.04' RCP
- (gg) G1 (Mod) INLET H=5.28' WITH GRATE TYPE 24-12X
- (hh) 18" X 107.36' RCP
- (ii) G1 (Mod) INLET H=4.0' WITH GRATE TYPE 24-12X
- (jj) 18" X 19.20' RCP
- (kk) G1 (Mod) INLET H=3.43' WITH GRATE TYPE 24-12X
- (ll) 18" X 137.00' RCP
- (mm) G1 (Mod) INLET H=4.0' WITH GRATE TYPE 24-12X
- (nn) 18" X 7.8' RCP
- (oo) REINFORCED CONCRETE JUNCTION STRUCTURE WITH MANHOLE RISER, FRAME AND COVER, SPAN=4.5' Hb=1.75' RISER H=2.2'
- (pp) 18" X 7.8' RCP
- (qq) G1 (Mod) INLET H=3.43' WITH GRATE TYPE 24-12X

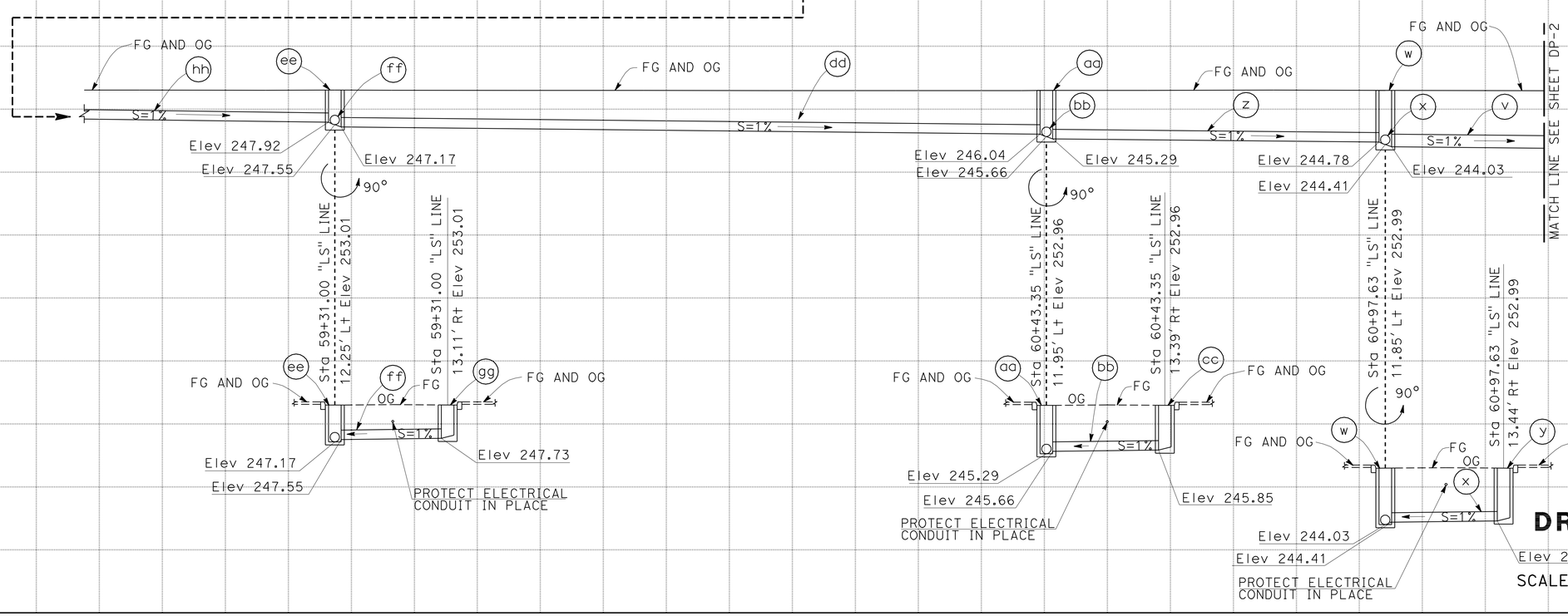

DRAINAGE PROFILE

SCALE: V 1" = 10'
H 1" = 10'

DP-1

STATION		TOTAL
CY	Exc	
	Emb	

REVISED BY | DATE REVISED
RICARDO PADILLA | RAMON JUAREZ
CALCULATED-DESIGNED BY | CHECKED BY
FUNCTIONAL SUPERVISOR: CHRIS M THOMAS

STATE OF CALIFORNIA - DEPARTMENT OF TRANSPORTATION
Caltrans
DESIGN

LAST REVISION 02-15-13 | DATE PLOTTED => 13-MAR-2013 | TIME PLOTTED => 22:19

Dist	COUNTY	ROUTE	POST MILES TOTAL PROJECT	SHEET No.	TOTAL SHEETS
11	SD	163	1.4	16	147

REGISTERED CIVIL ENGINEER 03-04-13 DATE

03-04-13
PLANS APPROVAL DATE

REGISTERED PROFESSIONAL ENGINEER RICARDO PADILLA No. C58151 Exp. 6-30-14 CIVIL STATE OF CALIFORNIA

THE STATE OF CALIFORNIA OR ITS OFFICERS OR AGENTS SHALL NOT BE RESPONSIBLE FOR THE ACCURACY OR COMPLETENESS OF SCANNED COPIES OF THIS PLAN SHEET.

DRAINAGE SYSTEM (1)

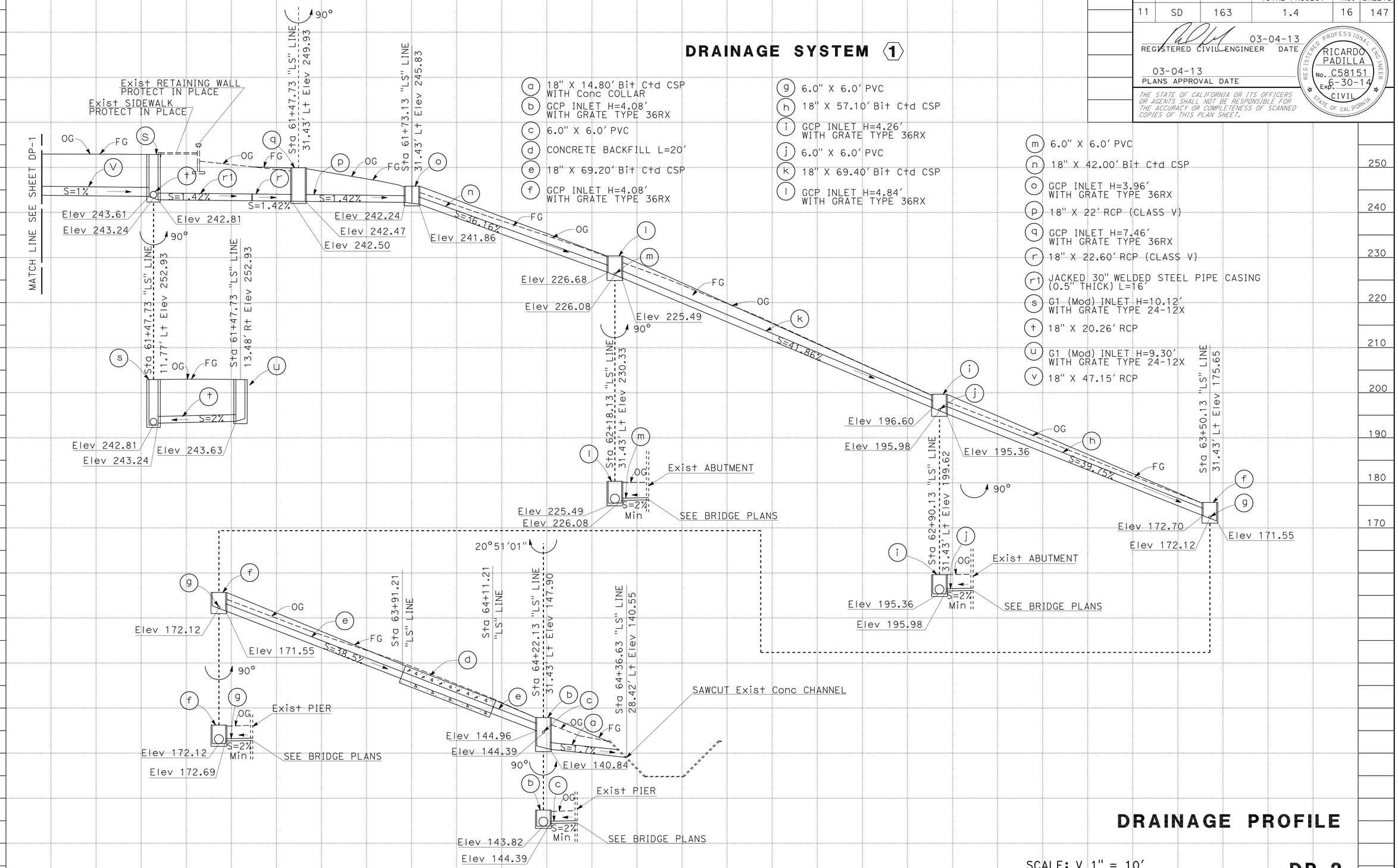

a 18" X 14.80' Bit Ctd CSP WITH Conc COLLAR
b GCP INLET H=4.08' WITH GRATE TYPE 36RX
c 6.0" X 6.0' PVC
d CONCRETE BACKFILL L=20'
e 18" X 69.20' Bit Ctd CSP
f GCP INLET H=4.08' WITH GRATE TYPE 36RX
g 6.0" X 6.0' PVC
h 18" X 57.10' Bit Ctd CSP
i GCP INLET H=4.26' WITH GRATE TYPE 36RX
j 6.0" X 6.0' PVC
k 18" X 69.40' Bit Ctd CSP
l GCP INLET H=4.84' WITH GRATE TYPE 36RX
m 6.0" X 6.0' PVC
n 18" X 42.00' Bit Ctd CSP
o GCP INLET H=3.96' WITH GRATE TYPE 36RX
p 18" X 22' RCP (CLASS V)
q GCP INLET H=7.46' WITH GRATE TYPE 36RX
r 18" X 22.60' RCP (CLASS V)
r1 JACKED 30" WELDED STEEL PIPE CASING (0.5" THICK) L=16'
s G1 (Mod) INLET H=10.12' WITH GRATE TYPE 24-12X
t 18" X 20.26' RCP
u G1 (Mod) INLET H=9.30' WITH GRATE TYPE 24-12X
v 18" X 47.15' RCP

DRAINAGE PROFILE

SCALE: V 1" = 10'
H 1" = 10'

DP-2

STATION		TOTAL
CY	Exc	
	Emb	

STATE OF CALIFORNIA - DEPARTMENT OF TRANSPORTATION
Caltrans
DESIGN

FUNCTIONAL SUPERVISOR: CHRIS M THOMAS
CALCULATED-DESIGNED BY: RICARDO PADILLA
CHECKED BY: RAMON JUAREZ
REVISED BY
DATE REVISED

LAST REVISION 02-11-13
DATE PLOTTED => 13-MAR-2013
TIME PLOTTED => 22:19

Dist	COUNTY	ROUTE	POST MILES TOTAL PROJECT	SHEET No.	TOTAL SHEETS
11	SD	163	1.4	17	147

REGISTERED CIVIL ENGINEER 03-04-13 DATE

03-04-13
PLANS APPROVAL DATE

REGISTERED PROFESSIONAL ENGINEER RICARDO PADILLA No. C58151 Exp. 6-30-14 CIVIL STATE OF CALIFORNIA

THE STATE OF CALIFORNIA OR ITS OFFICERS OR AGENTS SHALL NOT BE RESPONSIBLE FOR THE ACCURACY OR COMPLETENESS OF SCANNED COPIES OF THIS PLAN SHEET.

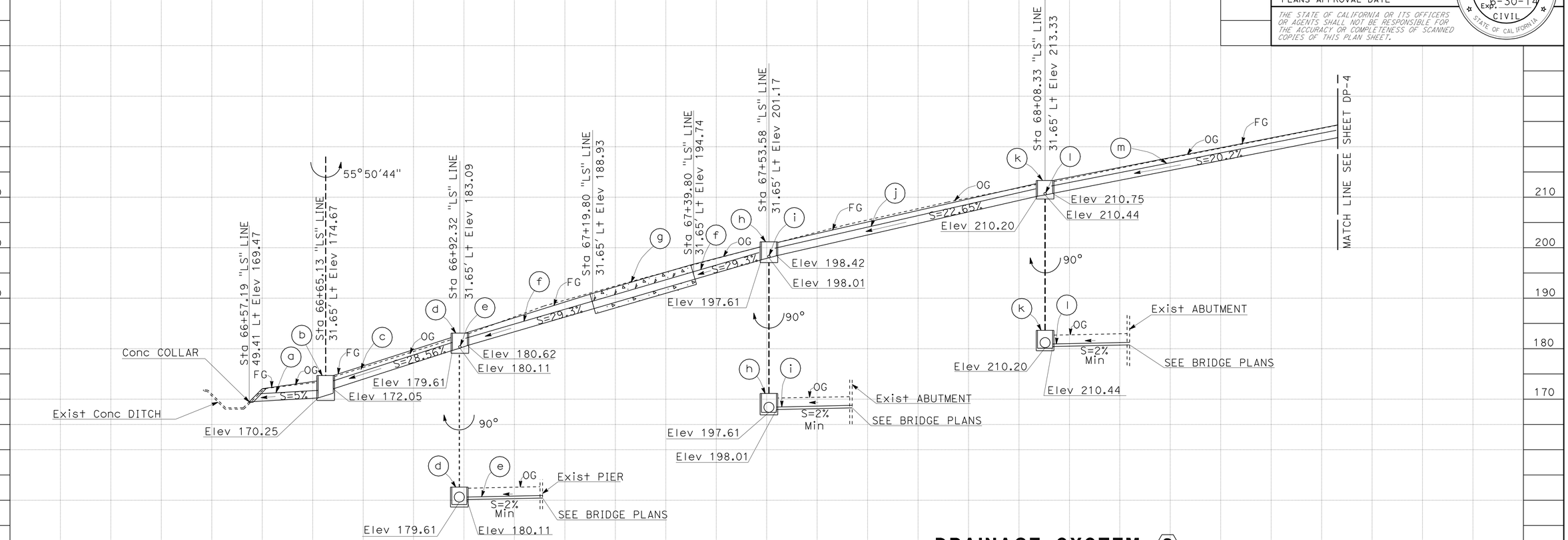

DRAINAGE SYSTEM 2

- (a) 18" X 15.30' Bit Ctd CSP WITH Conc COLLAR
- (b) GCP INLET H=3.55' WITH GRATE TYPE 36RX
- (c) 18" X 24.22' Bit Ctd CSP
- (d) GCP INLET H=3.48' WITH GRATE TYPE 36RX
- (e) 6" X 15' PVC
- (f) 18" X 58' Bit Ctd CSP
- (g) CONCRETE BACKFILL L=20'
- (h) GCP INLET H=3.76' WITH GRATE TYPE 36RX
- (i) 6" X 15' PVC
- (j) 18" X 52' Bit Ctd CSP
- (k) GCP INLET H=3.13' WITH GRATE TYPE 36RX
- (l) 6" X 15' PVC
- (m) 18" X 85' Bit Ctd CSP

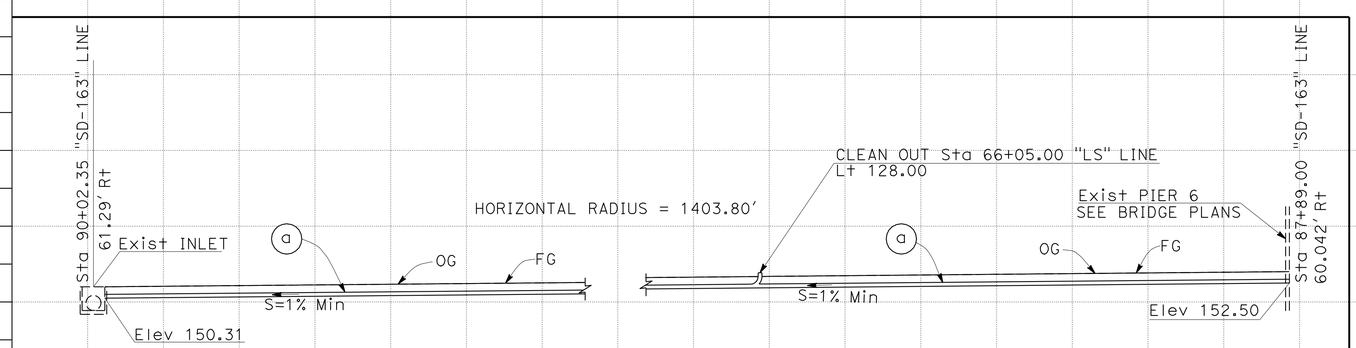

DRAINAGE SYSTEM 4

- (a) 6" X 213.5' PVC

DRAINAGE PROFILE

SCALE: V 1" = 10'
H 1" = 10'

DP-3

STATION		TOTAL
CY	Exc	
	Emb	

STATE OF CALIFORNIA - DEPARTMENT OF TRANSPORTATION
DESIGN
FUNCTIONAL SUPERVISOR: CHRIS M THOMAS
CALCULATED-DESIGNED BY: RICARDO PADILLA
CHECKED BY: RAMON JUAREZ
REVISED BY / DATE REVISED

LAST REVISION 02-12-13 | DATE PLOTTED => 13-MAR-2013 | TIME PLOTTED => 22:20

Dist	COUNTY	ROUTE	POST MILES TOTAL PROJECT	SHEET No.	TOTAL SHEETS
11	SD	163	1.4	18	147

REGISTERED CIVIL ENGINEER 03-04-13 DATE

03-04-13
PLANS APPROVAL DATE

REGISTERED PROFESSIONAL ENGINEER RICARDO PADILLA No. C58151 Exp. 6-30-14 CIVIL STATE OF CALIFORNIA

THE STATE OF CALIFORNIA OR ITS OFFICERS OR AGENTS SHALL NOT BE RESPONSIBLE FOR THE ACCURACY OR COMPLETENESS OF SCANNED COPIES OF THIS PLAN SHEET.

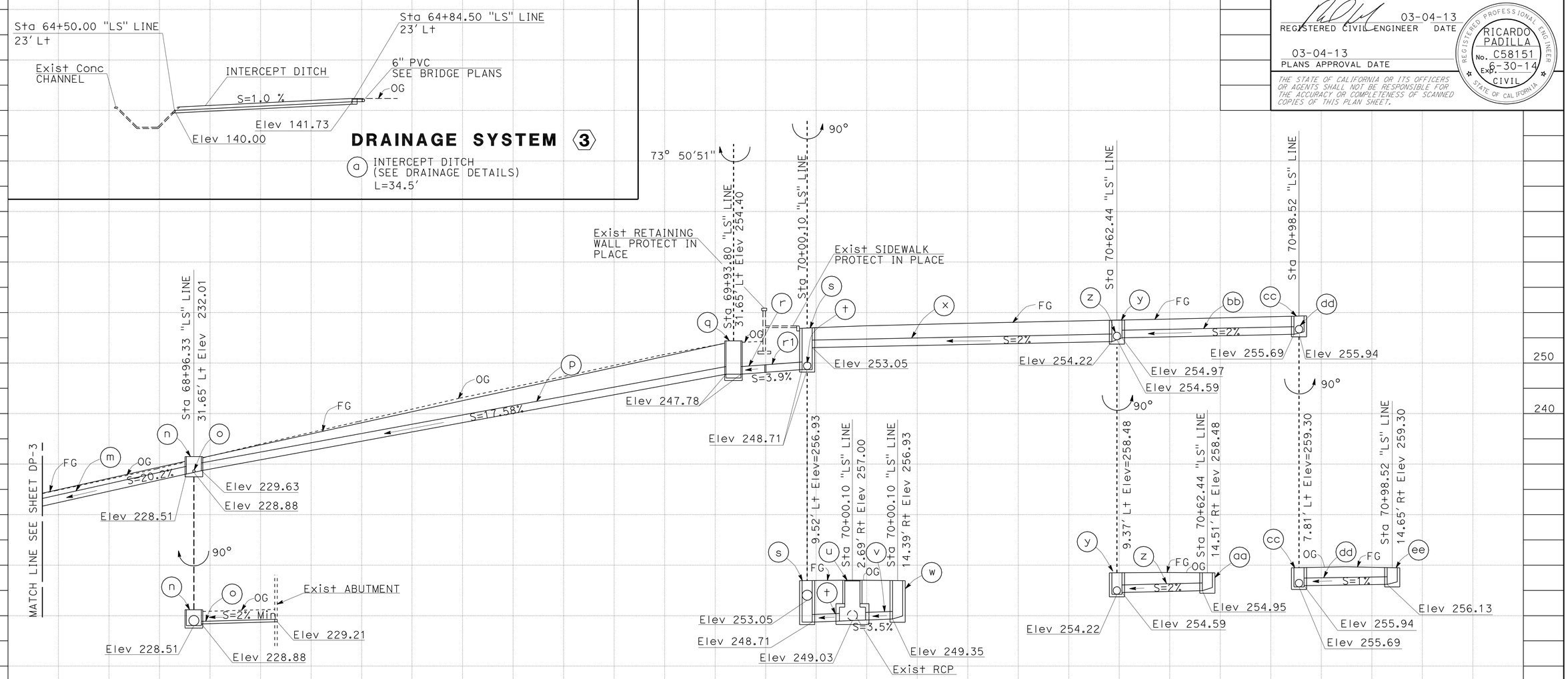

DRAINAGE SYSTEM 2

- m 18" X 85' Bit Ctd PAVED INVERT CSP
- n GCP INLET H=3.5' WITH GRATE TYPE 36RX
- o 6" X 15' PVC
- p 18" X 94.49' Bit Ctd PAVED INVERT CSP
- q GCP INLET H=6.62' WITH GRATE TYPE 36RX
- r 18" X 26.00' RCP (CLASS V)
- r1 JACKED 30" WELDED STEEL PIPE CASING (0.5" THICK) L=16'
- s G1 (Mod) INLET H=8.22' WITH GRATE TYPE 24-12X
- t 18" X 8.13' RCP
- u REINFORCED CONCRETE JUNCTION STRUCTURE WITH MANHOLE RISER, FRAME AND COVER SPAN=5.18' Hb=5.5' RISER H=3.14'
- v 18" X 8.21' RCP
- w G1 (Mod) INLET H=7.58' WITH GRATE TYPE 24-12X
- x 18" X 58.68' RCP
- y G1 INLET H=4.26' WITH GRATE TYPE 24-12X
- z 18" X 19.21' RCP
- aa G1 INLET H=3.53' WITH GRATE TYPE 24-12X
- bb 18" X 33.13' RCP
- cc G1 INLET H=3.62' WITH GRATE TYPE 24-12X
- dd 18" X 19.53' RCP
- ee G1 INLET H=3.17' WITH GRATE TYPE 24-12X

DRAINAGE PROFILE

SCALE: V 1" = 10'
H 1" = 10'

DP-4

STATION		TOTAL
CY	Exc	
	Emb	

REVISED BY | DATE REVISED
RICARDO PADILLA | RAMON JUAREZ
CALCULATED-DESIGNED BY | CHECKED BY
FUNCTIONAL SUPERVISOR: CHRIS M THOMAS
STATE OF CALIFORNIA - DEPARTMENT OF TRANSPORTATION
DESIGN
Caltrans

LAST REVISION 02-22-13
DATE PLOTTED => 13-MAR-2013
TIME PLOTTED => 22:20

Dist	COUNTY	ROUTE	POST MILES TOTAL PROJECT	SHEET No.	TOTAL SHEETS
11	SD	163	1.4	19	147

REGISTERED CIVIL ENGINEER 03-04-13 DATE

03-04-13
PLANS APPROVAL DATE

REGISTERED PROFESSIONAL ENGINEER RICARDO PADILLA No. C58151 Exp. 06/30/14 CIVIL STATE OF CALIFORNIA

THE STATE OF CALIFORNIA OR ITS OFFICERS OR AGENTS SHALL NOT BE RESPONSIBLE FOR THE ACCURACY OR COMPLETENESS OF SCANNED COPIES OF THIS PLAN SHEET.

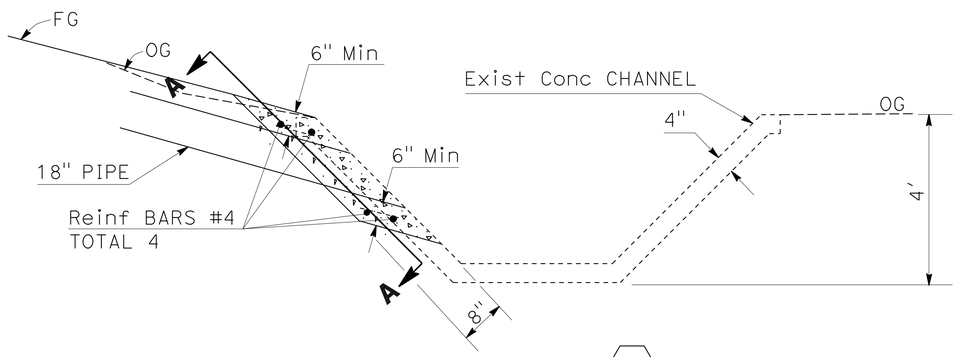

PROFILE VIEW, DRAINAGE SYSTEM 1

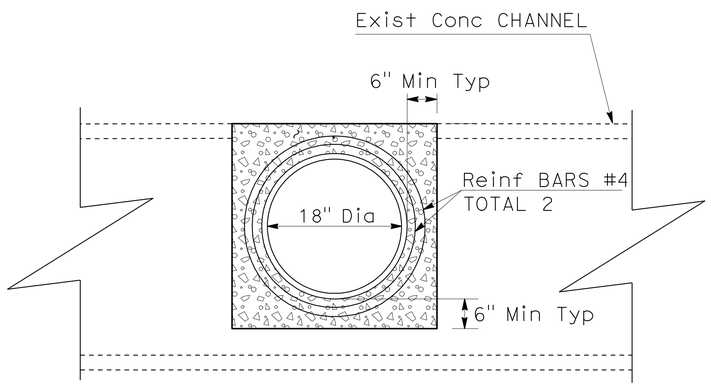

CONCRETE COLLAR, DRAINAGE SYSTEM 1

SECTION A-A

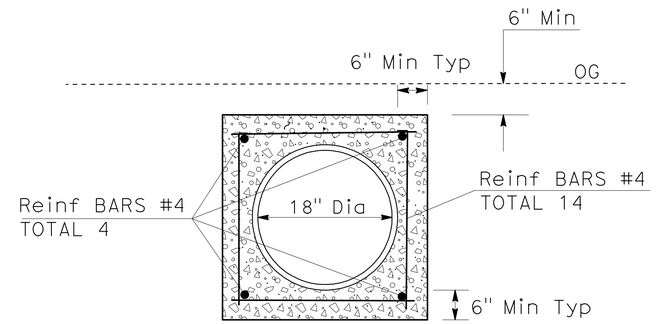

CONCRETE BACKFILL

SYSTEM 1 d , 2 g

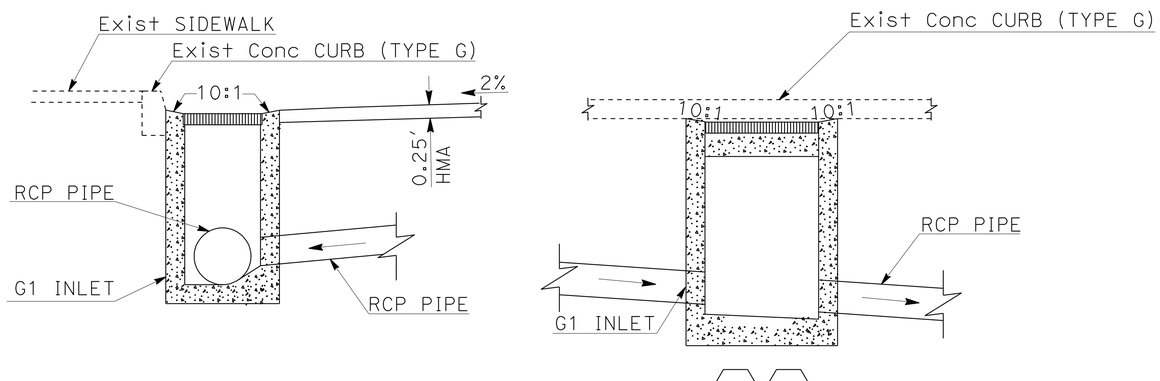

PROFILE VIEW, DRAINAGE SYSTEM 1 2

G1 INLET

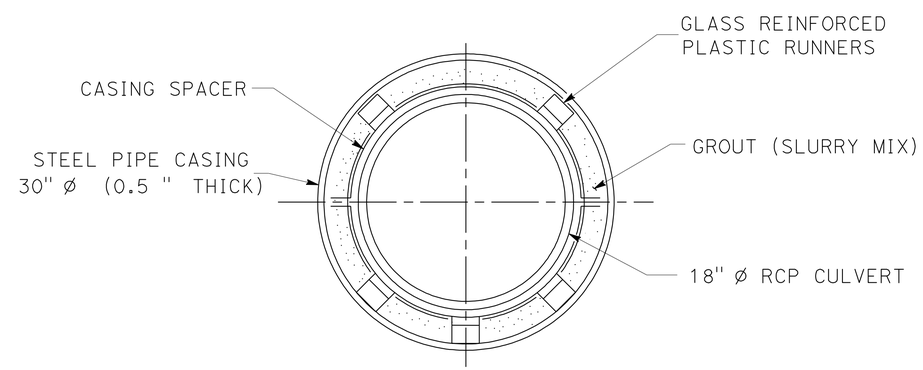

JACKED 30" WELDED STEEL PIPE CASING

SYSTEM 1 r1 , 2 r1

DRAINAGE DETAILS

NO SCALE

DD-1

STATE OF CALIFORNIA - DEPARTMENT OF TRANSPORTATION
Caltrans
DESIGN

FUNCTIONAL SUPERVISOR: CHRIS M THOMAS
CALCULATED-DESIGNED BY: RICARDO PADILLA
CHECKED BY: RAMON JUAREZ
REVISED BY
DATE REVISED

LAST REVISION 02-12-13
DATE PLOTTED => 13-MAR-2013
TIME PLOTTED => 22:20

Dist	COUNTY	ROUTE	POST MILES TOTAL PROJECT	SHEET No.	TOTAL SHEETS
11	SD	163	1.4	20	147

REGISTERED CIVIL ENGINEER DATE 03-04-13

PLANS APPROVAL DATE 03-04-13

REGISTERED PROFESSIONAL ENGINEER RICARDO PADILLA No. C58151 Exp. 06/30/14 CIVIL STATE OF CALIFORNIA

THE STATE OF CALIFORNIA OR ITS OFFICERS OR AGENTS SHALL NOT BE RESPONSIBLE FOR THE ACCURACY OR COMPLETENESS OF SCANNED COPIES OF THIS PLAN SHEET.

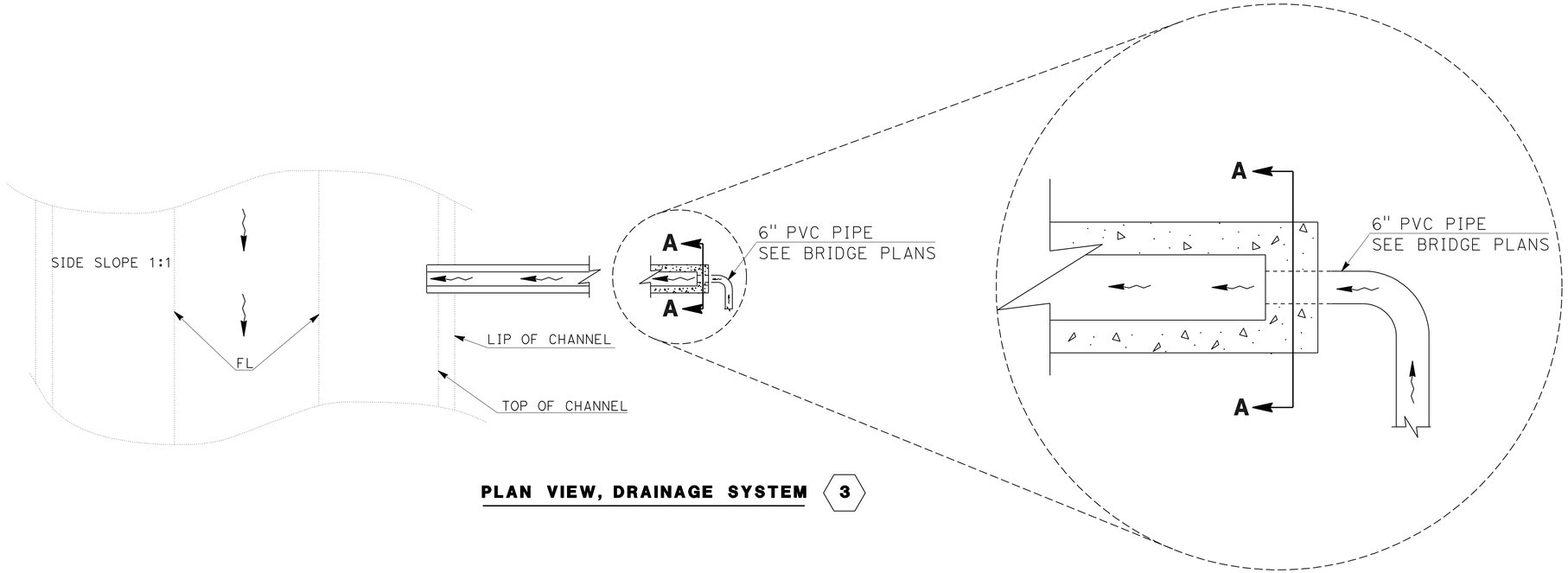

PLAN VIEW, DRAINAGE SYSTEM 3

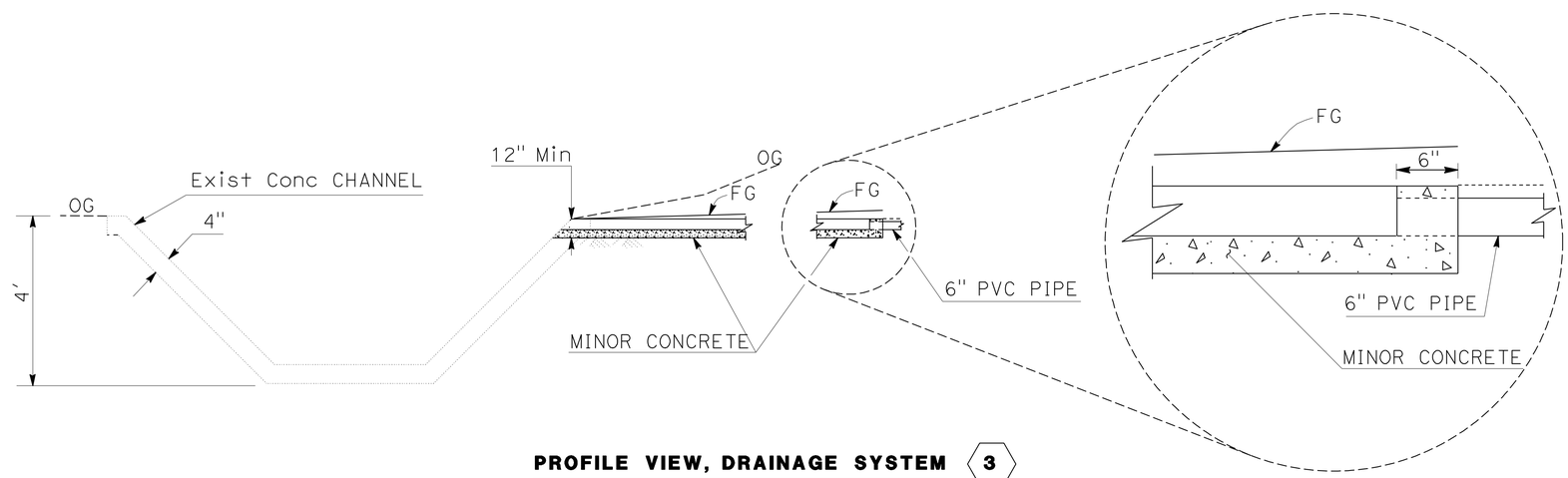

PROFILE VIEW, DRAINAGE SYSTEM 3

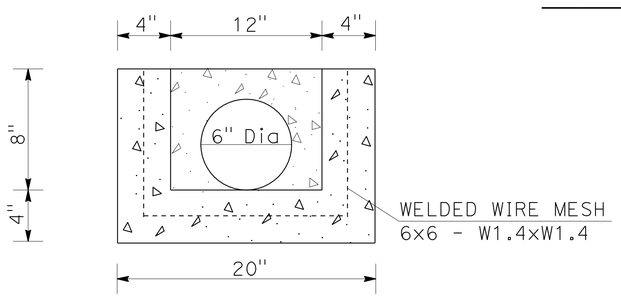

MINOR CONCRETE (INTERCEPT DITCH)

SECTION A-A

DRAINAGE DETAILS

NO SCALE

DD-2

STATE OF CALIFORNIA - DEPARTMENT OF TRANSPORTATION

Caltrans® **DESIGN**

FUNCTIONAL SUPERVISOR: CHRIS M THOMAS

CALCULATED-DESIGNED BY: RICARDO PADILLA

CHECKED BY: RAMON JUAREZ

REVISED BY

DATE REVISED

LAST REVISION 02-11-13

DATE PLOTTED => 13-MAR-2013

TIME PLOTTED => 22:21

Dist	COUNTY	ROUTE	POST MILES TOTAL PROJECT	SHEET No.	TOTAL SHEETS
11	SD	163	1.4	21	147

REGISTERED CIVIL ENGINEER 03-04-13 DATE

03-04-13
PLANS APPROVAL DATE

REGISTERED PROFESSIONAL ENGINEER
RICARDO PADILLA
No. C58151
Exp. 06/30/14
CIVIL
STATE OF CALIFORNIA

THE STATE OF CALIFORNIA OR ITS OFFICERS OR AGENTS SHALL NOT BE RESPONSIBLE FOR THE ACCURACY OR COMPLETENESS OF SCANNED COPIES OF THIS PLAN SHEET.

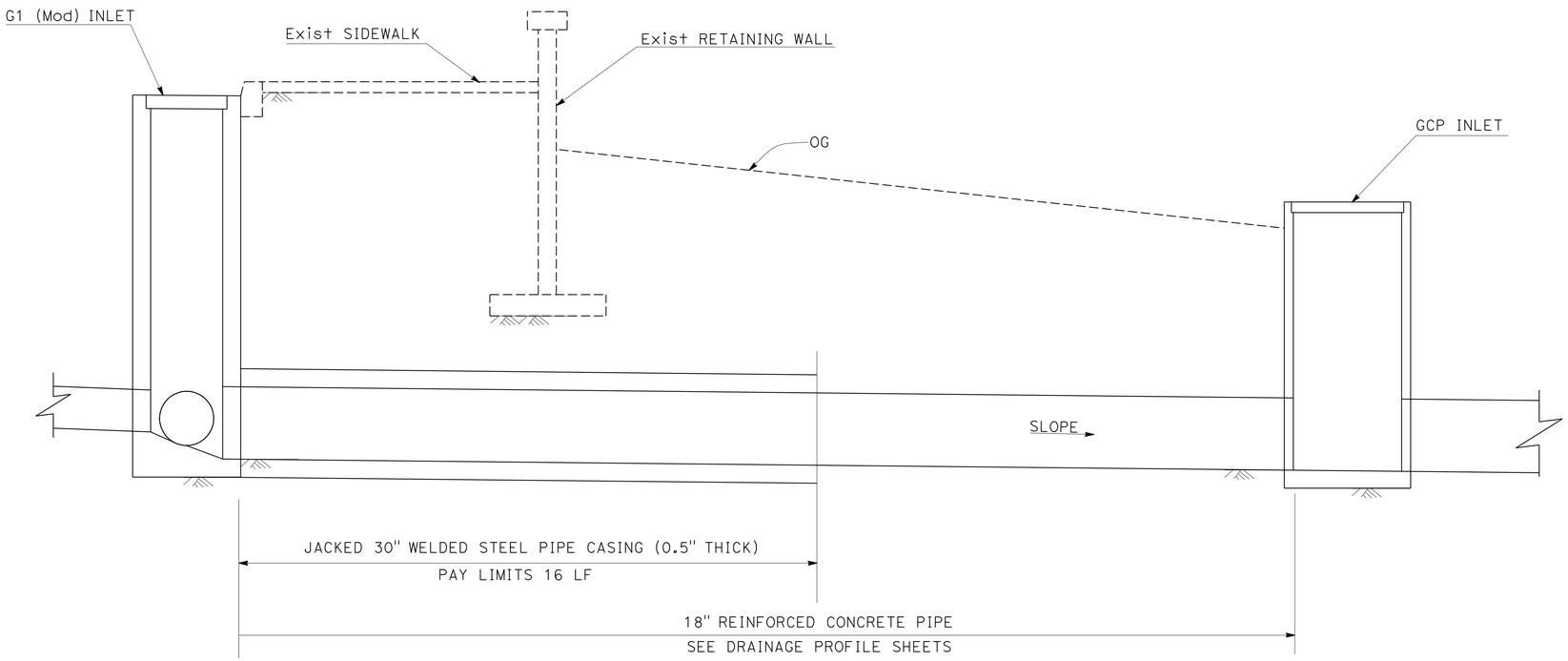

PROFILE VIEW
PIPE JACKING

SYSTEM 1 (r1), 2 (r1)

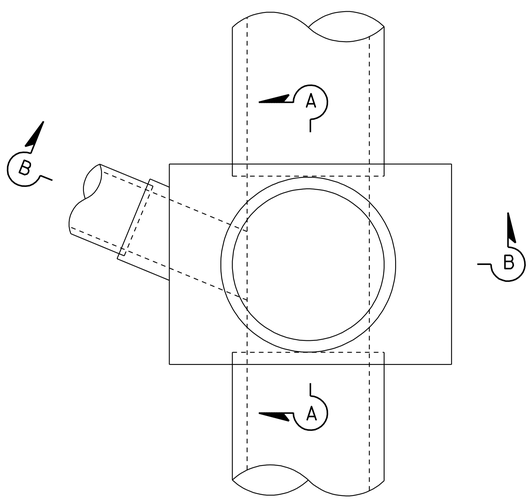

PLAN

FOR DETAILS NOT SHOWN, SEE STANDARD PLAN D91A AND D91B

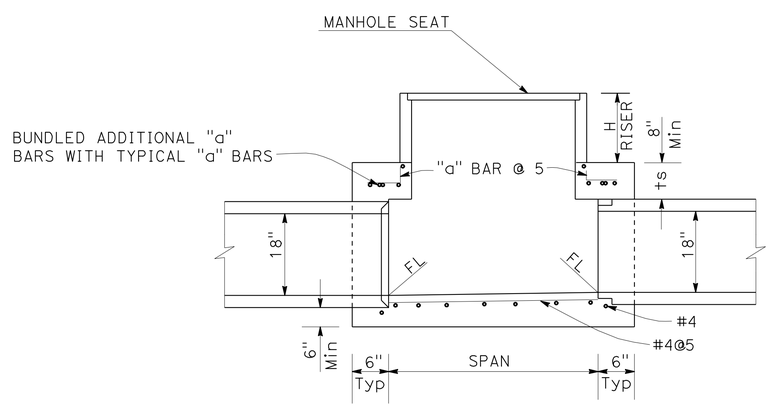

SECTION A-A

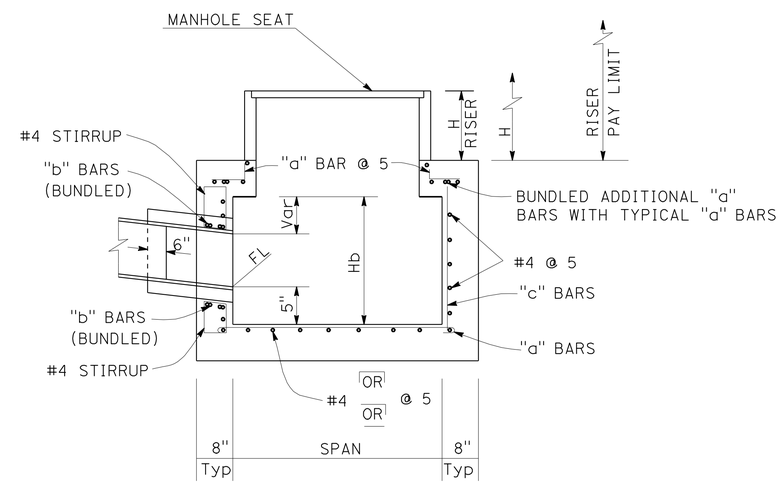

SECTION B-B

JUNCTION STRUCTURE

SYSTEM 1 (00)

DRAINAGE DETAILS

NO SCALE

DD-3

STATE OF CALIFORNIA - DEPARTMENT OF TRANSPORTATION
Caltrans
DESIGN

FUNCTIONAL SUPERVISOR: CHRIS M THOMAS

CALCULATED-DESIGNED BY: RICARDO PADILLA
CHECKED BY: RAMON JUAREZ

REVISED BY
DATE REVISED

LAST REVISION 02-22-13
DATE PLOTTED => 13-MAR-2013
TIME PLOTTED => 22:21

Dist	COUNTY	ROUTE	POST MILES TOTAL PROJECT	SHEET No.	TOTAL SHEETS
11	SD	163	1.4	22	147

REGISTERED CIVIL ENGINEER 03-04-13 DATE

03-04-13
PLANS APPROVAL DATE

REGISTERED PROFESSIONAL ENGINEER RICARDO PADILLA No. C58151 Exp. 6-30-14 CIVIL STATE OF CALIFORNIA

THE STATE OF CALIFORNIA OR ITS OFFICERS OR AGENTS SHALL NOT BE RESPONSIBLE FOR THE ACCURACY OR COMPLETENESS OF SCANNED COPIES OF THIS PLAN SHEET.

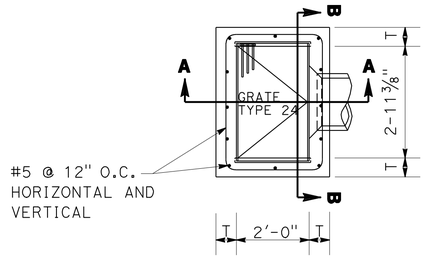

PLAN VIEW

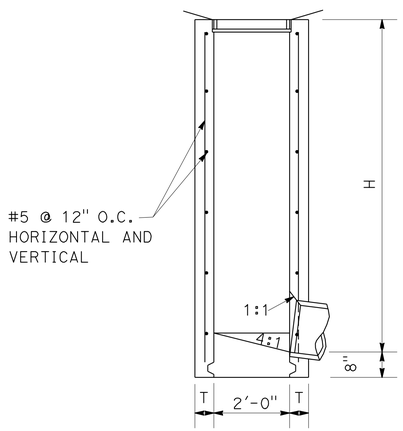

SECTION A-A

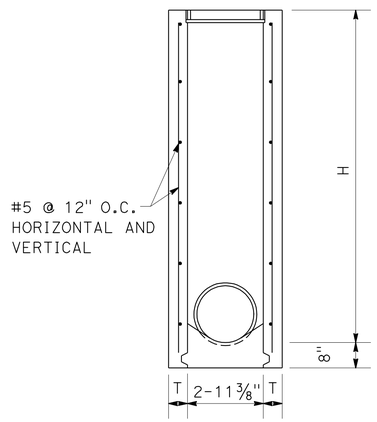

SECTION B-B

TYPE G1 (Mod)

NOTES:

1.- FOR "T" WALL THICKNESS. SEE TABLE BELOW
2.- WALL REINFORCING NOT REQUIRED WHEN "H" IS 6'-0" OR LESS AND THE UNSUPPORTED WIDTH OR LENGTH IS 7'-0" OR LESS. WALLS EXCEEDING THESE LIMITS SHALL BE REINFORCED WITH #5 BARS AT 12" CENTERS PLACED 1½ CLEAR TO INSIDE OF BOX UNLESS OTHERWISE SHOWN.
3.- INLET BOTTOM REINFORCING NOT REQUIRED. SEE STANDARD PLAN D74C FOR ALTERNATIVE REINFORCED BOTTOM AND ALTERNATIVE HALF ROUND BOTTOM.
4.- STEPS-NONE REQUIRED WHERE "H" IS LESS THAN 2'-6". WHERE "H" IS 2'-6" OR MORE, INSTALL STEPS WITH LOWEST RUNG 1'-0" ABOVE THE FLOOR AND HIGHEST RUNG NOT MORE 6" BELOW TOP OF INLET. THE DISTANCE BETWEEN STEPS SHALL NOT EXCEED 1'-0" AND SHALL BE UNIFORM THROUGHOUT THE LENGTH OF THE WALL. PLACE STEPS IN THE WALL WITHOUT AN OPENING. STEPS INSERTS MAY BE SUSTITUTED FOR THE BAR STEPS. STEP INSERTS SHALL COMPLY WITH STATE INDUSTRIAL SAFETY REQUIREMENTS. SEE STANDARD PLANS D74C FOR STEP DETAILS.
5.- DETAILS SHOWN APPLY TO BOTH METAL AND CONCRETE PIPE.
6.- PIPE(S) CAN BE PLACED IN ANY WALL OF G1 (Mod) BOX.
7.- CURB SECTION SHALL MATCH ADJACENT CURB.
8.- SET INLET SO THAT GRATE BARS ARE PARALLEL TO DIRECTION OF PRINCIPAL SURFACE FLOW.
9.- SEE STANDARD PLANS D77A AND D77B FOR GRATE AND FRAME DETAILS AND WEIGHTS OF MISCELLANEOUS IRON AND STEEL.

TABLE (Mod)

CONCRETE QUANTITIES				
TYPE	H=3'-0" TO H=8'-0" (T=6")		H=8'-1" TO H=20'-0" (T=8")	
	H=3'-0" (CY)	ADDITIONAL PCC PER FOOT (CY)	H=8'-1" (CY)	ADDITIONAL PCC PER FOOT (CY)
G-1 (Mod)	0.95	0.220	2.75	0.310

NO SCALE

DRAINAGE DETAILS
DD-4

STATE OF CALIFORNIA - DEPARTMENT OF TRANSPORTATION
Caltrans® DESIGN
FUNCTIONAL SUPERVISOR: CHRIS M. THOMAS
CALCULATED-DESIGNED BY: RICARDO PADILLA
CHECKED BY: RAMON JUAREZ
REVISED BY / DATE REVISED

LAST REVISION 11-14-12
DATE PLOTTED => 13-MAR-2013
TIME PLOTTED => 22:22

Dist	COUNTY	ROUTE	POST MILES TOTAL PROJECT	SHEET No.	TOTAL SHEETS
11	SD	163	1.4	23	147

REGISTERED CIVIL ENGINEER 03-04-13 DATE

03-04-13
PLANS APPROVAL DATE

REGISTERED PROFESSIONAL ENGINEER RICARDO PADILLA No. C58151 Exp 06/30/14 CIVIL STATE OF CALIFORNIA

THE STATE OF CALIFORNIA OR ITS OFFICERS OR AGENTS SHALL NOT BE RESPONSIBLE FOR THE ACCURACY OR COMPLETENESS OF SCANNED COPIES OF THIS PLAN SHEET.

NOTES:

1).-(N) - NOT A SEPARATE PAY ITEM, FOR INFORMATION ONLY.

2).-COMPOSITE SSRP SHALL BE SMOOTH INTERIOR, WITH ¾" x ¾" RIBS AT 7½" PITCH.

3).-HDPE PIPE SHALL HAVE ONLY SMOOTH INTERIOR.

4).-SEE "SUMMARY OF QUANTITIES" SHEETS FOR ADDITIONAL QUANTITIES.

5).-PIPE JOINT SHALL BE POSITIVE WHEN "P" IS SPECIFIED.

* 18" REINFORCED CONCRETE PIPE (CLASS V)

DRAINAGE SYSTEM	DRAINAGE UNIT	PLAN SHEET NO	INLET GRATE TYPE 24-12X (N)	INLET GRATE TYPE 36RX (N)	18" REINFORCED CONCRETE PIPE	MANHOLE FRAME/COVER (N)	18" BITUMINOUS COATED CORRUGATED STEEL PIPE (.109" THICK)	CONCRETE BACKFILL	MISCELLANEOUS IRON & STEEL	6" PLASTIC PIPE (SCHEDULE 40)	MINOR CONCRETE (MINOR STRUCTURE)	CONCRETE COLLAR (N)	36" PRECAST CONCRETE PIPE INLET	36" PRECAST CONCRETE PIPE RISER	JACKED 30" WELDED STEEL PIPE CASING (0.5" THICK)	CAP RAISER	GROUT (SLURRY MIX) (N)	PIPE JOINT CLASSIFICATION (N)	MAXIMUM COVER (N)	DESCRIPTION	STATION	PLAN SHEET NO	DRAINAGE SYST.	DRAINAGE UNIT
			EA	EA	LF	EA	LF	CY	LB	LF	CY	EA	LF	LF	LF	EA	CY	-	FT					
1	a	D-1					14.80					1						P	2.0	18" X 14.80' Bit Ctd CSP WITH Conc COLLAR	Sta 64+36.63 "LS" LINE	D-1	1	a
	b			1					215		0.41		4.58							GCP INLET H=4.08' WITH GRATE TYPE 36RX	Sta 64+22.13 "LS" LINE			b
	c									6.0										6" X 6.0' PVC PIPE				c
	d							4.5												CONCRETE BACKFILL L=20'				d
	e						69.20											P	1.53	18" X 69.20' Bit Ctd CSP				e
	f			1					215		0.41		4.59							GCP INLET H=3.53' WITH GRATE TYPE 36RX	Sta 63+50.13 "LS" LINE			f
	g									6.0										6" X 6.0' PVC PIPE				g
	h						57.10											P	2.26	18" X 57.10' Bit Ctd CSP				h
	i			1					215		0.41		4.76							GCP INLET H=4.26' WITH GRATE TYPE 36RX	Sta 62+90.13 "LS" LINE			i
	j									6.0										6" X 6.0' PVC PIPE				j
	k						69.40											P	2.84	18" X 69.40' Bit Ctd CSP				k
	l			1					215		0.41		5.34							GCP INLET H= 4.84' WITH GRATE TYPE 36RX	Sta 62+18.13 "LS" LINE			l
	m									6.0										6" X 6.0' PVC PIPE				m
	n						42.00											P	1.96	18" X 42' Bit Ctd CSP				n
	o			1					215		0.41		4.46							GCP INLET H=3.96' WITH GRATE TYPE 36RX	Sta 61+73.13 "LS" LINE			o
	p				22.0													P	5.46	18" X 22' RCP (CLASS V)				p
	q			1					215		0.41		7.96							GCP INLET H=7.46' WITH GRATE TYPE 36RX	Sta 61+47.73 "LS" LINE			q
	r				22.6													P	8.12	18" X 22.6' RCP (CLASS V)				r
	r1														16.0		2.34	P	8.12	JACKED 30' WELDED STEEL PIPE CASING (0.5" THICK)				r1
	s		1						239		3.40									G1 (Mod) INLET H= 10.12' WITH GRATE TYPE 24-12X	Sta 61+47.73 "LS" LINE			s
	t				20.26													P	7.0	18" X 20.26' RCP				t
	u		1						239		3.15									G1 (Mod) INLET H= 9.30' WITH GRATE TYPE 24-12X	Sta 61+47.73 "LS" LINE			u
	v				47.15													P	7.46	18" X 47.15' RCP				v
	w		1						239		3.05									G1 (Mod) INLET H= 8.96' WITH GRATE TYPE 24-12X	Sta 60+97.63 "LS" LINE			w
	x				20.41													P	6.86	18" X 20.41' RCP				x
	y		1						239		2.87									G1 (Mod) INLET H= 8.39' WITH GRATE TYPE 24-12X	Sta 60+97.63 "LS" LINE			y
	z				50.68													P	6.17	18" X 50.68' RCP				z
	aa		1						239		1.98									G1 (MOd) INLET H= 7.67' WITH GRATE TYPE 24-12X	Sta 60+43.35 "LS" LINE			aa
	bb				20.21													P	5.61	18" X 20.21' RCP				bb
	cc		1						239		1.85									G1 (MOd) INLET H= 7.11' WITH GRATE TYPE 24-12X	Sta 60+43.35 "LS" LINE			cc
	dd				109.17													P	4.34	18" X 109.2' RCP				dd
	ee		1						239		1.58									G1 (Mod) INLET H= 5.84' WITH GRATE TYPE 24-12X	Sta 59+31.00 "LS" LINE			ee
	ff				19.04													P	3.78	18" X 19.04' RCP				ff
	gg		1						239		1.45									G1 (Mod) INLET H= 5.28' WITH GRATE TYPE 24-12X	Sta 59+31.00 "LS" LINE			gg
	hh				107.36													P	2.5	18" X 107.36' RCP				hh
	ii		1						239		1.17									G1 (Mod) INLET H= 4.0' WITH GRATE TYPE 24-12X	Sta 58+20.69 "LS" LINE			ii
	jj				19.20													P	1.93	18" X 19.20' RCP				jj
	kk		1						239		1.05									G1 (Mod) INLET H= 3.43' WITH GRATE TYPE 24-12X	Sta 58+20.69 "LS" LINE			kk
	ll				137.0													P	2.5	18" X 137' RCP				ll
	mm		1						239		1.17									G1 (Mod) INLET H= 4.0' WITH GRATE TYPE 24-12X	Sta 56+80.74 "LS" LINE			mm
	nn				7.80														1.93	18" X 7.8' RCP				nn
	oo					1			441		3.80			2.20				P		Reinf Conc Jct Str WITH MANHOLE RISER FRAME AND COVER, Hb=1.75'	Sta 56+80.74 "LS" LINE			oo
	pp				7.80														1.93	18" X 7.8' RCP				pp
	qq		1						239		1.05									G1 (Mod) INLET H= 3.43' WITH GRATE TYPE 24-12X	Sta 56+80.74 "LS" LINE			qq
SUBTOTAL					610.68		252.5	4.5	4599	24.0	30.03		31.69	2.20	16.0									

DRAINAGE QUANTITIES
DQ-1

STATE OF CALIFORNIA - DEPARTMENT OF TRANSPORTATION
Caltrans®
DESIGN

FUNCTIONAL SUPERVISOR: CHRIS M THOMAS
CALCULATED-DESIGNED BY: RICARDO PADILLA
CHECKED BY: RAMON JUAREZ
REVISED BY
DATE REVISED

LAST REVISION 02-27-13
DATE PLOTTED => 13-MAR-2013
TIME PLOTTED => 22:22

Dist	COUNTY	ROUTE	POST MILES TOTAL PROJECT	SHEET No.	TOTAL SHEETS
11	SD	163	1.4	24	147

REGISTERED CIVIL ENGINEER 03-04-13 DATE

03-04-13
PLANS APPROVAL DATE

REGISTERED PROFESSIONAL ENGINEER RICARDO PADILLA No. C58151 Exp. 06/30/14 CIVIL STATE OF CALIFORNIA

THE STATE OF CALIFORNIA OR ITS OFFICERS OR AGENTS SHALL NOT BE RESPONSIBLE FOR THE ACCURACY OR COMPLETENESS OF SCANNED COPIES OF THIS PLAN SHEET.

DRAINAGE SYSTEM	DRAINAGE UNIT	PLAN SHEET NO	INLET GRATE TYPE 24-12X (N) EA	INLET GRATE TYPE 36RX (N) EA	18" REINFORCED CONCRETE PIPE LF	MANHOLE FRAME/COVER (N) EA	18" BITUMINOUS COATED CORRUGATE STEEL PIPE (0.109" THICK) LF	CONCRETE BACKFILL CY	MISCELLANEOUS IRON & STEEL LB	6" PLASTIC PIPE (SCHEDULE 40) LF	MINOR CONCRETE (MINOR STRUCTURE) CY	CONCRETE COLLAR (N) EA	36" PRECAST CONCRETE PIPE INLET LF	36" PRECAST CONCRETE PIPE RISER LF	JACKED 30" WELDED STEEL PIPE CASING (0.5" THICK) LF	CAP RAISER EA	GROUT (SLURRY MIX) (N) CY	PIPE JOINT CLASSIFICATION (N) -	MAXIMUM COVER (N) FT	DESCRIPTION	STATION	PLAN SHEET NO	DRAINAGE SYST.	DRAINAGE UNIT
2	a	D-2					15.3					1						P	1.55	18" X 15.3' Bit Ctd CSP WITH Conc COLLAR	Sta 66+57.19 "LS" LINE	D-2	2	a
	b			1					215		0.41		4.1							GCP INLET H=3.55' W/GRATE 36RX	Sta 66+65.13 "LS" LINE			b
	c						24.22											P	1.48	18' X 24.22' Bit Ctd CSP				c
	d			1					215		0.41		3.98							GCP INLET H=3.48' WITH GRATE 36RX	Sta 66+92.32 "LS" LINE			d
	e									15										6" X 15' PVC PIPE				e
	f						58.0													18" X 58' Bit Ctd CSP				f
	g							4.5										P	1.76	CONCRETE BACKFILL L=20'	Sta 67+19.80 TO Sta 67+39.80 "LS" LINE			g
	h			1					215		0.41		4.26							GCP INLET H=3.76' WITH GRATE 36RX	Sta 67+60.32 "LS" LINE			h
	i									15										6" X 6' PVC PIPE				i
	j						52.0											P	1.13	18" X 52' Bit Ctd CSP				j
	k			1					215		0.41		3.63							GCP INLET H=3.13' WITH GRATE 36RX	Sta 68+08.33 "LS" LINE			k
	l									15										6" X 6' PVC PIPE				l
	m						85.0											P	1.5	18" X 85' Bit Ctd CSP				m
	n			1					215		0.41		4.00							GCP INLET H=3.5' WITH GRATE 36RX	Sta 68+96.33 "LS" LINE			n
	o									15										6" X 6' PVC PIPE				o
	p						94.49											P	4.62	18" X 94.49' Bit Ctd CSP				p
	q			1					215		0.41		7.12							GCP INLET H=6.62' WITH GATE 36RX	Sta 69+39.80 "LS" LINE			q
	r				26.0													P	6.22	18" X 26.0' RCP (CLASS V)				r
	r1														16.0		2.34	P	6.22	JACKED 30" WELDED STEEL PIPE CASING (0.5" THICK)				r1
	s		1						239		2.80		9.40							G1 (Mod) INLET H=8.22' WITH GRATE TYPE 24-12X	Sta 70+00.10 "LS" LINE			s
	t				8.13													P	6.47	18' X 8.13' RCP				t
	u					1			441		6.00			3.14						Reinf Conc Jct Str WITH MANHOLE RISER FRAME AND COVER, Hb=5.5'	Sta 70+00.10 "LS" LINE			u
	v				8.21													P	6.08	18' X 8.21' RCP				v
	w		1						239		1.96									G1 (Mod) INLET H=7.58' WITH GRATE TYPE 24-12X	Sta 70+00.10 "LS" LINE			w
	x				58.68													P	2.76	18' X 58.68' RCP				x
	y		1						239		1.23									G1 (Mod) INLET H=4.26' WITH GRATE TYPE 24-12X	Sta 70+62.44 "LS" LINE			y
	z				19.21													P	2.03	18' X 19.21' RCP				z
	aa		1						239		1.07									G1 (Mod) INLET H=3.53' WITH GRATE TYPE 24-12X	Sta 70+62.44 "LS" LINE			aa
	bb				33.13													P	2.23	18' X 33.13' RCP				bb
	cc		1						239		1.09									G1 (Mod) INLET H=3.62' WITH GRATE TYPE 24-12X	Sta 71+15.41 "LS" LINE			cc
	dd				19.53													P	1.8	18' X 19.53' RCP				dd
	ee		1						239		1.00									G1 (Mod) INLET H=3.17' WITH GRATE TYPE 24-12X	Sta 71+15.41 "LS" LINE			ee
3	a	D-4									1.70									INTERCEPT DITCH L=34.5'	Sta 64+50.00 TO Sta 64+84.50 "LS" LINE	D-4	3	a
4	a	D-3								213.5'										6" X 213.5' PVC PIPE	Sta 87+89.00 TO Sta 90+02.35 "SD-163" LINE	D-3	4	a
SUBTOTAL					172.89		329.01	4.5	3165	273.5	19.31		36.49	3.14	16.0									
TOTAL					783.57		581.51	9.0	7764	297.5	49.34		68.18	5.34	32.0									

REVISED BY | DATE REVISED

RICARDO PADILLA | RAMON JUAREZ

CALCULATED-DESIGNED BY | CHECKED BY

FUNCTIONAL SUPERVISOR: CHRIS M THOMAS

STATE OF CALIFORNIA - DEPARTMENT OF TRANSPORTATION

Caltrans® DESIGN

DRAINAGE QUANTITIES
DQ-2

LAST REVISION 02-27-13

DATE PLOTTED => 13-MAR-2013
TIME PLOTTED => 22:23

Dist	COUNTY	ROUTE	POST MILES TOTAL PROJECT	SHEET No.	TOTAL SHEETS
11	SD	163	1.4	25	147

REGISTERED CIVIL ENGINEER 03-04-13 DATE

03-04-13
PLANS APPROVAL DATE

REGISTERED PROFESSIONAL ENGINEER LANCHI HOANG No. C76518 Exp. 12-31-14 CIVIL STATE OF CALIFORNIA

THE STATE OF CALIFORNIA OR ITS OFFICERS OR AGENTS SHALL NOT BE RESPONSIBLE FOR THE ACCURACY OR COMPLETENESS OF SCANNED COPIES OF THIS PLAN SHEET.

NOTE: FOR COMPLETE RIGHT OF WAY AND ACCURATE ACCESS DATA, SEE RIGHT OF WAY RECORD MAPS AT DISTRICT OFFICE. ALL UTILITIES TO BE FIELD VERIFIED BY CONTRACTOR PIOR TO CONSTRUCTION

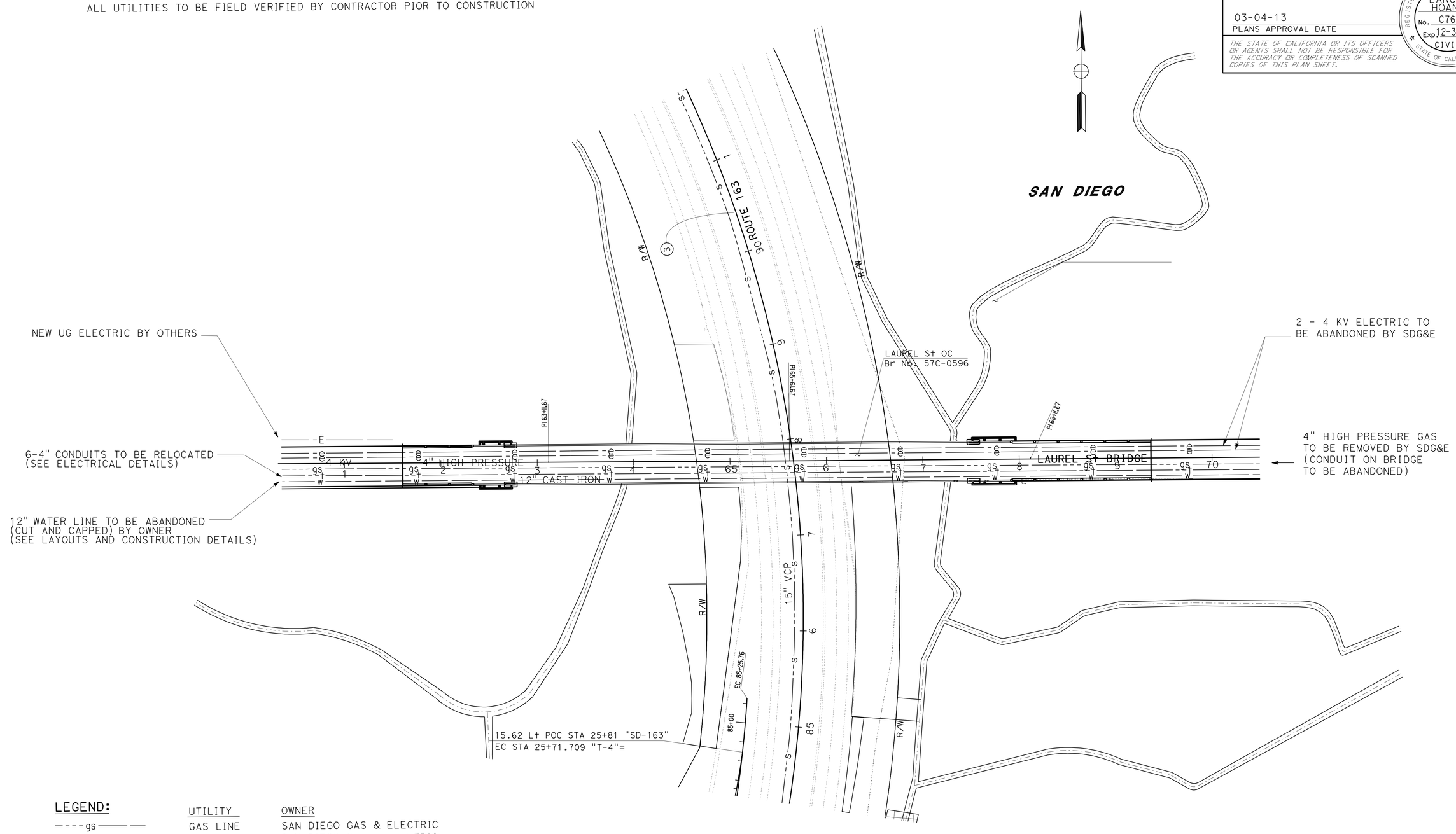

LEGEND:

	UTILITY	OWNER
----gs———	GAS LINE	SAN DIEGO GAS & ELECTRIC
——-e———	ELECTRIC	SAN DIEGO GAS & ELECTRIC
——--s———	SEWER	CITY OF SAN DIEGO
-——w———	WATER	CITY OF SAN DIEGO
——--t———	TELEPHONE	ATT & CROWN CASTLE
——-E———	NEW ELECTRIC	SAN DIEGO GAS & ELECTRIC

THIS PLAN ACCURATE FOR UTILITY INFORMATION ONLY.

SCALE 1:50

UTILITY PLAN

U-1

STATE OF CALIFORNIA - DEPARTMENT OF TRANSPORTATION
Caltrans PROJECT DEVELOPMENT

FUNCTIONAL SUPERVISOR: ABU-BAKR H. AL-JAFRI
CALCULATED-DESIGNED BY: SIMON TSE
CHECKED BY: LANCHI HOANG
REVISED BY
DATE REVISED

LAST REVISION 02-22-12
DATE PLOTTED => 13-MAR-2013
TIME PLOTTED => 22:19

Dist	COUNTY	ROUTE	POST MILES TOTAL PROJECT	SHEET No.	TOTAL SHEETS
11	SD	163	1.4	26	147

REGISTERED CIVIL ENGINEER 03-04-13 DATE

03-04-13
PLANS APPROVAL DATE

REGISTERED PROFESSIONAL ENGINEER RICARDO PADILLA No. C58151 Exp. 06-30-14 CIVIL STATE OF CALIFORNIA

THE STATE OF CALIFORNIA OR ITS OFFICERS OR AGENTS SHALL NOT BE RESPONSIBLE FOR THE ACCURACY OR COMPLETENESS OF SCANNED COPIES OF THIS PLAN SHEET.

NOTES:

1. LOCATION OF CONSTRUCTION AREA SIGNS ARE APPROXIMATE. EXACT LOCATIONS WILL BE DETERMINED BY THE ENGINEER.
2. FOR ADDITIONAL CONSTRUCTION AREA SIGNS, SEE TRAFFIC HANDLING PLANS AND STAGE CONSTRUCTION PLANS
3. FEDERAL MANUAL ON UNIFORM TRAFFIC CONTROL DEVICES (MUTCD) SIGN CODES ARE SHOWN UNLESS DESIGNATED BY (CA), INDICATING CALIFORNIA MUTCD.
4. EXISTING UTILITIES ARE NOT SHOWN ON THESE PLAN SHEETS. THE CONTRACTOR SHALL VERIFY LOCATIONS OF EXISTING UTILITIES AND ADJUST THE FIELD LOCATION OF SIGN POSTS IN CONSULTATION WITH THE ENGINEER.

LEGEND:

[X] = CONSTRUCTION AREA SIGNS

CONSTRUCTION AREA SIGNS

SIGN No.	TYPE	PANEL SIZE (In)x(In)	No. OF POST AND SIZE (In)x(In)	No. OF SIGNS
1	C40 (CA)	108 X 42	2-4 X 6	2
2	C23 (CA)	48 X 24	1-4 X 4	4
3	C14 (CA)	48 X 48	1-4 X 6	4
4	SC6-4 (CA)	48 X 60	PORTABLE	10
5	SPCL-21	48 X 48	1-4 X 6	8
			TOTAL	28

SIGN #5

SPCL-21 4" CAPS

TRAIL SUBJECT TO 5 MINUTE CLOSURES

36" × 36"

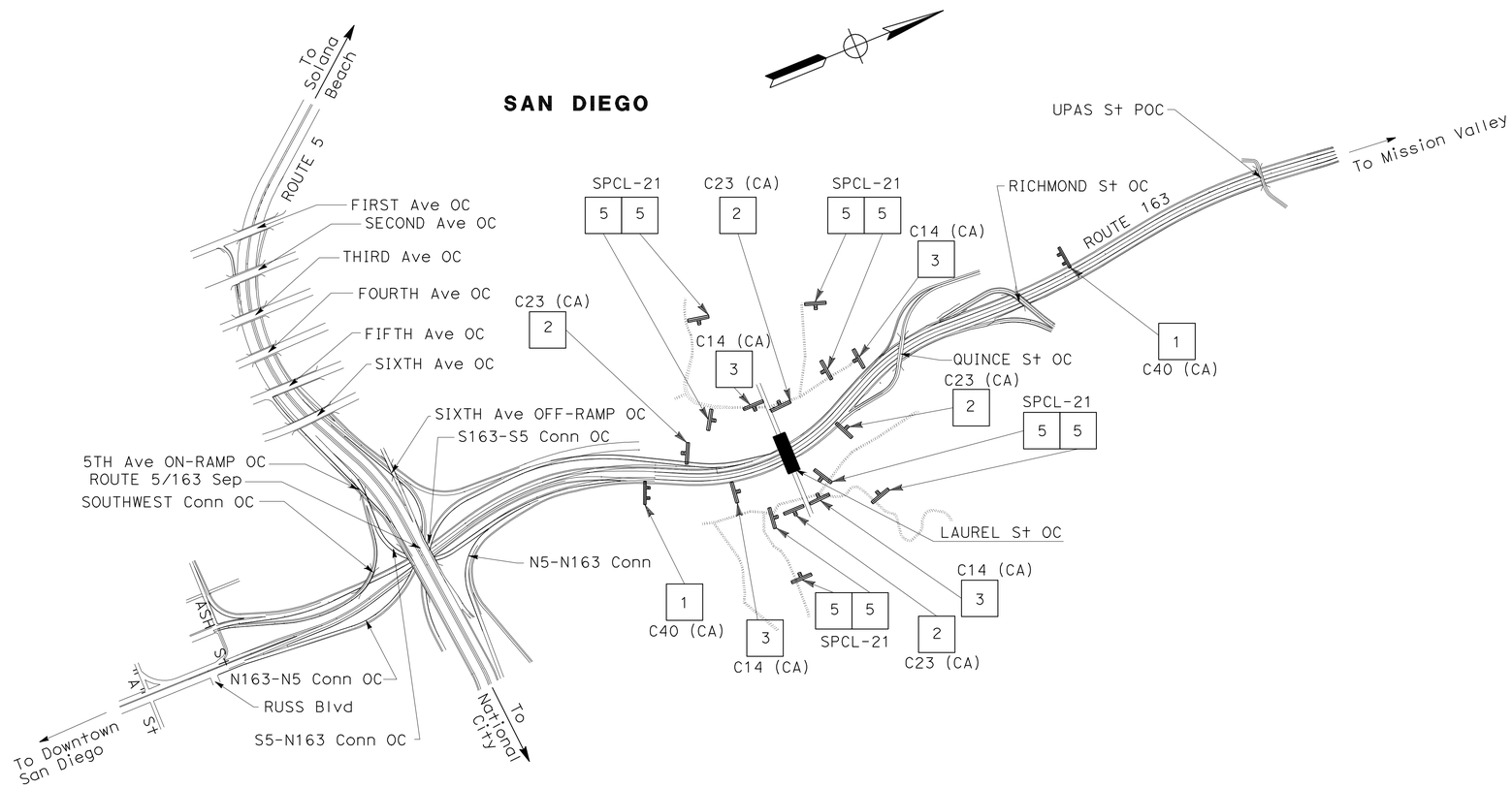

CONSTRUCTION AREA SIGNS

NO SCALE

CS-1

APPROVED FOR TRAFFIC HANDLING WORK ONLY

STATE OF CALIFORNIA - DEPARTMENT OF TRANSPORTATION
Caltrans
DESIGN

FUNCTIONAL SUPERVISOR: CHRIS M THOMAS
CALCULATED-DESIGNED BY: RICARDO PADILLA
CHECKED BY: SHAHIN ADIBI
REVISED BY
DATE REVISED

LAST REVISION 12-05-12
DATE PLOTTED => 13-MAR-2013
TIME PLOTTED => 22:20

Dist	COUNTY	ROUTE	POST MILES TOTAL PROJECT	SHEET No.	TOTAL SHEETS
11	SD	163	1.4	27	147

REGISTERED CIVIL ENGINEER 03-04-13 DATE

03-04-13
PLANS APPROVAL DATE

REGISTERED PROFESSIONAL ENGINEER RICARDO PADILLA No. C58151 Exp. 06-30-14 CIVIL STATE OF CALIFORNIA

THE STATE OF CALIFORNIA OR ITS OFFICERS OR AGENTS SHALL NOT BE RESPONSIBLE FOR THE ACCURACY OR COMPLETENESS OF SCANNED COPIES OF THIS PLAN SHEET.

TYPICAL-PLACEMENT OF SC6-4 (CA) CONSTRUCTION AREA SIGNS

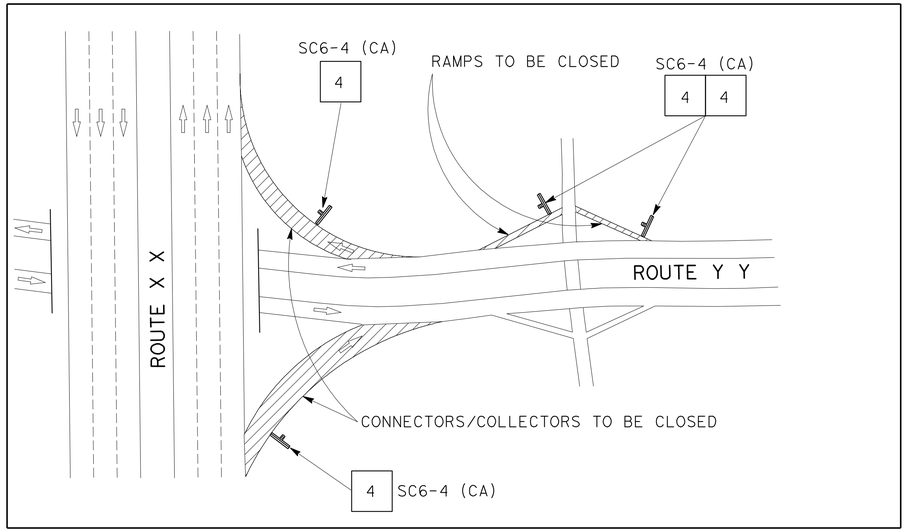

TYPICAL PLACEMENT OF TRAFFIC PLASTIC DRUM

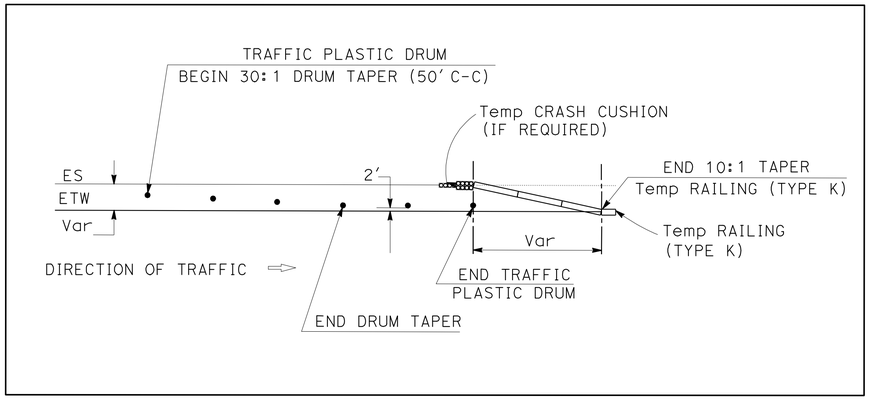

APPROVED FOR TRAFFIC HANDLING WORK ONLY

CONSTRUCTION AREA SIGNS

CS-2

NO SCALE

STATE OF CALIFORNIA - DEPARTMENT OF TRANSPORTATION
Caltrans
TRAFFIC

FUNCTIONAL SUPERVISOR: CHRIS M THOMAS
CALCULATED-DESIGNED BY: RICARDO PADILLA
CHECKED BY: SHAHIN ADIBI
REVISED BY
DATE REVISED

LAST REVISION 07-11-12
DATE PLOTTED => 13-MAR-2013
TIME PLOTTED => 22:20

Dist	COUNTY	ROUTE	POST MILES TOTAL PROJECT	SHEET No.	TOTAL SHEETS
11	SD	163	1.4	28	147

REGISTERED CIVIL ENGINEER 03-04-13 DATE

03-04-13
PLANS APPROVAL DATE

REGISTERED PROFESSIONAL ENGINEER RICARDO PADILLA No. C58151 Exp. 6-30-14 CIVIL STATE OF CALIFORNIA

THE STATE OF CALIFORNIA OR ITS OFFICERS OR AGENTS SHALL NOT BE RESPONSIBLE FOR THE ACCURACY OR COMPLETENESS OF SCANNED COPIES OF THIS PLAN SHEET.

NOTE:

1. FOR ACCURATE RIGHT OF WAY DATA, CONTACT RIGHT OF WAY ENGINEERING AT THE DISTRICT OFFICE.

LEGEND:

- Temp CONSTRUCTION AREA
- Temp HMA-A PAVING
- Alt Temp CRASH CUSHION SYSTEM

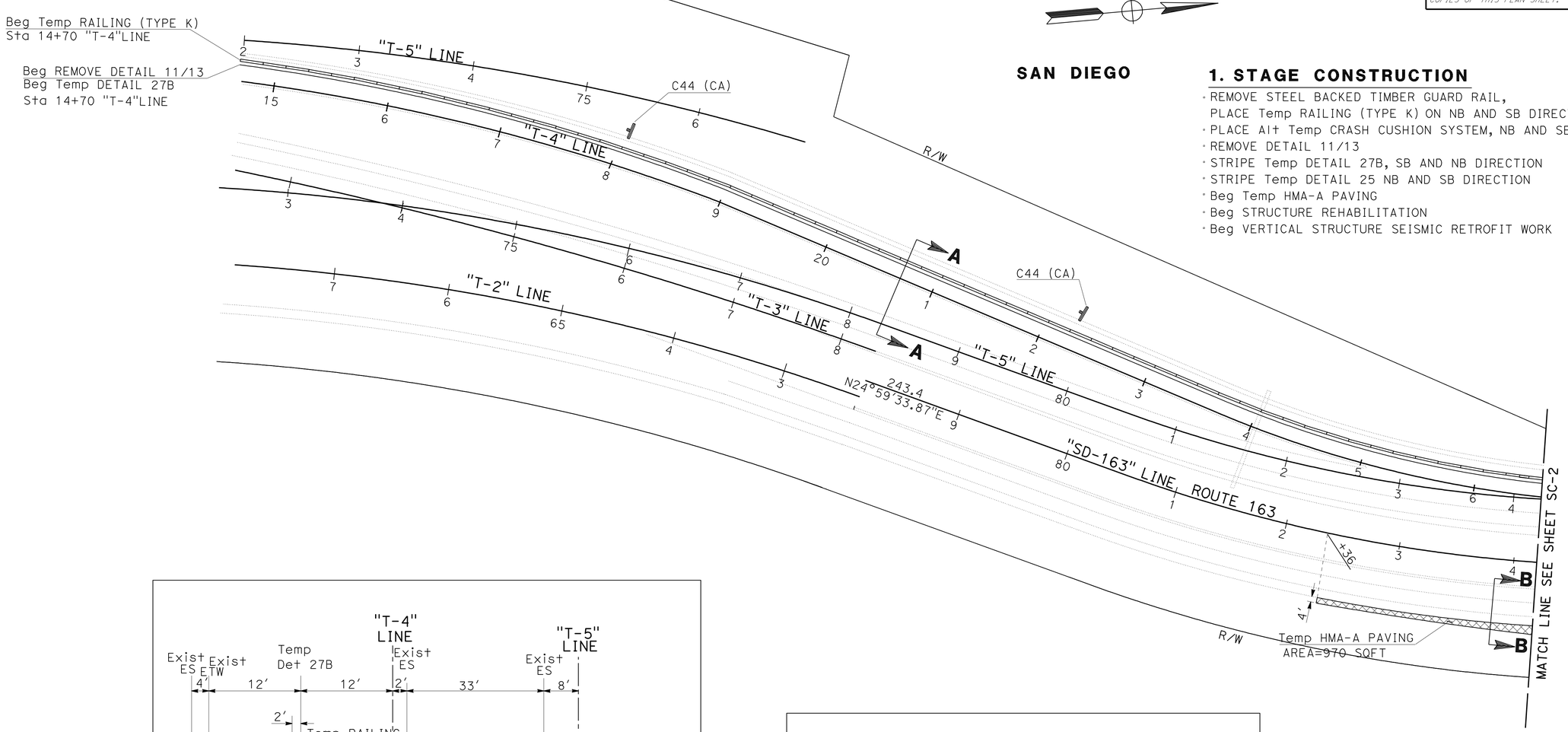

SAN DIEGO

1. STAGE CONSTRUCTION

- REMOVE STEEL BACKED TIMBER GUARD RAIL, PLACE Temp RAILING (TYPE K) ON NB AND SB DIRECTION
- PLACE Alt Temp CRASH CUSHION SYSTEM, NB AND SB DIRECTION
- REMOVE DETAIL 11/13
- STRIPE Temp DETAIL 27B, SB AND NB DIRECTION
- STRIPE Temp DETAIL 25 NB AND SB DIRECTION
- Beg Temp HMA-A PAVING
- Beg STRUCTURE REHABILITATION
- Beg VERTICAL STRUCTURE SEISMIC RETROFIT WORK

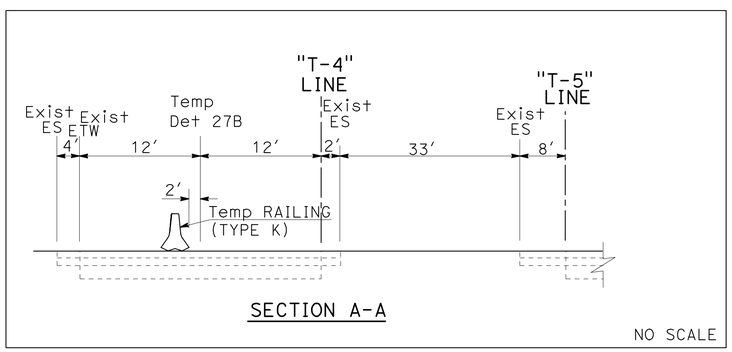

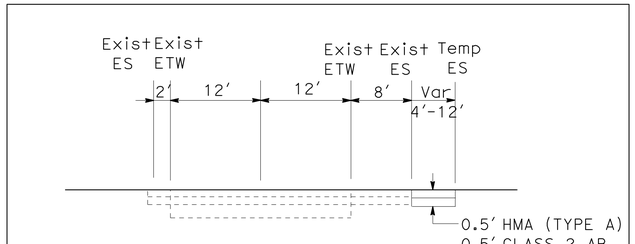

APPROVED FOR STAGE CONSTRUCTION WORK ONLY

STAGE CONSTRUCTION

STAGE 1

SCALE 1"=50'

SC-1

STATE OF CALIFORNIA - DEPARTMENT OF TRANSPORTATION
DESIGN

CONSULTANT FUNCTIONAL SUPERVISOR: CHRIS M. THOMAS
CALCULATED-DESIGNED BY: RICARDO PADILLA
CHECKED BY: RAMON JUAREZ
REVISED BY
DATE REVISED

LAST REVISION 12-18-12
DATE PLOTTED => 13-MAR-2013
TIME PLOTTED => 22:20

Dist	COUNTY	ROUTE	POST MILES TOTAL PROJECT	SHEET No.	TOTAL SHEETS
11	SD	163	1.4	29	147

REGISTERED CIVIL ENGINEER 03-04-13 DATE

03-04-13
PLANS APPROVAL DATE

REGISTERED PROFESSIONAL ENGINEER RICARDO PADILLA No. C58151 Exp. 6-30-14 CIVIL STATE OF CALIFORNIA

THE STATE OF CALIFORNIA OR ITS OFFICERS OR AGENTS SHALL NOT BE RESPONSIBLE FOR THE ACCURACY OR COMPLETENESS OF SCANNED COPIES OF THIS PLAN SHEET.

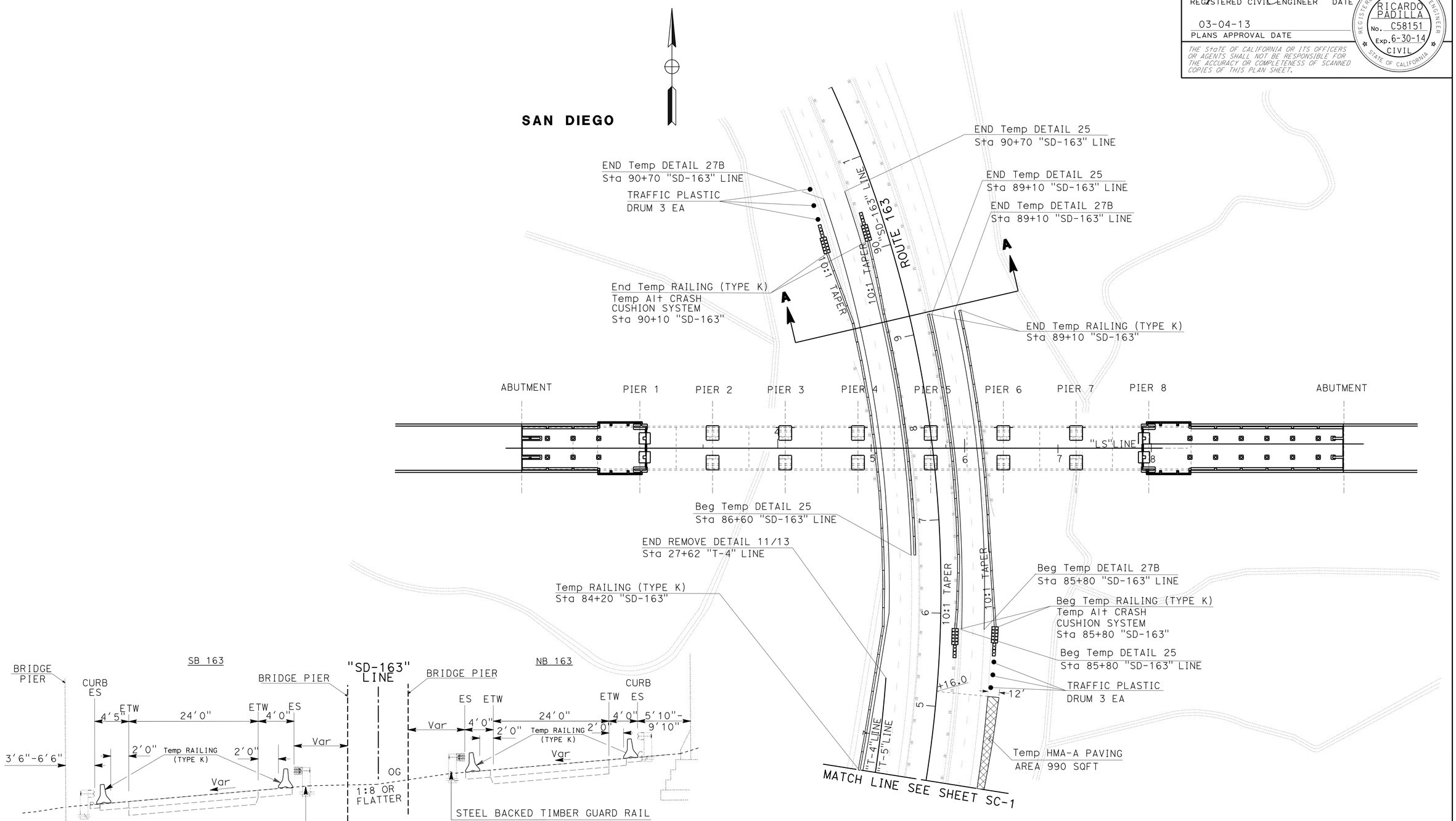

SECTION A-A

NO SCALE

APPROVED FOR STAGE CONSTRUCTION WORK ONLY

STAGE CONSTRUCTION

STAGE 1

NO SCALE

SC-2

REVISED BY	DATE REVISED
RICARDO PADILLA	
RAMON JUAREZ	

CALCULATED-DESIGNED BY
CHECKED BY

FUNCTIONAL SUPERVISOR
CHRIS M. THOMAS

STATE OF CALIFORNIA - DEPARTMENT OF TRANSPORTATION
Caltrans® PROJECT DEVELOPMENT

LAST REVISION 02-15-13
DATE PLOTTED => 14-MAR-2013
TIME PLOTTED => 09:00

Dist	COUNTY	ROUTE	POST MILES TOTAL PROJECT	SHEET No.	TOTAL SHEETS
11	SD	163	1.4	30	147

REGISTERED CIVIL ENGINEER 03-04-13 DATE

03-04-13
PLANS APPROVAL DATE

REGISTERED PROFESSIONAL ENGINEER RICARDO PADILLA No. C58151 Exp. 6-30-14 CIVIL STATE OF CALIFORNIA

THE STATE OF CALIFORNIA OR ITS OFFICERS OR AGENTS SHALL NOT BE RESPONSIBLE FOR THE ACCURACY OR COMPLETENESS OF SCANNED COPIES OF THIS PLAN SHEET.

2A. STAGE CONSTRUCTION

- PLACE BARRICADES TYPE III AT EAST AND WEST END OF LAUREL STREET BRIDGE AND SET UP Temp CHAIN LINK FENCE
- PLACE TRAFFIC DRUMS AND DETOUR TRAFFIC
- WORK ON MIDDLE OF BRIDGE, REMOVE DETAIL 21
- PEDESTRIANS ON Exist SIDEWALK, RETROFIT MIDDLE OF BRIDGE (WORK INCLUDES TRENCHING FOR UTILITY RELOCATION)
- SEE Const DETAILS SHEET FOR SPECIFIC INFORMATION
- REMOVE Exist ASPHALT Conc PAVEMENT, BASE, SUBBASE, AND UTILITIES Conc ENCASEMENT, 6 EA 4" PVC AT&T CONDUITS TO BE PROTECTED IN PLACE UNTIL NEW CONDUITS ARE INSTALLED AND CONNECTIONS UPGRADED ONLY THEN CAN EXISTING CONDUITS BE REMOVED
- REMOVE Exist GAS AND ELECTRICAL LINES
- PLACE AT&T CONDUITS AND SPLICE AT&T FIBER OPTIC LINES AND NEXT-G LINES THEN REMOVE Exist AT&T CONDUITS

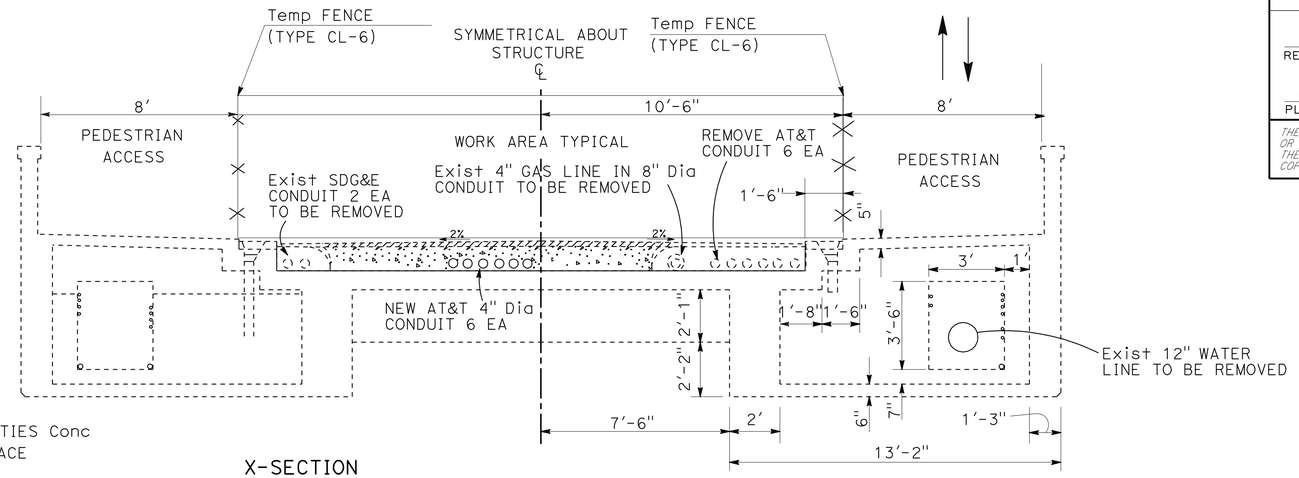

X-SECTION

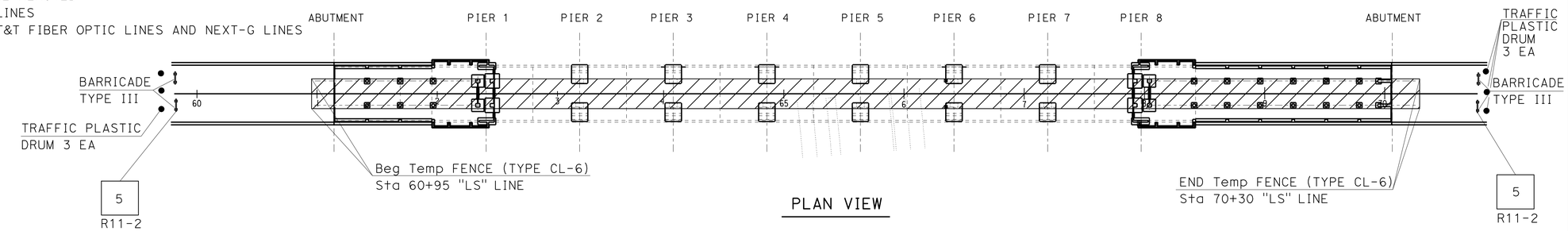

PLAN VIEW

APPROVED FOR STAGE CONSTRUCTION WORK ONLY

STAGE CONSTRUCTION
STAGE 2

NO SCALE **SC-3**

REVISED BY | DATE REVISED
RICARDO PADILLA | RAMON JUAREZ
CALCULATED-DESIGNED BY | CHECKED BY
FUNCTIONAL SUPERVISOR: CHRIS M. THOMAS
STATE OF CALIFORNIA - DEPARTMENT OF TRANSPORTATION
Caltrans® DESIGN

LAST REVISION 02-11-13 | DATE PLOTTED => 13-MAR-2013 | TIME PLOTTED => 22:21

Dist	COUNTY	ROUTE	POST MILES TOTAL PROJECT	SHEET No.	TOTAL SHEETS
11	SD	163	1.4	31	147

REGISTERED CIVIL ENGINEER 03-04-13 DATE

03-04-13
PLANS APPROVAL DATE

REGISTERED PROFESSIONAL ENGINEER RICARDO PADILLA No. C58151 Exp. 6-30-14 CIVIL STATE OF CALIFORNIA

THE STATE OF CALIFORNIA OR ITS OFFICERS OR AGENTS SHALL NOT BE RESPONSIBLE FOR THE ACCURACY OR COMPLETENESS OF SCANNED COPIES OF THIS PLAN SHEET.

2B. STAGE CONSTRUCTION

- RESET Temp FENCE (TYPE CL-6)
- PLACE PEDESTRIANS IN MIDDLE OF BRIDGE (ADA COMPLIANT WALKWAY)
- VERTICAL PRESTRESSING OF BRIDGE PIERS
- GROUT PRESTRESSING DUCTS
- INSERT NEW LADDERS INTO PIER COLUMNS

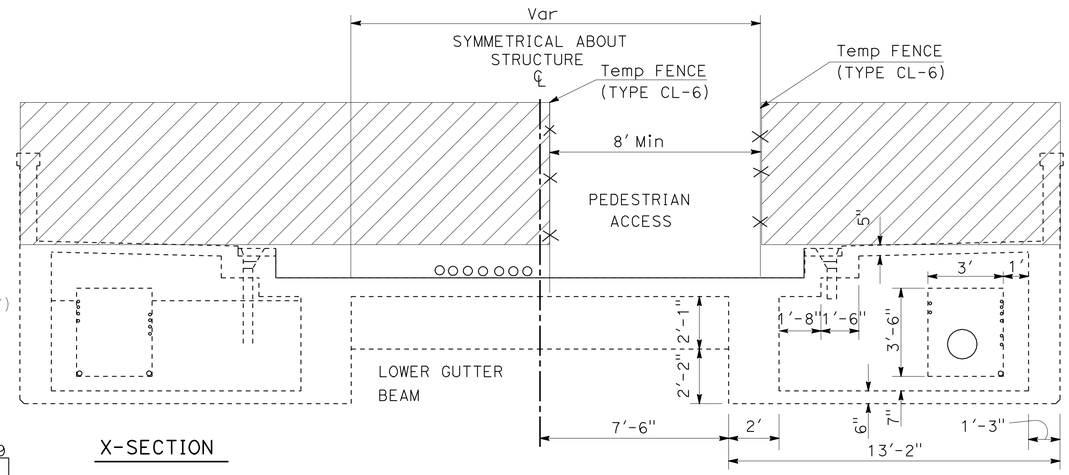

X-SECTION

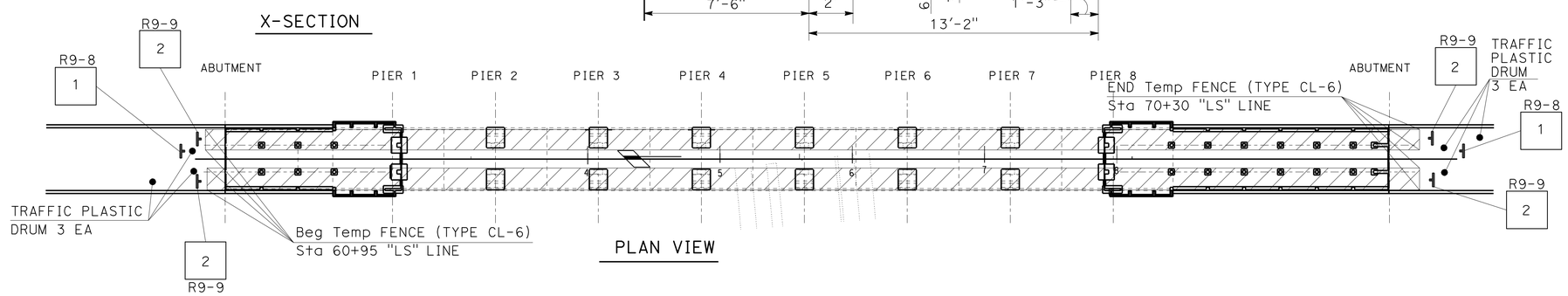

PLAN VIEW

APPROVED FOR STAGE CONSTRUCTION WORK ONLY

STAGE CONSTRUCTION

STAGE 2

NO SCALE

SC-4

REVISED BY	DATE REVISED

RICARDO PADILLA — RAMON JUAREZ — CALCULATED-DESIGNED BY — CHECKED BY

FUNCTIONAL SUPERVISOR: CHRIS M. THOMAS

STATE OF CALIFORNIA - DEPARTMENT OF TRANSPORTATION — DESIGN — Caltrans

LAST REVISION — DATE PLOTTED => 13-MAR-2013 — TIME PLOTTED => 22:22 — 10-24-12

Dist	COUNTY	ROUTE	POST MILES TOTAL PROJECT	SHEET No.	TOTAL SHEETS
11	SD	163	1.4	32	147

REGISTERED CIVIL ENGINEER 03-04-13 DATE

03-04-13
PLANS APPROVAL DATE

REGISTERED PROFESSIONAL ENGINEER RICARDO PADILLA No. C58151 Exp. 6-30-14 CIVIL STATE OF CALIFORNIA

THE STATE OF CALIFORNIA OR ITS OFFICERS OR AGENTS SHALL NOT BE RESPONSIBLE FOR THE ACCURACY OR COMPLETENESS OF SCANNED COPIES OF THIS PLAN SHEET.

2C. STAGE CONSTRUCTION

- PLACE ALL PEDESTRIANS ON Lt SIDE
- Conc TEST PANELS TO BE PROVIDED PRIOR TO THIS STAGE
- DRILL AND BOND, FORM, REINFORCING BARS FOR SOFFIT Rt SIDE
- FORM, DRILL AND BOND STAGE 1 DIAPHRAGM Rt SIDE
- POUR WALL, SOFFIT AND STAGE I DIAPHRAGM Rt SIDE
- FORM SIDEWALK AND BARRIER Rt SIDE
- POUR Conc FOR SIDEWALK AND BARRIER Rt SIDE

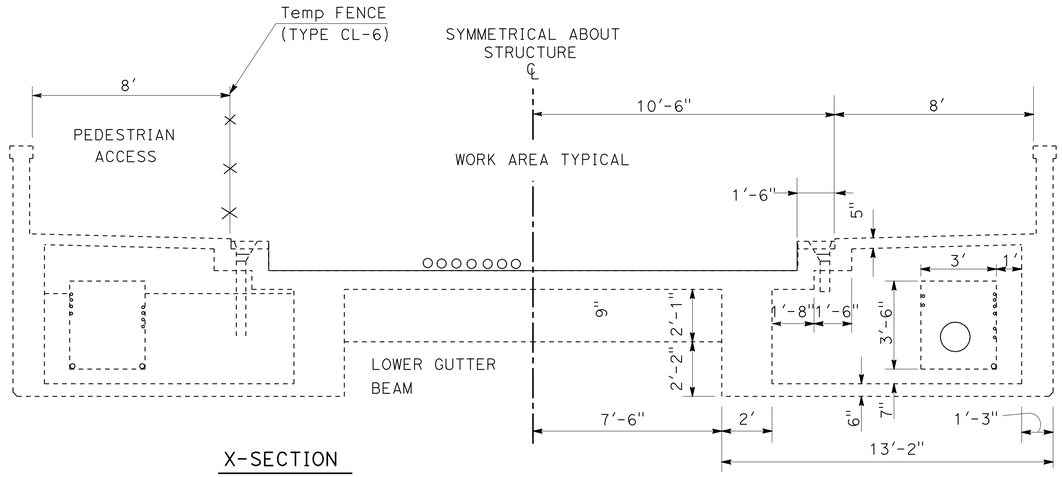

X-SECTION

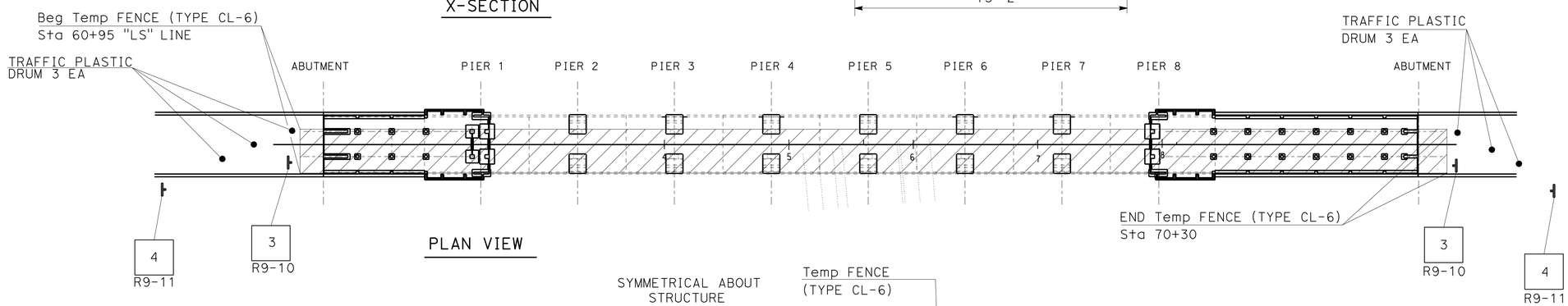

PLAN VIEW

2D. STAGE CONSTRUCTION

- PLACE ALL PEDESTRIANS ON Rt SIDE
- DRILL AND BOND, FORM, REINFORCING BARS FOR SOFFIT Lt SIDE
- FORM, DRILL AND BOND STAGE 1 DIAPHRAGM Lt SIDE
- POUR WALL, SOFFIT AND STAGE I DIAPHRAGM Lt SIDE
- FORM SIDEWALK AND BARRIER Lt SIDE
- POUR Conc FOR SIDEWALK, BARRIER AND DECK JOINTS Lt SIDE

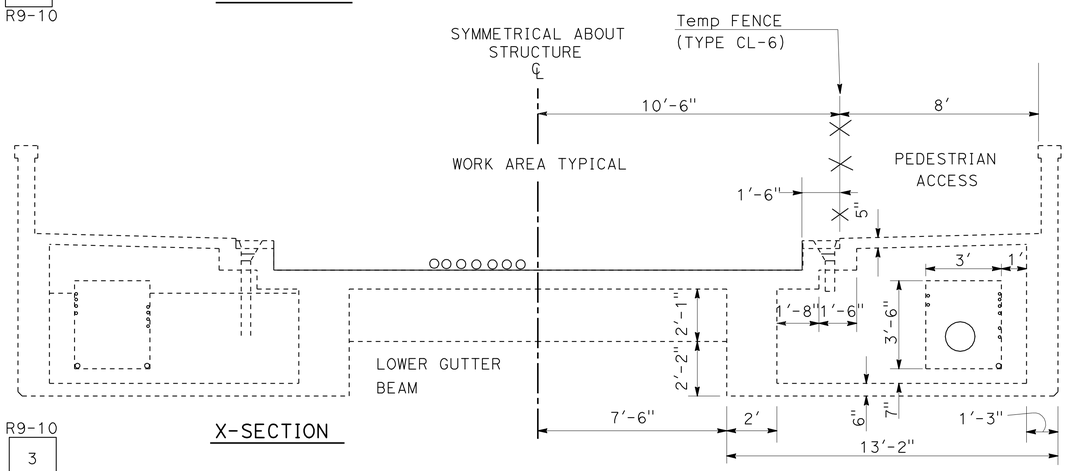

X-SECTION

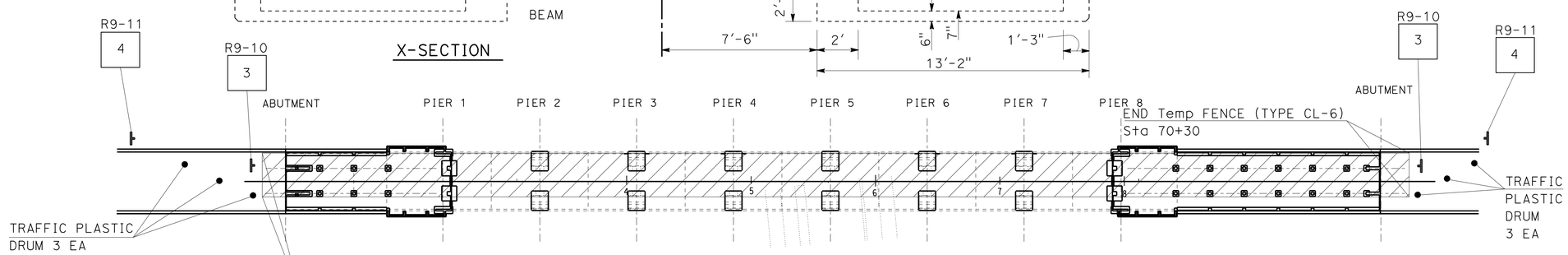

PLAN VIEW

APPROVED FOR STAGE CONSTRUCTION WORK ONLY

STAGE CONSTRUTION

STAGE 2

NO SCALE

SC-5

STATE OF CALIFORNIA - DEPARTMENT OF TRANSPORTATION
Caltrans® DESIGN

FUNCTIONAL SUPERVISOR: CHRIS M. THOMAS
CALCULATED-DESIGNED BY: RAMON JUAREZ
CHECKED BY: RICARDO PADILLA
REVISED BY
DATE REVISED

LAST REVISION 02-12-13
DATE PLOTTED => 13-MAR-2013
TIME PLOTTED => 22:22

Dist	COUNTY	ROUTE	POST MILES TOTAL PROJECT	SHEET No.	TOTAL SHEETS
11	SD	163	1.4	33	147

REGISTERED CIVIL ENGINEER 03-04-13 DATE

03-04-13
PLANS APPROVAL DATE

REGISTERED PROFESSIONAL ENGINEER RICARDO PADILLA No. C58151 Exp. 6-30-14 CIVIL STATE OF CALIFORNIA

THE STATE OF CALIFORNIA OR ITS OFFICERS OR AGENTS SHALL NOT BE RESPONSIBLE FOR THE ACCURACY OR COMPLETENESS OF SCANNED COPIES OF THIS PLAN SHEET.

2E. STAGE CONSTRUCTION

- PLACE PEDESTRIANS IN MIDDLE OF BRIDGE (PROVIDE LEVEL SURFACE)
- PLACE STRANDS AND JACKS FOR PRESTRESSING,
- STRESS BRIDGE, CLOSED TO PEDESTRIANS (TOTAL 4 NIGHTS)
- GROUT PRESTRESSING DUCTS IN DECK
- FORM, DRILL AND BOND STAGE 2 DIAPHRAGM
- STAGE 2 DIAPHRAGM CLOSURE POUR AT EXPANSION JOINTS
- CURE SIDEWALK

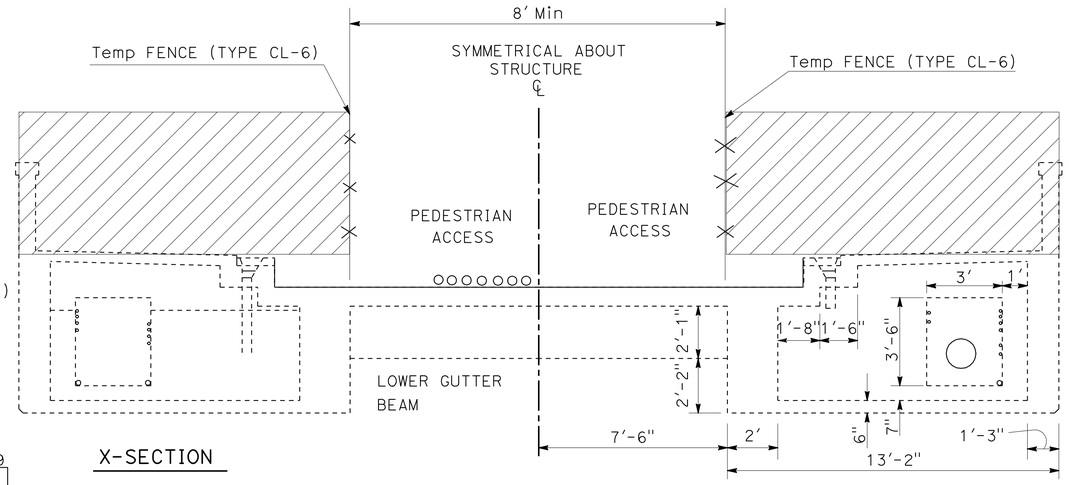

X-SECTION

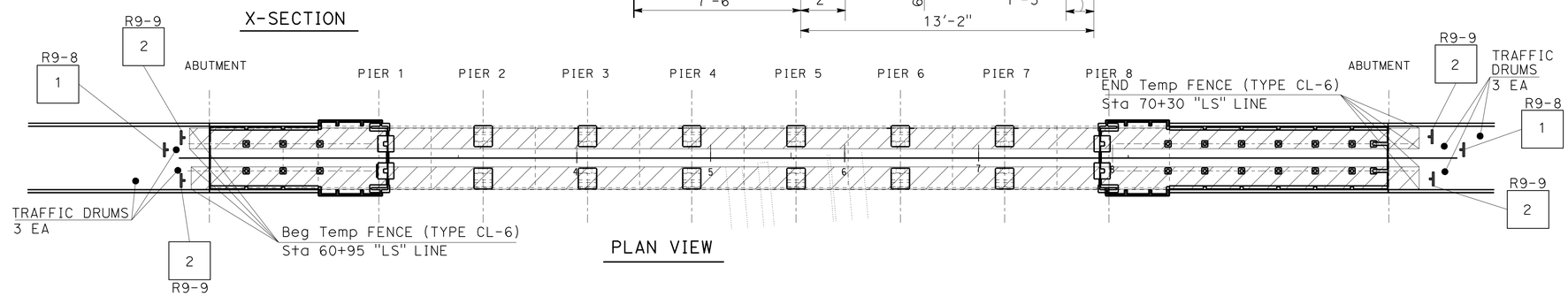

PLAN VIEW

2F. STAGE CONSTRUCTION

- PROVIDE 6 FT Min SIDEWALKS ON BOTH SIDES
- RESET Temp CHAIN LINK FENCE
- PREPARE Conc BRIDGE DECK, PROTECT UTILITIES
- REPAIR Conc DECK
- METHACRYLATE BRIDGE DECK
- INSTALL REINFORCING BARS FOR BRIDGE DECK
- POUR Conc DECK AND CURE
- OPEN BRIDGE TO VEHICULAR TRAFFIC

3. STAGE CONSTRUCTION (NOT SHOWN)

- RECONSTRUCT STEEL BACKED TIMBER GUARD RAIL, SB AND NB DIRECTION
- REMOVE Temp PAVING, REMOVE Temp RAILING (TYPE K), SB AND NB DIRECTION
- Conc BARRIER AND MBGR

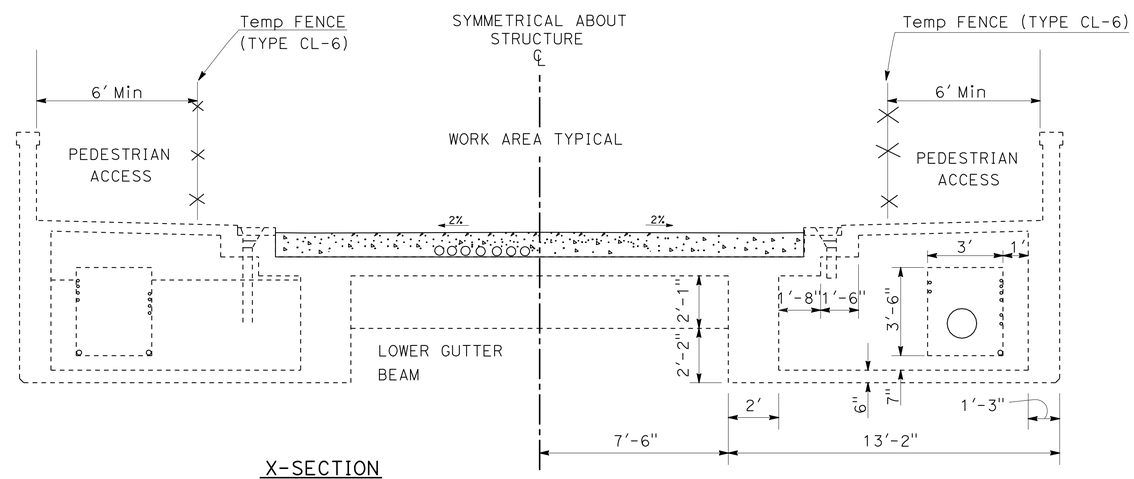

X-SECTION

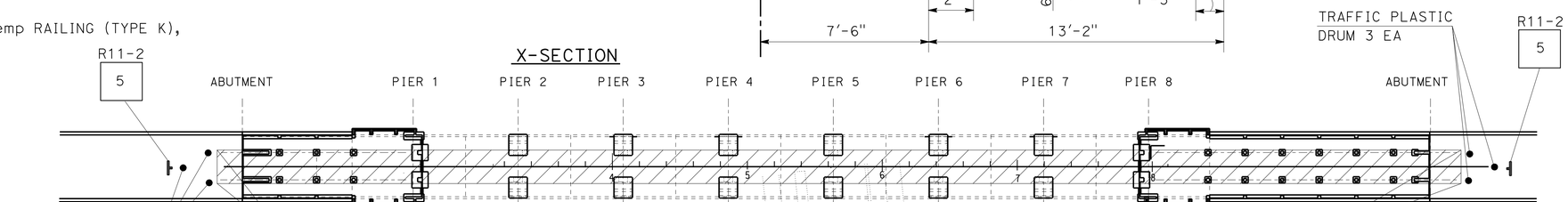

PLAN VIEW

APPROVED FOR STAGE CONSTRUCTION WORK ONLY

STAGE CONSTRUTION

STAGE 2

NO SCALE

SC-6

STATE OF CALIFORNIA - DEPARTMENT OF TRANSPORTATION
Caltrans® DESIGN

FUNCTIONAL SUPERVISOR: CHRIS M. THOMAS
CALCULATED-DESIGNED BY: RICARDO PADILLA
CHECKED BY: RAMON JUAREZ
REVISED BY
DATE REVISED

LAST REVISION 02-12-13
DATE PLOTTED => 13-MAR-2013
TIME PLOTTED => 22:23

Dist	COUNTY	ROUTE	POST MILES TOTAL PROJECT	SHEET No.	TOTAL SHEETS
11	SD	163	1.4	34	147

REGISTERED CIVIL ENGINEER DATE 03-04-13

PLANS APPROVAL DATE 03-04-13

REGISTERED PROFESSIONAL ENGINEER RICARDO PADILLA No. C58151 Exp. 6-30-14 CIVIL STATE OF CALIFORNIA

THE STATE OF CALIFORNIA OR ITS OFFICERS OR AGENTS SHALL NOT BE RESPONSIBLE FOR THE ACCURACY OR COMPLETENESS OF SCANNED COPIES OF THIS PLAN SHEET.

TEMPORARY PAVEMENT DELINEATION (180 DAYS OR LESS)

SHEET	STAGE	DIRECTION	STATION TO STATION	Temp TRAFFIC STRIPE (PAINT)		Temp PAVEMENT MARKER
				Det 27B LF	Det 25 LF	Det 25 EA
SC- 1	1	SB	Sta 26+60 TO Sta 14+70 "T-4"	1190	-	-
SC- 2	1	SB	Sta 90+70 TO Sta 84+20 "SD-163"	650	-	-
SC- 2	1	SB	Sta 90+70 TO Sta 86+60 "SD-163"	-	410	11
SC- 2	1	NB	Sta 85+80 TO Sta 89+10 "SD-163"	330	-	-
SC- 2	1	NB	Sta 85+80 TO Sta 89+10 "SD-163"	-	330	9
			SUBTOTAL	2170	740	20
			TOTAL	2910		20

CONSTRUCTION AREA SIGNS

SIGN No.	TYPE	PANEL SIZE (INCHES)	No. OF POST (INCHES)	No. OF SIGNS
1	R9-8	36 x 18	PORTABLE	2
2	R9-9	30 x 18	PORTABLE	4
3	R9-10	48 x 24	PORTABLE	8
4	R9-11	48 x 36	PORTABLE	8
5	R11-2	48 x 30	PORTABLE	4
6	C44(CA)	36 x 36	1-4"x4"	2
			TOTAL	28*

* SEE CS AND TH SHEETS FOR ADDITIONAL CONSTRUCTION AREA SIGNS

TEMPORARY RAILING (TYPE K)

STAGE	LF
1	2800
2A	-
2B	-
2C	-
2D	-
2E	-
2F	-
2G	-
TOTAL	2800

TEMPORARY ALTERNATIVE CRASH CUSHION SYSTEM

STAGE	TYPE	EACH
1	Alt	4
2A	-	-
2B	-	-
2C	-	-
2D	-	-
2E	-	-
2F	-	-
2G	-	-
	TOTAL	4

TRAFFIC PLASTIC DRUM

STAGE	EACH
1	6
2A THRU 2G	6
3	-
TOTAL	12

TYPE III BARRICADE

STAGE	EACH
1	-
2A THRU 2G	4
3	-
TOTAL	4

TEMPORARY FENCE (TYPE CL-6)

STAGE	LOCATION	LF
1	-	-
2A THRU 2G	Sta 60+95 TO Sta 70+30 "LS" LINE	1900
3	-	-
	TOTAL	1900

REMOVE PAVEMENT MARKERS (N)

ROUTE	DESCRIPTION	DETAIL	FROM STATION	TO STATION	NON-REFLECTIVE (EA)	RETROREFLECTIVE (EA)
					TYPE A	TYPE C, D, G
163	SB-RAMP "T-4" LINE	13	14+70	27+62	103	25
				TOTAL	-	-

(N) - NOT A SEPARATE PAY ITEM, FOR INFORMATION ONLY.

Temp TRANSITION STRUCTURAL SECTION SUMMARY

STAGE	SHEET	STATION	CL-2 AB	HMA (TYPE A)	TACK COAT	ROADWAY EXCAVATION
			CY	Ton	Ton	CY
1	SC-1	82+36 TO 84+20 "SD-163"	18.0	35.2	0.013	35.9
1	SC-2	84+20 TO 85+16 "SD-163"	18.3	35.9	0.014	36.7
3	SC-6	82+36 TO 84+20 "SD-163"	17.9			17.9
3	SC-6	84+20 TO 85+16 "SD-163"	18.4			18.4
		TOTAL	72.6	71.1*	0.027*	108.9

* = SEE Q-1 SHEET FOR ADDITIONAL QUANTITIES.

REMOVE PAINTED TRAFFIC STRIPE

ROUTE	DESCRIPTION	FROM STATION	TO STATION	DETAIL	PAINT
					LF
163	SB-RAMP "T-4" LINE	14+70.0	27+62.0	11/13	347
				TOTAL	347

STAGE CONSTRUCTION QUANTITIES

NO SCALE

SCQ-1

STATE OF CALIFORNIA - DEPARTMENT OF TRANSPORTATION

Caltrans DESIGN

FUNCTIONAL SUPERVISOR: CHRIS M THOMAS

CALCULATED-DESIGNED BY: RICARDO PADILLA

CHECKED BY: RAMON JUAREZ

REVISED BY / DATE REVISED

LAST REVISION 02-28-13

DATE PLOTTED => 13-MAR-2013

TIME PLOTTED => 22:24

Dist	COUNTY	ROUTE	POST MILES TOTAL PROJECT	SHEET No.	TOTAL SHEETS
11	SD	163	1.4	35	147

REGISTERED CIVIL ENGINEER 03-04-13 DATE

03-04-13
PLANS APPROVAL DATE

REGISTERED PROFESSIONAL ENGINEER RICARDO PADILLA No. C58151 Exp. 06-30-14 CIVIL STATE OF CALIFORNIA

THE STATE OF CALIFORNIA OR ITS OFFICERS OR AGENTS SHALL NOT BE RESPONSIBLE FOR THE ACCURACY OR COMPLETENESS OF SCANNED COPIES OF THIS PLAN SHEET.

NOTES:

1. EXACT LOCATION OF CONSTRUCTION AREA SIGNS WILL BE DETERMINED BY THE ENGINEER.
2. FEDERAL MANUAL ON UNIFORM TRAFFIC CONTROL DEVICES (MUTCD) SIGN CODES ARE SHOWN UNLESS DESIGNATED BY (CA), INDICATING CALIFORNIA MUTCD.
3. ROTATE ARROW ON SC9 (CA) PANEL TO REFLECT DIRECTION OF DETOUR.
4. SEE CONSTRUCTION AREA SIGN PLAN FOR ADDITIONAL CONSTRUCTION AREA SIGNS.
5. EXISTING UTILITIES ARE NOT SHOWN ON THESE PLAN SHEETS. THE CONTRACTOR SHALL VERIFY LOCATIONS OF EXISTING UTILITIES AND ADJUST THE FIELD LOCATION OF THE SIGN POSTS IN CONSULTATION WITH THE ENGINEER.
6. STRAP AND SADDLE SIGNS TO EXSITING POLES ON TH-8.

LEGEND:

[XX] = CONSTRUCTION AREA SIGNS

SPCL = SPECIAL CONSTRUCTION AREA SIGN

⇨ = DETOUR DIRECTION OF TRAVEL

CAPS = UPPER CASE TEXT (CAPITAL LETTERING)

SSBM = STRAP & SADDLE BRACKET METHOD

CONSTRUCTION AREA SIGNS

SIGN No.	TYPE	PANEL SIZE (In)x(In)	No. OF POSTS AND SIZE	No. OF SIGNS
S	SC3 (CA)	18 X 48	SSBM	41
1	SC9 (CA)	36 X 36	PORTABLE	89
2	M4-8a	24 X 18	PORTABLE	7
2	M4-8a	24 X 18	SSBM	2
3	SPCL-1	72 X 72	PORTABLE	2
4	SPCL-2	72 X 72	PORTABLE	2
5	SPCL-3	72 X 72	PORTABLE	1
6	SPCL-4	72 X 72	PORTABLE	2
7	SPCL-5	72 X 72	PORTABLE	1
8	SPCL-6	72 X 72	PORTABLE	1
9	SPCL-7	72 X 72	PORTABLE	1
10	SPCL-8	72 X 72	PORTABLE	1
11	SPCL-9	72 X 72	PORTABLE	1
12	SPCL-10	72 X 72	PORTABLE	1
13	SPCL-11	72 X 72	PORTABLE	1
14	SPCL-12	72 X 72	PORTABLE	1
15	SPCL-13	72 X 72	PORTABLE	2
16	SPCL-14	72 X 72	PORTABLE	1
17	SPCL-15	72 X 72	PORTABLE	1
18	SPCL-16	72 X 72	PORTABLE	1
19	SPCL-17	72 X 72	PORTABLE	1
20	SPCL-18	72 X 72	PORTABLE	1
21	SPCL-19	72 X 72	PORTABLE	1
22	SPCL-20	72 X 72	SSBM	5
C	CMS		PORTABLE	2
MR	M4-10R	48 X 18	PORTABLE	7
ML	M4-10L	48 X 18	PORTABLE	5
			TOTAL	181

SIGN #3

SPCL-1 8" CAPS

163 NORTH
USE
8 EAST

72" 72"

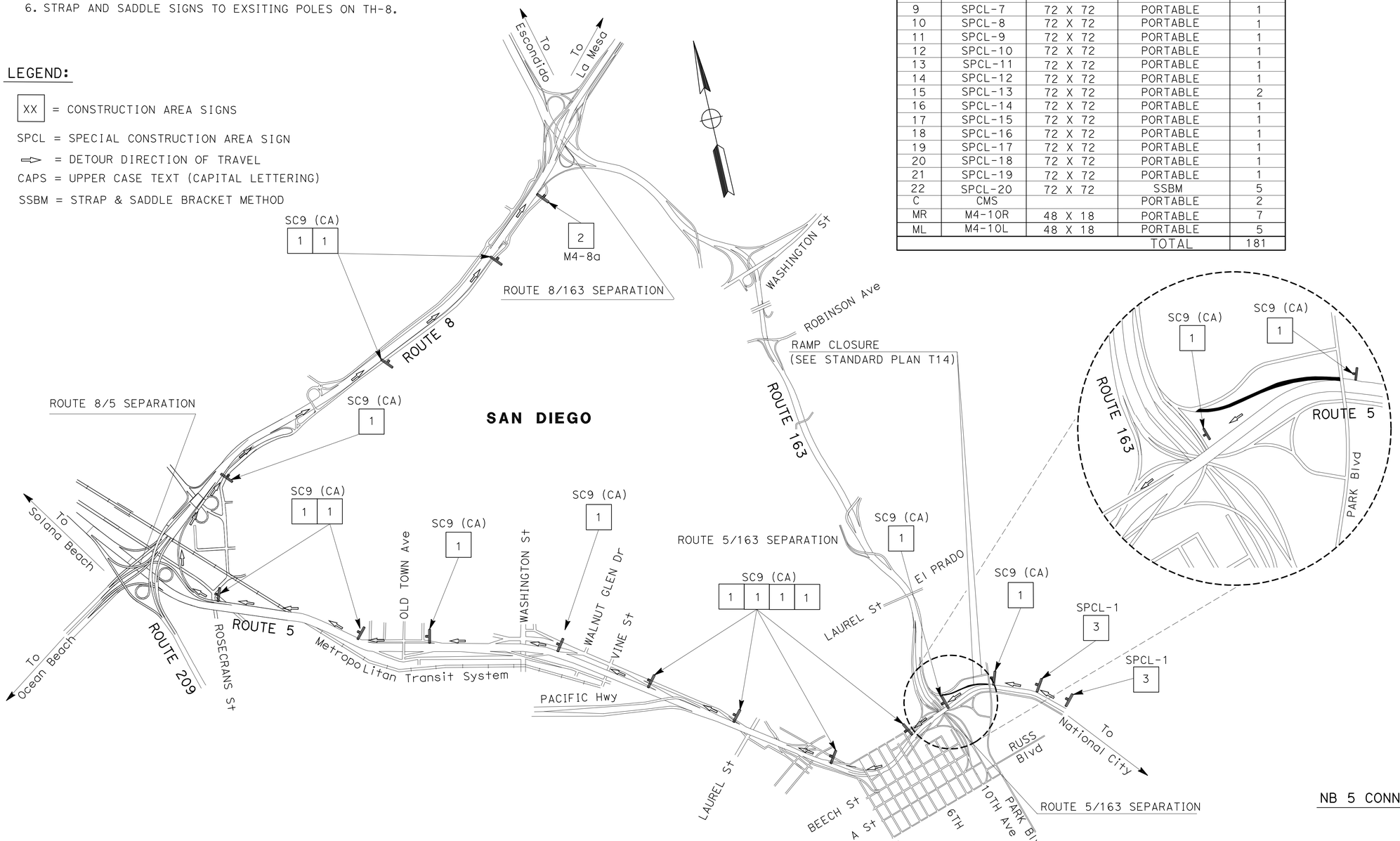

NB 5 CONNECTOR TO NB 163 DETOUR

TRAFFIC HANDLING PLAN

NO SCALE

TH-1

APPROVED FOR TRAFFIC HANDLING WORK ONLY

STATE OF CALIFORNIA - DEPARTMENT OF TRANSPORTATION
Caltrans® TRAFFIC DESIGN
FUNCTIONAL SUPERVISOR: CHRIS M THOMAS
CALCULATED-DESIGNED BY: RICARDO PADILLA
CHECKED BY: SHAHIN ADIBI
REVISED BY
DATE REVISED

LAST REVISION 02-12-13
DATE PLOTTED => 13-MAR-2013
TIME PLOTTED => 22:24

Dist	COUNTY	ROUTE	POST MILES TOTAL PROJECT	SHEET No.	TOTAL SHEETS
11	SD	163	1.4	36	147

REGISTERED CIVIL ENGINEER 03-04-13 DATE

03-04-13
PLANS APPROVAL DATE

REGISTERED PROFESSIONAL ENGINEER RICARDO PADILLA No. C58151 Exp. 06-30-14 CIVIL STATE OF CALIFORNIA

THE STATE OF CALIFORNIA OR ITS OFFICERS OR AGENTS SHALL NOT BE RESPONSIBLE FOR THE ACCURACY OR COMPLETENESS OF SCANNED COPIES OF THIS PLAN SHEET.

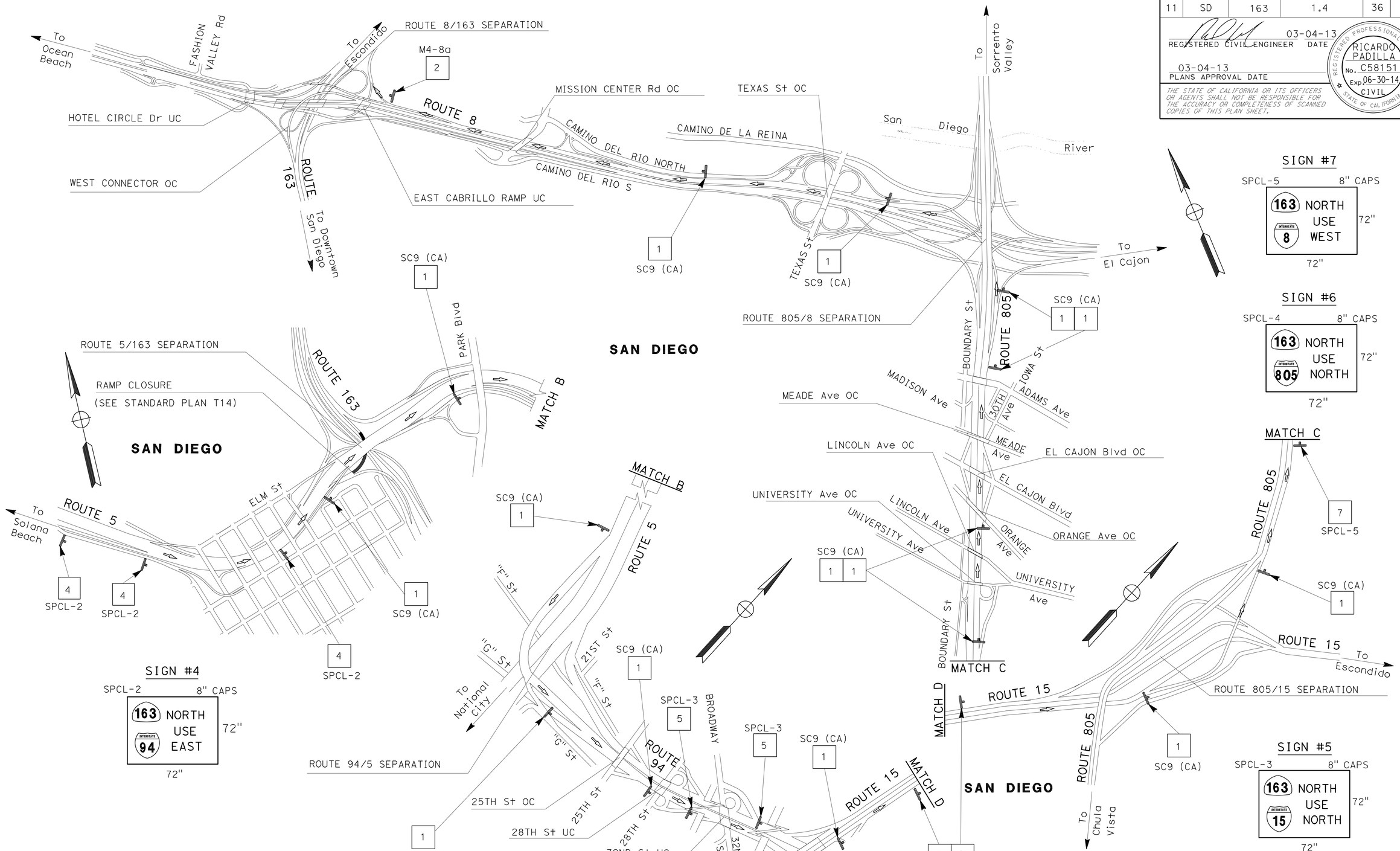

APPROVED FOR TRAFFIC HANDLING WORK ONLY

TRAFFIC HANDLING PLAN

NO SCALE

TH-2

STATE OF CALIFORNIA - DEPARTMENT OF TRANSPORTATION
Caltrans® **TRAFFIC DESIGN**

FUNCTIONAL SUPERVISOR: CHRIS M THOMAS
CALCULATED-DESIGNED BY: RICARDO PADILLA
CHECKED BY: SHAHIN ADIBI
REVISED BY
DATE REVISED

LAST REVISION: DATE PLOTTED => 13-MAR-2013 TIME PLOTTED => 22:25
07-13-12

Dist	COUNTY	ROUTE	POST MILES TOTAL PROJECT	SHEET No.	TOTAL SHEETS
11	SD	163	1.4	37	147

REGISTERED CIVIL ENGINEER 03-04-13 DATE

03-04-13
PLANS APPROVAL DATE

REGISTERED PROFESSIONAL ENGINEER RICARDO PADILLA No. C58151 Exp. 06-30-14 CIVIL STATE OF CALIFORNIA

THE STATE OF CALIFORNIA OR ITS OFFICERS OR AGENTS SHALL NOT BE RESPONSIBLE FOR THE ACCURACY OR COMPLETENESS OF SCANNED COPIES OF THIS PLAN SHEET.

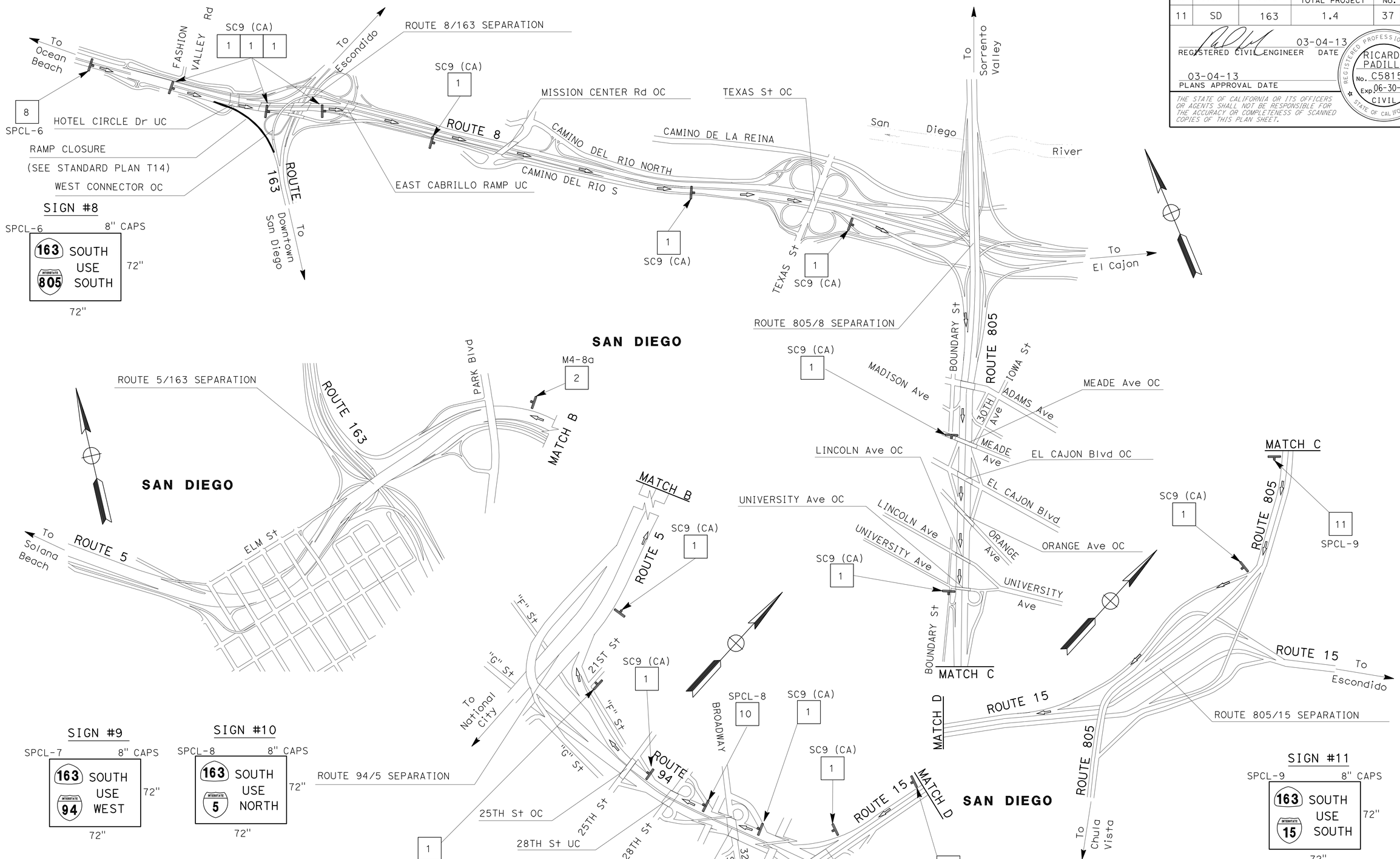

EB 8 CONNECTOR TO SB 163

APPROVED FOR TRAFFIC HANDLING WORK ONLY

TRAFFIC HANDLING PLAN

NO SCALE

TH-3

STATE OF CALIFORNIA - DEPARTMENT OF TRANSPORTATION
Caltrans® TRAFFIC DESIGN

FUNCTIONAL SUPERVISOR: CHRIS M THOMAS
CALCULATED-DESIGNED BY: RICARDO PADILLA
CHECKED BY: SHAHIN ADIBI
REVISED BY / DATE REVISED

LAST REVISION: DATE PLOTTED => 13-MAR-2013
07-13-12 TIME PLOTTED => 22:25

Dist	COUNTY	ROUTE	POST MILES TOTAL PROJECT	SHEET No.	TOTAL SHEETS
11	SD	163	1.4	38	147

REGISTERED CIVIL ENGINEER 03-04-13 DATE

03-04-13
PLANS APPROVAL DATE

REGISTERED PROFESSIONAL ENGINEER RICARDO PADILLA No. C58151 Exp. 06-30-14 CIVIL STATE OF CALIFORNIA

THE STATE OF CALIFORNIA OR ITS OFFICERS OR AGENTS SHALL NOT BE RESPONSIBLE FOR THE ACCURACY OR COMPLETENESS OF SCANNED COPIES OF THIS PLAN SHEET.

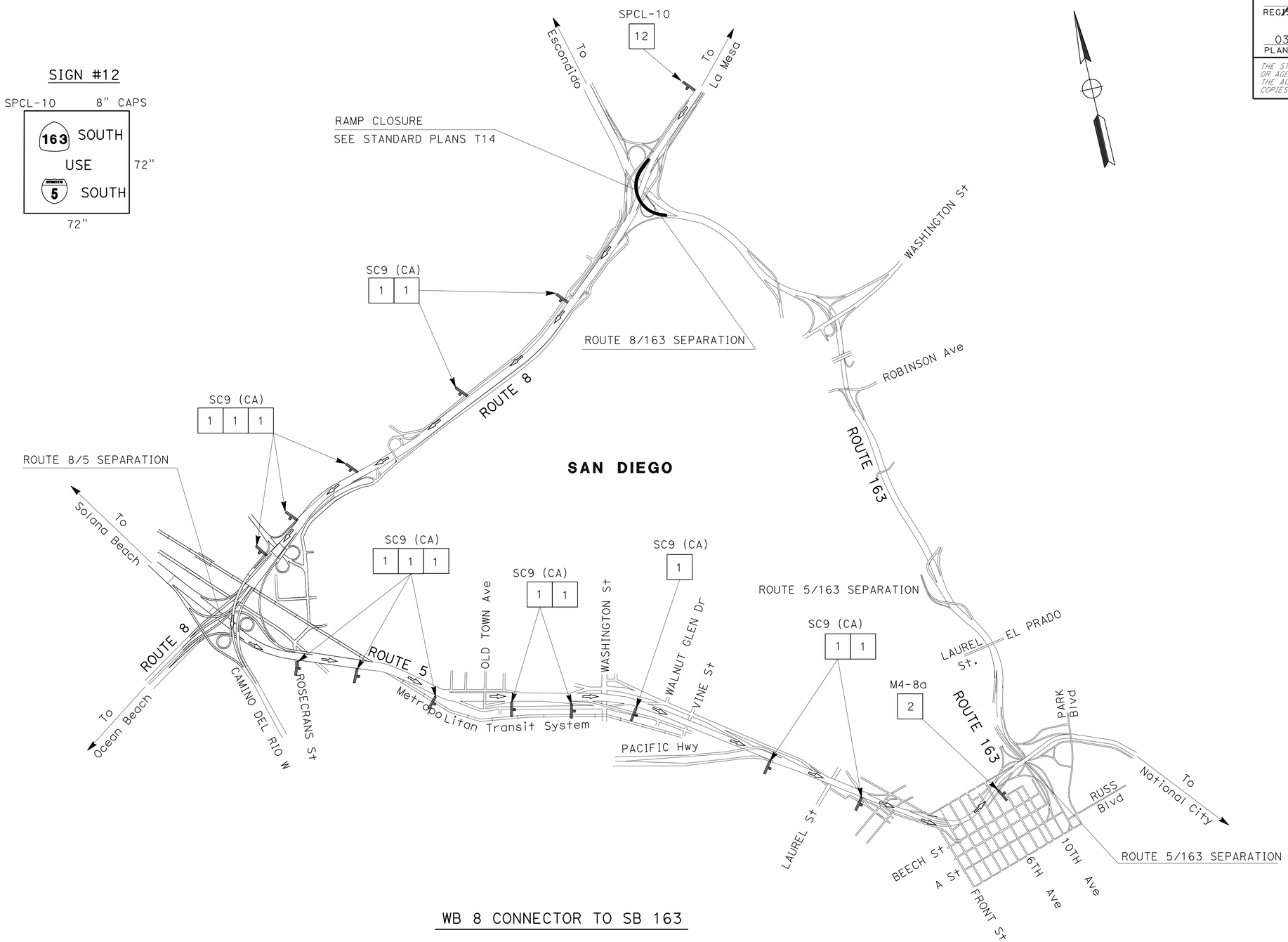

WB 8 CONNECTOR TO SB 163

TRAFFIC HANDLING PLAN

NO SCALE

TH-4

APPROVED FOR TRAFFIC HANDLING WORK ONLY

STATE OF CALIFORNIA - DEPARTMENT OF TRANSPORTATION
Caltrans® TRAFFIC DESIGN

FUNCTIONAL SUPERVISOR: CHRIS M THOMAS
CALCULATED-DESIGNED BY: RICARDO PADILLA
CHECKED BY: SHAHIN ADIBI
REVISED BY
DATE REVISED

LAST REVISION 11-14-12
DATE PLOTTED => 13-MAR-2013
TIME PLOTTED => 22:26

Dist	COUNTY	ROUTE	POST MILES TOTAL PROJECT	SHEET No.	TOTAL SHEETS
11	SD	163	1.4	39	147

REGISTERED CIVIL ENGINEER DATE 03-04-13

03-04-13
PLANS APPROVAL DATE

REGISTERED PROFESSIONAL ENGINEER RICARDO PADILLA No. C58151 Exp. 06-30-14 CIVIL STATE OF CALIFORNIA

THE STATE OF CALIFORNIA OR ITS OFFICERS OR AGENTS SHALL NOT BE RESPONSIBLE FOR THE ACCURACY OR COMPLETENESS OF SCANNED COPIES OF THIS PLAN SHEET.

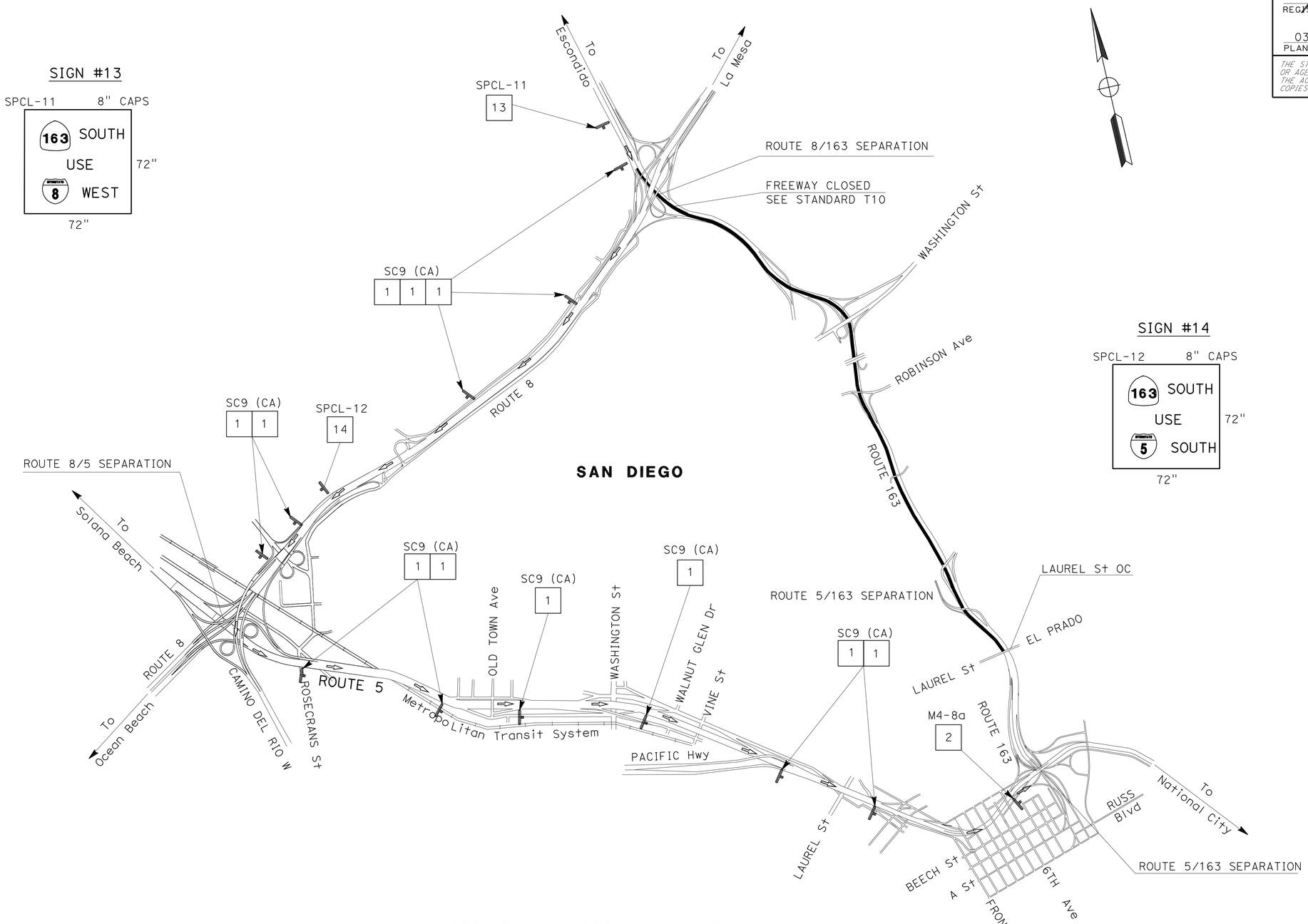

SB 163 DETOUR FULL FREEWAY CLOSURE

APPROVED FOR TRAFFIC HANDLING WORK ONLY

TRAFFIC HANDLING PLAN

NO SCALE

TH-5

STATE OF CALIFORNIA - DEPARTMENT OF TRANSPORTATION
Caltrans
TRAFFIC DESIGN

FUNCTIONAL SUPERVISOR: CHRIS M THOMAS
CALCULATED-DESIGNED BY: RICARDO PADILLA
CHECKED BY: SHAHIN ADIBI
REVISED BY
DATE REVISED

LAST REVISION 10-31-12
DATE PLOTTED => 13-MAR-2013
TIME PLOTTED => 22:26

Dist	COUNTY	ROUTE	POST MILES TOTAL PROJECT	SHEET No.	TOTAL SHEETS
11	SD	163	1.4	40	147

REGISTERED CIVIL ENGINEER 03-04-13 DATE

03-04-13
PLANS APPROVAL DATE

REGISTERED PROFESSIONAL ENGINEER RICARDO PADILLA No. C58151 Exp. 06-30-14 CIVIL STATE OF CALIFORNIA

THE STATE OF CALIFORNIA OR ITS OFFICERS OR AGENTS SHALL NOT BE RESPONSIBLE FOR THE ACCURACY OR COMPLETENESS OF SCANNED COPIES OF THIS PLAN SHEET.

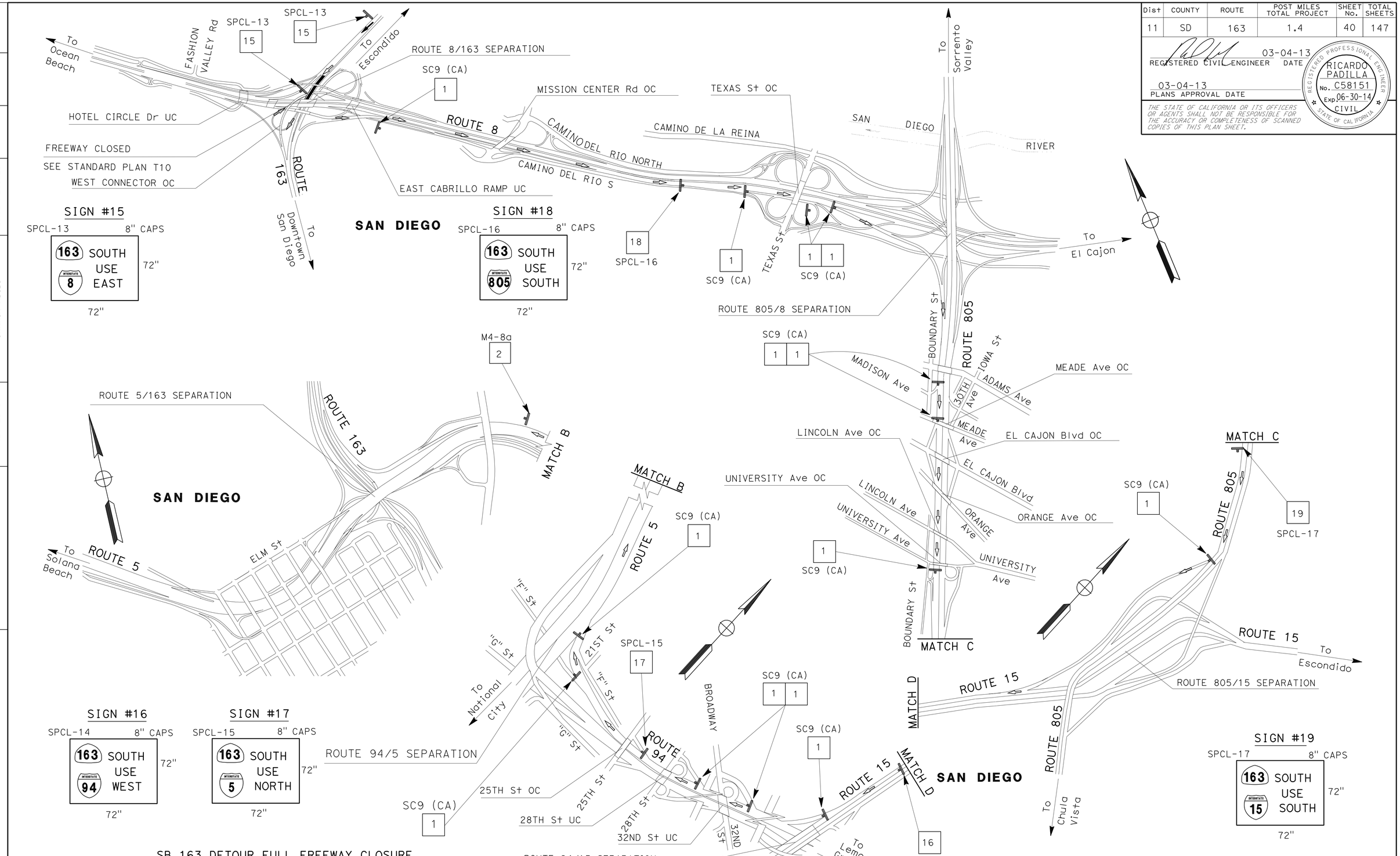

SB 163 DETOUR FULL FREEWAY CLOSURE

APPROVED FOR TRAFFIC HANDLING WORK ONLY

TRAFFIC HANDLING PLAN

NO SCALE

TH-6

STATE OF CALIFORNIA - DEPARTMENT OF TRANSPORTATION
Caltrans® TRAFFIC DESIGN

FUNCTIONAL SUPERVISOR: CHRIS M THOMAS
CALCULATED-DESIGNED BY: RICARDO PADILLA
CHECKED BY: SHAHIN ADIBI
REVISED BY / DATE REVISED

LAST REVISION 07-13-12
DATE PLOTTED => 13-MAR-2013
TIME PLOTTED => 22:26

BORDER LAST REVISED 7/2/2010
USERNAME => s127284
DGN FILE => 1100000225md006.dgn
RELATIVE BORDER SCALE IS IN INCHES 0 1 2 3
UNIT 2763
PROJECT NUMBER & PHASE 11000002251

Dist	COUNTY	ROUTE	POST MILES TOTAL PROJECT	SHEET No.	TOTAL SHEETS
11	SD	163	1.4	41	147

REGISTERED CIVIL ENGINEER 03-04-13 DATE

03-04-13
PLANS APPROVAL DATE

REGISTERED PROFESSIONAL ENGINEER RICARDO PADILLA No. C58151 Exp. 06-30-14 CIVIL STATE OF CALIFORNIA

THE STATE OF CALIFORNIA OR ITS OFFICERS OR AGENTS SHALL NOT BE RESPONSIBLE FOR THE ACCURACY OR COMPLETENESS OF SCANNED COPIES OF THIS PLAN SHEET.

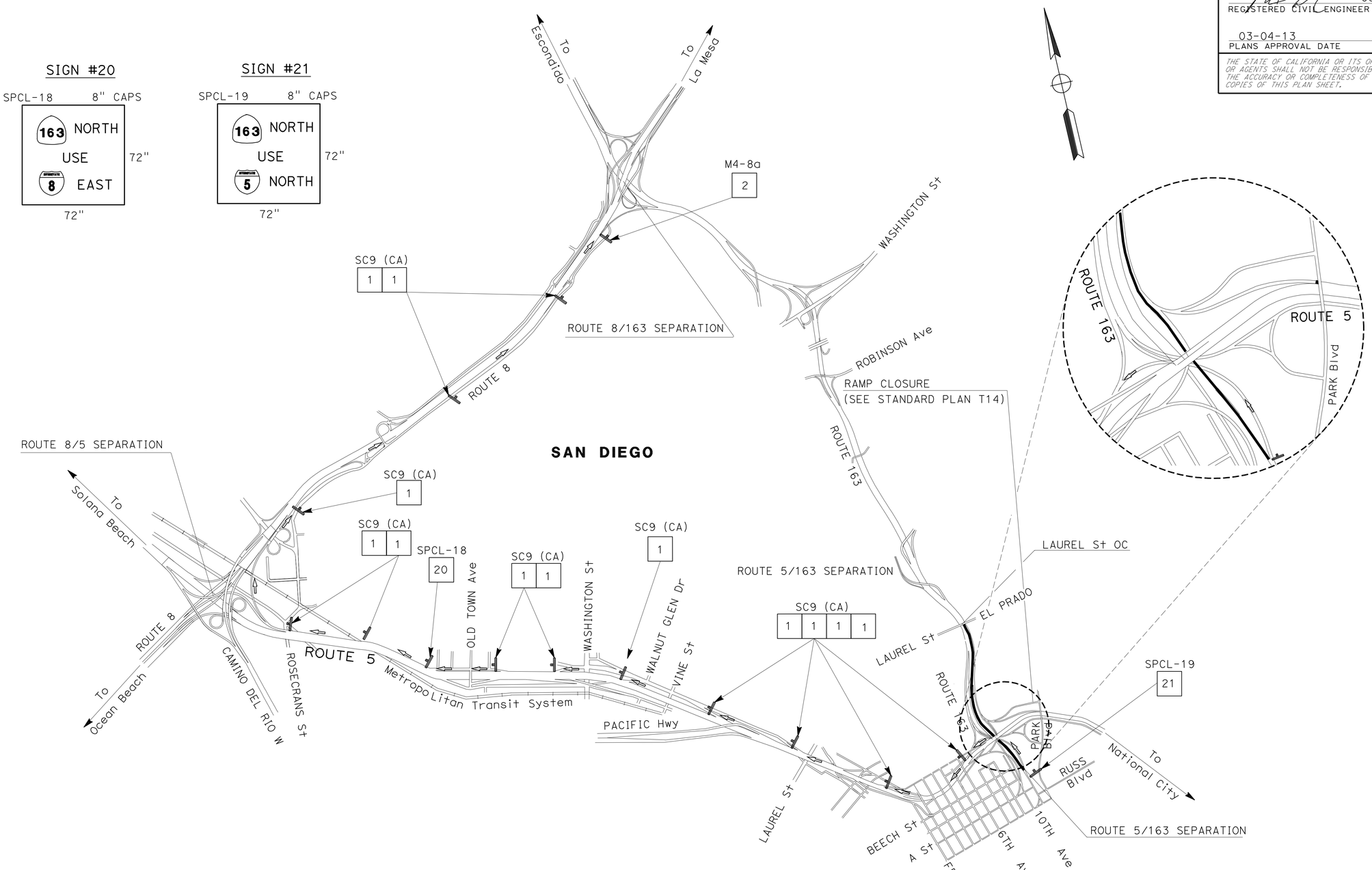

NB 163 DETOUR FULL FREEWAY CLOSURE

APPROVED FOR TRAFFIC HANDLING WORK ONLY

TRAFFIC HANDLING PLAN

NO SCALE

TH-7

STATE OF CALIFORNIA - DEPARTMENT OF TRANSPORTATION
Caltrans
TRAFFIC DESIGN

FUNCTIONAL SUPERVISOR: CHRIS M THOMAS
CALCULATED-DESIGNED BY: RICARDO PADILLA
CHECKED BY: RAMON JUAREZ
REVISED BY
DATE REVISED

LAST REVISION 11-14-12
DATE PLOTTED => 13-MAR-2013
TIME PLOTTED => 22:27

Dist	COUNTY	ROUTE	POST MILES TOTAL PROJECT	SHEET No.	TOTAL SHEETS
11	SD	163	1.4	42	147

REGISTERED CIVIL ENGINEER 03-04-13 DATE

03-04-13
PLANS APPROVAL DATE

REGISTERED PROFESSIONAL ENGINEER RICARDO PADILLA No. C58151 Exp. 06-30-14 CIVIL STATE OF CALIFORNIA

THE STATE OF CALIFORNIA OR ITS OFFICERS OR AGENTS SHALL NOT BE RESPONSIBLE FOR THE ACCURACY OR COMPLETENESS OF SCANNED COPIES OF THIS PLAN SHEET.

NOTE:

THIS PLAN TO BE USED WHEN THERE ARE NO GAMES OR EVENTS AT PETCO PARK, MAJOR EVENTS AT THE CONVENTION CENTER AND/OR MAJOR EVENTS IN DOWNTOWN SAN DIEGO.

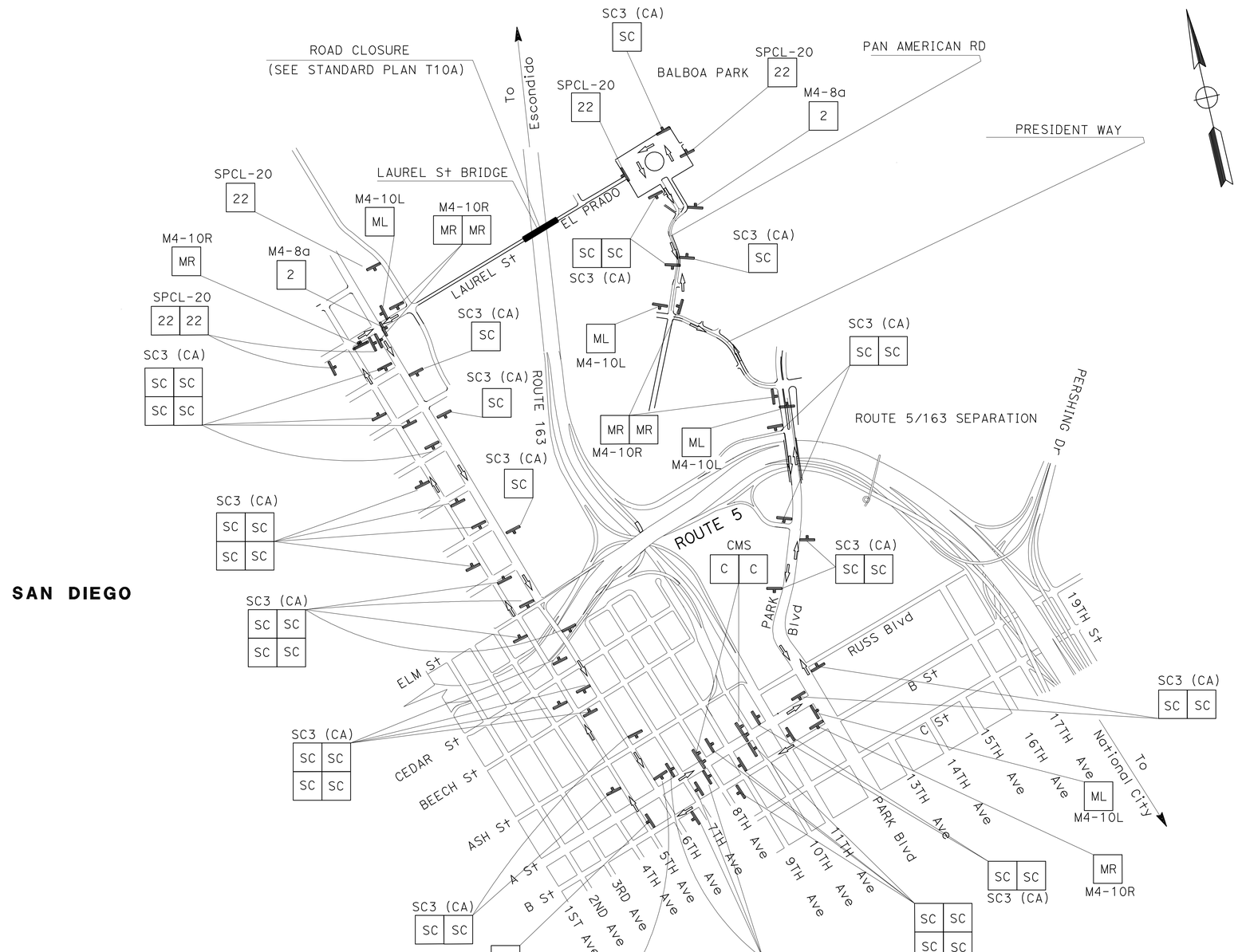

SAN DIEGO

SIGN #22

SPCL-20 8" CAPS

LAUREL St
BRIDGE
CLOSED
USE DETOUR

72" 72"

LAUREL STREET BRIDGE (FULL CLOSURE)

TRAFFIC HANDLING PLAN

APPROVED FOR TRAFFIC HANDLING WORK ONLY

NO SCALE

TH-8

STATE OF CALIFORNIA - DEPARTMENT OF TRANSPORTATION
Caltrans
TRAFFIC DESIGN

FUNCTIONAL SUPERVISOR: CHRIS M THOMAS
CALCULATED-DESIGNED BY: PARVIS NAHAVANDIAN
CHECKED BY: SHAHIN T ADIBI
REVISED BY
DATE REVISED

LAST REVISION 10-23-12
DATE PLOTTED => 13-MAR-2013
TIME PLOTTED => 22:27

Dist	COUNTY	ROUTE	POST MILES TOTAL PROJECT	SHEET No.	TOTAL SHEETS
11	SD	163	1.4	43	147

REGISTERED CIVIL ENGINEER 03-04-13 DATE

03-04-13
PLANS APPROVAL DATE

REGISTERED PROFESSIONAL ENGINEER
SHAHIN ADIBI
No. 54839
Exp. 06-30-14
CIVIL
STATE OF CALIFORNIA

THE STATE OF CALIFORNIA OR ITS OFFICERS OR AGENTS SHALL NOT BE RESPONSIBLE FOR THE ACCURACY OR COMPLETENESS OF SCANNED COPIES OF THIS PLAN SHEET.

DETAIL 11/13 COMBINATION

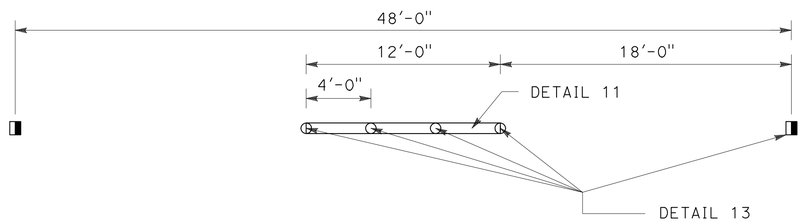

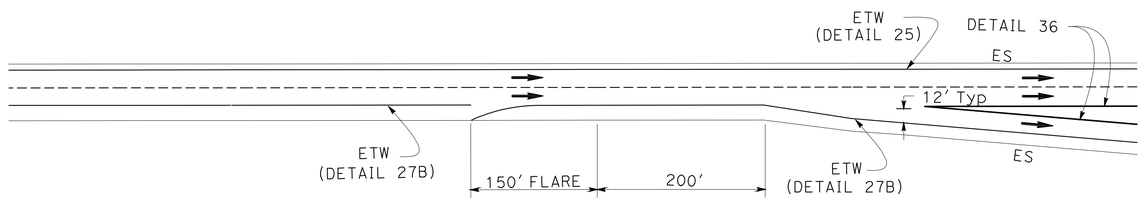

RIGHT EDGELINE FLARE DETAIL

[FOR USE ON ALL EXIT RAMPS EXCEPT WHERE LANE(S) TRAP OFF]

PAVEMENT DELINEATION DETAILS

NO SCALE

PDD-1

STATE OF CALIFORNIA - DEPARTMENT OF TRANSPORTATION
Caltrans® **TRAFFIC DESIGN**

FUNCTIONAL SUPERVISOR: CHRIS M THOMAS
CALCULATED-DESIGNED BY: RICARDO PADILLA
CHECKED BY: SHAHIN ADIBI
REVISED BY
DATE REVISED

LAST REVISION 10-29-12
DATE PLOTTED => 13-MAR-2013
TIME PLOTTED => 22:29

Dist	COUNTY	ROUTE	POST MILES TOTAL PROJECT	SHEET No.	TOTAL SHEETS
11	SD	163	1.4	44	147

REGISTERED CIVIL ENGINEER 03-04-13 DATE

03-04-13
PLANS APPROVAL DATE

REGISTERED PROFESSIONAL ENGINEER
SHAHIN ADIBI
No. 54839
Exp. 06-30-14
CIVIL
STATE OF CALIFORNIA

THE STATE OF CALIFORNIA OR ITS OFFICERS OR AGENTS SHALL NOT BE RESPONSIBLE FOR THE ACCURACY OR COMPLETENESS OF SCANNED COPIES OF THIS PLAN SHEET.

NOTE: 1. ALL PAVEMENT DELINEATION SHALL BE REPLACED IN KIND UNLESS INDICATED OTHERWISE.

PAVEMENT DELINEATION QUANTITIES

PAVEMENT MARKER SUMMARY / TRAFFIC STRIPE SUMMARY

ROUTE	DESCRIPTION	FROM STATION	TO STATION	DETAIL	NON-REFLECTIVE (EA)	RETROREFLECTIVE (EA)			PAINT (LF)	THERMOPLASTIC (LF)			
										4"	8"	8"	4"
					TYPE A	TYPE C	TYPE G	TYPE H	(2-COAT)	BROKEN	BROKEN	SOLID	SOLID
					WHITE	RED-CLEAR	CLEAR	YELLOW					
163	SB-RAMP "T-4" LINE	14+70.0	27+62.0	11/13	110	5	25		1292				
	SB-MAIN LANE "SD-163"	84+20.0	90+70.0	27B					650				
163	LAUREL St Br "LS" LINE	55+20.0	71+20.0	22				140					3200
				SUB TOTAL	110	170			1942				3200

PAVEMENT DELINEATION QUANTITIES

PDQ-1

STATE OF CALIFORNIA - DEPARTMENT OF TRANSPORTATION
Caltrans® TRAFFIC DESIGN

FUNCTIONAL SUPERVISOR: CHRIS M THOMAS
CALCULATED-DESIGNED BY: RICARDO PADILLA
CHECKED BY: SHAHIN ADIBI
REVISED BY
DATE REVISED

LAST REVISION 02-28-13
DATE PLOTTED => 13-MAR-2013
TIME PLOTTED => 22:30

Dist	COUNTY	ROUTE	POST MILES TOTAL PROJECT	SHEET No.	TOTAL SHEETS
11	SD	163	1.4	45	147

REGISTERED CIVIL ENGINEER DATE 03-04-13

PLANS APPROVAL DATE 03-04-13

REGISTERED PROFESSIONAL ENGINEER RICARDO PADILLA No. C58151 Exp. 6-30-14 CIVIL STATE OF CALIFORNIA

THE STATE OF CALIFORNIA OR ITS OFFICERS OR AGENTS SHALL NOT BE RESPONSIBLE FOR THE ACCURACY OR COMPLETENESS OF SCANNED COPIES OF THIS PLAN SHEET.

ROADWAY QUANTITIES

SHEET	BEGIN STATION	BEGIN LINE	END STATION	END LINE	COLD PLANE AC PAVEMENT (SQYD)	HMA (TYPE A) (TON)	TACK COAT (TON)
L-2	55+45.00	LS	61+73.39	LS	1676.0	305.0	0.4
L-2	69+41.82	LS	71+20.00	LS	476.0	87.0	0.1
				TOTAL	2152.0	392.0*	0.5*

* SEE SCQ SHEETS FOR ADDITIONAL QUANTITIES.

RECONSTRUCT STEEL BACKED TIMBER GUARD RAIL

STAGE	SHEET	STATION	LF
1	L-2	85+45 TO 89+00 "SD-163"	355.0
1	L-2	86+70 TO 90+45 "SD-163"	375.0
		TOTAL	730.0

TEMPORARY FENCE

SHEET	TEMPORARY FENCE (TYPE ESA)
UNIT	LF
L-1	-
L-2	1500
TOTAL	1500

POLYMER MODIFIED EMULSION SEAL COAT

LOCATION "LS" LINE STA	STA	LENGTH LF	TRAVELLED WAY WIDTH LF	ASPHALTIC EMULSION (POLYMER MODIFIED) TON	SCREENINGS (MEDIUM) TON	SAND COVER TON	ASPHALTIC EMULSION (FOG SEAL COAT) TRAVELED WAY TON
55+45.00	61+73.39	628.39	24	4.19	24.14	4.19	0.42
61+73.39	69+41.82	769.33	21	5.13	30.77	5.13	0.51
69+41.82	71+20.00	177.28	24	1.18	7.09	1.18	0.12
			TOTAL	10.50	63.00	10.50	1.05

SUMMARY OF QUANTITIES
Q-1

STATE OF CALIFORNIA - DEPARTMENT OF TRANSPORTATION
Caltrans® TRAFFIC DESIGN

FUNCTIONAL SUPERVISOR: CHRIS M. THOMAS
CALCULATED-DESIGNED BY: FELIZARDO BAGCUS
CHECKED BY: RICARDO PADILLA
REVISED BY
DATE REVISED

LAST REVISION 02-27-13
DATE PLOTTED => 13-MAR-2013
TIME PLOTTED => 22:30

Dist	COUNTY	ROUTE	POST MILES TOTAL PROJECT	SHEET No.	TOTAL SHEETS
11	SD	163	1.4	46	147

REGISTERED CIVIL ENGINEER 03-04-13 DATE

03-04-13
PLANS APPROVAL DATE

REGISTERED PROFESSIONAL ENGINEER RICARDO PADILLA No. 58151 Exp. 06-30-14 CIVIL STATE OF CALIFORNIA

THE STATE OF CALIFORNIA OR ITS OFFICERS OR AGENTS SHALL NOT BE RESPONSIBLE FOR THE ACCURACY OR COMPLETENESS OF SCANNED COPIES OF THIS PLAN SHEET.

CONCRETE BARRIER

DIRECTION	Rte	LINE		STATION	(TYPE 60 Mod)
					LF
SB	163	SD-163	R†	87+40 TO 89+12	172.0
NB	163	SD-163	R†	87+22 TO 88+00	78.0
				TOTALS	250.0

SLURRY CEMENT BACKFILL

Rte	LINE	STATION	SLURRY CEMENT BACKFILL
			CY
LAUREL St	LS	61+60 TO 61+80	0.6
LAUREL St	LS	69+40 TO 70+20	2.4
		TOTALS	3.0*

* SLURRY CEMENT BACKFILL TRUNCATED ABANDONED 12" WATER LINE.

REMOVE PIPE

Rte	LINE	STATION	REMOVE PIPE	
			LF(N)	EA
LAUREL St	LS	61+73.4 TO 69+49.3	775.9*	1
		TOTALS	775.9*	1

* PIPE REMOVAL OF TRUNCATED ABANDONED 12" WATER LINE.
(N) - NOT A SEPARATE PAY ITEM, FOR INFORMATION ONLY.

METAL BEAM GUARD RAILING

MBGR No.	SHEET No.	DIRECTION	Rte	LINE		LAYOUT TYPE (N)	REMOVE MBGR	MBGR	ALTERNATIVE FLARED TERMINAL SYSTEM	END ANCHOR ASSEMBLY (TYPE SFT)	TRANSITION RAILING (TYPE WB)	GUARD RAILING DELINEATOR	BURIED POST END ANCHOR (N)	END CAP (TYPE A)	REMARKS
							LF	LF	EA	EA	EA	EA	EA	EA	
1	L-2	SB	163	SD-163	R†	12B	115.0	25.0	1	1	1	5	1	1	
2	L-2	NB	163	SD-163	R†	12B	105.0	25.0	1	1	1	5	1	1	
TOTALS							220.0	50.0	2	2	2	10	-	2	

(N) - NOT A SEPARATE PAY ITEM, FOR INFORMATION ONLY.

SUMMARY OF QUANTITIES

Q-2

STATE OF CALIFORNIA - DEPARTMENT OF TRANSPORTATION
Caltrans®
DESIGN

FUNCTIONAL SUPERVISOR: CHRIS M THOMAS
CALCULATED-DESIGNED BY: BAHMAN YAZDANI
CHECKED BY: RICARDO PADILLA
REVISED BY
DATE REVISED

LAST REVISION 02-12-13
DATE PLOTTED => 13-MAR-2013
TIME PLOTTED => 22:31

Dist	COUNTY	ROUTE	POST MILES TOTAL PROJECT	SHEET No.	TOTAL SHEETS
11	SD	163	1.4	47	147

LICENSED LANDSCAPE ARCHITECT

03-04-13
PLANS APPROVAL DATE

LICENSED LANDSCAPE ARCHITECT
KENNETH L. MAH No. 3649
Expiration Date 02-28-14
Renewal Date 03-04-12
Date
STATE OF CALIFORNIA

THE STATE OF CALIFORNIA OR ITS OFFICERS OR AGENTS SHALL NOT BE RESPONSIBLE FOR THE ACCURACY OR COMPLETENESS OF SCANNED COPIES OF THIS PLAN SHEET.

NOTES:

1. FOR ACCURATE RIGHT OF WAY DATA, CONTACT RIGHT OF WAY ENGINEERING AT THE DISTRICT OFFICE.
2. QUANTITIES OF MAINTAIN Exist PLANTED AREAS ARE FOR INFORMATION ONLY.

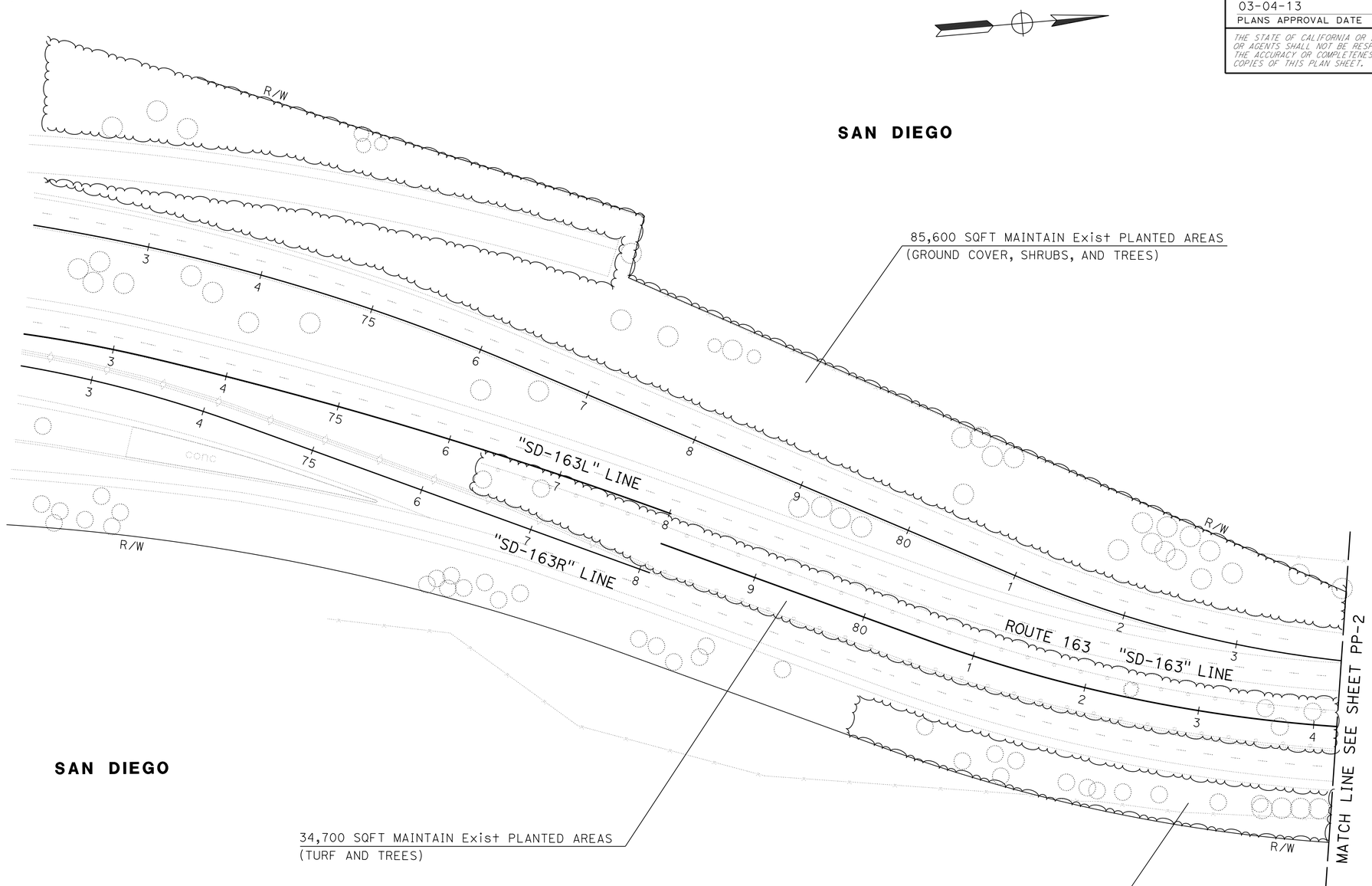

APPROVED FOR PLANTING WORK ONLY

PLANTING PLAN

SCALE: 1" = 50'

PP-1

STATE OF CALIFORNIA - DEPARTMENT OF TRANSPORTATION
Caltrans LANDSCAPE ARCHITECTURE

SENIOR LANDSCAPE ARCHITECT: STEPHEN ALVAREZ
CALCULATED-DESIGNED BY: RAFAEL AMBROSI
CHECKED BY: KENNY MAH
REVISED BY
DATE REVISED

LAST REVISION 11-05-12
DATE PLOTTED => 14-MAR-2013
TIME PLOTTED => 08:50

Dist	COUNTY	ROUTE	POST MILES TOTAL PROJECT	SHEET No.	TOTAL SHEETS
11	SD	163	1.4	48	147

LICENSED LANDSCAPE ARCHITECT

03-04-13
PLANS APPROVAL DATE

LICENSED LANDSCAPE ARCHITECT
KENNETH L. MAH No. 3649
Expiration Date 02-28-14
Renewal Date 03-04-12
STATE OF CALIFORNIA

THE STATE OF CALIFORNIA OR ITS OFFICERS OR AGENTS SHALL NOT BE RESPONSIBLE FOR THE ACCURACY OR COMPLETENESS OF SCANNED COPIES OF THIS PLAN SHEET.

NOTES:

1. FOR ACCURATE RIGHT OF WAY DATA, CONTACT RIGHT OF WAY ENGINEERING AT THE DISTRICT OFFICE.
2. QUANTITIES OF MAINTAIN Exist PLANTED AREAS ARE FOR INFORMATION ONLY.

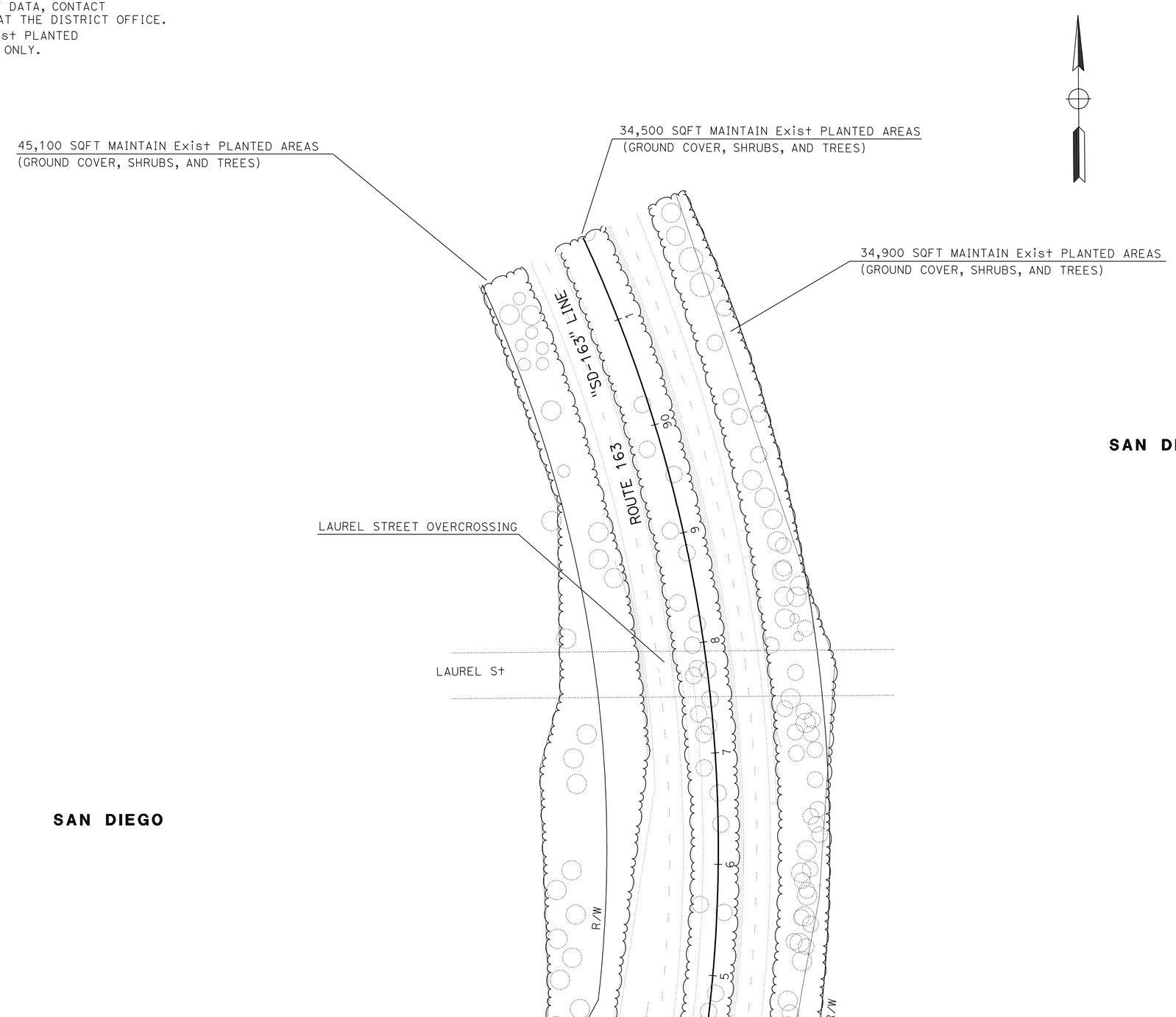

SAN DIEGO

SAN DIEGO

APPROVED FOR PLANTING WORK ONLY

PLANTING PLAN

SCALE: 1" = 50'

PP-2

STATE OF CALIFORNIA - DEPARTMENT OF TRANSPORTATION
Caltrans® LANDSCAPE ARCHITECTURE

SENIOR LANDSCAPE ARCHITECT: STEPHEN ALVAREZ
CALCULATED-DESIGNED BY: RAFAEL AMBROSI
CHECKED BY: KENNY MAH
REVISED BY
DATE REVISED

LAST REVISION 11-05-12
DATE PLOTTED => 13-MAR-2013
TIME PLOTTED => 22:31

Dist	COUNTY	ROUTE	POST MILES TOTAL PROJECT	SHEET No.	TOTAL SHEETS
11	SD	163	1.4	49	147

LICENSED LANDSCAPE ARCHITECT

03-04-13
PLANS APPROVAL DATE

LICENSED LANDSCAPE ARCHITECT
KENNETH L. MAH No. 3649
Expiration Date 02-28-14
Renewal Date 03-04-12
DATE
STATE OF CALIFORNIA

THE STATE OF CALIFORNIA OR ITS OFFICERS OR AGENTS SHALL NOT BE RESPONSIBLE FOR THE ACCURACY OR COMPLETENESS OF SCANNED COPIES OF THIS PLAN SHEET.

NOTES:

1. FOR ACCURATE RIGHT OF WAY DATA, CONTACT RIGHT OF WAY ENGINEERING AT THE DISTRICT OFFICE.
2. ALL EXISTING IRRIGATION SHOWN TO BE MAINTAINED.
3. FOUR EXISTING WATER METERS AND BACKFLOW PREVENTER ASSEMBLIES ARE LOCATED AT:
   - 11TH Ave AND ASH St.
   - SOUTH BOUND ROUTE 5 TO 10TH Ave OFF RAMP (RIGHT SIDE).
   - NORTH BOUND ROUTE 5 TO 6TH Ave OFF RAMP (LEFT SIDE).
   - NORTH BOUND ROUTE 163 AND UPAS St/PEDESTRIAN OC.

   THESE WATER METERS ARE POTENTIALY LOOPED. TO SHUT WATER OFF USE THE CLOSEST ISOLATION VALVES NEAREST TO WORK.
4. CONTROLLER 'U' IS LOCATED SOUTH BOUND 5 TO 10TH Av OFF RAMP (LEFT SIDE).
5. CONTROLLER 'E' IS LOCATED NORTH BOUND ROUTE 163 AND RICHMOND St OFF RAMP.

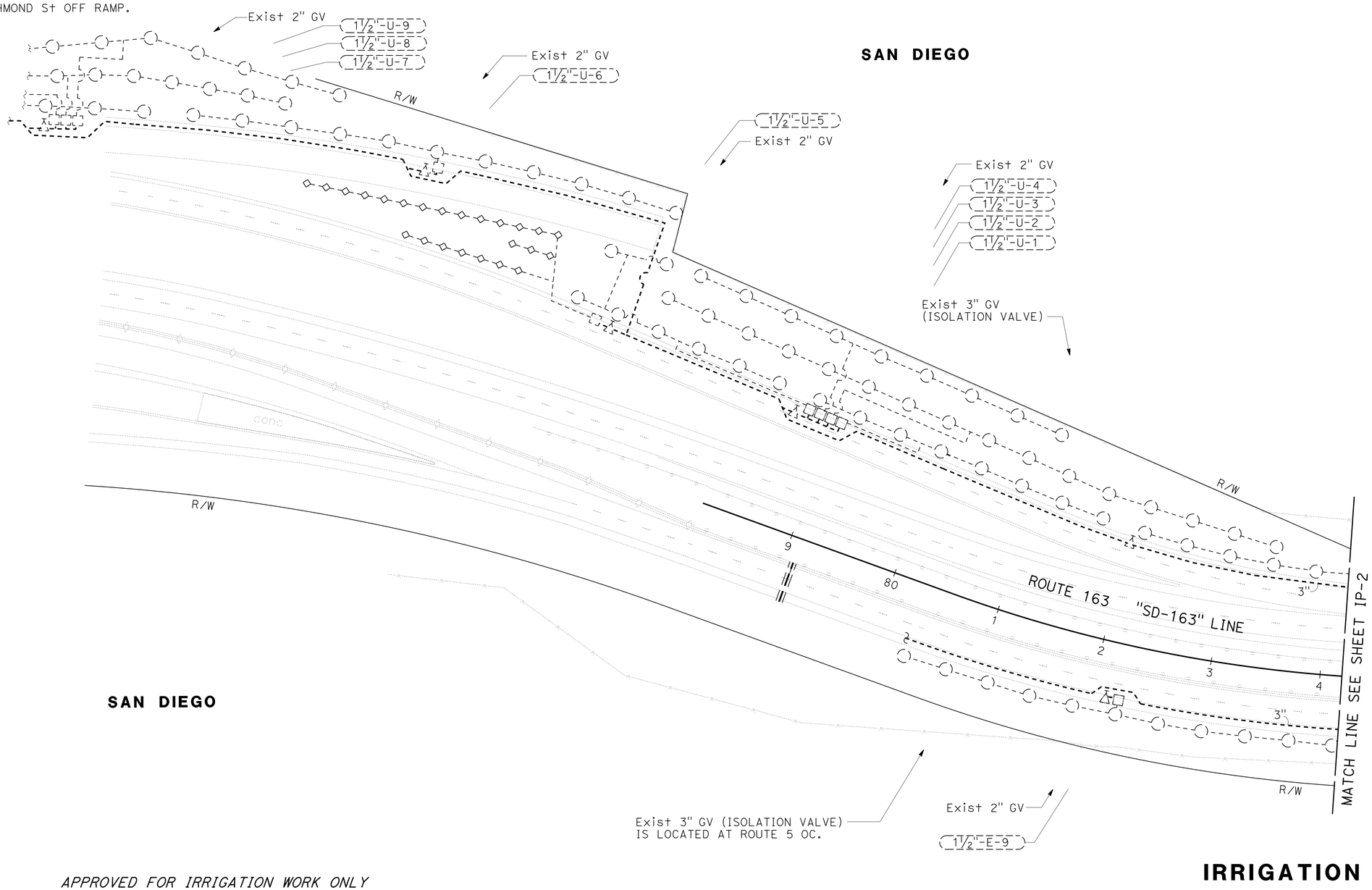

APPROVED FOR IRRIGATION WORK ONLY

IRRIGATION PLAN

SCALE: 1" = 50'

IP-1

STATE OF CALIFORNIA - DEPARTMENT OF TRANSPORTATION
Caltrans LANDSCAPE ARCHITECTURE

SENIOR LANDSCAPE ARCHITECT: STEPHEN ALVAREZ

CALCULATED-DESIGNED BY: RAFAEL AMBROSI
CHECKED BY: KENNY MAH

REVISED BY
DATE REVISED

LAST REVISION 11-05-12
DATE PLOTTED => 14-MAR-2013
TIME PLOTTED => 08:54

Dist	COUNTY	ROUTE	POST MILES TOTAL PROJECT	SHEET No.	TOTAL SHEETS
11	SD	163	1.4	50	147

LICENSED LANDSCAPE ARCHITECT

03-04-13
PLANS APPROVAL DATE

LICENSED LANDSCAPE ARCHITECT
KENNETH L. MAH No. 3049
Expiration Date 02-28-14
03-04-12
Date
STATE OF CALIFORNIA

THE STATE OF CALIFORNIA OR ITS OFFICERS OR AGENTS SHALL NOT BE RESPONSIBLE FOR THE ACCURACY OR COMPLETENESS OF SCANNED COPIES OF THIS PLAN SHEET.

NOTES:

1. FOR ACCURATE RIGHT OF WAY DATA, CONTACT RIGHT OF WAY ENGINEERING AT THE DISTRICT OFFICE.
2. ALL EXISTING IRRIGATION SHOWN TO BE MAINTAINED.
3. FOUR EXISTING WATER METERS AND BACKFLOW PREVENTER ASSEMBLIES ARE LOCATED AT:
   - 11TH Ave AND ASH St.
   - SOUTH BOUND ROUTE 5 TO 10TH Ave OFF RAMP (RIGHT SIDE).
   - NORTH BOUND ROUTE 5 TO 6TH Ave OFF RAMP (LEFT SIDE).
   - NORTH BOUND ROUTE 163 AND UPAS St/PEDESTRIAN OC.

   THESE WATER METERS ARE POTENTIALY LOOPED. TO SHUT WATER OFF USE THE CLOSEST ISOLATION VALVES NEAREST TO WORK.

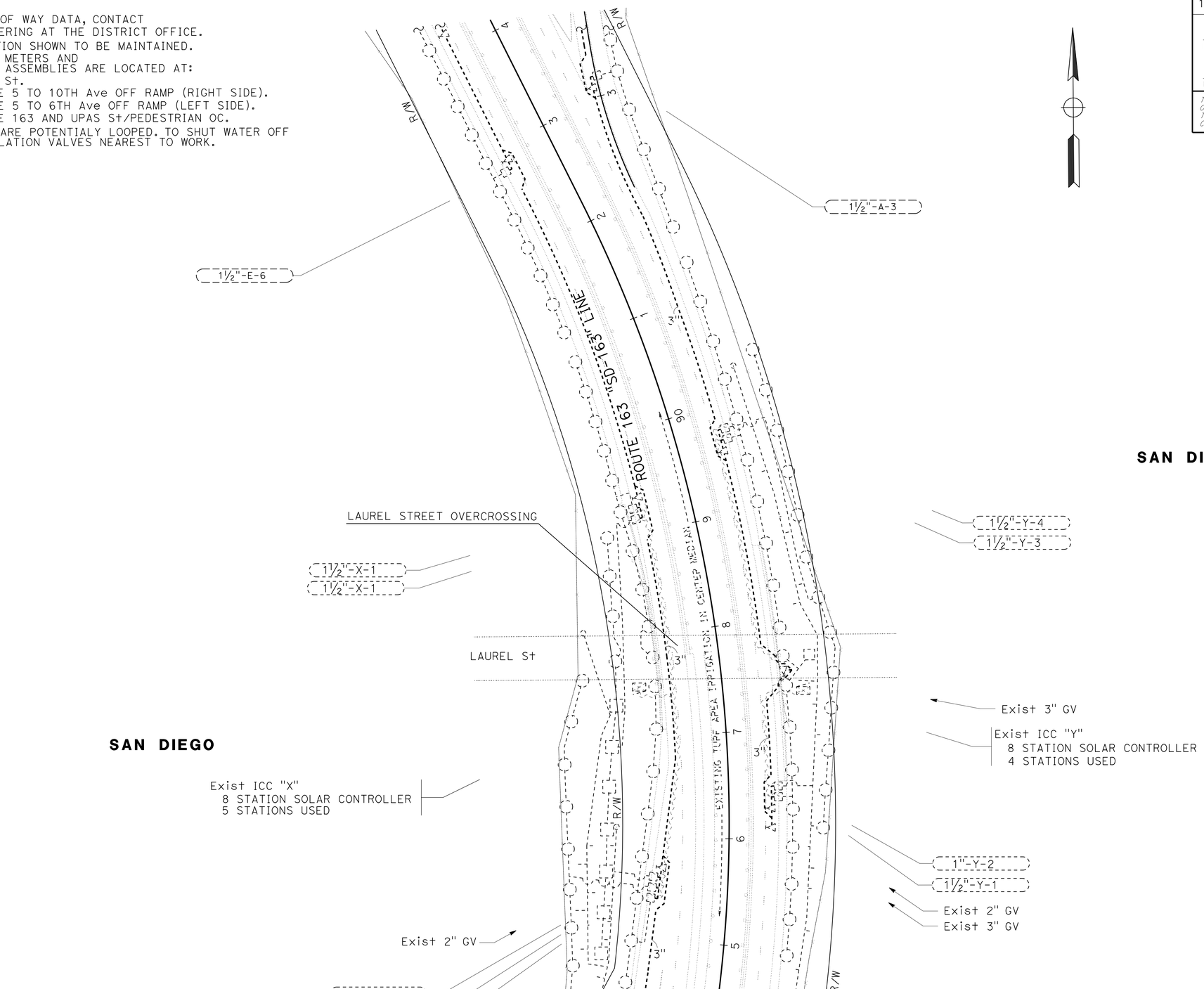

SAN DIEGO

APPROVED FOR IRRIGATION WORK ONLY

IRRIGATION PLAN

SCALE: 1" = 50'

IP-2

STATE OF CALIFORNIA - DEPARTMENT OF TRANSPORTATION
Caltrans® LANDSCAPE ARCHITECTURE

SENIOR LANDSCAPE ARCHITECT: STEPHEN ALVAREZ

CALCULATED-DESIGNED BY: RAFAEL AMBROSI
CHECKED BY: KENNY MAH

REVISED BY
DATE REVISED

LAST REVISION 11-05-12
DATE PLOTTED => 14-MAR-2013
TIME PLOTTED => 09:04

Dist	COUNTY	ROUTE	POST MILES TOTAL PROJECT	SHEET No.	TOTAL SHEETS
11	SD	163	1.4	51	147

REGISTERED ELECTRICAL ENGINEER 02-07-13 DATE

PLANS APPROVAL DATE 03-04-13

REGISTERED PROFESSIONAL ENGINEER ALLAN RAY MORRIS No. 16958 Exp. 06/30/13 ELECTRICAL STATE OF CALIFORNIA

THE STATE OF CALIFORNIA OR ITS OFFICERS OR AGENTS SHALL NOT BE RESPONSIBLE FOR THE ACCURACY OR COMPLETENESS OF SCANNED COPIES OF THIS PLAN SHEET.

T Y LIN INTERNATIONAL
404 CAMINO DEL RIO SOUTH, SUITE 700
SAN DIEGO, CA 92108

PROJECT NOTES:

1. INSTALL REMOTE METER PEDESTAL WITH TWO PEU'S AND TOU METER (SEE SHEETS E-25 AND E-26).
2. 2-4"C, 3-1500 KCMIL (120/240 V SERVICE).
3. Exist ¾"C, 2#8 (120 V XMAS LIGHTS), 2#12 (120 V STREET LIGHTING - PRADO).
4. Exist 2#8 TO 120 V X-MAS LIGHTS.
5. 2-4"C, 3-1500 KCMIL (120/240 V SERVICE), 6#14 (2-120 V PEU).
6. Exist 4#12 TO DECORATIVE STRING LIGHTS.
7. CONNECT CONDUIT TO EXISTING DUAL ACORN LUMINAIRE (SEE DETAILS 1 & 2 ON SHEET E-23).
8. 2"C, 3#6.
9. EXIST 1¼"C, 3#12.
10. NOT USED.
11. Exist 2#10 TO DECORATIVE STRING LIGHTS.
12. 2"C, 4#8 (2-120 V XMAS LIGHTS), 4#8 (2-120 V STREET LIGHTING - PRADO).
13. 3"C, 2#8 (120 V XMAS LIGHTS), 2#8 (120 V STREET LIGHTING - PRADO).
14. 2"C, 3#6 (2-120 V NORTH BRIDGE STREET LIGHTING), 3#10 (120 V NORTH DECORATIVE LIGHTS).
15. 2"C, 2#6, 6#8, 2#10, 2#12.
16. NOT USED.
17. 2-3"C, 21#2, 3#4, 6#6.
18. 2"C, 4#8 (2-240 V CATWALK LIGHTING CIRCUITS), 1#10 (120 V CATWALK LIGHTING CONTROL), 1#10 (120 V CATWALK LIGHTING CONTROL SWITCHED).
19. INSTALL OUTDOOR 120 VAC OUTLET ON BRIDGE AND INSTALL MATCHING PLUG TO DECORATIVE STRING LIGHTS (SEE DETAIL 3 ON SHEET E-23).
20. 2"C, 3#6 (2-120 V SOUTH BRIDGE STREET LIGHTING), 4#10 (2-120 V SOUTH DECORATIVE LIGHTS).
21. INSTALL SERVICE ENCLOSURE (SEE SHEET E-21 AND E-22).
22. 2-2"C, MT (FUTURE ACCENT LIGHTING).
23. INSTALL CONNECTION BETWEEN NEW BRIDGE LIGHTING CONDUITS/NEMA ENCLOSURES AND EXISTING 1¼"C, 3#12, SPLICE EXISTING TO CORRESPONDING NEW CONDUCTORS.
24. INSTALL TEMPORARY CONDUIT AND CABLE TO EXISTING PANEL "A" FOR TEMPORARY SERVICE (SEE DETAIL B ON SHEET E-2).
25. CONTRACTOR TO COORDINATE WITH SDG&E IN VERIFYING LOCATION AND REMOVING CONDUCTORS OF 4KV CIRCUITS PK-2 AND PK-4. CIRCUITS ARE LOCATED ON THE NORTH CATWALK AND CONNECT TO TRANSFORMERS IN THE EAST AND WEST ABUTMENTS

LEGEND:

- 16" NEMA ENCLOSURE
- 30" NEMA ENCLOSURE
- JUNCTION BOX
- FLUORESCENT LIGHT FIXTURE
- 120 VAC GFCI OUTLET
- 240 VAC OUTLET
- 3 WAY SWITCH SPDT
- 4 WAY SWITCH
- 3 WAY SWITCH DPDT
- Exist TALL BLUE LUMINAIRE
- Exist ACORN LUMINAIRE
- VAULT
- 120 V OUTDOOR OUTLET
- No. 6 PULL BOX
- SERVICE ENCLOSURE
- REMOTE METER PEDESTAL
- EXISTING UTILITY TRANSFORMER-PAD MOUNTED
- LIGHTING CIRCUIT NUMBER
- CONDUIT RISER

1 REMOTE METER PEDESTAL
(120/240 V) (TOU)
METERING COMPARTMENT DOOR SHALL FACE NORTH
LOAD:
272-64 W FLUORESCENT LUMINAIRES
4-1440 W BRIDGE DECORATIVE LIGHTING
2-3150 W BRIDGE X-MAS LIGHTING
2-1050 W BRIDGE TO SEFTON PLAZA LIGHTING
2-1440 W BRIDGE HPS LIGHTING

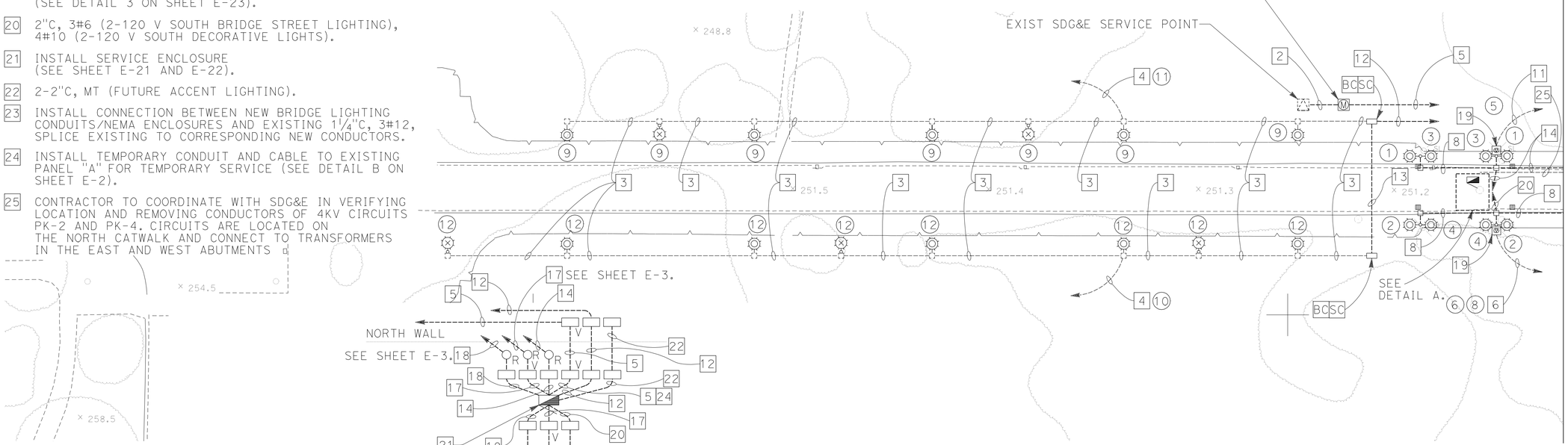

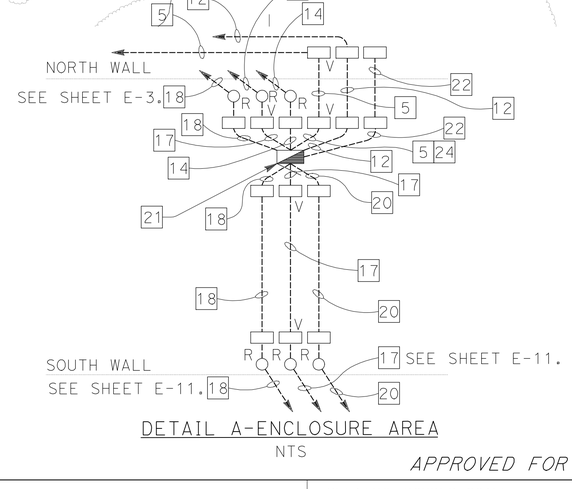

DETAIL A-ENCLOSURE AREA
NTS

APPROVED FOR ELECTRICAL WORK ONLY

LIGHTING (SURFACE LIGHTING PLAN)

SCALE: 1" = 30'

E-1

STATE OF CALIFORNIA - DEPARTMENT OF TRANSPORTATION
Caltrans®

CONSULTANT FUNCTIONAL SUPERVISOR: BRIAN PECUS
CALCULATED-DESIGNED BY: CHIAMING CHI
CHECKED BY: ALLAN MORRIS
REVISED BY
DATE REVISED

LAST REVISION 02-07-13
DATE PLOTTED => 13-MAR-2013
TIME PLOTTED => 22:42

Dist	COUNTY	ROUTE	POST MILES TOTAL PROJECT	SHEET No.	TOTAL SHEETS
11	SD	163	1.4	52	147

02-07-13
REGISTERED ELECTRICAL ENGINEER DATE

03-04-13
PLANS APPROVAL DATE

REGISTERED PROFESSIONAL ENGINEER
ALLAN RAY MORRIS
No. 16958
Exp. 06/30/13
ELECTRICAL
STATE OF CALIFORNIA

THE STATE OF CALIFORNIA OR ITS OFFICERS OR AGENTS SHALL NOT BE RESPONSIBLE FOR THE ACCURACY OR COMPLETENESS OF SCANNED COPIES OF THIS PLAN SHEET.

T Y LIN INTERNATIONAL
404 CAMINO DEL RIO SOUTH, SUITE 700
SAN DIEGO, CA 92108

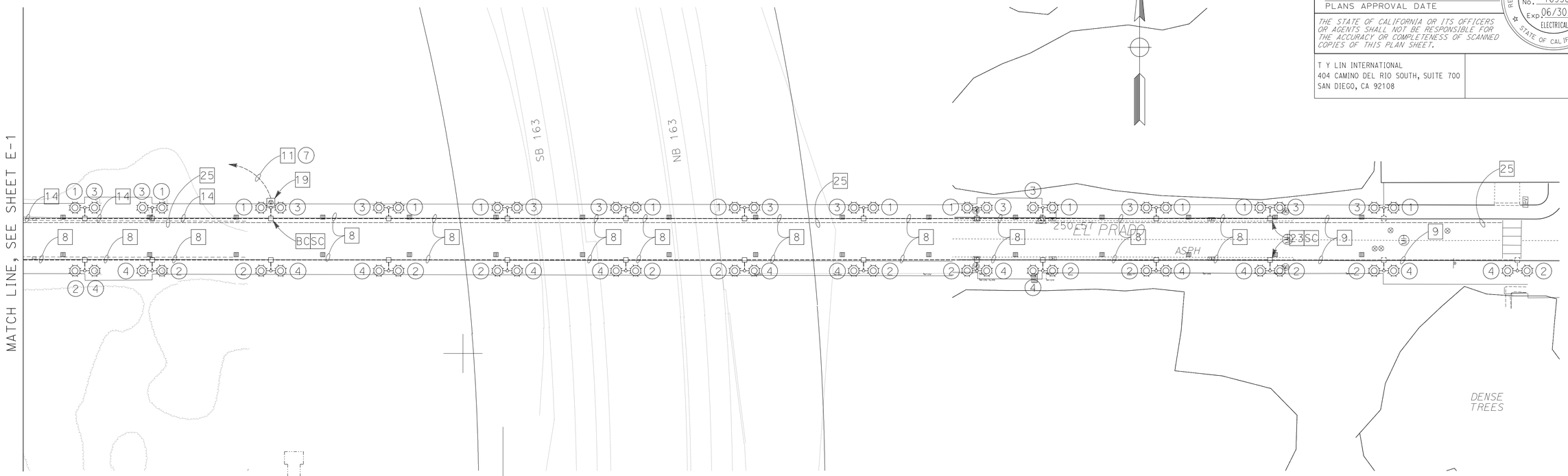

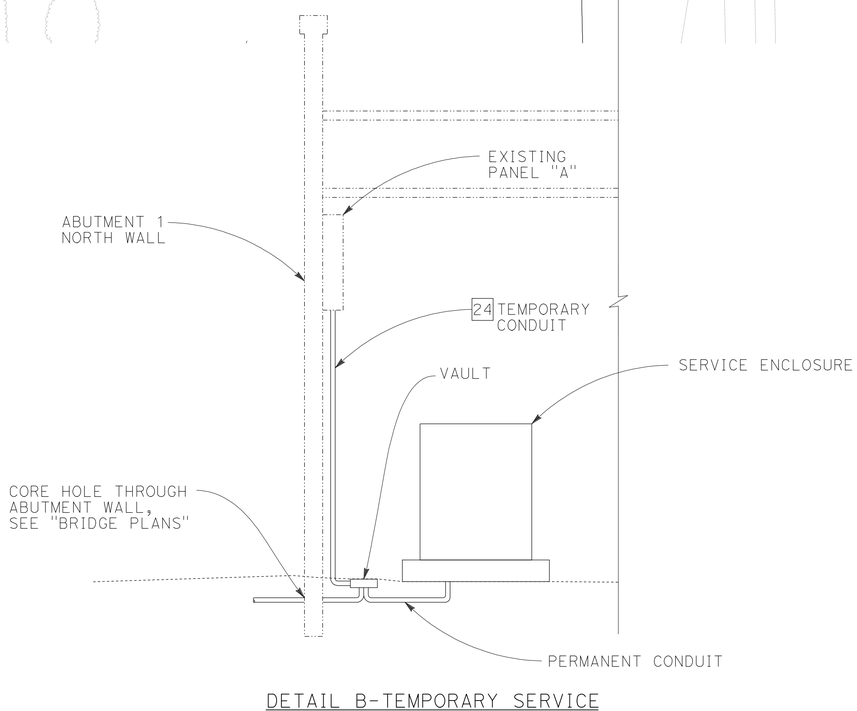

DETAIL B-TEMPORARY SERVICE
NTS

LIGHTING (SURFACE LIGHTING PLAN)

SCALE: 1" = 30'

E-2

APPROVED FOR ELECTRICAL WORK ONLY

STATE OF CALIFORNIA - DEPARTMENT OF TRANSPORTATION
Caltrans®

CONSULTANT FUNCTIONAL SUPERVISOR: BRIAN PECUS
CALCULATED-DESIGNED BY: ALLAN MORRIS
CHECKED BY: CHIAMING CHI
REVISED BY
DATE REVISED

LAST REVISION 02-07-13
DATE PLOTTED => 13-MAR-2013
TIME PLOTTED => 22:43

Dist	COUNTY	ROUTE	POST MILES TOTAL PROJECT	SHEET No.	TOTAL SHEETS
11	SD	163	1.4	53	147

REGISTERED ELECTRICAL ENGINEER 02-07-13 DATE

PLANS APPROVAL DATE 03-04-13

REGISTERED PROFESSIONAL ENGINEER ALLAN RAY MORRIS No. 16958 Exp. 06/30/13 ELECTRICAL STATE OF CALIFORNIA

THE STATE OF CALIFORNIA OR ITS OFFICERS OR AGENTS SHALL NOT BE RESPONSIBLE FOR THE ACCURACY OR COMPLETENESS OF SCANNED COPIES OF THIS PLAN SHEET.

T Y LIN INTERNATIONAL
404 CAMINO DEL RIO SOUTH, SUITE 700
SAN DIEGO, CA 92108

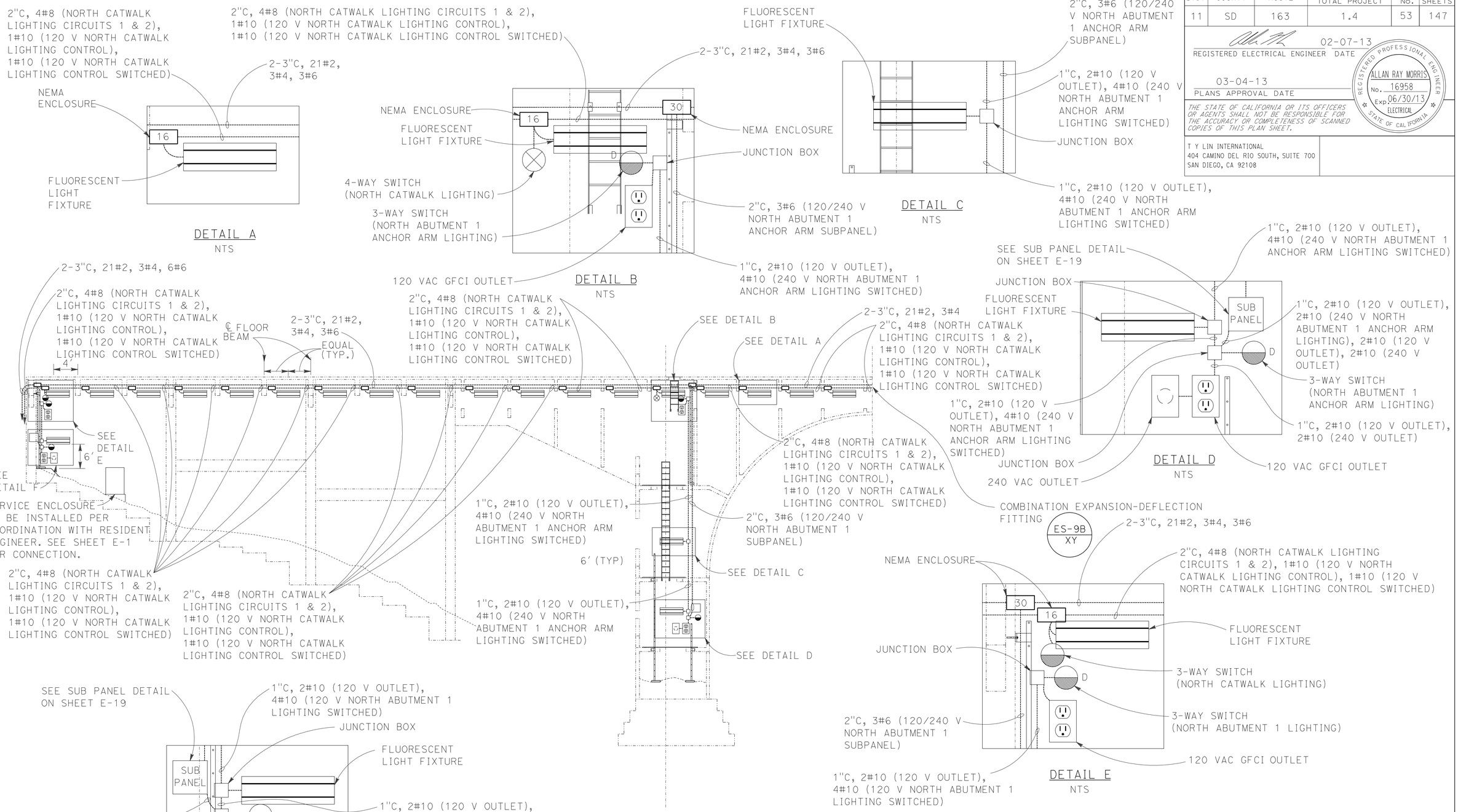

LIGHTING
(INTERIOR LIGHTING NORTH ABUTMENT 1)

NO SCALE

E-3

APPROVED FOR ELECTRICAL WORK ONLY

STATE OF CALIFORNIA - DEPARTMENT OF TRANSPORTATION
Caltrans®
CONSULTANT FUNCTIONAL SUPERVISOR: BRIAN PECUS
CALCULATED-DESIGNED BY: ALLAN MORRIS
CHECKED BY: CHIAMING CHI
REVISED BY
DATE REVISED

LAST REVISION 02-07-13
DATE PLOTTED => 13-MAR-2013
TIME PLOTTED => 22:43

Dist	COUNTY	ROUTE	POST MILES TOTAL PROJECT	SHEET No.	TOTAL SHEETS
11	SD	163	1.4	54	147

REGISTERED ELECTRICAL ENGINEER 02-07-13

PLANS APPROVAL DATE 03-04-13

REGISTERED PROFESSIONAL ENGINEER ALLAN RAY MORRIS No. 16958 Exp. 06/30/13 ELECTRICAL STATE OF CALIFORNIA

THE STATE OF CALIFORNIA OR ITS OFFICERS OR AGENTS SHALL NOT BE RESPONSIBLE FOR THE ACCURACY OR COMPLETENESS OF SCANNED COPIES OF THIS PLAN SHEET.

T Y LIN INTERNATIONAL
404 CAMINO DEL RIO SOUTH, SUITE 700
SAN DIEGO, CA 92108

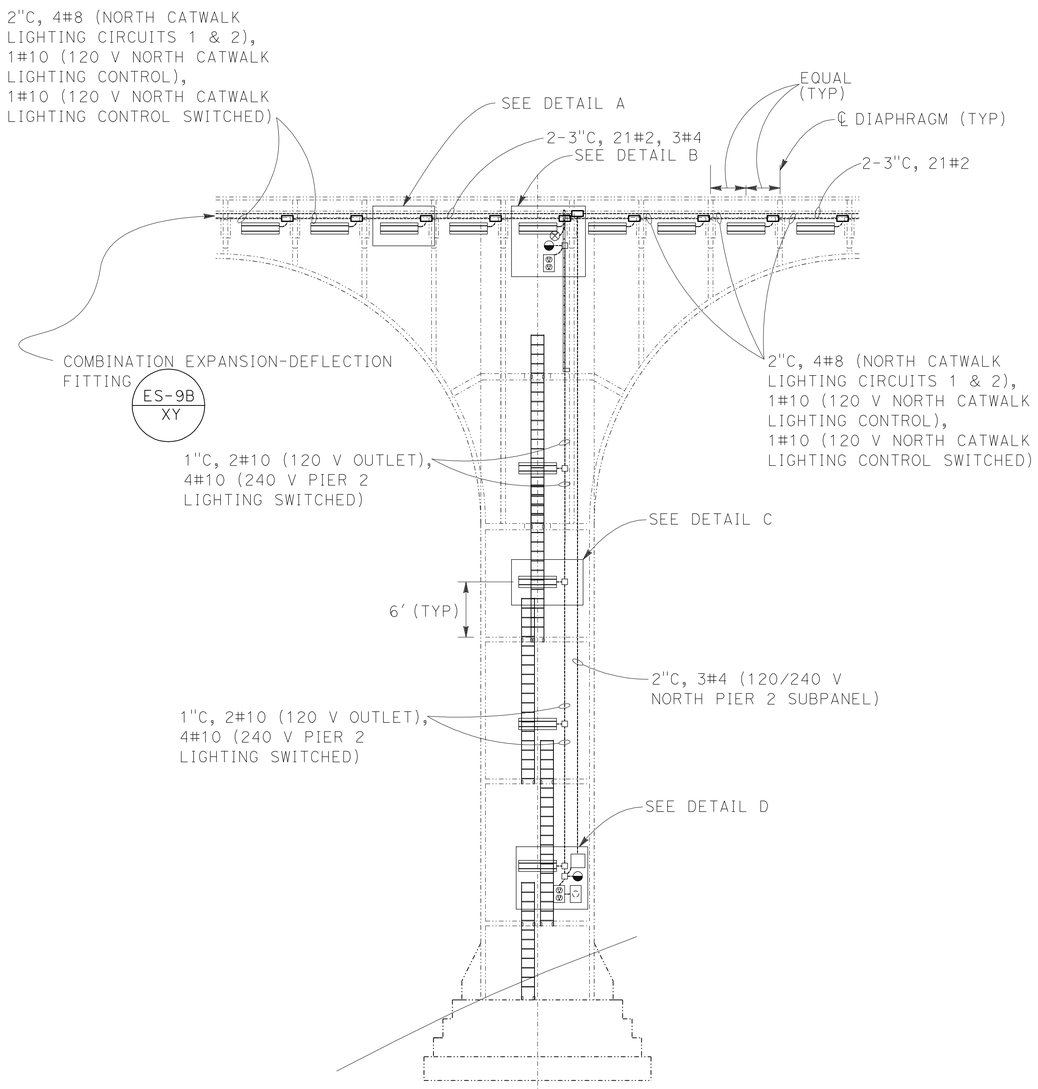

PIER 2 ELEVATION
1/8"=1'-0"

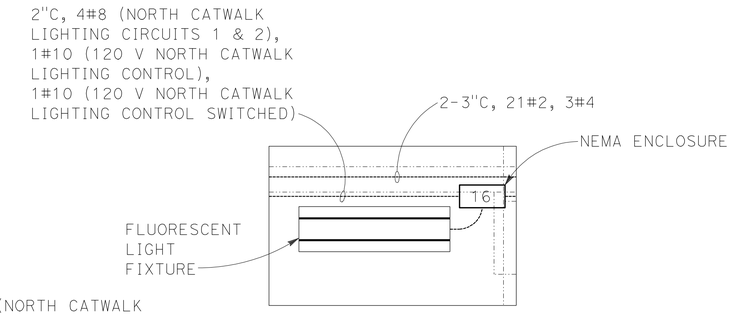

DETAIL A
NTS

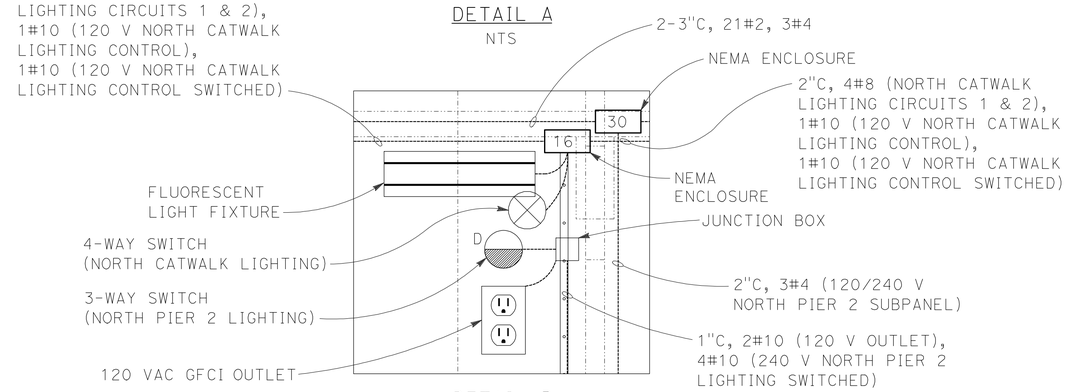

DETAIL B
NTS

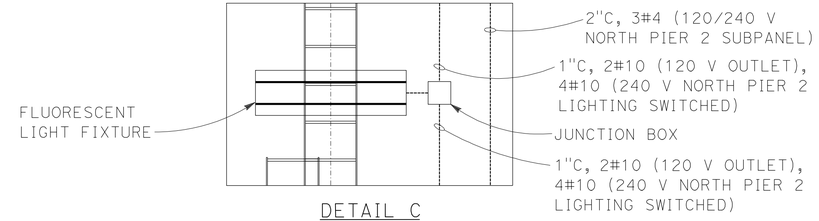

DETAIL C
NTS

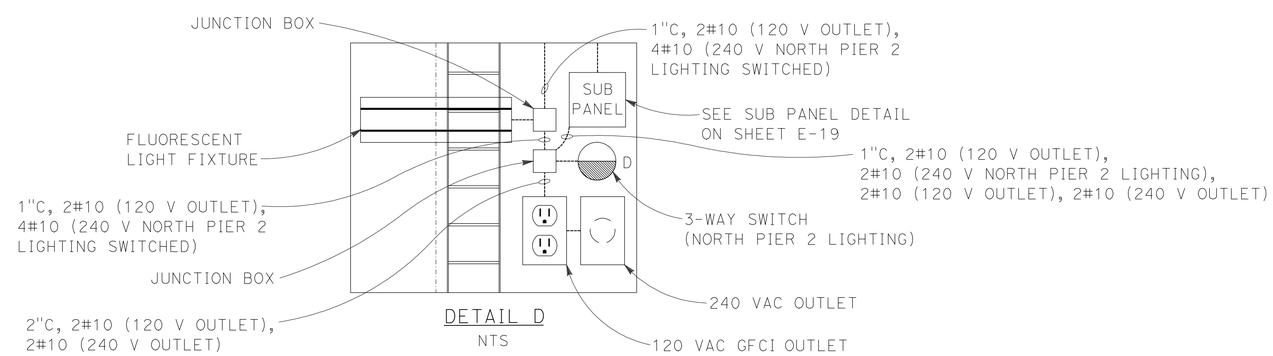

DETAIL D
NTS

LIGHTING
(INTERIOR LIGHTING NORTH PIER 2)

NO SCALE

E-4

APPROVED FOR ELECTRICAL WORK ONLY

STATE OF CALIFORNIA - DEPARTMENT OF TRANSPORTATION
Caltrans
CONSULTANT FUNCTIONAL SUPERVISOR: BRIAN PECUS
CALCULATED-DESIGNED BY: CHIAMING CHI
CHECKED BY: ALLAN MORRIS
REVISED BY
DATE REVISED

LAST REVISION 02-07-13
DATE PLOTTED => 13-MAR-2013
TIME PLOTTED => 22:44

Dist	COUNTY	ROUTE	POST MILES TOTAL PROJECT	SHEET No.	TOTAL SHEETS
11	SD	163	1.4	55	147

REGISTERED ELECTRICAL ENGINEER 02-07-13 DATE

PLANS APPROVAL DATE 03-04-13

REGISTERED PROFESSIONAL ENGINEER ALLAN RAY MORRIS No. 16958 Exp. 06/30/13 ELECTRICAL STATE OF CALIFORNIA

THE STATE OF CALIFORNIA OR ITS OFFICERS OR AGENTS SHALL NOT BE RESPONSIBLE FOR THE ACCURACY OR COMPLETENESS OF SCANNED COPIES OF THIS PLAN SHEET.

T Y LIN INTERNATIONAL
404 CAMINO DEL RIO SOUTH, SUITE 700
SAN DIEGO, CA 92108

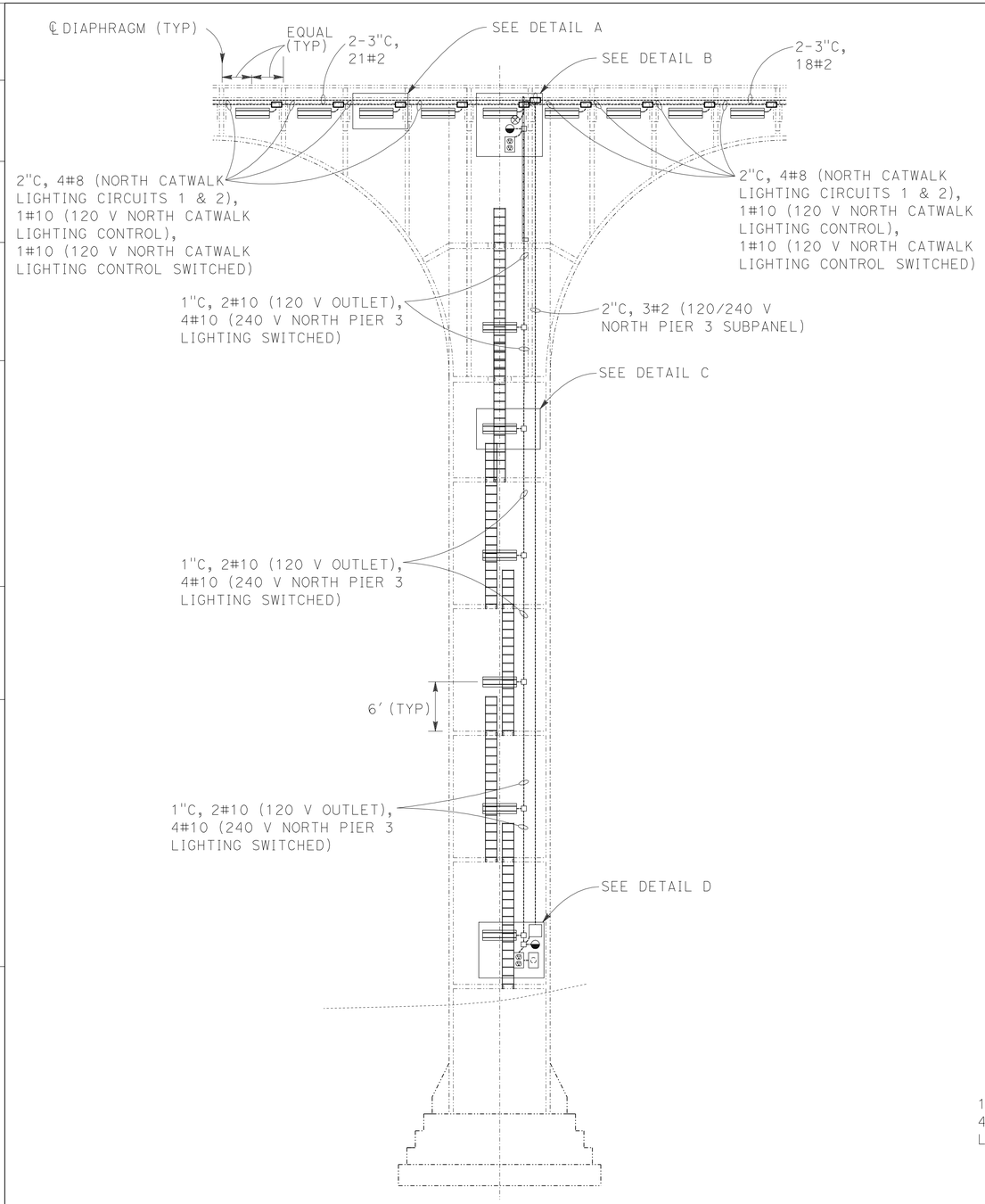

PIER 3 ELEVATION
1/8"=1'-0"

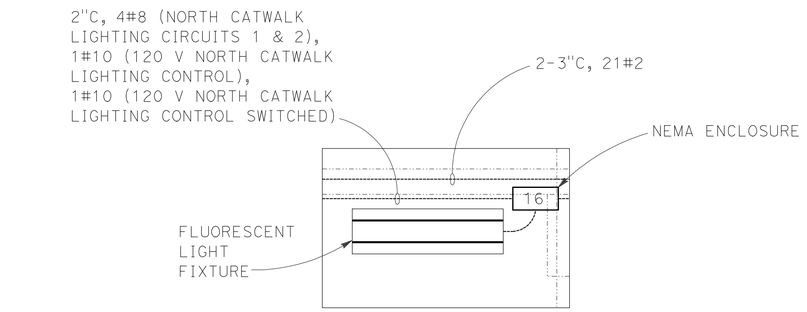

DETAIL A
NTS

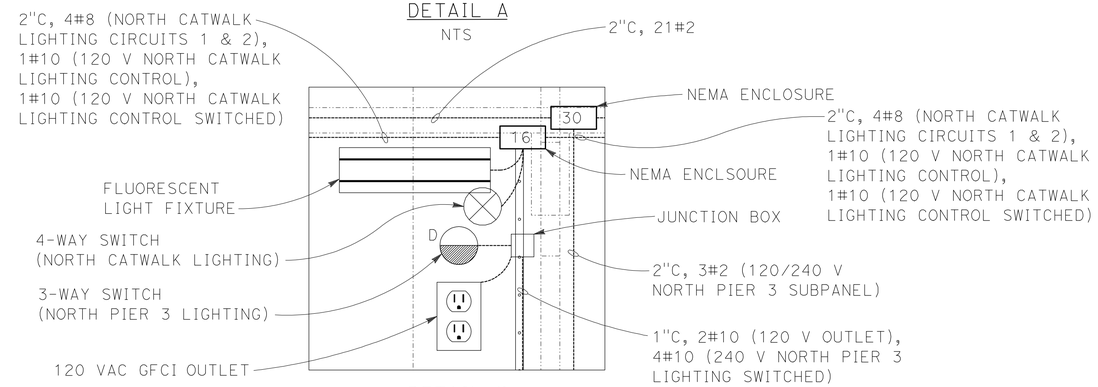

DETAIL B
NTS

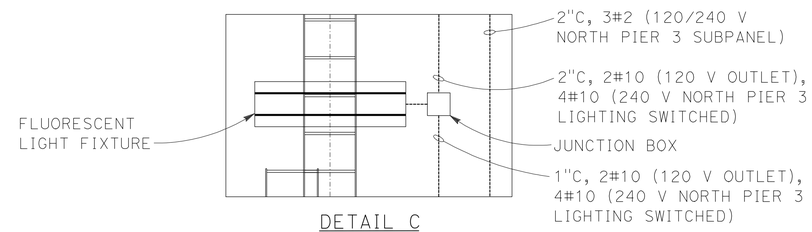

DETAIL C
NTS

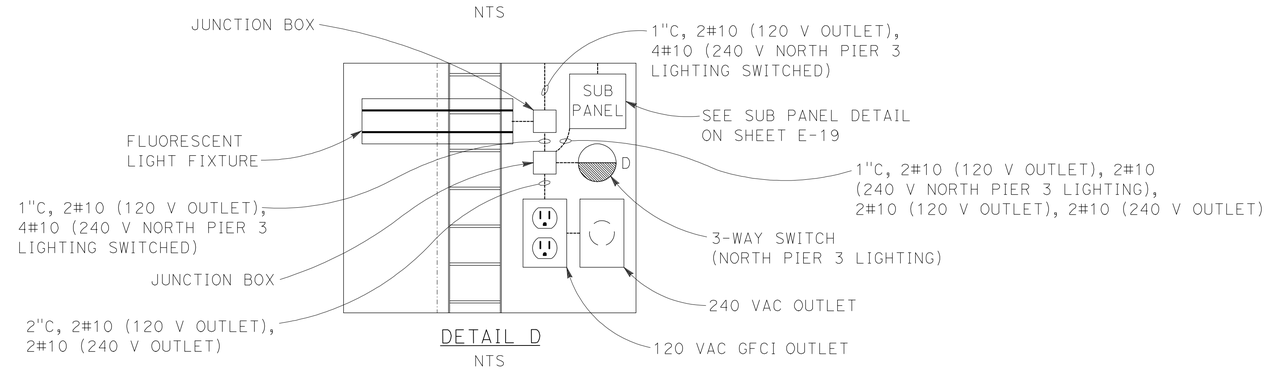

DETAIL D
NTS

LIGHTING
(INTERIOR LIGHTING NORTH PIER 3)

NO SCALE

E-5

APPROVED FOR ELECTRICAL WORK ONLY

STATE OF CALIFORNIA - DEPARTMENT OF TRANSPORTATION
Caltrans®
CONSULTANT FUNCTIONAL SUPERVISOR: BRIAN PECUS
CALCULATED-DESIGNED BY: ALLAN MORRIS
CHECKED BY: CHIAMING CHI
REVISED BY / DATE REVISED

LAST REVISION 02-07-13 | DATE PLOTTED => 13-MAR-2013 | TIME PLOTTED => 22:44

Dist	COUNTY	ROUTE	POST MILES TOTAL PROJECT	SHEET No.	TOTAL SHEETS
11	SD	163	1.4	56	147

REGISTERED ELECTRICAL ENGINEER 02-07-13 DATE

PLANS APPROVAL DATE 03-04-13

REGISTERED PROFESSIONAL ENGINEER ALLAN RAY MORRIS No. 16958 Exp. 06/30/13 ELECTRICAL STATE OF CALIFORNIA

THE STATE OF CALIFORNIA OR ITS OFFICERS OR AGENTS SHALL NOT BE RESPONSIBLE FOR THE ACCURACY OR COMPLETENESS OF SCANNED COPIES OF THIS PLAN SHEET.

T Y LIN INTERNATIONAL
404 CAMINO DEL RIO SOUTH, SUITE 700
SAN DIEGO, CA 92108

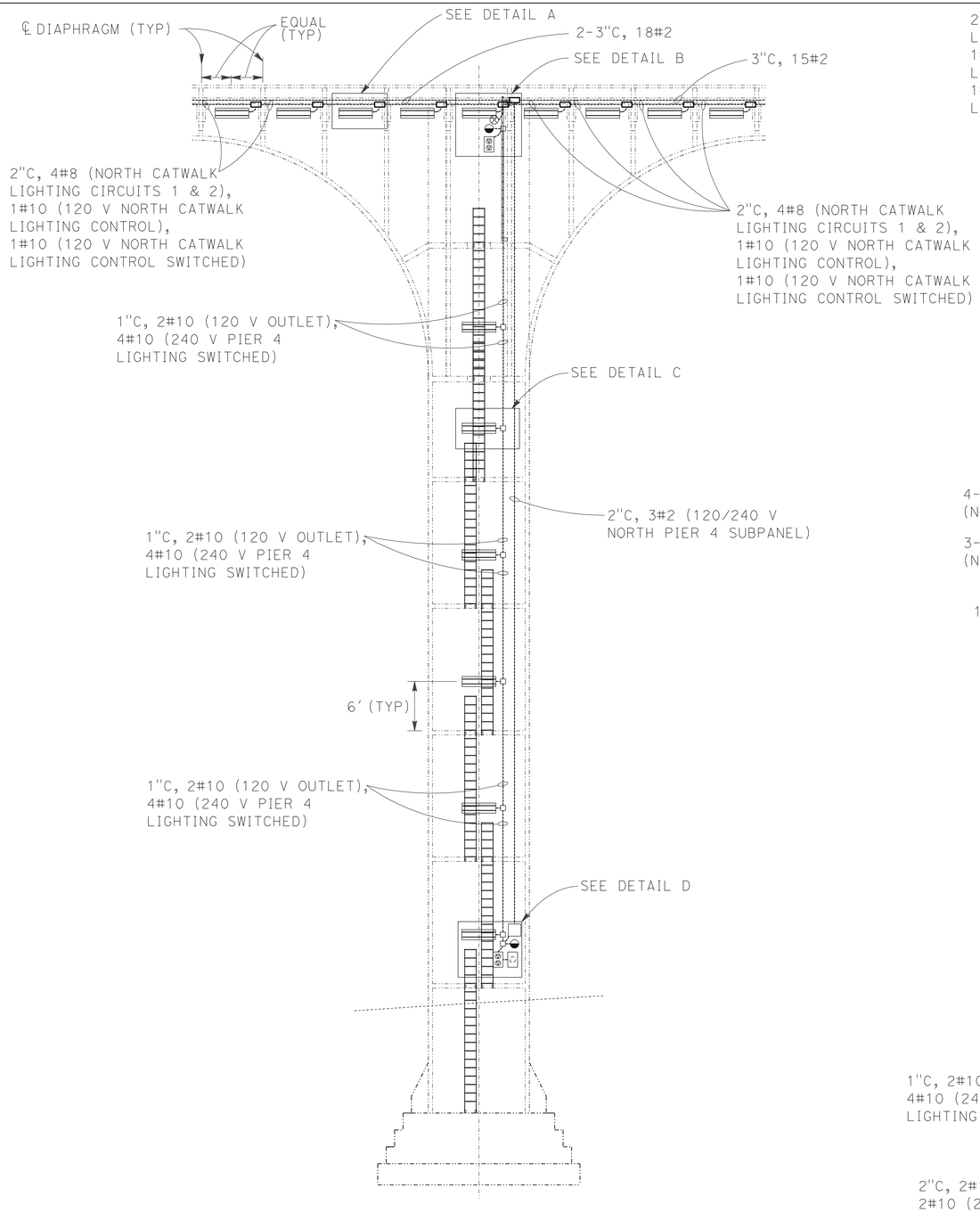

PIER 4 ELEVATION
1/8"=1'-0"

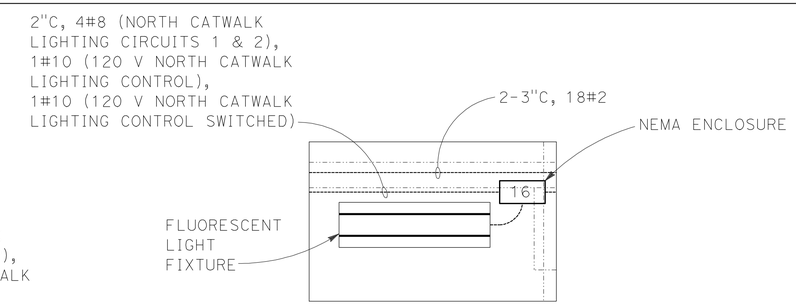

DETAIL A
NTS

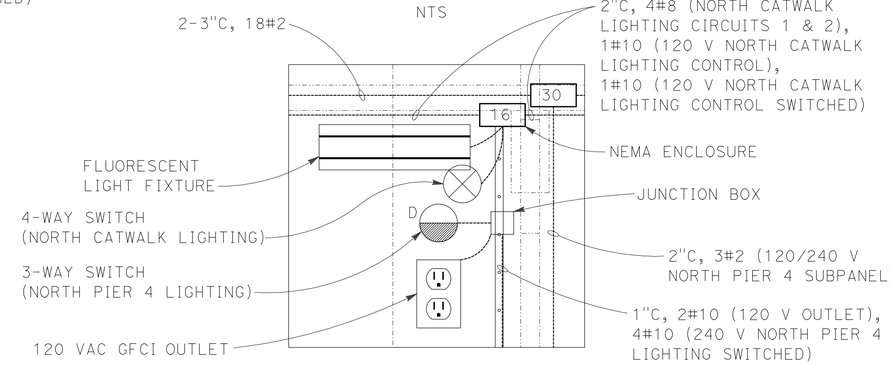

DETAIL B
NTS

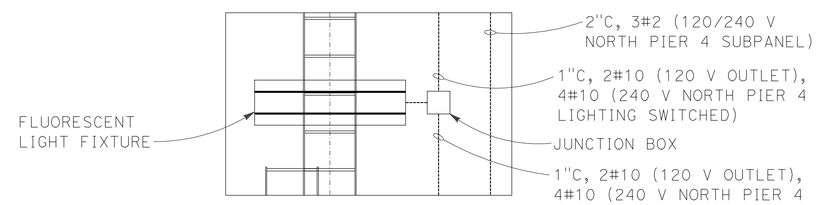

DETAIL C
NTS

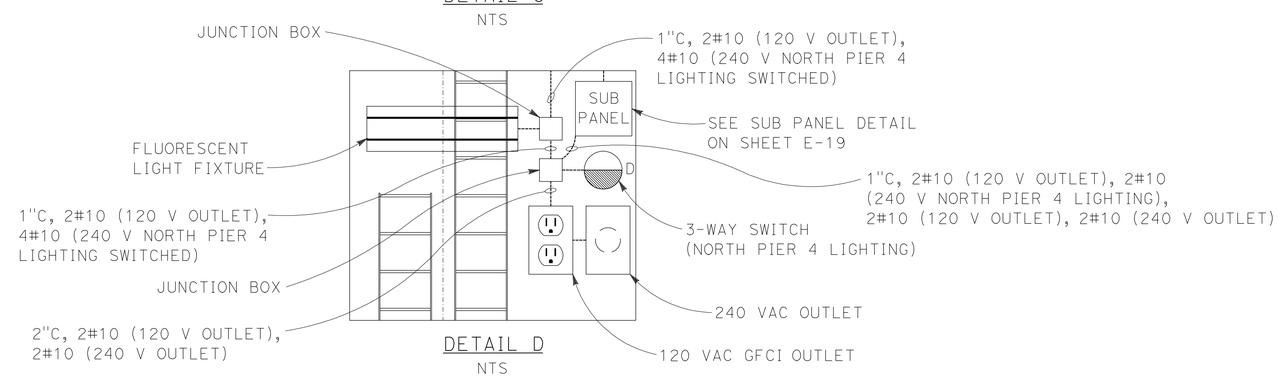

DETAIL D
NTS

LIGHTING
(INTERIOR LIGHTING NORTH PIER 4)

NO SCALE

E-6

APPROVED FOR ELECTRICAL WORK ONLY

STATE OF CALIFORNIA - DEPARTMENT OF TRANSPORTATION
Caltrans®

CONSULTANT FUNCTIONAL SUPERVISOR: BRIAN PECUS

CALCULATED-DESIGNED BY: ALLAN MORRIS
CHECKED BY: CHIAMING CHI

REVISED BY | DATE REVISED

LAST REVISION 02-07-13 | DATE PLOTTED => 13-MAR-2013 | TIME PLOTTED => 22:45

Dist	COUNTY	ROUTE	POST MILES TOTAL PROJECT	SHEET No.	TOTAL SHEETS
11	SD	163	1.4	57	147

REGISTERED ELECTRICAL ENGINEER 02-07-13 DATE

PLANS APPROVAL DATE 03-04-13

REGISTERED PROFESSIONAL ENGINEER ALLAN RAY MORRIS No. 16958 Exp. 06/30/13 ELECTRICAL STATE OF CALIFORNIA

THE STATE OF CALIFORNIA OR ITS OFFICERS OR AGENTS SHALL NOT BE RESPONSIBLE FOR THE ACCURACY OR COMPLETENESS OF SCANNED COPIES OF THIS PLAN SHEET.

T Y LIN INTERNATIONAL
404 CAMINO DEL RIO SOUTH, SUITE 700
SAN DIEGO, CA 92108

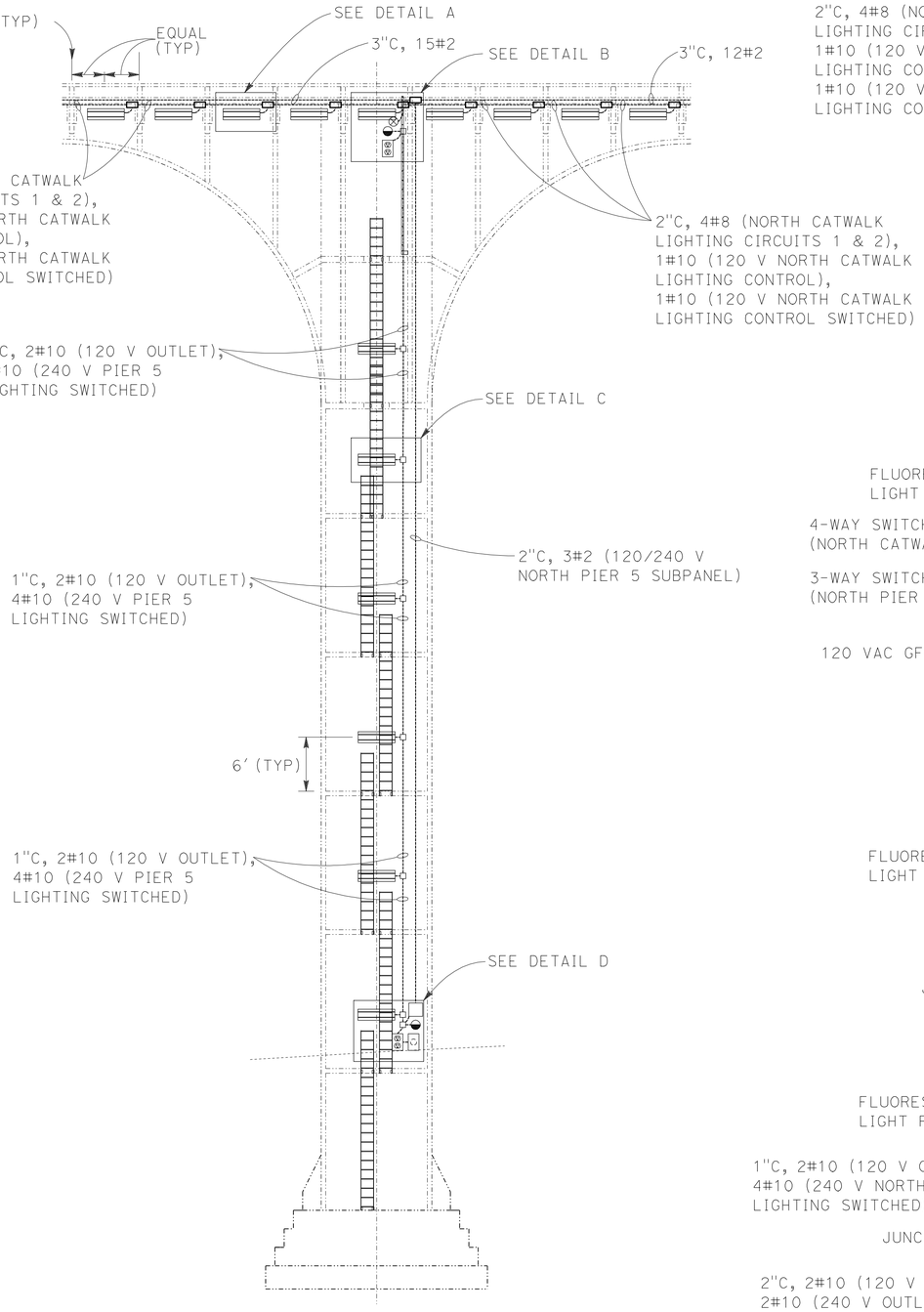

PIER 5 ELEVATION
1/8"=1'-0"

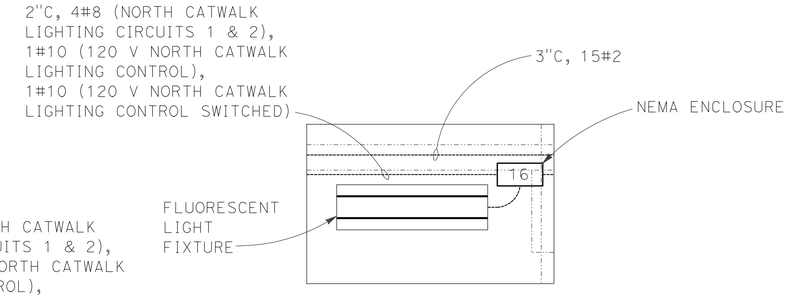

DETAIL A
NTS

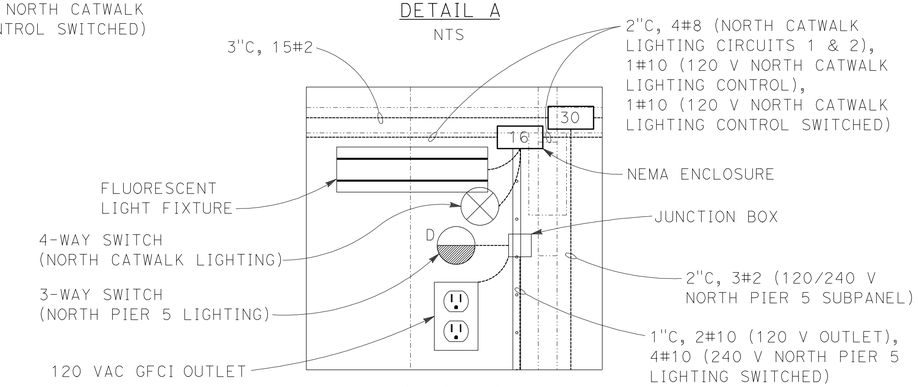

DETAIL B
NTS

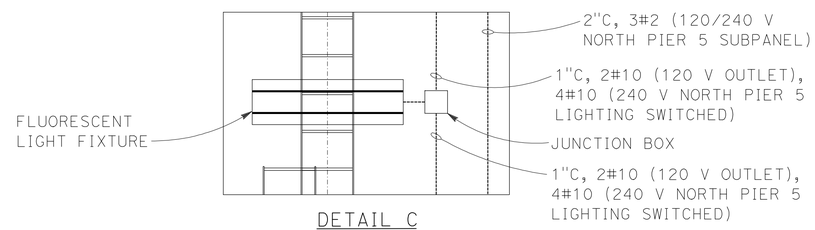

DETAIL C
NTS

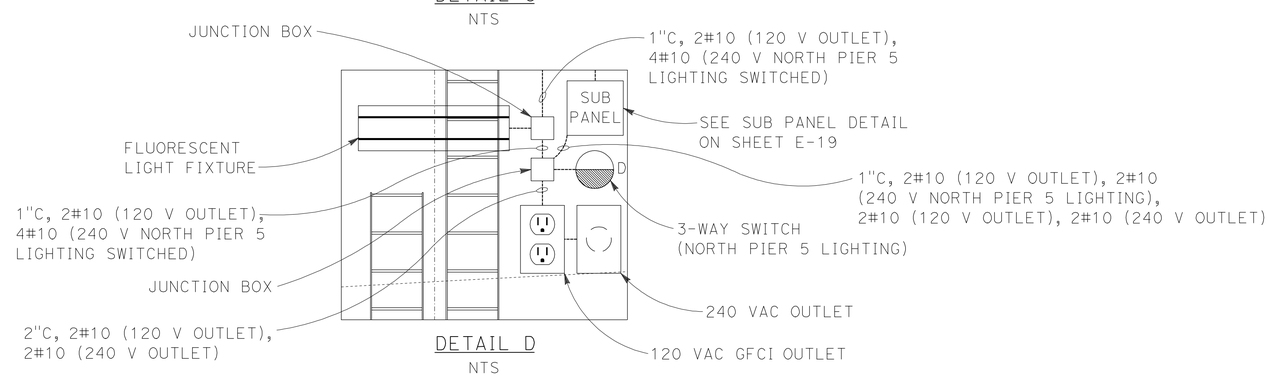

DETAIL D
NTS

LIGHTING
(INTERIOR LIGHTING NORTH PIER 5)

NO SCALE

E-7

APPROVED FOR ELECTRICAL WORK ONLY

STATE OF CALIFORNIA - DEPARTMENT OF TRANSPORTATION
Caltrans®

CONSULTANT FUNCTIONAL SUPERVISOR: BRIAN PECUS

CHIAMING CHI — CALCULATED-DESIGNED BY
ALLAN MORRIS — CHECKED BY

REVISED BY — DATE REVISED

LAST REVISION 02-07-13 — DATE PLOTTED => 13-MAR-2013 — TIME PLOTTED => 22:45

Dist	COUNTY	ROUTE	POST MILES TOTAL PROJECT	SHEET No.	TOTAL SHEETS
11	SD	163	1.4	58	147

REGISTERED ELECTRICAL ENGINEER 02-07-13 DATE

PLANS APPROVAL DATE 03-04-13

REGISTERED PROFESSIONAL ENGINEER ALLAN RAY MORRIS No. 16958 Exp. 06/30/13 ELECTRICAL STATE OF CALIFORNIA

THE STATE OF CALIFORNIA OR ITS OFFICERS OR AGENTS SHALL NOT BE RESPONSIBLE FOR THE ACCURACY OR COMPLETENESS OF SCANNED COPIES OF THIS PLAN SHEET.

T Y LIN INTERNATIONAL
404 CAMINO DEL RIO SOUTH, SUITE 700
SAN DIEGO, CA 92108

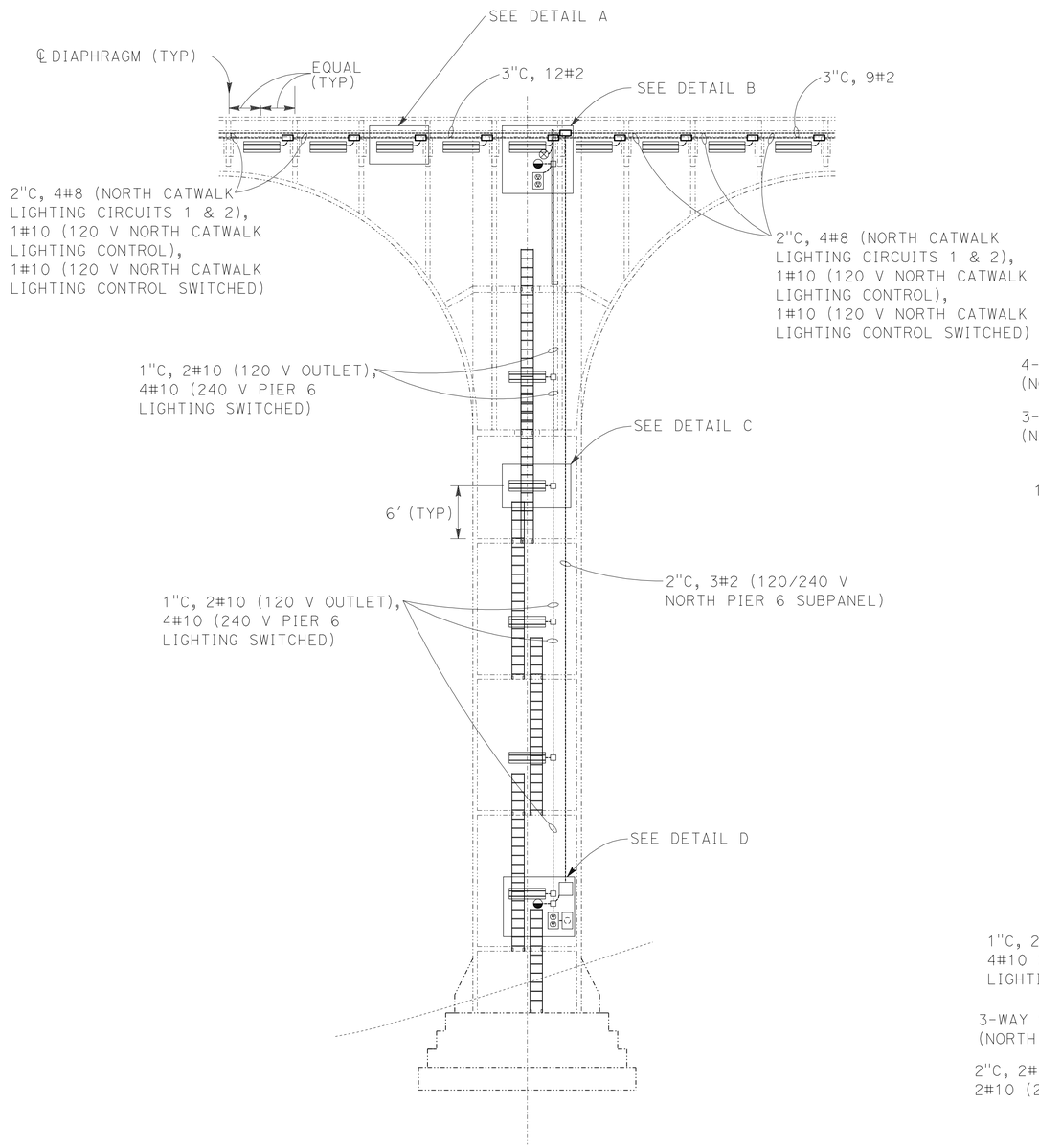

PIER 6 ELEVATION
1/8"=1'-0"

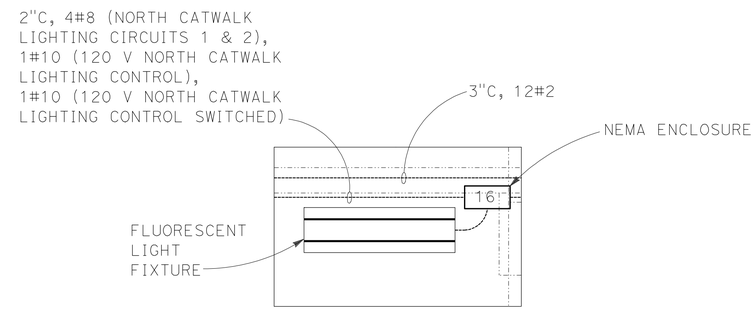

DETAIL A
NTS

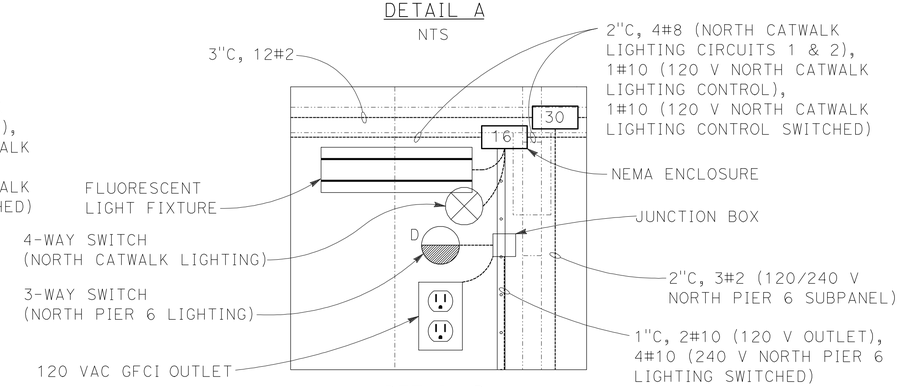

DETAIL B
NTS

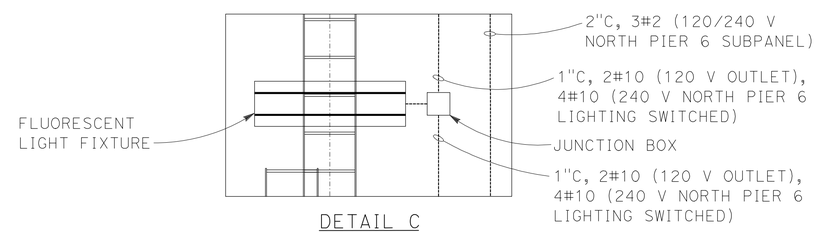

DETAIL C
NTS

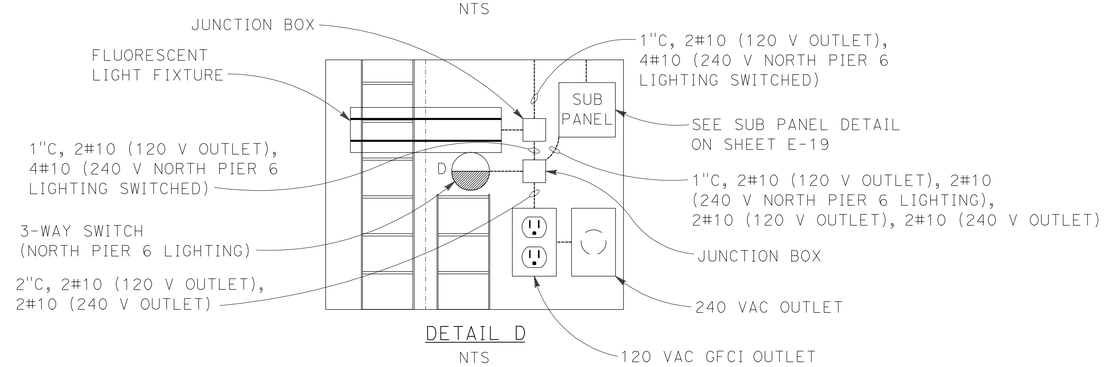

DETAIL D
NTS

LIGHTING
(INTERIOR LIGHTING NORTH PIER 6)

NO SCALE

E-8

APPROVED FOR ELECTRICAL WORK ONLY

STATE OF CALIFORNIA - DEPARTMENT OF TRANSPORTATION
Caltrans®

CONSULTANT FUNCTIONAL SUPERVISOR: BRIAN PECUS
CALCULATED-DESIGNED BY: ALLAN MORRIS
CHECKED BY: CHIAMING CHI
REVISED BY / DATE REVISED

LAST REVISION 02-07-13
DATE PLOTTED => 13-MAR-2013
TIME PLOTTED => 22:46

Dist	COUNTY	ROUTE	POST MILES TOTAL PROJECT	SHEET No.	TOTAL SHEETS
11	SD	163	1.4	59	147

02-07-13
REGISTERED ELECTRICAL ENGINEER DATE

03-04-13
PLANS APPROVAL DATE

REGISTERED PROFESSIONAL ENGINEER
ALLAN RAY MORRIS
No. 16958
Exp. 06/30/13
ELECTRICAL
STATE OF CALIFORNIA

THE STATE OF CALIFORNIA OR ITS OFFICERS OR AGENTS SHALL NOT BE RESPONSIBLE FOR THE ACCURACY OR COMPLETENESS OF SCANNED COPIES OF THIS PLAN SHEET.

T Y LIN INTERNATIONAL
404 CAMINO DEL RIO SOUTH, SUITE 700
SAN DIEGO, CA 92108

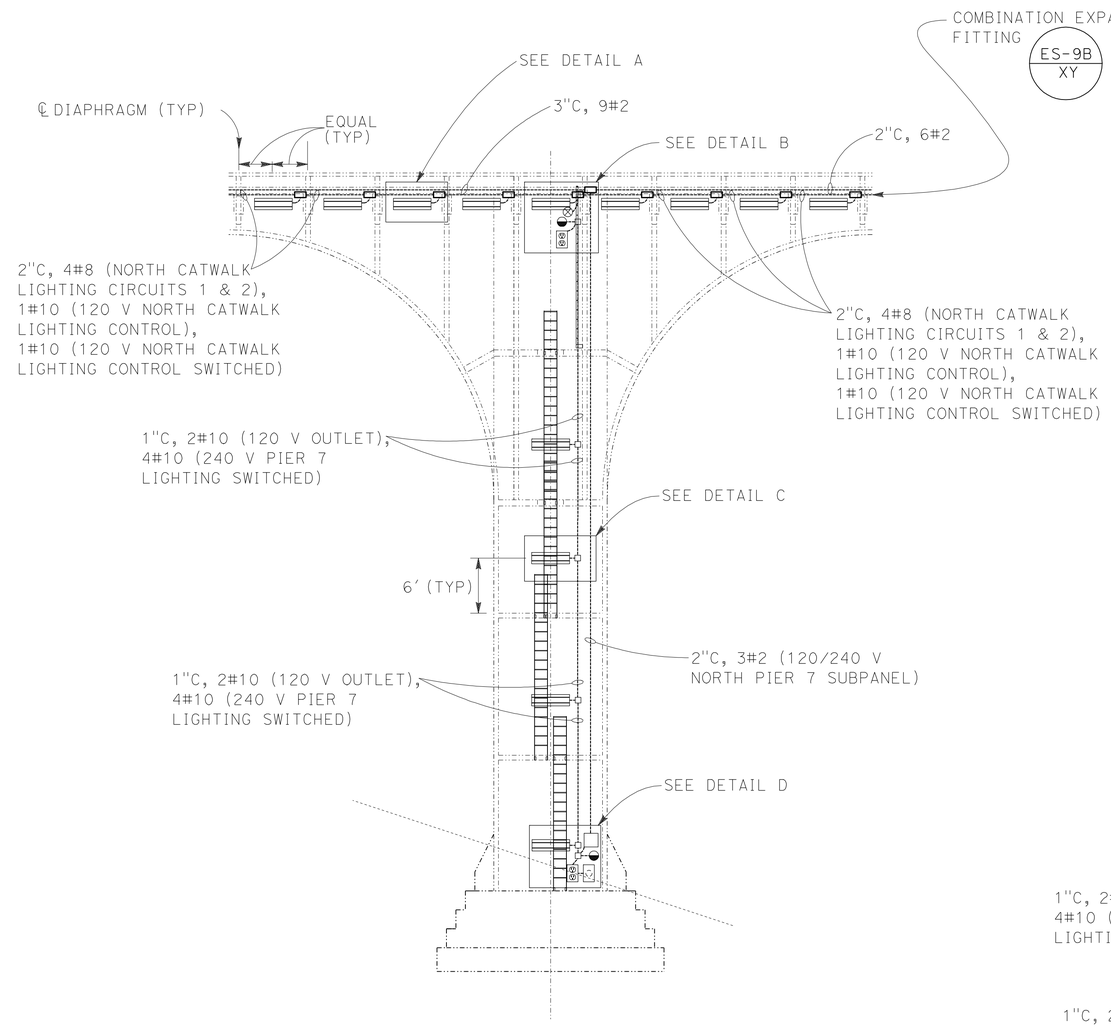

PIER 7 ELEVATION
1/8"=1'-0"

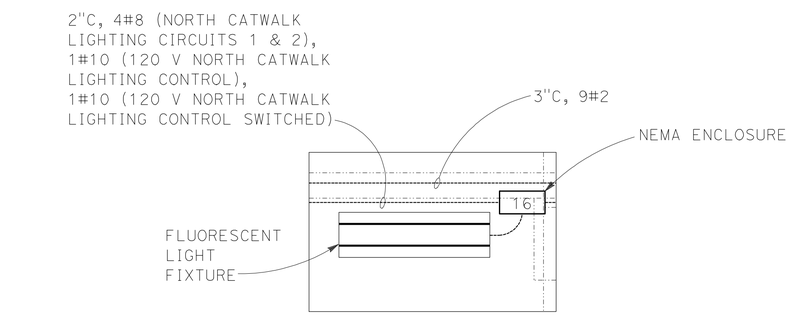

DETAIL A
NTS

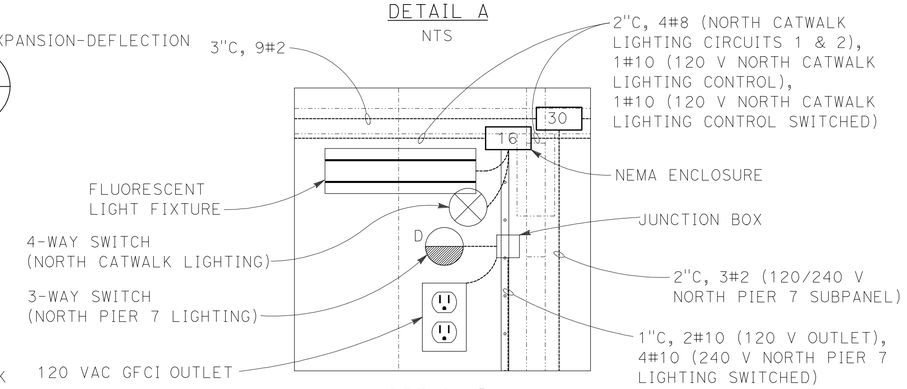

DETAIL B
NTS

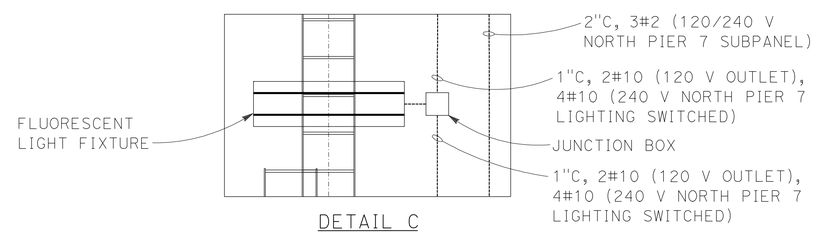

DETAIL C
NTS

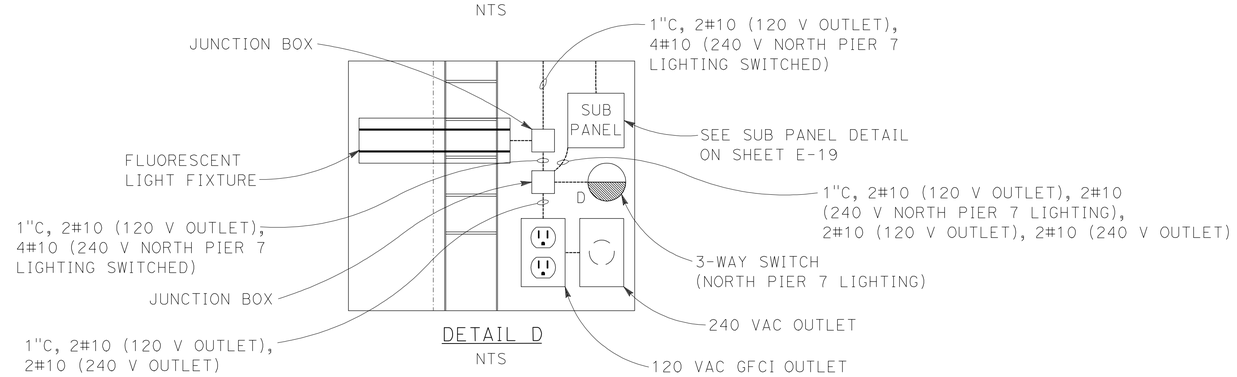

DETAIL D
NTS

LIGHTING
(INTERIOR LIGHTING NORTH PIER 7)

NO SCALE

E-9

APPROVED FOR ELECTRICAL WORK ONLY

STATE OF CALIFORNIA - DEPARTMENT OF TRANSPORTATION
Caltrans®
CONSULTANT FUNCTIONAL SUPERVISOR: BRIAN PECUS
CHIAMING CHI
CALCULATED-DESIGNED BY: ALLAN MORRIS
CHECKED BY
REVISED BY
DATE REVISED

LAST REVISION 02-07-13
DATE PLOTTED => 13-MAR-2013
TIME PLOTTED => 22:46

Dist	COUNTY	ROUTE	POST MILES TOTAL PROJECT	SHEET No.	TOTAL SHEETS
11	SD	163	1.4	60	147

REGISTERED ELECTRICAL ENGINEER 02-07-13 DATE

PLANS APPROVAL DATE 03-04-13

REGISTERED PROFESSIONAL ENGINEER ALLAN RAY MORRIS No. 16958 Exp. 06/30/13 ELECTRICAL STATE OF CALIFORNIA

THE STATE OF CALIFORNIA OR ITS OFFICERS OR AGENTS SHALL NOT BE RESPONSIBLE FOR THE ACCURACY OR COMPLETENESS OF SCANNED COPIES OF THIS PLAN SHEET.

T Y LIN INTERNATIONAL
404 CAMINO DEL RIO SOUTH, SUITE 700
SAN DIEGO, CA 92108

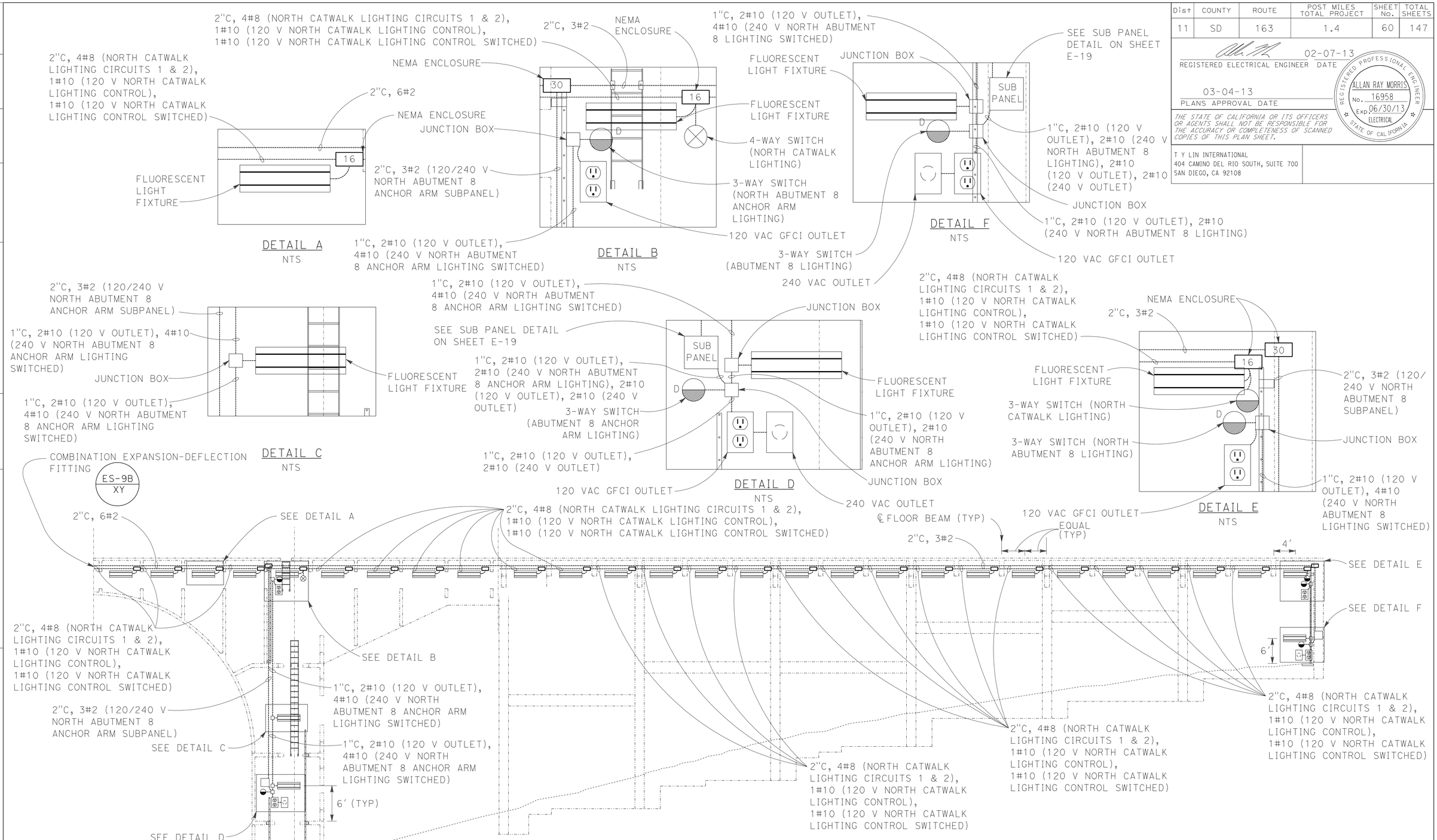

LIGHTING
(INTERIOR LIGHTING NORTH ABUTMENT 8)

NO SCALE

APPROVED FOR ELECTRICAL WORK ONLY

E-10

STATE OF CALIFORNIA - DEPARTMENT OF TRANSPORTATION
Caltrans®

CONSULTANT FUNCTIONAL SUPERVISOR: BRIAN PECUS

CALCULATED-DESIGNED BY: CHIAMING CHI
CHECKED BY: ALLAN MORRIS

REVISED BY | DATE REVISED

LAST REVISION 02-07-13 | DATE PLOTTED => 13-MAR-2013 | TIME PLOTTED => 22:46

Dist	COUNTY	ROUTE	POST MILES TOTAL PROJECT	SHEET No.	TOTAL SHEETS
11	SD	163	1.4	61	147

REGISTERED ELECTRICAL ENGINEER 02-07-13 DATE

PLANS APPROVAL DATE 03-04-13

REGISTERED PROFESSIONAL ENGINEER ALLAN RAY MORRIS No. 16958 Exp. 06/30/13 ELECTRICAL STATE OF CALIFORNIA

THE STATE OF CALIFORNIA OR ITS OFFICERS OR AGENTS SHALL NOT BE RESPONSIBLE FOR THE ACCURACY OR COMPLETENESS OF SCANNED COPIES OF THIS PLAN SHEET.

T Y LIN INTERNATIONAL
404 CAMINO DEL RIO SOUTH, SUITE 700
SAN DIEGO, CA 92108

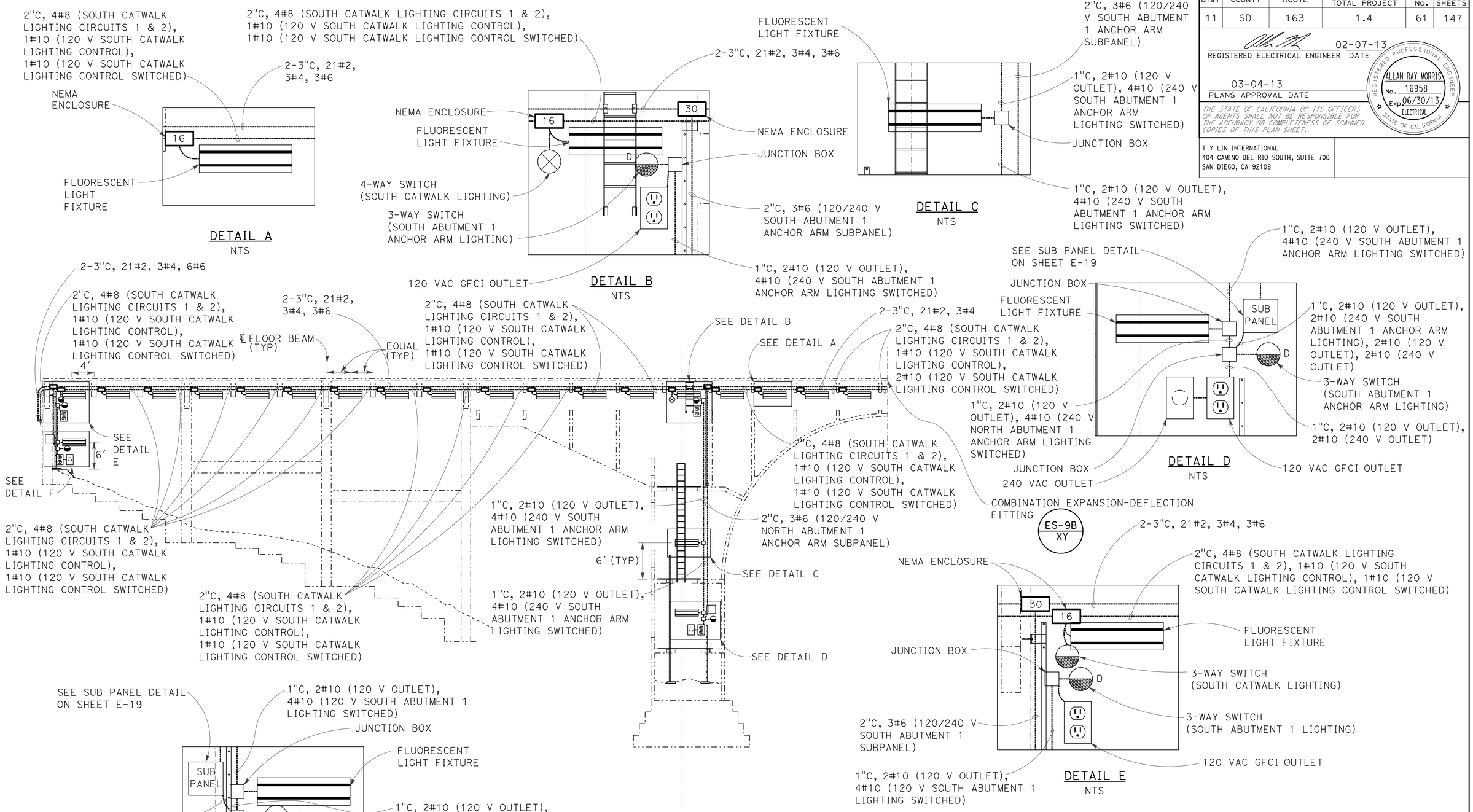

LIGHTING
(INTERIOR LIGHTING SOUTH ABUTMENT 1)

NO SCALE

E-11

APPROVED FOR ELECTRICAL WORK ONLY

STATE OF CALIFORNIA - DEPARTMENT OF TRANSPORTATION
Caltrans®
CONSULTANT FUNCTIONAL SUPERVISOR: BRIAN PECUS
CALCULATED-DESIGNED BY: ALLAN MORRIS
CHECKED BY: CHIAMING CHI
REVISED BY
DATE REVISED

LAST REVISION 02-07-13
DATE PLOTTED => 13-MAR-2013
TIME PLOTTED => 22:31

Dist	COUNTY	ROUTE	POST MILES TOTAL PROJECT	SHEET No.	TOTAL SHEETS
11	SD	163	1.4	62	147

REGISTERED ELECTRICAL ENGINEER 02-07-13 DATE

PLANS APPROVAL DATE 03-04-13

REGISTERED PROFESSIONAL ENGINEER ALLAN RAY MORRIS No. 16958 Exp. 06/30/13 ELECTRICAL STATE OF CALIFORNIA

THE STATE OF CALIFORNIA OR ITS OFFICERS OR AGENTS SHALL NOT BE RESPONSIBLE FOR THE ACCURACY OR COMPLETENESS OF SCANNED COPIES OF THIS PLAN SHEET.

T Y LIN INTERNATIONAL
404 CAMINO DEL RIO SOUTH, SUITE 700
SAN DIEGO, CA 92108

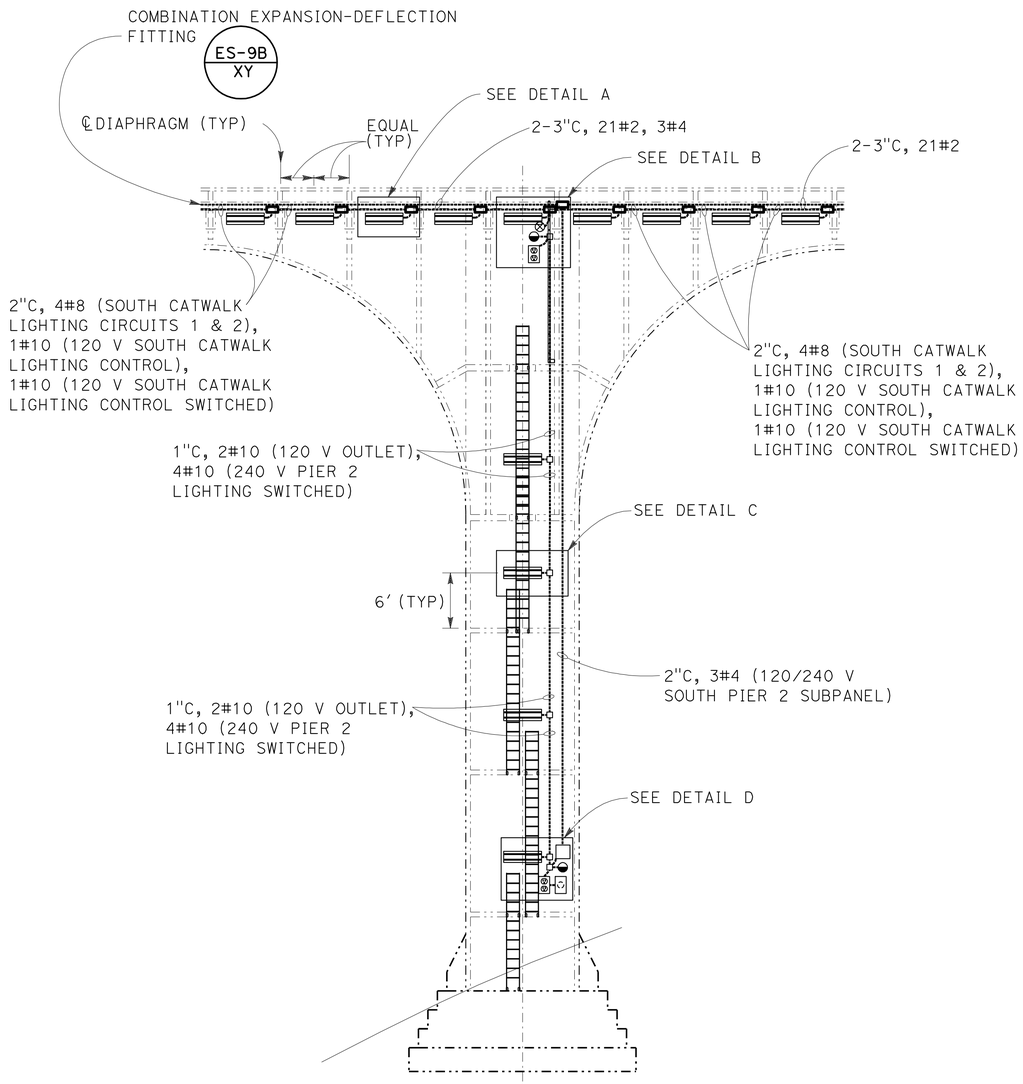

PIER 2 ELEVATION
1/8"=1'-0"

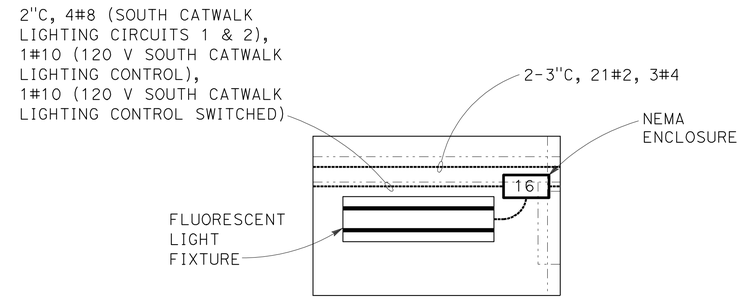

DETAIL A
NTS

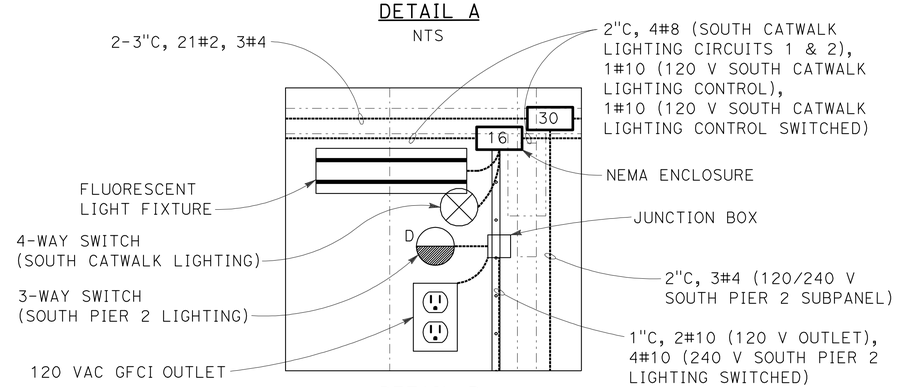

DETAIL B
NTS

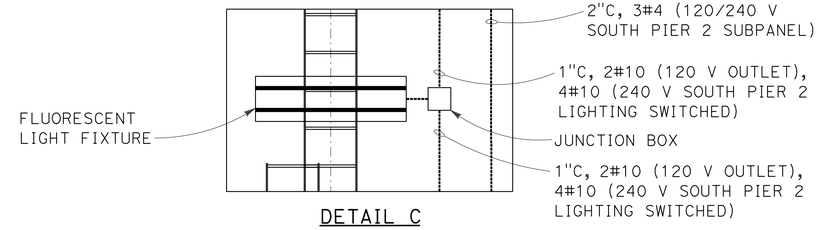

DETAIL C
NTS

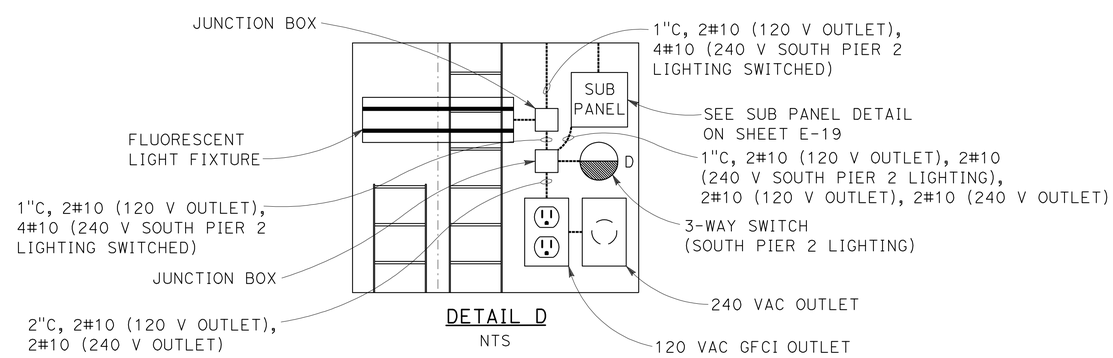

DETAIL D
NTS

LIGHTING
(INTERIOR LIGHTING SOUTH PIER 2)

NO SCALE

E-12

APPROVED FOR ELECTRICAL WORK ONLY

STATE OF CALIFORNIA - DEPARTMENT OF TRANSPORTATION
Caltrans
CONSULTANT FUNCTIONAL SUPERVISOR BRIAN PECUS
CALCULATED-DESIGNED BY CHIAMING CHI
CHECKED BY ALLAN MORRIS
REVISED BY
DATE REVISED

LAST REVISION 02-07-13
DATE PLOTTED => 13-MAR-2013
TIME PLOTTED => 22:31

Dist	COUNTY	ROUTE	POST MILES TOTAL PROJECT	SHEET No.	TOTAL SHEETS
11	SD	163	1.4	63	147

REGISTERED ELECTRICAL ENGINEER 02-07-13 DATE

PLANS APPROVAL DATE 03-04-13

REGISTERED PROFESSIONAL ENGINEER ALLAN RAY MORRIS No. 16958 Exp. 06/30/13 ELECTRICAL STATE OF CALIFORNIA

THE STATE OF CALIFORNIA OR ITS OFFICERS OR AGENTS SHALL NOT BE RESPONSIBLE FOR THE ACCURACY OR COMPLETENESS OF SCANNED COPIES OF THIS PLAN SHEET.

T Y LIN INTERNATIONAL
404 CAMINO DEL RIO SOUTH, SUITE 700
SAN DIEGO, CA 92108

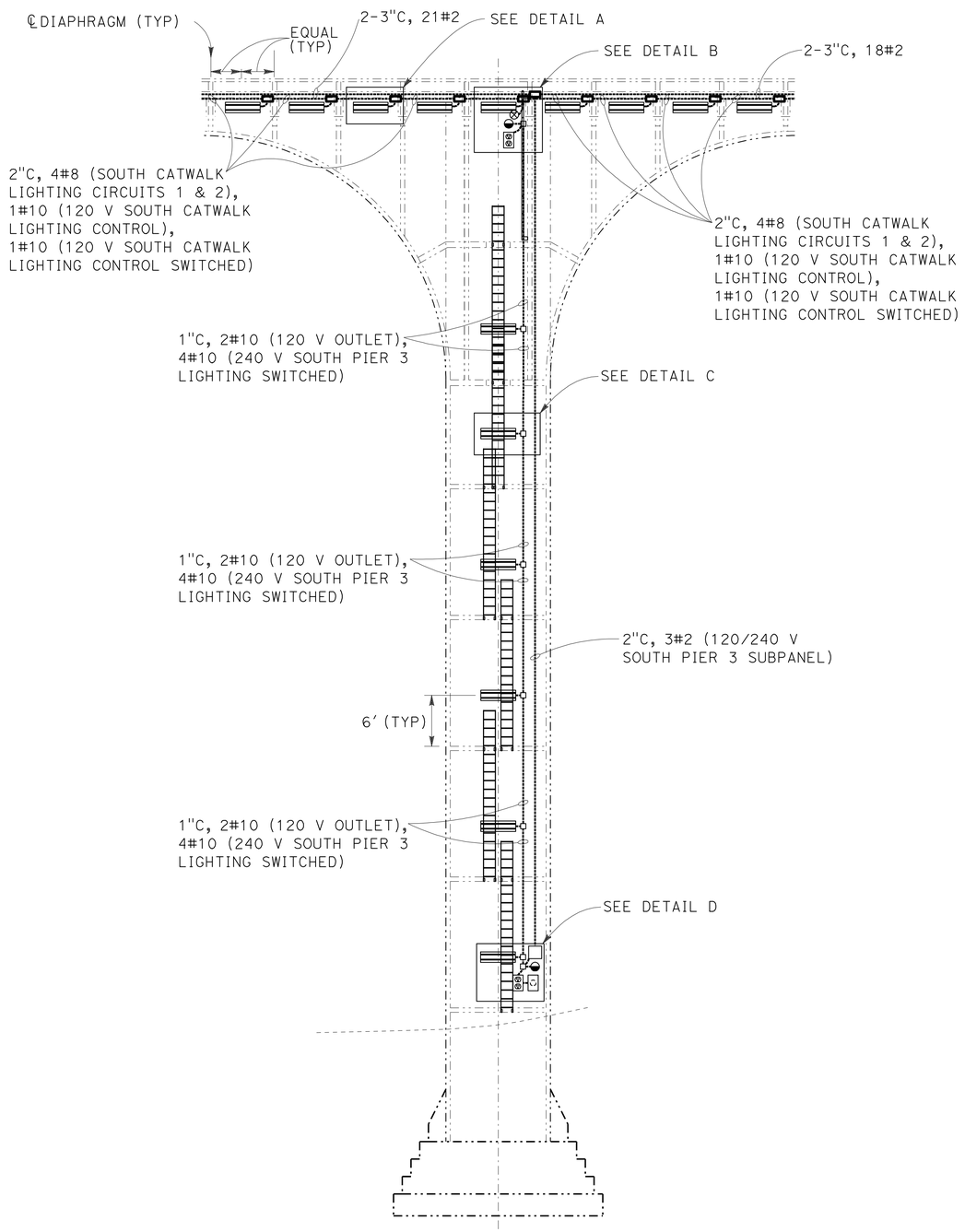

PIER 3 ELEVATION
1/8"=1'-0"

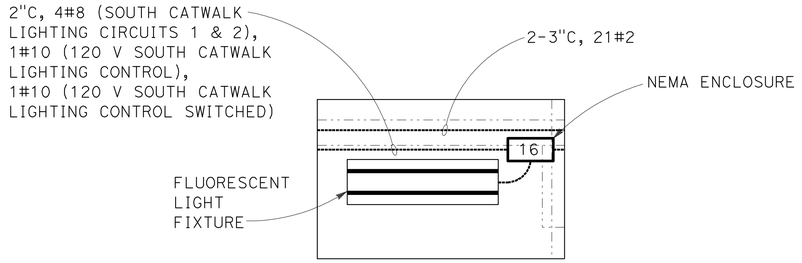

DETAIL A
NTS

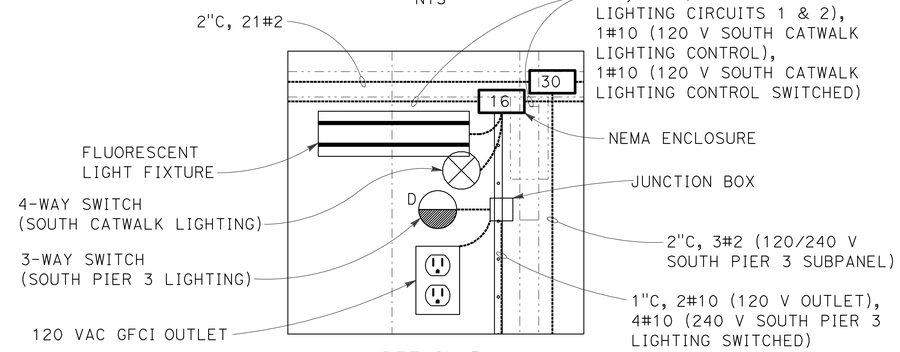

DETAIL B
NTS

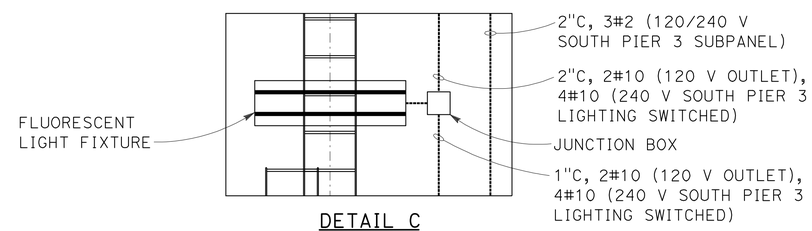

DETAIL C
NTS

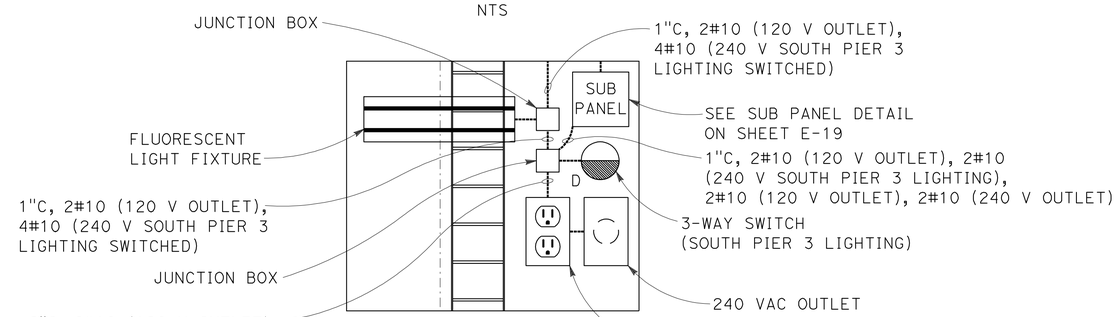

DETAIL D
NTS

LIGHTING
(INTERIOR LIGHTING SOUTH PIER 3)

NO SCALE

E-13

APPROVED FOR ELECTRICAL WORK ONLY

STATE OF CALIFORNIA - DEPARTMENT OF TRANSPORTATION
Caltrans

CONSULTANT FUNCTIONAL SUPERVISOR: BRIAN PECUS
CALCULATED-DESIGNED BY: CHIAMING CHI
CHECKED BY: ALLAN MORRIS
REVISED BY
DATE REVISED

LAST REVISION 02-07-13
DATE PLOTTED => 13-MAR-2013
TIME PLOTTED => 22:32

Dist	COUNTY	ROUTE	POST MILES TOTAL PROJECT	SHEET No.	TOTAL SHEETS
11	SD	163	1.4	64	147

REGISTERED ELECTRICAL ENGINEER 02-07-13 DATE

PLANS APPROVAL DATE 03-04-13

REGISTERED PROFESSIONAL ENGINEER ALLAN RAY MORRIS No. 16958 Exp. 06/30/13 ELECTRICAL STATE OF CALIFORNIA

THE STATE OF CALIFORNIA OR ITS OFFICERS OR AGENTS SHALL NOT BE RESPONSIBLE FOR THE ACCURACY OR COMPLETENESS OF SCANNED COPIES OF THIS PLAN SHEET.

T Y LIN INTERNATIONAL
404 CAMINO DEL RIO SOUTH, SUITE 700
SAN DIEGO, CA 92108

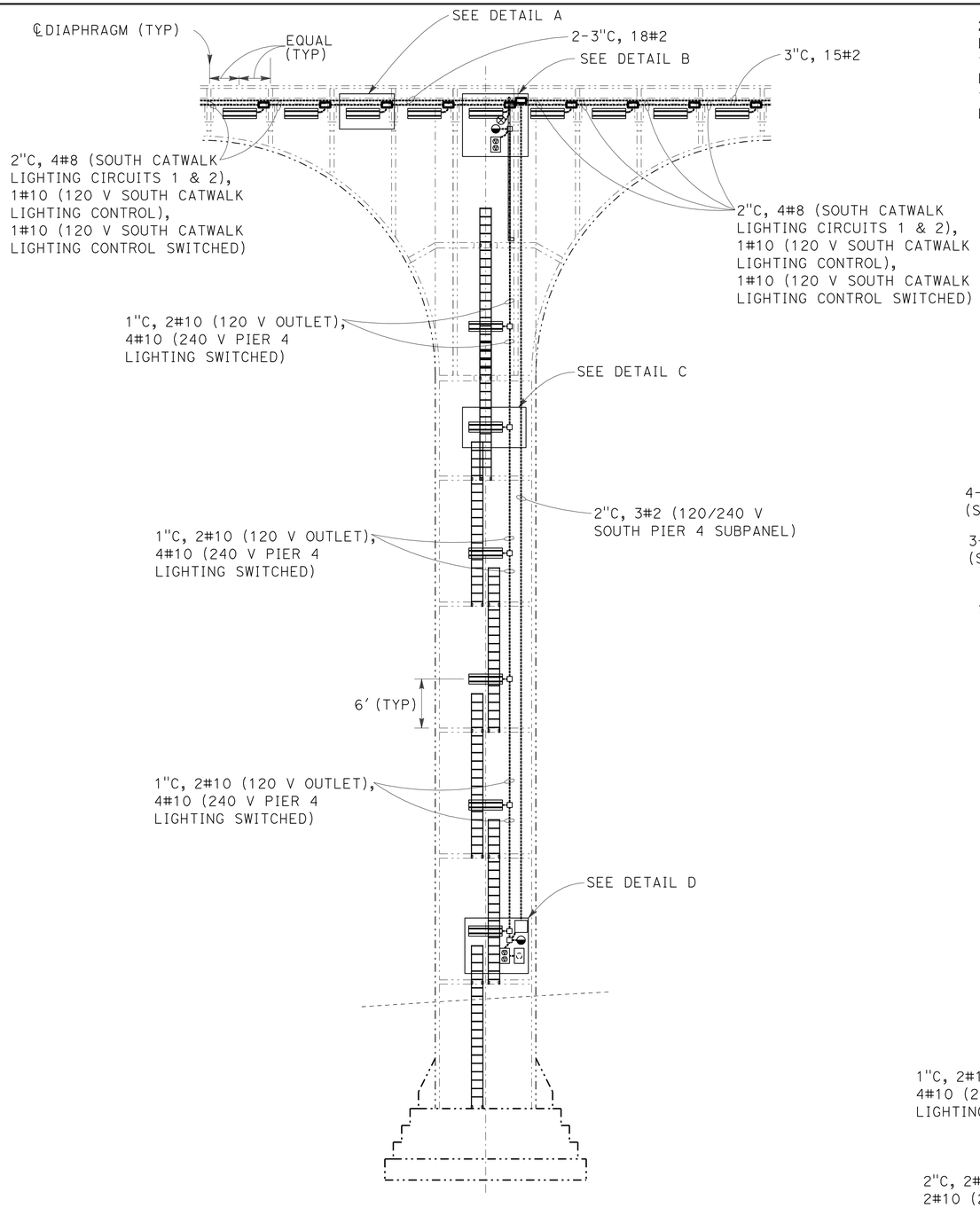

PIER 4 ELEVATION
1/8"=1'-0"

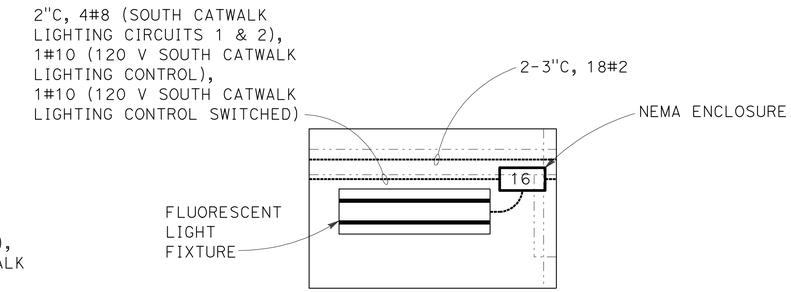

DETAIL A
NTS

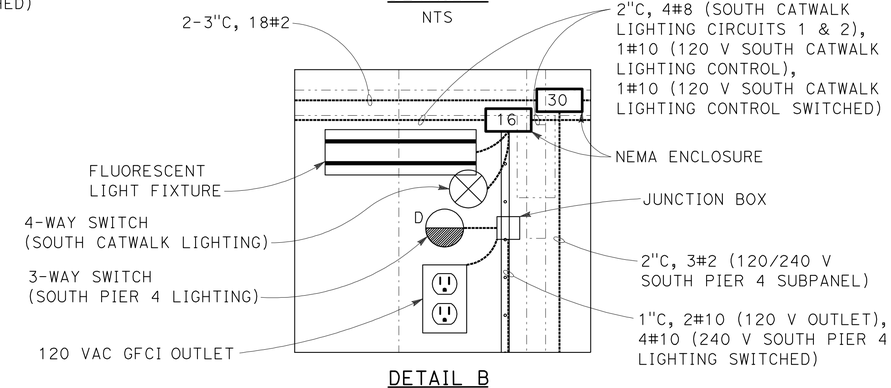

DETAIL B
NTS

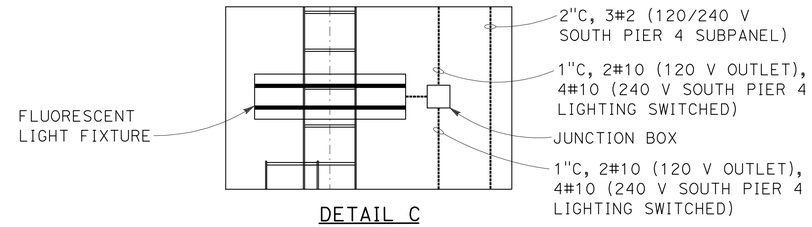

DETAIL C
NTS

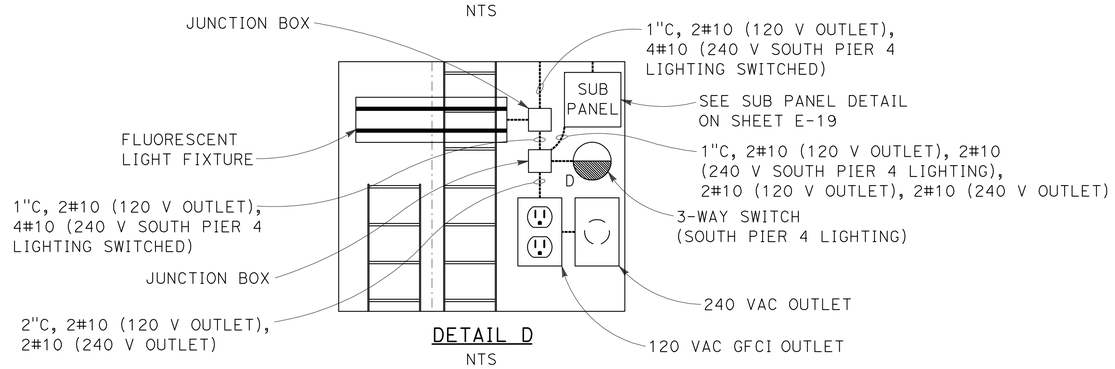

DETAIL D
NTS

LIGHTING
(INTERIOR LIGHTING SOUTH PIER 4)

NO SCALE

E-14

APPROVED FOR ELECTRICAL WORK ONLY

STATE OF CALIFORNIA - DEPARTMENT OF TRANSPORTATION
Caltrans
CONSULTANT FUNCTIONAL SUPERVISOR: BRIAN PECUS
CHIAMING CHI — CALCULATED-DESIGNED BY
ALLAN MORRIS — CHECKED BY
REVISED BY — DATE REVISED

LAST REVISION 02-07-13 | DATE PLOTTED => 13-MAR-2013 | TIME PLOTTED => 22:32

Dist	COUNTY	ROUTE	POST MILES TOTAL PROJECT	SHEET No.	TOTAL SHEETS
11	SD	163	1.4	65	147

REGISTERED ELECTRICAL ENGINEER 02-07-13

PLANS APPROVAL DATE 03-04-13

REGISTERED PROFESSIONAL ENGINEER ALLAN RAY MORRIS No. 16958 Exp. 06/30/13 ELECTRICAL STATE OF CALIFORNIA

THE STATE OF CALIFORNIA OR ITS OFFICERS OR AGENTS SHALL NOT BE RESPONSIBLE FOR THE ACCURACY OR COMPLETENESS OF SCANNED COPIES OF THIS PLAN SHEET.

T Y LIN INTERNATIONAL
404 CAMINO DEL RIO SOUTH, SUITE 700
SAN DIEGO, CA 92108

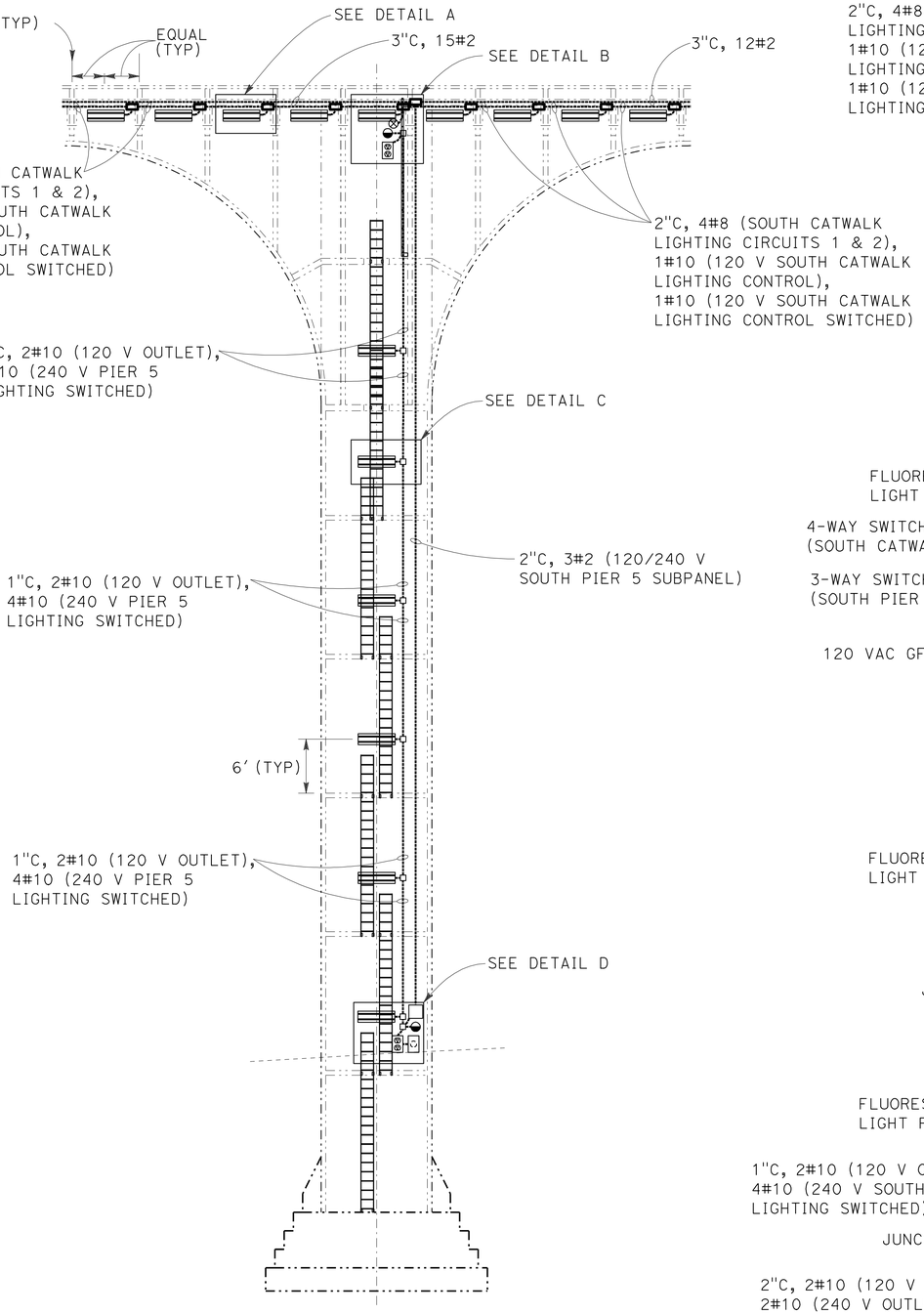

PIER 5 ELEVATION
1/8"=1'-0"

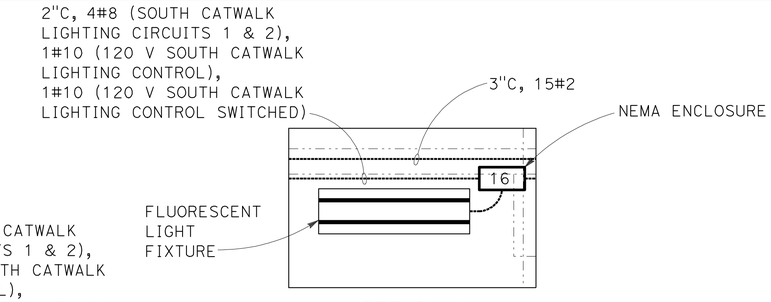

DETAIL A
NTS

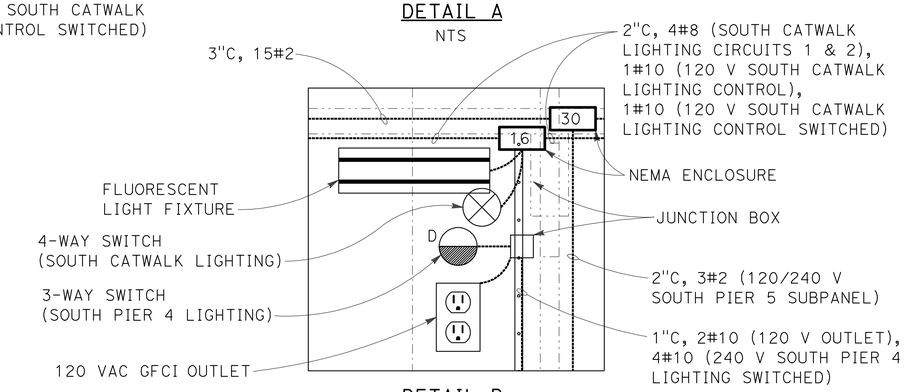

DETAIL B
NTS

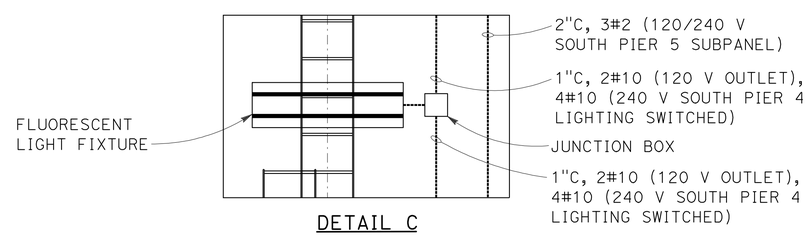

DETAIL C
NTS

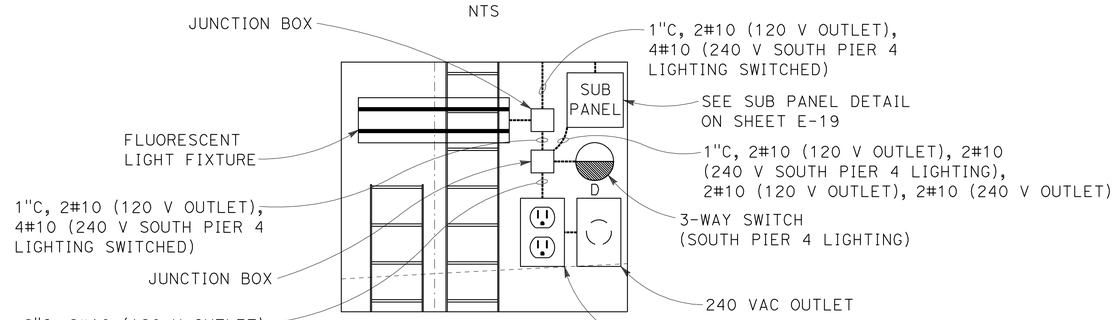

DETAIL D
NTS

LIGHTING
(INTERIOR LIGHTING SOUTH PIER 5)

NO SCALE

E-15

APPROVED FOR ELECTRICAL WORK ONLY

STATE OF CALIFORNIA - DEPARTMENT OF TRANSPORTATION
Caltrans®

CONSULTANT FUNCTIONAL SUPERVISOR: BRIAN PECUS
CALCULATED-DESIGNED BY: ALLAN MORRIS
CHECKED BY: CHIAMING CHI
REVISED BY / DATE REVISED

LAST REVISION 02-07-13 | DATE PLOTTED => 13-MAR-2013 | TIME PLOTTED => 22:33

Dist	COUNTY	ROUTE	POST MILES TOTAL PROJECT	SHEET No.	TOTAL SHEETS
11	SD	163	1.4	66	147

REGISTERED ELECTRICAL ENGINEER 02-07-13 DATE

PLANS APPROVAL DATE 03-04-13

REGISTERED PROFESSIONAL ENGINEER ALLAN RAY MORRIS No. 16958 Exp. 06/30/13 ELECTRICAL STATE OF CALIFORNIA

THE STATE OF CALIFORNIA OR ITS OFFICERS OR AGENTS SHALL NOT BE RESPONSIBLE FOR THE ACCURACY OR COMPLETENESS OF SCANNED COPIES OF THIS PLAN SHEET.

T Y LIN INTERNATIONAL
404 CAMINO DEL RIO SOUTH, SUITE 700
SAN DIEGO, CA 92108

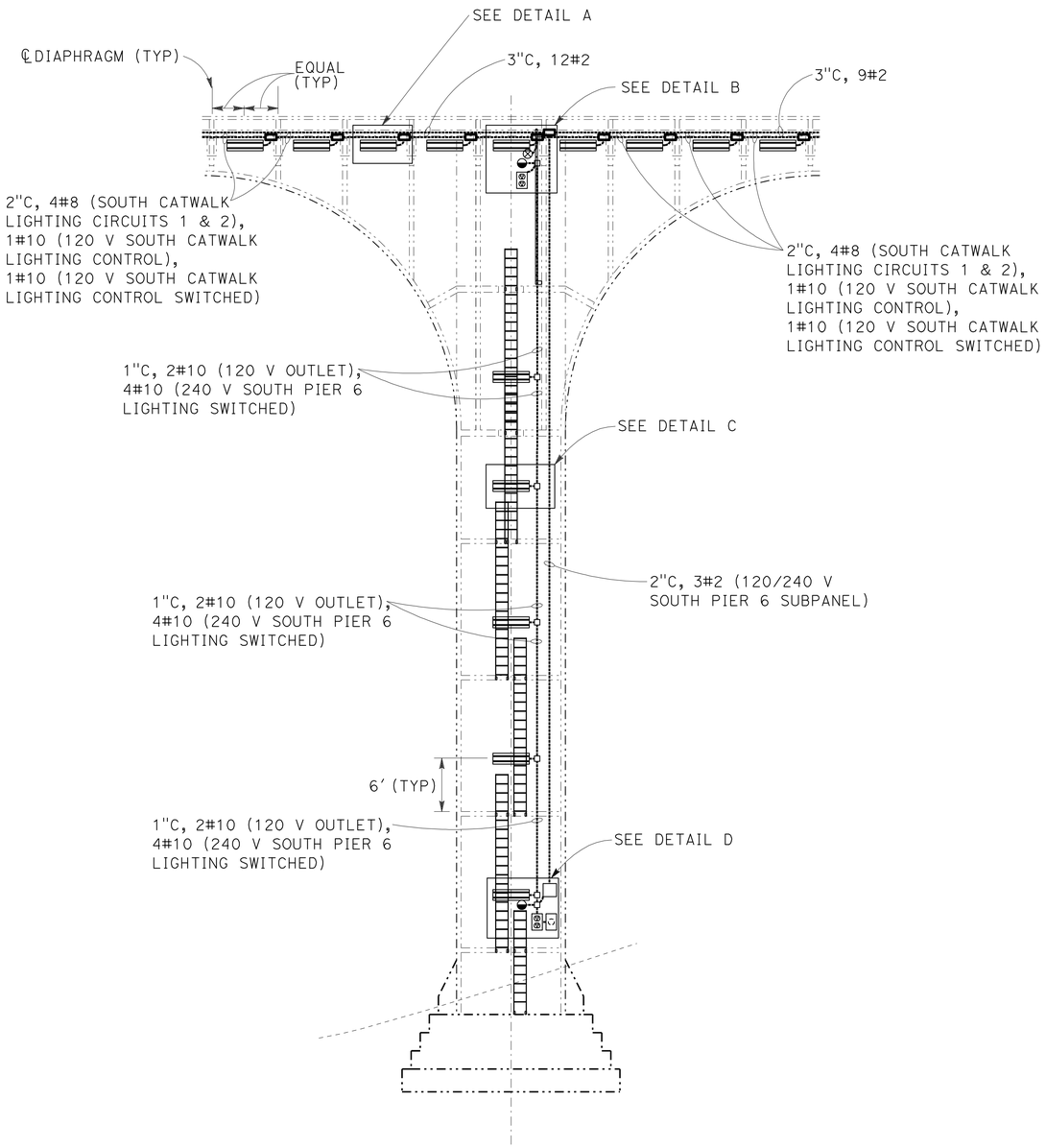

PIER 6 ELEVATION
1/8"=1'-0"

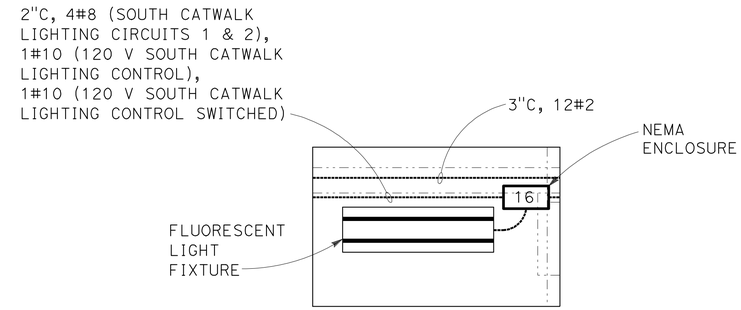

DETAIL A
NTS

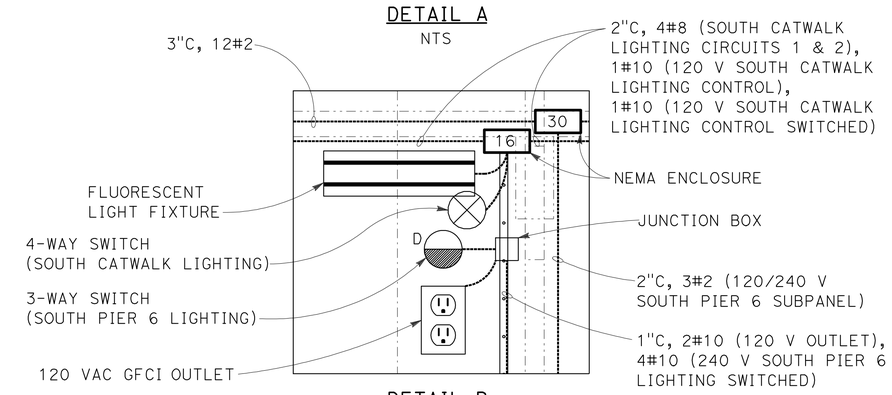

DETAIL B
NTS

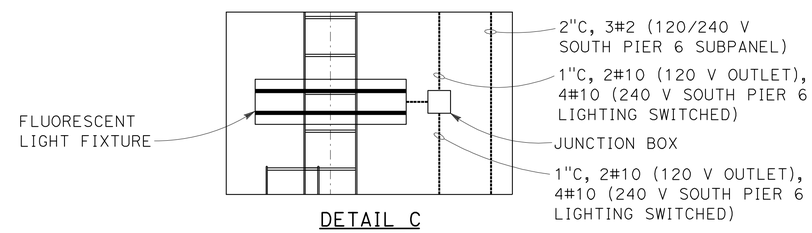

DETAIL C
NTS

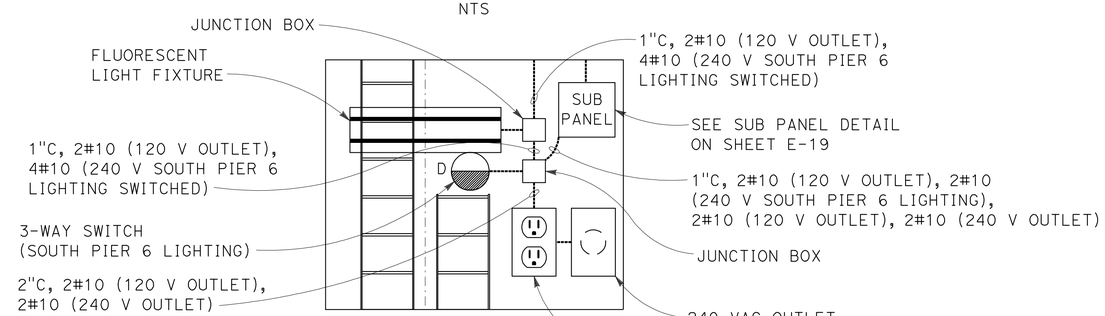

DETAIL D
NTS

LIGHTING
(INTERIOR LIGHTING SOUTH PIER 6)

NO SCALE

E-16

APPROVED FOR ELECTRICAL WORK ONLY

STATE OF CALIFORNIA - DEPARTMENT OF TRANSPORTATION
Caltrans

CONSULTANT FUNCTIONAL SUPERVISOR: BRIAN PECUS
CALCULATED-DESIGNED BY: CHIAMING CHI
CHECKED BY: ALLAN MORRIS
REVISED BY
DATE REVISED

LAST REVISION 02-07-13
DATE PLOTTED => 13-MAR-2013
TIME PLOTTED => 22:34

Dist	COUNTY	ROUTE	POST MILES TOTAL PROJECT	SHEET No.	TOTAL SHEETS
11	SD	163	1.4	67	147

REGISTERED ELECTRICAL ENGINEER 02-07-13 DATE

PLANS APPROVAL DATE 03-04-13

REGISTERED PROFESSIONAL ENGINEER ALLAN RAY MORRIS No. 16958 Exp. 06/30/13 ELECTRICAL STATE OF CALIFORNIA

THE STATE OF CALIFORNIA OR ITS OFFICERS OR AGENTS SHALL NOT BE RESPONSIBLE FOR THE ACCURACY OR COMPLETENESS OF SCANNED COPIES OF THIS PLAN SHEET.

T Y LIN INTERNATIONAL
404 CAMINO DEL RIO SOUTH, SUITE 700
SAN DIEGO, CA 92108

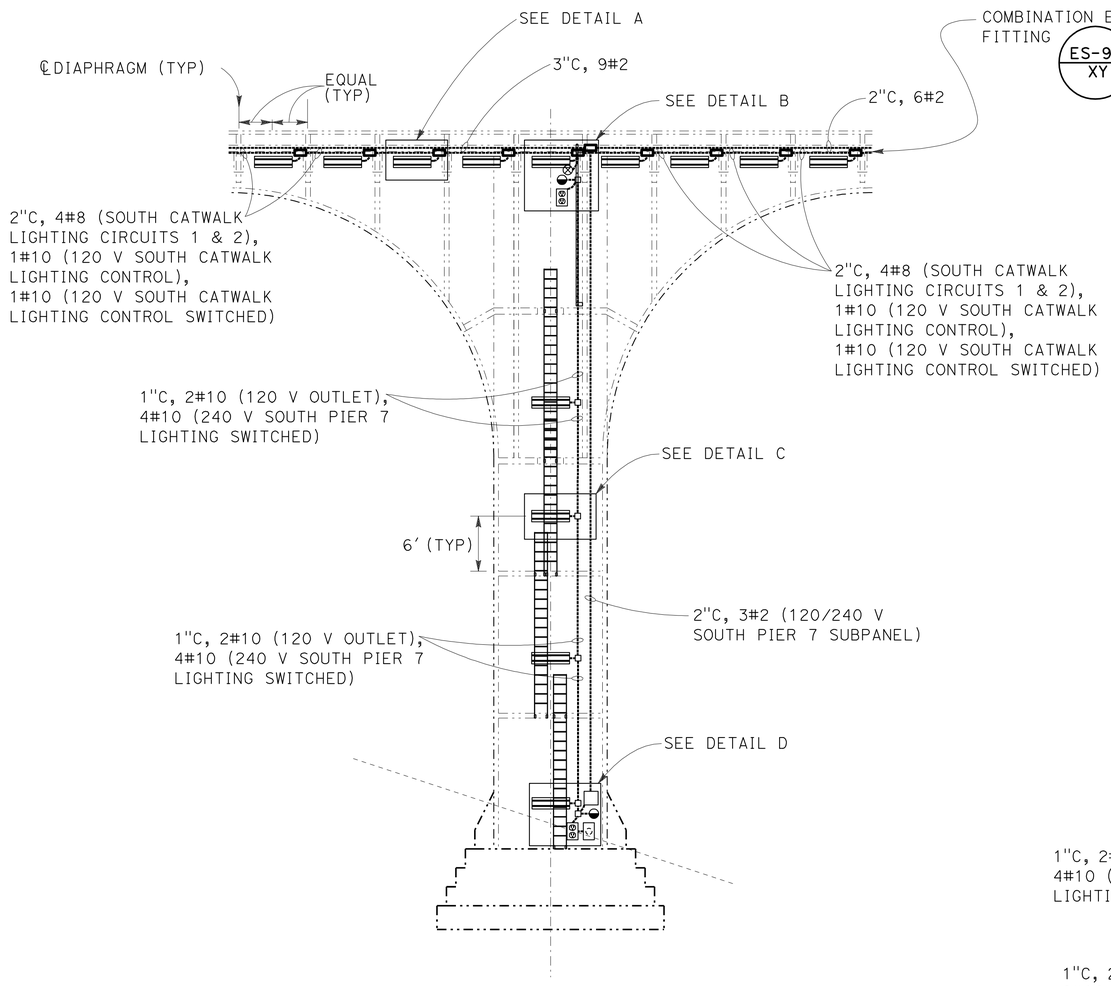

PIER 7 ELEVATION
1/8"=1'-0"

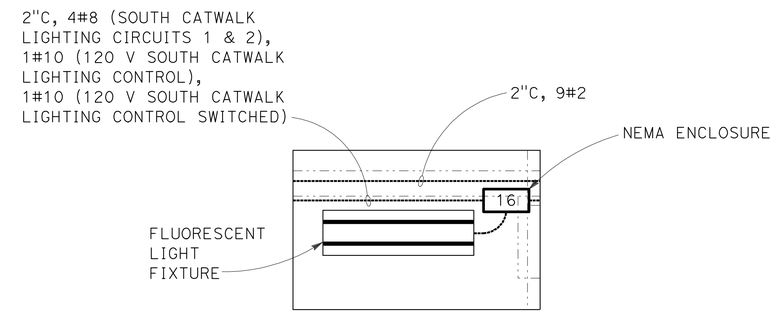

DETAIL A
NTS

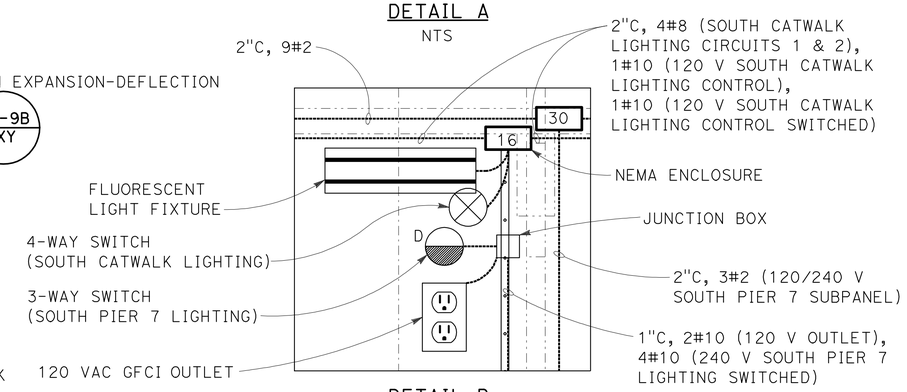

DETAIL B
NTS

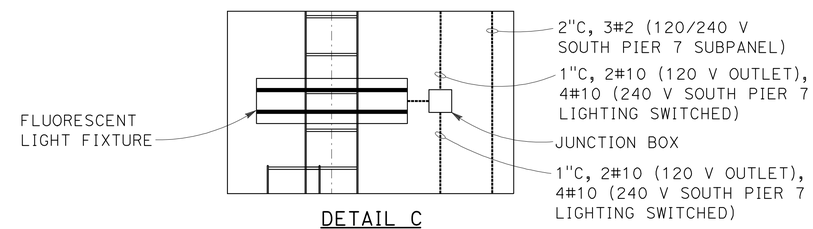

DETAIL C
NTS

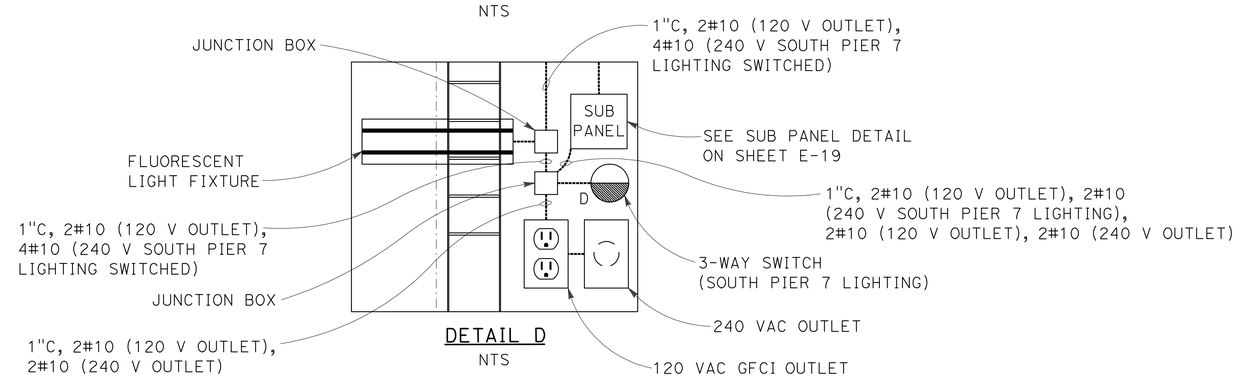

DETAIL D
NTS

LIGHTING
(INTERIOR LIGHTING SOUTH PIER 7)

NO SCALE

E-17

APPROVED FOR ELECTRICAL WORK ONLY

STATE OF CALIFORNIA - DEPARTMENT OF TRANSPORTATION
Caltrans

CONSULTANT FUNCTIONAL SUPERVISOR: BRIAN PECUS
CALCULATED-DESIGNED BY: CHIAMING CHI
CHECKED BY: ALLAN MORRIS
REVISED BY
DATE REVISED

LAST REVISION 02-07-13
DATE PLOTTED => 13-MAR-2013
TIME PLOTTED => 22:34

Dist	COUNTY	ROUTE	POST MILES TOTAL PROJECT	SHEET No.	TOTAL SHEETS
11	SD	163	1.4	68	147

REGISTERED ELECTRICAL ENGINEER 02-07-13 DATE

PLANS APPROVAL DATE 03-04-13

REGISTERED PROFESSIONAL ENGINEER ALLAN RAY MORRIS No. 16958 Exp. 06/30/13 ELECTRICAL STATE OF CALIFORNIA

THE STATE OF CALIFORNIA OR ITS OFFICERS OR AGENTS SHALL NOT BE RESPONSIBLE FOR THE ACCURACY OR COMPLETENESS OF SCANNED COPIES OF THIS PLAN SHEET.

T Y LIN INTERNATIONAL
404 CAMINO DEL RIO SOUTH, SUITE 700
SAN DIEGO, CA 92108

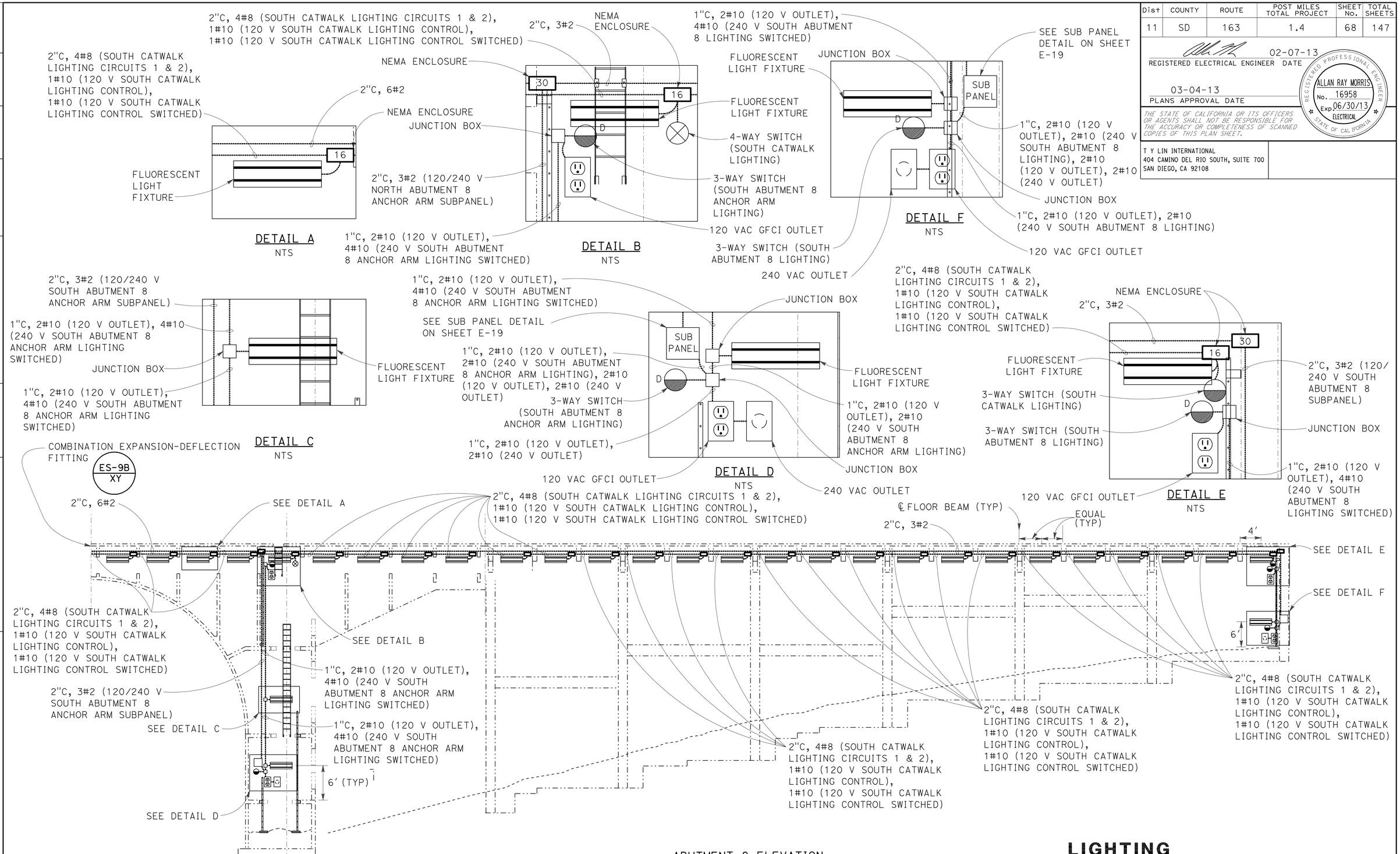

ABUTMENT 8 ELEVATION
1/8"=1'-0"

LIGHTING
(INTERIOR LIGHTING SOUTH ABUTMENT 8)

NO SCALE

E-18

APPROVED FOR ELECTRICAL WORK ONLY

STATE OF CALIFORNIA - DEPARTMENT OF TRANSPORTATION
Caltrans®

CONSULTANT FUNCTIONAL SUPERVISOR: BRIAN PECUS
CALCULATED-DESIGNED BY: ALLAN MORRIS
CHECKED BY: CHIAMING CHI
REVISED BY
DATE REVISED

LAST REVISION 02-07-13
DATE PLOTTED => 13-MAR-2013
TIME PLOTTED => 22:35

Dist	COUNTY	ROUTE	POST MILES TOTAL PROJECT	SHEET No.	TOTAL SHEETS
11	SD	163	1.4	69	147

REGISTERED ELECTRICAL ENGINEER 02-07-13 DATE

PLANS APPROVAL DATE 03-04-13

REGISTERED PROFESSIONAL ENGINEER ALLAN RAY MORRIS No. 16958 Exp. 06/30/13 ELECTRICAL STATE OF CALIFORNIA

THE STATE OF CALIFORNIA OR ITS OFFICERS OR AGENTS SHALL NOT BE RESPONSIBLE FOR THE ACCURACY OR COMPLETENESS OF SCANNED COPIES OF THIS PLAN SHEET.

T Y LIN INTERNATIONAL
404 CAMINO DEL RIO SOUTH, SUITE 700
SAN DIEGO, CA 92108

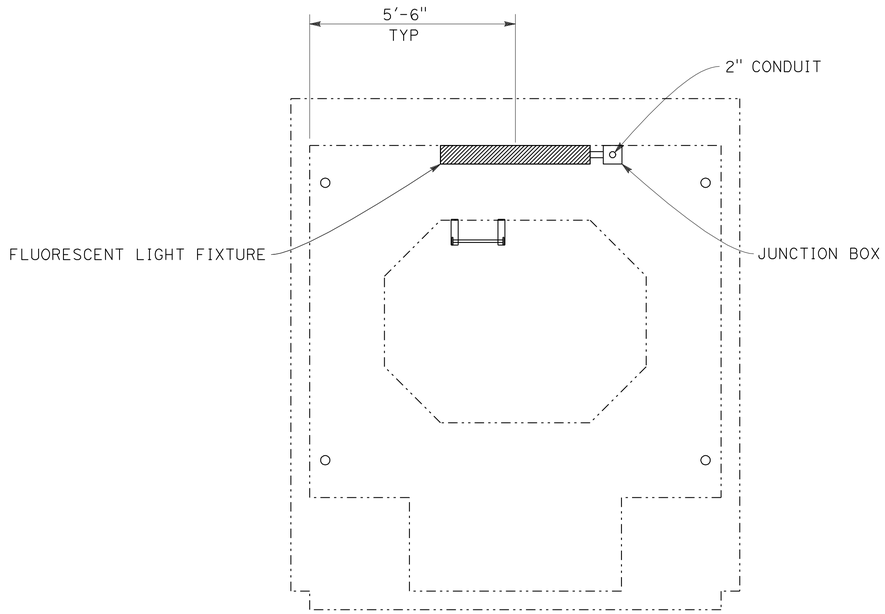

PIER COLUMN TYPICAL SECTION
NTS

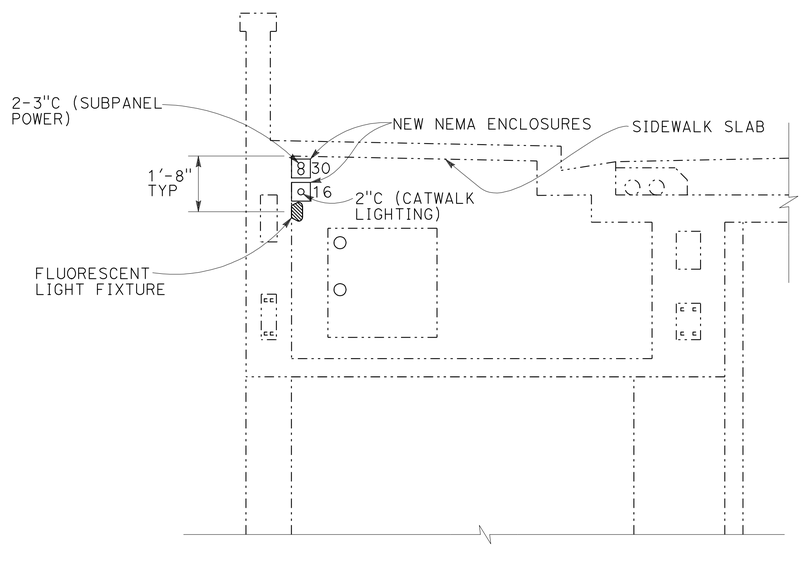

PART BRIDGE TYPICAL SECTION
NTS

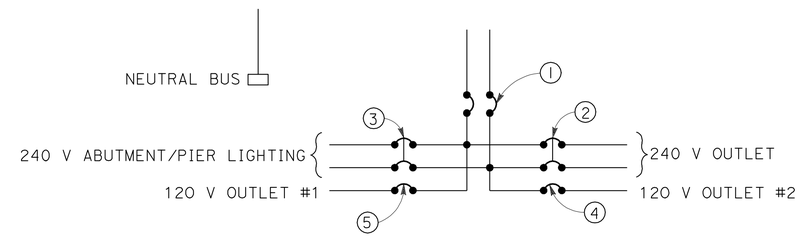

ITEM No.	COMPONENT	NAMEPLATE DESCRIPTION
1	50 A, 240 V, 2P, CB	MAIN BREAKER
2	20 A, 240 V, 2P, GFCI CB	240 V OUTLET
3	10 A, 240 V, 2P, CB	240 V PIER/ABUT LIGHTING
4	20 A, 120 V, 1P, CB	120 V OUTLET #2
5	20 A, 120 V, 1P, CB	120 V OUTLET #1

ABUT/PIER SUBPANEL DETAIL
NTS

ELECTRICAL DETAILS No. 1
(CONDUIT INSTALLATION AND SUBPANEL WIRING)
NO SCALE

E-19

STATE OF CALIFORNIA - DEPARTMENT OF TRANSPORTATION
Caltrans®
CONSULTANT FUNCTIONAL SUPERVISOR: BRIAN PECUS
CALCULATED-DESIGNED BY: CHIAMING CHI
CHECKED BY: ALLAN MORRIS
REVISED BY
DATE REVISED

LAST REVISION 02-07-13
DATE PLOTTED => 13-MAR-2013
TIME PLOTTED => 22:35

Dist	COUNTY	ROUTE	POST MILES TOTAL PROJECT	SHEET No.	TOTAL SHEETS
11	SD	163	1.4	70	147

02-07-13
REGISTERED ELECTRICAL ENGINEER DATE

03-04-13
PLANS APPROVAL DATE

REGISTERED PROFESSIONAL ENGINEER
ALLAN RAY MORRIS
No. 16958
Exp. 06/30/13
ELECTRICAL
STATE OF CALIFORNIA

THE STATE OF CALIFORNIA OR ITS OFFICERS OR AGENTS SHALL NOT BE RESPONSIBLE FOR THE ACCURACY OR COMPLETENESS OF SCANNED COPIES OF THIS PLAN SHEET.

T Y LIN INTERNATIONAL
404 CAMINO DEL RIO SOUTH, SUITE 700
SAN DIEGO, CA 92108

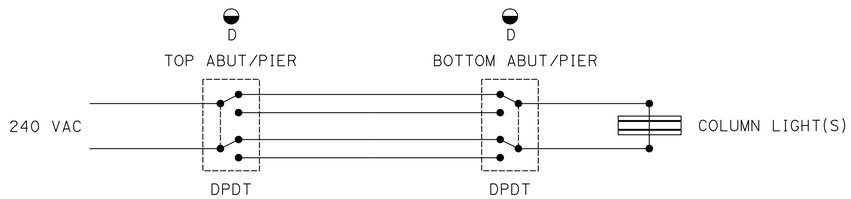

ABUT/PIER WIRING (TYPICAL)

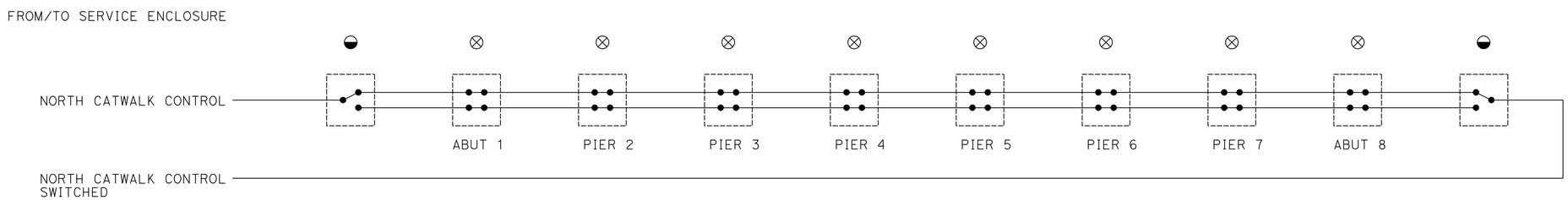

NORTH CATWALK CIRCUITRY

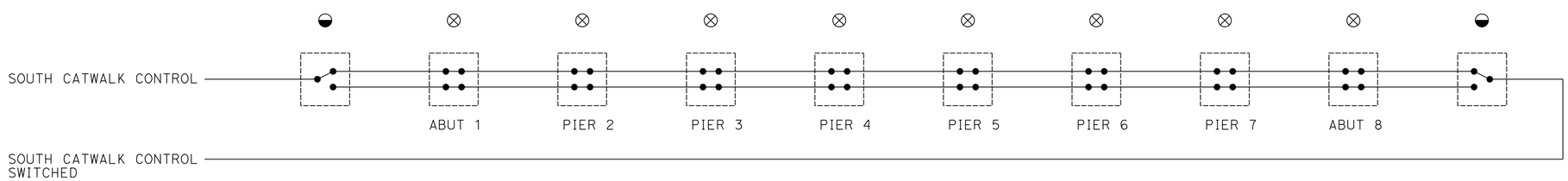

SOUTH CATWALK CIRCUITRY

ELECTRICAL DETAILS No. 2
(BRIDGE CIRCUITRY)
NO SCALE

E-20

STATE OF CALIFORNIA - DEPARTMENT OF TRANSPORTATION
Caltrans

CONSULTANT FUNCTIONAL SUPERVISOR: BRIAN PECUS
CALCULATED-DESIGNED BY: ALLAN MORRIS
CHECKED BY: CHIAMING CHI
REVISED BY
DATE REVISED

LAST REVISION 02-07-13
DATE PLOTTED => 13-MAR-2013
TIME PLOTTED => 22:36

Dist	COUNTY	ROUTE	POST MILES TOTAL PROJECT	SHEET No.	TOTAL SHEETS
11	SD	163	1.4	71	147

02-07-13
REGISTERED ELECTRICAL ENGINEER DATE

03-04-13
PLANS APPROVAL DATE

REGISTERED PROFESSIONAL ENGINEER
ALLAN RAY MORRIS
No. 16958
Exp. 06/30/13
ELECTRICAL
STATE OF CALIFORNIA

THE STATE OF CALIFORNIA OR ITS OFFICERS OR AGENTS SHALL NOT BE RESPONSIBLE FOR THE ACCURACY OR COMPLETENESS OF SCANNED COPIES OF THIS PLAN SHEET.

T Y LIN INTERNATIONAL
404 CAMINO DEL RIO SOUTH, SUITE 700
SAN DIEGO, CA 92108

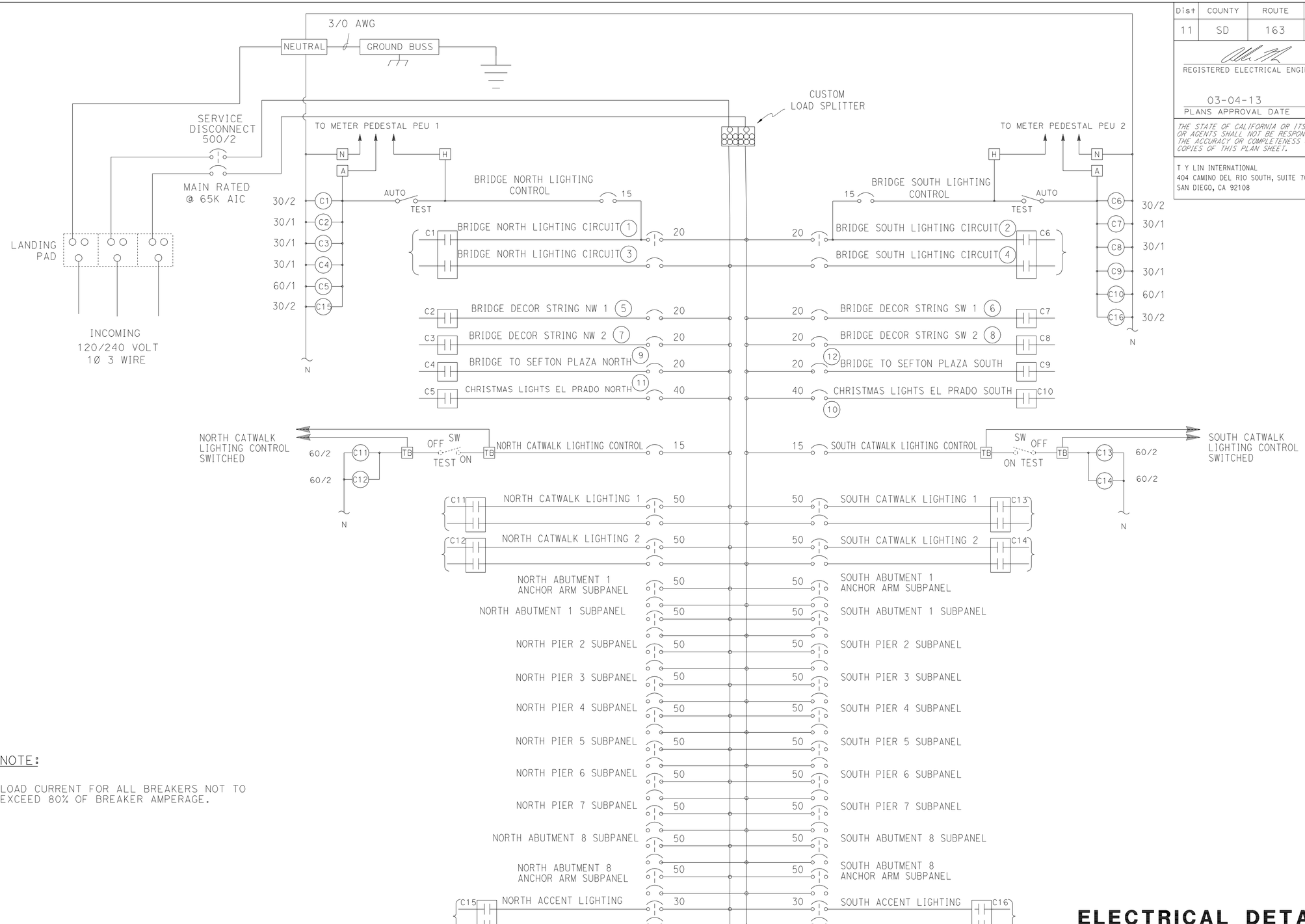

NOTE:

LOAD CURRENT FOR ALL BREAKERS NOT TO EXCEED 80% OF BREAKER AMPERAGE.

ELECTRICAL DETAILS No. 3
(SERVICE ENCLOSURE WIRING DIAGRAM)
NO SCALE

E-21

REVISED BY	DATE REVISED
CHIAMING CHI	ALLAN MORRIS
CALCULATED-DESIGNED BY	CHECKED BY
CONSULTANT FUNCTIONAL SUPERVISOR	BRIAN PECUS

STATE OF CALIFORNIA - DEPARTMENT OF TRANSPORTATION
Caltrans

LAST REVISION 02-07-13 | DATE PLOTTED => 13-MAR-2013 | TIME PLOTTED => 22:39

Dist	COUNTY	ROUTE	POST MILES TOTAL PROJECT	SHEET No.	TOTAL SHEETS
11	SD	163	1.4	72	147

REGISTERED ELECTRICAL ENGINEER 02-07-13 DATE

PLANS APPROVAL DATE 03-04-13

REGISTERED PROFESSIONAL ENGINEER ALLAN RAY MORRIS No. 16958 Exp. 06/30/13 ELECTRICAL STATE OF CALIFORNIA

THE STATE OF CALIFORNIA OR ITS OFFICERS OR AGENTS SHALL NOT BE RESPONSIBLE FOR THE ACCURACY OR COMPLETENESS OF SCANNED COPIES OF THIS PLAN SHEET.

T Y LIN INTERNATIONAL
404 CAMINO DEL RIO SOUTH, SUITE 700
SAN DIEGO, CA 92108

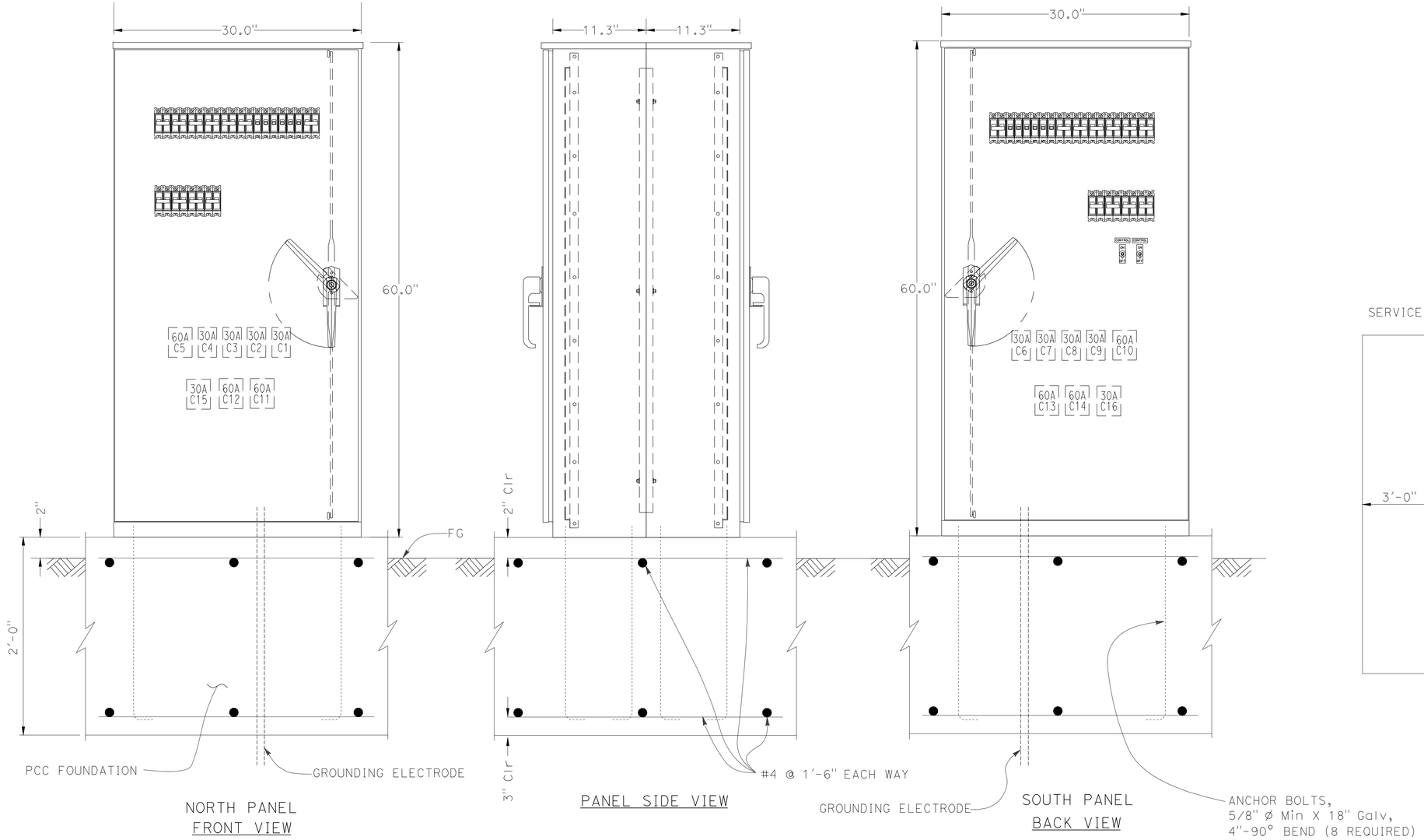

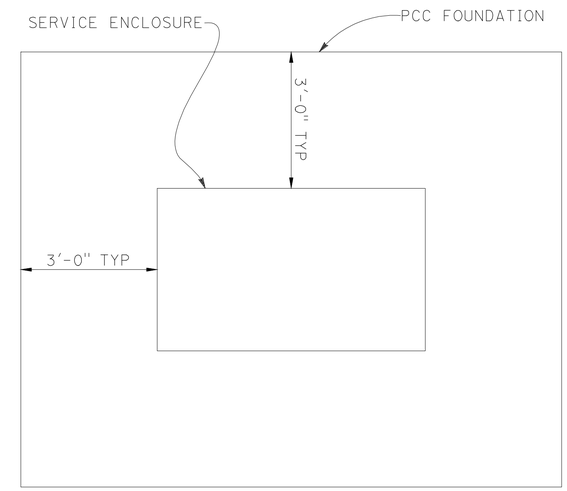

FOUNDATION PLAN

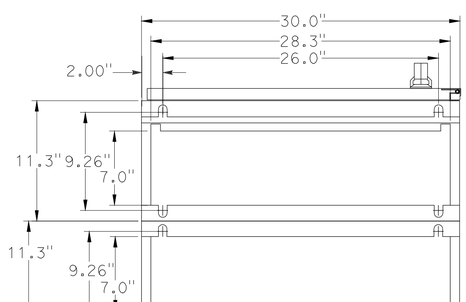

PANEL BASE PLAN

ENCLOSURE CONSTRUCTION NOTES

1. EXTERIOR 12 GA. H.D. GALV. STEEL AND INTERIOR 14 GA. COLD ROLLED STEEL ELECTRICALLY WELDED AND REINFORCED WHERE REQUIRED.
2. CONSTRUCTION WILL BE NEMA 3R, RAINTIGHT.
3. ALL NUTS, BOLTS AND SCREWS WILL BE STAINLESS STEEL.
4. NUTS, BOLTS & SCREWS WILL NOT BE VISIBLE FROM OUTSIDE OF ENCLOSURE.
5. NAMEPLATES WILL BE PROVIDED AS REQUIRED.
6. CONTROL WIRING WILL BE MARKED AT BOTH ENDS BY PERMANENT WIRE MARKERS.
7. A PLASTIC COVERED WIRING DIAGRAM WILL BE ATTACHED TO THE INSIDE OF THE FRONT DOOR.
8. ENCLOSURE WILL BE FACTORY WIRED AND CONFORM TO REQUIRED NEMA AND UL 508A STANDARDS.
9. COLOR TO BE DETERMINED.

ELECTRICAL DETAILS No. 4
(SERVICE ENCLOSURE OVERVIEW)
NO SCALE

E-22

STATE OF CALIFORNIA - DEPARTMENT OF TRANSPORTATION
Caltrans

CONSULTANT FUNCTIONAL SUPERVISOR: BRIAN PECUS
CALCULATED-DESIGNED BY: ALLAN MORRIS
CHECKED BY: CHIAMING CHI
REVISED BY
DATE REVISED

LAST REVISION 02-07-13
DATE PLOTTED => 13-MAR-2013
TIME PLOTTED => 22:39

Dist	COUNTY	ROUTE	POST MILES TOTAL PROJECT	SHEET No.	TOTAL SHEETS
11	SD	163	1.4	73	147

REGISTERED ELECTRICAL ENGINEER 02-07-13 DATE

PLANS APPROVAL DATE 03-04-13

REGISTERED PROFESSIONAL ENGINEER ALLAN RAY MORRIS No. 16958 Exp. 06/30/13 ELECTRICAL STATE OF CALIFORNIA

THE STATE OF CALIFORNIA OR ITS OFFICERS OR AGENTS SHALL NOT BE RESPONSIBLE FOR THE ACCURACY OR COMPLETENESS OF SCANNED COPIES OF THIS PLAN SHEET.

T Y LIN INTERNATIONAL
404 CAMINO DEL RIO SOUTH, SUITE 700
SAN DIEGO, CA 92108

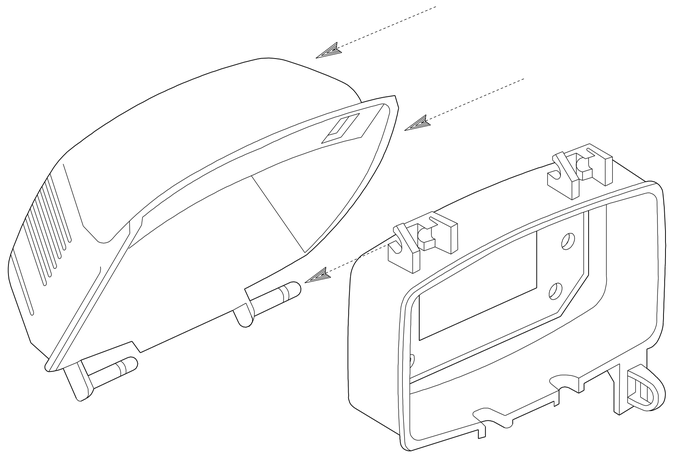

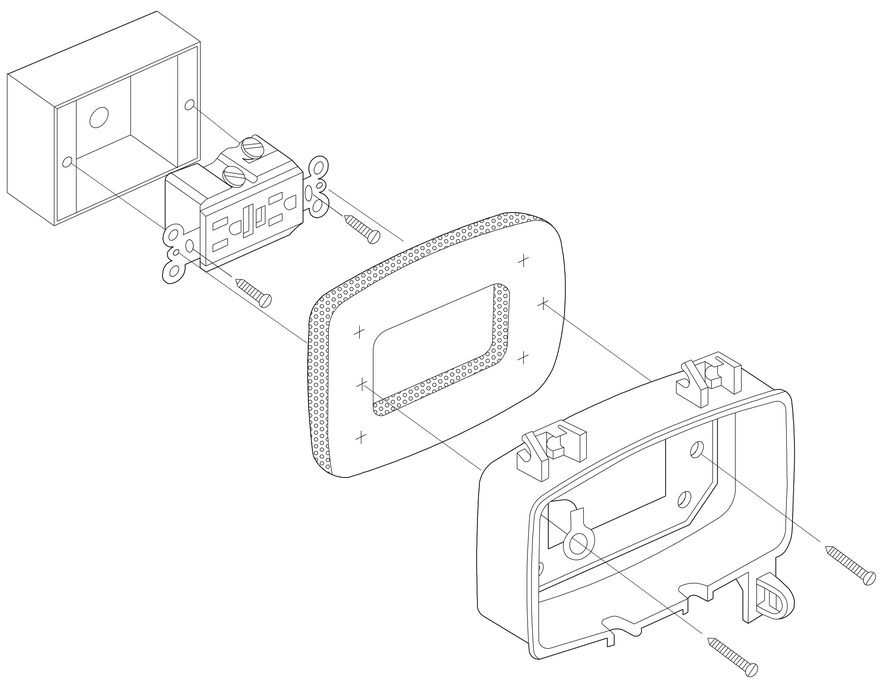

3 EXTERIOR OUTLET WITH COVER DETAIL
NTS

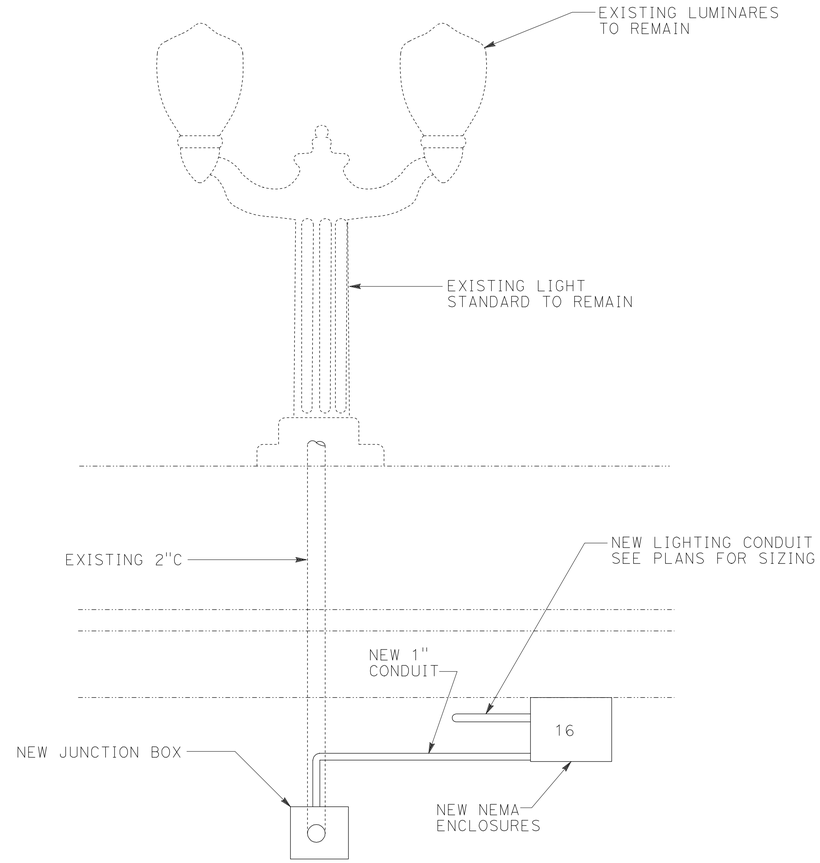

1 NORTH ELEVATION - CABRILLO BRIDGE (TYP)
NTS

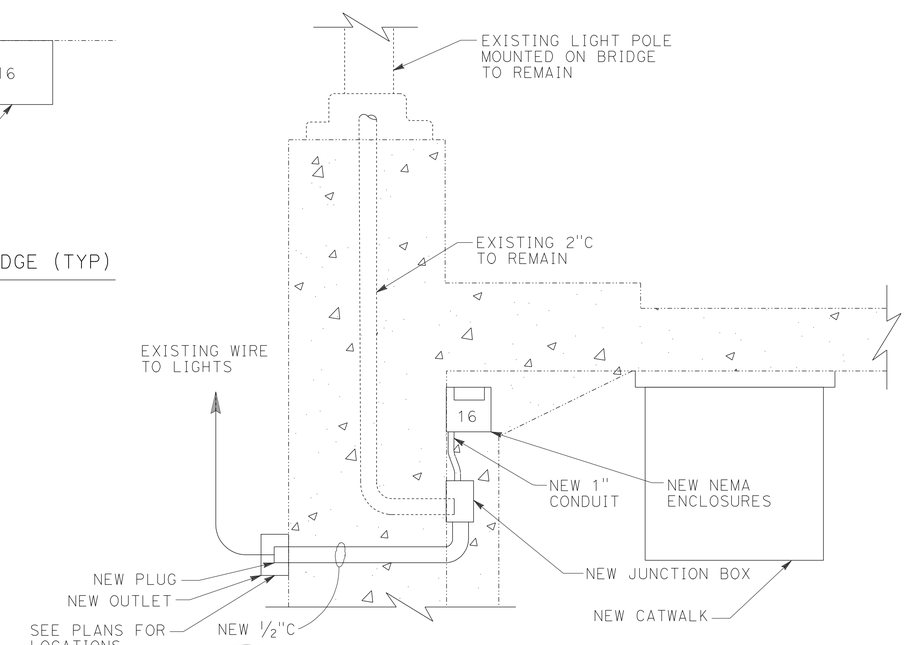

2 NORTH/SOUTH ELEVATION - CABRILLO BRIDGE (TYP)
NTS

ELECTRICAL DETAILS No. 5
(STREET LIGHT)
NO SCALE

E-23

REVISED BY | DATE REVISED
CHIAMING CHI | ALLAN MORRIS
CALCULATED-DESIGNED BY | CHECKED BY
CONSULTANT FUNCTIONAL SUPERVISOR | BRIAN PECUS
STATE OF CALIFORNIA - DEPARTMENT OF TRANSPORTATION
Caltrans

LAST REVISION 02-07-13 | DATE PLOTTED => 13-MAR-2013 | TIME PLOTTED => 22:40

Dist	COUNTY	ROUTE	POST MILES TOTAL PROJECT	SHEET No.	TOTAL SHEETS
11	SD	163	1.4	74	147

REGISTERED ELECTRICAL ENGINEER 02-07-13 DATE

PLANS APPROVAL DATE 03-04-13

REGISTERED PROFESSIONAL ENGINEER ALLAN RAY MORRIS No. 16958 Exp. 06/30/13 ELECTRICAL STATE OF CALIFORNIA

THE STATE OF CALIFORNIA OR ITS OFFICERS OR AGENTS SHALL NOT BE RESPONSIBLE FOR THE ACCURACY OR COMPLETENESS OF SCANNED COPIES OF THIS PLAN SHEET.

T Y LIN INTERNATIONAL
404 CAMINO DEL RIO SOUTH, SUITE 700
SAN DIEGO, CA 92108

NOTES (THIS SHEET ONLY):

1. BACKFILL ACCORDING TO STANDARD SPECIFICATIONS, SECTION 19. CONCRETE SHOULD BE PLACED AROUND AND UNDER VAULT (6" MINIMUM) AND SHOULD CONTAIN A MINIMUM OF 550 lbs OF PORTLAND CEMENT PER CUBIC YARD.
2. PORTLAND CEMENT CONCRETE FLOOR OVER CLEAN CRUSHED ROCK SUMP AS PER ES-8. BOTTOM OF VAULT SHALL BE SLOPED TOWARD THE DRAIN PIPE AND SHALL HAVE A SMOOTH FINISH.
3. MINIMUM VAULT DEPTH SHALL BE 20". IF NECESSARY, AN EXTENSION MAY BE USED TO MEET THE REQUIREMENT.
4. VAULT, VAULT EXTENSION AND VAULT COVER SHALL SUPPORT A MINIMUM TEST LOAD OF 25,000 lbs. AND CONFORM TO VERTICAL PROOF LOAD STRENGTH REQUIREMENT AS PER STANDARD SPECIFICATIONS, SECTION 86-2.06.
5. LOCKING MECHANISM SHALL BE PROVIDED FOR COVER. TWO ⅜" ø BRASS OR STAINLESS STEEL STUD BOLTS NUTS, AND WASHERS, MINIMUM 2 PER BOX. RECESS IN COVER FOR NUT.
6. "CITY LIGHTING" SHALL BE CASTED ON THE TOP FACE OF ALL COVERS.
7. IF APPLICABLE, VAULT HEIGHT ABOVE EXISTING DIRT GRADE SHALL PERMIT 1" OF FUTURE SURFACE LANDSCAPING. WHEN VAULT IS INSTALLED IN EXISTING SIDEWALK, VAULT COVER SHALL SIT FLUSH WITH THE PAVEMENT.
8. SEE PLAN SHEETS FOR NUMBER AND SIZE OF CONDUIT.
9. ALL CONDUITS SHALL ENTER THROUGH EXISTING KNOCKOUTS. IF MORE THAN 3 CONDUITS ARE REQUIRED IN SAME KNOCKOUT, KNOCKOUT SHALL BE WIDENED TO ⅜" MORE THAN THE COMBINED CONDUIT WIDTH NOT TO EXCEED MANUFACTURERS REQUIREMENTS.
10. BOTTOM OF CONDUIT CENTERLINE SHALL BE ALIGNED TO EXIT TOP OF VAULT TO FACILITATE CABLE PULLING. IF EXISTING CONDUIT IS USED, CONTRACTOR SHALL MODIFY CONDUIT TO MATCH SWEEP AS SHOWN. CONTRACTOR SHALL INSTALL CONDUIT ELBOW AS SHOWN.
11. EXCESS CONDUIT FOR ALL CONDUIT ENDS SHALL BE CUT BACK TO PROVIDE STUB ENDS OF 1" MINIMUM TO 2" MAXIMUM.
12. ALL METALLIC CONDUITS SHALL HAVE THREADED METALLIC BUSHINGS. ALL PVC AND HDPE CONDUITS SHALL HAVE BELL ENDS.
13. INSTALL CAPS OR DUCT PLUGS FOR ALL CONDUITS.
14. ALL VAULT SHALL BE FURNISHED WITH TWO RACKS AND HOOKS INSTALLED ON EACH OF THE TWO LONG SIDES.

LEGEND:

1. VAULT COVER.
2. RACK & HOOK ASSEMBLY, SEE NOTE 14.
3. 45 DEGREE ELBOW, 3' RADIUS Min. ELBOW AND COUPLING MAY NOT BE NECESSARY FOR NEW CONDUIT INSTALLED BY DIRECTIONAL BORING, NEW CONDUIT INSTALLED BY DIRECTIONAL DRILLING SHALL ENTER PULLBOX WITH A BENDING RADIUS OF 3' MINIMUM.

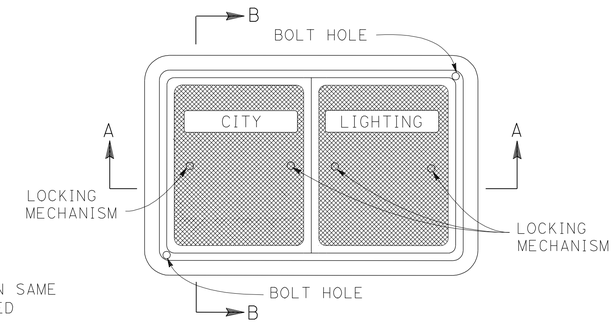

PLAN VIEW

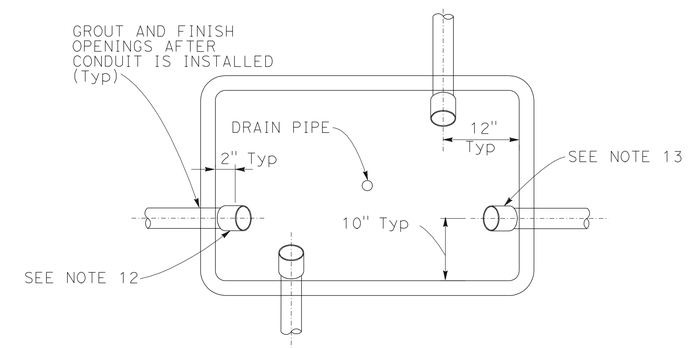

PLAN VIEW WITHOUT COVER

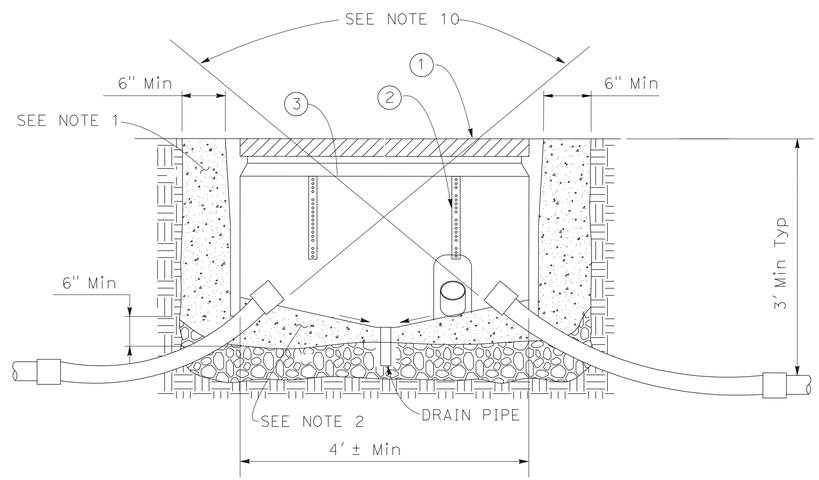

SECTION A-A

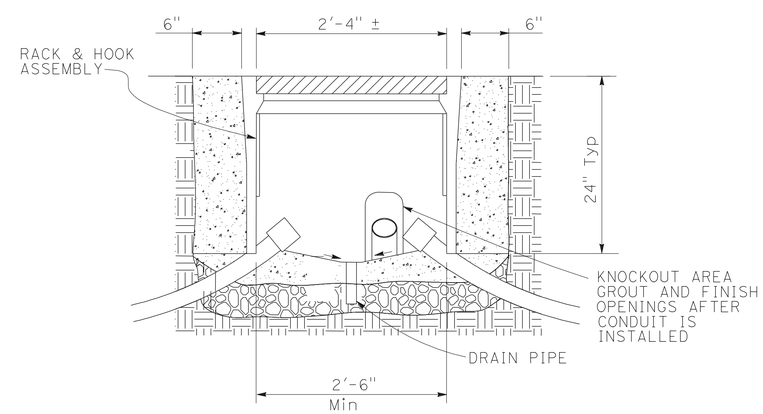

SECTION B-B

ELECTRICAL DETAILS No. 6
(VAULT)
NO SCALE

E-24

STATE OF CALIFORNIA - DEPARTMENT OF TRANSPORTATION
Caltrans
CONSULTANT FUNCTIONAL SUPERVISOR: BRIAN PECUS
CALCULATED-DESIGNED BY: CHIAMING CHI
CHECKED BY: ALLAN MORRIS
REVISED BY
DATE REVISED

LAST REVISION 02-07-13
DATE PLOTTED => 13-MAR-2013
TIME PLOTTED => 22:40

Dist	COUNTY	ROUTE	POST MILES TOTAL PROJECT	SHEET No.	TOTAL SHEETS
11	SD	163	1.4	75	147

02-07-13
REGISTERED ELECTRICAL ENGINEER DATE

03-04-13
PLANS APPROVAL DATE

REGISTERED PROFESSIONAL ENGINEER
ALLAN RAY MORRIS
No. 16958
Exp. 06/30/13
ELECTRICAL
STATE OF CALIFORNIA

THE STATE OF CALIFORNIA OR ITS OFFICERS OR AGENTS SHALL NOT BE RESPONSIBLE FOR THE ACCURACY OR COMPLETENESS OF SCANNED COPIES OF THIS PLAN SHEET.

T Y LIN INTERNATIONAL
404 CAMINO DEL RIO SOUTH, SUITE 700
SAN DIEGO, CA 92108

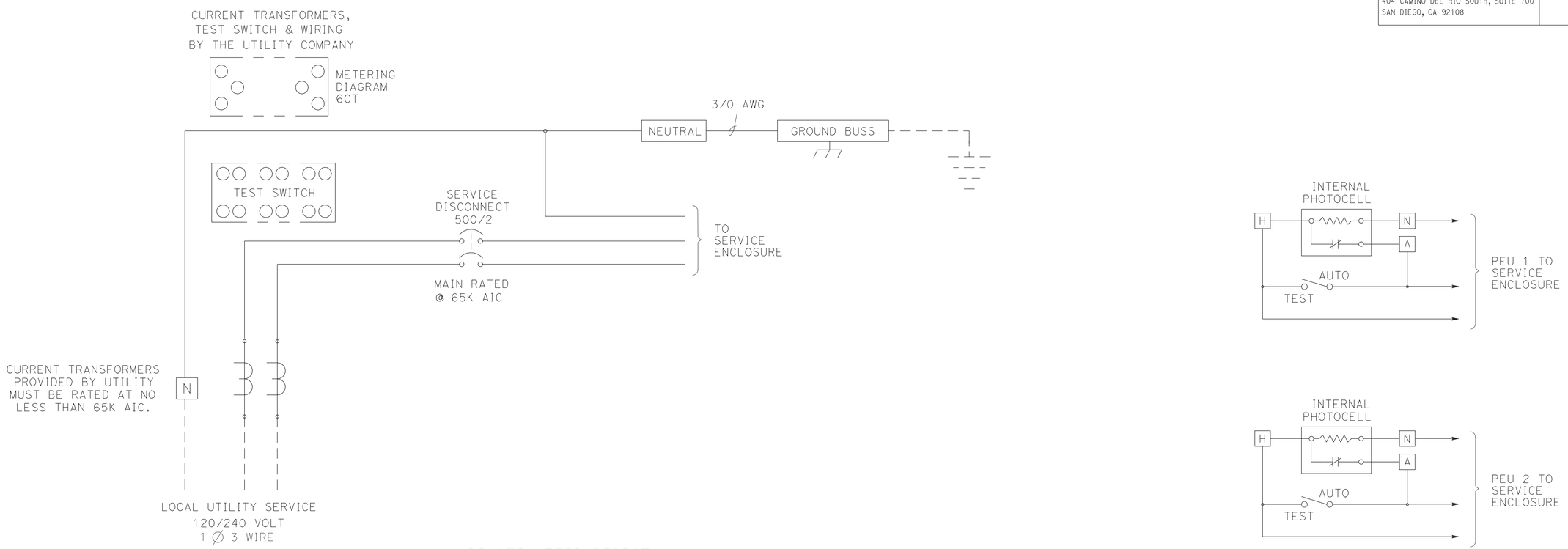

REMOTE METER PEDESTAL
WIRING DIAGRAM

NOTE: LOAD CURRENT FOR ALL BREAKERS NOT TO EXCEED 80% OF BREAKER AMPERAGE

ELECTRICAL DETAILS No. 7

(REMOTE METER PEDESTAL WIRING DIAGRAM)

NO SCALE

E-25

REVISED BY	DATE REVISED
CHIAMING CHI	ALLAN MORRIS
CALCULATED-DESIGNED BY	CHECKED BY
CONSULTANT FUNCTIONAL SUPERVISOR	BRIAN PECUS

STATE OF CALIFORNIA - DEPARTMENT OF TRANSPORTATION
Caltrans

LAST REVISION 02-07-13 | DATE PLOTTED => 13-MAR-2013 | TIME PLOTTED => 22:41

Dist	COUNTY	ROUTE	POST MILES TOTAL PROJECT	SHEET No.	TOTAL SHEETS
11	SD	163	1.4	76	147

02-07-13
REGISTERED ELECTRICAL ENGINEER DATE

03-04-13
PLANS APPROVAL DATE

REGISTERED PROFESSIONAL ENGINEER
ALLAN RAY MORRIS
No. 16958
Exp. 06/30/13
ELECTRICAL
STATE OF CALIFORNIA

THE STATE OF CALIFORNIA OR ITS OFFICERS OR AGENTS SHALL NOT BE RESPONSIBLE FOR THE ACCURACY OR COMPLETENESS OF SCANNED COPIES OF THIS PLAN SHEET.

T Y LIN INTERNATIONAL
404 CAMINO DEL RIO SOUTH, SUITE 700
SAN DIEGO, CA 92108

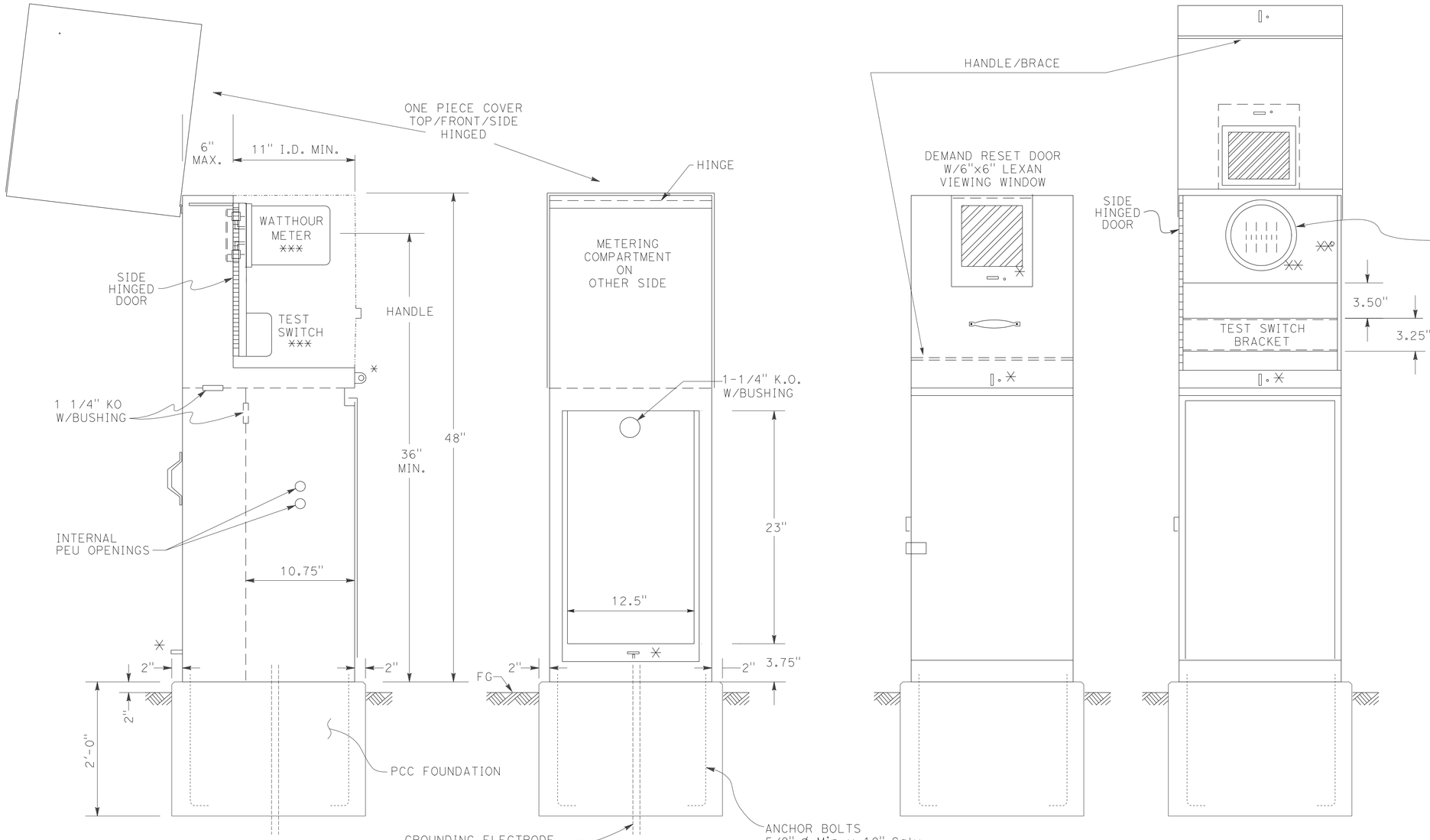

SIDE VIEW
METER COVER
IN OPEN POSITION

REAR VIEW
(PULL SECTION COVER REMOVED)

FRONT VIEW
(WEATHERPROOF COVER
& DOOR IN PLACE)

FRONT VIEW
(WEATHERPROOF COVER
OPENED TO REAR)
LOWER DOOR
NOT SHOWN

NOTE:
✳ - PADLOCKABLE & SEALABLE
✳✳ - SEALABLE
✳✳✳ - PROVISIONS ONLY

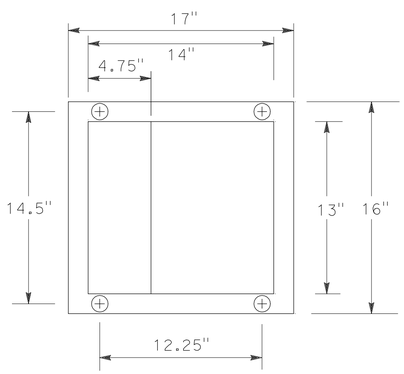

ENCLOSURE CONSTRUCTION NOTES:

1. EXTERIOR 12 GA. H.D. GALV. STEEL AND INTERIOR 14 GA. COLD ROLLED STEEL ELECTRICALLY WELDED AND REINFORCED WHERE REQUIRED.
2. CONSTRUCTION WILL BE NEMA 3R, RAINTIGHT.
3. ALL NUTS, BOLTS AND SCREWS WILL BE STAINLESS STEEL.
4. NUTS, BOLTS & SCREWS WILL NOT BE VISIBLE FROM OUTSIDE OF ENCLOSURE.
5. NAMEPLATES WILL BE PROVIDED AS REQUIRED.
6. CONTROL WIRING WILL BE MARKED AT BOTH ENDS BY PERMANENT WIRE MARKERS.
7. A PLASTIC COVERED WIRING DIAGRAM WILL BE ATTACHED TO THE INSIDE OF THE FRONT DOOR.
8. ENCLOSURE WILL BE FACTORY WIRED AND CONFORM TO REQUIRED NEMA AND UL 508A STANDARDS.
9. COLOR TO BE DETERMINED.

ELECTRICAL DETAILS No. 8
(REMOTE METER PEDESTAL)
NO SCALE

E-26

STATE OF CALIFORNIA - DEPARTMENT OF TRANSPORTATION
Caltrans
CONSULTANT FUNCTIONAL SUPERVISOR: BRIAN PECUS
CALCULATED-DESIGNED BY: CHIAMING CHI
CHECKED BY: ALLAN MORRIS
REVISED BY
DATE REVISED

LAST REVISION 76
DATE PLOTTED => 13-MAR-2013
TIME PLOTTED => 22:41

Dist	COUNTY	ROUTE	POST MILES TOTAL PROJECT	SHEET No.	TOTAL SHEETS
11	SD	163	1.4	77	147

REGISTERED CIVIL ENGINEER 03-04-13 DATE

03-04-13
PLANS APPROVAL DATE

REGISTERED PROFESSIONAL ENGINEER RICARDO PADILLA No. C58151 Exp. 6-30-14 CIVIL STATE OF CALIFORNIA

THE STATE OF CALIFORNIA OR ITS OFFICERS OR AGENTS SHALL NOT BE RESPONSIBLE FOR THE ACCURACY OR COMPLETENESS OF SCANNED COPIES OF THIS PLAN SHEET.

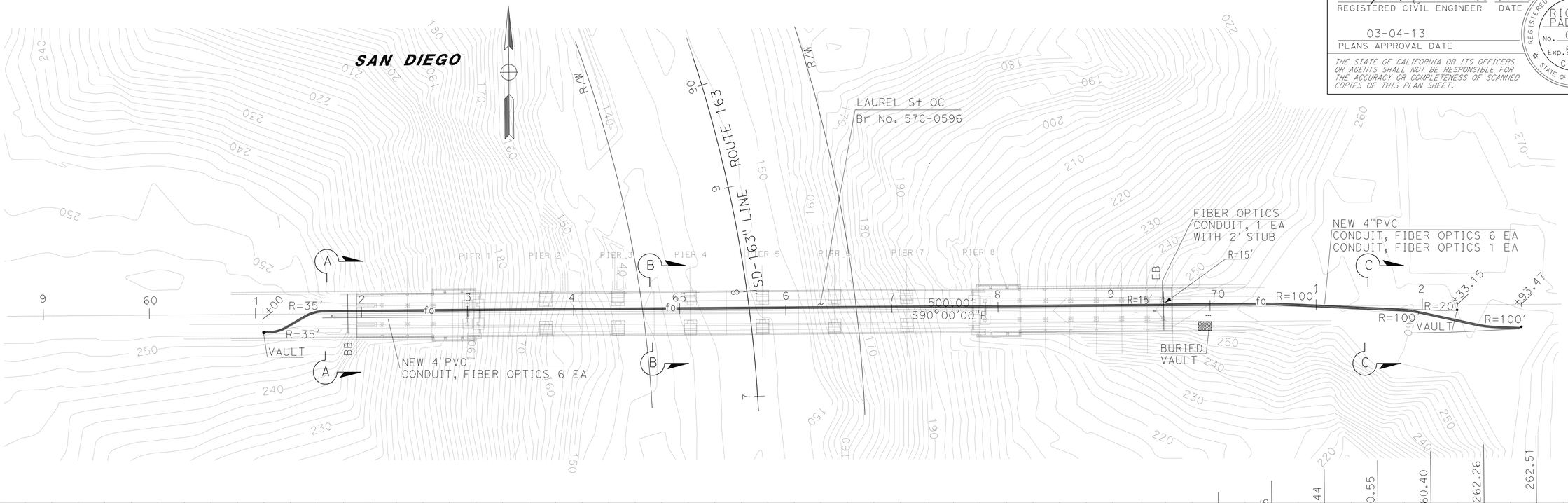

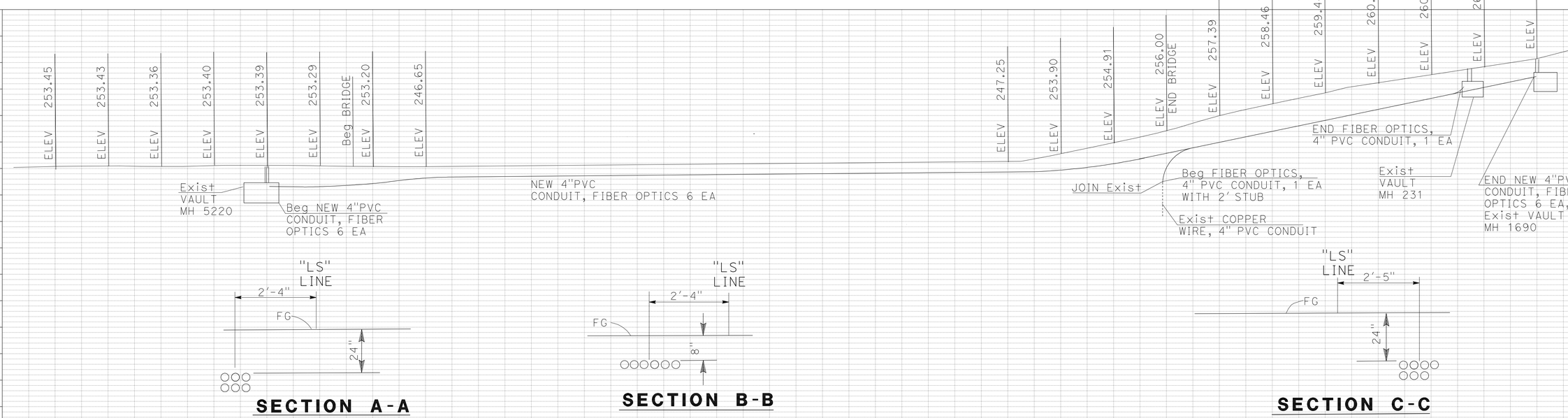

SECTION A-A

SECTION B-B

SECTION C-C

FIBER OPTICS CONDUIT

APPROVED FOR ELECTRICAL WORK ONLY

SCALE 1"=50'

CONDUIT DETAILS

E-27

REVISED BY	DATE REVISED
RICARDO PADILLA	RAMON JUAREZ
CALCULATED-DESIGNED BY	CHECKED BY
FUNCTIONAL SUPERVISOR	CHRIS M. THOMAS

STATE OF CALIFORNIA - DEPARTMENT OF TRANSPORTATION
Caltrans PROJECT DEVELOPMENT

LAST REVISION 02-22-13 | DATE PLOTTED => 13-MAR-2013 | TIME PLOTTED => 22:42

Dist	COUNTY	ROUTE	POST MILES TOTAL PROJECT	SHEET No.	TOTAL SHEETS
11	SD	163	1.4	78	147

REGISTERED CIVIL ENGINEER 03-04-13 DATE

03-04-13
PLANS APPROVAL DATE

REGISTERED PROFESSIONAL ENGINEER RICARDO PADILLA No. C58151 Exp. 6-30-14 CIVIL STATE OF CALIFORNIA

THE STATE OF CALIFORNIA OR ITS OFFICERS OR AGENTS SHALL NOT BE RESPONSIBLE FOR THE ACCURACY OR COMPLETENESS OF SCANNED COPIES OF THIS PLAN SHEET.

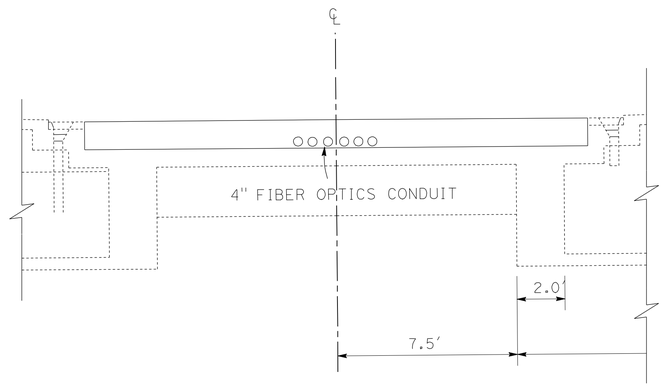

BRIDGE SECTION - ARCH MID - SPAN

61+00.00 TO 72+93.47 "LS"
69+41.82 TO 72+33.15 "LS"
SEE BRIDGE PLANS

4" FIBER OPTICS CONDUIT

STAGE	CONDUIT EACH	STATION	LF
2A	6	61+00.00 TO 72+93.47 "LS"	7250.0
2A	1	69+41.82 TO 72+33.15 "LS"	350.0
		TOTAL	7600.0

CONDUIT DETAILS

NO SCALE

E-28

REVISED BY | DATE REVISED
RICARDO PADILLA | RAMON JUAREZ
CALCULATED-DESIGNED BY | CHECKED BY
FUNCTIONAL SUPERVISOR | CHRIS M. THOMAS
STATE OF CALIFORNIA - DEPARTMENT OF TRANSPORTATION
Caltrans PROJECT DEVELOPMENT

LAST REVISION 02-27-13 | DATE PLOTTED => 13-MAR-2013 TIME PLOTTED => 22:42

Dist	COUNTY	ROUTE	POST MILES TOTAL PROJECT	SHEET No.	TOTAL SHEETS
11	SD	163	1.4	79	147

REGISTERED CIVIL ENGINEER 12-7-12 DATE

03-04-13
PLANS APPROVAL DATE

REGISTERED PROFESSIONAL ENGINEER Gurinderpal Bhullar No. C48815 Exp. 9-30-14 CIVIL STATE OF CALIFORNIA

THE STATE OF CALIFORNIA OR ITS OFFICERS OR AGENTS SHALL NOT BE RESPONSIBLE FOR THE ACCURACY OR COMPLETENESS OF SCANNED COPIES OF THIS PLAN SHEET.

NOTES:

Unless otherwise specified in the special provisions, all temporary warning signs shall have black legend on orange background.

California code are designated by (CA). Otherwise, Federal (MUTCD) codes are shown.

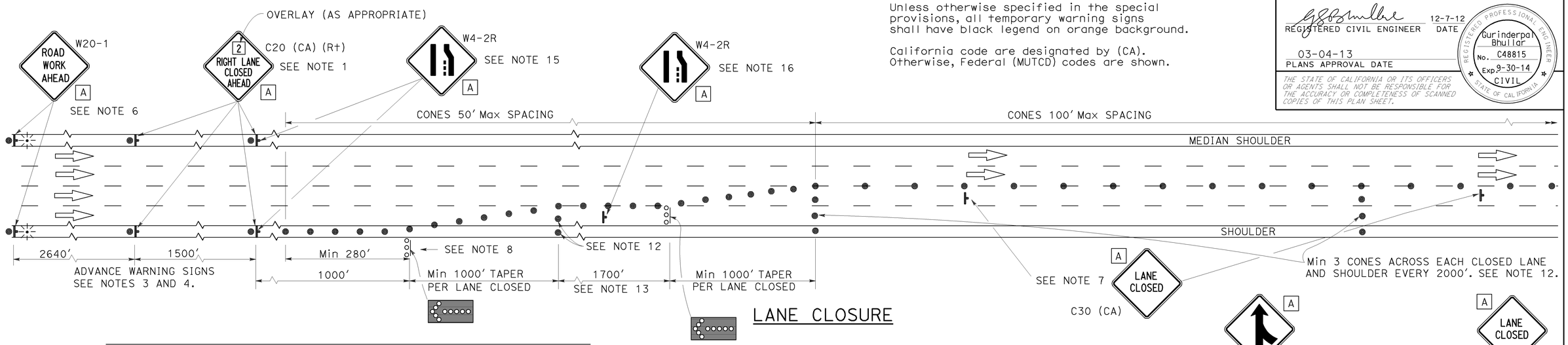

LANE CLOSURE

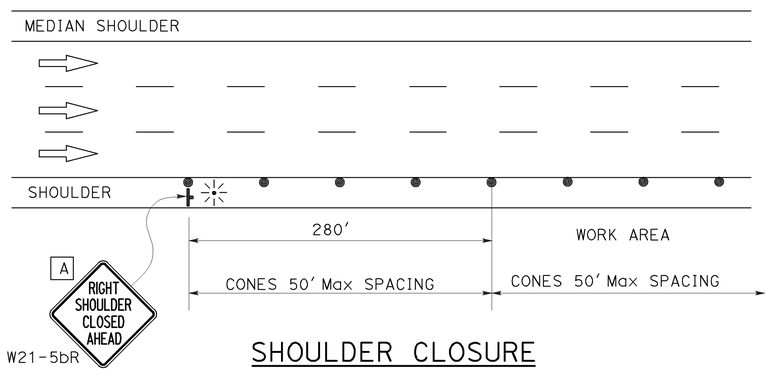

SHOULDER CLOSURE

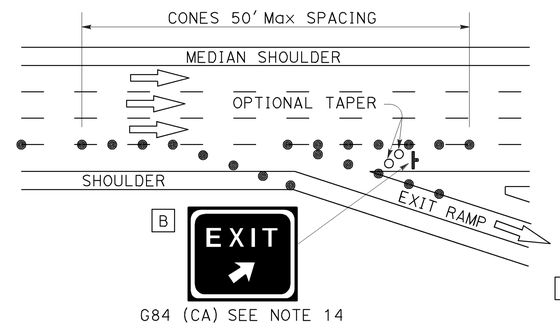

LANE CLOSURE AT EXIT RAMP

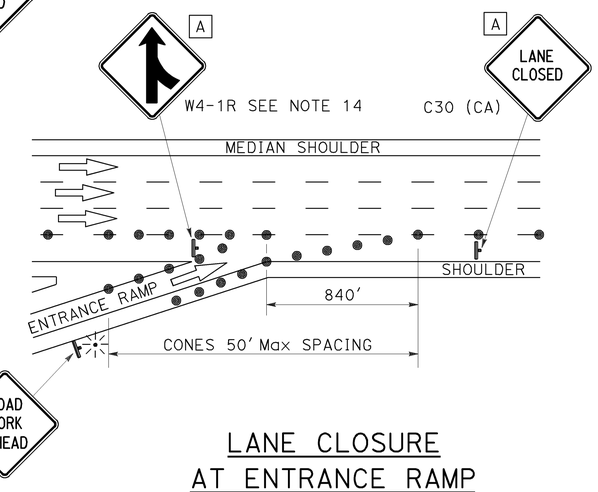

LANE CLOSURE AT ENTRANCE RAMP

NOTES:

1. Median lane closures shall conform to the details for outside lane closures except that C20 (CA) (Lt) signs shall be used.
2. At least one person shall be assigned to provide full time maintenance of traffic control devices for lane closures.
3. Duplicate sign installations are not required:
   a) On opposite shoulder if at least one-half of the available lanes remain open to traffic.
   b) In the median if the width of the median shoulder is less than 8' and the outside lanes are to be closed.
4. Each advance warning sign on each side of the roadway shall be equipped with at least two flags for daytime closure. Each flag shall be at least 16" x 16" in size and shall be orange or fluorescent red-orange in color. Flashing beacons shall be placed at the locations indicated for lane closure during hours of darkness.
5. A C14 (CA) "END ROAD WORK" sign, as appropriate, shall be placed at the end of the lane closure unless the end of work area is obvious or ends within a larger project's limits.
6. If the W20-1 sign would follow within 2000' of a stationary W20-1 or C11 (CA) "ROAD WORK NEXT _____ MILES", use a C20 (CA) sign for the first advance warning sign.
7. Place a C30 (CA) sign every 2000' throughout length of lane closure.
8. One flashing arrow sign for each lane closed. The first flashing arrow sign shall be Type I. All others may be either Type I or Type II.
9. A minimum 1500' of sight distance shall be provided where possible for vehicles approaching the first flashing arrow sign. Lane closures shall not begin at top of crest vertical curve or on a horizontal curve.
10. All cones used for lane closures during the hours of darkness shall be fitted with retroreflective bands (or sleeves) as specified in the specifications.
11. Portable delineators, placed at one-half the spacing indicated for traffic cones may be used instead of cones for daytime closures only.
12. Unless otherwise specified in the special provisions, a minimum of 3 cones shall be placed transversely across each closed lane and shoulder at each location where a taper across a traffic lane ends and every 2000' as shown on the "Lane Closure" detail. Two Type II barricades may be used instead of the 3 cones. The transverse alignment of the cones or barricades on the closed shoulder may be shifted from the transverse alignment to provide access to the work.
13. Unless otherwise specified in the special provisions, the 1700' tangent shown along lane lines shall be used between the 1000' tapers required for each closed traffic lane.
14. Unless otherwise specified in the special provisions, the G84 (CA) and W4-1 signs shall be used as shown.
15. When specified in the special provisions, a W4-2 "LANE ENDS" symbol sign is to be used in place of the C20 (CA) "RIGHT LANE CLOSED AHEAD" sign.
16. The W4-2 "LANE ENDS" symbol sign shown at this location is to be used where the W4-2 sign is used as advance warning as described in Note 15.

SIGN PANEL SIZE (Min)

A	48" x 48"
B	54" x 48"

LEGEND

- TRAFFIC CONE
- TRAFFIC CONE (OPTIONAL TAPER)
- TEMPORARY SIGN
- FLASHING ARROW SIGN (FAS)
- FAS SUPPORT OR TRAILER
- PORTABLE FLASHING BEACON

STATE OF CALIFORNIA
DEPARTMENT OF TRANSPORTATION

TRAFFIC CONTROL SYSTEM FOR LANE CLOSURE ON FREEWAYS AND EXPRESSWAYS

NO SCALE

TCS-1

REVISED BY | DATE REVISED | CALCULATED-DESIGNED BY | CHECKED BY | FUNCTIONAL SUPERVISOR

STATE OF CALIFORNIA - DEPARTMENT OF TRANSPORTATION

Caltrans

LAST REVISION 03-04-13 | DATE PLOTTED => 10-DEC-2012 | TIME PLOTTED => 09:45

Dist	COUNTY	ROUTE	POST MILES TOTAL PROJECT	SHEET No.	TOTAL SHEETS
11	SD	163	1.4	80	147

REGISTERED CIVIL ENGINEER 12-7-12 DATE

03-04-13
PLANS APPROVAL DATE

REGISTERED PROFESSIONAL ENGINEER Gurinderpal Bhullar No. C48815 Exp. 9-30-14 CIVIL STATE OF CALIFORNIA

THE STATE OF CALIFORNIA OR ITS OFFICERS OR AGENTS SHALL NOT BE RESPONSIBLE FOR THE ACCURACY OR COMPLETENESS OF SCANNED COPIES OF THIS PLAN SHEET.

NOTES:

Unless otherwise specified in the special provisions, all temporary warning signs shall have black legend on orange background.

California code are designated by (CA). Otherwise, Federal (MUTCD) codes are shown.

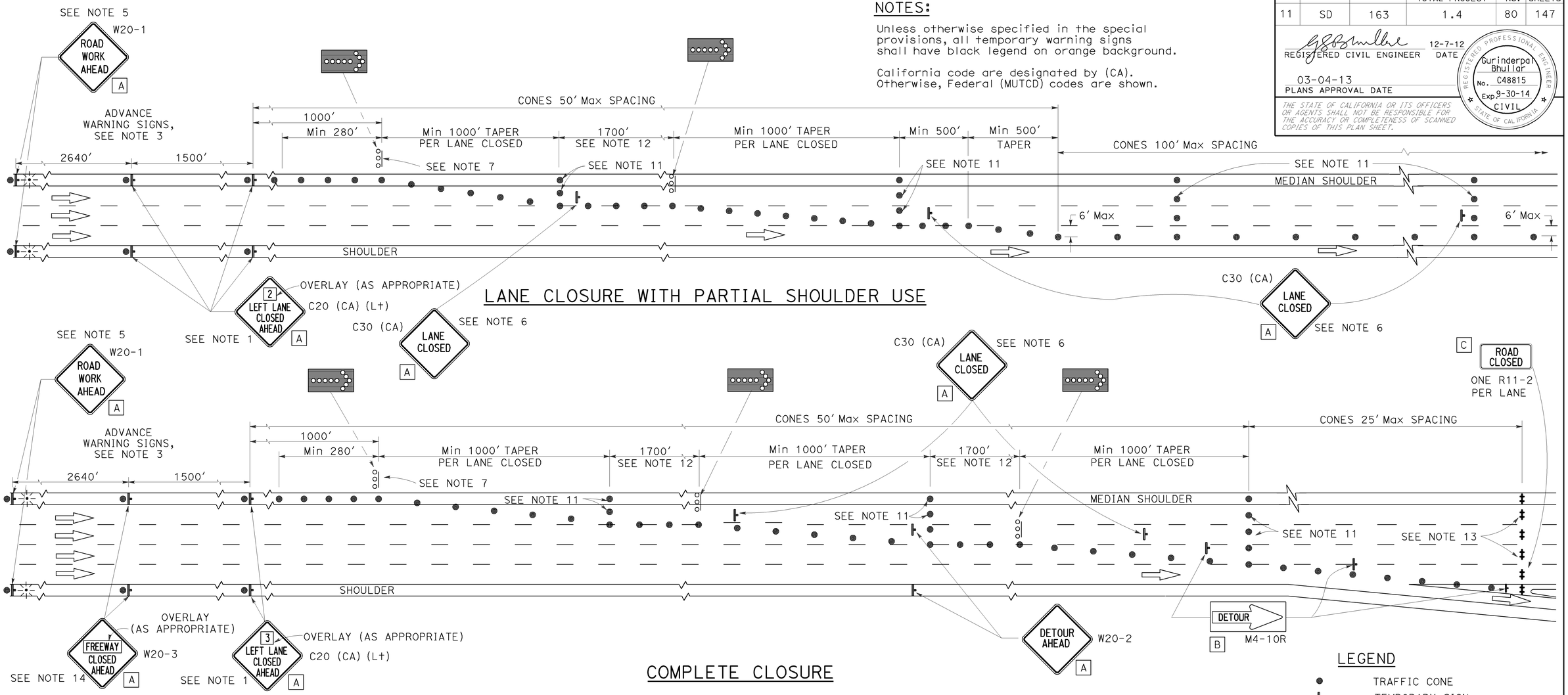

LANE CLOSURE WITH PARTIAL SHOULDER USE

COMPLETE CLOSURE

LEGEND

- TRAFFIC CONE
- TEMPORARY SIGN
- BARRICADE
- FLASHING ARROW SIGN (FAS)
- FAS SUPPORT OR TRAILER
- PORTABLE FLASHING BEACON

NOTES:

1. Lane closures on the right side using partial median shoulder as a traffic lane shall conform to the details for inside lane closure except that C20 (CA) (Rt) signs shall be used.
2. At least one person shall be assigned to provide full time maintenance of traffic control devices for lane closures.
3. Each advance warning sign on each side of the roadway shall be equipped with at least two flags for daytime closure. Each flag shall be at least 16" X 16" in size and shall be orange or fluorescent red-orange in color. Flashing beacons shall be placed at the locations indicated for lane closure during hours of darkness.
4. A C14 (CA) "END ROAD WORK" sign, as appropriate, shall be placed at the end of the lane closure unless the end of work area is obvious or ends within a larger project's limits.
5. If the W20-1 sign would follow within 2000′ of a stationary W20-1 or C11 (CA) "ROAD WORK NEXT ___ MILES", use a C20 (CA) sign for the first advance warning sign.
6. Place a C30 (CA) sign every 2000′ throughout length of lane closure.
7. One flashing arrow sign for each lane closed. The first flashing arrow sign shall be Type I. All others may be either Type I or Type II.
8. A minimum 1500′ of sight distance shall be provided where possible for vehicles approaching the first flashing arrow sign. Lane closures shall not begin at the top of crest vertical curve or on a horizontal curve.
9. All cones used for lane closures during the hours of darkness shall be fitted with retroreflective bands (or sleeves) as specified in the specifications.
10. Portable delineators, placed at one-half the spacing indicated for traffic cones, may be used instead of cones for daytime closures only.
11. Unless otherwise specified in the special provisions, a minimum of 3 cones shall be placed transversely across each closed lane and shoulder at each location where a taper across a traffic lane ends and every 2000′ as shown on the "Lane Closure With Partial Shoulder Use" detail. Two Type II barricades may be used instead of the 3 cones. The transverse alignment of the cones or barricades on the closed shoulder may be shifted from the transverse alignment to provide access to the work.
12. Unless otherwise specified in the special provisions, the 1700′ tangent shown along lane lines shall be used between the 1000′ tapers required for each closed traffic lane.
13. A minimum of Two Type II barricades shall be placed across each closed lane and shoulder at the location shown and every 2000′ within the complete closure area. Within the complete closure area, the transverse alignment of the barricades on the closed shoulder may be shifted from the transverse alignment to provide access to the work.
14. When specified in the special provisions, a W20-2 "DETOUR AHEAD" sign is to be used in place of the W20-3 "FREEWAY CLOSED AHEAD" sign.

SIGN PANEL SIZE (Min)

A	48" × 48"
B	48" × 18"
C	48" × 30"

STATE OF CALIFORNIA
DEPARTMENT OF TRANSPORTATION

TRAFFIC CONTROL SYSTEM FOR LANE AND COMPLETE CLOSURES ON FREEWAYS AND EXPRESSWAYS

NO SCALE

TCS-2

STATE OF CALIFORNIA - DEPARTMENT OF TRANSPORTATION

Caltrans

REVISED BY | DATE REVISED | CALCULATED-DESIGNED BY | CHECKED BY | FUNCTIONAL SUPERVISOR

LAST REVISION 03-04-13 | DATE PLOTTED => 10-DEC-2012 | TIME PLOTTED => 09:45

Dist	COUNTY	ROUTE	POST MILES TOTAL PROJECT	SHEET No.	TOTAL SHEETS
11	SD	163	1.4	81	147

REGISTERED CIVIL ENGINEER 12-7-12 DATE

03-04-13
PLANS APPROVAL DATE

REGISTERED PROFESSIONAL ENGINEER Gurinderpal Bhullar No. C48815 Exp. 9-30-14 CIVIL STATE OF CALIFORNIA

THE STATE OF CALIFORNIA OR ITS OFFICERS OR AGENTS SHALL NOT BE RESPONSIBLE FOR THE ACCURACY OR COMPLETENESS OF SCANNED COPIES OF THIS PLAN SHEET.

NOTES:

Unless otherwise specified in the special provisions, all temporary warning signs shall have black legend on orange background.

California code are designated by (CA). Otherwise, Federal (MUTCD) codes are shown.

TYPICAL LANE CLOSURE WITH REVERSIBLE CONTROL

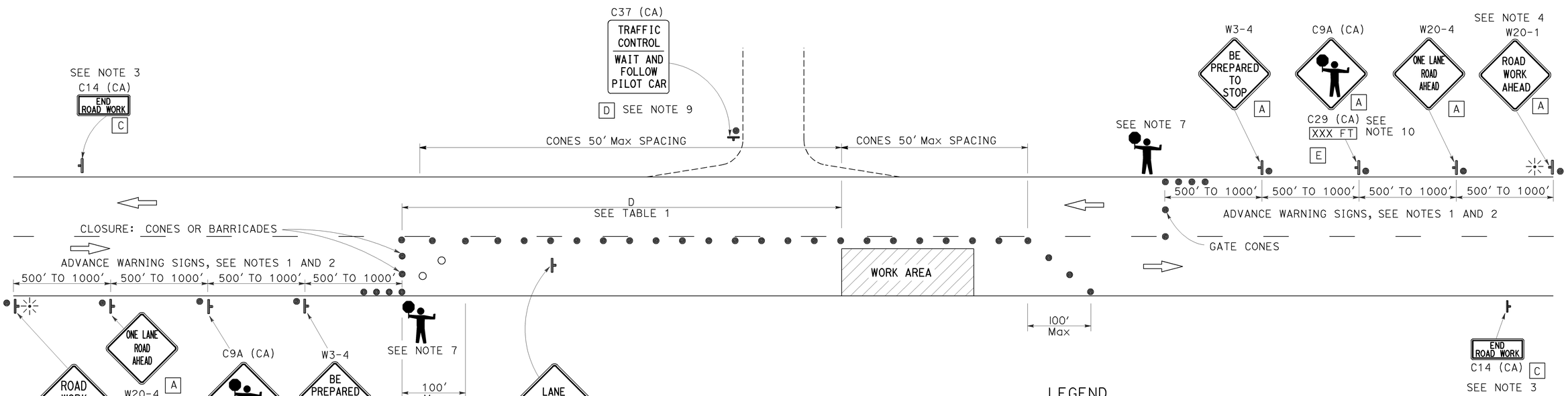

SIGN PANEL SIZE (MINIMUM)

A	48" × 48" - SPEED OF 45 mph OR MORE 36" × 36" - SPEED LESS THAN 45 mph
B	30" × 30"
C	36" × 18"
D	36" × 42"
E	36" × 9"

LEGEND

- TRAFFIC CONE
- TRAFFIC CONE (OPTIONAL TAPER)
- TEMPORARY SIGN
- PORTABLE FLASHING BEACON
- FLAGGER

TABLE 1

APPROACH SPEED	MINIMUM D	DOWNGRADE MINIMUM D *		
		-3%	-6%	-9%
mph	ft	ft	ft	ft
25 AND BELOW	155	158	165	173
30	200	205	215	227
35	250	257	271	287
40	305	315	333	354
45	360	378	400	427
50	425	446	474	507
55	495	520	553	593
60	570	598	638	686
65	645	682	728	785

* USE ON SUSTAINED DOWNGRADE STEEPER THAN -3 PERCENT AND LONGER THAN 1 MILE.

NOTES:

1. Where approach speeds are low, advance warning signs may be placed at 300' spacing, and closer in urban areas.
2. Each advance warning sign in each direction of travel shall be equipped with at least two flags for daytime closure. Each flag shall be at least 16" x 16" in size and shall be orange or fluorescent red-orange in color. Flashing beacons shall be placed at the locations indicated for lane closure during hours of darkness.
3. A C14 (CA) "END ROAD WORK" sign, as appropriate, shall be placed at the end of the lane control unless the end of work area is obvious, or ends within a larger project's limits.
4. If the W20-1 sign would follow within 2000' of a stationary W20-1 or C11 (CA) "ROAD WORK NEXT _____MILES", use a W20-4 sign for the first advance warning sign.
5. All cones used for lane closures during the hours of darkness shall be fitted with retroreflective bands (or sleeves) as specified in the specifications.
6. Portable delineators, placed at one-half the spacing indicated for traffic cones, may be used instead of cones for daytime closures only.
7. Additional advance flaggers may be required. Flagger should stand in a conspicuous place, be visible to approaching traffic as well as approaching vehicles after the first vehicle has stopped. During the hours of darkness, the flagging-station and flagger shall be illuminated and clearly visible to approaching traffic. The illumination footprint of the lighting on the ground shall be at least 20' in diameter. Place a minimum of four cones at 50' intervals in advance of flagger station as shown.
8. Place C30 (CA) "LANE CLOSED" sign at 500' to 1000' intervals throughout extended work areas. They are optional if the work area is visible from the flagger station.
9. When a pilot car is used, place a C37 (CA) "TRAFFIC CONTROL-WAIT AND FOLLOW PILOT CAR" sign at all intersections within traffic control area. Signs shall be clean and visible at all times.
10. An optional C29 (CA) sign may be placed below the C9A (CA) sign.
11. Traffic cones or barricades may be placed on the optional taper as shown, barricades shall be Type I, II, or III.

STATE OF CALIFORNIA
DEPARTMENT OF TRANSPORTATION

TRAFFIC CONTROL SYSTEM FOR LANE CLOSURE ON TWO LANE CONVENTIONAL HIGHWAYS

NO SCALE

TCS-3

STATE OF CALIFORNIA - DEPARTMENT OF TRANSPORTATION
Caltrans

FUNCTIONAL SUPERVISOR | CALCULATED-DESIGNED BY | CHECKED BY | REVISED BY | DATE REVISED

LAST REVISION 03-04-13 | DATE PLOTTED => 10-DEC-2012 | TIME PLOTTED => 09:45

Dist	COUNTY	ROUTE	POST MILES TOTAL PROJECT	SHEET No.	TOTAL SHEETS
11	SD	163	1.4	82	147

REGISTERED CIVIL ENGINEER 12-7-12 DATE

03-04-13
PLANS APPROVAL DATE

REGISTERED PROFESSIONAL ENGINEER Gurinderpal Bhullar No. C48815 Exp. 9-30-14 CIVIL STATE OF CALIFORNIA

THE STATE OF CALIFORNIA OR ITS OFFICERS OR AGENTS SHALL NOT BE RESPONSIBLE FOR THE ACCURACY OR COMPLETENESS OF SCANNED COPIES OF THIS PLAN SHEET.

TYPICAL RAMP CLOSURES

SIGN PANEL SIZE (Min)

- A 48" x 48"
- B 48" x 30"
- C 30" x 30"
- D 48" x 48" - SPEED OF 50 mph OR MORE
  36" x 36" - SPEED LESS THAN 50 mph
- E 48" x 36"

LEGEND

- TRAFFIC CONE
- TEMPORARY SIGN
- BARRICADES

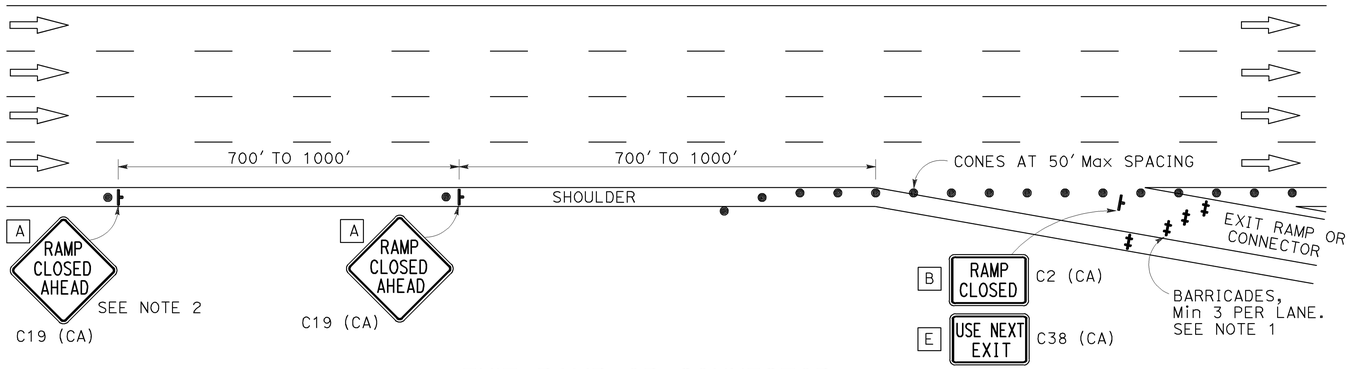

EXIT RAMP OR CONNECTOR

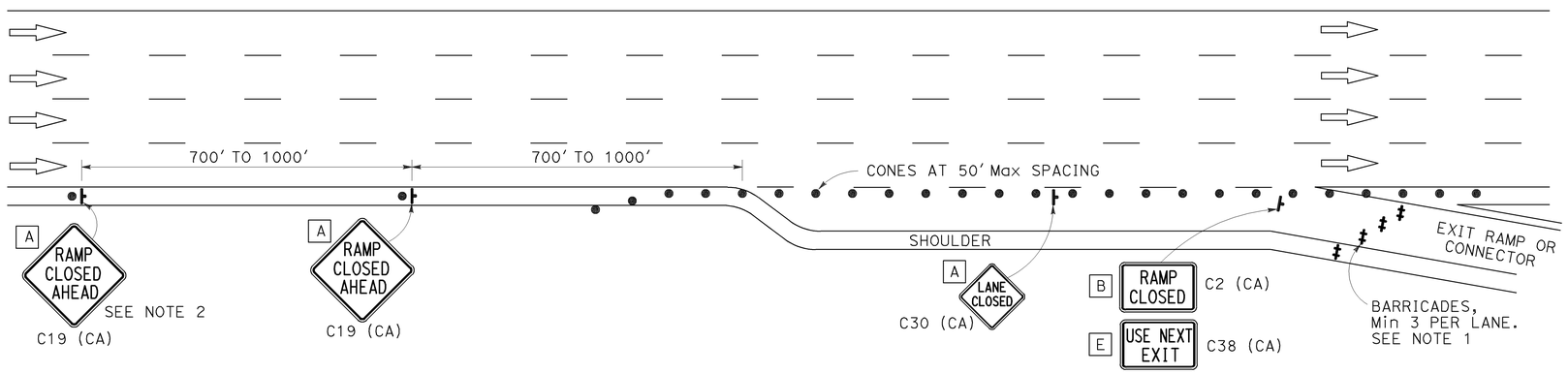

EXIT RAMP OR CONNECTOR WITH ADDITIONAL LANE

NOTES:

1. Barricades shall be Type I, II, or III for closures lasting one week or less and Type III for closures lasting longer than one week.
2. In addition to placing the C19 (CA) "RAMP CLOSED AHEAD" and C30 (CA) "RAMP CLOSED" signs, black on orange overlay plates with the word "CLOSED" may be mounted, as directed by the Engineer, on all guide signs that refer to the closed ramp. The letter size on the overlay shall be the same as the guide sign.
3. Each advance C19 (CA) "RAMP CLOSED AHEAD" sign shall be equipped with at least two flags for daytime closure. Each flag shall be at least 16" x 16" in size and shall be orange or fluorescent red-orange in color.
4. All cones used for ramp closures during the hours of darkness shall be fitted with retroreflective bands (or sleeves) as specified in the specifications.
5. Portable delineators, placed at one-half the spacing indicated for traffic cones, may be used instead of cones for daytime ramp closures only.
6. At least one person shall be assigned to provide full time maintenance of traffic control devices, unless otherwise directed by the Engineer.
7. The existing "EXIT" sign in the gore area shall be covered during ramp closures.

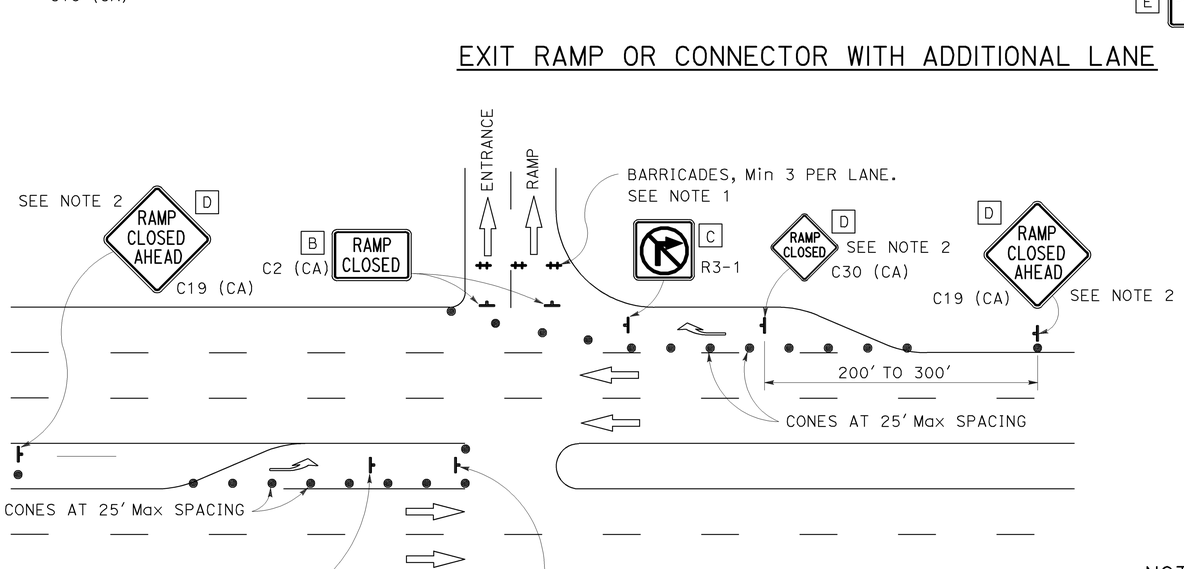

ENTRANCE RAMP WITH TURNING POCKETS

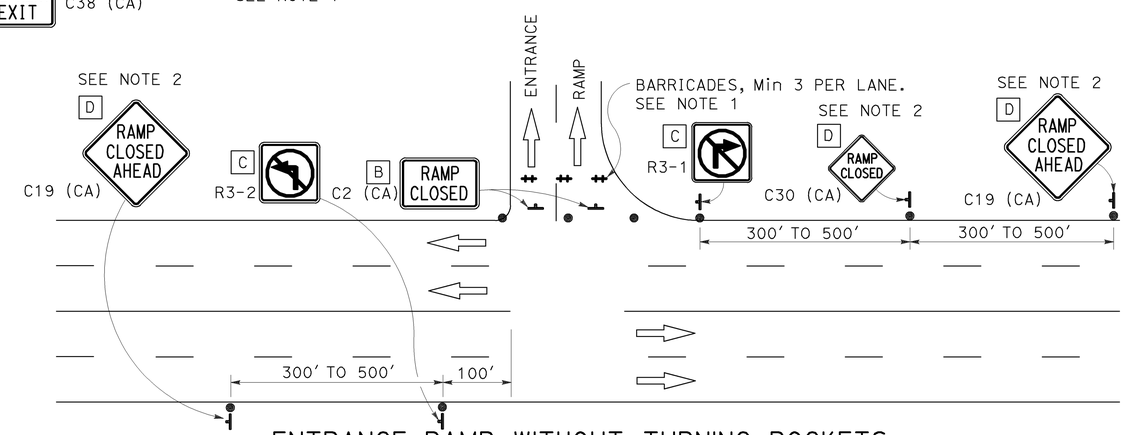

ENTRANCE RAMP WITHOUT TURNING POCKETS

NOTES:

Unless otherwise specified in the special provisions, all temporary warning signs shall have black legend on orange background.

California code are designated by (CA). Otherwise, Federal (MUTCD) codes are shown.

STATE OF CALIFORNIA
DEPARTMENT OF TRANSPORTATION

TRAFFIC CONTROL SYSTEM FOR RAMP CLOSURE

NO SCALE

TCS-4

REVISED BY | DATE REVISED | CALCULATED-DESIGNED BY | CHECKED BY | FUNCTIONAL SUPERVISOR

STATE OF CALIFORNIA - DEPARTMENT OF TRANSPORTATION

Caltrans

LAST REVISION 03-04-13 | DATE PLOTTED => 10-DEC-2012 | TIME PLOTTED => 09:45

Dist	COUNTY	ROUTE	POST MILES TOTAL PROJECT	SHEET No.	TOTAL SHEETS
11	SD	163	1.4	83	147

REGISTERED CIVIL ENGINEER

October 19, 2012
PLANS APPROVAL DATE

REGISTERED PROFESSIONAL ENGINEER Glenn DeCou No. C34547 Exp. 9-30-13 CIVIL STATE OF CALIFORNIA

THE STATE OF CALIFORNIA OR ITS OFFICERS OR AGENTS SHALL NOT BE RESPONSIBLE FOR THE ACCURACY OR COMPLETENESS OF SCANNED COPIES OF THIS PLAN SHEET.

TO ACCOMPANY PLANS DATED 03-04-13

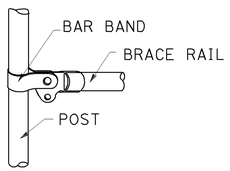

BRACE RAIL

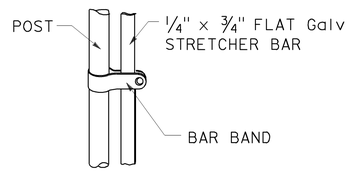

STRETCHER BAR

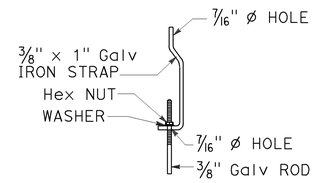

TRUSS TIGHTENER

NOTES:

1. All material for abutment connection to be galvanized.
2. The chain link fabric shall be replaced by barbed wire strands at 12" maximum centers between the double posts.
3. When the width of the culvert makes it necessary to anchor a post to the top of the culvert, a cast iron shoe or other device approved by the Engineer shall be used.
4. Fencing over stream and around headwall may also use Barbed Wire or Wire Mesh fencing with either wood post or steel post installation.
5. See Standard Plan A85 for Chain Link fence dimensions. See Standard Plan A86 for Barbed Wire and Wire Mesh fence dimensions and for wood post and steel post installation.

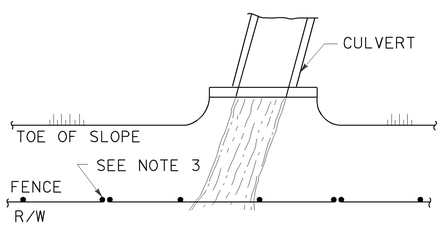

PLAN

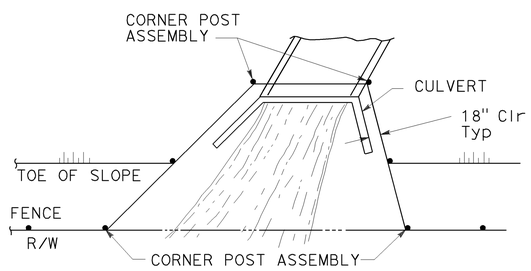

PLAN

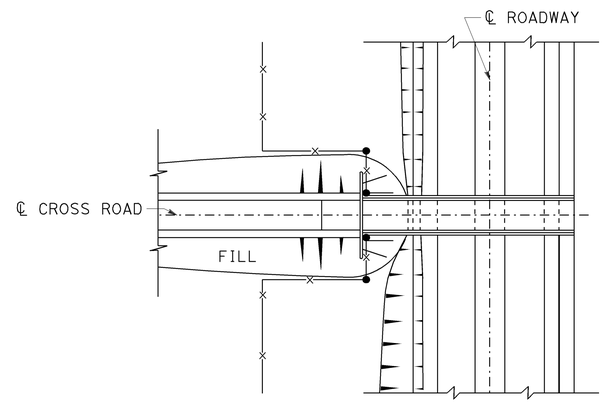

PLAN OF ROADWAY - OVERCROSSING

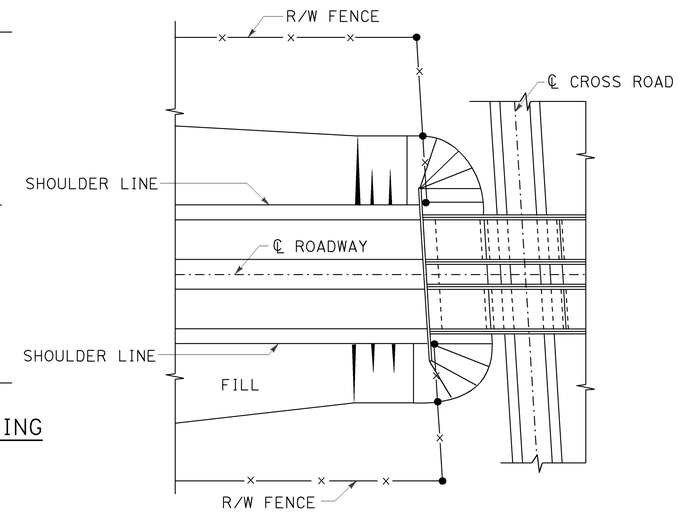

PLAN OF ROADWAY - UNDERCROSSING

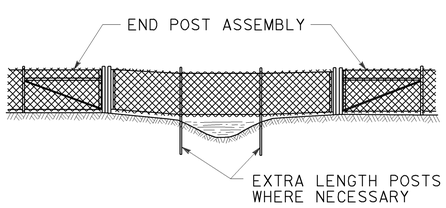

ELEVATION

INSTALLATION OVER STREAM

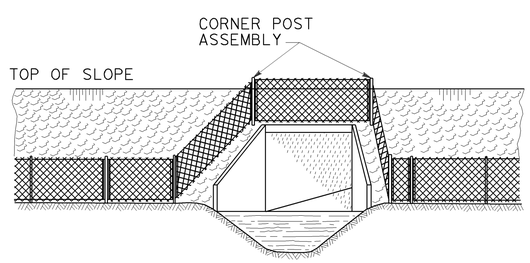

ELEVATION

INSTALLATION AROUND HEADWALL

See Note 4

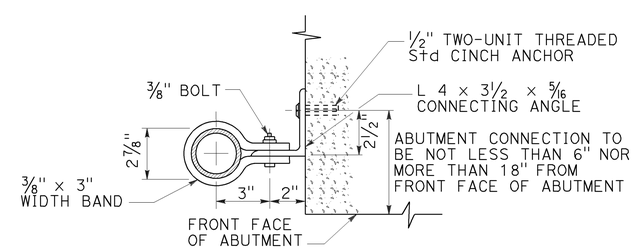

ABUTMENT CONNECTION

TYPICAL INSTALLATION AT BRIDGES

STATE OF CALIFORNIA
DEPARTMENT OF TRANSPORTATION

CHAIN LINK FENCE DETAILS

NO SCALE

RSP A85B DATED OCTOBER 19, 2012 SUPERSEDES STANDARD PLAN A85B DATED MAY 20, 2011 - PAGE 114 OF THE STANDARD PLANS BOOK DATED 2010.

REVISED STANDARD PLAN RSP A85B

2010 REVISED STANDARD PLAN RSP A85B

7-19-12

TO ACCOMPANY PLANS DATED 03-04-13

Dist	COUNTY	ROUTE	POST MILES TOTAL PROJECT	SHEET No.	TOTAL SHEETS
11	SD	163	1.4	84	147

Glenn DeCou
REGISTERED CIVIL ENGINEER

October 19, 2012
PLANS APPROVAL DATE

REGISTERED PROFESSIONAL ENGINEER Glenn DeCou No. C34547 Exp. 9-30-13 CIVIL STATE OF CALIFORNIA

THE STATE OF CALIFORNIA OR ITS OFFICERS OR AGENTS SHALL NOT BE RESPONSIBLE FOR THE ACCURACY OR COMPLETENESS OF SCANNED COPIES OF THIS PLAN SHEET.

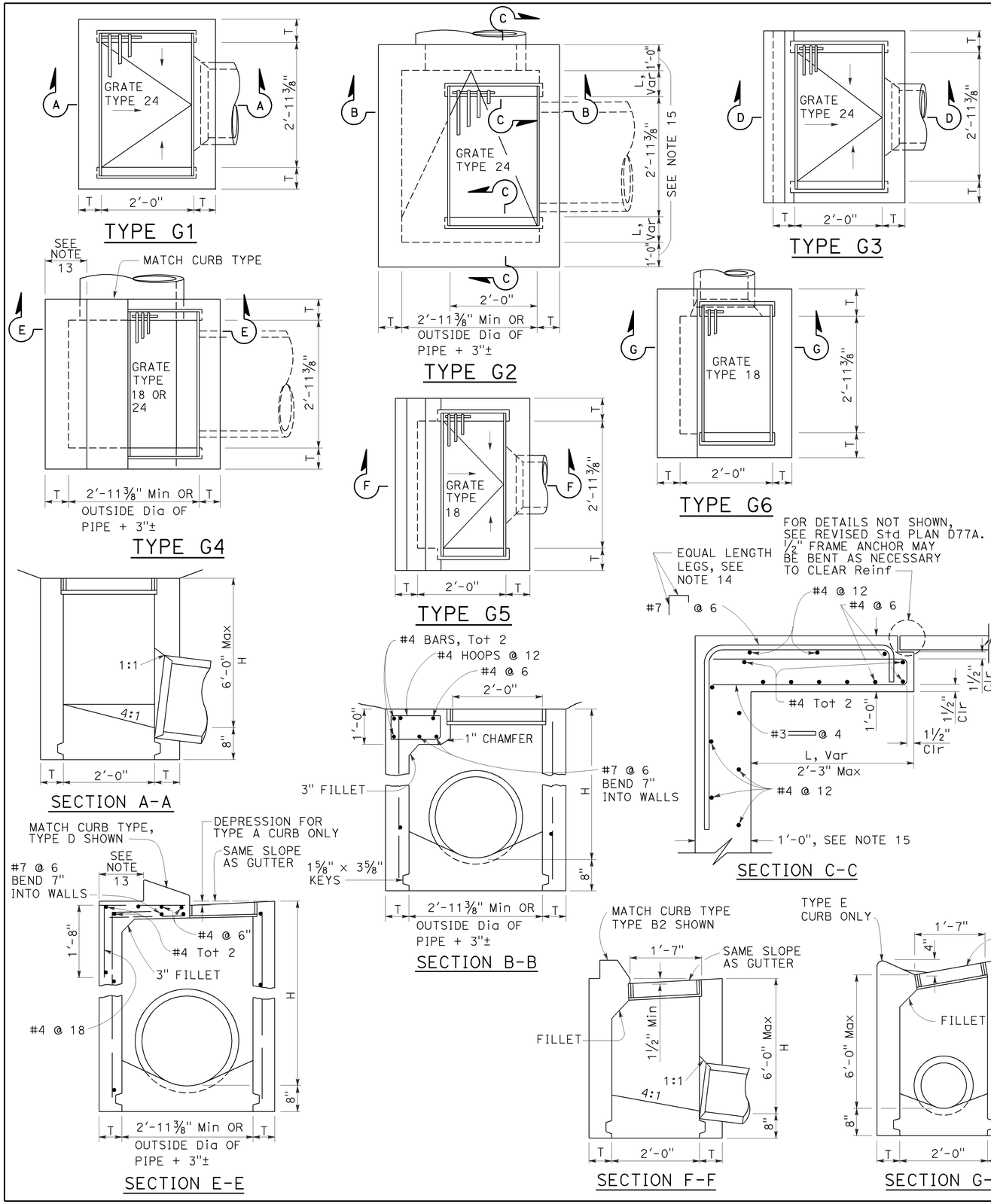

NOTES:

1. "H" is the difference in elevation between the outlet pipe flow line and the normal gutter grade line undepressed.
2. For "T" wall thickness, see Table A below.
3. Wall reinforcing not required when "H" is 8'-0" or less and the unsupported width or length is 7'-0" or less. Walls exceeding these limits shall be reinforced with #4 bars @ 1'-6" ± centers placed 1½" clear to inside of box unless otherwise shown.
4. Inlet bottom reinforcing not required. See Standard Plan D74C for alternative reinforced bottom and alternative half round bottom.
5. Steps-None required where "H" is less than 2'-6". Where "H" is 2'-6" or more, install steps with lowest rung 1'-0" above the floor and highest rung not more than 6" below top of inlet. The distance between steps shall not exceed 1'-0" and shall be uniform throughout the length of the wall. Place steps in the wall without an opening. Steps inserts may be substituted for the bar steps. Step inserts shall comply with State Industrial Safety requirements. See Standard Plan D74C for step details.
6. Details shown apply to both metal and concrete pipe.
7. Pipe(s) can be placed in any wall.
8. Curb section shall match adjacent curb.
9. Basin floors shall have wood trowel finish and a minimum slope of 12:3 from all directions toward outlet pipe.
10. Set inlet so that grate bars are parallel to direction of principal surface flow.
11. See Revised Standard Plans D77A and D77B for grate and frame details and weights of miscellaneous iron and steel.
12. See Standard Plan D78A for gutter depression details.
13. This dimenison will vary with different grates, curbs types, box width and wall thickness.
14. Bar may be rotated as necessary to clear opening. Where "L" is 6" or less, bar may be omitted.
15. Where "L" is 6" or less, wall thickness shall be as shown in Table A.
16. Cast-in-place inlets to be formed around all pipes/stubs intersecting the inlet, and concrete poured in one continuous operation. Precast inlets shall have mortared connections conforming to details for Type GCP Inlet shown on Standard Plan D75B. See Standard Specifications for mortar composition.

TABLE A

CONCRETE QUANTITIES				
TYPE	H=3'-0" TO 8'-0" (T=6")		H=8'-1" TO 20'-0" (T=8")	
	H=3'-0" (CY)	ADDITIONAL PCC PER FOOT (CY)	H=8'-1" (CY)	ADDITIONAL PCC PER FOOT (CY)
G-1	0.95	0.220	See Note A	SEE NOTE A
G-2*	1.31	0.255	3.50	0.357
G-3	1.03	0.220	See Note A	SEE NOTE A
G-4* (TYPE 24)	1.27	0.255	3.48	0.357
G-4* (TYPE 18)	1.30	0.255	3.50	0.357
G-5	1.02	0.220	SEE NOTE A	SEE NOTE A
G-6	1.04	0.220	SEE NOTE A	SEE NOTE A

TABLE BASED ON 8" FLOOR SLAB. NO DEDUCTIONS ARE TO BE MADE TO THESE QUANTITIES BECAUSE OF PIPE OPENINGS, DIFFERENT FLOOR ALTERNATIVES OR DIFFERENT CURB TYPES. * QUANTITIES FOR TYPE G-2 AND G-4 INLETS BASED ON THE MINIMUM INTERIOR DIMENSIONS.

NOTE A:

Maximum allowable height 6'-0".

STATE OF CALIFORNIA
DEPARTMENT OF TRANSPORTATION

DRAINAGE INLETS

NO SCALE

RSP D73 DATED OCTOBER 19, 2012 SUPERSEDES STANDARD PLAN D73 DATED MAY 20, 2011 - PAGE 156 OF THE STANDARD PLANS BOOK DATED 2010.

REVISED STANDARD PLAN RSP D73

2010 REVISED STANDARD PLAN RSP D73

7-19-12

Dist	COUNTY	ROUTE	POST MILES TOTAL PROJECT	SHEET No.	TOTAL SHEETS
11	SD	163	1.4	85	147

Raymond Don Tsztoo
REGISTERED CIVIL ENGINEER

July 20, 2012
PLANS APPROVAL DATE

REGISTERED PROFESSIONAL ENGINEER Raymond Don Tsztoo No. C37332 Exp. 6-30-14 CIVIL STATE OF CALIFORNIA

THE STATE OF CALIFORNIA OR ITS OFFICERS OR AGENTS SHALL NOT BE RESPONSIBLE FOR THE ACCURACY OR COMPLETENESS OF SCANNED COPIES OF THIS PLAN SHEET.

TO ACCOMPANY PLANS DATED 03-04-13

2010 REVISED STANDARD PLAN RSP D77B

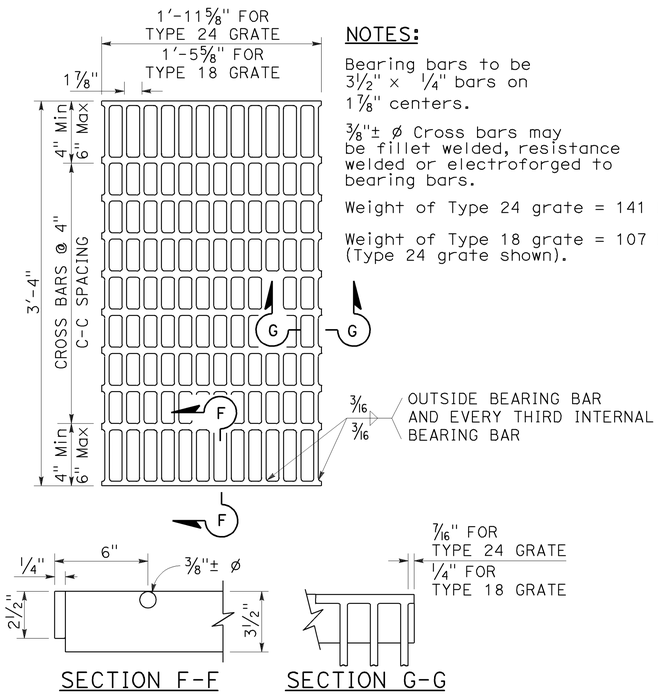

TYPE 18-10 AND 24-13 GRATE

(Welded Steel)

NOTES:

Bearing bars to be 3½" × ¼" bars on 1⅞" centers.

⅜"± ø Cross bars may be fillet welded, resistance welded or electroforged to bearing bars.

Weight of Type 24 grate = 141 LBS.

Weight of Type 18 grate = 107 LBS. (Type 24 grate shown).

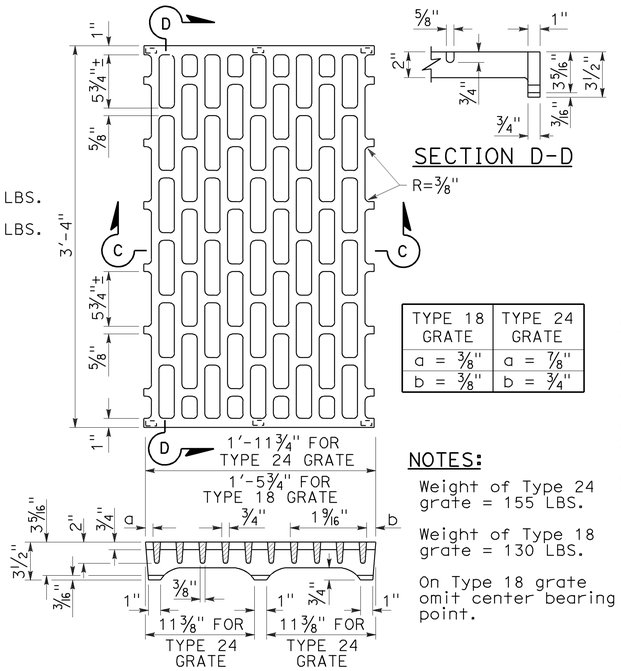

TYPE 18 GRATE	TYPE 24 GRATE
a = ⅜"	a = ⅞"
b = ⅜"	b = ¾"

NOTES:

Weight of Type 24 grate = 155 LBS.

Weight of Type 18 grate = 130 LBS.

On Type 18 grate omit center bearing point.

TYPE 18-8C AND 24-10C GRATE

(Cast ductile iron)

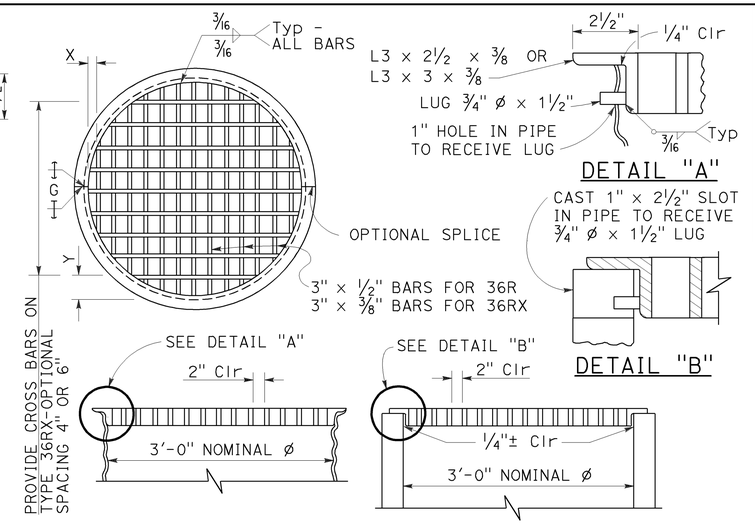

TYPE 36R AND 36RX GRATE DETAILS

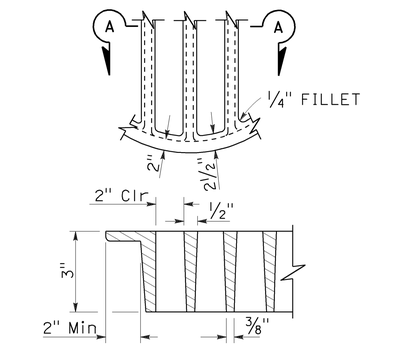

SECTION A-A

ALTERNATIVE CAST DUCTILE IRON GRATE OR CAST CARBON STEEL GRATE TYPE 36R AND 36RX

BASIS FOR Misc IRON AND STEEL FINAL PAY WEIGHTS FOR DRAINAGE INLETS

INLET TYPE	GRATE TYPE	No. OF GRATES	WEIGHT LB
GDO (SEE NOTE 4)	24-10C	2	391
	24-10S	2	456
	24-12X	2	473
	24-13	2	374
GO,GOL,G1,G2, G3,G4 (TYPE 24)	24-10C	1	202
	24-10S	1	229
	24-12X	1	239
	24-13	1	188
G4 (TYPE 18) G5,G6	18-8S	1	187
	18-9X	1	187
	18-10	1	149
GT1,GT2	18-8S	2	374
	18-9X	2	374
	18-10	2	298
GT3,GT4	24-10C	2	404
	24-10S	2	458
	24-12X	2	478
	24-13	2	376
ODI	36RX (Mod)	1	196
GMP,GCP,GCPI	36RX	1	215
ODI	36R (Mod)	1	220
GMP,GCP,GCPI	36R	1	236
TRASH RACK			22
GRATE CHAIN			3

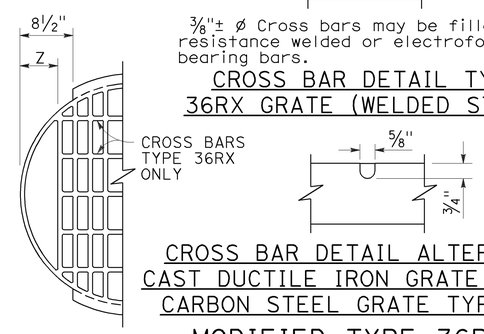

CROSS BAR DETAIL ALTERNATIVE CAST DUCTILE IRON GRATE OR CAST CARBON STEEL GRATE TYPE 36RX

MODIFIED TYPE 36R AND 36RX GRATE FOR ODI INLET

NOTES:

1. When alternative grates are allowed - Final pay based on alternative with the lesser weight.
2. Use frame shown on Standard Plan D74A, D74B or RSP D77A as appropriate.
3. When Type 24-10S, 24-12X or 24-13 grates are used with GDO Inlets, a ¼" × 3½" × 3'-4⅞" steel bar shall be welded across the center of inlet frame to separate the individual grates.
4. See Revised Standard Plan RSP D77A for connecting chain to welded grate and frame. When chain is required, do not use cast ductile iron grate.

GRATE BAR SPACING TABLE

TYPE	No. OF BARS	CLEAR BAR SPACING	X	Y 4" SPACING	Y 6" SPACING	Z
36R	13	2"	2⅛"	-	-	-
36RX (STEEL)	15	2"	9/16"	3¾"	5¾"	-
36RX (CAST)	13	2"	2⅛"	3¾"	5¾"	-
36R Mod	12	2"	2⅛"	-	-	5"
36RX Mod (STEEL)	13	2"	9/16"	3¾"	5¾"	5 11/16"
36RX Mod (CAST)	12	2"	2⅛"	3¾"	5¾"	5"

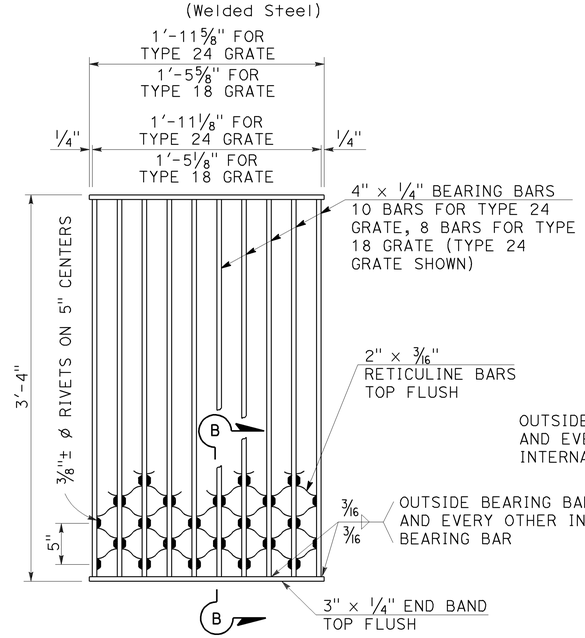

NOTES:

Weight of Type 24 grate = 182 LBS.
Weight of Type 18 grate = 145 LBS.

TYPE 18-8S AND 24-10S GRATE

(Welded Steel) Reticuline type

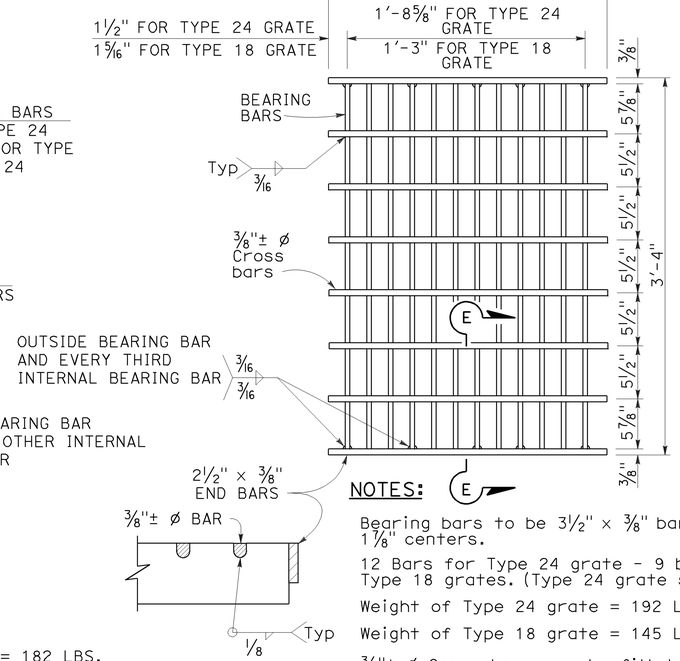

NOTES:

Bearing bars to be 3½" × ⅜" bars on 1⅞" centers.

12 Bars for Type 24 grate - 9 bars for Type 18 grates. (Type 24 grate shown).

Weight of Type 24 grate = 192 LBS.

Weight of Type 18 grate = 145 LBS.

⅜"± ø Cross bars may be fillet welded, resistance welded or electroforged to bearing bars.

TYPE 18-9X AND 24-12X GRATE

(Welded Steel)

STATE OF CALIFORNIA
DEPARTMENT OF TRANSPORTATION

BICYCLE TRAVERSABLE GRATE DETAILS

NO SCALE

RSP D77B DATED JULY 20, 2012 SUPERSEDES STANDARD PLAN D77B DATED MAY 20, 2011 - PAGE 165 OF THE STANDARD PLANS BOOK DATED 2010.

REVISED STANDARD PLAN RSP D77B

4-17-13

DIST	COUNTY	ROUTE	POST MILES TOTAL PROJECT	SHEET NO.	TOTAL SHEETS
11	SD	163	1.4	86	147

REGISTERED ELECTRICAL ENGINEER

January 20, 2012
PLANS APPROVAL DATE

REGISTERED PROFESSIONAL ENGINEER
Jeffery G. McRae
No. E14512
Exp. 6-30-12
ELECTRICAL
STATE OF CALIFORNIA

THE STATE OF CALIFORNIA OR ITS OFFICERS OR AGENTS SHALL NOT BE RESPONSIBLE FOR THE ACCURACY OR COMPLETENESS OF SCANNED COPIES OF THIS PLAN SHEET.

TO ACCOMPANY PLANS DATED 03-04-13

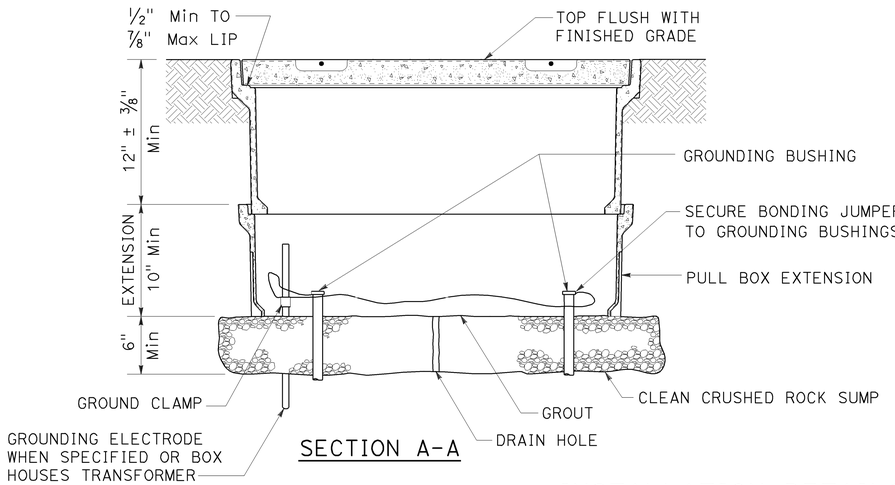

SECTION A-A

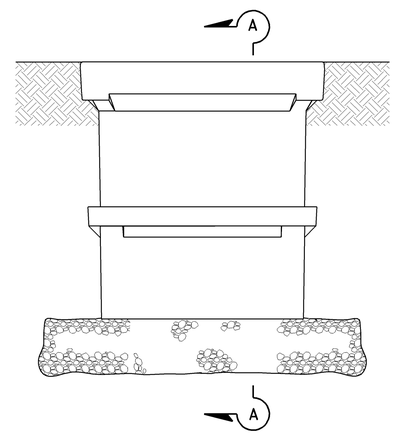

SIDE VIEW

INSTALLATION DETAILS

DETAIL A

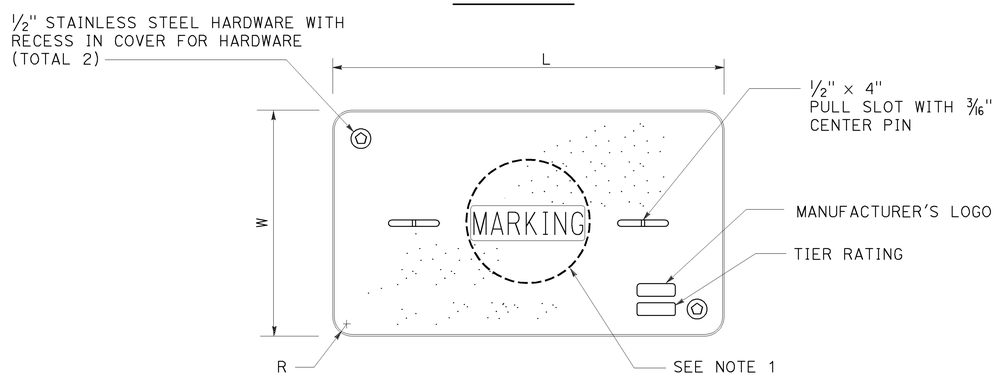

COVER TOP VIEW

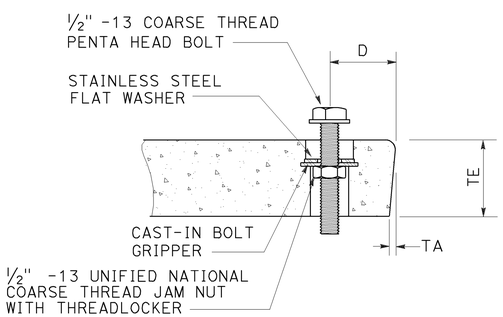

TYPICAL COVER CAPTIVE BOLT

OR SIMILAR

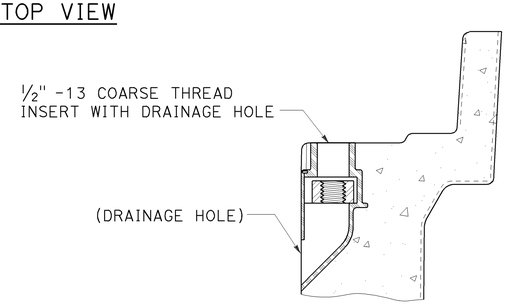

TYPICAL THREADED INSERT

OR SIMILAR

DIMENSION TABLE

PULL BOX	PULL BOX			COVER						
	MINIMUM DEPTH BOX	MINIMUM DEPTH EXTENSION	MAXIMUM WEIGHT	L	W	R	TE	TA	D	MAXIMUM WEIGHT
No. 3½	12"	N/A	40 lb	1' - 3⅜"	10⅛"	1⅜"	2"	⅛"	1¾"	30 lb
No. 5	12"	10"	55 lb	1' - 11¼"	1' - 1¾"	1⅜"	2"	⅛"	1¾"	60 lb
No. 6	12"	10"	70 lb	2' - 6½"	1' - 5½"	1⅜"	2"	⅛"	2"	85 lb

NOTES ON PULL BOXES:

1. Pull box covers must be marked as follows: "SERVICE" Service circuits between service point and service disconnect; "SPRINKLER-CONTROL" sprinkler control circuits, 50 V or less; "CALTRANS" on all pull boxes, except pull boxes marked "SPRINKLER-CONTROL"; and "TELEPHONE" Telephone service;

   A) No. 3½ pull box.
      1) "SIGNAL" - Traffic signal circuits with or without street or sign lighting circuits.
      2) "ST LIGHTING" - Street or sign lighting circuits where voltage is under 600 V.

   B) No. 5, 6, 9 or 9A pull box.
      1) "TRAFFIC SIGNAL" - Traffic signal circuits with or without street or sign lighting circuits.
      2) "STREET LIGHTING" - Street or sign lighting circuits where voltage is under 600 V.
      3) "STREET LIGHTING-HIGH VOLTAGE" - Street or sign lighting circuits where voltage is above 600 V.
      4) "IRRIGATION" - Circuits to irrigation controller 120 V or more.
      5) "RAMP METER" - Ramp meter circuits.
      6) "COUNT STATION" - Count or speed monitor circuits.
      7) "COMMUNICATIONS" - Communication circuits.
      8) "TOS COMMUNICATIONS" - TOS communication line.
      9) "TOS POWER" - TOS power.
      10) "TDC POWER" - Telephone demarcation cabinet power.
      11) "CCTV" - Closed circuit television circuits.
      12) "TMS" - Traffic monitoring station circuits.
      13) "CMS" - Changeable message sign circuits.
      14) "HAR" - Highway advisory radio circuits.

2. The nominal dimensions of the opening in which the cover sets must be the same as the cover dimensions (L and W) plus ⅛" or greater.
3. Covers and boxes must be interchangeable with California Standard. When interchanged with a standard, the top surfaces must be flush within ⅛". Top outside radius of covers and pull boxes must have a ⅛" radius.
4. Pull box extension may be another pull box as long as the bottom edge of the pull box can fit into the cover opening.

STATE OF CALIFORNIA
DEPARTMENT OF TRANSPORTATION

ELECTRICAL SYSTEMS (PULL BOX)

NO SCALE

RSP ES-8A DATED JANUARY 20, 2012 SUPPLEMENTS THE STANDARD PLANS BOOK DATED 2010.

REVISED STANDARD PLAN RSP ES-8A

2010 REVISED STANDARD PLAN RSP ES-8A

01-09-12

DIST	COUNTY	ROUTE	POST MILES TOTAL PROJECT	SHEET No	TOTAL SHEETS
11	SD	163	1.4	87	147

Peter B Smith 1/4/13
REGISTERED CIVIL ENGINEER DATE

03-04-13
PLANS APPROVAL DATE

REGISTERED PROFESSIONAL ENGINEER Peter B. Smith No. C60122 Exp. 06/30/14 CIVIL STATE OF CALIFORNIA

The State of California or its officers or agents shall not be responsible for the accuracy or completeness of scanned copies of this plan sheet.

T.Y. LIN INTERNATIONAL
404 CAMINO DEL RIO SOUTH, SUITE 700
SAN DIEGO, CA 92108

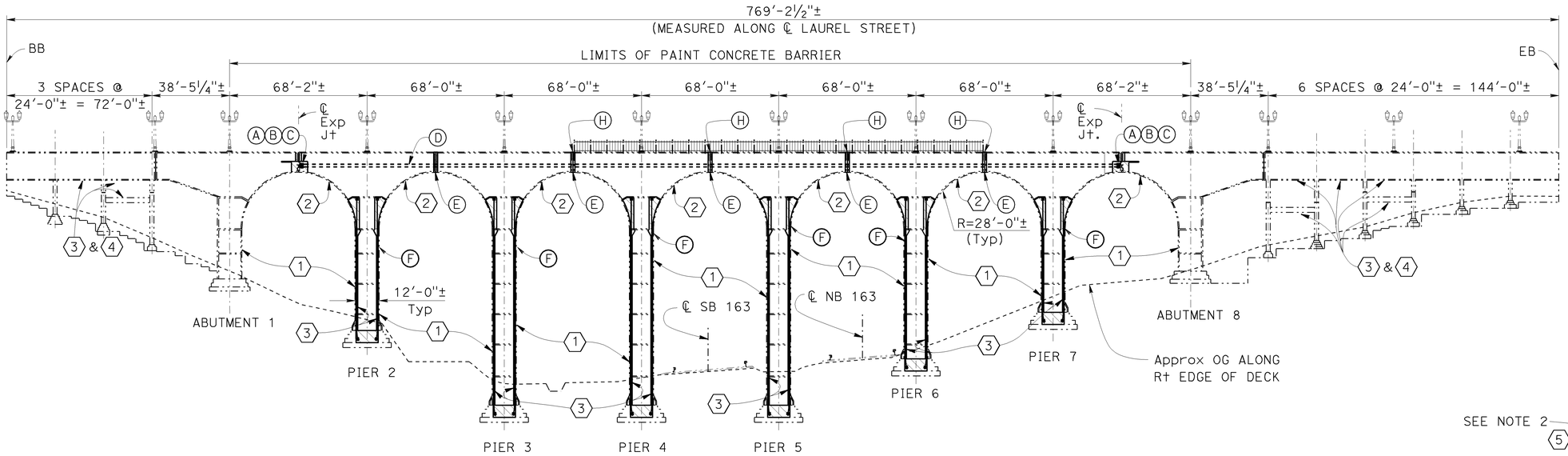

ELEVATION

1"=30'

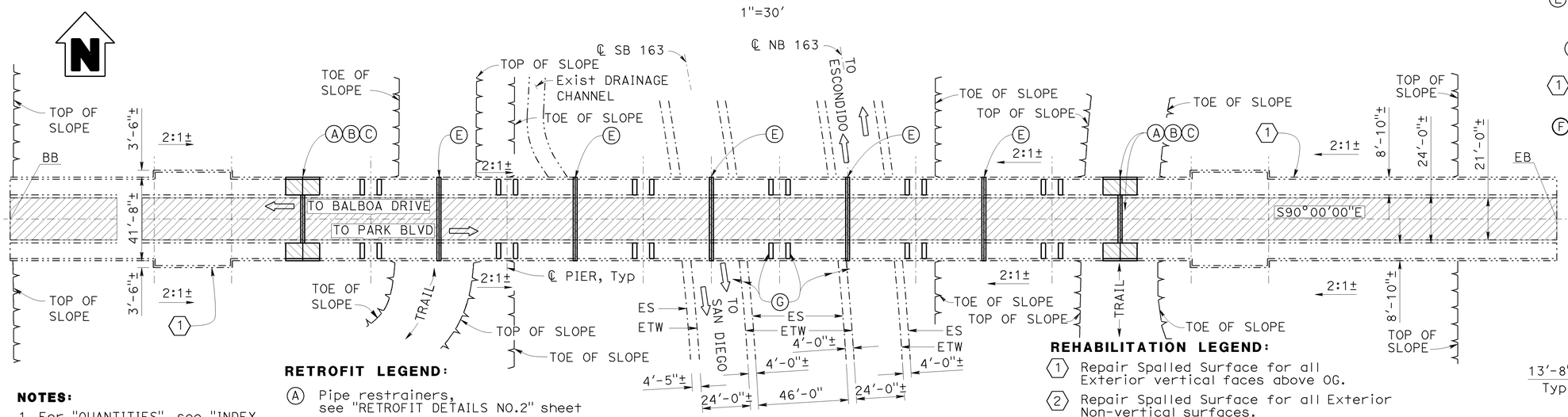

PLAN

1"=30'

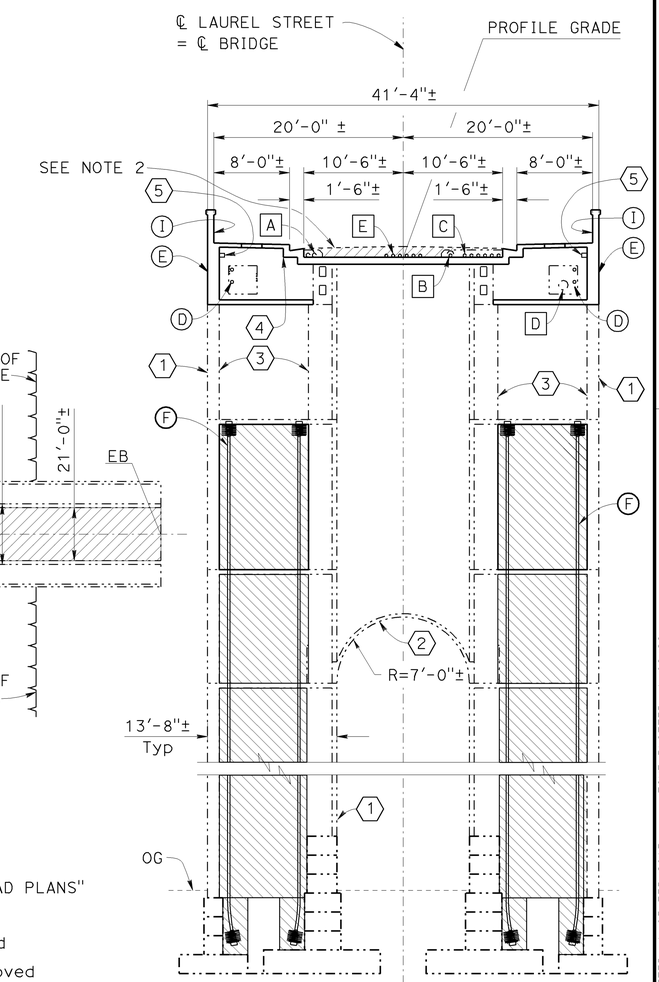

TYPICAL SECTION

⅛" = 1'-0"

SEISMIC RETROFIT AND REHABILITATION

NOTES:

1. For "QUANTITIES", see "INDEX TO PLANS" sheet.
2. For "POLYMER MODIFIED EMULSION CHIP SEAL COAT", see "ROAD PLANS".

NOTE: THE CONTRACTOR SHALL VERIFY ALL CONTROLLING FIELD DIMENSIONS BEFORE ORDERING OR FABRICATING ANY MATERIAL.

RETROFIT LEGEND:

- (A) Pipe restrainers, see "RETROFIT DETAILS NO.2" sheet
- (B) P/S Anchorage, see "RETROFIT DETAILS NO.2" sheet
- (C) Reinforced Concrete Diaphragm, see "RETROFIT DETAILS NO.2" sheet
- (D) Superstructure P/S Tendon, Tot 4, see "RETROFIT DETAILS NO.8" sheet
- (E) Reinforced Concrete Deck Removal and Replacement at intermediate Jt, see "RETROFIT DETAILS NO.8" sheet
- (F) Pier P/S, and Reinforced Concrete Shear Wall, see "RETROFIT DETAILS NO.10" sheet
- (G) Deck access opening
- (H) Remove and reinstall sections of existing railing for joint replacement
- (I) Paint Concrete Barrier
- Indicates existing structure
- Indicates new concrete
- Indicates JPCP(Mod) w/HMA overlay

REHABILITATION LEGEND:

- (1) Repair Spalled Surface for all Exterior vertical faces above OG.
- (2) Repair Spalled Surface for all Exterior Non-vertical surfaces.
- (3) Repair Spalled Surface for all Interior vertical faces.
- (4) Repair Spalled Surface for all Interior Non-vertical surfaces.
- (5) New Lighting and Electrical system, see "ROAD PLANS"

UTILITIES:

- [A] Exist 2-5" Electrical conduits to be removed
- [B] Exist 8" casing (for 4" Gas main) to be removed
- [C] Exist 6-4" Telephone conduits to be removed
- [D] 12" Waterline (to be removed), see "ROAD PLANS"
- [E] New 6-4" Telephone conduit, see "ROAD PLANS"

	BY	CHECKED		BY	CHECKED
DESIGN	Dan Fitzwilliam	Oscar Henriquez	LOAD & RESISTANCE FACTOR DESIGN		
DETAILS	Oscar Colcol	Oscar Henriquez	LAYOUT	Peter Smith	Oscar Henriquez
QUANTITIES	Sabina Piras	Dina Tobia	SPECIFICATIONS	Jared Cole	PLANS AND SPECS COMPARED Peter Smith

DESIGN OVERSIGHT
1/4/2013
SIGN OFF DATE

PREPARED FOR THE STATE OF CALIFORNIA DEPARTMENT OF TRANSPORTATION

Peter Smith
PROJECT ENGINEER

BRIDGE NO. 57-0215
POST MILES 1.4

LAUREL STREET OVERCROSSING
GENERAL PLAN

DESIGN GENERAL PLAN SHEET (ENGLISH) (REV. 03/14/12)

ORIGINAL SCALE IN INCHES FOR REDUCED PLANS 0 1 2 3

UNIT: _____
PROJECT NUMBER & PHASE: 1100000225 1 CONTRACT NO.: 11-264111

DISREGARD PRINTS BEARING EARLIER REVISION DATES

REVISION DATES: 11-16-12 01-04-13 06-06-12 10/04/12

SHEET 1 OF 61

FILE => 57-0215-a-gp01.dgn

USERNAME => s133329 DATE PLOTTED => 05-FEB-2013 TIME PLOTTED => 06:28

DIST	COUNTY	ROUTE	POST MILES TOTAL PROJECT	SHEET No	TOTAL SHEETS
11	SD	163	1.4	88	147

Peter B Smith 1/4/13
REGISTERED CIVIL ENGINEER DATE

03-04-13
PLANS APPROVAL DATE

REGISTERED PROFESSIONAL ENGINEER Peter B. Smith No. C60122 Exp. 06/30/14 CIVIL STATE OF CALIFORNIA

The State of California or its officers or agents shall not be responsible for the accuracy or completeness of scanned copies of this plan sheet.

T.Y. LIN INTERNATIONAL
404 CAMINO DEL RIO SOUTH, SUITE 700
SAN DIEGO, CA 92108

INDEX TO BRIDGE PLANS

SHEET NO.	TITLE
1	GENERAL PLAN
2	INDEX TO PLANS
3	DEMOLITION DETAILS NO.1
4	DEMOLITION DETAILS NO.2
5	DEMOLITION DETAILS NO.3
6	DEMOLITION DETAILS NO.4
7	DEMOLITION DETAILS NO.5
8	DEMOLITION DETAILS NO.6
9	DEMOLITION DETAILS NO.7
10	RETROFIT DETAILS NO.1
11	RETROFIT DETAILS NO.2
12	RETROFIT DETAILS NO.3
13	RETROFIT DETAILS NO.4
14	RETROFIT DETAILS NO.5
15	RETROFIT DETAILS NO.6
16	RETROFIT DETAILS NO.7
17	RETROFIT DETAILS NO.8
18	RETROFIT DETAILS NO.9
19	RETROFIT DETAILS NO.10
20	RETROFIT DETAILS NO.11
21	RETROFIT DETAILS NO.12
22	RETROFIT DETAILS NO.13
23	RETROFIT DETAILS NO.14
24	RETROFIT DETAILS NO.15
25	RETROFIT DETAILS NO.16
26	REHABILITATION PLAN
27	REHABILITATION LAYOUT NO. 1
28	REHABILITATION LAYOUT NO. 2
29	REHABILITATION LAYOUT NO. 3
30	REHABILITATION LAYOUT NO. 4
31	REHABILITATION DETAILS NO. 1
32	REHABILITATION DETAILS NO. 2
33	REHABILITATION DETAILS NO. 3
34	ACCESS DOOR GENERAL PLAN
35	ACCESS DOOR DETAILS NO. 1
36	ACCESS DOOR DETAILS NO. 2
37	ACCESS DOOR DETAILS NO. 3
38	ACCESS DOOR DETAILS NO. 4
39	LADDERS, CATWALKS, & PLATFORMS
40	PIER LADDER PLAN
41	ANCHOR ARM LADDER PLAN
42	ABUTMENT CATWALK PLAN
43	CATWALK DETAILS NO. 1
44	CATWALK DETAILS NO. 2
45	CATWALK DETAILS NO. 3
46	CATWALK DETAILS NO. 4
47	CATWALK DETAILS NO. 5
48	CATWALK DETAILS NO. 6
49	CATWALK DETAILS NO. 7
50	CATWALK DETAILS NO. 8
51	PLATFORM GRATING LAYOUT
52	LADDER DETAILS NO. 1
53	LADDER DETAILS NO. 2
54	DRAINAGE PLAN
55	DRAINAGE DETAILS NO. 1
56	DRAINAGE DETAILS NO. 2
57	DRAINAGE DETAILS NO. 3
58	DRAINAGE DETAILS NO. 4
59	DRAINAGE DETAILS NO. 5
60	SLOPE REPAIR DETAILS NO. 1
61	SLOPE REPAIR DETAILS NO. 2

PLAN SYMBOLS

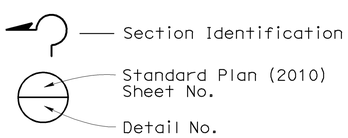

NOTE: THE CONTRACTOR SHALL VERIFY ALL CONTROLLING FIELD DIMENSIONS BEFORE ORDERING OR FABRICATING ANY MATERIAL.

STANDARD PLANS (DATED 2010)

A10A	ABBREVIATIONS (SHEET 1 OF 2)
A10B	ABBREVIATIONS (SHEET 2 OF 2)
A10C	LINES AND SYMBOLS (SHEET 1 OF 3)
A10D	LINES AND SYMBOLS (SHEET 2 OF 3)
A10E	LINES AND SYMBOLS (SHEET 3 OF 3)
P1	JOINTED PLAIN CONCRETE PAVEMENT
B0-13	BRIDGE DETAILS
B6-21	JOINT SEALS (MAXIMUM MOVEMENT RATING = 2")
B8-5	CAST-IN-PLACE PRESTRESSED GIRDER DETAILS

GENERAL NOTES
LOAD AND RESISTANCE FACTOR DESIGN

DESIGN: AASHTO LRFD BRIDGE DESIGN SPECIFICATIONS, 4th edition and the Caltrans Amendments, preface dated September 2010.

DEAD LOAD: Includes lightweight concrete wearing surface.

LIVE LOADING: Not included.

SEISMIC DESIGN: Caltrans Memo to Designers 20-4
Caltrans Seismic Design Criteria Version 1.4, June 2006

SEISMIC LOADING: SDC Version 1.4 Figure B.8
Soil profile: Type D
Magnitude: 7.25±0.25
Peak Bedrock Acceleration: 0.7 g
(Modified for near source effects per SDC 6.1.2.1)

Acceleration Response Spectrum (5% damping)

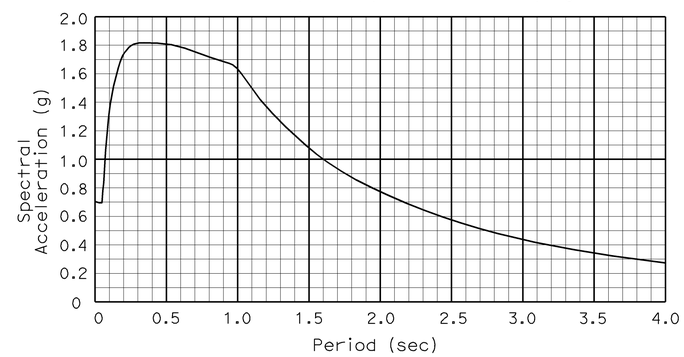

REINFORCED CONCRETE: Assumed For Existing

f_y = 40 ksi

f'_c = 2.5 ksi

New Construction (Structure Concrete, Bridge)

f_y = 60 ksi

f'_c = 5 ksi @ 28 days

LIGHTWEIGHT CONCRETE: f'c = 4 ksi @ 28 days

PRESTRESSED CONCRETE: See "PRESTRESSING NOTES" on "RETROFIT DETAILS NO. 8" and "RETROFIT DETAILS NO. 11" sheets

STRUCTURAL STEEL PIPE: ASTM A53 GRADE B

GALVANIZING: All Miscellaneous Metal Components shall be galvanized

QUANTITIES

GROUT EXPANSION JOINTS	9	CF
REMOVE FORMWORK	89,000	SQFT
REMOVE BIRD WASTE	900	SQFT
PRESSURE RINSE CONCRETE	LUMP	SUM
REPAIR SPALLED SURFACE AREA (INTERIOR VERTICAL)	7,870	SQFT
REPAIR SPALLED SURFACE AREA (INTERIOR NON-VERTICAL)	4,760	SQFT
REPAIR SPALLED SURFACE AREA (EXTERIOR VERTICAL)	10,120	SQFT
REPAIR SPALLED SURFACE AREA (EXTERIOR NON-VERTICAL)	4,350	SQFT
PUBLIC SAFETY PLAN	LUMP	SUM
CLOSE ACCESS, DECK	24	EA
RAPID SETTING CONCRETE (PATCH)	404	CF
REMOVE ASPHALT CONCRETE SURFACING	16,150	SQFT
REMOVE UNSOUND CONCRETE	404	CF
PREPARE CONCRETE BRIDGE DECK SURFACE	32,300	SQFT
TREAT BRIDGE DECK	16,150	SQFT
FURNISH BRIDGE DECK TREATMENT MATERIAL	180	GAL
CORE CONCRETE (7/8")	230	LF
CORE CONCRETE (5")	30	LF
CORE CONCRETE (6")	130	LF
CORE CONCRETE (7")	35	LF
ACCESS OPENING, DECK	24	EA
BRIDGE REMOVAL (PORTION)	LUMP	SUM
REPAIR ABUTMENT SLOPE	1250	CY
HOT MIX ASPHALT (BRIDGE)	203	TON
JOINTED PLAIN CONCRETE PAVEMENT (MOD)	512	CY
TEMPORARY SUPPORT	LUMP	SUM
PRESTRESSING CAST-IN-PLACE CONCRETE	LUMP	SUM
STRUCTURAL CONCRETE, BRIDGE	1,200	CY
MINOR CONCRETE	1	CY
DRILL AND BOND DOWEL	7,300	LF
DRILL AND BOND DOWEL (CHEMICAL ADHESIVE)	10,680	EA
JOINT SEAL (MR 1½")	83	LF
JOINT SEAL (TYPE A)	42	LF
JOINT SEAL (ASPHALTIC PLUG)	42	LF
BAR REINFORCING STEEL (BRIDGE)	377,000	LB
HEADED BAR REINFORCEMENT	145	EA
PAINT CONCRETE BARRIER	4,450	SQFT
MISCELLANEOUS METAL (RESTRAINER - PIPE TYPE)	4,950	LB
MISCELLANEOUS METAL (BRIDGE)	159,000	LB
BRIDGE DECK DRAINAGE SYSTEM	11,200	LB

SEISMIC RETROFIT AND REHABILITATION

Frank H. Wei
DESIGN OVERSIGHT
1/4/2013
SIGN OFF DATE

	BY	CHECKED
DESIGN	Dan Fitzwilliam	Oscar Henriquez
DETAILS	Oscar Colcol	Oscar Henriquez
QUANTITIES	Sabina Piras	Dina Tobia

PREPARED FOR THE STATE OF CALIFORNIA DEPARTMENT OF TRANSPORTATION

Peter Smith
PROJECT ENGINEER

BRIDGE NO. 57-0215
POST MILES 1.4

LAUREL STREET OVERCROSSING
INDEX TO PLANS

DESIGN DETAIL SHEET (ENGLISH) (REV. 03/14/12)

ORIGINAL SCALE IN INCHES FOR REDUCED PLANS 0 1 2 3

UNIT: _____
PROJECT NUMBER & PHASE: 1100000225 1 CONTRACT NO.: 11-264111

DISREGARD PRINTS BEARING EARLIER REVISION DATES 11-16-12 01-04-13 06-06-13 10/04/13

SHEET 2 OF 61

FILE => 57-0215-a-itp.dgn

USERNAME => s133329 DATE PLOTTED => 05-FEB-2013 TIME PLOTTED => 06:28

DIST	COUNTY	ROUTE	POST MILES TOTAL PROJECT	SHEET No	TOTAL SHEETS
11	SD	163	1.4	89	147

Peter B Smith 11/16/12
REGISTERED CIVIL ENGINEER DATE

03-04-13
PLANS APPROVAL DATE

REGISTERED PROFESSIONAL ENGINEER Peter B. Smith No. C60122 Exp. 06/30/14 CIVIL STATE OF CALIFORNIA

The State of California or its officers or agents shall not be responsible for the accuracy or completeness of scanned copies of this plan sheet.

T.Y. LIN INTERNATIONAL
404 CAMINO DEL RIO SOUTH, SUITE 700
SAN DIEGO, CA 92108

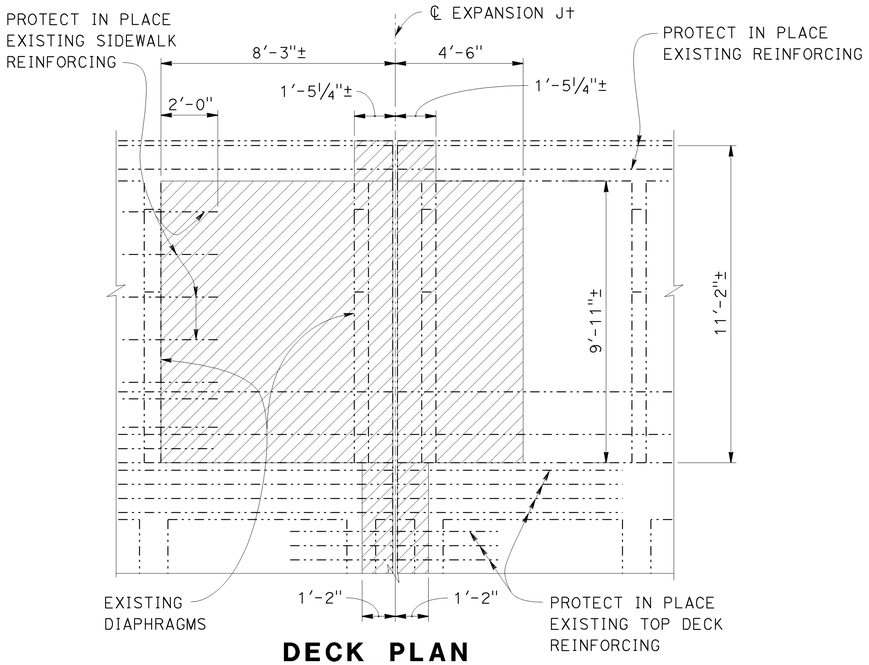

DECK PLAN

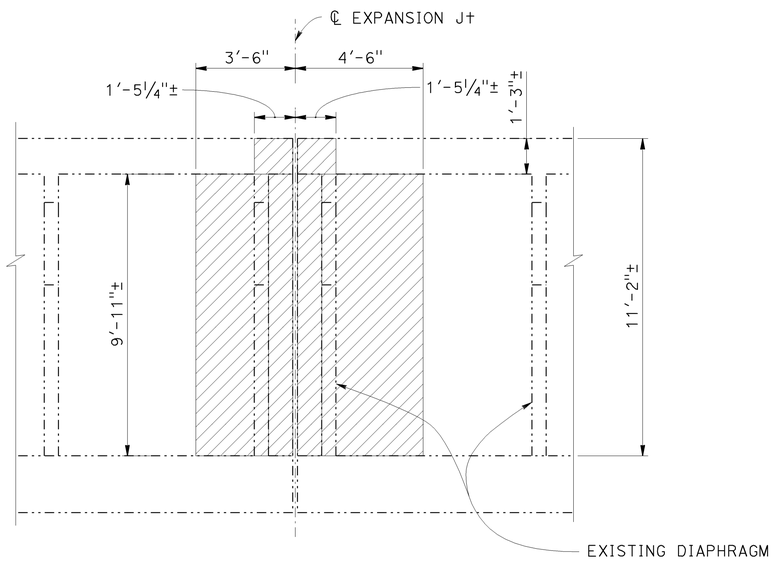

SOFFIT PLAN

DEMOLITION PLAN AT EXPANSION JOINT

⅜"=1'-0"

NOTE: THE CONTRACTOR SHALL VERIFY ALL CONTROLLING FIELD DIMENSIONS BEFORE ORDERING OR FABRICATING ANY MATERIAL.

NOTES:

1. For "SECTION A-A", "SECTION B-B", "SECTION C-C" and "SECTION D-D", see "DEMOLITION DETAILS NO.2" sheet.
2. See "GENERAL PLAN" for list of utilities.
3. Remove screens at top of arches over freeway.

LEGEND:

- Indicates Bridge Removal (Portion)
- Indicates Remove Asphalt Concrete Surfacing

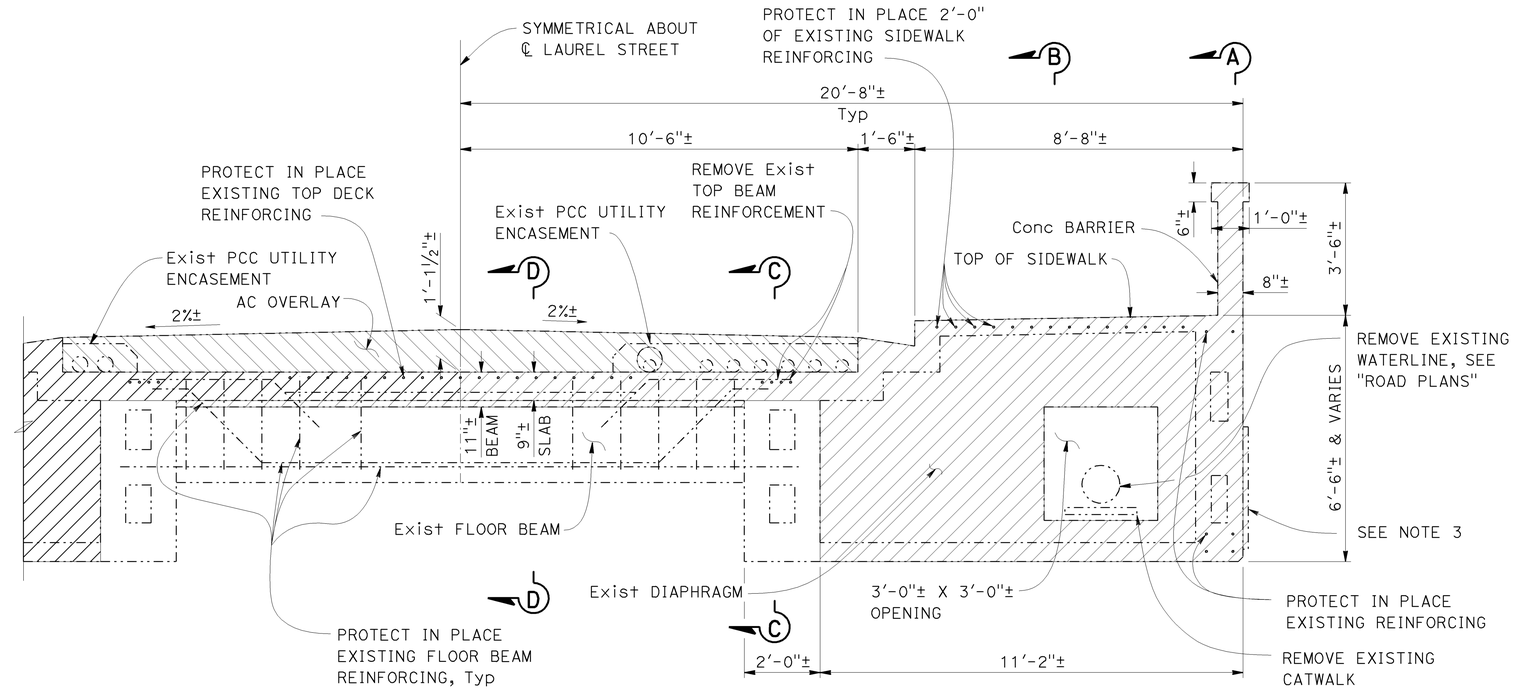

TYPICAL SECTION EXPANSION JOINT

½"=1'-0"

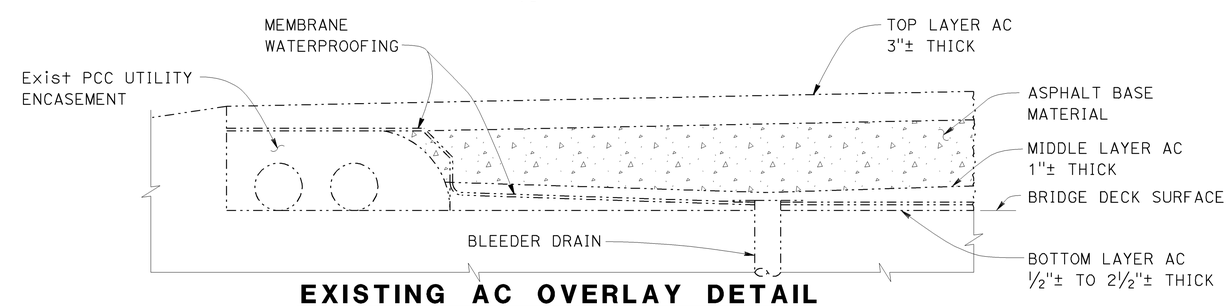

EXISTING AC OVERLAY DETAIL

1½"=1'-0"

SEISMIC RETROFIT AND REHABILITATION

Frank H. Wei
DESIGN OVERSIGHT
11/16/2012
SIGN OFF DATE

	BY	CHECKED
DESIGN	Dan Fitzwilliam	Oscar Henriquez
DETAILS	Oscar Colcol	Oscar Henriquez
QUANTITIES	Sabina Piras	Dina Tobia

PREPARED FOR THE STATE OF CALIFORNIA DEPARTMENT OF TRANSPORTATION

Peter Smith
PROJECT ENGINEER

BRIDGE NO. 57-0215
POST MILES 1.4

LAUREL STREET OVERCROSSING
DEMOLITION DETAILS NO.1

DESIGN DETAIL SHEET (ENGLISH) (REV. 03/14/12)

ORIGINAL SCALE IN INCHES FOR REDUCED PLANS 0 1 2 3

UNIT: _____
PROJECT NUMBER & PHASE: 1100000225 1 CONTRACT NO.: 11-264111

DISREGARD PRINTS BEARING EARLIER REVISION DATES

REVISION DATES: 11-16-12 04-13-12 06-08-12 10-04-12

SHEET 3 OF 61

FILE => 57-0215-m-dd01.dgn

USERNAME => s133329 DATE PLOTTED => 05-FEB-2013 TIME PLOTTED => 06:28

DIST	COUNTY	ROUTE	POST MILES TOTAL PROJECT	SHEET No	TOTAL SHEETS
11	SD	163	1.4	90	147

Peter B Smith 11/16/12
REGISTERED CIVIL ENGINEER DATE

03-04-13
PLANS APPROVAL DATE

REGISTERED PROFESSIONAL ENGINEER Peter B. Smith No. C60122 Exp. 06/30/14 CIVIL STATE OF CALIFORNIA

The State of California or its officers or agents shall not be responsible for the accuracy or completeness of scanned copies of this plan sheet.

T.Y. LIN INTERNATIONAL
404 CAMINO DEL RIO SOUTH, SUITE 700
SAN DIEGO, CA 92108

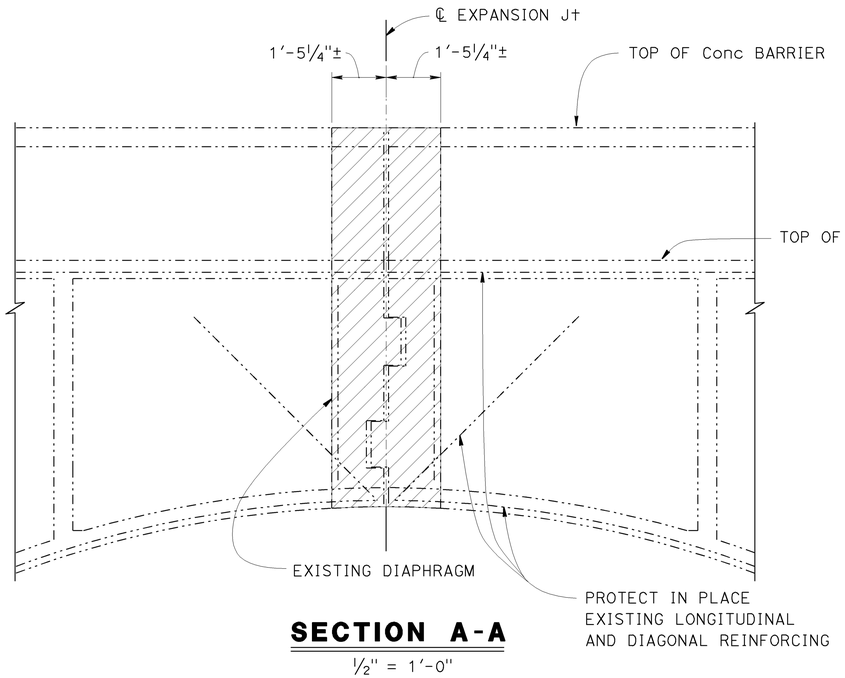

SECTION A-A
½" = 1'-0"

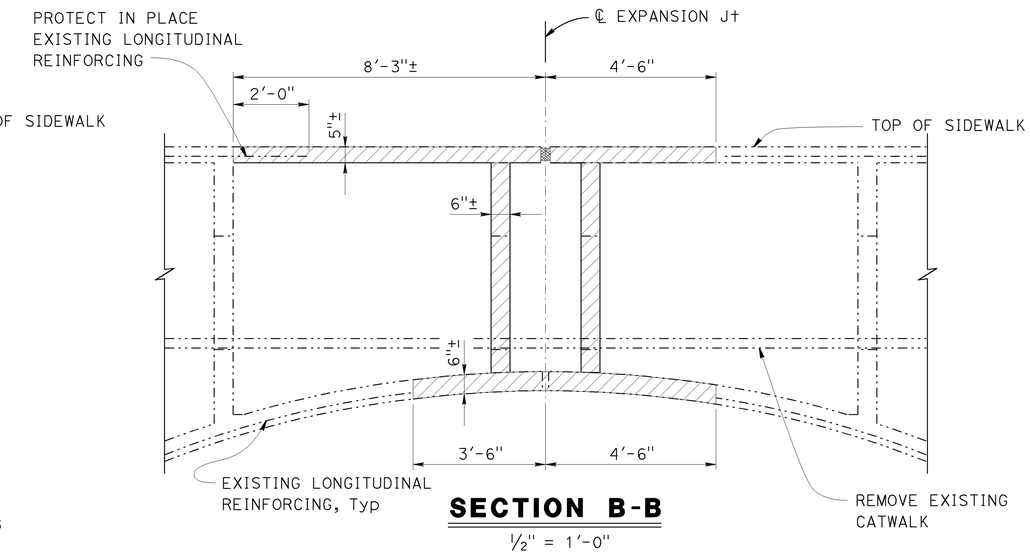

SECTION B-B
½" = 1'-0"

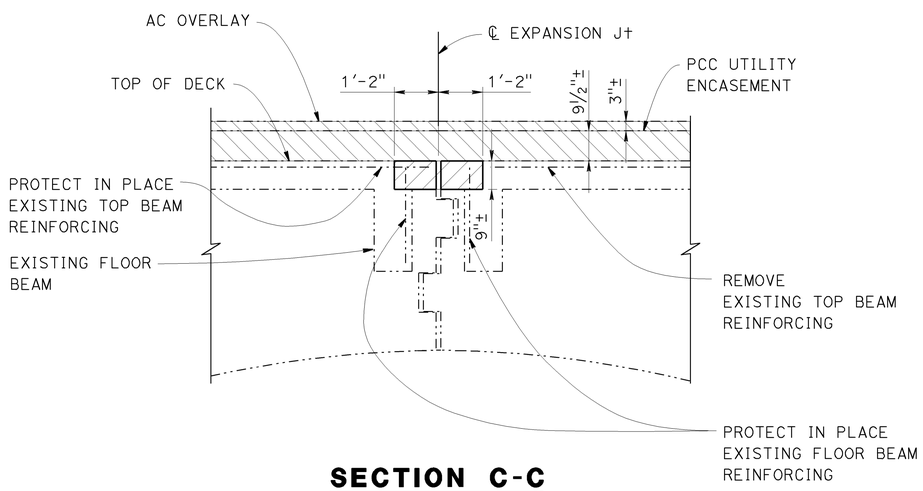

SECTION C-C
½" = 1'-0"

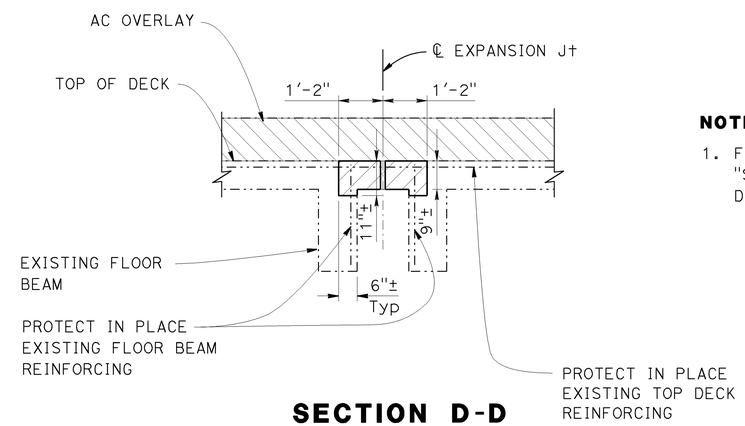

SECTION D-D
½" = 1'-0"

NOTES:

1. For location of "SECTION A-A", "SECTION B-B", "SECTION C-C", and "SECTION D-D", see "DEMOLITION DETAILS NO. 1" sheet

LEGEND:

- Indicates Bridge Removal (Portion)
- Indicates Remove Asphalt Concrete Surfacing

NOTE: THE CONTRACTOR SHALL VERIFY ALL CONTROLLING FIELD DIMENSIONS BEFORE ORDERING OR FABRICATING ANY MATERIAL.

SEISMIC RETROFIT AND REHABILITATION

DESIGN OVERSIGHT
11/16/2012
SIGN OFF DATE

	BY	CHECKED
DESIGN	Dan Fitzwilliam	Oscar Henriquez
DETAILS	Oscar Colcol	Oscar Henriquez
QUANTITIES	Sabina Piras	Dina Tobia

PREPARED FOR THE STATE OF CALIFORNIA DEPARTMENT OF TRANSPORTATION

Peter Smith
PROJECT ENGINEER

BRIDGE NO. 57-0215
POST MILES 1.4

LAUREL STREET OVERCROSSING
DEMOLITION DETAILS NO.2

DESIGN DETAIL SHEET (ENGLISH) (REV. 03/14/12)

ORIGINAL SCALE IN INCHES FOR REDUCED PLANS 0 1 2 3

UNIT: _____
PROJECT NUMBER & PHASE: 1100000225 1 CONTRACT NO.: 11-264111

DISREGARD PRINTS BEARING EARLIER REVISION DATES

REVISION DATES: 11-16-12 04-12-12 06-08-12 10/04/12

SHEET 4 OF 61

FILE => 57-0215-m-dd02.dgn

USERNAME => s133329 DATE PLOTTED => 05-FEB-2013 TIME PLOTTED => 06:28

DIST	COUNTY	ROUTE	POST MILES TOTAL PROJECT	SHEET No	TOTAL SHEETS
11	SD	163	1.4	91	147

Peter B Smith 11/16/12
REGISTERED CIVIL ENGINEER DATE

03-04-13
PLANS APPROVAL DATE

REGISTERED PROFESSIONAL ENGINEER Peter B. Smith No. C60122 Exp. 06/30/14 CIVIL STATE OF CALIFORNIA

The State of California or its officers or agents shall not be responsible for the accuracy or completeness of scanned copies of this plan sheet.

T.Y. LIN INTERNATIONAL
404 CAMINO DEL RIO SOUTH, SUITE 700
SAN DIEGO, CA 92108

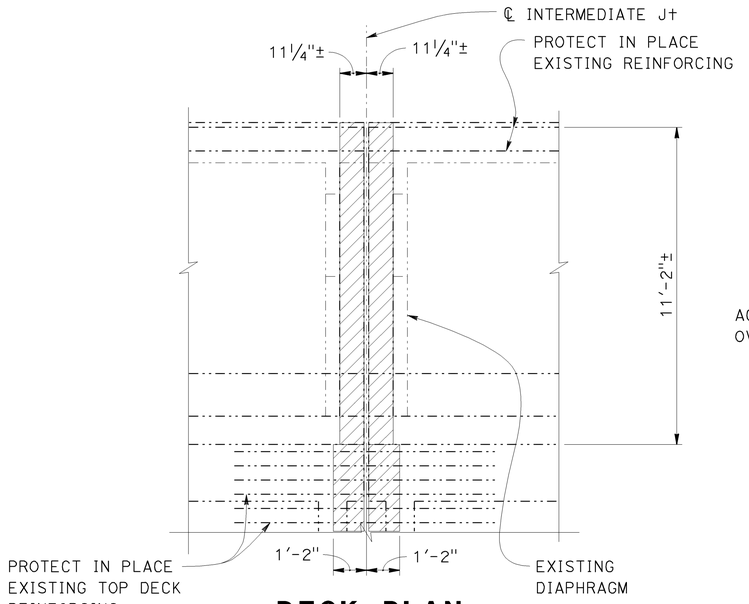

DECK PLAN

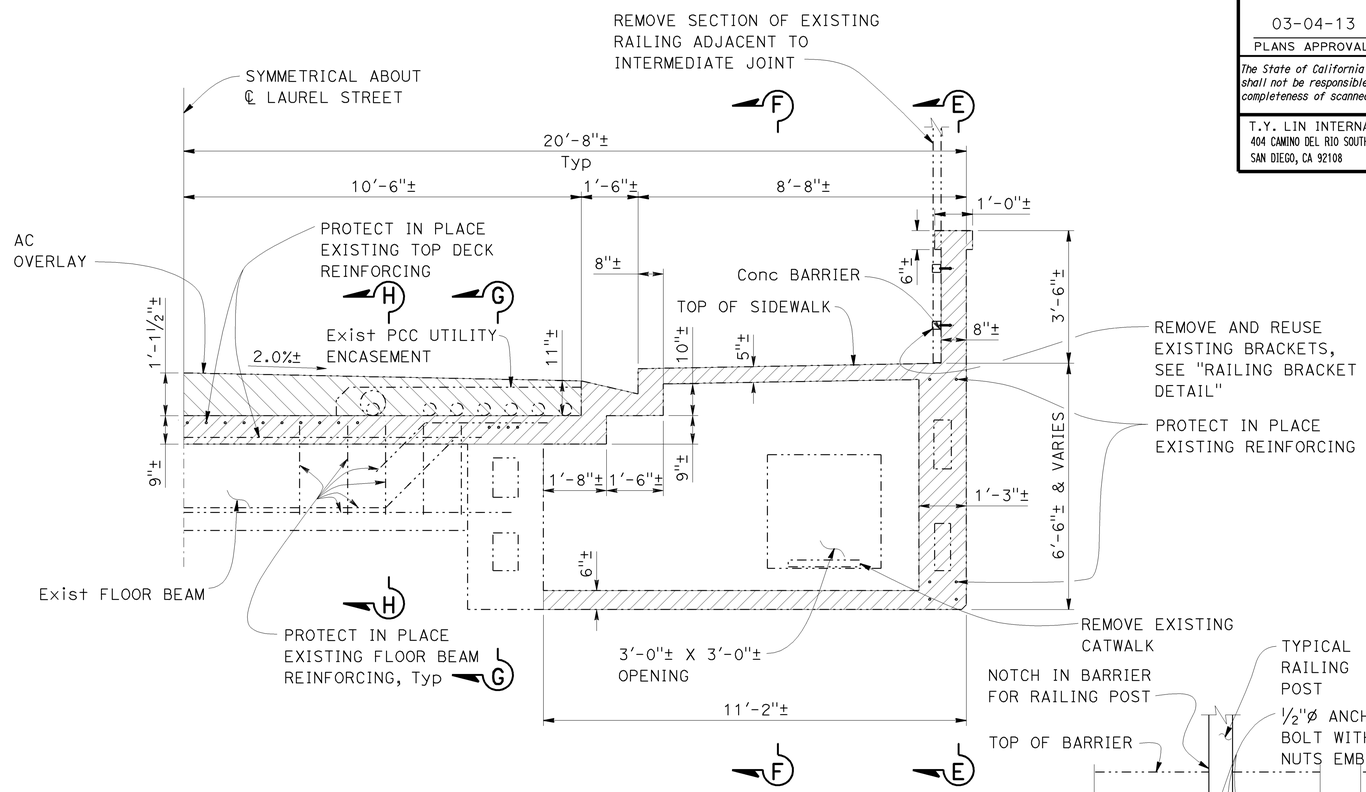

TYPICAL SECTION INTERMEDIATE JOINT

½"=1'-0"

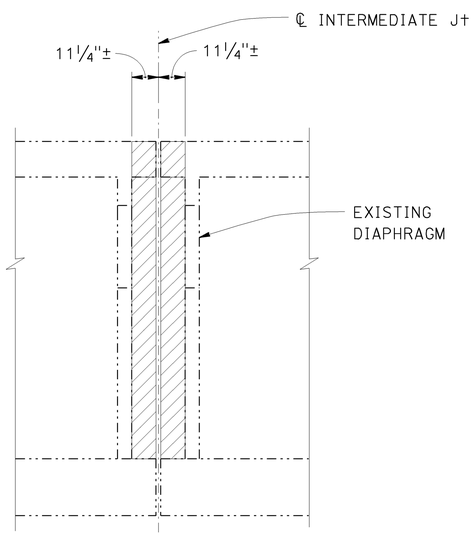

SOFFIT PLAN

DEMOLITION PLAN AT INTERMEDIATE JOINT

⅜"=1'-0"

NOTE: THE CONTRACTOR SHALL VERIFY ALL CONTROLLING FIELD DIMENSIONS BEFORE ORDERING OR FABRICATING ANY MATERIAL.

NOTE:

For "SECTION E-E", "SECTION F-F", "SECTION G-G" and "SECTION H-H", see "DEMOLITION DETAILS NO.4" sheet

LEGEND:

- Indicates Bridge Removal (Portion)
- Indicates Remove Asphalt Concrete Surfacing

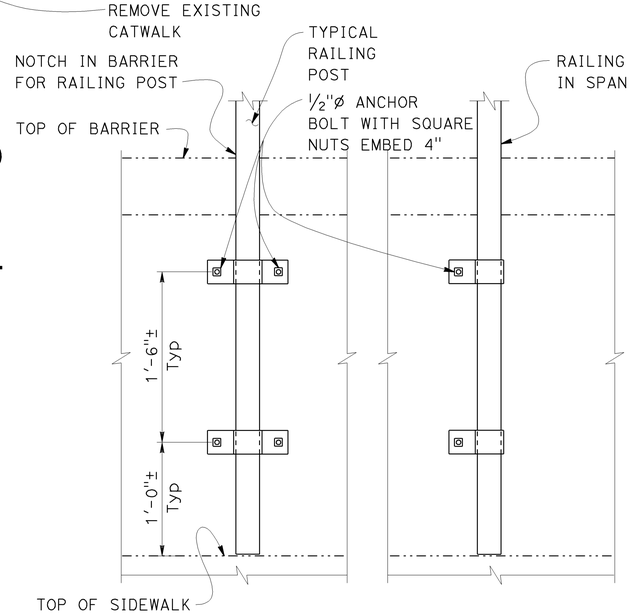

RAILING BRACKET DETAIL

1½"=1'-0"

SEISMIC RETROFIT AND REHABILITATION

Frank H. Wei
DESIGN OVERSIGHT
11/16/2012
SIGN OFF DATE

	BY	CHECKED
DESIGN	Peter Smith	Oscar Henriquez
DETAILS	Oscar Colcol	Oscar Henriquez
QUANTITIES	Sabina Piras	Dina Tobia

PREPARED FOR THE STATE OF CALIFORNIA DEPARTMENT OF TRANSPORTATION

Peter Smith
PROJECT ENGINEER

BRIDGE NO. 57-0215
POST MILES 1.4

LAUREL STREET OVERCROSSING
DEMOLITION DETAILS NO.3

DESIGN DETAIL SHEET (ENGLISH) (REV. 03/14/12)

ORIGINAL SCALE IN INCHES FOR REDUCED PLANS 0 1 2 3

UNIT: _____
PROJECT NUMBER & PHASE: 1100000225 1 CONTRACT NO.: 11-264111

DISREGARD PRINTS BEARING EARLIER REVISION DATES

REVISION DATES: 11-16-12 04-13-12 06-08-12 10/04/12

SHEET 5 OF 61

FILE => 57-0215-m-dd03.dgn

USERNAME => s133329 DATE PLOTTED => 05-FEB-2013 TIME PLOTTED => 06:28

DIST	COUNTY	ROUTE	POST MILES TOTAL PROJECT	SHEET No	TOTAL SHEETS
11	SD	163	1.4	92	147

Peter B Smith 11/16/12
REGISTERED CIVIL ENGINEER DATE

03-04-13
PLANS APPROVAL DATE

REGISTERED PROFESSIONAL ENGINEER
Peter B. Smith
No. C60122
Exp. 06/30/14
CIVIL
STATE OF CALIFORNIA

The State of California or its officers or agents shall not be responsible for the accuracy or completeness of scanned copies of this plan sheet.

T.Y. LIN INTERNATIONAL
404 CAMINO DEL RIO SOUTH, SUITE 700
SAN DIEGO, CA 92108

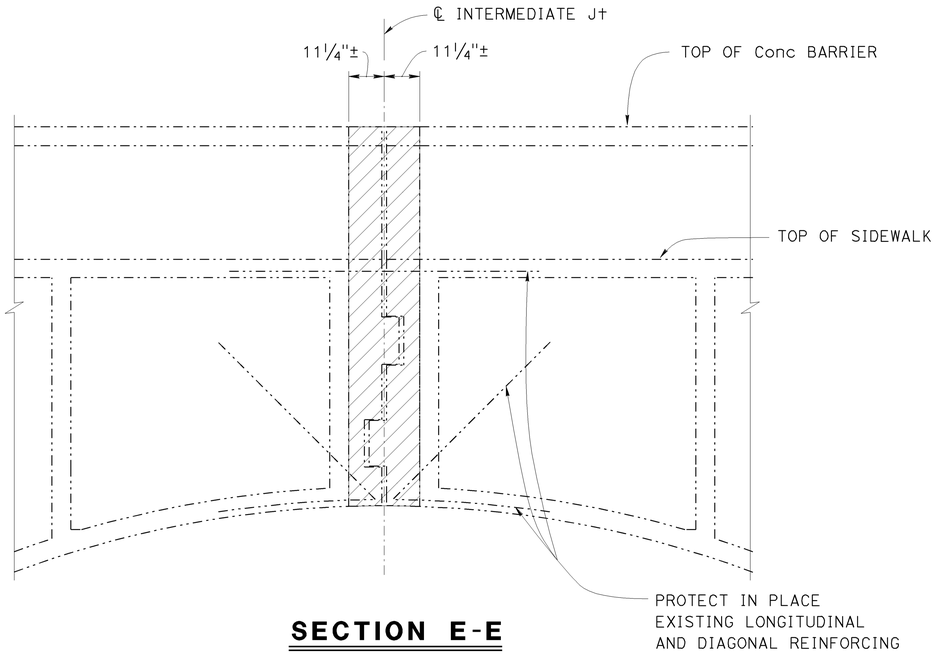

SECTION E-E
½" = 1'-0"

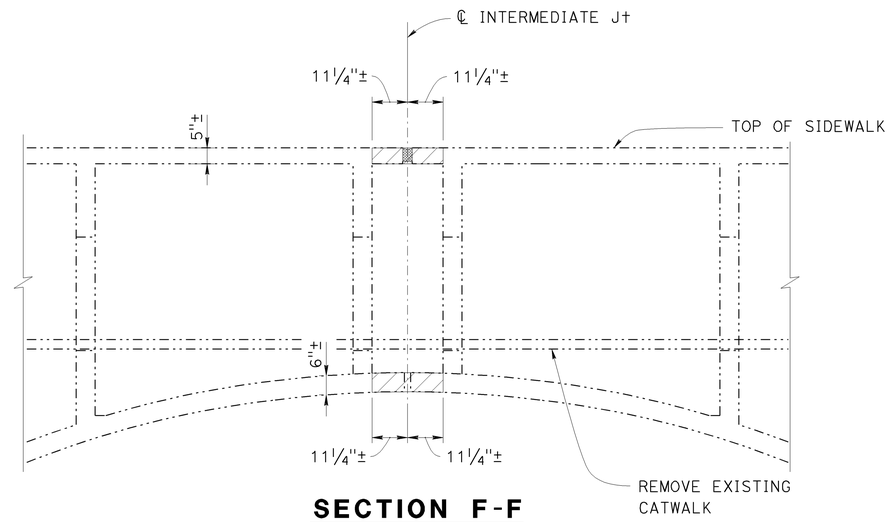

SECTION F-F
½" = 1'-0"

NOTES:

1. For location of "SECTION E-E", "SECTION F-F", "SECTION G-G", and "SECTION H-H", see "DEMOLITION DETAILS NO. 3" sheet

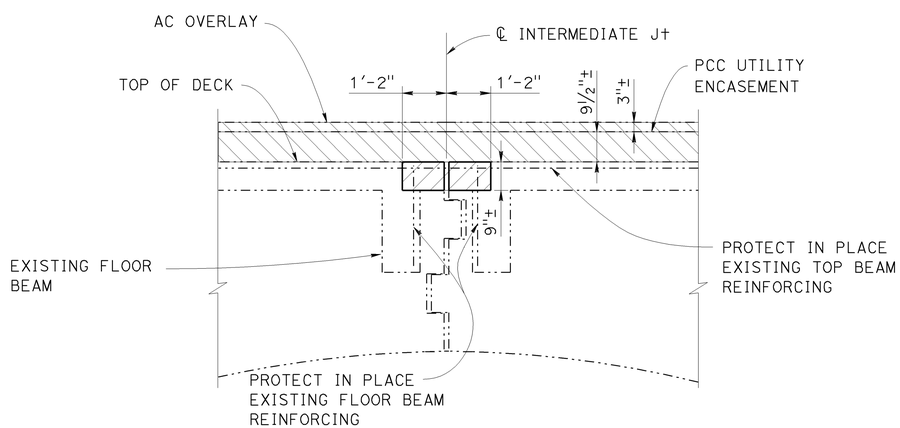

SECTION G-G
½" = 1'-0"

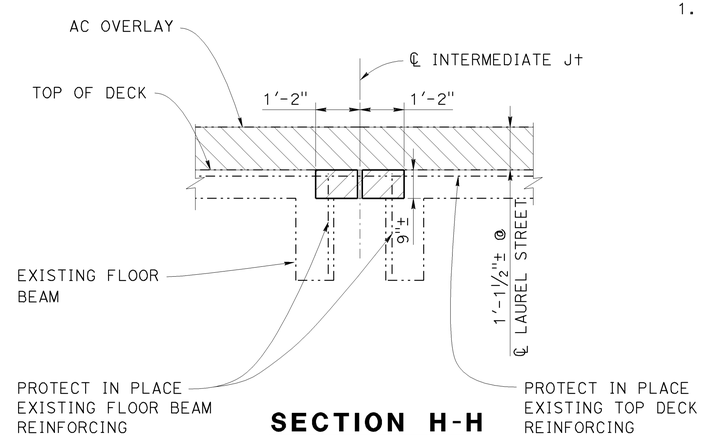

SECTION H-H
½" = 1'-0"

LEGEND:

- Indicates Bridge Removal (Portion)
- Indicates Remove Asphalt Concrete Surfacing

NOTE: THE CONTRACTOR SHALL VERIFY ALL CONTROLLING FIELD DIMENSIONS BEFORE ORDERING OR FABRICATING ANY MATERIAL.

SEISMIC RETROFIT AND REHABILITATION

DESIGN OVERSIGHT
11/16/2012
SIGN OFF DATE

	BY	CHECKED
DESIGN	Dan Fitzwilliam	Oscar Henriquez
DETAILS	Oscar Colcol	Oscar Henriquez
QUANTITIES	Sabina Piras	Dina Tobia

PREPARED FOR THE
STATE OF CALIFORNIA
DEPARTMENT OF TRANSPORTATION

Peter Smith
PROJECT ENGINEER

BRIDGE NO. 57-0215
POST MILES 1.4

LAUREL STREET OVERCROSSING
DEMOLITION DETAILS NO.4

DESIGN DETAIL SHEET (ENGLISH) (REV. 03/14/12)

ORIGINAL SCALE IN INCHES FOR REDUCED PLANS 0 1 2 3

UNIT: _____
PROJECT NUMBER & PHASE: 1100000225 1 CONTRACT NO.: 11-264111

DISREGARD PRINTS BEARING EARLIER REVISION DATES

REVISION DATES: 11-16-12 ~~04-13-12~~ ~~06-08-12~~ ~~10-04-12~~ SHEET 6 OF 61

FILE => 57-0215-m-dd04.dgn

USERNAME => s133329 DATE PLOTTED => 05-FEB-2013 TIME PLOTTED => 06:28

DIST	COUNTY	ROUTE	POST MILES TOTAL PROJECT	SHEET No	TOTAL SHEETS
11	SD	163	1.4	93	147

Peter B Smith 11/16/12
REGISTERED CIVIL ENGINEER DATE

03-04-13
PLANS APPROVAL DATE

REGISTERED PROFESSIONAL ENGINEER Peter B. Smith No. C60122 Exp. 06/30/14 CIVIL STATE OF CALIFORNIA

The State of California or its officers or agents shall not be responsible for the accuracy or completeness of scanned copies of this plan sheet.

T.Y. LIN INTERNATIONAL
404 CAMINO DEL RIO SOUTH, SUITE 700
SAN DIEGO, CA 92108

NOTES:

1. For "DETAIL A", see "DEMOLITION DETAILS NO.6" sheet
2. For "SECTION J-J" and "SECTION K-K" see "DEMOLITION DETAILS NO.7" sheet
3. Pier 4 shown, Piers 2, 3, 5, 6 & 7 similar
4. Place temporary supports under diaphragm prior to removal of existing concrete. Total dead load at each diaphragm = 8.0 kips.

LEGEND:

- Indicates Bridge Removal (Portion)

(5) - Level designation

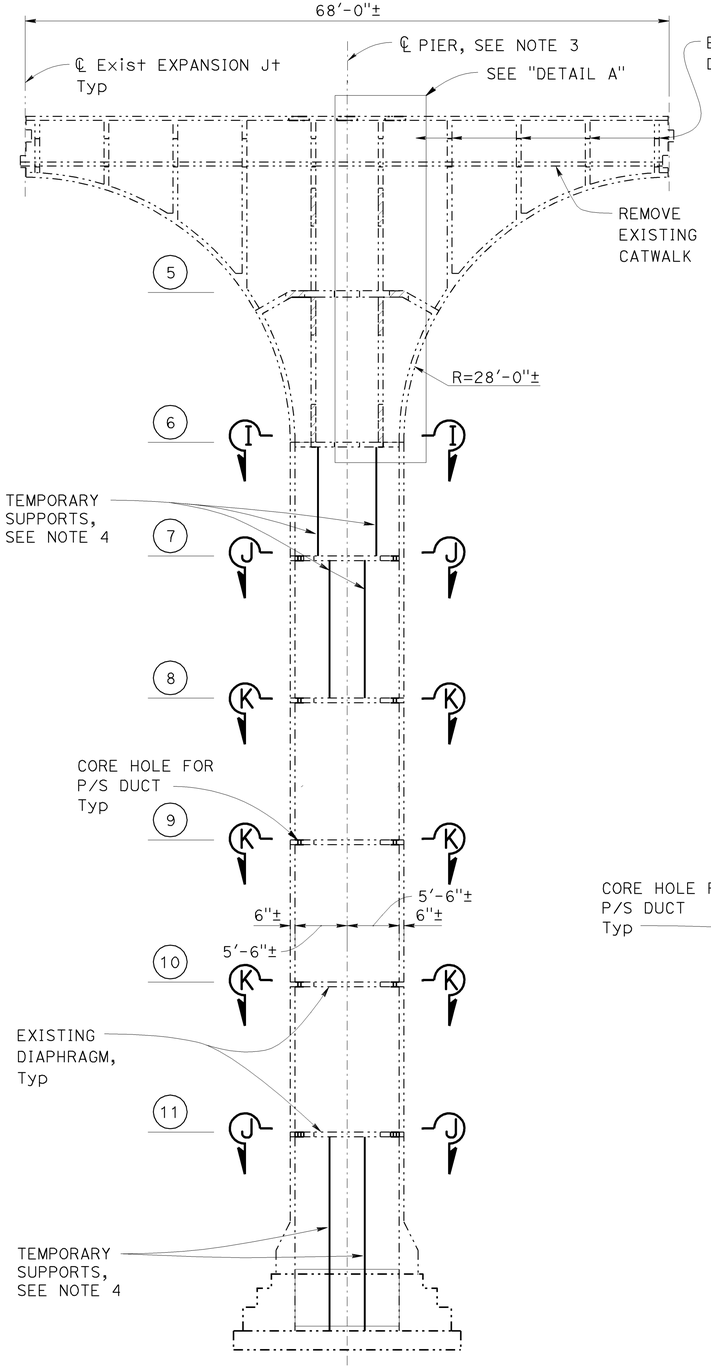

NOTE: THE CONTRACTOR SHALL VERIFY ALL CONTROLLING FIELD DIMENSIONS BEFORE ORDERING OR FABRICATING ANY MATERIAL.

PART ELEVATION

1/8"=1'-0"

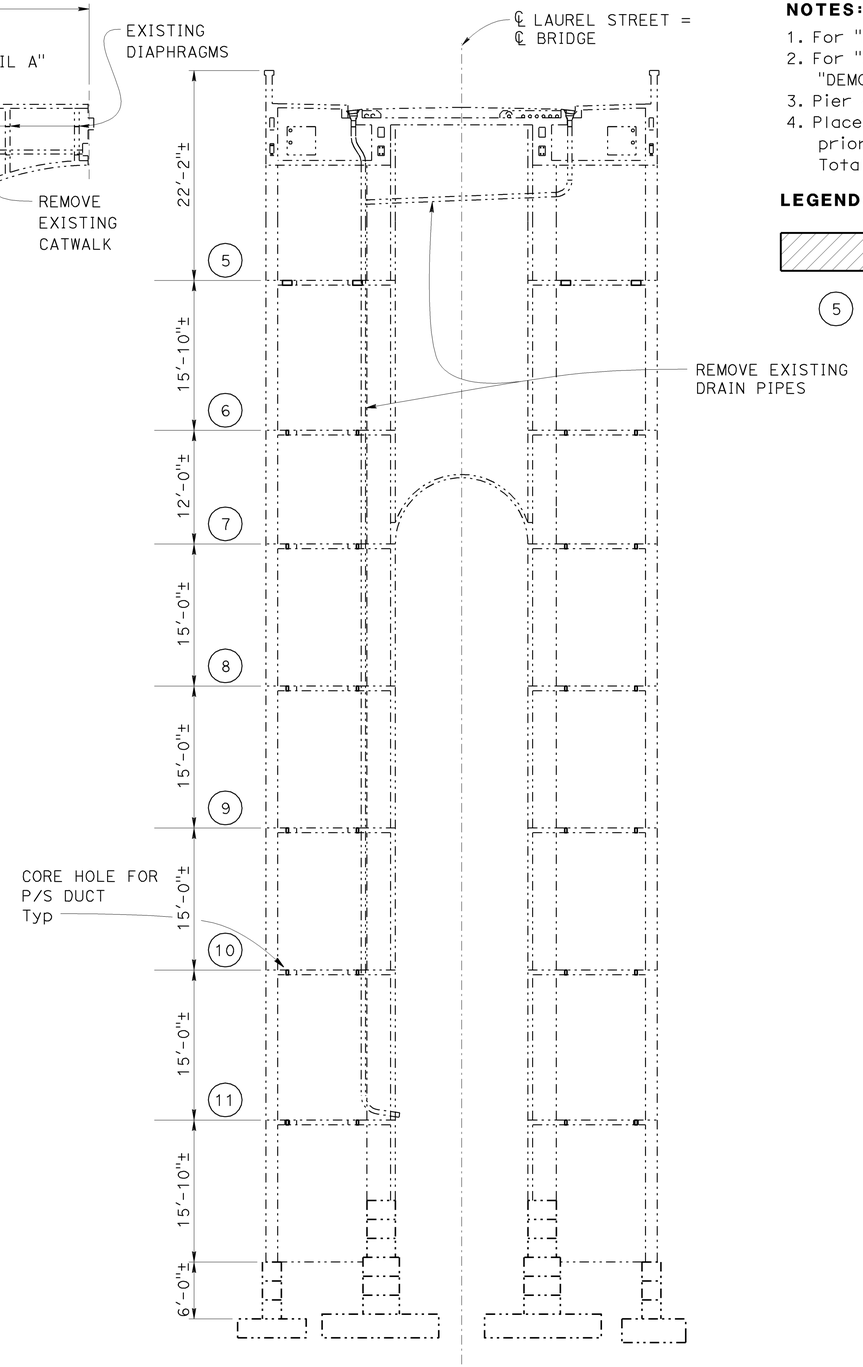

PART TYPICAL SECTION

1/8"=1'-0"

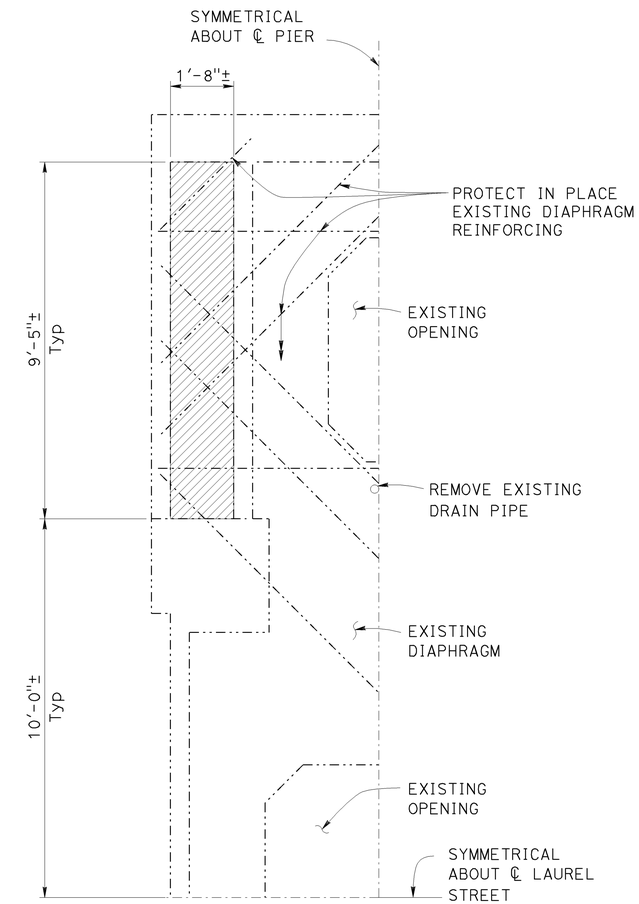

SECTION I-I

1/2"=1'-0"

SEISMIC RETROFIT AND REHABILITATION

LAUREL STREET OVERCROSSING

DEMOLITION DETAILS NO.5

DESIGN OVERSIGHT
11/16/2012
SIGN OFF DATE

	BY	CHECKED
DESIGN	Dan Fitzwilliam	Oscar Henriquez
DETAILS	Oscar Colcol	Oscar Henriquez
QUANTITIES	Sabina Piras	Dina Tobia

PREPARED FOR THE STATE OF CALIFORNIA DEPARTMENT OF TRANSPORTATION

Peter Smith
PROJECT ENGINEER

BRIDGE NO. 57-0215
POST MILES 1.4

DESIGN DETAIL SHEET (ENGLISH) (REV. 03/14/12)

ORIGINAL SCALE IN INCHES FOR REDUCED PLANS 0 1 2 3

UNIT: _____
PROJECT NUMBER & PHASE: 1100000225 1 CONTRACT NO.: 11-264111

DISREGARD PRINTS BEARING EARLIER REVISION DATES

REVISION DATES 11-16-12 04-13-12 06-08-12 10/04/12 SHEET 7 OF 61

FILE => 57-0215-m-dd05.dgn

USERNAME => s133329 DATE PLOTTED => 05-FEB-2013 TIME PLOTTED => 06:28

DIST	COUNTY	ROUTE	POST MILES TOTAL PROJECT	SHEET No	TOTAL SHEETS
11	SD	163	1.4	94	147

Peter B Smith 11/16/12
REGISTERED CIVIL ENGINEER DATE

03-04-13
PLANS APPROVAL DATE

REGISTERED PROFESSIONAL ENGINEER Peter B. Smith No. C60122 Exp. 06/30/14 CIVIL STATE OF CALIFORNIA

The State of California or its officers or agents shall not be responsible for the accuracy or completeness of scanned copies of this plan sheet.

T.Y. LIN INTERNATIONAL
404 CAMINO DEL RIO SOUTH, SUITE 700
SAN DIEGO, CA 92108

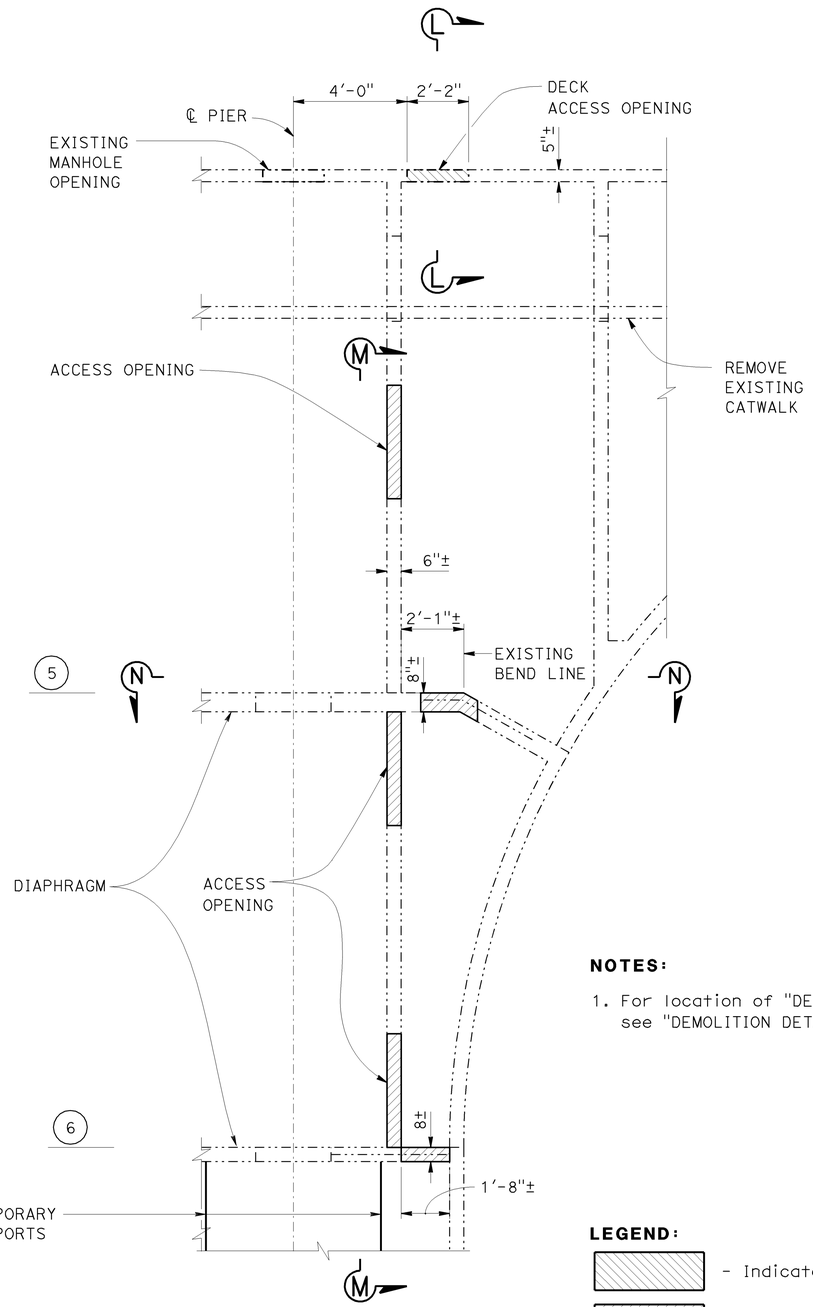

DETAIL A
3/8"=1'-0"

NOTE: THE CONTRACTOR SHALL VERIFY ALL CONTROLLING FIELD DIMENSIONS BEFORE ORDERING OR FABRICATING ANY MATERIAL.

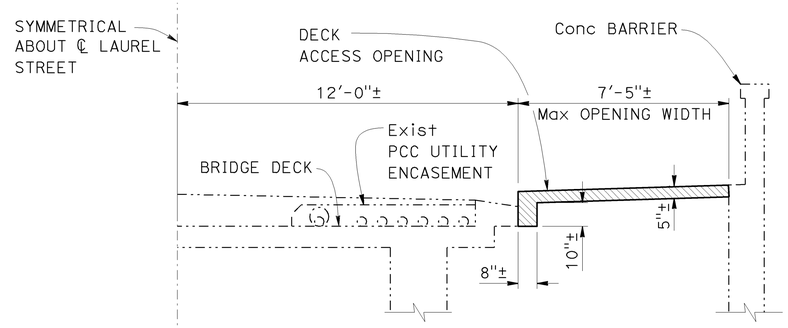

SECTION L-L
3/8"=1'-0"

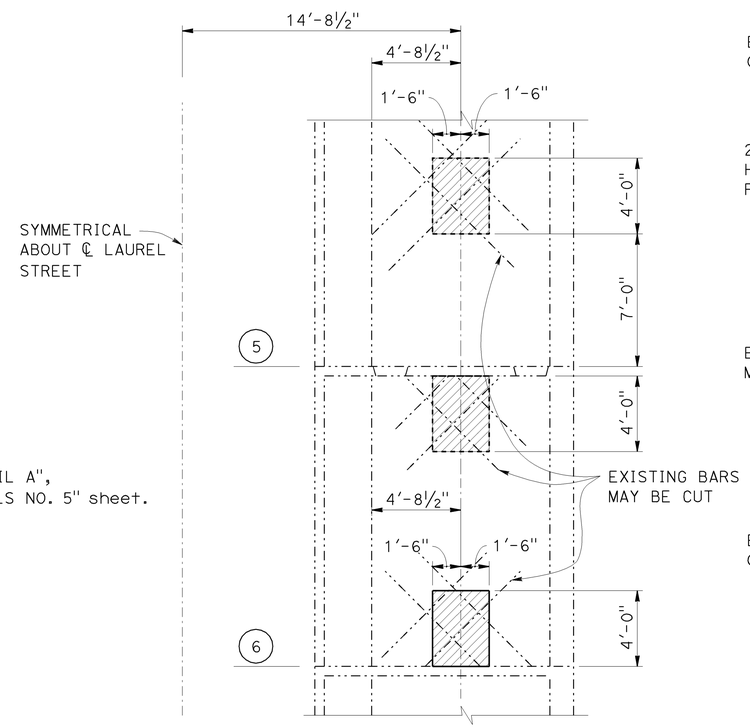

SECTION M-M
1/4"=1'-0"

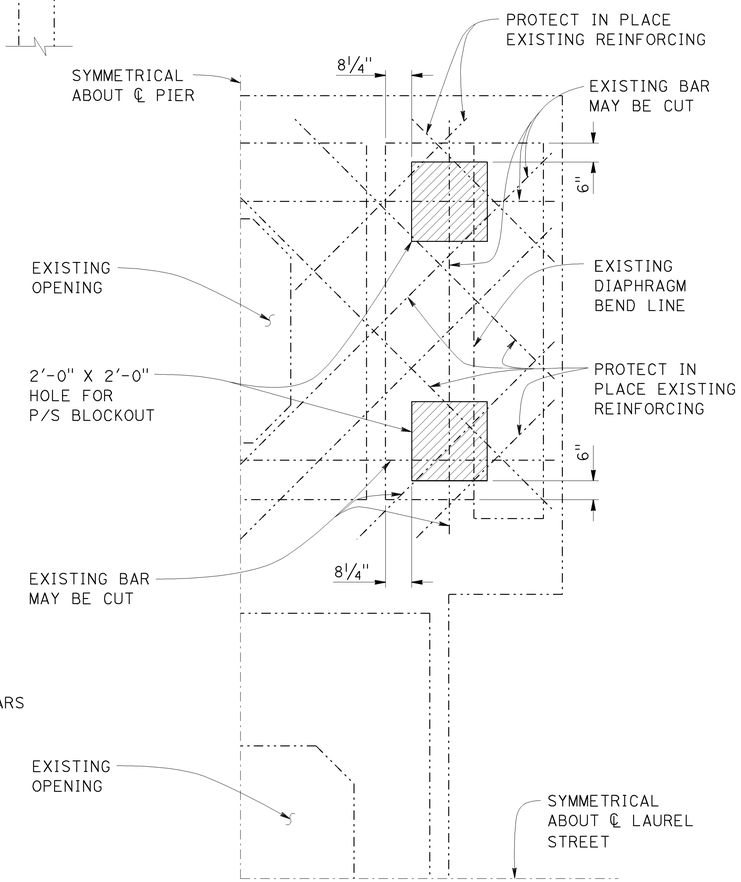

SECTION N-N
1/2"=1'-0"

NOTES:

1. For location of "DETAIL A", see "DEMOLITION DETAILS NO. 5" sheet.

LEGEND:

- Indicates Access Opening, Deck
- Indicates Bridge Removal (Portion)
- (5) - Level designation.

SEISMIC RETROFIT AND REHABILITATION

Frank H. Wei
DESIGN OVERSIGHT
11/16/2012
SIGN OFF DATE

	BY	CHECKED
DESIGN	Dan Fitzwilliam	Oscar Henriquez
DETAILS	Oscar Colcol	Oscar Henriquez
QUANTITIES	Sabina Piras	Dina Tobia

PREPARED FOR THE STATE OF CALIFORNIA DEPARTMENT OF TRANSPORTATION

Peter Smith
PROJECT ENGINEER

BRIDGE NO. 57-0215
POST MILES 1.4

LAUREL STREET OVERCROSSING
DEMOLITION DETAILS NO.6

DESIGN DETAIL SHEET (ENGLISH) (REV. 03/14/12)

ORIGINAL SCALE IN INCHES FOR REDUCED PLANS 0 1 2 3

UNIT:
PROJECT NUMBER & PHASE: 1100000225 1 CONTRACT NO.: 11-264111

DISREGARD PRINTS BEARING EARLIER REVISION DATES

REVISION DATES: 11-16-12 04-13-12 06-06-12 10/04/12

SHEET 8 OF 61

FILE => 57-0215-m-dd06.dgn

USERNAME => s133329 DATE PLOTTED => 05-FEB-2013 TIME PLOTTED => 06:28

DIST	COUNTY	ROUTE	POST MILES TOTAL PROJECT	SHEET No	TOTAL SHEETS
11	SD	163	1.4	95	147

Peter B Smith 1/4/13
REGISTERED CIVIL ENGINEER DATE

03-04-13
PLANS APPROVAL DATE

REGISTERED PROFESSIONAL ENGINEER Peter B. Smith No. C60122 Exp. 06/30/14 CIVIL STATE OF CALIFORNIA

The State of California or its officers or agents shall not be responsible for the accuracy or completeness of scanned copies of this plan sheet.

T.Y. LIN INTERNATIONAL
404 CAMINO DEL RIO SOUTH, SUITE 700
SAN DIEGO, CA 92108

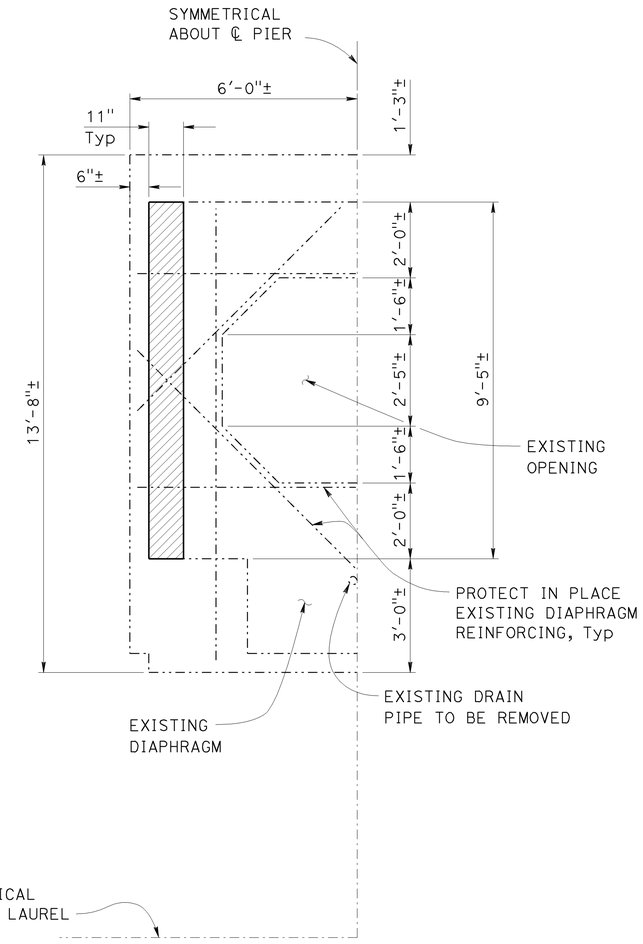

SECTION J-J

½"=1'-0"

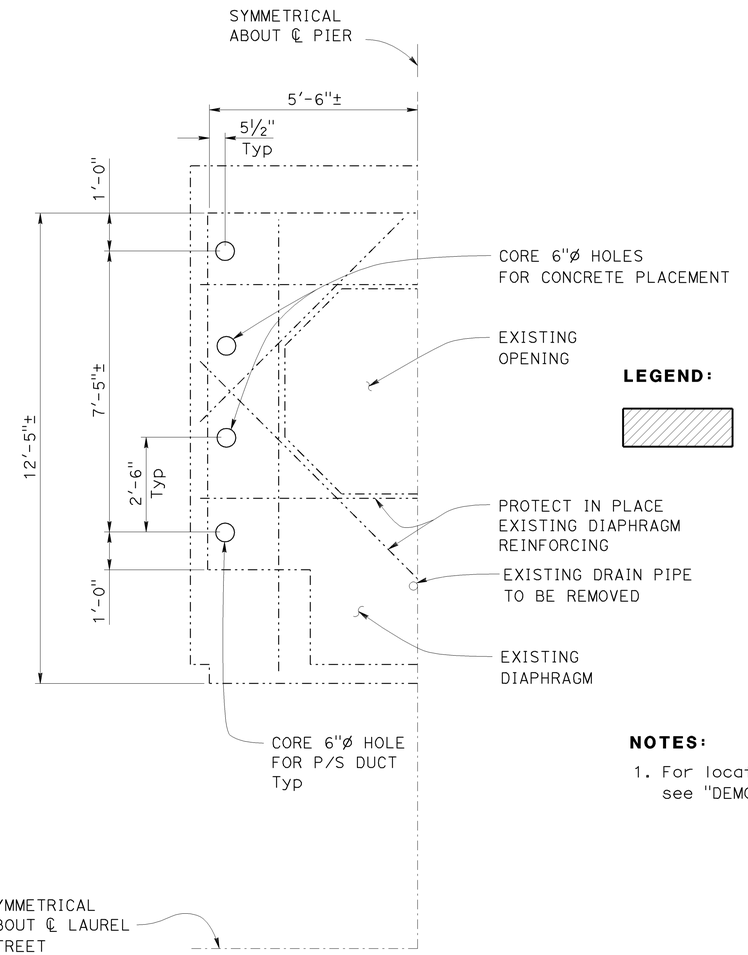

SECTION K-K

½"=1'-0"

LEGEND:

- Indicates Bridge Removal (Portion)

NOTES:

1. For location "SECTION J-J" and "SECTION K-K", see "DEMOLITION DETAILS NO. 5" sheet.

ESTIMATE OF REMOVE FORMWORK

DESCRIPTION	APPROXIMATE AREA (SF)
AREA OF 85% OF THE INTERIOR SURFACE OF THE EXTERIOR WALLS	78,000
AREA OF EXISTING WOOD CATWALKS	6,700
AREA OF WOOD PLATFORMS COVERING EACH OF THE 7 EXISTING DIAPHRAGMS IN PIERS 3,4, & 5	4,200

ESTIMATE OF REMOVE BIRDWASTE

DESCRIPTION	APPROXIMATE AREA (SF)
AREA ON THE SOUTHERN CATWALK AND BRIDGE SOFFIT FROM CENTERLINE ABUTMENT 8 TO 17' BEYOND CENTERLINE PIER 7	400
AREA OF SOUTHERN AND MIDDLE PORTION OF THE EXISTING TOP DIAPHRAGM IN PIER 7	500

NOTE: THE CONTRACTOR SHALL VERIFY ALL CONTROLLING FIELD DIMENSIONS BEFORE ORDERING OR FABRICATING ANY MATERIAL.

SEISMIC RETROFIT AND REHABILITATION

Frank H. Wei
DESIGN OVERSIGHT
1/4/2013
SIGN OFF DATE

	BY	CHECKED
DESIGN	Dan Fitzwilliam	Oscar Henriquez
DETAILS	Oscar Colcol	Oscar Henriquez
QUANTITIES	Sabina Piras	Dina Tobia

PREPARED FOR THE STATE OF CALIFORNIA DEPARTMENT OF TRANSPORTATION

Peter Smith
PROJECT ENGINEER

BRIDGE NO. 57-0215
POST MILES 1.4

LAUREL STREET OVERCROSSING
DEMOLITION DETAILS NO.7

DESIGN DETAIL SHEET (ENGLISH) (REV. 03/14/12)

ORIGINAL SCALE IN INCHES FOR REDUCED PLANS 0 1 2 3

UNIT: _____
PROJECT NUMBER & PHASE: 1100000225 1 CONTRACT NO.: 11-264111

DISREGARD PRINTS BEARING EARLIER REVISION DATES

REVISION DATES: 11-16-12 01-04-13 06-08-12 10-04-12 SHEET 9 OF 61

FILE => 57-0215-m-dd07.dgn

USERNAME => s133329 DATE PLOTTED => 05-FEB-2013 TIME PLOTTED => 06:28

DIST	COUNTY	ROUTE	POST MILES TOTAL PROJECT	SHEET No	TOTAL SHEETS
11	SD	163	1.4	96	147

Peter B Smith 11/16/12
REGISTERED CIVIL ENGINEER DATE

03-04-13
PLANS APPROVAL DATE

REGISTERED PROFESSIONAL ENGINEER Peter B. Smith No. C60122 Exp. 06/30/14 CIVIL STATE OF CALIFORNIA

The State of California or its officers or agents shall not be responsible for the accuracy or completeness of scanned copies of this plan sheet.

T.Y. LIN INTERNATIONAL
404 CAMINO DEL RIO SOUTH, SUITE 700
SAN DIEGO, CA 92108

NOTES:

1. Drill and Bond Dowel (Chemical Adhesive) #4 2'-0" @ 1'-0" O.C. embed 5"
2. Drill and Bond Dowel (Chemical Adhesive) #4 1'-2" @ 1'-0" O.C. embed 5"
3. Drill and Bond Dowel #4 @ 6¾" O.C. embed 8" 1'-0" 1 3 (in deck slab)
4. Bar extension shown for drill and bond dowels is length beyond embedment depth, see "DRILL AND BOND DOWEL DETAIL"
5. For "SECTION G-G" and "SECTION H-H", see "RETROFIT DETAILS NO.7" sheet
6. For "SECTION J-J", see "RETROFIT DETAILS NO. 3" sheet
7. For "SECTION I-I" see "RETROFIT DETAILS NO. 2" sheet

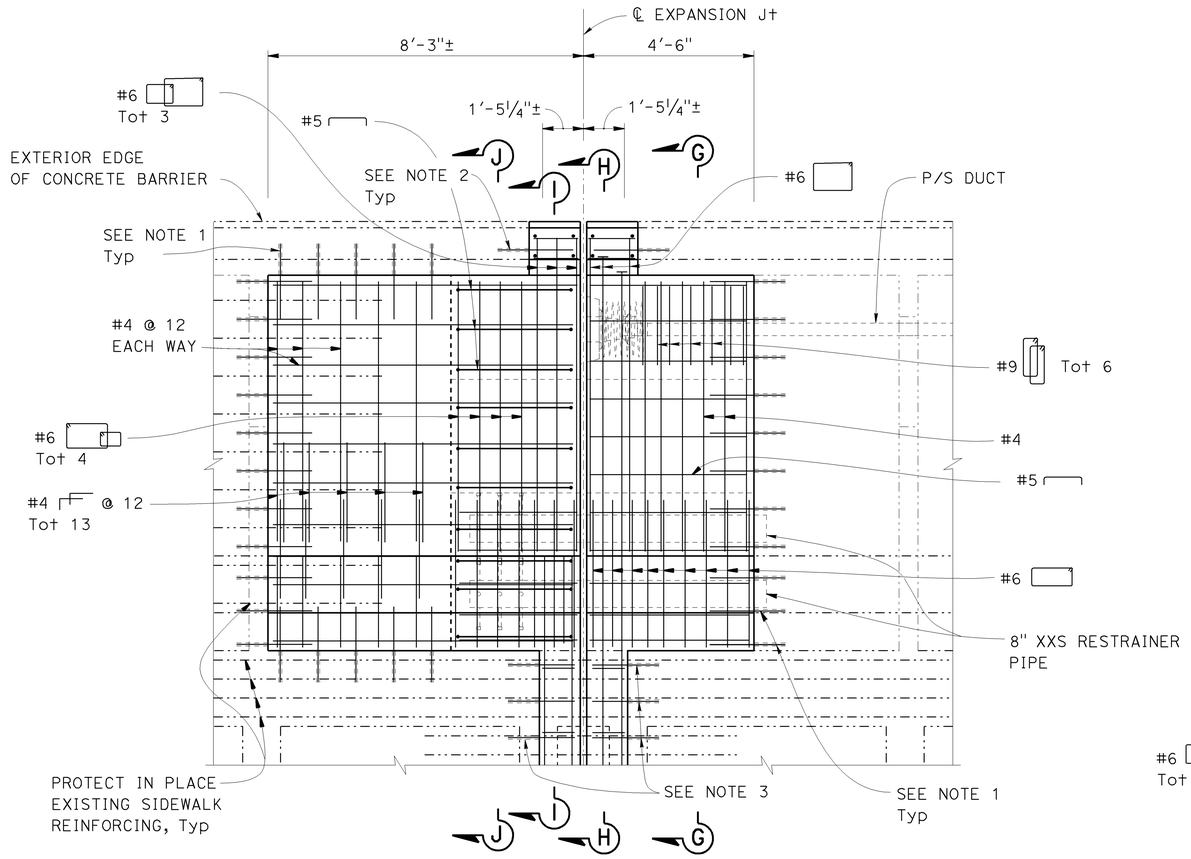

DECK PLAN

RECONSTRUCTION PLAN AT EXPANSION JOINT

½"=1'-0"

DRILL AND BOND DOWEL (CHEMICAL ADHESIVE) **DRILL AND BOND DOWEL**

DRILL AND BOND DOWEL DETAIL

No Scale

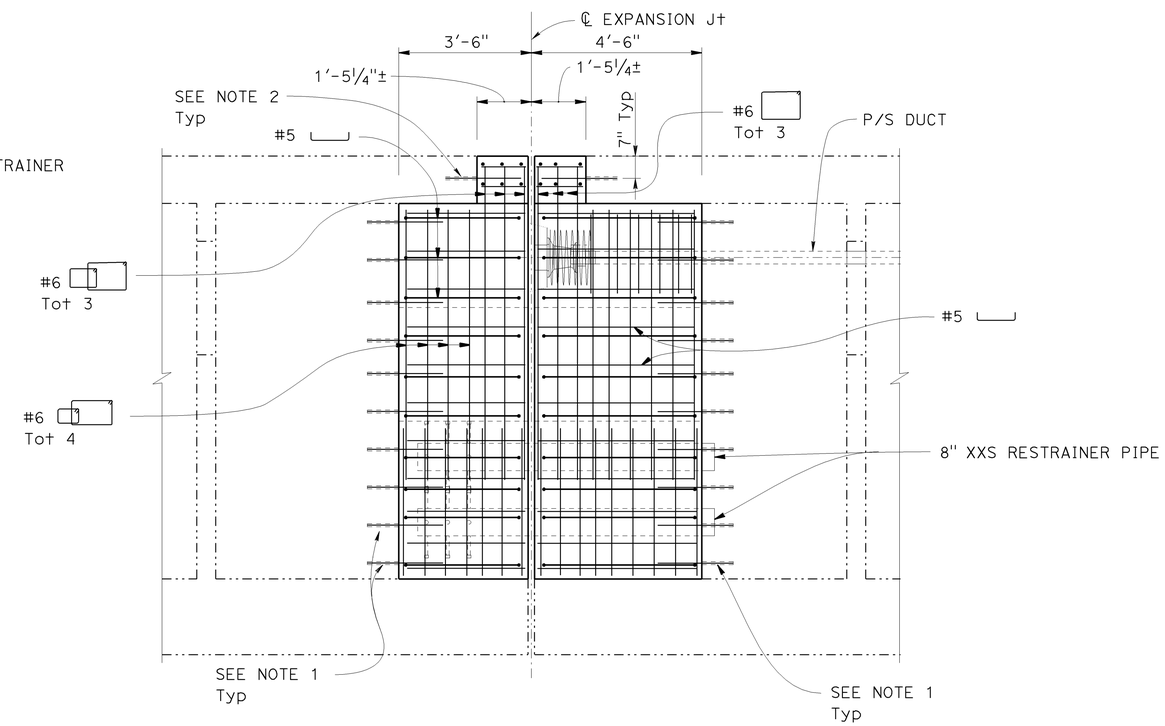

SOFFIT PLAN

RECONSTRUCTION PLAN AT EXPANSION JOINT

½"=1'-0"

NOTE: THE CONTRACTOR SHALL VERIFY ALL CONTROLLING FIELD DIMENSIONS BEFORE ORDERING OR FABRICATING ANY MATERIAL.

SEISMIC RETROFIT AND REHABILITATION

DESIGN OVERSIGHT
11/16/2012
SIGN OFF DATE

	BY	CHECKED
DESIGN	Dan Fitzwilliam	Oscar Henriquez
DETAILS	Oscar Colcol	Oscar Henriquez
QUANTITIES	Sabina Piras	Dina Tobia

PREPARED FOR THE STATE OF CALIFORNIA DEPARTMENT OF TRANSPORTATION

Peter Smith
PROJECT ENGINEER

BRIDGE NO. 57-0215
POST MILES 1.4

LAUREL STREET OVERCROSSING
RETROFIT DETAILS NO.1

DESIGN DETAIL SHEET (ENGLISH) (REV. 03/14/12)

ORIGINAL SCALE IN INCHES FOR REDUCED PLANS 0 1 2 3

UNIT: _____
PROJECT NUMBER & PHASE: 1100000225 1 CONTRACT NO.: 11-264111

DISREGARD PRINTS BEARING EARLIER REVISION DATES

REVISION DATES: 11-16-12 04-13-12 06-08-12 10-04-12

SHEET 10 OF 61

FILE => 57-0215-m-rd01.dgn

USERNAME => s133329 DATE PLOTTED => 05-FEB-2013 TIME PLOTTED => 06:28

DIST	COUNTY	ROUTE	POST MILES TOTAL PROJECT	SHEET No	TOTAL SHEETS
11	SD	163	1.4	97	147

Peter B Smith 11/16/12
REGISTERED CIVIL ENGINEER DATE

03-04-13
PLANS APPROVAL DATE

REGISTERED PROFESSIONAL ENGINEER Peter B. Smith No. C60122 Exp. 06/30/14 CIVIL STATE OF CALIFORNIA

The State of California or its officers or agents shall not be responsible for the accuracy or completeness of scanned copies of this plan sheet.

T.Y. LIN INTERNATIONAL
404 CAMINO DEL RIO SOUTH, SUITE 700
SAN DIEGO, CA 92108

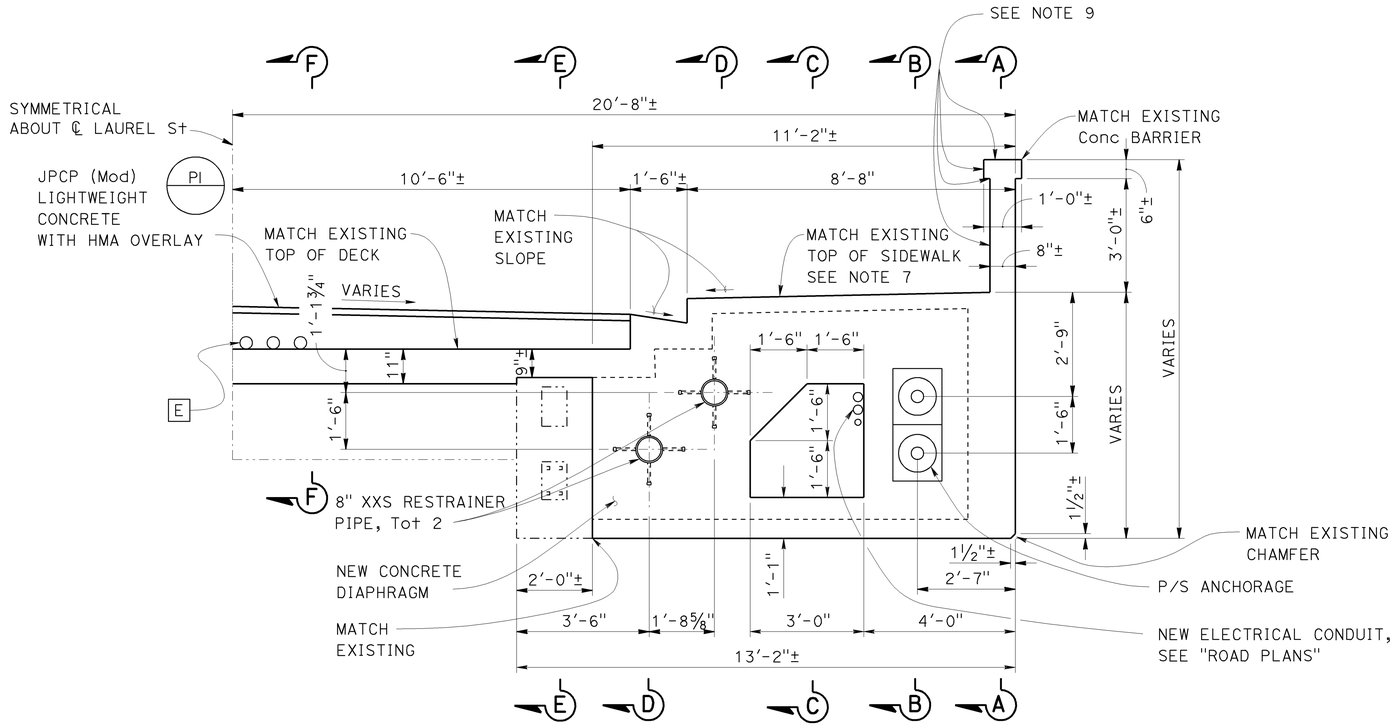

SHOWING DIMENSION

TYPICAL SECTION EXPANSION JOINT

½" = 1'-0"

NOTES:

1. Drill and Bond Dowel (Chemical Adhesive) #4 2'-0" @ 1'-0" O.C. embed 5"
2. Drill and Bond Dowel (Chemical Adhesive) #4 1'-2" @ 1'-0" O.C. embed 5"
3. For "SECTION A-A", "SECTION B-B", see "RETROFIT DETAILS NO.4" sheet
4. For "SECTION E-E" and "SECTION F-F", see "RETROFIT DETAILS NO.6" sheet
5. Drill and Bond Dowel #4 @ 6¾" O.C. embed 8" 1'-0" 1½/3 (in deck slab)
6. Bar extension shown for drill and bond dowels is length beyond embedment depth, see "DRILL AND BOND DOWEL DETAIL" on "RETROFIT DETAILS NO.1" sheet
7. Replicate existing weakened plane joints in sidewalk and gutter, see "RETROFIT DETAILS NO. 7" sheet
8. For "SECTION C-C" and "SECTION D-D", see "RETROFIT DETAILS NO. 5" sheet
9. Paint top and inside face of concrete barrier, see "GENERAL PLAN" for limits
10. For location of "SECTION I-I", see "RETROFIT DETAILS NO. 1" sheet.

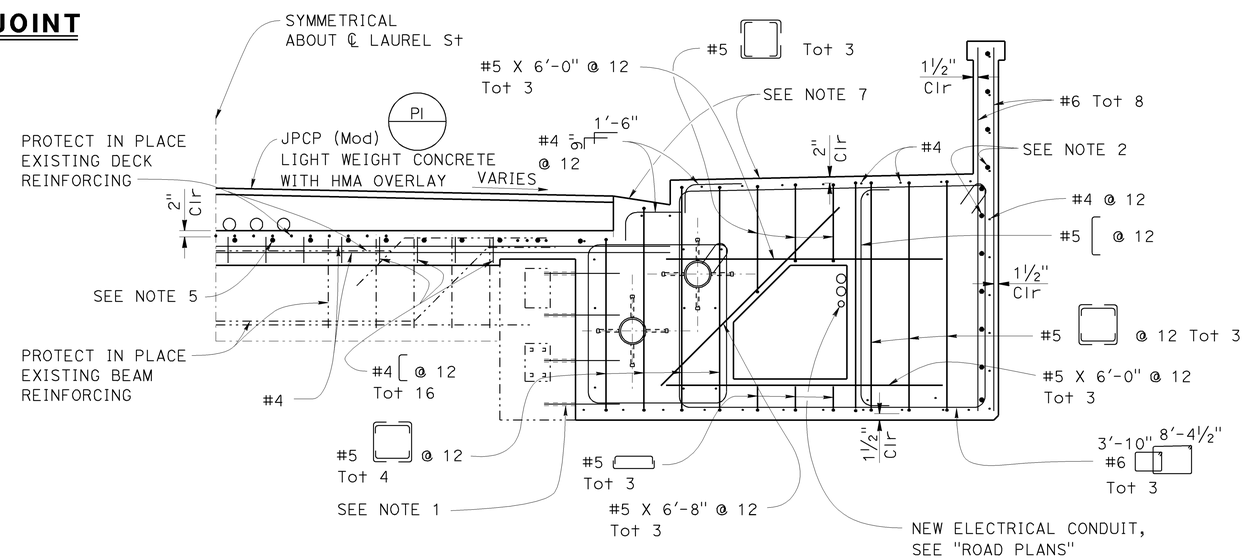

SECTION I-I

½" = 1'-0"

NOTE: THE CONTRACTOR SHALL VERIFY ALL CONTROLLING FIELD DIMENSIONS BEFORE ORDERING OR FABRICATING ANY MATERIAL.

SEISMIC RETROFIT AND REHABILITATION

DESIGN	BY Dan Fitzwilliam	CHECKED Oscar Henriquez	
DETAILS	BY Oscar Colcol	CHECKED Oscar Henriquez	
QUANTITIES	BY Sabina Piras	CHECKED Dina Tobia	

DESIGN OVERSIGHT
11/16/2012
SIGN OFF DATE

PREPARED FOR THE STATE OF CALIFORNIA DEPARTMENT OF TRANSPORTATION

Peter Smith
PROJECT ENGINEER

BRIDGE NO. 57-0215
POST MILES 1.4

LAUREL STREET OVERCROSSING
RETROFIT DETAILS NO.2

DESIGN DETAIL SHEET (ENGLISH) (REV. 03/14/12)

ORIGINAL SCALE IN INCHES FOR REDUCED PLANS 0 1 2 3

UNIT: _____
PROJECT NUMBER & PHASE: 1100000225 1 CONTRACT NO.: 11-264111

DISREGARD PRINTS BEARING EARLIER REVISION DATES

REVISION DATES 11-16-12 04-12-12 06-28-12 10/04/12 SHEET 11 OF 61

FILE => 57-0215-m-rd02.dgn

USERNAME => s133329 DATE PLOTTED => 05-FEB-2013 TIME PLOTTED => 06:28

DIST	COUNTY	ROUTE	POST MILES TOTAL PROJECT	SHEET No	TOTAL SHEETS
11	SD	163	1.4	98	147

Peter B Smith 11/16/12
REGISTERED CIVIL ENGINEER DATE

03-04-13
PLANS APPROVAL DATE

REGISTERED PROFESSIONAL ENGINEER
Peter B. Smith
No. C60122
Exp. 06/30/14
CIVIL
STATE OF CALIFORNIA

The State of California or its officers or agents shall not be responsible for the accuracy or completeness of scanned copies of this plan sheet.

T.Y. LIN INTERNATIONAL
404 CAMINO DEL RIO SOUTH, SUITE 700
SAN DIEGO, CA 92108

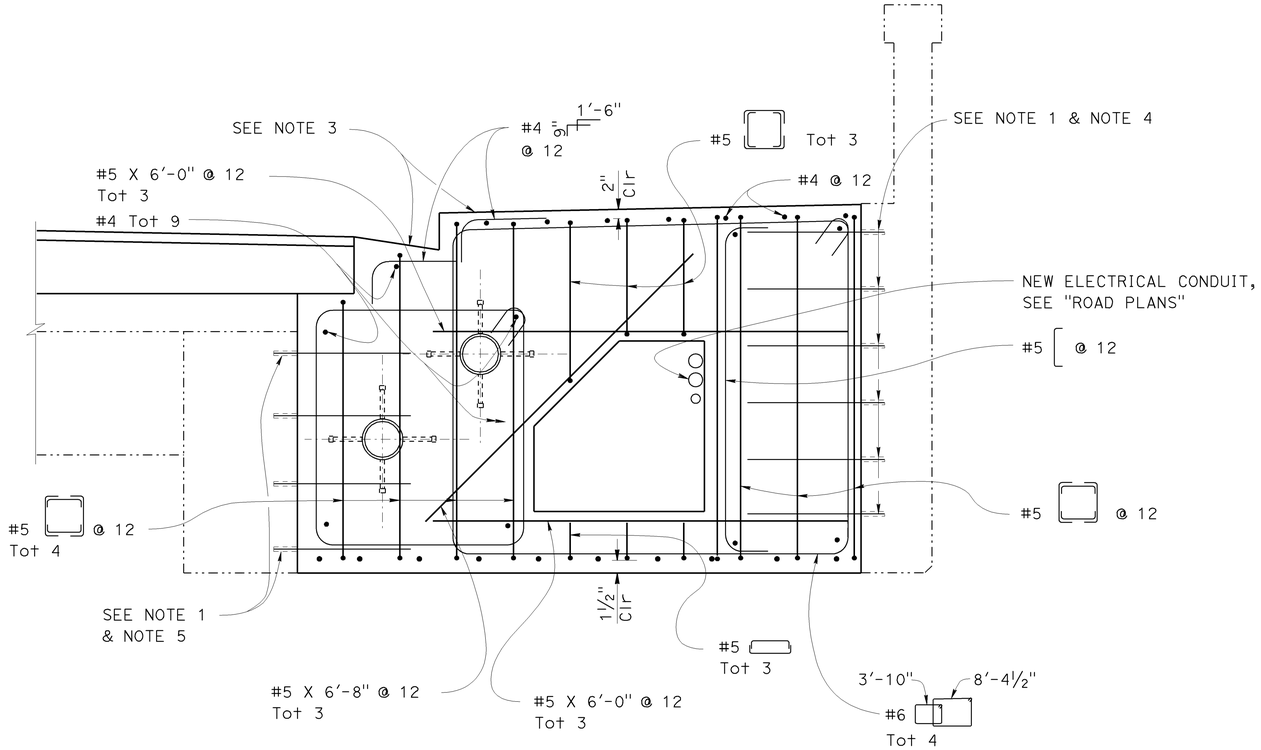

SECTION J-J

¾" = 1'-0"

NOTES:

1. Drill and Bond Dowel (Chemical Adhesive) #4 2'-0" @ 1'-0" O.C. embed 5"
2. Bar extension shown for drill and bond dowels is length beyond embedment depth
3. Replicate existing weakened plane joints in sidewalk and gutter, see "RETROFIT DETAILS NO. 7" sheet
4. See "SECTION A-A" on "RETROFIT DETAILS NO. 4" sheet for layout of drill & bond dowels.
5. See "SECTION E-E" on "RETROFIT DETAILS NO. 6" sheet for layout of drill & bond dowels. See "DRILL AND BOND DOWEL DETAIL" on "RETROFIT DETAILS NO.1" sheet
6. For location of "SECTION J-J", see "RETROFIT DETAILS NO. 1" sheet

NOTE: THE CONTRACTOR SHALL VERIFY ALL CONTROLLING FIELD DIMENSIONS BEFORE ORDERING OR FABRICATING ANY MATERIAL.

SEISMIC RETROFIT AND REHABILITATION

LAUREL STREET OVERCROSSING
RETROFIT DETAILS NO.3

DESIGN OVERSIGHT
11/16/2012
SIGN OFF DATE

	BY	CHECKED
DESIGN	Dan Fitzwilliam	Oscar Henriquez
DETAILS	Oscar Colcol	Oscar Henriquez
QUANTITIES	Sabina Piras	Dina Tobia

PREPARED FOR THE STATE OF CALIFORNIA DEPARTMENT OF TRANSPORTATION

Peter Smith
PROJECT ENGINEER

BRIDGE NO. 57-0215
POST MILES 1.4

DESIGN DETAIL SHEET (ENGLISH) (REV. 03/14/12)

ORIGINAL SCALE IN INCHES FOR REDUCED PLANS 0 1 2 3

UNIT:
PROJECT NUMBER & PHASE: 1100000225 1 CONTRACT NO.: 11-264111

DISREGARD PRINTS BEARING EARLIER REVISION DATES

REVISION DATES: 11-16-12 ~~04-13-12~~ ~~06-06-12~~ 10/04/12

SHEET 12 OF 61

FILE => 57-0215-m-rd03.dgn

USERNAME => s133329 DATE PLOTTED => 05-FEB-2013 TIME PLOTTED => 06:28

DIST	COUNTY	ROUTE	POST MILES TOTAL PROJECT	SHEET No	TOTAL SHEETS
11	SD	163	1.4	99	147

Peter B Smith 11/16/12
REGISTERED CIVIL ENGINEER DATE

03-04-13
PLANS APPROVAL DATE

REGISTERED PROFESSIONAL ENGINEER Peter B. Smith No. C60122 Exp. 06/30/14 CIVIL STATE OF CALIFORNIA

The State of California or its officers or agents shall not be responsible for the accuracy or completeness of scanned copies of this plan sheet.

T.Y. LIN INTERNATIONAL
404 CAMINO DEL RIO SOUTH, SUITE 700
SAN DIEGO, CA 92108

NOTES:

1. Drill and Bond Dowel (Chemical Adhesive) #4 2'-0" @ 1'-0" O.C. embed 5"
2. Drill and Bond (Chemical Adhesive) #4 1'-2" @ 1'-0" O.C. embed 5"
3. For "a" dimension see B6-21

   All bridge type except CIP/PS.
4. Bar extension shown for drill & bond dowels is length beyond embedment depth. See "DRILL AND BOND DOWEL DETAIL" on "RETROFIT DETAILS NO. 1" sheet.
5. For location of "SECTION A-A" and "SECTION B-B", see "RETROFIT DETAILS NO. 2" sheet.

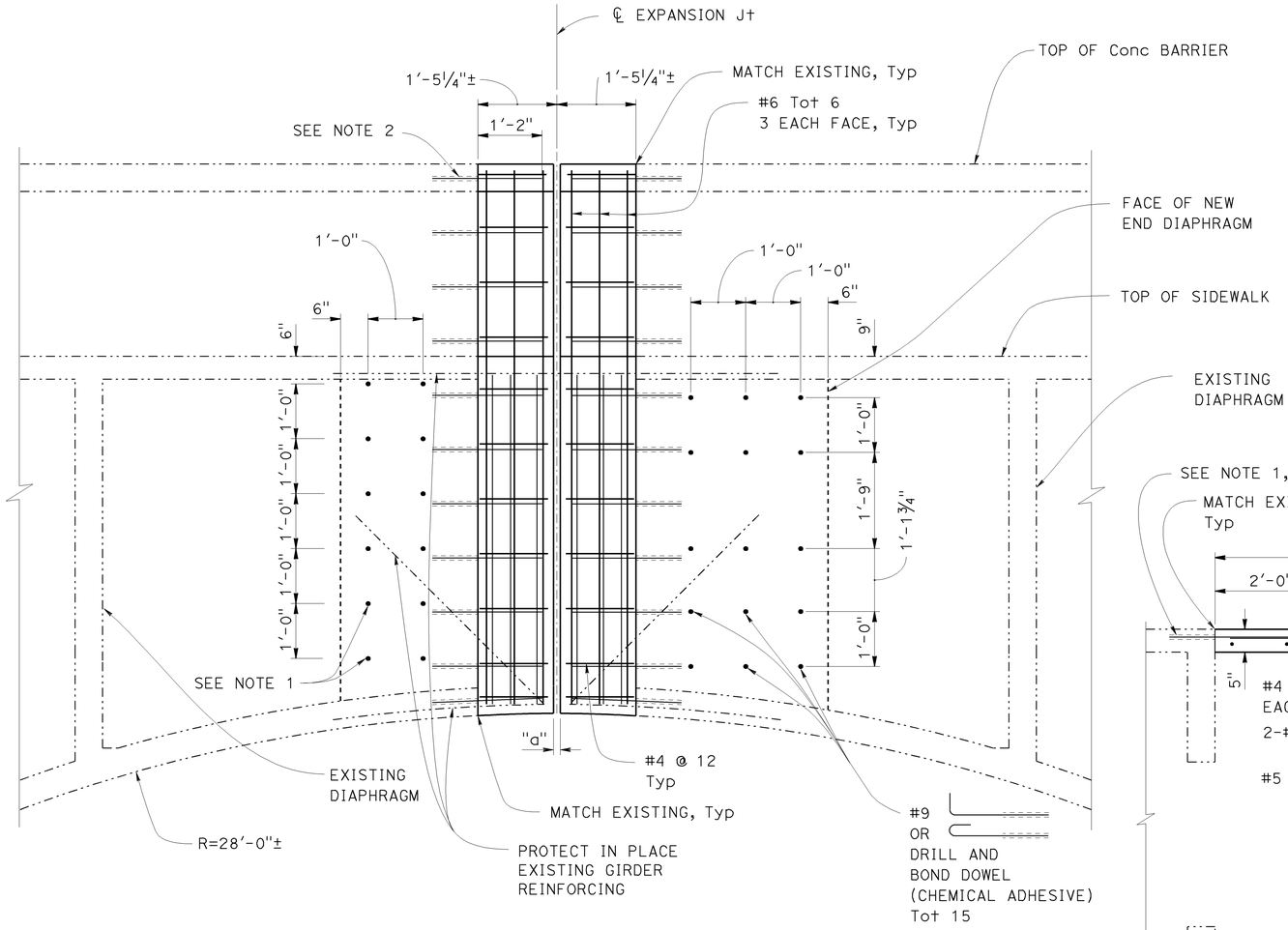

SECTION A-A

¾" = 1'-0"

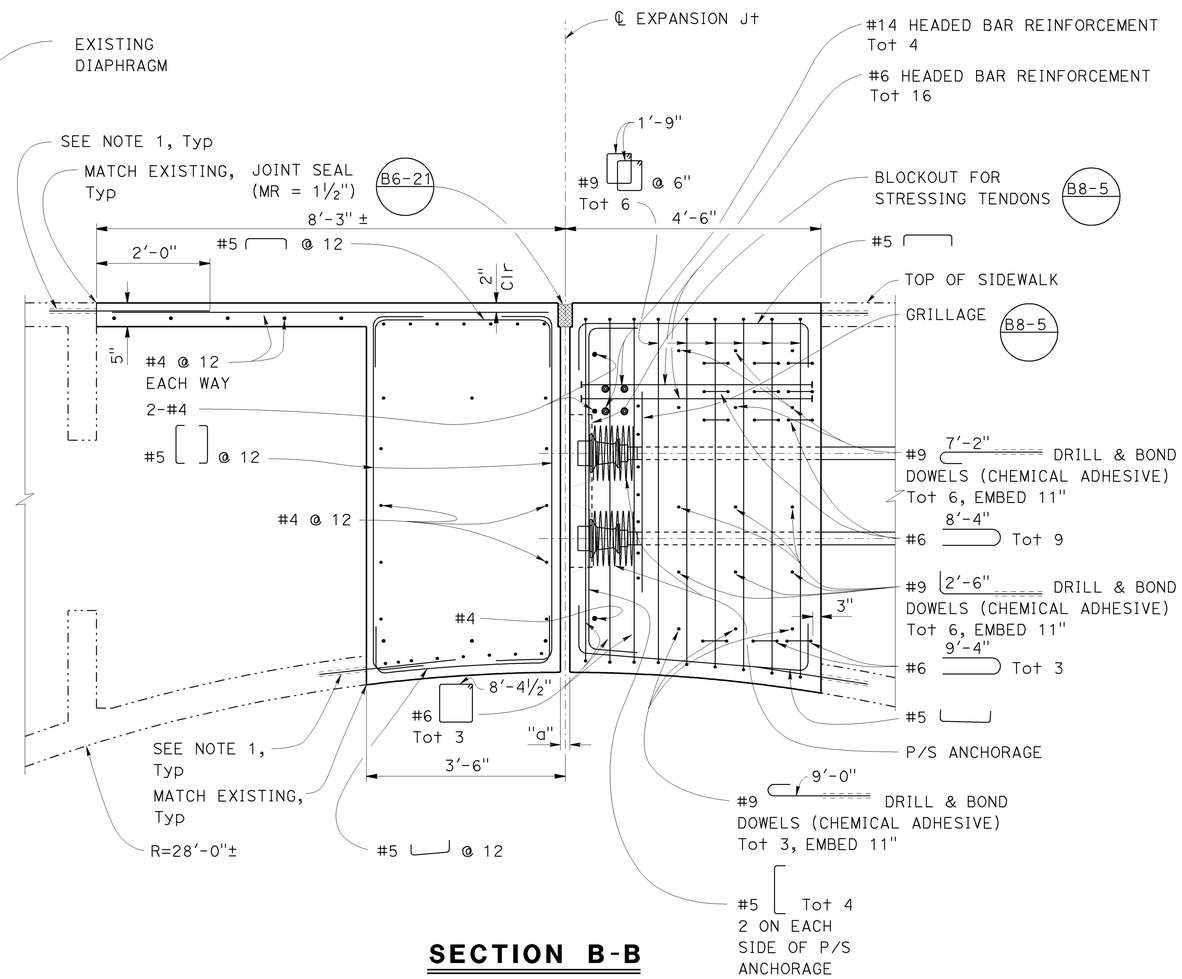

SECTION B-B

¾" = 1'-0"

NOTE: THE CONTRACTOR SHALL VERIFY ALL CONTROLLING FIELD DIMENSIONS BEFORE ORDERING OR FABRICATING ANY MATERIAL.

SEISMIC RETROFIT AND REHABILITATION

Frank H. Wei
DESIGN OVERSIGHT
11/16/2012
SIGN OFF DATE

	BY	CHECKED
DESIGN	Peter Smith	Oscar Henriquez
DETAILS	Oscar Colcol	Oscar Henriquez
QUANTITIES	Sabina Piras	Dina Tobia

PREPARED FOR THE STATE OF CALIFORNIA DEPARTMENT OF TRANSPORTATION

Peter Smith
PROJECT ENGINEER

BRIDGE NO. 57-0215
POST MILES 1.4

LAUREL STREET OVERCROSSING
RETROFIT DETAILS NO.4

DESIGN DETAIL SHEET (ENGLISH) (REV. 03/14/12)

ORIGINAL SCALE IN INCHES FOR REDUCED PLANS 0 1 2 3

UNIT: _____
PROJECT NUMBER & PHASE: 1100000225 1 CONTRACT NO.: 11-264111

DISREGARD PRINTS BEARING EARLIER REVISION DATES

REVISION DATES: 11-16-12 04-13-12 06-06-12 10/04/12

SHEET 13 OF 61

FILE => 57-0215-m-rd04.dgn

USERNAME => s133329 DATE PLOTTED => 05-FEB-2013 TIME PLOTTED => 06:28

DIST	COUNTY	ROUTE	POST MILES TOTAL PROJECT	SHEET No	TOTAL SHEETS
11	SD	163	1.4	100	147

Peter B Smith 11/16/12
REGISTERED CIVIL ENGINEER DATE

03-04-13
PLANS APPROVAL DATE

REGISTERED PROFESSIONAL ENGINEER Peter B. Smith No. C60122 Exp. 06/30/14 CIVIL STATE OF CALIFORNIA

The State of California or its officers or agents shall not be responsible for the accuracy or completeness of scanned copies of this plan sheet.

T.Y. LIN INTERNATIONAL
404 CAMINO DEL RIO SOUTH, SUITE 700
SAN DIEGO, CA 92108

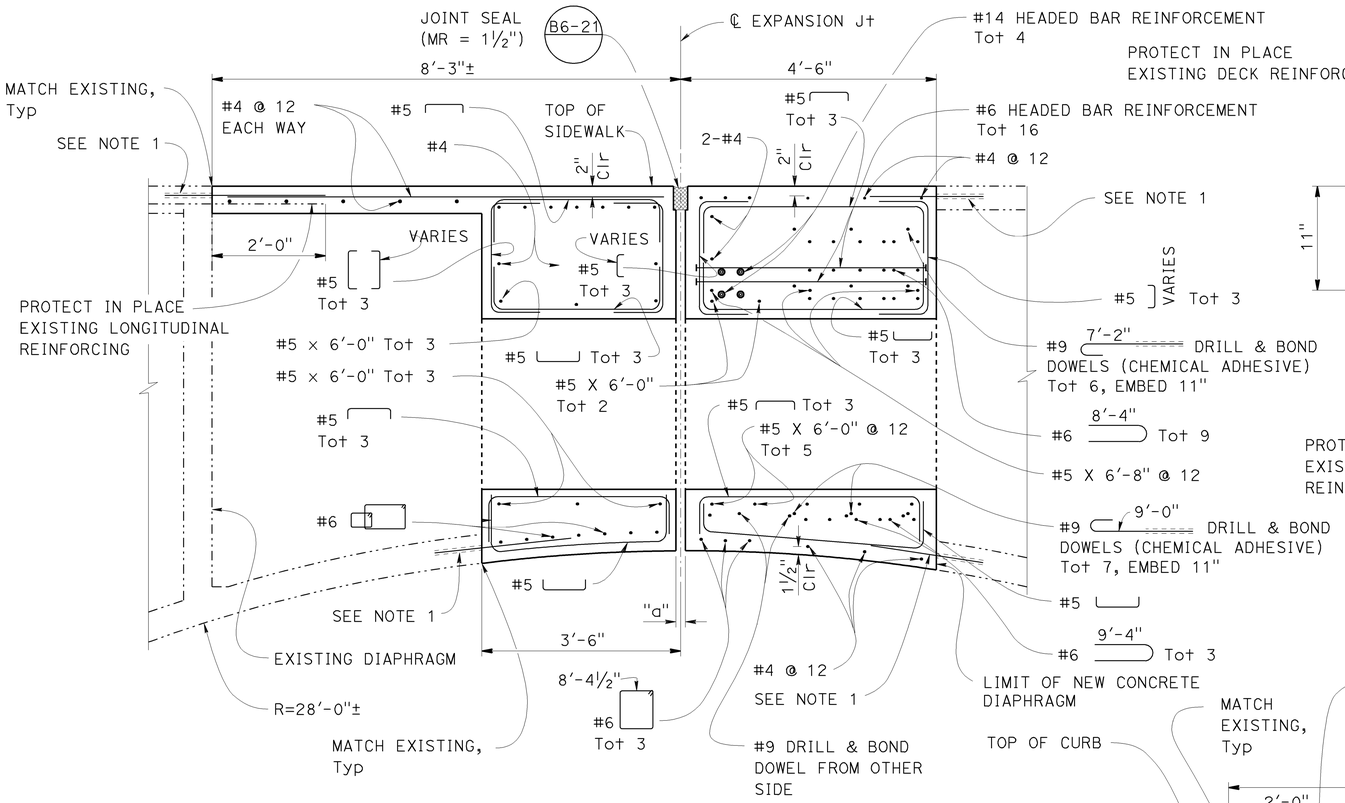

SECTION C-C

¾" = 1'-0"

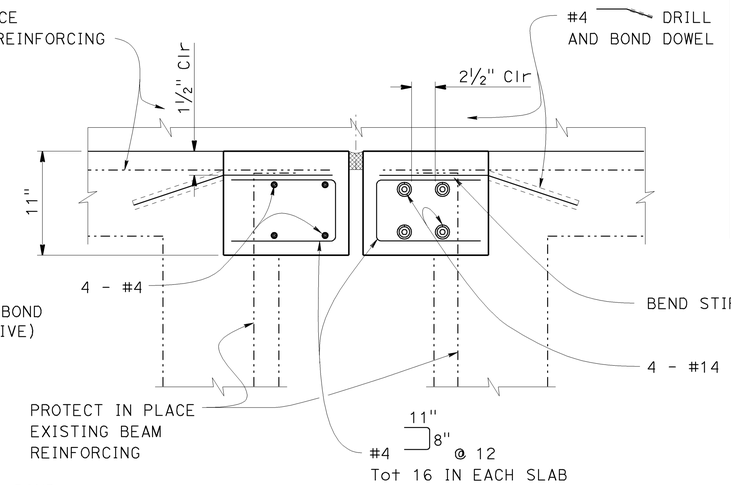

DETAIL B

1½" = 1'-0"

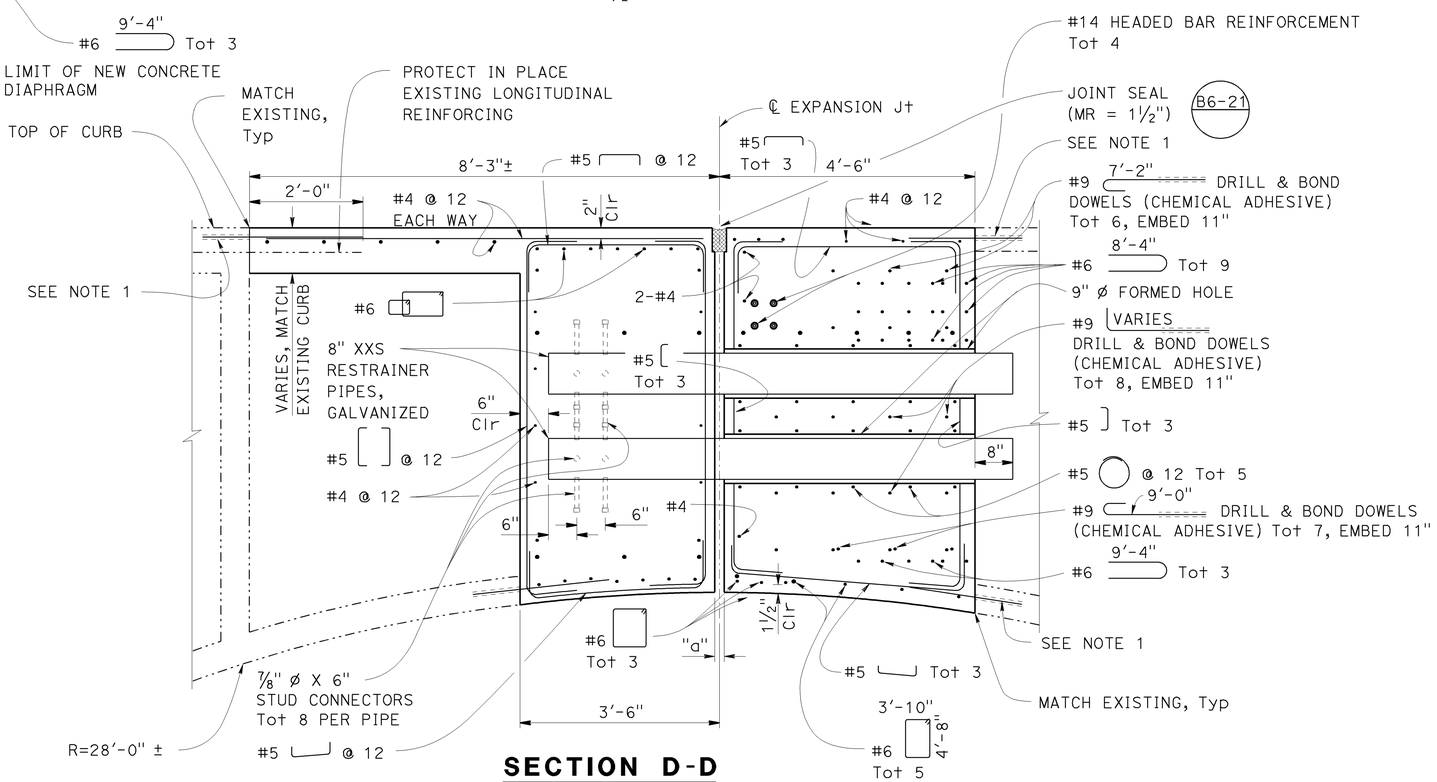

SECTION D-D

¾" = 1'-0"

NOTES:

1. Drill and Bond Dowel (Chemical Adhesive) #4 2'-0" @ 1'-0" O.C. Embed 5"
2. For "a" dimension see B6-21

   All bridge type except CIP/PS.
3. Bar extension shown for drill and bond dowels is length beyond embedment depth. See "DRILL AND BOND DOWEL DETAIL" on "RETROFIT DETAILS NO. 1" sheet.
4. For location of "DETAIL B", see "RETROFIT DETAILS NO. 6" sheet.
5. For location of "SECTION C-C" and "SECTION D-D", see "RETROFIT DETAILS NO. 2" sheet.

NOTE: THE CONTRACTOR SHALL VERIFY ALL CONTROLLING FIELD DIMENSIONS BEFORE ORDERING OR FABRICATING ANY MATERIAL.

SEISMIC RETROFIT AND REHABILITATION

DESIGN OVERSIGHT
11/16/2012
SIGN OFF DATE

	BY	CHECKED
DESIGN	Peter Smith	Oscar Henriquez
DETAILS	Oscar Colcol	Oscar Henriquez
QUANTITIES	Sabina Piras	Dina Tobia

PREPARED FOR THE STATE OF CALIFORNIA DEPARTMENT OF TRANSPORTATION

Peter Smith
PROJECT ENGINEER

BRIDGE NO. 57-0215
POST MILES 1.4

LAUREL STREET OVERCROSSING
RETROFIT DETAILS NO.5

DESIGN DETAIL SHEET (ENGLISH) (REV. 03/14/12)

ORIGINAL SCALE IN INCHES FOR REDUCED PLANS 0 1 2 3

UNIT: _____
PROJECT NUMBER & PHASE: 1100000225 1 CONTRACT NO.: 11-264111

DISREGARD PRINTS BEARING EARLIER REVISION DATES

REVISION DATES: 11-16-12 04-12-12 06-08-12 10/04/12

SHEET 14 OF 61

FILE => 57-0215-m-rd05.dgn

USERNAME => s133329 DATE PLOTTED => 05-FEB-2013 TIME PLOTTED => 06:28