Dist	COUNTY	ROUTE	POST MILES TOTAL PROJECT	SHEET No.	TOTAL SHEETS
11	SD	78	15.3/15.7	3	306

Nicole DeLuca 10-04-11
REGISTERED CIVIL ENGINEER DATE

7-18-11
PLANS APPROVAL DATE

REGISTERED PROFESSIONAL ENGINEER NICOLE DELUCA No. C74273 Exp. 6-30-12 CIVIL STATE OF CALIFORNIA

THE STATE OF CALIFORNIA OR ITS OFFICERS OR AGENTS SHALL NOT BE RESPONSIBLE FOR THE ACCURACY OR COMPLETENESS OF SCANNED COPIES OF THIS PLAN SHEET.

Dokken Engineering
5675 Ruffin Road
Suite 250
San Diego, CA 92123

CITY OF ESCONDIDO
201 NORTH BROADWAY
ESCONDIDO, CA 92025

1

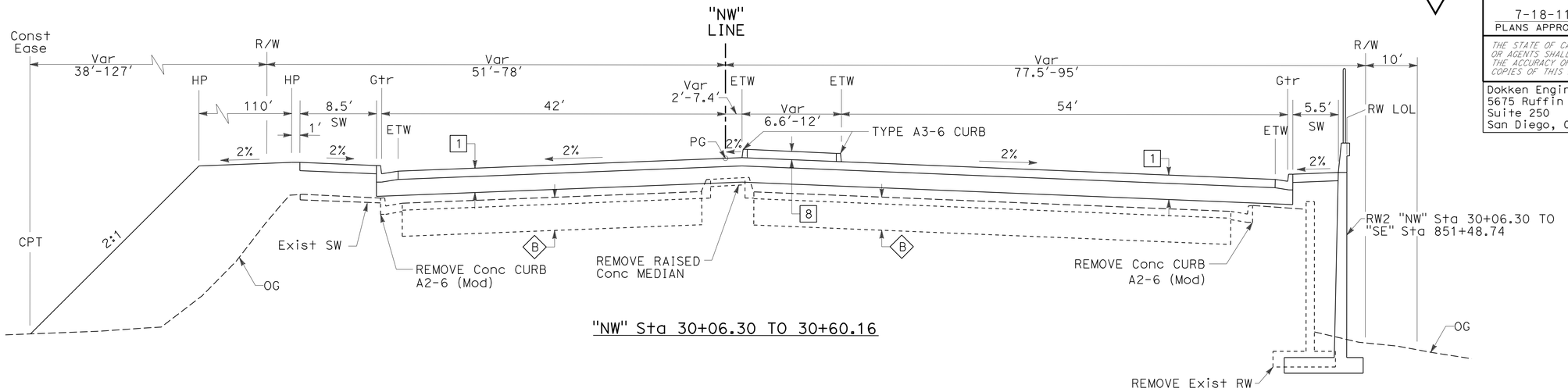

"NW" Sta 30+06.30 TO 30+60.16

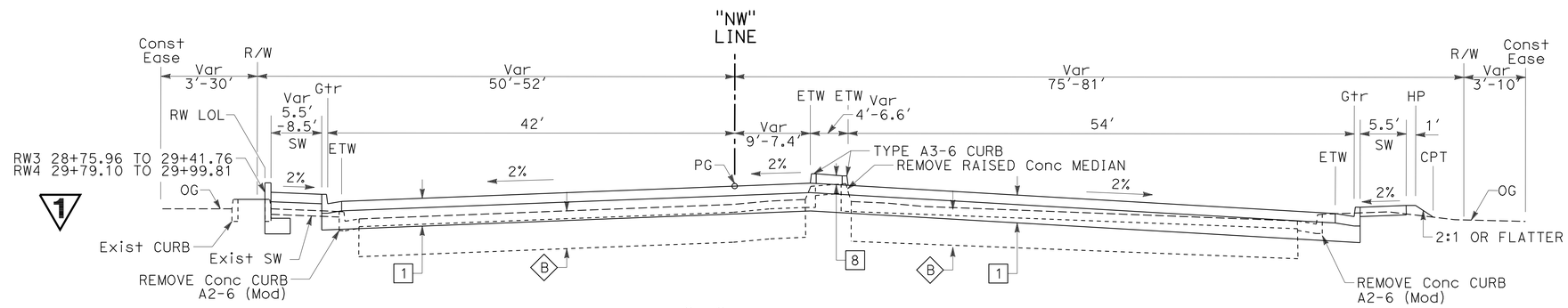

"NW" Sta 28+64.16 TO 30+06.30

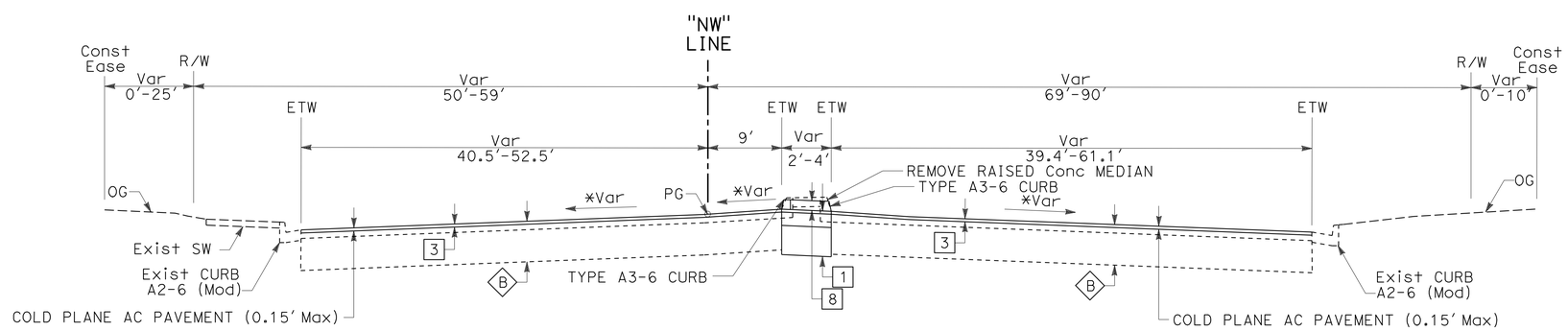

"NW" Sta 26+35.84 TO 28+64.16

NORDAHL Rd

*Var MATCH Exist CROSS SLOPE

TYPICAL CROSS SECTIONS

NO SCALE

X-2

1 **REVISED PER ADDENDUM No. 1 DATED OCTOBER 21, 2011**

STATE OF CALIFORNIA - DEPARTMENT OF TRANSPORTATION
Caltrans®

CONSULTANT FUNCTIONAL SUPERVISOR: MARK TARRALL
CALCULATED-DESIGNED BY: DANIEL WAGNER
CHECKED BY: MARK FIRGER
REVISED BY / DATE REVISED

LAST REVISION 10-04-11
DATE PLOTTED => 18-OCT-2011
TIME PLOTTED => 09:35

Dist	COUNTY	ROUTE	POST MILES TOTAL PROJECT	SHEET No.	TOTAL SHEETS
11	SD	78	15.3/15.7	11	306

Nicole DeLuca 10-04-11
REGISTERED CIVIL ENGINEER DATE

7-18-11
PLANS APPROVAL DATE

REGISTERED PROFESSIONAL ENGINEER NICOLE DELUCA No. C74273 Exp 6-30-12 CIVIL STATE OF CALIFORNIA

THE STATE OF CALIFORNIA OR ITS OFFICERS OR AGENTS SHALL NOT BE RESPONSIBLE FOR THE ACCURACY OR COMPLETENESS OF SCANNED COPIES OF THIS PLAN SHEET.

Dokken Engineering
5675 Ruffin Road
Suite 250
San Diego, CA 92123

CITY OF ESCONDIDO
201 NORTH BROADWAY
ESCONDIDO, CA 92025

NOTES:

1. FOR ACCURATE RIGHT OF WAY AND ACCESS DATA, CONTACT RIGHT OF WAY ENGINEERING AT THE DISTRICT OFFICE.
2. SEE Const DETAILS FOR CURB RAMPS.
3. SEE Const DETAILS FOR DRIVEWAY IMPROVEMENTS.
4. SEE SUMMARY OF QUANTITIIES FOR LIMITS OF Conc CURB, SIDEWALK, AND MEDIAN REMOVAL.
5. FOR LOCATION OF TRANSPLANT PALM TREE, TRANSPLANT TREE, AND RELOCATE BOULDER WORK, SEE PLANT REMOVAL PLANS.
6. FOR LOCATION OF IRRIGATION SLEEVE WORK PLEASE SEE CONSTRUCTION DETAIL SHEETS.

CURVE DATA TABLE				
No.	R	Δ	T	L
1	500.00′	11°19′16″	49.56′	98.80′
2	2800.00′	7°09′49″	175.27′	350.08′
3	2000.00′	8°36′25″	150.49′	300.44′

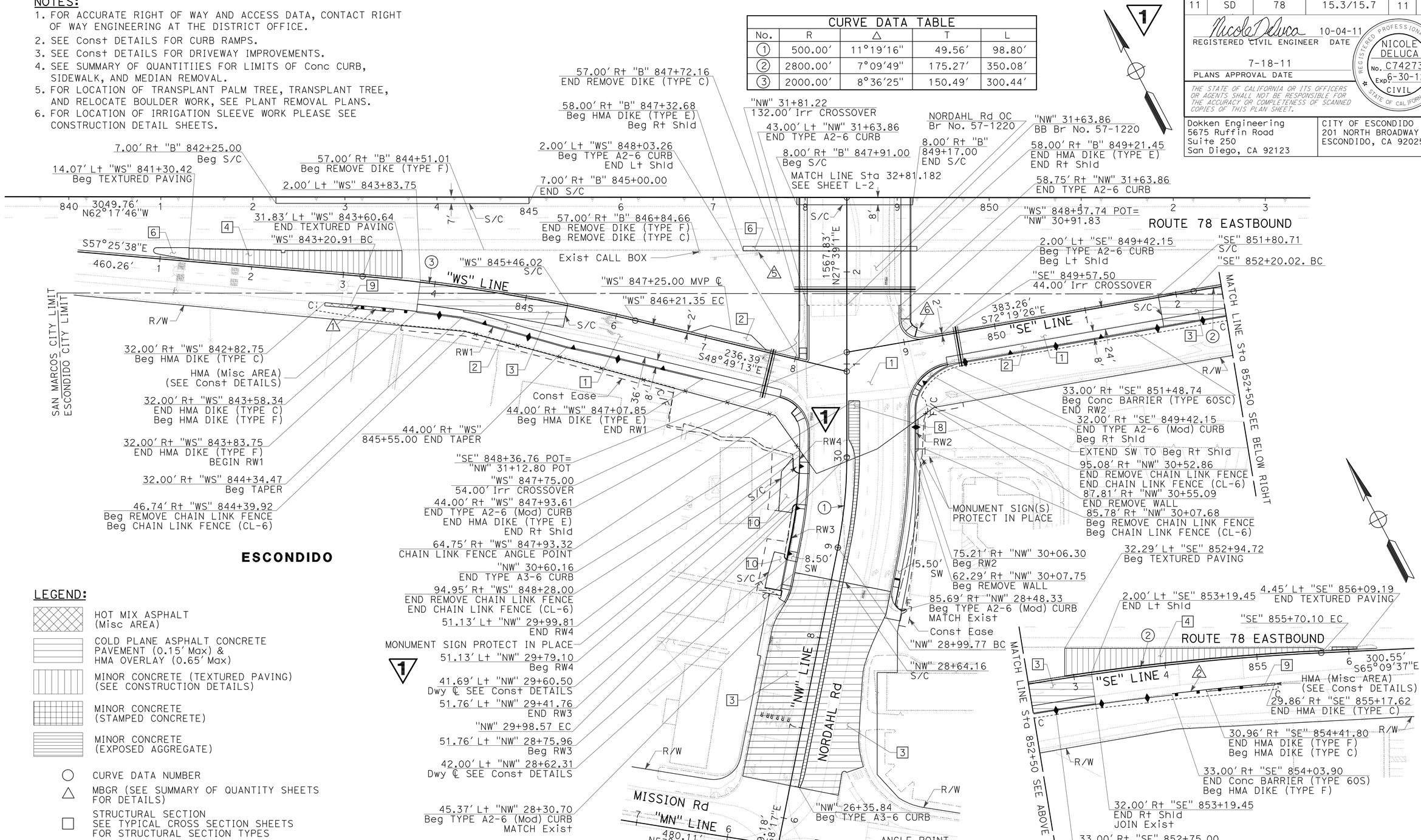

LEGEND:

- HOT MIX ASPHALT (Misc AREA)
- COLD PLANE ASPHALT CONCRETE PAVEMENT (0.15′ Max) & HMA OVERLAY (0.65′ Max)
- MINOR CONCRETE (TEXTURED PAVING) (SEE CONSTRUCTION DETAILS)
- MINOR CONCRETE (STAMPED CONCRETE)
- MINOR CONCRETE (EXPOSED AGGREGATE)
- ○ CURVE DATA NUMBER
- △ MBGR (SEE SUMMARY OF QUANTITY SHEETS FOR DETAILS)
- □ STRUCTURAL SECTION SEE TYPICAL CROSS SECTION SHEETS FOR STRUCTURAL SECTION TYPES
- MVP MAINTENANCE VEHICLE PULLOUT
- S/C SAWCUT
- TW TRAVELED WAY

1 REVISED PER ADDENDUM No. 1 DATED OCTOBER 21, 2011

SCALE: 1" = 50′

LAYOUT L-1

STATE OF CALIFORNIA - DEPARTMENT OF TRANSPORTATION
Caltrans

CONSULTANT FUNCTIONAL SUPERVISOR: MARK TARRALL
CALCULATED-DESIGNED BY: DANIEL WAGNER
CHECKED BY: MARK FIRGER
REVISED BY / DATE REVISED

LAST REVISION 10-04-11 | DATE PLOTTED => 18-OCT-2011 | TIME PLOTTED => 09:35

Dist	COUNTY	ROUTE	POST MILES TOTAL PROJECT	SHEET No.	TOTAL SHEETS
11	SD	78	15.3/15.7	26	306

Nicole DeLuca 10-04-11
REGISTERED CIVIL ENGINEER DATE

7-18-11
PLANS APPROVAL DATE

REGISTERED PROFESSIONAL ENGINEER NICOLE DELUCA No. C74273 Exp. 6-30-12 CIVIL STATE OF CALIFORNIA

THE STATE OF CALIFORNIA OR ITS OFFICERS OR AGENTS SHALL NOT BE RESPONSIBLE FOR THE ACCURACY OR COMPLETENESS OF SCANNED COPIES OF THIS PLAN SHEET.

Dokken Engineering
5675 Ruffin Road
Suite 250
San Diego, CA 92123

CITY OF ESCONDIDO
201 NORTH BROADWAY
ESCONDIDO, CA 92025

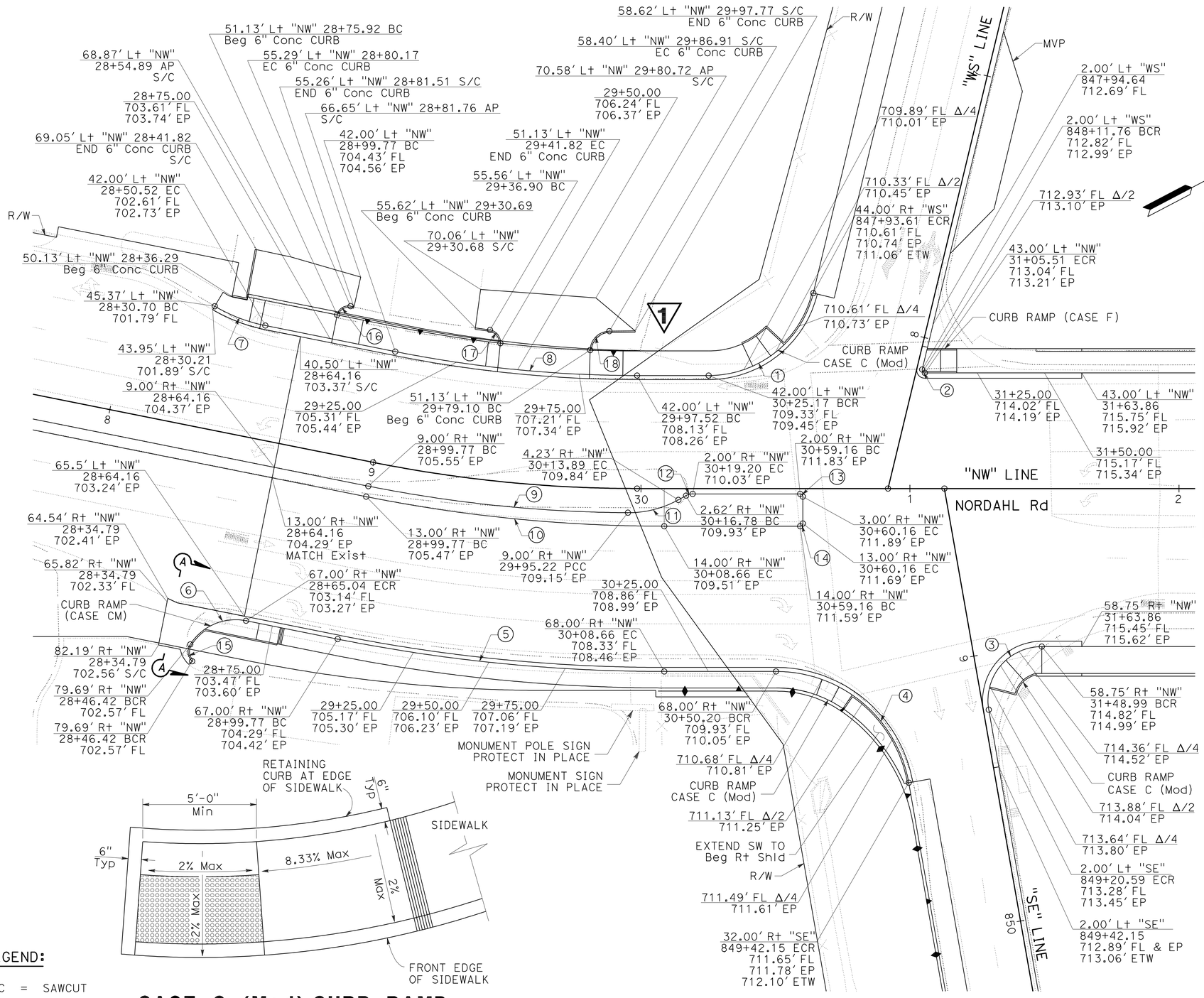

CURB DATA TABLE

No.	R	Δ	T	L
1	40.00'	76°28'14"	31.52'	53.39'
2	1.00'	103°31'46"	1.27'	1.81'
3	20.00'	99°58'27"	23.82'	34.90'
4	50.00'	80°8'15"	42.06'	69.93'
5	618.39'	11°19'16"	61.29'	122.19'
6	20.00'	68°33'17"	13.63'	23.93'
7	60.00'	19°17'25"	10.20'	20.20
8	458.00'	11°19'16"	45.40'	90.50'
9	509.00'	10°56'14"	48.73'	97.16'
10	564.39'	11°19'16"	55.94'	111.52'
11	38.18'	29°18'45"	9.99'	19.53'
12	5.00'	28°55'43"	1.29'	2.52'
13	1.00'	90°0'0"	1.00'	1.57'
14	1.00'	90°0'0"	1.00'	1.57'
15	5.00'	78°6'53"	4.06'	6.82'
16	4.16'	91°19'17"	4.26'	6.63'
17	4.50'	87°47'18"	4.33'	6.90'
18	7.26'	87°47'56"	6.99'	11.12'

CASE C (Mod) CURB RAMP

NO SCALE

NOTE: FOR ADDITIONAL INFORMATION, SEE Std PLAN A88A.

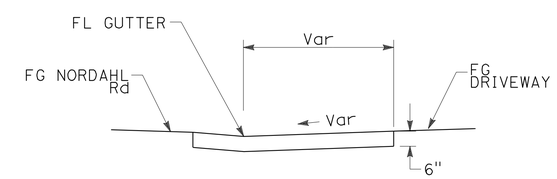

SECTION A-A

NO SCALE

PLAN

NORDAHL ROAD

LEGEND:

S/C = SAWCUT

1 REVISED PER ADDENDUM No. 1 DATED OCTOBER 21, 2011

CONSTRUCTION DETAILS

SCALE: 1" = 20'

C-4

STATE OF CALIFORNIA - DEPARTMENT OF TRANSPORTATION
Caltrans®

CONSULTANT FUNCTIONAL SUPERVISOR: MARK TARRALL
CALCULATED-DESIGNED BY: DANIEL WAGNER
CHECKED BY: MARK FIRGER
REVISED BY
DATE REVISED

LAST REVISION 10-04-11
DATE PLOTTED => 18-OCT-2011
TIME PLOTTED => 09:35

Dist	COUNTY	ROUTE	POST MILES TOTAL PROJECT	SHEET No.	TOTAL SHEETS
11	SD	78	15.3/15.7	45	306

Nicole DeLuca 10-04-11
REGISTERED CIVIL ENGINEER DATE

7-18-11
PLANS APPROVAL DATE

REGISTERED PROFESSIONAL ENGINEER NICOLE DELUCA No. C74273 Exp. 6-30-12 CIVIL STATE OF CALIFORNIA

THE STATE OF CALIFORNIA OR ITS OFFICERS OR AGENTS SHALL NOT BE RESPONSIBLE FOR THE ACCURACY OR COMPLETENESS OF SCANNED COPIES OF THIS PLAN SHEET.

Dokken Engineering
5675 Ruffin Road
Suite 250
San Diego, CA 92123

CITY OF ESCONDIDO
201 NORTH BROADWAY
ESCONDIDO, CA 92025

NOTES:
1. FOR ACCURATE RIGHT OF WAY DATA, CONTACT RIGHT OF WAY ENGINEERING AT THE DISTRICT OFFICE.
2. SEE Const DETAIL SHEET C-17 FOR ADDITIONAL DRIVEWAY INFORMATION.

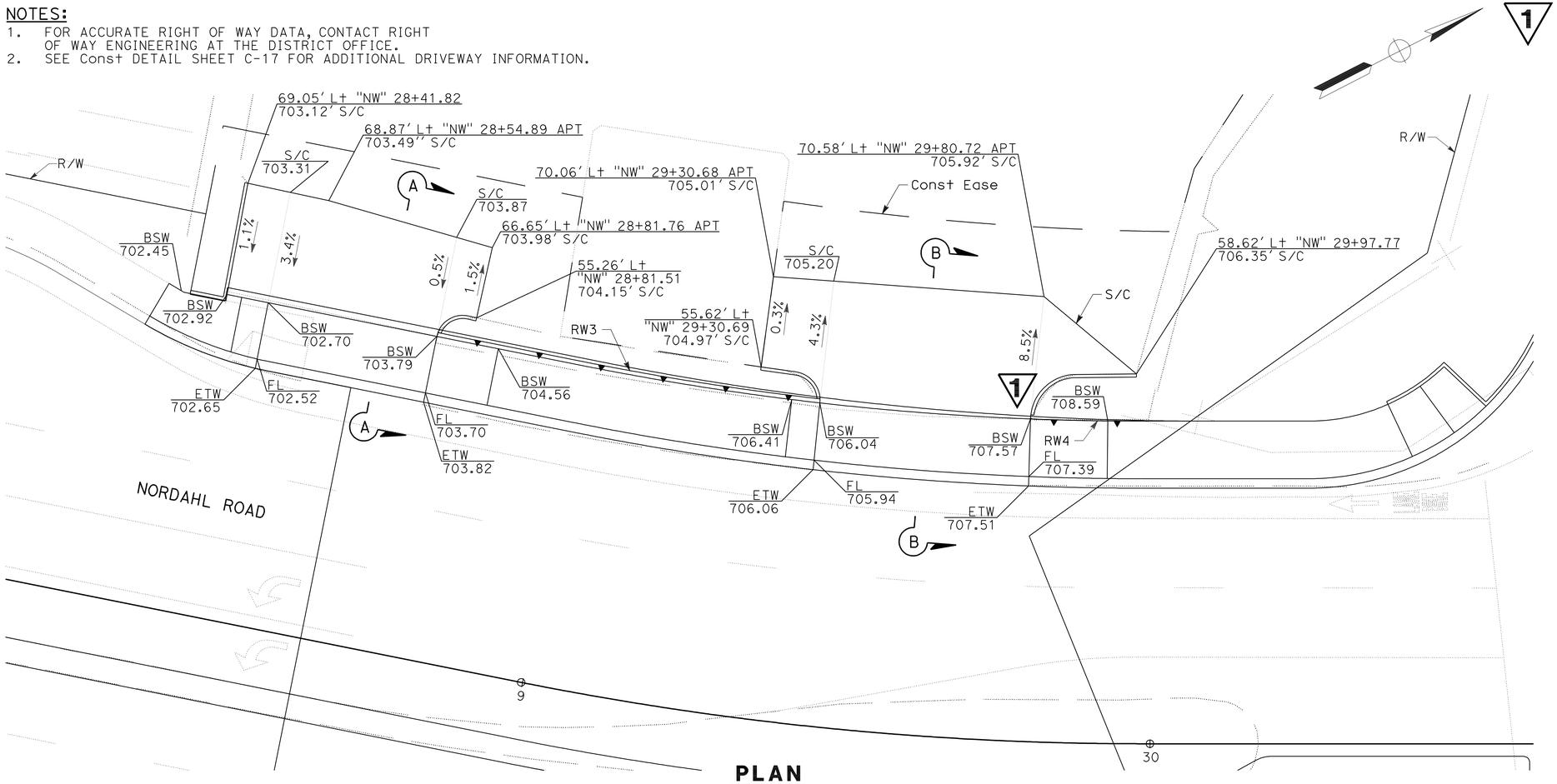

PLAN
"NW" LINE
NORDAHL ROAD
SCALE: 1" = 10'

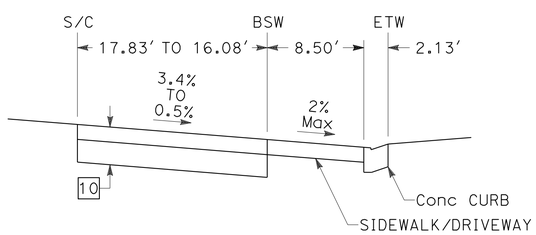

SECTION A-A
NO SCALE

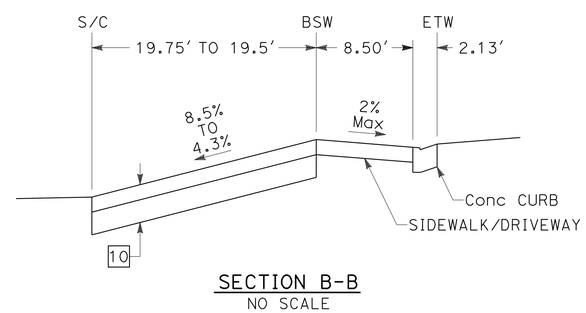

SECTION B-B
NO SCALE

DRIVEWAYS

1 **REVISED PER ADDENDUM No. 1 DATED OCTOBER 21, 2011**

CONSTRUCTION DETAILS

SCALE AS SHOWN

C-23

STATE OF CALIFORNIA - DEPARTMENT OF TRANSPORTATION
Caltrans

CONSULTANT FUNCTIONAL SUPERVISOR: MARK TARRALL
CALCULATED-DESIGNED BY: DANIEL WAGNER
CHECKED BY: MARK FIRGER
REVISED BY
DATE REVISED

LAST REVISION 10-04-11
DATE PLOTTED => 18-OCT-2011
TIME PLOTTED => 09:35

Dist	COUNTY	ROUTE	POST MILES TOTAL PROJECT	SHEET No.	TOTAL SHEETS
11	SD	78	15.3/15.7	156	306

REGISTERED CIVIL ENGINEER 10-06-11 DATE

7-18-11
PLANS APPROVAL DATE

REGISTERED PROFESSIONAL ENGINEER NICOLE DELUCA No. C74273 Exp. 6-30-12 CIVIL STATE OF CALIFORNIA

THE STATE OF CALIFORNIA OR ITS OFFICERS OR AGENTS SHALL NOT BE RESPONSIBLE FOR THE ACCURACY OR COMPLETENESS OF SCANNED COPIES OF THIS PLAN SHEET.

Dokken Engineering
5675 Ruffin Road
Suite 250
San Diego, CA 92123

CITY OF ESCONDIDO
201 NORTH BROADWAY
ESCONDIDO, CA 92025

1

IRRIGATION CROSSOVERS

LOCATION		SIDE		CONDUIT	CONDUIT TYPE ③ SIZE (DN)			(N) WATER LINE CROSSOVER SIZE (In) DN	(N) SPRINKLER CONTROL CROSSOVER SIZE (In) DN	REMARKS
LINE	STATION	R†	L†	LENGTH (ft)	8 In	10 In	12 In			
"NW"	31+81.22	X	X	132.0	X			3	2	
"NW"	33+80.43	X	X	132.0	X			3	2	
"NW"	37+61.83 TO 38+03.83	X	-	42.0	X			2	2	ACROSS DRIVEWAY
"SE"	849+57.50	X	X	44.0	X			3	2	
"WS"	847+75.00	X	X	54.0	X			3	2	
"NWR"	847+38.55	X	X	44.0	X			3	2	
"ENRA"	849+25.55	X	X	56.0	X			3	2	
	TOTAL			504.0						

(N) - NOT A SEPARATE PAY ITEM, FOR INFORMATION ONLY.
DN - DIAMETER NOMINAL
X - DENOTES REQUIREMENT

CONDUIT TYPE
(APPLICABLE WHEN CIRCLED BELOW AND SHOWN UNDER THE 'CONDUIT TYPE' COLUMN HEADING)
1 BITUMINOUS COATED CORRUGATED STEEL PIPE (0.064 In THICK)
2 WELDED STEEL PIPE (0.25 In THICK)
③ CORRUGATED HIGH DENSITY POLYETHYLENE PIPE
4 ALTERNATIVE CONDUIT

IRRIGATION SLEEVE

SHEET NUMBER	2" LF	2½" LF
L-2, L-3	120	56
SUBTOTAL	120	56
TOTAL	176	

MONUMENT SIGN

STRUCTURE EXCAVATION (SIGN) (N)	CY	6.5
STRUCTURE BACKFILL (SIGN) (N)	CY	3.7
MINOR CONCRETE (MINOR STRUCTURE)	CY	2.8*
BAR REINFORCING STEEL (SIGN) (N)	LB	653
MASONRY BLOCK (MONUMENT SIGN)	SQFT	94
STUCCO TEXTURE	SQFT	188
RED TILE (N)	SQFT	34
RELOCATE SIGN PANEL & FRAME (N)	EA	2

* QUANTITY ADDED TO MINOR CONCRETE (MINOR STRUCTURE) QUANTITY TABLE.

MINOR CONCRETE (MINOR STRUCTURE)

SHEET NUMBER	LINE	R†/L†	STATION	CY	REMARKS
L-2	"NW"	L†	35+78.00 TO 35+83.00	1.0	PEDESTRIAN RAMP
L-2	"NW"	R†	35+89.86 TO 36+00.36	1.8	CONCRETE STEPS AND PEDESTRIAN RAMP
			SUBTOTAL	2.8	
			MONUMENT SIGN	2.8	
			DRAINAGE SHEETS	38.7	
			TOTAL	44.3	

RETAINING WALLS

RETAINING WALL No.	STRUCTURE EXCAVATION (Ret WALL)	STRUCTURE BACKFILL (Ret WALL)	STRUCTURAL CONCRETE, RETAINING WALL	CONCRETE BARRIER (TYPE 732A)	PERVIOUS BACKFILL MATERIAL (Ret WALL)	ARCHITECTURAL TREATMENT (DRY STACK ROCK TEXTURE)	BAR REINFORCING STEEL (RETAINING WALL)	CLASS 4 AGGREGATE SUBBASE	METAL RAILING
	CY	CY	CY	LF	CY	SQFT	LB	CY*	LF
"RW1"	726	650	544	320	61	2,228	25,150	171	-
"RW2"	490	304	330	312	20	1,450	18,500	90	73
"RW3"	39	31	26	-	-	-	1540	-	-
"RW4"	10	11	8	-	-	-	460	-	-
"RW5"	-	-	-	-	-	-	-	-	-
TOTAL	1265	996	908	632	81	3,678	45,650	261*	73

* QUANTITY ADDED TO FOUNDATION TREATMENT TABLE.

1

COLD PLANE AND OVERLAY AREAS

LOCATION			COLD PLANE ASPHALT CONCRETE PAVEMENT	GEOSYNTHETIC PAVEMENT INTERLAYER	HOT MIX ASPHALT (TYPE A)	PAVING ASPHALT (BINDER, GEOSYNTHETIC PAVEMENT INTERLAYER)	TACK COAT
SHEET NUMBER	LINE	STATION	SQYD	SQYD	TON*	TON	TON*
L-1	"WS"	843+83.75 TO 845+46.02	466.5	529.5	102.6	0.1	0.1
L-1	"SE"	851+80.71 TO 853+19.45	522.1	533.5	141.0	0.1	0.1
L-1	"NW"	26+35.85 TO 28+64.16	1,505.3	1,521.8	185.1	0.4	0.4
L-1	"NW"	26+35.85 TO 28+64.16	1,189.3	1,206.8	146.2	0.3	0.3
L-2	"NWR"	843+64.25 TO 844+63.93	373.7	385.1	90.4	0.1	0.1
		TOTAL	4,056.9	4,176.6	665.3*	1.0	1.0*

* QUANTITY ADDED TO HMA (TYPE A) QUANTITY TABLE.

(N) NOT A SEPARATE PAY ITEM, FOR INFORMATION ONLY.

1 REVISED PER ADDENDUM No. 1 DATED OCTOBER 21, 2011

SUMMARY OF QUANTITIES

Q-4

STATE OF CALIFORNIA - DEPARTMENT OF TRANSPORTATION
Caltrans

CONSULTANT FUNCTIONAL SUPERVISOR: MARK TARRALL
CALCULATED-DESIGNED BY: DANIEL WAGNER
CHECKED BY: MARK FIRGER
REVISED BY / DATE REVISED

LAST REVISION 10-06-11
DATE PLOTTED => 18-OCT-2011
TIME PLOTTED => 09:35

Dist	COUNTY	ROUTE	POST MILES TOTAL PROJECT	SHEET No.	TOTAL SHEETS
11	SD	78	15.3/15.7	163	306

REGISTERED CIVIL ENGINEER — DATE: 10-06-11

7-18-11
PLANS APPROVAL DATE

REGISTERED PROFESSIONAL ENGINEER — NICOLE DELUCA — No. C76263 — Exp. 6-30-12 — CIVIL — STATE OF CALIFORNIA

THE STATE OF CALIFORNIA OR ITS OFFICERS OR AGENTS SHALL NOT BE RESPONSIBLE FOR THE ACCURACY OR COMPLETENESS OF SCANNED COPIES OF THIS PLAN SHEET.

Dokken Engineering
5675 Ruffin Road
Suite 250
San Diego, CA 92123

CITY OF ESCONDIDO
201 NORTH BROADWAY
ESCONDIDO, CA 92025

1

NOTES:

1. FOR COMPLETE RIGHT OF WAY DATA, CONTACT RIGHT OF WAY ENGINEERING AT THE DISTRICT OFFICE.

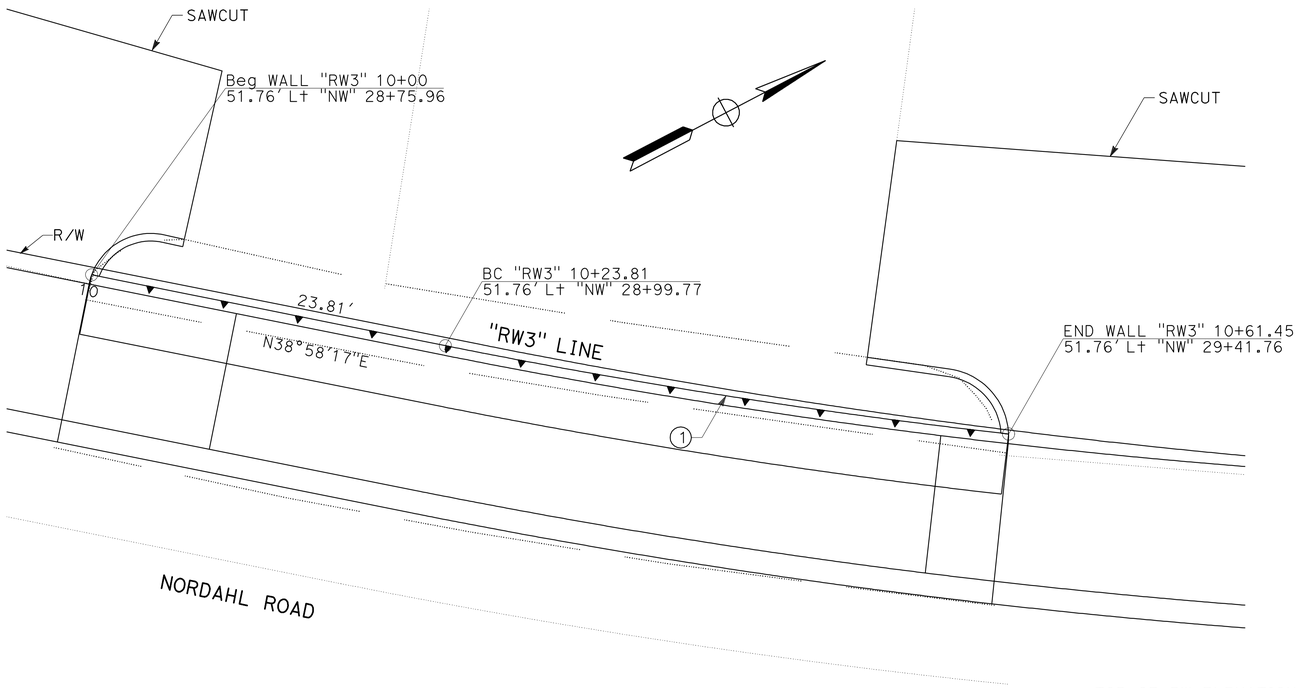

CURVE DATA TABLE				
No.	R	Δ	T	L
1	448.24'	4°48'41"	18.83'	37.64'

TOP OF RW ELEVATIONS

STATION	ELEVATION
10+00.00	705.36
10+16.00	705.86
10+32.00	706.42
10+48.00	707.06
10+61.45	707.61

FOOTING LAYOUT

SCALE 1"=5'

RETAINING WALL "RW3" QUANTITIES		
STRUCTURE EXCAVATION (Ret WALL)	CY	39
STRUCTURE BACKFILL (Ret WALL)	CY	31
STRUCTURAL CONCRETE, RETAINING WALL	CY	26
BAR REINFORCING STEEL (RETAINING WALL)	LB	1540

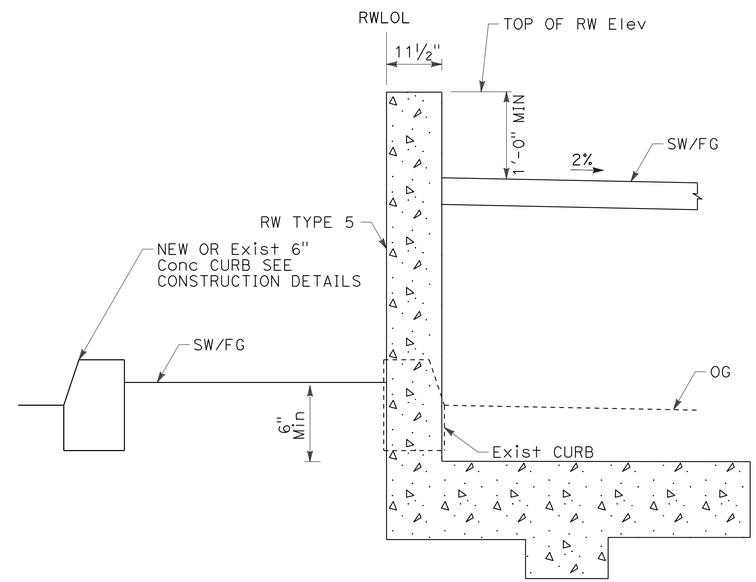

FOR RETAINING WALL Reinf, SEE Std PLAN B3-7

TYPICAL SECTION (B3-7)

RETAINING WALL TYPE 5
Sta 10+00.00 TO 10+61.45
NO SCALE

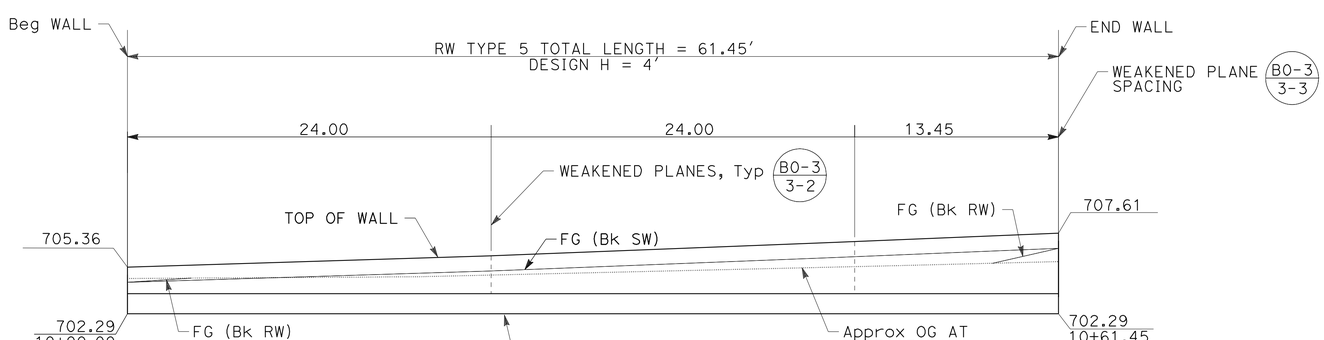

ELEVATION

SCALE Horiz 1"=5'
Vert 1"=5'

THIS PLAN ACCURATE FOR RETAINING WALL WORK ONLY.

1 **REVISED PER ADDENDUM No. 1 DATED OCTOBER 21, 2011**

RETAINING WALL PLAN ("RW3")

SCALE AS SHOWN

R3-1

STATE OF CALIFORNIA - DEPARTMENT OF TRANSPORTATION — Caltrans

CONSULTANT FUNCTIONAL SUPERVISOR: MARK TARRALL

CALCULATED-DESIGNED BY: KATHRYN WALKER — CHECKED BY: MARK FIRGER

REVISED BY — DATE REVISED

LAST REVISION 10-06-11 — DATE PLOTTED => 18-OCT-2011 — TIME PLOTTED => 09:36

Dist	COUNTY	ROUTE	POST MILES TOTAL PROJECT	SHEET No.	TOTAL SHEETS
11	SD	78	15.3/15.7	164	306

REGISTERED CIVIL ENGINEER 10-06-11 DATE

7-18-11
PLANS APPROVAL DATE

REGISTERED PROFESSIONAL ENGINEER NICOLE DELUCA No. C74273 Exp. 6-30-12 CIVIL STATE OF CALIFORNIA

THE STATE OF CALIFORNIA OR ITS OFFICERS OR AGENTS SHALL NOT BE RESPONSIBLE FOR THE ACCURACY OR COMPLETENESS OF SCANNED COPIES OF THIS PLAN SHEET.

Dokken Engineering
5675 Ruffin Road
Suite 250
San Diego, CA 92123

CITY OF ESCONDIDO
201 NORTH BROADWAY
ESCONDIDO, CA 92025

NOTES:
1. FOR COMPLETE RIGHT OF WAY DATA, CONTACT RIGHT OF WAY ENGINEERING AT THE DISTRICT OFFICE.

1

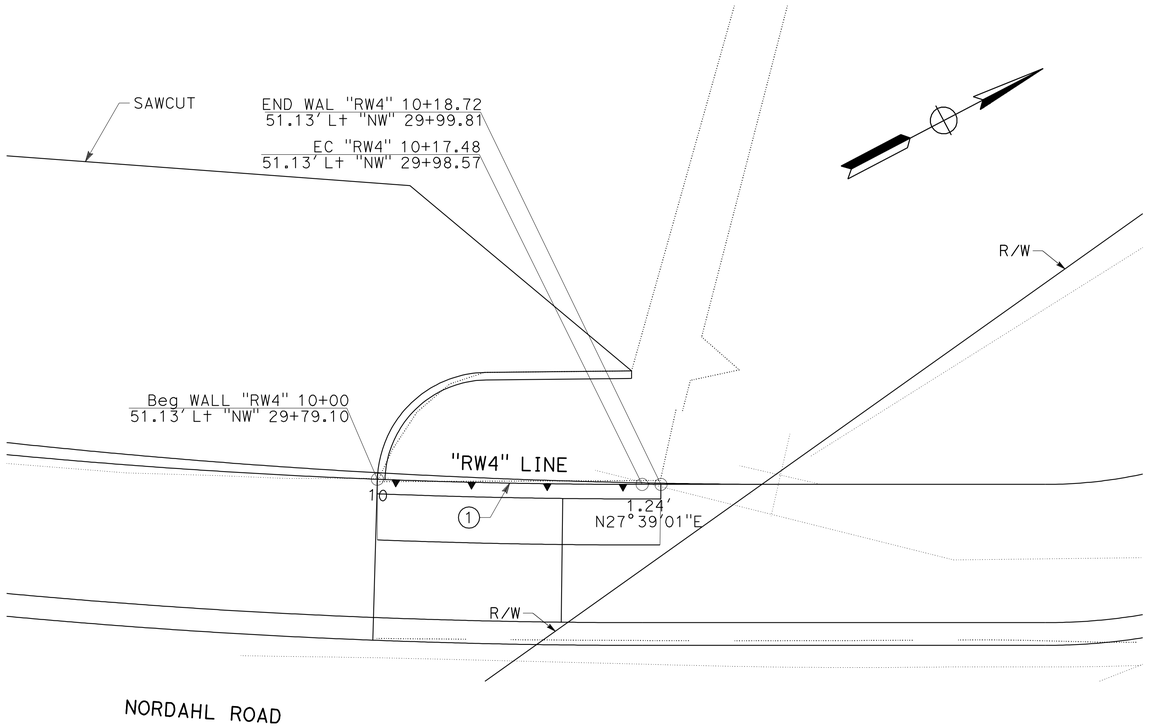

FOOTING LAYOUT
SCALE 1"=5'

RETAINING WALL "RW4" QUANTITIES		
STRUCTURE EXCAVATION (Rev WALL)	CY	10
STRUCTURE BACKFILL (Rev WALL)	CY	11
STRUCTURAL CONCRETE, RETAINING WALL	CY	8
BAR REINFORCING STEEL (RETAINING WALL)	LB	460

CURVE DATA TABLE				
No.	R	Δ	T	L
1	448.88'	2°13'52"	8.74'	17.48'

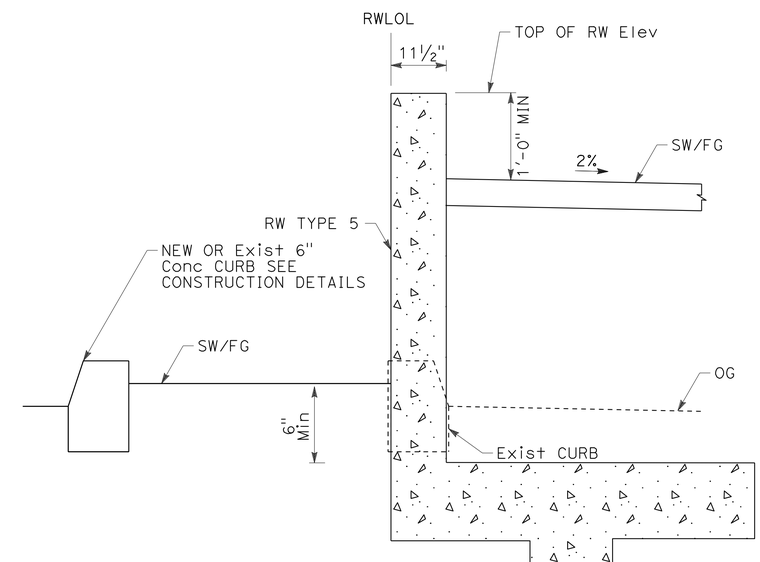

FOR RETAINING WALL Reinf, SEE Std PLAN B3-7

TYPICAL SECTION B3-7
RETAINING WALL TYPE 5
Sta 10+00.00 TO 10+18.72
NO SCALE

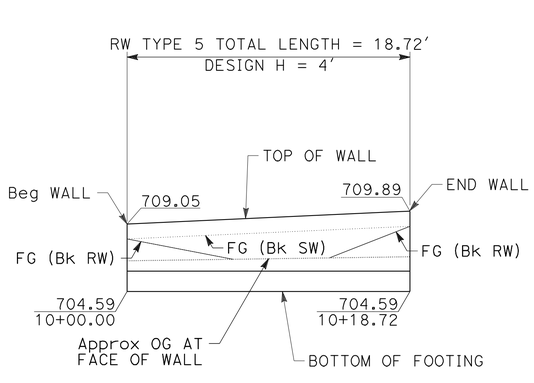

ELEVATION
SCALE Horiz 1"=5'
Vert 1"=5'

TOP OF RW ELEVATIONS

STATION	ELEVATION
10+00.00	709.05
10+08.00	709.41
10+16.00	709.78
10+18.72	709.89

THIS PLAN ACCURATE FOR RETAINING WALL WORK ONLY.

1 **REVISED PER ADDENDUM No. 1 DATED OCTOBER 21, 2011**

RETAINING WALL PLAN ("RW4")

SCALE AS SHOWN

R4-1

STATE OF CALIFORNIA - DEPARTMENT OF TRANSPORTATION
Caltrans®

CONSULTANT FUNCTIONAL SUPERVISOR: MARK TARRALL
CALCULATED-DESIGNED BY: MARK FIRGER
CHECKED BY: KATHRYN WALKER
REVISED BY | DATE REVISED

LAST REVISION 10-06-11
DATE PLOTTED => 18-OCT-2011
TIME PLOTTED => 09:36