DIST	COUNTY	ROUTE	POST MILES TOTAL PROJECT	SHEET No.	TOTAL SHEETS
11	SD	5	3.9/9.2	101	282

06-15-16
REGISTERED CIVIL ENGINEER DATE

07-11-16
PLANS APPROVAL DATE

REGISTERED PROFESSIONAL ENGINEER
SHAHIN ADIBI
No. 54839
Exp. 06-30-18
CIVIL
STATE OF CALIFORNIA

THE STATE OF CALIFORNIA OR ITS OFFICERS OR AGENTS SHALL NOT BE RESPONSIBLE FOR THE ACCURACY OR COMPLETENESS OF SCANNED COPIES OF THIS PLAN SHEET.

PAVEMENT DELINEATION QUANTITIES (Cont)

LOCATION						PAVEMENT MARKER				TRAFFIC STRIPE THERMOPLASTIC (ENHANCED WET NIGHT VISIBILITY) (LF)						REMOVE PAVEMENT MARKER (N)	REMOVE TRAFFIC STRIPE		REMARKS
SHEET	LOCATION	Rte	FROM STATION	TO STATION	DETAIL No.	NON-REFLECTIVE (EA)	RETROREFLECTIVE (EA)			4"			8"	6"			PAINTED 4"	THERMOPLASTIC 8"	
						TYPE A WHITE	TYPE D YELLOW	TYPE H YELLOW	TYPE G CLEAR	BROKEN 6'-1'	SOLID	BROKEN 17'-7'	SOLID	SOLID	BROKEN 8'-4'	(EA)	(LF)	(LF)	
PD-6	J St NB ON RAMP,"EN-J" (LOCATION 6)	5	419+30	425+75	25A			28			645					28	645		
PD-6	J St NB ON RAMP,"EN-J" (LOCATION 6)	5	419+30	431+10	27B						1,180								
PD-6	J St NB ON RAMP,"EN-J" (LOCATION 6)	5	419+30	424+70	38				24				540						
PD-6	J St NB ON RAMP,"EN-J" (LOCATION 6)	5	425+75	428+10	36A				13				560			13		560	
PD-6	J St NB ON RAMP,"EN-J" (LOCATION 6)	5	424+70	426+20	8/10	19			5			150							
PD-6	J St NB ON RAMP,"EN-J" (LOCATION 6)	5	438+10	431+10	9				16			700				16	205		
PD-7	H St NB ON RAMP,"EN-H" (LOCATION 7)	5	455+15	458+15	9				8			300				8	88		
PD-7	H St NB ON RAMP,"EN-H" (LOCATION 7)	5	445+80	451+40	25A			25			560					25	560		
PD-7	H St NB ON RAMP,"EN-H" (LOCATION 7)	5	445+80	458+12	27B						1,232								
PD-7	H St NB ON RAMP,"EN-H" (LOCATION 7)	5	445+80	449+70	38				18				390						
PD-7	H St NB ON RAMP,"EN-H" (LOCATION 7)	5	451+40	455+15	36A				17				750			17		750	
PD-7	H St NB ON RAMP,"EN-H" (LOCATION 7)	5	445+80	451+00	8/10	65			12			520							
PD-7	H St NB ON RAMP,"EN-H" (LOCATION 7)	5	449+70	451+00	8/10	17			3			130							
PD-7	H St ,"H" LINE (LOCATION 7)	5			40					120									
PD-7	H St ,"H" LINE (LOCATION 7)	5			4" STRIPE												120		
					SUB-TOTAL	101		53	116	120	3,617	1,800	2,240			107	1,618	1,310	
					TOTAL 2	101		169		120	3,617	1,800	2,240			107	1,618	1,310	
					TOTAL 1	158		374			9,188	1,685	4,544	355	310	288	4,002	3,320	
					TOTAL	259		543		120	12,805	3,485	6,784	355	310	395	5,620	4,630	

(N) - NOT A SEPARATE PAY ITEM. FOR INFORMATION ONLY.

THERMOPLASTIC PAVEMENT MARKING (ENHANCED WET NIGHT VISIBILITY)

Rte	LOCATION	TYPE I-24' SQFT	TYPE III (L) SQFT	TYPE III (R) SQFT	SQFT	12" LIMIT LINE SQFT	12" CROSS WALK SQFT	BIKE LANE SYMBOL SQFT	BIKE LANE ARROW SQFT	STOP SQFT	TYPE IV (L) SQFT
5	CORONADO Ave NB ON RAMP (LOCATION 1)	62				24					
5	CORONADO Ave (LOCATION 1)			42		71	198	11	3.5		30
5	PALM Ave NB ON RAMP (LOCATION 2)	31			22	48					
5	MAIN St NB ON RAMP (LOCATION 3)	31			22	24					
5	PALOMAR St NB ON RAMP (LOCATION 4)	93			33	24					
5	INDUSTRIAL Blvd NB ON RAMP (LOCATION 5)	62	42	42			205			44	
5	INDUSTRIAL Blvd (LOCATION 5)	62	42	42		55		22	7.0	88	
5	J St NB ON RAMP (LOCATION 6)	31			33	24	90				
5	H St NB ON RAMP (LOCATION 7)	62			33	36	90				
5	E St NB ON RAMP (LOCATION 8)					24					
	SUB TOTAL	434	84	126	143	330	583	33	10.5	132	30
	TOTAL	1,906									

PAVEMENT DELINEATION QUANTITIES

PDQ-2

STATE OF CALIFORNIA - DEPARTMENT OF TRANSPORTATION
Caltrans® TRAFFIC DESIGN

FUNCTIONAL SUPERVISOR: CAMILLE ABOU-FADEL
CALCULATED-DESIGNED BY: PARVIS NAHAVANDIAN
CHECKED BY: SHAHIN ADIBI
REVISED BY
DATE REVISED

LAST REVISION 06-23-16
DATE PLOTTED => 21-JUL-2016
TIME PLOTTED => 14:03

Dist	COUNTY	ROUTE	POST MILES TOTAL PROJECT	SHEET No.	TOTAL SHEETS
11	SD	5	3.9/9.2	102	282

06-15-16
REGISTERED CIVIL ENGINEER DATE

07-11-16
PLANS APPROVAL DATE

REGISTERED PROFESSIONAL ENGINEER
SHAHIN ADIBI
No. 54839
Exp. 06-30-18
CIVIL
STATE OF CALIFORNIA

THE STATE OF CALIFORNIA OR ITS OFFICERS OR AGENTS SHALL NOT BE RESPONSIBLE FOR THE ACCURACY OR COMPLETENESS OF SCANNED COPIES OF THIS PLAN SHEET.

NOTE:

FOR ACCURATE RIGHT OF WAY DATA, CONTACT
RIGHT OF WAY ENGINEERING AT THE DISTRICT OFFICE.

LEGEND:

SSBM
(XX) = INSTALL SIGN STRAP AND SADDLE BRACKET METHOD

RL
(XX) = RELOCATE ROADSIDE SIGN

RM
(XX) = REMOVE ROADSIDE SIGN

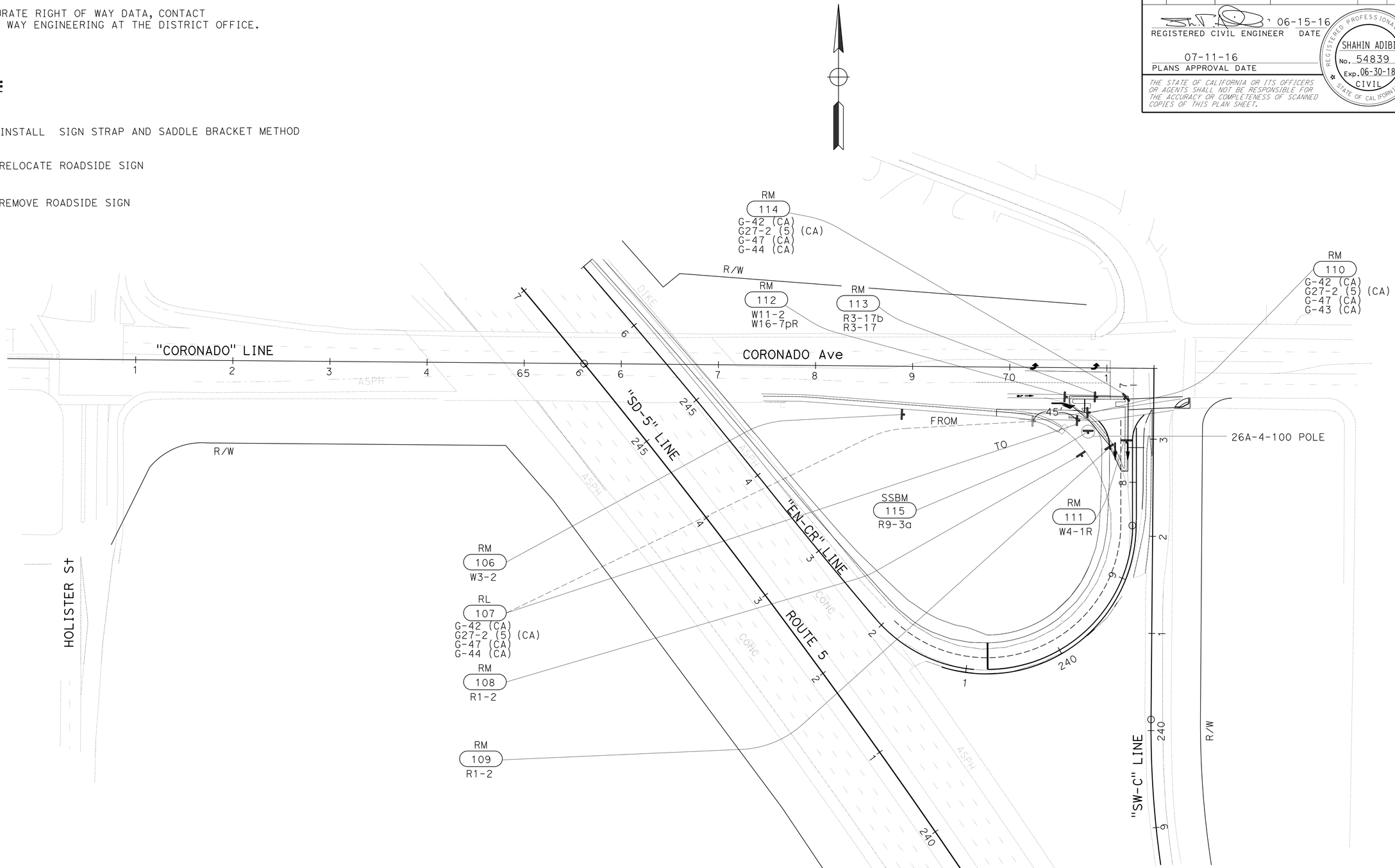

APPROVED FOR SIGN WORK ONLY

LOCATION 1

SIGN PLAN

SCALE: 1"=50'

S-1

STATE OF CALIFORNIA - DEPARTMENT OF TRANSPORTATION
Caltrans®
TRAFFIC DESIGN

FUNCTIONAL SUPERVISOR: CAMILLE ABOU-FADEL
CALCULATED-DESIGNED BY: PARVIS NAHAVANDIAN
CHECKED BY: SHAHIN ADIBI
REVISED BY
DATE REVISED

LAST REVISION 06-23-16
DATE PLOTTED => 21-JUL-2016
TIME PLOTTED => 14:03

Dist	COUNTY	ROUTE	POST MILES TOTAL PROJECT	SHEET No.	TOTAL SHEETS
11	SD	5	3.9/9.2	103	282

06-15-16
REGISTERED CIVIL ENGINEER DATE

07-11-16
PLANS APPROVAL DATE

REGISTERED PROFESSIONAL ENGINEER
SHAHIN ADIBI
No. 54839
Exp. 06-30-18
CIVIL
STATE OF CALIFORNIA

THE STATE OF CALIFORNIA OR ITS OFFICERS OR AGENTS SHALL NOT BE RESPONSIBLE FOR THE ACCURACY OR COMPLETENESS OF SCANNED COPIES OF THIS PLAN SHEET.

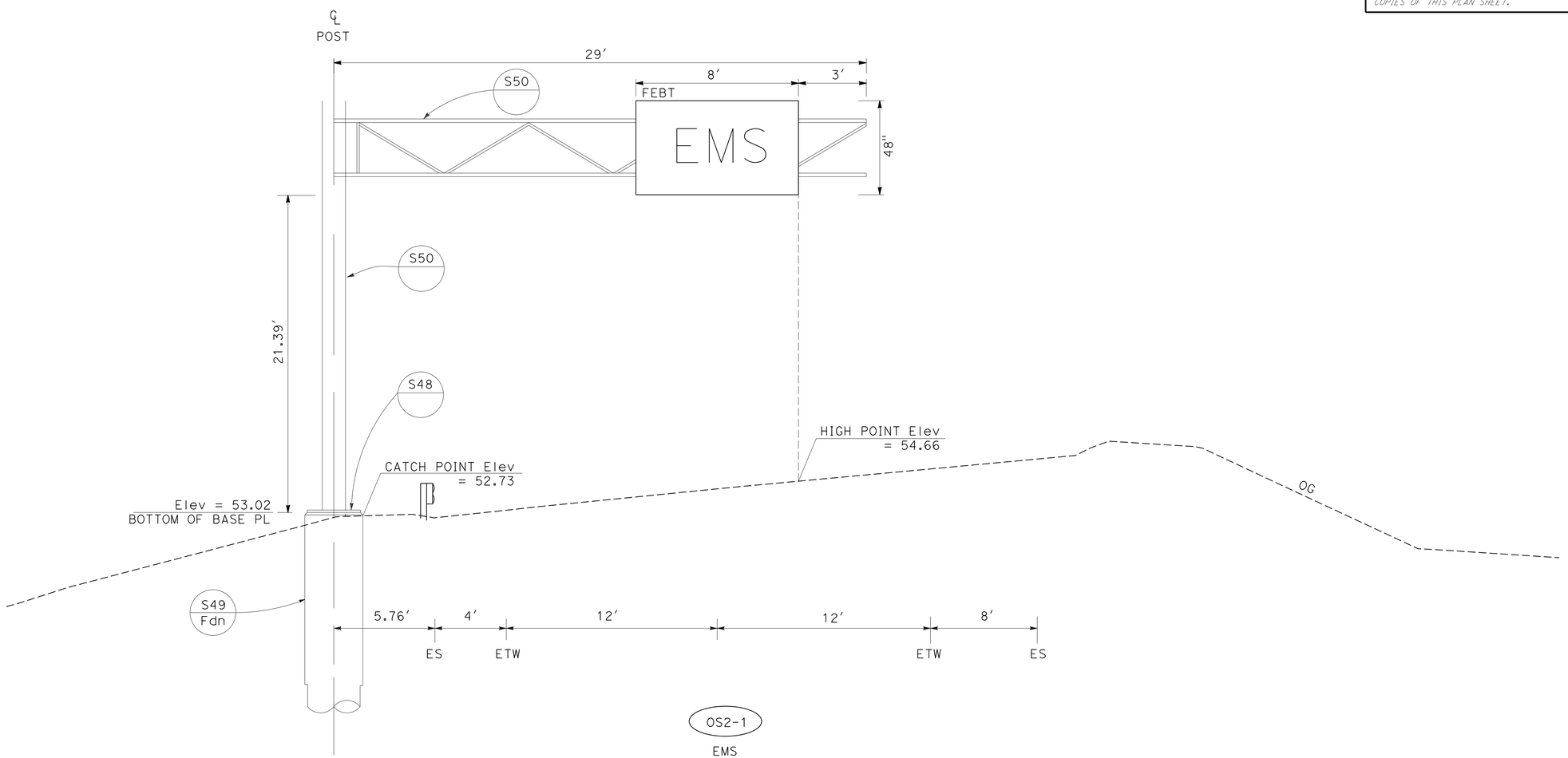

OS2-1

EMS
INSTALL SIGN STRUCTURE
STATION 273+00 "WN-PM" LINE (FEBT)
LIGHTWEIGHT TRUSS

LOCATION 2
SIGN DETAILS
SD-1

NO SCALE

STATE OF CALIFORNIA - DEPARTMENT OF TRANSPORTATION
Caltrans
TRAFFIC DESIGN

FUNCTIONAL SUPERVISOR: CAMILLE ABOUFADEL
CALCULATED-DESIGNED BY: PARVIS NAHAVANDIAN
CHECKED BY: SHAHIN ADIBI
REVISED BY
DATE REVISED

LAST REVISION 06-23-16
DATE PLOTTED => 21-JUL-2016
TIME PLOTTED => 14:03

Dist	COUNTY	ROUTE	POST MILES TOTAL PROJECT	SHEET No.	TOTAL SHEETS
11	SD	5	3.9/9.2	104	282

06-15-16
REGISTERED CIVIL ENGINEER DATE

07-11-16
PLANS APPROVAL DATE

REGISTERED PROFESSIONAL ENGINEER
SHAHIN ADIBI
No. 54839
Exp. 06-30-18
CIVIL
STATE OF CALIFORNIA

THE STATE OF CALIFORNIA OR ITS OFFICERS OR AGENTS SHALL NOT BE RESPONSIBLE FOR THE ACCURACY OR COMPLETENESS OF SCANNED COPIES OF THIS PLAN SHEET.

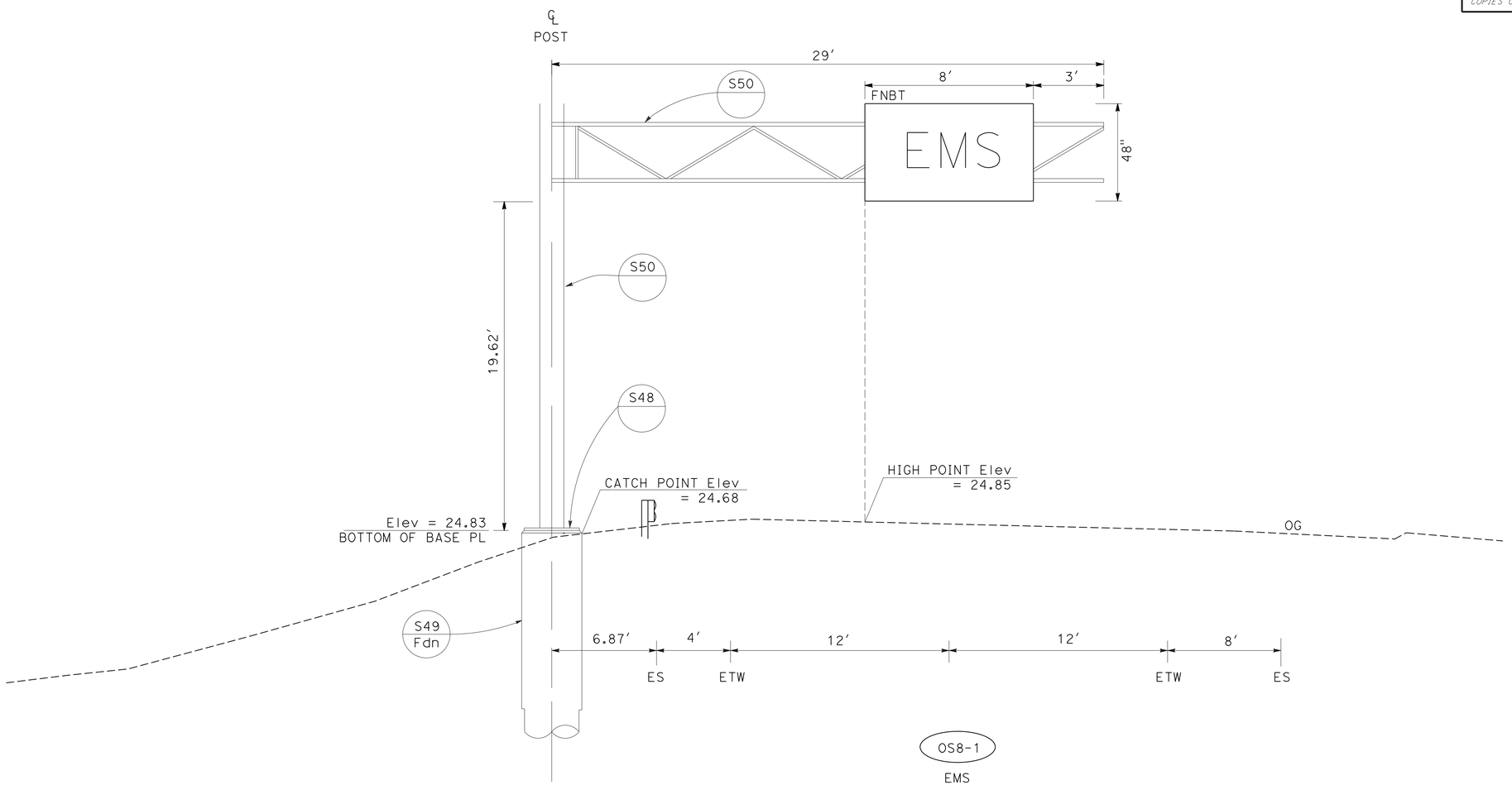

OS8-1

EMS
INSTALL SIGN STRUCTURE
STATION 499+90 "EN-E" LINE (FNBT)
LIGHTWEIGHT TRUSS

LOCATION 8

SIGN DETAILS

NO SCALE

SD-2

STATE OF CALIFORNIA - DEPARTMENT OF TRANSPORTATION
Caltrans®
TRAFFIC DESIGN

FUNCTIONAL SUPERVISOR: CAMILLE ABOUFADEL
CALCULATED-DESIGNED BY: PARVIS NAHAVANDIAN
CHECKED BY: SHAHIN ADIBI
REVISED BY
DATE REVISED

LAST REVISION 06-23-16
DATE PLOTTED => 21-JUL-2016
TIME PLOTTED => 14:03

Dist	COUNTY	ROUTE	POST MILES TOTAL PROJECT	SHEET No.	TOTAL SHEETS
11	SD	5	3.9/9.2	105	282

06-15-16
REGISTERED CIVIL ENGINEER DATE

07-11-16
PLANS APPROVAL DATE

REGISTERED PROFESSIONAL ENGINEER
SHAHIN ADIBI
No. 54839
Exp. 06-30-18
CIVIL
STATE OF CALIFORNIA

THE STATE OF CALIFORNIA OR ITS OFFICERS OR AGENTS SHALL NOT BE RESPONSIBLE FOR THE ACCURACY OR COMPLETENESS OF SCANNED COPIES OF THIS PLAN SHEET.

(516) G87-1 (CA)

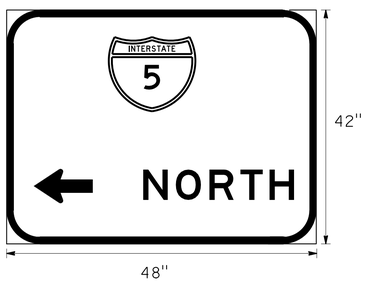

LEGEND				ARROW	
LINE No.	U/L	Caps	Num	Deg	LENGTH
1					
2		6"D	8"	180	9.56"

(504) G87-1 (CA)

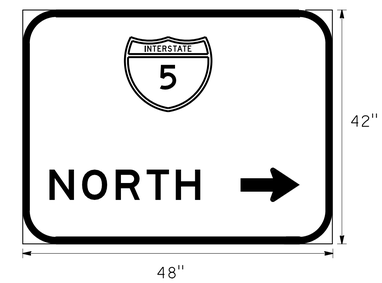

LEGEND				ARROW	
LINE No.	U/L	Caps	Num	Deg	LENGTH
1					
2		6"D	8"	0	9.56"

SIGN DETAILS

SD-3

NO SCALE

STATE OF CALIFORNIA - DEPARTMENT OF TRANSPORTATION
Caltrans® TRAFFIC DESIGN

FUNCTIONAL SUPERVISOR: CAMILLE ABOU-FADEL
CALCULATED-DESIGNED BY: PARVIS NAHAVANDIAN
CHECKED BY: SHAHIN ADIBI
REVISED BY
DATE REVISED

LAST REVISION 06-23-16
DATE PLOTTED => 21-JUL-2016
TIME PLOTTED => 14:03

Dist	COUNTY	ROUTE	POST MILES TOTAL PROJECT	SHEET No.	TOTAL SHEETS
11	SD	5	3.9/9.2	106	282

REGISTERED CIVIL ENGINEER 06-15-16 DATE

07-11-16
PLANS APPROVAL DATE

REGISTERED PROFESSIONAL ENGINEER SHAHIN ADIBI No. 54839 Exp. 06-30-18 CIVIL STATE OF CALIFORNIA

THE STATE OF CALIFORNIA OR ITS OFFICERS OR AGENTS SHALL NOT BE RESPONSIBLE FOR THE ACCURACY OR COMPLETENESS OF SCANNED COPIES OF THIS PLAN SHEET.

ROADSIDE SIGN QUANTITIES

Loc No.	SIGN No.	CODE	SHEET No.	PANEL SIZE (N) Horiz	PANEL SIZE (N) Vert	D (N)	C (N)	E (N)	Min POST LENGTH (N)	POST SIZE (N) 4x4	POST SIZE (N) 4x6	POST SIZE (N) 6x6	POST SIZE (N) 6x8	ROADSIDE SIGN ONE POST	ROADSIDE SIGN TWO POST	REMOVE ROADSIDE SIGN	INSTALL SIGN (STRAP AND SADDLE BRACKET METHOD)	INSTALL SIGN (MAST-ARM HANGER METHOD)	RELOCATE ROADSIDE SIGN	TREATED WOOD WASTE	REMARKS
				INCHESxINCHES		Ft	Ft	Ft	Ft	INCHESxINCHES				EA	EA	EA	EA	EA	EA	LB	
1	101	W3-8	PD-1	36	X 36												1				MOUNT ON FLASHING BEACON
	102	W3-8	PD-1	36	X 36												1				MOUNT ON FLASHING BEACON
	103	R10-6R	PD-1	24	X 36												1				MOUNT ON 1-A POLE
		R89-2 (2) (CA)		24	X 10																
	104	R10-6L	PD-1	24	X 36												1				MOUNT ON 1-A POLE
		R89-2 (2) (CA)		24	X 10																
	105	W4-2R	PD-1	48	X 48	5.7	7	5	17.7			X		1							
	106	W4-2R	S-1	48	X 48											1				137	L=16'; 6X6 (ONE POST)
	107	G92	S-1	48	X 30														1		
		G27 (5)		25	X 30																
		G47		21	X 9																
		G44		21	X 15																
	108	R1-2	S-1	48	X 48											1				137	L=16'; 6X6 (ONE POST)
	109	R1-2	S-1	48	X 48											1				137	L=16'; 6X6 (ONE POST)
	110	G92	S-1	48	X 30											1				116	L=13.5'; 6X6 (ONE POST)
		G27 (5)		25	X 30																
		G47		21	X 9																
		G44		21	X 15																
	111	W4-1R	S-1	48	X 48											1				137	L=16'; 6X6 (ONE POST)
	112	W11-2	S-1	48	X 48											1				137	L=16'; 6X6 (ONE POST)
		W16-7pR		24	X 12																
	113	R3-17b	S-1	30	X 12											1					METAL POLE
		R3-17		30	X 24																
	114	G92	S-1	48	X 30											1				115	L=13.5'; 6X6 (ONE POST)
		G27 (5)		25	X 30																
		G47		21	X 9																
		G44		21	X 15																
	115	R9-3a	S-1	30	X 30	2.5	7	3.5	13					1			1				MOUNT ON 26A-4-100 POLE
2	201	W3-8	PD-2	36	X 36												1				MOUNT ON FLASHING BEACON
	202	R91-1 (CA)	PD-2	48	X 66	5.5	7	5	17.5			X		1							BUSES OK
	203	R91-1 (CA)	PD-2	48	X 66	5.5	7	5	17.5			X		1							BUSES OK
	204	R10-6R	PD-2	24	X 36												1				MOUNT ON 1-A POLE
		R89-2 (2) (CA)		24	X 10																
	205	R10-6L	PD-2	24	X 36												1				MOUNT ON 1-A POLE
		R89-2 (2) (CA)		24	X 10																
3	206	W4-2R	PD-2	48	X 48	5.7	7	5	17.7			X		1							
	207	R89-2 (2) (CA)	PD-2	24	X 10													1			MOUNT ON MAST-ARM
	208	R89-2 (2) (CA)	PD-2	24	X 10													1			MOUNT ON MAST-ARM
	301	W3-8	PD-3	36	X 36												1				MOUNT ON FLASHING BEACON
	302	R91-1 (CA)	PD-3	48	X 66	5.5	7	5	17.5			X		1							BUSES OK
	303	R91-1 (CA)	PD-3	48	X 66	5.5	7	5	17.5			X		1							BUSES OK
	304	R10-6R	PD-3	24	X 36												1				MOUNT ON 1-A POLE
		R89-2 (2) (CA)		24	X 10																
	305	R10-6L	PD-3	24	X 36												1				MOUNT ON 1-A POLE
		R89-2 (2) (CA)		24	X 10																
	306	W4-2R	PD-3	48	X 48	5.7	7	5	17.7			X		1							
													SUBTOTAL 1	8		8	11	2		916	

(N) - NOT A SEPARATE PAY ITEM, FOR INFORMATION ONLY.

NOTES:

1. FEDERAL (MUTCD) SIGN CODES ARE SHOWN UNLESS DESIGNATED BY (CA) INDICATING STANDARD CALIFORNIA SIGN SPECIFICATIONS.
2. MINIMUM POST LENGTHS WERE CALCULATED ASSUMING A LEVEL GROUND SURFACE FROM THE EP. ENSURE "C" DIMENSION IS MET. POST LENGTHS MAY VARY DUE TO SITE CONDITIONS.
3. REFER TO "FURNISH ROADSIDE SIGN PANEL" CHART FOR FURTHER INFORMATION.
4. EXACT LOCATIONS OF SIGNS AND POSTS SHALL BE DETERMINED BY THE ENGINEER.

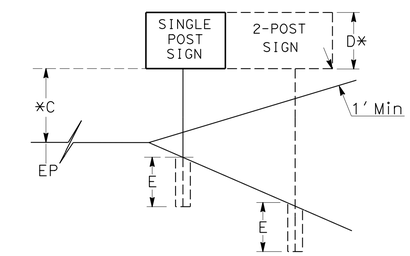

*TO BOTTOM OF LOWER PANEL ON MULTIPLE SIGN INSTALLATIONS.

SIGN QUANTITIES
SQ-1

STATE OF CALIFORNIA - DEPARTMENT OF TRANSPORTATION
Caltrans
TRAFFIC DESIGN

FUNCTIONAL SUPERVISOR: CAMILLE ABOU-FADEL
CALCULATED-DESIGNED BY: PARVIS NAHAVANDIAN
CHECKED BY: SHAHIN ADIBI
REVISED BY
DATE REVISED

LAST REVISION 06-23-16
DATE PLOTTED => 21-JUL-2016
TIME PLOTTED => 14:03

Dist	COUNTY	ROUTE	POST MILES TOTAL PROJECT	SHEET No.	TOTAL SHEETS
11	SD	5	3.9/9.2	107	282

REGISTERED CIVIL ENGINEER 06-15-16 DATE

07-11-16
PLANS APPROVAL DATE

REGISTERED PROFESSIONAL ENGINEER SHAHIN ADIBI No. 54839 Exp. 06-30-18 CIVIL STATE OF CALIFORNIA

THE STATE OF CALIFORNIA OR ITS OFFICERS OR AGENTS SHALL NOT BE RESPONSIBLE FOR THE ACCURACY OR COMPLETENESS OF SCANNED COPIES OF THIS PLAN SHEET.

ROADSIDE SIGN QUANTITIES

Loc No.	SIGN No.	CODE	SHEET No.	PANEL SIZE (N) Horiz	PANEL SIZE (N) Vert	D (N)	C (N)	E (N)	Min POST LENGTH (N)	POST SIZE (N) 4x4	POST SIZE (N) 4x6	POST SIZE (N) 6x6	POST SIZE (N) 6x8	ROADSIDE SIGN ONE POST	ROADSIDE SIGN TWO POST	REMOVE ROADSIDE SIGN	INSTALL SIGN (STRAP AND SADDLE BRACKET METHOD)	INSTALL SIGN (MAST-ARM HANGER METHOD)	RELOCATE ROADSIDE SIGN	TREATED WOOD WASTE	REMARKS
				INCHES	INCHES	Ft	Ft	Ft	Ft	INCHES	INCHES	INCHES	INCHES	EA	EA	EA	EA	EA	EA	LB	
	401	W3-8	PD-4	36	36												1				MOUNT ON FLASHING BEACON
	402	W3-8	PD-4	36	36												1				MOUNT ON FLASHING BEACON
	403	R91-1 (CA)	PD-4	48	66	5.5	7	5	17.5			X		1							BUSES OK
	404	R91-1 (CA)	PD-4	48	66	5.5	7	5	17.5			X		1							BUSES OK
4	405	R10-6R	PD-4	24	36												1				MOUNT ON 1-A POLE
		R89-2 (2) (CA)		24	10																
	406	R10-6L	PD-4	24	36												1				MOUNT ON 1-A POLE
		R89-2 (2) (CA)		24	10																
	407	W4-2R	PD-4	48	48	5.7	7	5	17.7			X		1							
	408	W4-2L	PD-4	36	36											1				61	L=16'; 4X4 (ONE POST)
	501	W3-8	PD-5	36	36												1				MOUNT ON FLASHING BEACON
	502	R1-1	PD-5	30	30	2.5	7	3.5	13		X			1							
	503	R1-1	PD-5	30	30	2.5	7	3.5	13		X			1							
	504	G78-1 (CA)	PD-5	48	42	4	7	3.5	14.5		X			1							
	505	G92	PD-5	48	30	7	2	4.5	13.5		X			1							
		G27 (5)		25	30																
		G47		21	9																
		G44		21	15																
	506	G92	PD-5	48	30	7	2	4.5	13.5		X			1							
		G27 (5)		25	30																
		G47		21	9																
		G44		21	15																
	507	R10-6R	PD-5	24	36												1				MOUNT ON 1-A POLE
		R89-2 (2) (CA)		24	10																
5	508	R10-6L	PD-5	24	36												1				MOUNT ON 1-A POLE
		R89-2 (2) (CA)		24	10																
	509	W4-2R	PD-5	48	48	5.7	7	5	17.7			X		1							
	510	R1-2	PD-5	36	36											1					REMOVE EXISTING SIGN
	511	R1-1	PD-5	30	30											1					REMOVE EXISTING SIGN
	512	G92 (CA)	PD-5	48	30											1				77	REMOVE EXISTING SIGN
		G27-2 (5) (CA)		25	30																
		G47 (CA)		21	9																
		G43 (CA)		21	15																
	513	G92 (CA)	PD-5	48	30											1				77	REMOVE EXISTING SIGN
		G27-2 (5) (CA)		25	30																
		G47 (CA)		21	9																
		G43 (CA)		21	15																
	514	G78-1 (CA)	PD-5	48	42											1				92	REMOVE EXISTING SIGN
	515	G78-1 (CA)	PD-5	48	42											1				92	REMOVE EXISTING SIGN
	516	G78-1 (CA)	PD-5	48	42	3.5	7	4.5	15		X			1							
	517	R5-10	PD-5	36	30														1		RELOCATE EXISTING SIGN
	518	R1-1	PD-5	30	30	2.5	7	3.5	13		X										
	519	R81 (CA)	PD-5	12	8	1.5	7	3.5	12	X											
		R81A (CA)	PD-5	12	5																
													SUBTOTAL 2	10		7	7		1	399	
													SUBTOTAL 1	8		8	11	2		916	

(N) - NOT A SEPARATE PAY ITEM, FOR INFORMATION ONLY.

SIGN QUANTITIES
SQ-2

STATE OF CALIFORNIA - DEPARTMENT OF TRANSPORTATION
Caltrans TRAFFIC DESIGN

FUNCTIONAL SUPERVISOR: CAMILLE ABOU-FADEL
CALCULATED-DESIGNED BY: PARVIS NAHAVANDIAN
CHECKED BY: SHAHIN ADIBI
REVISED BY
DATE REVISED

LAST REVISION 06-23-16
DATE PLOTTED => 21-JUL-2016
TIME PLOTTED => 14:03

Dist	COUNTY	ROUTE	POST MILES TOTAL PROJECT	SHEET No.	TOTAL SHEETS
11	SD	5	3.9/9.2	108	282

06-15-16
REGISTERED CIVIL ENGINEER DATE

07-11-16
PLANS APPROVAL DATE

REGISTERED PROFESSIONAL ENGINEER
SHAHIN ADIBI
No. 54839
Exp. 06-30-18
CIVIL
STATE OF CALIFORNIA

THE STATE OF CALIFORNIA OR ITS OFFICERS OR AGENTS SHALL NOT BE RESPONSIBLE FOR THE ACCURACY OR COMPLETENESS OF SCANNED COPIES OF THIS PLAN SHEET.

ROADSIDE SIGN QUANTITIES

Loc No.	SIGN No.	CODE	SHEET No.	PANEL SIZE (N) Horiz x Vert INCHES x INCHES	D (N) Ft	C (N) Ft	E (N) Ft	Min POST LENGTH (N) Ft	POST SIZE (N) 4x4	4x6	6x6	6x8	ROADSIDE SIGN ONE POST EA	TWO POST EA	REMOVE ROADSIDE SIGN EA	INSTALL SIGN (STRAP AND SADDLE BRACKET METHOD) EA	INSTALL SIGN (MAST-ARM HANGER METHOD) EA	RELOCATE ROADSIDE SIGN EA	TREATED WOOD WASTE LB	REMARKS
6	601	W3-8	PD-6	36 X 36												1				MOUNT ON FLASHING BEACON
	602	W3-8	PD-6	36 X 36												1				MOUNT ON FLASHING BEACON
	603	R8-8	PD-6	24 X 30	2.5	7	3.5	13	X				1							
	604	R91-1 (CA)	PD-6	48 X 66	5.5	7	5	17.5			X		1							BUSES OK
	605	R91-1 (CA)	PD-6	48 X 66	5.5	7	5	17.5			X		1							BUSES OK
	606	R91-1 (CA)	PD-6	48 X 66	5.5	7	5	17.5			X		1							BUSES OK
	607	R10-6R	PD-6	24 X 36												1				MOUNT ON 1-A POLE
		R89-2 (2) (CA)		24 X 10																
	608	R10-6L	PD-6	24 X 36												1				MOUNT ON 1-A POLE
		R89-2 (2) (CA)		24 X 10																
	609	W4-2R	PD-6	48 X 48	5.7	7	5	17.7			X		1							
7	701	W3-8	PD-7	36 X 36												1				MOUNT ON FLASHING BEACON
	702	R8-8	PD-7	24 X 30	2.5	7	3.5	13	X				1							
	703	R91-1 (CA)	PD-7	48 X 66	5.5	7	5	17.5			X		1							BUSES OK
	704	R91-1 (CA)	PD-7	48 X 66	5.5	7	5	17.5			X		1							BUSES OK
	705	R91-1 (CA)	PD-7	48 X 66	5.5	7	5	17.5			X		1							BUSES OK
	706	W4-2L	PD-7	48 X 48	5.7	7	5	17.7			X		1							
	707	R89-2 (2) (CA)	PD-7	24 X 10													1			MOUNT ON MAST-ARM
	708	R89-2 (2) (CA)	PD-7	24 X 10													1			MOUNT ON MAST-ARM
	709	R89-2 (2) (CA)	PD-7	24 X 10													1			MOUNT ON MAST-ARM
8	801	R10-6R	PD-8	24 X 36												1				MOUNT ON 1-A POLE
		R89-2 (2) (CA)		24 X 10																
	802	R10-6L	PD-8	24 X 36												1				MOUNT ON 1-A POLE
		R89-2 (2) (CA)		24 X 10																
SUBTOTAL 3													10			7	3			
SUBTOTAL 2													10		7	7		1	399	
SUBTOTAL 1													8		8	11	2		916	
TOTAL													28		15	25	5	1	1,315*	

(N) - NOT A SEPARATE PAY ITEM, FOR INFORMATION ONLY.

* - SEE Q-2 SHEET FOR ADDITIONAL QUANTITIES.

STATE OF CALIFORNIA - DEPARTMENT OF TRANSPORTATION
Caltrans® TRAFFIC DESIGN

FUNCTIONAL SUPERVISOR: CAMILLE ABOU-FADEL
CALCULATED-DESIGNED BY: PARVIS NAHAVANDIAN
CHECKED BY: SHAHIN ADIBI
REVISED BY
DATE REVISED

SIGN QUANTITIES
SQ-3

LAST REVISION 06-23-16
DATE PLOTTED => 21-JUL-2016
TIME PLOTTED => 14:03

Dist	COUNTY	ROUTE	POST MILES TOTAL PROJECT	SHEET No.	TOTAL SHEETS
11	SD	5	3.9/9.2	109	282

REGISTERED CIVIL ENGINEER DATE 06-15-16

PLANS APPROVAL DATE 07-11-16

REGISTERED PROFESSIONAL ENGINEER SHAHIN ADIBI No. 54839 Exp. 06-30-18 CIVIL STATE OF CALIFORNIA

THE STATE OF CALIFORNIA OR ITS OFFICERS OR AGENTS SHALL NOT BE RESPONSIBLE FOR THE ACCURACY OR COMPLETENESS OF SCANNED COPIES OF THIS PLAN SHEET.

FURNISH ROADSIDE SIGN PANEL

SIGN No.	CODE	PANEL SIZE Horiz (INCHES X INCHES)	PANEL SIZE Vert (INCHES X INCHES)	BACKGROUND SHEETING COLOR	BACKGROUND RETROREFLECTIVE ASTM TYPE	LEGEND SHEETING COLOR	LEGEND REFLECTIVE ASTM TYPE	LEGEND BLACK (NON-REFLECTIVE)	SIGN PANEL SINGLE SHEET ALUMINUM FOR RETROREFLECTIVE SHEETING (TYPE XI) (SQFT) UNFRAMED 0.080"	SIGN PANEL SINGLE SHEET ALUMINUM FOR RETROREFLECTIVE SHEETING (TYPE XI) (SQFT) UNFRAMED 0.063"	SIGN PANEL RETROREFLECTIVE SHEETING (TYPE XI) (SQFT)	SIGN PANEL PROTECTIVE OVERLAY PREMIUM FILM
101	W3-8	36	36	FY	XI	BLACK		X		9.00	9.00	X
102	W3-8	36	36	FY	XI	BLACK		X		9.00	9.00	X
103	R10-6R	24	36	WHITE	XI	BLACK		X		6.00	6.00	X
	R89-2 (2) (CA)	24	10	WHITE	XI	BLACK		X		1.66	1.66	X
104	R10-6L	24	36	WHITE	XI	BLACK		X		6.00	6.00	X
	R89-2 (2) (CA)	24	10	WHITE	XI	BLACK		X		1.66	1.66	X
105	W4-2R	48	48	FY	XI	BLACK		X	16.00		16.00	X
106	R9-3a	24	24	WHITE	XI	BLACK/RED		X		4.00	4.00	X
201	W3-8	36	36	FY	XI	BLACK		X		9.00	9.00	X
202	R91-1 (CA)	48	66	WHITE	XI	BLACK		X	22.00		22.00	X
203	R91-1 (CA)	48	66	WHITE	XI	BLACK		X	22.00		22.00	X
204	R10-6R	24	36	WHITE	XI	BLACK		X		6.00	6.00	X
	R89-2 (2) (CA)	24	10	WHITE	XI	BLACK		X		1.66	1.66	X
205	R10-6L	24	36	WHITE	XI	BLACK		X		6.00	6.00	X
	R89-2 (2) (CA)	24	10	WHITE	XI	BLACK		X		1.66	1.66	X
206	W4-2R	48	48	FY	XI	BLACK		X	16.00		16.00	X
207	R89-2 (2) (CA)	24	10	WHITE	XI	BLACK		X		1.66	1.66	X
208	R89-2 (2) (CA)	24	10	WHITE	XI	BLACK		X		1.66	1.66	X
301	W3-8	36	36	FY	XI	BLACK		X		9.00	9.00	X
302	R91-1 (CA)	48	66	WHITE	XI	BLACK		X	22.00		22.00	X
303	R91-1 (CA)	48	66	WHITE	XI	BLACK		X	22.00		22.00	X
304	R10-6R	24	36	WHITE	XI	BLACK		X		6.00	6.00	X
	R89-2 (2) (CA)	24	10	WHITE	XI	BLACK		X		1.66	1.66	X
305	R10-6L	24	36	WHITE	XI	BLACK		X		6.00	6.00	X
	R89-2 (2) (CA)	24	10	WHITE	XI	BLACK		X		1.66	1.66	X
306	W4-2R	48	48	FY	XI	BLACK		X	16.00		16.00	X
401	W3-8	36	36	FY	XI	BLACK		X		9.00	9.00	X
402	W3-8	36	36	FY	XI	BLACK		X		9.00	9.00	X
403	R91-1 (CA)	48	66	WHITE	XI	BLACK		X	22.00		22.00	X
404	R91-1 (CA)	48	66	WHITE	XI	BLACK		X	22.00		22.00	X
405	R10-6R	24	36	WHITE	XI	BLACK		X		6.00	6.00	X
	R89-2 (2) (CA)	24	10	WHITE	XI	BLACK		X		1.66	1.66	X
406	R10-6L	24	36	WHITE	XI	BLACK		X		6.00	6.00	X
	R89-2 (2) (CA)	24	10	WHITE	XI	BLACK		X		1.66	1.66	X
407	W4-2R	48	48	FY	XI	BLACK		X	16.00		16.00	X
												X
501	W3-8	36	36	FY	XI	BLACK		X		9.00	9.00	X
502	R1-1	30	30	RED	XI	WHITE	XI			6.25	6.25	X
503	R1-1	30	30	RED	XI	WHITE	XI			6.25	6.25	X
504	G78-1 (CA)	48	42	BLUE/RED/GREEN	XI	WHITE	XI		14.00		14.00	X
505	G92 (CA)	48	30	GREEN	XI	WHITE	XI		10.00		10.00	X
	G27-2 (5) (CA)	25	30	BLUE/RED	XI	WHITE	XI			5.20	5.20	X
	G47 (CA)	21	9	BLUE	XI	WHITE	XI			1.31	1.31	X
	G44 (CA)	21	15	BLUE	XI	WHITE	XI			2.19	2.19	X
506	G92 (CA)	48	30	GREEN	XI	WHITE	XI		10.00		10.00	X
	G27-2 (5) (CA)	25	30	BLUE/RED	XI	WHITE	XI			5.20	5.20	X
	G47 (CA)	21	9	BLUE	XI	WHITE	XI			1.31	1.31	X
	G44 (CA)	21	15	BLUE	XI	WHITE	XI			2.19	2.19	X
						SUB-TOTAL SQ-4			230.00	161.50	391.50	

NOTES:

1. FEDERAL (MUTCD) SIGN CODES ARE SHOWN UNLESS DESIGNATED BY (CA) INDICATING STANDARD CALIFORNIA SIGN SPECIFICATIONS.
2. REFER TO "ROADSIDE SIGN QUANTITIES" CHART FOR FURTHER INFORMATION.
3. FY - FLUORESCENT YELLOW

SIGN QUANTITIES
SQ-4

REVISED BY | DATE REVISED

PARVIS NAHAVANDIAN | SHAHIN ADIBI

CALCULATED-DESIGNED BY | CHECKED BY

FUNCTIONAL SUPERVISOR: CAMILLE ABOU-FADEL

STATE OF CALIFORNIA - DEPARTMENT OF TRANSPORTATION

Caltrans® TRAFFIC DESIGN

LAST REVISION 06-23-16 | DATE PLOTTED => 21-JUL-2016 | TIME PLOTTED => 14:03

Dist	COUNTY	ROUTE	POST MILES TOTAL PROJECT	SHEET No.	TOTAL SHEETS
11	SD	5	3.9/9.2	110	282

REGISTERED CIVIL ENGINEER 06-15-16 DATE

07-11-16
PLANS APPROVAL DATE

REGISTERED PROFESSIONAL ENGINEER SHAHIN ADIBI No. 54839 Exp. 06-30-18 CIVIL STATE OF CALIFORNIA

THE STATE OF CALIFORNIA OR ITS OFFICERS OR AGENTS SHALL NOT BE RESPONSIBLE FOR THE ACCURACY OR COMPLETENESS OF SCANNED COPIES OF THIS PLAN SHEET.

FURNISH ROADSIDE SIGN PANEL

SIGN No.	CODE	PANEL SIZE Horiz (INCHES X INCHES)	PANEL SIZE Vert (INCHES X INCHES)	BACKGROUND SHEETING COLOR	BACKGROUND RETROREFLECTIVE ASTM TYPE	LEGEND SHEETING COLOR	LEGEND REFLECTIVE ASTM TYPE	LEGEND BLACK (NON-REFLECTIVE)	SIGN PANEL SINGLE SHEET ALIMINUM FOR RETROREFLECTIVE SHEETING (TYPE XI) (SQFT) UNFRAMED 0.080"	SIGN PANEL UNFRAMED 0.063"	SIGN PANEL RETROREFLECTIVE SHEETING (TYPE XI) (SQFT)	SIGN PANEL PROTECTIVE OVERLAY PREMIUM FILM
507	R10-6R	24	36	WHITE	XI	BLACK		X		6.00	6.00	X
	R89-2 (2) (CA)	24	10	WHITE	XI	BLACK		X		1.66	1.66	X
508	R10-6L	24	36	WHITE	XI	BLACK		X		6.00	6.00	X
	R89-2 (2) (CA)	24	10	WHITE	XI	BLACK		X		1.66	1.66	X
509	W4-2R	48	48	FY	XI	BLACK		X	16.00		16.00	X
510	R1-2	36	36	WHITE	XI	RED	XI			9.00	9.00	X
511	R1-1	30	30	RED	XI	WHITE	XI			6.25	6.25	X
516	G78-1 (CA)	48	42	BLUE/RED/GREEN	XI	WHITE	XI		14.00		14.00	X
517	R5-10	36	30	WHITE	XI	BLACK		X				X
518	R1-1	30	30	RED	XI	WHITE	XI			6.25	6.25	X
519	R81 (CA)	12	8	WHITE	XI	BLACK	XI			0.67	0.67	X
	R81A (CA)	12	5	WHITE	XI	BLACK	XI			0.42	0.42	X
601	W3-8	36	36	FY	XI	BLACK		X		9.00	9.00	X
602	W3-8	36	36	FY	XI	BLACK		X		9.00	9.00	X
603	R8-8	24	30	WHITE	XI	BLACK		X		5.00	5.00	X
604	R91-1 (CA)	48	66	WHITE	XI	BLACK		X	22.00		22.00	X
605	R91-1 (CA)	48	66	WHITE	XI	BLACK		X	22.00		22.00	X
606	R91-1 (CA)	48	66	WHITE	XI	BLACK		X	22.00		22.00	X
607	R10-6R	24	36	WHITE	XI	BLACK		X		6.00	6.00	X
	R89-2 (2) (CA)	24	10	WHITE	XI	BLACK		X		1.66	1.66	X
608	R10-6L	24	36	WHITE	XI	BLACK		X		6.00	6.00	X
	R89-2 (2) (CA)	24	10	WHITE	XI	BLACK		X		1.66	1.66	X
609	W4-2R	48	48	FY	XI	BLACK		X	16.00		16.00	X
701	W3-8	36	36	FY	XI	BLACK		X		9.00	9.00	X
702	R8-8	24	30	WHITE	XI	BLACK		X		5.00	5.00	X
703	R91-1 (CA)	48	66	WHITE	XI	BLACK		X	22.00		22.00	X
704	R91-1 (CA)	48	66	WHITE	XI	BLACK		X	22.00		22.00	X
705	R91-1 (CA)	48	66	WHITE	XI	BLACK		X	22.00		22.00	X
706	W4-2L	48	48	FY	XI	BLACK		X	16.00		16.00	X
707	R89-2 (2) (CA)	24	10	WHITE	XI	BLACK		X		1.66	1.66	X
708	R89-2 (2) (CA)	24	10	WHITE	XI	BLACK		X		1.66	1.66	X
709	R89-2 (2) (CA)	24	10	WHITE	XI	BLACK		X		1.66	1.66	X
801	R10-6R	24	36	WHITE	XI	BLACK		X		6.00	6.00	X
	R89-2 (2) (CA)	24	10	WHITE	XI	BLACK		X		1.66	1.66	X
802	R10-6L	24	36	WHITE	XI	BLACK		X		6.00	6.00	X
	R89-2 (2) (CA)	24	10	WHITE	XI	BLACK		X		1.66	1.66	X
						SUB-TOTAL SQ-5			194.00	110.53	323.53	
						SUB-TOTAL SQ-4			230.00	161.50	391.50	
						TOTAL			424.00	272.03	715.03	

SIGN QUANTITIES
SQ-5

STATE OF CALIFORNIA - DEPARTMENT OF TRANSPORTATION
Caltrans TRAFFIC DESIGN

FUNCTIONAL SUPERVISOR: CAMILLE ABOU-FADEL
CALCULATED-DESIGNED BY: PARVIS NAHAVANDIAN
CHECKED BY: SHAHIN ADIBI
REVISED BY / DATE REVISED

LAST REVISION 06-23-16 | DATE PLOTTED => 21-JUL-2016 | TIME PLOTTED => 14:03

Dist	COUNTY	ROUTE	POST MILES TOTAL PROJECT	SHEET No.	TOTAL SHEETS
11	SD	5	3.9/9.2	111	282

06-15-16
REGISTERED CIVIL ENGINEER DATE

07-11-16
PLANS APPROVAL DATE

REGISTERED PROFESSIONAL ENGINEER
SHAHIN ADIBI
No. 54839
Exp. 06-30-18
CIVIL
STATE OF CALIFORNIA

THE STATE OF CALIFORNIA OR ITS OFFICERS OR AGENTS SHALL NOT BE RESPONSIBLE FOR THE ACCURACY OR COMPLETENESS OF SCANNED COPIES OF THIS PLAN SHEET.

OVERHEAD SIGN STRUCTURE

SIGN No.	LOCATION	INSTALL SIGN STRUCTURE (LIGHTWEIGHT)	FURNISH SIGN STRUCTURE (LIGHTWEIGHT)	CIDH CONCRETE PILE (SIGN Fdn) 36 INCH		COMMENTS
				Lt	Rt	
		LB	LB	LF	LF	
OS2-1	273+00 "WN-PM"	4,730	4,730	16		EMS
OS8-1	499+90 "EN-E"	4,960	4,960	16		EMS
TOTAL		9,690	9,690	32		

SIGN QUANTITIES
SQ-6

STATE OF CALIFORNIA - DEPARTMENT OF TRANSPORTATION
Caltrans TRAFFIC DESIGN

FUNCTIONAL SUPERVISOR: CAMILLE ABOU-FADEL
CALCULATED-DESIGNED BY: PARVIS NAHAVANDIAN
CHECKED BY: SHAHIN ADIBI
REVISED BY
DATE REVISED

LAST REVISION 06-23-16
DATE PLOTTED => 21-JUL-2016
TIME PLOTTED => 14:03

Dist	COUNTY	ROUTE	POST MILES TOTAL PROJECT	SHEET No.	TOTAL SHEETS
11	SD	5	3.9/9.2	112	282

REGISTERED CIVIL ENGINEER 06-15-16 DATE

07-11-16
PLANS APPROVAL DATE

REGISTERED PROFESSIONAL ENGINEER KENNETH SAYLER No. C66456 Exp. 6-30-18 CIVIL STATE OF CALIFORNIA

THE STATE OF CALIFORNIA OR ITS OFFICERS OR AGENTS SHALL NOT BE RESPONSIBLE FOR THE ACCURACY OR COMPLETENESS OF SCANNED COPIES OF THIS PLAN SHEET.

CONCRETE BARRIER

LOCATION			(TYPE 60D)	(TYPE 60 Mod)	(TYPE 60 Mod 2)	(TYPE 60C)
No.	SHEET	STATION	(LF)	(LF)	(LF)	(LF)
6	L-6	419+25 "EN-J" - 421+50 "EN-J"	235			
6	L-6	421+55 "EN-J" - 424+22 "EN-J"				267
6	L-6	427+05 "EN-J" - 430+00 "EN-J"				295
7	L-7	449+00 "EN-H" - 450+42 "EN-H"		142		
8	L-9	500+88 "EN-E" - 501+01.75 "EN-E"			22.1	
		TOTALS	235	142	22.1	562

DIKE

LOCATION				PLACE HOT MIX ASPHALT DIKE (TYPE C)	PLACE HOT MIX ASPHALT DIKE (TYPE E)	PLACE HOT MIX ASPHALT DIKE (TYPE F)	MINOR HOT MIX ASPHALT	REMOVE ASPHALT CONCRETE DIKE
No.	SHEET	STATION	SIDE	(LF)	(LF)	(LF)	(TON)	(LF)
1	L-1	244+25.00 - 246+79.85 "EN-CR"	R+		254.85		6.64	
2	L-2	278+44.45 - 279+41.80 "EN-PM"	R+	97.35			0.37	
2	L-2	279+41.80 - 279+66.80 "EN-PM"	R+			25	0.17	
2	L-2	282+50.00 - 285+62.11 "EN-PM"	R+		312.11		8.11	
3	L-3	317+91.30 - 320+90.00 "EN-M"	L+		298.7		7.67	
3	L-3	320+75.00 - 330+12.27 "EN-M"	R+					937.27
3	L-3	321+02.00 - 321+50.00 "EN-M"	L+		48		1.25	
3	L-3	321+25.00 - 330+12.27 "EN-M"	R+		887.27		23.07	
4	L-4	354+69.00 - 356+16.00 "WN-PO"	R+		147		3.82	
4	L-4	356+16.00 - 356+66.80 "WN-PO"	R+	50.8			0.38	
4	L-4	356+66.80 - 357+00.00 "WN-PO"	R+			33.2	0.44	
4	L-4	360+37.61 - 363+75.00 "WN-PO"	R+		337.69		8.77	
5	L-5	387+88.00 - 391+50.00 "EN-L"	R+		362		9.41	
6	L-6	419+25.00 - 421+50.00 "EN-J"	L+					225.00
6	L-6	420+25.00 - 420+66.00 "EN-J"	R+		41		1.07	
6	L-6	420+66.00 - 421+20.00 "EN-J"	R+	54			0.41	
6	L-6	421+20.00 - 421+45.00 "EN-J"	R+			50	0.33	
6	L-6	430+00.00 - 430+70.00 "EN-J"	R+		70		2.92	
7	L-7	448+45.00 - 448+65.00 "EN-H"	R+	20			0.15	
7	L-7	448+65.00 - 448+90.00 "EN-H"	R+			25	0.33	
7	L-7	454+00.00 - 458+12.38 "EN-H"	R+		412.38		10.71	
			TOTALS	222.15	3,171.00	133.20	86.02	1,162.27

ROADWAY EXCAVATION

LOCATION		[N] EMBANKMENT	ROADWAY EXCAVATION	ROADWAY EXCAVATION (TYPE Z-2) (AERIALLY DEPOSITED LEAD)	REMOVE BASE AND SURFACING
No.	STATION	(CY)	(CY)	(CY)	(CY)
1	237+64.49 - 246+79.85 "EN-CR"	57	653	526	
1	237+12.0 - 237+89.0 "EN-CR"		279		
1	237+35.10 - 237+99.00 "EN-CR"				109.5
2	277+67.00 - 285+62.11 "EN-PM"	28	500	442	
3	317+91.30 - 330+12.27 "EN-M"	120	122	742	
4	354+25.00 - 364+12.28 "WN-PO"	73	807	1,062	
5	382+01.59 - 392+12.32 "EN-L"	44	662	940	
5	56+61.00 - 57+17.00 "IN-D"				71.1
5	57+94.40 - 58+73.60 "IN-D"				55.9
6	419+41.20 - 431+12.34 "EN-J"	274	523	208	
7	445+79.81 - 458+12.38 "EN-H"	18	722	1,443	
5	386+57.20 - 387+07.60 "SW-L"		160		
5	381+97.60 - 381+56.10 "EN-L"		101		
1	237+12.00 - 237+89.00 "EN-CR"		72		
8	500+80.00 - 501+01.75 "EN-E"	1	1.2		
	TOTALS		4,602.2	5,363	236.5

[N] - NOT A SEPARATE PAY ITEM, FOR INFORMATION ONLY.

SUMMARY OF QUANTITIES

Q-1

STATE OF CALIFORNIA - DEPARTMENT OF TRANSPORTATION
Caltrans DESIGN

FUNCTIONAL SUPERVISOR: DUY TON
CALCULATED-DESIGNED BY: KENNETH SAYLER
CHECKED BY: KENNETH SAYLER
REVISED BY
DATE REVISED

LAST REVISION 06-23-16
DATE PLOTTED => 21-JUL-2016
TIME PLOTTED => 14:03

Dist	COUNTY	ROUTE	POST MILES TOTAL PROJECT	SHEET No.	TOTAL SHEETS
11	SD	5	3.9/9.2	113	282

REGISTERED CIVIL ENGINEER 06-15-16 DATE

07-11-16
PLANS APPROVAL DATE

REGISTERED PROFESSIONAL ENGINEER KENNETH SAYLER No. C66456 Exp. 6-30-18 CIVIL STATE OF CALIFORNIA

THE STATE OF CALIFORNIA OR ITS OFFICERS OR AGENTS SHALL NOT BE RESPONSIBLE FOR THE ACCURACY OR COMPLETENESS OF SCANNED COPIES OF THIS PLAN SHEET.

MINOR CONCRETE (EXPOSED AGGREGATE CONCRETE)

LOCATION No.	SHEET	◇	(SQFT)
1	L-1	1	628.2
3	L-3	2	1305.7
		TOTAL	1,933.9

ROCK BLANKET

Loc No.	SHEET	STATION	(SQFT)
8	L-9/C-11	L+ 506+05.00 - 506+30.00 "EN-E"	100
8	L-9/C-11	R+ 507+15.00 - 507+40.00 "EN-E"	100
		TOTAL	200

OVERSIDE DRAIN

Loc No.	SHEET	STATION	MINOR HOT MIX ASPHALT (TON)	PLACE HOT MIX ASPHALT (Misc AREA) (SQYD)	REMOVE OVERSIDE DRAIN (EA)
2	L-2	R+ 277+67.00 "EN-PM"			1
2	L-2	R+ 278+34.00 "EN-PM"	0.48	2.19	
3	L-3	L+ 321+00.00 "EN-M"	0.48	2.19	
		TOTAL	0.96	4.38	1

MIDWEST GUARDRAIL SYSTEM

Loc No.	SHEET No.	LINE	SIDE	STATION	LAYOUT TYPE	[N] ALTERNATIVE IN-LINE TERMINAL SYSTEM (EA)	ALTERNATIVE FLARED TERMINAL SYSTEM (EA)	MIDWEST GUARDRAIL SYSTEM (LF)	TRANSITION RAILING (TYPE WB-31) (EA)	MINOR CONCRETE (MINOR STRUCTURE) CONCRETE TRANSITION BLOCK TYPE 1 (CY)	CONCRETE TRANSITION BLOCK TYPE 2 (CY)	ANCHOR BLOCK (CY)	END ANCHOR ASSEMBLY (TYPE SFT) (EA)	GUARD RAILING DELINEATOR (EA)	VEGETATION CONTROL (MINOR CONCRETE) (SQYD)	REMOVE GUARDRAIL (LF)	[N] REMOVE TERMINAL SECTION (EA)	TREATED WOOD WASTE (LB)
1	L-1	"EN-CR"	R+	242+24.50 - 243+87.00	16B		1	162.5					1	4	86.11			
2	L-2	"EN-PM"	R+	278+29.30 - 279+41.80	12A	1		112.5	1			2.02		3	63.89			
2	L-2	"EN-PM"	L+	280+16.00 - 281+91.00	16B		1	175.0					1	4	91.67			
2	L-2	"WN-PM"	L+	272+67.50 - 273+05.00	16B		1	37.5					1	1	30.56			
4	L-4	"WN-PO"	R+	356+55.00 - 356+90.00	12B		1		1			2.02		1	19.44			
6	L-6	"EN-J"	R+	421+20.00 - 421+45.00	12A	1			1	3.09				1	16.67			
7	L-7	"EN-H"	R+	448+65.00 - 448+90.00	12A	1			1		3.09			1	16.67			
8	L-8	"EN-E"	L+	495+74.75 - 496+12.25	16A	1		37.5					1	2	23.61	62.5	1	1,124.5
8	L-8	"EN-E"	R+	495+74.75 - 496+12.25	16B		1	37.5					1	2	30.56	62.5	1	1,124.5
8	L-9	"EN-E"	L+	499+55.00 - 506+05.00	12A	1		650	1			0.66		14		600.0	1	7,539.2
8	L-9	"EN-E"	R+	504+27.50 - 507+15.00	12B		1	287.5	1			0.66		7		287.5	1	4,016.2
				SUBTOTALS		5	6	1,500.0	6	3.09	3.09	5.36	5	40	376.40	1,012.5		13,804.4 *
				TOTALS		5	6	1,500.0	6	11.54 **			5	40	376.40	1,012.5		13,804.4 *

[N] - NOT A SEPARATE PAY ITEM, FOR INFORMATION ONLY..
* - SEE "SQ" SHEETS FOR ADDITIONAL QUANTITIES
** - SEE "DQ" SHEETS FOR ADDITIONAL QUANTITIES.

SUMMARY OF QUANTITIES

Q-2

REVISED BY | DATE REVISED
KIERSTEN BOUSQUET | KENNETH SAYLER
CALCULATED-DESIGNED BY | CHECKED BY
FUNCTIONAL SUPERVISOR: DUY TON
STATE OF CALIFORNIA - DEPARTMENT OF TRANSPORTATION
Caltrans®
DESIGN

LAST REVISION 06-23-16 | DATE PLOTTED => 21-JUL-2016 | TIME PLOTTED => 14:03

Dist	COUNTY	ROUTE	POST MILES TOTAL PROJECT	SHEET No.	TOTAL SHEETS
11	SD	5	3.9/9.2	114	282

Mark W. Kaems 06-15-16
REGISTERED CIVIL ENGINEER DATE

07-11-16
PLANS APPROVAL DATE

REGISTERED PROFESSIONAL ENGINEER
MARK W. KAEMS
No. C49242
Exp. 9/30/18
CIVIL
STATE OF CALIFORNIA

THE STATE OF CALIFORNIA OR ITS OFFICERS OR AGENTS SHALL NOT BE RESPONSIBLE FOR THE ACCURACY OR COMPLETENESS OF SCANNED COPIES OF THIS PLAN SHEET.

CURB RAMP

LOCATION			REMOVE CONCRETE	REMOVE BASE AND SURFACING	ROADWAY EXCAVATION	[N] EMBANKMENT	MINOR HOT MIX ASPHALT	DETECTABLE WARNING SURFACE	MINOR CONCRETE (CURB, SIDEWALK AND CURB RAMP)
Loc No.	CURB RAMP No.	STATION	(CY)	(CY)	(CY)	(CY)	(TON)	(SQFT)	(CY)
1	1A	9+96.30 - 10+29.98 "CR2"	3.80	1.87		2	0.94	35	5.22
1	1B	10+33.49 - 11+25.05 "CR1"	8.35	1.70		18	0.85	50	11.44
2	2	10+16.50 - 10+60.50 "PALMCR1"	6.43	0.81	2		0.41	20	5.41
5	5A	9+23.57 - 10+18.88 "LSTCR1"		1.77	167		0.88	61	11.70
5	5B	10+17.50 - 11+74.40 "LSTCR2"		8.72		24	4.36	43	19.26
		TOTALS	18.58	14.87	169		7.44	209	53.03

[N] - NOT A SEPARATE PAY ITEM, FOR INFORMATION ONLY.

SUMMARY OF QUANTITIES

Q-3

STATE OF CALIFORNIA - DEPARTMENT OF TRANSPORTATION
Caltrans DESIGN
FUNCTIONAL SUPERVISOR: DUY TON
CALCULATED-DESIGNED BY: MARK W. KAEMS
CHECKED BY: KENNETH SAYLER
REVISED BY
DATE REVISED

LAST REVISION 06-23-16
DATE PLOTTED => 21-JUL-2016
TIME PLOTTED => 14:03

Dist	COUNTY	ROUTE	POST MILES TOTAL PROJECT	SHEET No.	TOTAL SHEETS
11	SD	5	3.9/9.2	115	282

REGISTERED CIVIL ENGINEER 06-15-16 DATE

07-11-16
PLANS APPROVAL DATE

REGISTERED PROFESSIONAL ENGINEER KENNETH SAYLER No. C66456 Exp. 6-30-18 CIVIL STATE OF CALIFORNIA

THE STATE OF CALIFORNIA OR ITS OFFICERS OR AGENTS SHALL NOT BE RESPONSIBLE FOR THE ACCURACY OR COMPLETENESS OF SCANNED COPIES OF THIS PLAN SHEET.

ROADWAY STRUCTURAL SECTION

No.	LOCATION STATION	RUBBERIZED HOT MIX ASPHALT (GAP GRADED) (TON)	HOT MIX ASPHALT (TYPE A) (TON)	CLASS 2 AGGREGATE BASE (CY)	TACK COAT (TON)	COLD PLANE ASPHALT CONCRETE PAVEMENT (SQYD)
1	237+64.49 - 246+79.85 "EN-CR"	168.98	276.22	970.07	1.49	1,434.64
2	277+81.47 - 285+62.11 "EN-PM"	160.86	286.44	925.12	1.33	966.81
3	317+10.00 - 330+12.27 "EN-M"	115.18	448.99	808.30	1.32	1,660.84
4	354+25.00 - 364+12.28 "WN-PO"	176.33	520.17	987.57	1.47	2,203.22
4	352+24.50 - 354+25.00 "WN-PO"	9.74			0.22	903.6
5	382+01.59 - 392+12.32 "EN-L"	181.72	445.68	1,032.17	1.53	1,289.89
6	419+41.20 - 431+12.34 "EN-J"	143.53	449.35	769.64	1.67	2,235.41
7	445+79.81 - 458+12.38 "EN-H"	235.66	657.30	1,395.21	2.16	2,163.81
5	386+57.20 - 387+07.60 "SW-L"	12.15	28.36	81.02		
5	381+97.60 - 381+56.10 "EN-L"	8.63	20.14	57.54		
1	237+12.00 - 237+89.00 "EN-CR"	27.43	64.01	182.88		
Var	DIKE					
	TOTALS	1,240.21	3,196.66	7,209.52	11.19	12,858.22

CURB/SIDEWALK

Loc No.	LOCATION STATION	MINOR HOT MIX ASPHALT (TON)	MINOR CONCRETE (CURB, SIDEWALK AND CURB RAMP) (CY)	REMOVE ASPHALT CONCRETE DIKE (LF)
6	419+37.61 - 419+52.95 "EN-J"	0.57	8.10	7.5
7	445+89.00 - 445+96.00 "EN-H"		0.18	
	TOTALS	0.57	8.28	7.5

RETAINING WALL

Loc No.	WALL No.	LOCATION STATION	STRUCTURE EXCAVATION (TYPE Z-2) (AEIRIALLY DEPOSITED LEAD) (CY)	STRUCTURE BACKFILL (RETAINING WALL) (CY)	PERVIOUS BACKFILL MATERIAL (RETAINING WALL) (CY)	STRUCTURE CONCRETE (RETAINING WALL) (CY)	BAR REINFORCING STEEL (RETAINING WALL) (LB)	CONCRETE BARRIER (TYPE 732A) (LF)	CONCRETE BARRIER (TYPE 60D) (LF)	CABLE RAILING (LF)	ARCHITECTURAL TREATMENT (SQFT)	MINOR CONCRETE (GUTTER) (LF)
2	RW1	279+75.00 - 282+50.00 "EN-PM"	520	380	2	175	19,400	276			12,713	
4	RW2	357+00.00 - 360+37.61 "WN-PO"	2,970	1440	41	516	47,725		338	338	41,014	340
6	RW3	424+22.00 - 427+05.00 "EN-J"	865	625	35	228	47,814	284			30,638	
7	RW4	450+42.00 - 454+00.00 "EN-H"	2,150	1030	11	355	32,300		358	358		360
		TOTALS	6,505	3,475	89	1,274	147,239	560	696	696	84,365	700

CONCRETE BLOCK STRUCTURE

Loc No.	LOCATION STATION	REMOVE CONCRETE BLOCK STRUCTURE (EA)
2	277+90 "EN-PM"	1
5	58+50 "IN-D"	1
	TOTALS	2

SUMMARY OF QUANTITIES

Q-4

STATE OF CALIFORNIA - DEPARTMENT OF TRANSPORTATION
Caltrans DESIGN
FUNCTIONAL SUPERVISOR: DUY TON
CALCULATED-DESIGNED BY: KENNETH SAYLER
CHECKED BY: DUY TON
REVISED BY
DATE REVISED

LAST REVISION 06-23-16
DATE PLOTTED => 21-JUL-2016
TIME PLOTTED => 14:03

Dist	COUNTY	ROUTE	POST MILES TOTAL PROJECT	SHEET No.	TOTAL SHEETS
11	SD	5	3.9/9.2	116	282

REGISTERED CIVIL ENGINEER 06-15-16 DATE

07-11-16
PLANS APPROVAL DATE

REGISTERED PROFESSIONAL ENGINEER KENNETH SAYLER No. C66456 Exp. 6-30-18 CIVIL STATE OF CALIFORNIA

THE STATE OF CALIFORNIA OR ITS OFFICERS OR AGENTS SHALL NOT BE RESPONSIBLE FOR THE ACCURACY OR COMPLETENESS OF SCANNED COPIES OF THIS PLAN SHEET.

IRRIGATION CONDUIT

SHEET No.	LOCATION		SIDE		Exist Irr Cond	EXTENSION CONNECTION TYPE		(*) PLASTIC PIPE (SUPPLY LINE)	(N) ELECTRICAL CONDUIT FOR CNC	CORRUGATED HIGH DENSITY POLYETHYLENE PIPE			WELDED STEEL PIPE			SCHEDULE 40 PVC PIPE		
										CONDUIT SIZE (INCH)								
	LINE	STATION	L†	R†	SIZE (INCH)	CB	OL	SIZE (INCH)	SIZE (INCH)	8"	-	-	-	-	-	-	-	-
										LENGTH (LF)								
IPP-1	EN-CR	241+10	-	X	8"	X	-	3"	2"	25′	-	-	-	-	-	-	-	-
IPP-2	EN-PM	278+20	-	X	8"	X	-	3"	2"	20′								
IPP-3	EN-M	318+80	X	-	8"	X	-	3"	2"	15′								
IPP-3	EN-M	322+20	X	-	8"	X	-	3"	2"	30′								
IPP-4	EN-L	385+10	-	X	8"	X	-	3"	2"	25′								
IPP-4	EN-L	387+30	-	X	8"	X	-	3"	2"	25′								
IPP-5	EN-J	422+10	-	X	8"	X	-	3"	2"	15′								
IPP-6	EN-H	450+00	-	X	8"	X	-	3"	2"	15′								
									TOTAL	170′								

(N) - NOT A SEPARATE PAY ITEM, FOR INFORMATION ONLY
X - DENOTES REQUIREMENT
* - FOR QUANTITIES SEE IRRIGATION QUANTITY SHEETS

ABBREVIATIONS:
CB - COUPLING BAND
OL - OVERLAP

SUMMARY OF QUANTITIES

Q-5

STATE OF CALIFORNIA - DEPARTMENT OF TRANSPORTATION
DESIGN
Caltrans
FUNCTIONAL SUPERVISOR: DUY TON
CALCULATED-DESIGNED BY: KIERSTEN BOUSQUET
CHECKED BY: KENNETH SAYLER
REVISED BY
DATE REVISED

LAST REVISION 06-23-16
DATE PLOTTED => 21-JUL-2016
TIME PLOTTED => 14:03

Dist	COUNTY	ROUTE	POST MILES TOTAL PROJECT	SHEET No.	TOTAL SHEETS
11	SD	5	3.9/9.2	117	282

REGISTERED CIVIL ENGINEER 06-15-16 DATE

07-11-16
PLANS APPROVAL DATE

REGISTERED PROFESSIONAL ENGINEER KENNETH SAYLER No. C66456 Exp. 06/30/18 CIVIL STATE OF CALIFORNIA

THE STATE OF CALIFORNIA OR ITS OFFICERS OR AGENTS SHALL NOT BE RESPONSIBLE FOR THE ACCURACY OR COMPLETENESS OF SCANNED COPIES OF THIS PLAN SHEET.

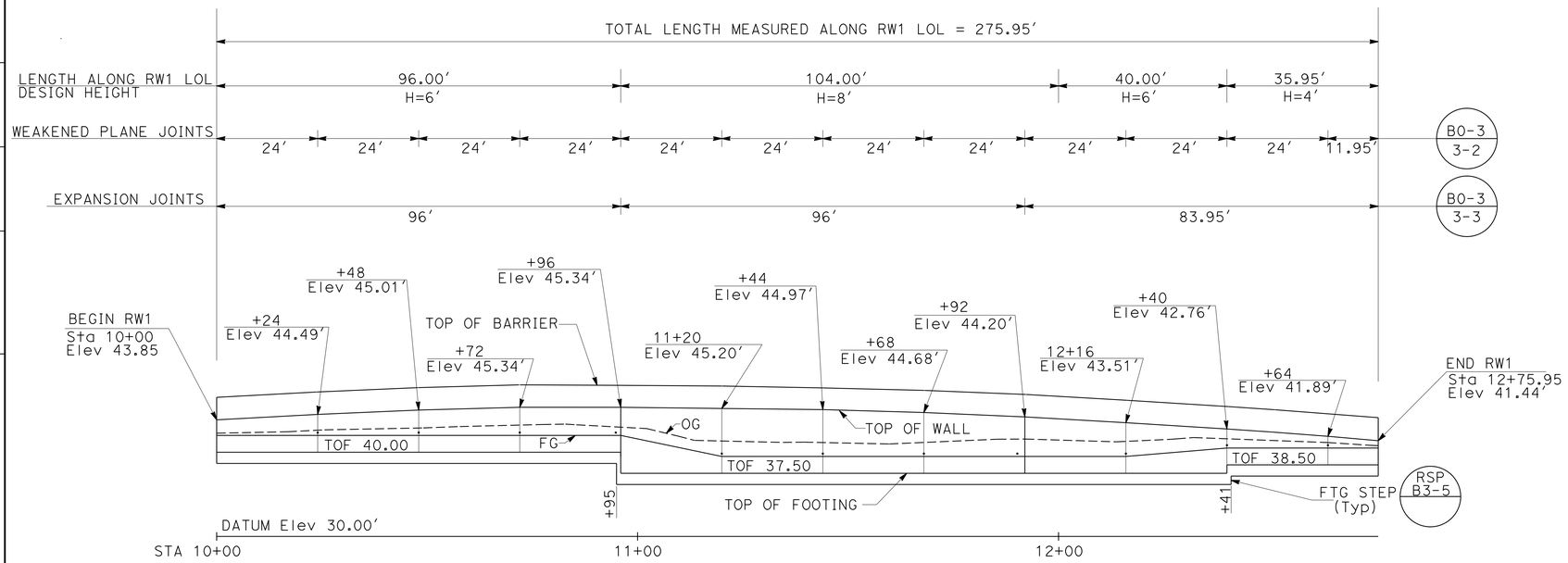

DEVELOPED ELEVATION

SCALE: Horiz: 1" = 20'
Vert: 1" = 5'

NOTES:

1. FOR DETAILS NOT SHOWN SEE STANDARD PLAN (RSP B3-1A)
2. FOR ARCHITECTURAL TREATMENT SEE RETAINING WALL DETAIL SHEET R1-3
3. FOR RETAINING WALL ANGLE POINTS SEE RETAINING WALL DETAIL SHEET R1-4.
4. PLACE TYPE 15TS POLE (MODIFIED) AT STATION 10+80. SEE SHEET SES-1 FOR DETAILS.
5. FOR WEEP HOLE AND GEOCOMOPOSITE DRAIN ALTERNATIVE TO BRIDGE DETAIL (B0-3 3-1) SEE RETAINING WALL DETAIL SHEET R1-4.

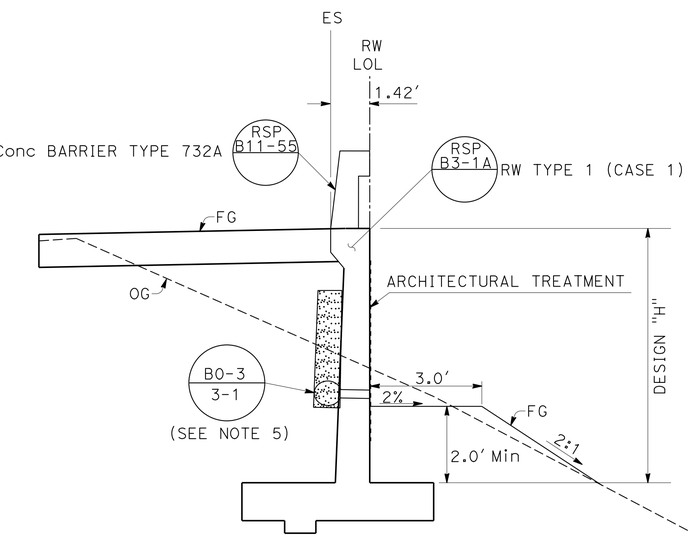

TYPICAL SECTION

NO SCALE

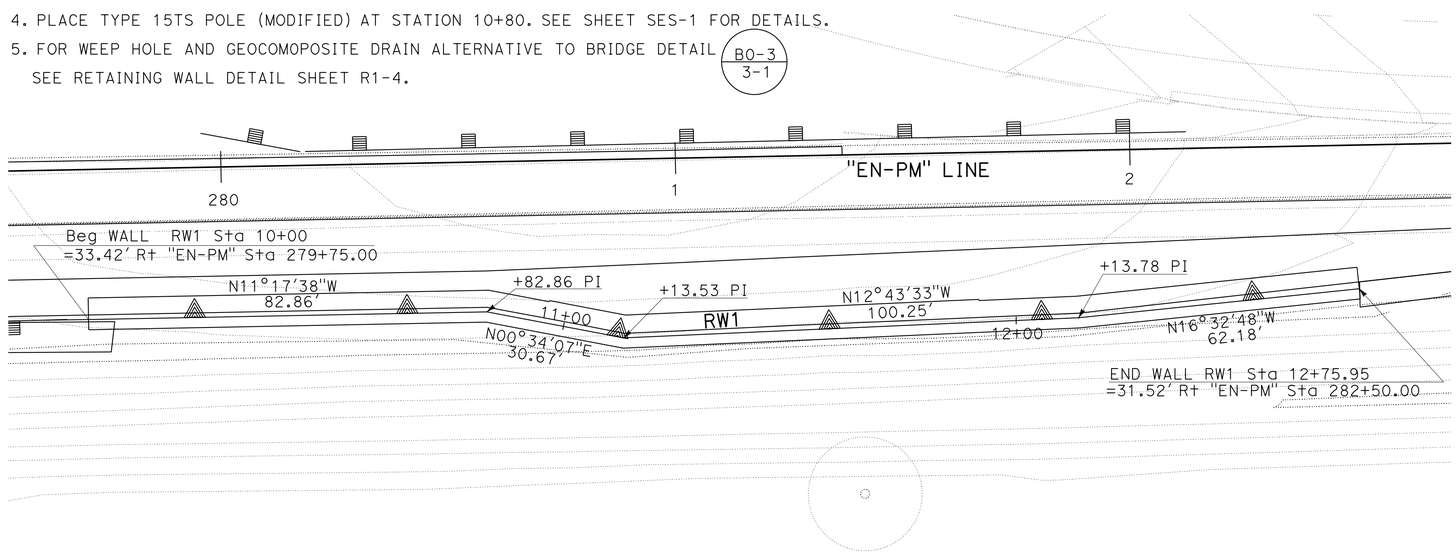

PLAN

SCALE: 1" = 20'

LOCATION 2

APPROVED FOR RETAINING WALL WORK ONLY

RETAINING WALL "RW1" PLAN

SCALE AS SHOWN

R1-1

STATE OF CALIFORNIA - DEPARTMENT OF TRANSPORTATION
Caltrans
DESIGN

FUNCTIONAL SUPERVISOR: DUY TON
CALCULATED-DESIGNED BY: KEVIN BALUYUT
CHECKED BY: KEN SAYLER
REVISED BY
DATE REVISED

LAST REVISION 06-27-16
DATE PLOTTED => 21-JUL-2016
TIME PLOTTED => 14:03

Dist	COUNTY	ROUTE	POST MILES TOTAL PROJECT	SHEET No.	TOTAL SHEETS
11	SD	5	3.9/9.2	118	282

REGISTERED CIVIL ENGINEER 06-15-16 DATE

07-11-16
PLANS APPROVAL DATE

REGISTERED PROFESSIONAL ENGINEER
KENNETH SAYLER
No. C66456
Exp. 06/30/18
CIVIL
STATE OF CALIFORNIA

THE STATE OF CALIFORNIA OR ITS OFFICERS OR AGENTS SHALL NOT BE RESPONSIBLE FOR THE ACCURACY OR COMPLETENESS OF SCANNED COPIES OF THIS PLAN SHEET.

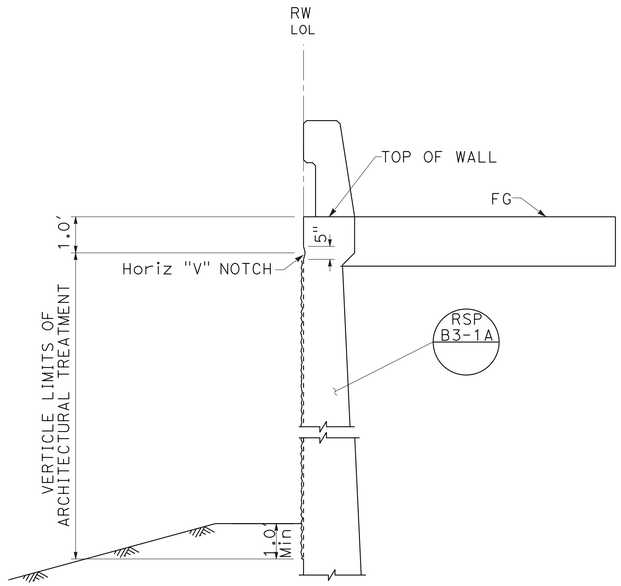

WALL SECTION FOR RW1 & RW3

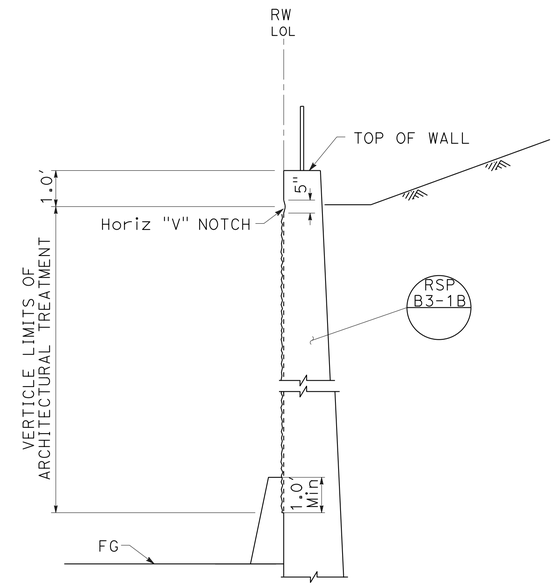

WALL SECTION FOR RW2

HORIZONTAL LIMITS OF ARCHITECTURAL TREATMENT	
LOCATION	STATIONS
RW1	10+72 - 12+24
RW2	10+68 - 12+84
RW3	10+24 - 12+64

NOTES:

1. THE CONTRACTOR SHALL VERIFY ALL CONTROLLING FIELD DIMENSIONS BEFORE ORDERING OR FABRICATING ANY MATERIAL.
2. FOR WALL DETAILS NOT SHOWN SEE RETAINING WALL PLAN SHEETS.

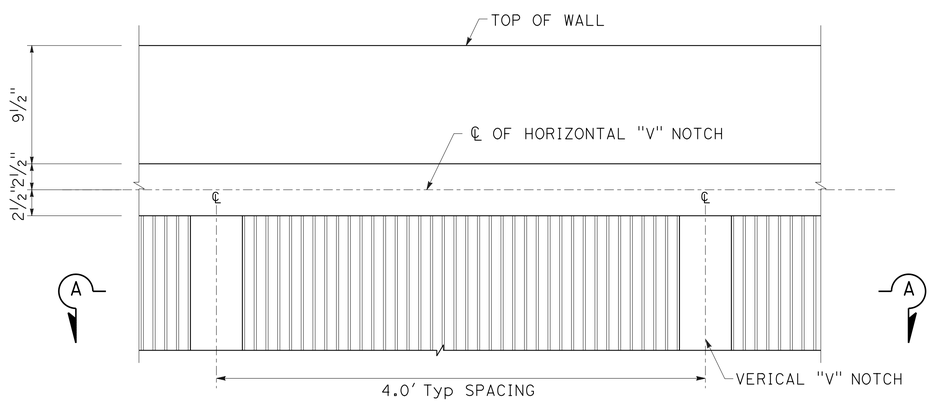

FACE OF WALL

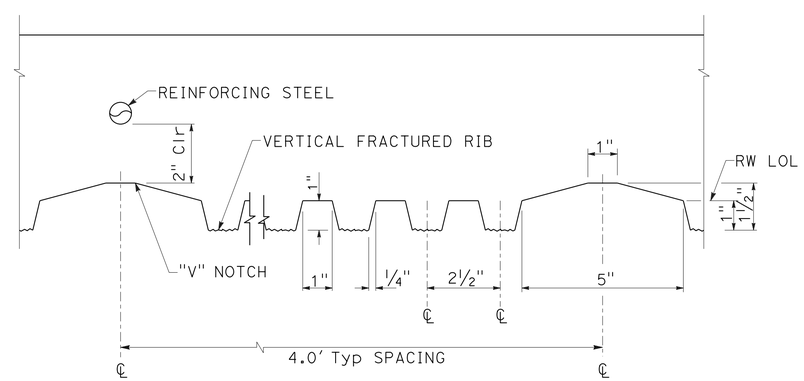

SECTION A-A

ARCHITECTURAL TREATMENT

APPROVED FOR RETAINING WALL WORK ONLY

RETAINING WALL DETAILS

NO SCALE

R1-2

STATE OF CALIFORNIA - DEPARTMENT OF TRANSPORTATION
Caltrans
DESIGN

FUNCTIONAL SUPERVISOR: DUY TON
CALCULATED-DESIGNED BY: KEVIN BALUYUT
CHECKED BY: KEN SAYLER
REVISED BY
DATE REVISED

LAST REVISION 07-08-16
DATE PLOTTED => 21-JUL-2016
TIME PLOTTED => 14:03

Dist	COUNTY	ROUTE	POST MILES TOTAL PROJECT	SHEET No.	TOTAL SHEETS
11	SD	5	3.9/9.2	119	282

REGISTERED CIVIL ENGINEER DATE 06-15-16

PLANS APPROVAL DATE 07-11-16

REGISTERED PROFESSIONAL ENGINEER KENNETH SAYLER No. C66456 Exp. 06/30/18 CIVIL STATE OF CALIFORNIA

THE STATE OF CALIFORNIA OR ITS OFFICERS OR AGENTS SHALL NOT BE RESPONSIBLE FOR THE ACCURACY OR COMPLETENESS OF SCANNED COPIES OF THIS PLAN SHEET.

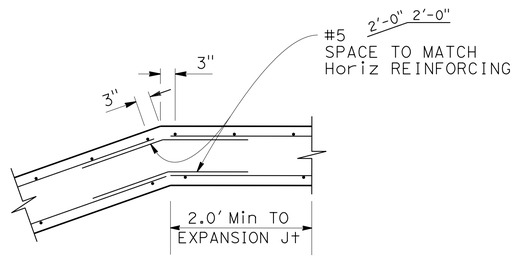

WALL DETAIL

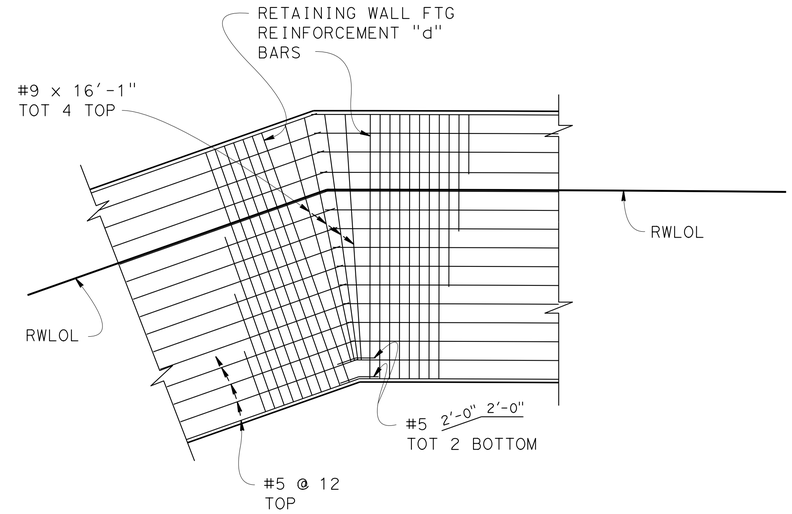

FOOTING DETAIL

ADDITIONAL REINFORCEMENT AT RETAINING WALL ANGLE POINTS

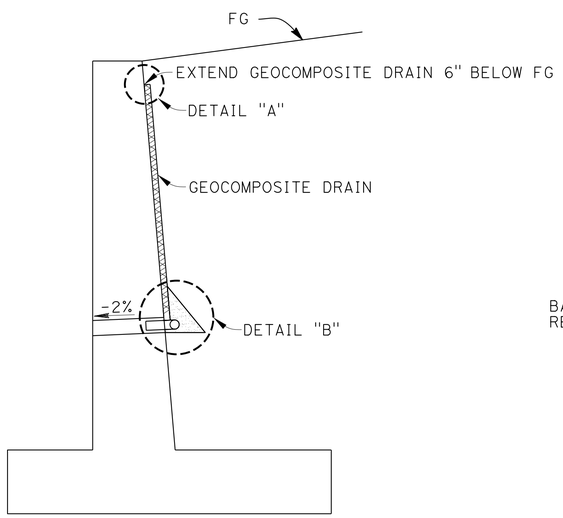

WALL SECTION

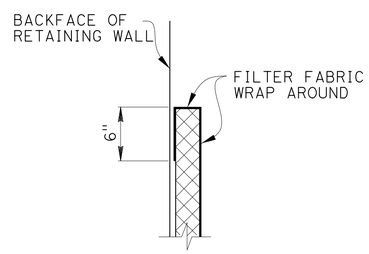

DETAIL "A"

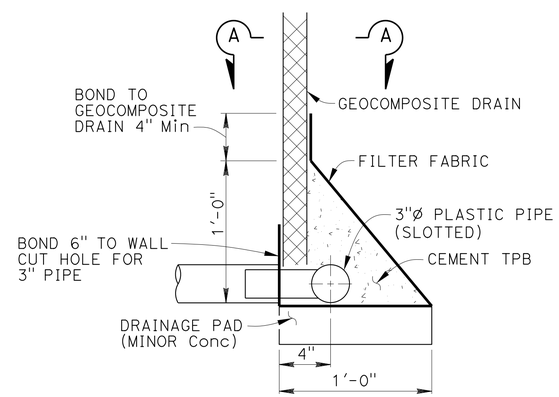

DETAIL "B"

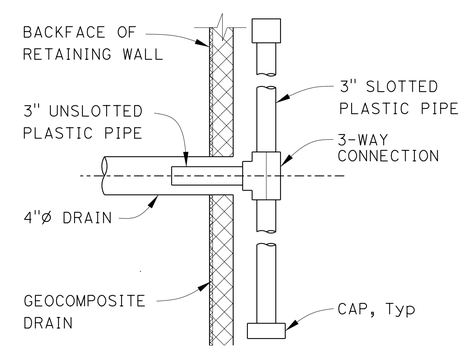

SECTION A-A

WEEP HOLE AND GEOCOMPOSITE DRAIN ALTERNATIVE

ALTERNATIVE TO BRIDGE DETAIL BO-3 / 3-1

APPROVED FOR RETAINING WALL WORK ONLY

RETAINING WALL DETAILS

NO SCALE

R1-3

STATE OF CALIFORNIA - DEPARTMENT OF TRANSPORTATION

Caltrans

DESIGN

FUNCTIONAL SUPERVISOR: DUY TON

CALCULATED-DESIGNED BY: KEVIN BALUYUT

CHECKED BY: KEN SAYLER

REVISED BY

DATE REVISED

LAST REVISION 07-08-16 | DATE PLOTTED => 21-JUL-2016 | TIME PLOTTED => 14:03

Dist	COUNTY	ROUTE	POST MILES TOTAL PROJECT	SHEET No.	TOTAL SHEETS
11	SD	5	3.9/9.2	120	282

REGISTERED CIVIL ENGINEER 06-15-16 DATE

07-11-16
PLANS APPROVAL DATE

REGISTERED PROFESSIONAL ENGINEER
KENNETH SAYLER
No. C66456
Exp. 6-30-18
CIVIL
STATE OF CALIFORNIA

THE STATE OF CALIFORNIA OR ITS OFFICERS OR AGENTS SHALL NOT BE RESPONSIBLE FOR THE ACCURACY OR COMPLETENESS OF SCANNED COPIES OF THIS PLAN SHEET.

RETAINING WALL "RW1"

LOCATION	STRUCTURE EXCAVATION (TYPE Z-2) (AERIALLY DEPOSITED LEAD)	STRUCTURE BACKFILL (RETAINING WALL)	PERVIOUS BACKFILL MATERIAL (RETAINING WALL)	STRUCTURAL CONCRETE, RETAINING WALL	BAR REINFORCING STEEL (RETAINING WALL)	CONCRETE BARRIER (TYPE 732A)	ARCHITECTURAL TREATMENT	
STATION	(CY)	(CY)	(CY)	(CY)	(LB)	(LF)	(SQFT)	
10+00 - 12+75.95 "RW1" LINE	520	380	2	175	19,400	276	12,713	
TOTALS	520	380	2	175	19,400	276	12,713	

RETAINING WALL "RW1" QUANTITIES

R1-4

REVISED BY	DATE REVISED
KENNETH SAYLER	KENNETH SAYLER

CALCULATED-DESIGNED BY: KENNETH SAYLER
CHECKED BY: KENNETH SAYLER

FUNCTIONAL SUPERVISOR: DUY TON

STATE OF CALIFORNIA - DEPARTMENT OF TRANSPORTATION
Caltrans®
DESIGN

LAST REVISION 07-08-16 | DATE PLOTTED => 21-JUL-2016 | TIME PLOTTED => 14:03

DIST	COUNTY	ROUTE	POST MILES TOTAL PROJECT	SHEET No.	TOTAL SHEETS
11	SD	5	3.9/9.2	121	282

REGISTERED CIVIL ENGINEER 06-14-16 DATE

07-11-16
PLANS APPROVAL DATE

REGISTERED PROFESSIONAL ENGINEER
ALI LARI
No. C65846
Exp. 12-31-17
CIVIL
STATE OF CALIFORNIA

The State of California or its officers or agents shall not be responsible for the accuracy or completeness of electronic copies of this plan sheet.

This LOTB sheet was prepared in accordance with the Caltrans Soil & Rock Logging, Classification, & Presentation Manual (2010 Edition).

See 2010 Revised Standard Plans RSP A10F and RSP A10G for Soil Legend, and A10H for Rock Legend.

BENCH MARK

Y 895
3½" USC&GS BM DISK
Set in Bridge Sidewalk
NE Quad SD-5 and Palm Ave.
Elev 40.64 ft
NAVD88

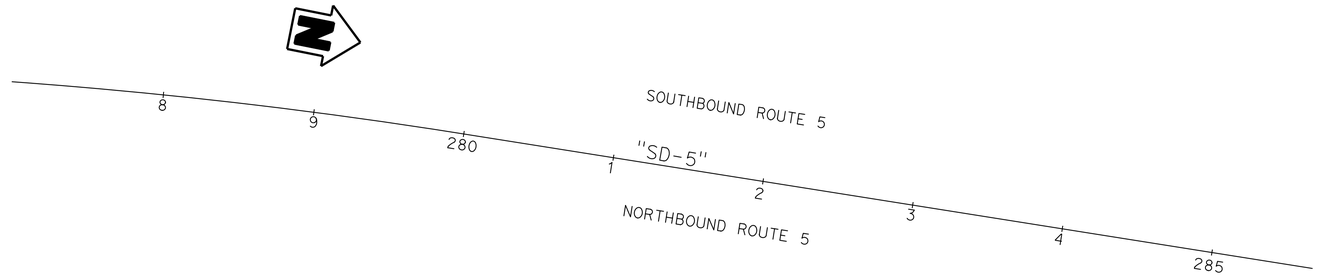

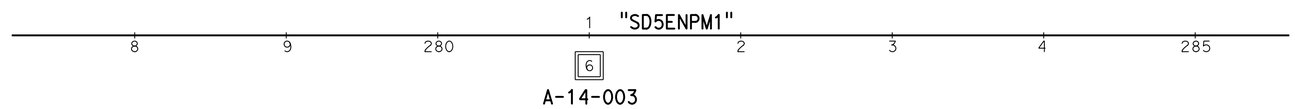

PLAN

1" = 50'

Note: Groundwater was not encountered during field investigation.

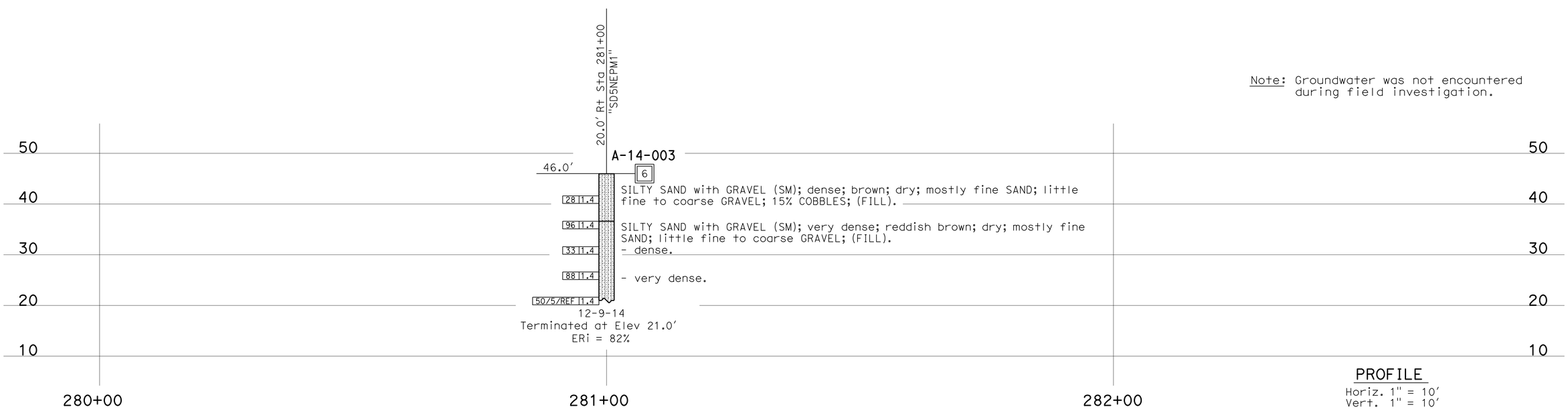

PROFILE

Horiz. 1" = 10'
Vert. 1" = 10'

ENGINEERING SERVICES	MATERIALS AND GEOTECHNICAL SERVICES	STATE OF CALIFORNIA DEPARTMENT OF TRANSPORTATION	DIVISION OF ENGINEERING SERVICES STRUCTURE DESIGN DESIGN BRANCH X	BRIDGE NO. / POST MILE 4.8	RW1 PALM AVENUE ON-RAMP LOG OF TEST BORINGS
FUNCTIONAL SUPERVISOR NAME: S. Wei	DRAWN BY: F. Nguyen / CHECKED BY: J. Tesar	FIELD INVESTIGATION BY: A. Lari			

OGS CIVIL LOG OF TEST BORINGS SHEET

ORIGINAL SCALE IN INCHES FOR REDUCED PLANS 0 1 2 3

UNIT: 3650
PROJECT NUMBER & PHASE: 11140000451 CONTRACT NO.: 11-244004

DISREGARD PRINTS BEARING EARLIER REVISION DATES

REVISION DATES: 03-05-15 03-18-15 03-26-15 SHEET X OF X

FILE => 1114000045qa005.dgn

USERNAME => s127400 DATE PLOTTED => 21-JUL-2016 TIME PLOTTED => 14:27

Dist	COUNTY	ROUTE	POST MILES TOTAL PROJECT	SHEET No.	TOTAL SHEETS
11	SD	5	3.9/9.2	122	282

REGISTERED CIVIL ENGINEER 06-15-16 DATE

07-11-16
PLANS APPROVAL DATE

REGISTERED PROFESSIONAL ENGINEER KENNETH SAYLER No. C66456 Exp. 06/30/18 CIVIL STATE OF CALIFORNIA

THE STATE OF CALIFORNIA OR ITS OFFICERS OR AGENTS SHALL NOT BE RESPONSIBLE FOR THE ACCURACY OR COMPLETENESS OF SCANNED COPIES OF THIS PLAN SHEET.

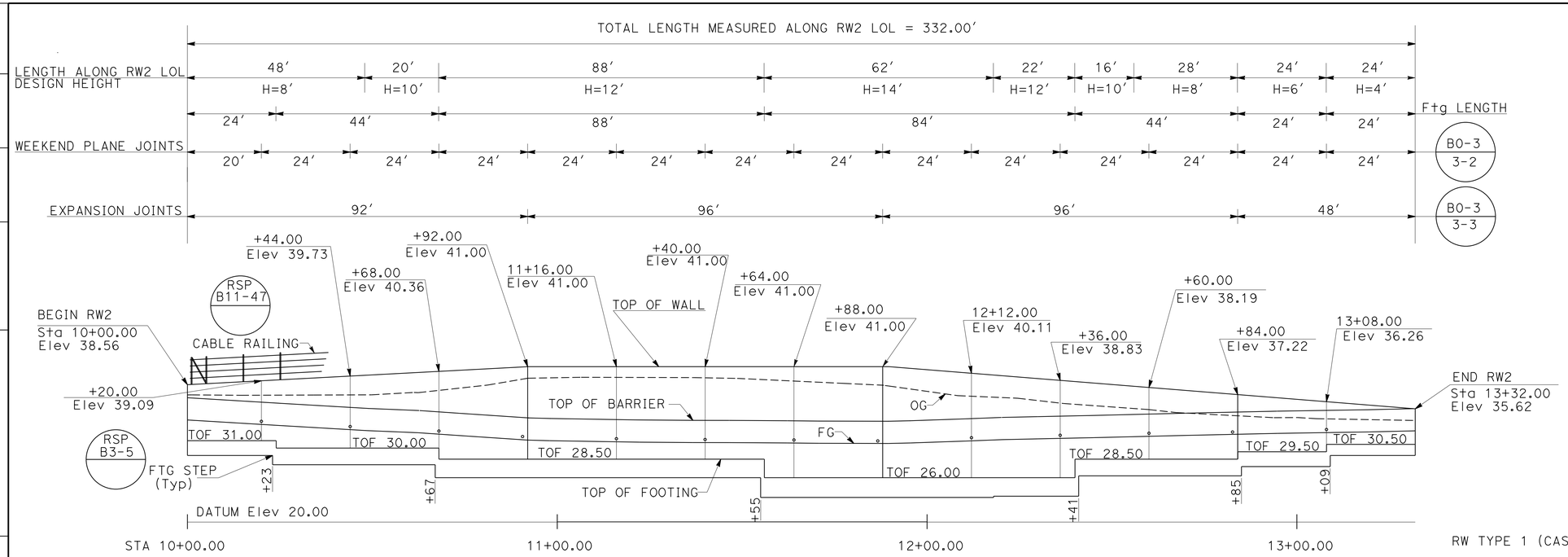

DEVELOPED ELEVATION

SCALE: Horiz: 1" = 20'
Vert: 1" = 5'

NOTES:

1. FOR DETAILS NOT SHOWN SEE STANDARD PLAN (RSP B3-1B)
2. FOR ARCHITECTURAL TREATMENT SEE RETAINING WALL DETAILS SHEET R1-3.
3. FOR RETAINING WALL ANGLE POINTS SEE RETAINING WALL DETAILS SHEET R1-4.
4. PLACE EXPANSION JOINTS THROUGH Conc BARRIER TYPE 60D TO COINCIDE WITH RW LOCATIONS
5. FOR WEEP HOLE AND GEOCOMPOSTIE DRAIN ALTERNATEVE TO BRIDGE DETAIL (B0-3 / 3-1) SEE RETAINING WALL DETAILS SHEET R1-4.

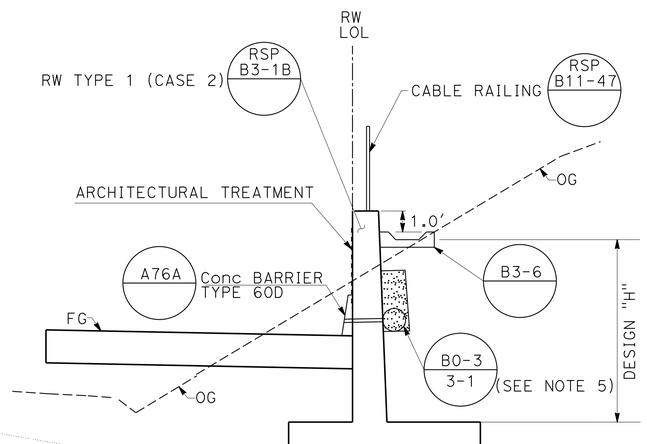

TYPICAL SECTION

NO SCALE

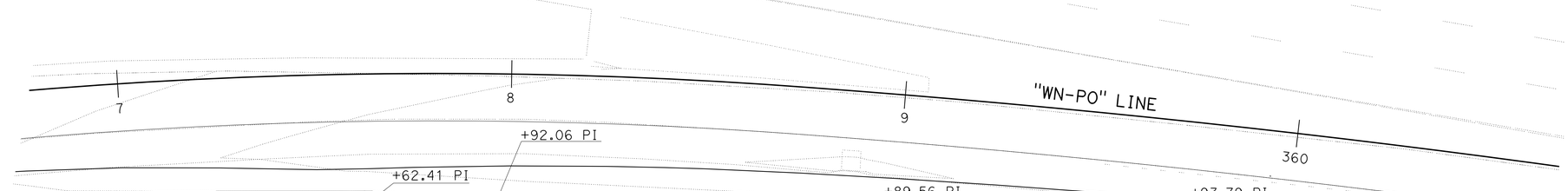

PLAN

SCALE: 1" = 20'

LOCATION 4

APPROVED FOR RETAINING WALL WORK ONLY

RETAINING WALL "RW2" PLAN

SCALE AS SHOWN

R2-1

STATE OF CALIFORNIA - DEPARTMENT OF TRANSPORTATION
Caltrans® DESIGN

FUNCTIONAL SUPERVISOR: Duy Ton
CALCULATED-DESIGNED BY: KEVIN BALUYUT
CHECKED BY: KEN SAYLER
REVISED BY
DATE REVISED

LAST REVISION 06-27-16
DATE PLOTTED => 21-JUL-2016
TIME PLOTTED => 14:03

Dist	COUNTY	ROUTE	POST MILES TOTAL PROJECT	SHEET No.	TOTAL SHEETS
11	SD	5	3.9/9.2	123	282

REGISTERED CIVIL ENGINEER 06-15-16 DATE

07-11-16
PLANS APPROVAL DATE

REGISTERED PROFESSIONAL ENGINEER
KENNETH SAYLER
No. C66456
Exp. 6-30-18
CIVIL
STATE OF CALIFORNIA

THE STATE OF CALIFORNIA OR ITS OFFICERS OR AGENTS SHALL NOT BE RESPONSIBLE FOR THE ACCURACY OR COMPLETENESS OF SCANNED COPIES OF THIS PLAN SHEET.

RETAINING WALL "RW2"

LOCATION	STRUCTURE EXCAVATION (TYPE Z-2) (AERIALLY DEPOSITED LEAD)	STRUCTURE BACKFILL (RETAINING WALL)	PERVIOUS BACKFILL MATERIAL (RETAINING WALL)	STRUCTURAL CONCRETE, RETAINING WALL	BAR REINFORCING STEEL (RETAINING WALL)	CONCRETE BARRIER (TYPE 60D)	CABLE RAILING	ARCHITECTURAL TREATMENT	MINOR CONCRETE (GUTTER)
STATION	(CY)	(CY)	(CY)	(CY)	(LB)	(LF)	(LF)	(SQFT)	(LF)
10+00 - 13+32 "RW2" LINE	2,970	1,440	41	516	47,725	332	332	41,014	340
TOTALS	2,970	1,440	41	516	47,725	332	332	41,014	340

RETAINING WALL "RW2" QUANTITIES

R2-2

STATE OF CALIFORNIA - DEPARTMENT OF TRANSPORTATION
Caltrans
DESIGN

FUNCTIONAL SUPERVISOR: DUY TON
CALCULATED-DESIGNED BY: KENNETH SAYLER
CHECKED BY: KENNETH SAYLER
REVISED BY
DATE REVISED

LAST REVISION 06-27-16
DATE PLOTTED => 21-JUL-2016
TIME PLOTTED => 14:03

DIST	COUNTY	ROUTE	POST MILES TOTAL PROJECT	SHEET No.	TOTAL SHEETS
11	SD	5	3.9/9.2	124	282

REGISTERED CIVIL ENGINEER 06-14-16 DATE

07-11-16
PLANS APPROVAL DATE

REGISTERED PROFESSIONAL ENGINEER ALI LARI No. C65846 Exp. 12-31-17 CIVIL STATE OF CALIFORNIA

The State of California or its officers or agents shall not be responsible for the accuracy or completeness of electronic copies of this plan sheet.

This LOTB sheet was prepared in accordance with the Caltrans Soil & Rock Logging, Classification, & Presentation Manual (2010 Edition).

See 2010 Revised Standard Plans RSP A10F and RSP A10G for Soil Legend, and A10H for Rock Legend.

BENCH MARK

FRUIT 4
3½" CADT Brass Disk
Set in Bridge Sidewalk
SE Quad SD-5 and Palomar St.
Elev 60.47 ft
NAVD88

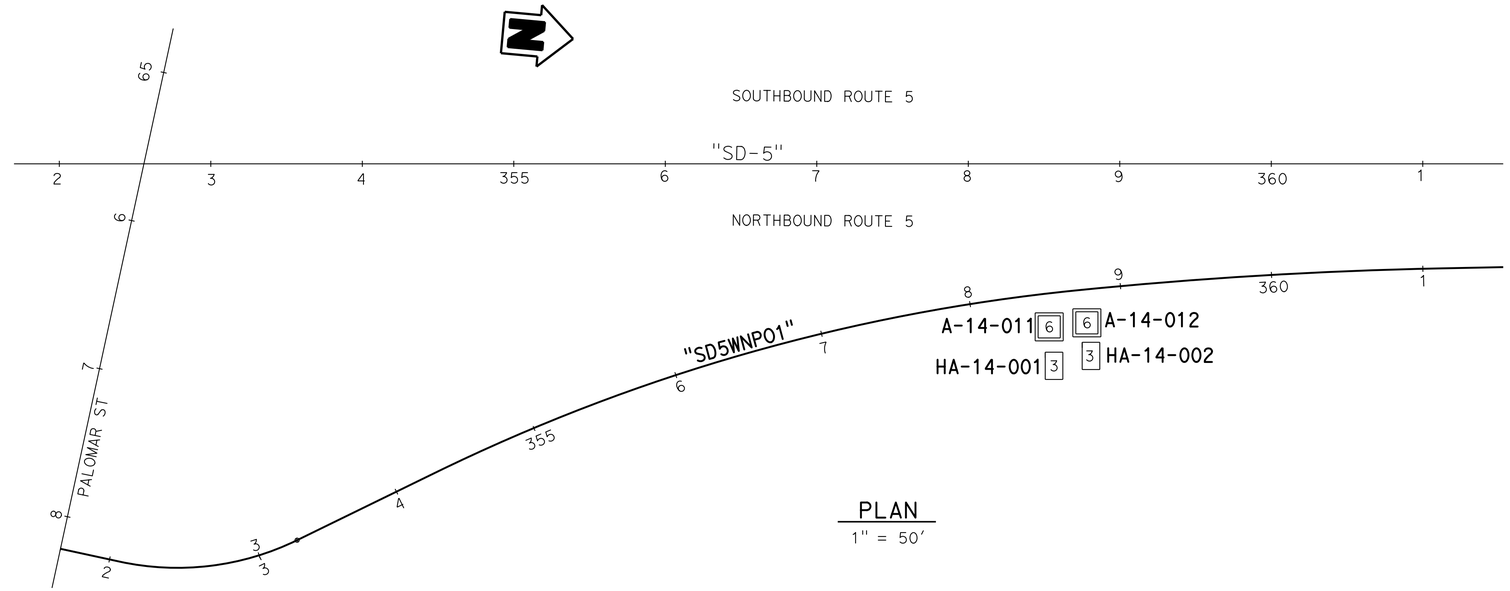

PLAN

1" = 50'

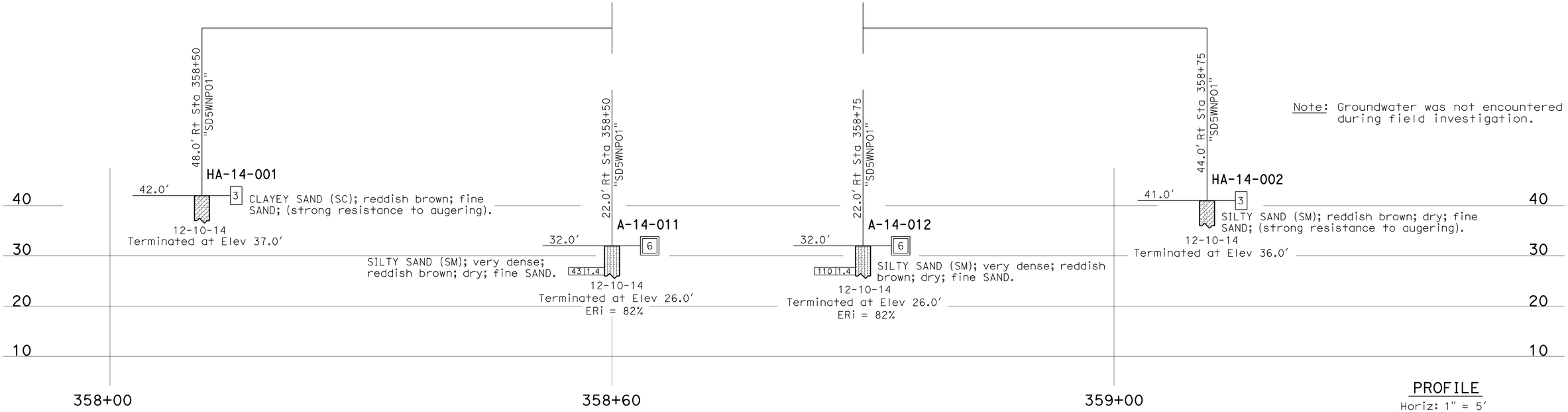

Note: Groundwater was not encountered during field investigation.

PROFILE

Horiz: 1" = 5'
Vert: 1" = 10'

ENGINEERING SERVICES	MATERIALS AND GEOTECHNICAL SERVICES	STATE OF CALIFORNIA DEPARTMENT OF TRANSPORTATION	DIVISION OF ENGINEERING SERVICES STRUCTURE DESIGN	BRIDGE NO.	RW2 PALOMAR STREET ON-RAMP
FUNCTIONAL SUPERVISOR	DRAWN BY: F. Nguyen	FIELD INVESTIGATION BY:	DESIGN BRANCH X	POST MILE 6.1	LOG OF TEST BORINGS
NAME: S. Wei	CHECKED BY: J. Tesar	A. Lari			

OGS CIVIL LOG OF TEST BORINGS SHEET

ORIGINAL SCALE IN INCHES FOR REDUCED PLANS 0 1 2 3

UNIT: 3650
PROJECT NUMBER & PHASE: 11140000451
CONTRACT NO.: 11-244004

DISREGARD PRINTS BEARING EARLIER REVISION DATES

REVISION DATES 03-06-15 03-12-15 03-26-15 SHEET X OF X

FILE => 1114000045qb003.dgn

USERNAME => s127400 DATE PLOTTED => 21-JUL-2016 TIME PLOTTED => 14:28

Dist	COUNTY	ROUTE	POST MILES TOTAL PROJECT	SHEET No.	TOTAL SHEETS
11	SD	5	3.9/9.2	125	282

REGISTERED CIVIL ENGINEER 06-15-16 DATE

07-11-16
PLANS APPROVAL DATE

REGISTERED PROFESSIONAL ENGINEER KENNETH SAYLER No. C66456 Exp. 06/30/18 CIVIL STATE OF CALIFORNIA

THE STATE OF CALIFORNIA OR ITS OFFICERS OR AGENTS SHALL NOT BE RESPONSIBLE FOR THE ACCURACY OR COMPLETENESS OF SCANNED COPIES OF THIS PLAN SHEET.

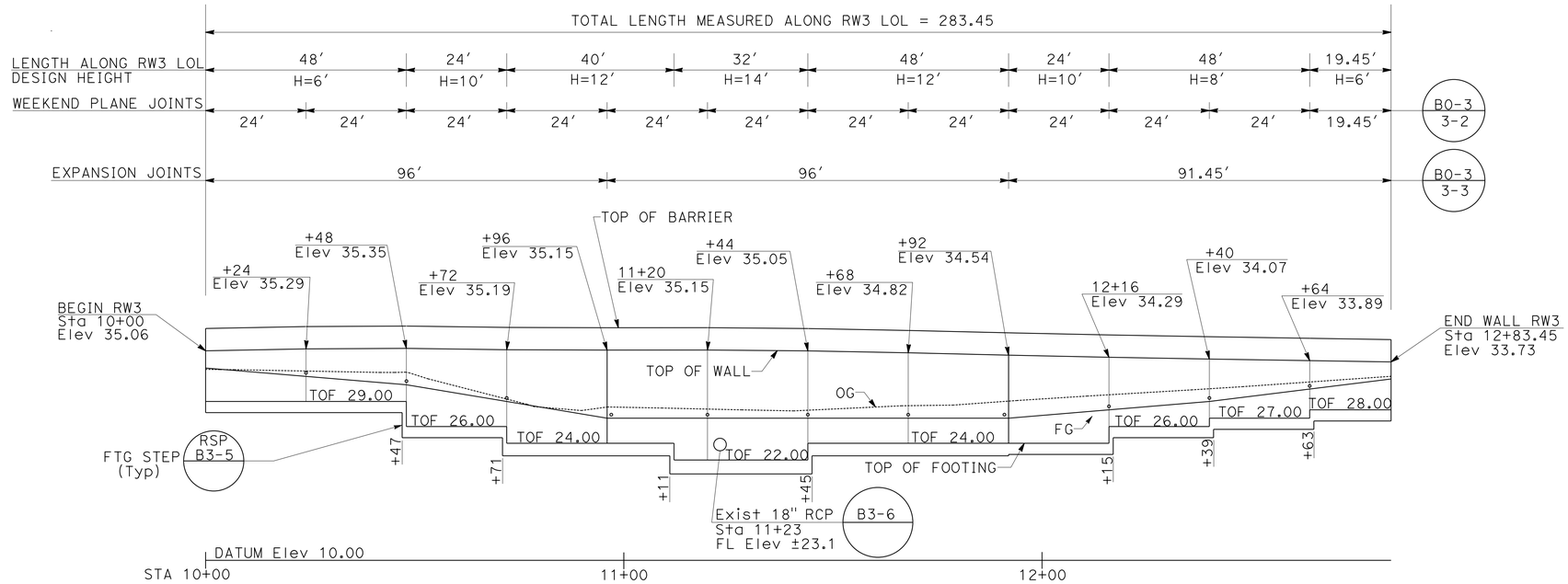

DEVELOPED ELEVATION

SCALE: Horiz: 1" = 20′
Vert: 1" = 5′

NOTES:

1. FOR DETAILS NOT SHOWN SEE STANDARD PLAN (RSP B3-1A)
2. FOR ARCHITECTURAL TREATMENT SEE RETAINING WALL DETAIL SHEETS R1-3.
3. FOR RETAINING WALL ANGLE POINTS SEE RETAINING WALL DETAIL SHEETS R1-4.
4. PLACE TYPE 15TS POLE (MODIFIED) AT STATION 10+45. SEE SHEET SES-1 FOR DETAILS
5. FOR WEEP HOLE AND GEOCOMPOSITE DRAIN ALTERNATIVE TO BRIDGE DETAIL (B0-3 / 3-1) SEE RETAINING WALL DETAILS SHEET R1-4.

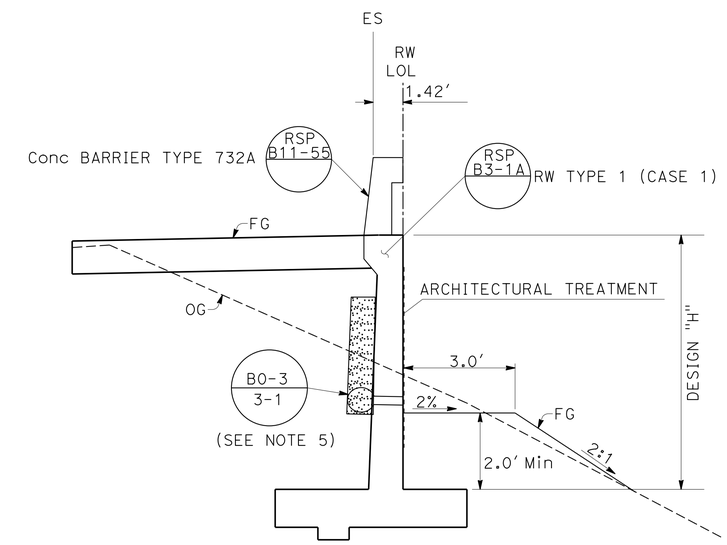

TYPICAL SECTION

NO SCALE

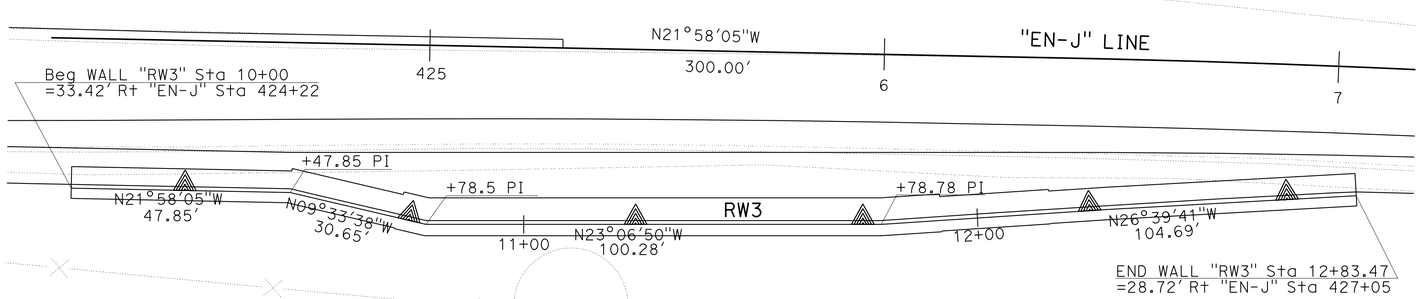

PLAN

SCALE: 1" = 20′

LOCATION 6

APPROVED FOR RETAINING WALL WORK ONLY

RETAINING WALL "RW3" PLAN

SCALE AS SHOWN

R3-1

STATE OF CALIFORNIA - DEPARTMENT OF TRANSPORTATION
Caltrans® DESIGN

FUNCTIONAL SUPERVISOR: DUY TON
CALCULATED-DESIGNED BY: KEVIN BALUYUT
CHECKED BY: KEN SAYLER
REVISED BY / DATE REVISED

LAST REVISION 06-27-16 | DATE PLOTTED => 21-JUL-2016 | TIME PLOTTED => 14:03

Dist	COUNTY	ROUTE	POST MILES TOTAL PROJECT	SHEET No.	TOTAL SHEETS
11	SD	5	3.9/9.2	126	282

REGISTERED CIVIL ENGINEER 06-15-16 DATE

07-11-16
PLANS APPROVAL DATE

REGISTERED PROFESSIONAL ENGINEER KENNETH SAYLER No. C66456 Exp. 6-30-18 CIVIL STATE OF CALIFORNIA

THE STATE OF CALIFORNIA OR ITS OFFICERS OR AGENTS SHALL NOT BE RESPONSIBLE FOR THE ACCURACY OR COMPLETENESS OF SCANNED COPIES OF THIS PLAN SHEET.

RETAINING WALL "RW3"

LOCATION	STRUCTURE EXCAVATION (TYPE Z-2) (AERIALLY DEPOSITED LEAD)	STRUCTURE BACKFILL (RETAINING WALL)	PERVIOUS BACKFILL MATERIAL (RETAINING WALL)	STRUCTURAL CONCRETE, RETAINING WALL	BAR REINFORCING STEEL (RETAINING WALL)	CONCRETE BARRIER (TYPE 732A)	ARCHITECTURAL TREATMENT	
STATION	(CY)	(CY)	(CY)	(CY)	(LB)	(LF)	(SQFT)	
10+00 - 12+83.47 "RW3" LINE	865	625	35	228	47,814	284	30,638	
TOTALS	865	625	35	228	47,814	284	30,638	

RETAINING WALL "RW3" QUANTITIES

R3-2

STATE OF CALIFORNIA - DEPARTMENT OF TRANSPORTATION
Caltrans® DESIGN

FUNCTIONAL SUPERVISOR: DUY TON
CALCULATED-DESIGNED BY: KENNETH SAYLER
CHECKED BY: KENNETH SAYLER
REVISED BY
DATE REVISED

LAST REVISION 06-27-16 | DATE PLOTTED => 21-JUL-2016 | TIME PLOTTED => 14:03

DIST	COUNTY	ROUTE	POST MILES TOTAL PROJECT	SHEET No.	TOTAL SHEETS
11	SD	5	3.9/9.2	127	282

REGISTERED CIVIL ENGINEER — DATE 06-14-16

PLANS APPROVAL DATE 07-11-16

REGISTERED PROFESSIONAL ENGINEER — ALI LARI — No. C65846 — Exp. 12-31-17 — CIVIL — STATE OF CALIFORNIA

The State of California or its officers or agents shall not be responsible for the accuracy or completeness of electronic copies of this plan sheet.

This LOTB sheet was prepared in accordance with the Caltrans Soil & Rock Logging, Classification, & Presentation Manual (2010 Edition).

See 2010 Revised Standard Plans RSP A10F and RSP A10G for Soil Legend, and A10H for Rock Legend.

BENCH MARK

5 7.30
PK Nail & Washer in conc. curb.
W'ly nose of median island on J St.
50± east of SD-5 OC.
Elev 23.67 ft
NAVD88

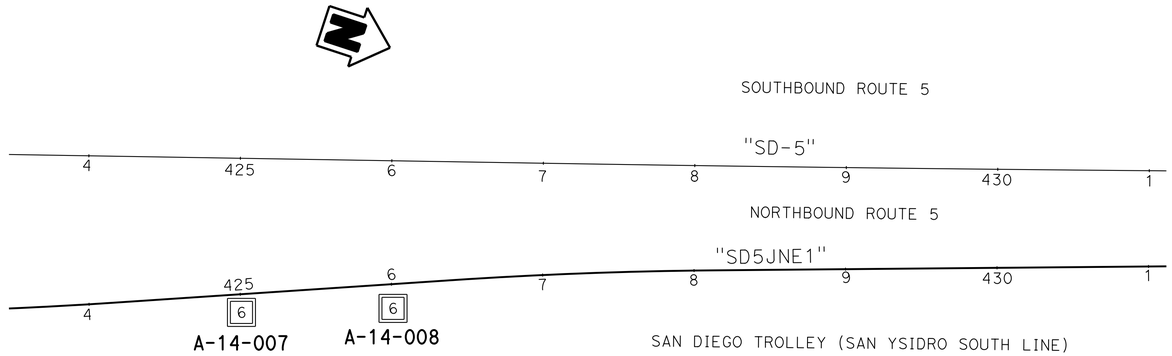

PLAN

1" = 50'

Note: Groundwater was not encountered during field investigation.

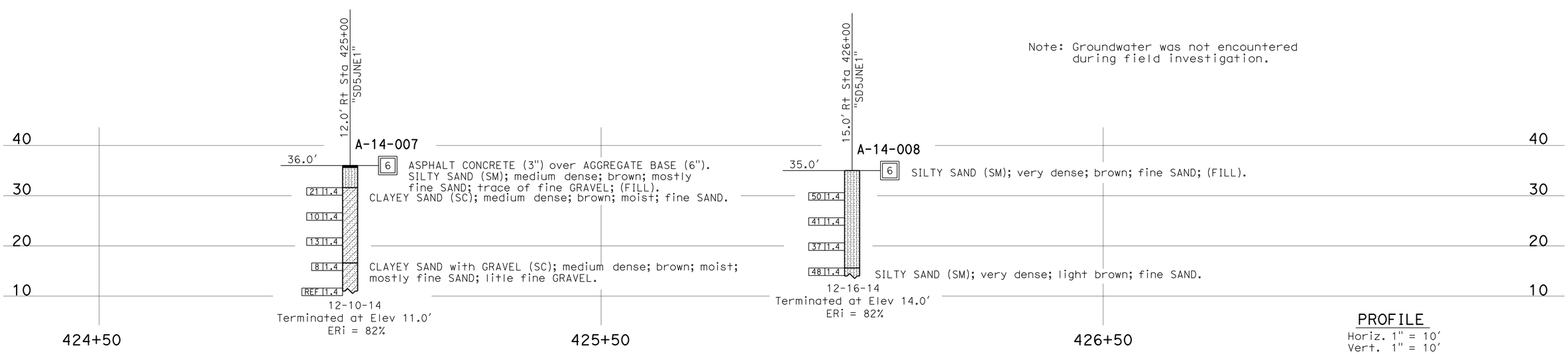

PROFILE

Horiz. 1" = 10'
Vert. 1" = 10'

ENGINEERING SERVICES	MATERIALS AND GEOTECHNICAL SERVICES	STATE OF CALIFORNIA DEPARTMENT OF TRANSPORTATION	DIVISION OF ENGINEERING SERVICES STRUCTURE DESIGN	BRIDGE NO.	RW3 J STREET ON-RAMP
FUNCTIONAL SUPERVISOR	DRAWN BY: F. Nguyen	FIELD INVESTIGATION BY:	DESIGN BRANCH X	POST MILE 7.4	LOG OF TEST BORINGS
NAME: S. Wei	CHECKED BY: J. Tesar	A. Lari			

OGS CIVIL LOG OF TEST BORINGS SHEET

ORIGINAL SCALE IN INCHES FOR REDUCED PLANS 0 1 2 3

UNIT: 3650
PROJECT NUMBER & PHASE: 11140000451 CONTRACT NO.: 11-244004

DISREGARD PRINTS BEARING EARLIER REVISION DATES

REVISION DATES: 03-05-15 03-12-15 03-26-15 — SHEET X OF X

FILE => 1114000045qc003.dgn

USERNAME => s127400 DATE PLOTTED => 21-JUL-2016 TIME PLOTTED => 14:29

Dist	COUNTY	ROUTE	POST MILES TOTAL PROJECT	SHEET No.	TOTAL SHEETS
11	SD	5	3.9/9.2	128	282

REGISTERED CIVIL ENGINEER 06-15-16 DATE

07-11-16
PLANS APPROVAL DATE

REGISTERED PROFESSIONAL ENGINEER KENNETH SAYLER No. C66456 Exp. 06/30/18 CIVIL STATE OF CALIFORNIA

THE STATE OF CALIFORNIA OR ITS OFFICERS OR AGENTS SHALL NOT BE RESPONSIBLE FOR THE ACCURACY OR COMPLETENESS OF SCANNED COPIES OF THIS PLAN SHEET.

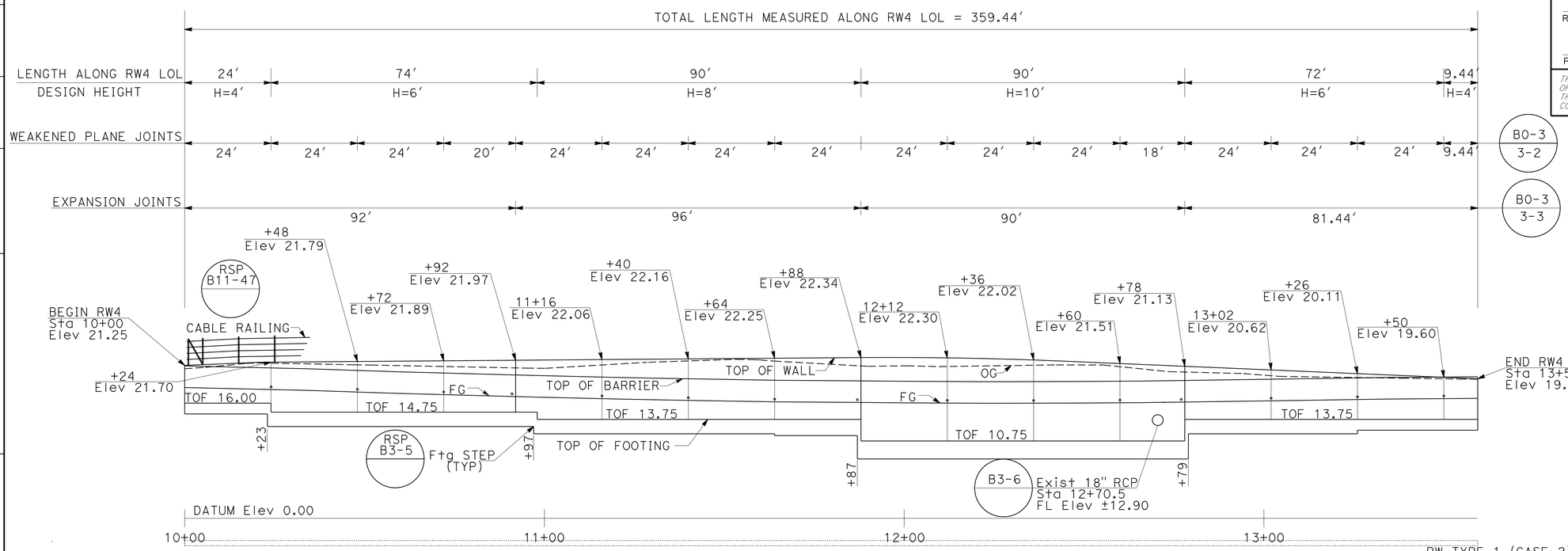

DEVELOPED ELEVATION

SCALE: Horiz: 1"= 20'
Vert: 1"= 5'

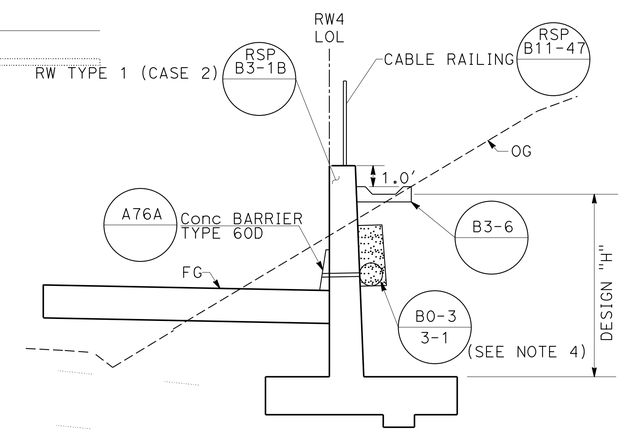

TYPICAL SECTION

NO SCALE

NOTES:

1. FOR DETAILS NOT SHOWN SEE STANDARD PLAN RSP B3-1B
2. FOR RETAINING WALL ANGLE POINTS SEE RETAINING WALL DETAIL SHEET R1-4.
3. PLACE EXPANSION JOINTS THROUGH Conc BARRIER TYPE 60D TO COINCIDE WITH RW LOCATIONS.
4. FOR WEEP HOLE AND GEOCOMPOSITE DRAIN ALTERNATIVE TO BRIDGE DETAIL B0-3 3-1 SEE RETAINING WALL DETAILS SHEET R1-4.

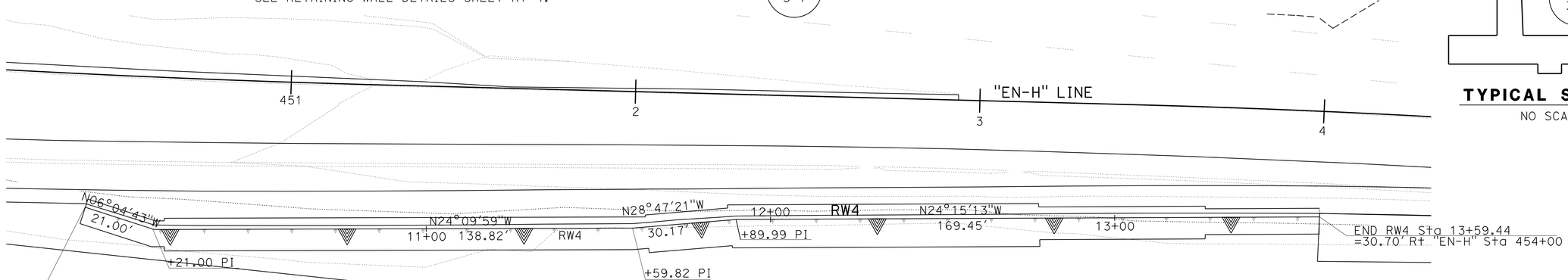

PLAN

SCALE: 1" = 20'

LOCATION 7

RETAINING WALL "RW4" PLAN

SCALE AS SHOWN

R4-1

APPROVED FOR RETAINING WALL WORK ONLY

REVISED BY | DATE REVISED
KEVIN BALUYUT | KEN SAYLER
CALCULATED-DESIGNED BY | CHECKED BY
FUNCTIONAL SUPERVISOR: DUY TON

STATE OF CALIFORNIA - DEPARTMENT OF TRANSPORTATION
Caltrans
DESIGN

LAST REVISION 06-27-16 | DATE PLOTTED => 21-JUL-2016 | TIME PLOTTED => 14:03

Dist	COUNTY	ROUTE	POST MILES TOTAL PROJECT	SHEET No.	TOTAL SHEETS
11	SD	5	3.9/9.2	129	282

REGISTERED CIVIL ENGINEER 06-15-16 DATE

07-11-16
PLANS APPROVAL DATE

REGISTERED PROFESSIONAL ENGINEER KENNETH SAYLER No. C66456 Exp. 6-30-18 CIVIL STATE OF CALIFORNIA

THE STATE OF CALIFORNIA OR ITS OFFICERS OR AGENTS SHALL NOT BE RESPONSIBLE FOR THE ACCURACY OR COMPLETENESS OF SCANNED COPIES OF THIS PLAN SHEET.

RETAINING WALL "RW4"

LOCATION	STRUCTURE EXCAVATION (TYPE Z-2) (AERIALLY DEPOSITED LEAD)	STRUCTURE BACKFILL (RETAINING WALL)	PERVIOUS BACKFILL MATERIAL (RETAINING WALL)	STRUCTURAL CONCRETE, RETAINING WALL	BAR REINFORCING STEEL (RETAINING WALL)	CONCRETE BARRIER (TYPE 60D)	CABLE RAILING	ARCHITECTURAL TREATMENT	MINOR CONCRETE (GUTTER)
STATION	(CY)	(CY)	(CY)	(CY)	(LB)	(LF)	(LF)	(SQFT)	(LF)
10+00 - 13+59.44 "RW4" LINE	2,150	1,030	11	355	32,300	360	360	0	360
TOTALS	2,150	1,030	11	355	32,300	360	360	0	360

RETAINING WALL "RW4" QUANTITIES

R4-2

STATE OF CALIFORNIA - DEPARTMENT OF TRANSPORTATION
Caltrans® DESIGN

FUNCTIONAL SUPERVISOR: DUY TON

CALCULATED-DESIGNED BY: KENNETH SAYLER
CHECKED BY: KENNETH SAYLER

REVISED BY
DATE REVISED

LAST REVISION 06-27-16
DATE PLOTTED => 21-JUL-2016
TIME PLOTTED => 14:03

DIST	COUNTY	ROUTE	POST MILES TOTAL PROJECT	SHEET No.	TOTAL SHEETS
11	SD	5	3.9/9.2	130	282

REGISTERED CIVIL ENGINEER 06-14-16 DATE

07-11-16
PLANS APPROVAL DATE

REGISTERED PROFESSIONAL ENGINEER ALI LARI No. C65846 Exp 12-31-17 CIVIL STATE OF CALIFORNIA

The State of California or its officers or agents shall not be responsible for the accuracy or completeness of electronic copies of this plan sheet.

This LOTB sheet was prepared in accordance with the Caltrans Soil & Rock Logging, Classification, & Presentation Manual (2010 Edition).

See 2010 Revised Standard Plans RSP A10F and RSP A10G for Soil Legend, and A10H for Rock Legend.

BENCH MARK

5-7.8
2¼" CADT Disk
Set in conc. curb (nose of island)
Southbound Off to H St.
NW Quad SD-5 and H St.
Elev 28.64 ft
NAVD88

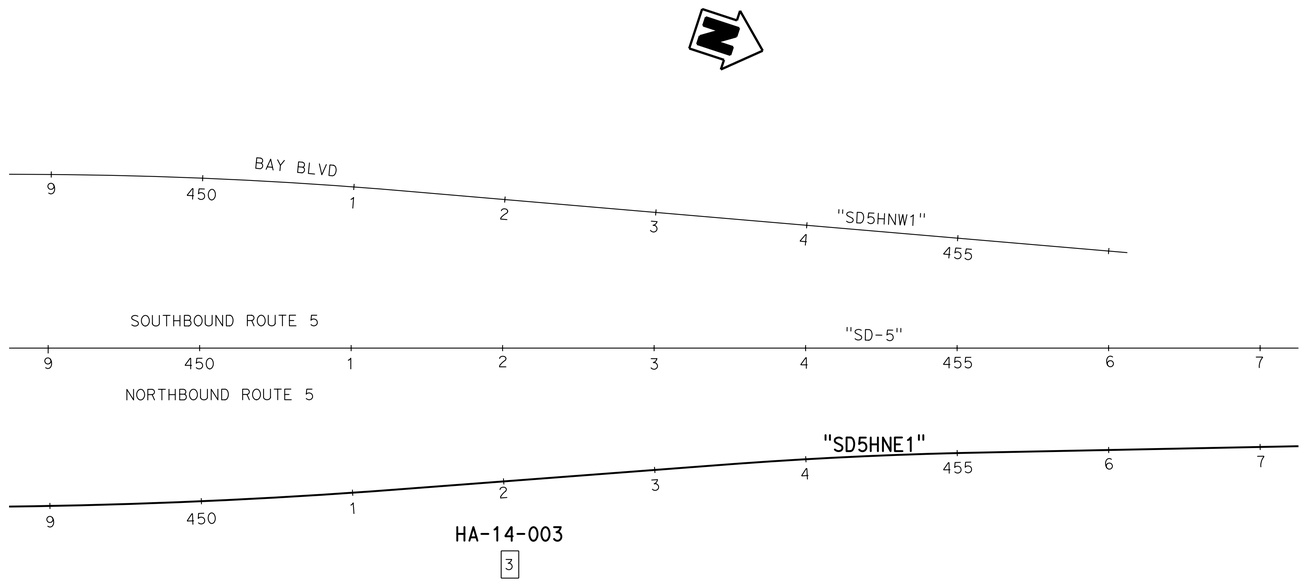

PLAN
1" = 50'

Note: Groundwater was not encountered during field investigation.

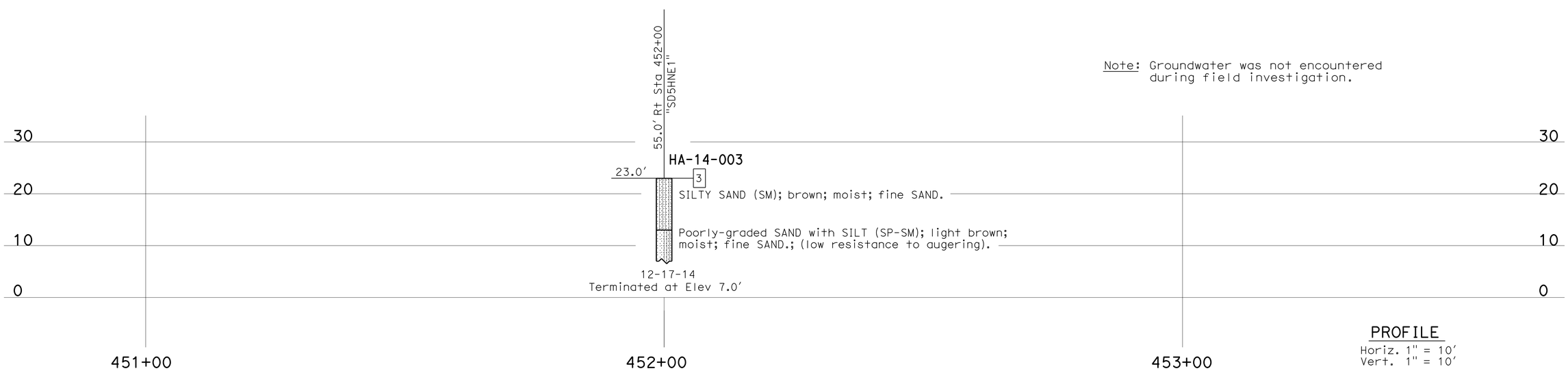

PROFILE
Horiz. 1" = 10'
Vert. 1" = 10'

ENGINEERING SERVICES	MATERIALS AND GEOTECHNICAL SERVICES	STATE OF CALIFORNIA DEPARTMENT OF TRANSPORTATION	DIVISION OF ENGINEERING SERVICES STRUCTURE DESIGN DESIGN BRANCH X	BRIDGE NO. / POST MILE 7.9	RW4 H STREET ON-RAMP LOG OF TEST BORINGS
FUNCTIONAL SUPERVISOR NAME: S. Wei	DRAWN BY: F. Nguyen CHECKED BY: J. Tesar	FIELD INVESTIGATION BY: A. Lari			

OGS CIVIL LOG OF TEST BORINGS SHEET

ORIGINAL SCALE IN INCHES FOR REDUCED PLANS 0 1 2 3

UNIT: 3650
PROJECT NUMBER & PHASE: 11140000451 CONTRACT NO.: 11-244004

DISREGARD PRINTS BEARING EARLIER REVISION DATES → REVISION DATES 03-05-15 03-18-15 03-26-15 SHEET X OF X

FILE => 1114000045qd003.dgn

USERNAME => s127400 DATE PLOTTED => 21-JUL-2016 TIME PLOTTED => 14:29

Dist	COUNTY	ROUTE	POST MILES TOTAL PROJECT	SHEET No.	TOTAL SHEETS
11	SD	5	3.9/9.2	131	282

LICENSED LANDSCAPE ARCHITECT

07-11-16
PLANS APPROVAL DATE

LICENSED LANDSCAPE ARCHITECT
EVAN TORRES No. 3826
Expiration Date 01-31-18
Archived Date 06-16-16
Date
STATE OF CALIFORNIA

THE STATE OF CALIFORNIA OR ITS OFFICERS OR AGENTS SHALL NOT BE RESPONSIBLE FOR THE ACCURACY OR COMPLETENESS OF SCANNED COPIES OF THIS PLAN SHEET.

IRRIGATION LEGEND

SYMBOL	DESCRIPTION	SPRAY PATTERN	OPERATING PRESSURE (psi)	PRESSURE COMPENSATING	PLUS/MINUS 5% ② DISCHARGE: GALLONS PER MINUTE (GPM)	DISCHARGE: GALLONS PER HOUR (GPH)	RADIUS (ft)	WIDTH x LENGTH (ft)	FLOW SHUTOFF DEVICE	INLET CONNECTION (NPT INCH)	POSITIVE-LOCKING Adj ARC STOP	BACKSPLASH PREVENTER	DIFFUSER PIN	DISTANCE CONTROL FLAP	Adj DISCHARGE	SPRINKLER ASSEMBLY: RISER: RISER TYPE	RISER: MATERIAL: PLASTIC	RISER: MATERIAL: GALVANIZED	RISER: SIZE (IPS INCH)	RISER: HEIGHT (INCH)	RISER: ⑥ SWING JOINT (INCH)	RISER: RISER SUPPORT	POP-UP: ⑥ SWING JOINT (INCH)	POP-UP: INLET CONNECTION (NPT INCH)	POP-UP: SPRINKLER PROTECTOR (TYPE)	POP-UP: POP-UP HEIGHT (INCH)	TREE WELL: ⑥ SWING JOINT (INCH)	REMARKS
□	RISER SPRINKLER ASSEMBLY	-	30	-	1.21	-	4x15	-	-	¾	-	-	X	-	-	I	X	-	¾	12	¾	-	-	-	-	-	-	SIDE STRIP
△	RISER SPRINKLER ASSEMBLY	-	30	-	1.73	-	9x18	-	-	¾	-	-	X	-	-	I	X	-	¾	12	¾	-	-	-	-	-	-	SIDE STRIP
●	TREE WELL SPRINKLER ASSEMBLY Mod	-	30	X	1.00	-	-	-	-	½	-	-		-	-	-	-	-	-	-	-	-	-	-	-	-	½	FLOOD BUBBLER ④⑨⑩⑪

X IN BOX DENOTES REQUIREMENT

APPLICABLE WHEN CIRCLED BELOW:

1 - SEE SPECIAL PROVISIONS.
② - IF A PRESSURE COMPENSATING DEVICE IS SPECIFIED, THE DISCHARGE AND RADII SHOWN REFLECT ITS USE.
3 - MUST HAVE AN INTERNAL OR EXTERNAL CHECK VALVE.
④ - NON-ADJUSTABLE DISCHARGE RATE.
5 - REQUIRED ADJACENT TO SHOULDERS, CURBS, SIDEWALKS, AND DIKES.
⑥ - SEE DETAIL.
7 - ADJUSTABLE ARC.
8 - MATCHED PRECIPITATION RATE NOZZLES.
⑨ - REFER TO PIPE SIZING CHARTS.
⑩ - INSTALL ONE FLOOD BUBBLER PER No. 15 TREE
⑪ - PRESSURE COMPENSATING

NOTES:

1. ALL LATERAL PLASTIC PIPE (SUPPLY LINE) NOT LABELED MUST BE 1 INCH, OR AS SHOWN ON PIPE SIZING CHARTS.
2. ALL SPRINKLER HEADS, VALVES AND PLASTIC PIPE (SUPPLY LINE) SHOWN NEAR MVP LOCATIONS ARE TO BE INSTALLED OUTSIDE OF THE PAVED MVP AREA. VALVES TO BE INSTALLED AT EXITING END OF THE MVP.
3. PULL ONE ADDITIONAL CNC WIRE FROM EACH CONTROLLER TO THE LAST VALVE BOX AT EACH VALVE MANIFOLD. (FOR FUTURE USE)

LEGEND:

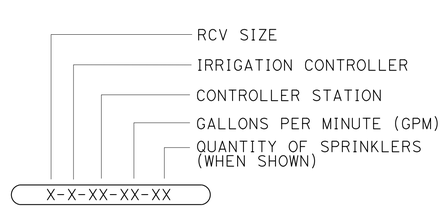

VALVE CODE

SCHEDULE 40 PIPE

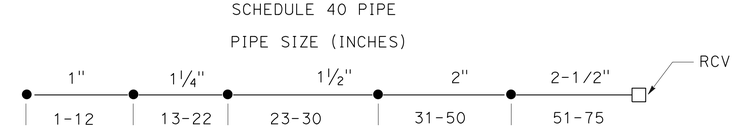

NUMBER OF HEADS @ 1.0 GPM

PIPE SIZING CHART
TREE WELL SPRINKLER ASSEMBLY
Mod
(FLOOD BUBBLER)

IRRIGATION SPRINKLER SCHEDULE

ISS-1

STATE OF CALIFORNIA - DEPARTMENT OF TRANSPORTATION
Caltrans LANDSCAPE ARCHITECTURE
SENIOR LANDSCAPE ARCHITECT: TIM MANN
CALCULATED-DESIGNED BY: EVAN TORRES
CHECKED BY: KENNY MAH
REVISED BY: X
DATE REVISED: MM-DD-YY

LAST REVISION 06-27-16
DATE PLOTTED => 21-JUL-2016
TIME PLOTTED => 14:03

Dist	COUNTY	ROUTE	POST MILES TOTAL PROJECT	SHEET No.	TOTAL SHEETS
11	SD	5	3.9/9.2	132	282

LICENSED LANDSCAPE ARCHITECT

07-11-16
PLANS APPROVAL DATE

LICENSED LANDSCAPE ARCHITECT
EVAN TORRES No. 5826
PROFESSIONAL 01-31-18
EXPIRATION DATE
06-16-16
DATE
STATE OF CALIFORNIA

THE STATE OF CALIFORNIA OR ITS OFFICERS OR AGENTS SHALL NOT BE RESPONSIBLE FOR THE ACCURACY OR COMPLETENESS OF SCANNED COPIES OF THIS PLAN SHEET.

NOTES:

1. FOR ACCURATE RIGHT OF WAY AND ACCESS DATA, CONTACT RIGHT OF WAY ENGINEERING AT THE DISTRICT OFFICE.
2. Exist Irr Cond ARE 8" ACP WITH 3" Irr SUPPLY LINE AND 2" Elect Cond, Typ

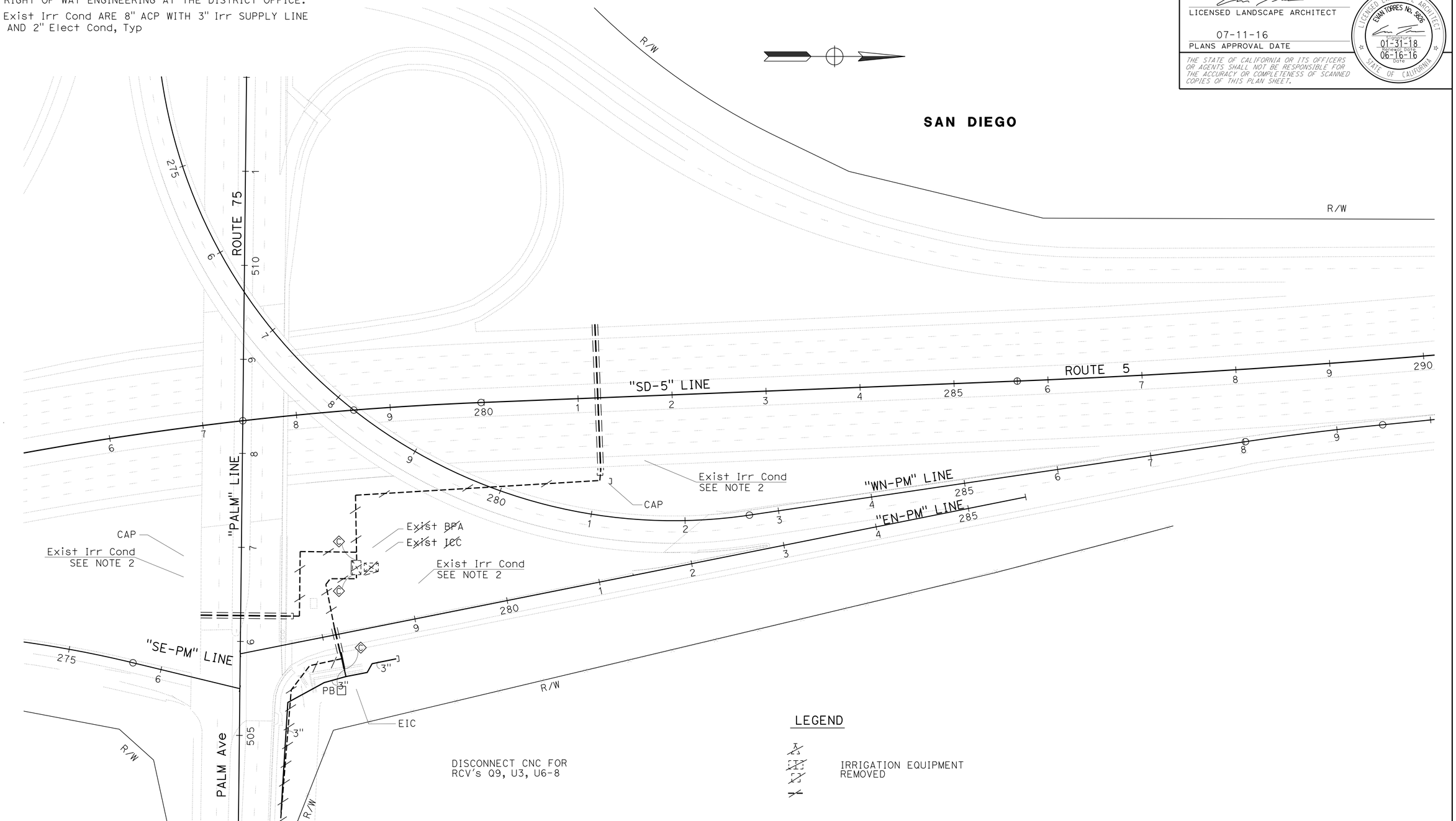

APPROVED FOR IRRIGATION REMOVAL WORK ONLY

LOCATION 2
IRRIGATION REMOVAL PLAN
SCALE: 1" = 50'

IR-1

STATE OF CALIFORNIA - DEPARTMENT OF TRANSPORTATION
Caltrans® LANDSCAPE ARCHITECTURE

SENIOR LANDSCAPE ARCHITECT: TIM MANN
CALCULATED-DESIGNED BY: EVAN TORRES
CHECKED BY: KENNY MAH
REVISED BY: X
DATE REVISED: MM-DD-YY

LAST REVISION 06-27-16
DATE PLOTTED => 21-JUL-2016
TIME PLOTTED => 14:03

Dist	COUNTY	ROUTE	POST MILES TOTAL PROJECT	SHEET No.	TOTAL SHEETS
11	SD	5	3.9/9.2	133	282

LICENSED LANDSCAPE ARCHITECT

07-11-16
PLANS APPROVAL DATE

LICENSED LANDSCAPE ARCHITECT
EVAN TORRES No. 3826
Signature
01-31-18
Renewal Date
06-16-16
Date
STATE OF CALIFORNIA

THE STATE OF CALIFORNIA OR ITS OFFICERS OR AGENTS SHALL NOT BE RESPONSIBLE FOR THE ACCURACY OR COMPLETENESS OF SCANNED COPIES OF THIS PLAN SHEET.

NOTES:

1. FOR ACCURATE RIGHT OF WAY AND ACCESS DATA, CONTACT RIGHT OF WAY ENGINEERING AT THE DISTRICT OFFICE.
2. Exist Irr Cond ARE 8" ACP WITH 3" Irr SUPPLY LINE AND 2" Elect Cond, Typ

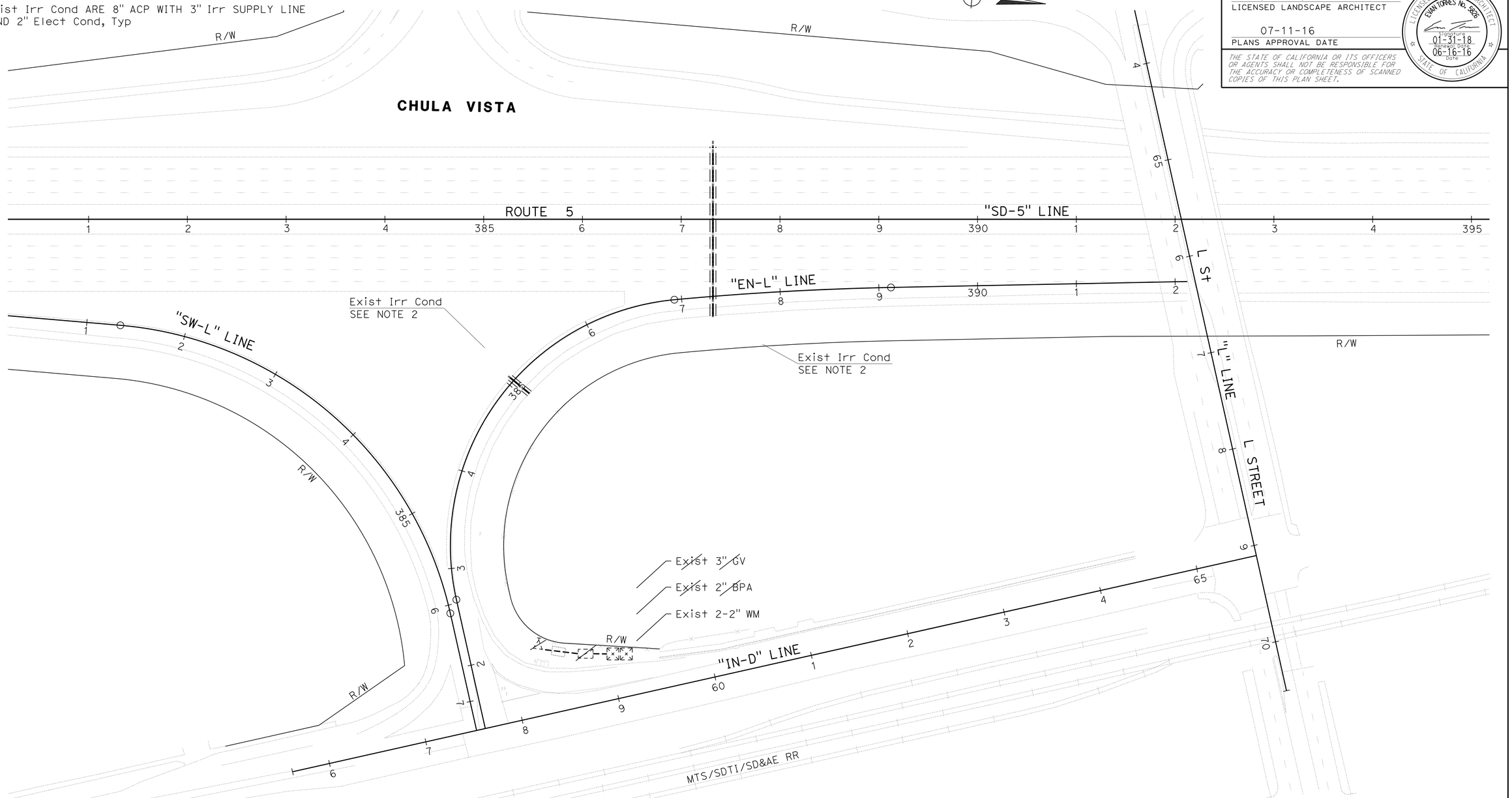

APPROVED FOR IRRIGATION REMOVAL WORK ONLY

LOCATION 5
IRRIGATION REMOVAL PLAN
SCALE: 1" = 50'

IR-2

STATE OF CALIFORNIA - DEPARTMENT OF TRANSPORTATION
Caltrans LANDSCAPE ARCHITECTURE

SENIOR LANDSCAPE ARCHITECT: TIM MANN
CALCULATED-DESIGNED BY: EVAN TORRES
CHECKED BY: KENNY MAH
REVISED BY: X
DATE REVISED: MM-DD-YY

LAST REVISION 06-27-16
DATE PLOTTED => 21-JUL-2016
TIME PLOTTED => 14:03

Dist	COUNTY	ROUTE	POST MILES TOTAL PROJECT	SHEET No.	TOTAL SHEETS
11	SD	5	3.9/9.2	134	282

LICENSED LANDSCAPE ARCHITECT

07-11-16
PLANS APPROVAL DATE

LICENSED LANDSCAPE ARCHITECT
EVAN TORRES No. 5826
Expiration Date 01-31-18
Renewal Date 06-16-16
Date
STATE OF CALIFORNIA

THE STATE OF CALIFORNIA OR ITS OFFICERS OR AGENTS SHALL NOT BE RESPONSIBLE FOR THE ACCURACY OR COMPLETENESS OF SCANNED COPIES OF THIS PLAN SHEET.

NOTES:

1. FOR ACCURATE RIGHT OF WAY AND ACCESS DATA, CONTACT RIGHT OF WAY ENGINEERING AT THE DISTRICT OFFICE.
2. Exist Irr Cond ARE 8" ACP WITH 3" Irr SUPPLY LINE AND 2" Elect Cond, Typ
3. All NEW Irr Cond ARE 8"CDHPE, WITH 3" PLASTIC PIPE (SUPPLY LINE) AND 2" Elec Cond FOR CNC.

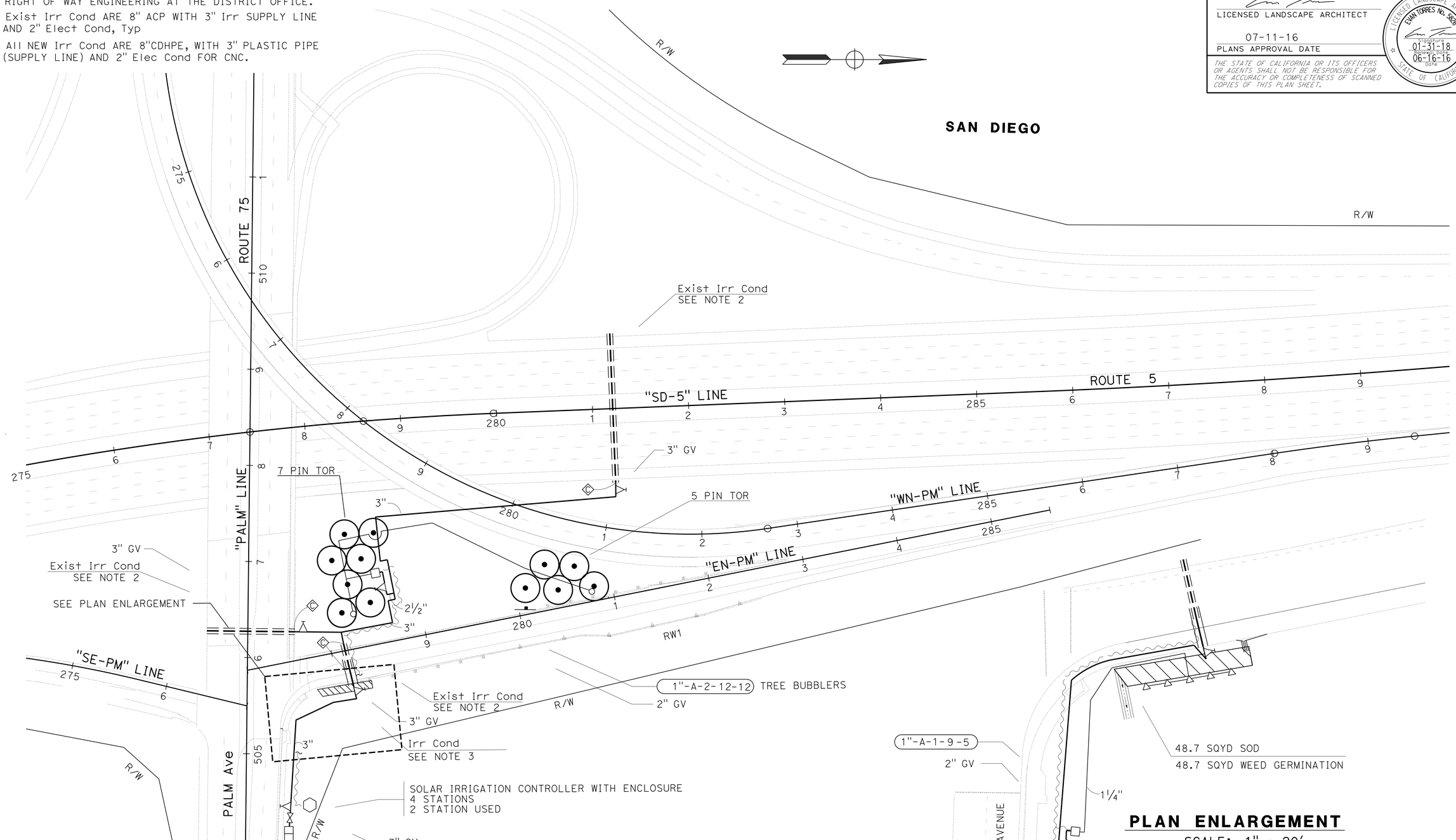

PLAN ENLARGEMENT

SCALE: 1" = 20'

APPROVED FOR IRRIGATION AND PLANTING WORK ONLY

LOCATION 2
IRRIGATION & PLANTING PLAN
IPP-1

SCALE: 1" = 50'

STATE OF CALIFORNIA - DEPARTMENT OF TRANSPORTATION
Caltrans® LANDSCAPE ARCHITECTURE

SENIOR LANDSCAPE ARCHITECT: TIM MANN
CALCULATED-DESIGNED BY: EVAN TORRES
CHECKED BY: KENNY MAH
REVISED BY: X
DATE REVISED: MM-DD-YY

LAST REVISION 07-08-16
DATE PLOTTED => 21-JUL-2016
TIME PLOTTED => 14:03

Dist	COUNTY	ROUTE	POST MILES TOTAL PROJECT	SHEET No.	TOTAL SHEETS
11	SD	5	3.9/9.2	135	282

LICENSED LANDSCAPE ARCHITECT

07-11-16
PLANS APPROVAL DATE

LICENSED LANDSCAPE ARCHITECT
EVAN TORRES No. 3826
PROFESSIONAL ENGINEER
01-31-18
EXPIRATION DATE
06-16-16
DATE
STATE OF CALIFORNIA

THE STATE OF CALIFORNIA OR ITS OFFICERS OR AGENTS SHALL NOT BE RESPONSIBLE FOR THE ACCURACY OR COMPLETENESS OF SCANNED COPIES OF THIS PLAN SHEET.

NOTES:

1. FOR ACCURATE RIGHT OF WAY AND ACCESS DATA, CONTACT RIGHT OF WAY ENGINEERING AT THE DISTRICT OFFICE.
2. Exist Irr Cond ARE 8" ACP WITH 3" Irr SUPPLY LINE AND 2" Elect Cond, Typ
3. All NEW Irr Cond ARE 8"CDHPE, WITH 3" PLASTIC PIPE (SUPPLY LINE) AND 2" Elec Cond FOR CNC.

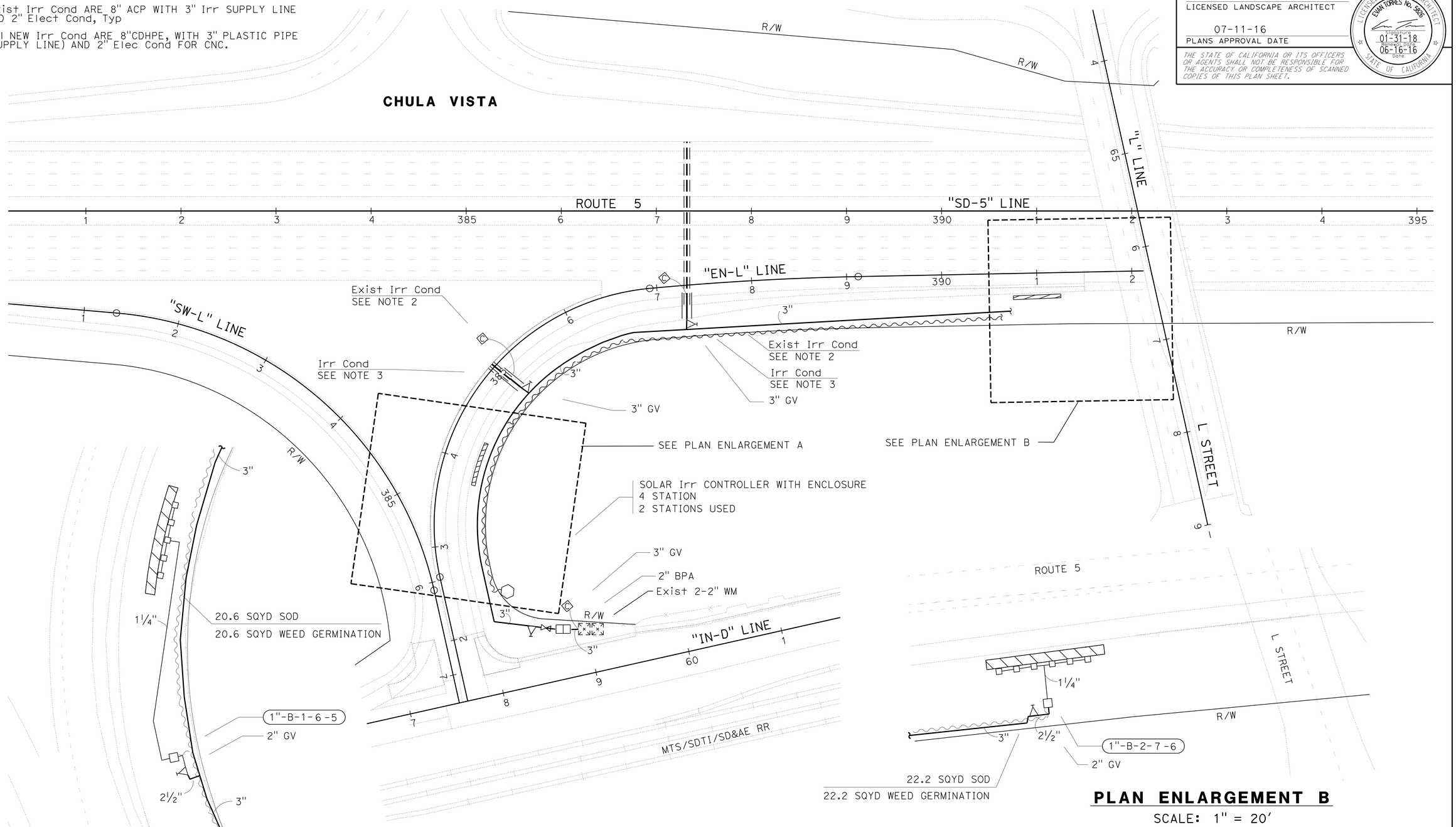

PLAN ENLARGEMENT A
SCALE: 1" = 20'

PLAN ENLARGEMENT B
SCALE: 1" = 20'

APPROVED FOR IRRIGATION AND PLANTING WORK ONLY

LOCATION 5
IRRIGATION & PLANTING PLAN
SCALE: 1" = 50'

IPP-2

X	MM-DD-YY
REVISED BY	DATE REVISED
EVAN TORRES	KENNY MAH
CALCULATED-DESIGNED BY	CHECKED BY
SENIOR LANDSCAPE ARCHITECT	TIM MANN

STATE OF CALIFORNIA - DEPARTMENT OF TRANSPORTATION
Caltrans® LANDSCAPE ARCHITECTURE

LAST REVISION 07-08-16 | DATE PLOTTED => 21-JUL-2016 | TIME PLOTTED => 14:03

Dist	COUNTY	ROUTE	POST MILES TOTAL PROJECT	SHEET No.	TOTAL SHEETS
11	SD	5	3.9/9.2	136	282

LICENSED LANDSCAPE ARCHITECT

07-11-16
PLANS APPROVAL DATE

LICENSED LANDSCAPE ARCHITECT
EVAN TORRES No. 5826
Expiration Date
01-31-18
Renewal Date
06-16-16
Date
STATE OF CALIFORNIA

THE STATE OF CALIFORNIA OR ITS OFFICERS OR AGENTS SHALL NOT BE RESPONSIBLE FOR THE ACCURACY OR COMPLETENESS OF SCANNED COPIES OF THIS PLAN SHEET.

NOTES:

1. FOR ACCURATE RIGHT OF WAY AND ACCESS DATA, CONTACT RIGHT OF WAY ENGINEERING AT THE DISTRICT OFFICE.
2. Exist Irr Cond ARE 8" ACP WITH 3" Irr SUPPLY LINE AND 2" Elect Cond, Typ
3. All NEW Irr Cond ARE 8"CDHPE, WITH 3" PLASTIC PIPE (SUPPLY LINE) AND 2" Elec Cond FOR CNC.
4. Exist 2" POTABLE WATER METER AND BACKFLOW PREVENTER ASSEMBLY ARE LOCATED AT ORO VISTA ROAD AND TOCAYO AVENUE.

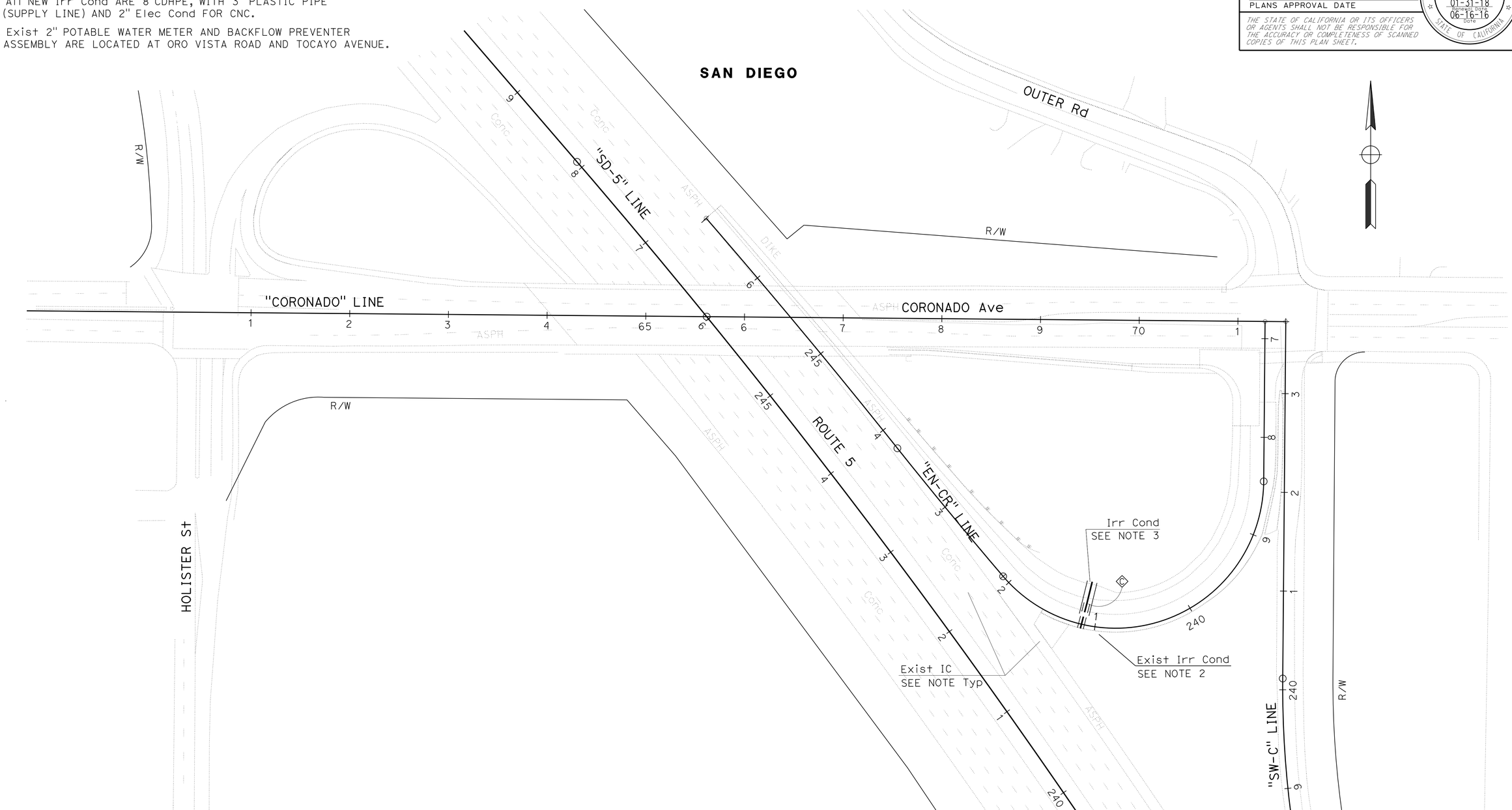

APPROVED FOR IRRIGATION WORK ONLY

SCALE: 1" = 50'

LOCATION 1
IRRIGATION PLAN
IP-1

STATE OF CALIFORNIA - DEPARTMENT OF TRANSPORTATION
Caltrans LANDSCAPE ARCHITECTURE

SENIOR LANDSCAPE ARCHITECT: TIM MANN
CALCULATED-DESIGNED BY: EVAN TORRES
CHECKED BY: KENNY MAH
REVISED BY: X
DATE REVISED: MM-DD-YY

LAST REVISION 07-08-16
DATE PLOTTED => 21-JUL-2016
TIME PLOTTED => 14:03

Dist	COUNTY	ROUTE	POST MILES TOTAL PROJECT	SHEET No.	TOTAL SHEETS
11	SD	5	3.9/9.2	137	282

LICENSED LANDSCAPE ARCHITECT

07-11-16

PLANS APPROVAL DATE

LICENSED LANDSCAPE ARCHITECT
EVAN TORRES No. 3826
01-31-18
Renewal Date
06-16-16
Date
STATE OF CALIFORNIA

THE STATE OF CALIFORNIA OR ITS OFFICERS OR AGENTS SHALL NOT BE RESPONSIBLE FOR THE ACCURACY OR COMPLETENESS OF SCANNED COPIES OF THIS PLAN SHEET.

NOTES:

1. FOR ACCURATE RIGHT OF WAY AND ACCESS DATA, CONTACT RIGHT OF WAY ENGINEERING AT THE DISTRICT OFFICE.
2. Exist Irr Cond ARE 8" ACP WITH 3" Irr SUPPLY LINE AND 2" Elect Cond, Typ
3. All NEW Irr Cond ARE 8"CDHPE, WITH 3" PLASTIC PIPE (SUPPLY LINE) AND 2" Elec Cond FOR CNC.
4. Exist 2" POTABLE WATER METER AND BACKFLOW PREVENTER ASSEMBLY ARE LOCATED AT 1591 W. FRONTAGE ROAD.

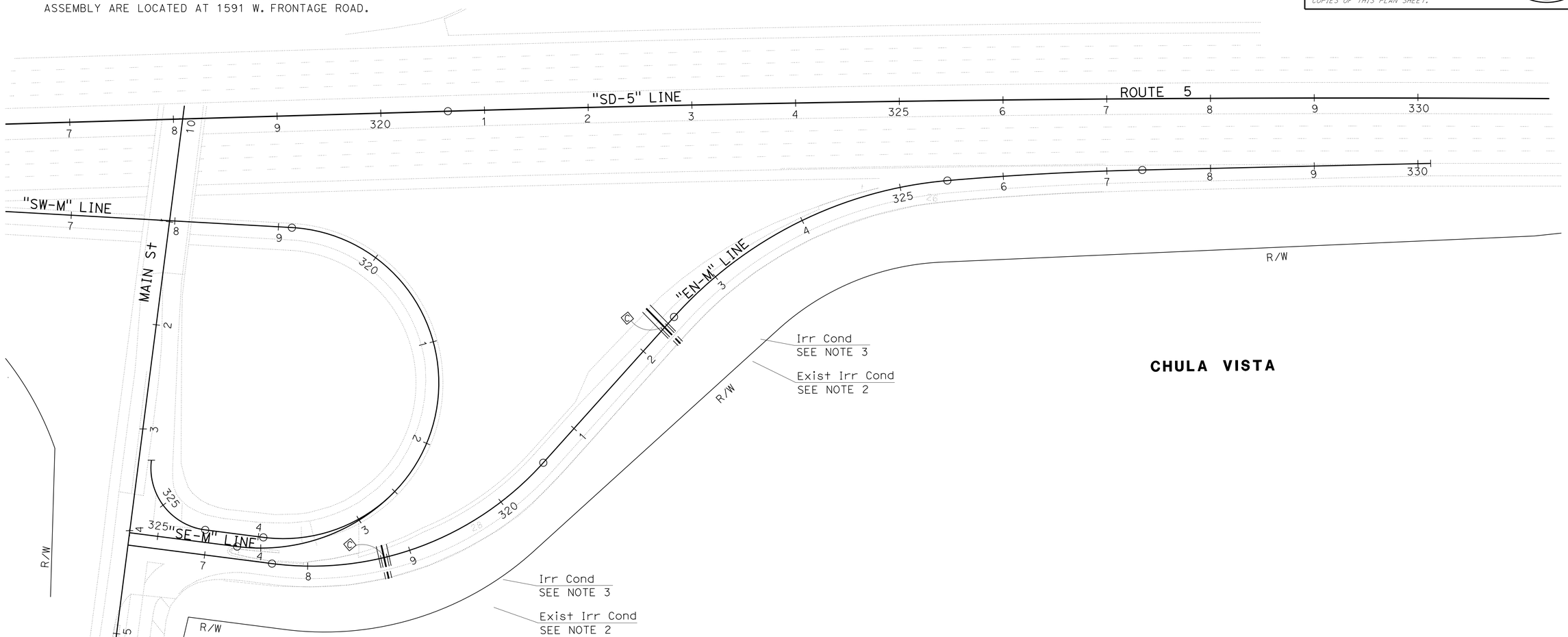

APPROVED FOR IRRIGATION WORK ONLY

SCALE: 1" = 50'

LOCATION 3
IRRIGATION PLAN
IP-2

STATE OF CALIFORNIA - DEPARTMENT OF TRANSPORTATION
Caltrans LANDSCAPE ARCHITECTURE

SENIOR LANDSCAPE ARCHITECT: TIM MANN

CALCULATED-DESIGNED BY: EVAN TORRES
CHECKED BY: KENNY MAH

REVISED BY: X
DATE REVISED: MM-DD-YY

LAST REVISION: 07-08-16
DATE PLOTTED => 21-JUL-2016
TIME PLOTTED => 14:03

BORDER LAST REVISED 7/2/2010
USERNAME => s127400
DGN FILE => 1114000045sp002.dgn
RELATIVE BORDER SCALE IS IN INCHES 0 1 2 3
UNIT 2816
PROJECT NUMBER & PHASE 11140000451

Dist	COUNTY	ROUTE	POST MILES TOTAL PROJECT	SHEET No.	TOTAL SHEETS
11	SD	5	3.9/9.2	138	282

LICENSED LANDSCAPE ARCHITECT

07-11-16
PLANS APPROVAL DATE

LICENSED LANDSCAPE ARCHITECT
EVAN TORRES No. 3826
TIMOTHY J. MANN
01-31-18
EXPIRATION DATE
06-16-16
DATE
STATE OF CALIFORNIA

THE STATE OF CALIFORNIA OR ITS OFFICERS OR AGENTS SHALL NOT BE RESPONSIBLE FOR THE ACCURACY OR COMPLETENESS OF SCANNED COPIES OF THIS PLAN SHEET.

NOTES:

1. FOR ACCURATE RIGHT OF WAY AND ACCESS DATA, CONTACT RIGHT OF WAY ENGINEERING AT THE DISTRICT OFFICE.
2. Exist Irr Cond ARE 8" ACP WITH 3" Irr SUPPLY LINE AND 2" Elect Cond, Typ
3. All NEW Irr Cond ARE 8"CDHPE, WITH 3" PLASTIC PIPE (SUPPLY LINE) AND 2" Elec Cond FOR CNC.
4. Exist 2" POTABLE WATER METER AND BACKFLOW PREVENTER ASSEMBLY ARE LOCATED AT 504 BAY Blvd/H STREET

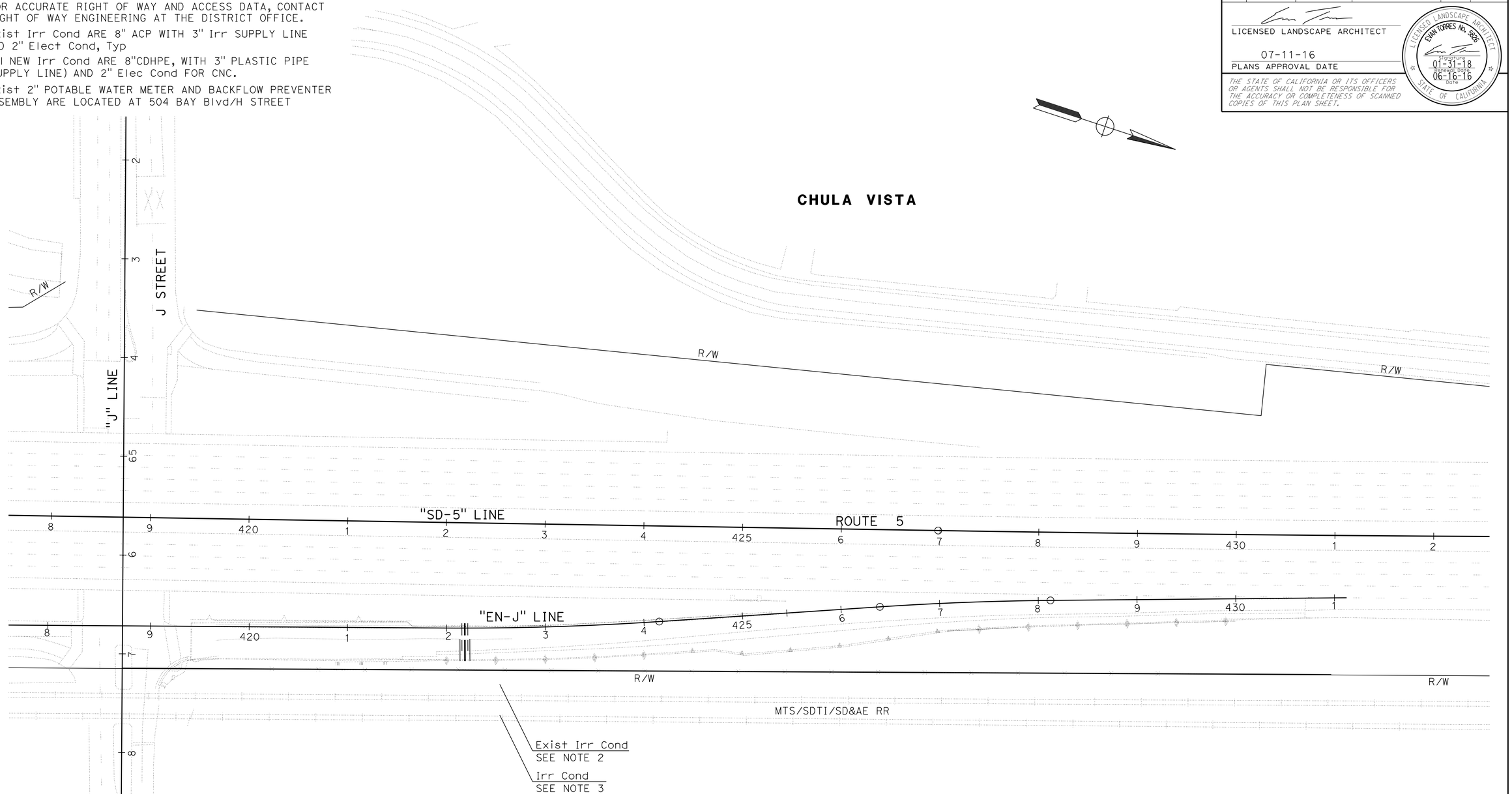

APPROVED FOR IRRIGATION WORK ONLY

SCALE: 1" = 50'

LOCATION 6
IRRIGATION PLAN
IP-3

STATE OF CALIFORNIA - DEPARTMENT OF TRANSPORTATION
Caltrans® LANDSCAPE ARCHITECTURE

SENIOR LANDSCAPE ARCHITECT: TIM MANN
CALCULATED-DESIGNED BY: EVAN TORRES
CHECKED BY: KENNY MAH
REVISED BY: X
DATE REVISED: MM-DD-YY

LAST REVISION 07-08-16
DATE PLOTTED => 21-JUL-2016
TIME PLOTTED => 14:03

Dist	COUNTY	ROUTE	POST MILES TOTAL PROJECT	SHEET No.	TOTAL SHEETS
11	SD	5	3.9/9.2	139	282

LICENSED LANDSCAPE ARCHITECT

07-11-16
PLANS APPROVAL DATE

LICENSED LANDSCAPE ARCHITECT
EVAN TORRES No. 3826
TODAY'S DATE 01-31-18
EXPIRATION DATE 06-16-16
Date
STATE OF CALIFORNIA

THE STATE OF CALIFORNIA OR ITS OFFICERS OR AGENTS SHALL NOT BE RESPONSIBLE FOR THE ACCURACY OR COMPLETENESS OF SCANNED COPIES OF THIS PLAN SHEET.

NOTES:

1. FOR ACCURATE RIGHT OF WAY AND ACCESS DATA, CONTACT RIGHT OF WAY ENGINEERING AT THE DISTRICT OFFICE.
2. Exist Irr Cond ARE 8" ACP WITH 3" Irr SUPPLY LINE AND 2" Elect Cond, Typ
3. All NEW Irr Cond ARE 8"CDHPE, WITH 3" PLASTIC PIPE (SUPPLY LINE) AND 2" Elec Cond FOR CNC.
4. Exist 2" POTABLE WATER METER AND BACKFLOW PREVENTER ASSEMBLY ARE LOCATED AT E STREET ON RAMP TO SB Rte 5.

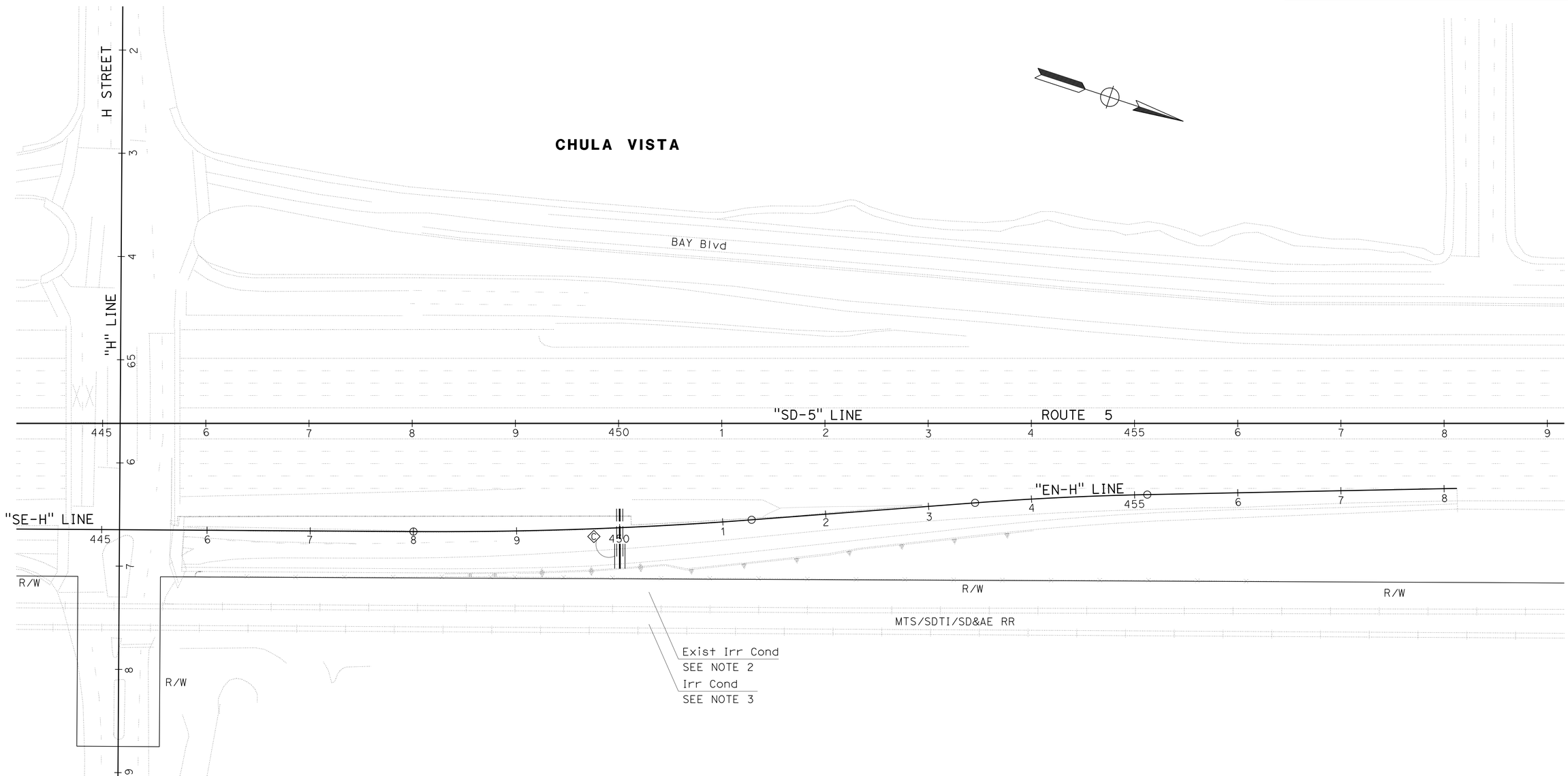

APPROVED FOR IRRIGATION WORK ONLY

SCALE: 1" = 50'

LOCATION 7
IRRIGATION PLAN
IP-4

REVISED BY	DATE REVISED
X	MM-DD-YY

EVAN TORRES — KENNY MAH — CALCULATED-DESIGNED BY — CHECKED BY

SENIOR LANDSCAPE ARCHITECT — TIM MANN

STATE OF CALIFORNIA - DEPARTMENT OF TRANSPORTATION
Caltrans® LANDSCAPE ARCHITECTURE

LAST REVISION 07-08-16 — DATE PLOTTED => 21-JUL-2016 — TIME PLOTTED => 14:03

Dist	COUNTY	ROUTE	POST MILES TOTAL PROJECT	SHEET No.	TOTAL SHEETS
11	SD	5	3.9/9.2	140	282

LICENSED LANDSCAPE ARCHITECT

07-11-16
PLANS APPROVAL DATE

LICENSED LANDSCAPE ARCHITECT EVAN TORRES No. 3826 Expiration Date 01-31-18 Renewal Date 06-16-16 Date STATE OF CALIFORNIA

THE STATE OF CALIFORNIA OR ITS OFFICERS OR AGENTS SHALL NOT BE RESPONSIBLE FOR THE ACCURACY OR COMPLETENESS OF SCANNED COPIES OF THIS PLAN SHEET.

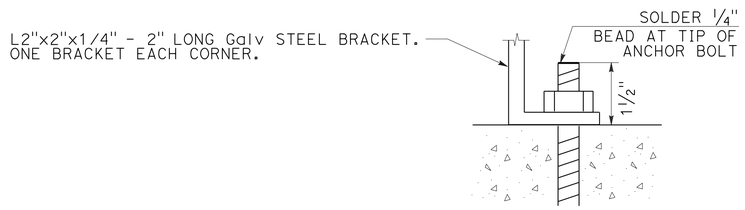

DETAIL "B"

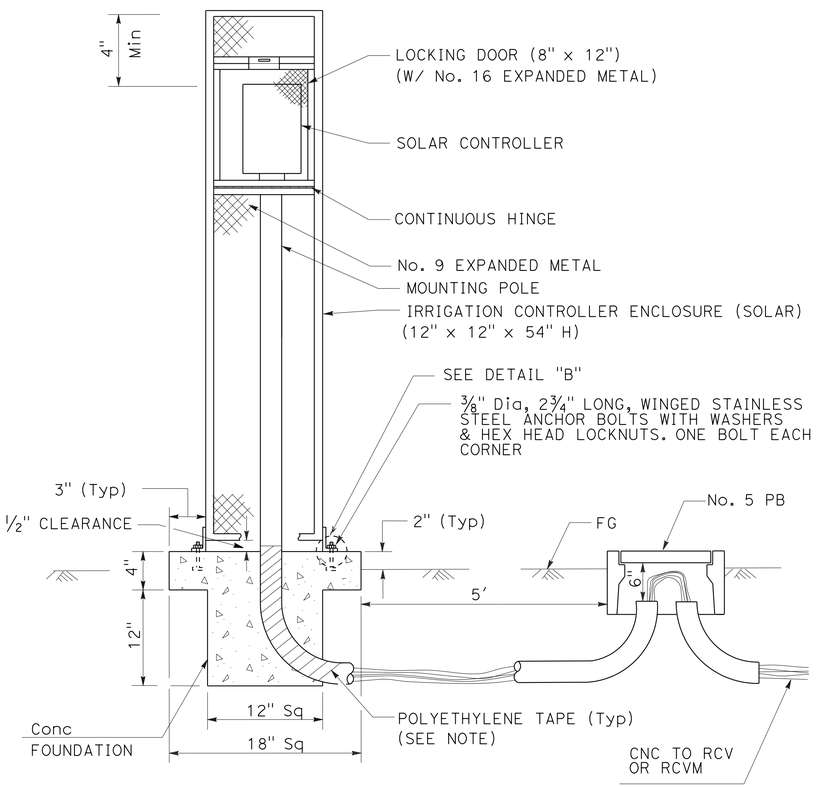

NOTE:

ALL METAL IN CONTACT WITH SOIL AND PCC MUST BE WRAPPED WITH 2" WIDE PLASTIC BACKED ADHESIVE POLYETHYLENE TAPE, 20 MIL THICK WITH 1/2" OVERLAP.

SOLAR POWERED IRRIGATION CONTROLLER WITH ENCLOSURE

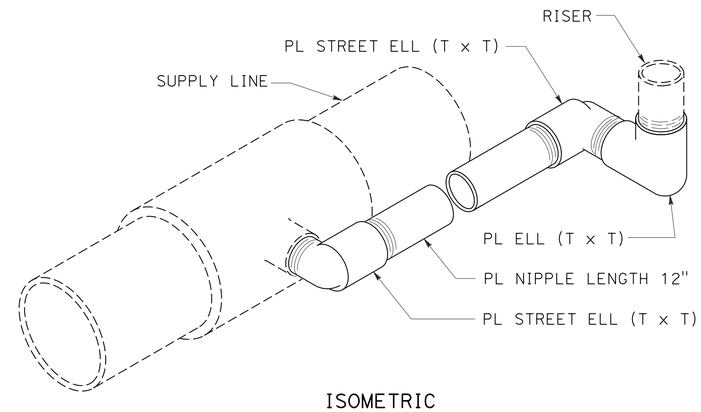

ISOMETRIC

SWING JOINT (Mod)

INSTALLATION	TYPE FITTING	INSTALLATION	TYPE FITTING
	90° ELL		DEAD END
	BEND 45° 22.5° 11.25°		GATE VALVE
			VERTICAL BEND (TYPE I) 45° 22.5° 11.25°
	TEE		OR VERTICAL BEND (TYPE II) 45° 22.5° 11.25°

NOTES:

Min 1 CF PCC FOR 1 1/2" PIPE SIZE AND SMALLER.
Min 2 CF PCC FOR 2" PIPE SIZE.
Min 2 CF PCC FOR 3" AND 4" PIPE SIZE.
Min 3 CF PCC FOR 6" PIPE SIZE.
Min 4 CF PCC FOR 8" PIPE SIZE.
USE #3 REINFORCING BAR WHERE SHOWN.

THRUST BLOCKS (Mod)

APPROVED FOR IRRIGATION WORK ONLY

IRRIGATION DETAILS

NO SCALE

ID-1

STATE OF CALIFORNIA - DEPARTMENT OF TRANSPORTATION
Caltrans® LANDSCAPE ARCHITECTURE

SENIOR LANDSCAPE ARCHITECT: TIM MANN
CALCULATED-DESIGNED BY: EVAN TORRES
CHECKED BY: KENNY MAH
REVISED BY: X
DATE REVISED: MM-DD-YY

LAST REVISION 06-27-16
DATE PLOTTED => 21-JUL-2016
TIME PLOTTED => 14:03

Dist	COUNTY	ROUTE	POST MILES TOTAL PROJECT	SHEET No.	TOTAL SHEETS
11	SD	5	3.9/9.2	141	282

LICENSED LANDSCAPE ARCHITECT

07-11-16
PLANS APPROVAL DATE

LICENSED LANDSCAPE ARCHITECT
EVAN TORRES No. 3826
PROFESSIONAL ENGINEER 01-31-18
PROFESSIONAL ENGINEER 06-16-16
Date
STATE OF CALIFORNIA

THE STATE OF CALIFORNIA OR ITS OFFICERS OR AGENTS SHALL NOT BE RESPONSIBLE FOR THE ACCURACY OR COMPLETENESS OF SCANNED COPIES OF THIS PLAN SHEET.

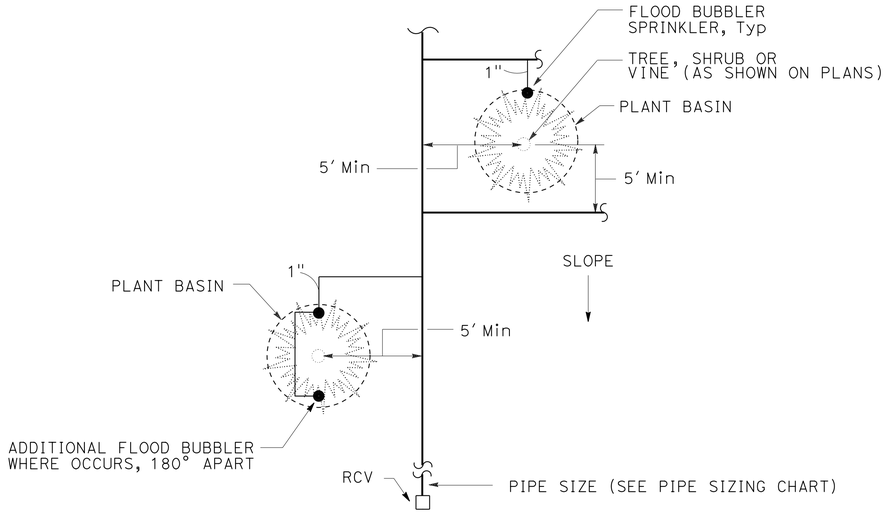

PLAN

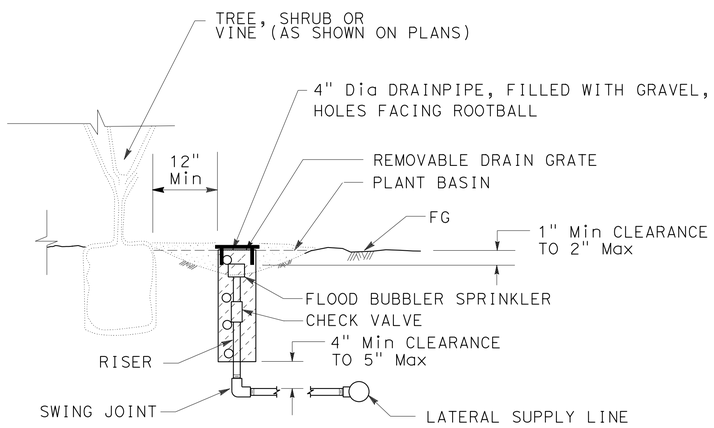

SECTION

NOTES:

1. INSTALL FLOOD BUBBLER SPRINKLER ON UPHILL SIDE OF PLANT WHEN ON SLOPE
2. INSTALL FLOOD BUBBLER WITHIN PLANT BASIN

TREE WELL SPRINKLER ASSEMBLY (Mod)

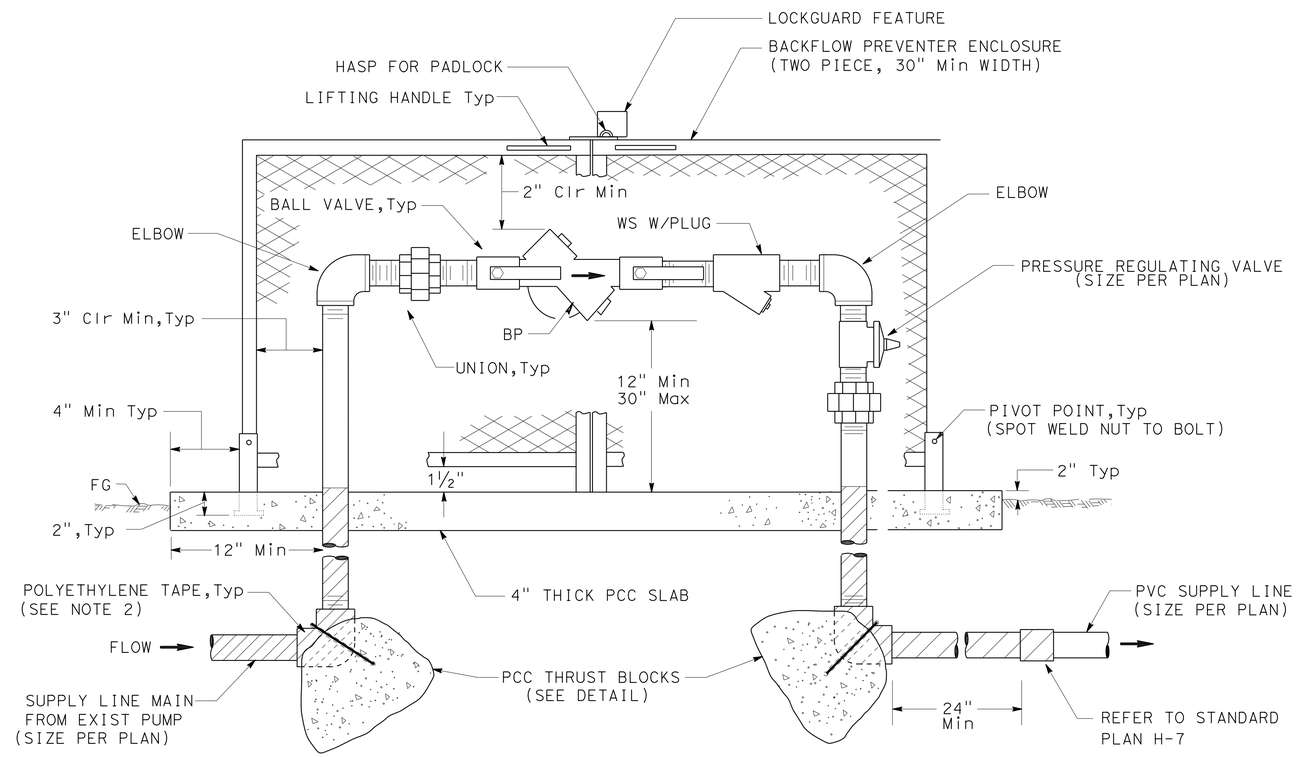

ELEVATION

NOTES:

1. WS AND FITTINGS MUST BE SAME SIZE AS BACKFLOW PREVENTER SHOWN ON PLANS.
2. BPA MUST BE CONSTRUCTED WITH COPPER PIPE FROM PLASTIC PIPE SUPPLY LINE (MAIN) THROUGH BPA TO CONNECTION TO PVC AS SHOWN ON DETAIL.
3. ALL METAL IN CONTACT WITH SOIL AND PORTLAND CEMENT CONCRETE MUST BE WRAPPED WITH 2" WIDE PLASTIC BACKED ADHESIVE POLYETHYLENE TAPE 0.020" THICK WITH ½" OVERLAP.

BACKFLOW PREVENTER ASSEMBLY (BPA) - (Mod) (IN ENCLOSURE)

APPROVED FOR IRRIGATION WORK ONLY

IRRIGATION DETAILS

NO SCALE

ID-2

STATE OF CALIFORNIA - DEPARTMENT OF TRANSPORTATION
Caltrans® LANDSCAPE ARCHITECTURE

SENIOR LANDSCAPE ARCHITECT: TIM MANN
CALCULATED-DESIGNED BY: EVAN TORRES
CHECKED BY: KENNY MAH
REVISED BY: X
DATE REVISED: MM-DD-YY

LAST REVISION 06-27-16
DATE PLOTTED => 21-JUL-2016
TIME PLOTTED => 14:03

Dist	COUNTY	ROUTE	POST MILES TOTAL PROJECT	SHEET No.	TOTAL SHEETS
11	SD	5	3.9/9.2	142	282

LICENSED LANDSCAPE ARCHITECT

07-11-16
PLANS APPROVAL DATE

LICENSED LANDSCAPE ARCHITECT
EVAN TORRES No. 3826
PROFESSIONAL ENGINEER
01-31-18
EXPIRATION DATE
06-16-16
Date
STATE OF CALIFORNIA

THE STATE OF CALIFORNIA OR ITS OFFICERS OR AGENTS SHALL NOT BE RESPONSIBLE FOR THE ACCURACY OR COMPLETENESS OF SCANNED COPIES OF THIS PLAN SHEET.

IRRIGATION QUANTITIES

DESCRIPTION	IRRIGATION CONTROLLER	VALVE NUMBER	SOLAR POWERED IRRIGATION CONTROLLER WITH ENCLOSURE (EA)								COPPER PIPE (SUPPLY LINE) (LF)		WM (EA)	BPA (EA)		PRV (EA)	REMOTE CONTROL VALVE (MASTER) (EA)			FLOW SENSOR (EA)			GATE VALVE (EA)			BALL VALVE (EA)		REMOTE CONTROL VALVE (EA)			PLASTIC PIPE (SCHEDULE 40) (SUPPLY LINE) (LF)				PLASTIC PIPE (CLASS 315) (SUPPLY LINE) (LF)		CHECK VALVE (EA)				SPRINKLER ASSEMBLY (EA)				
			4 STATION	16 STATION	24 STATION	40 STATION	48 STATION	TWO WIRE	CEC (N) SINGLE	CEC (N) DOUBLE	2"	3"	2"	2"	(N) ENCLOSURE	2"	1½"	2"	3"	1½"	2"	3"	1½"	2"	3"	1"	1½"	1"	1½"	2"	1"	1¼"	1½"	2"	2½"	3"	1"	1¼"	1½"	2"	TREE WELL	RISER GEAR DRIVEN	POP-UP GEAR DRIVEN	RISER	POP-UP
SUBTOTALS PER VALVE ON LATERAL SUPPLY SIDE OF CONTROL VALVE	A	1	-	-	-	-	-	-	-	-	-	-	-	-	-	-	-	-	-	-	-	-	-	-	-	-	-	-	-	-	50′	150′	-	-	-	-	-	-	-	-	-	5	-
		2																													490	30′	-	-	-	-	-	-	-	12	-	-	-	-
		-																													-	-	-	-	-	-	-	-	-	-	-	-	-	-
		-																													-	-	-	-	-	-	-	-	-	-	-	-	-	-
	B	1																													50′	100′	-	-	-	-	-	-	-	-	-	5	-
		2																													50′	50′	-	-	-	-	-	-	-	-	-	6	-
		-																													-	-	-	-	-	-	-	-	-	-	-	-	-
		-																													-	-	-	-	-	-	-	-	-	-	-	-	-
SUBTOTALS PER SHEET ON MAIN SUPPLY SIDE OF CONTROL VALVE	SHEET NUMBER	IPP-1	-	-	-	-	-	-	-	-	-	-	-	-	-	-	-	-	-	-	-	-	-	-	-	-	-	-	-	-	-	-	-	-	-	25′								
		IPP-2	1	-	-	-	-	-	-	-	-	-	-	1	1	1	-	-	-	-	-	-	-	2	4	-	-	2	-	-	-	-	-	-	20	740								
		IPP-3	-	-	-	-	-	-	-	-	-	-	-	-	-	-	-	-	-	-	-	-	-	-	-	-	-	-	-	-	-	-	-	-	-	45′								
		IPP-4	1	-	-	-	-	-	-	-	-	-	-	1	1	1	-	-	-	-	-	-	-	2	3	-	-	2	-	-	-	-	-	-	40	950								
		IPP-5	-	-	-	-	-	-	-	-	-	-	-	-	-	-	-	-	-	-	-	-	-	-	-	-	-	-	-	-	-	-	-	-	-	15′								
		IPP-6	-	-	-	-	-	-	-	-	-	-	-	-	-	-	-	-	-	-	-	-	-	-	-	-	-	-	-	-	-	-	-	-	-	15′								
		-	-	-	-	-	-	-	-	-	-	-	-	-	-	-	-	-	-	-	-	-	-	-	-	-	-	-	-	-	-	-	-	-	-	-								
		-	-	-	-	-	-	-	-	-	-	-	-	-	-	-	-	-	-	-	-	-	-	-	-	-	-	-	-	-	-	-	-	-	-	-								
		-	-	-	-	-	-	-	-	-	-	-	-	-	-	-	-	-	-	-	-	-	-	-	-	-	-	-	-	-	-	-	-	-	-	-								
TOTAL			2	-	-	-	-	-	-	-	-	-	-	2		2	-	-	-	-	-	-	-	4	7	-	-	4	-	-	640′	330′	-	-	60	1790	-	-	-	-	12	-	-	16	-

(N) - NOT A SEPARATE PAY ITEM, FOR INFORMATION ONLY.

STATE OF CALIFORNIA - DEPARTMENT OF TRANSPORTATION
Caltrans® LANDSCAPE ARCHITECTURE

SENIOR LANDSCAPE ARCHITECT: TIM MANN
CALCULATED-DESIGNED BY: EVAN TORRES
CHECKED BY: KENNY MAH
REVISED BY: X
DATE REVISED: MM-DD-YY

IRRIGATION QUANTITIES
IQ-1

LAST REVISION 06-27-16
DATE PLOTTED => 21-JUL-2016
TIME PLOTTED => 14:03

Dist	COUNTY	ROUTE	POST MILES TOTAL PROJECT	SHEET No.	TOTAL SHEETS
11	SD	5	3.9/9.2	143	282

LICENSED LANDSCAPE ARCHITECT

07-11-16
PLANS APPROVAL DATE

LICENSED LANDSCAPE ARCHITECT
EVAN TORRES No. 3826
SIGNED DATE 01-31-18
EXPIRED DATE 06-16-16
DATE
STATE OF CALIFORNIA

THE STATE OF CALIFORNIA OR ITS OFFICERS OR AGENTS SHALL NOT BE RESPONSIBLE FOR THE ACCURACY OR COMPLETENESS OF SCANNED COPIES OF THIS PLAN SHEET.

PLANTING LEGEND

WEED GERMINATION

PLANTING LEGEND

PLANT GROUP	PLANT No.	SYMBOL	BOTANICAL NAME	COMMON NAME	SIZE	QUANTITY EACH	HOLE SIZE (INCH) Dia	HOLE SIZE (INCH) DEPTH	BASIN TYPE	SOIL AMENDMENT TYPE	SOIL AMENDMENT RATE	IRON SULFATE RATE	FERTILIZER ③ PLANTING	FERTILIZER ③ PLT ESTB	WOOD MULCH ③ BASIN TYPE	WOOD MULCH ③ BASIN CY	STAKING	PLANTING LIMITS MINIMUM DISTANCE (ft) FROM ETW	Pvmt	FENCE	WALL	PAVED DITCH	EARTH DITCH	ON CENTER (ft)	REMARKS
-	1		①	SOD	SQYD	91.5	-	-	-	-	-	-	-	-	-	-	-	-	-	-	-	-	-	-	SOD ①
U	2		PINUS TORREYANA	TORREY PINE	No. 15	12	②	②	1	-	-	-	3 Pkt	-	-	0.06	④	-	-	-	-	-	-	⑤	TREE ⑥⑦

APPLICABLE WHEN CIRCLED:

① - 20-25% NASSELLA PULCHRA (PURPLE NEEDLEGRASS)
20-25% HORDEUM CALIFORNICUM (CALIFORNIA BARLEY)
20-25% HORDEUM B. BRACHYANTHERUM (MEADOW BARLEY)
35-40% FESTUCA RUBRA (MOLATA FESCUE)

② - SUFFICIENT TO RECIEVE ROOT BALL.

③ - QUANTITIES SHOWN ARE "PER PLANT" UNLESS SHOWN AS SQFT OR SQYD APPLICATION RATES.

④ - SEE STANDARD DETAIL H4

⑤ - AS SHOWN ON PLANS

⑥ - PLANT SOURCE FROM SAN DIEGO OR ORANGE COUNTY ONLY

⑦ - MINIMUM 6' IN HEIGHT FOR PINUS TORREYANA IN CONTAINER

APPLICATION AND SEQUENCE OF WORK

SEQUENCE	ITEM	MATERIAL DESCRIPTION	MATERIAL TYPE	APPLICATION RATE	REMARKS
STEP 1	IMPORTED TOPSOIL	TOPSOIL	-	-	SEE DRAINAGE PLANS
STEP 2	COMPOST	COMPOST	MEDIUM	130 CY/ACRE	SEE WPC PLANS
STEP 3	INCORPORATE MATERIALS	TOPSOIL/COMPOST	-	-	SEE WPC PLANS
STEP 4	INSTALL IRRIGATION	-	-	-	SEE Irr AND PLANTING PLANS
STEP 5	WEED GERMINATION	-	-	-	SEE Irr AND PLANTING PLANS
STEP 6	SOD	-	-	-	SEE Irr AND PLANTING PLANS

WEED GERMINATION

SHEET NUMBER	SQYD
IPP-2	48.7
IPP-5	44.8
TOTAL	91.5

PLANT LIST
PL-1

EVAN TORRES — KENNY MAH — REVISED BY — DATE REVISED — X — MM-DD-YY
CALCULATED-DESIGNED BY — CHECKED BY
SENIOR LANDSCAPE ARCHITECT — TIM MANN
STATE OF CALIFORNIA - DEPARTMENT OF TRANSPORTATION
Caltrans LANDSCAPE ARCHITECTURE

LAST REVISION 06-27-16 — DATE PLOTTED => 21-JUL-2016 — TIME PLOTTED => 14:03

Dist	COUNTY	ROUTE	POST MILES TOTAL PROJECT	SHEET No.	TOTAL SHEETS
11	SD	5	3.9/9.2	144	282

REGISTERED CIVIL ENGINEER 06-15-16 DATE

07-11-16
PLANS APPROVAL DATE

REGISTERED PROFESSIONAL ENGINEER KENNETH SAYLER No. C66456 Exp. 06/30/18 CIVIL STATE OF CALIFORNIA

THE STATE OF CALIFORNIA OR ITS OFFICERS OR AGENTS SHALL NOT BE RESPONSIBLE FOR THE ACCURACY OR COMPLETENESS OF SCANNED COPIES OF THIS PLAN SHEET.

EROSION CONTROL (TYPE I) LEGEND

SEQUENCE	ITEM	MATERIAL		APPLICATION RATE	REMARKS
		DESCRIPTION	TYPE		
STEP 1	COMPOST	COMPOST	MEDIUM	270 CY/ACRE	-
STEP 2	INCORPORATE MATERIALS	-	-	-	INCORPORATE 12" DEPTH
STEP 3	COMPOST SOCK	-	12" Dia	-	-
STEP 4	DRY SEED	SEED	MIX 1	27 LB/ACRE	-

SEED

SEED MIX	BOTANICAL NAME (COMMON NAME)	PERCENT GERMINATION (MINIMUM)	POUNDS PURE LIVE SEED PER ACRE (SLOPE MEASUREMENT)
1	BACCHARIS PILULARIS (COYOTE BRUSH) [1]	35	0.5
	ERIOGONUM FASICULATUM (CALIFORNIA BUCKWHEAT) [1]	20	2.5
	ISOCOMA MENZIESII (COAST GOLDENBRUSH) [1]	25	2.0
	LASTHENIA CALIFORNICA (GOLDFIELDS) [1]	35	4.0
	LOTUS SCOPARIUS (DEERWEED) [1]	60	6.0
	LUPINUS BICOLOR (MINIATURE LUPINE) [1]	65	4.0
	NASSELLA PULCHRA (PURPLE NEEDLGGRASS) [1]	60	8.0
		TOTAL	27.0

[1] SEED PRODUCED IN CALIFORNIA ONLY

EROSION CONTROL LEGEND

ECL-1

STATE OF CALIFORNIA - DEPARTMENT OF TRANSPORTATION
Caltrans DESIGN

FUNCTIONAL SUPERVISOR: DUY TON
CALCULATED-DESIGNED BY / CHECKED BY
MELBA FULLER-FABIEN / KENNETH SAYLER
REVISED BY / DATE REVISED

LAST REVISION 06-27-16 | DATE PLOTTED => 21-JUL-2016 | TIME PLOTTED => 14:03

Dist	COUNTY	ROUTE	POST MILES TOTAL PROJECT	SHEET No.	TOTAL SHEETS
11	SD	5	3.9/9.2	145	282

REGISTERED CIVIL ENGINEER 06-15-16 DATE

07-11-16
PLANS APPROVAL DATE

REGISTERED PROFESSIONAL ENGINEER
KENNETH SAYLER
No. C66456
Exp. 06/30/18
CIVIL
STATE OF CALIFORNIA

THE STATE OF CALIFORNIA OR ITS OFFICERS OR AGENTS SHALL NOT BE RESPONSIBLE FOR THE ACCURACY OR COMPLETENESS OF SCANNED COPIES OF THIS PLAN SHEET.

NOTES:

1. FOR ACCURATE RIGHT OF WAY DATA, CONTACT RIGHT OF WAY ENGINEERING AT THE DISTRICT OFFICE.
2. EROSION CONTROL (TYPE 1) TO BE PLACED ON ALL DISTURBED SLOPES.

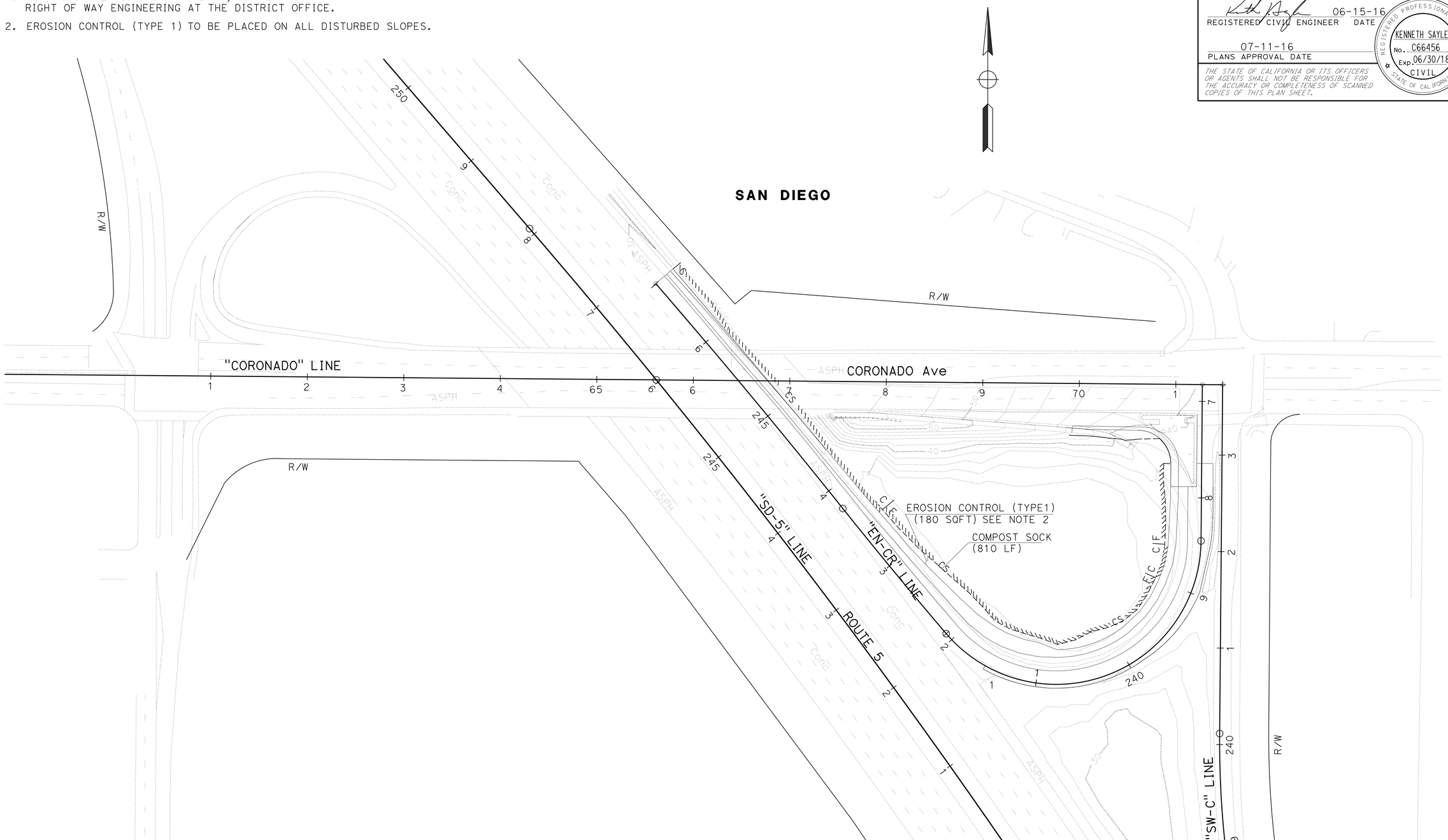

APPROVED FOR EROSION CONTROL WORK ONLY

EROSION CONTROL PLAN
LOCATION 1

SCALE: 1"=50'

EC-1

STATE OF CALIFORNIA - DEPARTMENT OF TRANSPORTATION
Caltrans
DESIGN

FUNCTIONAL SUPERVISOR: DUY TON
CALCULATED-DESIGNED BY: MELBA FULLER-FABIEN
CHECKED BY: KENNETH SAYLER
REVISED BY
DATE REVISED

LAST REVISION 06-27-16
DATE PLOTTED => 21-JUL-2016
TIME PLOTTED => 14:03

Dist	COUNTY	ROUTE	POST MILES TOTAL PROJECT	SHEET No.	TOTAL SHEETS
11	SD	5	3.9/9.2	146	282

REGISTERED CIVIL ENGINEER 06-15-16 DATE

07-11-16
PLANS APPROVAL DATE

REGISTERED PROFESSIONAL ENGINEER
KENNETH SAYLER
No. C66456
Exp. 06/30/18
CIVIL
STATE OF CALIFORNIA

THE STATE OF CALIFORNIA OR ITS OFFICERS OR AGENTS SHALL NOT BE RESPONSIBLE FOR THE ACCURACY OR COMPLETENESS OF SCANNED COPIES OF THIS PLAN SHEET.

NOTES:

1. FOR ACCURATE RIGHT OF WAY DATA, CONTACT RIGHT OF WAY ENGINEERING AT THE DISTRICT OFFICE.
2. EROSION CONTROL (TYPE1) TO BE PLACED ON ALL DISTURBED SLOPES.

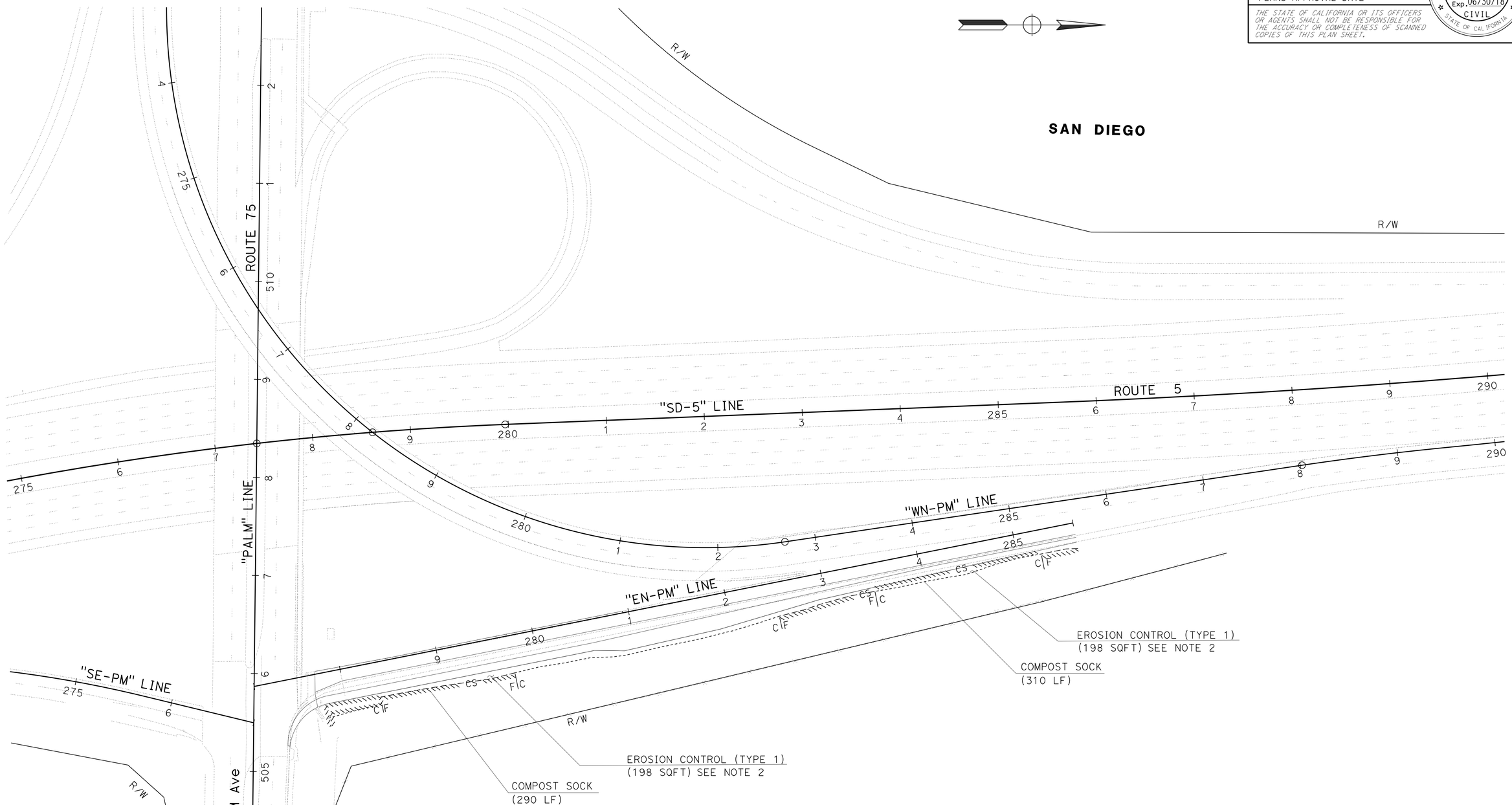

APPROVED FOR EROSION CONTROL WORK ONLY

EROSION CONTROL PLAN
LOCATION 2

SCALE : 1"=50'

EC-2

STATE OF CALIFORNIA - DEPARTMENT OF TRANSPORTATION
Caltrans
DESIGN

FUNCTIONAL SUPERVISOR: DUY TON
CALCULATED-DESIGNED BY: KENNETH SAYLER
CHECKED BY: MELBA FULLER-FABIEN
REVISED BY
DATE REVISED

LAST REVISION 06-27-16
DATE PLOTTED => 21-JUL-2016
TIME PLOTTED => 14:03

Dist	COUNTY	ROUTE	POST MILES TOTAL PROJECT	SHEET No.	TOTAL SHEETS
11	SD	5	3.9/9.2	147	282

REGISTERED CIVIL ENGINEER DATE 06-15-16

PLANS APPROVAL DATE 07-11-16

REGISTERED PROFESSIONAL ENGINEER KENNETH SAYLER No. C66456 Exp. 06/30/18 CIVIL STATE OF CALIFORNIA

THE STATE OF CALIFORNIA OR ITS OFFICERS OR AGENTS SHALL NOT BE RESPONSIBLE FOR THE ACCURACY OR COMPLETENESS OF SCANNED COPIES OF THIS PLAN SHEET.

NOTES:

1. FOR ACCURATE RIGHT OF WAY DATA, CONTACT RIGHT OF WAY ENGINEERING AT THE DISTRICT OFFICE.
2. EROSION CONTROL (TYPE 1) TO BE PLACED ON ALL DISTURBED SLOPES.

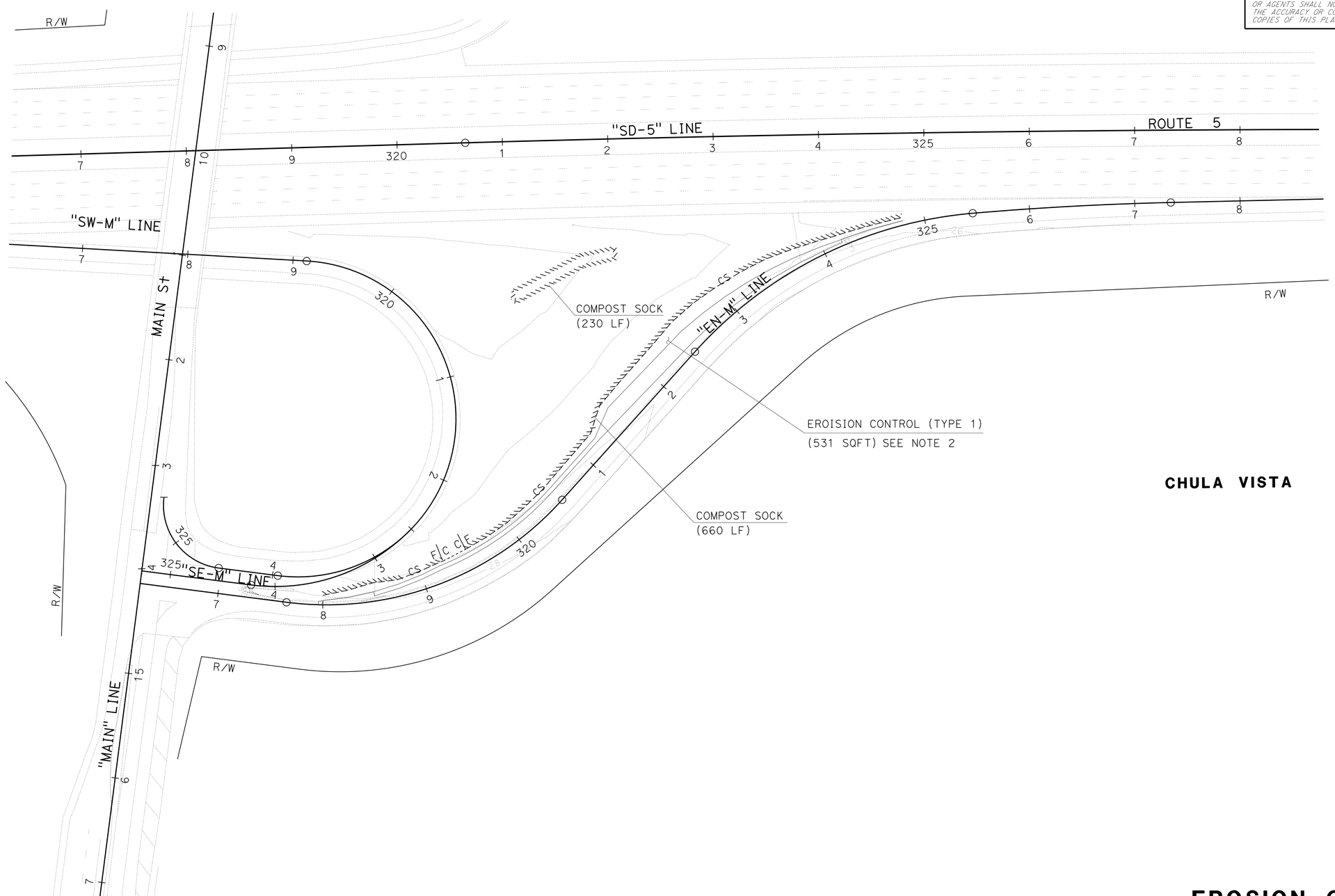

CHULA VISTA

APPROVED FOR EROSION CONTROL WORK ONLY

EROSION CONTROL PLAN
LOCATION 3

SCALE : 1"=50'

EC-3

STATE OF CALIFORNIA - DEPARTMENT OF TRANSPORTATION
Caltrans
DESIGN

FUNCTIONAL SUPERVISOR: DUY TON
CALCULATED-DESIGNED BY: MELBA FULLER-FABIEN
CHECKED BY: KENNETH SAYLER
REVISED BY
DATE REVISED

LAST REVISION 06-27-16
DATE PLOTTED => 21-JUL-2016
TIME PLOTTED => 14:03

Dist	COUNTY	ROUTE	POST MILES TOTAL PROJECT	SHEET No.	TOTAL SHEETS
11	SD	5	3.9/9.2	148	282

REGISTERED CIVIL ENGINEER 06-15-16 DATE

07-11-16
PLANS APPROVAL DATE

REGISTERED PROFESSIONAL ENGINEER
KENNETH SAYLER
No. C66456
Exp. 06/30/18
CIVIL
STATE OF CALIFORNIA

THE STATE OF CALIFORNIA OR ITS OFFICERS OR AGENTS SHALL NOT BE RESPONSIBLE FOR THE ACCURACY OR COMPLETENESS OF SCANNED COPIES OF THIS PLAN SHEET.

NOTES:

1. FOR ACCURATE RIGHT OF WAY DATA, CONTACT RIGHT OF WAY ENGINEERING AT THE DISTRICT OFFICE.
2. EROSION CONTROL (TYPE 1) TO BE PLACED ON ALL DISTURBED SLOPES.

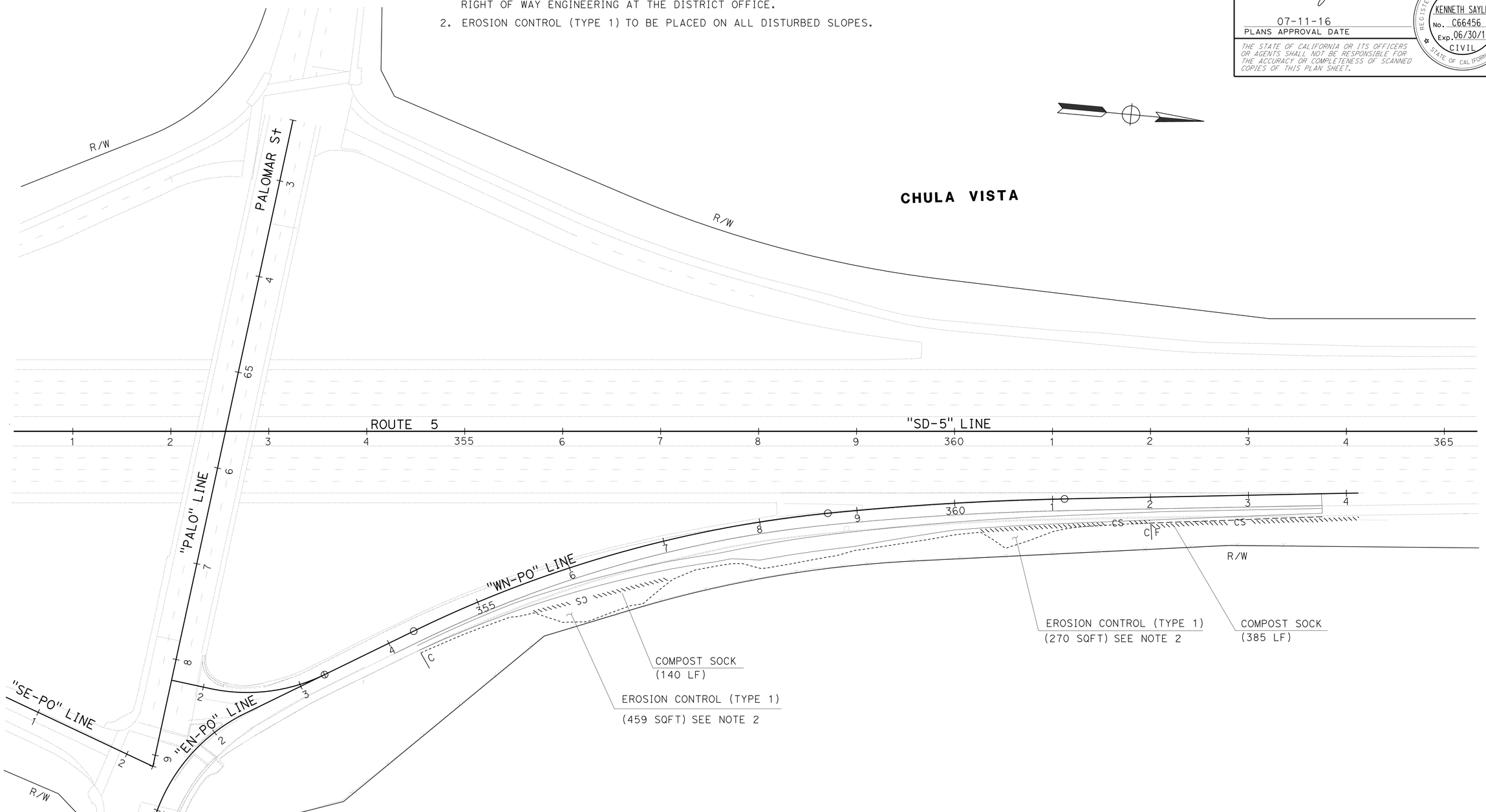

APPROVED FOR EROSION CONTROL WORK ONLY

EROSION CONTROL PLAN
LOCATION 4

SCALE : 1"=50'

EC-4

STATE OF CALIFORNIA - DEPARTMENT OF TRANSPORTATION
Caltrans®
DESIGN

FUNCTIONAL SUPERVISOR: DUY TON
CALCULATED-DESIGNED BY: MELBA FULLER-FABIEN
CHECKED BY: KENNETH SAYLER
REVISED BY
DATE REVISED

LAST REVISION 06-27-16
DATE PLOTTED => 21-JUL-2016
TIME PLOTTED => 14:03

BORDER LAST REVISED 7/2/2010
USERNAME => s127400
DGN FILE => 1114000045te004.dgn
RELATIVE BORDER SCALE IS IN INCHES 0 1 2 3
UNIT 2782
PROJECT NUMBER & PHASE 11140000451

Dist	COUNTY	ROUTE	POST MILES TOTAL PROJECT	SHEET No.	TOTAL SHEETS
11	SD	5	3.9/9.2	149	282

REGISTERED CIVIL ENGINEER 06-15-16 DATE

07-11-16
PLANS APPROVAL DATE

REGISTERED PROFESSIONAL ENGINEER KENNETH SAYLER No. C66456 Exp. 06/30/18 CIVIL STATE OF CALIFORNIA

THE STATE OF CALIFORNIA OR ITS OFFICERS OR AGENTS SHALL NOT BE RESPONSIBLE FOR THE ACCURACY OR COMPLETENESS OF SCANNED COPIES OF THIS PLAN SHEET.

NOTES:

1. FOR ACCURATE RIGHT OF WAY DATA, CONTACT RIGHT OF WAY ENGINEERING AT THE DISTRICT OFFICE.
2. EROSION CONTROL (TYPE 1) TO BE PLACED ON ALL DISTURBED SLOPES.

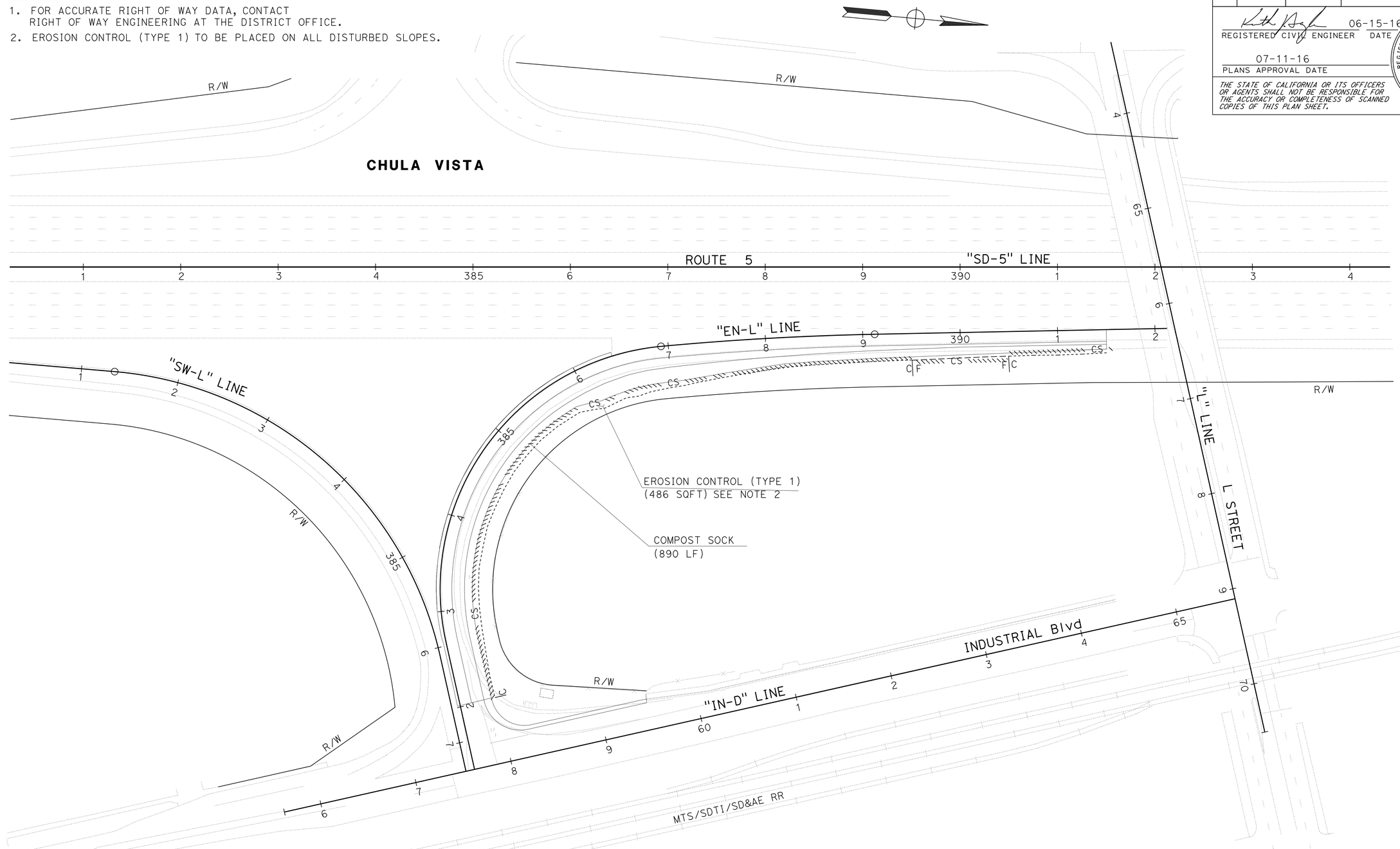

APPROVED FOR EROSION CONTROL WORK ONLY

EROSION CONTROL PLAN
LOCATION 5

SCALE : 1"=50'

EC-5

STATE OF CALIFORNIA - DEPARTMENT OF TRANSPORTATION
Caltrans® **DESIGN**

FUNCTIONAL SUPERVISOR: DUY TON
CALCULATED-DESIGNED BY / CHECKED BY
MELBA FULLER-FABIEN / KENNETH SAYLER
REVISED BY / DATE REVISED

LAST REVISION 06-27-16
DATE PLOTTED => 21-JUL-2016
TIME PLOTTED => 14:03

Dist	COUNTY	ROUTE	POST MILES TOTAL PROJECT	SHEET No.	TOTAL SHEETS
11	SD	5	3.9/9.2	150	282

REGISTERED CIVIL ENGINEER 06-15-16 DATE

07-11-16
PLANS APPROVAL DATE

REGISTERED PROFESSIONAL ENGINEER
KENNETH SAYLER
No. C66456
Exp. 06/30/18
CIVIL
STATE OF CALIFORNIA

THE STATE OF CALIFORNIA OR ITS OFFICERS OR AGENTS SHALL NOT BE RESPONSIBLE FOR THE ACCURACY OR COMPLETENESS OF SCANNED COPIES OF THIS PLAN SHEET.

NOTES:

1. FOR ACCURATE RIGHT OF WAY DATA, CONTACT RIGHT OF WAY ENGINEERING AT THE DISTRICT OFFICE.
2. EROSION CONTROL (TYPE 1) TO BE PLACED ON ALL DISTURBED SLOPES.

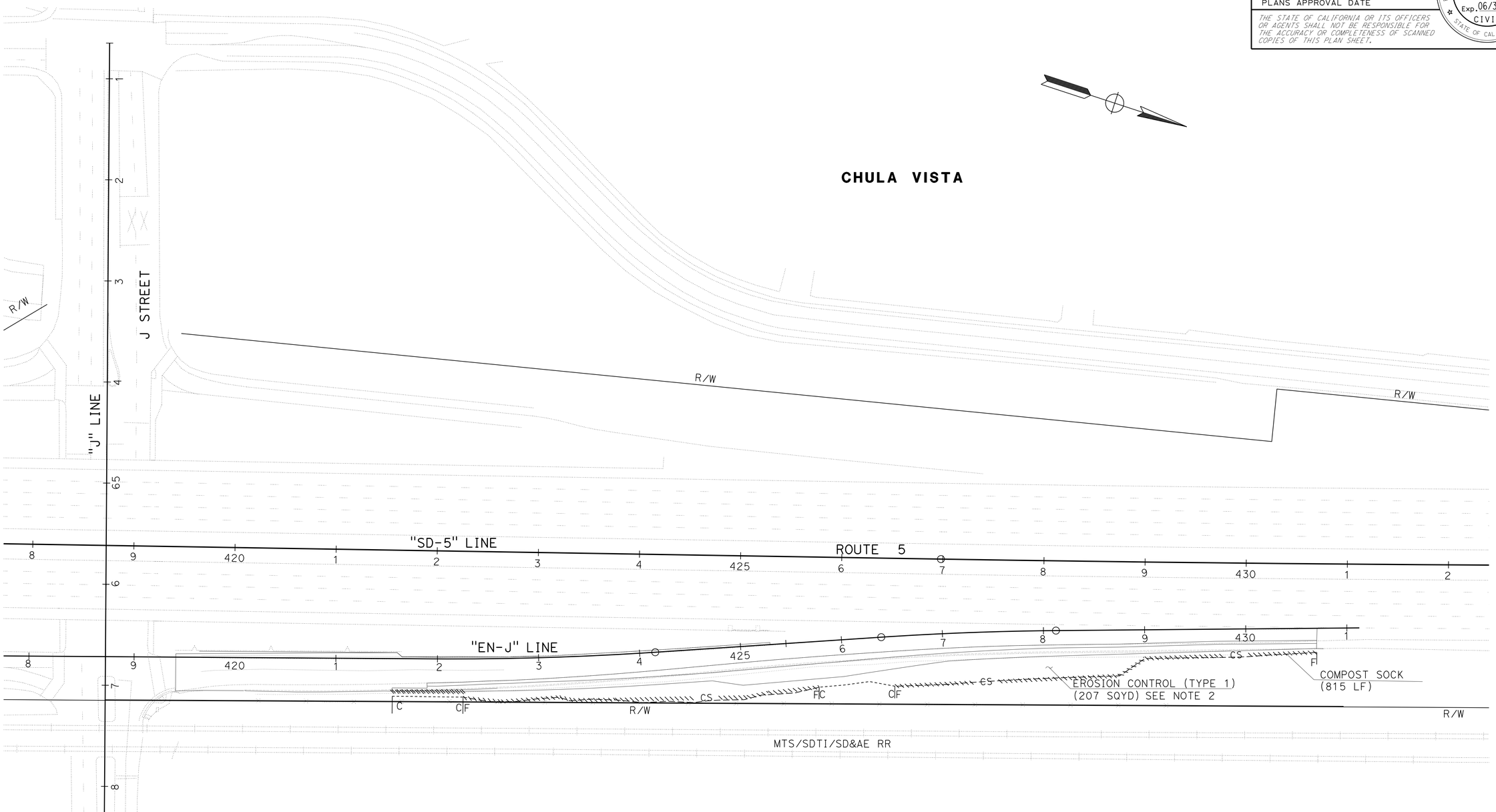

EROSION CONTROL PLAN
LOCATION 6

SCALE : 1"=50'

EC-6

APPROVED FOR EROSION CONTROL WORK ONLY

STATE OF CALIFORNIA - DEPARTMENT OF TRANSPORTATION
Caltrans
DESIGN

FUNCTIONAL SUPERVISOR: DUY TON
CALCULATED-DESIGNED BY: MELBA FULLER-FABIEN
CHECKED BY: KENNETH SAYLER
REVISED BY
DATE REVISED

LAST REVISION 06-27-16
DATE PLOTTED => 21-JUL-2016
TIME PLOTTED => 14:03

Dist	COUNTY	ROUTE	POST MILES TOTAL PROJECT	SHEET No.	TOTAL SHEETS
11	SD	5	3.9/9.2	151	282

REGISTERED CIVIL ENGINEER 06-15-16 DATE

07-11-16
PLANS APPROVAL DATE

REGISTERED PROFESSIONAL ENGINEER
KENNETH SAYLER
No. C66456
Exp. 06/30/18
CIVIL
STATE OF CALIFORNIA

THE STATE OF CALIFORNIA OR ITS OFFICERS OR AGENTS SHALL NOT BE RESPONSIBLE FOR THE ACCURACY OR COMPLETENESS OF SCANNED COPIES OF THIS PLAN SHEET.

NOTES:

1. FOR ACCURATE RIGHT OF WAY DATA, CONTACT RIGHT OF WAY ENGINEERING AT THE DISTRICT OFFICE.
2. EROSION CONTROL (TYPE 1) TO BE PLACED ON ALL DISTURBED SLOPES.

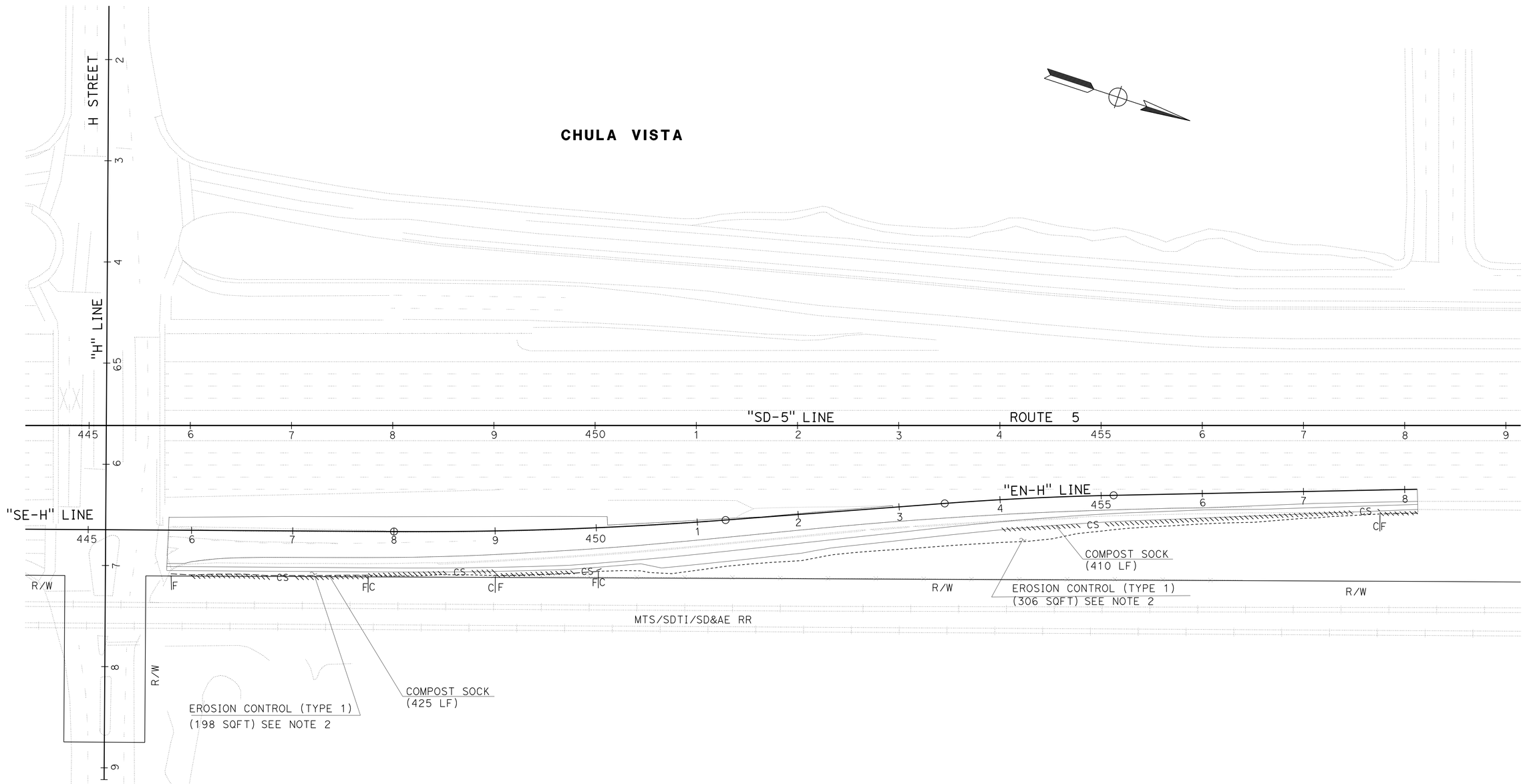

APPROVED FOR EROSION CONTROL WORK ONLY

EROSION CONTROL PLAN
LOCATION 7

SCALE : 1"=50'

EC-7

STATE OF CALIFORNIA - DEPARTMENT OF TRANSPORTATION
DESIGN

FUNCTIONAL SUPERVISOR: DUY TON
CALCULATED-DESIGNED BY: MELBA FULLER-FABIEN
CHECKED BY: KENNETH SAYLER
REVISED BY
DATE REVISED

LAST REVISION 01-07-16
DATE PLOTTED => 21-JUL-2016
TIME PLOTTED => 14:04

Dist	COUNTY	ROUTE	POST MILES TOTAL PROJECT	SHEET No.	TOTAL SHEETS
11	SD	5	3.9/9.2	152	282

REGISTERED CIVIL ENGINEER 06-15-16 DATE

07-11-16
PLANS APPROVAL DATE

REGISTERED PROFESSIONAL ENGINEER
KENNETH SAYLER
No. C66456
Exp. 06/30/18
CIVIL
STATE OF CALIFORNIA

THE STATE OF CALIFORNIA OR ITS OFFICERS OR AGENTS SHALL NOT BE RESPONSIBLE FOR THE ACCURACY OR COMPLETENESS OF SCANNED COPIES OF THIS PLAN SHEET.

EROSION CONTROL SUMMARY OF QUANTITIES

SHEET	EROSION CONTROL (DRY SEED)	COMPOST	INCORPORATE MATERIALS	COMPOST SOCK
	SQFT	SQFT	SQFT	LF
EC-1	180	185	185	925
EC-2	351	350	350	600
EC-3	531	530	530	890
EC-4	729	731	731	525
EC-5	486	490	490	890
EC-6	207	205	205	815
EC-7	504	510	510	835
TOTAL	2,988	3,001*	3,001*	5,480

* - SEE "WQ" SHEETS FOR ADDITIONAL QUANTITIES.

EROSION CONTROL QUANTITIES

ECQ-1

STATE OF CALIFORNIA - DEPARTMENT OF TRANSPORTATION
Caltrans
DESIGN

FUNCTIONAL SUPERVISOR: DUY TON

CALCULATED-DESIGNED BY: MELBA FULLER-FABIEN
CHECKED BY: KENNETH SAYLER

REVISED BY
DATE REVISED

LAST REVISION 06-27-16
DATE PLOTTED => 21-JUL-2016
TIME PLOTTED => 14:04

Dist	COUNTY	ROUTE	POST MILES TOTAL PROJECT	SHEET No.	TOTAL SHEETS
11	SD	5	3.9/9.2	153	282

REGISTERED ELECTRICAL ENGINEER 06-14-16 DATE

07-11-16
PLANS APPROVAL DATE

REGISTERED PROFESSIONAL ENGINEER HENRY TSUI No. E21015 Exp. 3-31-17 ELECTRICAL STATE OF CALIFORNIA

THE STATE OF CALIFORNIA OR ITS OFFICERS OR AGENTS SHALL NOT BE RESPONSIBLE FOR THE ACCURACY OR COMPLETENESS OF SCANNED COPIES OF THIS PLAN SHEET.

CONDUIT NOTES:

1. Exist 1½"C, 2#8 (LTG), 2#8 (SIGN)
2. 2"C, 2#8 (LTG), 2#8 (SIGN)
3. 2"C, 2#8 (LTG), 2#8 (SIGN), 4#14 (PEU)
4. Exist 1½"C, 2#6 (Ltg), 2#8 (Ltg), 2#8 (SIGN), 2#8 (IRRIGATION CONTROL)
5. Exist 2"C, 2#6 (Ltg), 2#8 (Ltg), 2#8 (SIGN), 2#8 (IRRIGATION CONTROL), 4#14 (PEU)
   - Exist 1"C, 2#4 (SWITCH PEDESTAL)
6. Exist 2"C, 2#4 (SWITCH PEDESTAL)
7. Exist 1½"C, 2#8 (Ltg)
8. 2"C, 2#8 (Ltg)

LEGEND AND NOTES:

1 - RC 310 W HPS. INSTALL ROADWAY 2 LED LUMINAIRE.

2 - RC TYPE 30 LIGHTING STANDARD. RS ROADWAY 2 LED LUMINAIRE.

3 - RC TYPE 30 LIGHTING STANDARD AND 2 PEU. RS ROADWAY 2 LED LUMINAIRE.

4 - RC EXISTING PB AND PLACE No. 5 PB.

5 - FOR ACCURATE RIGHT OF WAY DATA, CONTACT RIGHT OF WAY ENGINEERING AT DISTRICT OFFICE.

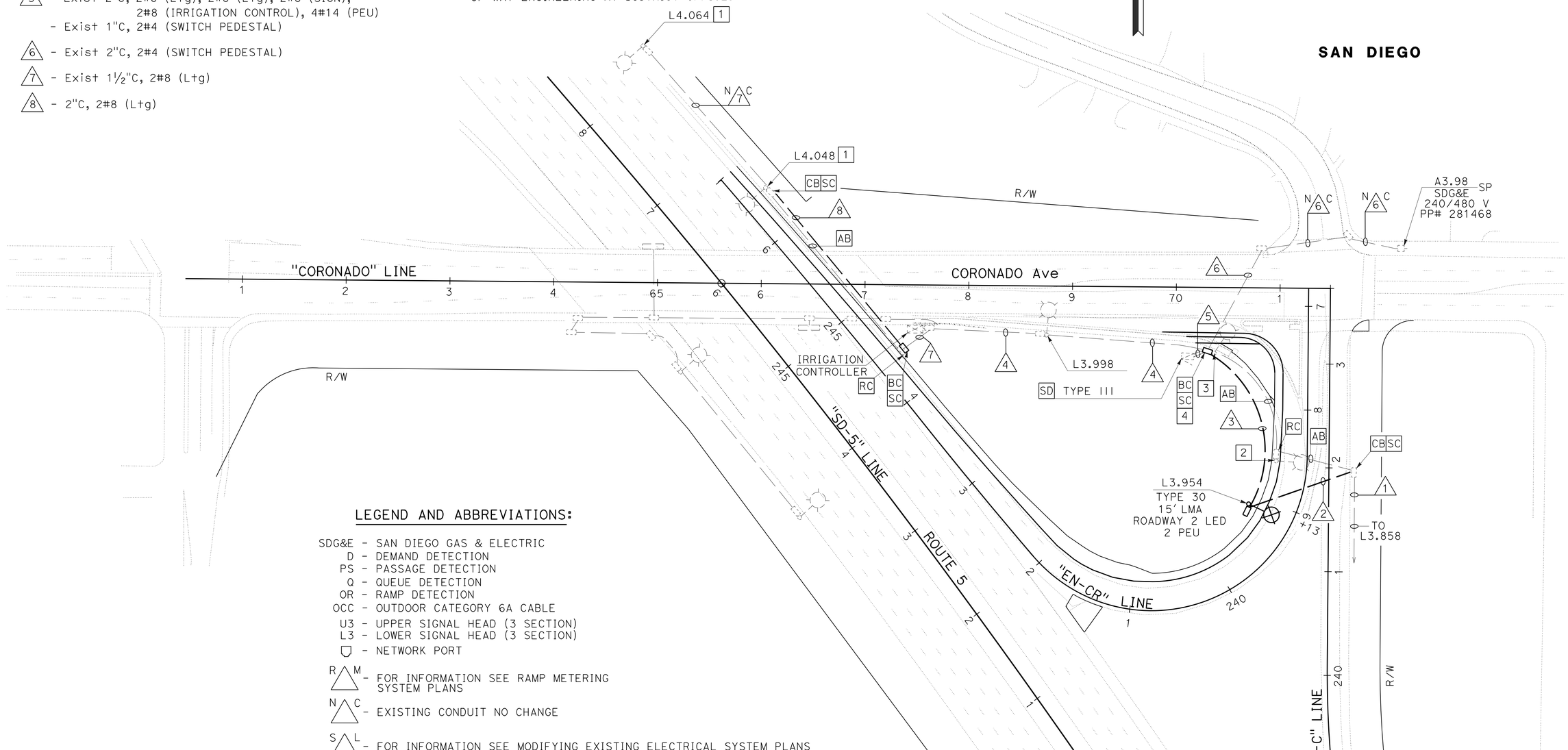

LEGEND AND ABBREVIATIONS:

SDG&E - SAN DIEGO GAS & ELECTRIC
D - DEMAND DETECTION
PS - PASSAGE DETECTION
Q - QUEUE DETECTION
OR - RAMP DETECTION
OCC - OUTDOOR CATEGORY 6A CABLE
U3 - UPPER SIGNAL HEAD (3 SECTION)
L3 - LOWER SIGNAL HEAD (3 SECTION)
- NETWORK PORT
R M - FOR INFORMATION SEE RAMP METERING SYSTEM PLANS
N C - EXISTING CONDUIT NO CHANGE
S L - FOR INFORMATION SEE MODIFYING EXISTING ELECTRICAL SYSTEM PLANS
L S - FOR INFORMATION SEE LIGHTING AND SIGN ILLUMINATION PLANS

LIGHTING AND SIGN ILLUMINATION

E-1

APPROVED FOR ELECTRICAL WORK ONLY

SCALE: 1"=50'

STATE OF CALIFORNIA - DEPARTMENT OF TRANSPORTATION
Caltrans TRAFFIC ELECTRICAL

FUNCTIONAL SUPERVISOR: RAJPREET SINGH
CALCULATED-DESIGNED BY: HENRY TSUI
CHECKED BY: MERVIN FULLENWIDER
REVISED BY
DATE REVISED

LAST REVISION 06-27-16
DATE PLOTTED => 21-JUL-2016
TIME PLOTTED => 14:04

Dist	COUNTY	ROUTE	POST MILES TOTAL PROJECT	SHEET No.	TOTAL SHEETS
11	SD	5	3.9/9.2	154	282

REGISTERED ELECTRICAL ENGINEER 06-14-16 DATE

07-11-16
PLANS APPROVAL DATE

REGISTERED PROFESSIONAL ENGINEER HENRY TSUI No. E21015 Exp. 3-31-17 ELECTRICAL STATE OF CALIFORNIA

THE STATE OF CALIFORNIA OR ITS OFFICERS OR AGENTS SHALL NOT BE RESPONSIBLE FOR THE ACCURACY OR COMPLETENESS OF SCANNED COPIES OF THIS PLAN SHEET.

CONDUIT NOTES:

1. - Exist 1½"C, 2#8 (Ltg)
2. - 2"C, 2#8 (Ltg)
3. - Exist 1½"C, 2#6 (Ltg)
4. N C - Exist 1½"C, 2#4 (Ltg), 2#8 (SIGN)
5. - Exist 1½"C, 2#4 (Ltg), 2#6 (Ltg), 2#8 (SIGN)
6. - 2"C, 2#4 (Ltg), 2#6 (Ltg), 2#8 (SIGN)

LEGEND AND NOTES:

1 - RC 310 W LUMINAIRE AND INSTALL ROADWAY 2 LED LUMINAIRE.

2 - INSTALL CONDUIT BY DIRECTIONAL BORING METHOD.

3 - FOR ACCURATE RIGHT OF WAY DATA, CONTACT RIGHT OF WAY ENGINEERING AT DISTRICT OFFICE.

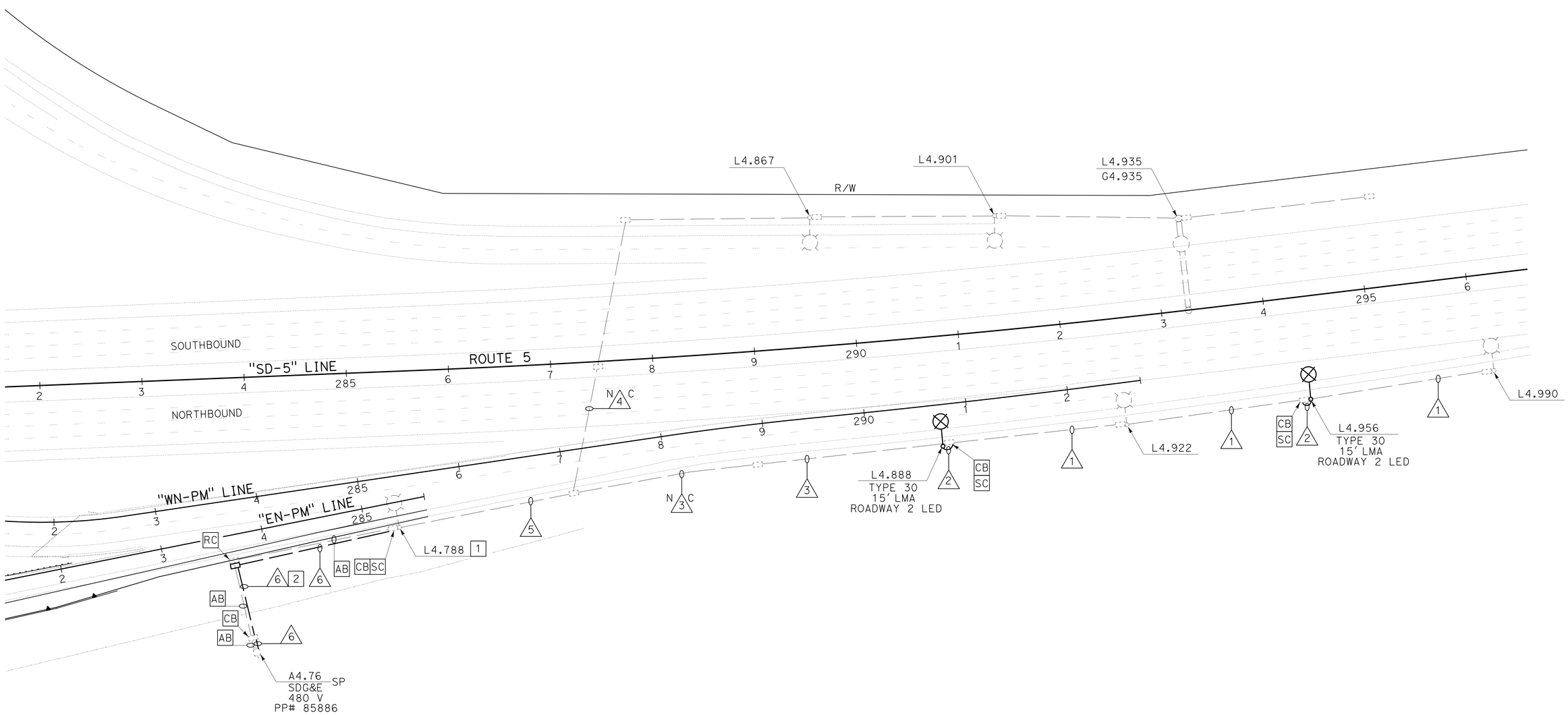

LIGHTING AND SIGN ILLUMINATION

E-2

APPROVED FOR ELECTRICAL WORK ONLY

SCALE: 1"=50'

STATE OF CALIFORNIA - DEPARTMENT OF TRANSPORTATION
Caltrans® TRAFFIC ELECTRICAL

FUNCTIONAL SUPERVISOR: RAJPREET SINGH
CALCULATED-DESIGNED BY: HENRY TSUI
CHECKED BY: MERVIN FULLENWIDER
REVISED BY
DATE REVISED

LAST REVISION 06-27-16
DATE PLOTTED => 21-JUL-2016
TIME PLOTTED => 14:04

Dist	COUNTY	ROUTE	POST MILES TOTAL PROJECT	SHEET No.	TOTAL SHEETS
11	SD	5	3.9/9.2	155	282

REGISTERED ELECTRICAL ENGINEER 06-14-16 DATE

07-11-16
PLANS APPROVAL DATE

REGISTERED PROFESSIONAL ENGINEER
HENRY TSUI
No. E21015
Exp. 3-31-17
ELECTRICAL
STATE OF CALIFORNIA

THE STATE OF CALIFORNIA OR ITS OFFICERS OR AGENTS SHALL NOT BE RESPONSIBLE FOR THE ACCURACY OR COMPLETENESS OF SCANNED COPIES OF THIS PLAN SHEET.

CONDUIT NOTES:

N C 1 - Exist 1½"C, 2#8 (Ltg), 2#8 (SIGN)

2 - 2"C, 2#8 (Ltg), 2#8 (SIGN)

3 - Exist 1½"C, 2#6 (Ltg), 2#8 (Ltg)

4 - Exist 2"C, 6#6 (Ltg), 2#8 (SIGN)

5 - 2"C, 2#8 (Ltg)

6 - Exist 2"C, 2#8 (Ltg)

LEGEND AND NOTES:

1 - RC 310 W HPS LUMINAIRE. INSTALL ROADWAY 2 LED LUMINAIRE.

2 - RC TYPE 15 STANDARD.

3 - FOR CIRCUIT CONTINUITY, SEE RAMP METERING SYSTEM LOCATION 5 SHEET E-14.

4 - FOR ACCURATE RIGHT OF WAY DATA, CONTACT RIGHT OF WAY ENGINEERING AT DISTRICT OFFICE.

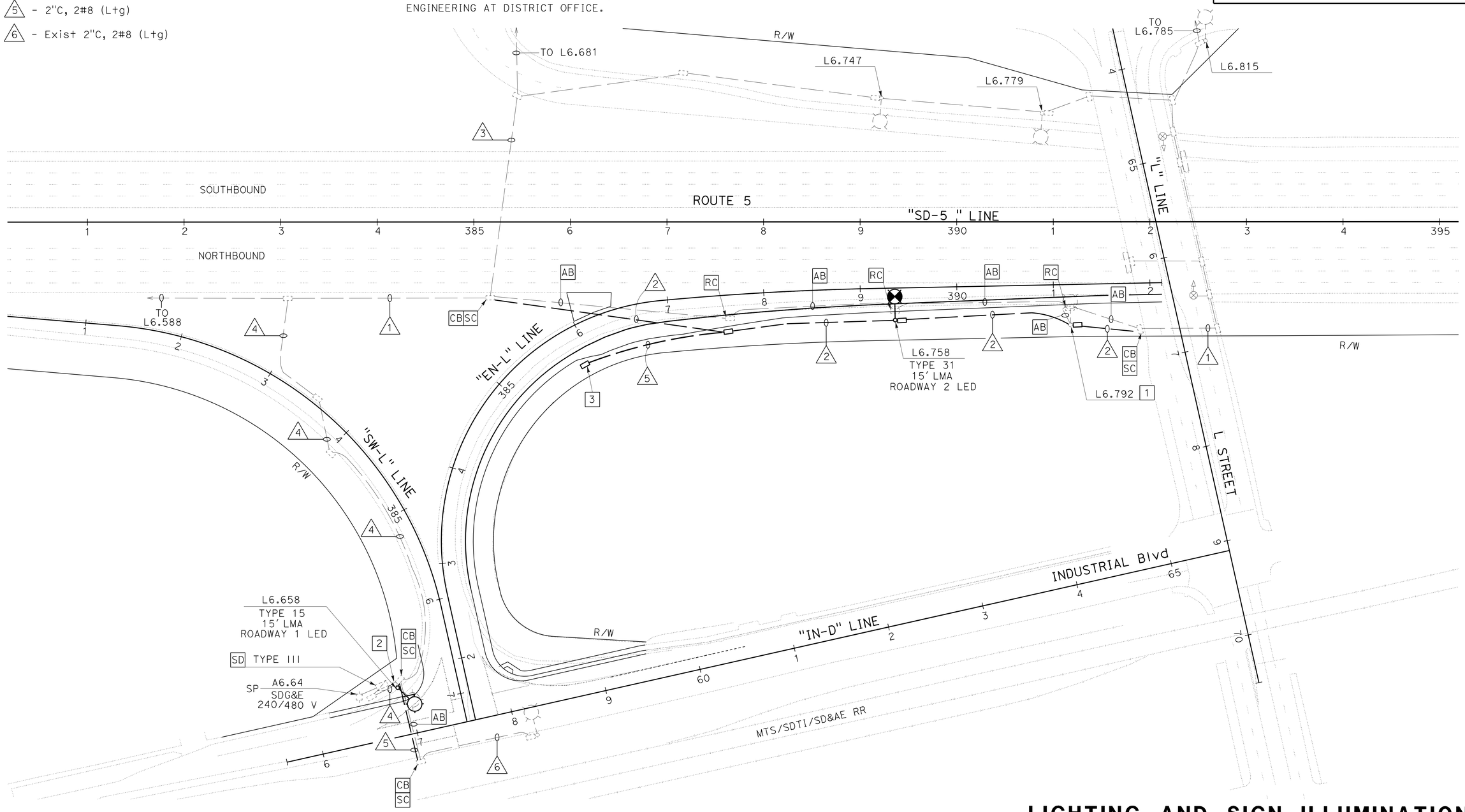

APPROVED FOR ELECTRICAL WORK ONLY

LIGHTING AND SIGN ILLUMINATION

SCALE: 1"=50'

E-3

STATE OF CALIFORNIA - DEPARTMENT OF TRANSPORTATION
Caltrans® TRAFFIC ELECTRICAL

FUNCTIONAL SUPERVISOR: RAJPREET SINGH
CALCULATED-DESIGNED BY: HENRY TSUI
CHECKED BY: MERVIN FULLENWIDER
REVISED BY / DATE REVISED

LAST REVISION 06-27-16 | DATE PLOTTED => 21-JUL-2016 | TIME PLOTTED => 14:04

Dist	COUNTY	ROUTE	POST MILES TOTAL PROJECT	SHEET No.	TOTAL SHEETS
11	SD	5	3.9/9.2	156	282

REGISTERED ELECTRICAL ENGINEER 06-14-16 DATE

07-11-16
PLANS APPROVAL DATE

REGISTERED PROFESSIONAL ENGINEER HENRY TSUI No. E21015 Exp. 3-31-17 ELECTRICAL STATE OF CALIFORNIA

THE STATE OF CALIFORNIA OR ITS OFFICERS OR AGENTS SHALL NOT BE RESPONSIBLE FOR THE ACCURACY OR COMPLETENESS OF SCANNED COPIES OF THIS PLAN SHEET.

CONDUIT NOTES:

1 - Exist 1½"C, 2#8 (Ltg)

2 - 2"C, 2#8 (Ltg)

LEGEND AND NOTES:

1 - TO SERVICE POINT A7.79 AT 798 H STREET. SDG&E. 240/480 V.

2 - INSTALL CONDUIT BY DIRECTIONAL BORING METHOD.

3 - FOR ACCURATE RIGHT OF WAY DATA, CONTACT RIGHT OF WAY ENGINEERING AT DISTRICT OFFICE.

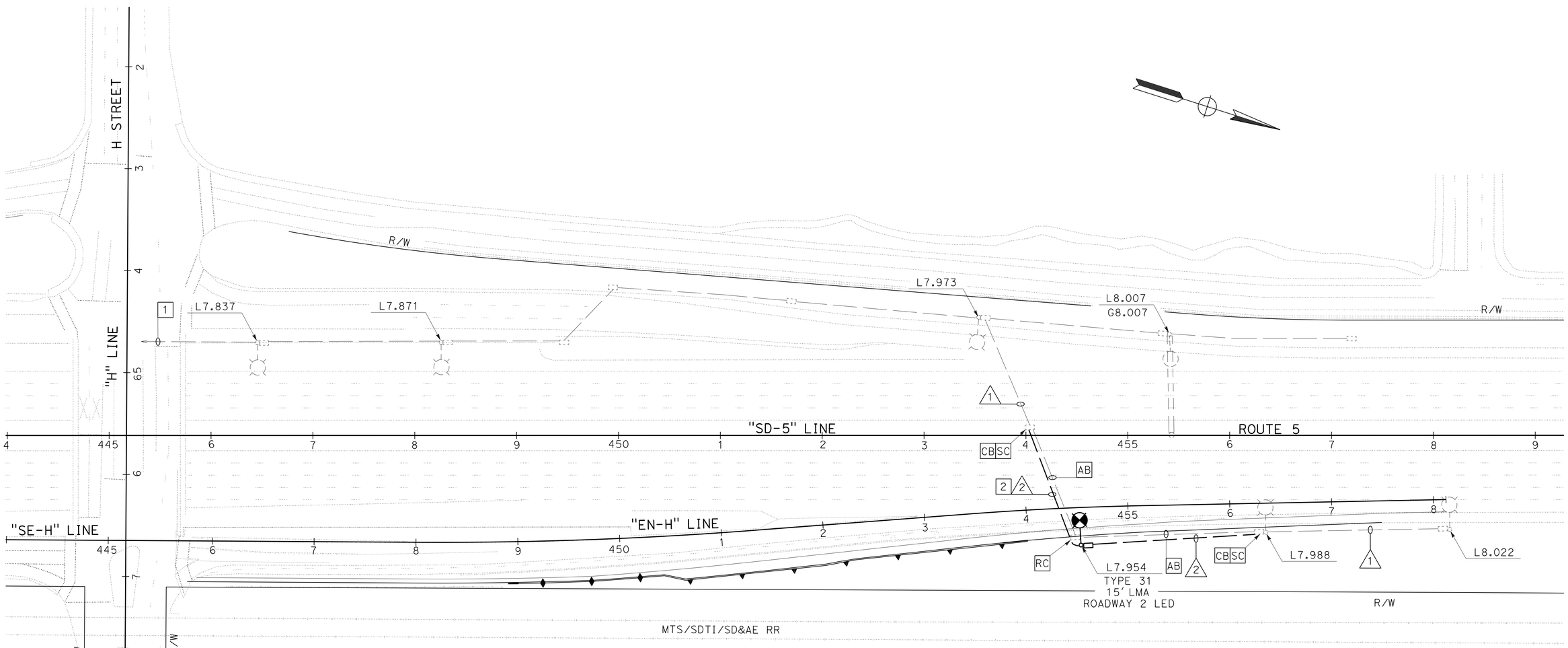

LIGHTING AND SIGN ILLUMINATION

SCALE: 1"=50'

E-4

APPROVED FOR ELECTRICAL WORK ONLY

STATE OF CALIFORNIA - DEPARTMENT OF TRANSPORTATION
Caltrans TRAFFIC ELECTRICAL

FUNCTIONAL SUPERVISOR: RAJPREET SINGH
CALCULATED-DESIGNED BY: HENRY TSUI
CHECKED BY: MERVIN FULLENWIDER
REVISED BY
DATE REVISED

LAST REVISION 06-27-16
DATE PLOTTED => 21-JUL-2016
TIME PLOTTED => 14:04

Dist	COUNTY	ROUTE	POST MILES TOTAL PROJECT	SHEET No.	TOTAL SHEETS
11	SD	5	3.9/9.2	157	282

REGISTERED ELECTRICAL ENGINEER — DATE 06-14-16

07-11-16
PLANS APPROVAL DATE

REGISTERED PROFESSIONAL ENGINEER MERVIN D. FULLENWIDER No. E20211 Exp. 3-31-17 ELECTRICAL STATE OF CALIFORNIA

THE STATE OF CALIFORNIA OR ITS OFFICERS OR AGENTS SHALL NOT BE RESPONSIBLE FOR THE ACCURACY OR COMPLETENESS OF SCANNED COPIES OF THIS PLAN SHEET.

CONDUIT NOTES:

N C 1 - Exist 2"C, 2#6 (Ltg), 2#8 (SIGN)
N C 2 - Exist 2"C, 2#8 (SIGN)
N C 3 - Exist 2"C, 2#8 (Ltg), 2#8 (SIGN)
N C 4 - Exist 2"C, 2#8 (Ltg)

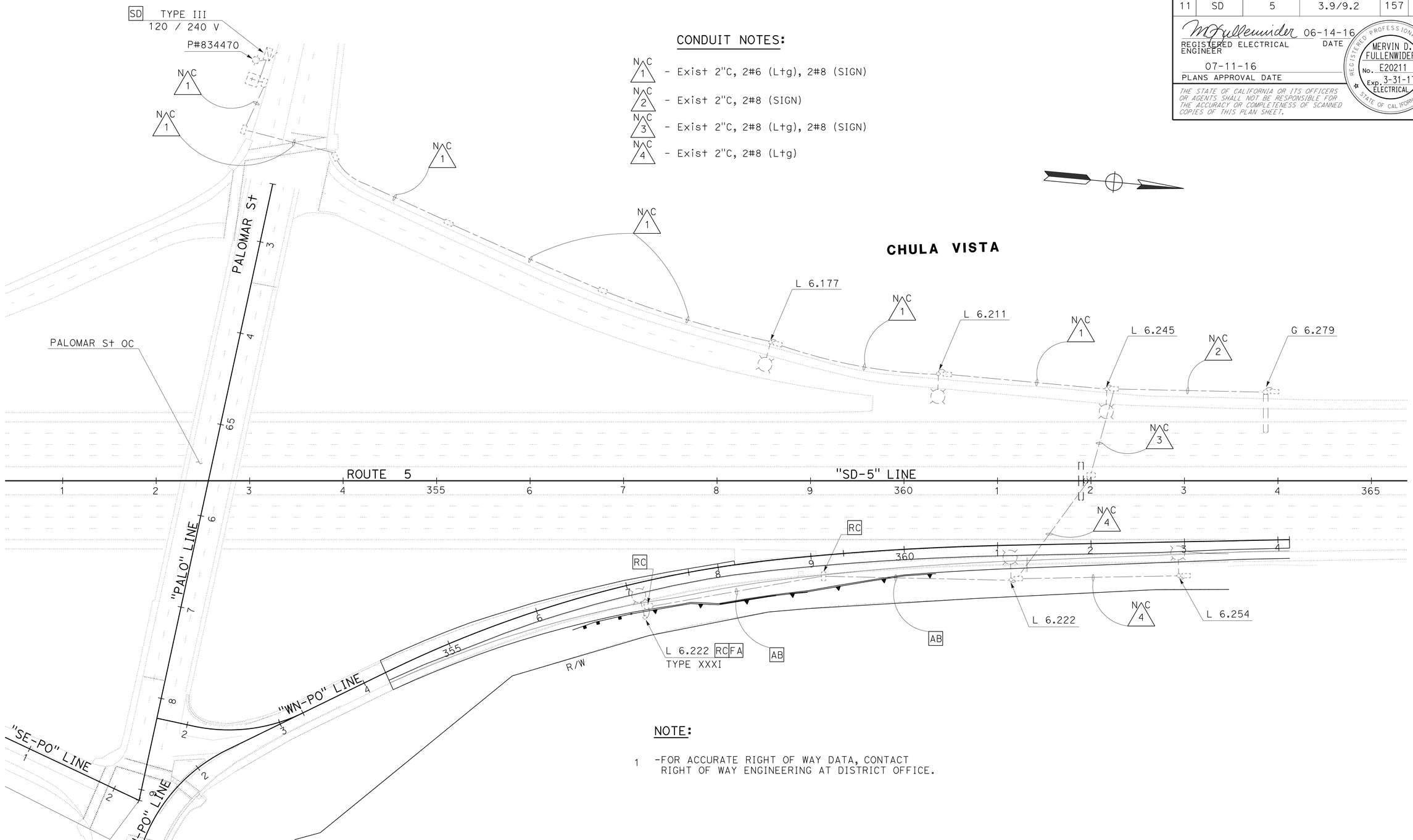

NOTE:

1 -FOR ACCURATE RIGHT OF WAY DATA, CONTACT RIGHT OF WAY ENGINEERING AT DISTRICT OFFICE.

LIGHTING AND SIGN ILLUMINATION

APPROVED FOR ELECTRICAL WORK ONLY

SCALE: 1"=50'

E-5

STATE OF CALIFORNIA - DEPARTMENT OF TRANSPORTATION
Caltrans® **TRAFFIC ELECTRICAL**

FUNCTIONAL SUPERVISOR: RAJPREET SINGH
CALCULATED-DESIGNED BY: ANTONIO A. RODRIGUEZ
CHECKED BY: MERVIN FULLENWIDER
REVISED BY
DATE REVISED

LAST REVISION DATE PLOTTED => 21-JUL-2016
06-27-16 TIME PLOTTED => 14:04

Dist	COUNTY	ROUTE	POST MILES TOTAL PROJECT	SHEET No.	TOTAL SHEETS
11	SD	5	3.9/9.2	158	282

REGISTERED ELECTRICAL ENGINEER — DATE 06-14-16

07-11-16
PLANS APPROVAL DATE

REGISTERED PROFESSIONAL ENGINEER — MERVIN D. FULLENWIDER — No. E20211 — Exp. 3-31-17 — ELECTRICAL — STATE OF CALIFORNIA

THE STATE OF CALIFORNIA OR ITS OFFICERS OR AGENTS SHALL NOT BE RESPONSIBLE FOR THE ACCURACY OR COMPLETENESS OF SCANNED COPIES OF THIS PLAN SHEET.

NOTE:

1 -FOR ACCURATE RIGHT OF WAY DATA, CONTACT RIGHT OF WAY ENGINEERING AT DISTRICT OFFICE.

LEGEND:

SEE SHEET E-7

CONDUIT NOTES:

SEE SHEET E-7

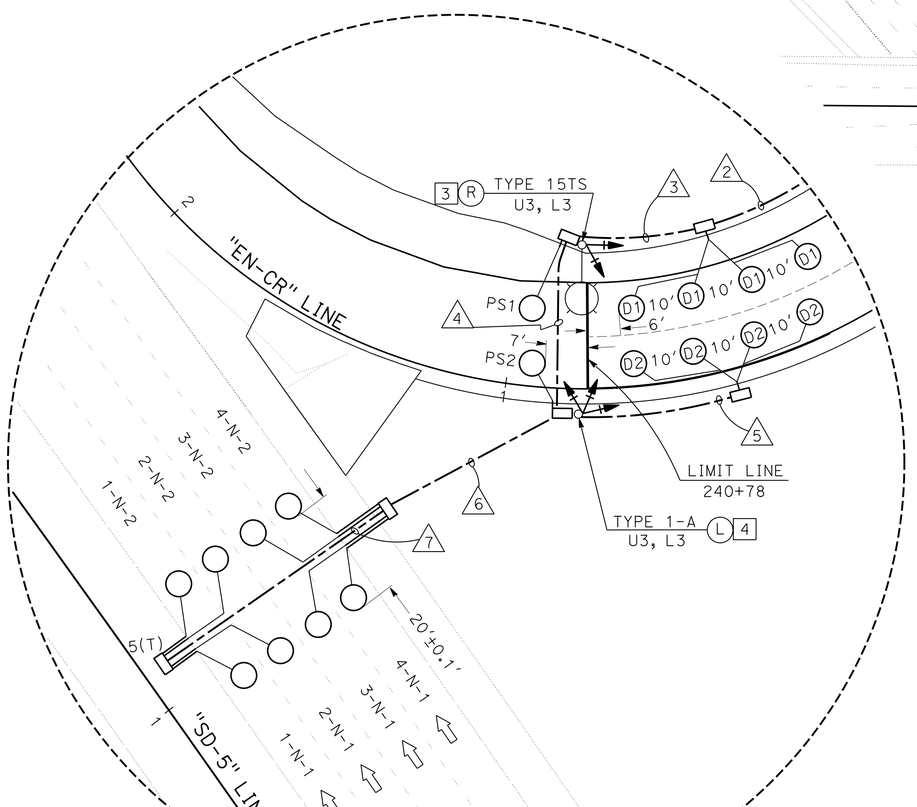

DETAIL ML
NO SCALE

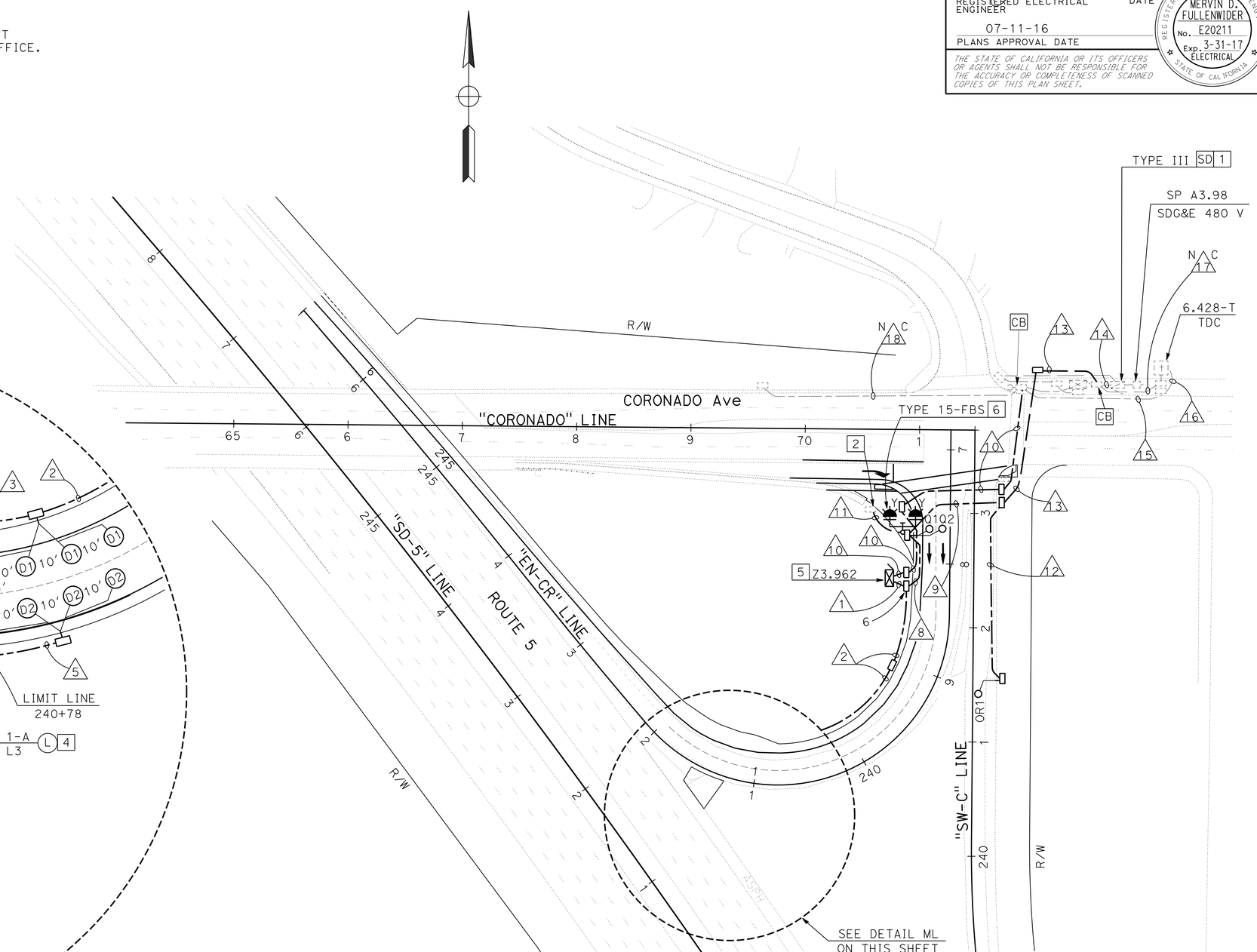

Z3.962
Rte 5 NB ON RAMP AT
CORONADO Ave

LOCATION 1

RAMP METERING SYSTEM

SCALE: 1"=50'

E-6

APPROVED FOR ELECTRICAL WORK ONLY

STATE OF CALIFORNIA - DEPARTMENT OF TRANSPORTATION
Caltrans® TRAFFIC ELECTRICAL

FUNCTIONAL SUPERVISOR: RAJPREET SINGH
CALCULATED-DESIGNED BY: MERVIN FULLENWIDER
CHECKED BY: HENRY TSUI
REVISED BY
DATE REVISED

LAST REVISION 06-27-16
DATE PLOTTED => 21-JUL-2016
TIME PLOTTED => 14:04

Dist	COUNTY	ROUTE	POST MILES TOTAL PROJECT	SHEET No.	TOTAL SHEETS
11	SD	5	3.9/9.2	159	282

REGISTERED ELECTRICAL ENGINEER — DATE 06-14-16

07-11-16
PLANS APPROVAL DATE

REGISTERED PROFESSIONAL ENGINEER — MERVIN D. FULLENWIDER — No. E20211 — Exp. 3-31-17 — ELECTRICAL — STATE OF CALIFORNIA

THE STATE OF CALIFORNIA OR ITS OFFICERS OR AGENTS SHALL NOT BE RESPONSIBLE FOR THE ACCURACY OR COMPLETENESS OF SCANNED COPIES OF THIS PLAN SHEET.

CONDUIT AND CONDUCTOR SCHEDULE

AWG SIZE OR CABLE TYPE	CIRCUIT ID	CONDUIT SIZE AND RUN												
		2-3" (1)	3" (2)	3" (3)	2" (4)	2" (5)	2" (6)	2" (7)	3" (8)	2" (9)	2" (10)	2" (11)	2" (12)	2" (13)
6	RM POWER	2							2	2				2
8	LIGHTING (RM)		2	2					2			2		
14	FB	2							2	2				
9CSC	Std Rt	1	1	1										
	Std Lt	1	1	1	1									
DLC	DETECTORS ML (NB)	8	8	8	8		8	4						
	D	2	2	1	1	1								
	PS	2	2	2	1									
	Q	2							2					
	OR	1							1	1			1	
TWISTED PAIR LOOP WIRES														
SIC														
OCC											1			
TOTAL CONDUCTORS / CABLES		21	16	15	11	1	8	4	9	5	1	2	1	2

LEGEND:

1. -Exist TYPE III SERVICE EQUIPMENT ENCLOSURE (120/240 V) WITH:
   MAIN 4P-70 A
   1P-50 A (Sig)
   1P-15 A (PEU)
   2P-30 A (Ltg)
   1P-15 A (TDC)
   ADD 1P-30 A (RM)
2. -FOR CIRCUIT CONTINUITY SEE MODIFYING EXISTING ELECTRICAL SYSTEM SHEET E-22.
3. -SEE DETAIL 15TS ON ELECTRICAL DETAIL SHEET E-29.
4. -SEE DETAIL 1-A ON ELECTRICAL DETAIL SHEET E-29.
5. -SEE ELECTRICAL DETAIL SHEET E-30.
6. -SEE STANDARD PLAN RSP ES-7J DETAIL A.
   SIGN LIGHTING FIXTURE NOT REQUIRED.

CONDUIT NOTES:

(14) - Exist 2"C, 2#14 (TDC)
ADD 2#6 (RM)

(15) - Exist 2"C, 1 SIC, 2 OCC
ADD 1 OCC

(16) - Exist 1"C, 1 SIC, 2 OCC
ADD 1 OCC

N C (17) - Exist 2"C, 2#14 (TDC)

N C (18) - Exist 2"C, 1 SIC, 1 OCC

LOCATION 1

RAMP METERING SYSTEM

E-7

REVISED BY	DATE REVISED
MERVIN FULLENWIDER	HENRY TSUI
CALCULATED-DESIGNED BY	CHECKED BY
FUNCTIONAL SUPERVISOR	RAJPREET SINGH

STATE OF CALIFORNIA - DEPARTMENT OF TRANSPORTATION
Caltrans® TRAFFIC ELECTRICAL

LAST REVISION 06-27-16
DATE PLOTTED => 21-JUL-2016
TIME PLOTTED => 14:04

Dist	COUNTY	ROUTE	POST MILES TOTAL PROJECT	SHEET No.	TOTAL SHEETS
11	SD	5	3.9/9.2	160	282

REGISTERED ELECTRICAL ENGINEER — DATE 06-14-16

07-11-16
PLANS APPROVAL DATE

REGISTERED PROFESSIONAL ENGINEER MERVIN D. FULLENWIDER No. E20211 Exp. 3-31-17 ELECTRICAL STATE OF CALIFORNIA

THE STATE OF CALIFORNIA OR ITS OFFICERS OR AGENTS SHALL NOT BE RESPONSIBLE FOR THE ACCURACY OR COMPLETENESS OF SCANNED COPIES OF THIS PLAN SHEET.

NOTE:

1 -FOR ACCURATE RIGHT OF WAY DATA, CONTACT RIGHT OF WAY ENGINEERING AT DISTRICT OFFICE.

LEGEND:

SEE SHEET E-9

CONDUIT NOTES:

SEE SHEET E-9

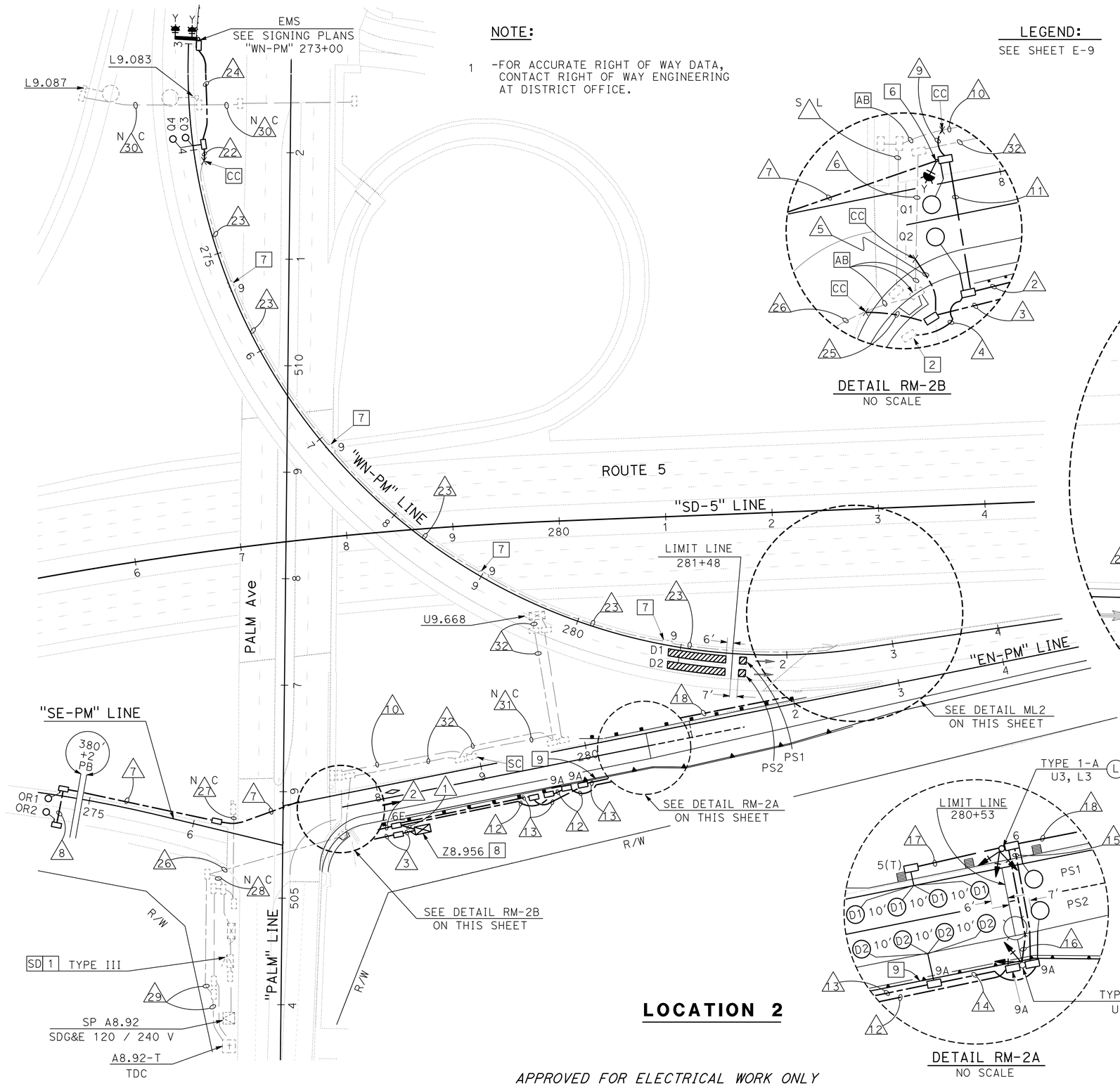

DETAIL RM-2B
NO SCALE

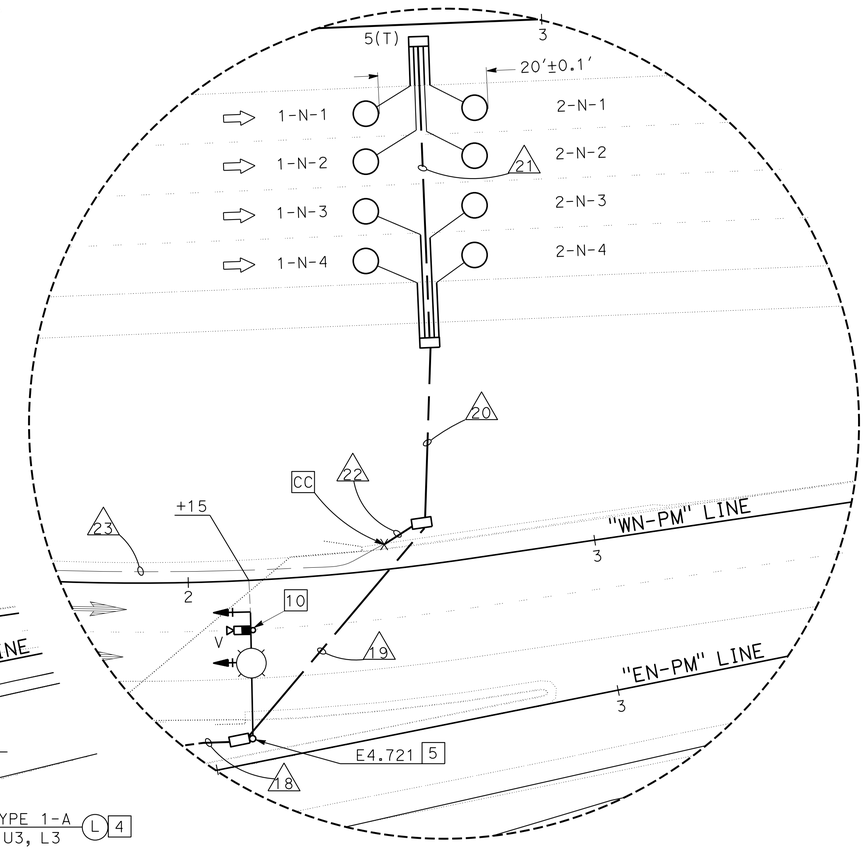

DETAIL ML2
NO SCALE

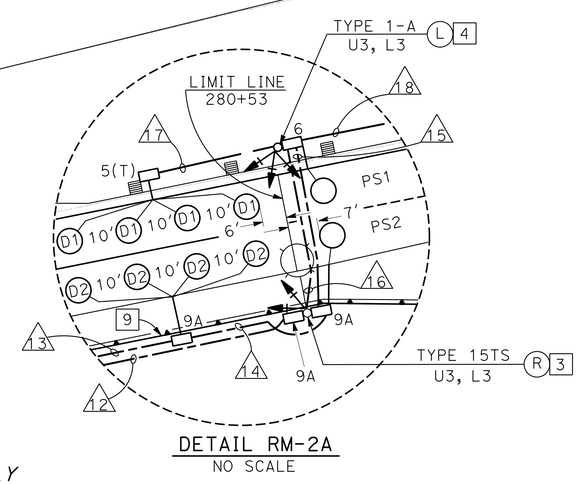

DETAIL RM-2A
NO SCALE

Z8.956
Rte 5 NB ON RAMP AT
PALM Ave

RAMP METERING SYSTEM

LOCATION 2

APPROVED FOR ELECTRICAL WORK ONLY

SCALE 1"=50'

E-8

STATE OF CALIFORNIA - DEPARTMENT OF TRANSPORTATION
Caltrans® TRAFFIC ELECTRICAL

FUNCTIONAL SUPERVISOR: RAJPREET SINGH
CALCULATED-DESIGNED BY: MERVIN FULLENWIDER
CHECKED BY: HENRY TSUI
REVISED BY
DATE REVISED

LAST REVISION DATE PLOTTED => 21-JUL-2016
06-27-16 TIME PLOTTED => 14:04

Dist	COUNTY	ROUTE	POST MILES TOTAL PROJECT	SHEET No.	TOTAL SHEETS
11	SD	5	3.9/9.2	161	282

REGISTERED ELECTRICAL ENGINEER — DATE 06-14-16

07-11-16
PLANS APPROVAL DATE

REGISTERED PROFESSIONAL ENGINEER MERVIN D. FULLENWIDER No. E20211 Exp. 3-31-17 ELECTRICAL STATE OF CALIFORNIA

THE STATE OF CALIFORNIA OR ITS OFFICERS OR AGENTS SHALL NOT BE RESPONSIBLE FOR THE ACCURACY OR COMPLETENESS OF SCANNED COPIES OF THIS PLAN SHEET.

CONDUIT AND CONDUCTOR SCHEDULE

AWG SIZE OR CABLE TYPE	CIRCUIT ID	CONDUIT SIZE AND RUN																							
		2-3" (1)	2" (2)	2" (3)	2" (4)	2" (5)	EX 2" (6)	2" (7)	2" (8)	2" (9)	EX 2" (10)	2" (11)	3" (12)	2" (13)	2" (14)	2" (15)	3" (16)	2" (17)	3" (18)	2" (19)	2" (20)	2" (21)	1½" (22)	EX 1½" (23)	2" (24)
6	RM POWER	2	2		2																				
10	MVDS POWER				2					2	2	2													
10	LIGHTING (RM)		2		2								2				2		2						
14	FB	2	2									2													
8	EMS/FB	3											3				3		3	3			3	3	3
9CSC	Std Rt	1											1												
	Std Lt	1											1				1								
12CSC	Std M	1											1				1		1						
DLC	DETECTORS ML (NB)	8												8	8	8			8	8	8	4			
	D	2												2	1	1		1							
	PS	2												2	2	1									
	Q	4	2									1		2	2	2			2	2			2	2	
	OR	2	2					2	1			2													
VIDEO CABLE HARNESS		1												1	1	1			1						
OCC	RM CONTROLLER			1																					
	MVDS CONTROLLER					2	2																		
TOTAL CONDUCTORS / CABLES		29	10	1	6	2	2	2	1	2	2	7	8	15	14	13	7	1	17	13	8	4	5	5	3

CONDUIT NOTES:

(25) - 2"C, 2 OCC (MVDS), 1 OCC (RM)

(26) - Exist 2"C, 2 OCC (MVDS), 1 OCC (RM)

N C (27) - Exist 2"C, 1-12CSC (Sig)

N C (28) - Exist 2"C, SIC (Sig)

(29) - Exist 2"C, 2 OCC (MVDS), SIC (Sig),
[RC] 2 OCC (MVDS),
ADD 2 OCC (MVDS), 1 OCC (RM)

N C (30) - Exist 1½"C, 2#6 (Sgn), 2#8 (Lt g)

N C (31) - Exist 2"C, 2#10 (MVDS)

(32) - Exist 2"C, 2 OCC (MVDS),
[RC] 2 OCC (MVDS),
ADD 2 OCC (MVDS)

LEGEND:

[1] -Exist TYPE III SERVICE EQUIPMENT ENCLOSURE (120/240 V) WITH:
MAIN 2P-70 A
1P-50 A (Sig)
1P-15 A (PEU)
2P-30 A (Lt g)
1P-15 A (TDC)
1P-15 A (MVDS)
ADD 1P-30 A (RM)

[2] -FOR CIRCUIT CONTINUITY SEE MODIFYING EXISTING ELECTRICAL SYSTEM SHEET E-24.

[3] -SEE DETAIL 15TS-B ON ELECTRICAL DETAIL SHEET E-31.

[4] -SEE DETAIL 1-A ON ELECTRICAL DETAIL SHEET E-29.

[5] -SEE DETAIL M-1 ON ELECTRICAL DETAIL SHEET E-31.

[6] -SEE DETAIL FB ON ELECTRICAL DETAIL SHEET E-29.

[7] -ADD GROUNDING BUSHING TO EXISTING CONDUIT TERMINATIONS.

[8] -SEE ELECTRICAL DETAIL SHEET E-30.

[9] -"RW1", SEE ELECTRICAL DETAILS SHEET E-33.

[10] -VIDEO IMAGE SENSOR MUST BE MOUNTED WITH AN EXTENTED MOUNTING BRACKET.

LOCATION 2

RAMP METERING SYSTEM

E-9

REVISED BY | DATE REVISED
MERVIN FULLENWIDER | HENRY TSUI
CALCULATED-DESIGNED BY | CHECKED BY
FUNCTIONAL SUPERVISOR | RAJPREET SINGH
STATE OF CALIFORNIA - DEPARTMENT OF TRANSPORTATION
Caltrans® TRAFFIC ELECTRICAL

LAST REVISION 06-27-16 | DATE PLOTTED => 21-JUL-2016 | TIME PLOTTED => 14:04

Dist	COUNTY	ROUTE	POST MILES TOTAL PROJECT	SHEET No.	TOTAL SHEETS
11	SD	5	3.9/9.2	162	282

REGISTERED ELECTRICAL ENGINEER — DATE 06-14-16

PLANS APPROVAL DATE 07-11-16

REGISTERED PROFESSIONAL ENGINEER MERVIN D. FULLENWIDER No. E20211 Exp. 3-31-17 ELECTRICAL STATE OF CALIFORNIA

THE STATE OF CALIFORNIA OR ITS OFFICERS OR AGENTS SHALL NOT BE RESPONSIBLE FOR THE ACCURACY OR COMPLETENESS OF SCANNED COPIES OF THIS PLAN SHEET.

NOTE:

1 -FOR ACCURATE RIGHT OF WAY DATA, CONTACT RIGHT OF WAY ENGINEERING AT DISTRICT OFFICE.

LEGEND:

SEE SHEET E-11

CONDUIT NOTES:

SEE SHEET E-11

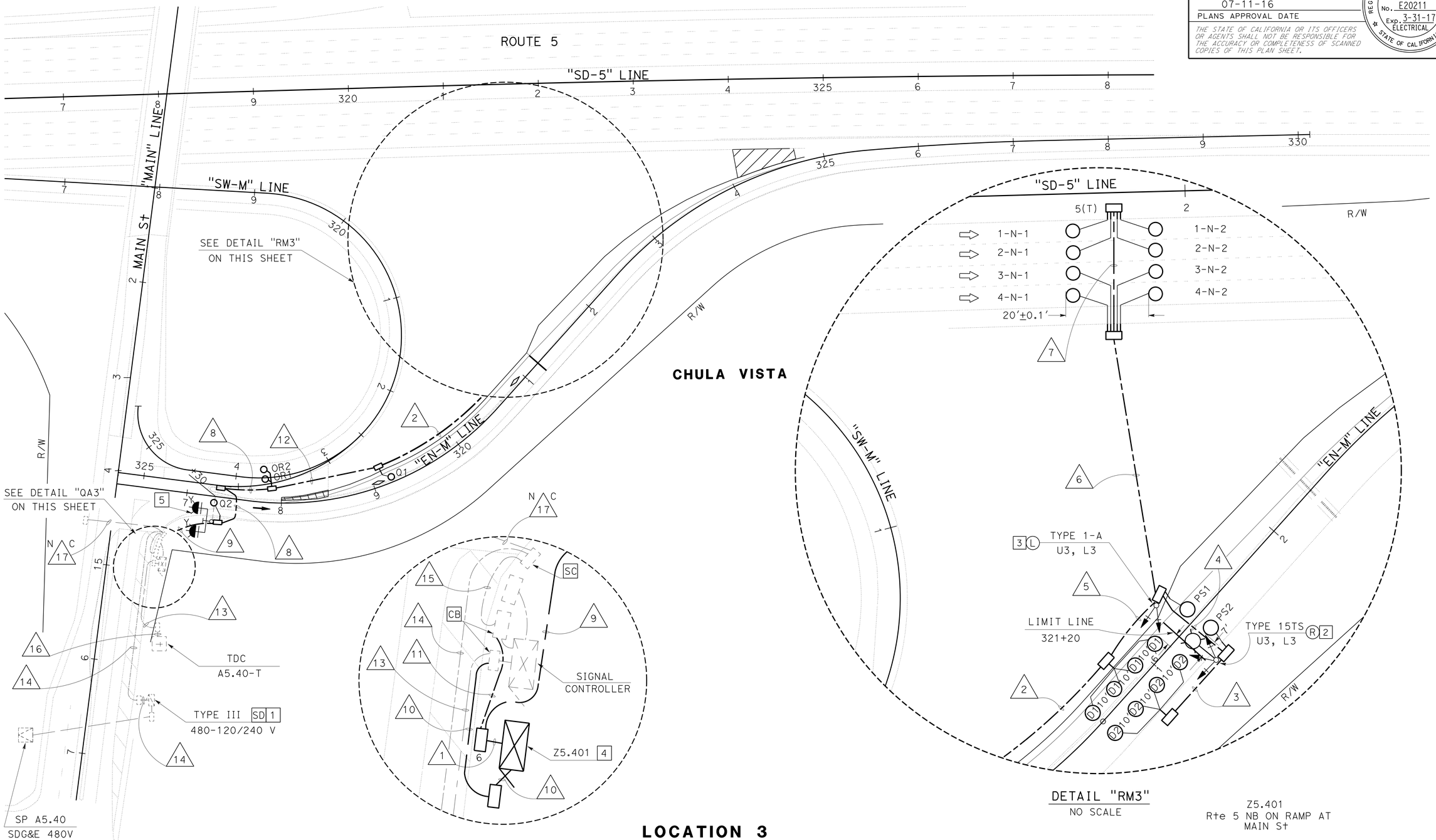

DETAIL "QA3"
NO SCALE

DETAIL "RM3"
NO SCALE

Z5.401
Rte 5 NB ON RAMP AT MAIN St

LOCATION 3

RAMP METERING SYSTEM

E-10

APPROVED FOR ELECTRICAL WORK ONLY

SCALE: 1"=50'

STATE OF CALIFORNIA - DEPARTMENT OF TRANSPORTATION
Caltrans® **TRAFFIC ELECTRICAL**

FUNCTIONAL SUPERVISOR: RAJPREET SINGH
CALCULATED-DESIGNED BY: ANTONIO A. RODRIGUEZ
CHECKED BY: MERVIN FULLENWIDER
REVISED BY / DATE REVISED

LAST REVISION 06-27-16 — DATE PLOTTED => 21-JUL-2016 — TIME PLOTTED => 14:04

Dist	COUNTY	ROUTE	POST MILES TOTAL PROJECT	SHEET No.	TOTAL SHEETS
11	SD	5	3.9/9.2	163	282

REGISTERED ELECTRICAL ENGINEER — DATE 06-14-16

07-11-16
PLANS APPROVAL DATE

REGISTERED PROFESSIONAL ENGINEER — MERVIN D. FULLENWIDER — No. E20211 — Exp. 3-31-17 — ELECTRICAL — STATE OF CALIFORNIA

THE STATE OF CALIFORNIA OR ITS OFFICERS OR AGENTS SHALL NOT BE RESPONSIBLE FOR THE ACCURACY OR COMPLETENESS OF SCANNED COPIES OF THIS PLAN SHEET.

CONDUIT AND CONDUCTOR SCHEDULE

AWG SIZE OR CABLE TYPE	CIRCUIT ID	CONDUIT SIZE AND RUN											
		2-3" (1)	3" (2)	2" (3)	2" (4)	3" (5)	2" (6)	2" (7)	3" (8)	3" (9)	2" (10)	2" (11)	3" (12)
6	RM POWER	2										2	
8	LIGHTING (RM)		2		2	2			2	2		2	2
14	FB	2								2			
9CSC	Std Rt	1	1		1	1			1	1			1
	Std Lt	1	1			1			1	1			1
12CSC													
DLC	DETECTORS ML (NB)	8	8			8	8	4	8	8			8
	D	2	2	1	1	1			2	2			2
	PS	2	2		1	2			2	2			2
	Q	2							1	2			1
	OR	2							2	2			
TWISTED PAIR LOOP WIRES													
SIC	CONTROLLER												
	TELEPHONE												
OCC											1		
TOTAL CONDUCTORS / CABLES		22	16	1	5	15	8	4	9	22	1	4	17

LEGEND:

1 -Exist TYPE III SERVICE EQUIPMENT ENCLOSURE (120/240 V) TWO METERS WITH:

METER 1
MAIN 1P-100 A
1P-30 A (CEC 1)
1P-30 A (CEC 2)

METER 2
MAIN 1P-100 A
1P-30 A (SIGN)
2P-30 A (Sig AND Ltg)
1P-15 A (PEU)
1P-15 A (TDC)
1P-30 A (TMS)
1P-30 A (Sig)
ADD 1P-30 A (RM)

2 -SEE DETAIL 15TS-R ON ELECTRICAL DETAIL SHEET E-29.

3 -SEE DETAIL 1-A-L ON ELECTRICAL DETAIL SHEET E-29.

4 -SEE ELECTRICAL DETAIL SHEET E-30.

5 -SEE STANDARD PLAN RSP ES-7J DETAIL A.
SIGN LIGHTING FIXTURE NOT REQUIRED.

CONDUIT NOTES:

13 - Exist 2"C, 3 OCC,
ADD 1 OCC

14 - Exist 2"C, 2#8 (Ltg), 2#6 (Ltg), 2#6 (SIGN), 2#6 Sig,
4#10 (Irr), 2#10 (TDC), 2#10 (TMS), 4#14 (PEU),
ADD 2#6 (RM)

15 - Exist 2"C, 2#8 (Ltg), 2#6 (Sig,) 4#14 (PEU),
ADD 2#6 (RM)

16 - Exist 1"C, 3 OCC,
ADD 1 OCC

N C 17 - Exist 2"C, 2#6 (Ltg), 2#6 (SIGN), 2#10 (Irr),
2#10 (TMS)

LOCATION 3

RAMP METERING SYSTEM

E-11

REVISED BY | DATE REVISED
ANTONIO A. RODRIGUEZ | MERVIN FULLENWIDER
CALCULATED-DESIGNED BY | CHECKED BY
FUNCTIONAL SUPERVISOR: RAJPREET SINGH
STATE OF CALIFORNIA - DEPARTMENT OF TRANSPORTATION
Caltrans® TRAFFIC ELECTRICAL

LAST REVISION 06-27-16 | DATE PLOTTED => 21-JUL-2016 | TIME PLOTTED => 14:04

Dist	COUNTY	ROUTE	POST MILES TOTAL PROJECT	SHEET No.	TOTAL SHEETS
11	SD	5	3.9/9.2	164	282

REGISTERED ELECTRICAL ENGINEER — DATE: 06-14-16

PLANS APPROVAL DATE: 07-11-16

REGISTERED PROFESSIONAL ENGINEER — MERVIN D. FULLENWIDER No. E20211 Exp. 3-31-17 ELECTRICAL — STATE OF CALIFORNIA

THE STATE OF CALIFORNIA OR ITS OFFICERS OR AGENTS SHALL NOT BE RESPONSIBLE FOR THE ACCURACY OR COMPLETENESS OF SCANNED COPIES OF THIS PLAN SHEET.

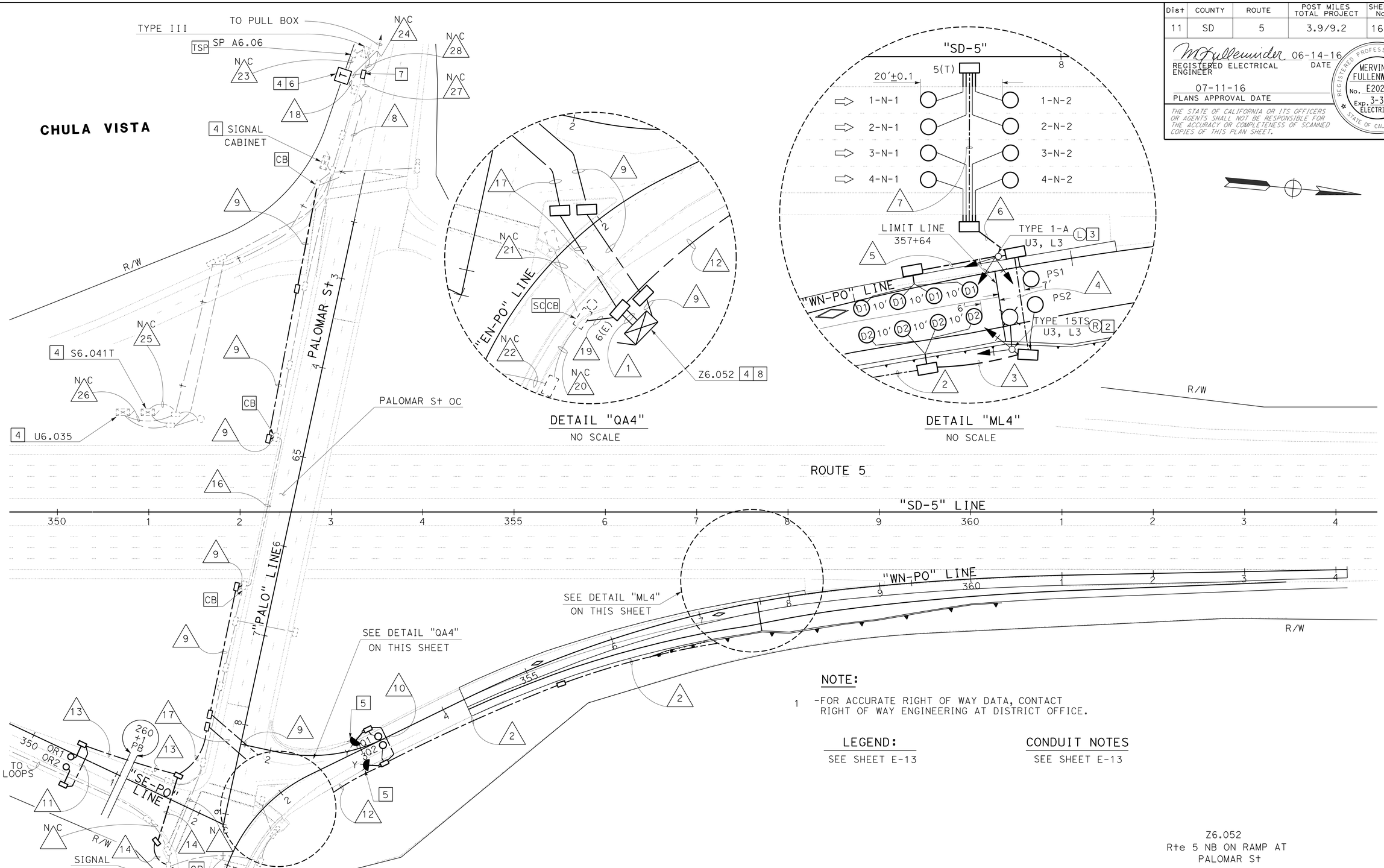

NOTE:

1 -FOR ACCURATE RIGHT OF WAY DATA, CONTACT RIGHT OF WAY ENGINEERING AT DISTRICT OFFICE.

LEGEND: SEE SHEET E-13

CONDUIT NOTES SEE SHEET E-13

Z6.052
Rte 5 NB ON RAMP AT
PALOMAR St

LOCATION 4

RAMP METERING SYSTEM

SCALE: 1"=50'

E-12

APPROVED FOR ELECTRICAL WORK ONLY

STATE OF CALIFORNIA - DEPARTMENT OF TRANSPORTATION
Caltrans® TRAFFIC ELECTRICAL

FUNCTIONAL SUPERVISOR: RAJPREET SINGH
CALCULATED-DESIGNED BY: ANTONIO A. RODRIGUEZ
CHECKED BY: MERVIN FULLENWIDER
REVISED BY / DATE REVISED

LAST REVISION 06-27-16 | DATE PLOTTED => 21-JUL-2016 | TIME PLOTTED => 14:04

Dist	COUNTY	ROUTE	POST MILES TOTAL PROJECT	SHEET No.	TOTAL SHEETS
11	SD	5	3.9/9.2	165	282

REGISTERED ELECTRICAL ENGINEER — DATE 06-14-16

07-11-16
PLANS APPROVAL DATE

REGISTERED PROFESSIONAL ENGINEER — MERVIN D. FULLENWIDER — No. E20211 — Exp. 3-31-17 — ELECTRICAL — STATE OF CALIFORNIA

THE STATE OF CALIFORNIA OR ITS OFFICERS OR AGENTS SHALL NOT BE RESPONSIBLE FOR THE ACCURACY OR COMPLETENESS OF SCANNED COPIES OF THIS PLAN SHEET.

CONDUIT AND CONDUCTOR SCHEDULE

AWG SIZE OR CABLE TYPE	CIRCUIT ID	CONDUIT SIZE AND RUN											
		2-3" (1)	3" (2)	3" (3)	2" (4)	2" (5)	2" (6)	2" (7)	EX 2" (8)	2" (9)	2" (10)	2" (11)	3" (12)
6	RM POWER	2											
8	LIGHTING (RM)		2	2									2
14	FB	2									2		2
9CSC	Std Rt	1	1	1									1
	Std Lt	1	1	1	1								1
12CSC													
DLC	DETECTORS ML (NB)	8	8	8	8		8	4					8
	D	2	2	1	1	1							2
	PS	2	2	2	1								2
	Q	2									1		2
	OR	2										1	
TWISTED PAIR LOOP WIRES													
SIC													
OCC	CCTV/SIG/TMS								3	1			
OCC	RAMP METER								(1)				
TOTAL CONDUCTORS / CABLES		22	16	15	11	1	8	4	4	1	3	1	20

CONDUIT NOTES:

(13) - 2"C, 2 DLC (OR),

(14) - 2"C, 2#6 (RM)

(15) - Exist 2"C, 2#6 (Sig), 2#10 (Ltg), 2#12 (SNS), ADD 2#6 (RM)

(16) - Exist 1½"C, 2 SIC, 4 (DLC), ADD 1 OCC

(17) - 2"C, 2#6 (RM), 2 DLC (OR)

(18) - Exist 1"C, 4 OCC, ADD 1 OCC

(19) - 2"C, 2#8 (Ltg-RM)

NC (20) - Exist 3"C, 3-3CSC, 3-12CSC, 2#12 (SNS), 2 EVUC, 2#10 (Ltg)

NC (21) - Exist 3"C, 2-3CSC, 1-12CSC, 2#12 (SNS), 2 EVUC, 2#10 (Ltg)

NC (22) - Exist 3"C, 3-3CSC, 3-12CSC, 2#10 (Ltg), 2 EVUC, 6 DLC

NC (23) - Exist 1"C, SIC (TELEPHONE)

NC (24) - Exist 2"C, 2#10 (TDC)

NC (25) - Exist 3"C, 1 OCC, 1 CAMERA CABLE

NC (26) - Exist 3"C, 2 OCC

NC (27) - Exist 2"C, 2#6 (Sig), 2#10 (Ltg), 2#12 (SIGN), 2#10 (CCTV), 2#10 (TMS), 2 DLC

NC (28) - Exist 2"C, 2#6 (Sig), 2#10 (Ltg), 2#12 (SIGN), 2#10 (CCTV), 2#10 (TMS), 2#10 (TDC)

LEGEND:

1 -Exist TYPE III SERVICE EQUIPMENT ENCLOSURE (120/240 V) WITH:
MAIN 2P-70 A
1P-50 A (Sig)
1P-50 A (PEU)
1P-15 A (Irr)
1P-15 A (SPARE)
2P-30 A (Ltg)
ADD 1P-30 A (RM)

2 -SEE DETAIL 15TS ON ELECTRICAL DETAIL SHEET E-29.

3 -SEE DETAIL 1-A ON ELECTRICAL DETAIL SHEET E-29.

4 -SEE DETAIL C ON ELECTRICAL DETAIL SHEET E-35.

5 -SEE DETAIL FB ON ELECTRICAL DETAIL SHEET E-29.

6 -RC EXSITING TYPE A (TDC). PLACE MODIFIED TYPE G (TDC) ON EXISTING FOUNDATION. SEE ELECTRICAL DETAIL SHEETS E-36 AND E-37.

7 -RC EXISTING PULL BOX. PLACE No. 5 PULL BOX.

8 -SEE DETAIL A AND DETAIL B ON ELECTRICAL DETAIL SHEET E-30.

LEGEND AND ABBREVIATIONS:

(X) - NEW CONDUCTOR IN EXISTING CONDUIT
X = No. OF CODUCTORS

LOCATION 4

RAMP METERING SYSTEM

E-13

STATE OF CALIFORNIA - DEPARTMENT OF TRANSPORTATION
Caltrans TRAFFIC ELECTRICAL
FUNCTIONAL SUPERVISOR: RAJPREET SINGH
CALCULATED-DESIGNED BY: ANTONIO A. RODRIGUEZ
CHECKED BY: MERVIN FULLENWIDER
REVISED BY
DATE REVISED

LAST REVISION 06-27-16 | DATE PLOTTED => 21-JUL-2016 | TIME PLOTTED => 14:04

Dist	COUNTY	ROUTE	POST MILES TOTAL PROJECT	SHEET No.	TOTAL SHEETS
11	SD	5	3.9/9.2	166	282

M Fullenwider 06-14-16
REGISTERED ELECTRICAL ENGINEER DATE

07-11-16
PLANS APPROVAL DATE

REGISTERED PROFESSIONAL ENGINEER MERVIN D. FULLENWIDER No. E20211 Exp. 3-31-17 ELECTRICAL STATE OF CALIFORNIA

THE STATE OF CALIFORNIA OR ITS OFFICERS OR AGENTS SHALL NOT BE RESPONSIBLE FOR THE ACCURACY OR COMPLETENESS OF SCANNED COPIES OF THIS PLAN SHEET.

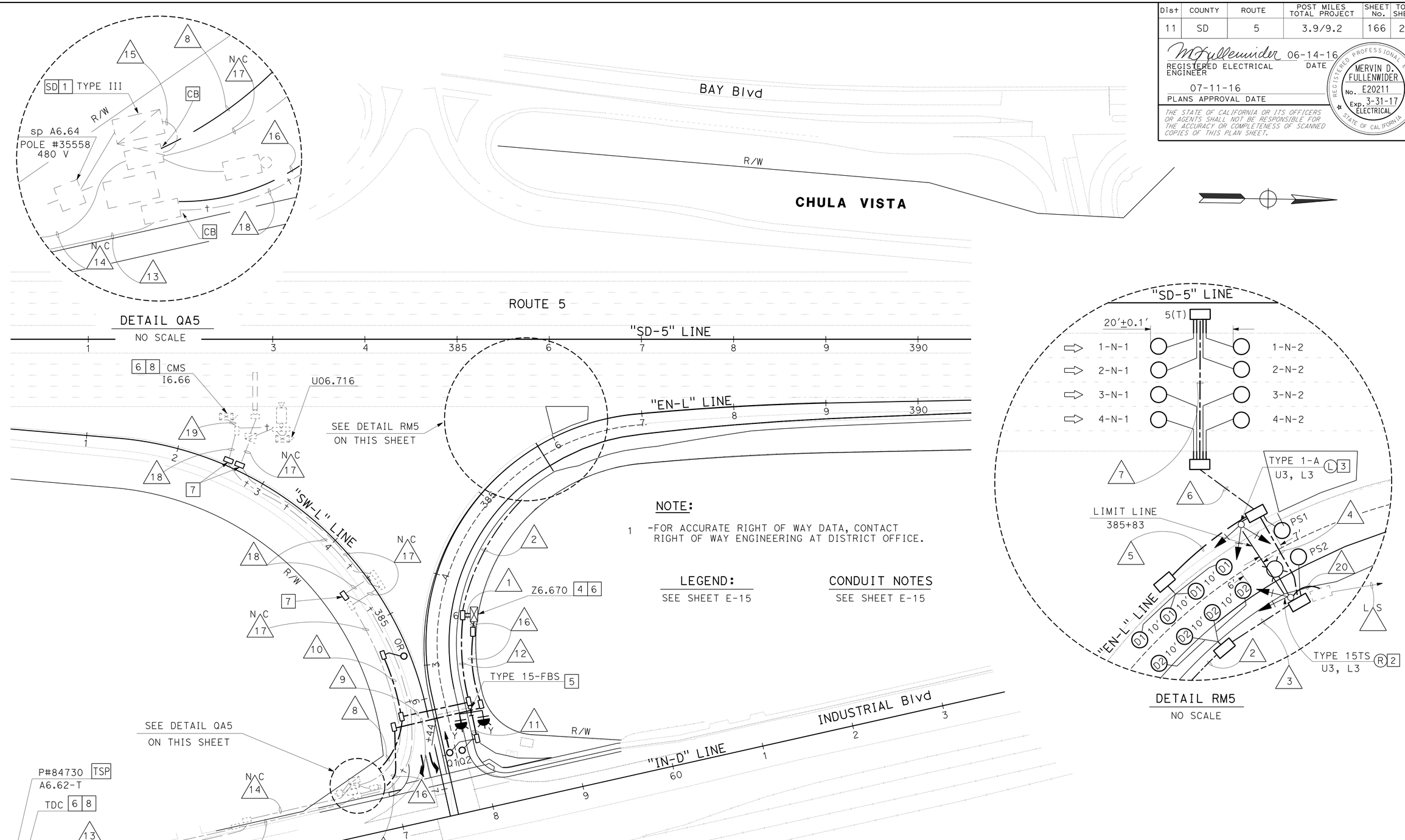

Z6.670
Rte 5 NB ON RAMP AT
INDUSTRIAL Blvd

LOCATION 5

RAMP METERING SYSTEM

APPROVED FOR ELECTRICAL WORK ONLY

SCALE: 1"=50'

E-14

STATE OF CALIFORNIA - DEPARTMENT OF TRANSPORTATION
Caltrans® TRAFFIC ELECTRICAL

FUNCTIONAL SUPERVISOR: RAJPREET SINGH
CALCULATED-DESIGNED BY: ANTONIO A. RODRIGUEZ
CHECKED BY: MERVIN FULLENWIDER
REVISED BY
DATE REVISED

LAST REVISION DATE PLOTTED => 21-JUL-2016
06-27-16 TIME PLOTTED => 14:04

BORDER LAST REVISED 7/2/2010
USERNAME => s127400
DGN FILE => 1114000045ua014.dgn
RELATIVE BORDER SCALE IS IN INCHES 0 1 2 3
UNIT 2833
PROJECT NUMBER & PHASE 11140000451

Dist	COUNTY	ROUTE	POST MILES TOTAL PROJECT	SHEET No.	TOTAL SHEETS
11	SD	5	3.9/9.2	167	282

REGISTERED ELECTRICAL ENGINEER — DATE 06-14-16

PLANS APPROVAL DATE 07-11-16

REGISTERED PROFESSIONAL ENGINEER — MERVIN D. FULLENWIDER — No. E20211 — Exp. 3-31-17 — ELECTRICAL — STATE OF CALIFORNIA

THE STATE OF CALIFORNIA OR ITS OFFICERS OR AGENTS SHALL NOT BE RESPONSIBLE FOR THE ACCURACY OR COMPLETENESS OF SCANNED COPIES OF THIS PLAN SHEET.

CONDUIT AND CONDUCTOR SCHEDULE

AWG SIZE OR CABLE TYPE	CIRCUIT ID	CONDUIT SIZE AND RUN											
		2-3" (1)	3" (2)	3" (3)	2" (4)	2" (5)	2" (6)	2" (7)	2" (8)	2" (9)	2" (10)	2" (11)	2" (12)
6	RM POWER	2							2	2			2
14	FB	2											2
9CSC	Std Rt	1	1	1									
	Std Lt	1	1	1	1								
12CSC													
DLC	DETECTORS ML (NB)	8	8	8	8		8	4					
	D	2	2	1	1	1							
	PS	2	2	2	1								
	Q	2										2	2
	OR	1								1	1		1
TWISTED PAIR LOOP WIRES													
SIC	CONTROLLER												
	TELEPHONE												
OCC	RAMP METER												
TOTAL CONDUCTORS / CABLES		21	14	13	11	1	8	4	2	3	1	2	7

LEGEND:

1. -Exist TYPE III SERVICE EQUIPMENT ENCLOSURE (120/240 V) WITH:
   - MAIN 2P-100 A
   - 2P-30 A (CMS)
   - 2P-40 A (Ltg)
   - 2P-40 A (SIGN)
   - 1P-15 A (Irr)
   - 1P-30 A (TDC)
   - 1P-15 A (PEU)
   - 1P-15 A (SPARE)
   - RC 1P-15 A (SPARE)
   - ADD 1P-30 A (RM)
2. -SEE DETAIL 15TS ON ELECTRICAL DETAIL SHEET E-29.
3. -SEE DETAIL 1-A ON ELECTRICAL DETAIL SHEET E-29.
4. -SEE DETAIL A AND DETAIL B ON ELECTRICAL DETAIL SHEET E-30.
5. -SEE STANDARD PLAN RSP ES-7J DETAIL A.
6. -SEE DETAIL D ON ELECTRICAL DETAIL SHEET E-35.
7. -RC Exist PULL BOX. PLACE No. 5 PULL BOX.
8. -SEE DETAIL E ON ELECTRICAL DETAIL SHEET E-38.

CONDUIT NOTES:

13. - Exist 1½"C, 1 SIC, 1 OCC, ADD 2 OCC
14. (N C) - Exist 1"C, 2#10 (TDC)
15. - Exist 2"C, 1 SIC, 1 OCC, 2#10 (TDC), ADD 2#6 (RM)
16. - 2"C, 1 OCC (RM)
17. (N C) - Exist 2"C, 2#4 (POWER)
18. - Exist 1½"C, 1 SIC, 1 OCC, ADD 1 OCC
19. - Exist 1½"C, 1 SIC, ADD 1 OCC
20. - 2"C, 2#8 (Ltg)

LOCATION 5

RAMP METERING SYSTEM

E-15

STATE OF CALIFORNIA - DEPARTMENT OF TRANSPORTATION — Caltrans® TRAFFIC ELECTRICAL

FUNCTIONAL SUPERVISOR: RAJPREET SINGH

CALCULATED-DESIGNED BY: ANTONIO A. RODRIGUEZ — CHECKED BY: MERVIN FULLENWIDER

REVISED BY — DATE REVISED

LAST REVISION 06-27-16 — DATE PLOTTED => 21-JUL-2016 — TIME PLOTTED => 14:04

Dist	COUNTY	ROUTE	POST MILES TOTAL PROJECT	SHEET No.	TOTAL SHEETS
11	SD	5	3.9/9.2	168	282

REGISTERED ELECTRICAL ENGINEER — DATE 06-14-16

PLANS APPROVAL DATE 07-11-16

REGISTERED PROFESSIONAL ENGINEER MERVIN D. FULLENWIDER No. E20211 Exp. 3-31-17 ELECTRICAL STATE OF CALIFORNIA

THE STATE OF CALIFORNIA OR ITS OFFICERS OR AGENTS SHALL NOT BE RESPONSIBLE FOR THE ACCURACY OR COMPLETENESS OF SCANNED COPIES OF THIS PLAN SHEET.

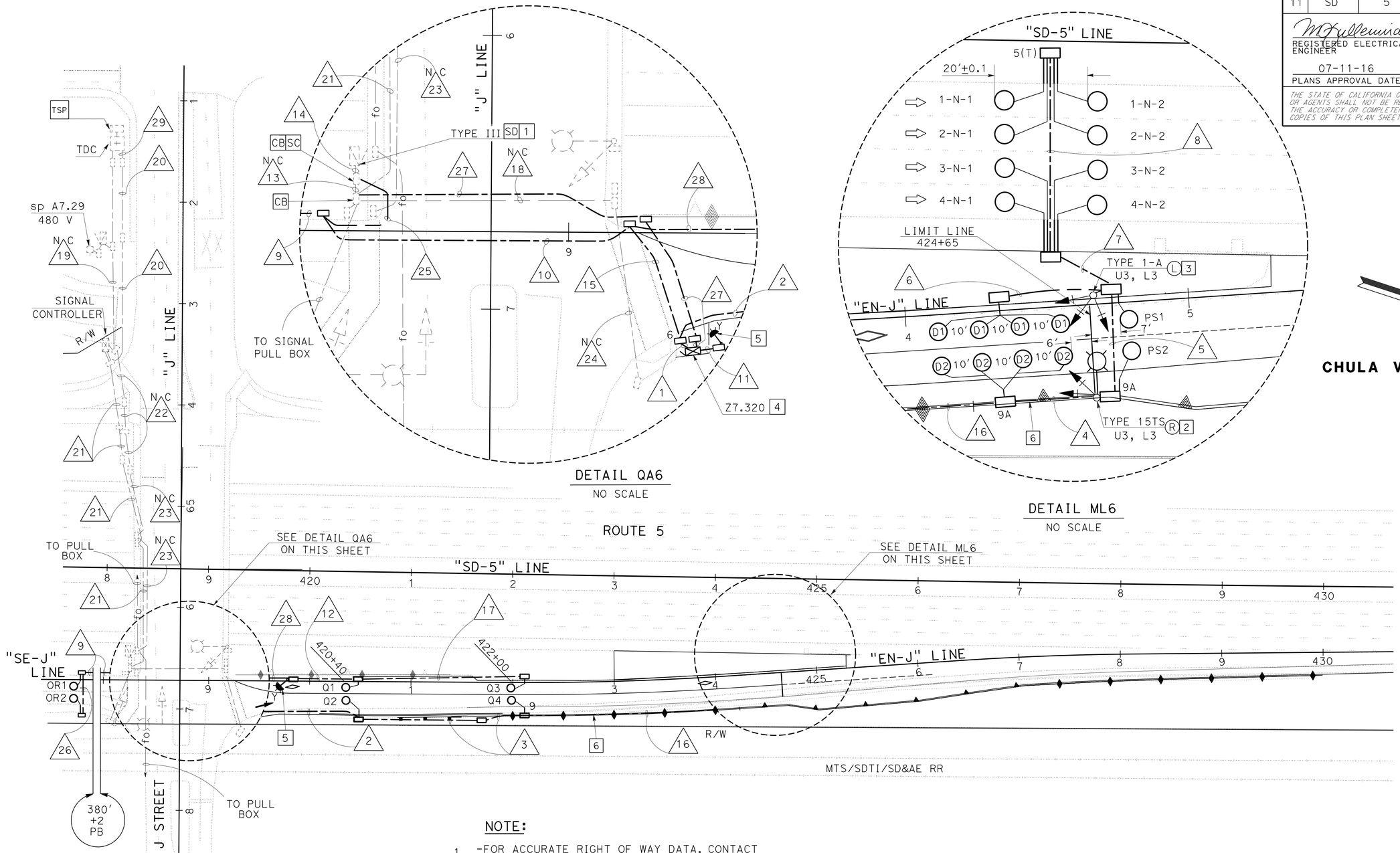

CHULA VISTA

NOTE:

1 -FOR ACCURATE RIGHT OF WAY DATA, CONTACT RIGHT OF WAY ENGINEERING AT DISTRICT OFFICE.

LEGEND:

SEE SHEET E-17

CONDUIT NOTES:

SEE SHEET E-17

Z7.320
Rte 5 NB ON RAMP AT
J St

LOCATION 6

RAMP METERING SYSTEM

APPROVED FOR ELECTRICAL WORK ONLY

SCALE: 1"=50'

E-16

STATE OF CALIFORNIA - DEPARTMENT OF TRANSPORTATION

Caltrans® TRAFFIC ELECTRICAL

FUNCTIONAL SUPERVISOR: RAJPREET SINGH

CALCULATED-DESIGNED BY: ANTONIO A. RODRIGUEZ

CHECKED BY: MERVIN FULLENWIDER

REVISED BY

DATE REVISED

LAST REVISION 06-27-16

DATE PLOTTED => 21-JUL-2016
TIME PLOTTED => 14:04

Dist	COUNTY	ROUTE	POST MILES TOTAL PROJECT	SHEET No.	TOTAL SHEETS
11	SD	5	3.9/9.2	169	282

REGISTERED ELECTRICAL ENGINEER — DATE 06-14-16

07-11-16
PLANS APPROVAL DATE

REGISTERED PROFESSIONAL ENGINEER — MERVIN D. FULLENWIDER — No. E20211 — Exp. 3-31-17 — ELECTRICAL — STATE OF CALIFORNIA

THE STATE OF CALIFORNIA OR ITS OFFICERS OR AGENTS SHALL NOT BE RESPONSIBLE FOR THE ACCURACY OR COMPLETENESS OF SCANNED COPIES OF THIS PLAN SHEET.

CONDUIT AND CONDUCTOR SCHEDULE

AWG SIZE OR CABLE TYPE	CIRCUIT ID	CONDUIT SIZE AND RUN																
		2-3" 1	3" 2	3" 3	3" 4	3" 5	2" 6	2" 7	2" 8	2" 9	2" 10	2" 11	3" 12	EX 2 N C 13	EX 3 N 14	3" 15	3" 16	2" 17
6	SERVICE													2	2			
6	RM POWER	2									2				(2)	2		
8	SIGNAL													2	2			
8	LIGHTING (RM)		2	2	2						2					2	2	
8	LIGHTING													2	2			
14	PEU													3	3			
14	FB	2										2				2		
9CSC	Std Rt	1	1	1	1												1	
	Std Lt	1	1	1	1	1											1	
12CSC																		
DLC	DETECTORS ML (NB)	8	8	8	8	8		8	4								8	
	D	2	2	2	1	1	1										2	
	PS	2	2	2	2	1											2	
	Q	4	2	1									2			2		1
	OR	2								2	2					2		
TWISTED PAIR LOOP WIRES																		
SIC	CONTROLLER																	
OCC	RAMP METER																	
TOTAL CONDUCTORS / CABLES		24	18	17	15	11	1	8	4	2	6	2	2	9	11	10	16	1

CONDUIT NOTES:

N C 18 - Exist 3"C, 2-3CSC, 3-12CSC, 2#8 (Ltg), 2 DLC, 1 (EVUC), 1 (VCH),

N C 19 - Exist 2"C, 2#6 (Sig), 2#14(Irr), 3#14 (PEU), 4#8 (Ltg), 2#6 (Ltg)

20 - Exist 2"C, 1 SIC, 3 OCC, ADD 1 OCC

21 - Exist 2"C, 1 SIC, 1 OCC, ADD 1 OCC

N C 22 - Exist 3"C, 2-3CSC, 4-12CSC, 2 (DLC), 3 (VCH)

N C 23 - Exist 2"C, 2#6 (Sig)

N C 24 - Exist 2"C, 1-3CSC, 1-12CSC, 2 DLC

25 - 2"C, 2#6 (RM), 2#8 (Ltg-RM)

26 - 2"C, 1 DLC

27 - 2"C, 1 OCC

28 - 2"C, 2#14 (FB), 2 DLC (Q)

29 - Exist 1½"C, 1 SIC, 3 OCC, ADD 1 OCC

LEGEND:

1 -Exist TYPE III SERVICE EQUIPMENT ENCLOSURE (120/240 V) WITH:
MAIN 2P-20 A
2P-15 A (Ltg)
1P-15 A (SPARE)
1P-15 A (SPARE)
1P-20 A (Sig)
1P-15 A (PEU)
ADD 1P-30 A (RM)

2 -SEE DETAIL 15TS-B ON ELECTRICAL DETAIL SHEET E-31.

3 -SEE DETAIL 1-A ON ELECTRICAL DETAIL SHEET E-29.

4 -SEE ELECTRICAL DETAIL SHEET E-30. FOR ADDITIONAL INFORMATION, SEE CONSTRUCTION DETAILS.

5 -SEE DETAIL FB ON ELECTRICAL DETAIL SHEET E-29.

6 -"RW3", SEE ELECTRICAL DETAILS SHEET E-34.

LEGEND AND ABBREVIATIONS:

(X) - NEW CONDUCTOR IN EXISTING CONDUIT
X = No. OF CODUCTORS

LOCATION 6

RAMP METERING SYSTEM

E-17

REVISED BY	DATE REVISED
ANTONIO A. RODRIGUEZ	MERVIN FULLENWIDER
CALCULATED-DESIGNED BY	CHECKED BY
FUNCTIONAL SUPERVISOR	RAJPREET SINGH

STATE OF CALIFORNIA - DEPARTMENT OF TRANSPORTATION
Caltrans® TRAFFIC ELECTRICAL

LAST REVISION 06-27-16 | DATE PLOTTED => 21-JUL-2016 | TIME PLOTTED => 14:04

Dist	COUNTY	ROUTE	POST MILES TOTAL PROJECT	SHEET No.	TOTAL SHEETS
11	SD	5	3.9/9.2	170	282

REGISTERED ELECTRICAL ENGINEER — DATE 06-14-16

PLANS APPROVAL DATE 07-11-16

REGISTERED PROFESSIONAL ENGINEER MERVIN D. FULLENWIDER No. E20211 Exp. 3-31-17 ELECTRICAL STATE OF CALIFORNIA

THE STATE OF CALIFORNIA OR ITS OFFICERS OR AGENTS SHALL NOT BE RESPONSIBLE FOR THE ACCURACY OR COMPLETENESS OF SCANNED COPIES OF THIS PLAN SHEET.

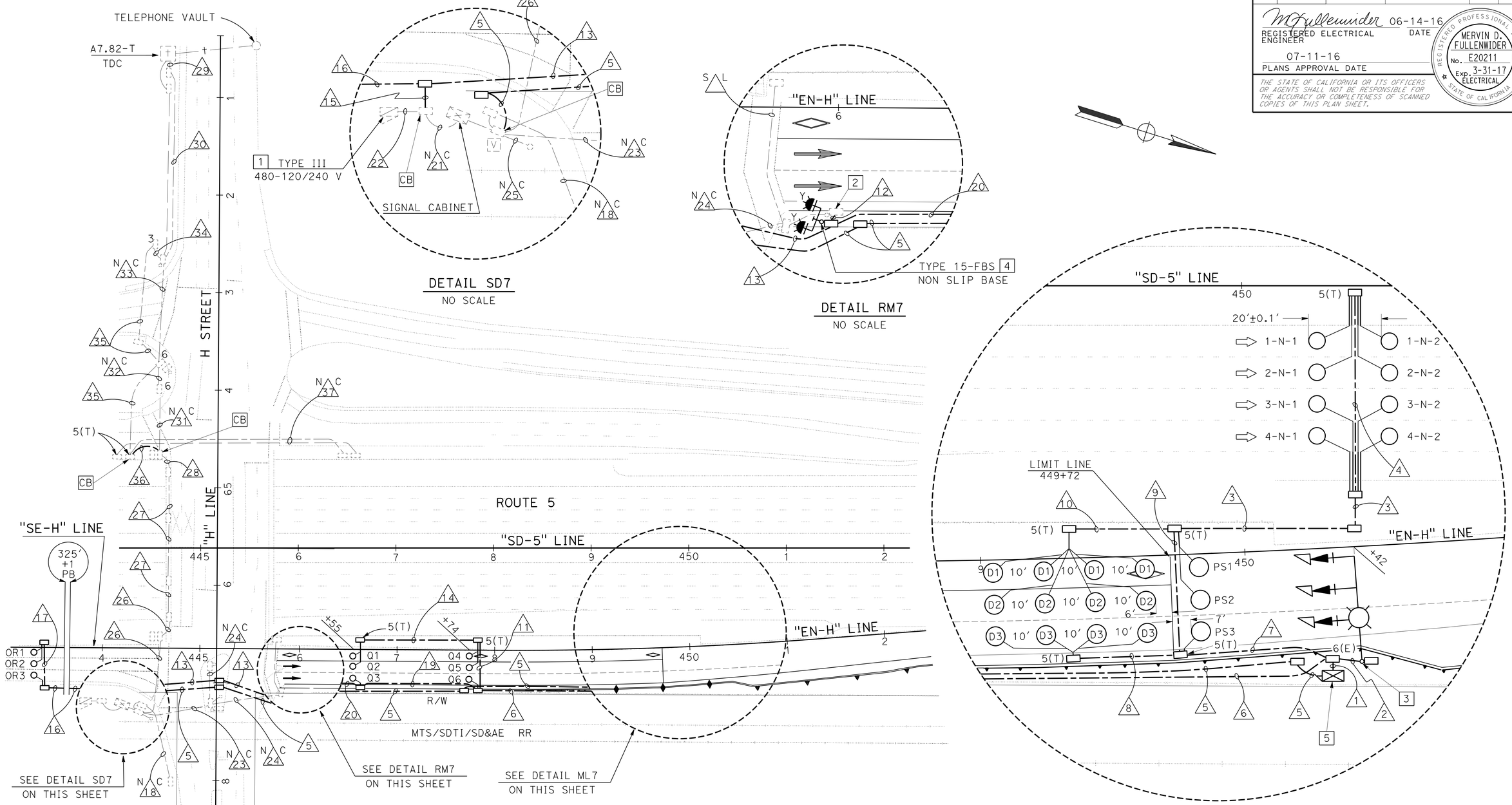

DETAIL ML7
NO SCALE

NOTE:

1 -FOR ACCURATE RIGHT OF WAY DATA, CONTACT RIGHT OF WAY ENGINEERING AT DISTRICT OFFICE.

LEGEND:
SEE SHEET E-19

CONDUIT NOTES:
SEE SHEET E-19

Z7.908
Rte 5 NB ON RAMP AT
H St

LOCATION 7

RAMP METERING SYSTEM

APPROVED FOR ELECTRICAL WORK ONLY

SCALE: 1"=50'

E-18

STATE OF CALIFORNIA - DEPARTMENT OF TRANSPORTATION
Caltrans TRAFFIC ELECTRICAL

FUNCTIONAL SUPERVISOR: RAJPREET SINGH
CALCULATED-DESIGNED BY: MERVIN FULLENWIDER
CHECKED BY: HENRY TSUI
REVISED BY
DATE REVISED

LAST REVISION DATE PLOTTED => 21-JUL-2016
TIME PLOTTED => 14:04
06-27-16

BORDER LAST REVISED 7/2/2010 | USERNAME => s127400 | DGN FILE => 1114000045ua018.dgn | RELATIVE BORDER SCALE IS IN INCHES 0 1 2 3 | UNIT 2833 | PROJECT NUMBER & PHASE 11140000451

Dist	COUNTY	ROUTE	POST MILES TOTAL PROJECT	SHEET No.	TOTAL SHEETS
11	SD	5	3.9/9.2	171	282

REGISTERED ELECTRICAL ENGINEER — DATE 06-14-16

07-11-16
PLANS APPROVAL DATE

REGISTERED PROFESSIONAL ENGINEER — MERVIN D. FULLENWIDER — No. E20211 — Exp. 3-31-17 — ELECTRICAL — STATE OF CALIFORNIA

THE STATE OF CALIFORNIA OR ITS OFFICERS OR AGENTS SHALL NOT BE RESPONSIBLE FOR THE ACCURACY OR COMPLETENESS OF SCANNED COPIES OF THIS PLAN SHEET.

CONDUIT AND CONDUCTOR SCHEDULE

AWG SIZE OR CABLE TYPE	CIRCUIT ID	CONDUIT SIZE AND RUN																			
		2-3" 1	2" 2	2" 3	2" 4	2" 5	3" 6	3" 7	2" 8	3" 9	2" 10	2" 11	2" 12	2" 13	2" 14	2" 15	2" 16	2" 17	EX 2" N C 18	3" 19	3" 20
6	RM POWER	2					2							2		2				2	2
8	LIGHTING (RM)		2				2						2							2	2
14	FB	2					2													2	2
9CSC	Std Rt																				
	Std Lt																				
12CSC	Std M	1	1																		
DLC	DETECTORS ML (NB)	8		8	4			8		8											
	D	3						3	1	2	2										
	PS	3						3		2											
	Q	6					6					4			2					1	
	OR	3					3							3			3	2		3	3
OCC	RM CONTROLLER					1															
SIC	INTERCONNECT																				
SIC	RAILROAD																		1		
TOTAL CONDUCTORS / CABLES		28	3	8	4	1	15	14	1	12	2	4	2	5	2	2	3	2	1	10	9
NOTES																					

CONDUIT NOTES:

N C 21 - Exist 2"C, 2#8 (Sig), 2#8 (Ltg), 2#14 (PEU), 2#6 (SERVICE)

22 - Exist 2"C, 2#8 (Sig), 2#8 (Ltg), 3#14 (PEU), 2#8 (SERVICE), ADD 2#6 (RM)

N C 23 - Exist 3"C, 5-12CSC (Sig), 2-3CSC (Sig), 2#8 (Ltg), 2 EVUC, 3 VIDEO CABLE

N C 24 - Exist 2"C, 1-12CSC (Sig), 1 EVUC, 1 VIDEO CABLE

N C 25 - Exist 1"C, 3CSC (Sig)

26 - Exist 3"C, 1-12CSC (Sig), 1-3CSC (Sig), 2#6 (SERVICE), 1 SIC, 1 OCC, ADD 1 OCC

27 - Exist 2-1½"C, 2#6 (SERVICE), 1 SIC, 1 OCC, ADD 1 OCC

28 - Exist 3"C, 1-12CSC (Sig), 1-3CSC (Sig), 2#6 (SERVICE), 2#8 (Ltg), 1 SIC, 1 OCC, ADD 1 OCC

29 - Exist 1"C, SIC (Sig), 2 OCC, OCC (Tel), SIC, ADD 1 OCC

30 - Exist 1½"C, SIC (Sig), 2 OCC, ADD 1 OCC

N C 31 - Exist 2"C, 1-12CSC (Sig), 1-3CSC (Sig), 2#6 (SERVICE), 2#8 (Ltg), 1 SIC, 1 OCC

N C 32 - Exist 3"C, 2-12CSC (Sig), 2-3CSC (Sig), 2#6 (SERVICE), 2#8 (Ltg), 3 DLC 2 EVUC, 1 SIC, 1 OCC, 2 VIDEO CABLE HARNESS

N C 33 - Exist 3"C, 1-12CSC (Sig), 1-3CSC (Sig), 1 OCC, 2#8 (Ltg), 3 DLC 2 EVUC, 1 SIC, VIDEO CABLE HARNESS

34 - Exist 1"C, 2 OCC, ADD 1 OCC

35 - Exist 2"C, 2 OCC, ADD 1 OCC

36 - 2"C, 1 OCC

N C 37 - Exist 2"C, 2 OCC
- Exist 2"C, 2#8 (MVDS), 2#8 (CCTV)

LEGEND:

1 -Exist TYPE 3R NEMA SERVICE EQUIPMENT ENCLOSURE (480-120/240 V) WITH:
MAIN 2P-20 A
1P-20 A (Sig)
1P-15 A (PEU)
2P-15 A (Ltg)
1P-15 A (Irr)
1P-15 A (SPARE)
ADD 1P-30 A (RM)

2 -FOR CIRCUIT CONTINUITY SEE MODIFYING EXISTING ELECTRICAL SYSTEM SHEET E-27.

3 -SEE DETAIL M-2 ON ELECTRICAL DETAIL SHEET E-32.

4 -SEE STANDARD PLAN RSP ES-7J DETAIL A. SIGN LIGHTING FIXTURE NOT REQUIRED. TYPE 15-FBS MUST BE 18" Min FROM CURB.

5 -SEE ELECTRICAL DETAIL SHEET E-30.

LOCATION 7

RAMP METERING SYSTEM

E-19

REVISED BY | DATE REVISED
MERVIN FULLENWIDER | HENRY TSUI
CALCULATED-DESIGNED BY | CHECKED BY
FUNCTIONAL SUPERVISOR | RAJPREET SINGH
STATE OF CALIFORNIA - DEPARTMENT OF TRANSPORTATION
Caltrans® TRAFFIC ELECTRICAL

LAST REVISION 06-27-16 | DATE PLOTTED => 21-JUL-2016 | TIME PLOTTED => 14:04

Dist	COUNTY	ROUTE	POST MILES TOTAL PROJECT	SHEET No.	TOTAL SHEETS
11	SD	5	3.9/9.2	172	282

REGISTERED ELECTRICAL ENGINEER — DATE 06-14-16

07-11-16
PLANS APPROVAL DATE

REGISTERED PROFESSIONAL ENGINEER — MERVIN D. FULLENWIDER — No. E20211 — Exp. 3-31-17 — ELECTRICAL — STATE OF CALIFORNIA

THE STATE OF CALIFORNIA OR ITS OFFICERS OR AGENTS SHALL NOT BE RESPONSIBLE FOR THE ACCURACY OR COMPLETENESS OF SCANNED COPIES OF THIS PLAN SHEET.

CONDUIT AND CONDUCTOR SCHEDULE

AWG SIZE OR CABLE TYPE	CIRCUIT ID	CONDUIT SIZE AND RUN																	
		2-3" (1)	3" (2)	3" (3)	2" (4)	2" (5)	3" (6)	1½" N C (7)	3" (8)	2" (9)	2" (10)	2" N C (11)	2" (12)	3" (13)	2" (14)	2" (15)	2" N C (16)	2" (17)	2" (18)
6	RM POWER	2												2	2	2			
6	LIGHTING (RM)		2				2		2	2				2	2	2			
6	LIGHTING							2									2		
6	SIGN																2		
10	EMS/FB	3												3					
8	Irr							2											
9CSC	Std R+	1	1				1		1	1									
	Std L+	1	1				1		1										
12CSC																			
DLC	DETECTORS ML (NB)	8	8	8	4	4													
	D	2	2				2		1	1	1								
	PS	2	2				2		2	1									
	Q	2												2	1				
	OR	2												2	2	2		1	2
	R	3	2	2										1	1				
TWISTED PAIR LOOP WIRES					5														
SIC																			
OCC	CONTROLLER												1						
TOTAL CONDUCTORS / CABLES		26	18	10	9	4	8	4	7	5	1	0	1	12	8	6	4	1	2

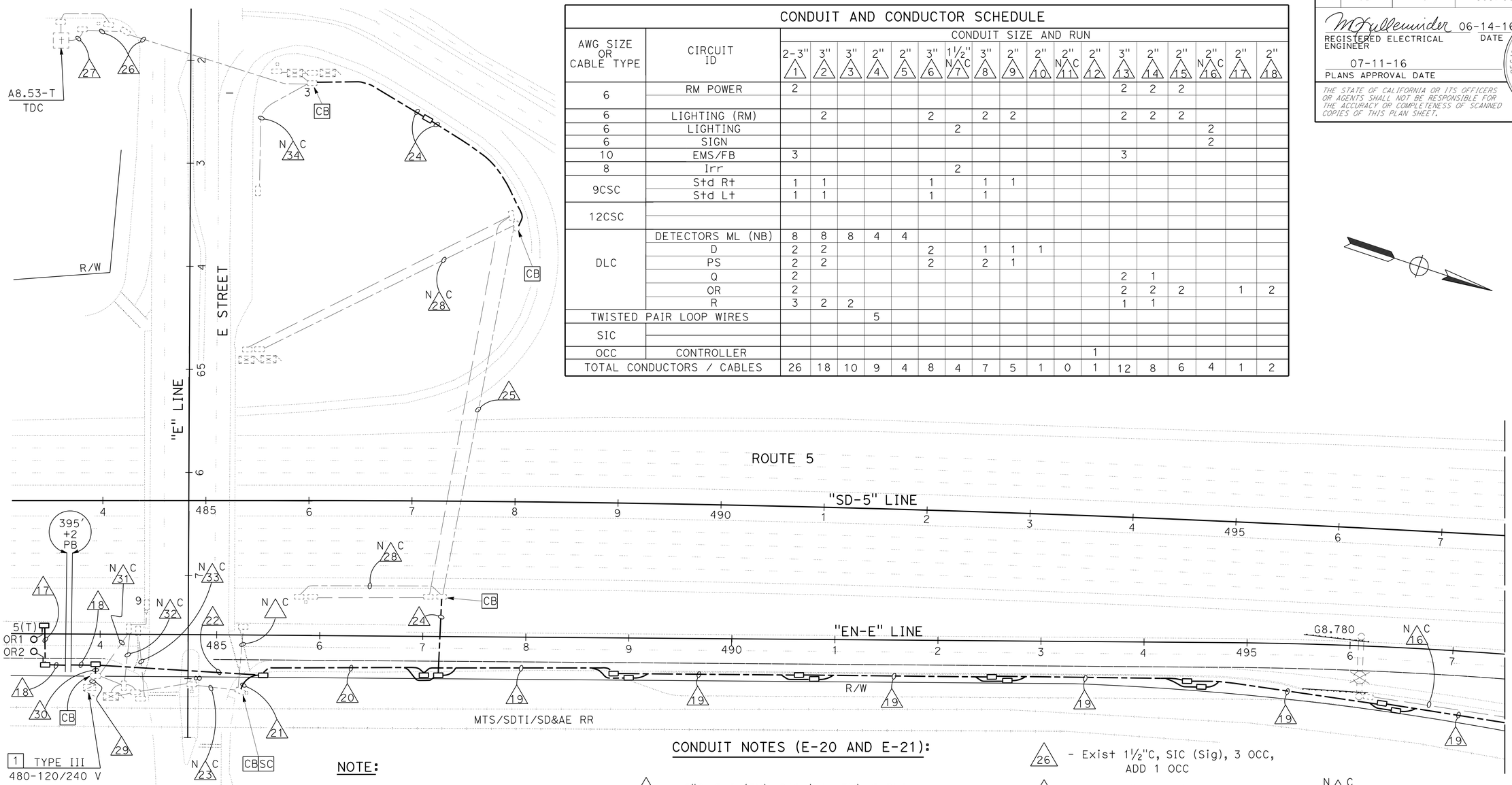

NOTE:

1 -FOR ACCURATE RIGHT OF WAY DATA, CONTACT RIGHT OF WAY ENGINEERING AT DISTRICT OFFICE.

LEGEND (E-20 AND E-21):

1 -Exist TYPE III SERVICE EQUIPMENT ENCLOSURE (480-120/240 V) WITH:
MAIN 2P-20 A
1P-20 A (Sig)
1P-15 A (PEU)
2P-15 A (Ltg)
ADD 1P-30 A (RM)

2 -SEE DETAIL 1-A ON ELECTRICAL DETAIL SHEET E-29.

3 -SEE DETAIL 15TS ON ELECTRICAL DETAIL SHEET E-29.

4 -SEE ELECTRICAL DETAIL SHEET E-30.

CONDUIT NOTES (E-20 AND E-21):

19 - 2"C, 2#6 (RM), 2#6 (Ltg-RM), 2 DLC
- 2"C, 1 OCC (RM)

20 - 2"C, 2#6 (RM), 2#6 (Ltg-RM), 2 DLC

21 - 2"C, 2#6 (Ltg-RM)

22 - 2"C, 2#6 (RM), 2 DLC

N C 23 - Exist 3"C, 2-12CSC (Sig), 2-3CSC (Sig), 2#8 (Ltg), 1 EVUC, 1 VIDEO CABLE

24 - 2"C, 1 OCC (RM)

25 - Exist 2"C, 1 OCC (MVDS), ADD 1 OCC

26 - Exist 1½"C, SIC (Sig), 3 OCC, ADD 1 OCC

27 - Exist 1"C, SIC (Sig), 3 OCC, ADD 1 OCC

N C 28 - Exist 2"C, 1 OCC (MVDS)

29 - Exist 4"C, 2#6 (SERVICE) 2#8 (Sig), 3#14 (PEU), 2#8 (Ltg), ADD 2#8 (RM)

30 - 2"C, 2#6 (RM)

N C 31 - Exist 2"C, 2#6 (SERVICE)

N C 32 - Exist 2"C, 12CSC (Sig), 3CSC (Sig), SIC

N C 33 - Exist 1½"C, 6#8 (Ltg)

N C 34 - Exist 2"C, 3 OCC (MVDS)

Z8.868
NB 5 ON RAMP AT
E STREET

LOCATION 8

RAMP METERING SYSTEM

SCALE: 1"=50'

E-20

APPROVED FOR ELECTRICAL WORK ONLY

STATE OF CALIFORNIA - DEPARTMENT OF TRANSPORTATION
Caltrans® TRAFFIC ELECTRICAL

FUNCTIONAL SUPERVISOR: RAJPREET SINGH
CALCULATED-DESIGNED BY: MERVIN FULLENWIDER
CHECKED BY: HENRY TSUI
REVISED BY
DATE REVISED

LAST REVISION DATE PLOTTED => 21-JUL-2016
06-27-16 TIME PLOTTED => 14:04

Dist	COUNTY	ROUTE	POST MILES TOTAL PROJECT	SHEET No.	TOTAL SHEETS
11	SD	5	3.9/9.2	173	282

REGISTERED ELECTRICAL ENGINEER — DATE 06-14-16

07-11-16
PLANS APPROVAL DATE

REGISTERED PROFESSIONAL ENGINEER — MERVIN D. FULLENWIDER — No. E20211 — Exp. 3-31-17 — ELECTRICAL — STATE OF CALIFORNIA

THE STATE OF CALIFORNIA OR ITS OFFICERS OR AGENTS SHALL NOT BE RESPONSIBLE FOR THE ACCURACY OR COMPLETENESS OF SCANNED COPIES OF THIS PLAN SHEET.

NOTE:

1 -FOR ACCURATE RIGHT OF WAY DATA, CONTACT RIGHT OF WAY ENGINEERING AT DISTRICT OFFICE.

LEGEND:
SEE SHEET E-20

CONDUIT NOTES:
SEE SHEET E-20

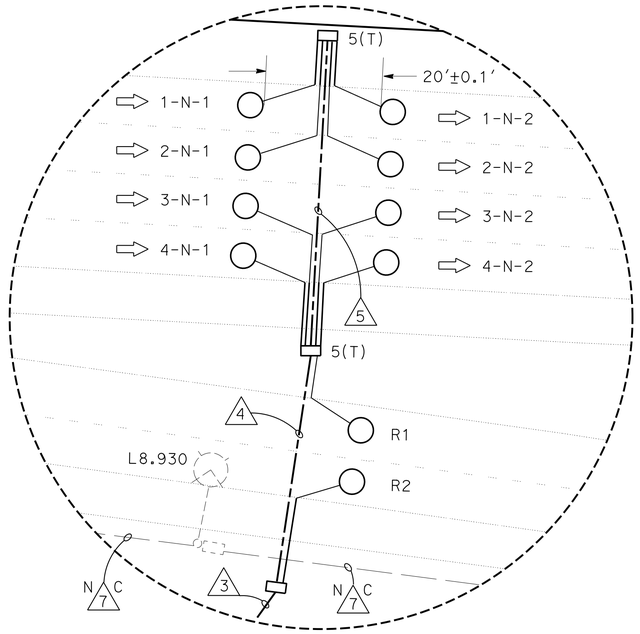

DETAIL ML8
NO SCALE

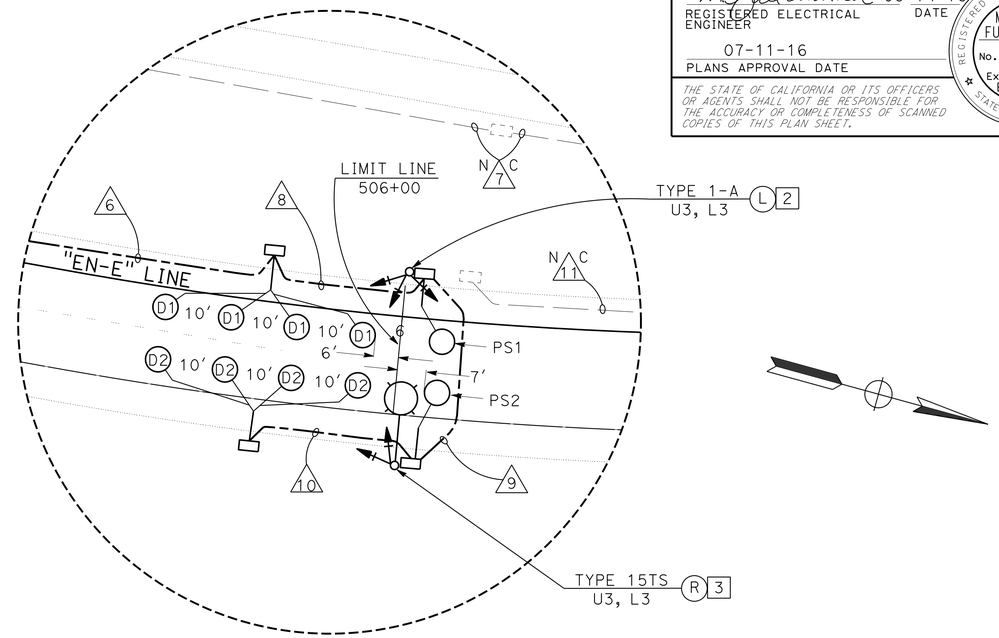

DETAIL RM8
NO SCALE

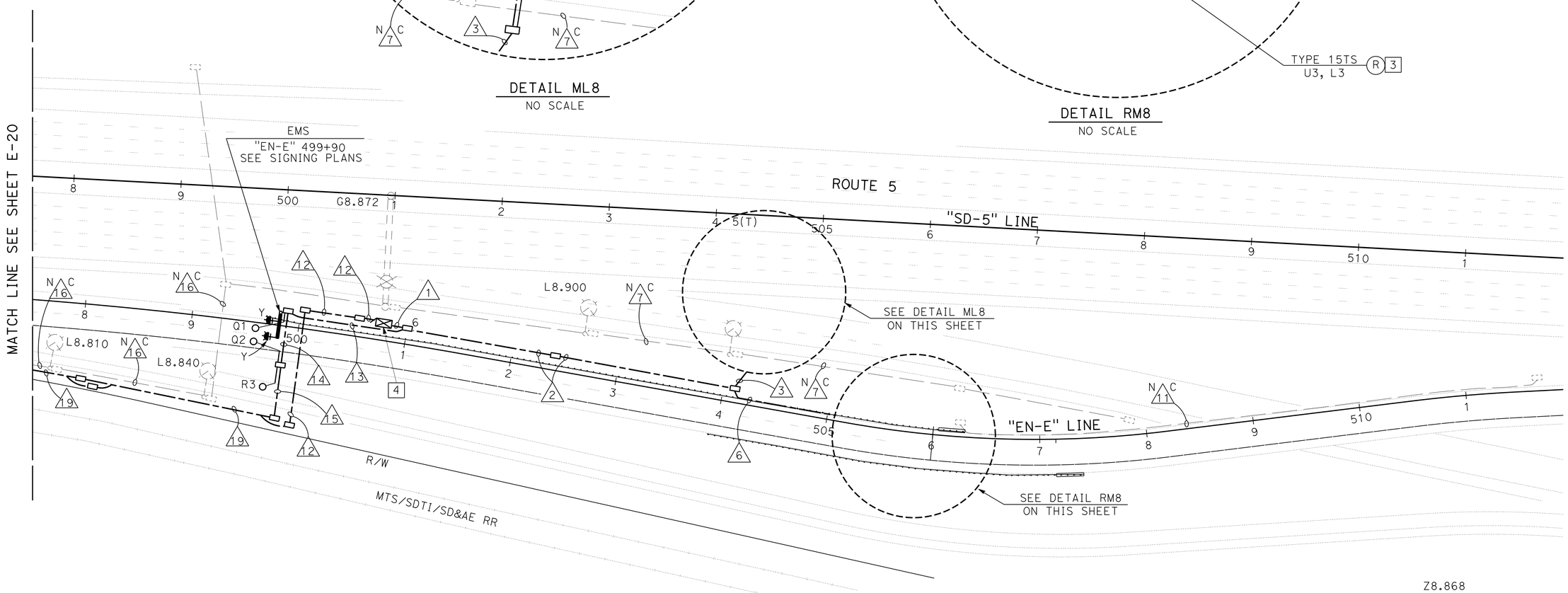

Z8.868
NB 5 ON RAMP AT
E STREET

LOCATION 8

RAMP METERING SYSTEM

APPROVED FOR ELECTRICAL WORK ONLY

SCALE: 1"=50'

E-21

STATE OF CALIFORNIA - DEPARTMENT OF TRANSPORTATION
Caltrans® TRAFFIC ELECTRICAL

FUNCTIONAL SUPERVISOR: RAJPREET SINGH
CALCULATED-DESIGNED BY: MERVIN FULLENWIDER
CHECKED BY: HENRY TSUI
REVISED BY
DATE REVISED

LAST REVISION 06-27-16
DATE PLOTTED => 21-JUL-2016
TIME PLOTTED => 14:04

Dist	COUNTY	ROUTE	POST MILES TOTAL PROJECT	SHEET No.	TOTAL SHEETS
11	SD	5	3.9/9.2	174	282

REGISTERED ELECTRICAL ENGINEER — DATE 06-14-16

07-11-16
PLANS APPROVAL DATE

REGISTERED PROFESSIONAL ENGINEER — MERVIN D. FULLENWIDER — No. E20211 — Exp. 3-31-17 — ELECTRICAL — STATE OF CALIFORNIA

THE STATE OF CALIFORNIA OR ITS OFFICERS OR AGENTS SHALL NOT BE RESPONSIBLE FOR THE ACCURACY OR COMPLETENESS OF SCANNED COPIES OF THIS PLAN SHEET.

NOTE:

1 -FOR ACCURATE RIGHT OF WAY DATA, CONTACT RIGHT OF WAY ENGINEERING AT DISTRICT OFFICE.

LEGEND:
SEE SHEET E-23

CONDUIT NOTES:
SEE SHEET E-23

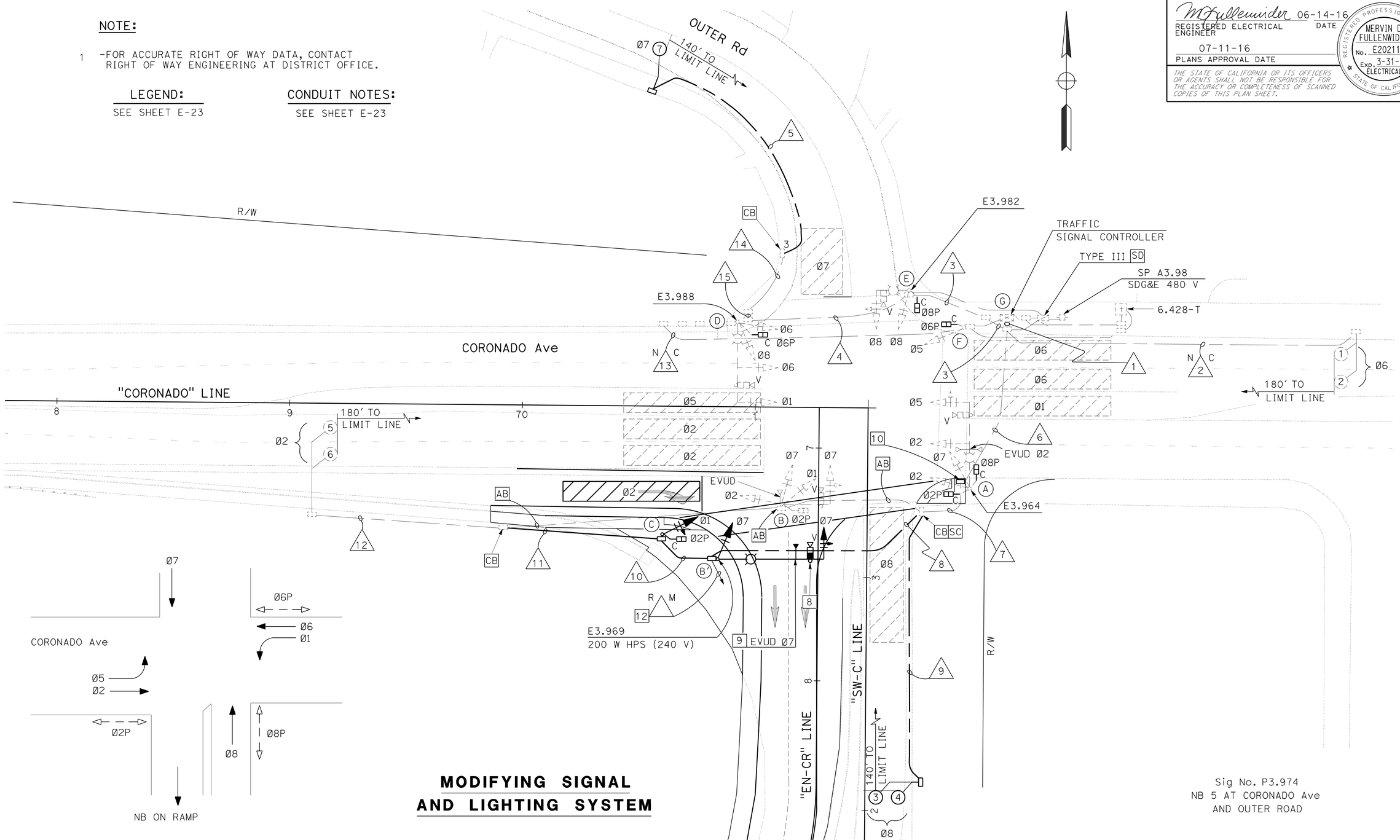

MODIFYING SIGNAL AND LIGHTING SYSTEM

Sig No. P3.974
NB 5 AT CORONADO Ave
AND OUTER ROAD

MODIFYING EXISTING ELECTRICAL SYSTEM

SCALE: 1"=20'

E-22

APPROVED FOR ELECTRICAL WORK ONLY

STATE OF CALIFORNIA - DEPARTMENT OF TRANSPORTATION
Caltrans® TRAFFIC ELECTRICAL

FUNCTIONAL SUPERVISOR: RAJPREET SINGH
CALCULATED-DESIGNED BY: MERVIN FULLENWIDER
CHECKED BY: HENRY TSUI
REVISED BY / DATE REVISED

LAST REVISION 06-27-16 | DATE PLOTTED => 21-JUL-2016 | TIME PLOTTED => 14:04

Dist	COUNTY	ROUTE	POST MILES TOTAL PROJECT	SHEET No.	TOTAL SHEETS
11	SD	5	3.9/9.2	175	282

REGISTERED ELECTRICAL ENGINEER — DATE 06-14-16

PLANS APPROVAL DATE 07-11-16

REGISTERED PROFESSIONAL ENGINEER — MERVIN D. FULLENWIDER No. E20211 Exp. 3-31-17 ELECTRICAL — STATE OF CALIFORNIA

THE STATE OF CALIFORNIA OR ITS OFFICERS OR AGENTS SHALL NOT BE RESPONSIBLE FOR THE ACCURACY OR COMPLETENESS OF SCANNED COPIES OF THIS PLAN SHEET.

CONDUIT AND CONDUCTOR SCHEDULE

AWG SIZE OR CABLE TYPE	PHASE	POLE OR CIRCUIT	CONDUIT SIZE AND RUN														
			EX 2-4" (1)	EX 2" NC (2)	EX 3" (3)	EX 3" (4)	2" (5)	EX 3" (6)	EX 3" (7)	3" (8)	2" (9)	3" (10)	2" (11)	EX 2" (12)	EX 2" NC (13)	EX 1½" (14)	EX 1" (15)
No. 14 CABLES		POLE - A	2 / 2					2 / 2									
3CSC		B'	- / (1)					- / (1)	- / (1)	- / 1							
		B	1 / 2					1 / 2	1 / 2								
		C	(1) / (1)					(1) / (1)	(1) / (1)	1 / 1		1 / 1					
		D	1 / 2		1 / 2	1 / 2											
12CSC		E	1 / 1		1 / 1												
		F															
TOTAL CONDUCTORS 3CSC/ 12CSC			5 / 7		2 / 3	1 / 2		3 / 4	1 / 2	1 / 2		1 / 1					
6		SIGNAL	2														
8		LIGHTING			2	2		2	2	2							
14		PEU															
TYPE DLC	Ø2	LOOP DETECTOR	(2)					(2)	(2)	2		2	2	(2)			
	Ø6	LOOP DETECTOR	2	2													
	Ø7	LOOP DETECTOR	(1)		(1)	(1)	1									(1)	(1)
	Ø8	LOOP DETECTOR	(2)					(2)	(2)		2						
SIC (INTERCONNECT)			1		1	1									1		
OCC															1		
EVUC (FUTURE)			2		2	1											
EVUC Ø7			(1)					(1)	(1)	1							
EVUC Ø2			2					2									
VIDEO CABLE HARNESS			3		2	1		1									
VIDEO CABLE HARNESS Ø7			(1)					(1)	(1)	1							
TOTAL CONDUCTORS / CABLES			30	2	13	9	1	18	11	9	2	4	2	2	2	1	1
NOTES			1 2		2	2		1	1					6		11	

LEGEND AND ABBREVIATIONS:

(X) -NEW CONDUCTOR IN EXISTING CONDUIT
X = No. OF CONDUCTORS

LEGEND:

1 -RC CONDUCTORS FOR POLE (B).
RC CONDUCTORS FOR DLC Ø2 LOOP DETECTOR. ADD DLC Ø2 LOOP DETECTOR.
RC CONDUCTORS FOR EVUC Ø7. ADD EVUC FOR Ø7.
RC CONDUCTORS FOR VIDEO CABLE HARNESS Ø7. ADD VIDEO CABLE HARNESS FOR Ø7.
ADD DLC Ø8 LOOP DETECTOR.

2 -ADD DLC Ø7 LOOP DETECTOR.

3 -RC SIGNAL STANDARD AND APPURTENANCES
RR VIDEO IMAGE SENSOR AND EVUD.

4 -RC PEDESTRIAN SIGNAL MODULE. ADD PEDESTRIAN SIGNAL MODULE WITH COUNTDOWN.

5 -SEE ELECTRICAL DETAIL MAT4 ON THIS SHEET.

6 -RC CONDUCTORS. ADD DLC Ø2 LOOP DETECTOR.

7 -RC PEDESTRIAN PUSH BUTTON ASSEMBLY. ADD ACCESSIBLE PEDESTRIAN SIGNAL.

8 -REUSED VIDEO IMAGE SENSOR.

9 -REUSED EVUD.

10 -RC PULL BOX. PLACE No. 5 PULL BOX.

11 -RC CONDUCTORS. ADD DLC Ø7 LOOP DETECTOR.

12 -FOR CIRCUIT CONTINUITY SEE RAMP METERING SYSTEM LOCATION 1 SHEET E-6.

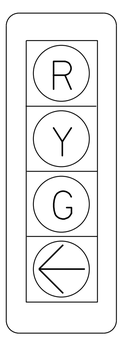

GREEN ARROW

DETAIL MAT4

EQUIPMENT AND POLE SCHEDULE

Loc	STANDARD TYPE	MASTARM SMA (ft)	MASTARM LMA (ft)	PLACEMENT DIMENSIONS A (ft)	PLACEMENT DIMENSIONS B (ft)	VEHICLE POLE	VEHICLE MASTARM	PEDESTRIAN SIGNAL	PEDESTRIAN PBA	PEDESTRIAN APS	LUMINAIRE	REMARKS
A	Exist TYPE 19	30	12	Exist		Exist SV-2-T	Exist MAT	Exist SP-2-T	Exist Ø2P ← Exist Ø8P ←	Ø2P ← Ø8P ←	Exist LED ROADWAY 1	E3.964 4 7
B	Exist TYPE 16	-	-	-	-	Exist SV-2-T, SV-1-T	Exist MAS	Exist SP-2-T	Exist Ø2P ←	-	Exist LED ROADWAY 1	3
B'	26A-4-100	45	15	15.7	5.8	SV-1-T	MAT 5	-	-	-	LED ROADWAY 1	E3.969
C	1-A 10'	-	-	-	6.4	TV-1-T	-	SP-1-T	-	Ø2P ←	-	-
D	Exist TYPE 19	30	12	Exist		Exist SV-2-T	Exist MAT, MAS	Exist SP-1-T	Exist Ø6P →	Ø6P →	Exist LED ROADWAY 1	E3.988 4 7
E	Exist TYPE 17	15	12	Exist		Exist SV-1-T	Exist MAT	Exist SP-1-T	Exist Ø6P ←	Ø6P ←	Exist LED ROADWAY 1	E3.982 4 7
F	Exist TYPE 1-A	-	-	Exist		Exist TV-1-T	-	Exist SP-1-T	Exist Ø8P →	Ø8P →	-	4 7
G	EXISTING MODEL 170 CONTROLLER ASSEMBLY											

Sig No. P3.974
NB 5 AT CORONADO Ave
AND OUTER ROAD

MODIFYING EXISTING ELECTRICAL SYSTEM

E-23

STATE OF CALIFORNIA - DEPARTMENT OF TRANSPORTATION
Caltrans TRAFFIC ELECTRICAL

FUNCTIONAL SUPERVISOR: RAJPREET SINGH
CALCULATED-DESIGNED BY: MERVIN FULLENWIDER
CHECKED BY: HENRY TSUI
REVISED BY / DATE REVISED

LAST REVISION 06-27-16
DATE PLOTTED => 21-JUL-2016
TIME PLOTTED => 14:04

Dist	COUNTY	ROUTE	POST MILES TOTAL PROJECT	SHEET No.	TOTAL SHEETS
11	SD	5	3.9/9.2	176	282

REGISTERED ELECTRICAL ENGINEER — DATE 06-14-16

07-11-16
PLANS APPROVAL DATE

REGISTERED PROFESSIONAL ENGINEER — MERVIN D. FULLENWIDER — No. E20211 — Exp. 3-31-17 — ELECTRICAL — STATE OF CALIFORNIA

THE STATE OF CALIFORNIA OR ITS OFFICERS OR AGENTS SHALL NOT BE RESPONSIBLE FOR THE ACCURACY OR COMPLETENESS OF SCANNED COPIES OF THIS PLAN SHEET.

NOTE:

1 -FOR ACCURATE RIGHT OF WAY DATA, CONTACT RIGHT OF WAY ENGINEERING AT DISTRICT OFFICE.

LEGEND:
SEE SHEET E-26

CONDUIT NOTES:
SEE SHEET E-26

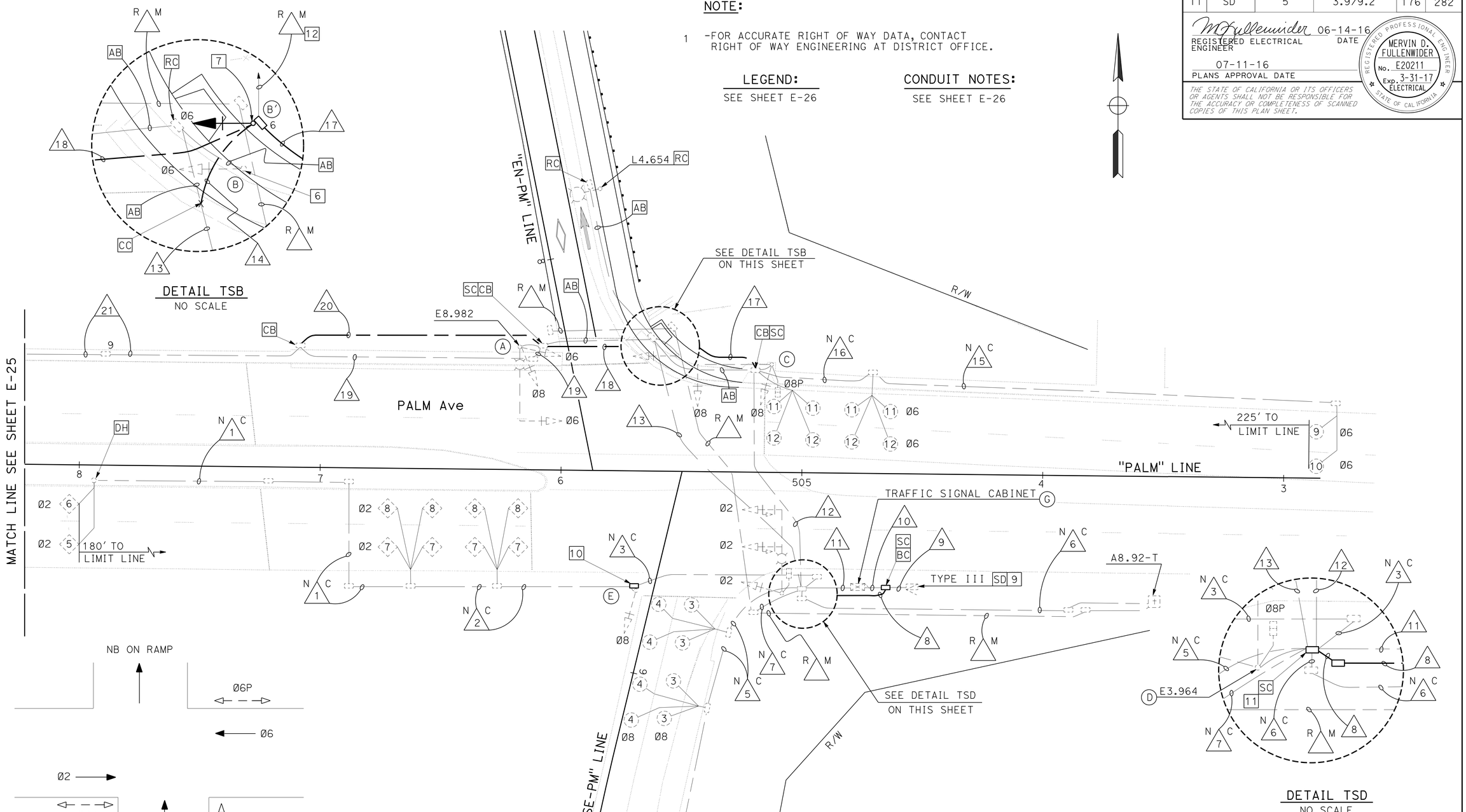

PHASE DESIGNATION
(EXISTING)

MODIFYING SIGNAL AND LIGHTING SYSTEM

Sig No. P4.628
NB 5 AT Rte 75
AND PALM Ave

MODIFYING EXISTING ELECTRICAL SYSTEM

APPROVED FOR ELECTRICAL WORK ONLY

SCALE: 1"=20'

E-24

STATE OF CALIFORNIA - DEPARTMENT OF TRANSPORTATION
Caltrans® TRAFFIC ELECTRICAL

FUNCTIONAL SUPERVISOR: RAJPREET SINGH
CALCULATED-DESIGNED BY: MERVIN FULLENWIDER
CHECKED BY: HENRY TSUI
REVISED BY / DATE REVISED

LAST REVISION DATE PLOTTED => 21-JUL-2016
06-27-16 TIME PLOTTED => 14:04

Dist	COUNTY	ROUTE	POST MILES TOTAL PROJECT	SHEET No.	TOTAL SHEETS
11	SD	5	3.9/9.2	177	282

REGISTERED ELECTRICAL ENGINEER — DATE 06-14-16

07-11-16
PLANS APPROVAL DATE

REGISTERED PROFESSIONAL ENGINEER — MERVIN D. FULLENWIDER No. E20211 Exp. 3-31-17 ELECTRICAL — STATE OF CALIFORNIA

THE STATE OF CALIFORNIA OR ITS OFFICERS OR AGENTS SHALL NOT BE RESPONSIBLE FOR THE ACCURACY OR COMPLETENESS OF SCANNED COPIES OF THIS PLAN SHEET.

NOTE:

1 -FOR ACCURATE RIGHT OF WAY DATA, CONTACT RIGHT OF WAY ENGINEERING AT DISTRICT OFFICE.

LEGEND:
SEE SHEET E-26

CONDUIT NOTES:
SEE SHEET E-26

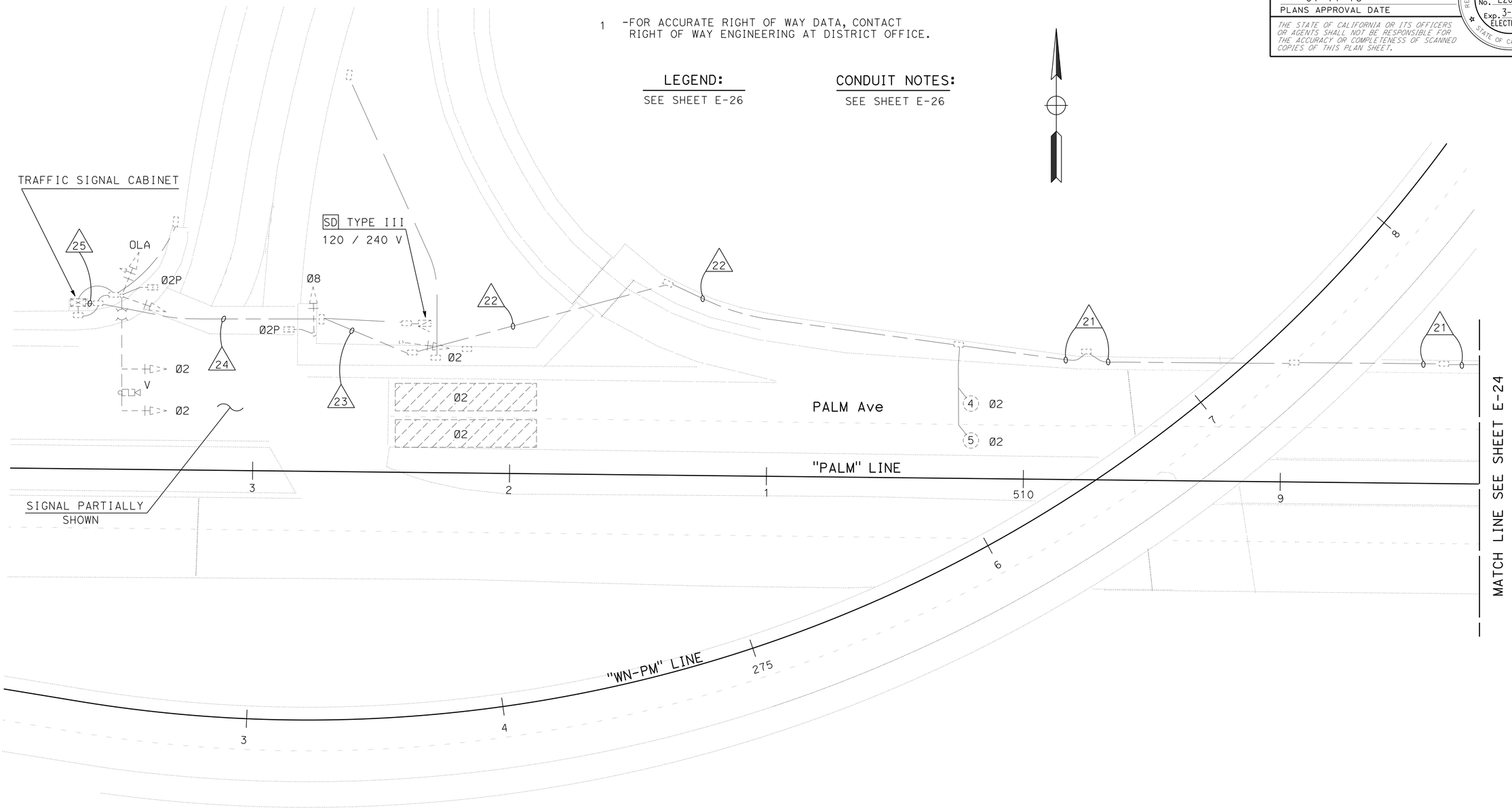

MODIFYING SIGNAL AND LIGHTING SYSTEM

Sig No. P4.645
SB 5 AT Rte 75
AND PALM Ave

MODIFYING EXISTING ELECTRICAL SYSTEM

APPROVED FOR ELECTRICAL WORK ONLY

SCALE: 1"=20'

E-25

STATE OF CALIFORNIA - DEPARTMENT OF TRANSPORTATION
Caltrans® TRAFFIC ELECTRICAL

FUNCTIONAL SUPERVISOR: RAJPREET SINGH
CALCULATED-DESIGNED BY: MERVIN FULLENWIDER
CHECKED BY: HENRY TSUI
REVISED BY
DATE REVISED

LAST REVISION 06-27-16
DATE PLOTTED => 21-JUL-2016
TIME PLOTTED => 14:04

Dist	COUNTY	ROUTE	POST MILES TOTAL PROJECT	SHEET No.	TOTAL SHEETS
11	SD	5	3.9/9.2	178	282

REGISTERED ELECTRICAL ENGINEER — DATE: 06-14-16

07-11-16
PLANS APPROVAL DATE

REGISTERED PROFESSIONAL ENGINEER — MERVIN D. FULLENWIDER — No. E20211 — Exp. 3-31-17 — ELECTRICAL — STATE OF CALIFORNIA

THE STATE OF CALIFORNIA OR ITS OFFICERS OR AGENTS SHALL NOT BE RESPONSIBLE FOR THE ACCURACY OR COMPLETENESS OF SCANNED COPIES OF THIS PLAN SHEET.

CONDUIT AND CONDUCTOR SCHEDULE

AWG SIZE OR CABLE TYPE	PHASE	POLE OR CIRCUIT	EX 1½" NC (1)	EX 1½" NC (2)	EX 1½" NC (3)	EX 1½" NC (4)	EX 1½" NC (5)	EX 1" NC (6)	EX 2" NC (7)	2" (8)	EX 2" (9)	EX 2" (10)	EX 2-3" (11)	EX 3" (12)	EX 2" (13)	2" (14)	EX 1½" NC (15)	EX 1½" NC (16)	3" (17)	3" (18)	EX 1½" (19)	2" (20)	EX 1½" (21)
No. 14 CABLES		POLE - A											(1)/(1)	(1)/(1)					1/1	1/1			
3CSC		B′											(1)/(1)	(1)/(1)					1/1				
		B											1/1	1/1									
		C											1/1	1/1									
		D											1/1										
		E			-/1								-/1										
12CSC																							
TOTAL CONDUCTORS 3CSC/ 12CSC					-/1								5/6	4/4					2/2	1/1			
6		SIGNAL									2	2											
10		LIGHTING									2	2	2	2					2	2			
14		PEU									3	3	3										
6		RM								2	(2)				(2)	2							
10		MVDS								2	2	2	2		(2)	2							
10		TDC						2		2	2	2	2										
TYPE DLC	Ø2	LOOP DETECTOR	2	4	4								4										
	Ø6	LOOP DETECTOR											4	4			2	4					
	Ø8	LOOP DETECTOR				2	4						4										
SIC (INTERCONNECT)													(1)	(1)					1	1	2	1	(1)
OCC									1														
EVUC (POLE A)													(1)	(1)					1	1			
EVUC													2	1									
TOTAL CONDUCTORS / CABLES			2	4	5	2	4	2	1	6	13	7	30	15	4	4	2	4	8	6	0	1	1
NOTES											1	2	3	4							5		8

CONDUIT NOTES:

22 - Exist 1½"C, 2 DLC, 2 SIC,
RC 2 SIC
ADD 1 SIC

23 - Exist 3"C, 1-12CSC, 2 DLC, 2 SIC,
RC 2 SIC
ADD 1 SIC

24 - Exist 3"C, 2-12CSC, 1-3CSC, 2#6 (Sig), 2#8 (L+g),
3#14 (PEU), 2#10 (TMS), 2 DLC, 2 SIC,
RC 2 SIC
ADD 1 SIC

25 - Exist 4"C, 3-12CSC, 2-3CSC, 2#6 (Sig), 2#8 (L+g), EVUC,
3#14 (PEU), 2#10 (TMS), 2 DLC, 2 SIC, VIDEO CABLE,
RC 2 SIC
ADD 1 SIC

LEGEND AND ABBREVIATIONS:

(X) -NEW CONDUCTOR IN EXISTING CONDUIT
X = No. OF CONDUCTORS

EQUIPMENT AND POLE SCHEDULE

Loc	STANDARD TYPE	MASTARM SMA (ft)	MASTARM LMA (ft)	PLACEMENT DIMENSIONS A (ft)	PLACEMENT DIMENSIONS B (ft)	SIGNAL MOUNTING AND PLACEMENT: VEHICLE POLE	VEHICLE MASTARM	PEDESTRIAN SIGNAL	PEDESTRIAN PBA	LUMINAIRE	REMARKS
A	Exist TYPE 19	25	12	Exist		Exist SV-2-T	Exist MAS	-	Exist Ø6P	Exist LED ROADWAY 1	E8.982
B	Exist TYPE 1-A	-	-	-	-	Exist TV-1-T	-	-	Exist Ø6P	-	6
B′	RL TYPE 1-A	-	-	-	12	RL TV-1-T	-	-	RL Ø6P	-	
C	Exist TYPE 16	20	-	Exist		Exist SV-2-T	Exist MAS	Exist SP-1-T	Ø8P	-	
D	Exist TYPE 19	30	12	Exist		Exist SV-2-T	Exist 2 MAS	Exist SP-1-T	Exist Ø8P	Exist LED ROADWAY 1	E3.964, PEU
E	Exist TYPE 1-A	-	-	Exist		Exist TV-1-T	-	-	-	-	
G	EXISTING MODEL 170 CONTROLLER ASSEMBLY										

LEGEND:

1 -ADD RM CONDUCTORS.

2 -RC CONDUCTORS FOR TDC AND MVDS.

3 -RC CONDUCTORS FOR POLE A AND POLE B.
ADD CONDUCTORS FOR POLE A AND POLE B′.
RC EVUC CABLE FOR POLE A.
ADD EVUC CABLE FOR POLE A.
RC SIC. ADD SIC.
RC CONDUCTORS FOR TDC AND MVDS.

4 -RC CONDUCTORS FOR POLE A AND POLE B.
ADD CONDUCTORS FOR POLE A AND POLE B′.
RC EVUC CABLE FOR POLE A.
ADD EVUC CABLE FOR POLE A.
RC SIC. ADD SIC.

5 -RC CONDUCTORS.

6 -RL TYPE 1-A AND APPURTENANCES.

7 -RELOCATED TYPE 1-A AND APPRUTENANCES.

8 -RC CONDUCTORS. ADD SIC.

9 -Exist TYPE III SERVICE EQUIPMENT ENCLOSURE (120/240 V) WITH:
MAIN 2P-70 A
1P-50 A (Sig)
1P-15 A (PEU)
2P-30 A (L+g)
1P-15 A (TDC)
1P-15 A (MVDS)
ADD 1P-30 A (RM)

10 -RC PULL BOX.
PLACE No. 5 PULL BOX.

11 -RC PULL BOX.
PLACE No. 6(E) PULL BOX.

12 -FOR CIRCUIT CONTINUITY SEE RAMP METERING SYSTEM LOCATION 2 SHEET E-8.

Sig No. P4.628
NB 5 AT R+e 75
AND PALM Ave

MODIFYING EXISTING ELECTRICAL SYSTEM

E-26

STATE OF CALIFORNIA - DEPARTMENT OF TRANSPORTATION
Caltrans® TRAFFIC ELECTRICAL

FUNCTIONAL SUPERVISOR: RAJPREET SINGH
CALCULATED-DESIGNED BY: MERVIN FULLENWIDER
CHECKED BY: HENRY TSUI
REVISED BY / DATE REVISED

LAST REVISION 06-27-16 — DATE PLOTTED => 21-JUL-2016 — TIME PLOTTED => 14:04

Dist	COUNTY	ROUTE	POST MILES TOTAL PROJECT	SHEET No.	TOTAL SHEETS
11	SD	5	3.9/9.2	179	282

REGISTERED ELECTRICAL ENGINEER — DATE 06-14-16

07-11-16
PLANS APPROVAL DATE

REGISTERED PROFESSIONAL ENGINEER MERVIN D. FULLENWIDER No. E20211 Exp. 3-31-17 ELECTRICAL STATE OF CALIFORNIA

THE STATE OF CALIFORNIA OR ITS OFFICERS OR AGENTS SHALL NOT BE RESPONSIBLE FOR THE ACCURACY OR COMPLETENESS OF SCANNED COPIES OF THIS PLAN SHEET.

NOTE:

1 -FOR ACCURATE RIGHT OF WAY DATA, CONTACT RIGHT OF WAY ENGINEERING AT DISTRICT OFFICE.

LEGEND:
SEE SHEET E-28

CONDUIT NOTES:
SEE SHEET E-28

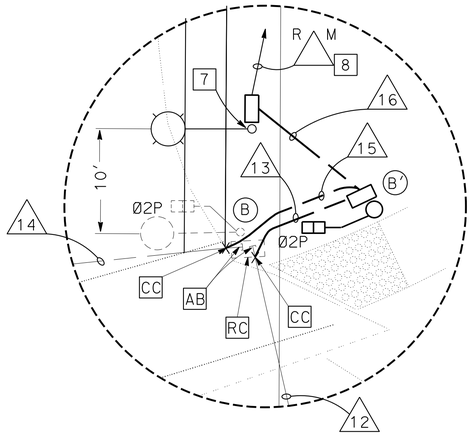

DETAIL TSC
NO SCALE

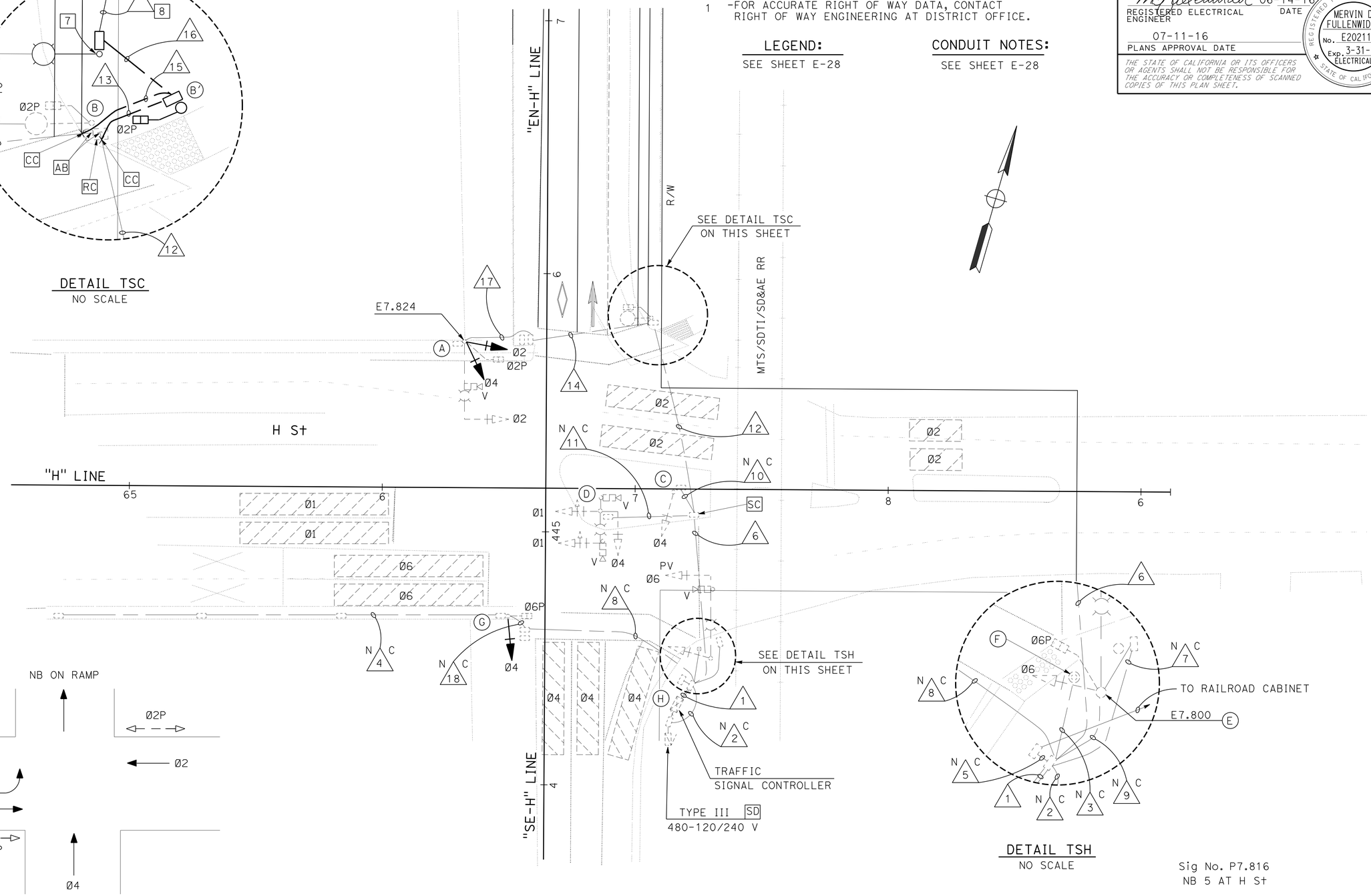

DETAIL TSH
NO SCALE

PHASE DESIGNATION
(EXISTING)

MODIFYING SIGNAL AND LIGHTING SYSTEM

MODIFYING EXISTING ELECTRICAL SYSTEM

APPROVED FOR ELECTRICAL WORK ONLY

SCALE: 1"=20'

E-27

STATE OF CALIFORNIA - DEPARTMENT OF TRANSPORTATION
Caltrans® TRAFFIC ELECTRICAL

FUNCTIONAL SUPERVISOR: RAJPREET SINGH
CALCULATED-DESIGNED BY: MERVIN FULLENWIDER
CHECKED BY: HENRY TSUI
REVISED BY
DATE REVISED

LAST REVISION 06-27-16
DATE PLOTTED => 21-JUL-2016
TIME PLOTTED => 14:04

Dist	COUNTY	ROUTE	POST MILES TOTAL PROJECT	SHEET No.	TOTAL SHEETS
11	SD	5	3.9/9.2	180	282

REGISTERED ELECTRICAL ENGINEER — DATE 06-14-16

07-11-16
PLANS APPROVAL DATE

REGISTERED PROFESSIONAL ENGINEER — MERVIN D. FULLENWIDER — No. E20211 — Exp. 3-31-17 — ELECTRICAL — STATE OF CALIFORNIA

THE STATE OF CALIFORNIA OR ITS OFFICERS OR AGENTS SHALL NOT BE RESPONSIBLE FOR THE ACCURACY OR COMPLETENESS OF SCANNED COPIES OF THIS PLAN SHEET.

CONDUIT AND CONDUCTOR SCHEDULE

AWG SIZE OR CABLE TYPE	PHASE	POLE OR CIRCUIT	EX 2-3" (1)	EX 2" NC (2)	EX 1" NC (3)	EX 2-1½" NC (4)	EX 2" NC (5)	EX 3" (6)	EX 4" NC (7)	EX 3" NC (8)	EX 2" NC (9)	EX 2" NC (10)	EX 2" NC (11)	EX 3" (12)	3" (13)	EX 2" (14)	2" (15)	2" (16)	EX 2" (17)	EX 1½" NC (18)
No. 14 CABLES																				
3CSC		POLE - A	(1)/(1)					(1)/(1)						(1)/(1)	1/1	(1)/(1)	1/1		(1)/(1)	
		B	1/1					1/1												
		B′	(1)/(1)					(1)/(1)						(1)/(1)	1/1					
		C	-/1					-/1				-/1								
		D	-/1					-/1					-/1							
		E	1/1								1/1									
12CSC		F	1/-		1/-															
		G	1/1							1/1										1/1
TOTAL CONDUCTORS 3CSC/ 12CSC			5/6		1/-			2/4		1/1	1/1	-/1	-/1	2/2	2/2	1/1	1/1		1/1	1/1
8		SIGNAL																		
8		LIGHTING		2				2	2				2	(2)	2	(2)	2	2	(2)	
14		PEU		3							3									
6		SWITCH PEDESTAL		2		2				2										2
TYPE DLC																				
SIC (INTERCONNECT)			1			1				1										1
OCC			1			1				1										1
SIC (RAILROAD)			1				1													
EVUC (FUTURE)			2					1			1		1							
EVUC (FUTURE) Ø2			(1)					(1)						(1)	1	(1)	1		(1)	
VIDEO CABLE HARNESS			3					2			1		2							
VIDEO CABLE HARNESS Ø2			(1)					(1)						(1)	1	(1)	1		(1)	
TOTAL CONDUCTORS / CABLES			21	7	1	4	1	13	2	6	7	1	6	8	8	6	6	2	6	6
NOTES			1					1											5	

EQUIPMENT AND POLE SCHEDULE

Loc	STANDARD TYPE	MASTARM SMA (ft)	MASTARM LMA (ft)	PLACEMENT DIMENSIONS A (ft)	PLACEMENT DIMENSIONS B (ft)	SIGNAL MOUNTING AND PLACEMENT VEHICLE POLE	VEHICLE MASTARM	PEDESTRIAN SIGNAL	PEDESTRIAN PBA	LUMINAIRE	REMARKS
(A)	Exist TYPE 17	20	15	Exist		Exist SV-2-T	Exist MAT 6	Exist SP-1-T	Exist Ø2P →	Exist LED ROADWAY 1	E7.824 4
(B)	Exist TYPE 15	-	-	-	-	-	-	Exist SP-1-T	Exist Ø2P ←	Exist LED ROADWAY 1	E7.828 2
(B′)	TYPE 1-A 7′	-	-	-	7	-	-	TP-1	Ø2P ←	-	-
(C)	Exist 1-A	-	-	Exist		Exist TV-1-T	-	-	-	-	-
(D)	Exist TYPE 33	25	-	Exist		Exist SV-2-T	Exist MAS	-	-	-	-
(E)	Exist TYPE 17	20	15	Exist		Exist SV-1-T	Exist MAT PV	Exist SP-1-T	-	Exist LED ROADWAY 1	E7.800
(F)	Exist PPB	-	-	Exist		-	-	-	Exist Ø6P →	-	-
(G)	Exist 1-A	-	-	Exist		Exist TV-1-T	-	Exist SP-1-T	Exist Ø6P ←	-	3
(H)	EXISTING MODEL 170 CONTROLLER ASSEMBLY										

LEGEND AND ABBREVIATIONS:

(X) -NEW CONDUCTOR IN EXISTING CONDUIT
X = No. OF CONDUCTORS

LEGEND:

1 -RC CONDUCTORS FOR POLE (A).
ADD CONDUCTORS FOR POLE (A).
RC CONDUCTORS FOR POLE (B).
RC CONDUCTORS FOR VIDEO CABLE HARNESS Ø2.
ADD VIDEO CABLE HARNESS FOR Ø2.
RC CONDUCTORS FOR EVUC Ø2.
ADD EVUC FOR Ø2.
ADD CONDUCTORS FOR POLE (B′).

2 -RC SP-1-T AND PPB. SEAL HOLES ON TYPE 15 STANDARD DUE TO THE REMOVAL OF EQUIPMENT.
RL TYPE 15 STANDARD.

3 -RC TV-1-T AND PLACE TV-1-T.

4 -RC SV-2-T AND PLACE SV-2-T.

5 -RC CONDUCTORS. ADD CONDUCTORS FOR POLE (A).

6 -TERMINATE EVUC IN RED SECTION OF SIGNAL HEAD.
LEAVE 3 FEET OF SLACK.

7 -RELOCATED TYPE 15 STANDARD. TYPE 15 STANDARD
MUST BE 18" Min FROM CURB.

8 -FOR CIRCUIT CONTINUITY SEE RAMP METERING SYSTEM
LOCATION 7 SHEET E-18.

Sig No. P7.816
NB 5 AT H St

MODIFYING EXISTING ELECTRICAL SYSTEM

E-28

STATE OF CALIFORNIA - DEPARTMENT OF TRANSPORTATION
Caltrans® TRAFFIC ELECTRICAL

FUNCTIONAL SUPERVISOR: RAJPREET SINGH
CALCULATED-DESIGNED BY: MERVIN FULLENWIDER — CHECKED BY: HENRY TSUI
REVISED BY — DATE REVISED

LAST REVISION 06-27-16 — DATE PLOTTED => 21-JUL-2016 — TIME PLOTTED => 14:04

Dist	COUNTY	ROUTE	POST MILES TOTAL PROJECT	SHEET No.	TOTAL SHEETS
11	SD	5	3.9/9.2	181	282

REGISTERED ELECTRICAL ENGINEER — DATE 06-14-16

07-11-16
PLANS APPROVAL DATE

REGISTERED PROFESSIONAL ENGINEER — MERVIN D. FULLENWIDER No. E20211 Exp. 3-31-17 ELECTRICAL — STATE OF CALIFORNIA

THE STATE OF CALIFORNIA OR ITS OFFICERS OR AGENTS SHALL NOT BE RESPONSIBLE FOR THE ACCURACY OR COMPLETENESS OF SCANNED COPIES OF THIS PLAN SHEET.

LEGEND AND NOTES:

1. -TYPE 1-A (10′) SIGNAL STANDARD.
2. -PLACE TERMINAL COMPARTMENT ON SIDE OF POLE AWAY FROM METERED TRAFFIC.
3. -THREE SECTION HEAD, RED, YELLOW AND GREEN. BACKPLATE REQUIRED. ALL LENSES MUST BE 12".
4. -TWO OR THREE SECTION SIGNAL HEAD, AS SHOWN. BACKPLATE NOT REQUIRED. ALL LENSES MUST BE 12".
5. -ONE SECTION SIGNAL HEAD WITH 12" RED LENS AS SHOWN.
6. -TYPE 15TS LIGHTING STANDARD.
7. -SIGN PANEL. SEE SIGNING PLANS.
8. -ONE SECTION SIGNAL HEAD WITH YELLOW LENS. BACKPLATE REQUIRED.
9. -TV-1-T ON TYPE 1-A.

NINE CONDUCTOR COLOR CODE AND USAGE

USAGE	COLOR	REMARKS
COMMON	WHITE	
RED SECTION	RED	
YELLOW SECTION	YELLOW	
GREEN SECTION	BROWN	
SECOND RED	RED/BLACK	
SECOND YELLOW	YELLOW/BLACK	
SECOND GREEN	BROWN/BLACK	
SPARE	BLACK	
SPARE	WHITE/BLACK	

TWELVE CONDUCTOR COLOR CODE AND USAGE

USAGE	COLOR	REMARKS
COMMON	WHITE	
RED SECTION	RED	
YELLOW SECTION	YELLOW	
GREEN SECTION	BROWN	
SECOND RED	RED/BLACK	
SECOND YELLOW	YELLOW/BLACK	
SECOND GREEN	BROWN/BLACK	
THIRD RED	BLACK/RED	
THIRD YELLOW	BLACK/WHITE	
THIRD GREEN	BLACK	
SPARE	RED/WHITE	
SPARE	BROWN/WHITE	

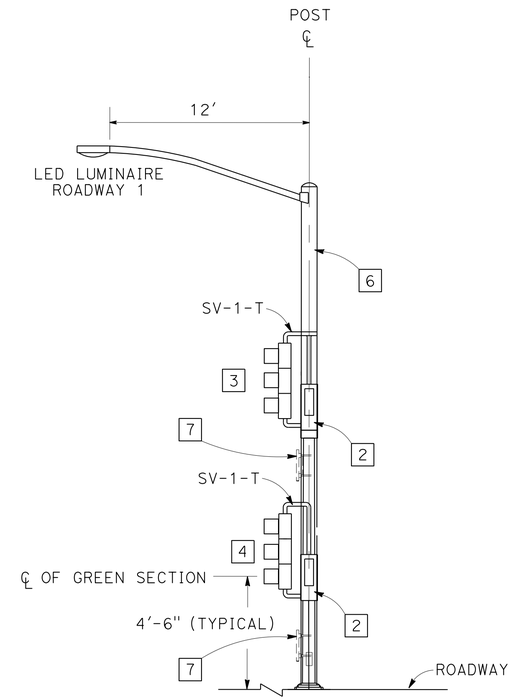

DETAIL 15TS

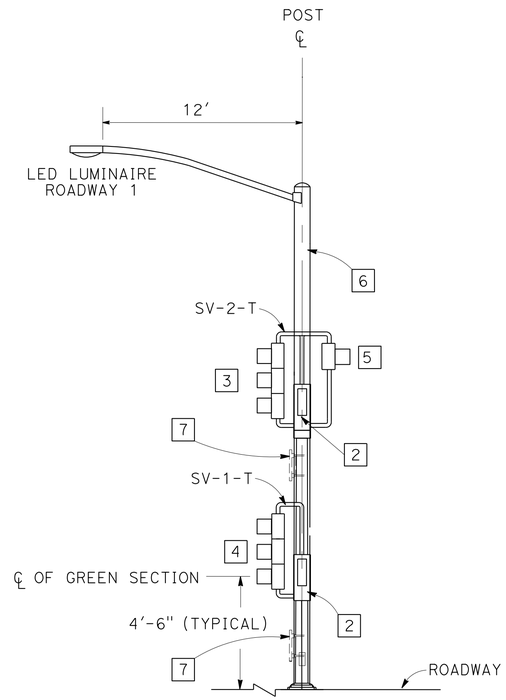

DETAIL 15TS-R

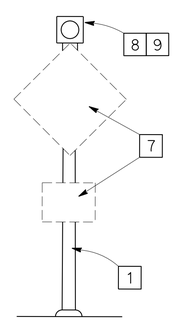

DETAIL FB

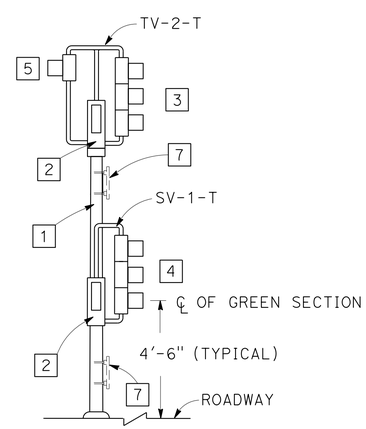

DETAIL 1-A

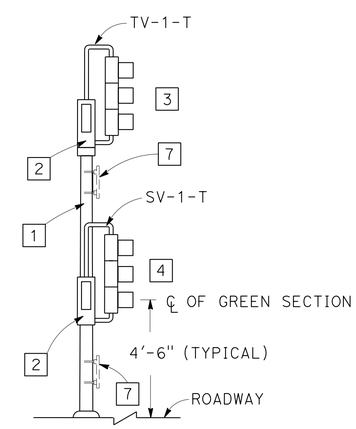

DETAIL 1-A-L

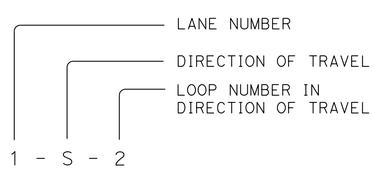

MAINLINE LOOP DETECTOR IDENTIFICATION
TYPICAL

RAMP METERING SYSTEM

ELECTRICAL DETAIL

NO SCALE

E-29

STATE OF CALIFORNIA - DEPARTMENT OF TRANSPORTATION
Caltrans® TRAFFIC ELECTRICAL

FUNCTIONAL SUPERVISOR: RAJPREET SINGH
CALCULATED-DESIGNED BY: MERVIN FULLENWIDER
CHECKED BY: HENRY TSUI
REVISED BY
DATE REVISED

LAST REVISION 06-27-16 | DATE PLOTTED => 21-JUL-2016 | TIME PLOTTED => 14:04

Dist	COUNTY	ROUTE	POST MILES TOTAL PROJECT	SHEET No.	TOTAL SHEETS
11	SD	5	3.9/9.2	182	282

REGISTERED ELECTRICAL ENGINEER — DATE: 06-14-16

07-11-16
PLANS APPROVAL DATE

REGISTERED PROFESSIONAL ENGINEER — MERVIN D. FULLENWIDER No. E20211 Exp. 3-31-17 ELECTRICAL — STATE OF CALIFORNIA

THE STATE OF CALIFORNIA OR ITS OFFICERS OR AGENTS SHALL NOT BE RESPONSIBLE FOR THE ACCURACY OR COMPLETENESS OF SCANNED COPIES OF THIS PLAN SHEET.

LEGEND AND NOTES:

1 -THE CONTRACTOR MUST VERIFY ALL CONTROLLING FIELD DIMENSIONS BEFORE ORDERING AND INSTALLING EQUIPMENT.

2 -CONSTRUCT FOUNDATION PER STANDARD PLAN RSP ES-3C.

3 -ADD RACK MOUNTABLE PUNCH DOWN PANEL WITH RJ45 ON THE FRONT AND 110 PUNCH ON THE BACK. TERMINATE OCC AS TIA/EIA 568B.

4 -SHELF REQUIRED FOR EQUIPMENT.

5 -LABEL NETWORK PORT 1 TDC.

6 -FOR RAMP METER SYSTEM LOCATION 2, ADDITIONAL DEPARTMENT FURNISHED INPUT FILE.

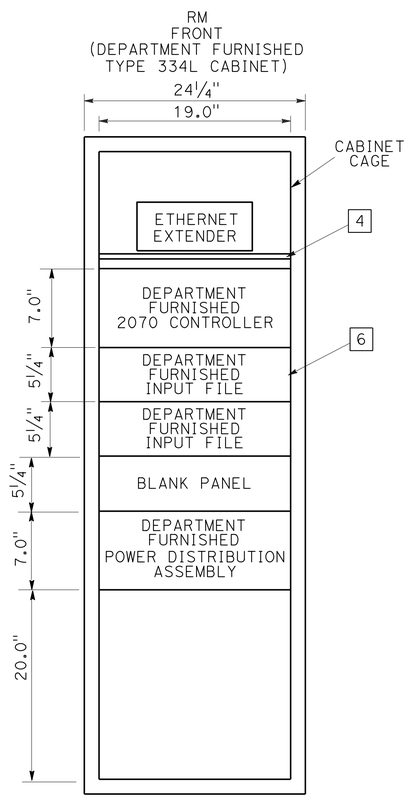

RM CABINET
EQUIPMENT PLACEMENT
DETAIL A

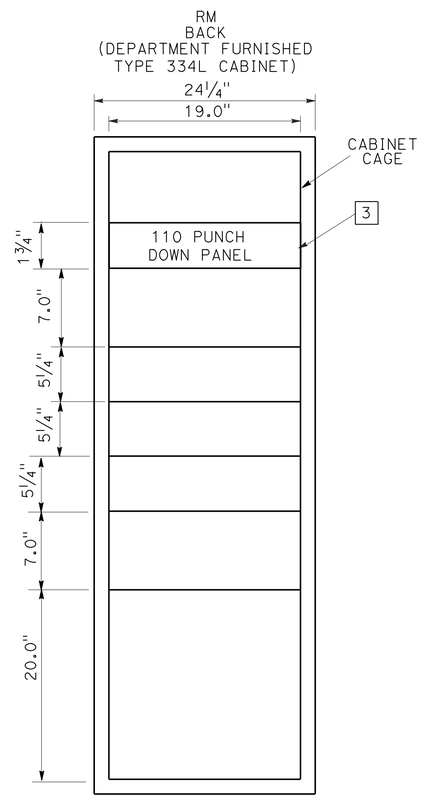

RM CABINET
EQUIPMENT PLACEMENT
DETAIL B

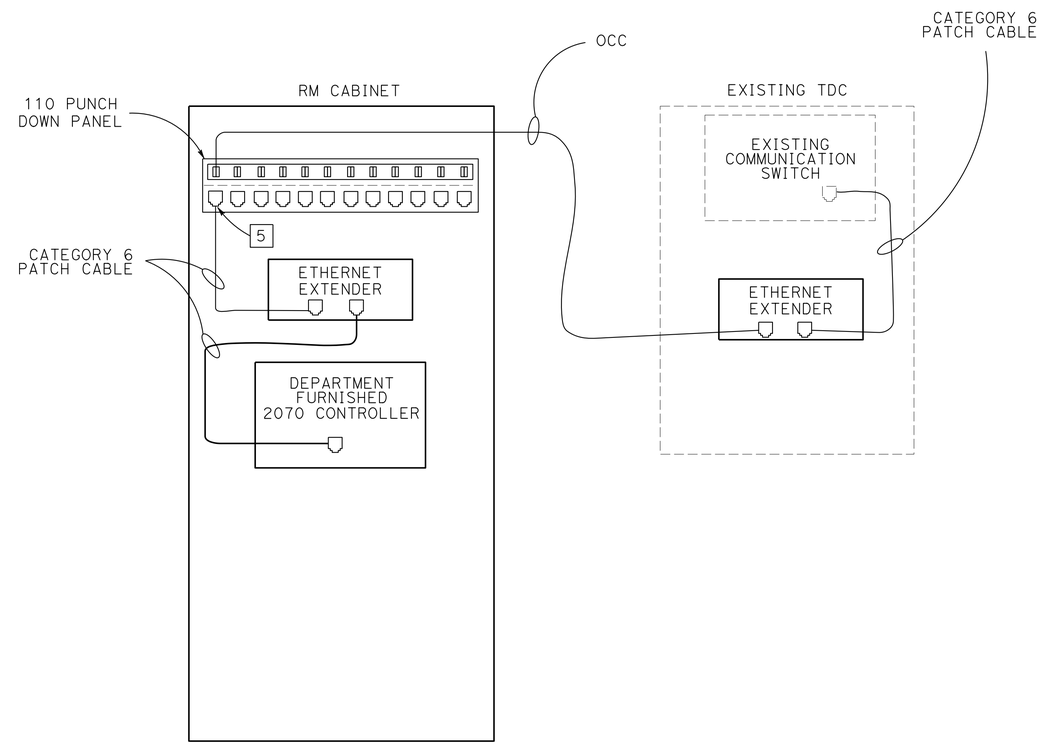

RM CABINET TO TDC
COMPONENT DIAGRAM
DETAIL C

RAMP METERING SYSTEM

ELECTRICAL DETAIL

NO SCALE

E-30

STATE OF CALIFORNIA - DEPARTMENT OF TRANSPORTATION
Caltrans TRAFFIC ELECTRICAL

FUNCTIONAL SUPERVISOR: RAJPREET SINGH
CALCULATED-DESIGNED BY: MERVIN FULLENWIDER
CHECKED BY: HENRY TSUI
REVISED BY
DATE REVISED

LAST REVISION 06-27-16 | DATE PLOTTED => 21-JUL-2016 | TIME PLOTTED => 14:04

Dist	COUNTY	ROUTE	POST MILES TOTAL PROJECT	SHEET No.	TOTAL SHEETS
11	SD	5	3.9/9.2	183	282

REGISTERED ELECTRICAL ENGINEER — DATE 06-14-16

07-11-16
PLANS APPROVAL DATE

REGISTERED PROFESSIONAL ENGINEER MERVIN D. FULLENWIDER No. E20211 Exp. 3-31-17 ELECTRICAL STATE OF CALIFORNIA

THE STATE OF CALIFORNIA OR ITS OFFICERS OR AGENTS SHALL NOT BE RESPONSIBLE FOR THE ACCURACY OR COMPLETENESS OF SCANNED COPIES OF THIS PLAN SHEET.

LEGEND AND NOTES:

1. -SIGN PANEL, SEE SIGNING PLANS.
2. -PLACE TERMINAL COMPARTMENT ON SIDE OF POLE AWAY FROM METERED TRAFFIC.
3. -THREE SECTION HEAD, RED, YELLOW AND GREEN. BACKPLATE REQUIRED. ALL LENSES MUST BE 12".
4. -TWO OR THREE SECTION SIGNAL HEAD, AS SHOWN. BACKPLATE NOT REQUIRED. ALL LENSES MUST BE 12".
5. -TYPE 15TS LIGHTING STANDARD. FOR ADDITIONAL DETAILS SEE SES-1.
6. -SEE RSP ES-7N DETAIL U.

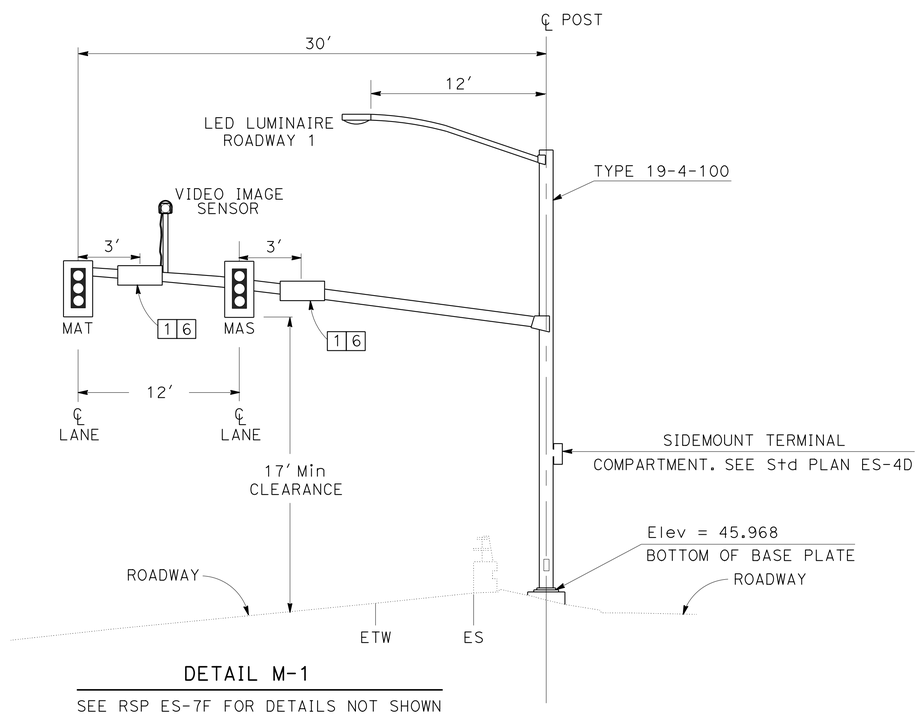

DETAIL M-1

SEE RSP ES-7F FOR DETAILS NOT SHOWN
NO SCALE

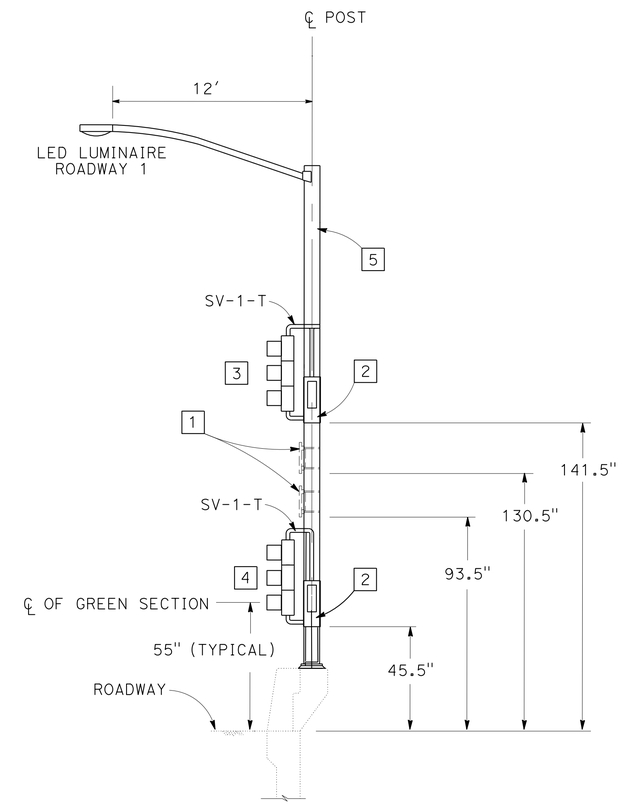

DETAIL 15TS-B

ELECTRICAL DETAIL

NO SCALE

E-31

STATE OF CALIFORNIA - DEPARTMENT OF TRANSPORTATION
Caltrans TRAFFIC ELECTRICAL

FUNCTIONAL SUPERVISOR: RAJPREET SINGH
CALCULATED-DESIGNED BY: MERVIN FULLENWIDER
CHECKED BY: HENRY TSUI
REVISED BY / DATE REVISED

LAST REVISION 06-27-16 | DATE PLOTTED => 21-JUL-2016 | TIME PLOTTED => 14:04

Dist	COUNTY	ROUTE	POST MILES TOTAL PROJECT	SHEET No.	TOTAL SHEETS
11	SD	5	3.9/9.2	184	282

REGISTERED ELECTRICAL ENGINEER — DATE 06-14-16

07-11-16
PLANS APPROVAL DATE

REGISTERED PROFESSIONAL ENGINEER MERVIN D. FULLENWIDER No. E20211 Exp. 3-31-17 ELECTRICAL STATE OF CALIFORNIA

THE STATE OF CALIFORNIA OR ITS OFFICERS OR AGENTS SHALL NOT BE RESPONSIBLE FOR THE ACCURACY OR COMPLETENESS OF SCANNED COPIES OF THIS PLAN SHEET.

LEGEND AND NOTES:

1 -SIGN PANEL, SEE SIGNING PLANS. SEE RSP ES-7N DETAIL U.

2 -TYPE 29-5-100 MODIFIED. FOR ADDITIONAL DETAILS SEE SES-2 SHEET.

3 -THE CONTRACTOR MUST VERIFY ALL CONTROLLING FIELD DIMENSIONS BEFORE ORDERING OR FABRICATING ANY MATERIAL.

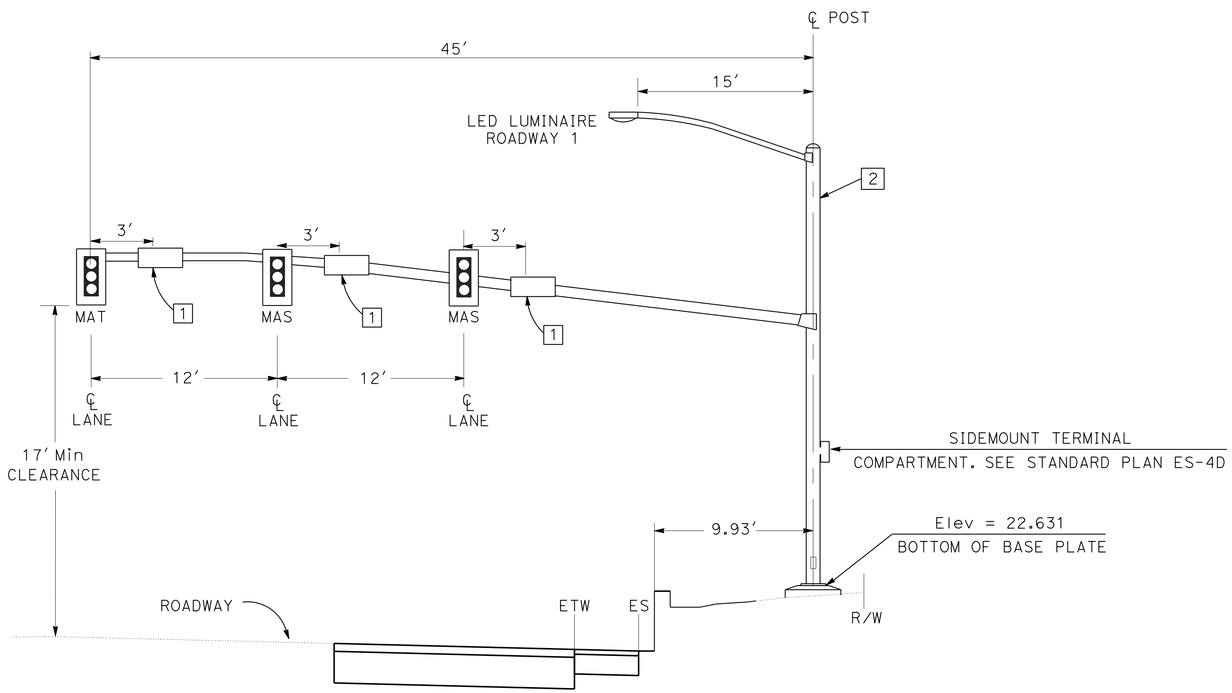

DETAIL M-2

SEE RSP ES-7F FOR DETAILS NOT SHOWN

ELECTRICAL DETAIL

NO SCALE

E-32

REVISED BY | DATE REVISED

MERVIN FULLENWIDER | HENRY TSUI

CALCULATED-DESIGNED BY | CHECKED BY

FUNCTIONAL SUPERVISOR: RAJPREET SINGH

STATE OF CALIFORNIA - DEPARTMENT OF TRANSPORTATION

Caltrans® TRAFFIC ELECTRICAL

LAST REVISION 06-27-16 | DATE PLOTTED => 21-JUL-2016 | TIME PLOTTED => 14:04

Dist	COUNTY	ROUTE	POST MILES TOTAL PROJECT	SHEET No.	TOTAL SHEETS
11	SD	5	3.9/9.2	185	282

REGISTERED ELECTRICAL ENGINEER — DATE: 06-14-16

PLANS APPROVAL DATE: 07-11-16

REGISTERED PROFESSIONAL ENGINEER — MERVIN D. FULLENWIDER — No. E20211 — Exp. 3-31-17 — ELECTRICAL — STATE OF CALIFORNIA

THE STATE OF CALIFORNIA OR ITS OFFICERS OR AGENTS SHALL NOT BE RESPONSIBLE FOR THE ACCURACY OR COMPLETENESS OF SCANNED COPIES OF THIS PLAN SHEET.

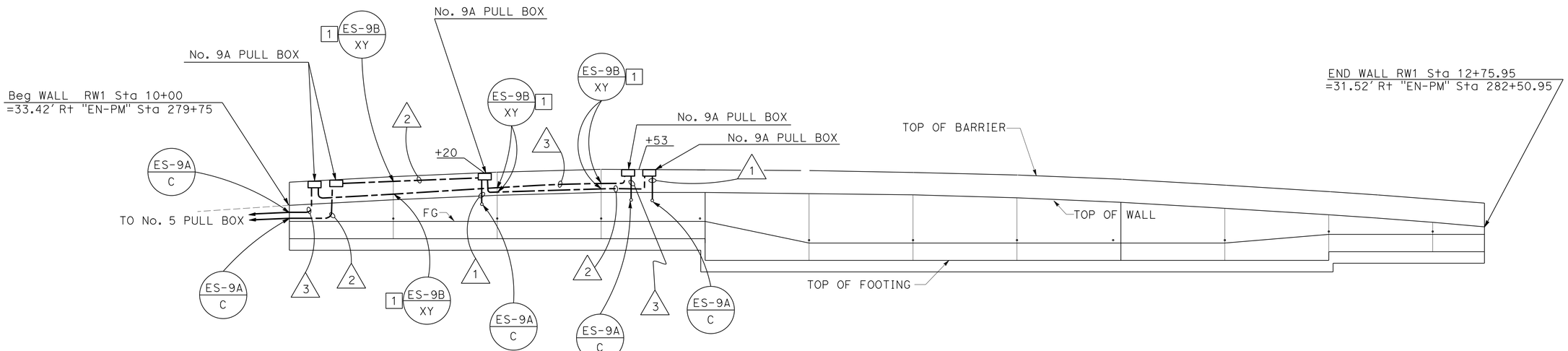

DEVELOPED ELEVATION

RETAINING WALL "RW1"
RAMP METERING SYSTEM
LOCATION 2

LEGEND AND NOTES:

1 -TOTAL 6 COMBINATION EXPANSION-DEFLECTION FITTINGS.

CONDUIT NOTES:

1 - 1"C, (SEE RAMP METERING SYSTEM PLAN).

2 - 2"C, (SEE RAMP METERING SYSTEM PLAN).

3 - 3"C, (SEE RAMP METERING SYSTEM PLAN).

ELECTRICAL DETAILS

NO SCALE

E-33

STATE OF CALIFORNIA - DEPARTMENT OF TRANSPORTATION
Caltrans® TRAFFIC ELECTRICAL

FUNCTIONAL SUPERVISOR: RAJPREET SINGH
CALCULATED-DESIGNED BY: MERVIN FULLENWIDER
CHECKED BY: ANTONIO A. RODRIGUEZ
REVISED BY
DATE REVISED

LAST REVISION 06-27-16 | DATE PLOTTED => 21-JUL-2016 | TIME PLOTTED => 14:04

Dist	COUNTY	ROUTE	POST MILES TOTAL PROJECT	SHEET No.	TOTAL SHEETS
11	SD	5	3.9/9.2	186	282

REGISTERED ELECTRICAL ENGINEER — DATE: 06-14-16

07-11-16
PLANS APPROVAL DATE

REGISTERED PROFESSIONAL ENGINEER — MERVIN D. FULLENWIDER — No. E20211 — Exp. 3-31-17 — ELECTRICAL — STATE OF CALIFORNIA

THE STATE OF CALIFORNIA OR ITS OFFICERS OR AGENTS SHALL NOT BE RESPONSIBLE FOR THE ACCURACY OR COMPLETENESS OF SCANNED COPIES OF THIS PLAN SHEET.

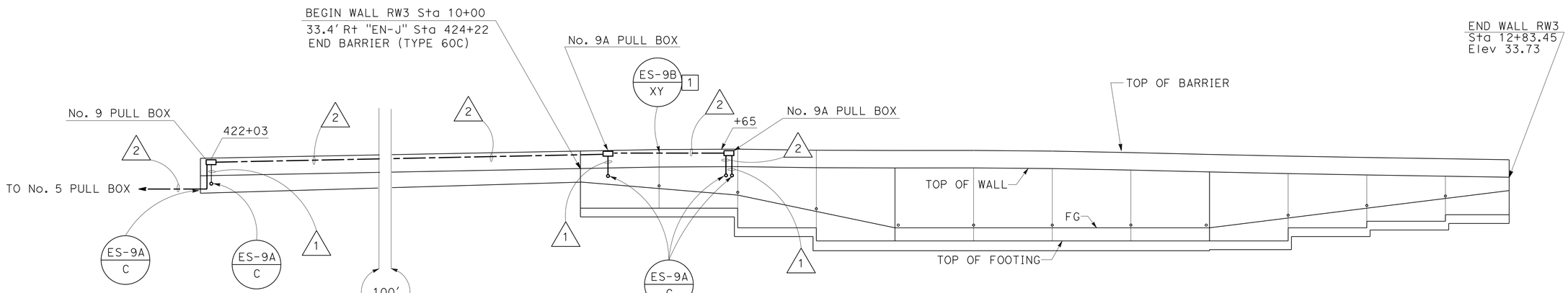

DEVELOPED ELEVATION

RETAINING WALL "RW3"
RAMP METERING SYSTEM
LOCATION 6

LEGEND AND NOTES:

1 -TOTAL 1 COMBINATION EXPANTION-DEFLECTION FITTIGNS.

CONDUIT NOTES:

1 - 1"C, (SEE RAMP METER SYSTEM PLAN).

2 - 3"C, (SEE RAMP METER SYSTEM PLAN).

ELECTRICAL DETAILS

NO SCALE

E-34

STATE OF CALIFORNIA - DEPARTMENT OF TRANSPORTATION
Caltrans® TRAFFIC ELECTRICAL

FUNCTIONAL SUPERVISOR: RAJPREET SINGH

CALCULATED-DESIGNED BY: ANTONIO A. RODRIGUEZ
CHECKED BY: MERVIN FULLENWIDER
REVISED BY
DATE REVISED

LAST REVISION 06-27-16 | DATE PLOTTED => | TIME PLOTTED =>

Dist	COUNTY	ROUTE	POST MILES TOTAL PROJECT	SHEET No.	TOTAL SHEETS
11	SD	5	3.9/9.2	187	282

REGISTERED ELECTRICAL ENGINEER — DATE 06-14-16

PLANS APPROVAL DATE 07-11-16

REGISTERED PROFESSIONAL ENGINEER MERVIN D. FULLENWIDER No. E20211 Exp. 3-31-17 ELECTRICAL STATE OF CALIFORNIA

THE STATE OF CALIFORNIA OR ITS OFFICERS OR AGENTS SHALL NOT BE RESPONSIBLE FOR THE ACCURACY OR COMPLETENESS OF SCANNED COPIES OF THIS PLAN SHEET.

LEGEND:

1. -ADD RACK MOUNTABLE PUNCH DOWN PANEL WITH RJ45 ON THE FRONT AND 110 PUNCH ON THE BACK. TERMINATE OCC AS TIA/EIA 568B.
2. -LABEL NETWORK PORT TO MATCH CORRESPONDING FIELD ELEMENT.
3. -RS EXISTING PATCH CABLE FROM TERMINAL BLOCK TO EXISTING MODEM.
4. -TERMINATE OCC AS TIA/EIA 568B. REMOVE EXISTING OCC FROM RJ45 MOUNT BOX FOR CCTV, MVDS AND SIGNAL. TERMINATE EXISTING OCC TO 110 PUNCH DOWN AS TIA/EIA 568B.
5. -ADD SERIAL TO ETHERNET CONVERSION UNIT.

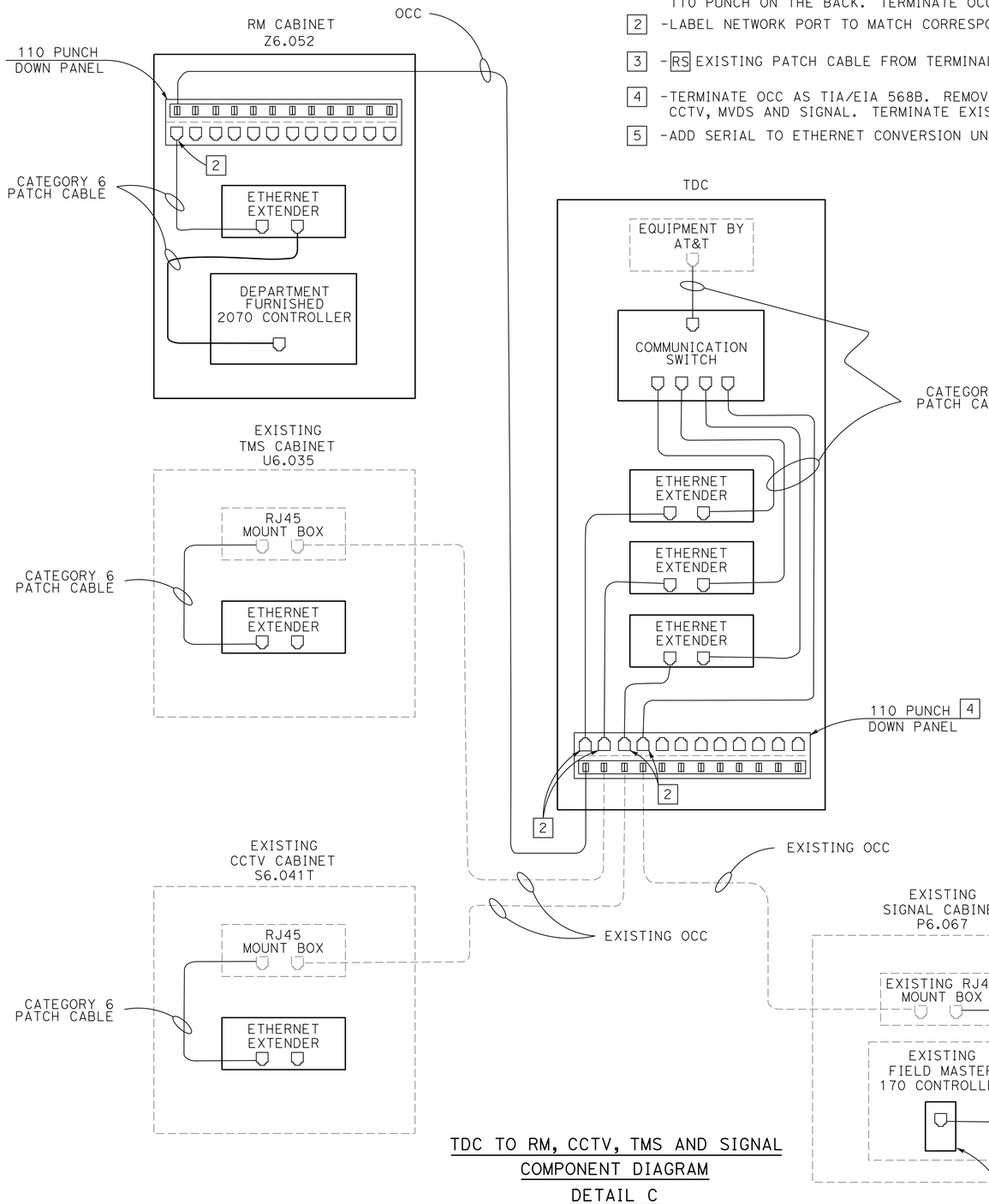

TDC TO RM, CCTV, TMS AND SIGNAL
COMPONENT DIAGRAM
DETAIL C

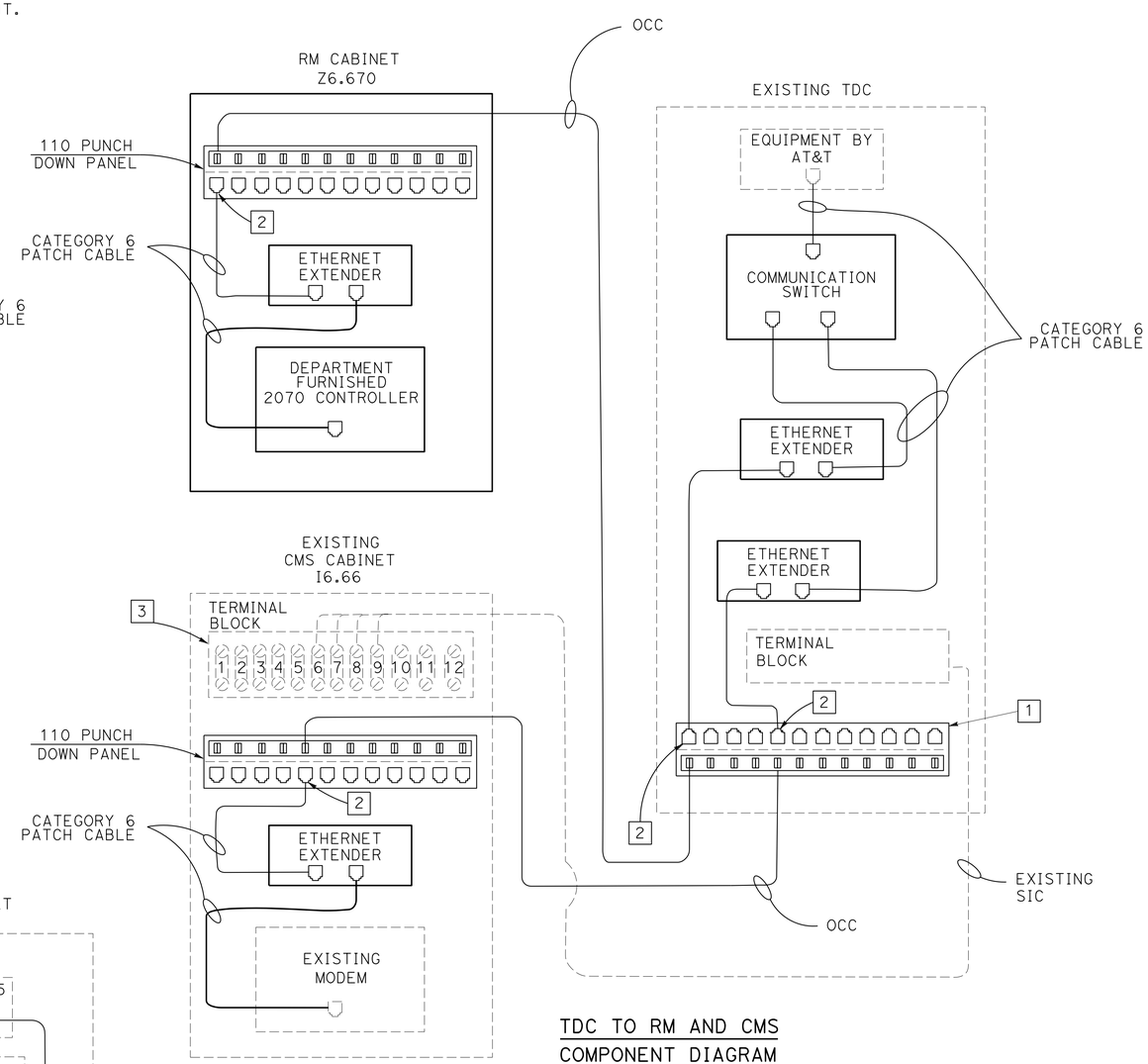

TDC TO RM AND CMS
COMPONENT DIAGRAM
DETAIL D

ELECTRICAL DETAIL

NO SCALE

E-35

STATE OF CALIFORNIA - DEPARTMENT OF TRANSPORTATION
Caltrans® TRAFFIC ELECTRICAL

FUNCTIONAL SUPERVISOR: RAJPREET SINGH
CALCULATED-DESIGNED BY: MERVIN FULLENWIDER
CHECKED BY: HENRY TSUI
REVISED BY
DATE REVISED

LAST REVISION 06-27-16
DATE PLOTTED => 21-JUL-2016
TIME PLOTTED => 14:04

Dist	COUNTY	ROUTE	POST MILES TOTAL PROJECT	SHEET No.	TOTAL SHEETS
11	SD	5	3.9/9.2	188	282

REGISTERED ELECTRICAL ENGINEER — DATE 06-14-16

PLANS APPROVAL DATE 07-11-16

REGISTERED PROFESSIONAL ENGINEER MERVIN D. FULLENWIDER No. E20211 Exp. 3-31-17 ELECTRICAL STATE OF CALIFORNIA

THE STATE OF CALIFORNIA OR ITS OFFICERS OR AGENTS SHALL NOT BE RESPONSIBLE FOR THE ACCURACY OR COMPLETENESS OF SCANNED COPIES OF THIS PLAN SHEET.

LEGEND AND NOTES:

1 - THE CONTRACTOR MUST VERIFY ALL CONTROLLING FIELD DIMENSIONS BEFORE ORDERING OR FABRICATING MATERIAL.

2 - GFCI RECEPTACLES ARE FOR MAINTENANCE EQUIPMENT ONLY.

3 - EIA 19" RACK MOUNT SHELF REQUIRED FOR EQUIPMENT.

4 - 8 PAIR TERMINAL BLOCK.

5 - VDSL SWITCH CABLE AND VDSL CPE CONNECTION POINT.

6 - FOR DETAILS NOT SHOWN SEE RSP ES-3B (TYPE G). NOTES 1 TO 7, 9, 10 AND 12 APPLY.

7 - BACK MOUNTING BOARD (1/2" THICK AND GRADE ACX PLYWOOD).

8 - CABINET MUST BE FURNISHED WITH MOUNTING BOARDS, OUTLET BOXES, CB AND OUTLET PLATES. DIMENSIONS ARE NOMINAL.

9 - FAN MUST BE THERMOSTATICALLY CONTROLLED AND ADJUSTABLE TO TURN ON BETWEEN 33°C AND 65°C.

10 - FAN CIRCUIT MUST BE FUSED AT 125 PERCENT OF THE FAN MOTOR CAPACITY.

11 - FAN CAPACITY MUST BE AT LEAST 9 CF PER MINUTE.

12 - FASTEN FIXED MOUNTING PANEL WITH NUTS, LOCK AND FLAT WASHERS TO 0.2" Ø x 1" STUDS WELDED TO ENCLOSURE.

13 - SEE ELECTRICAL DETAILS COMPONENT DIAGRAM.

14 - POLICE PANEL NOT REQUIRED.

15 - ALTERNATE VENTING METHOD MUST BE APPROVED BY ENGINEER.

16 - THREE POINT DOOR CLOSING MECHANISM.

17 - 19" EIA RACK RAIL.

LEGEND AND ABBREVIATIONS:

CPE	CUSTOMER PREMISES EQUIPMENT
VDSL	VERY HIGH DIGITAL SUBSCRIBER LINE

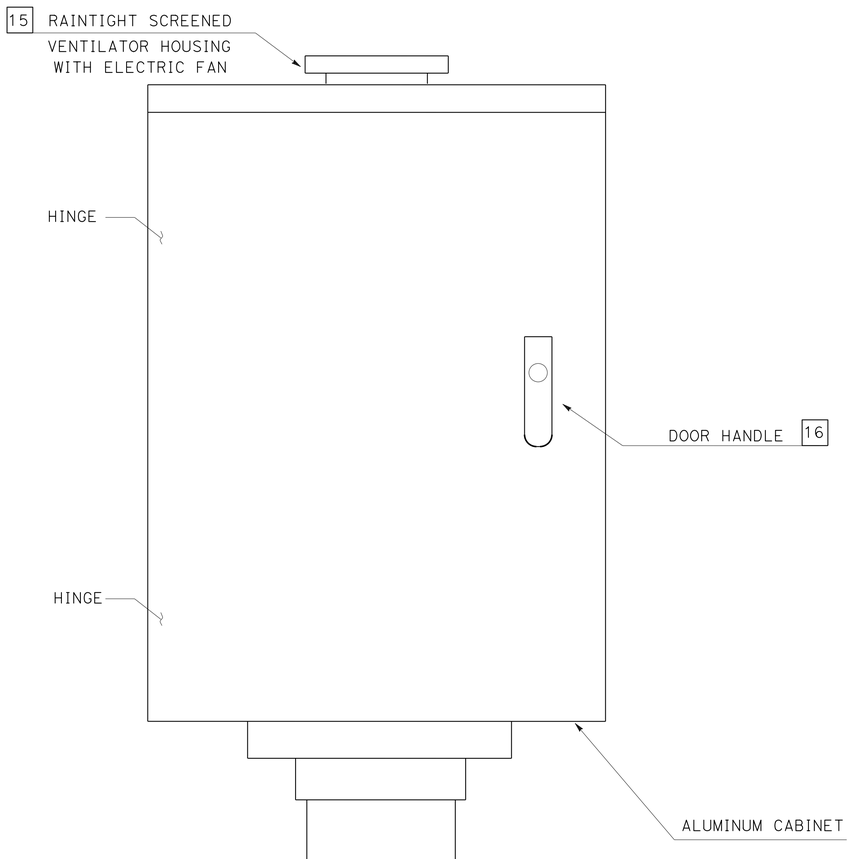

FRONT

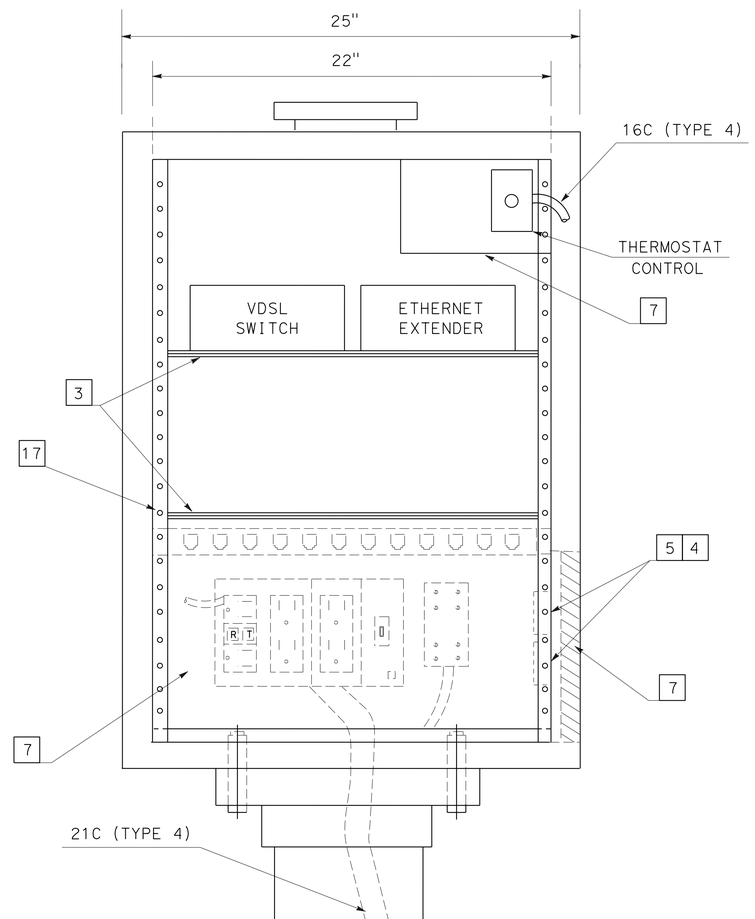

FRONT (INTERIOR)

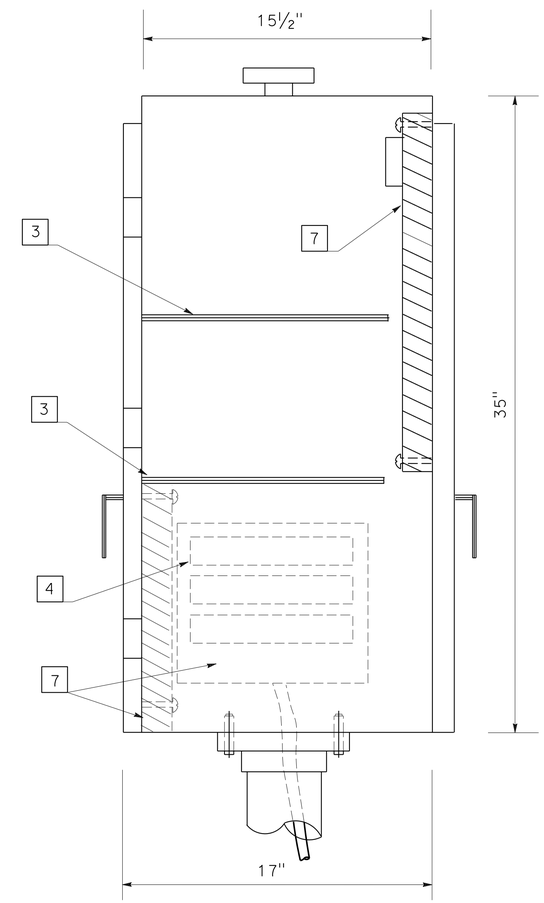

RIGHT SIDE

MODIFIED TYPE G

TDC

ELECRICAL DETAIL

NO SCALE

E-36

STATE OF CALIFORNIA - DEPARTMENT OF TRANSPORTATION

Caltrans® **TRAFFIC ELECTRICAL**

FUNCTIONAL SUPERVISOR: RAJPREET SINGH

CALCULATED-DESIGNED BY: ANTONIO A. RODRIGUEZ

CHECKED BY: MERVIN FULLENWIDER

REVISED BY / DATE REVISED

LAST REVISION 06-27-16 | DATE PLOTTED => 21-JUL-2016 | TIME PLOTTED => 14:04

Dist	COUNTY	ROUTE	POST MILES TOTAL PROJECT	SHEET No.	TOTAL SHEETS
11	SD	5	3.9/9.2	189	282

REGISTERED ELECTRICAL ENGINEER — DATE 06-14-16

PLANS APPROVAL DATE 07-11-16

REGISTERED PROFESSIONAL ENGINEER MERVIN D. FULLENWIDER No. E20211 Exp. 3-31-17 ELECTRICAL STATE OF CALIFORNIA

THE STATE OF CALIFORNIA OR ITS OFFICERS OR AGENTS SHALL NOT BE RESPONSIBLE FOR THE ACCURACY OR COMPLETENESS OF SCANNED COPIES OF THIS PLAN SHEET.

LEGEND AND NOTES:

1 - THE CONTRACTOR MUST VERIFY ALL CONTROLLING FIELD DIMENSIONS BEFORE ORDERING OR FABRICATING MATERIAL.

[2] - POLICE PANEL NOT REQUIRED.

[3] - EIA 19" RACK MOUNT SHELF REQUIRED FOR EQUIPMENT.

[4] - 8 PAIR TERMINAL BLOCK.

[5] - VDSL SWITCH CABLE AND VDSL CPE CONNECTION POINT.

[6] - EIA 19" RACK RAIL.

[7] - BACK MOUNTING BOARD (1/2" THICK AND GRADE ACX PLYWOOD).

8 - INSTALL CB INSIDE THE JUNCTION BOX. THE CB MUST BE OPERATED EXTERNALLY WITHOUT OPENING THE JUNCTION BOX COVER. SEE WIRING DIAGRAM ON THIS SHEET.

[9] - 110 PUNCH DOWN PANEL.

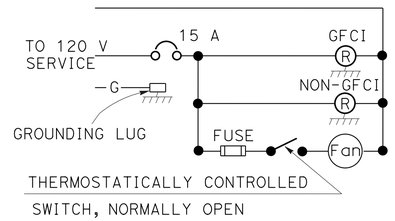

WIRING DIAGRAM

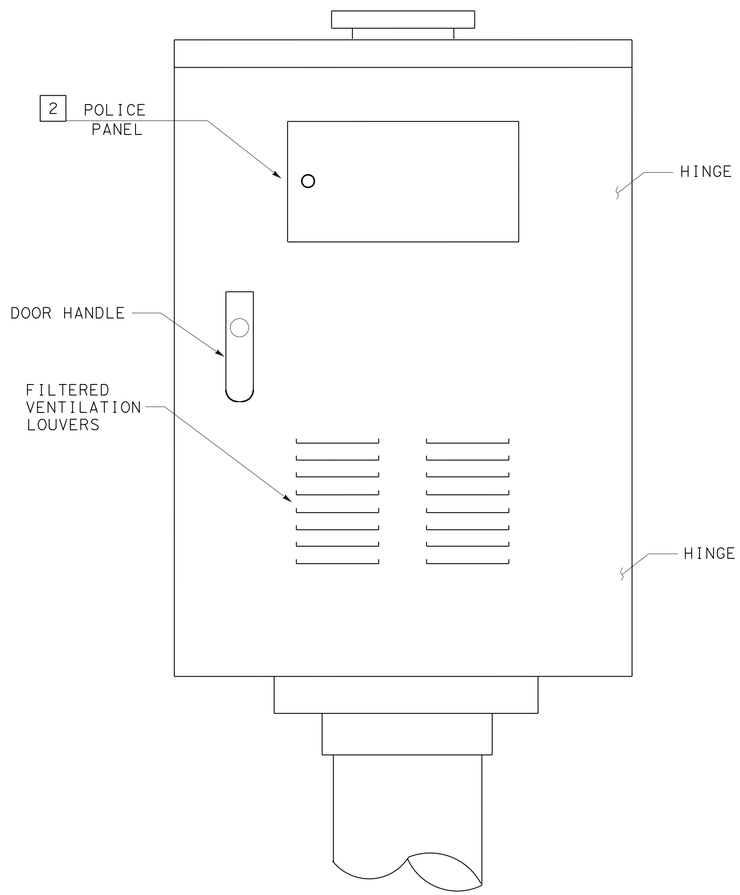

BACK

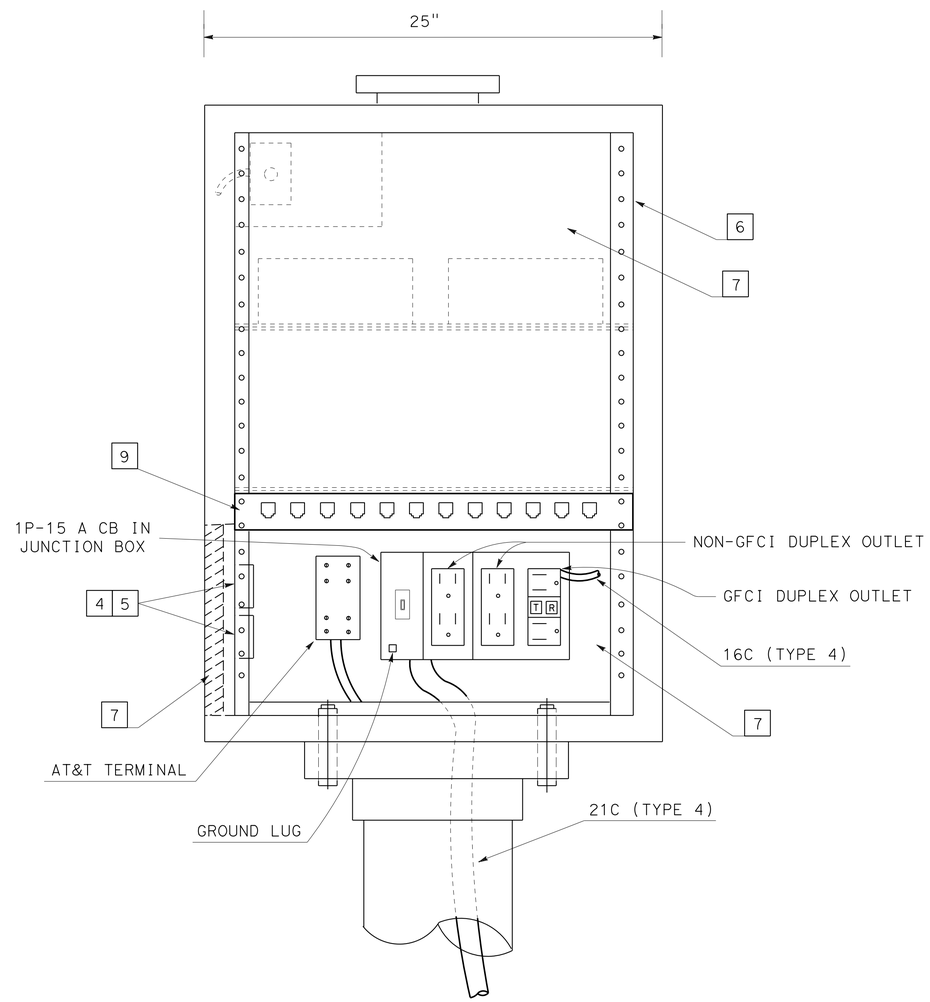

BACK (INTERIOR)

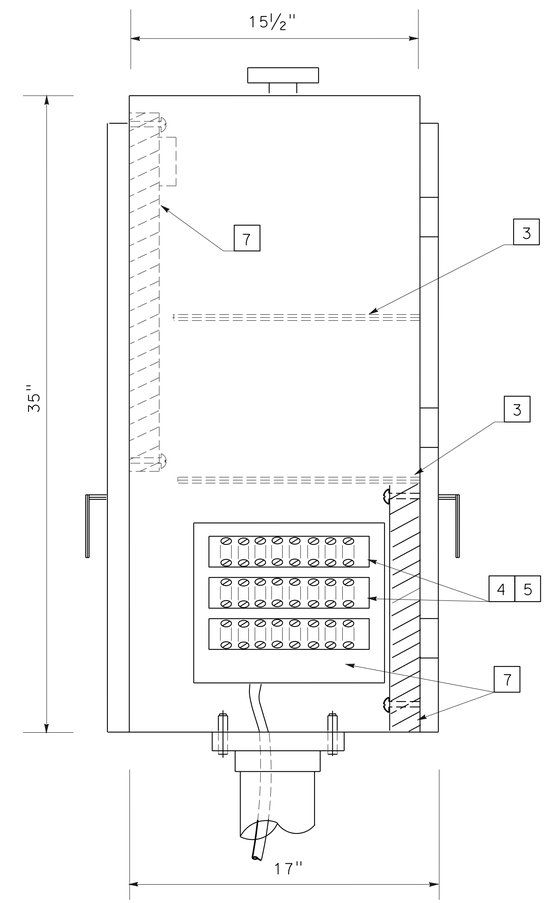

LEFT SIDE

MODIFIED TYPE G

TDC

ELECTRICAL DETAIL

NO SCALE

E-37

STATE OF CALIFORNIA - DEPARTMENT OF TRANSPORTATION

Caltrans® **TRAFFIC ELECTRICAL**

FUNCTIONAL SUPERVISOR: RAJPREET SINGH

CALCULATED-DESIGNED BY: ANTONIO A. RODRIGUEZ

CHECKED BY: MERVIN FULLENWIDER

REVISED BY / DATE REVISED

LAST REVISION 06-27-16 — DATE PLOTTED => 21-JUL-2016 — TIME PLOTTED => 14:04

Dist	COUNTY	ROUTE	POST MILES TOTAL PROJECT	SHEET No.	TOTAL SHEETS
11	SD	5	3.9/9.2	190	282

REGISTERED ELECTRICAL ENGINEER — DATE 06-14-16

07-11-16
PLANS APPROVAL DATE

REGISTERED PROFESSIONAL ENGINEER — MERVIN D. FULLENWIDER — No. E20211 — Exp. 3-31-17 — ELECTRICAL — STATE OF CALIFORNIA

THE STATE OF CALIFORNIA OR ITS OFFICERS OR AGENTS SHALL NOT BE RESPONSIBLE FOR THE ACCURACY OR COMPLETENESS OF SCANNED COPIES OF THIS PLAN SHEET.

LEGEND:

1 - ADD RACK MOUNTABLE PUNCH DOWN PANEL WITH RJ45 ON THE FRONT AND 110 PUNCH ON THE BACK. TERMINATE OCC AS TIA/EIA 568B.

2 - 110 PUNCH DOWN PANEL.

3 - EXISTING BACK MOUNTING BOARD (1/2" THICK AND GRADE ACX PLYWOOD).

4 - EXISTING 8 PAIR TERMINAL BLOCK.

5 - VDSL SWITCH CABLE AND VDSL CPE CONNECTION POINT.

6 - EXISTING EIA 19" RACK RAIL.

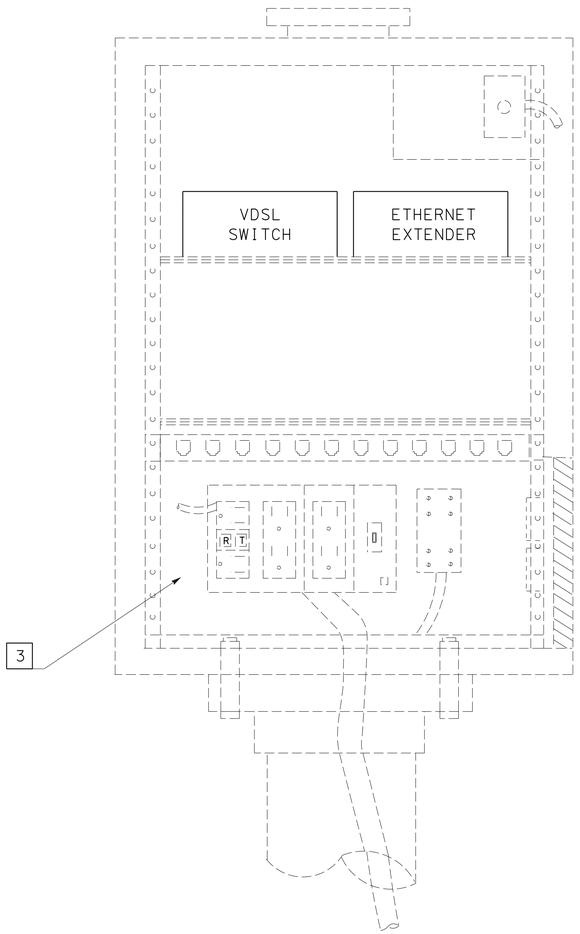

EXISTING TDC
FRONT
(INTERIOR)

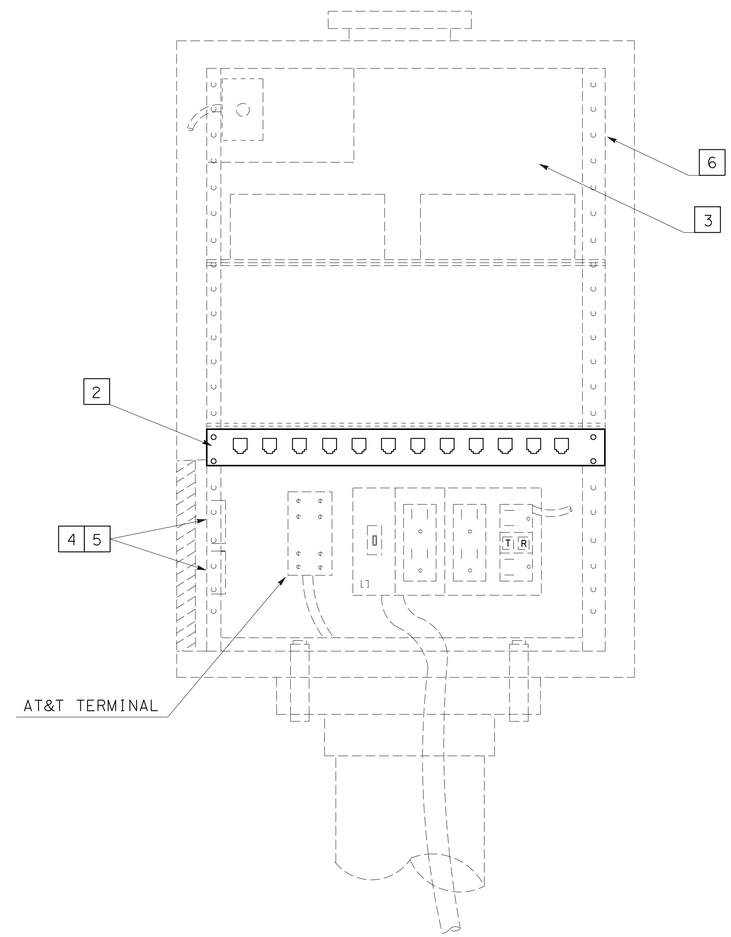

EXISTING TDC
BACK
(INTERIOR)

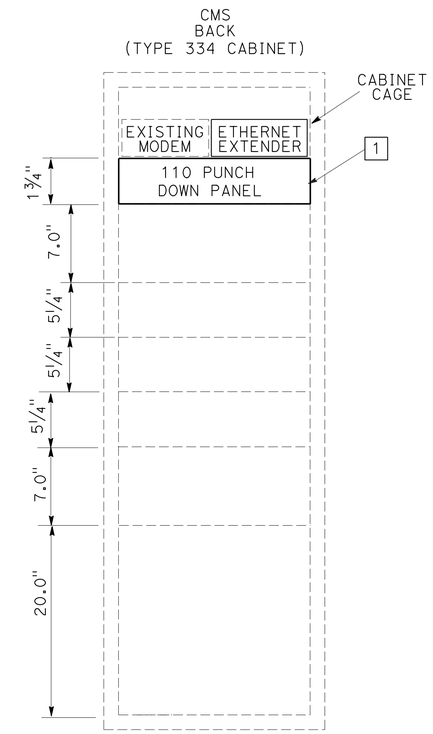

EXISTING CMS CABINET
EQUIPMENT PLACEMENT
DETAIL E

ELECTRICAL DETAIL

NO SCALE

E-38

STATE OF CALIFORNIA - DEPARTMENT OF TRANSPORTATION
Caltrans® TRAFFIC ELECTRICAL

FUNCTIONAL SUPERVISOR: RAJPREET SINGH
CALCULATED-DESIGNED BY: MERVIN FULLENWIDER
CHECKED BY: ANTONIO A. RODRIGUEZ
REVISED BY
DATE REVISED

LAST REVISION 06-27-16
DATE PLOTTED => 21-JUL-2016
TIME PLOTTED => 14:04

Dist	COUNTY	ROUTE	POST MILES TOTAL PROJECT	SHEET No.	TOTAL SHEETS
11	SD	5	3.9/9.2	191	282

REGISTERED ELECTRICAL ENGINEER — DATE 06-14-16

07-11-16
PLANS APPROVAL DATE

REGISTERED PROFESSIONAL ENGINEER MERVIN D. FULLENWIDER No. E20211 Exp. 3-31-17 ELECTRICAL STATE OF CALIFORNIA

THE STATE OF CALIFORNIA OR ITS OFFICERS OR AGENTS SHALL NOT BE RESPONSIBLE FOR THE ACCURACY OR COMPLETENESS OF SCANNED COPIES OF THIS PLAN SHEET.

NOTE:

1 -ITEMS SHOWN ON THESE TABLES ARE NOT A SEPARATE PAY ITEM, FOR INFORMATION ONLY.

LIGHTING AND SIGN ILLUMINATION

LIGHTING STANDARD (EA)			LUMINARE		PULL BOX No.5 (EA)	CONDUIT 2" (FT)	CONDUCTORS (FT)			
15	30	31	ROADWAY 1 (EA)	ROADWAY 2 (EA)			#4	#6	#8	#14
1	3	2	1	9	8	1575	500	500	5010	600

MODIFYING EXISTING ELECTRICAL SYSTEM

SIGNAL HEAD (EA)						PEDESTRIAN SIGNAL MODULE COUNTDOWN (EA)	APS (EA)	PBA (EA)	SIGNAL STANDARD			DETECTOR LOOPS (EA)	PULL BOX (EA)		CONDUCTORS (FT)								CONDUIT (FT)		LUMINAIRE ROADWAY 1 (EA)
SV-1-T	SP-1-T	TV-1-T	SV-2-T	TP-1	MAT				1-A (7′)	26A-4-100	1-A (10′)		No.5	No.6	DLC	VIDEO CABLE HARNESS	12CSC	3CSC	EVUC	SIC	#6	#10	2"	3"	
1	1	2	1	1	1	6	6	1	1	1	1	3	10	1	1463	590	1265	1055	810	1067	350	930	485	230	1

ELECTRICAL QUANTITIES

E-39

STATE OF CALIFORNIA - DEPARTMENT OF TRANSPORTATION
Caltrans® TRAFFIC ELECTRICAL

FUNCTIONAL SUPERVISOR: RAJPREET SINGH
CALCULATED-DESIGNED BY: ANTONIO A. RODRIGUEZ
CHECKED BY: MERVIN FULLENWIDER
REVISED BY
DATE REVISED

LAST REVISION 06-27-16
DATE PLOTTED => 21-JUL-2016
TIME PLOTTED => 14:04

Dist	COUNTY	ROUTE	POST MILES TOTAL PROJECT	SHEET No.	TOTAL SHEETS
11	SD	5	3.9/9.2	192	282

REGISTERED ELECTRICAL ENGINEER — DATE 06-14-16

07-11-16
PLANS APPROVAL DATE

REGISTERED PROFESSIONAL ENGINEER MERVIN D. FULLENWIDER No. E20211 Exp. 3-31-17 ELECTRICAL STATE OF CALIFORNIA

THE STATE OF CALIFORNIA OR ITS OFFICERS OR AGENTS SHALL NOT BE RESPONSIBLE FOR THE ACCURACY OR COMPLETENESS OF SCANNED COPIES OF THIS PLAN SHEET.

NOTE:

1 -ITEMS SHOWN ON THESE TABLES ARE NOT A SEPERATE PAY ITEM, FOR INFORMATION ONLY.

RAMP METERING SYSTEM

RAMP METER LOCATION	SIGNAL HEAD (EA)						FLASHING BEACONS (EA)	SIGNAL STANDARD (EA)				POLE TYPE 15 (EA)
	SV-1-T	SV-2-T	TV-1-T	TV-2-T	MAT	MAS		1-A	15TS	19-4-100	26A-4-100	
LOCATION 1	3	0	0	1	0	0	2	1	1	0	0	1
LOCATION 2	3	0	0	1	1	1	3	3	1	1	0	0
LOCATION 3	2	1	1	0	0	0	2	1	1	0	0	1
LOCATION 4	3	0	0	1	0	0	2	3	1	0	0	0
LOCATION 5	3	0	0	1	0	0	2	1	1	0	0	0
LOCATION 6	3	0	0	1	0	0	2	3	1	0	0	0
LOCATION 7	0	0	0	0	1	2	2	0	0	0	1	1
LOCATION 8	3	0	0	1	0	0	2	0	1	0	0	0

RAMP METERING SYSTEM

RAMP METER LOCATION	PULL BOX (EA)						DETECTOR LOOPS (EA)	CONDUCTORS (FT)								
	No.5	No.5(T)	No.6	No.6(E)	No. 9	No.9(A)		12CSC	9CSC	DLC	OCC	VIDEO CABLE	#6	#8	#10	#14
LOCATION 1	13	1	1	0	0	0	21	0	500	4460	400	0	680	560	0	265
LOCATION 2	14	2	1	1	0	5	24	453	555	9820	1871	473	90	4464	1360	170
LOCATION 3	10	1	1	0	0	0	22	0	1160	9500	155	0	564	1250	0	252
LOCATION 4	20	1	0	1	0	0	22	0	1225	9305	935	0	780	1200	0	388
LOCATION 5	15	1	1	0	0	0	21	0	460	4050	1580	0	540	80	0	230
LOCATION 6	13	1	1	0	1	2	24	0	1300	9890	654	0	420	1620	0	736
LOCATION 7	15	7	0	1	0	0	32	48	0	8071	1125	0	1296	898	0	1326
LOCATION 8	34	3	1	0	0	0	24	0	1093	11737	2470	0	8234	0	378	0

RAMP METERING SYSTEM

RAMP METER LOCATION	CONDUIT (FT)			ETHERNET SWITCH (EA)	ETHERNET EXTENDER (EA)	110 PUNCH DOWN (EA)	CONTROLLER FOUNDATION (EA)	LUMINAIRES ROADWAY 1 (EA)	EMS (EA)	SHELF (EA)	XY FITTING (EA)	VIDEO IMAGE DETECTION SYSTEM (EA)	MODIFIED TYPE G TDC (EA)	SERIAL TO ETHERNET CONVERSION UNIT (EA)
	1½"	2"	3"											
LOCATION 1	0	940	294	0	2	1	1	1	0	1	0	0	0	0
LOCATION 2	2	941	455	0	2	1	1	2	1	1	0	1	0	0
LOCATION 3	0	440	540	0	2	1	1	1	0	1	0	0	0	0
LOCATION 4	0	1510	590	1	6	2	1	1	0	1	0	0	1	1
LOCATION 5	0	830	210	1	4	2	1	1	0	1	0	0	0	0
LOCATION 6	0	500	670	0	2	1	1	1	0	1	1	0	0	0
LOCATION 7	0	1490	583	0	2	1	1	1	0	1	6	0	0	0
LOCATION 8	0	3838	667	0	2	1	1	1	1	1	0	0	0	0

ELECTRICAL QUANTITIES

E-40

REVISED BY | DATE REVISED
ANTONIO A. RODRIGUEZ | MERVIN FULLENWIDER
CALCULATED-DESIGNED BY | CHECKED BY
FUNCTIONAL SUPERVISOR: RAJPREET SINGH

STATE OF CALIFORNIA - DEPARTMENT OF TRANSPORTATION
Caltrans® TRAFFIC ELECTRICAL

LAST REVISION 06-27-16 | DATE PLOTTED => 21-JUL-2016 | TIME PLOTTED => 14:04

DIST	COUNTY	ROUTE	POST MILES TOTAL PROJECT	SHEET No	TOTAL SHEETS
11	SD	5	3.9/9.2	193	282

Eliseo Lopez 12/9/15
REGISTERED CIVIL ENGINEER DATE

07-11-16
PLANS APPROVAL DATE

REGISTERED PROFESSIONAL ENGINEER ELISEO LOPEZ No. C72910 Exp. 12/31/16 CIVIL STATE OF CALIFORNIA

The State of California or its officers or agents shall not be responsible for the accuracy or completeness of electronic copies of this plan sheet.

To get to the Caltrans web site, go to: http://www.dot.ca.gov

TABLE A

LOCATION	POLE TYPE	POLE DATA					BASE PLATE DATA		
		A Height	Min OD Base	Min OD Top	Wall Thickness	C	Bolt Circle	Thick-ness	Anchor Bolts Size
6	15TS (Modified) at Sta 424+65 "EN-J" Line	30′	8"	3 11/16"	0.1793"	1′-1½"	1′-0"	2"	1½"ø X 1′-8"
2	15TS (Modified) at Sta 280+53 "EN-PM" Line	30′	8"	3 11/16"	0.1793"	1′-1½"	1′-0"	2"	1½"ø X 1′-8"

TABLE B

LUMINAIRE ARM DATA				
M Projected Length	N Rise	Min OD At Pole	Nominal Thickness	P
12′-0"	4′-3"±	3⅞"	0.1196"	33′-9"

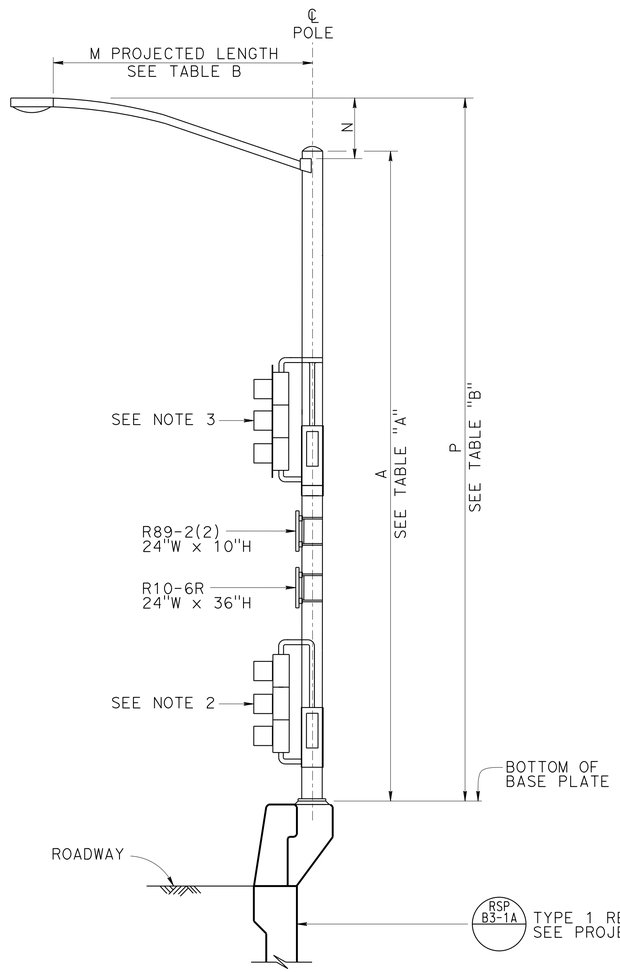

TYPE 15TS POLE MODIFIED ELEVATION

SEE NOTE 5

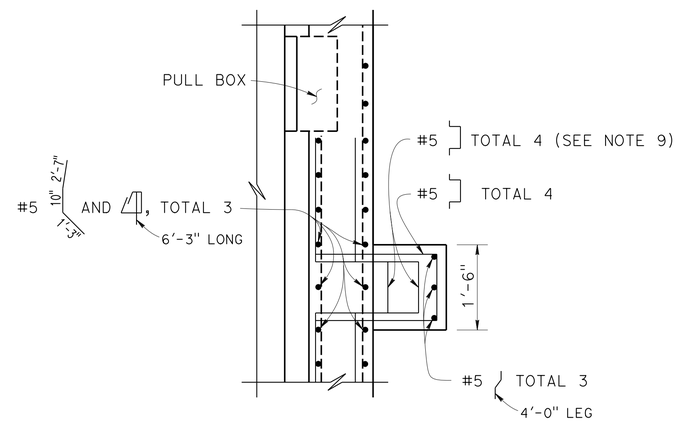

SECTION A-A

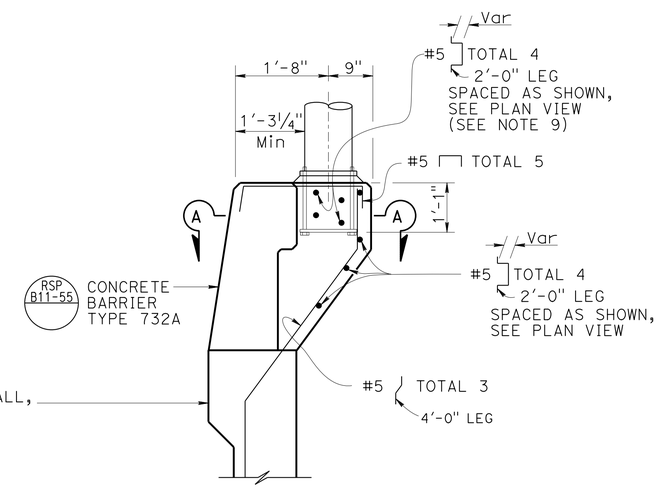

BARRIER PEDESTAL ELEVATION

GENERAL NOTES

SPECIFICATIONS:

DESIGN: AASHTO Standard Specifications for Structural Supports for Highway Signs, Luminaires, and Traffic Signals, Sixth Edition.

LOADING:

Wind Loading (3 second gust) : 100 MPH

UNIT STRESSES:

Structural Steel: f_y = 55,000 psi (tapered steel tube)
f_y = 50,000 psi (unless otherwise noted)

Anchor bolts: f_y = 55,000 psi

Reinforced Concrete : f'_c = 3,600 psi
f_y = 60,000 psi

NOTES:

1. For pole locations, see "ROADWAY" plans.
2. 12" diameter, 3 section signal head without backplate.
3. 12" diameter, 3 section signal head, backplate required.
4. For attachment mounting heights, see Project Plan sheet "E-12".
5. For additional details and data for Type 15TS Standard, see "2010 RSP ES-7A" and "2010 RSP ES-6B".
6. For Barrier Pedestal details, see "Pedestal Elevation" detail on "2010 RSP B11-55".
7. All steel must be galvanized after fabrication.
8. During pole erection, the post must be raked as necessary with the use of leveling nuts to provide a plumb pole axis.
9. Reinforcement shown is in addition to the Barrier Pedestal Reinforcement shown on "2010 RSP B11-55".
10. All standard plan vertical Retaining Wall Reinforcement must be extended to top of barrier.
11. For details not shown, see "2010 STANDARD PLANS" and "2010 REVISED STANDARD PLANS".

STANDARD PLAN SHEET No.
DETAIL No.

THE CONTRACTOR MUST VERIFY ALL CONTROLLING FIELD DIMENSIONS BEFORE ORDERING OR FABRICATING ANY MATERIAL.

NO SCALE

BRANCH CHIEF JEFFREY B WOODY

	BY	CHECKED
DESIGN	A. GUTIERREZ	E. LOPEZ
DETAILS	M. CLEVERLEY	A. GUTIERREZ
QUANTITIES		

STATE OF CALIFORNIA
DEPARTMENT OF TRANSPORTATION

DIVISION OF ENGINEERING SERVICES
DESIGN AND TECHNICAL SERVICES
SPECIAL DESIGNS BRANCH A

BRIDGE NO.
POST MILE 3.9/9.2

TYPE 15TS POLE MODIFIED ON CONCRETE BARRIER TYPE 732A (MOD)-PEDESTAL DETAILS

SES-1

(ENGLISH) SPECIAL DESIGNS BRANCH BORDER SHEET (REV. 7-1-09)

ORIGINAL SCALE IN INCHES FOR REDUCED PLANS 0 1 2 3

UNIT: 3619
PROJECT NUMBER & PHASE: 1114000045-1 CONTRACT NO.: 11-244004

DISREGARD PRINTS BEARING EARLIER REVISION DATES 12/9/15 11/17/15 11/16/15 11/10/15

SHEET OF

FILE => spec_des_br_prj_2015sd\ 1114000045uh001.dgn

USERNAME => s127400 DATE PLOTTED => 21-JUL-2016 TIME PLOTTED => 14:04

DIST	COUNTY	ROUTE	POST MILES TOTAL PROJECT	SHEET No	TOTAL SHEETS
11	SD	5	3.9/9.2	194	282

Eliseo Lopez 12/9/15
REGISTERED CIVIL ENGINEER DATE

07-11-16
PLANS APPROVAL DATE

REGISTERED PROFESSIONAL ENGINEER ELISEO LOPEZ No. C72910 Exp. 12/31/16 CIVIL STATE OF CALIFORNIA

The State of California or its officers or agents shall not be responsible for the accuracy or completeness of electronic copies of this plan sheet.

To get to the Caltrans web site, go to: http://www.dot.ca.gov

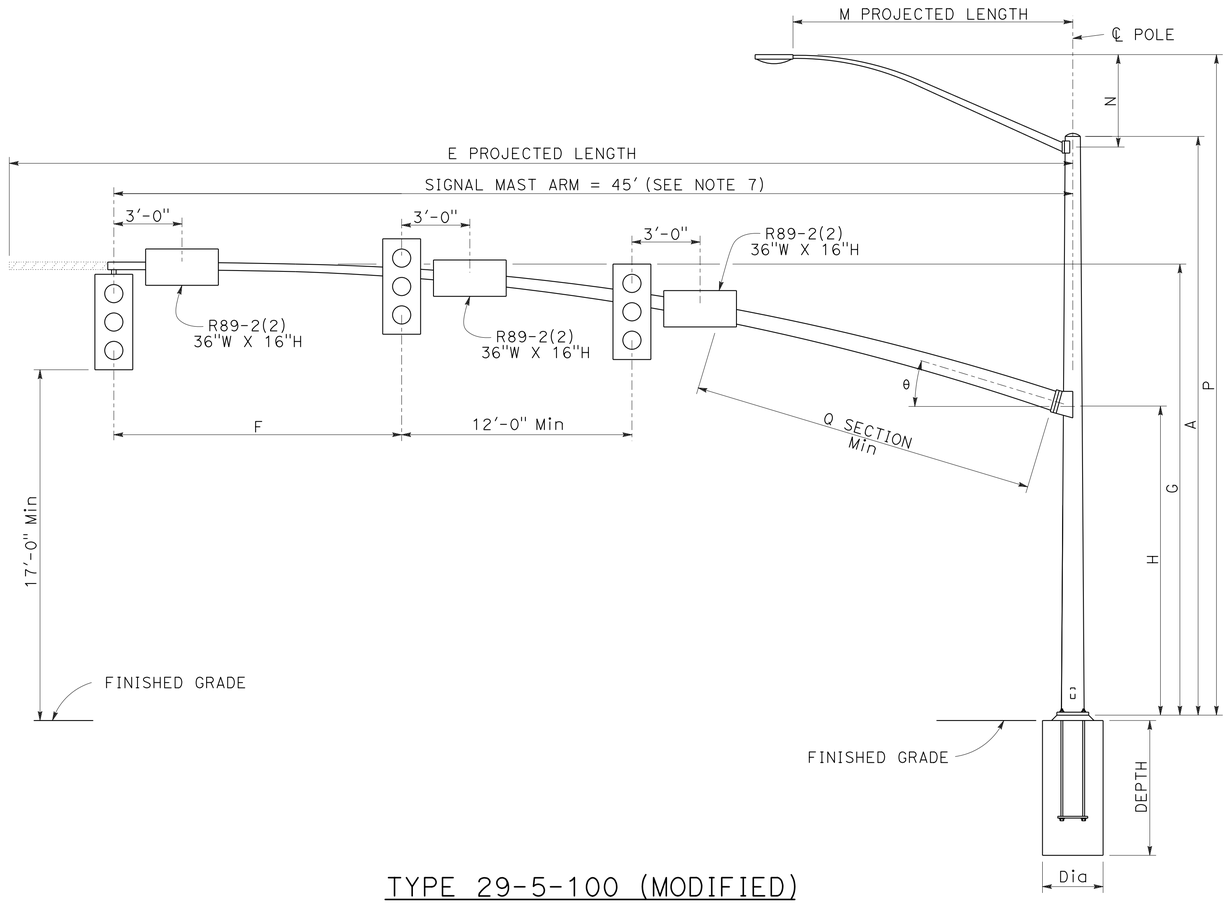

TYPE 29-5-100 (MODIFIED)

ELEVATION

GENERAL NOTES

SPECIFICATIONS:

DESIGN: AASHTO Standard Specifications for Structural Supports for Highway Signs, Luminaires, and Traffic Signals, Sixth Edition.

LOADING:

Wind Loading (3 second gust) : 100 MPH

UNIT STRESSES:

Structural Steel: fy = 55,000 psi (tapered steel tube)
fy = 50,000 psi (unless otherwise noted)

Anchor bolts: fy = 55,000 psi

Reinforced Concrete : f′c = 3,600 psi
fy = 60,000 psi

NOTES:

1. For pole location and details not shown, see "ROADWAY" plans.
2. For sign details, see "SIGN PLANS".
3. For additional details and data for Type 29-5-100 Standard, see "2010 RSP ES-7G".
4. All steel must be galvanized after fabrication.
5. During pole erection, the post must be raked as necessary with the use of leveling nuts to provide a plumb pole axis.
6. For details not shown, see "2010 STANDARD PLANS" and "2010 REVISED STANDARD PLANS".
7. Use a 50′ signal mast arm with last 5′ removed and a raintight cap installed at fabrication shop.

SIGNAL MAST ARM DATA

E PROJECTED LENGTH	F SPACING	G MOUNTING HEIGHT	H	Min OD AT POLE	THICKNESS	I BOLT CIRCLE	HS CAP SCREWS	J PLATE SIZE	K MAST ARM ℙ THICKNESS	L POLE ℙ THICKNESS	θ	Q SECTION LENGTH	Q SECTION THICKNESS
50′	12′-0"	20′-7" TO 22′-7"±	13′-0"	11 7/16"	0.1793"	16"	1½"-6NC-3¼"	1′-4"	1¾"	1¾"	15°	18′-0"	0.2391

POLE TYPE	POLE DATA				BASE PLATE DATA				CIDH PILE FOUNDATION	
	A HEIGHT	Min OD BASE	Min OD TOP	THICKNESS	C	BC = BOLT CIRCLE	THICKNESS	ANCHOR BOLT SIZE	DIAMETER	DEPTH
29-5-100 (Modified)	27′-0"	14"	9 11/16"	0.3125"	23"	21"	3"	2½" ø x 42"	3′-6"	12′-0"

LUMINAIRE MAST ARM DATA

M PROJECTED LENGTH	N RISE	Min OD AT POLE	THICKNESS	P MOUNTING HEIGHT
15′-0"	4′-9"±	4¼"	0.1196"	31′-3"±

THE CONTRACTOR MUST VERIFY ALL CONTROLLING FIELD DIMENSIONS BEFORE ORDERING OR FABRICATING ANY MATERIAL.

STANDARD PLAN SHEET No.
DETAIL No.

NO SCALE

BRANCH CHIEF	JEFFREY B WOODY	DESIGN	BY A. GUTIERREZ	CHECKED E. LOPEZ
		DETAILS	BY M. CLEVERLEY	CHECKED A. GUTIERREZ
		QUANTITIES	BY	CHECKED

STATE OF CALIFORNIA
DEPARTMENT OF TRANSPORTATION

DIVISION OF ENGINEERING SERVICES
DESIGN AND TECHNICAL SERVICES
SPECIAL DESIGNS BRANCH
A

BRIDGE NO.
POST MILE 3.9/9.2

TYPE 29-5-100 (MODIFIED)
POLE DETAILS

SES-2

(ENGLISH) SPECIAL DESIGNS BRANCH BORDER SHEET (REV. 7-1-09)

ORIGINAL SCALE IN INCHES FOR REDUCED PLANS 0 1 2 3

UNIT: 3619
PROJECT NUMBER & PHASE: 1114000045-1
CONTRACT NO.: 11-244004

DISREGARD PRINTS BEARING EARLIER REVISION DATES
REVISION DATES 12/18/15 12/23/15 11/30/15 12/9/15
SHEET OF

FILE => spec_des_br_prj_2015sd\ 1114000045uh002.dgn

USERNAME => s127400 DATE PLOTTED => 21-JUL-2016 TIME PLOTTED => 14:04

M

Maint	MAINTENANCE
Max	MAXIMUM
MB	METAL BEAM
MBB	METAL BEAM BARRIER
MBGR	METAL BEAM GUARD RAILING
Med	MEDIAN
MGS	MIDWEST GUARDRAIL SYSTEM
MH	MANHOLE
Min	MINIMUM
Misc	MISCELLANEOUS
Misc I & S	MISCELLANEOUS IRON AND STEEL
Mkr	MARKER
Mod	MODIFIED,
	MODIFY
Mon	MONUMENT
MP	METAL PLATE
MPGR	METAL PLATE GUARD RAILING
MR	MOVEMENT RATING
MSE	MECHANICALLY STABILIZED EMBANKMENT
Mt	MOUNTAIN, MOUNT
Mtl	MATERIAL
MVP	MAINTENANCE VEHICLE PULLOUT

N

N	NORTH
NB	NORTHBOUND
No.	NUMBER (MUST HAVE PERIOD)
Nos.	NUMBERS (MUST HAVE PERIOD)
NPS	NOMINAL PIPE SIZE
NS	NEAR SIDE
NSP	NEW STANDARD PLAN
NTS	NOT TO SCALE

O

Oblr	OBLITERATE
OC	OVERCROSSING
OD	OUTSIDE DIAMETER
OF	OUTSIDE FACE
OG	ORIGINAL GROUND
OGAC	OPEN GRADED ASPHALT CONCRETE
OGFC	OPEN GRADED FRICTION COURSE
OH	OVERHEAD
OHWM	ORDINARY HIGH WATER MARK
O-O	OUT TO OUT
Opp	OPPOSITE
OSD	OVERSIDE DRAIN

P

P	PAGE
PAP	PERFORATED ALUMINUM PIPE
PB	PULL BOX
PC	POINT OF CURVATURE,
	PRECAST
PCC	POINT OF COMPOUND CURVE,
	PORTLAND CEMENT CONCRETE
PCMS	PORTABLE CHANGEABLE MESSAGE SIGN
PCP	PERFORATED CONCRETE PIPE,
	PRESTRESSED CONCRETE PIPE
PCVC	POINT OF COMPOUND VERTICAL CURVE
PEC	PERMIT TO ENTER AND CONSTRUCT
Ped	PEDESTRIAN
Ped OC	PEDESTRIAN OVERCROSSING
Ped UC	PEDESTRIAN UNDERCROSSING
Perm Mtl	PERMEABLE MATERIAL

P continued

PG	PROFILE GRADE
PI	POINT OF INTERSECTION
PJP	PARTIAL JOINT PENETRATION
Pkwy	PARKWAY
ℙ,PL	PLATE
P/L	PROPERTY LINE
PM	POST MILE,
	TIME FROM NOON TO MIDNIGHT
PN	PAVING NOTCH
POC	POINT OF HORIZONTAL CURVE
POT	POINT OF TANGENT
POVC	POINT OF VERTICAL CURVE
PP	PIPE PILE,
	PLASTIC PIPE,
	POWER POLE
PPL	PREFORMED PERMEABLE LINER
PPP	PERFORATED PLASTIC PIPE
PRC	POINT OF REVERSE CURVE
PRF	PAVEMENT REINFORCING FABRIC
PRVC	POINT OF REVERSE VERTICAL CURVE
PS&E	PLANS, SPECIFICATIONS AND ESTIMATES
PS, P/S	PRESTRESSED
PSP	PERFORATED STEEL PIPE
PT	POINT OF TANGENCY
PVC	POLYVINYL CHLORIDE
Pvmt	PAVEMENT

Q

Qty	QUANTITY

R

R	RADIUS
R & D	REMOVE AND DISPOSE
R & S	REMOVE AND SALVAGE
R/C	RATE OF CHANGE
RCA	REINFORCED CONCRETE ARCH
RCB	REINFORCED CONCRETE BOX
RCP	REINFORCED CONCRETE PIPE
RCPA	REINFORCED CONCRETE PIPE ARCH
Rd	ROAD
Reinf	REINFORCED,
	REINFORCEMENT,
	REINFORCING
Rel	RELOCATE
Repl	REPLACEMENT
Ret	RETAINING
Rev	REVISED, REVISION
Rdwy	ROADWAY
RHMA	RUBBERIZED HOT MIX ASPHALT
Riv	RIVER
RM	ROAD-MIXED
RP	RADIUS POINT,
	REFERENCE POINT
RR	RAILROAD
RSP	ROCK SLOPE PROTECTION,
	REVISED STANDARD PLAN
Rt	RIGHT
Rte	ROUTE
RW	REDWOOD,
	RETAINING WALL
R/W	RIGHT OF WAY
Rwy	RAILWAY

S

S	SOUTH,
	SUPPLEMENT
SAE	STRUCTURE APPROACH EMBANKMENT
Salv	SALVAGE
SAPP	STRUCTURAL ALUMINUM PLATE PIPE
SB	SOUTHBOUND
SC	SAND CUSHION
SCSP	SLOTTED CORRUGATED STEEL PIPE
SD	STORM DRAIN
Sec	SECOND,
	SECTION
Sep	SEPARATION
SG	SUBGRADE
Shld	SHOULDER
Sht	SHEET
Sim	SIMILAR
℄	STATION LINE
SM	SELECTED MATERIAL
Spec	SPECIAL,
	SPECIFICATIONS
SPP	SLOTTED PLASTIC PIPE
SS	SLOPE STAKE
SSBM	STRAP AND SADDLE BRACKET METHOD
SSD	STRUCTURAL SECTION DRAIN
SSPA	STRUCTURAL STEEL PLATE ARCH
SSPP	STRUCTURAL STEEL PLATE PIPE
SSPPA	STRUCTURAL STEEL PLATE PIPE ARCH
SSRP	STEEL SPIRAL RIB PIPE
St	STREET
Sta	STATION
STBB	SINGLE THRIE BEAM BARRIER
Std	STANDARD
Str	STRUCTURE
Surf	SURFACING
SW	SIDEWALK,
	SOUND WALL
Swr	SEWER
Sym	SYMMETRICAL
S4S	SURFACE 4 SIDES

T

T	SEMI-TANGENT
Tan	TANGENT
TBB	THRIE BEAM BARRIER
Tbr	TIMBER
TC	TOP OF CURB
TCB	TRAFFIC CONTROL BOX
TCE	TEMPORARY CONSTRUCTION EASEMENT
Tel	TELEPHONE
Temp	TEMPORARY
TG	TOP OF GRADE
Tot	TOTAL
TP	TELEPHONE POLE
TPB	TREATED PERMEABLE BASE
TPM	TREATED PERMEABLE MATERIAL
Trans	TRANSITION

T continued

TS	TRANSVERSE,
	TRAFFIC SIGNAL,
	TUBULAR STEEL
Typ	TYPICAL

U

UC	UNDERCROSSING
UD	UNDERDRAIN
UG	UNDERGROUND
UON	UNLESS OTHERWISE NOTED
UP	UNDERPASS

V

V	VALVE,
	DESIGN SPEED
Var	VARIABLE,
	VARIES
VC	VERTICAL CURVE
VCP	VITRIFIED CLAY PIPE
Vert	VERTICAL
Via	VIADUCT
Vol	VOLUME

W

W	WEST,
	WIDTH
WB	WESTBOUND
WH	WEEP HOLE
WM	WIRE MESH
WS	WATER SURFACE
WSP	WELDED STEEL PIPE
Wt	WEIGHT
WV	WATER VALVE
WW	WINGWALL
WWLOL	WINGWALL LAYOUT LINE

X

X Sec	CROSS SECTION
Xing	CROSSING

Y

Yr	YEAR
Yrs	YEARS

Dist	COUNTY	ROUTE	POST MILES TOTAL PROJECT	SHEET No.	TOTAL SHEETS
11	SD	5	3.9/9.2	195	282

Grace M. Tsushima
REGISTERED CIVIL ENGINEER

July 19, 2013
PLANS APPROVAL DATE

REGISTERED PROFESSIONAL ENGINEER
Grace M. Tsushima
No. C49814
Exp. 9-30-14
CIVIL
STATE OF CALIFORNIA

THE STATE OF CALIFORNIA OR ITS OFFICERS OR AGENTS SHALL NOT BE RESPONSIBLE FOR THE ACCURACY OR COMPLETENESS OF SCANNED COPIES OF THIS PLAN SHEET.

TO ACCOMPANY PLANS DATED 07-11-16

UNIT OF MEASUREMENT SYMBOLS:

Some of the symbols used in the project plan quantity tables and in the Bid Item List are:

TABLE A

SYMBOL USED	DEFINITIONS
ACRE	ACRE
CF	CUBIC FOOT
CY	CUBIC YARD
EA	EACH
GAL	GALLON
LB	POUND
LF	LINEAR FOOT
SQFT	SQUARE FOOT
SQYD	SQUARE YARD
STA	100 FEET
TAB	TABLET
TON	2,000 POUNDS

Some of the symbols used in the plans other than in the project plan quantity tables are:

TABLE B

SYMBOL USED	DEFINITIONS
ksi	KIPS PER SQUARE INCH
ksf	KIPS PER SQUARE FOOT
psi	POUNDS PER SQUARE INCH
psf	POUNDS PER SQUARE FOOT
lb/ft^3, pcf	POUNDS PER CUBIC FOOT
tsf	TONS PER SQUARE FOOT
mph, MPH *	MILES PER HOUR
ø	NOMINAL DIAMETER
oz	OUNCE
lb	POUND
kip	1,000 POUNDS
cal	CALORIE
ft	FOOT OR FEET
gal	GALLON

* For use on a sign panel only

STATE OF CALIFORNIA
DEPARTMENT OF TRANSPORTATION

ABBREVIATIONS (SHEET 2 OF 2)

NO SCALE

RSP A10B DATED JULY 19, 2013 SUPERSEDES STANDARD PLAN A10B DATED MAY 20, 2011 - PAGE 2 OF THE STANDARD PLANS BOOK DATED 2010.

REVISED STANDARD PLAN RSP A10B

2010 REVISED STANDARD PLAN RSP A10B

6-7-13

REFERENCE: CALTRANS SOIL & ROCK LOGGING, CLASSIFICATION, AND PRESENTATION MANUAL (2010)

Dist	COUNTY	ROUTE	POST MILES TOTAL PROJECT	SHEET No.	TOTAL SHEETS
11	SD	5	3.9/9.2	196	282

CERTIFIED ENGINEERING GEOLOGIST

October 30, 2015
PLANS APPROVAL DATE

REGISTERED GEOLOGIST
CHRIS A. RISDEN
CERTIFIED ENGINEERING GEOLOGIST
No. 2541
Exp. 9-30-17
STATE OF CALIFORNIA

THE STATE OF CALIFORNIA OR ITS OFFICERS OR AGENTS SHALL NOT BE RESPONSIBLE FOR THE ACCURACY OR COMPLETENESS OF SCANNED COPIES OF THIS PLAN SHEET.

TO ACCOMPANY PLANS DATED 07-11-16

ABBREVIATION:

GWS = Ground Water Surface

CEMENTATION

DESCRIPTION	CRITERIA
WEAK	CRUMBLES OR BREAKS WITH HANDLING OR LITTLE FINGER PRESSURE.
MODERATE	CRUMBLES OR BREAKS WITH CONSIDERABLE FINGER PRESSURE.
STRONG	WILL NOT CRUMBLE OR BREAK WITH FINGER PRESSURE.

BOREHOLE IDENTIFICATION

SYMBOL	HOLE TYPE	DESCRIPTION
Size	A	AUGER BORING (HOLLOW OR SOLID STEM BUCKET)
Size	R	ROTARY DRILLED BORING (CONVENTIONAL)
	RW	ROTARY DRILLED WITH SELF-CASING WIRE-LINE
	RC	ROTARY CORE WITH CONTINUOUSLY-SAMPLED, SELF-CASING WIRE-LINE
	P	ROTARY PERCUSSION BORING (AIR)
Size	R	ROTARY DRILLED DIAMOND CORE
	RC	ROTARY DRILLED DIAMOND CORE, CONTINUOUSLY SAMPLED
Size	HD	HAND DRIVEN (1-INCH SOIL TUBE)
	HA	HAND AUGER
●	D	DYNAMIC CONE PENETRATION BORING
▲	CPT	CONE PENETRATION TEST (ASTM D 5778)
⬚	O	OTHER (NOTE ON LOTB)

Note: Size in inches.

CONSISTENCY OF COHESIVE SOILS

DESCRIPTION	SHEAR STRENGTH (tsf)	POCKET PENETROMETER MEASUREMENT, PP, (tsf)	TORVANE MEASUREMENT, TV, (tsf)	VANE SHEAR MEASUREMENT, VS, (tsf)
VERY SOFT	LESS THAN 0.12	LESS THAN 0.25	LESS THAN 0.12	LESS THAN 0.12
SOFT	0.12 - 0.25	0.25 - 0.5	0.12 - 0.25	0.12 - 0.25
MEDIUM STIFF	0.25 - 0.5	0.5 - 1	0.25 - 0.5	0.25 - 0.5
STIFF	0.5 - 1	1 - 2	0.5 - 1	0.5 - 1
VERY STIFF	1 - 2	2 - 4	1 - 2	1 - 2
HARD	GREATER THAN 2	GREATER THAN 4	GREATER THAN 2	GREATER THAN 2

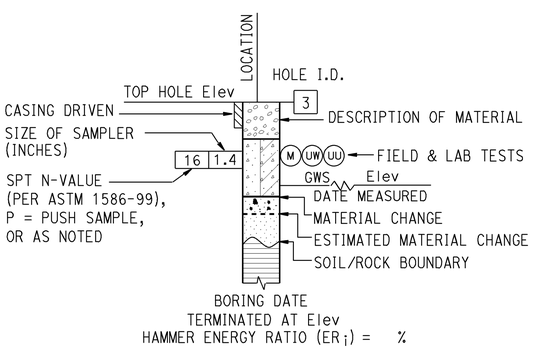

ROTARY BORING

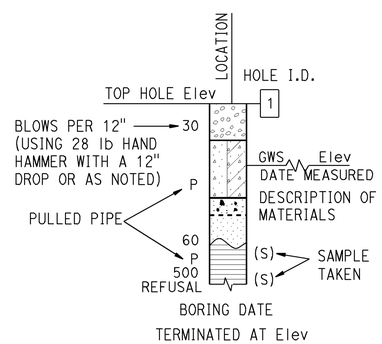

HAND BORING

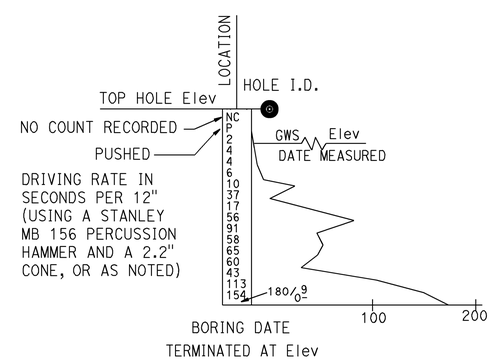

DYNAMIC CONE PENETRATION BORING

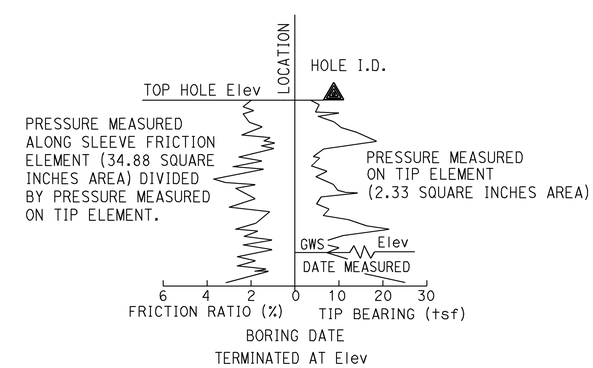

CONE PENETRATION TEST (CPT) BORING

STATE OF CALIFORNIA
DEPARTMENT OF TRANSPORTATION

LEGEND - SOIL (SHEET 1 OF 2)

NO SCALE

RSP A10F DATED OCTOBER 30, 2015 SUPERSEDES STANDARD PLAN A10F DATED MAY 20, 2011 - PAGE 6 OF THE STANDARD PLANS BOOK DATED 2010.

REVISED STANDARD PLAN RSP A10F

2010 REVISED STANDARD PLAN RSP A10F

8-18-15

REFERENCE: CALTRANS SOIL & ROCK LOGGING, CLASSIFICATION, AND PRESENTATION MANUAL (2010)

Dist	COUNTY	ROUTE	POST MILES TOTAL PROJECT	SHEET No.	TOTAL SHEETS
11	SD	5	3.9/9.2	197	282

CERTIFIED ENGINEERING GEOLOGIST

October 30, 2015
PLANS APPROVAL DATE

REGISTERED GEOLOGIST
CHRIS A. RISDEN
CERTIFIED ENGINEERING GEOLOGIST
No. 2541
Exp. 9-30-17
STATE OF CALIFORNIA

THE STATE OF CALIFORNIA OR ITS OFFICERS OR AGENTS SHALL NOT BE RESPONSIBLE FOR THE ACCURACY OR COMPLETENESS OF SCANNED COPIES OF THIS PLAN SHEET.

TO ACCOMPANY PLANS DATED 07-11-16

GROUP SYMBOLS AND NAMES

GRAPHIC/SYMBOL	GROUP NAMES	GRAPHIC/SYMBOL	GROUP NAMES
GW	WELL-GRADED GRAVEL WELL-GRADED GRAVEL WITH SAND	CL	LEAN CLAY LEAN CLAY WITH SAND LEAN CLAY WITH GRAVEL SANDY LEAN CLAY SANDY LEAN CLAY WITH GRAVEL GRAVELLY LEAN CLAY GRAVELLY LEAN CLAY WITH SAND
GP	POORLY-GRADED GRAVEL POORLY-GRADED GRAVEL WITH SAND		
GW-GM	WELL-GRADED GRAVEL WITH SILT WELL-GRADED GRAVEL WITH SILT AND SAND	CL-ML	SILTY CLAY SILTY CLAY WITH SAND SILTY CLAY WITH GRAVEL SANDY SILTY CLAY SANDY SILTY CLAY WITH GRAVEL GRAVELLY SILTY CLAY GRAVELLY SILTY CLAY WITH SAND
GW-GC	WELL-GRADED GRAVEL WITH CLAY (OR SILTY CLAY) WELL-GRADED GRAVEL WITH CLAY AND SAND (OR SILTY CLAY AND SAND)		
GP-GM	POORLY-GRADED GRAVEL WITH SILT POORLY-GRADED GRAVEL WITH SILT AND SAND	ML	SILT SILT WITH SAND SILT WITH GRAVEL SANDY SILT SANDY SILT WITH GRAVEL GRAVELLY SILT GRAVELLY SILT WITH SAND
GP-GC	POORLY-GRADED GRAVEL WITH CLAY (OR SILTY CLAY) POORLY-GRADED GRAVEL WITH CLAY AND SAND (OR SILTY CLAY AND SAND)		
GM	SILTY GRAVEL SILTY GRAVEL WITH SAND	OL	ORGANIC LEAN CLAY ORGANIC LEAN CLAY WITH SAND ORGANIC LEAN CLAY WITH GRAVEL SANDY ORGANIC LEAN CLAY SANDY ORGANIC LEAN CLAY WITH GRAVEL GRAVELLY ORGANIC LEAN CLAY GRAVELLY ORGANIC LEAN CLAY WITH SAND
GC	CLAYEY GRAVEL CLAYEY GRAVEL WITH SAND		
GC-GM	SILTY, CLAYEY GRAVEL SILTY, CLAYEY GRAVEL WITH SAND	OL	ORGANIC SILT ORGANIC SILT WITH SAND ORGANIC SILT WITH GRAVEL SANDY ORGANIC SILT SANDY ORGANIC SILT WITH GRAVEL GRAVELLY ORGANIC SILT GRAVELLY ORGANIC SILT WITH SAND
SW	WELL-GRADED SAND WELL-GRADED SAND WITH GRAVEL		
SP	POORLY-GRADED SAND POORLY-GRADED SAND WITH GRAVEL	CH	FAT CLAY FAT CLAY WITH SAND FAT CLAY WITH GRAVEL SANDY FAT CLAY SANDY FAT CLAY WITH GRAVEL GRAVELLY FAT CLAY GRAVELLY FAT CLAY WITH SAND
SW-SM	WELL-GRADED SAND WITH SILT WELL-GRADED SAND WITH SILT AND GRAVEL		
SW-SC	WELL-GRADED SAND WITH CLAY (OR SILTY CLAY) WELL-GRADED SAND WITH CLAY AND GRAVEL (OR SILTY CLAY AND GRAVEL)	MH	ELASTIC SILT ELASTIC SILT WITH SAND ELASTIC SILT WITH GRAVEL SANDY ELASTIC SILT SANDY ELASTIC SILT WITH GRAVEL GRAVELLY ELASTIC SILT GRAVELLY ELASTIC SILT WITH SAND
SP-SM	POORLY-GRADED SAND WITH SILT POORLY-GRADED SAND WITH SILT AND GRAVEL		
SP-SC	POORLY-GRADED SAND WITH CLAY (OR SILTY CLAY) POORLY-GRADED SAND WITH CLAY AND GRAVEL (OR SILTY CLAY AND GRAVEL)	OH	ORGANIC FAT CLAY ORGANIC FAT CLAY WITH SAND ORGANIC FAT CLAY WITH GRAVEL SANDY ORGANIC FAT CLAY SANDY ORGANIC FAT CLAY WITH GRAVEL GRAVELLY ORGANIC FAT CLAY GRAVELLY ORGANIC FAT CLAY WITH SAND
SM	SILTY SAND SILTY SAND WITH GRAVEL		
SC	CLAYEY SAND CLAYEY SAND WITH GRAVEL	OH	ORGANIC ELASTIC SILT ORGANIC ELASTIC SILT WITH SAND ORGANIC ELASTIC SILT WITH GRAVEL SANDY ORGANIC ELASTIC SILT SANDY ORGANIC ELASTIC SILT WITH GRAVEL GRAVELLY ORGANIC ELASTIC SILT GRAVELLY ORGANIC ELASTIC SILT WITH SAND
SC-SM	SILTY, CLAYEY SAND SILTY, CLAYEY SAND WITH GRAVEL		
PT	PEAT	OL/OH	ORGANIC SOIL ORGANIC SOIL WITH SAND ORGANIC SOIL WITH GRAVEL SANDY ORGANIC SOIL SANDY ORGANIC SOIL WITH GRAVEL GRAVELLY ORGANIC SOIL GRAVELLY ORGANIC SOIL WITH SAND
	COBBLES COBBLES AND BOULDERS BOULDERS		

FIELD AND LABORATORY TESTING

C	CONSOLIDATION (ASTM D2435)
CL	COLLAPSE POTENTIAL (ASTM D4546)
CP	COMPACTION CURVE (CTM 216)
CR	CORROSIVITY TESTING (CTM 643, CTM 422, CTM 417)
CU	CONSOLIDATED UNDRAINED TRIAXIAL (ASTM D4767)
DS	DIRECT SHEAR (ASTM D3080)
EI	EXPANSION INDEX (ASTM D4829)
M	MOISTURE CONTENT (ASTM D2216)
OC	ORGANIC CONTENT-% (ASTM D2974)
P	PERMEABILITY (CTM 220)
PA	PARTICLE SIZE ANALYSIS (ASTM D422)
PI	PLASTICITY INDEX (AASHTO T 90) LIQUID LIMIT (AASHTO T 89)
PL	POINT LOAD INDEX (ASTM D5731)
PM	PRESSURE METER
R	R-VALUE (CTM 301)
SE	SAND EQUIVALENT (CTM 217)
SG	SPECIFIC GRAVITY (AASHTO T 100)
SL	SHRINKAGE LIMIT (ASTM D4943)
SW	SWELL POTENTIAL (ASTM D4546)
UC	UNCONFINED COMPRESSION-SOIL (ASTM D2166) UNCONFINED COMPRESSION-ROCK (ASTM D7012 - METHOD C)
UU	UNCONSOLIDATED UNDRAINED TRIAXIAL (ASTM D2850)
UW	UNIT WEIGHT (ASTM D7263 - METHOD B)

APPARENT DENSITY OF COHESIONLESS SOILS

DESCRIPTION	SPT N_{60} (BLOWS / 12 INCHES)
VERY LOOSE	0 - 5
LOOSE	5 - 10
MEDIUM DENSE	10 - 30
DENSE	30 - 50
VERY DENSE	GREATER THAN 50

MOISTURE

DESCRIPTION	CRITERIA
DRY	NO DISCERNABLE MOISTURE
MOIST	MOISTURE PRESENT, BUT NO FREE WATER
WET	VISIBLE FREE WATER

PERCENT OR PROPORTION OF SOILS

DESCRIPTION	CRITERIA
TRACE	PARTICLES ARE PRESENT BUT ESTIMATED TO BE LESS THAN 5%
FEW	5% - 10%
LITTLE	15% - 25%
SOME	30% - 45%
MOSTLY	50% - 100%

PARTICLE SIZE

DESCRIPTION		SIZE
BOULDER		GREATER THAN 12"
COBBLE		3" - 12"
GRAVEL	COARSE	3/4" - 3"
	FINE	1/5" - 3/4"
SAND	COARSE	1/16" - 1/5"
	MEDIUM	1/64" - 1/16"
	FINE	1/300" - 1/64"
SILT AND CLAY		LESS THAN 1/300"

STATE OF CALIFORNIA
DEPARTMENT OF TRANSPORTATION

LEGEND - SOIL (SHEET 2 OF 2)

NO SCALE

RSP A10G DATED OCTOBER 30, 2015 SUPERSEDES STANDARD PLAN A10G DATED MAY 20, 2011 - PAGE 7 OF THE STANDARD PLANS BOOK DATED 2010.

REVISED STANDARD PLAN RSP A10G

2010 REVISED STANDARD PLAN RSP A10G

9-22-16

Dist	COUNTY	ROUTE	POST MILES TOTAL PROJECT	SHEET No.	TOTAL SHEETS
11	SD	5	3.9/9.2	198	282

REGISTERED CIVIL ENGINEER

July 19, 2013
PLANS APPROVAL DATE

REGISTERED PROFESSIONAL ENGINEER Roberta L. McLaughlin No. C40375 Exp. 3-31-15 CIVIL STATE OF CALIFORNIA

THE STATE OF CALIFORNIA OR ITS OFFICERS OR AGENTS SHALL NOT BE RESPONSIBLE FOR THE ACCURACY OR COMPLETENESS OF SCANNED COPIES OF THIS PLAN SHEET.

TO ACCOMPANY PLANS DATED 07-11-16

EXIT RAMP NEUTRAL AREA (GORE) TREATMENT

DETAIL 36

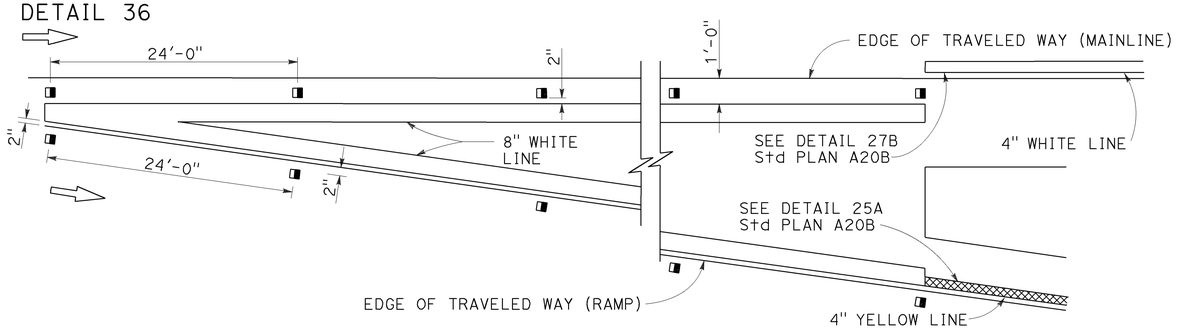

ENTRANCE RAMP NEUTRAL AREA (MERGE) TREATMENT

DETAIL 36A

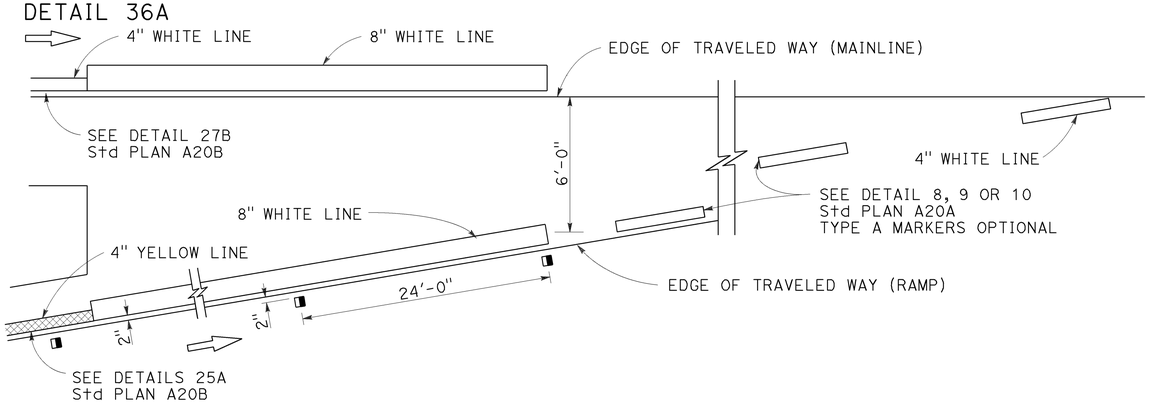

ENTRANCE RAMP NEUTRAL AREA (ACCELERATION LANE) TREATMENT

DETAIL 36B

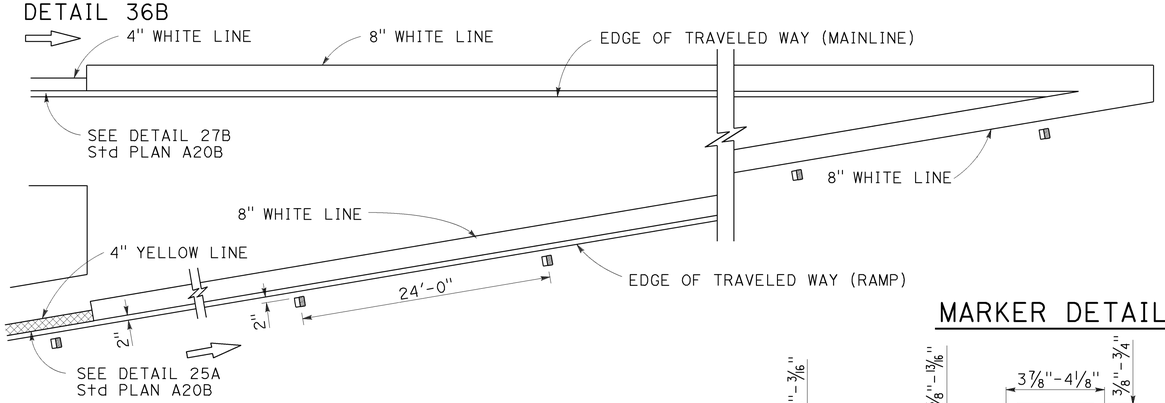

LANE DROP AT EXIT RAMPS

DETAIL 37

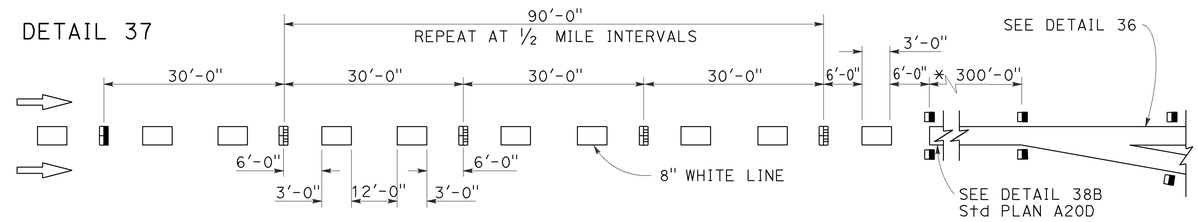

DETAIL 37A

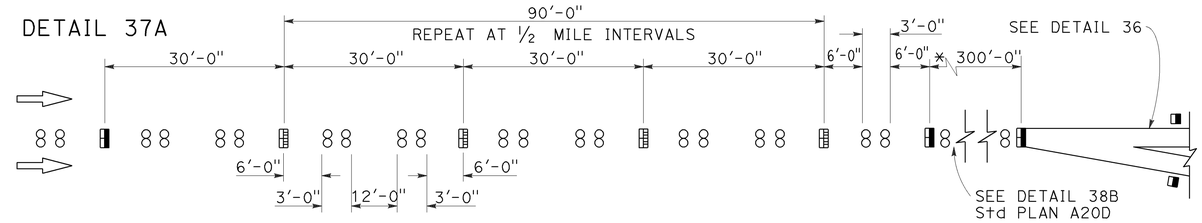

* The solid channelizing line shown may be omitted on short auxiliary lanes where weaving length is critical.

LANE DROP AT INTERSECTIONS

DETAIL 37B

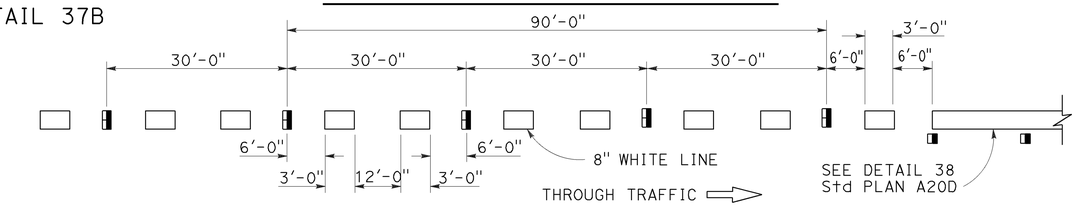

DETAIL 37C

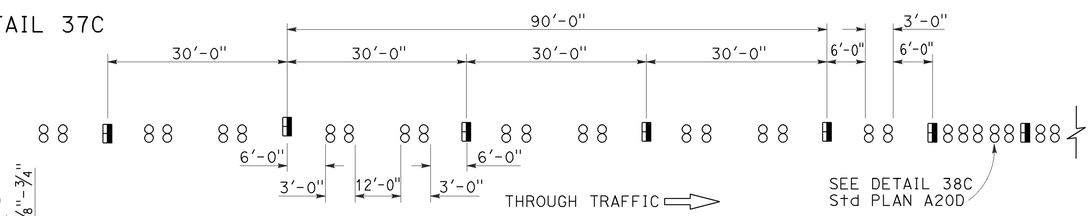

MARKER DETAILS

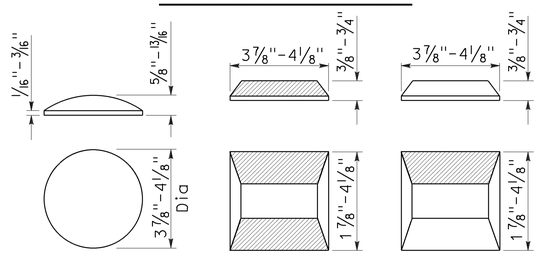

RETROREFLECTIVE FACE

LEGEND:

MARKERS

- ○ TYPE A WHITE NON-REFLECTIVE
- ⊞ TYPE C RED-CLEAR RETROREFLECTIVE
- ◨ TYPE G ONE-WAY CLEAR RETROREFLECTIVE

STATE OF CALIFORNIA
DEPARTMENT OF TRANSPORTATION

PAVEMENT MARKERS AND TRAFFIC LINE TYPICAL DETAILS

NO SCALE

RSP A20C DATED JULY 19, 2013 SUPERSEDES STANDARD PLAN A20C DATED MAY 20, 2011 - PAGE 11 OF THE STANDARD PLANS BOOK DATED 2010.

REVISED STANDARD PLAN RSP A20C

2010 REVISED STANDARD PLAN RSP A20C

4-29-13

Dist	COUNTY	ROUTE	POST MILES TOTAL PROJECT	SHEET No.	TOTAL SHEETS
11	SD	5	3.9/9.2	199	282

REGISTERED CIVIL ENGINEER

April 20, 2012
PLANS APPROVAL DATE

REGISTERED PROFESSIONAL ENGINEER
Roberta L. McLaughlin
No. C40375
Exp. 3-31-13
CIVIL
STATE OF CALIFORNIA

THE STATE OF CALIFORNIA OR ITS OFFICERS OR AGENTS SHALL NOT BE RESPONSIBLE FOR THE ACCURACY OR COMPLETENESS OF SCANNED COPIES OF THIS PLAN SHEET.

TO ACCOMPANY PLANS DATED 07-11-16

2010 REVISED STANDARD PLAN RSP A24A

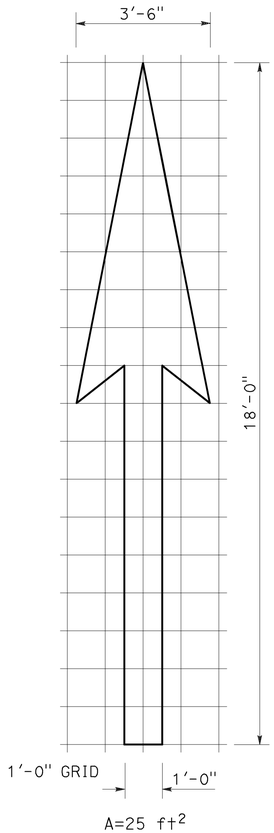

A=25 ft^2

TYPE I 18'-0" ARROW

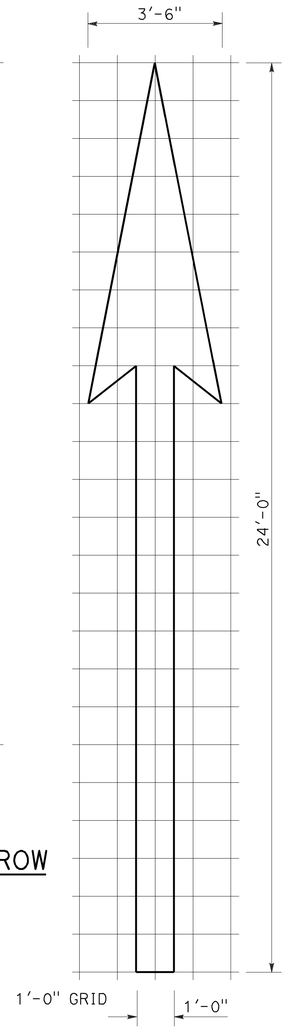

A=31 ft^2

TYPE I 24'-0" ARROW

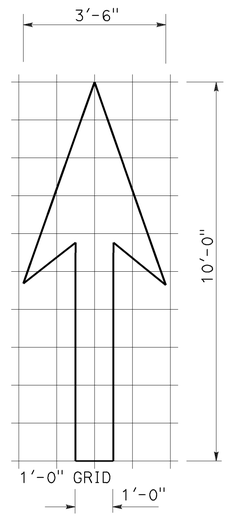

A=14 ft^2

TYPE I 10'-0" ARROW

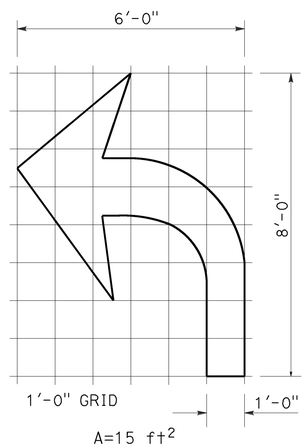

A=15 ft^2

TYPE IV (L) ARROW

(For Type IV (R) arrow, use mirror image)

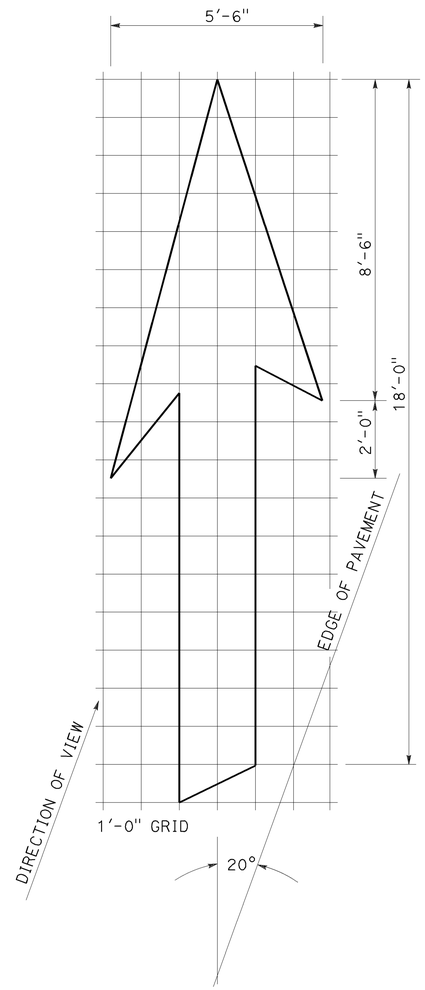

A=42 ft^2

TYPE VI ARROW

Right lane drop arrow
(For left lane, use mirror image)

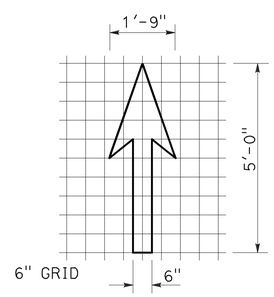

A=3.5 ft^2

BIKE LANE ARROW

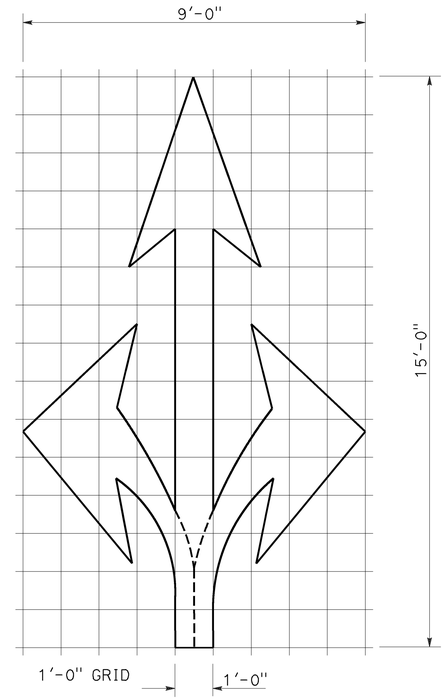

A=36 ft^2

TYPE VIII ARROW

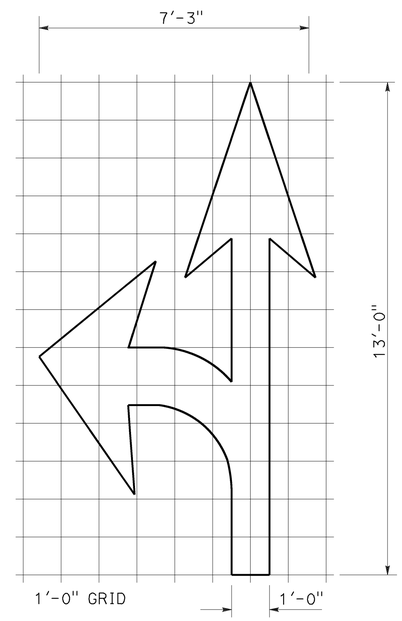

A=27 ft^2

TYPE VII (L) ARROW

(For Type VII (R) arrow, use mirror image)

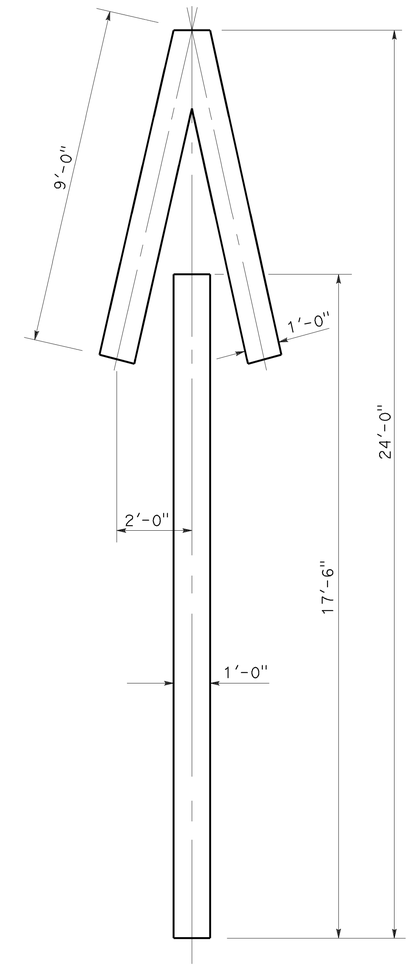

A=33 ft^2

TYPE V ARROW

NOTE:
Minor variations in dimensions may be accepted by the Engineer.

STATE OF CALIFORNIA
DEPARTMENT OF TRANSPORTATION

PAVEMENT MARKINGS ARROWS

NO SCALE

RSP A24A DATED APRIL 20, 2012 SUPERSEDES STANDARD PLAN A24A DATED MAY 20, 2011 - PAGE 13 OF THE STANDARD PLANS BOOK DATED 2010.

REVISED STANDARD PLAN RSP A24A

3-14-12

Dist	COUNTY	ROUTE	POST MILES TOTAL PROJECT	SHEET No.	TOTAL SHEETS
11	SD	5	3.9/9.2	200	282

REGISTERED CIVIL ENGINEER

October 19, 2012
PLANS APPROVAL DATE

REGISTERED PROFESSIONAL ENGINEER
Roberta L. McLaughlin
No. C40375
Exp. 3-31-13
CIVIL
STATE OF CALIFORNIA

THE STATE OF CALIFORNIA OR ITS OFFICERS OR AGENTS SHALL NOT BE RESPONSIBLE FOR THE ACCURACY OR COMPLETENESS OF SCANNED COPIES OF THIS PLAN SHEET.

NOTE: TO ACCOMPANY PLANS DATED 07-11-16

Minor variations in dimensions may be accepted by the Engineer.

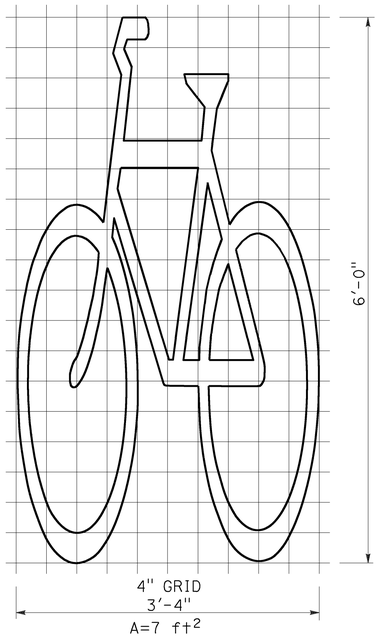

BIKE LANE SYMBOL WITHOUT PERSON

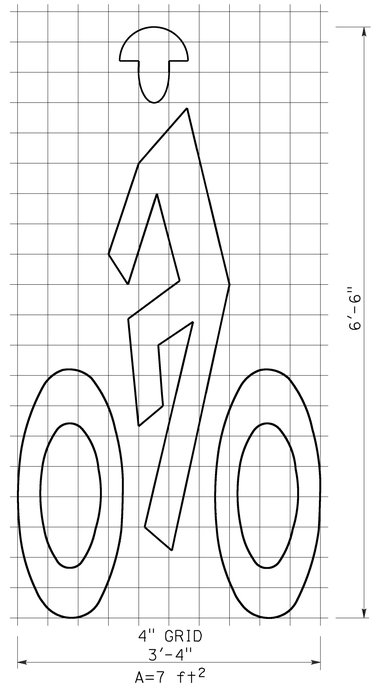

BIKE LANE SYMBOL WITH PERSON

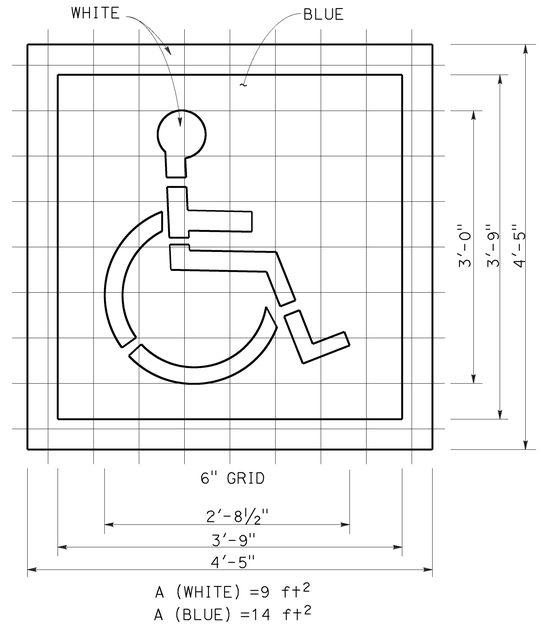

INTERNATIONAL SYMBOL OF ACCESSIBILITY (ISA) MARKING

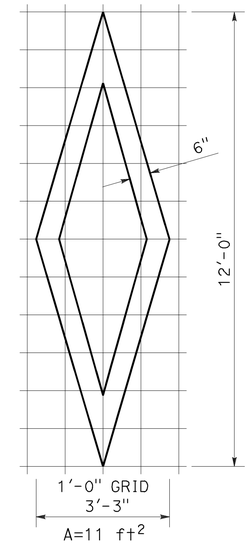

DIAMOND SYMBOL

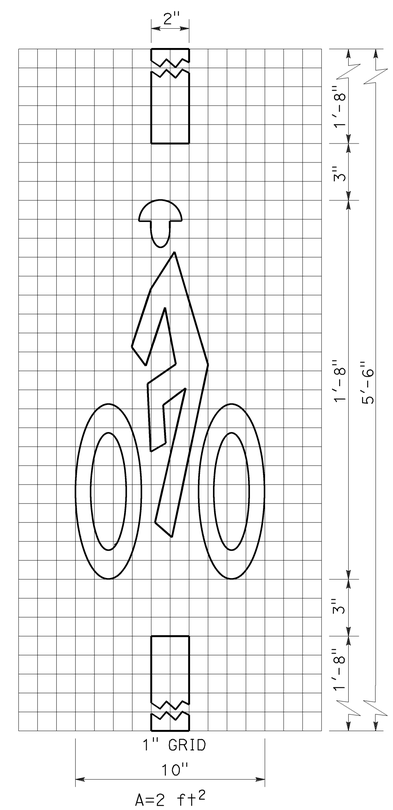

BICYCLE LOOP DETECTOR SYMBOL

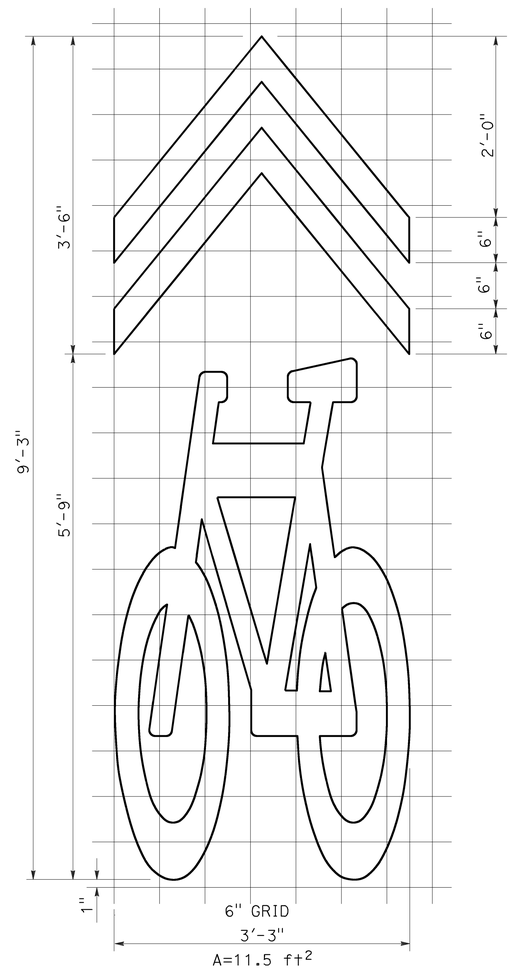

SHARED ROADWAY BICYCLE MARKING

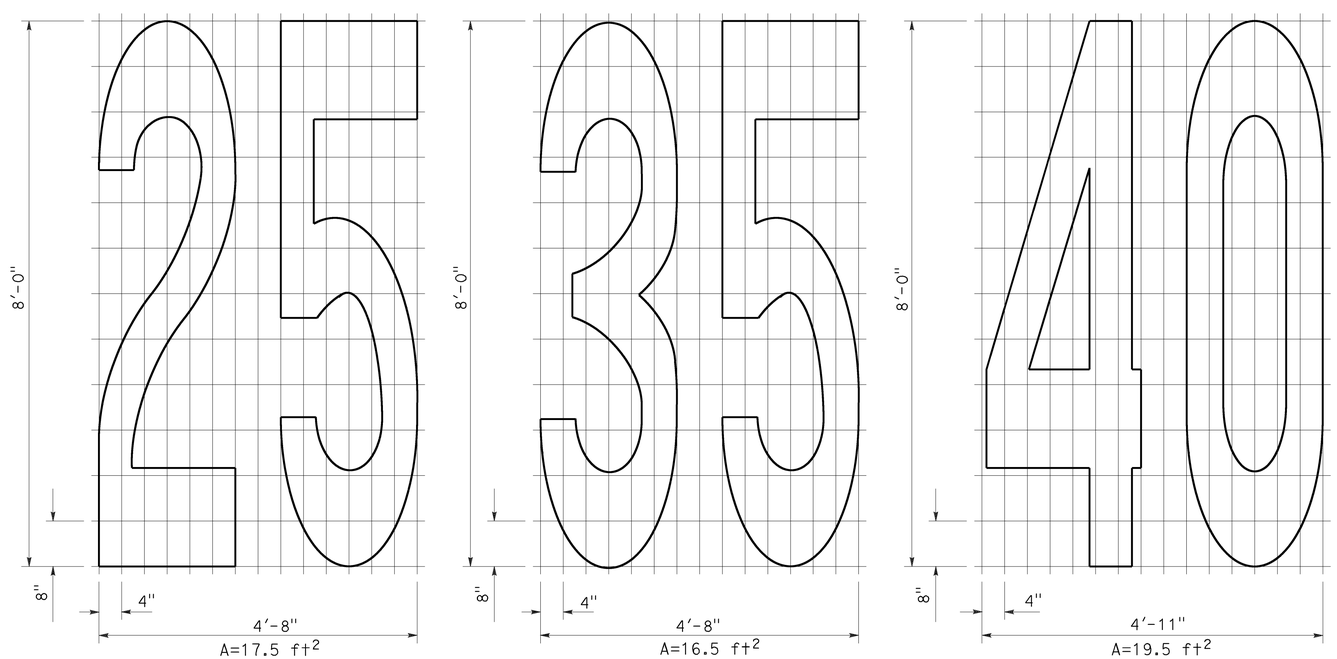

NUMERALS

STATE OF CALIFORNIA
DEPARTMENT OF TRANSPORTATION

PAVEMENT MARKINGS SYMBOLS AND NUMERALS

NO SCALE

RSP A24C DATED OCTOBER 19, 2012 SUPERSEDES STANDARD PLAN A24C DATED MAY 20, 2011 - PAGE 15 OF THE STANDARD PLANS BOOK DATED 2010.

REVISED STANDARD PLAN RSP A24C

2010 REVISED STANDARD PLAN RSP A24C

6-28-12