Dist	COUNTY	ROUTE	POST MILES TOTAL PROJECT	SHEET No.	TOTAL SHEETS
10	Mer	99	24.4/R25.8	1	45

INDEX OF PLANS

SHEET No.	DESCRIPTION
1	TITLE AND LOCATION MAP
2	PLANT LIST
3-10	PLANTING PLANS
11-18	IRRIGATION PLANS
19-22	LANDSCAPE DETAILS
23-24	IRRIGATION QUANTITIES
25	CONSTRUCTION AREA SIGNS
26	ELECTRICAL SERVICE (IRRIGATION) PLAN
27-28	ELECTRICAL EQUIPMENT PLANS
29	WELL SITE PLAN
30	NOTES, LEGENDS AND ABBREVIATIONS
31-33	WELL PLAN AND DETAILS
34-45	REVISED STANDARD PLANS

THE STANDARD PLANS LIST APPLICABLE TO THIS CONTRACT IS INCLUDED IN THE NOTICE TO BIDDERS AND SPECIAL PROVISIONS BOOK.

STATE OF CALIFORNIA

DEPARTMENT OF TRANSPORTATION

PROJECT PLANS FOR CONSTRUCTION ON

STATE HIGHWAY

IN MERCED COUNTY
IN AND NEAR ATWATER
FROM 0.7 MILE NORTH OF ATWATER OVERHEAD
TO 0.7 MILE SOUTH OF ARENA WAY

TO BE SUPPLEMENTED BY STANDARD PLANS DATED MAY 2006

LOCATION MAP

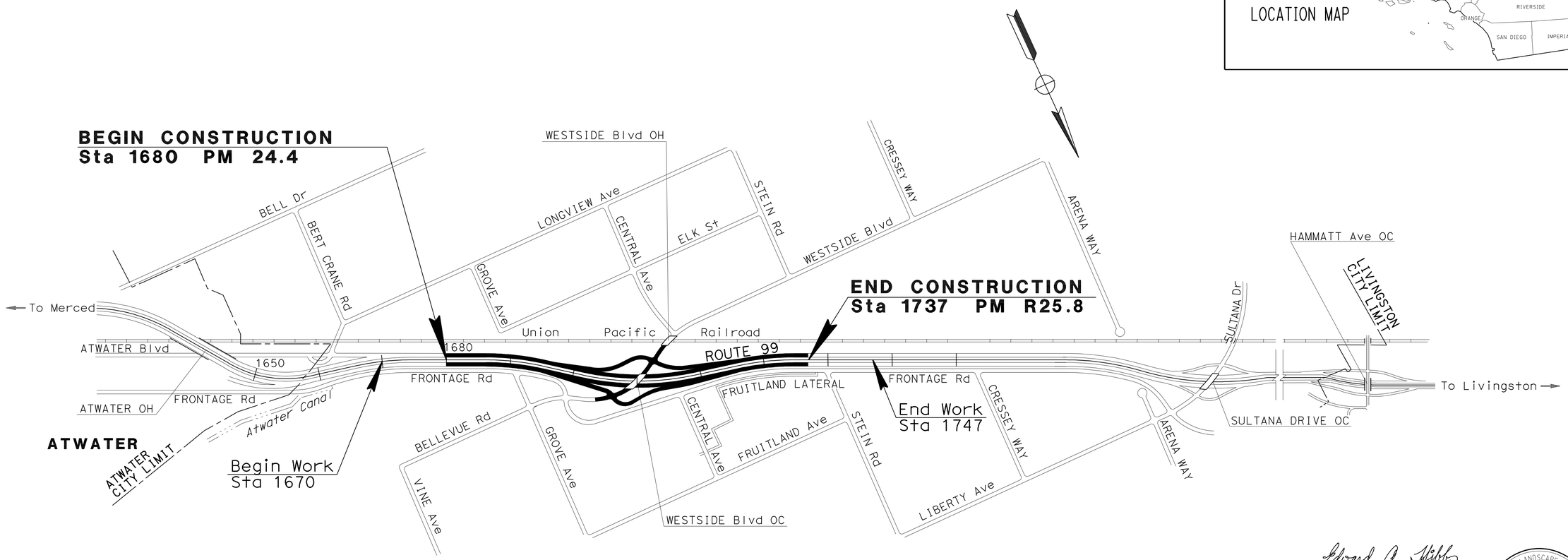

NO SCALE

Edward A. Hibbs
LICENSED LANDSCAPE ARCHITECT

March 28, 2011
PLANS APPROVAL DATE

THE STATE OF CALIFORNIA OR ITS OFFICERS OR AGENTS SHALL NOT BE RESPONSIBLE FOR THE ACCURACY OR COMPLETENESS OF SCANNED COPIES OF THIS PLAN SHEET.

LICENSED LANDSCAPE ARCHITECT — EDWARD A. HIBBS No. 1411 — Signature — 2/28/12 Renewal Date — 12/10/10 Date — STATE OF CALIFORNIA

THE CONTRACTOR SHALL POSSESS THE CLASS (OR CLASSES) OF LICENSE AS SPECIFIED IN THE "NOTICE TO BIDDERS."

CONTRACT No.	10-414824
PROJECT ID	1000000429

PROJECT MANAGER: PETER JEMERIGBE
SENIOR LANDSCAPE ARCHITECT: BRAD COLE

LAST REVISION 01-11-11 — DATE PLOTTED => 30-MAR-2011 — TIME PLOTTED => 10:11

Dist	COUNTY	ROUTE	POST MILES TOTAL PROJECT	SHEET No.	TOTAL SHEETS
10	Mer	99	24.4/R25.8	2	45

Edward A. Hibbs
LICENSED LANDSCAPE ARCHITECT

3-28-11
PLANS APPROVAL DATE

LICENSED LANDSCAPE ARCHITECT — Edward A. Hibbs No. 1482 — Expiration Date 2/28/10 — Renewal Date 11/10/10 — Date — STATE OF CALIFORNIA

THE STATE OF CALIFORNIA OR ITS OFFICERS OR AGENTS SHALL NOT BE RESPONSIBLE FOR THE ACCURACY OR COMPLETENESS OF SCANNED COPIES OF THIS PLAN SHEET.

ABBREVIATIONS

AMEND — AMENDMENT
B & B — BALLED AND BURLAPPED
CF — CUBIC FEET
CY — CUBIC YARD
Dia — DIAMETER
EA — EACH
ETW — EDGE OF TRAVELED WAY
Ft — FOOT/FEET
Max — MAXIMUM
Min — MINIMUM
NCN — NO COMMON NAME
No. — NUMBER
Oz — OUNCE
Pkt — PACKET
Pvmt — PAVEMENT
PLT ESTB — PLANT ESTABLISHMENT
LB — POUND(S)
R/W — RIGHT OF WAY
SQFT — SQUARE FEET
SQYD — SQUARE YARD
SF — STATE FURNISHED

PLANT LIST AND PLANTING SPECIFICATIONS

PLANT GROUP	PLANT No.	SYMBOL	BOTANICAL NAME	COMMON NAME	SIZE	QUANTITY EACH	HOLE SIZE (INCH) Dia	HOLE SIZE (INCH) DEPTH	BASIN TYPE	IRON SULFATE	SOIL AMEND (1)	COMMERCIAL FERTILIZER (1) PLANTING	COMMERCIAL FERTILIZER (1) PLT ESTB	BASIN MULCH	STAKING	PLANTING LIMITS MINIMUM DISTANCE (Ft) FROM ETW	Pvmt	FENCE	WALL	PAVED DITCH	EARTH DITCH	ON CENTER (Ft)	REMARKS
A	1	△	CISTUS X PULVERULENTUS 'SUNSET'	SUNSET ROCKROSE	No. 1	206	(8)	(2)	II	—	1/4 CF	1 Pkt	1/4 LB	1 CF	—	-	6	6	6	6	6	6.5	SHRUB
	2		LAGERSTROEMIA INDICA TRI 'MUSKOGEE'	CRAPE MYRTLE - LAVENDER	No. 1	4	(8)	(2)	II (10)	—	1/4 CF	1 Pkt	1/4 LB	1 CF	—	30	-	15	15	15	17	(4)	SHRUB (6)
	3		LAGERSTROEMIA INDICA TRI 'NATCHEZ'	CRAPE MYRTLE - WHITE	No. 1	4	(8)	(2)	II (10)	—	1/4 CF	1 Pkt	1/4 LB	1 CF	—	30	-	15	15	15	17	(4)	SHRUB (6)
	4		LAGERSTROEMIA INDICA TRI 'TUSCARORA'	CRAPE MYRTLE - PINK	No. 1	4	(8)	(2)	II (10)	—	1/4 CF	1 Pkt	1/4 LB	1 CF	—	30	-	15	15	15	17	(4)	SHRUB (6)
	5	◗	PARTHENOCISSUS TRICUSPIDATA	BOSTON IVY	No. 1	146	(8)	(2)	II	—	1/4 CF	1 Pkt	1/4 LB	1 CF	(9)	-	-	-	4	15	10	(4)	VINE
	6	⊕	PITTOSPORUM TOBIRA 'VARIGATA	VARIGATED TOBIRA	No. 1	297	(8)	(2)	II	—	1/4 CF	1 Pkt	1/4 LB	1 CF	—	-	12	12	10	10	12	(4)	SHRUB
	7		ROSA BANKSIAE 'LUTEA'	BANKS' YELLOW ROSE	No. 1	136	(8)	(2)	II	—	1/4 CF	1 Pkt	1/4 LB	1 CF	—	-	15	15	-	13	10	10	SHRUB
	8		SALVIA 'BEE'S BLISS'	BEE'S BLISS SALVIA	No. 1	164	(8)	(2)	II	—	1/4 CF	1 Pkt	1/4 LB	1 CF	—	-	8	8	8	8	8	10	SHRUB
B	9		CEDRUS DEODORA	DEODAR CEDAR	No. 5	45	(8)	(2)	II	—	1 CF	3 Pkt	3/8 LB	1 CF	(9)	40	-	30	30	30	32	(4)	TREE
	10		CHILOPSIS LINEARIS	DESERT WILLOW	No. 5	37	(8)	(2)	II	—	1 CF	3 Pkt	3/8 LB	1 CF	—	-	20	15	15	15	17	15	SHRUB
	11		LAGERSTROEMIA IND. 'WATERMELON RED'	CRAPE MYRTLE	No. 5	40	(8)	(2)	II	—	1 CF	3 Pkt	3/8 LB	1 CF	—	30	-	15	15	15	17	(4)	SHRUB
	12		PISTACHE CHINENSIS 'KEITH DAVEY'	CHINESE PISTACHE	No. 5	86	(8)	(2)	II	—	1 CF	3 Pkt	3/8 LB	1 CF	(9)	30	-	20	20	20	22	(4)	TREE
	13		QUERCUS LOBATA	VALLEY OAK	No. 5	58	(8)	(2)	II	—	1 CF	3 Pkt	3/8 LB	1 CF	(9)	30	-	20	20	20	23	(4)	TREE
	14		RHUS LANCEA	AFRICAN SUMAC	No. 5	248	(8)	(2)	II	—	1 CF	3 Pkt	3/8 LB	1 CF	—	-	20	15	15	15	17	4	SHRUB
	15		ROBINIA AMBIGUA 'IDAHOENSIS'	IDAHO LOCUST	No. 5	25	(8)	(2)	II	—	1 CF	3 Pkt	3/8 LB	1 CF	(9)	30	15	15	10	10	11	(4)	TREE

APPLICABLE WHEN CIRCLED:

(1)- QUANTITIES SHOWN ARE "PER PLANT" UNLESS SHOWN AS SQFT OR SQYD APPLICATION RATES
(2)- SUFFICIENT TO RECEIVE ROOT BALL
3 - DOES NOT APPLY TO MULCH AREAS
(4)- AS SHOWN ON PLANS
5 - UNLESS OTHERWISE SHOWN ON PLANS
(6)- SEE DETAIL
7 - SEE SPECIAL PROVISIONS
(8)- TWICE THE ROOTBALL DIAMETER
(9)- SEE STANDARD DETAIL
(10)- BASIN AREA EQUIVALENT TO 36 INCHES IN DIAMETER

LEGEND:

MULCH AREAS
ROADSIDE CLEARING AND PLT ESTB LIMITS (Typ)

NOTE:

UNDERLINED PORTIONS OF BOTANICAL NAME INDICATE ABBREVIATIONS USED ON PLANTING PLANS.

PLANT LIST PL-1

REVISED BY | DATE REVISED
ED HIBBS | KEVIN GALLO
CALCULATED-DESIGNED BY | CHECKED BY
SENIOR LANDSCAPE ARCHITECT | ELBERT COX
STATE OF CALIFORNIA - DEPARTMENT OF TRANSPORTATION
Caltrans® LANDSCAPE ARCHITECTURE

LAST REVISION 01-11-11 | DATE PLOTTED => 30-MAR-2011 | TIME PLOTTED => 06:22

Dist	COUNTY	ROUTE	POST MILES TOTAL PROJECT	SHEET No.	TOTAL SHEETS
10	Mer	99	24.4/R25.8	3	45

Edward A. Hibbs
LICENSED LANDSCAPE ARCHITECT

3-28-11
PLANS APPROVAL DATE

LICENSED LANDSCAPE ARCHITECT
Edward A. Hibbs No. 1482
Edward A. Hibbs
Expiration Date 2/28/10
Renewal Date 11/10/10
Date
STATE OF CALIFORNIA

THE STATE OF CALIFORNIA OR ITS OFFICERS OR AGENTS SHALL NOT BE RESPONSIBLE FOR THE ACCURACY OR COMPLETENESS OF SCANNED COPIES OF THIS PLAN SHEET.

NOTE:

FOR ACCURATE RIGHT OF WAY DATA, CONTACT RIGHT OF WAY ENGINEERING AT THE DISTRICT OFFICE.

ABBREVIATION:

MID - MERCED IRRIGATION DISTRICT

LEGEND:

/// - ABANDONED

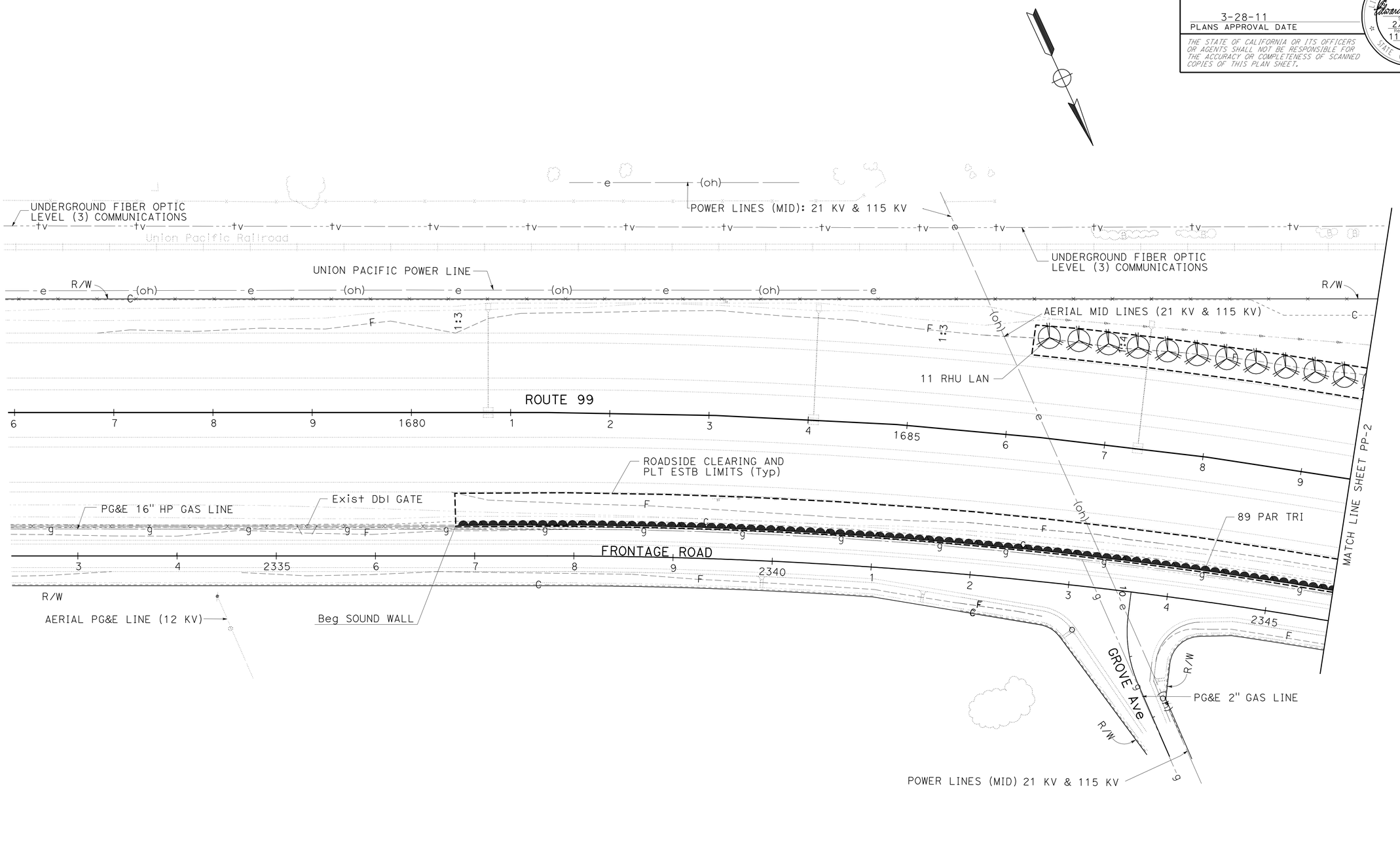

PLANTING PLAN PP-1

SCALE: 1" = 50'

THIS PLAN ACCURATE FOR PLANTING WORK ONLY

STATE OF CALIFORNIA - DEPARTMENT OF TRANSPORTATION
Caltrans® LANDSCAPE ARCHITECTURE

SENIOR LANDSCAPE ARCHITECT: ELBERT COX
CALCULATED-DESIGNED BY: ED HIBBS
CHECKED BY: KEVIN GALLO
REVISED BY
DATE REVISED

LAST REVISION 01-11-11
DATE PLOTTED => 30-MAR-2011
TIME PLOTTED => 06:22

Dist	COUNTY	ROUTE	POST MILES TOTAL PROJECT	SHEET No.	TOTAL SHEETS
10	Mer	99	24.4/R25.8	4	45

Edward A. Hibbs
LICENSED LANDSCAPE ARCHITECT

3-28-11
PLANS APPROVAL DATE

LICENSED LANDSCAPE ARCHITECT
Edward A. Hibbs No. 1480
Edward A. Hibbs
Signature
2/28/10
Renewal Date
11/10/10
Date
STATE OF CALIFORNIA

THE STATE OF CALIFORNIA OR ITS OFFICERS OR AGENTS SHALL NOT BE RESPONSIBLE FOR THE ACCURACY OR COMPLETENESS OF SCANNED COPIES OF THIS PLAN SHEET.

NOTE:

FOR ACCURATE RIGHT OF WAY DATA, CONTACT
RIGHT OF WAY ENGINEERING AT THE DISTRICT OFFICE.

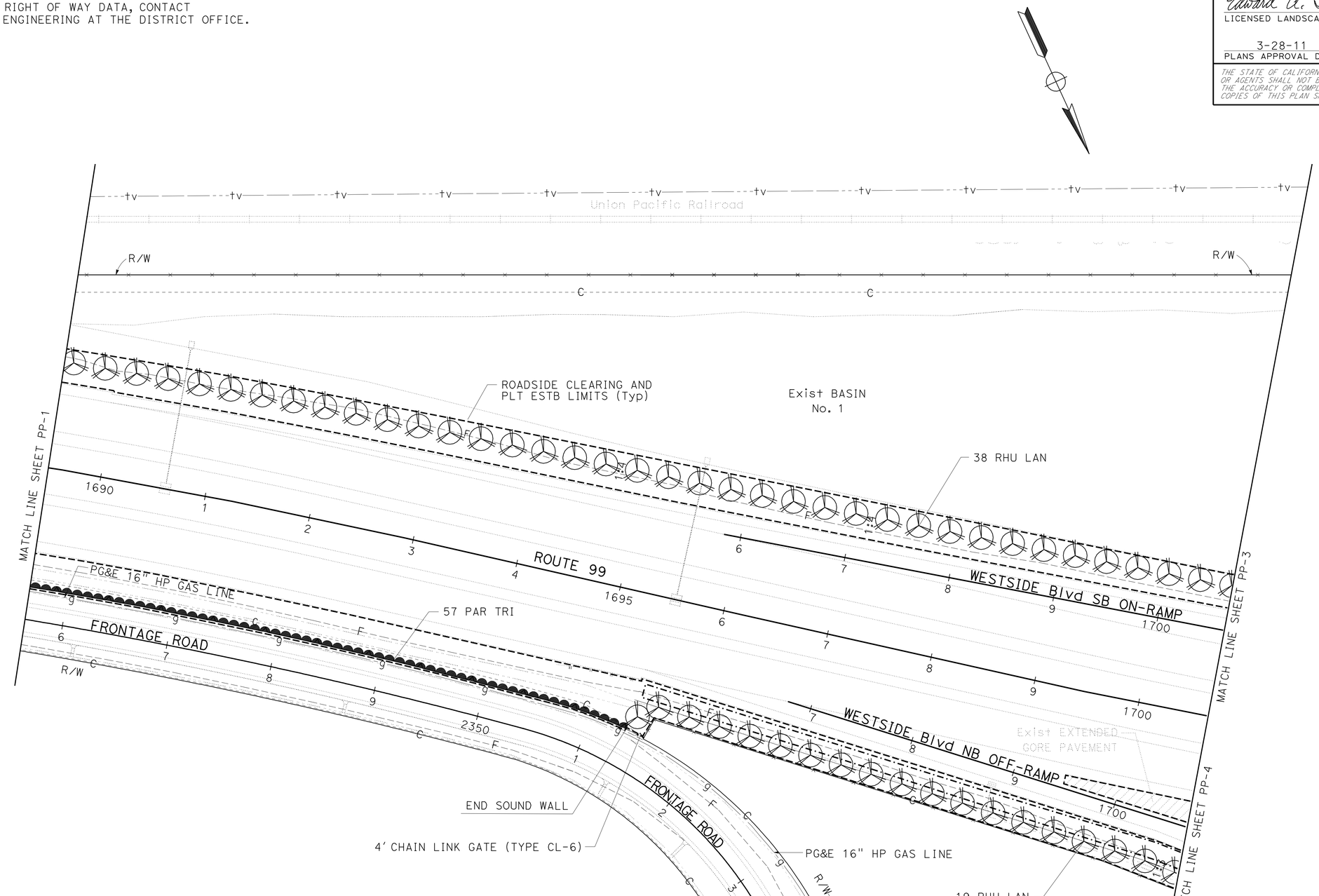

THIS PLAN ACCURATE FOR PLANTING WORK ONLY

PLANTING PLAN PP-2

SCALE: 1" = 50'

STATE OF CALIFORNIA - DEPARTMENT OF TRANSPORTATION
Caltrans® LANDSCAPE ARCHITECTURE

SENIOR LANDSCAPE ARCHITECT: ELBERT COX
CALCULATED-DESIGNED BY: ED HIBBS
CHECKED BY: KEVIN GALLO
REVISED BY
DATE REVISED

LAST REVISION 01-11-11
DATE PLOTTED => 30-MAR-2011
TIME PLOTTED => 06:22

Dist	COUNTY	ROUTE	POST MILES TOTAL PROJECT	SHEET No.	TOTAL SHEETS
10	Mer	99	24.4/R25.8	5	45

Edward A. Hibbs
LICENSED LANDSCAPE ARCHITECT

3-28-11
PLANS APPROVAL DATE

LICENSED LANDSCAPE ARCHITECT
Edward A. Hibbs No. 1482
Signature
2/28/10
Renewal Date
11/10/10
Date
STATE OF CALIFORNIA

THE STATE OF CALIFORNIA OR ITS OFFICERS OR AGENTS SHALL NOT BE RESPONSIBLE FOR THE ACCURACY OR COMPLETENESS OF SCANNED COPIES OF THIS PLAN SHEET.

NOTE:

FOR ACCURATE RIGHT OF WAY DATA, CONTACT RIGHT OF WAY ENGINEERING AT THE DISTRICT OFFICE.

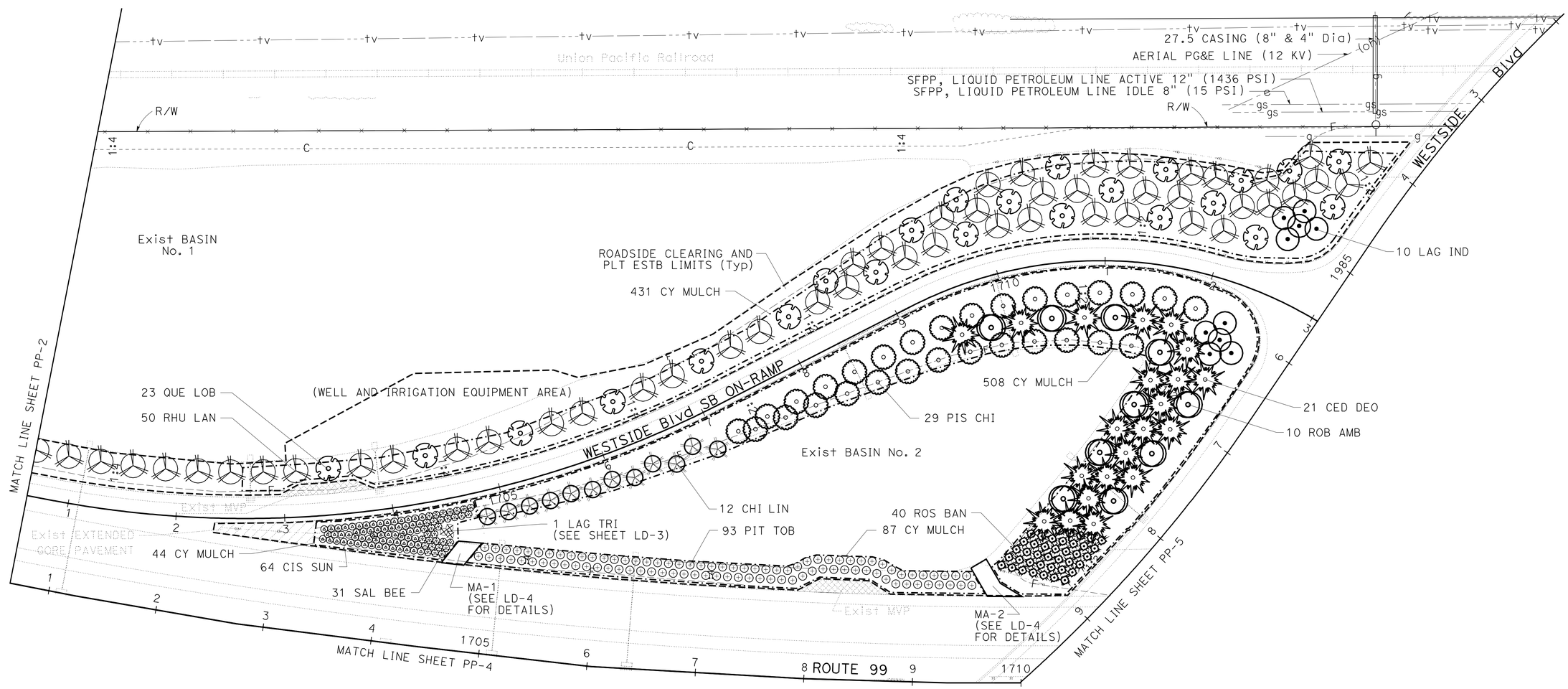

PLANTING PLAN PP-3

SCALE: 1" = 50'

THIS PLAN ACCURATE FOR PLANTING WORK ONLY

STATE OF CALIFORNIA - DEPARTMENT OF TRANSPORTATION
Caltrans® LANDSCAPE ARCHITECTURE

SENIOR LANDSCAPE ARCHITECT: ELBERT COX
CALCULATED-DESIGNED BY: KEVIN GALLO
CHECKED BY: ED HIBBS
REVISED BY
DATE REVISED

LAST REVISION 01-11-11
DATE PLOTTED => 30-MAR-2011
TIME PLOTTED => 06:23

Dist	COUNTY	ROUTE	POST MILES TOTAL PROJECT	SHEET No.	TOTAL SHEETS
10	Mer	99	24.4/R25.8	6	45

Edward A. Hibbs
LICENSED LANDSCAPE ARCHITECT

3-28-11
PLANS APPROVAL DATE

LICENSED LANDSCAPE ARCHITECT
Edward A. Hibbs No. 1
Signature
2/28/10
Renewal Date
11/10/10
Date
STATE OF CALIFORNIA

THE STATE OF CALIFORNIA OR ITS OFFICERS OR AGENTS SHALL NOT BE RESPONSIBLE FOR THE ACCURACY OR COMPLETENESS OF SCANNED COPIES OF THIS PLAN SHEET.

NOTE:

FOR ACCURATE RIGHT OF WAY DATA, CONTACT
RIGHT OF WAY ENGINEERING AT THE DISTRICT OFFICE.

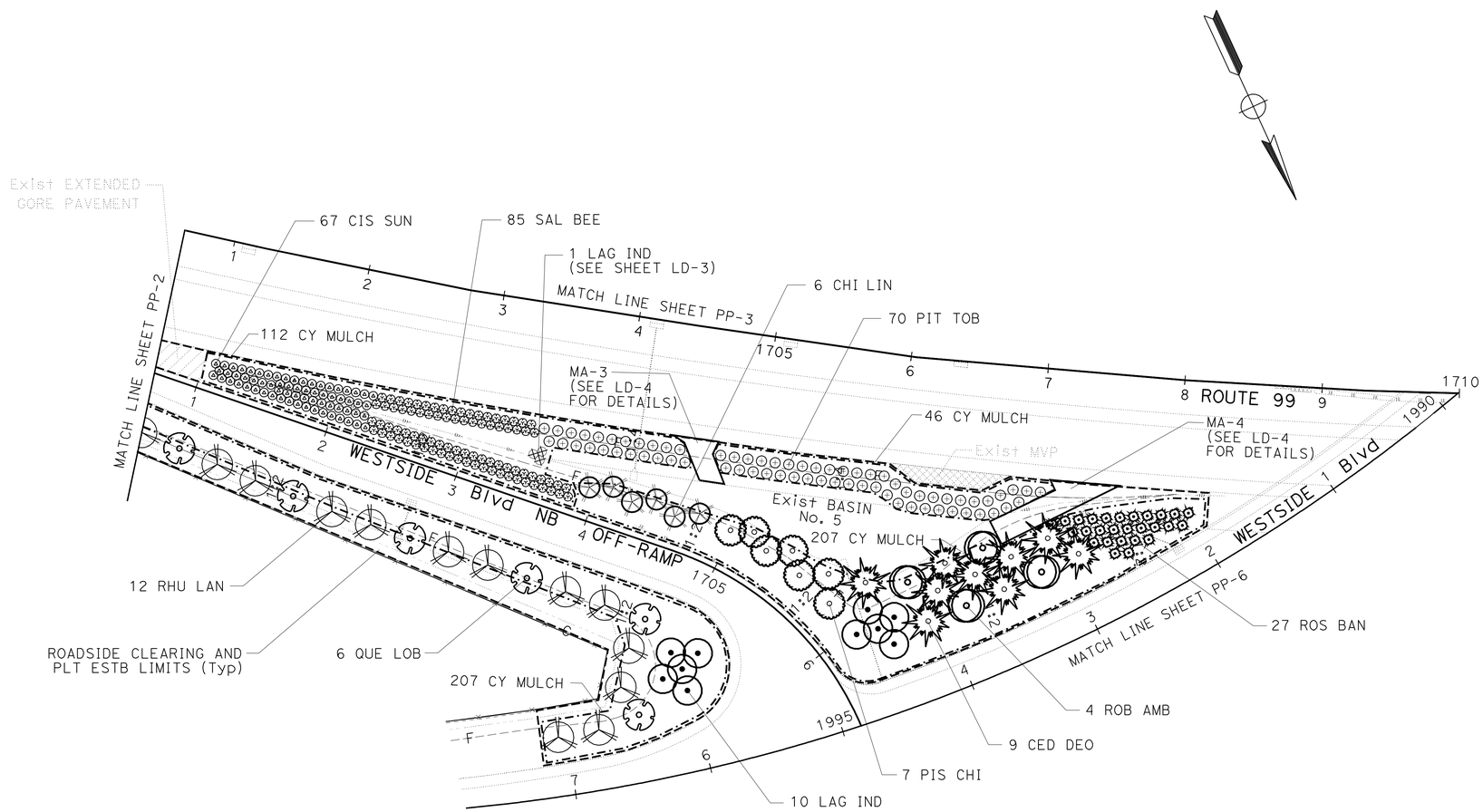

PLANTING PLAN PP-4

SCALE: 1" = 50'

THIS PLAN ACCURATE FOR PLANTING WORK ONLY

STATE OF CALIFORNIA - DEPARTMENT OF TRANSPORTATION
Caltrans® LANDSCAPE ARCHITECTURE

SENIOR LANDSCAPE ARCHITECT: ELBERT COX
CALCULATED-DESIGNED BY: ED HIBBS
CHECKED BY: KEVIN GALLO
REVISED BY
DATE REVISED

LAST REVISION 01-11-11
DATE PLOTTED => 30-MAR-2011
TIME PLOTTED => 06:23

Dist	COUNTY	ROUTE	POST MILES TOTAL PROJECT	SHEET No.	TOTAL SHEETS
10	Mer	99	24.4/R25.8	7	45

Edward A. Hibbs
LICENSED LANDSCAPE ARCHITECT

3-28-11
PLANS APPROVAL DATE

LICENSED LANDSCAPE ARCHITECT
Edward A. Hibbs No. 1482
Edward A. Hibbs
Signature
2/28/10
Renewal Date
11/10/10
Date
STATE OF CALIFORNIA

THE STATE OF CALIFORNIA OR ITS OFFICERS OR AGENTS SHALL NOT BE RESPONSIBLE FOR THE ACCURACY OR COMPLETENESS OF SCANNED COPIES OF THIS PLAN SHEET.

NOTE:

FOR ACCURATE RIGHT OF WAY DATA, CONTACT RIGHT OF WAY ENGINEERING AT THE DISTRICT OFFICE.

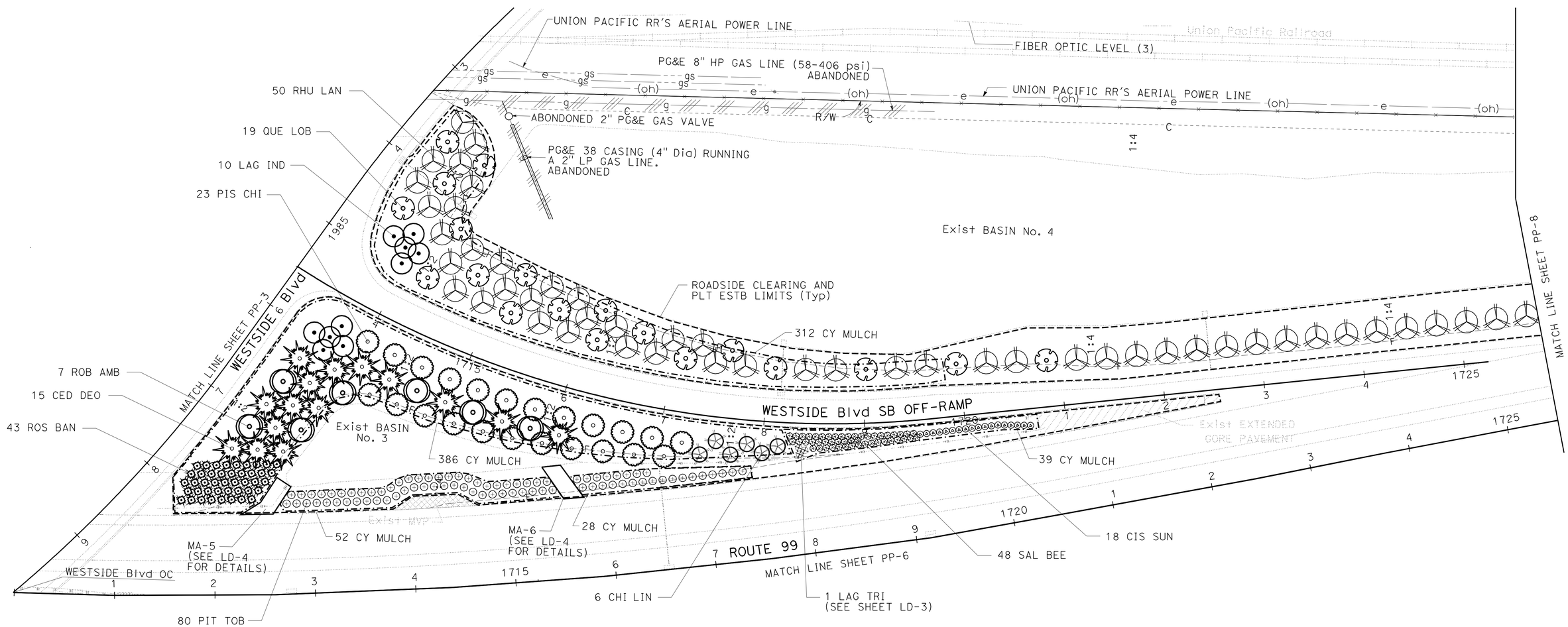

PLANTING PLAN PP-5

SCALE: 1" = 50'

THIS PLAN ACCURATE FOR PLANTING WORK ONLY

STATE OF CALIFORNIA - DEPARTMENT OF TRANSPORTATION
Caltrans® LANDSCAPE ARCHITECTURE

SENIOR LANDSCAPE ARCHITECT: ELBERT COX
CALCULATED-DESIGNED BY: ED HIBBS
CHECKED BY: KEVIN GALLO
REVISED BY
DATE REVISED

LAST REVISION 01-11-11
DATE PLOTTED => 30-MAR-2011
TIME PLOTTED => 06:23

Dist	COUNTY	ROUTE	POST MILES TOTAL PROJECT	SHEET No.	TOTAL SHEETS
10	Mer	99	24.4/R25.8	8	45

Edward A. Hibbs
LICENSED LANDSCAPE ARCHITECT

3-28-11
PLANS APPROVAL DATE

LICENSED LANDSCAPE ARCHITECT
Edward A. Hibbs No. 1
Expiration Date 2/28/10
Renewal Date 11/10/10
Date
STATE OF CALIFORNIA

THE STATE OF CALIFORNIA OR ITS OFFICERS OR AGENTS SHALL NOT BE RESPONSIBLE FOR THE ACCURACY OR COMPLETENESS OF SCANNED COPIES OF THIS PLAN SHEET.

NOTE:

FOR ACCURATE RIGHT OF WAY DATA, CONTACT
RIGHT OF WAY ENGINEERING AT THE DISTRICT OFFICE.

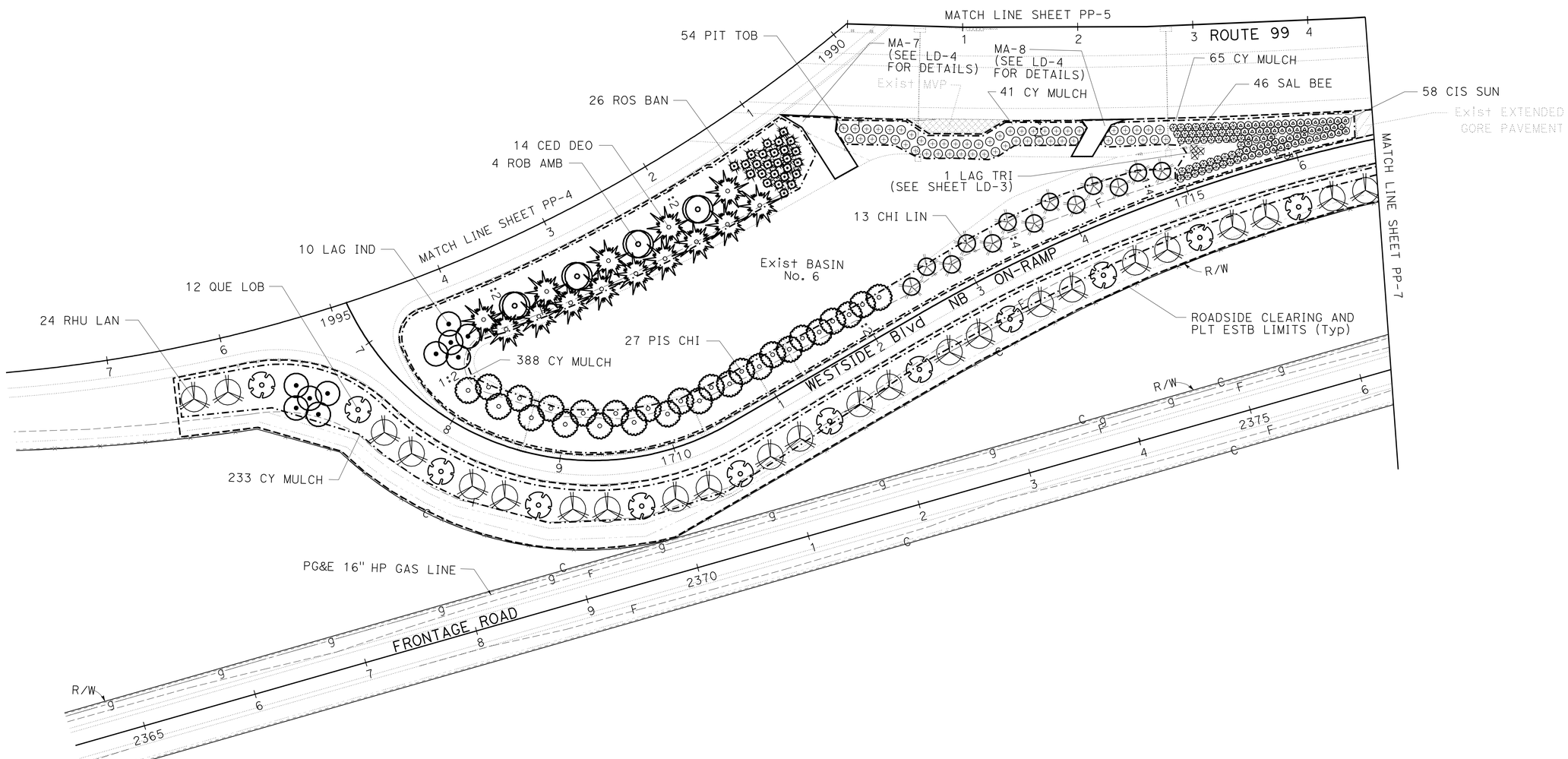

PLANTING PLAN PP-6

SCALE: 1" = 50'

THIS PLAN ACCURATE FOR PLANTING WORK ONLY

STATE OF CALIFORNIA - DEPARTMENT OF TRANSPORTATION
Caltrans® LANDSCAPE ARCHITECTURE

SENIOR LANDSCAPE ARCHITECT: ELBERT COX
CALCULATED-DESIGNED BY: KEVIN GALLO
CHECKED BY: ED HIBBS
REVISED BY
DATE REVISED

LAST REVISION 01-11-11
DATE PLOTTED => 30-MAR-2011
TIME PLOTTED => 06:23

Dist	COUNTY	ROUTE	POST MILES TOTAL PROJECT	SHEET No.	TOTAL SHEETS
10	Mer	99	24.4/R25.8	9	45

Edward A. Hibbs
LICENSED LANDSCAPE ARCHITECT

3-28-11
PLANS APPROVAL DATE

LICENSED LANDSCAPE ARCHITECT
Edward A. Hibbs No. 1482
Expiration Date 2/28/10
Renewal Date 11/10/10
Date
STATE OF CALIFORNIA

THE STATE OF CALIFORNIA OR ITS OFFICERS OR AGENTS SHALL NOT BE RESPONSIBLE FOR THE ACCURACY OR COMPLETENESS OF SCANNED COPIES OF THIS PLAN SHEET.

NOTE:

FOR ACCURATE RIGHT OF WAY DATA, CONTACT
RIGHT OF WAY ENGINEERING AT THE DISTRICT OFFICE.

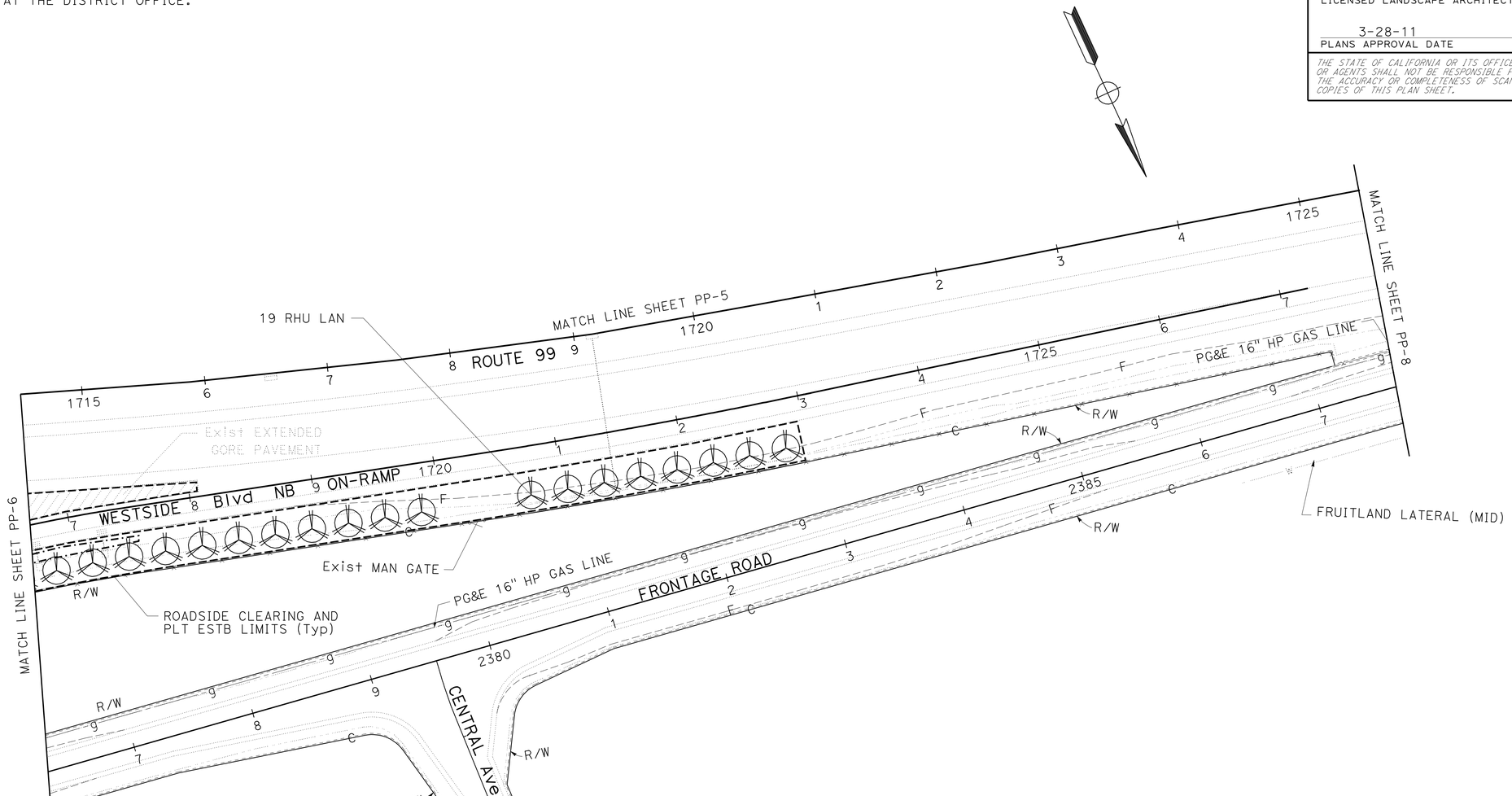

PLANTING PLAN PP-7

SCALE: 1" = 50'

THIS PLAN ACCURATE FOR PLANTING WORK ONLY

STATE OF CALIFORNIA - DEPARTMENT OF TRANSPORTATION
Caltrans® LANDSCAPE ARCHITECTURE

SENIOR LANDSCAPE ARCHITECT: ELBERT COX
CALCULATED-DESIGNED BY: ED HIBBS
CHECKED BY: KEVIN GALLO
REVISED BY
DATE REVISED

LAST REVISION 01-11-11
DATE PLOTTED => 30-MAR-2011
TIME PLOTTED => 06:23

Dist	COUNTY	ROUTE	POST MILES TOTAL PROJECT	SHEET No.	TOTAL SHEETS
10	Mer	99	24.4/R25.8	10	45

Edward A. Hibbs
LICENSED LANDSCAPE ARCHITECT

3-28-11
PLANS APPROVAL DATE

LICENSED LANDSCAPE ARCHITECT
EDWARD A. HIBBS No. 1482
Edward A. Hibbs
Expiration Date
2/28/10
Renewal Date
11/10/10
Date
STATE OF CALIFORNIA

THE STATE OF CALIFORNIA OR ITS OFFICERS OR AGENTS SHALL NOT BE RESPONSIBLE FOR THE ACCURACY OR COMPLETENESS OF SCANNED COPIES OF THIS PLAN SHEET.

NOTE:

FOR ACCURATE RIGHT OF WAY DATA, CONTACT RIGHT OF WAY ENGINEERING AT THE DISTRICT OFFICE.

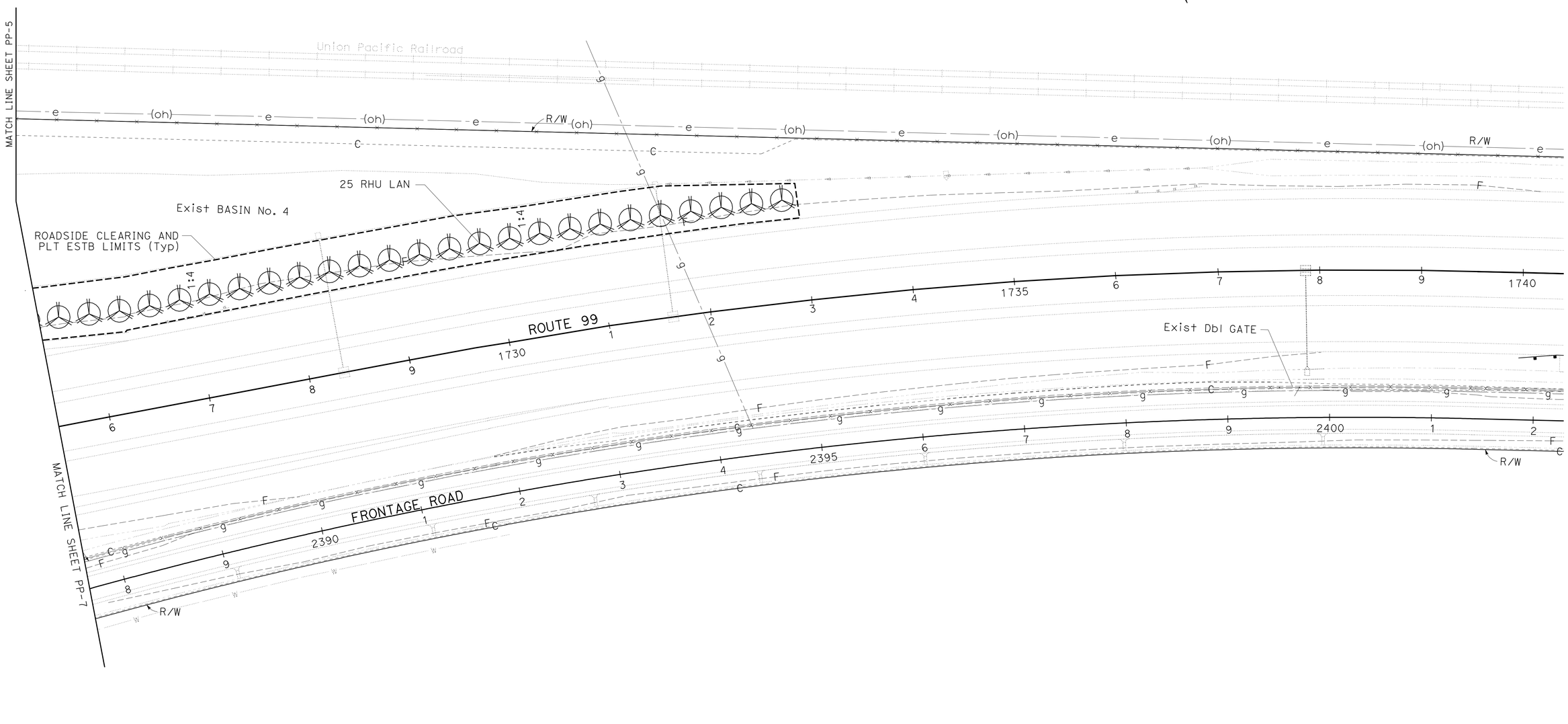

THIS PLAN ACCURATE FOR PLANTING WORK ONLY

PLANTING PLAN PP-8

SCALE: 1" = 50'

REVISED BY | DATE REVISED
ED HIBBS | KEVIN GALLO
CALCULATED-DESIGNED BY | CHECKED BY
SENIOR LANDSCAPE ARCHITECT
ELBERT COX

STATE OF CALIFORNIA - DEPARTMENT OF TRANSPORTATION
Caltrans® LANDSCAPE ARCHITECTURE

LAST REVISION 01-11-11
DATE PLOTTED => 30-MAR-2011
TIME PLOTTED => 06:23

Dist	COUNTY	ROUTE	POST MILES TOTAL PROJECT	SHEET No.	TOTAL SHEETS
10	Mer	99	24.4/R25.8	11	45

Edward A. Hibbs
LICENSED LANDSCAPE ARCHITECT

3-28-11
PLANS APPROVAL DATE

LICENSED LANDSCAPE ARCHITECT
Edward A. Hibbs No. 1
Edward A. Hibbs
Signature
2/28/10
Renewal Date
11/10/10
Date
STATE OF CALIFORNIA

THE STATE OF CALIFORNIA OR ITS OFFICERS OR AGENTS SHALL NOT BE RESPONSIBLE FOR THE ACCURACY OR COMPLETENESS OF SCANNED COPIES OF THIS PLAN SHEET.

NOTE:

FOR ACCURATE RIGHT OF WAY DATA, CONTACT RIGHT OF WAY ENGINEERING AT THE DISTRICT OFFICE.

LEGEND:

- ● 2 SPRINKLERS (TYPE C-2 Mod-10) (SEE LD-2 FOR DETAILS)
- [W] WELL

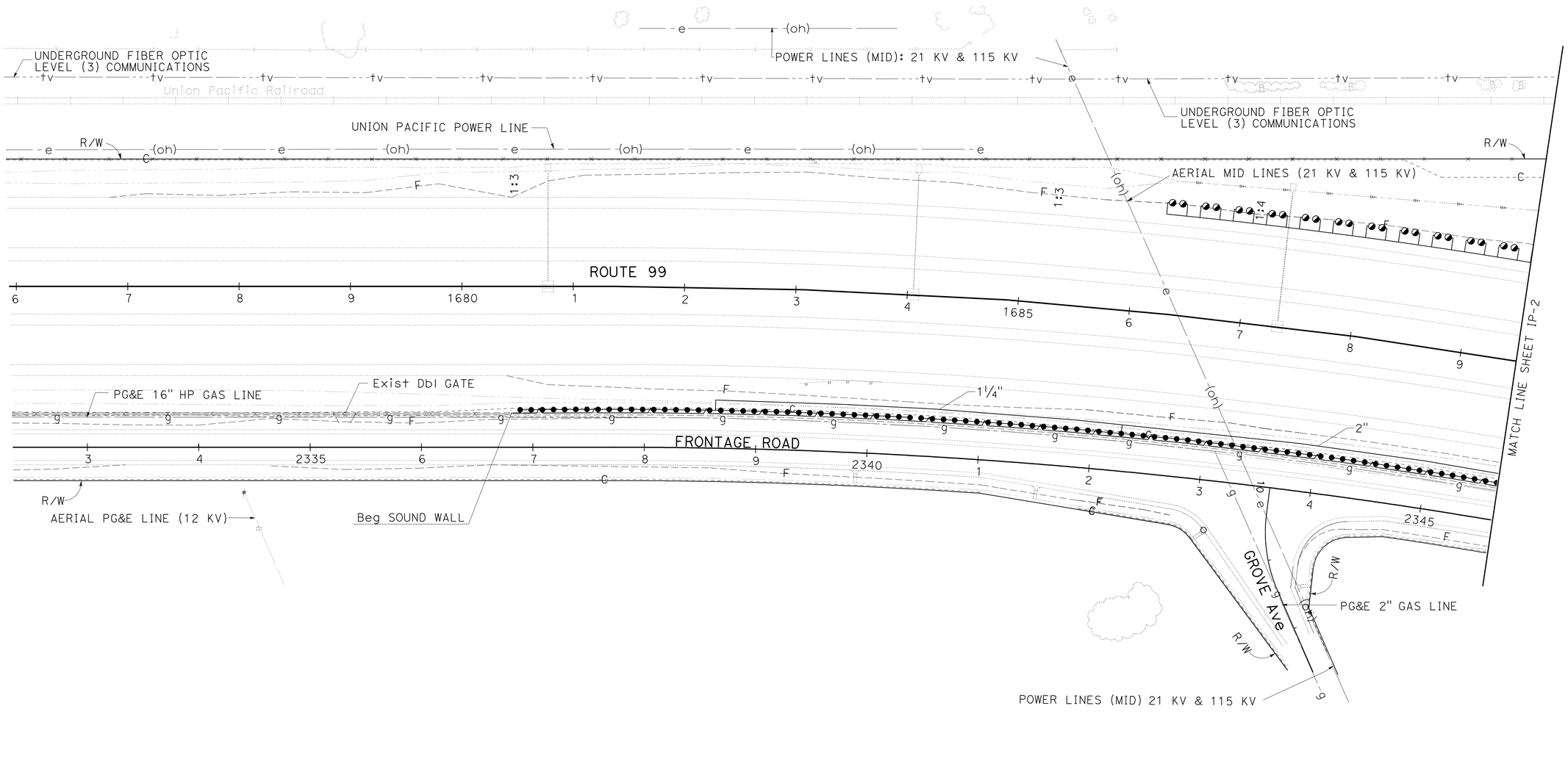

IRRIGATION PLAN IP-1

SCALE: 1" = 50'

THIS PLAN ACCURATE FOR IRRIGATION WORK ONLY

STATE OF CALIFORNIA - DEPARTMENT OF TRANSPORTATION
Caltrans® LANDSCAPE ARCHITECTURE

SENIOR LANDSCAPE ARCHITECT: ELBERT COX
CALCULATED-DESIGNED BY: ED HIBBS
CHECKED BY: KEVIN GALLO
REVISED BY
DATE REVISED

LAST REVISION 01-11-11
DATE PLOTTED => 30-MAR-2011
TIME PLOTTED => 06:23

Dist	COUNTY	ROUTE	POST MILES TOTAL PROJECT	SHEET No.	TOTAL SHEETS
10	Mer	99	24.4/R25.8	12	45

Edward A. Hibbs
LICENSED LANDSCAPE ARCHITECT

3-28-11
PLANS APPROVAL DATE

LICENSED LANDSCAPE ARCHITECT
EDWARD A. HIBBS No. 1480
Edward A. Hibbs
Signature
2/28/10
Renewal Date
11/10/10
Date
STATE OF CALIFORNIA

THE STATE OF CALIFORNIA OR ITS OFFICERS OR AGENTS SHALL NOT BE RESPONSIBLE FOR THE ACCURACY OR COMPLETENESS OF SCANNED COPIES OF THIS PLAN SHEET.

NOTE:

FOR ACCURATE RIGHT OF WAY DATA, CONTACT RIGHT OF WAY ENGINEERING AT THE DISTRICT OFFICE.

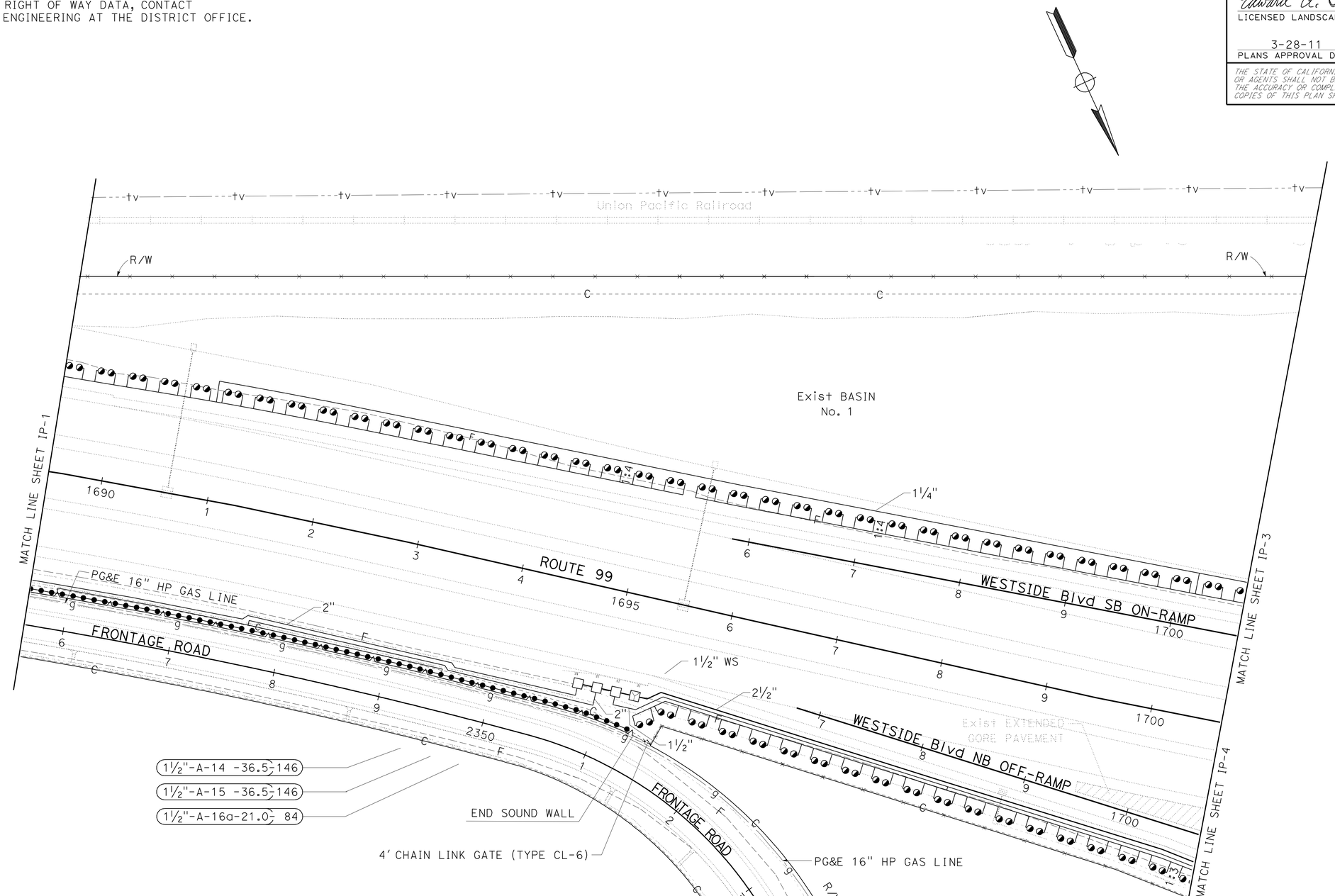

THIS PLAN ACCURATE FOR IRRIGATION WORK ONLY

IRRIGATION PLAN IP-2

SCALE: 1" = 50'

STATE OF CALIFORNIA - DEPARTMENT OF TRANSPORTATION
Caltrans® LANDSCAPE ARCHITECTURE

SENIOR LANDSCAPE ARCHITECT: ELBERT COX
REVISED BY: ED HIBBS
DATE REVISED: KEVIN GALLO
CALCULATED-DESIGNED BY
CHECKED BY

LAST REVISION 01-11-11 | DATE PLOTTED => 30-MAR-2011 | TIME PLOTTED => 06:23

Dist	COUNTY	ROUTE	POST MILES TOTAL PROJECT	SHEET No.	TOTAL SHEETS
10	Mer	99	24.4/R25.8	13	45

Edward A. Hibbs
LICENSED LANDSCAPE ARCHITECT

3-28-11
PLANS APPROVAL DATE

LICENSED LANDSCAPE ARCHITECT
Edward A. Hibbs No. 1480
Edward A. Hibbs
Expiration Date 2/28/10
Renewal Date 11/10/10
Date
STATE OF CALIFORNIA

THE STATE OF CALIFORNIA OR ITS OFFICERS OR AGENTS SHALL NOT BE RESPONSIBLE FOR THE ACCURACY OR COMPLETENESS OF SCANNED COPIES OF THIS PLAN SHEET.

NOTES:

1. FOR ACCURATE RIGHT OF WAY DATA, CONTACT RIGHT OF WAY ENGINEERING AT THE DISTRICT OFFICE.
2. WELL AND IRRIGATION CONTROLLER TO BE LOCATED BEHIND Exist MBGR.

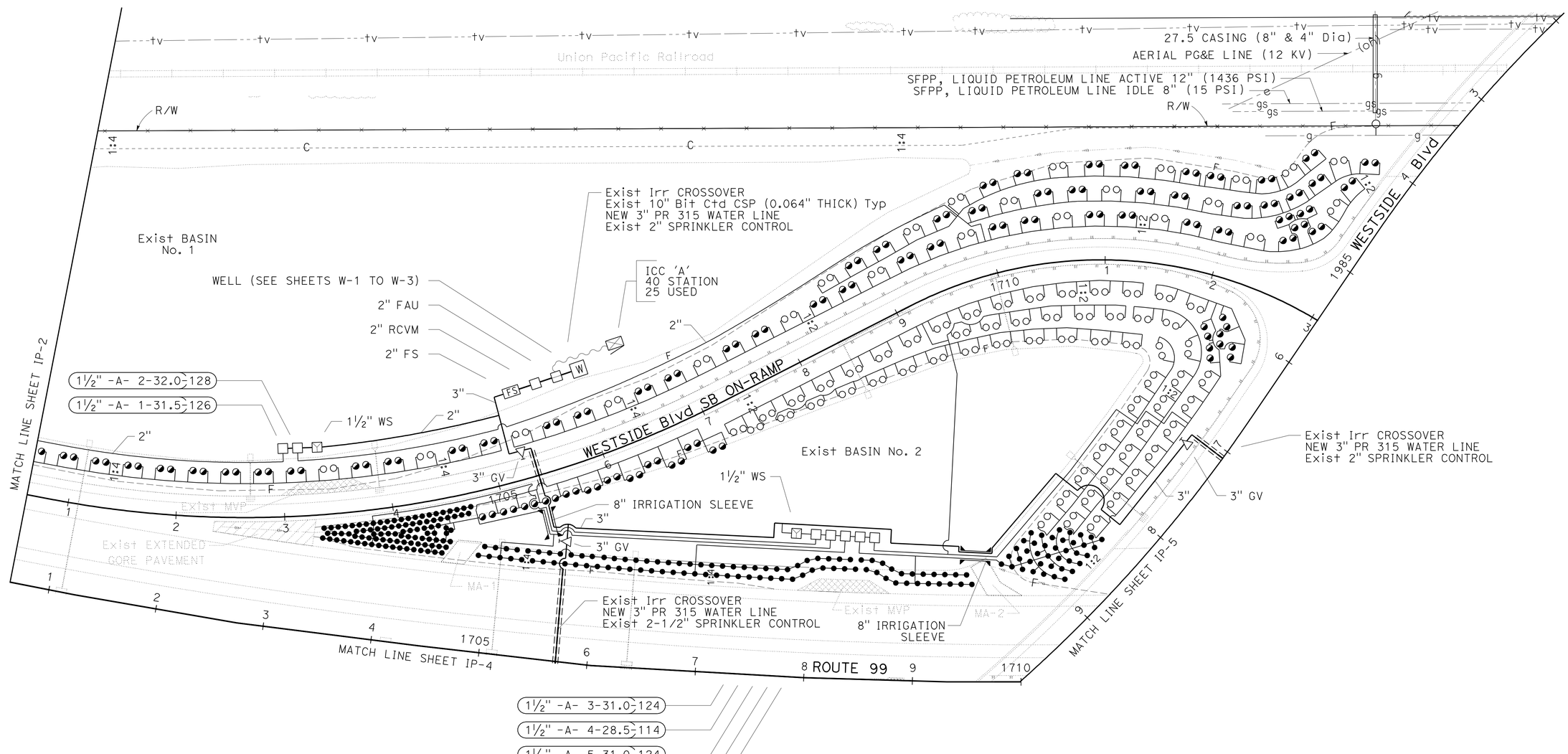

IRRIGATION PLAN
IP-3

SCALE: 1" = 50'

THIS PLAN ACCURATE FOR IRRIGATION WORK ONLY

STATE OF CALIFORNIA - DEPARTMENT OF TRANSPORTATION
Caltrans® LANDSCAPE ARCHITECTURE

SENIOR LANDSCAPE ARCHITECT: ELBERT COX
CALCULATED-DESIGNED BY: KEVIN GALLO
CHECKED BY: ED HIBBS
REVISED BY
DATE REVISED

LAST REVISION 01-11-11
DATE PLOTTED => 30-MAR-2011
TIME PLOTTED => 09:37

Dist	COUNTY	ROUTE	POST MILES TOTAL PROJECT	SHEET No.	TOTAL SHEETS
10	Mer	99	24.4/R25.8	14	45

Edward A. Hibbs
LICENSED LANDSCAPE ARCHITECT

3-28-11
PLANS APPROVAL DATE

LICENSED LANDSCAPE ARCHITECT
Edward A. Hibbs No. 1480
Edward A. Hibbs
Expiration Date
2/28/10
Renewal Date
11/10/10
Date
STATE OF CALIFORNIA

THE STATE OF CALIFORNIA OR ITS OFFICERS OR AGENTS SHALL NOT BE RESPONSIBLE FOR THE ACCURACY OR COMPLETENESS OF SCANNED COPIES OF THIS PLAN SHEET.

NOTE:

FOR ACCURATE RIGHT OF WAY DATA, CONTACT
RIGHT OF WAY ENGINEERING AT THE DISTRICT OFFICE.

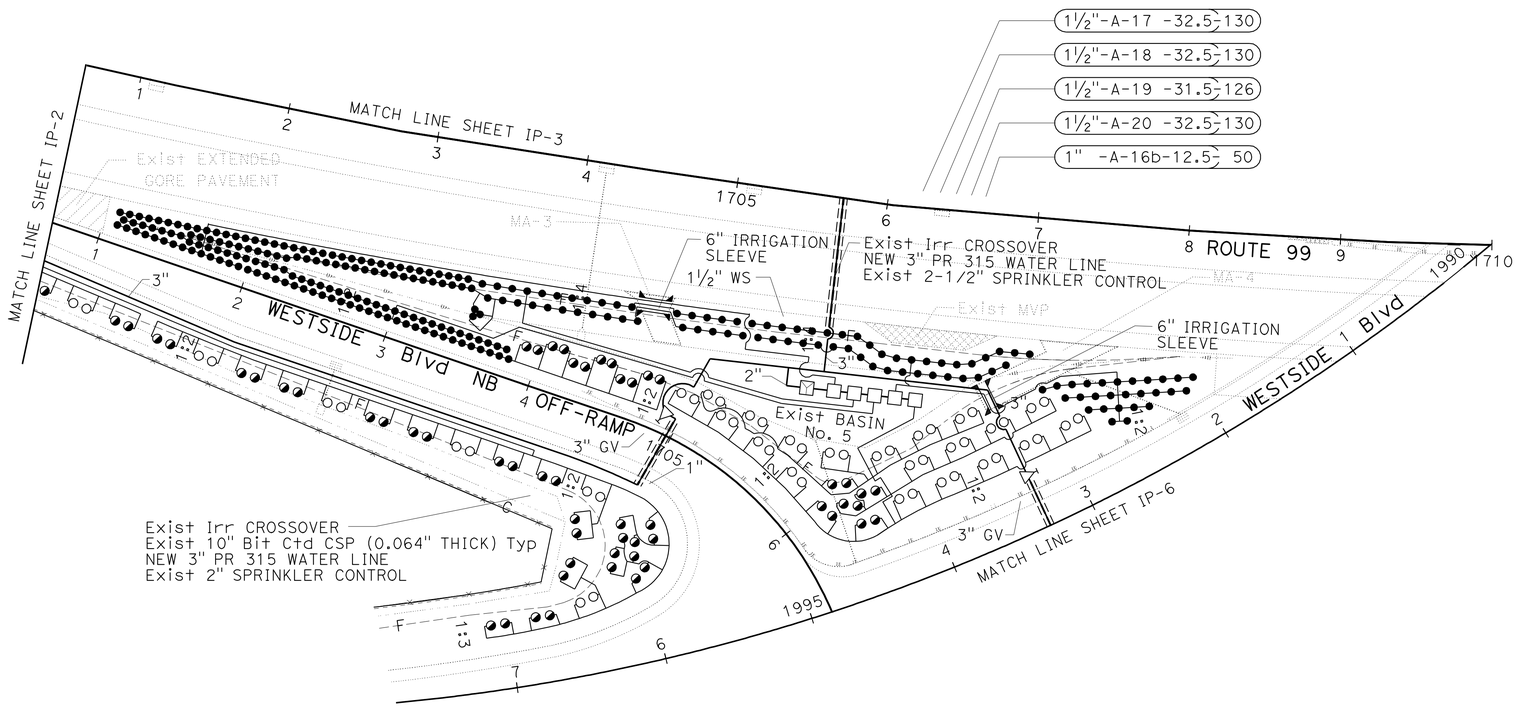

IRRIGATION PLAN IP-4

SCALE: 1" = 50'

THIS PLAN ACCURATE FOR IRRIGATION WORK ONLY

STATE OF CALIFORNIA - DEPARTMENT OF TRANSPORTATION
Caltrans® LANDSCAPE ARCHITECTURE

SENIOR LANDSCAPE ARCHITECT: ELBERT COX
CALCULATED-DESIGNED BY: ED HIBBS
CHECKED BY: KEVIN GALLO
REVISED BY
DATE REVISED

LAST REVISION 01-11-11
DATE PLOTTED => 30-MAR-2011
TIME PLOTTED => 09:37

Dist	COUNTY	ROUTE	POST MILES TOTAL PROJECT	SHEET No.	TOTAL SHEETS
10	Mer	99	24.4/R25.8	15	45

Edward A. Hibbs
LICENSED LANDSCAPE ARCHITECT

3-28-11
PLANS APPROVAL DATE

LICENSED LANDSCAPE ARCHITECT
Edward A. Hibbs No. 1482
Edward A. Hibbs
Expiration Date 2/28/10
Renewal Date 11/10/10
Date
STATE OF CALIFORNIA

THE STATE OF CALIFORNIA OR ITS OFFICERS OR AGENTS SHALL NOT BE RESPONSIBLE FOR THE ACCURACY OR COMPLETENESS OF SCANNED COPIES OF THIS PLAN SHEET.

NOTE:

FOR ACCURATE RIGHT OF WAY DATA, CONTACT
RIGHT OF WAY ENGINEERING AT THE DISTRICT OFFICE.

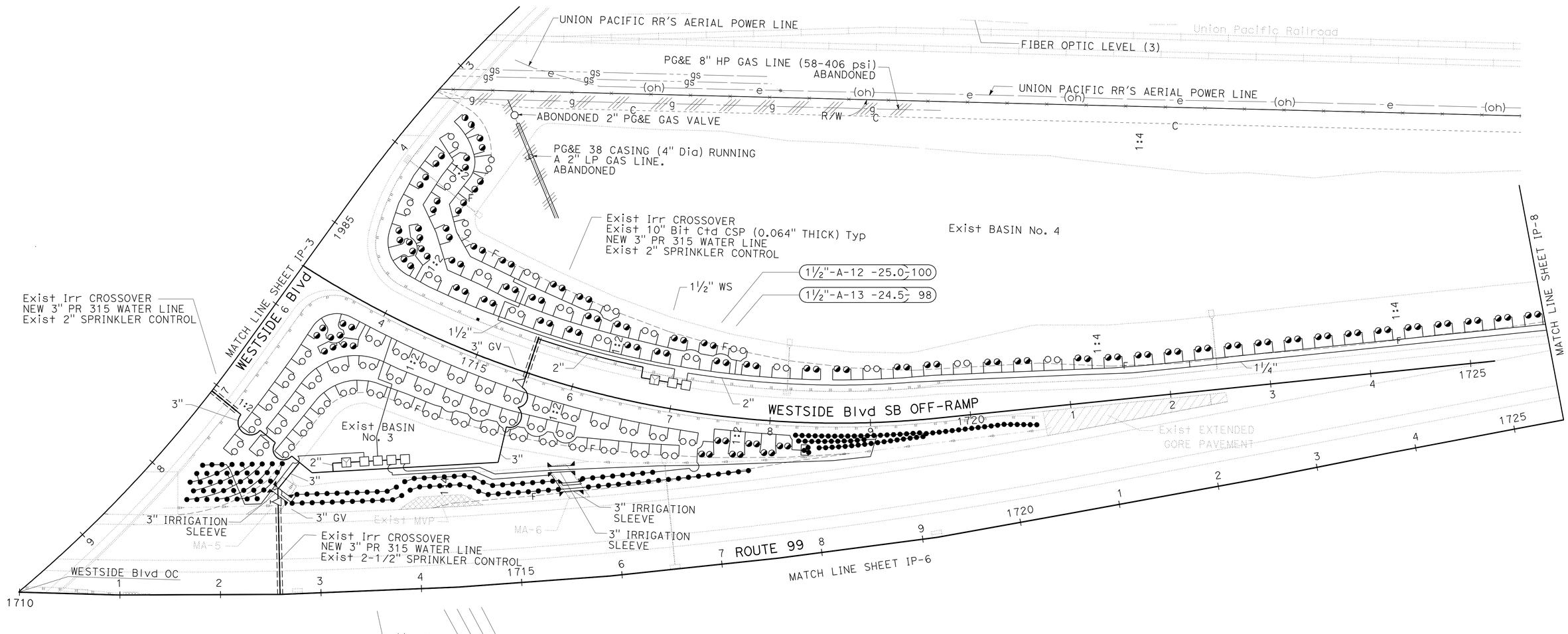

THIS PLAN ACCURATE FOR IRRIGATION WORK ONLY

IRRIGATION PLAN
IP-5

SCALE: 1" = 50'

REVISED BY	DATE REVISED

CALCULATED-DESIGNED BY	CHECKED BY
ED HIBBS	KEVIN GALLO

SENIOR LANDSCAPE ARCHITECT: ELBERT COX

STATE OF CALIFORNIA - DEPARTMENT OF TRANSPORTATION
Caltrans® LANDSCAPE ARCHITECTURE

LAST REVISION 01-11-11
DATE PLOTTED => 30-MAR-2011
TIME PLOTTED => 09:37

Dist	COUNTY	ROUTE	POST MILES TOTAL PROJECT	SHEET No.	TOTAL SHEETS
10	Mer	99	24.4/R25.8	16	45

Edward A. Hibbs
LICENSED LANDSCAPE ARCHITECT

3-28-11
PLANS APPROVAL DATE

LICENSED LANDSCAPE ARCHITECT
Edward A. Hibbs No. 1480
Expiration Date 2/28/10
Renewal Date 11/10/10
Date
STATE OF CALIFORNIA

THE STATE OF CALIFORNIA OR ITS OFFICERS OR AGENTS SHALL NOT BE RESPONSIBLE FOR THE ACCURACY OR COMPLETENESS OF SCANNED COPIES OF THIS PLAN SHEET.

NOTE:

FOR ACCURATE RIGHT OF WAY DATA, CONTACT RIGHT OF WAY ENGINEERING AT THE DISTRICT OFFICE.

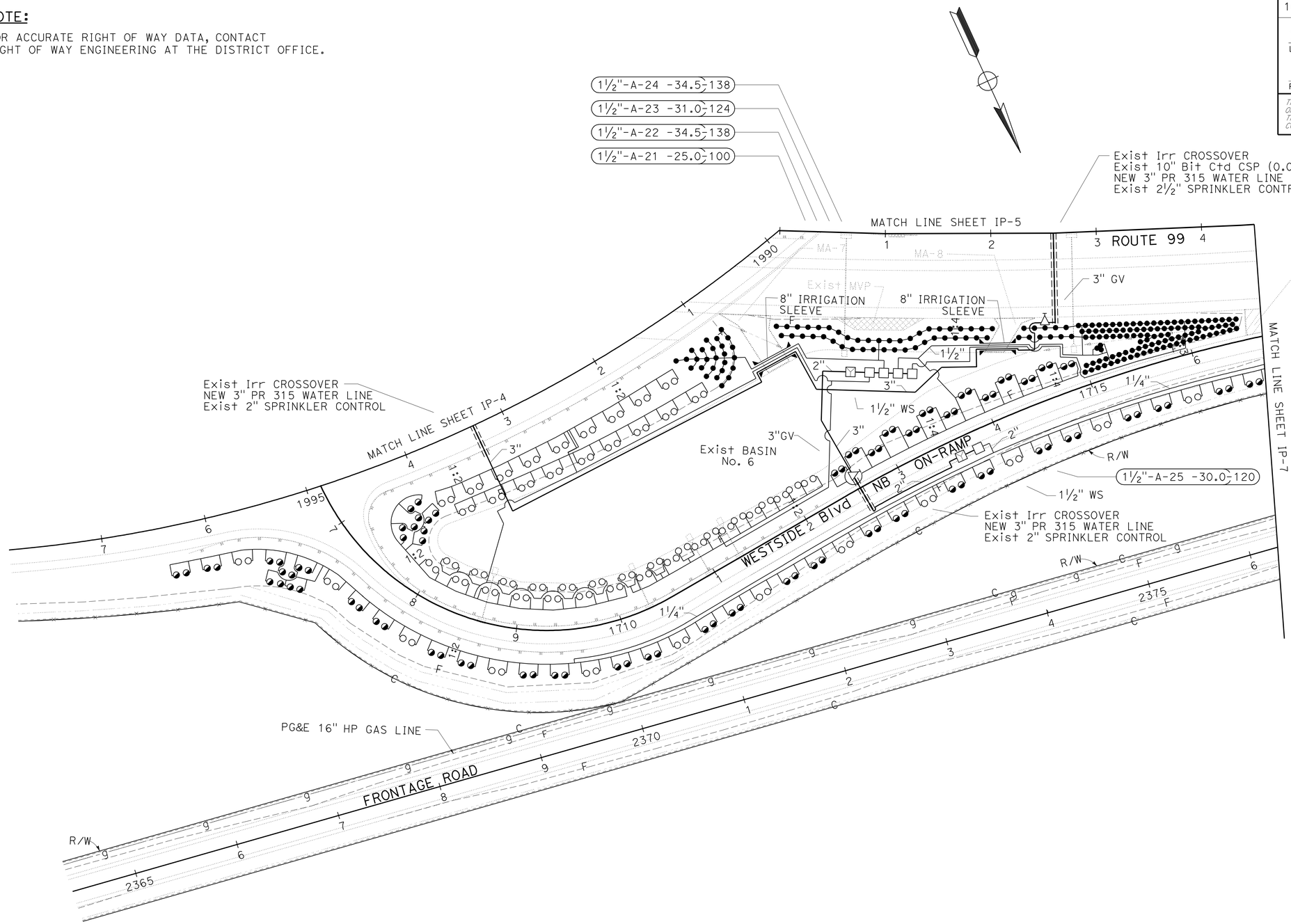

IRRIGATION PLAN IP-6

SCALE: 1" = 50'

THIS PLAN ACCURATE FOR IRRIGATION WORK ONLY

STATE OF CALIFORNIA - DEPARTMENT OF TRANSPORTATION
Caltrans® LANDSCAPE ARCHITECTURE

SENIOR LANDSCAPE ARCHITECT: ELBERT COX
CALCULATED-DESIGNED BY: ED HIBBS
CHECKED BY: KEVIN GALLO
REVISED BY
DATE REVISED

LAST REVISION 01-11-11
DATE PLOTTED => 30-MAR-2011
TIME PLOTTED => 09:37

Dist	COUNTY	ROUTE	POST MILES TOTAL PROJECT	SHEET No.	TOTAL SHEETS
10	Mer	99	24.4/R25.8	17	45

Edward A. Hibbs
LICENSED LANDSCAPE ARCHITECT

3-28-11
PLANS APPROVAL DATE

LICENSED LANDSCAPE ARCHITECT
Edward A. Hibbs No. 1
Expiration Date
2/28/10
Renewal Date
11/10/10
Date
STATE OF CALIFORNIA

THE STATE OF CALIFORNIA OR ITS OFFICERS OR AGENTS SHALL NOT BE RESPONSIBLE FOR THE ACCURACY OR COMPLETENESS OF SCANNED COPIES OF THIS PLAN SHEET.

NOTE:

FOR ACCURATE RIGHT OF WAY DATA, CONTACT
RIGHT OF WAY ENGINEERING AT THE DISTRICT OFFICE.

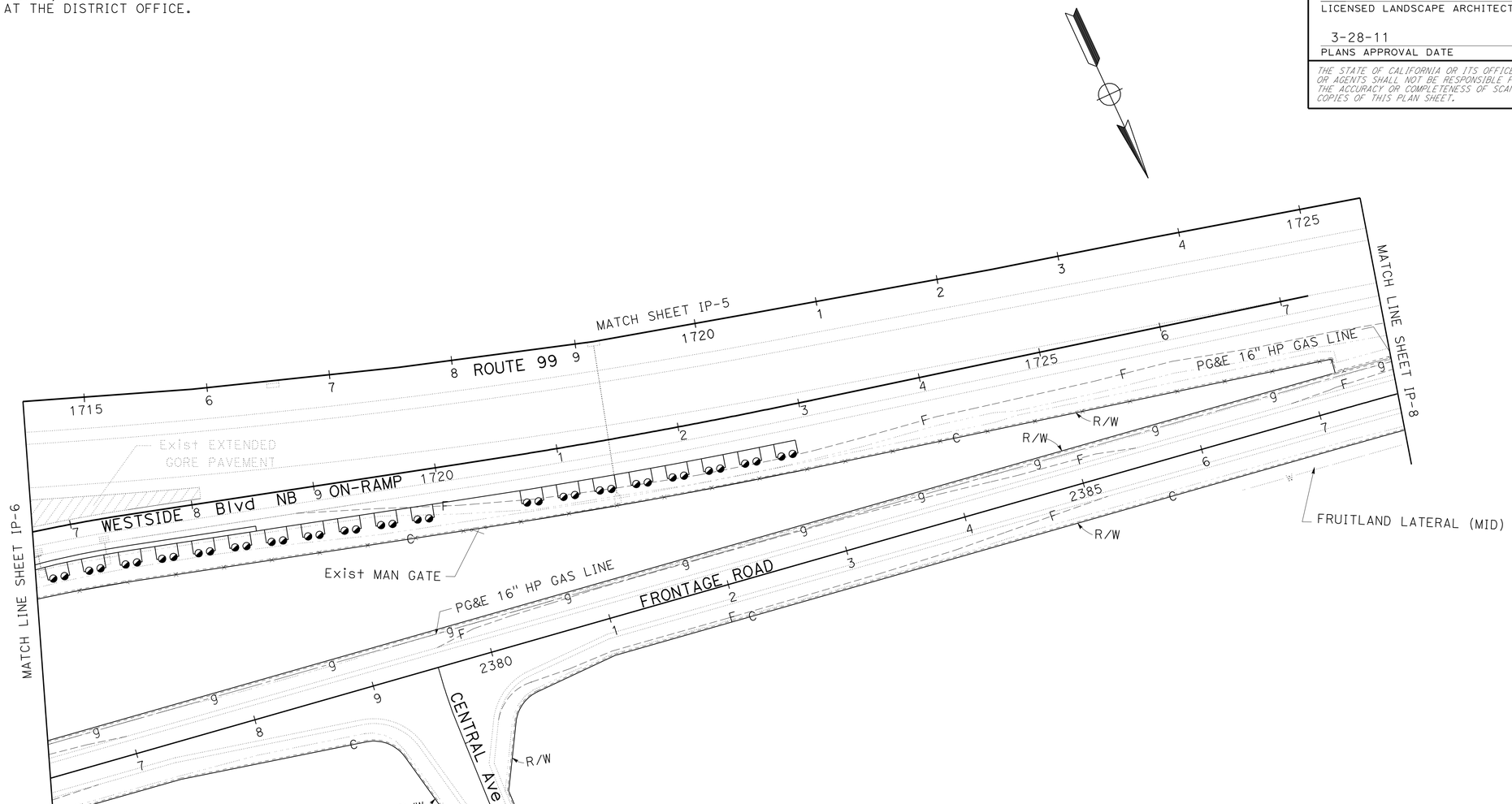

THIS PLAN ACCURATE FOR IRRIGATION WORK ONLY

IRRIGATION PLAN
SCALE: 1" = 50'
IP-7

STATE OF CALIFORNIA - DEPARTMENT OF TRANSPORTATION
Caltrans® LANDSCAPE ARCHITECTURE

SENIOR LANDSCAPE ARCHITECT: ELBERT COX
CALCULATED-DESIGNED BY: ED HIBBS
CHECKED BY: KEVIN GALLO
REVISED BY
DATE REVISED

LAST REVISION 01-11-11
DATE PLOTTED => 30-MAR-2011
TIME PLOTTED => 06:24

Dist	COUNTY	ROUTE	POST MILES TOTAL PROJECT	SHEET No.	TOTAL SHEETS
10	Mer	99	24.4/R25.8	18	45

Edward A. Hibbs
LICENSED LANDSCAPE ARCHITECT

3-28-11
PLANS APPROVAL DATE

LICENSED LANDSCAPE ARCHITECT
Edward A. Hibbs No. 1482
Edward A. Hibbs
Expiration Date
2/28/10
Renewal Date
11/10/10
Date
STATE OF CALIFORNIA

THE STATE OF CALIFORNIA OR ITS OFFICERS OR AGENTS SHALL NOT BE RESPONSIBLE FOR THE ACCURACY OR COMPLETENESS OF SCANNED COPIES OF THIS PLAN SHEET.

NOTE:

FOR ACCURATE RIGHT OF WAY DATA, CONTACT
RIGHT OF WAY ENGINEERING AT THE DISTRICT OFFICE.

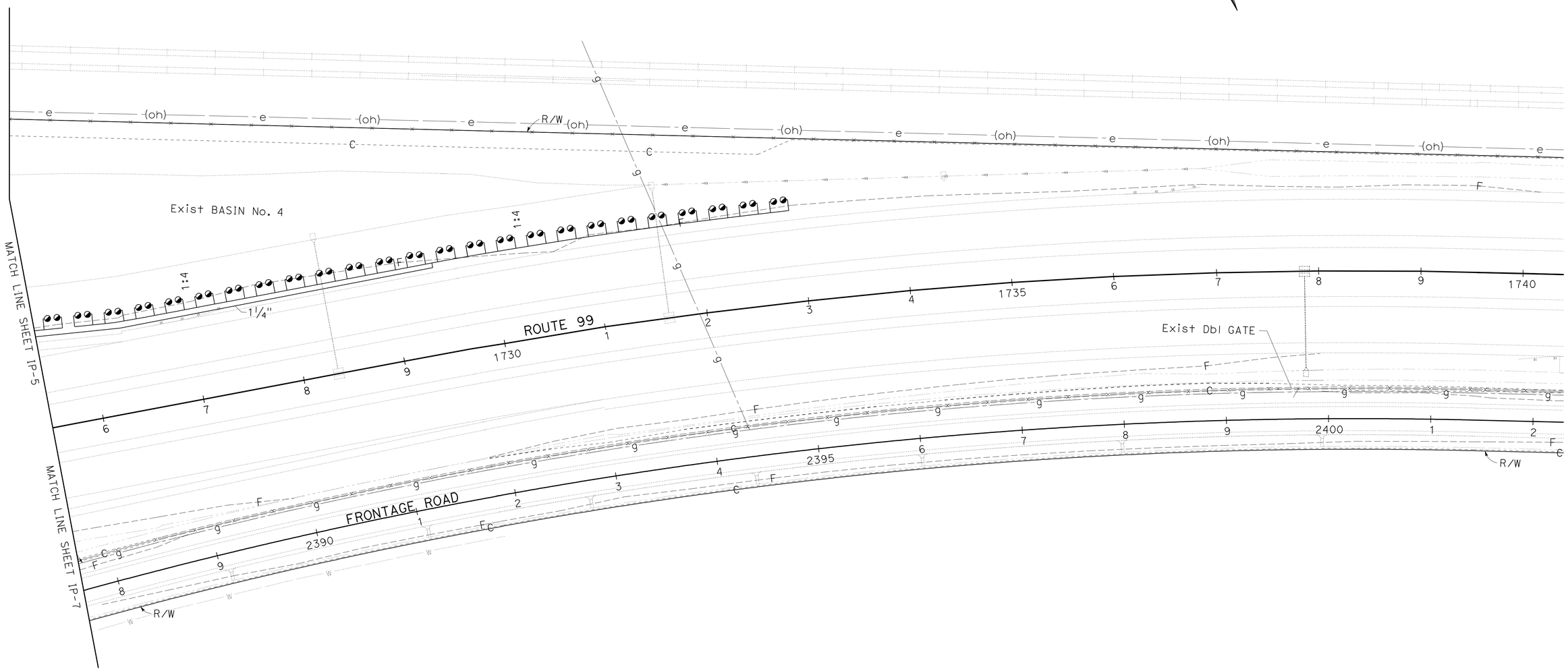

IRRIGATION PLAN
SCALE: 1" = 50'

IP-8

THIS PLAN ACCURATE FOR IRRIGATION WORK ONLY

STATE OF CALIFORNIA - DEPARTMENT OF TRANSPORTATION
Caltrans® LANDSCAPE ARCHITECTURE

SENIOR LANDSCAPE ARCHITECT: ELBERT COX
CALCULATED-DESIGNED BY: ED HIBBS
CHECKED BY: KEVIN GALLO
REVISED BY
DATE REVISED

LAST REVISION 01-11-11
DATE PLOTTED => 30-MAR-2011
TIME PLOTTED => 06:24

Dist	COUNTY	ROUTE	POST MILES TOTAL PROJECT	SHEET No.	TOTAL SHEETS
10	Mer	99	24.4/R25.8	19	45

Edward A. Hibbs
LICENSED LANDSCAPE ARCHITECT

3-28-11
PLANS APPROVAL DATE

LICENSED LANDSCAPE ARCHITECT
Edward A. Hibbs No. 1480
Expiration Date 2/28/10
Renewal Date 11/10/10
Date
STATE OF CALIFORNIA

THE STATE OF CALIFORNIA OR ITS OFFICERS OR AGENTS SHALL NOT BE RESPONSIBLE FOR THE ACCURACY OR COMPLETENESS OF SCANNED COPIES OF THIS PLAN SHEET.

SPRINKLER SCHEDULE

SYMBOL	TYPE	DESCRIPTION	SPRAY PATTERN	OPERATING PRESSURE (PSI)	PRESSURE COMPENSATING	PLUS/MINUS 5% ② DISCHARGE GALLONS PER MINUTE (GPM)	GALLONS PER HOUR (GPH)	RADIUS (Ft)	WIDTH x LENGTH (Ft)	MATERIAL	INLET CONNECTION (NPT INCH)	POSITIVE-LOCKING Adj ARC STOP	BACKSPLASH PREVENTER	DIFFUSER PIN	DISTANCE CONTROL FLAP	Adj DISCHARGE	RISER TYPE	RISER MATERIAL PLASTIC	GALVANIZED	RISER SIZE (IPS INCH)	HEIGHT (INCH)	FLOW SHUTOFF DEVICE	⑤ SWING JOINT (TYPE)	RISER SUPPORT	SPRINKLER PROTECTOR (TYPE)	REMARKS
●	C-2 Mod-10	ROOT WATERING FLOOD BUBBLER	-	30	X	.25	-	-	-	PL	½	-	-	-	-	-	-	-	-	½	-	-	I	-	-	SEE DETAIL (SHEET LD-2) (2 PER PLANT) ⑦ ⑧
◕	C-2 Mod-18	ROOT WATERING FLOOD BUBBLER	-	30	X	.25	-	-	-	PL	½	-	-	-	-	-	II	X	-	½	-	-	I	-	-	SEE DETAIL (SHEET LD-2) (2 PER PLANT) ⑦ ⑧
○	C-2 Mod-36	ROOT WATERING FLOOD BUBBLER	-	30	X	.25	-	-	-	PL	½	-	-	-	-	-	II	X	-	½	-	-	I	-	-	SEE DETAIL (SHEET LD-2) (2 PER PLANT) ⑦ ⑧

X IN BOX DENOTES REQUIREMENT

APPLICABLE WHEN CIRCLED BELOW:

1 - SEE SPECIAL PROVISIONS.
2 - IF A PRESSURE COMPENSATING DEVICE IS SPECIFIED, THE DISCHARGE AND RADII SHOWN REFLECT ITS USE.
3 - ARC STOP SHALL BE FITTED WITH A NUT AND BOLT.
4 - VINYL-COATED CAST IRON HOUSING.
5 - SWING JOINTS REQUIRED ADJACENT TO SHOULDERS, CURBS, SIDEWALKS, AND DIKES.
6 - UNLESS OTHERWISE SHOWN ON PLANS.
⑦ - SAND SOCK.
⑧ - INTEGRATED CHECK VALVE.

ABBREVIATIONS:

F	FULL CIRCLE	Ft	FEET/FOOT
P	PART CIRCLE	GPM	GALLONS PER MINUTE
F/P	FULL/PART CIRCLE	GPH	GALLONS PER HOUR
Q	QUARTER CIRCLE	Adj	ADJUSTABLE
T	THIRD CIRCLE	PL	PLASTIC
H	HALF CIRCLE	B/B	BRASS/BRONZE
TT	TWO THIRD CIRCLE	B/PL	BRASS/PLASTIC
TQ	THREE QUARTER CIRCLE	B/B/PL	BRASS/BRONZE/PLASTIC
CST	CENTER STRIP	NPT	NATIONAL PIPE THREAD
SST	SIDE STRIP	IPS	IRON PIPE SIZE
EST	END STRIP	PSI	POUNDS PER SQUARE INCH

LATERAL PIPE SIZING CHART	
No. Sprinklers by Type	Pipe Size (*)
C-2 Mod	
≤ 39	¾"
≤ 63	1"
≤102	1¼"
≤ 147	1½"

(*) UNLESS DESIGNATED OTHERWISE ON PLANS

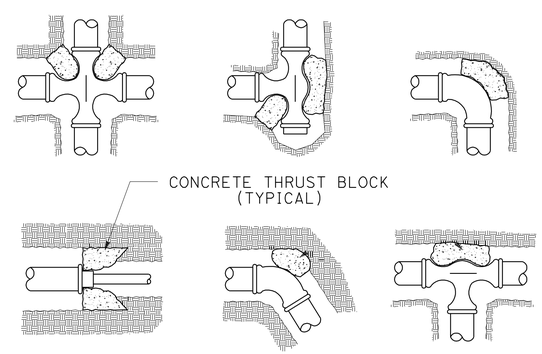

TYPICAL THRUST BLOCK

LANDSCAPE DETAILS

NO SCALE

LD-1

STATE OF CALIFORNIA - DEPARTMENT OF TRANSPORTATION
Caltrans® LANDSCAPE ARCHITECTURE
SENIOR LANDSCAPE ARCHITECT ELBERT COX
CALCULATED-DESIGNED BY KEVIN GALLO
CHECKED BY ED HIBBS
REVISED BY
DATE REVISED

LAST REVISION 01-11-11
DATE PLOTTED => 30-MAR-2011
TIME PLOTTED => 06:24

Dist	COUNTY	ROUTE	POST MILES TOTAL PROJECT	SHEET No.	TOTAL SHEETS
10	Mer	99	24.4/R25.8	20	45

Edward A. Hibbs
LICENSED LANDSCAPE ARCHITECT

3-28-11
PLANS APPROVAL DATE

LICENSED LANDSCAPE ARCHITECT — Edward A. Hibbs — Expiration Date 2/28/10 — Renewal Date 11/10/10 — Date — STATE OF CALIFORNIA

THE STATE OF CALIFORNIA OR ITS OFFICERS OR AGENTS SHALL NOT BE RESPONSIBLE FOR THE ACCURACY OR COMPLETENESS OF SCANNED COPIES OF THIS PLAN SHEET.

NOTE:
PROVIDE 1" HOLE IN SIDE OF PPP TO ACCOMMODATE SWING JOINT CONNECTION TO ELL

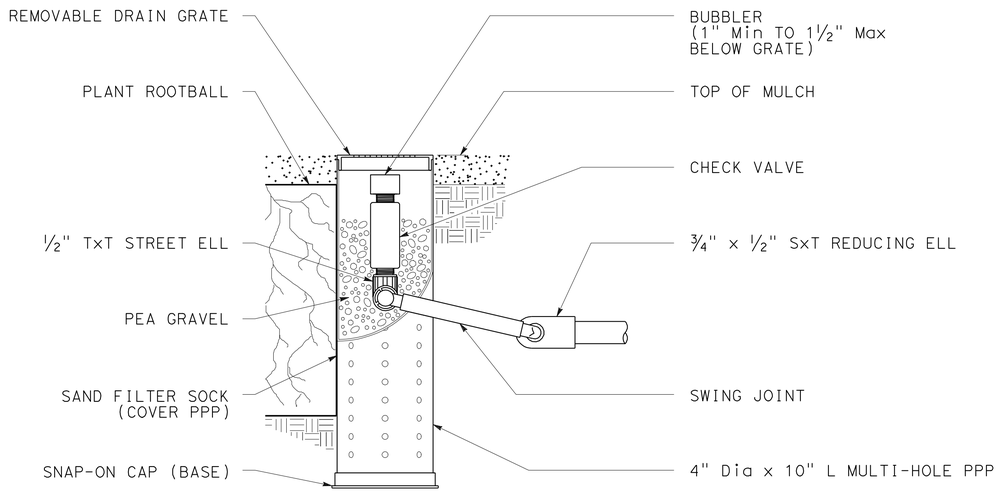

SECTION DETAIL "A"

SPRINKLER (TYPE C-2 Mod-10)

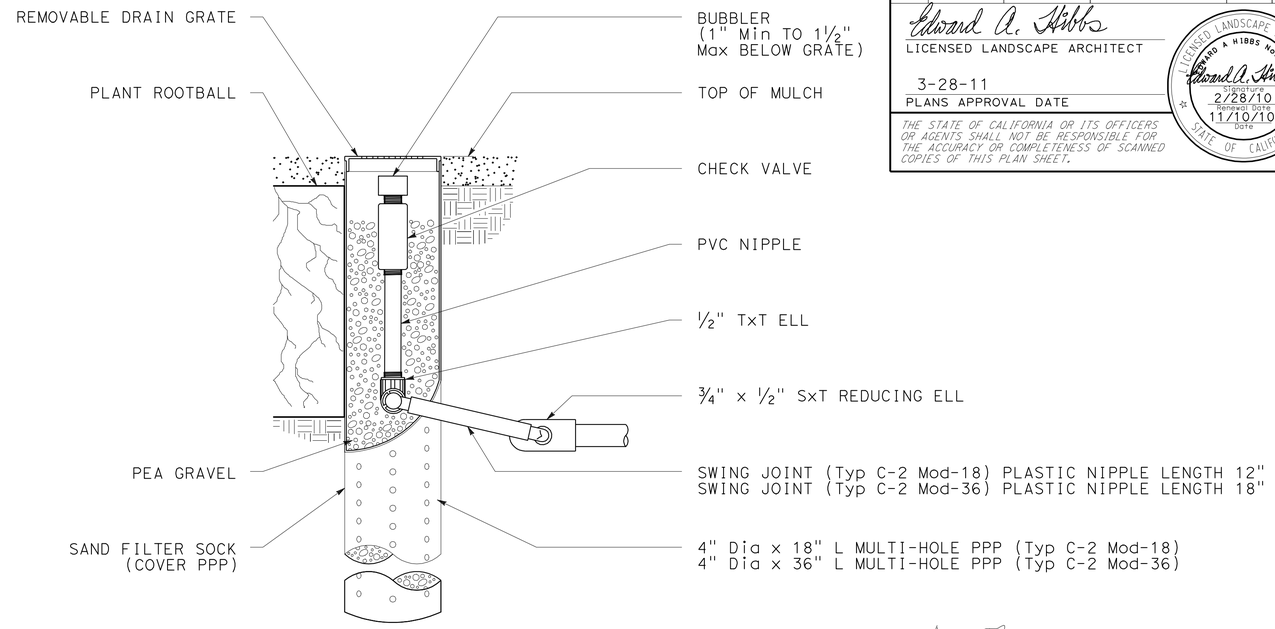

SECTION DETAIL "B"

SPRINKLER (TYPE C-2 Mod-18 and TYPE C-2 Mod-36)

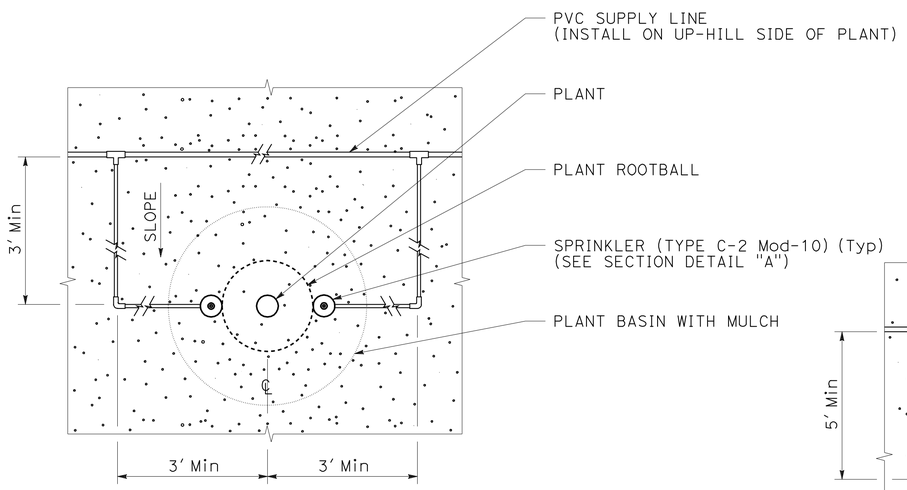

NOTE: EACH SYMBOL ON PLAN (●) REPRESENTS 2 SPRINKLERS AS NOTED ABOVE

PLAN "A"

SPRINKLER (TYPE C-2 Mod-10)

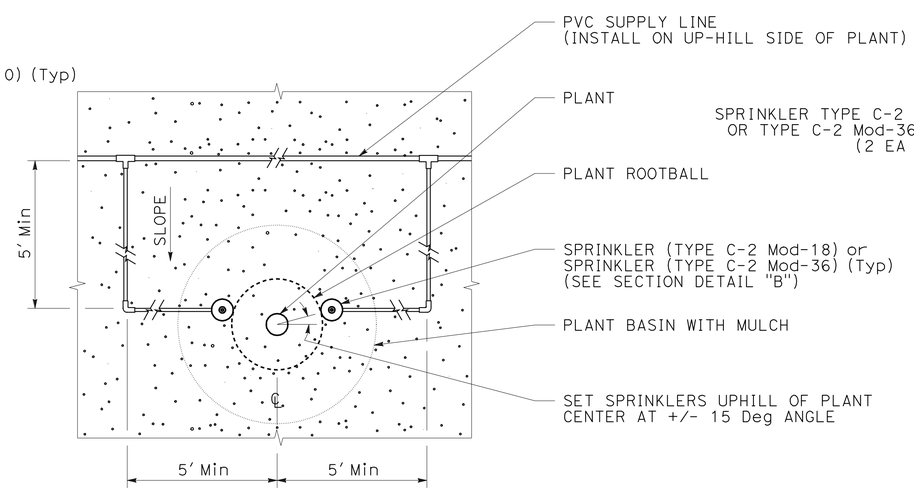

PLAN "B"

SPRINKLER (TYPE C-2 Mod-18 and TYPE C-2 Mod-36)

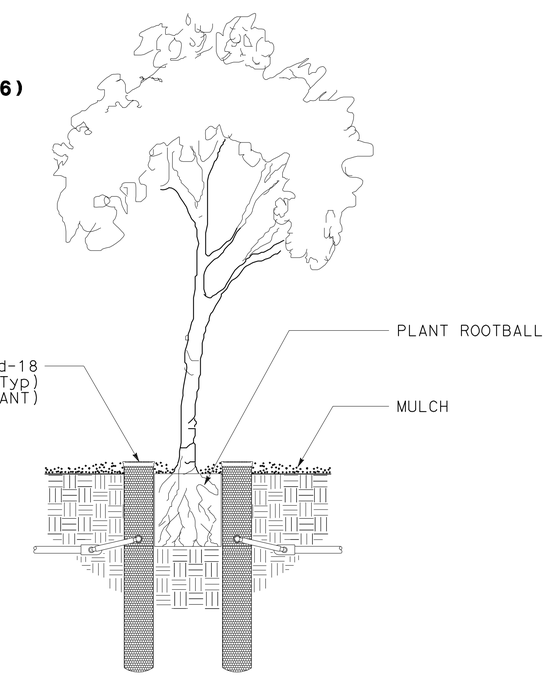

ELEVATION

LANDSCAPE DETAILS

NO SCALE

LD-2

STATE OF CALIFORNIA - DEPARTMENT OF TRANSPORTATION
Caltrans® LANDSCAPE ARCHITECTURE

SENIOR LANDSCAPE ARCHITECT: ELBERT COX
CALCULATED-DESIGNED BY: KEVIN GALLO
CHECKED BY: ED HIBBS
REVISED BY / DATE REVISED

LAST REVISION 01-11-11 | DATE PLOTTED => 30-MAR-2011 | TIME PLOTTED => 06:24

Dist	COUNTY	ROUTE	POST MILES TOTAL PROJECT	SHEET No.	TOTAL SHEETS
10	Mer	99	24.4/R25.8	21	45

Edward A. Hibbs
LICENSED LANDSCAPE ARCHITECT

3-28-11
PLANS APPROVAL DATE

LICENSED LANDSCAPE ARCHITECT
Edward A. Hibbs No. 1482
Edward A. Hibbs
Expiration Date
2/28/10
Renewal Date
11/10/10
Date
STATE OF CALIFORNIA

THE STATE OF CALIFORNIA OR ITS OFFICERS OR AGENTS SHALL NOT BE RESPONSIBLE FOR THE ACCURACY OR COMPLETENESS OF SCANNED COPIES OF THIS PLAN SHEET.

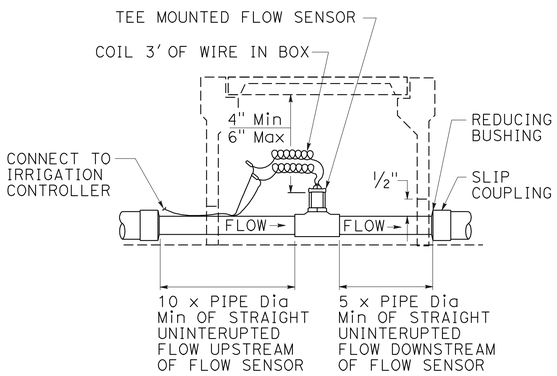

SECTION

FLOW SENSOR

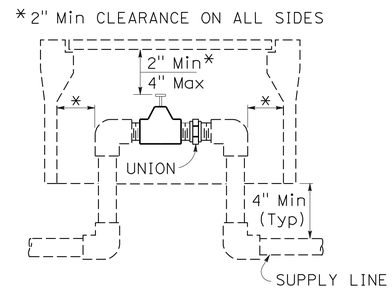

SECTION

VALVE

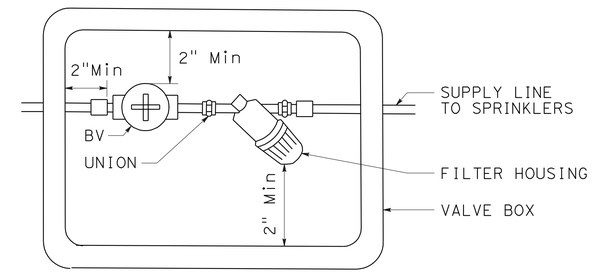

PLAN

FILTER ASSEMBLY UNIT (FAU)

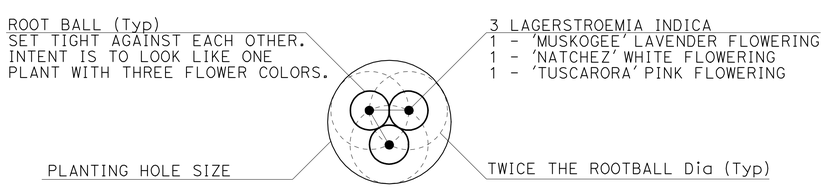

NOTE: EACH SYMBOL ON PLAN ( ) REPRESENTS 3 PLANTS AS NOTED ABOVE

PLAN VIEW

LAGERSTROEMIA INDICA TRI DETAIL ( )

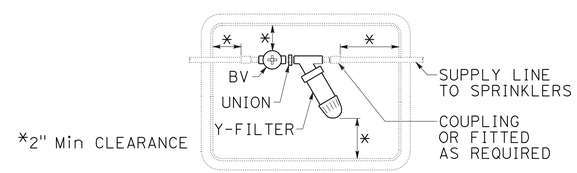

PLAN VIEW

WYE STRAINER

LANDSCAPE DETAILS

NO SCALE

LD-3

STATE OF CALIFORNIA - DEPARTMENT OF TRANSPORTATION
Caltrans® LANDSCAPE ARCHITECTURE

SENIOR LANDSCAPE ARCHITECT: ELBERT COX
CALCULATED-DESIGNED BY: KEVIN GALLO
CHECKED BY: ED HIBBS
REVISED BY
DATE REVISED

LAST REVISION 01-11-11
DATE PLOTTED => 30-MAR-2011
TIME PLOTTED => 06:25

Dist	COUNTY	ROUTE	POST MILES TOTAL PROJECT	SHEET No.	TOTAL SHEETS
10	Mer	99	24.4/R25.8	22	45

Edward A. Hibbs
LICENSED LANDSCAPE ARCHITECT

3-28-11
PLANS APPROVAL DATE

LICENSED LANDSCAPE ARCHITECT — Edward A. Hibbs No. 1480 — Expiration Date 2/28/10 — Renewal Date 11/10/10 — Date — STATE OF CALIFORNIA

THE STATE OF CALIFORNIA OR ITS OFFICERS OR AGENTS SHALL NOT BE RESPONSIBLE FOR THE ACCURACY OR COMPLETENESS OF SCANNED COPIES OF THIS PLAN SHEET.

NOTES:
1. REDWOOD SHALL BE ROUGH CONSTRUCTION HEART GRADE.
2. NAILS TO BE HOT DIPPED GALVANIZED.
3. (*)ANGLES ARE APPROXIMATE.
4. HEADER AND CLASS 2 AB SHALL CONFORM TO ES.

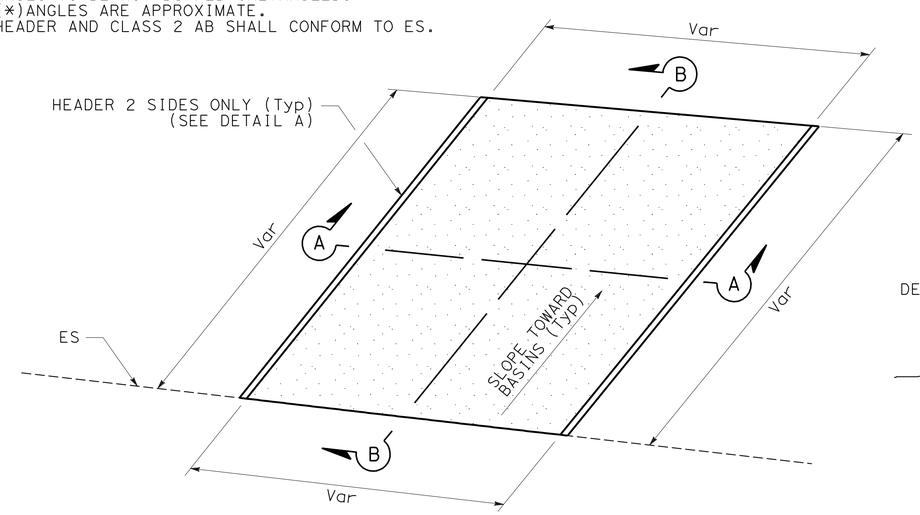

TYPICAL PLAN DIAGRAM

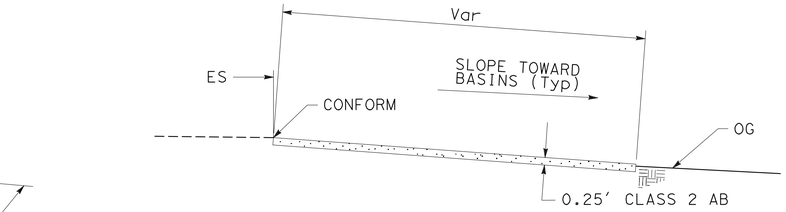

ELEVATION B-B

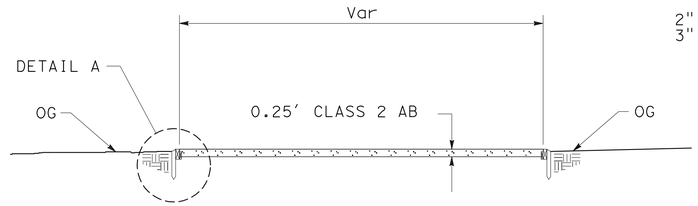

ELEVATION A-A

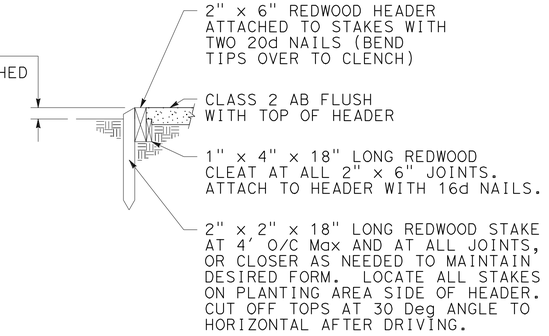

DETAIL A

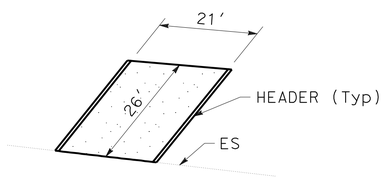

MA-1

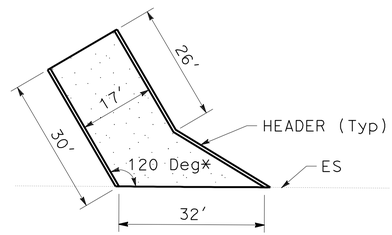

MA-2

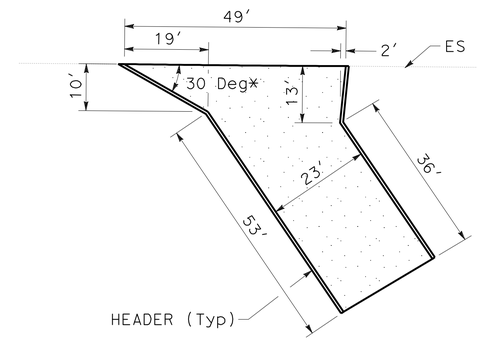

MA-7

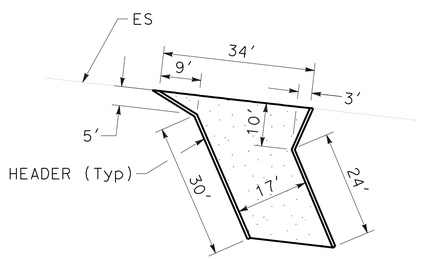

MA-3

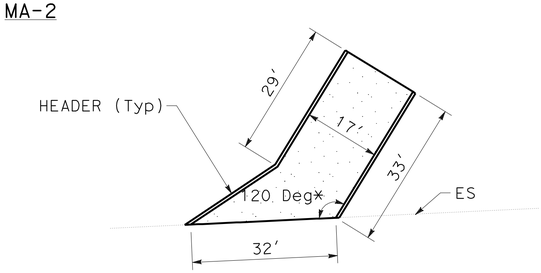

MA-5

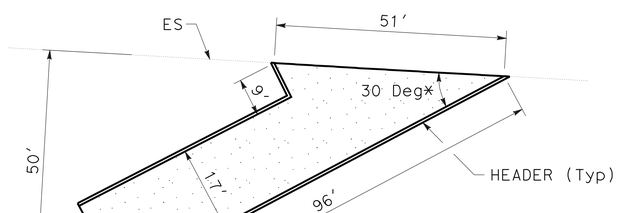

MA-4

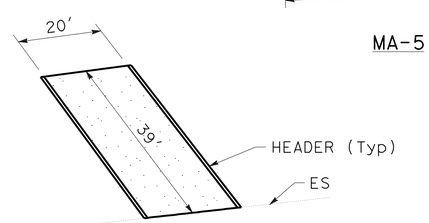

MA-6

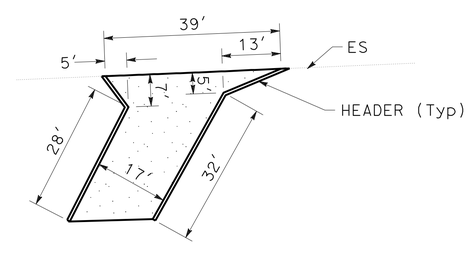

MA-8

MAINTENANCE ACCESS ROAD

MAINTENANCE ACCESS	AREA (N)	CLASS 2 AB	HEADER
	SF	CY	LF
MA-1	443	4.1	52.0
MA-2	648	6.0	79.2
MA-3	604	5.6	73.8
MA-4	1522	14.1	157.6
MA-5	712	6.6	85.0
MA-6	651	6.0	78.0
MA-7	1446	13.4	122.8
MA-8	669	6.2	82.3
	TOTAL	62.0	730.7

(N) NOT A SEPARATE PAY ITEM, FOR INFORMATION ONLY.

MA PLANS

MAINTENANCE ACCESS ROAD

LANDSCAPE DETAILS
NO SCALE

LD-4

STATE OF CALIFORNIA - DEPARTMENT OF TRANSPORTATION
Caltrans® LANDSCAPE ARCHITECTURE
SENIOR LANDSCAPE ARCHITECT: ELBERT COX
CALCULATED-DESIGNED BY: KEVIN GALLO
CHECKED BY: ED HIBBS
REVISED BY
DATE REVISED

LAST REVISION 01-11-11
DATE PLOTTED => 30-MAR-2011
TIME PLOTTED => 09:37

Dist	COUNTY	ROUTE	POST MILES TOTAL PROJECT	SHEET No.	TOTAL SHEETS
10	Mer	99	24.4/R25.8	23	45

Edward A. Hibbs
LICENSED LANDSCAPE ARCHITECT

3-28-11
PLANS APPROVAL DATE

LICENSED LANDSCAPE ARCHITECT
Edward A. Hibbs No. 1480
Expiration Date 2/28/10
Renewal Date 11/10/10
Date
STATE OF CALIFORNIA

THE STATE OF CALIFORNIA OR ITS OFFICERS OR AGENTS SHALL NOT BE RESPONSIBLE FOR THE ACCURACY OR COMPLETENESS OF SCANNED COPIES OF THIS PLAN SHEET.

ABBREVIATIONS:

EA — EACH
DIP — DUCTILE IRON PIPE
GSP — GALVANIZED STEEL PIPE
Ft — FOOT/FEET
PR — PRESSURE RATED

SUBTOTALS PER VALVE ON LATERAL SUPPLY SIDE OF CONTROL VALVE

DESCRIPTION			UNIT	VALVE OR ASSEMBLY NUMBER 1	2	3	4	5	6	7	8	9	10	11	12	13	14	15	16a	16b	17	18	19	20	21	22	23	24	25	SUBTOTALS	UNIT	DESCRIPTION		
PLASTIC PIPE SUPPLY LINE	PR 200	¾"	LF	3153	3100	372	730	595	545	3121	642	2458	1277	392	2562	2548	711	711	2053	389	403	601	1338	620	3098	1478	1664	1258	3015	38834	LF	¾"	PR 200	PLASTIC PIPE SUPPLY LINE
		1"	LF	20	42	5	61	9	13	87	38	-	-	30	39	6	383	-	592	240	6	14	6	153	-	167	6	8	-	1925	LF	1"		
		1¼"	LF	950	12	10	26	-	109	470	48	-	10	8	-	757	-	376	-	421	6	-	-	12	357	11	18	6	907	4514	LF	1¼"		
		1½"	LF	-	-	460	355	155	65	76	116	132	179	476	196	-	539	16	336	555	481	246	339	13	-	13	193	313	-	5254	LF	1½"		
		2"	LF	280	670	-	-	-	-	-	-	-	-	-	-	509	-	-	-	-	-	-	-	-	-	-	-	-	17	1459	LF	2"		
		2½"	LF	-	-	-	-	-	-	-	-	-	-	-	-	-	-	-	-	-	-	-	-	-	-	-	-	-	-	-	LF	2½"		
	PR 315	3"	LF	-	-	-	-	-	-	-	-	-	-	-	-	-	-	-	-	-	-	-	-	-	-	-	-	-	-	-	LF	3"		
GSP																																		
DIP																																		
SPRINKLER TYPE		C-2 Mod-10	EA	-	-	124	90	124	124	-	132	-	120	132	-	-	146	146	-	-	130	130	114	130	-	138	98	138	-	2016	EA	C-2 Mod-10		
		C-2 Mod-18	EA	122	86	-	24	-	-	10	-	10	12	-	68	92	-	-	72	10	-	-	12	-	10	-	26	-	96	650	EA	C-2 Mod-18		
		C-2 Mod-36	EA	4	42	-	-	-	-	120	-	90	-	-	32	6	-	-	12	40	-	-	-	-	90	-	-	-	24	460	EA	C-2 Mod-36		

IRRIGATION SLEEVE

LOCATION		PVC PLASTIC PIPE			
		PR 315		SCH 40	
		SIZE (INCH)			
SHEET	STATION	3		6	8
		LENGTH (LF)			
IP-3	1705+50	—		—	40
	1709+55	—		—	30
IP-4	1704+50	—		25	—
	1706+75	—		25	—
IP-5	1712+60	25		—	—
	1715+45	30		—	—
	1715+60	25		—	—
IP-6	1710+00	—		—	40
	1712+07	—		—	30
SUBTOTAL		80		50	140
TOTAL		270			

IRRIGATION QUANTITIES
IQ-1

REVISED BY | DATE REVISED
ED HIBBS | KEVIN GALLO
CALCULATED-DESIGNED BY | CHECKED BY
SENIOR LANDSCAPE ARCHITECT
ELBERT COX
STATE OF CALIFORNIA - DEPARTMENT OF TRANSPORTATION
Caltrans

LAST REVISION 01-11-11
DATE PLOTTED => 30-MAR-2011
TIME PLOTTED => 06:25

Dist	COUNTY	ROUTE	POST MILES TOTAL PROJECT	SHEET No.	TOTAL SHEETS
10	Mer	99	24.4/R25.8	24	45

Edward A. Hibbs
LICENSED LANDSCAPE ARCHITECT

3-28-11
PLANS APPROVAL DATE

LICENSED LANDSCAPE ARCHITECT
EDWARD A. HIBBS No. 1482
Expiration Date 2/28/10
Renewal Date 11/10/10
Date
STATE OF CALIFORNIA

THE STATE OF CALIFORNIA OR ITS OFFICERS OR AGENTS SHALL NOT BE RESPONSIBLE FOR THE ACCURACY OR COMPLETENESS OF SCANNED COPIES OF THIS PLAN SHEET.

SUBTOTALS PER PLAN SHEET ON MAIN SUPPLY SIDE OF CONTROL VALVE

DESCRIPTION			UNIT	SHEET NUMBER IP-1	IP-2	IP-3	IP-4	IP-5	IP-6	IP-7	IP-8	SUBTOTALS
BPA		ENCLOSURE										
BOOSTER PUMP												
IRRIGATION CONTROLLER		40 STATION	EA	-	-	1	-	-	-	-	-	1
		STATION										
		STATION										
	CEC	SINGLE	EA	-	-	1	-	-	-	-	-	1
		DOUBLE										
VALVES AND ASSEMBLIES	RCVM	2"	EA	-	-	1	-	-	-	-	-	1
	RCV	1"	EA	-	-	-	1	-	-	-	-	1
		1½"	EA	-	3	7	4	6	5	-	-	25
	GV	3"	EA	-	-	3	2	2	2	-	-	9
	WS	1½"	EA	-	1	2	1	2	2	-	-	8
	FAU	1½"	EA	-	1	2	1	2	2	-	-	8
CONDUIT	CSP											
	WSP											
PLASTIC PIPE SUPPLY LINE	PR 200	¾"	EA	-	-	-	-	-	-	-	-	-
		1"	EA	-	-	-	-	-	-	-	-	-
		1¼"	EA	-	-	-	-	-	-	-	-	-
		1½"	EA	-	-	-	-	-	-	-	-	-
		2"	EA	-	20	296	98	244	224	-	-	882
		2½"	EA	-	544	-	420	-	-	-	-	964
	PR 315	3"	EA	-	-	951	330	421	791	-	-	2493
		3"	EA	-	-	162	172	168	158	-	-	660
GSP												
DIP												

TOTAL QUANTITIES

TOTALS	UNIT	DESCRIPTION		
		ENCLOSURE		BPA
		BOOSTER PUMP		
1	EA	40 STATION		IRRIGATION CONTROLLER
		STATION		
		STATION		
1	EA	SINGLE	CEC	
		DOUBLE		
1	EA	2"	RCVM	VALVES AND ASSEMBLIES
1	EA	1"	RCV	
25	EA	1½"		
9	EA	3"	GV	
8	EA	1½"	WS	
8	EA	1½"	FAU	
			CSP	CONDUIT
			WSP	
38834	EA	¾"	PR 200	PLASTIC PIPE SUPPLY LINE
1925	EA	1"		
4514	EA	1¼"		
5254	EA	1½"		
2341	EA	2"		
964	EA	2½"		
2493	EA	3"	PR 315	
660	EA	3"		
			GSP	
			DIP	
2016	EA	C-2(10)		SPRINKLER TYPE
650	EA	C-2(18)		
460	EA	C-2(36)		

ABBREVIATIONS:

BPA — BACKFLOW PREVENTER ASSEMBLY
BV — BALL VALVE
CV — CHECK VALVE
CEC — CONTROLLER ENCLOSURE CABINET
CSP — CORRUGATED STEEL PIPE
DIP — DUCTILE IRON PIPE
EA — EACH
FAU — FILTER ASSEMBLY UNIT
FCV — FLOW CONTROL VALVE
FS — FLOW SENSOR
FV — FLUSH VALVE
GSP — GALVANIZED STEEL PIPE
GV — GATE VALVE
MCV — MANUAL CONTROL VALVE
F† — FOOT/FEET
PR — PRESSURE RATED
PRV — PRESSURE REDUCING VALVE
PRLV — PRESSURE RELIEF VALVE
QCV — QUICK COUPLING VALVE
RCV — REMOTE CONTROL VALVE
RCVM — REMOTE CONTROL VALVE (MASTER)
VAU — VALVE ASSEMBLY UNIT
WSP — WELDED STEEL PIPE
WS — WYE STRAINER

IRRIGATION QUANTITIES
IQ-2

STATE OF CALIFORNIA - DEPARTMENT OF TRANSPORTATION
Caltrans

SENIOR LANDSCAPE ARCHITECT: ELBERT COX
CALCULATED-DESIGNED BY: ED HIBBS
CHECKED BY: KEVIN GALLO
REVISED BY
DATE REVISED

LAST REVISION 01-11-11
DATE PLOTTED => 19-APR-2011
TIME PLOTTED => 09:17

Dist	COUNTY	ROUTE	POST MILES TOTAL PROJECT	SHEET No.	TOTAL SHEETS
10	Mer	99	24.4/R25.8	25	45

Hassan Taha 09-27-10
REGISTERED CIVIL ENGINEER DATE

3-28-11
PLANS APPROVAL DATE

REGISTERED PROFESSIONAL ENGINEER HASSAN M. TAHA No. 60130 Exp 06/30/12 CIVIL STATE OF CALIFORNIA

THE STATE OF CALIFORNIA OR ITS OFFICERS OR AGENTS SHALL NOT BE RESPONSIBLE FOR THE ACCURACY OR COMPLETENESS OF SCANNED COPIES OF THIS PLAN SHEET.

STATIONARY MOUNTED CONSTRUCTION AREA SIGNS

SIGN No.	SIGN CODE	PANEL SIZE	SIGN MESSAGE	No. OF POSTS	POST SIZE	No. OF SIGNS
A	W20-1	60" x 60"	ROAD WORK AHEAD	2	6" x 6"	2
B	G20-2	60" x 24"	END ROAD WORK	2	4" x 4"	2
C	W20-1	48" x 48"	ROAD WORK AHEAD	1	6" x 6"	2
D	G20-2	48" x 24"	END ROAD WORK	1	4" x 6"	2
E	C40	102" x 42"	TRAFFIC FINES DOUBLED IN CONSTRUCTION ZONES	2	6" x 6"	2

NOTES: 1. EXACT LOCATIONS TO BE DETERMINED BY THE ENGINEER.
2. FOR SIGN "C40" (TRAFFIC FINES DOUBLED IN CONSTRUCTION ZONES), ALL LETTERS SHALL BE BLACK ON WHITE BACKGROUND.

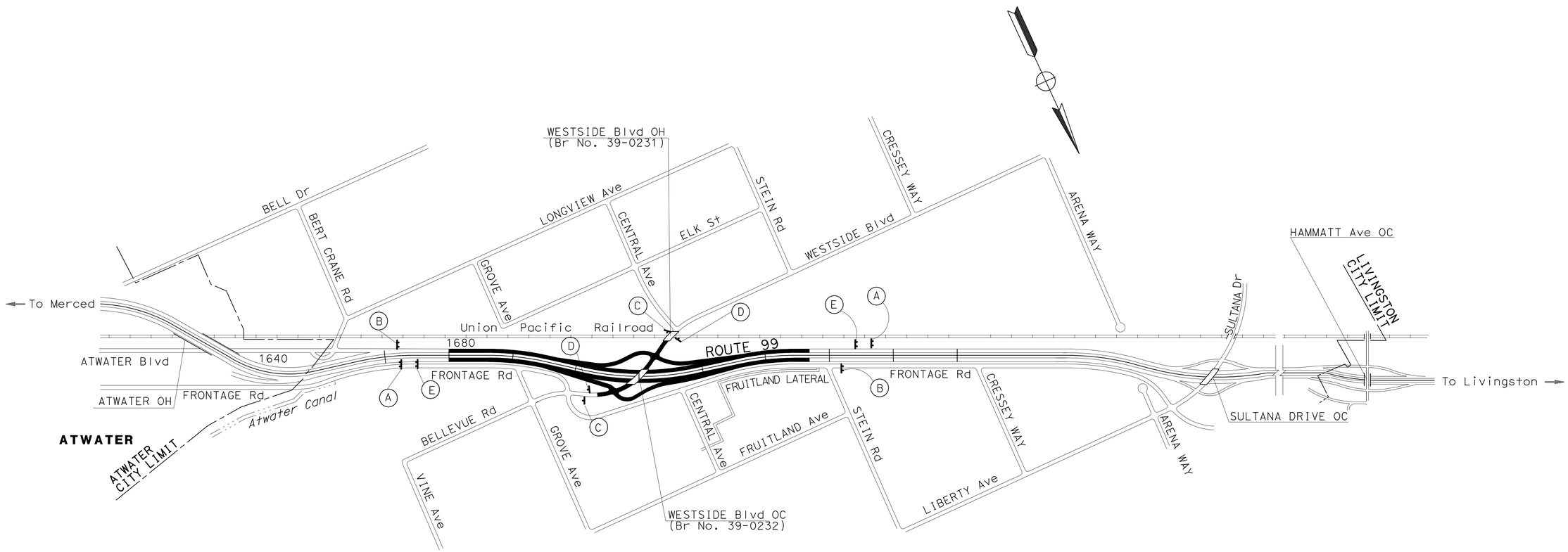

THIS PLAN ACCURATE FOR CONSTRUCTION AREA SIGN ONLY.

CONSTRUCTION AREA SIGNS

NO SCALE

CS-1

STATE OF CALIFORNIA - DEPARTMENT OF TRANSPORTATION
Caltrans 10-TRAFFIC DESIGN

FUNCTIONAL SUPERVISOR: MOHAMMED QATAMI
CALCULATED-DESIGNED BY: HASSAN TAHA
CHECKED BY: KEVIN NGUYEN
REVISED BY: A.S.
DATE REVISED: 05-28-10

LAST REVISION DATE PLOTTED => 30-MAR-2011
01-07-11 TIME PLOTTED => 06:25

Dist	COUNTY	ROUTE	POST MILES TOTAL PROJECT	SHEET No.	TOTAL SHEETS
10	Mer	99	24.4/R25.8	26	45

REGISTERED ELECTRICAL ENGINEER — DATE 1-31-11

3-28-11
PLANS APPROVAL DATE

REGISTERED PROFESSIONAL ENGINEER — Jaspal Singh — No. E16657 — Exp. 6/30/12 — ELECTRICAL — STATE OF CALIFORNIA

THE STATE OF CALIFORNIA OR ITS OFFICERS OR AGENTS SHALL NOT BE RESPONSIBLE FOR THE ACCURACY OR COMPLETENESS OF SCANNED COPIES OF THIS PLAN SHEET.

LEGEND:

1 Exist 120/240 V, 1Ø, 3-WIRE, TYPE III-CF SERVICE EQUIPMENT ENCLOSURE WITH THE FOLLOWING CIRCUIT BREAKERS:

CTID No. 10390990025030T

AMPERES	VOLTS	POLES	NAMEPLATE	METER	PHOTOELECTRIC CONTROL TYPE
100	240	2	MAIN BREAKER	YES	-
15	120	1	WMS	YES	-
15	120	1	TMS	YES	-
80	240	2	WELL PUMP	YES	2

CTID No. 10390990025030L

AMPERES	VOLTS	POLES	NAMEPLATE	METER	PHOTOELECTRIC CONTROL TYPE
100	240	2	MAIN BREAKER	YES	-
20	240	2	Hwy LTG RAMP A	YES	V
20	240	2	Hwy LTG RAMP B	YES	-
15	120	1	LIGHTING CONTROL	YES	-
15	240	2	SIGN ILLUMINATION	YES	-

2 INSTALL CIRCUIT BREAKER AND LABEL AS "WELL PUMP".

3 15 kVA, 240/480 V, SINGLE PHASE, 60 Hz, GENERAL PURPOSE, PAD MOUNTED, OUTDOOR TYPE TRANSFORMER IN NEMA 3R ENCLOSURE. SEE DETAIL A ON THIS SHEET. THE BASE DIMENSION FOR NEMA 3R ENCLOSURE FOR THE TRANSFORMER SHALL BE PER MANUFACTURER'S DESIGN.

NOTES:

1. FOR WELL PUMP ELECTRICAL SYSTEM, SEE EE SHEETS.
2. ICC IS NOT A PART OF THE ELECTRICAL WORK. SEE IP SHEETS.
3. FOR ACCURATE RIGHT OF WAY DATA, CONTACT RIGHT OF WAY ENGINEERING AT THE DISTRICT OFFICE.

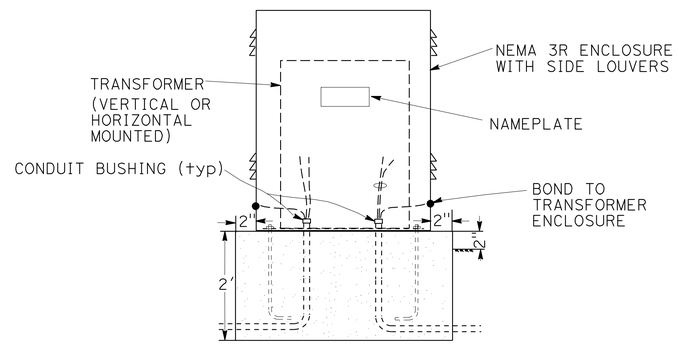

DETAIL A
NO SCALE

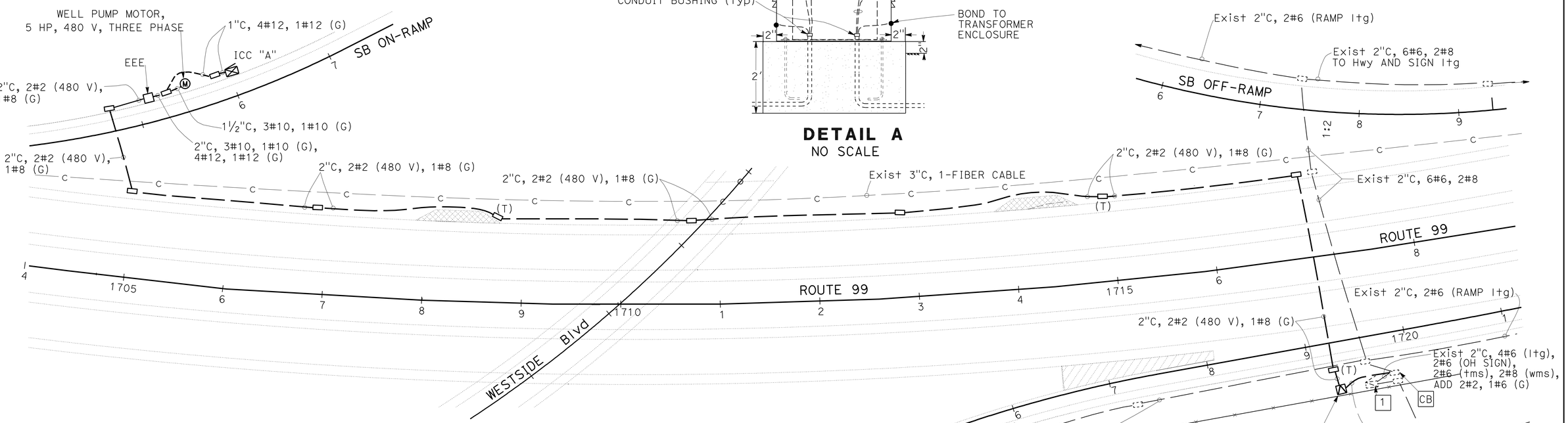

ABBREVIATIONS:

PG&E - PACIFIC GAS AND ELECTRIC COMPANY
CTID - CALTRANS INDENTIFICATION
EEE - ELECTRICAL EQUIPMENT ENCLOSURE

THIS PLAN IS ACCURATE FOR ELECTRICAL WORK ONLY.

ELECTRIC SERVICE (IRRIGATION)

SCALE: 1" = 50'

E-1

STATE OF CALIFORNIA - DEPARTMENT OF TRANSPORTATION
Caltrans
ELECTRICAL DESIGN

FUNCTIONAL SUPERVISOR: ALI BAKHDOUD
CALCULATED-DESIGNED BY: JASPAL SINGH
CHECKED BY: FRED IYASERE
REVISED BY / DATE REVISED

LAST REVISION 01-04-11
DATE PLOTTED => 30-MAR-2011
TIME PLOTTED => 06:25

DIST.	COUNTY	ROUTE	POST MILES TOTAL PROJECT	SHEET NO.	TOTAL SHEETS
10	Mer	99	24.4/R25.8	27	45

Eric Greve
REGISTERED ELECTRICAL ENGINEER — 11-29-10 DATE

REGISTERED PROFESSIONAL ENGINEER — ERIC GREVE No. 14791 Exp. 6-30-11 ELEC — STATE OF CALIFORNIA

3-28-11
PLANS APPROVAL DATE

The State of California or its officers or agents shall not be responsible for the accuracy or completeness of electronic copies of this plan sheet.

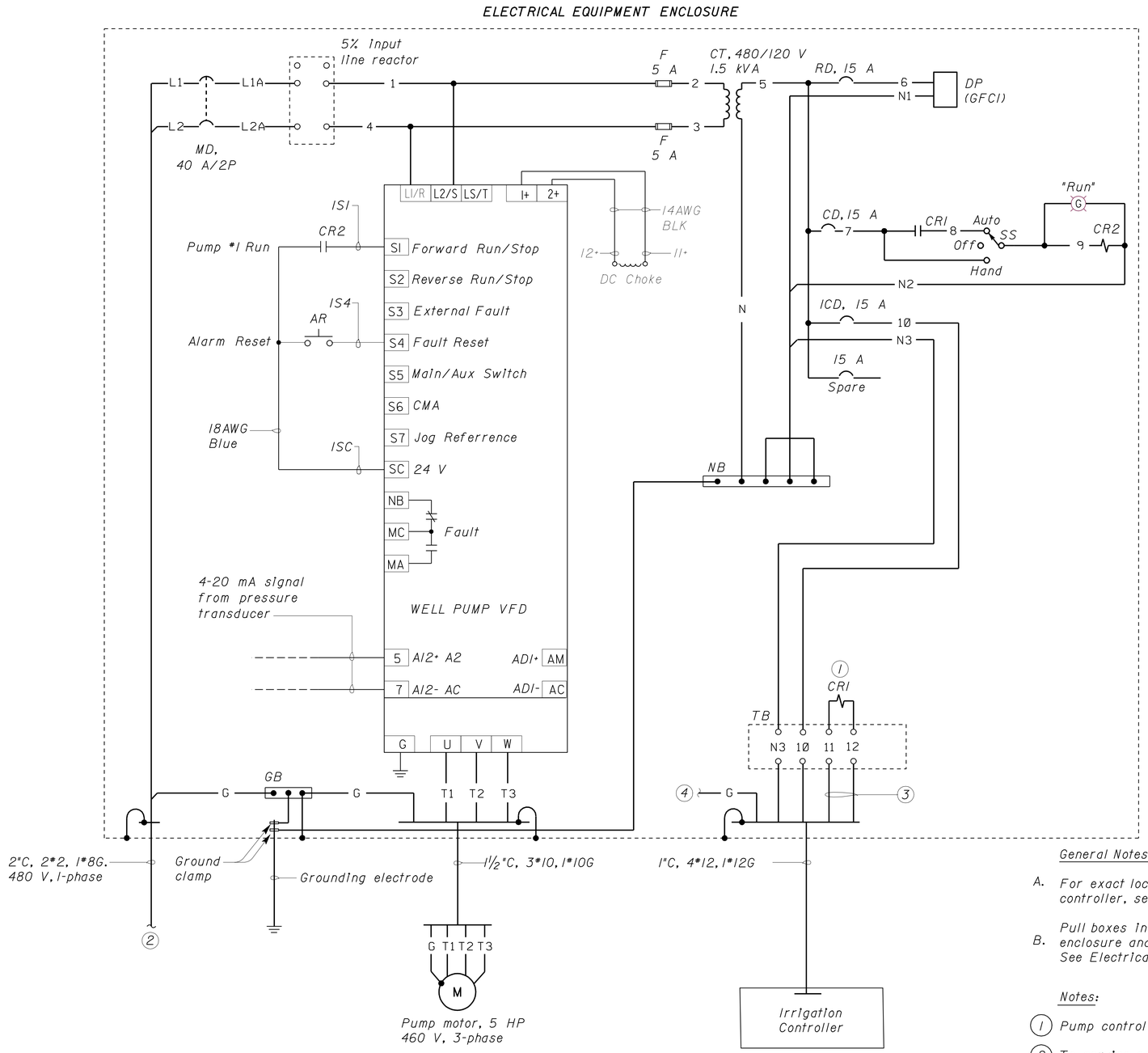

CONTROL SCHEMATIC

General Notes:

A. *For exact location of well pump, EEE and irrigation controller, see Irrigation Plans and Water Plans.*

B. *Pull boxes in between electrical equipment enclosure and irrigation controller are not shown. See Electrical "E" sheets.*

Notes:

1. *Pump control relay, 24 V(ac) coil.*
2. *To service equipment enclosure. See Electrical "E" sheets.*
3. *To master valve/pump start terminals in the irrigation controller.*
4. *Connect to ground bar.*

ABBREVIATIONS

A	AMPERES
AC	ALTERNATING CURRENT
CD	CONTROL DISCONNECT
CR	CONTROL RELAY
CT	CONTROL TRANSFORMER
DP	DUPLEX PLUG RECEPTACLE
F	FUSE
G	GROUND
GB	GROUND BAR
GFCI	GROUND FAULT CIRCUIT INTERRUPTER
ICD	IRRIGATION CONTROLLER DISCONNECT
MD	MAIN DISCONNECT
Min	MINIMUM
MS	MOTOR STARTER
(N)	NEW
NB	NEUTRAL BAR
OL	OVERLOAD
PD	PUMP DISCONNECT
RD	RECEPTACLE DISCONNECT
S	STARTER COIL
SS	SELECTOR SWITCH
TB	TERMINAL BLOCK
TM	TIME METER
Typ	TYPICAL
VFD	VARIABLE FREQUENCY DRIVE
WP	WEATHERPROOF

LEGEND

SYMBOL	DESCRIPTION
	CIRCUIT BREAKER, SINGLE POLE
	CIRCUIT BREAKER, THREE POLE
	CONTACT, NORMALLY OPEN
	CONTACT, NORMALLY CLOSED
	SWITCH, SINGLE-POLE, 3-POSITION
	OPERATING COIL
	THERMAL OVERLOAD
M	MOTOR
	GROUNDING ELECTRODE
	FUSE

THIS PLAN ACCURATE FOR ELECTRICAL WORK ONLY

DESIGN SUPERVISOR	DESIGN	BY Eric Greve	CHECKED J. S. Sandhu
DESIGN ENGINEER	DETAILS	BY Eric Greve	CHECKED J. S. Sandhu
	QUANTITIES	BY Eric Greve	CHECKED J. S. Sandhu

STATE OF CALIFORNIA DEPARTMENT OF TRANSPORTATION

DIVISION OF ENGINEERING SERVICES ELECTRICAL-MECHANICAL-WATER AND WASTEWATER DESIGN

BRIDGE NO.
POST MILE 24.4/R25.8

ATWATER IRRIGATION WELL

SCHEMATIC DIAGRAM

SHEET **EE-1**

TAEMWW Imperial Rev. 7/10

ORIGINAL SCALE IN INCHES FOR REDUCED PLANS 0 1 2 3

UNIT 3618
PROJECT NUMBER & PHASE 10000004291
EA 414821

DISREGARD PRINTS BEARING EARLIER REVISION DATES → 10/18/10 11/29/10

REVISION DATES (PRELIMINARY STAGE ONLY) SHEET OF

30-MAR-2011 06:25

a41482tu001.dgn

DIST.	COUNTY	ROUTE	POST MILES TOTAL PROJECT	SHEET NO.	TOTAL SHEETS
10	Mer	99	24.4/R25.8	28	45

Eric Greve
REGISTERED ELECTRICAL ENGINEER — 11-29-10 DATE

REGISTERED PROFESSIONAL ENGINEER
ERIC GREVE
No. 14791
Exp. 6-30-11
ELEC
STATE OF CALIFORNIA

3-28-11
PLANS APPROVAL DATE

The State of California or its officers or agents shall not be responsible for the accuracy or completeness of electronic copies of this plan sheet.

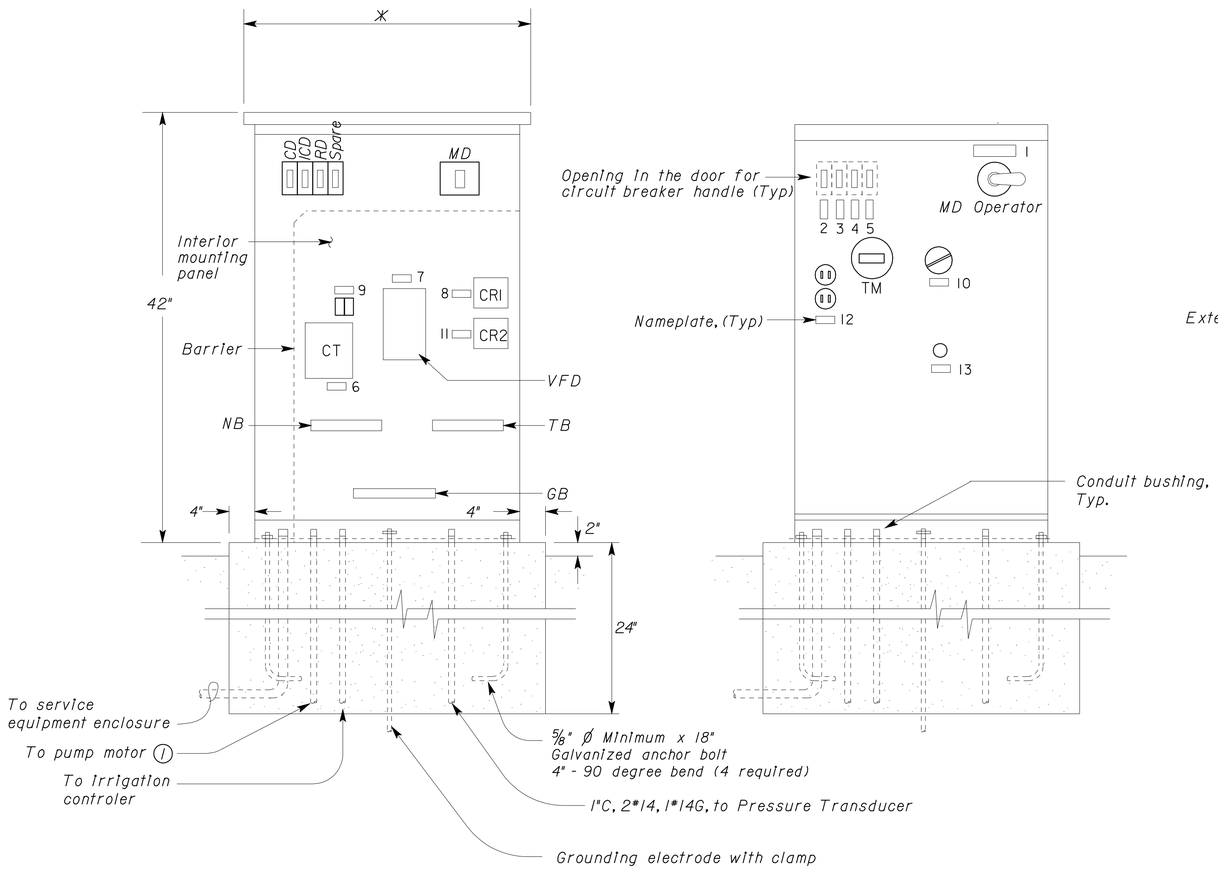

* Width to fit all components

(INTERIOR AND EXTERIOR DOORS NOT SHOWN)

(EXTERIOR DOOR NOT SHOWN)

ELEVATION

NO SCALE

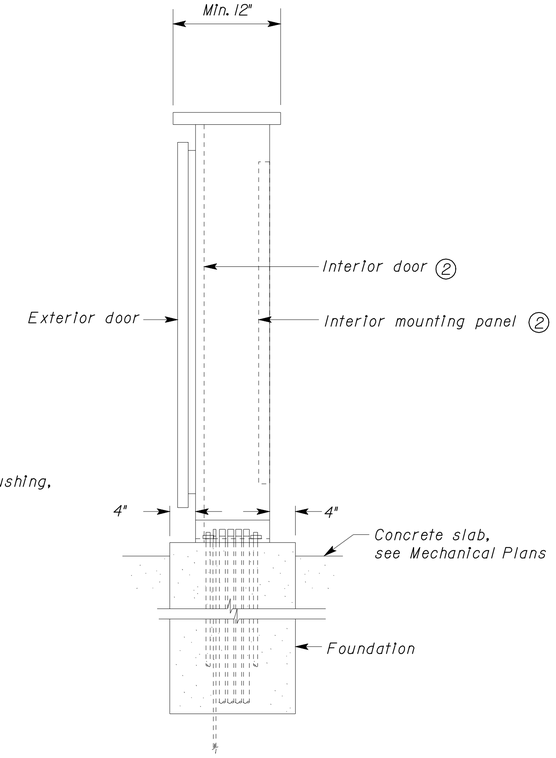

SIDE VIEW

No Scale

General notes:

A. *Dimensions of enclosure shown are approximate only.*

B. *For conduits and conductor sizes and quantity, see Electrical plans EE-1.*

Notes:

(1) *For routing conduit to pump motor, see Water plans.*

(2) *Mounted electrical components are not shown.*

NAMEPLATE SCHEDULE

ITEMS No.	INSCRIPTION	LETTER HEIGHT (Inch)
1	MAIN DISC.	1
2	CONTROL	1/2
3	IRRI. CONT.	1/2
4	RECEP.	1/2
5	SPARE	1/2
6	TRANSF	1/2
7	VARIABLE FREQUENCY DRIVE	1/2
8	CRI	1/2
9	FUSE	1/2
10	HAND-OFF-AUTO	1/2
11	CR2	1/2
12	120 V	1/2
13	PUMP RUNNING	1/2

	BY	CHECKED
DESIGN	Eric Greve	J. S. Sandhu
DETAILS	Eric Greve	J. S. Sandhu
QUANTITIES	Eric Greve	J. S. Sandhu

STATE OF CALIFORNIA
DEPARTMENT OF TRANSPORTATION

DIVISION OF ENGINEERING SERVICES
ELECTRICAL-MECHANICAL-WATER AND WASTEWATER DESIGN

BRIDGE NO.
POST MILE 24.4/R25.8

ATWATER IRRIGATION WELL

ELECTRICAL EQUIPMENT ENCLOSURE

SHEET **EE-2**

TAEMWW Imperial Rev. 7/10

ORIGINAL SCALE IN INCHES FOR REDUCED PLANS 0 1 2 3

UNIT 3618
PROJECT NUMBER & PHASE 10000004291
EA 414821

DISREGARD PRINTS BEARING EARLIER REVISION DATES → 10/18/10 11/29/10

REVISION DATES (PRELIMINARY STAGE ONLY) SHEET OF

30-MAR-2011 06:25

a41482tu002.dgn

DIST.	COUNTY	ROUTE	POST MILES TOTAL PROJECT	SHEET NO.	TOTAL SHEETS
10	Mer	99	24.4/R25.8	29	45

REGISTERED CIVIL ENGINEER — 11/29/10 DATE

REGISTERED PROFESSIONAL ENGINEER — JEROME R. MARCOTTE — No. C 36844 — Exp. 06/30/12 — CIVIL — STATE OF CALIFORNIA

3-28-11
PLANS APPROVAL DATE

The State of California or its officers or agents shall not be responsible for the accuracy or completeness of electronic copies of this plan sheet.

INDEX OF SHEETS

SHEET NO.	DESCRIPTION
GP	SITE PLAN
	WATER
W-0	NOTES, LEGENDS, AND ABBREVIATIONS
W-1	IRRIGATION WELL PLAN
W-2	DETAILS - 1
W-3	DETAILS - 2
	ELECTRICAL
EE-1	SCHEMATIC DIAGRAM 1
EE-2	ELECTRICAL EQUIPMENT ENCLOSURE

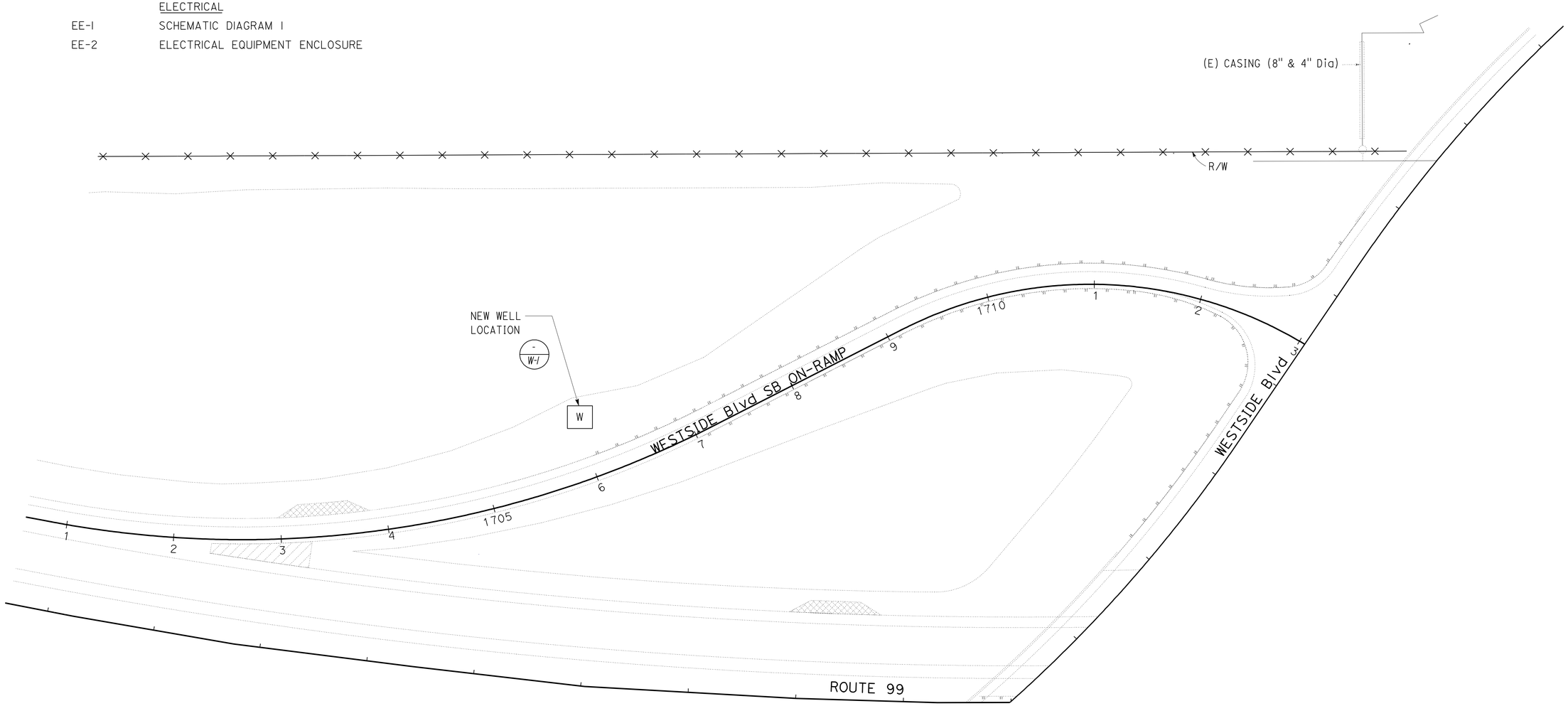

DESIGN SUPERVISOR	DESIGN	BY Andy Quan	CHECKED Jerry Marcotte
DESIGN ENGINEER	DETAILS	BY Andy Quan	CHECKED Jerry Marcotte
	QUANTITIES	BY Andy Quan	CHECKED Jerry Marcotte

STATE OF CALIFORNIA
DEPARTMENT OF TRANSPORTATION

DIVISION OF ENGINEERING SERVICES
ELECTRICAL-MECHANICAL-WATER AND WASTEWATER DESIGN

BRIDGE NO.
POST MILE 24.4/R25.8

ATWATER IRRIGATION WELL

SITE PLAN

SHEET GP

TAEMWW Imperial Rev. 7/10

ORIGINAL SCALE IN INCHES FOR REDUCED PLANS 0 1 2 3

UNIT 3616
PROJECT NUMBER & PHASE 10000004291
EA 414821

DISREGARD PRINTS BEARING EARLIER REVISION DATES → REVISION DATES (PRELIMINARY STAGE ONLY) ~~9-10-10~~ 11-24-10 SHEET OF

30-MAR-2011 06:26

g41482tw001.dgn

DIST.	COUNTY	ROUTE	POST MILES TOTAL PROJECT	SHEET NO.	TOTAL SHEETS
10	Mer	99	24.4/R25.8	30	45

REGISTERED CIVIL ENGINEER — DATE 11/29/10

REGISTERED PROFESSIONAL ENGINEER — JEROME R. MARCOTTE — No. C 36844 — Exp. 06/30/12 — CIVIL — STATE OF CALIFORNIA

3-28-11
PLANS APPROVAL DATE

The State of California or its officers or agents shall not be responsible for the accuracy or completeness of electronic copies of this plan sheet.

ABBREVIATIONS

AB	AGGREGATE BASE	JB	JUNCTION BOX
AC	ASPHALT CONCRETE	lbs	POUNDS
ACP	ASBESTOS CONCRETE PIPE	L/S	LANDSCAPE
AVC	AIR VOLUME CONTROLLER	Max	MAXIMUM
B	BUNG	MBV	MOTORIZED BALL VALVE
Bldg	BUILDING	MH	MANHOLE
C	CONDUIT	Min	MINIMUM
C-C	CENTER TO CENTER	NHT	NATIONAL HOSE THREAD
CI	CAST-IRON	O.C.	ON CENTER
CL	CHAIN LINK	OD	OUTSIDE DIAMETER
Conc	CONCRETE	OG	ORIGINAL GROUND
COTF	CLEANOUT TO FLOOR	P/L	PROPERTY LINE
COTG	CLEANOUT TO GRADE	PCC	PORTLAND CEMENT CONCRETE
CSP	CORRUGATED STEEL PIPE	PG	PRESSURE GAUGE
DBH	DIAMETER AT BREAST HEIGHT	PRV	PRESSURE REGULATING VALVE
DI	DRAINAGE INLET	PS	PRESSURE SWITCH
Dia	DIAMETER	psi	POUNDS PER SQUARE INCH
DP	DRAIN PIPE	PVC	POLYVINYL CHLORIDE
E	ELECTRICAL	PW	POTABLE WATER
(E)	EXISTING	R	RADIUS
EG	EXISTING GRADE	RCP	REINFORCED CONCRETE PIPE
EL	ELEVATION	RPM	REVOLUTIONS PER MINUTE
EP	EDGE OF PAVEMENT	R/W	RIGHT-OF-WAY
FF	FINISH FLOOR	RW	RAW WATER
FG	FINISH GRADE	S	SLOPE
FL	FLOW LINE	Sch	SCHEDULE
FS	FLOAT SWITCH	SD	STORM DRAIN
ft	FEET	SP	SEWAGE PIPE
Galv	GALVANIZED	sq	SQUARE
gpm	GALLONS PER MINUTE	Sta	STATION
GSP	GALVANIZED STEEL PIPE	TBM	TEMPORARY BENCHMARK
HF	HOSE FAUCET	Tot	TOTAL
H	HEIGHT	Typ	TYPICAL
HDPE	HIGH DENSITY POLYETHYLENE	U/G	UNDERGROUND
HP	HORSEPOWER	V	VOLT
Hz	HERTZ	W	WATER
ID	INSIDE DIAMETER	W/O	WITHOUT
IE	INVERT ELEVATION	WP	WATER PIPE
in	INCHES	WSP	WELDED STEEL PIPE

LEGEND

S	SANITARY SEWER
D	DRAIN
RD	RETURN DRAIN
V	VENT
FM	FORCE MAIN
L	LEACH LINES
RW	RAW WATER
PW	POTABLE WATER

1 / W-2	DETAIL / SHEET NUMBER
99.00	NEW GRADE IN FEET
X (100.00)	EXISTING SPOT GRADE IN FEET
	SURFACE DRAINAGE
	ABANDON (E)
	BENCHMARK ELEVATION
℄	CENTERLINE
ø	DIAMETER
	SECTION / ELEVATION LETTER / SHEET NUMBER

GENERAL WORK NOTES

The Contractor shall verify all controlling field dimensions and conditions before ordering or fabricating any materials.

The Contractor shall verify exact location of all underground facilities and utilities prior to start of construction.

No 90° bends allowed on drain or sewer pipe.

Typical Installation

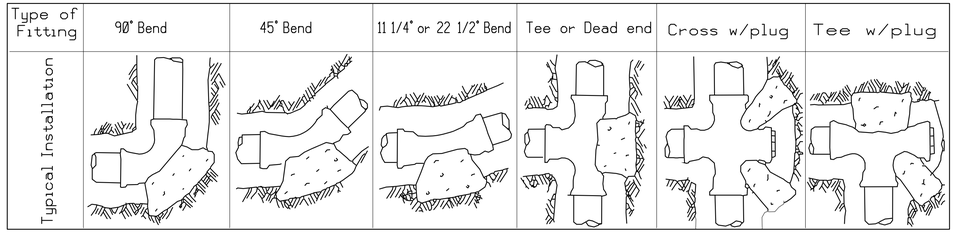

THRUST BLOCK BEARING AREA (SQ. FT.)

Type of Fitting / Size of Pipe	90° Bend	45° Bend	11 1/4° or 22 1/2° Bend	Tee or Dead End	Tee w/ Plug	Cross w/ Plug
4"	2	1	1	2	2	2
6"	4	4	2	4	4	4
8"	7	4	2	5	7	7
10"	12	6	3	8	12	12
12"	16	10	5	12	16	16
14"	20	12	6	14	20	20
16"	27	15	8	18	27	27
18"	45	25	13	32	45	45
24"	65	35	18	46	65	65

PIPE FITTINGS AND VALVES

- CAP, THREADED
- ELBOW, TURNED DOWN
- FLEXIBLE CONNECTOR
- REDUCED PRESSURE BACKFLOW PREVENTER
- REDUCER, CONCENTRIC
- REDUCER, ECCENTRIC
- PRESSURE GAUGE (WITH VALVE AND SNUBBER)
- UNION
- UNION, INSULATING
- VALVE, BALL
- VALVE, CHECK
- VALVE, GATE
- VALVE, SAFETY RELIEF
- VALVE, SOLENOID
- VALVE, PRESSURE REDUCING
- WATER / FLOW METER

DESIGN SUPERVISOR	DESIGN	BY Andy Quan	CHECKED Jerry Marcotte
	DETAILS	BY Kerry Geoffroy	CHECKED Jerry Marcotte
DESIGN ENGINEER	QUANTITIES	BY Andy Quan	CHECKED Jerry Marcotte

STATE OF CALIFORNIA
DEPARTMENT OF TRANSPORTATION

DIVISION OF ENGINEERING SERVICES
ELECTRICAL-MECHANICAL-WATER AND WASTEWATER DESIGN

BRIDGE NO.
POST MILE 24.4/R25.8

ATWATER IRRIGATION WELL

NOTES, LEGENDS & ABBREVIATIONS

SHEET W-0

TAEMWW Imperial Rev. 7/10

ORIGINAL SCALE IN INCHES FOR REDUCED PLANS 0 1 2 3

UNIT 3616
PROJECT NUMBER & PHASE 10000004291
EA 414821

DISREGARD PRINTS BEARING EARLIER REVISION DATES → 9-10-10 11-29-10

REVISION DATES (PRELIMINARY STAGE ONLY) SHEET OF

30-MAR-2011 06:26

a41482tw002.dgn

DIST.	COUNTY	ROUTE	POST MILES TOTAL PROJECT	SHEET NO.	TOTAL SHEETS
10	Mer	99	24.4/R25.8	31	45

REGISTERED CIVIL ENGINEER — 11/29/10 DATE

REGISTERED PROFESSIONAL ENGINEER — JEROME R. MARCOTTE — No. C 36844 — Exp. 06/30/12 — CIVIL — STATE OF CALIFORNIA

3-28-11
PLANS APPROVAL DATE

The State of California or its officers or agents shall not be responsible for the accuracy or completeness of electronic copies of this plan sheet.

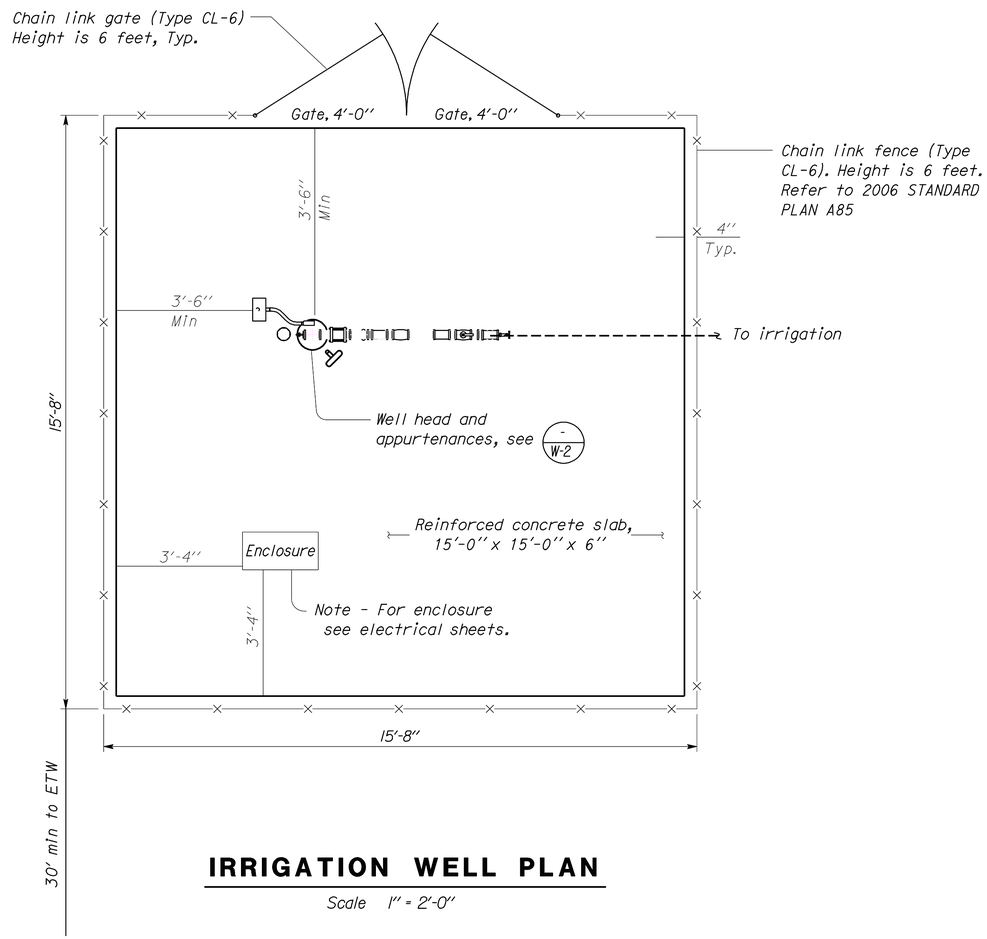

IRRIGATION WELL PLAN

Scale 1" = 2'-0"

DESIGN SUPERVISOR	DESIGN	BY Andy Quan	CHECKED Jerry Marcotte
DESIGN ENGINEER	DETAILS	BY Andy Quan	CHECKED Jerry Marcotte
	QUANTITIES	BY Andy Quan	CHECKED Jerry Marcotte

STATE OF CALIFORNIA
DEPARTMENT OF TRANSPORTATION

DIVISION OF ENGINEERING SERVICES
ELECTRICAL-MECHANICAL-WATER AND WASTEWATER DESIGN

BRIDGE NO.
POST MILE 24.4/R25.8

ATWATER IRRIGATION WELL

IRRIGATION WELL PLAN

SHEET **W-1**

TAEMWW Imperial Rev. 7/10

ORIGINAL SCALE IN INCHES FOR REDUCED PLANS 0 1 2 3

UNIT 3616
PROJECT NUMBER & PHASE 10000004291
EA 414821

DISREGARD PRINTS BEARING EARLIER REVISION DATES → 9-10-10 11-24-10

REVISION DATES (PRELIMINARY STAGE ONLY) SHEET OF

30-MAR-2011 06:26

a41482tw003.dgn

DIST.	COUNTY	ROUTE	POST MILES TOTAL PROJECT	SHEET NO.	TOTAL SHEETS
10	Mer	99	24.4/R25.8	32	45

REGISTERED CIVIL ENGINEER — 11/29/10 DATE

REGISTERED PROFESSIONAL ENGINEER — JEROME R. MARCOTTE — No. C 36844 — Exp. 06/30/12 — CIVIL — STATE OF CALIFORNIA

3-28-11
PLANS APPROVAL DATE

The State of California or its officers or agents shall not be responsible for the accuracy or completeness of electronic copies of this plan sheet.

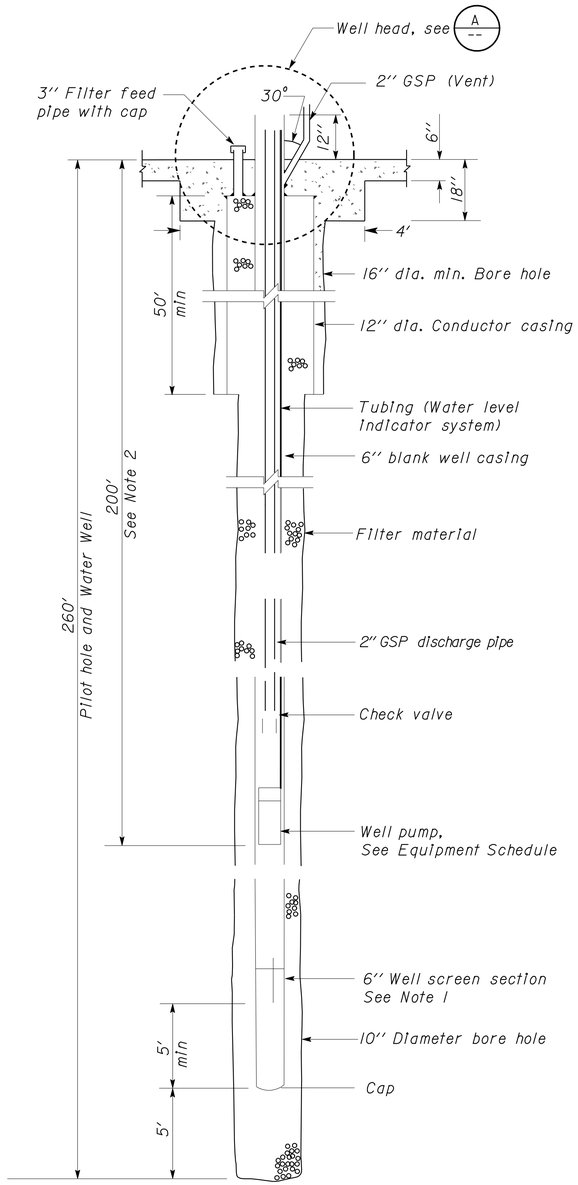

WATER WELL - SECTION

NO SCALE

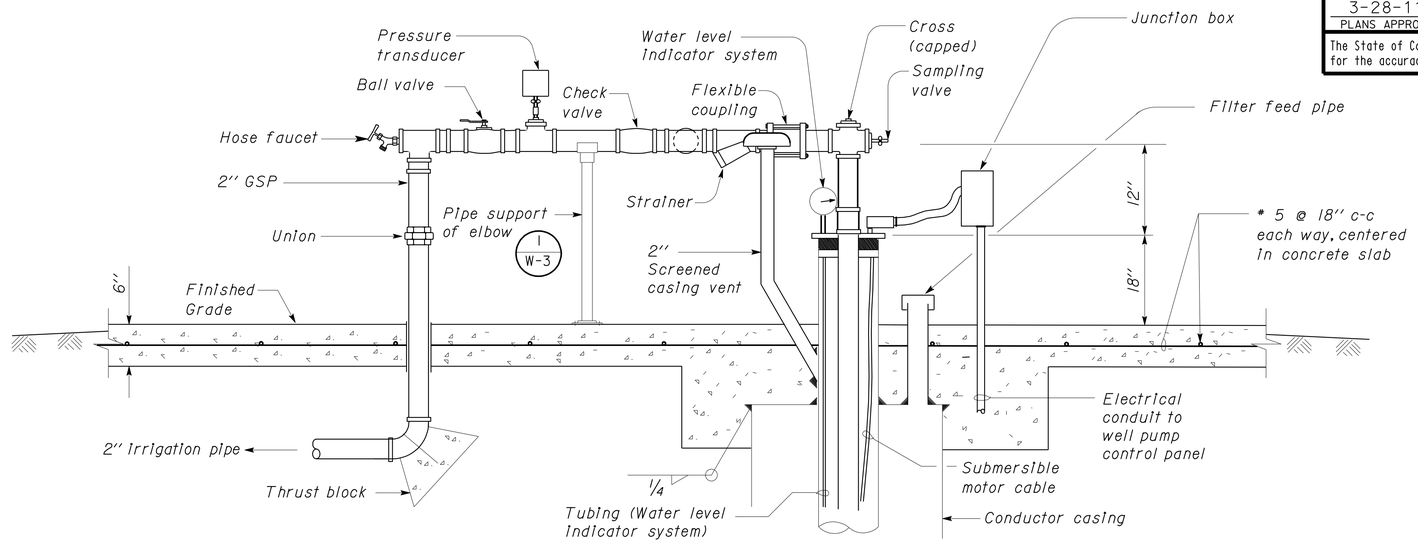

ELEVATION

A WELL HEAD

NO SCALE

EQUIPMENT SCHEDULE

EQUIPMENT	SPEED (RPM)	HP	VOLTS	PHASE	PUMPING RATE (gpm)	TOTAL DYNAMIC HEAD (ft)
SUBMERSIBLE WELL PUMP	3450	5.0	240	3	24	460
					30	430
					35	350

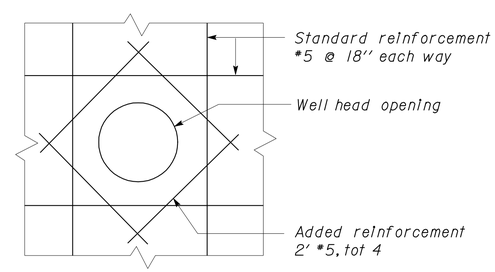

WELL OPENING REINFORCEMENT

NO SCALE

Notes:

1. Exact locations and lengths of well screen sections shall be field determined.
2. Actual depth of well pump shall be determined from on-site well testing. For bidding purposes, use depth shown.

	BY	CHECKED
DESIGN	Andy Quan	Jerry Marcotte
DETAILS	Kerry Geoffroy	Jerry Marcotte
QUANTITIES	Andy Quan	Jerry Marcotte

STATE OF CALIFORNIA DEPARTMENT OF TRANSPORTATION

DIVISION OF ENGINEERING SERVICES
ELECTRICAL-MECHANICAL-WATER AND WASTEWATER DESIGN

BRIDGE NO.
POST MILE 24.4/R25.8

ATWATER IRRIGATION WELL

DETAILS - 1

SHEET W-2

TAEMWW Imperial Rev. 7/10

ORIGINAL SCALE IN INCHES FOR REDUCED PLANS 0 1 2 3

UNIT 3616
PROJECT NUMBER & PHASE 10000004291
EA 414821

DISREGARD PRINTS BEARING EARLIER REVISION DATES → 9-10-10 11-24-10

REVISION DATES (PRELIMINARY STAGE ONLY) SHEET OF

30-MAR-2011 06:26

a41482tw004.dgn

DIST.	COUNTY	ROUTE	POST MILES TOTAL PROJECT	SHEET NO.	TOTAL SHEETS
10	Mer	99	24.4/R25.8	33	45

REGISTERED CIVIL ENGINEER — 11/29/10 DATE

REGISTERED PROFESSIONAL ENGINEER — JEROME R. MARCOTTE — No. C 36844 — Exp. 06/30/12 — CIVIL — STATE OF CALIFORNIA

3-28-11
PLANS APPROVAL DATE

The State of California or its officers or agents shall not be responsible for the accuracy or completeness of electronic copies of this plan sheet.

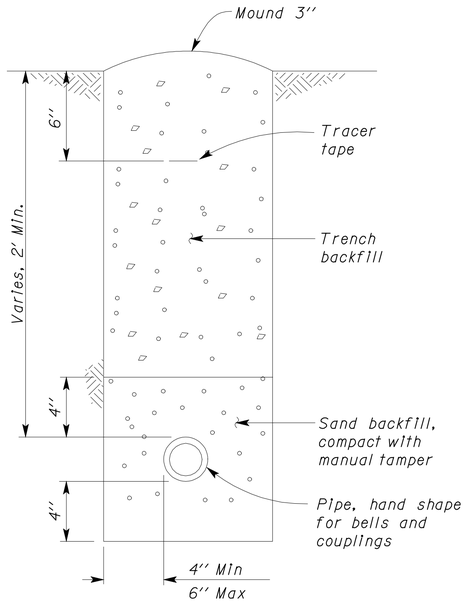

PIPE UNDER EARTH

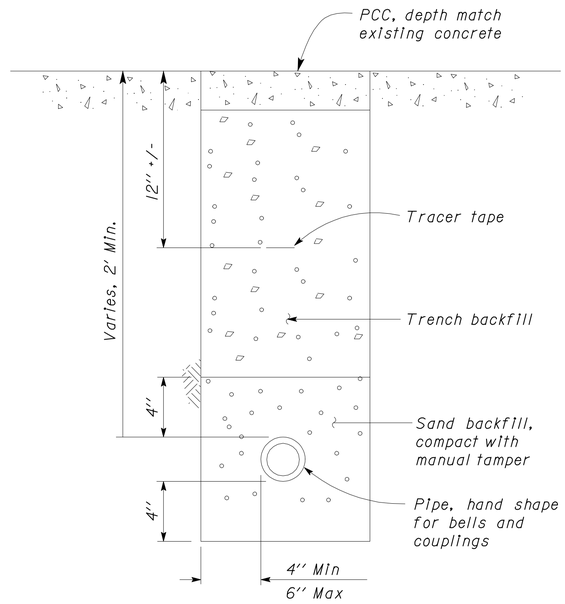

PIPE UNDER PCC

2 WATER PIPE
NO SCALE

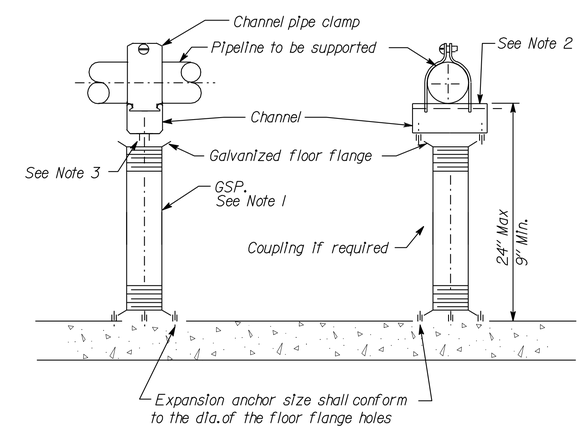

1 PIPE SUPPORT
NO SCALE

NOTES:

1. Galavanized steel pipe diameter shall be equal to pipe supported.
2. Channel shall be Uni-Strut, Kin-Line or equal.
3. Bolt channel to floor flange using bolt with the same diameter as the floor flange bolt hole.
4. For supports less than 9'' high use Uni-Strut, Kin-Line or equal.
5. All fasteners to concrete shall be expansion anchorage devices with Galvanized Threaded Stud, Hex Nut and flat washer.

	BY	CHECKED
DESIGN	Andy Quan	Jerry Marcotte
DETAILS	Kerry Geoffroy	Jerry Marcotte
QUANTITIES	Andy Quan	Jerry Marcotte

STATE OF CALIFORNIA
DEPARTMENT OF TRANSPORTATION

DIVISION OF ENGINEERING SERVICES
ELECTRICAL-MECHANICAL-WATER AND WASTEWATER DESIGN

BRIDGE NO.
POST MILE 24.4/R25.8

ATWATER IRRIGATION WELL

DETAILS - 2

SHEET **W-3**

TAEMWW Imperial Rev. 7/10

ORIGINAL SCALE IN INCHES FOR REDUCED PLANS 0 1 2 3

UNIT 3616
PROJECT NUMBER & PHASE 10000004291
EA 414821

DISREGARD PRINTS BEARING EARLIER REVISION DATES → 9-10-10 11-24-10

REVISION DATES (PRELIMINARY STAGE ONLY) SHEET OF

30-MAR-2011 06:26

a41482tw005.dgn

DIST	COUNTY	ROUTE	POST MILES TOTAL PROJECT	SHEET NO.	TOTAL SHEETS
10	Mer	99	24.4/R25.8	34	45

REGISTERED CIVIL ENGINEER

June 5, 2009
PLANS APPROVAL DATE

REGISTERED PROFESSIONAL ENGINEER Glenn DeCou No. C34547 Exp. 9-30-09 CIVIL STATE OF CALIFORNIA

The State of California or its officers or agents shall not be responsible for the accuracy or completeness of electronic copies of this plan sheet.

To accompany plans dated 3-28-11

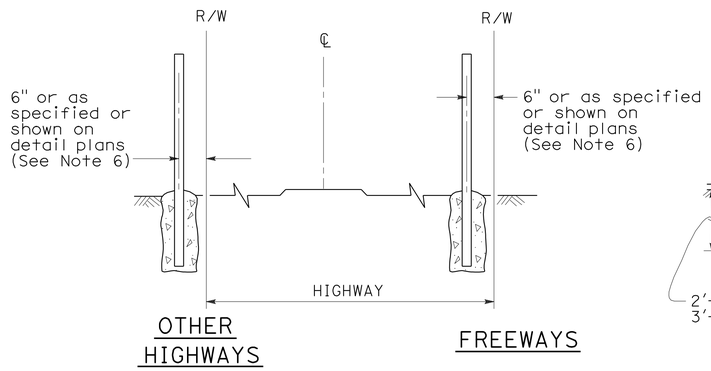

FENCE LOCATION

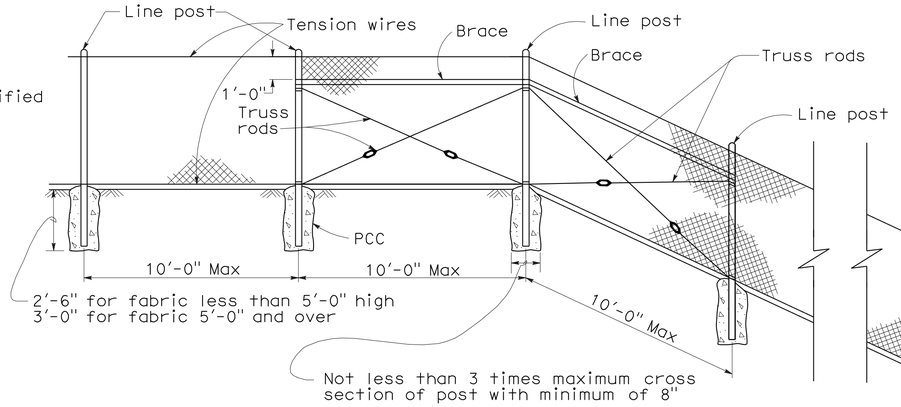

CHAIN LINK FENCE ON SHARP BREAK IN GRADE

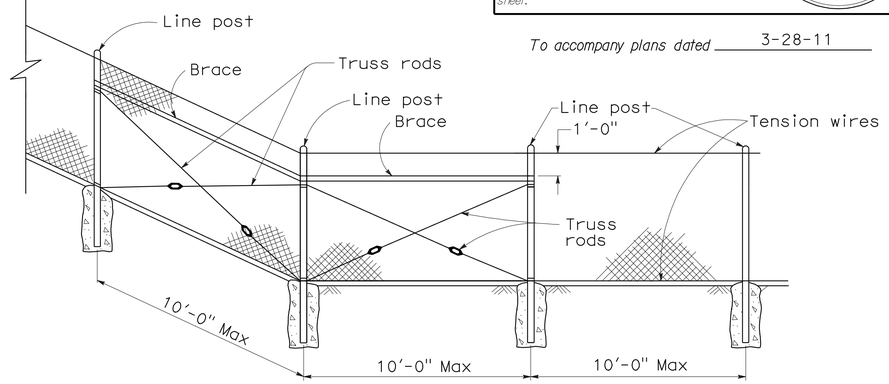

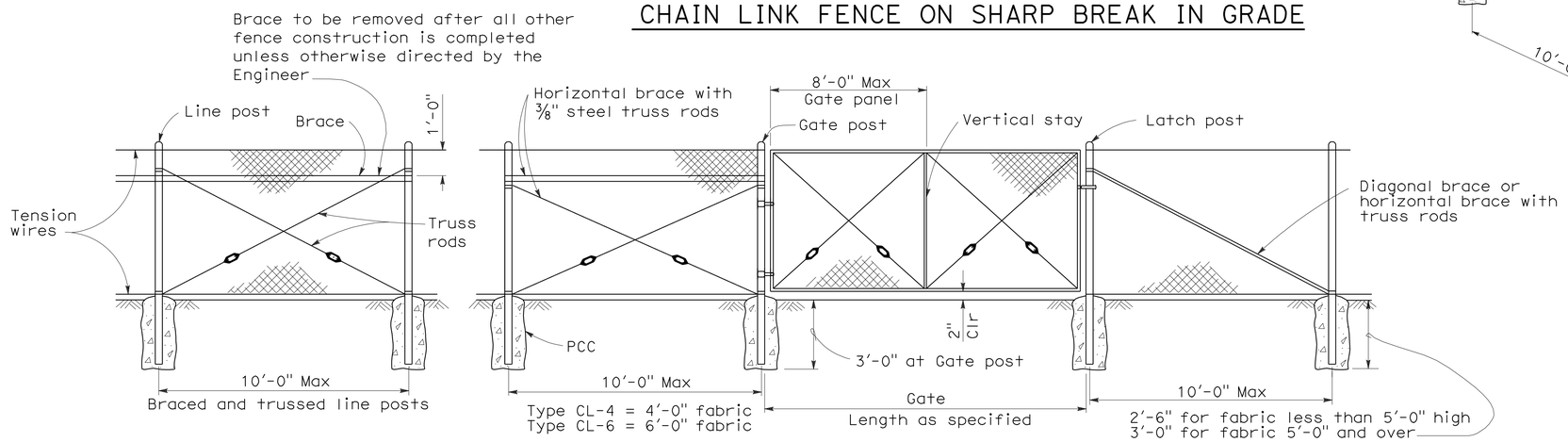

CHAIN LINK GATE INSTALLATION

GATE POST			
FENCE HEIGHT	GATE WIDTHS	NOMINAL ID	WEIGHT PER FOOT
6'-0" and Less	Up thru 6'-0"	2½"	4.95 LB
	Over 6'-0" thru 12'-0"	4"	10.79 LB
	Over 12'-0" thru 18'-0"	5"	14.62 LB
	Over 18'-0" to 24'-0" Max	6"	18.97 LB
Over 6'-0"	Up thru 6'-0"	3"	7.58 LB
	Over 6'-0" thru 12'-0"	5"	14.62 LB
	Over 12'-0" thru 18'-0"	6"	18.97 LB
	Over 18'-0" to 24'-0" Max	8"	28.55 LB

Above post dimensions and weights are minimums. Larger sizes may be used on approval of the Engineer.

NOTES:

1. The below table shows examples of post and brace sections which may comply with the Specifications.
2. Sections shown in the tables must also comply with the strength requirements and other provisions of the Specifications.
3. Other sections which comply with the strength requirements and other provisions of the Specifications may be used on approval of the Engineer.
4. Options exercised shall be uniform on any one project.
5. Dimensions shown are nominal.
6. Offset to be 2'-0" at monument locations, measured at right angles to R/W lines. Taper to achieve offset to be at least 20'-0" long.

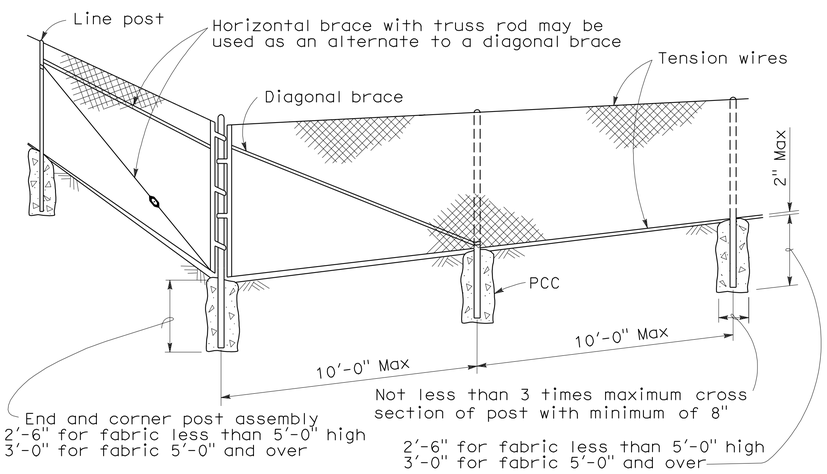

CORNER POST

TYPICAL MEMBER DIMENSIONS (See Notes)											
FENCE HEIGHT	LINE POSTS			END, LATCH & CORNER POSTS			BRACES				
	ROUND ID	H	ROLL FORMED	ROUND ID	ROLL FORMED		ROUND ID	H	ROLL FORMED		
6' & less	1½"	1⅞" × 1⅝"	1⅞" × 1⅝"	2"	3½" × 3½"	2" × 1¾"	1¼"	1½" × 1 5/16"	1⅝" × 1¼"	1¾" × 1¼"	
Over 6'	2"	2¼" × 2"	2" × 1¾"	2½"	3½" × 3½"	2½" × 2½"	1¼"	1½" × 1 5/16"	1⅝" × 1¼"	1¾" × 1¼"	

STATE OF CALIFORNIA
DEPARTMENT OF TRANSPORTATION

CHAIN LINK FENCE

NO SCALE

RSP A85 DATED JUNE 5, 2009 SUPERSEDES STANDARD PLAN A85
DATED MAY 1, 2006 - PAGE 111 OF THE STANDARD PLANS BOOK DATED MAY 2006.

REVISED STANDARD PLAN RSP A85

2006 REVISED STANDARD PLAN RSP A85

5-7-09

DIST	COUNTY	ROUTE	POST MILES TOTAL PROJECT	SHEET NO.	TOTAL SHEETS
10	Mer	99	24.4/R25.8	35	45

LICENSED LANDSCAPE ARCHITECT

June 5, 2009
PLANS APPROVAL DATE

LICENSED LANDSCAPE ARCHITECT — Gregory A. Balzer — 2516 — 10 January 2-28-11 Renewal Date — 5-14-09 Date — STATE OF CALIFORNIA

The State of California or its officers or agents shall not be responsible for the accuracy or completeness of electronic copies of this plan sheet.

To accompany plans dated 3-28-11

A

AB	aggregate base
ABS	acrylonitrile-butadiene-styrene
AC	asphalt concrete
Adj	adjacent/adjustable
AIC	auxiliary irrigation controller
Alt	alternative
AMEND	amendment
ARV	air release valve
AUTO	automatic
AUX	auxiliary
AVB	atmospheric vacuum breaker

B

B&B	balled and burlapped
B/B	brass/bronze
B/B/PL	brass/bronze/plastic
B/PL	brass/plastic
BFM	bonded fiber matrix
Bit Ctd	bituminous coated
BP	booster pump
BPA	backflow preventer assembly
BPAE	backflow preventer assembly in enclosure
BPE	backflow preventer enclosure
BV	ball valve

C

CAP	corrugated aluminum pipe
CARV	combination air release valve
CCA	cam coupler assembly
CEC	controller enclosure cabinet
CHDPE	corrugated high density polyethylene
CL	chain link
CNC	control and neutral conductors
Conc	concrete
Cond	conduit
CSP	corrugated steel pipe
CST	center strip
CV	check valve

D

Dia	diameter
DIP	ductile iron pipe
DN	diameter nominal

E

EA	each
Elect	electric/electrical
Elev	elevation
ENCL	enclosure
EP	edge of pavement
ES	edge of shoulder
EST	end strip
ESTB	establishment
ETW	edge of traveled way

F

F	full circle
F/P	full/part circle
FAU	filter assembly unit
FCV	flow control valve
FERT	fertilizer
FG	finished grade
FIPT	female iron pipe thread
FIS	fertilizer injector system
FL	flow line
FM	flow monitor
FS	flow sensor
Ft	foot/feet
FV	flush valve

G

GAL	Gallon(s)
Galv	galvanized
GARV	garden valve
GPH	gallons per hour
GPM	gallons per minute
GSP	galvanized steel pipe
GV	gate valve

H

H	half circle
HB	hose bib
HDPE	high density polyethylene
HP	horsepower/hinge point
HPL	high pressure line
Hwy	highway

I

IC	irrigation controller
ICC	irrigation controller(s) in controller enclosure cabinet
ID	inside diameter
In	inches
IFS	irrigation filtration system
IPS	iron pipe size
IPT	iron pipe thread
Irr	irrigation

L

L	length
LF	linear foot

M

Max	maximum
MBGR	metal beam guard railing
MCV	manual control valve
MIC	master irrigation controller
Min	minimum
MIPT	male iron pipe thread
Misc	miscellaneous
Mtl	material
MVP	maintenance vehicle pullout

N

NCN	no common name
NL	nozzle line
No.	number
NPT	national pipe thread

O

O/C	on center
OD	outside diameter
Oz	ounce

P

P	part circle
PB	pull box
PCC	portland cement concrete
PE	polyethylene
Pkt	packet
PL	plastic
PLT	plant/planting
PLT ESTB	plant establishment
PM	post mile
PR	pressure rated
PRLV	pressure relief valve
PSFM	polymer stabilized fiber matrix
PSI	pounds per square inch
PRV	pressure reducing valve
PVC	polyvinyl chloride
Pvmt	pavement

Q

Q	quarter circle
QCV	quick coupling valve

R

R	radius
RCP	reinforced concrete pipe
RCV	remote control valve
RCVM	remote control valve (master)
RCVMF	remote control valve (master) w/ flow meter
RCW	recycled/reclaimed water
RECP	rolled erosion control product
REQ	required
R/W	right of way

S

S	slip
SCC	sprinkler control conduit
SCH	schedule
SF	state-furnished
Shld	shoulder
SQFT	square foot/feet
SQYD	square yard(s)
SST	side strip
Sta	station
Std	standard
SW	sidewalk/sound wall

T

T	third circle/thread
TLS	truck loading standpipe
TQ	three quarter circle
TRM	turf reinforcement mat
TRVD	traveled
TT	two third circle
Typ	typical

U

UG	underground

V

VAU	valve assembly unit

W

W	width
W/	with
WM	water meter
WS	wye strainer
WSP	welded steel pipe
WWM	welded wire mesh

NOTE:

FOR ADDITIONAL ABBREVIATIONS, SEE STANDARD PLANS A10A AND A10B.

STATE OF CALIFORNIA
DEPARTMENT OF TRANSPORTATION

PLANTING AND IRRIGATION ABBREVIATIONS

NO SCALE

RSP H1 DATED JUNE 5, 2009 SUPERSEDES STANDARD PLAN H1
DATED MAY 1, 2006 - PAGE 201 OF THE STANDARD PLANS BOOK DATED MAY 2006.

REVISED STANDARD PLAN RSP H1

2006 REVISED STANDARD PLAN RSP H1

DIST	COUNTY	ROUTE	POST MILES TOTAL PROJECT	SHEET NO.	TOTAL SHEETS
10	Mer	99	24.4/R25.8	36	45

LICENSED LANDSCAPE ARCHITECT

June 5, 2009
PLANS APPROVAL DATE

The State of California or its officers or agents shall not be responsible for the accuracy or completeness of electronic copies of this plan sheet.

Gregory A. Balzer 2016 — 10 expiration date — 2-28-11 renewal date — 5-14-09 date — LICENSED LANDSCAPE ARCHITECT — STATE OF CALIFORNIA

To accompany plans dated 3-28-11

EXISTING	PROPOSED	ITEM DESCRIPTION
		WATER METER (WM)
		BACKFLOW PREVENTER ASSEMBLY (BPA)
		BACKFLOW PREVENTER ASSEMBLY IN ENCLOSURE (BPAE)
		BACKFLOW PREVENTER ENCLOSURE (BPE)
		BOOSTER PUMP (BP)
		TRUCK LOADING STANDPIPE (TLS)
FS	FS	FLOW SENSOR (FS)
X	X	MASTER IRRIGATION CONTROLLER (MIC)
		AUXILIARY IRRIGATION CONTROLLER (AIC)
		IRRIGATION CONTROLLER (IC)/ IRRIGATION CONTROLLER (IC) (BATTERY) IRRIGATION CONTROLLER (IC) (SOLAR)
		IRRIGATION CONTROLLER(S) IN CONTROLLER ENCLOSURE CABINET (ICC)
		CONTROL AND NEUTRAL CONDUCTORS (CNC)
SCC	SCC	SPRINKLER CONTROL CONDUIT (SCC)
		IRRIGATION CROSSOVER
		EXTEND IRRIGATION CROSSOVER
		IRRIGATION SLEEVE
dip	DIP	DUCTILE IRON PIPE (SUPPLY LINE) (MAIN) (DIP)
		GALVANIZED STEEL PIPE (SUPPLY LINE) (MAIN) (GSP)
		GALVANIZED STEEL PIPE (SUPPLY LINE) (LATERAL) (GSP)
		PLASTIC PIPE (PR 200) (SUPPLY LINE) (MAIN)
		PLASTIC PIPE (PR 200) (SUPPLY LINE) (LATERAL)
		PLASTIC PIPE (IRRIGATION LINE)
		REMOTE CONTROL VALVE (RCV) REMOTE CONTROL VALVE (MASTER) (RCVM) REMOTE CONTROL VALVE (MASTER) W/FLOW METER (RCVMF)
		MANUAL CONTROL VALVE (MCV)
		VALVE ASSEMBLY UNIT (VAU)
		WYE STRAINER (WS)
		FILTER ASSEMBLY UNIT (FAU)
		GATE VALVE (GV)
		BALL VALVE (BV)

EXISTING	PROPOSED	ITEM DESCRIPTION
		QUICK COUPLING VALVE (QCV)
		CAM COUPLER ASSEMBLY (CCA)
		PRESSURE REDUCING VALVE (PRV)
		PRESSURE RELIEF VALVE (PRLV)
		FLOW CONTROL VALVE (FCV)
		COMBINATION AIR RELEASE VALVE (CARV)
		CHECK VALVE (CV)
		FLUSH VALVE (FV)
		NOZZLE LINE W/TURNING UNION
		IRRIGATION SYSTEM
		IRRIGATION SYSTEM TO BE REMOVED
		CHAIN LINK GATE
		QUICK COUPLING VALVE W/SPRINKLER PROTECTOR
3	3	SPRINKLER W/SPRINKLER PROTECTOR
	C	CONNECT TO EXISTING SYSTEM
		CAP
		CAP EXISTING

VALVE CODE

RCV SIZE
IRRIGATION CONTROLLER
CONTROLLER STATION
VALVE IN PARALLEL (IF APPLICABLE)
GPM
QUANTITY OF SPRINKLERS (WHEN SHOWN)

* 2½"-A-2b-40 -60

MCV SIZE
VALVE NUMBER
GPM
QUANTITY OF TYPE SPRINKLERS (WHEN SHOWN)

* 2"-3-30 -50

* VALVE CODES FOR EXISTING VALVES ARE SHOWN IN A DASHED ENCLOSURE.

STATE OF CALIFORNIA
DEPARTMENT OF TRANSPORTATION

PLANTING AND IRRIGATION SYMBOLS

NO SCALE

RSP H2 DATED JUNE 5, 2009 SUPERSEDES RSP H2 DATED MARCH 7, 2008 AND STANDARD PLAN H2 DATED MAY 1, 2006 - PAGE 202 OF THE STANDARD PLANS BOOK DATED MAY 2006.

REVISED STANDARD PLAN RSP H2

2006 REVISED STANDARD PLAN RSP H2

5-11-09

DIST	COUNTY	ROUTE	POST MILES TOTAL PROJECT	SHEET NO.	TOTAL SHEETS
10	Mer	99	24.4/R25.8	37	45

LICENSED LANDSCAPE ARCHITECT

June 5, 2009
PLANS APPROVAL DATE

The State of California or its officers or agents shall not be responsible for the accuracy or completeness of electronic copies of this plan sheet.

LICENSED LANDSCAPE ARCHITECT Gregory A. Balzer 2576 STATE OF CALIFORNIA
10-01-09 (Renewal Date)
2-28-11 (Renewal Date)
5-14-09 Date

To accompany plans dated 3-28-11

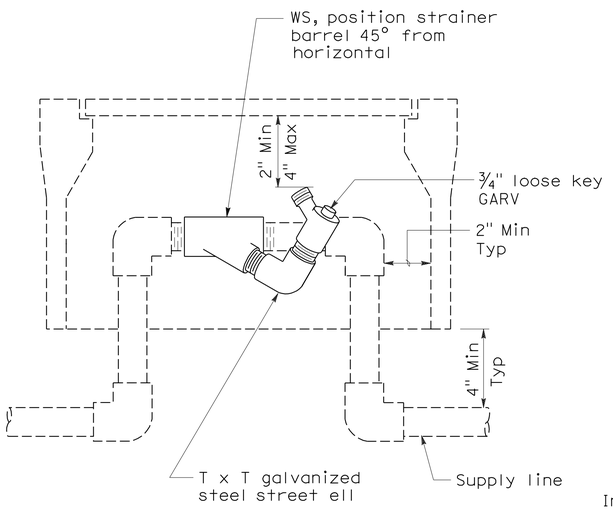

ELEVATION
WYE STRAINER

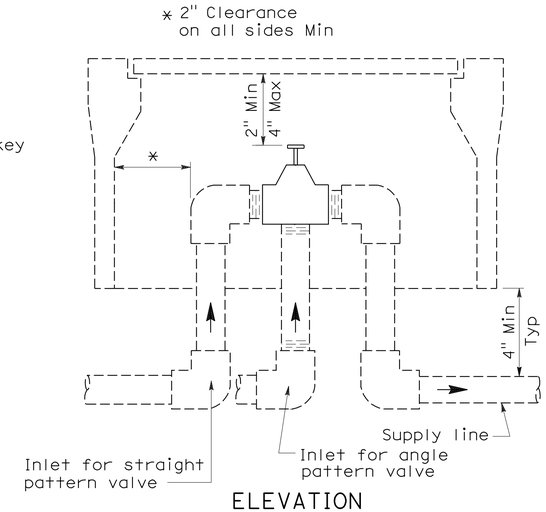

ELEVATION
VALVE

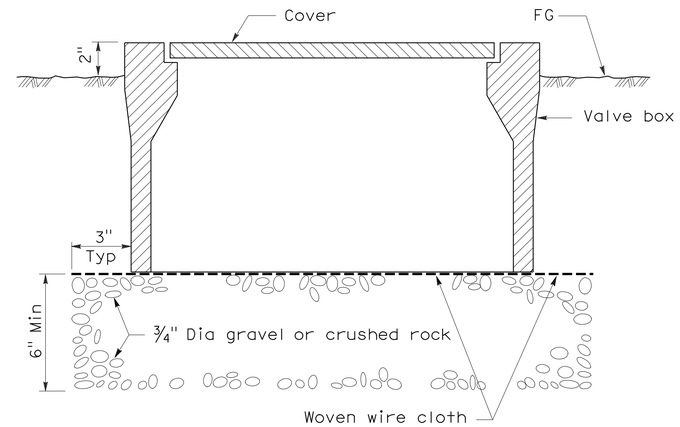

SECTION
VALVE BOX

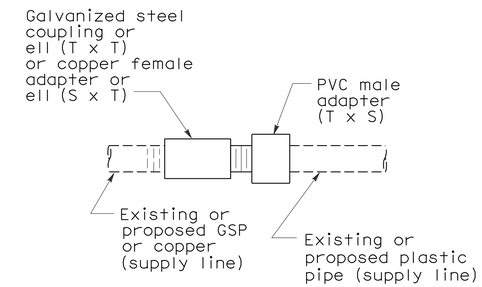

PLAN
GALVANIZED OR COPPER PIPE CONNECTION TO PLASTIC PIPE

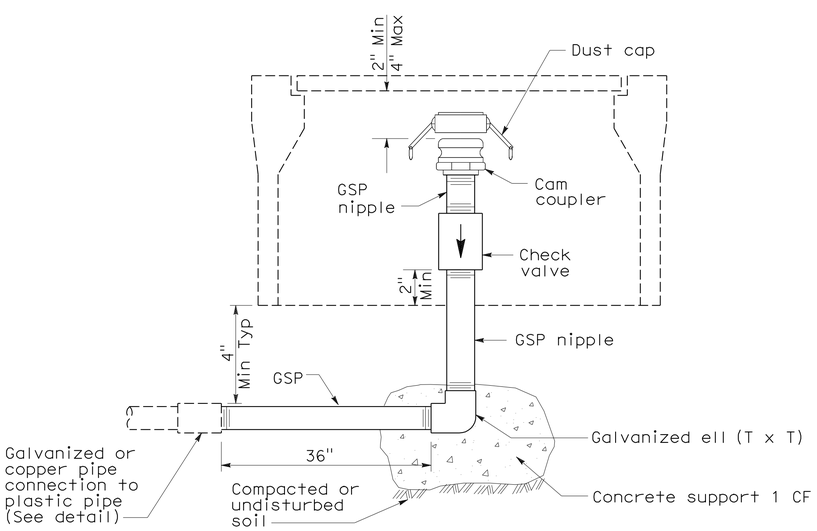

ELEVATION
CAM COUPLER ASSEMBLY

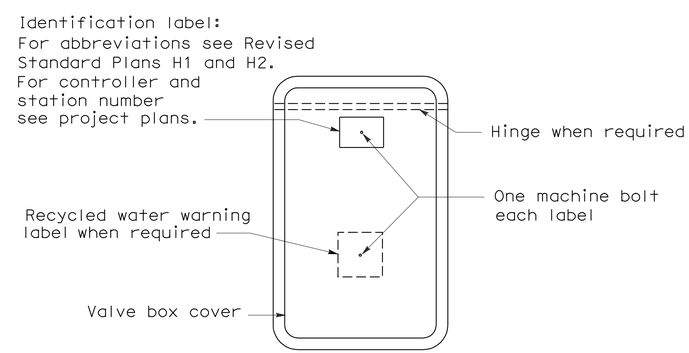

PLAN

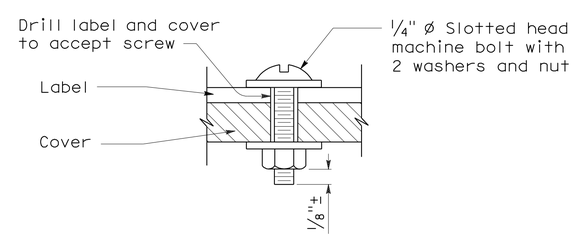

SECTION
VALVE BOX IDENTIFICATION

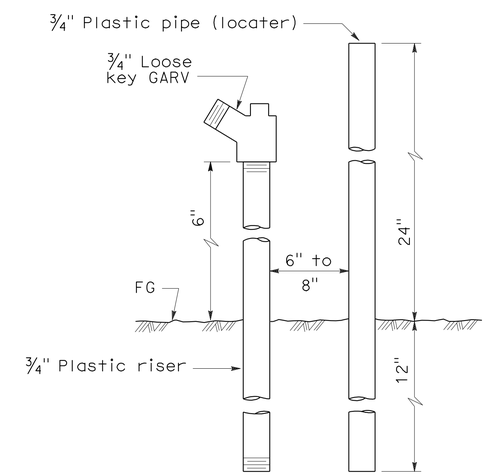

ELEVATION
FLUSH VALVE

STATE OF CALIFORNIA
DEPARTMENT OF TRANSPORTATION

PLANTING AND IRRIGATION DETAILS

NO SCALE

RSP H7 DATED JUNE 5, 2009 SUPERSEDES STANDARD PLAN H7
DATED MAY 1, 2006 - PAGE 207 OF THE STANDARD PLANS BOOK DATED MAY 2006.

REVISED STANDARD PLAN RSP H7

2006 REVISED STANDARD PLAN RSP H7

5-28-09

DIST	COUNTY	ROUTE	POST MILES TOTAL PROJECT	SHEET NO.	TOTAL SHEETS
10	Mer	99	24.4/R25.8	38	45

Randell D. Hiatt
REGISTERED CIVIL ENGINEER

June 6, 2008
PLANS APPROVAL DATE

REGISTERED PROFESSIONAL ENGINEER
Randell D. Hiatt
No. C50200
Exp. 6-30-09
CIVIL
STATE OF CALIFORNIA

The State of California or its officers or agents shall not be responsible for the accuracy or completeness of electronic copies of this plan sheet.

To accompany plans dated 3-28-11

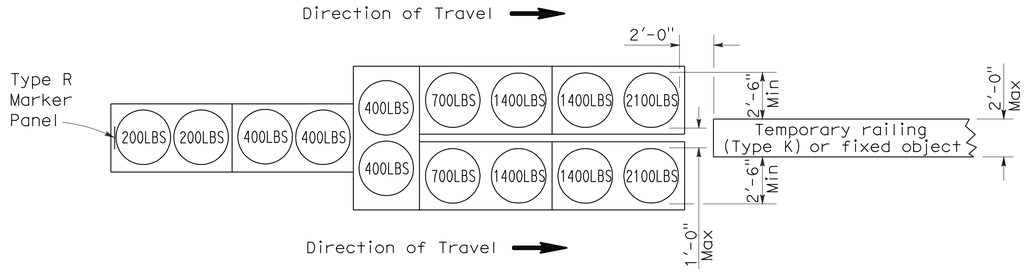

ARRAY 'TU14'

Approach speed 45 mph or more

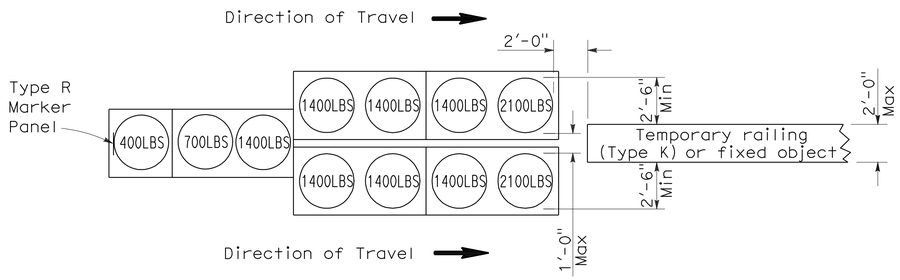

ARRAY 'TU11'

Approach speed less than 45 mph

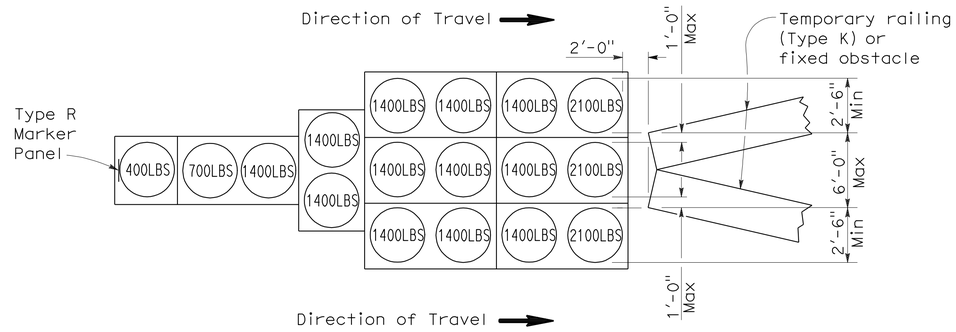

ARRAY 'TU17'

Approach speed less than 45 mph

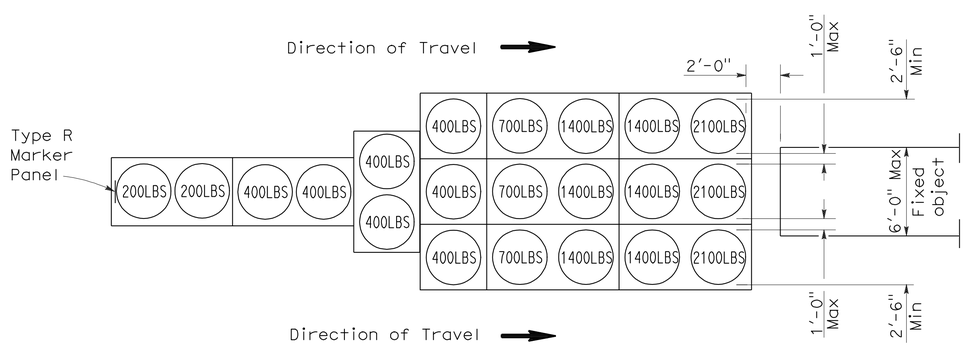

ARRAY 'TU21'

Approach speed 45 mph or more

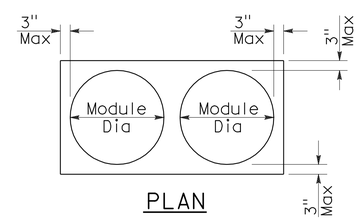

PLAN

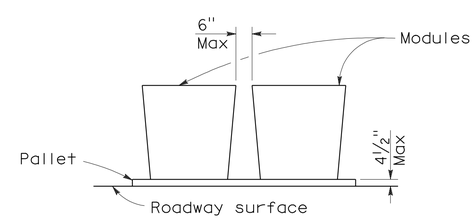

ELEVATION

CRASH CUSHION PALLET DETAIL

See Note 7

NOTES:

1. (XXX) Indicates sand filled module location and weight of sand in pounds for each module. Module spacing is based on the greater diameter of the module.
2. All sand weights are nominal.
3. Temporary crash cushion arrays shall not encroach on the traveled way.
4. Place the top of Type R marker panel 1" below the module lid.
5. Refer to Standard Plan A73B for marker details.
6. Approach speeds indicated conform to NCHRP 350 Report criteria.
7. Use of pallets is optional.

STATE OF CALIFORNIA
DEPARTMENT OF TRANSPORTATION

TEMPORARY CRASH CUSHION, SAND FILLED (UNIDIRECTIONAL)

NO SCALE

RSP T1A DATED JUNE 6, 2008 SUPERSEDES STANDARD PLAN T1A
DATED MAY 1, 2006 - PAGE 211 OF THE STANDARD PLANS BOOK DATED MAY 2006.

REVISED STANDARD PLAN RSP T1A

2006 REVISED STANDARD PLAN RSP T1A

DIST	COUNTY	ROUTE	POST MILES TOTAL PROJECT	SHEET NO.	TOTAL SHEETS
10	Mer	99	24.4/R25.8	39	45

Randell D. Hiatt
REGISTERED CIVIL ENGINEER

June 6, 2008
PLANS APPROVAL DATE

REGISTERED PROFESSIONAL ENGINEER
Randell D. Hiatt
No. C50200
Exp. 6-30-09
CIVIL
STATE OF CALIFORNIA

The State of California or its officers or agents shall not be responsible for the accuracy or completeness of electronic copies of this plan sheet.

To accompany plans dated 3-28-11

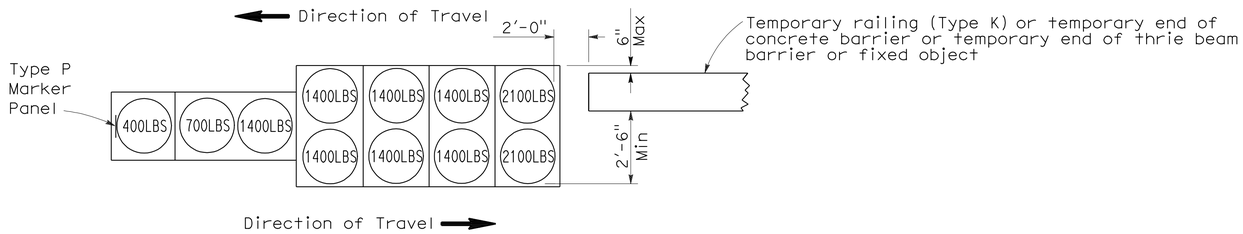

ARRAY 'TB11'

Approach speed less than 45 mph

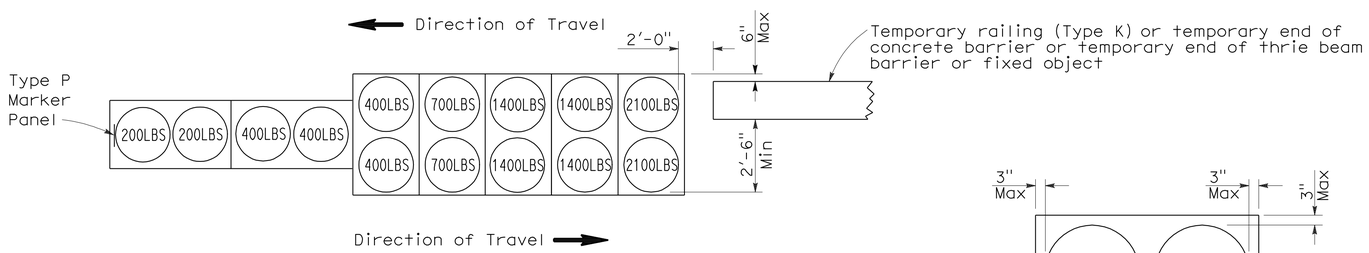

ARRAY 'TB14'

Approach speed 45 mph or more

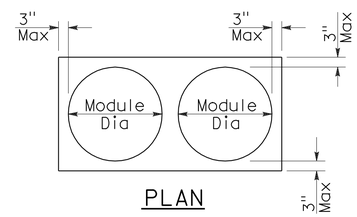

PLAN

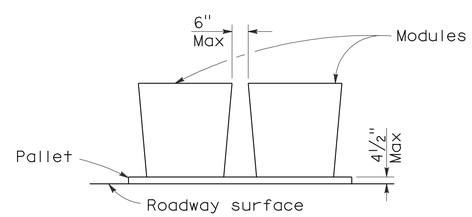

ELEVATION

CRASH CUSHION PALLET DETAIL

See Note 7

NOTES:

1. (XXX) Indicates sand filled module location and weight of sand in pounds for each module. Module spacing is based on the greater diameter of the module.
2. All sand weights are nominal.
3. Temporary crash cushion arrays shall not encroach on the traveled way.
4. Place the Type P marker panel so that the bottom of the panel rests upon the pallet.
5. Refer to Standard Plan A73B for marker details.
6. Approach speeds indicated conform to NCHRP 350 Report criteria.
7. Use of pallets is optional.

STATE OF CALIFORNIA
DEPARTMENT OF TRANSPORTATION

TEMPORARY CRASH CUSHION, SAND FILLED (BIDIRECTIONAL)

NO SCALE

RSP T1B DATED JUNE 6, 2008 SUPERSEDES STANDARD PLAN T1B
DATED MAY 1, 2006 - PAGE 212 OF THE STANDARD PLANS BOOK DATED MAY 2006.

REVISED STANDARD PLAN RSP T1B

2006 REVISED STANDARD PLAN RSP T1B

5-15-08

DIST	COUNTY	ROUTE	POST MILES TOTAL PROJECT	SHEET NO.	TOTAL SHEETS
10	Mer	99	24.4/R25.8	40	45

Randell D. Hiatt
REGISTERED CIVIL ENGINEER

June 6, 2008
PLANS APPROVAL DATE

REGISTERED PROFESSIONAL ENGINEER
Randell D. Hiatt
No. C50200
Exp. 6-30-09
CIVIL
STATE OF CALIFORNIA

The State of California or its officers or agents shall not be responsible for the accuracy or completeness of electronic copies of this plan sheet.

To accompany plans dated 3-28-11

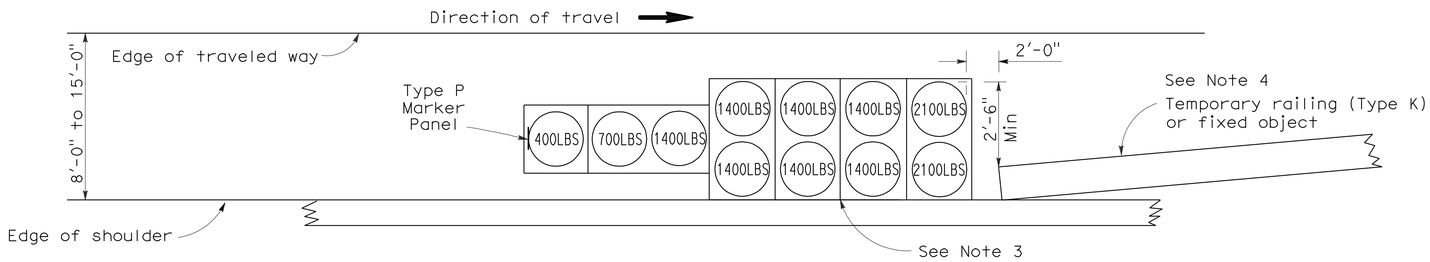

ARRAY 'TS11'

Approach speed less than 45 mph
See Note 9

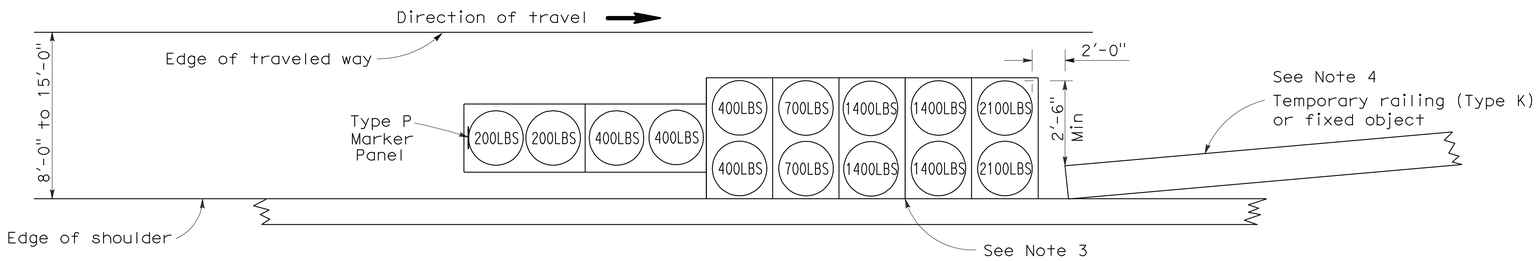

ARRAY 'TS14'

Approach speed 45 mph or more
See Note 9

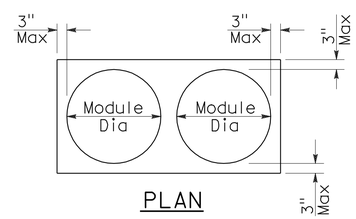

PLAN

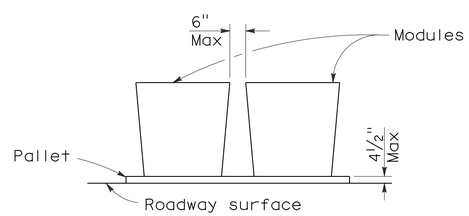

ELEVATION

CRASH CUSHION PALLET DETAIL

See Note 11

NOTES:

1. (XXX) Indicates sand filled module location and weight of sand in pounds for each module. Module spacing is based on the greater diameter of the module.
2. All sand weights are nominal.
3. The temporary crash cushion arrays shown on this plan shall be used only in locations where there will be traffic on one side of the temporary crash cushion array.
4. If the fixed object or approach end of the temporary railing is less than 15'-0" from the edge of traveled way, a temporary crash cushion is required in a construction or work zone.
5. Temporary crash cushion arrays shall not encroach on the traveled way.
6. Arrays for median shoulders shall conform to details shown on this plan for outside shoulders.
7. Place the Type P marker panel so that the bottom of the panel rests upon the pallet and faces traffic.
8. Refer to Standard Plan A73B for marker details.
9. For shoulder widths less than 8'-0", appropriate approved crash cushion protection, other than sand filled modules, shall be provided at fixed objects and at approach ends of temporary railing. The specific type of crash cushion shall be as shown on the project plans or as specified in the Special Provisions, or if not shown on the project plans or specified in the Special Provisions, shall be as approved by the Engineer.
10. Approach speeds indicated conform to NCHRP 350 Report criteria.
11. Use of pallets is optional.

STATE OF CALIFORNIA
DEPARTMENT OF TRANSPORTATION

TEMPORARY CRASH CUSHION, SAND FILLED (SHOULDER INSTALLATIONS)

NO SCALE

RSP T2 DATED JUNE 6, 2008 SUPERSEDES STANDARD PLAN T2
DATED MAY 1, 2006 - PAGE 213 OF THE STANDARD PLANS BOOK DATED MAY 2006.

REVISED STANDARD PLAN RSP T2

2006 REVISED STANDARD PLAN RSP T2

5-15-08

DIST	COUNTY	ROUTE	POST MILES TOTAL PROJECT	SHEET NO.	TOTAL SHEETS
10	Mer	99	24.4/R25.8	41	45

REGISTERED CIVIL ENGINEER

November 17, 2006
PLANS APPROVAL DATE

REGISTERED PROFESSIONAL ENGINEER — Greg W. Edwards — No. C36386 — Exp. 6-30-08 — CIVIL — STATE OF CALIFORNIA

The State of California or its officers or agents shall not be responsible for the accuracy or completeness of electronic copies of this plan sheet.

To accompany plans dated 3-28-11

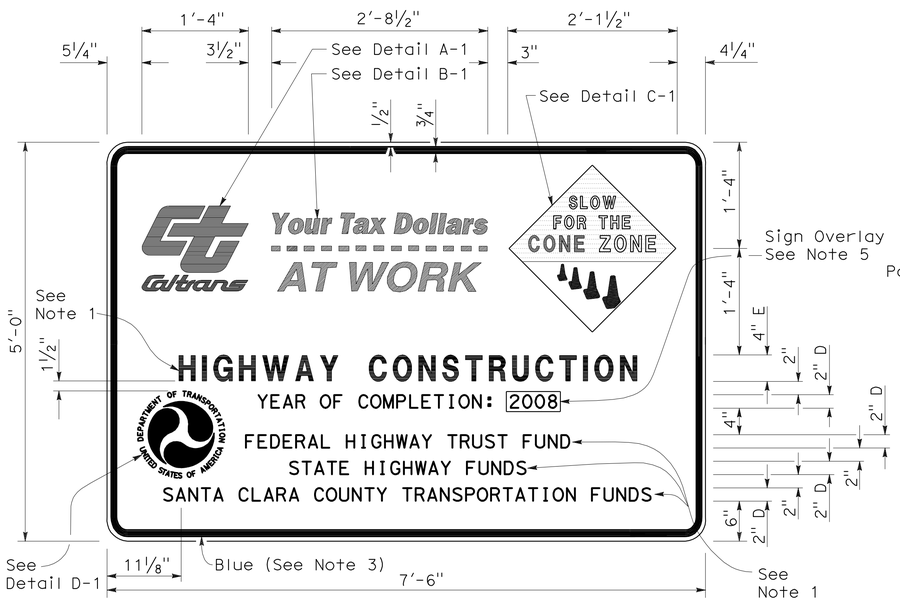

TYPE 1

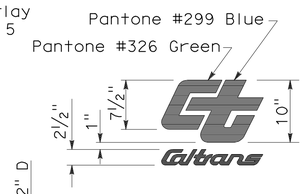

DETAIL A-1

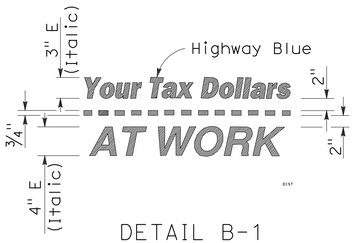

DETAIL B-1
(See Note 3)

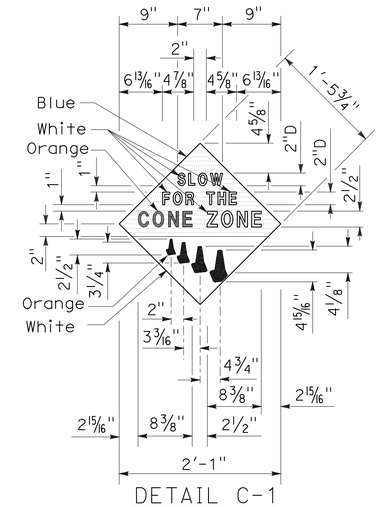

DETAIL C-1
(See Note 4)

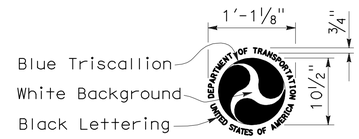

DETAIL D-1
(See Note 6)

NOTES:

1. The sign messages shown for type of project and fund types are examples only. See the Special Provisions for the applicable type of project and fund type messages to be used.
2. Except as otherwise shown, the legend of sign shall be black on a white background (non-reflective).
3. The border of the signs and details "B-1" and "B-2" shall be blue (non-reflective).
4. The diamond in details "C-1" and "C-2" shall be blue for the background of message, " SLOW FOR THE CONE ZONE", and white background for the orange cones. The color and type of font for the "SLOW FOR THE CONE ZONE" message shall be: "SLOW" white D; "FOR THE" white D; "CONE" orange Arial font; "ZONE" white Arial font.
5. Year of completion of project construction shown on the overlay is an example only. See the Special Provisions.
6. Use when the Project involves Federal Highway Trust Fund.

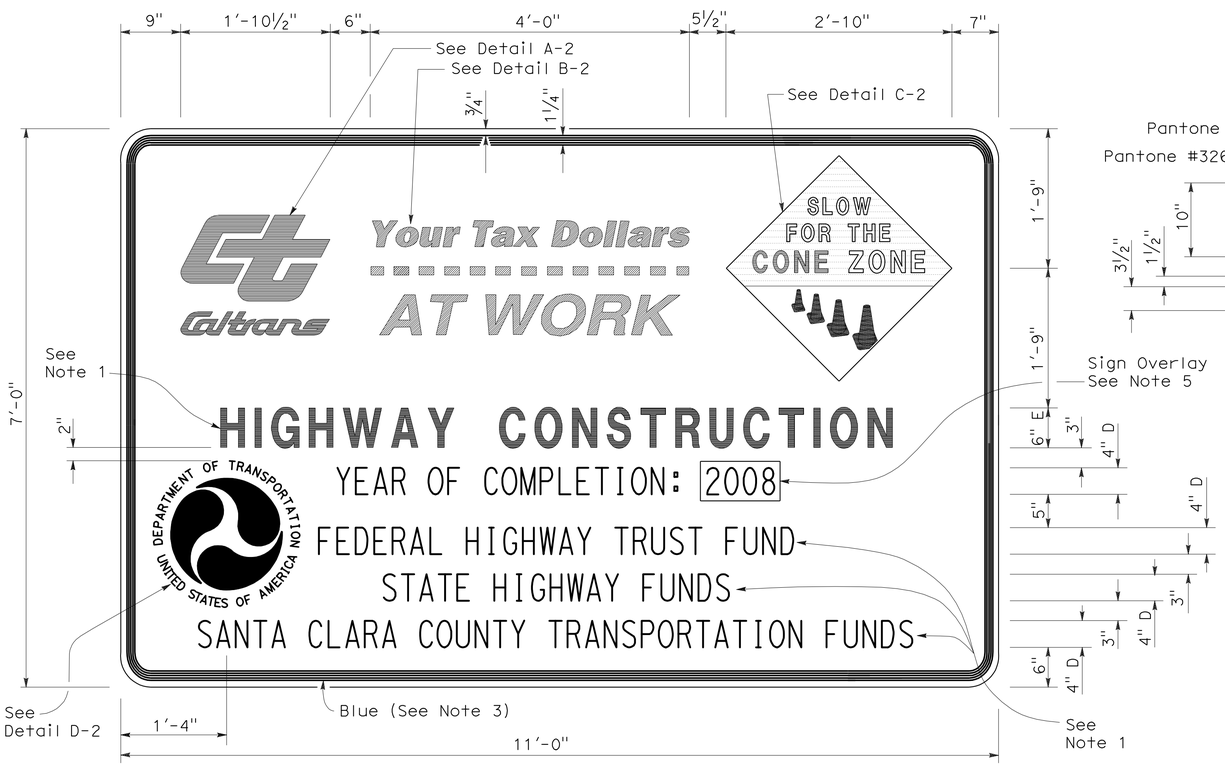

TYPE 2

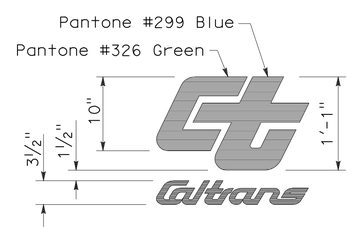

DETAIL A-2

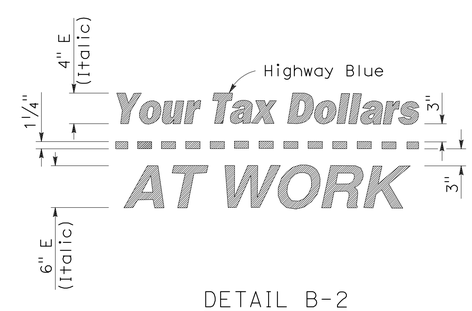

DETAIL B-2
(See Note 3)

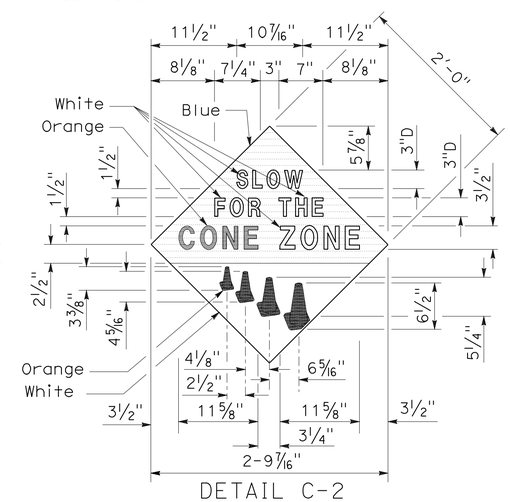

DETAIL C-2
(See Note 4)

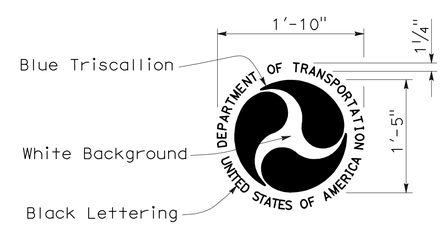

DETAIL D-2
(See Note 6)

STATE OF CALIFORNIA
DEPARTMENT OF TRANSPORTATION

CONSTRUCTION PROJECT FUNDING IDENTIFICATION SIGNS

NO SCALE

RSP T7 DATED NOVEMBER 17, 2006 SUPERSEDES STANDARD PLAN T7
DATED MAY 1, 2006 - PAGE 217 OF THE STANDARD PLANS BOOK DATED MAY 2006.

REVISED STANDARD PLAN RSP T7

2006 REVISED STANDARD PLAN RSP T7

9-7-06

DIST	COUNTY	ROUTE	POST MILES TOTAL PROJECT	SHEET NO.	TOTAL SHEETS
10	Mer	99	24.4/R25.8	42	45

Robert B Schott
LICENSED LANDSCAPE ARCHITECT

April 3, 2009
PLANS APPROVAL DATE

LICENSED LANDSCAPE ARCHITECT — Robert B. Schott 3025 — Signature — 11-30-10 Renewal Date — 2-25-09 Date — STATE OF CALIFORNIA

The State of California or its officers or agents shall not be responsible for the accuracy or completeness of electronic copies of this plan sheet.

To accompany plans dated 3-28-11

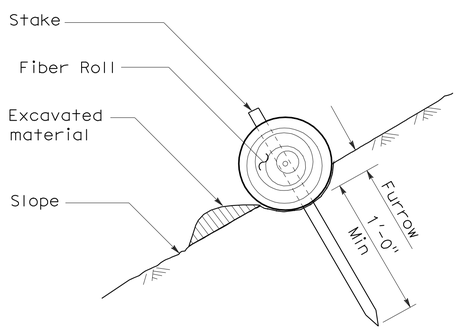

SECTION

TEMPORARY FIBER ROLL (TYPE 1)

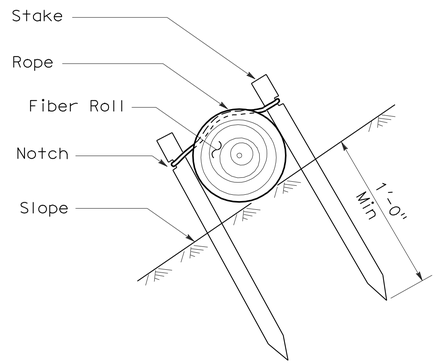

SECTION

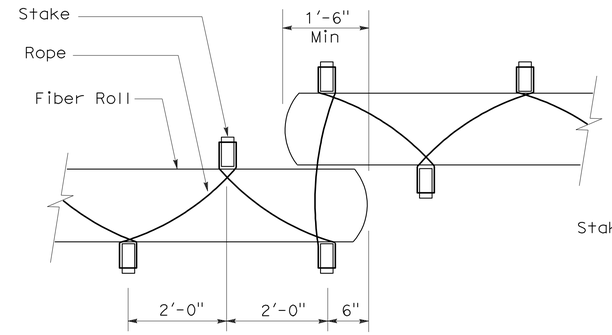

PLAN

TEMPORARY FIBER ROLL (TYPE 2)

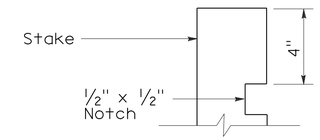

ELEVATION

STAKE NOTCH DETAIL

NOTES:

1. Temporary fiber roll spacing varies depending upon slope inclination.
2. Installations shown in the perspectives are for slope inclination of 10:1 and steeper.

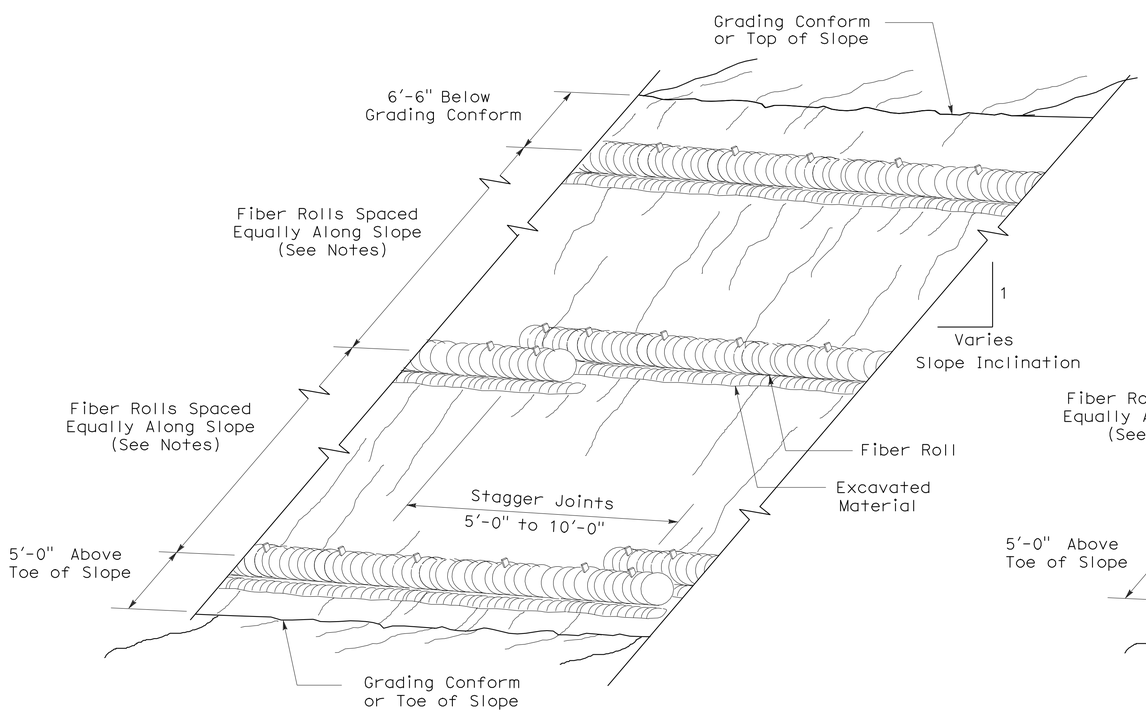

PERSPECTIVE

TEMPORARY FIBER ROLL (TYPE 1)

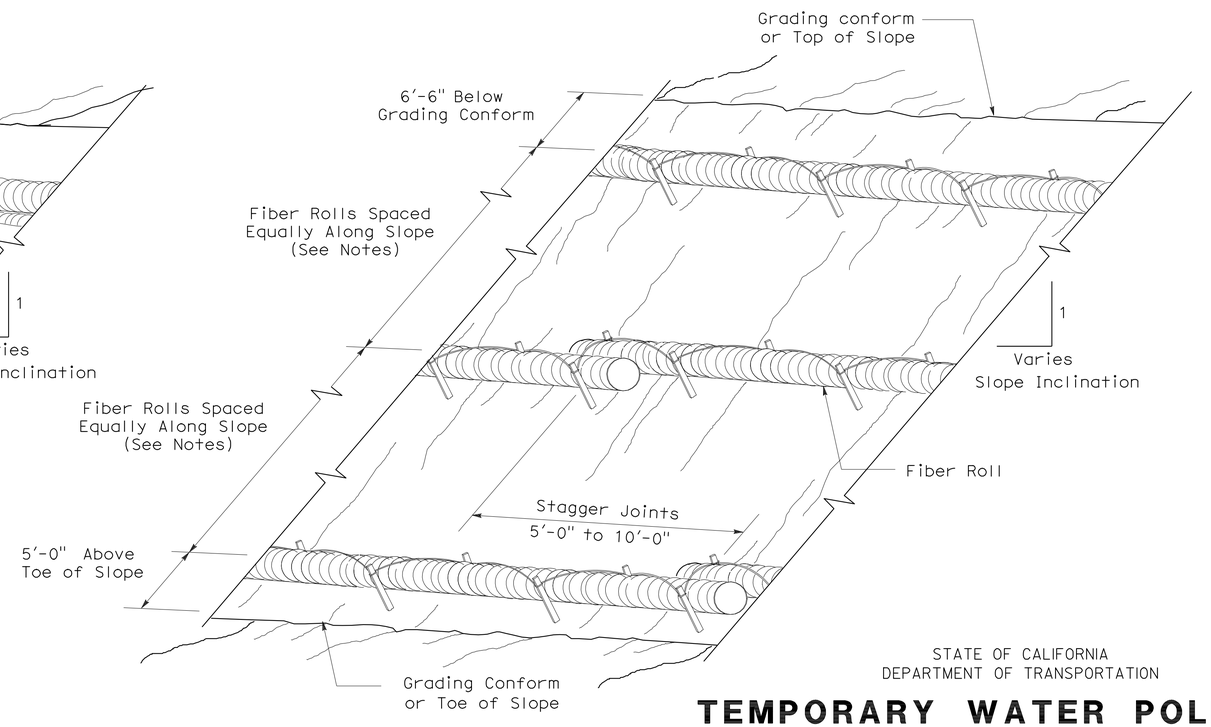

PERSPECTIVE

TEMPORARY FIBER ROLL (TYPE 2)

STATE OF CALIFORNIA
DEPARTMENT OF TRANSPORTATION

TEMPORARY WATER POLLUTION CONTROL DETAILS (TEMPORARY FIBER ROLL)

NO SCALE

RSP T56 DATED APRIL 3, 2009 SUPERSEDES STANDARD PLAN T56
DATED MAY 1, 2006 - PAGE 232 OF THE STANDARD PLANS BOOK DATED MAY 2006.

REVISED STANDARD PLAN RSP T56

2006 REVISED STANDARD PLAN RSP T56

2-23-09

DIST	COUNTY	ROUTE	POST MILES TOTAL PROJECT	SHEET NO.	TOTAL SHEETS
10	Mer	99	24.4/R25.8	43	45

REGISTERED ELECTRICAL ENGINEER

October 5, 2007
PLANS APPROVAL DATE

REGISTERED PROFESSIONAL ENGINEER Jeffery G. McRae No. E14512 Exp. 6-30-08 ELECTRICAL STATE OF CALIFORNIA

The State of California or its officers or agents shall not be responsible for the accuracy or completeness of electronic copies of this plan sheet.

To accompany plans dated 3-28-11

ELECTROLIERS

STANDARD TYPES
15, 15D
15 STRUCTURE
21, 21D STRUCTURE
30
31
32
35
36-20A

High mast light pole

Double Arm lighting standard

Existing electrolier

Electrolier foundation (Future installation)

NOTES:

1. Luminaires shall be 310 W HPS when installed on Type 21, 21D, 30, 31, 32, 35 and 36-20A Standards, unless otherwise specified. Luminaires shall be 200 W HPS when installed on other type standards or poles, unless otherwise specified.
2. Luminaires shall be the cutoff type, ANSI Type Ⅲ medium cutoff lighting distribution, unless otherwise specified.
3. Variations noted adjacent to symbol on project plans.

Electrolier (see project notes or project plans)

Luminaire on wood pole

STANDARD NOTES:

- AB — Abandon. If applied to conduit, remove conductors.
- BC — Install pull box in existing conduit run.
- BP — Pedestrian barricade, type as indicated on plan.
- CB — Install conduit into existing pull box.
- CC — Connect new and existing conduit. Remove existing conductors and install conductors as indicated.
- CF — Conduit to remain for future use. Remove conductors. Install pull wire or rope.
- DH — Detector handhole.
- FA — Foundation to be abandoned.
- IS — Install sign on signal mast arm.
- NS — No slip base on standard.
- PEC — Photoelectric control.
- PEU — Photoelectric unit.
- RC — Equipment or material to be removed and become the property of the Contractor.
- RE — Remove electrolier, fuses and ballast. Tape ends of conductors.
- RL — Relocate equipment.
- RR — Remove and reuse equipment.
- RS — Remove and salvage equipment.
- SC — Splice new to existing conductors.
- SD — Service disconnect.
- SF — Standard to remain for future use. Remove luminaire, pole conductors, fuses and ballast.
- TSP — Telephone service point.

ABBREVIATIONS AND EQUIPMENT DESIGNATIONS

PROPOSED	EXISTING	
BBS	bbs	Battery backup system
BC	bc	Bolt circle
C	C	Conduit
CCTV	cctv	Closed circuit television
CKT	ckt	Circuit
CMS	cms	Changeable message sign
DLC	dlc	Loop detector lead-in cable
EMS	ems	Extinguishable message sign
EVC	evc	Emergency vehicle cable
EVD	evd	Emergency vehicle detector
FB	fb	Flashing beacon
FBCA	fbca	Flashing beacon control assembly
FBS	fbs	Flashing beacon with slip base
FO	fo	Fiber optic
G	G	Ground (Equipment Grounding Conductor)
GFCI	GFCI	Ground fault circuit interrupt
HAR	har	Highway advisory radio
HEX	hex	Hexagonal
HPS	hps	High pressure sodium
IISNS	iisns	Internally illuminated street name sign
ISL	isl	Induction sign lighting
LED	led	Light emitting diode
LMA	lma	Luminaire mast arm
LPS	lps	Low pressure sodium
LTG	ltg	Lighting
LUM	lum	Luminaire
MAT	mat	Mast arm mounting vehicle signal faces, top attachment
MAS	mas	Mast arm mounting vehicle signal faces, side attachment
MAS-4A	mas-4A	Mast arm mounting vehicle signal faces, side attachment - 4 signal section
MAS-4B	mas-4B	
MAS-4C	mas-4C	
MAS-5A	mas-5A	Mast arm mounting vehicle signal faces, side attachment - 5 signal section
MAS-5B	mas-5B	
MC	mc	Mercury contactor
M/M	m/m	Multiple to multiple transformer
MT	mt	Conduit with pull wire or rope only
MTG	mtg	Mounting
	mv	Mercury vapor lighting fixture
N	N	Neutral (Grounded Conductor)
NC	NC	Normally closed
NO	NO	Normally open
PB	pb	Pull box
PEC	pec	Photoelectric control (Type Ⅰ, Ⅱ, Ⅲ, Ⅳ or Ⅴ as shown)
PED	ped	Pedestrian
PEU	peu	Photoelectric unit
PPB	ppb	Pedestrian push button
RL		Relocated equipment
RM	rm	Ramp metering
SB	sb	Slip base
SIC	sic	Signal interconnect cable
SIG	sig	Signal
SMA	sma	Signal mast arm
SNS	sns	Street name sign
SP	sp	Service point
TDC	tdc	Telephone demarcation cabinet
TMS	tms	Traffic monitoring station
TOS	tos	Traffic Operations System
VEH	veh	Vehicle
XFMR	xfmr	Transformer
COMM	comm	Communication
RWIS	rwis	Roadway weather information system

SOFFIT AND WALL MOUNTED LUMINAIRES

Pendant, 70 W HPS unless otherwise specified.

Flush, 70 W HPS unless otherwise specified.

Wall surface, 70 W HPS unless otherwise specified.

Existing soffit or wall luminaire to remain unmodified.

Existing soffit or wall luminaire to be modified as specified.

NOTE:

Arrow indicates "street side" of luminaire.

STATE OF CALIFORNIA
DEPARTMENT OF TRANSPORTATION

ELECTRICAL SYSTEMS (SYMBOLS AND ABBREVIATIONS)

NO SCALE

RSP ES-1A DATED OCTOBER 5, 2007 SUPERSEDES STANDARD PLAN ES-1A DATED MAY 1, 2006 - PAGE 400 OF THE STANDARD PLANS BOOK DATED MAY 2006.

REVISED STANDARD PLAN RSP ES-1A

2006 REVISED STANDARD PLAN RSP ES-1A

DIST	COUNTY	ROUTE	POST MILES TOTAL PROJECT	SHEET NO.	TOTAL SHEETS
10	Mer	99	24.4/R25.8	44	45

REGISTERED ELECTRICAL ENGINEER

October 5, 2007
PLANS APPROVAL DATE

REGISTERED PROFESSIONAL ENGINEER Jeffery G. McRae No. E14512 Exp. 6-30-08 ELECTRICAL STATE OF CALIFORNIA

The State of California or its officers or agents shall not be responsible for the accuracy or completeness of electronic copies of this plan sheet.

To accompany plans dated 3-28-11

CONDUIT

PROPOSED	EXISTING	
		Lighting Conduit, unless otherwise indicated or noted
		Traffic signal conduit
C	c	Communication conduit
T	t	Telephone conduit
F	f	Fire alarm conduit
FO	fo	Fiber optic conduit
		Conduit termination (RSP ES-9A C)
R	r	Conduit riser in/on structure or service pole

SERVICE EQUIPMENT

PROPOSED	EXISTING	
OH	oh	Overhead lines
U	U	Wood pole "U" indicates utility owned
		Pole guy with anchor
		Utility transformer - ground mounted
III		Service equipment enclosure type
		Service equipment enclosure door indicates front of enclosure
T	t	Telephone demarcation cabinet

POLE-MOUNTED SERVICE DESIGNATION

Type of installation

TYPE H SERVICE - 28'-10" ← Pole height above grade

ILLUMINATED OVERHEAD SIGN

PROPOSED	EXISTING	
		Overhead sign - Single post
		Overhead sign - Two post
		Overhead sign - Mounted on structure
		Overhead sign with electrolier

SIGNAL EQUIPMENT

PROPOSED	EXISTING	
		Pedestrian signal face
		Pedestrian push button post
		Pedestrian barricade
		Vehicle signal face (with backplate, 3-Section: red, yellow and green)
		Vehicle signal face with angle visors
PV	PV	Modifications of basic symbols: "L" indicates all non-arrow sections louvered "LG" indicates louvered green section only "PV" indicates 12" programmed visibility sections "8" indicates all 8" sections (only when specified)
		Type 15TS and Vehicle signal face
		Vehicle signal face with red, yellow and green left arrow sections
		Vehicle signal face with red and yellow sections and up green arrow
		Vehicle signal face (5 Section) with red, yellow and green sections and yellow and green right arrows
		Type 1 Standard and attached vehicle signal faces
		Standard with signal mast arm only and attached vehicle signal faces and internally illuminated street name sign
		Type 33 Standard, Left-turn vehicle signal face and sign
		Standard with luminaire and signal mast arms and attached vehicle signal faces
		Cantilever flashing beacon Type 9 Frame, with a sign unless otherwise specified or indicated
		Type 15-FBS Standard with two vehicle signal face sections with lens, backplate and visor with a sign
R	Y	Flashing beacon. One vehicle signal face section with lens, backplate and visor. "R" indicates red indication, "Y" indicates yellow indication
		Controller assembly. Door indicates front of cabinet

SIGNAL EQUIPMENT Cont

PROPOSED	EXISTING	
		Guard post
		Type 1 Standard with "Meter On" sign
		Emergency Vehicle detector

NOTES:

1. All signal sections shall be 12" unless shown otherwise.
2. Signal heads shall be provided with backplates unless shown otherwise.
3. Signal indication shall be LED.

STATE OF CALIFORNIA
DEPARTMENT OF TRANSPORTATION

ELECTRICAL SYSTEMS (SYMBOLS AND ABBREVIATIONS)

NO SCALE

RSP ES-1B DATED OCTOBER 5, 2007 SUPERCEDES STANDARD PLAN ES-1B
DATED MAY 1, 2006 - PAGE 401 OF THE STANDARD PLANS BOOK DATED MAY 2006.

REVISED STANDARD PLAN RSP ES-1B

2006 REVISED STANDARD PLAN RSP ES-1B

DIST	COUNTY	ROUTE	POST MILES TOTAL PROJECT	SHEET NO.	TOTAL SHEETS
10	Mer	99	24.4/R25.8	45	45

Jeffery G. McRae
REGISTERED ELECTRICAL ENGINEER

October 5, 2007
PLANS APPROVAL DATE

REGISTERED PROFESSIONAL ENGINEER
Jeffery G. McRae
No. E14512
Exp. 6-30-08
ELECTRICAL
STATE OF CALIFORNIA

The State of California or its officers or agents shall not be responsible for the accuracy or completeness of electronic copies of this plan sheet.

To accompany plans dated 3-28-11

EQUIPMENT IDENTIFICATION

ILLUMINATED SIGN IDENTIFICATION NUMBER:

Sign No. 12345

10 ISL SCI 1.0

- Sign number - Place on post or structure
- Transformer rating (kVA)
- Lighting control type
- Number and type of fixtures

Do NOT place on standard or structure

ELECTROLIER OR EQUIPMENT IDENTIFICATION NUMBER:

12345 - 15'-0"

- Mast arm length, if shown. Do not place on standard or structure.
- Equipment number - Place on standard or structure. Existing equipment numbers are shown in parenthesis

CONDUIT AND CONDUCTOR IDENTIFICATION:

1½"C, 2#10, 15#14, 2 DLC

- Number and size of conductors and cables
- Size of conduit in inches

Ø1, Ø2, Ø2P, etc.	Traffic phase identification for signal faces, detectors and phase diagrams
1 2 3	Project note numbers
A B C	Equipment description, installation or item numbers
1 2 3	Conduit run numbers

SIGNAL AND LIGHTING STANDARD (TYPICAL DESIGNATION):

19A - 3 - 100

- Wind velocity = 100 mph
- Case 3 arm loading
- Standard type
- Standard Plan sheet number
- Detail number or letter

MISCELLANEOUS EQUIPMENT

PROPOSED	EXISTING	
CMS	cms	Changeable message sign
		Closed circuit television camera
		Highway advisory radio pole and antenna
EMS	ems	Extinguishable message sign
M V	m v	Detection device M = Microwave sensor V = Video image sensor

WIRING DIAGRAM LEGEND

P	Pole
CB	Circuit breaker
A	Ampere
V	Volt
M	Metered
UM	Unmetered
NB	Neutral bus
GB	Ground bus
G	Equipment grounding conductor
N	Grounded conductor (Neutral)

- External conductor
- Conductor or bus
- Tie point
- Contactor coil
- Contactor, Contact NO
- Terminal blocks
- Contactor, Contact NC
- Enclosure bond
- Grounding electrode
- Circuit breaker
- Receptacle

PULL BOXES

PROPOSED EXISTING

Pull box-No. 5 unless otherwise indicated or noted.

3 9A(21)

Pull box-Additional designations or descriptions

3	= No. 3½ pull box
5	= No. 5 pull box
6	= No. 6 pull box
7	= No. 7 (Ceiling pull box)
8	= No. 8 (Pendant soffit pull box)
9	= No. 9 pull box
9A	= No. 9A pull box

(C) = Communications pull box
(E) = Pull box with extension
(S) = Sprinkler control pull box
(21) = Anchor bolts and conduit for future installation of Type 21 Standard
(T) = Traffic pull box

VEHICLE DETECTORS

5 J 9 U

- U = Upper
- L = Lower
- Slot number in input file
- Input file (I or J)
- Phase

PROPOSED EXISTING

	Type A detector loop. Outline of sawcut shown.
	Type B detector loop. Outline of sawcut shown.
	Type C detector loop. Outline of sawcut shown.
	Type D detector loop. Outline of sawcut shown.
	Type E detector loop. Outline of sawcut shown.
	Type Q detector loop. Outline of sawcut shown.
	Magnetic detector
DH dh	Detector handhole
	Microwave or video detection zone

STATE OF CALIFORNIA
DEPARTMENT OF TRANSPORTATION

ELECTRICAL SYSTEMS (SYMBOLS AND ABBREVIATIONS)

NO SCALE

RSP ES-1C DATED OCTOBER 5, 2007 SUPERCEDES STANDARD PLAN ES-1C DATED MAY 1, 2006 - PAGE 402 OF THE STANDARD PLANS BOOK DATED MAY 2006.

REVISED STANDARD PLAN RSP ES-1C

2006 REVISED STANDARD PLAN RSP ES-1C

7-10-07