Dist	COUNTY	ROUTE	POST MILES TOTAL PROJECT	SHEET No.	TOTAL SHEETS
10	SJ	4,99	R19.5/R20.1, 15.0/18.6	301	1414

Sean Pledger 12-05-11
REGISTERED CIVIL ENGINEER DATE

3-26-12
PLANS APPROVAL DATE

REGISTERED PROFESSIONAL ENGINEER SEAN M. PLEDGER No. 56328 Exp. 12-31-12 CIVIL STATE OF CALIFORNIA

THE STATE OF CALIFORNIA OR ITS OFFICERS OR AGENTS SHALL NOT BE RESPONSIBLE FOR THE ACCURACY OR COMPLETENESS OF SCANNED COPIES OF THIS PLAN SHEET.

NOTE:

FOR ACCURATE RIGHT OF WAY DATA, SEE RIGHT OF WAY ENGINEERING AT THE DISTRICT OFFICE.

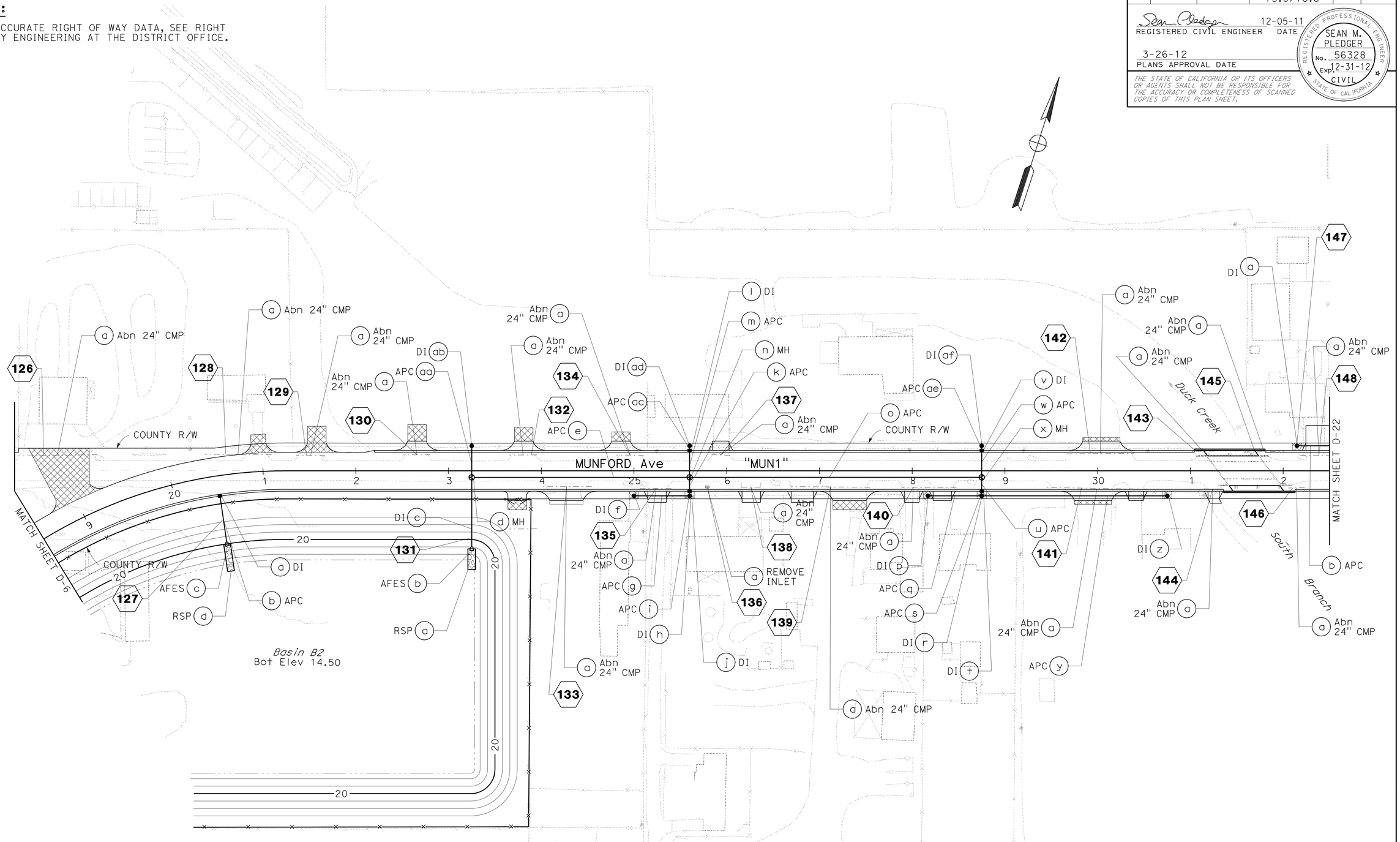

APPROVED FOR DRAINAGE WORK ONLY

DRAINAGE PLAN

SCALE: 1" = 50'

D-18

STATE OF CALIFORNIA - DEPARTMENT OF TRANSPORTATION
06-DESIGN
Caltrans

FUNCTIONAL SUPERVISOR: MARTIN NISHIKAWA
CALCULATED-DESIGNED BY: JOSE A GONZALEZ
CHECKED BY: ASHLYN SWAN
REVISED BY
DATE REVISED

LAST REVISION 05-26-11
DATE PLOTTED => 29-MAR-2012
TIME PLOTTED => 15:44

Dist	COUNTY	ROUTE	POST MILES TOTAL PROJECT	SHEET No.	TOTAL SHEETS
10	SJ	4,99	R19.5/R20.1, 15.0/18.6	302	1414

Sean Pledger 12-05-11
REGISTERED CIVIL ENGINEER DATE

3-26-12
PLANS APPROVAL DATE

REGISTERED PROFESSIONAL ENGINEER
SEAN M. PLEDGER
No. 56328
Exp. 12-31-12
CIVIL
STATE OF CALIFORNIA

THE STATE OF CALIFORNIA OR ITS OFFICERS OR AGENTS SHALL NOT BE RESPONSIBLE FOR THE ACCURACY OR COMPLETENESS OF SCANNED COPIES OF THIS PLAN SHEET.

NOTE:

FOR ACCURATE RIGHT OF WAY DATA, SEE RIGHT OF WAY ENGINEERING AT THE DISTRICT OFFICE.

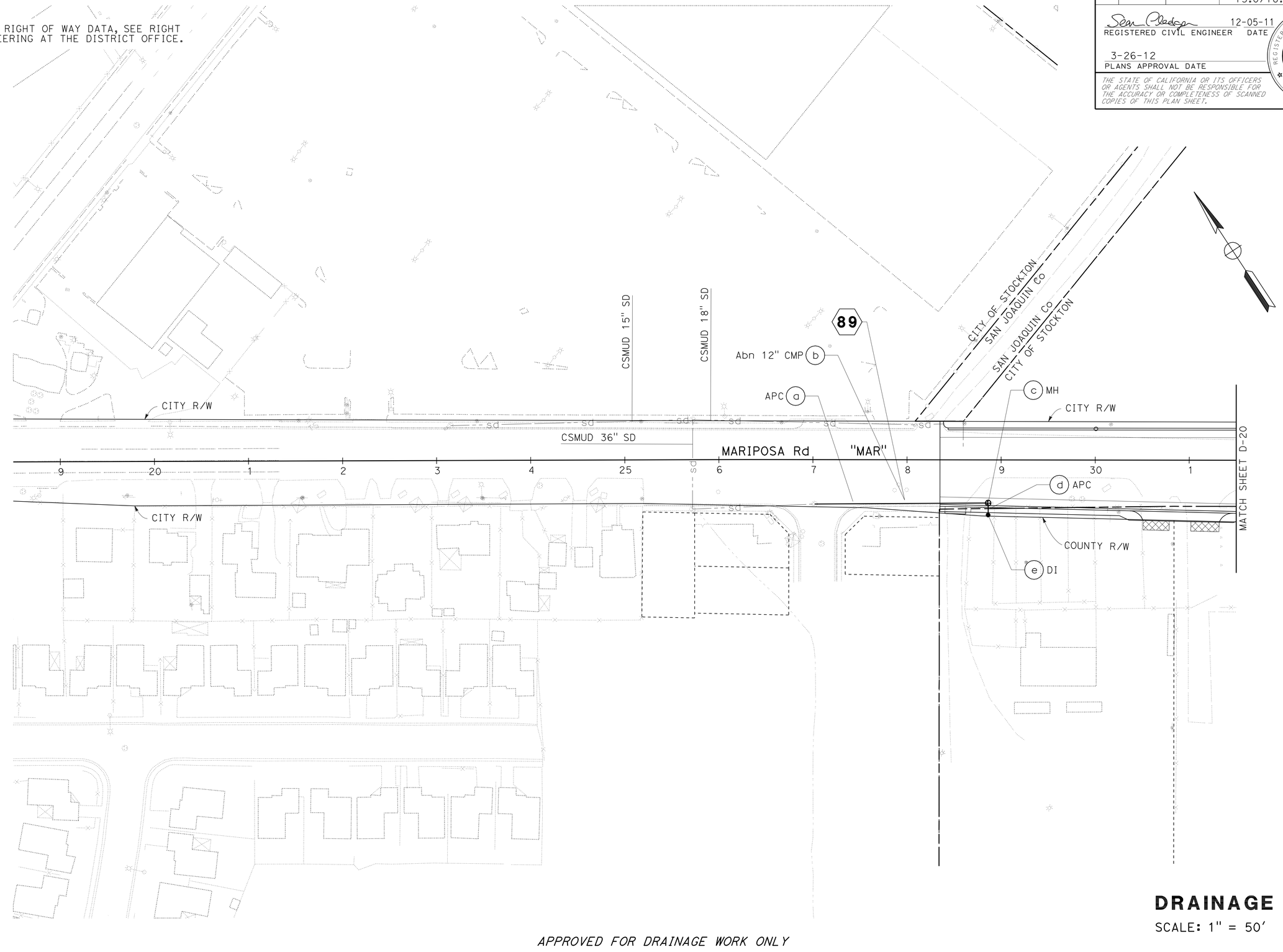

DRAINAGE PLAN

SCALE: 1" = 50'

D-19

APPROVED FOR DRAINAGE WORK ONLY

STATE OF CALIFORNIA - DEPARTMENT OF TRANSPORTATION
Caltrans
06-DESIGN

FUNCTIONAL SUPERVISOR: MARTIN NISHIKAWA
CALCULATED-DESIGNED BY: JOSE A GONZALEZ
CHECKED BY: ASHLYN SWAN
REVISED BY
DATE REVISED

LAST REVISION 05-26-11
DATE PLOTTED => 29-MAR-2012
TIME PLOTTED => 15:44

Dist	COUNTY	ROUTE	POST MILES TOTAL PROJECT	SHEET No.	TOTAL SHEETS
10	SJ	4,99	R19.5/R20.1, 15.0/18.6	303	1414

REGISTERED CIVIL ENGINEER 12-05-11 DATE

3-26-12
PLANS APPROVAL DATE

REGISTERED PROFESSIONAL ENGINEER SEAN M. PLEDGER No. 56328 Exp. 12-31-12 CIVIL STATE OF CALIFORNIA

THE STATE OF CALIFORNIA OR ITS OFFICERS OR AGENTS SHALL NOT BE RESPONSIBLE FOR THE ACCURACY OR COMPLETENESS OF SCANNED COPIES OF THIS PLAN SHEET.

NOTE:

FOR ACCURATE RIGHT OF WAY DATA, SEE RIGHT OF WAY ENGINEERING AT THE DISTRICT OFFICE.

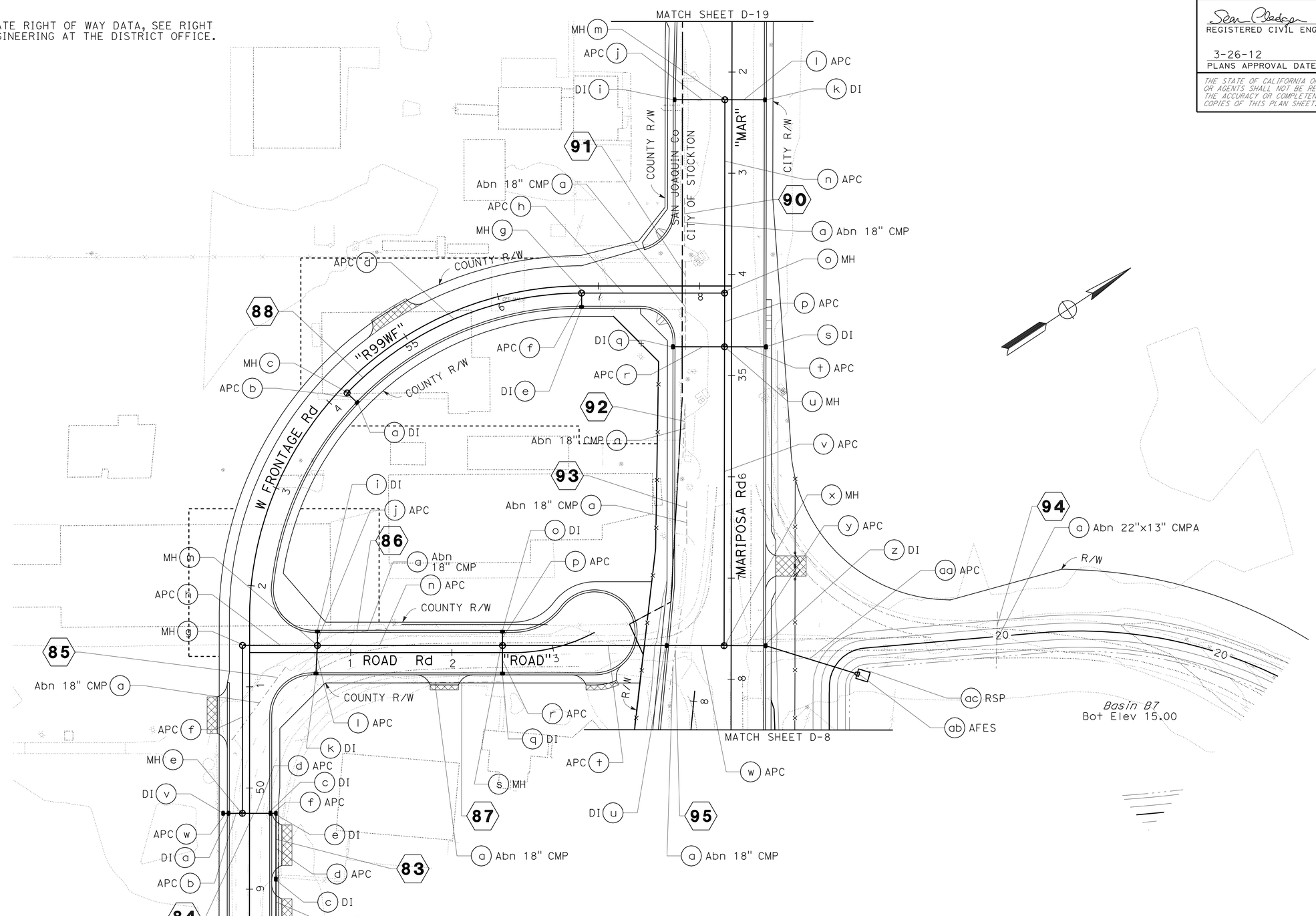

DRAINAGE PLAN

SCALE: 1" = 50'

D-20

APPROVED FOR DRAINAGE WORK ONLY

STATE OF CALIFORNIA - DEPARTMENT OF TRANSPORTATION

Caltrans

06-DESIGN

FUNCTIONAL SUPERVISOR: MARTIN NISHIKAWA

CALCULATED-DESIGNED BY: JOSE A GONZALEZ

CHECKED BY: ASHLYN SWAN

REVISED BY

DATE REVISED

LAST REVISION 05-26-11

DATE PLOTTED => 29-MAR-2012

TIME PLOTTED => 15:44

Dist	COUNTY	ROUTE	POST MILES TOTAL PROJECT	SHEET No.	TOTAL SHEETS
10	SJ	4,99	R19.5/R20.1, 15.0/18.6	304	1414

Sean Pledger 12-05-11
REGISTERED CIVIL ENGINEER DATE

3-26-12
PLANS APPROVAL DATE

REGISTERED PROFESSIONAL ENGINEER SEAN M. PLEDGER No. 56328 Exp. 12-31-12 CIVIL STATE OF CALIFORNIA

THE STATE OF CALIFORNIA OR ITS OFFICERS OR AGENTS SHALL NOT BE RESPONSIBLE FOR THE ACCURACY OR COMPLETENESS OF SCANNED COPIES OF THIS PLAN SHEET.

NOTE:

FOR ACCURATE RIGHT OF WAY DATA, SEE RIGHT OF WAY ENGINEERING AT THE DISTRICT OFFICE.

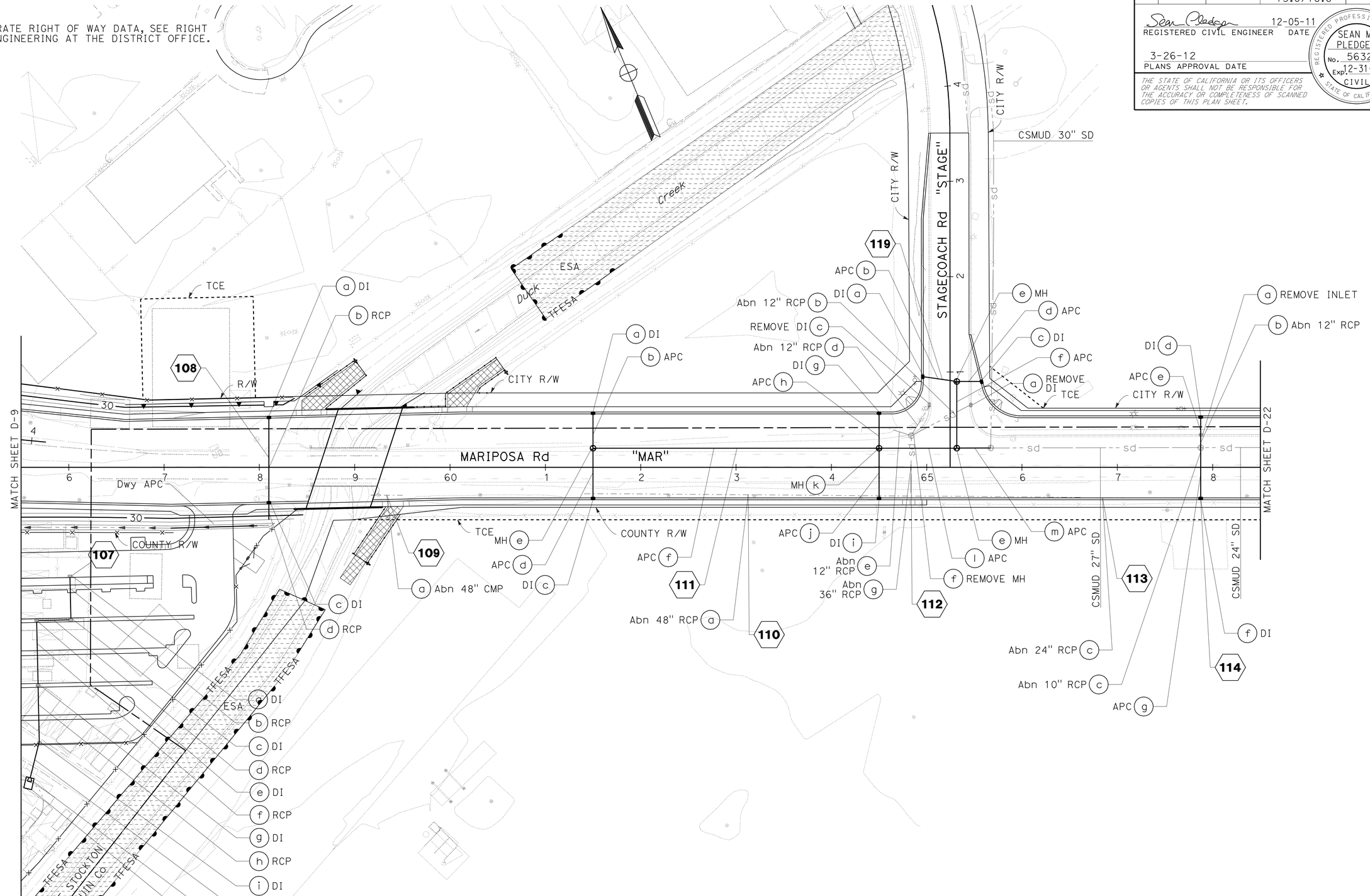

APPROVED FOR DRAINAGE WORK ONLY

DRAINAGE PLAN

SCALE: 1" = 50'

D-21

STATE OF CALIFORNIA - DEPARTMENT OF TRANSPORTATION
Caltrans
06-DESIGN

FUNCTIONAL SUPERVISOR: MARTIN NISHIKAWA
CALCULATED-DESIGNED BY: JOSE A GONZALEZ
CHECKED BY: ASHLYN SWAN
REVISED BY
DATE REVISED

LAST REVISION 05-26-11
DATE PLOTTED => 29-MAR-2012
TIME PLOTTED => 15:44

Dist	COUNTY	ROUTE	POST MILES TOTAL PROJECT	SHEET No.	TOTAL SHEETS
10	SJ	4,99	R19.5/R20.1, 15.0/18.6	305	1414

Sean Pledger 12-05-11
REGISTERED CIVIL ENGINEER DATE

3-26-12
PLANS APPROVAL DATE

REGISTERED PROFESSIONAL ENGINEER SEAN M. PLEDGER No. 56328 Exp. 12-31-12 CIVIL STATE OF CALIFORNIA

THE STATE OF CALIFORNIA OR ITS OFFICERS OR AGENTS SHALL NOT BE RESPONSIBLE FOR THE ACCURACY OR COMPLETENESS OF SCANNED COPIES OF THIS PLAN SHEET.

NOTE:

FOR ACCURATE RIGHT OF WAY DATA, SEE RIGHT OF WAY ENGINEERING AT THE DISTRICT OFFICE.

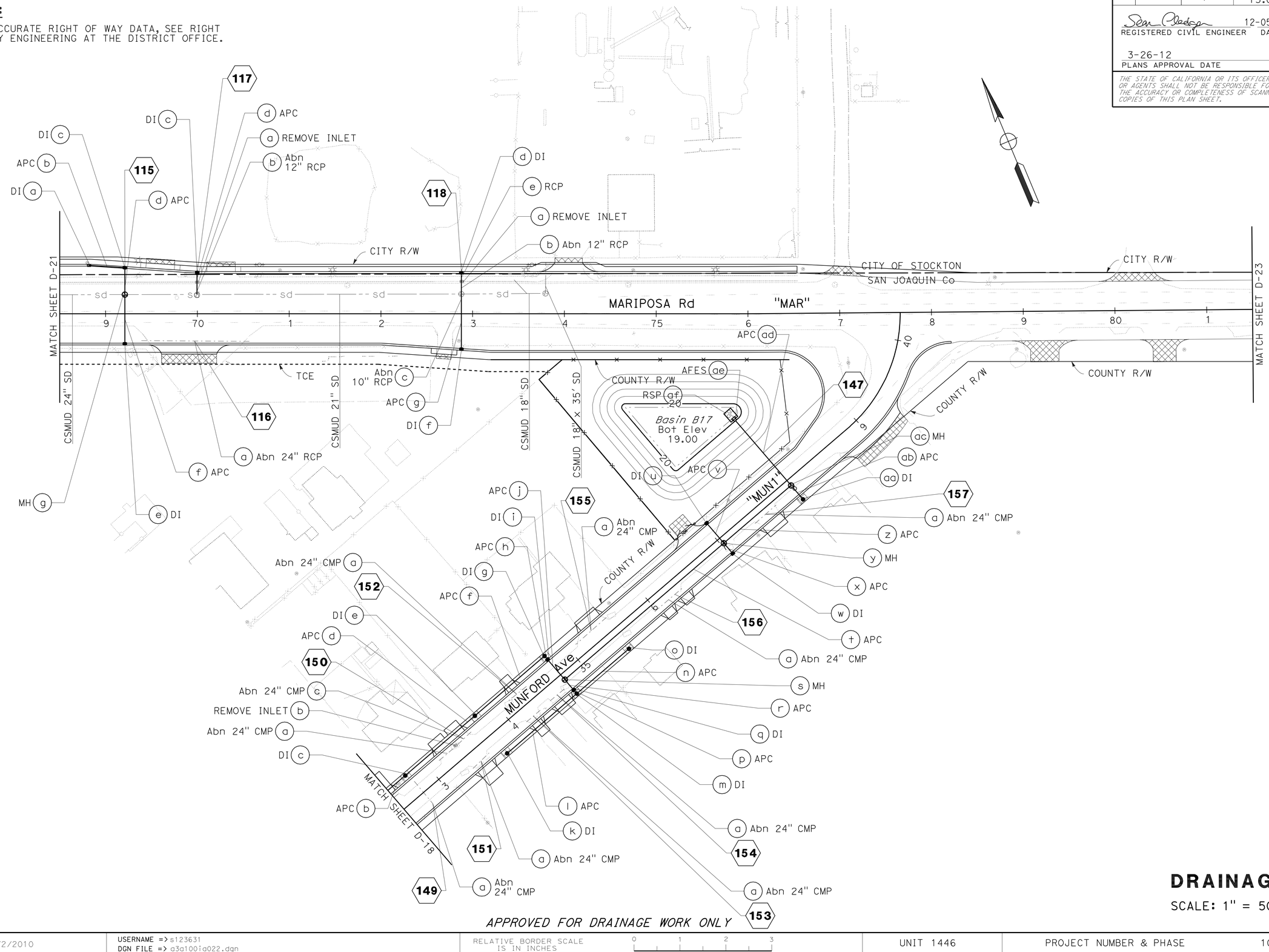

APPROVED FOR DRAINAGE WORK ONLY

DRAINAGE PLAN

SCALE: 1" = 50'

D-22

REVISED BY	DATE REVISED
JOSE A GONZALEZ	ASHLYN SWAN
CALCULATED-DESIGNED BY	CHECKED BY
FUNCTIONAL SUPERVISOR	MARTIN NISHIKAWA

STATE OF CALIFORNIA - DEPARTMENT OF TRANSPORTATION

Caltrans

06-DESIGN

LAST REVISION 05-26-11

DATE PLOTTED => 29-MAR-2012
TIME PLOTTED => 15:45

Dist	COUNTY	ROUTE	POST MILES TOTAL PROJECT	SHEET No.	TOTAL SHEETS
10	SJ	4,99	R19.5/R20.1, 15.0/18.6	306	1414

Sean Pledger 12-05-11
REGISTERED CIVIL ENGINEER DATE

3-26-12
PLANS APPROVAL DATE

REGISTERED PROFESSIONAL ENGINEER
SEAN M. PLEDGER
No. 56328
Exp. 12-31-12
CIVIL
STATE OF CALIFORNIA

THE STATE OF CALIFORNIA OR ITS OFFICERS OR AGENTS SHALL NOT BE RESPONSIBLE FOR THE ACCURACY OR COMPLETENESS OF SCANNED COPIES OF THIS PLAN SHEET.

NOTE:

FOR ACCURATE RIGHT OF WAY DATA, SEE RIGHT OF WAY ENGINEERING AT THE DISTRICT OFFICE.

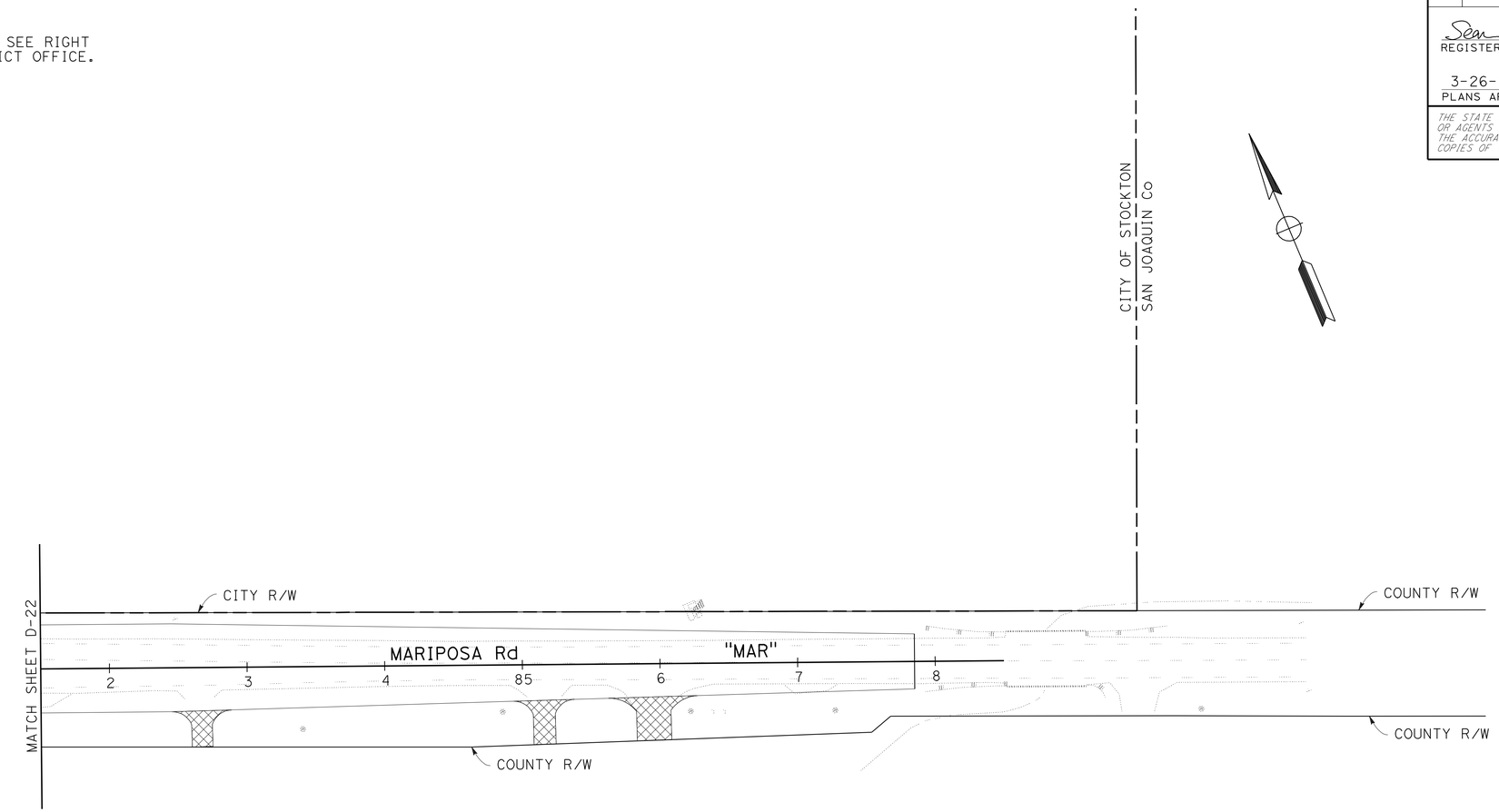

DRAINAGE PLAN

SCALE: 1" = 50′ **D-23**

APPROVED FOR DRAINAGE WORK ONLY

STATE OF CALIFORNIA - DEPARTMENT OF TRANSPORTATION
Caltrans
06-DESIGN

FUNCTIONAL SUPERVISOR: MARTIN NISHIKAWA
CALCULATED-DESIGNED BY: JOSE A GONZALEZ
CHECKED BY: ASHLYN SWAN
REVISED BY
DATE REVISED

LAST REVISION 05-26-11 | DATE PLOTTED => 29-MAR-2012 | TIME PLOTTED => 15:45

Dist	COUNTY	ROUTE	POST MILES TOTAL PROJECT	SHEET No.	TOTAL SHEETS
10	SJ	4,99	R19.5/R20.1, 15.0/18.6	307	1414

REGISTERED CIVIL ENGINEER 12-05-11 DATE

3-26-12
PLANS APPROVAL DATE

REGISTERED PROFESSIONAL ENGINEER SEAN M. PLEDGER No. 56328 Exp. 12-31-12 CIVIL STATE OF CALIFORNIA

THE STATE OF CALIFORNIA OR ITS OFFICERS OR AGENTS SHALL NOT BE RESPONSIBLE FOR THE ACCURACY OR COMPLETENESS OF SCANNED COPIES OF THIS PLAN SHEET.

NOTE:

FOR ACCURATE RIGHT OF WAY DATA, SEE RIGHT OF WAY ENGINEERING AT THE DISTRICT OFFICE.

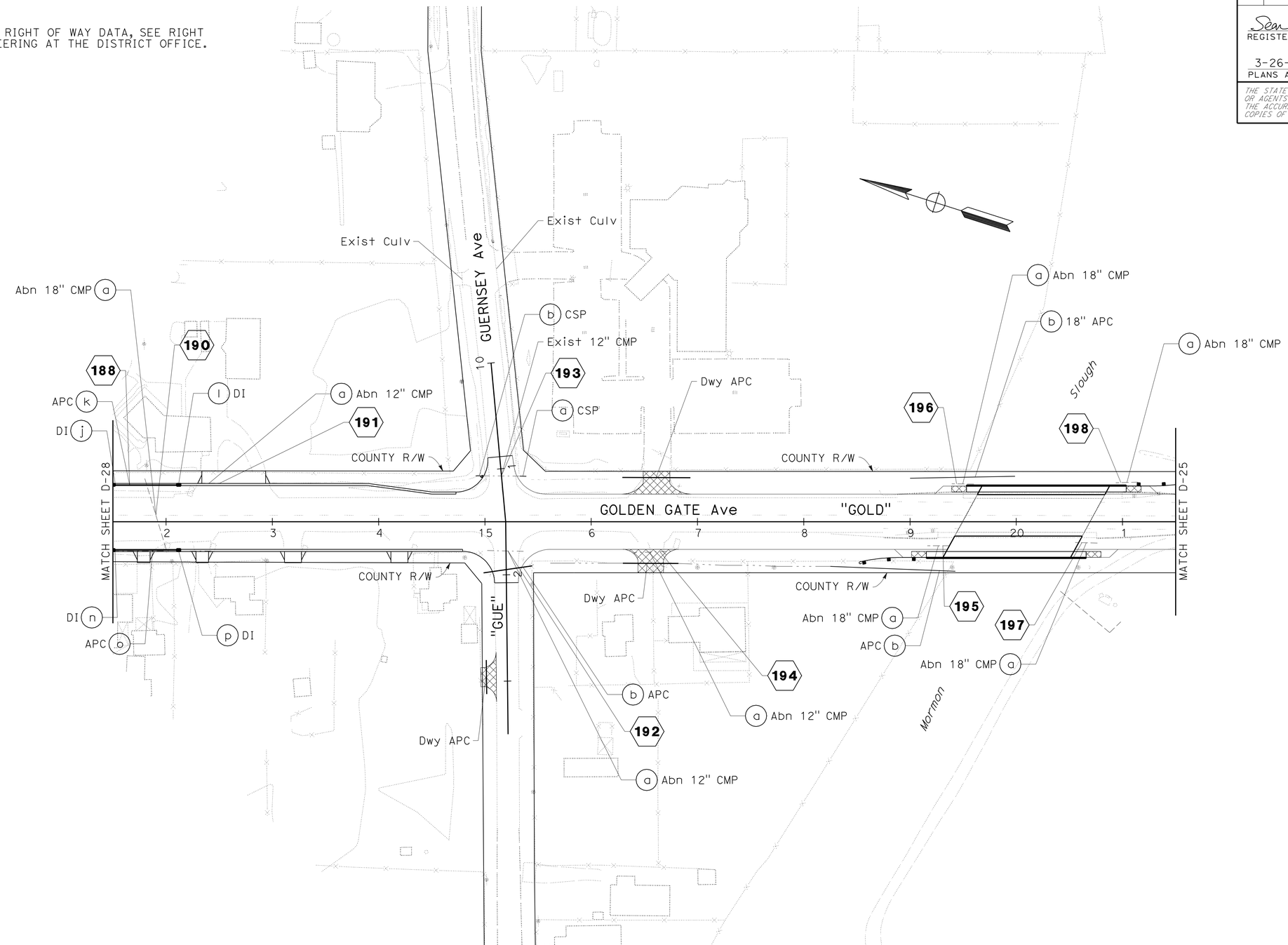

APPROVED FOR DRAINAGE WORK ONLY

DRAINAGE PLAN

SCALE: 1" = 50'

D-24

STATE OF CALIFORNIA - DEPARTMENT OF TRANSPORTATION

Caltrans

06-DESIGN

FUNCTIONAL SUPERVISOR: MARTIN NISHIKAWA

CALCULATED-DESIGNED BY: JOSE A GONZALEZ

CHECKED BY: ASHLYN SWAN

REVISED BY

DATE REVISED

LAST REVISION 05-26-11

DATE PLOTTED => 29-MAR-2012

TIME PLOTTED => 15:45

Dist	COUNTY	ROUTE	POST MILES TOTAL PROJECT	SHEET No.	TOTAL SHEETS
10	SJ	4,99	R19.5/R20.1, 15.0/18.6	308	1414

REGISTERED CIVIL ENGINEER 12-05-11 DATE

3-26-12
PLANS APPROVAL DATE

REGISTERED PROFESSIONAL ENGINEER SEAN M. PLEDGER No. 56328 Exp. 12-31-12 CIVIL STATE OF CALIFORNIA

THE STATE OF CALIFORNIA OR ITS OFFICERS OR AGENTS SHALL NOT BE RESPONSIBLE FOR THE ACCURACY OR COMPLETENESS OF SCANNED COPIES OF THIS PLAN SHEET.

NOTE:

FOR ACCURATE RIGHT OF WAY DATA, SEE RIGHT OF WAY ENGINEERING AT THE DISTRICT OFFICE.

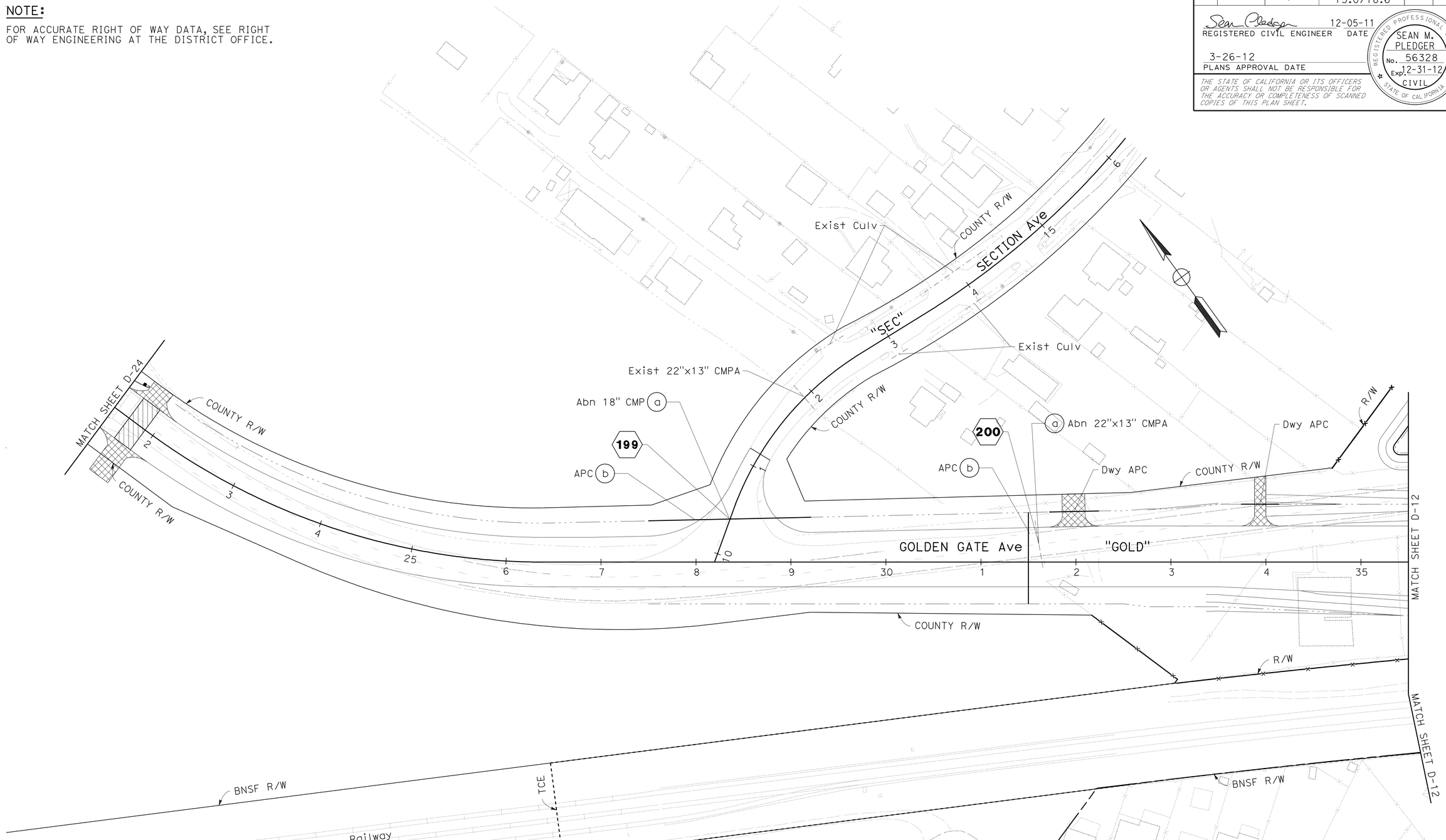

APPROVED FOR DRAINAGE WORK ONLY

DRAINAGE PLAN

SCALE: 1" = 50′ **D-25**

STATE OF CALIFORNIA - DEPARTMENT OF TRANSPORTATION
Caltrans
06-DESIGN

FUNCTIONAL SUPERVISOR: MARTIN NISHIKAWA
CALCULATED-DESIGNED BY: JOSE A GONZALEZ
CHECKED BY: ASHLYN SWAN
REVISED BY
DATE REVISED

LAST REVISION 05-26-11
DATE PLOTTED => 29-MAR-2012
TIME PLOTTED => 15:45

Dist	COUNTY	ROUTE	POST MILES TOTAL PROJECT	SHEET No.	TOTAL SHEETS
10	SJ	4,99	R19.5/R20.1, 15.0/18.6	309	1414

REGISTERED CIVIL ENGINEER 12-05-11 DATE

3-26-12
PLANS APPROVAL DATE

REGISTERED PROFESSIONAL ENGINEER SEAN M. PLEDGER No. 56328 Exp. 12-31-12 CIVIL STATE OF CALIFORNIA

THE STATE OF CALIFORNIA OR ITS OFFICERS OR AGENTS SHALL NOT BE RESPONSIBLE FOR THE ACCURACY OR COMPLETENESS OF SCANNED COPIES OF THIS PLAN SHEET.

NOTE:

FOR ACCURATE RIGHT OF WAY DATA, SEE RIGHT OF WAY ENGINEERING AT THE DISTRICT OFFICE.

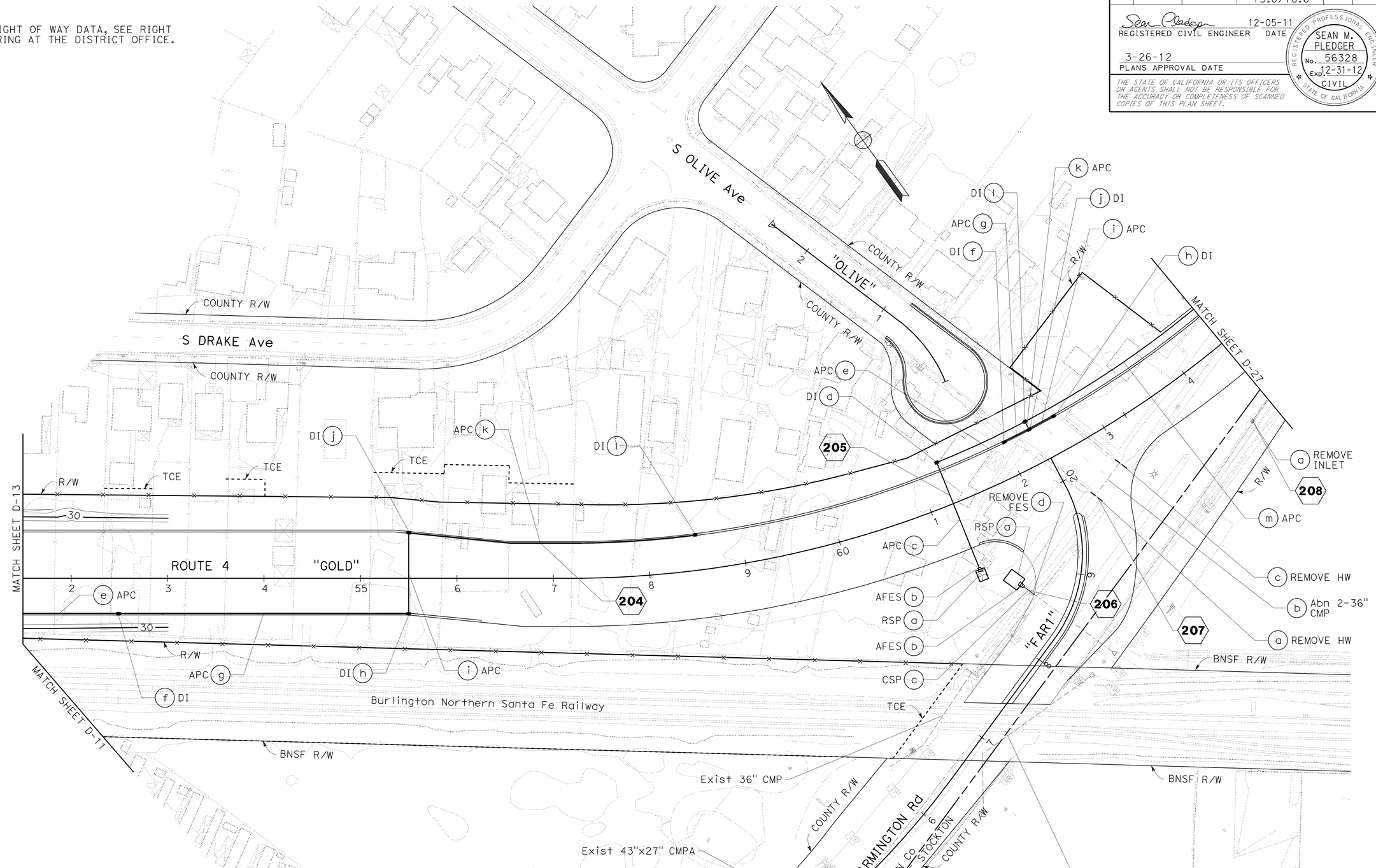

DRAINAGE PLAN

SCALE: 1" = 50'

D-26

APPROVED FOR DRAINAGE WORK ONLY

STATE OF CALIFORNIA - DEPARTMENT OF TRANSPORTATION
Caltrans
06-DESIGN

FUNCTIONAL SUPERVISOR: MARTIN NISHIKAWA
CALCULATED-DESIGNED BY: JOSE A GONZALEZ
CHECKED BY: ASHLYN SWAN
REVISED BY
DATE REVISED

LAST REVISION 05-26-11
DATE PLOTTED => 29-MAR-2012
TIME PLOTTED => 15:45

Dist	COUNTY	ROUTE	POST MILES TOTAL PROJECT	SHEET No.	TOTAL SHEETS
10	SJ	4,99	R19.5/R20.1, 15.0/18.6	310	1414

Sean Pledger 12-05-11
REGISTERED CIVIL ENGINEER DATE

3-26-12
PLANS APPROVAL DATE

REGISTERED PROFESSIONAL ENGINEER SEAN M. PLEDGER No. 56328 Exp. 12-31-12 CIVIL STATE OF CALIFORNIA

THE STATE OF CALIFORNIA OR ITS OFFICERS OR AGENTS SHALL NOT BE RESPONSIBLE FOR THE ACCURACY OR COMPLETENESS OF SCANNED COPIES OF THIS PLAN SHEET.

NOTE:

FOR ACCURATE RIGHT OF WAY DATA, SEE RIGHT OF WAY ENGINEERING AT THE DISTRICT OFFICE.

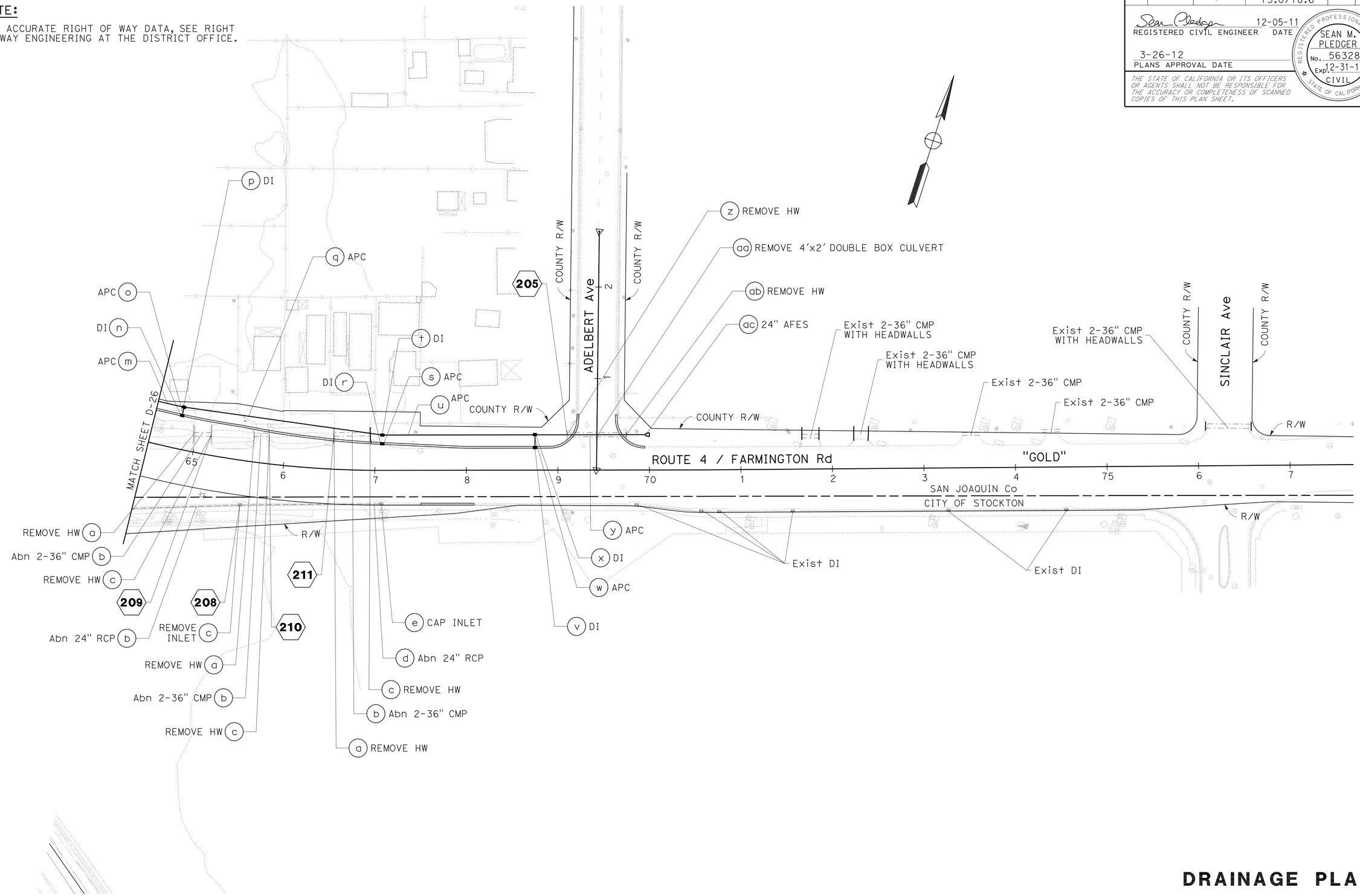

APPROVED FOR DRAINAGE WORK ONLY

DRAINAGE PLAN

SCALE: 1" = 50'

D-27

STATE OF CALIFORNIA - DEPARTMENT OF TRANSPORTATION
Caltrans
06-DESIGN

FUNCTIONAL SUPERVISOR: MARTIN NISHIKAWA
CALCULATED-DESIGNED BY: JOSE A GONZALEZ
CHECKED BY: ASHLYN SWAN
REVISED BY
DATE REVISED

LAST REVISION 05-26-11
DATE PLOTTED => 29-MAR-2012
TIME PLOTTED => 16:21

Dist	COUNTY	ROUTE	POST MILES TOTAL PROJECT	SHEET No.	TOTAL SHEETS
10	SJ	4,99	R19.5/R20.1, 15.0/18.6	311	1414

Sean Pledger 12-05-11
REGISTERED CIVIL ENGINEER DATE

3-26-12
PLANS APPROVAL DATE

REGISTERED PROFESSIONAL ENGINEER SEAN M. PLEDGER No. 56328 Exp. 12-31-12 CIVIL STATE OF CALIFORNIA

THE STATE OF CALIFORNIA OR ITS OFFICERS OR AGENTS SHALL NOT BE RESPONSIBLE FOR THE ACCURACY OR COMPLETENESS OF SCANNED COPIES OF THIS PLAN SHEET.

NOTE:

FOR ACCURATE RIGHT OF WAY DATA, SEE RIGHT OF WAY ENGINEERING AT THE DISTRICT OFFICE.

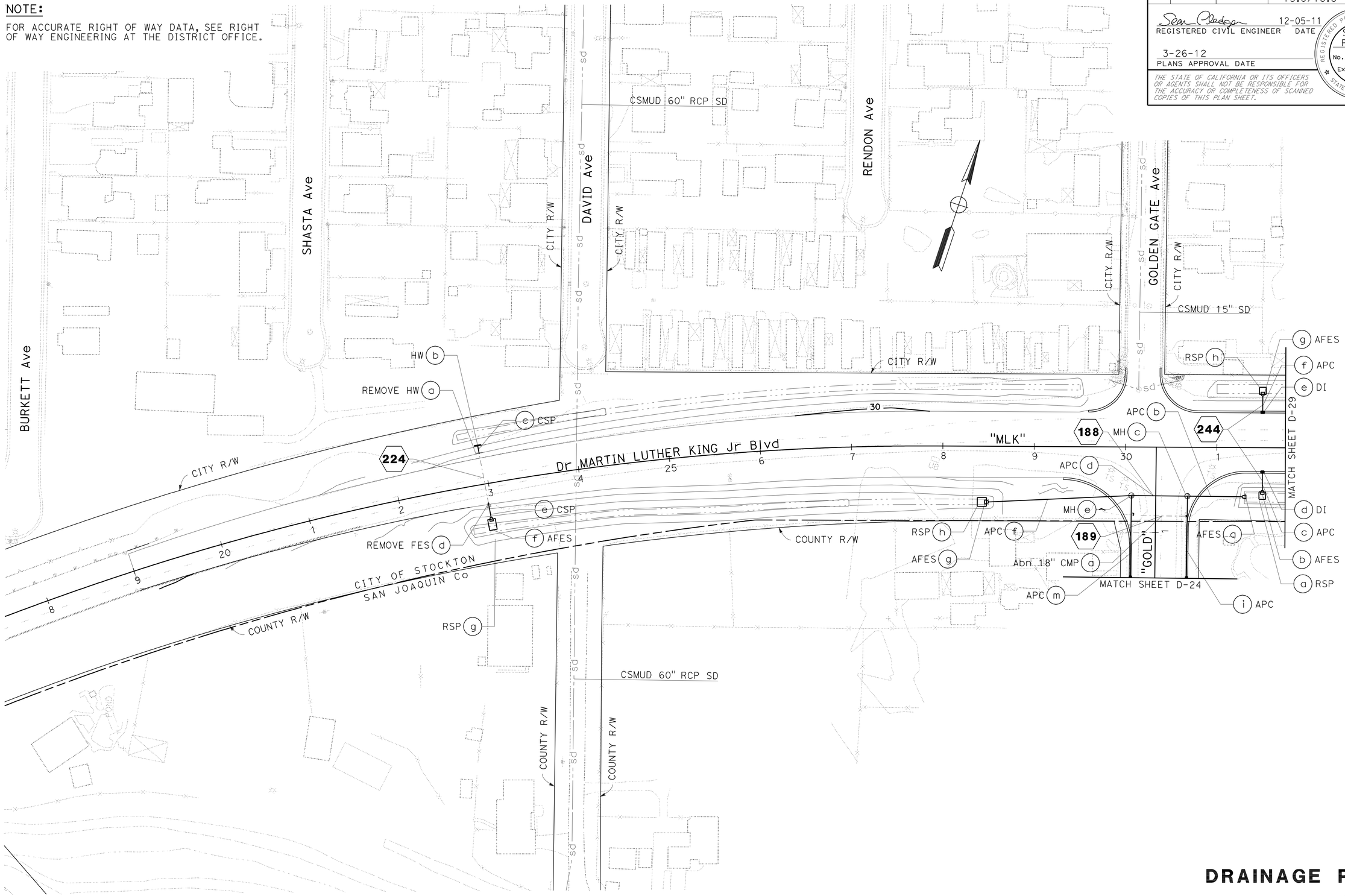

APPROVED FOR DRAINAGE WORK ONLY

DRAINAGE PLAN

SCALE: 1" = 50'

D-28

STATE OF CALIFORNIA - DEPARTMENT OF TRANSPORTATION
Caltrans
06-DESIGN

FUNCTIONAL SUPERVISOR: MARTIN NISHIKAWA
CALCULATED-DESIGNED BY: JOSE A GONZALEZ
CHECKED BY: ASHLYN SWAN
REVISED BY
DATE REVISED

LAST REVISION 05-26-11
DATE PLOTTED => 29-MAR-2012
TIME PLOTTED => 16:21

Dist	COUNTY	ROUTE	POST MILES TOTAL PROJECT	SHEET No.	TOTAL SHEETS
10	SJ	4,99	R19.5/R20.1, 15.0/18.6	312	1414

REGISTERED CIVIL ENGINEER 12-05-11 DATE

3-26-12
PLANS APPROVAL DATE

REGISTERED PROFESSIONAL ENGINEER SEAN M. PLEDGER No. 56328 Exp. 12-31-12 CIVIL STATE OF CALIFORNIA

THE STATE OF CALIFORNIA OR ITS OFFICERS OR AGENTS SHALL NOT BE RESPONSIBLE FOR THE ACCURACY OR COMPLETENESS OF SCANNED COPIES OF THIS PLAN SHEET.

NOTE:

FOR ACCURATE RIGHT OF WAY DATA, SEE RIGHT OF WAY ENGINEERING AT THE DISTRICT OFFICE.

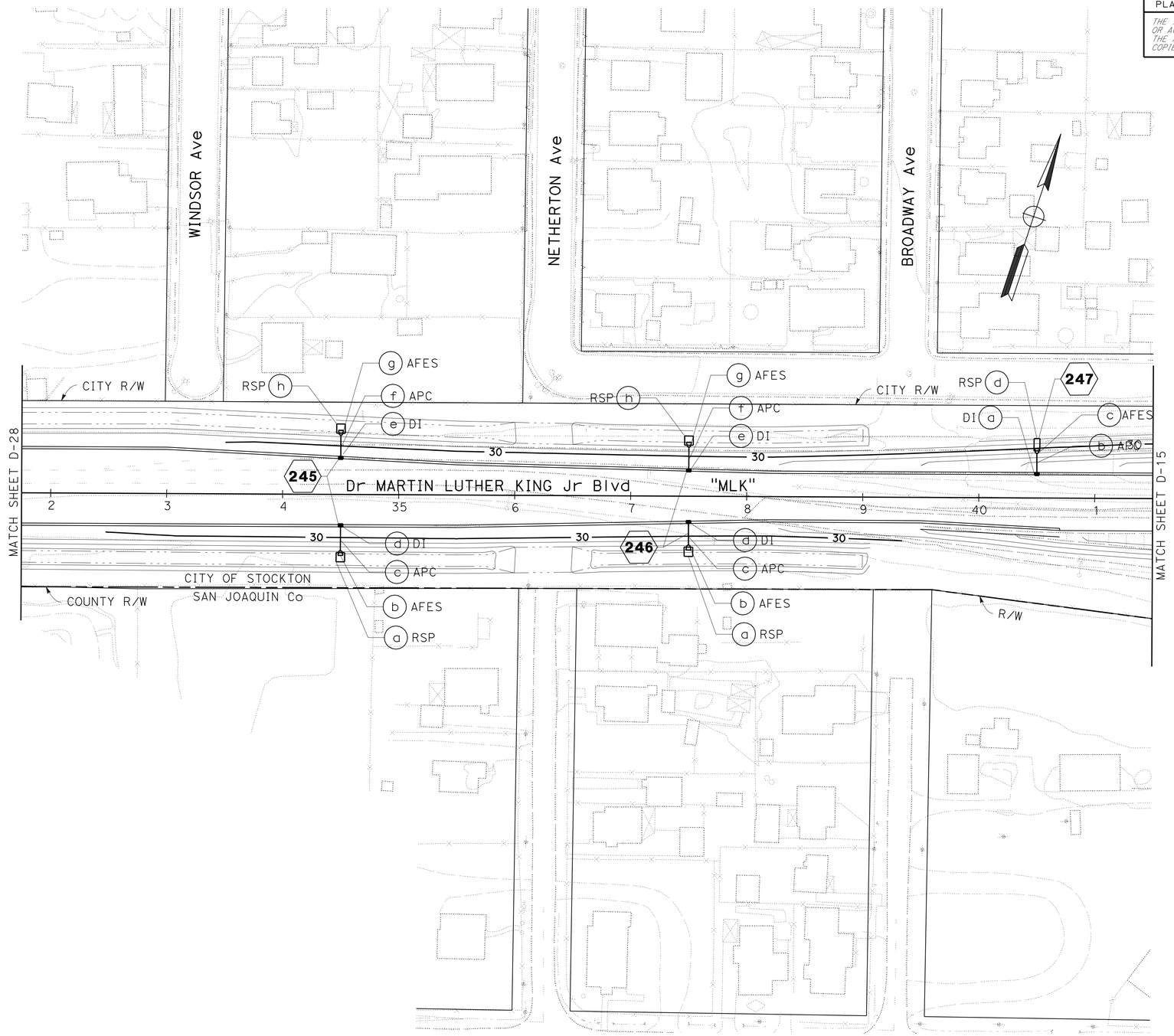

APPROVED FOR DRAINAGE WORK ONLY

DRAINAGE PLAN

SCALE: 1" = 50'

D-29

STATE OF CALIFORNIA - DEPARTMENT OF TRANSPORTATION

Caltrans

06-DESIGN

FUNCTIONAL SUPERVISOR: MARTIN NISHIKAWA

CALCULATED-DESIGNED BY: JOSE A GONZALEZ

CHECKED BY: ASHLYN SWAN

REVISED BY

DATE REVISED

LAST REVISION 05-26-11

DATE PLOTTED => 29-MAR-2012
TIME PLOTTED => 16:21

BORDER LAST REVISED 7/2/2010

USERNAME => s121614
DGN FILE => a3a100ia029.dgn

RELATIVE BORDER SCALE IS IN INCHES 0 1 2 3

UNIT 1446

PROJECT NUMBER & PHASE 10000004091

Dist	COUNTY	ROUTE	POST MILES TOTAL PROJECT	SHEET No.	TOTAL SHEETS
10	SJ	4,99	R19.5/R20.1, 15.0/18.6	313	1414

Sean Pledger 12-05-11
REGISTERED CIVIL ENGINEER DATE

3-26-12
PLANS APPROVAL DATE

REGISTERED PROFESSIONAL ENGINEER SEAN M. PLEDGER No. 56328 Exp. 12-31-12 CIVIL STATE OF CALIFORNIA

THE STATE OF CALIFORNIA OR ITS OFFICERS OR AGENTS SHALL NOT BE RESPONSIBLE FOR THE ACCURACY OR COMPLETENESS OF SCANNED COPIES OF THIS PLAN SHEET.

NOTE:

FOR ACCURATE RIGHT OF WAY DATA, SEE RIGHT OF WAY ENGINEERING AT THE DISTRICT OFFICE.

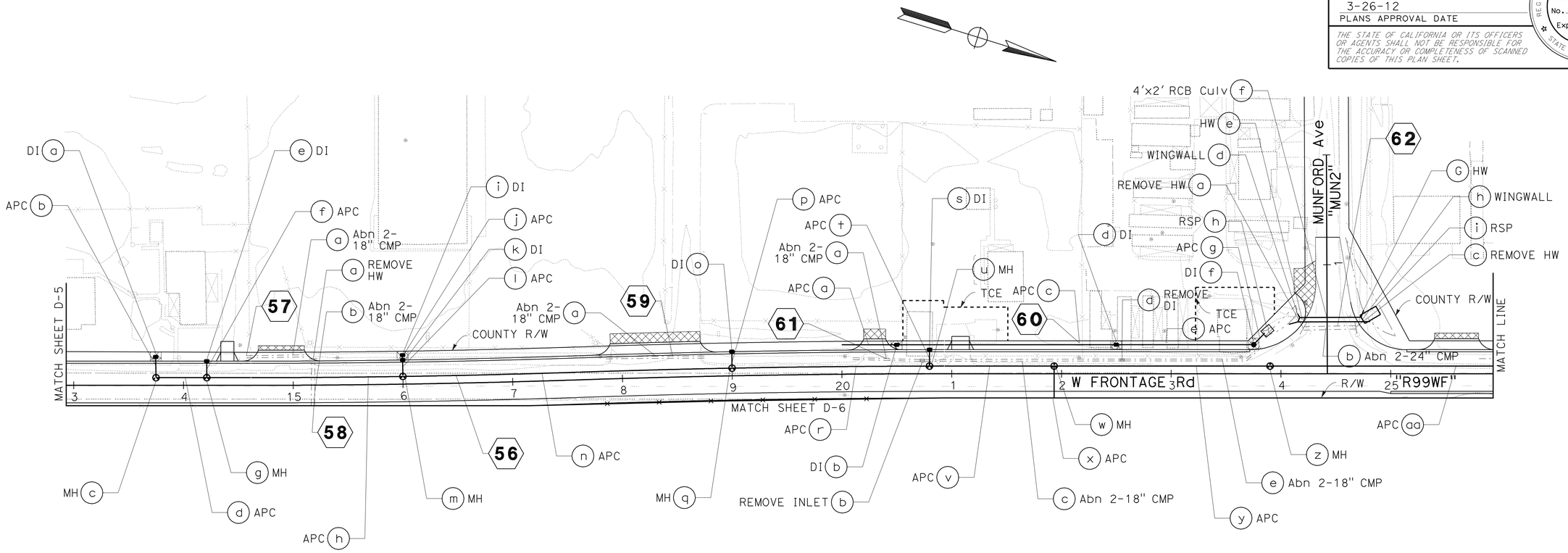

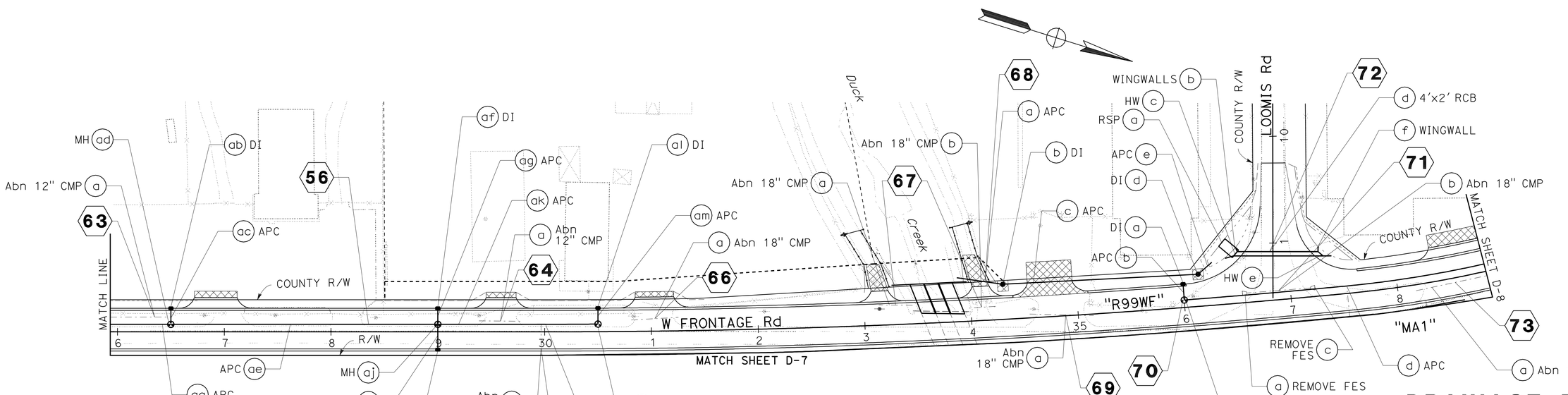

APPROVED FOR DRAINAGE WORK ONLY

SCALE: 1" = 50'

DRAINAGE PLAN
D-30

STATE OF CALIFORNIA - DEPARTMENT OF TRANSPORTATION
06-DESIGN

REVISED BY | DATE REVISED
JOSE A GONZALEZ | ASHLYN SWAN
CALCULATED-DESIGNED BY | CHECKED BY
FUNCTIONAL SUPERVISOR: MARTIN NISHIKAWA

LAST REVISION 05-26-11 | DATE PLOTTED => 29-MAR-2012 | TIME PLOTTED => 16:21

BORDER LAST REVISED 7/2/2010 | USERNAME => s121614 | DGN FILE => a3a100ia030.dgn | RELATIVE BORDER SCALE IS IN INCHES 0 1 2 3 | UNIT 1446 | PROJECT NUMBER & PHASE 10000004091

Dist	COUNTY	ROUTE	POST MILES TOTAL PROJECT	SHEET No.	TOTAL SHEETS
10	SJ	4,99	R19.5/R20.1, 15.0/18.6	314	1414

REGISTERED CIVIL ENGINEER 12-05-11 DATE

3-26-12
PLANS APPROVAL DATE

REGISTERED PROFESSIONAL ENGINEER SEAN M. PLEDGER No. 56328 Exp. 12-31-12 CIVIL STATE OF CALIFORNIA

THE STATE OF CALIFORNIA OR ITS OFFICERS OR AGENTS SHALL NOT BE RESPONSIBLE FOR THE ACCURACY OR COMPLETENESS OF SCANNED COPIES OF THIS PLAN SHEET.

NOTES:

1. ALL STATION, OFFSETS, AND CORRESPONDING SHOWN LEADER LINES ARE TO THE CENTER OF BOX (COB) OR FLOW LINE AT CURB (FLC) UNLESS OTHERWISE SHOWN.
2. LOCATIONS AND UTILITY FACILITIES SHOWN ARE APPROXIMATE AND SHALL BE VERIFIED BY THE THE CONTRACTOR PRIOR TO CONSTRUCTION. REFER TO UTILITY PLANS FOR ADDITIONAL INFORMATION.
3. CONTRACTOR SHALL VERIFY ALL CONTROLLING FIELD DIMENSIONS PRIOR TO ORDERING OR FABRICATING ANY MATERIAL.

ABBREVIATIONS:

PG&E	PACIFIC GAS AND ELECTRIC
AT&T	AMERICAN TELEPHONE AND TELEGRAPH
COB	CENTER OF BOX
CWS	CALIFORNIA WATER SERVICE
CSMUD	CITY OF STOCKTON MUNICIPLE UTILITES DEPARTMENT
CSPA	CORRUGATED STEEL PIPE ARCHED

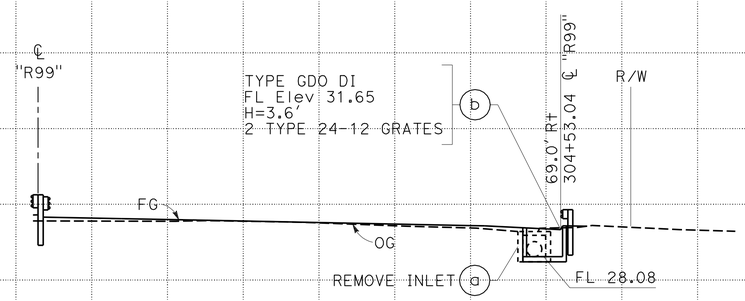

DRAINAGE SYSTEM No. 2
"R99" Sta 304+53.04

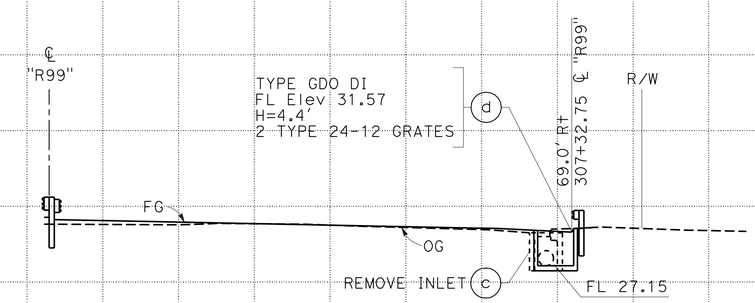

DRAINAGE SYSTEM No. 2
"R99" Sta 307+32.75

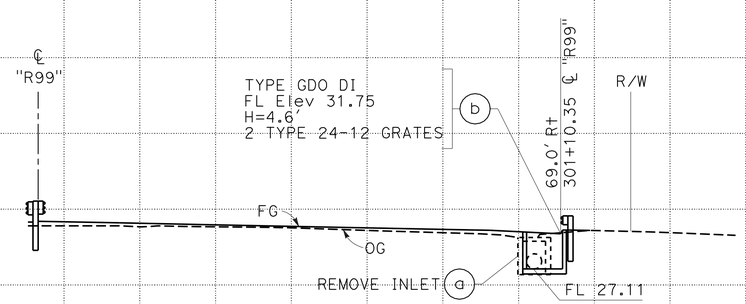

DRAINAGE SYSTEM No. 1
"R99" Sta 301+10.35

DRAINAGE PROFILES

SCALE: Horiz 1" = 10'
Vert 1" = 10'

DP-1

STATE OF CALIFORNIA - DEPARTMENT OF TRANSPORTATION
Caltrans
06-DESIGN
FUNCTIONAL SUPERVISOR: MARTIN NISHIKAWA
CALCULATED-DESIGNED BY: JOSE A GONZALEZ
CHECKED BY: ASHLYN SWAN
REVISED BY
DATE REVISED

LAST REVISION 05-26-11
DATE PLOTTED => 29-MAR-2012
TIME PLOTTED => 16:21

Dist	COUNTY	ROUTE	POST MILES TOTAL PROJECT	SHEET No.	TOTAL SHEETS
10	SJ	4,99	R19.5/R20.1, 15.0/18.6	315	1414

REGISTERED CIVIL ENGINEER 12-05-11 DATE

3-26-12
PLANS APPROVAL DATE

REGISTERED PROFESSIONAL ENGINEER SEAN M. PLEDGER No. 56328 Exp. 12-31-12 CIVIL STATE OF CALIFORNIA

THE STATE OF CALIFORNIA OR ITS OFFICERS OR AGENTS SHALL NOT BE RESPONSIBLE FOR THE ACCURACY OR COMPLETENESS OF SCANNED COPIES OF THIS PLAN SHEET.

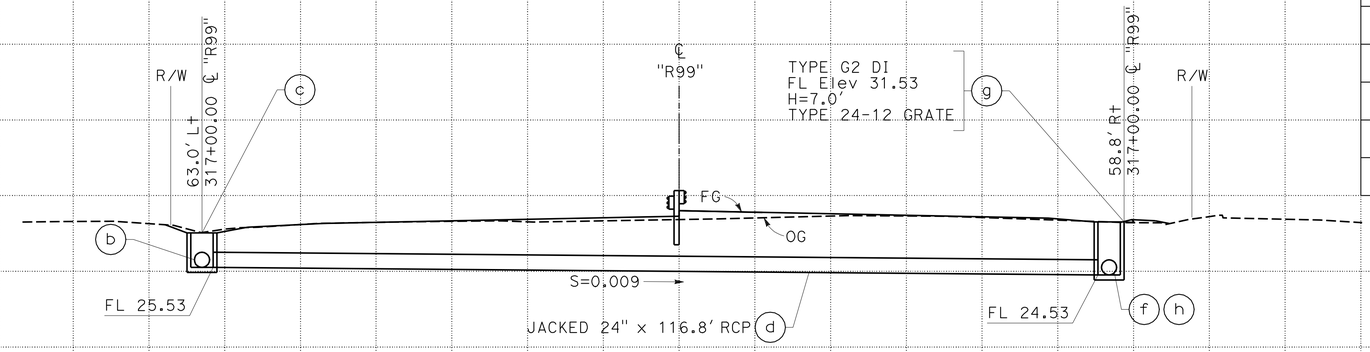

DRAINAGE SYSTEM No. 5

"R99" Sta 317+00.00

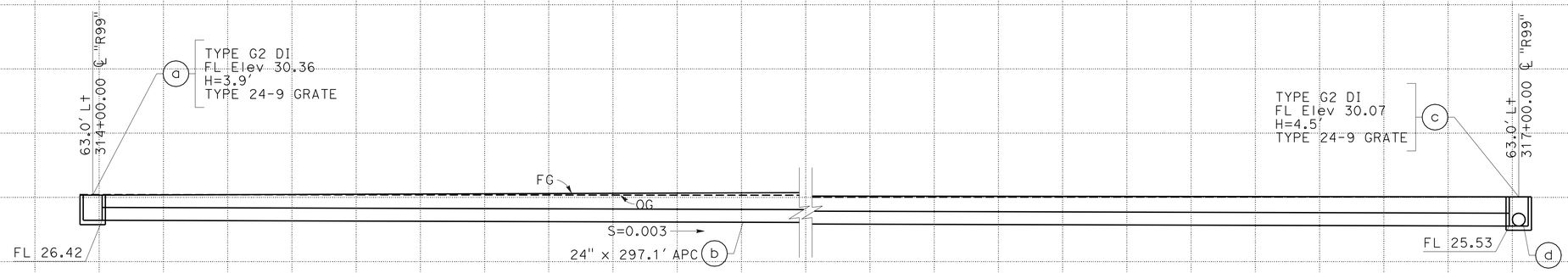

DRAINAGE SYSTEM No. 5

"R99" Sta 314+00.00

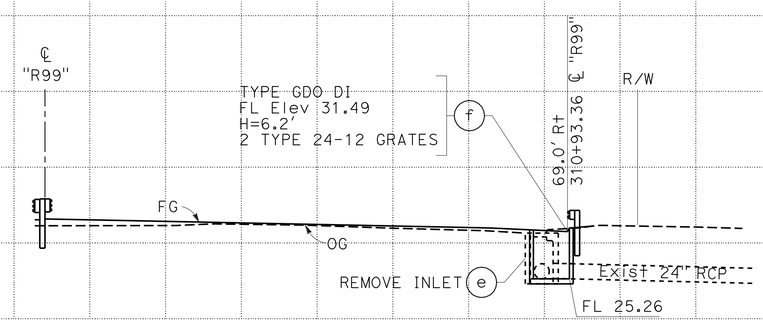

DRAINAGE SYSTEM No. 2

"R99" Sta 310+93.36

DRAINAGE PROFILES

SCALE: Horiz 1" = 10'
Vert 1" = 10'

DP-2

REVISED BY | DATE REVISED
JOSE A GONZALEZ | ASHLYN SWAN
CALCULATED-DESIGNED BY | CHECKED BY
FUNCTIONAL SUPERVISOR | MARTIN NISHIKAWA
STATE OF CALIFORNIA - DEPARTMENT OF TRANSPORTATION
Caltrans
06-DESIGN

LAST REVISION 05-26-11 | DATE PLOTTED => 29-MAR-2012 | TIME PLOTTED => 16:21

Dist	COUNTY	ROUTE	POST MILES TOTAL PROJECT	SHEET No.	TOTAL SHEETS
10	SJ	4,99	R19.5/R20.1, 15.0/18.6	316	1414

REGISTERED CIVIL ENGINEER 12-05-11 DATE

3-26-12
PLANS APPROVAL DATE

REGISTERED PROFESSIONAL ENGINEER SEAN M. PLEDGER No. 56328 Exp. 12-31-12 CIVIL STATE OF CALIFORNIA

THE STATE OF CALIFORNIA OR ITS OFFICERS OR AGENTS SHALL NOT BE RESPONSIBLE FOR THE ACCURACY OR COMPLETENESS OF SCANNED COPIES OF THIS PLAN SHEET.

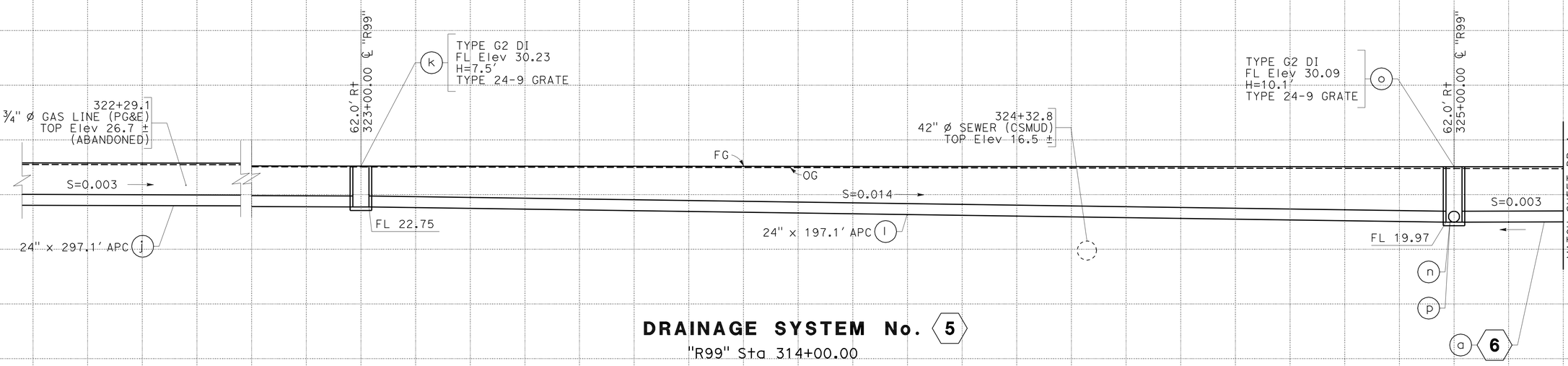

DRAINAGE SYSTEM No. 5

"R99" Sta 314+00.00

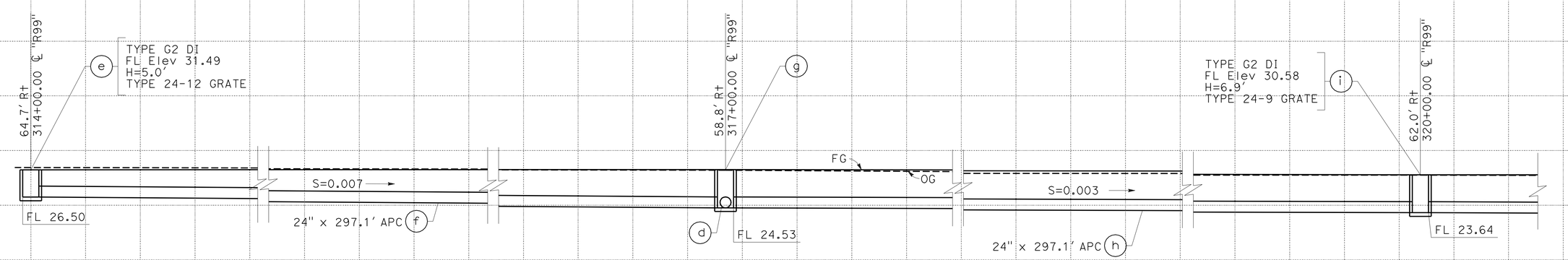

DRAINAGE SYSTEM No. 5

"R99" Sta 314+00.00

DRAINAGE PROFILES

SCALE: Horiz 1" = 10'
Vert 1" = 10'

DP-3

REVISED BY | DATE REVISED
JOSE A GONZALEZ | ASHLYN SWAN
CALCULATED-DESIGNED BY | CHECKED BY
FUNCTIONAL SUPERVISOR | MARTIN NISHIKAWA

STATE OF CALIFORNIA - DEPARTMENT OF TRANSPORTATION
Caltrans
06-DESIGN

LAST REVISION 05-26-11 | DATE PLOTTED => 29-MAR-2012 | TIME PLOTTED => 16:21

Dist	COUNTY	ROUTE	POST MILES TOTAL PROJECT	SHEET No.	TOTAL SHEETS
10	SJ	4,99	R19.5/R20.1, 15.0/18.6	317	1414

Sean Pledger 12-05-11
REGISTERED CIVIL ENGINEER DATE

3-26-12
PLANS APPROVAL DATE

REGISTERED PROFESSIONAL ENGINEER SEAN M. PLEDGER No. 56328 Exp. 12-31-12 CIVIL STATE OF CALIFORNIA

THE STATE OF CALIFORNIA OR ITS OFFICERS OR AGENTS SHALL NOT BE RESPONSIBLE FOR THE ACCURACY OR COMPLETENESS OF SCANNED COPIES OF THIS PLAN SHEET.

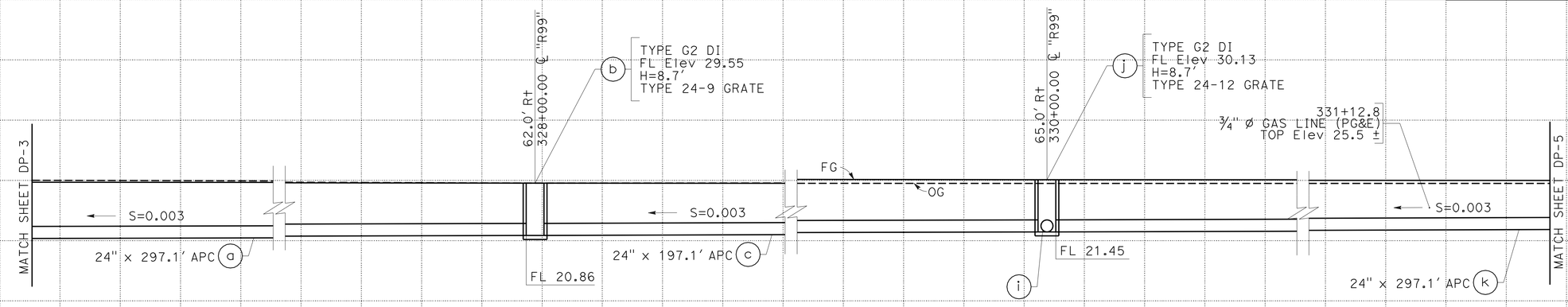

DRAINAGE SYSTEM No. 6

"R99" Sta 328+00.00

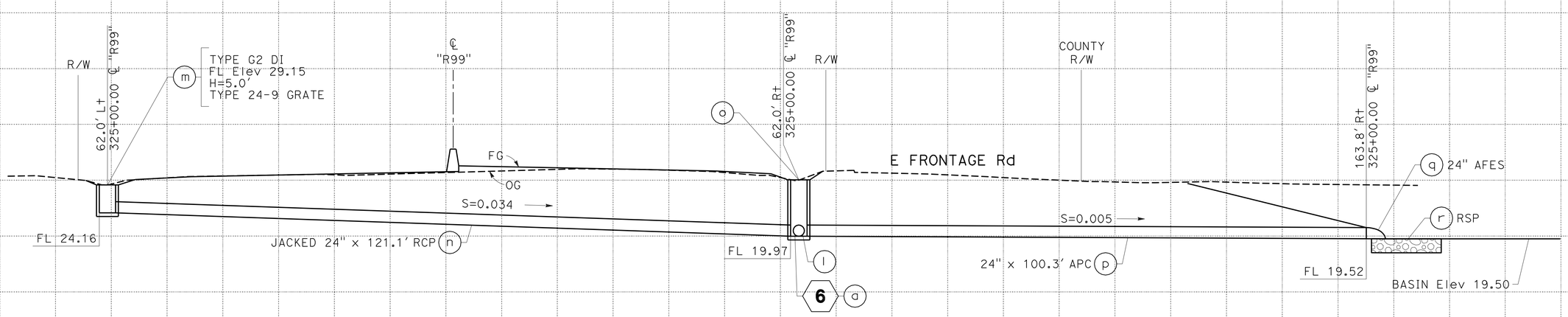

DRAINAGE SYSTEM No. 5

"R99" Sta 325+00.00

DRAINAGE PROFILES

SCALE: Horiz 1" = 10'
Vert 1" = 10'

DP-4

REVISED BY | DATE REVISED
JOSE A GONZALEZ | ASHLYN SWAN
CALCULATED-DESIGNED BY | CHECKED BY
FUNCTIONAL SUPERVISOR | MARTIN NISHIKAWA
STATE OF CALIFORNIA - DEPARTMENT OF TRANSPORTATION
06-DESIGN
Caltrans

LAST REVISION 05-26-11 | DATE PLOTTED => 29-MAR-2012 | TIME PLOTTED => 16:21

Dist	COUNTY	ROUTE	POST MILES TOTAL PROJECT	SHEET No.	TOTAL SHEETS
10	SJ	4,99	R19.5/R20.1, 15.0/18.6	318	1414

REGISTERED CIVIL ENGINEER 12-05-11 DATE

3-26-12
PLANS APPROVAL DATE

REGISTERED PROFESSIONAL ENGINEER SEAN M. PLEDGER No. 56328 Exp. 12-31-12 CIVIL STATE OF CALIFORNIA

THE STATE OF CALIFORNIA OR ITS OFFICERS OR AGENTS SHALL NOT BE RESPONSIBLE FOR THE ACCURACY OR COMPLETENESS OF SCANNED COPIES OF THIS PLAN SHEET.

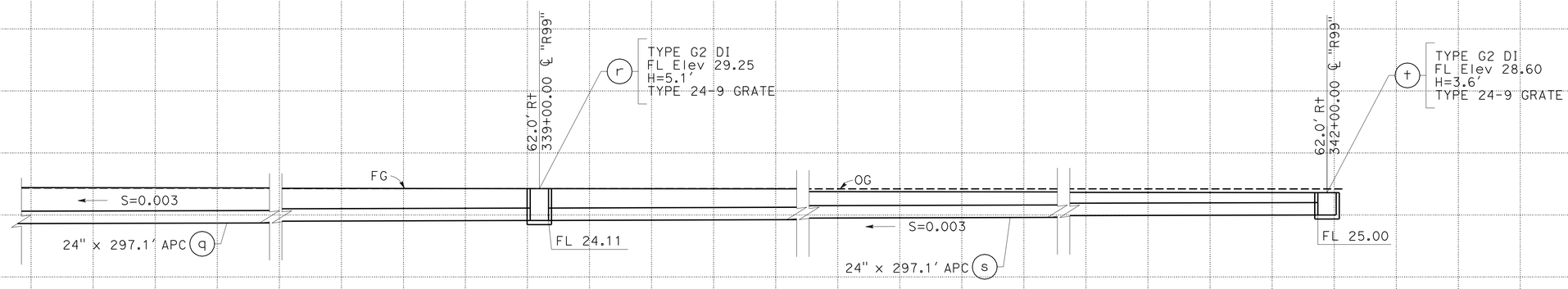

DRAINAGE SYSTEM No. 6

"R99" Sta 328+00.00

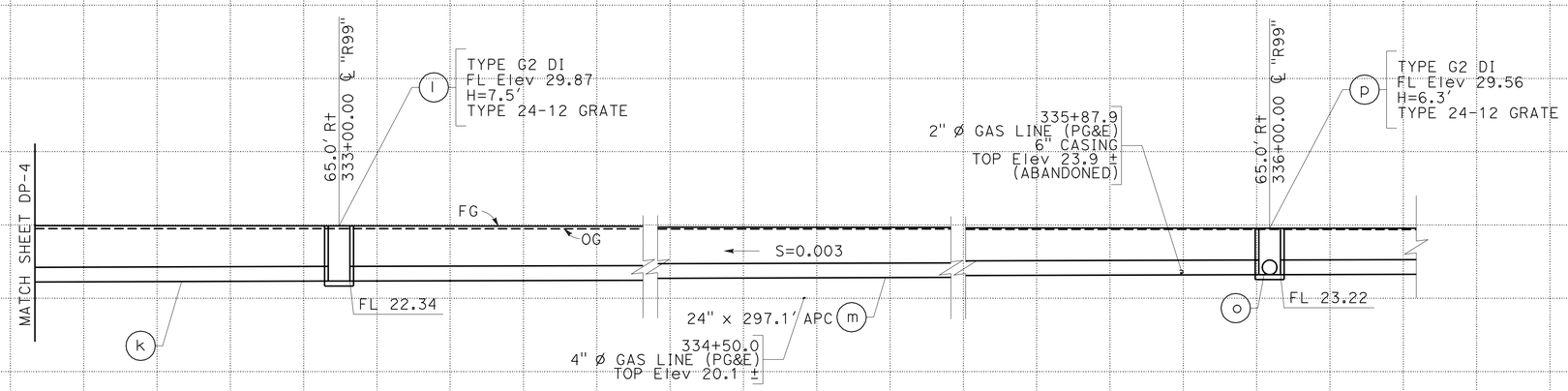

DRAINAGE SYSTEM No. 6

"R99" Sta 328+00.00

DRAINAGE PROFILES

SCALE: Horiz 1" = 10'
Vert 1" = 10'

DP-5

STATE OF CALIFORNIA - DEPARTMENT OF TRANSPORTATION
Caltrans
06-DESIGN

FUNCTIONAL SUPERVISOR: MARTIN NISHIKAWA
CALCULATED-DESIGNED BY: JOSE A GONZALEZ
CHECKED BY: ASHLYN SWAN
REVISED BY
DATE REVISED

LAST REVISION 05-26-11
DATE PLOTTED => 29-MAR-2012
TIME PLOTTED => 16:21

Dist	COUNTY	ROUTE	POST MILES TOTAL PROJECT	SHEET No.	TOTAL SHEETS
10	SJ	4,99	R19.5/R20.1, 15.0/18.6	319	1414

Sean Pledger 12-05-11
REGISTERED CIVIL ENGINEER DATE

3-26-12
PLANS APPROVAL DATE

REGISTERED PROFESSIONAL ENGINEER SEAN M. PLEDGER No. 56328 Exp. 12-31-12 CIVIL STATE OF CALIFORNIA

THE STATE OF CALIFORNIA OR ITS OFFICERS OR AGENTS SHALL NOT BE RESPONSIBLE FOR THE ACCURACY OR COMPLETENESS OF SCANNED COPIES OF THIS PLAN SHEET.

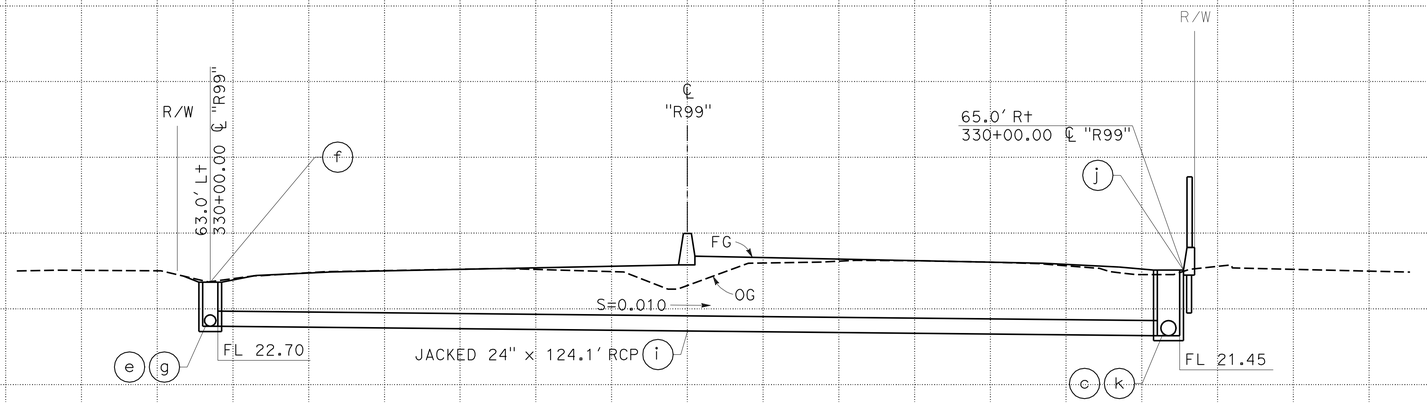

DRAINAGE SYSTEM No. 6

"R99" Sta 330+00.00

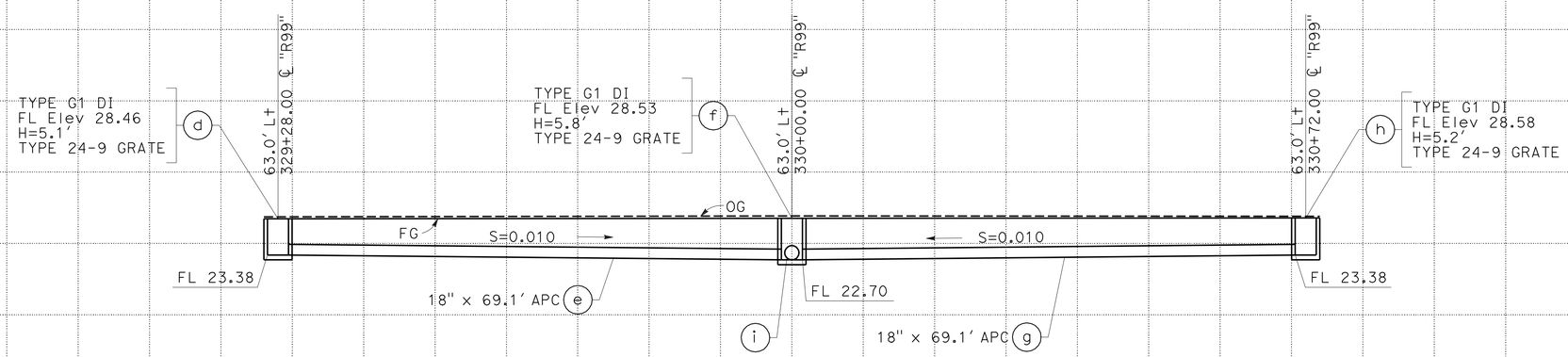

DRAINAGE SYSTEM No. 6

"R99" Sta 328+00.00

DRAINAGE PROFILES

SCALE: Horiz 1" = 10'
Vert 1" = 10'

DP-6

REVISED BY | DATE REVISED

JOSE A GONZALEZ | ASHLYN SWAN

CALCULATED-DESIGNED BY | CHECKED BY

FUNCTIONAL SUPERVISOR | MARTIN NISHIKAWA

STATE OF CALIFORNIA - DEPARTMENT OF TRANSPORTATION

Caltrans® 06-DESIGN

LAST REVISION 05-26-11 | DATE PLOTTED => 29-MAR-2012 | TIME PLOTTED => 16:22

Dist	COUNTY	ROUTE	POST MILES TOTAL PROJECT	SHEET No.	TOTAL SHEETS
10	SJ	4,99	R19.5/R20.1, 15.0/18.6	320	1414

Sean Pledger 12-05-11
REGISTERED CIVIL ENGINEER DATE

3-26-12
PLANS APPROVAL DATE

REGISTERED PROFESSIONAL ENGINEER
SEAN M. PLEDGER
No. 56328
Exp. 12-31-12
CIVIL
STATE OF CALIFORNIA

THE STATE OF CALIFORNIA OR ITS OFFICERS OR AGENTS SHALL NOT BE RESPONSIBLE FOR THE ACCURACY OR COMPLETENESS OF SCANNED COPIES OF THIS PLAN SHEET.

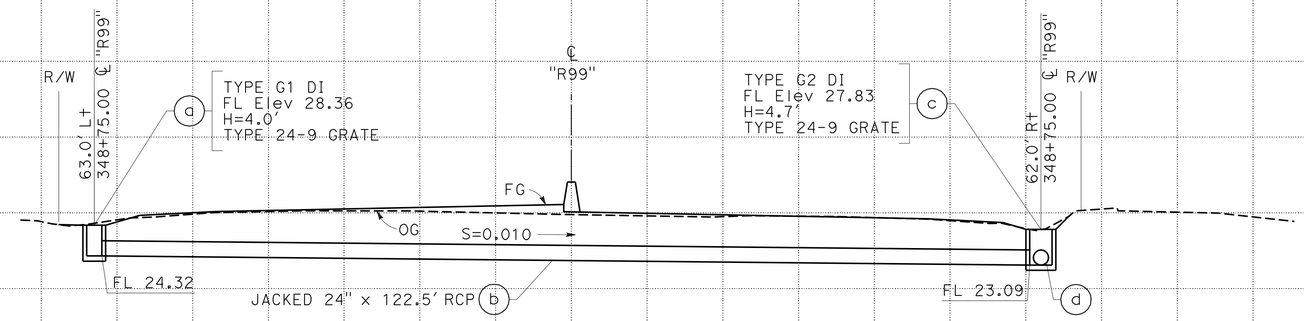

DRAINAGE SYSTEM No. 10

"R99" Sta 348+75.00

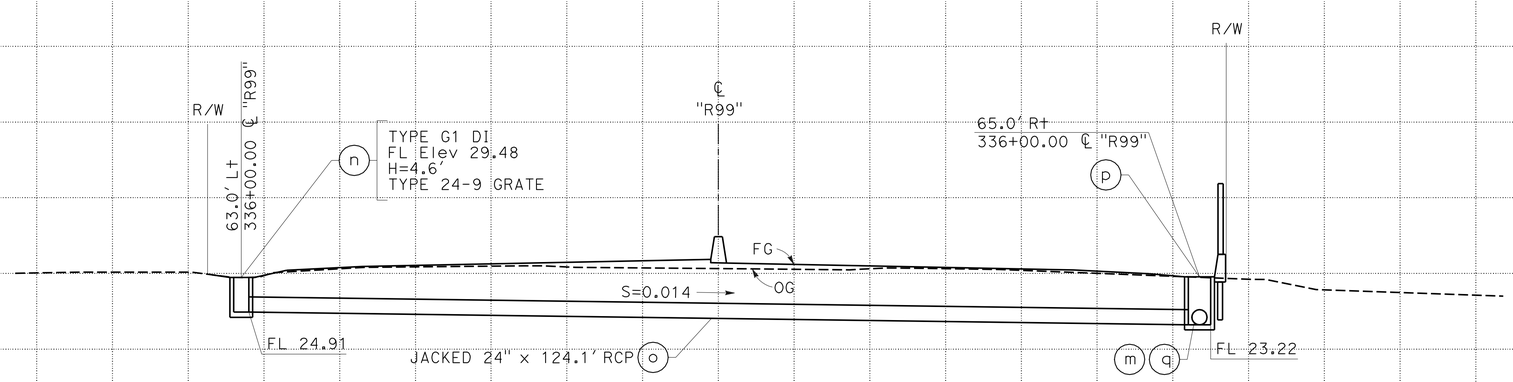

DRAINAGE SYSTEM No. 6

"R99" Sta 336+00.00

DRAINAGE PROFILES

SCALE: Horiz 1" = 10'
Vert 1" = 10'

DP-7

REVISED BY | DATE REVISED
JOSE A GONZALEZ | ASHLYN SWAN
CALCULATED-DESIGNED BY | CHECKED BY
FUNCTIONAL SUPERVISOR | MARTIN NISHIKAWA
STATE OF CALIFORNIA - DEPARTMENT OF TRANSPORTATION
Caltrans
06-DESIGN

LAST REVISION 05-26-11 | DATE PLOTTED => 29-MAR-2012 | TIME PLOTTED => 16:22

Dist	COUNTY	ROUTE	POST MILES TOTAL PROJECT	SHEET No.	TOTAL SHEETS
10	SJ	4,99	R19.5/R20.1, 15.0/18.6	321	1414

Sean Pledger 12-05-11
REGISTERED CIVIL ENGINEER DATE

3-26-12
PLANS APPROVAL DATE

REGISTERED PROFESSIONAL ENGINEER SEAN M. PLEDGER No. 56328 Exp. 12-31-12 CIVIL STATE OF CALIFORNIA

THE STATE OF CALIFORNIA OR ITS OFFICERS OR AGENTS SHALL NOT BE RESPONSIBLE FOR THE ACCURACY OR COMPLETENESS OF SCANNED COPIES OF THIS PLAN SHEET.

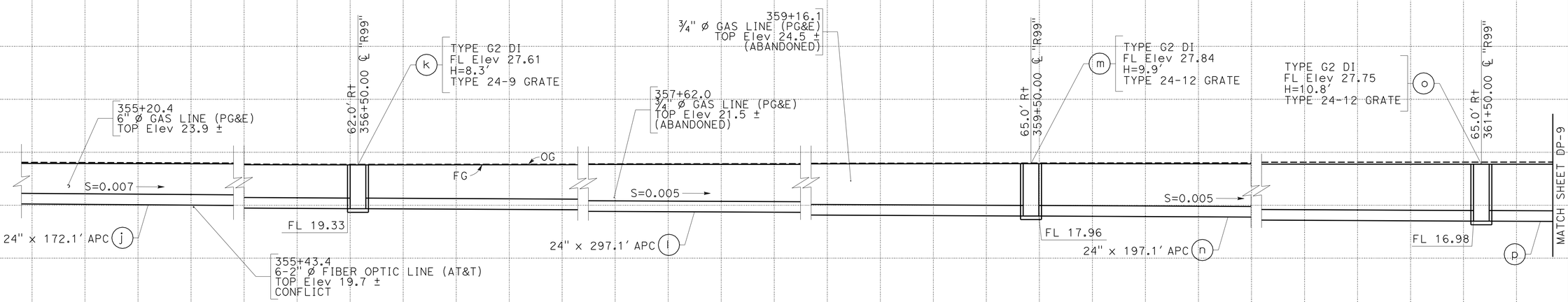

DRAINAGE SYSTEM No. 10

"R99" Sta 348+75.00

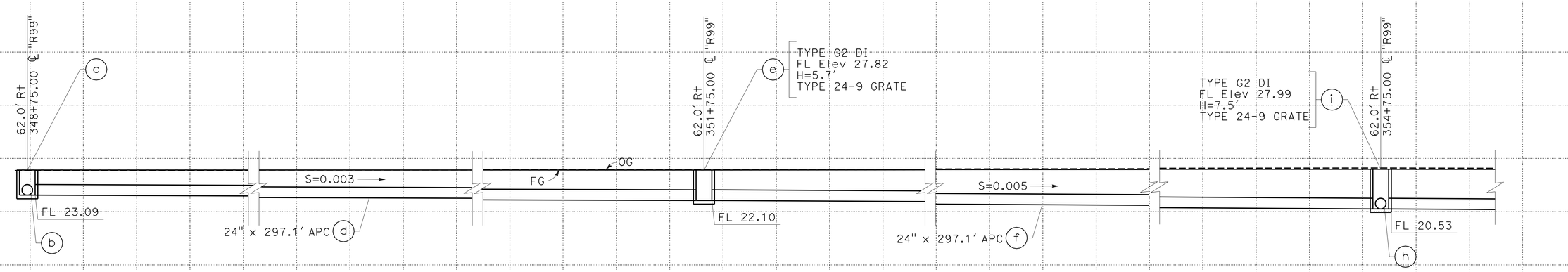

DRAINAGE SYSTEM No. 10

"R99" Sta 348+75.00

DRAINAGE PROFILES

SCALE: Horiz 1" = 10'
Vert 1" = 10'

DP-8

REVISED BY | DATE REVISED

JOSE A GONZALEZ | ASHLYN SWAN

CALCULATED-DESIGNED BY | CHECKED BY

FUNCTIONAL SUPERVISOR: MARTIN NISHIKAWA

STATE OF CALIFORNIA - DEPARTMENT OF TRANSPORTATION

Caltrans

06-DESIGN

LAST REVISION 05-26-11 | DATE PLOTTED => 29-MAR-2012 | TIME PLOTTED => 16:22

Dist	COUNTY	ROUTE	POST MILES TOTAL PROJECT	SHEET No.	TOTAL SHEETS
10	SJ	4,99	R19.5/R20.1, 15.0/18.6	322	1414

Sean Pledger 12-05-11
REGISTERED CIVIL ENGINEER DATE

3-26-12
PLANS APPROVAL DATE

REGISTERED PROFESSIONAL ENGINEER SEAN M. PLEDGER No. 56328 Exp. 12-31-12 CIVIL STATE OF CALIFORNIA

THE STATE OF CALIFORNIA OR ITS OFFICERS OR AGENTS SHALL NOT BE RESPONSIBLE FOR THE ACCURACY OR COMPLETENESS OF SCANNED COPIES OF THIS PLAN SHEET.

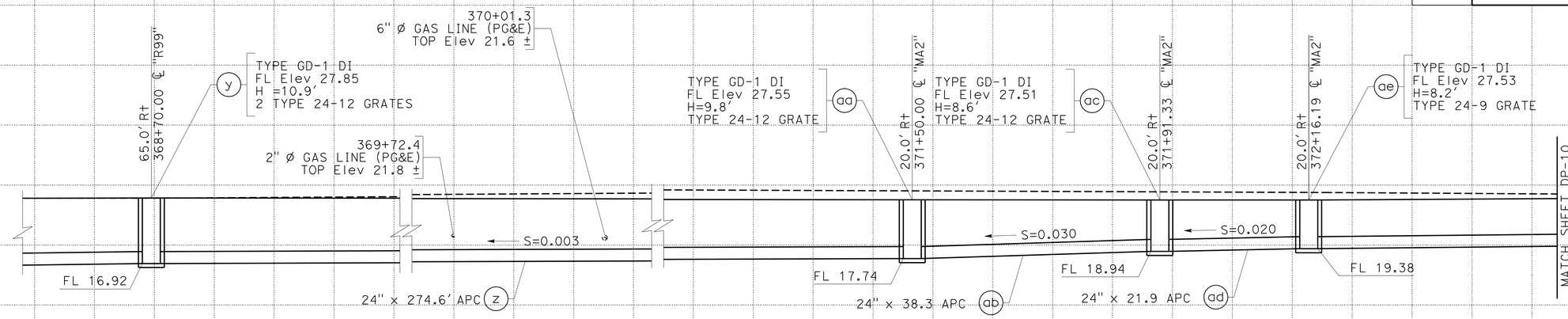

DRAINAGE SYSTEM No. 10

"R99" Sta 348+75.00

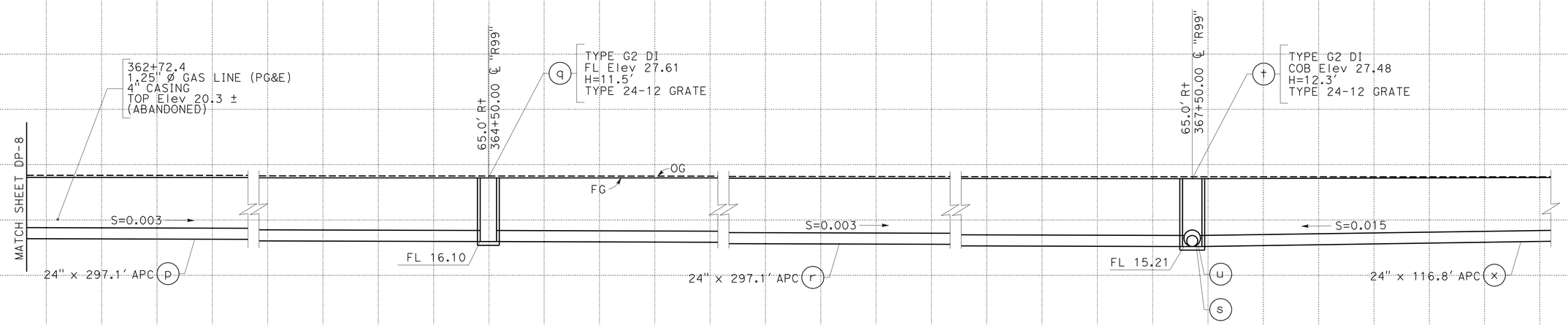

DRAINAGE SYSTEM No. 10

"R99" Sta 348+75.00

DRAINAGE PROFILES

SCALE: Horiz 1"=10'
Vert 1"=10'

DP-9

REVISED BY | DATE REVISED
JOSE A GONZALEZ | ASHLYN SWAN
CALCULATED-DESIGNED BY | CHECKED BY
FUNCTIONAL SUPERVISOR | MARTIN NISHIKAWA
STATE OF CALIFORNIA - DEPARTMENT OF TRANSPORTATION
06-DESIGN
Caltrans

LAST REVISION 05-26-11 | DATE PLOTTED => 29-MAR-2012 | TIME PLOTTED => 16:22

Dist	COUNTY	ROUTE	POST MILES TOTAL PROJECT	SHEET No.	TOTAL SHEETS
10	SJ	4,99	R19.5/R20.1, 15.0/18.6	323	1414

Sean Pledger 12-05-11
REGISTERED CIVIL ENGINEER DATE

3-26-12
PLANS APPROVAL DATE

REGISTERED PROFESSIONAL ENGINEER SEAN M. PLEDGER No. 56328 Exp. 12-31-12 CIVIL STATE OF CALIFORNIA

THE STATE OF CALIFORNIA OR ITS OFFICERS OR AGENTS SHALL NOT BE RESPONSIBLE FOR THE ACCURACY OR COMPLETENESS OF SCANNED COPIES OF THIS PLAN SHEET.

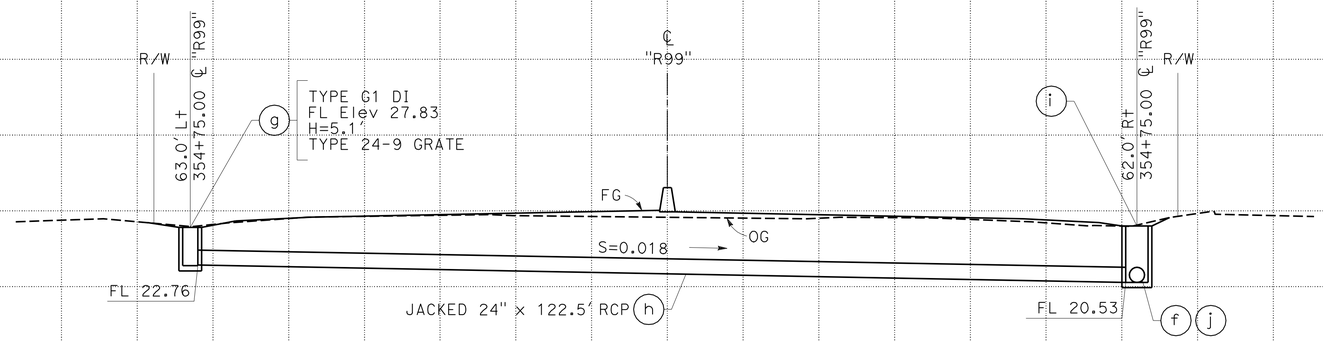

DRAINAGE SYSTEM No. 10

"R99" Sta 354+75.00

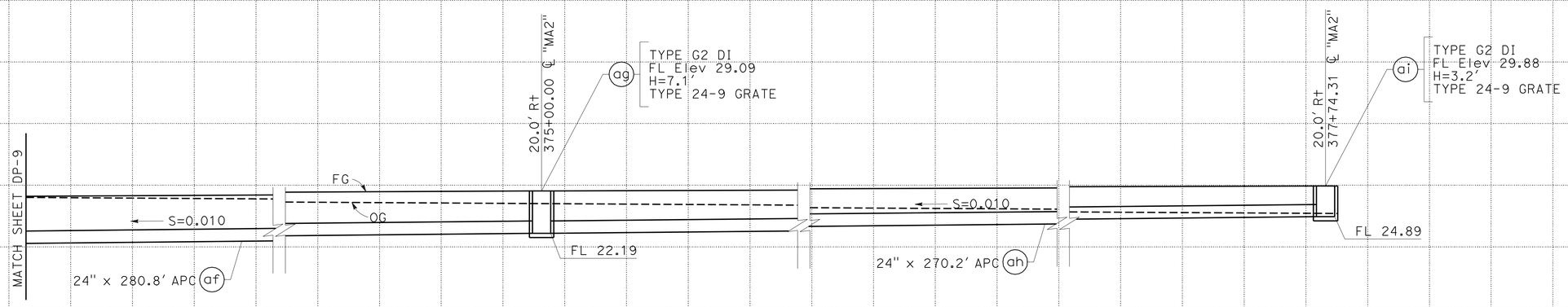

DRAINAGE SYSTEM No. 10

"R99" Sta 348+75.00

DRAINAGE PROFILES

SCALE: Horiz 1"=10'
Vert 1"=10'

DP-10

STATE OF CALIFORNIA - DEPARTMENT OF TRANSPORTATION
Caltrans
06-DESIGN

FUNCTIONAL SUPERVISOR: MARTIN NISHIKAWA
CALCULATED-DESIGNED BY: JOSE A GONZALEZ
CHECKED BY: ASHLYN SWAN
REVISED BY
DATE REVISED

LAST REVISION 05-26-11
DATE PLOTTED => 29-MAR-2012
TIME PLOTTED => 16:22

Dist	COUNTY	ROUTE	POST MILES TOTAL PROJECT	SHEET No.	TOTAL SHEETS
10	SJ	4,99	R19.5/R20.1, 15.0/18.6	324	1414

Sean Pledger 12-05-11
REGISTERED CIVIL ENGINEER DATE

3-26-12
PLANS APPROVAL DATE

REGISTERED PROFESSIONAL ENGINEER
SEAN M. PLEDGER
No. 56328
Exp. 12-31-12
CIVIL
STATE OF CALIFORNIA

THE STATE OF CALIFORNIA OR ITS OFFICERS OR AGENTS SHALL NOT BE RESPONSIBLE FOR THE ACCURACY OR COMPLETENESS OF SCANNED COPIES OF THIS PLAN SHEET.

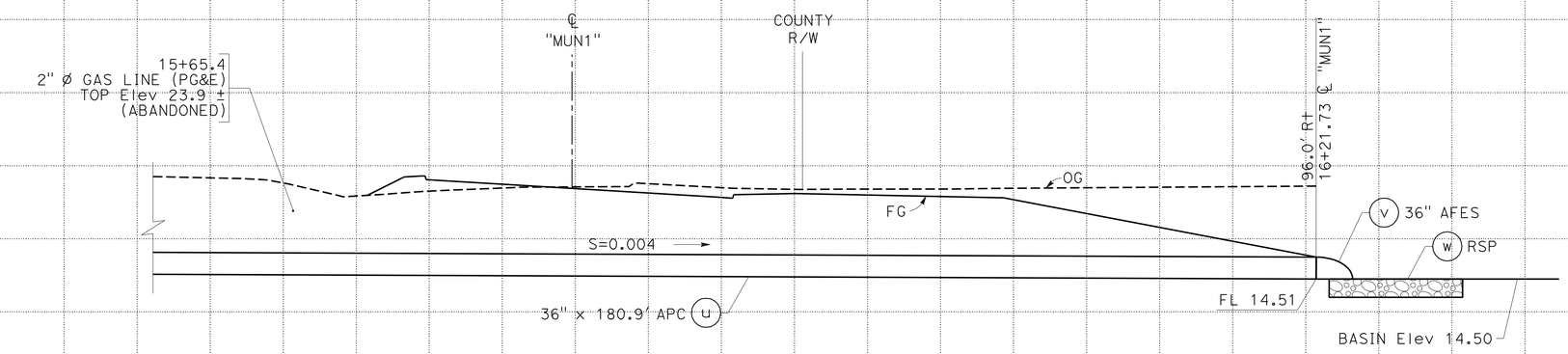

DRAINAGE SYSTEM No. 10

"R99" Sta 367+50.00

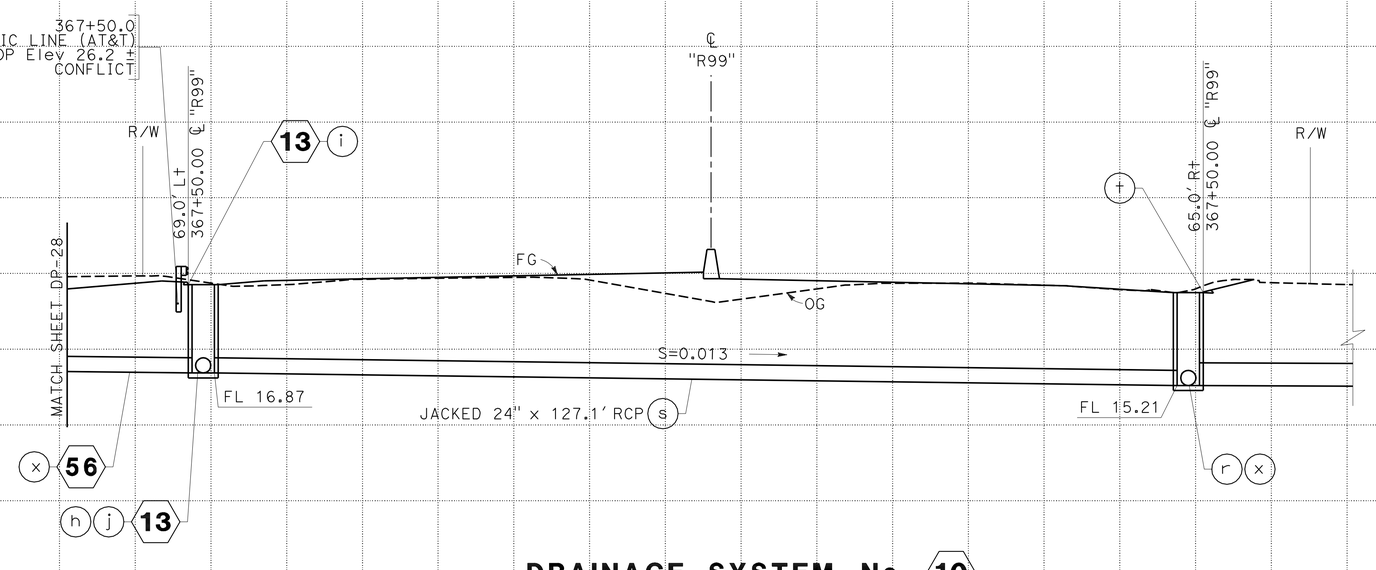

DRAINAGE SYSTEM No. 10

"R99" Sta 367+50.00

DRAINAGE PROFILES

SCALE: Horiz 1" = 10'
Vert 1" = 10'

DP-11

REVISED BY | DATE REVISED
JOSE A GONZALEZ | ASHLYN SWAN
CALCULATED-DESIGNED BY | CHECKED BY
FUNCTIONAL SUPERVISOR | MARTIN NISHIKAWA
STATE OF CALIFORNIA - DEPARTMENT OF TRANSPORTATION
06-DESIGN
Caltrans

LAST REVISION 05-26-11 | DATE PLOTTED => 29-MAR-2012 | TIME PLOTTED => 16:22

Dist	COUNTY	ROUTE	POST MILES TOTAL PROJECT	SHEET No.	TOTAL SHEETS
10	SJ	4,99	R19.5/R20.1, 15.0/18.6	325	1414

Sean Pledger 12-05-11
REGISTERED CIVIL ENGINEER DATE

3-26-12
PLANS APPROVAL DATE

REGISTERED PROFESSIONAL ENGINEER SEAN M. PLEDGER No. 56328 Exp. 12-31-12 CIVIL STATE OF CALIFORNIA

THE STATE OF CALIFORNIA OR ITS OFFICERS OR AGENTS SHALL NOT BE RESPONSIBLE FOR THE ACCURACY OR COMPLETENESS OF SCANNED COPIES OF THIS PLAN SHEET.

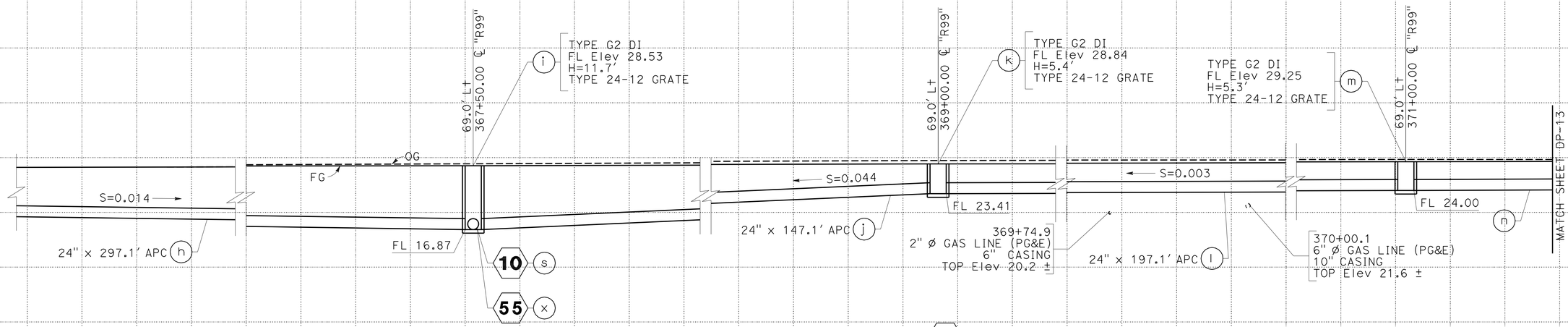

DRAINAGE SYSTEM No. 13

"R99" Sta 360+75.00

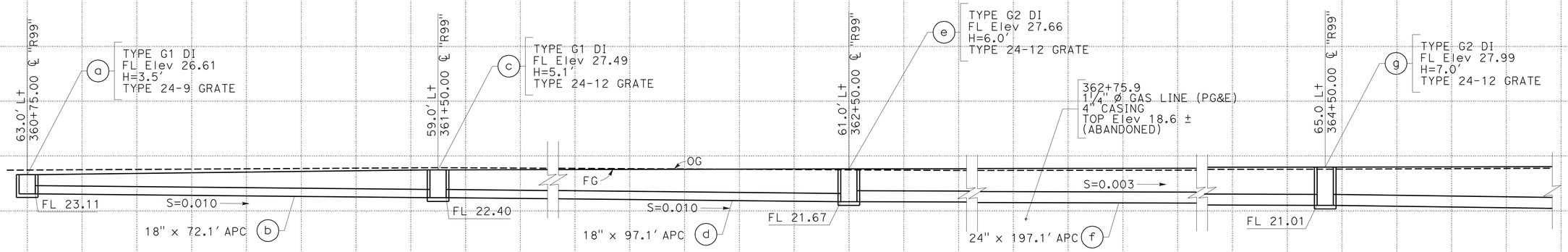

DRAINAGE SYSTEM No. 13

"R99" Sta 360+75.00

DRAINAGE PROFILES

SCALE: Horiz 1"=10'
Vert 1"=10'

DP-12

STATE OF CALIFORNIA - DEPARTMENT OF TRANSPORTATION
Caltrans
06-DESIGN

FUNCTIONAL SUPERVISOR: MARTIN NISHIKAWA
CALCULATED-DESIGNED BY: JOSE A GONZALEZ
CHECKED BY: ASHLYN SWAN
REVISED BY
DATE REVISED

LAST REVISION 05-26-11
DATE PLOTTED => 29-MAR-2012
TIME PLOTTED => 16:22

Dist	COUNTY	ROUTE	POST MILES TOTAL PROJECT	SHEET No.	TOTAL SHEETS
10	SJ	4,99	R19.5/R20.1, 15.0/18.6	326	1414

Sean Pledger 12-05-11
REGISTERED CIVIL ENGINEER DATE

3-26-12
PLANS APPROVAL DATE

REGISTERED PROFESSIONAL ENGINEER SEAN M. PLEDGER No. 56328 Exp. 12-31-12 CIVIL STATE OF CALIFORNIA

THE STATE OF CALIFORNIA OR ITS OFFICERS OR AGENTS SHALL NOT BE RESPONSIBLE FOR THE ACCURACY OR COMPLETENESS OF SCANNED COPIES OF THIS PLAN SHEET.

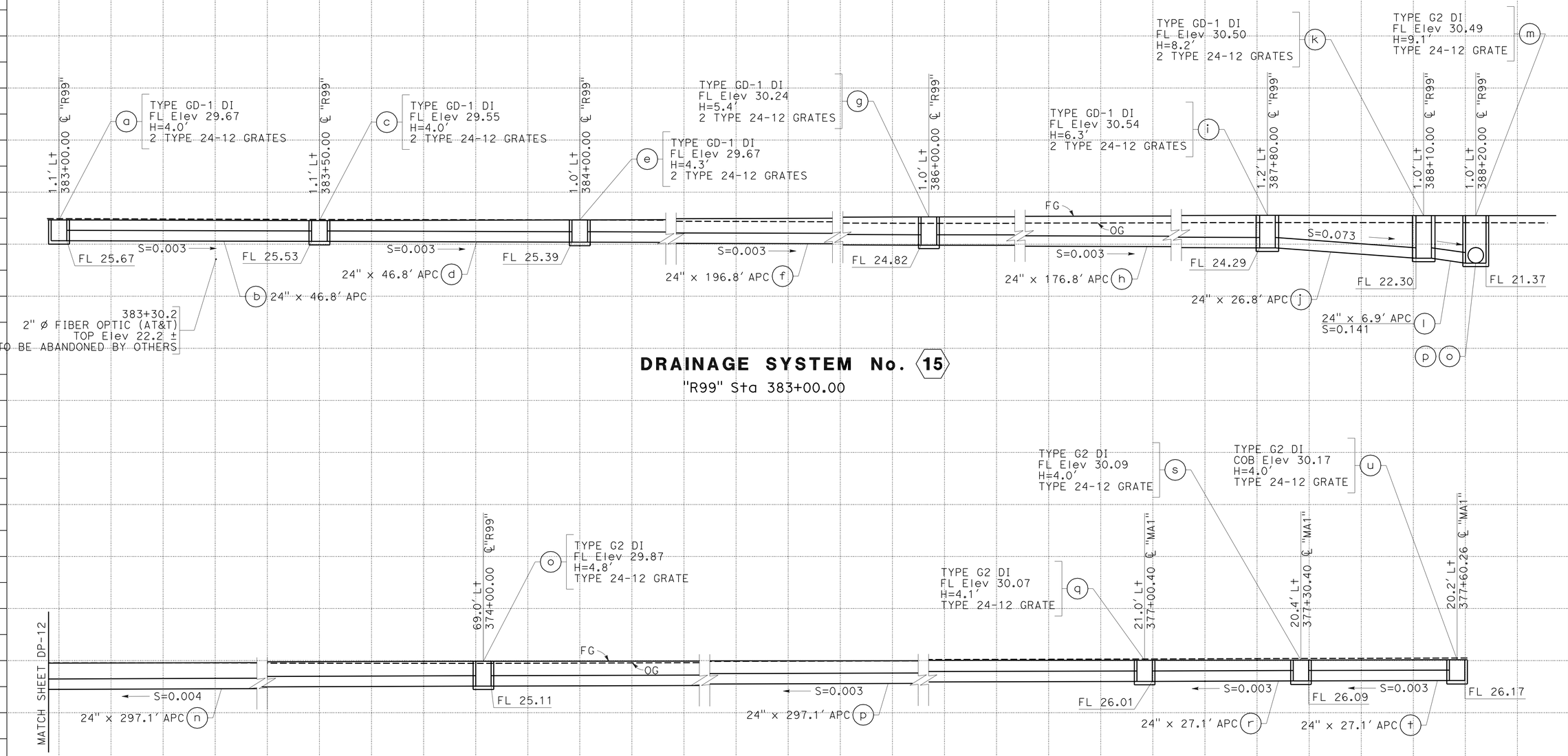

DRAINAGE SYSTEM No. 15

"R99" Sta 383+00.00

DRAINAGE SYSTEM No. 13

"R99" Sta 360+75.00

DRAINAGE PROFILES

SCALE: Horiz 1"=10'
Vert 1"=10'

DP-13

STATE OF CALIFORNIA - DEPARTMENT OF TRANSPORTATION
06-DESIGN
FUNCTIONAL SUPERVISOR: MARTIN NISHIKAWA
CALCULATED-DESIGNED BY: JOSE A GONZALEZ
CHECKED BY: ASHLYN SWAN
REVISED BY
DATE REVISED

LAST REVISION 05-26-11
DATE PLOTTED => 29-MAR-2012
TIME PLOTTED => 16:22

Dist	COUNTY	ROUTE	POST MILES TOTAL PROJECT	SHEET No.	TOTAL SHEETS
10	SJ	4,99	R19.5/R20.1, 15.0/18.6	327	1414

Sean Pledger 12-05-11
REGISTERED CIVIL ENGINEER DATE

3-26-12
PLANS APPROVAL DATE

REGISTERED PROFESSIONAL ENGINEER SEAN M. PLEDGER No. 56328 Exp. 12-31-12 CIVIL STATE OF CALIFORNIA

THE STATE OF CALIFORNIA OR ITS OFFICERS OR AGENTS SHALL NOT BE RESPONSIBLE FOR THE ACCURACY OR COMPLETENESS OF SCANNED COPIES OF THIS PLAN SHEET.

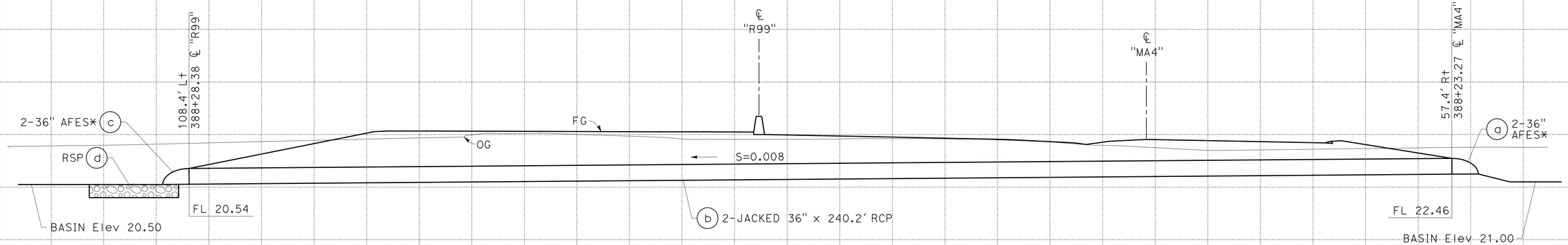

* SEE DRAINAGE DETAILS SHEETS.

DRAINAGE SYSTEM No. 17

"R99" Sta 388+20.00

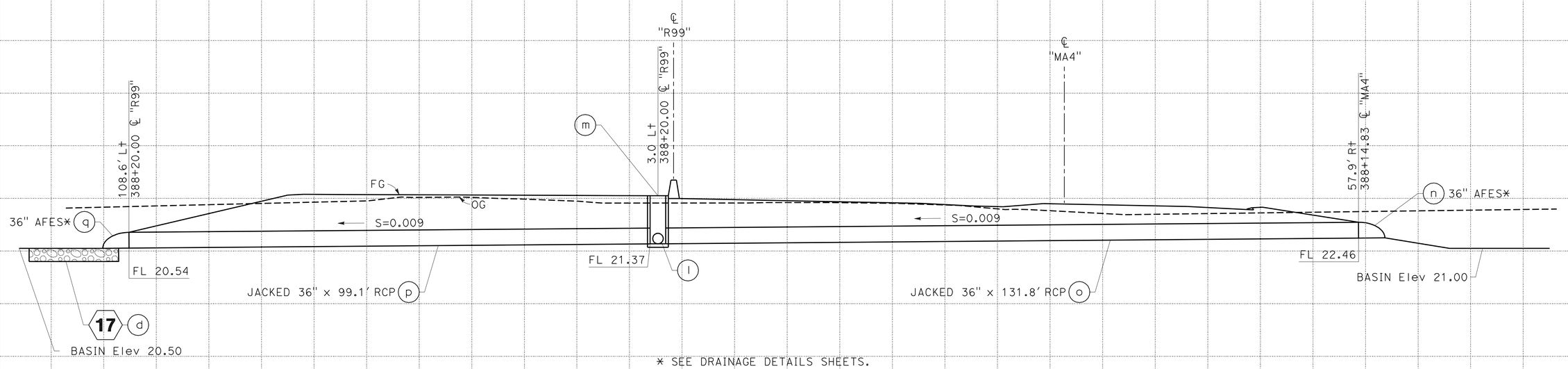

* SEE DRAINAGE DETAILS SHEETS.

DRAINAGE SYSTEM No. 15

"R99" Sta 388+20.00

DRAINAGE PROFILES

SCALE: Horiz 1" = 10'
Vert 1" = 10'

DP-14

REVISED BY | DATE REVISED
JOSE A GONZALEZ | ASHLYN SWAN
CALCULATED-DESIGNED BY | CHECKED BY
FUNCTIONAL SUPERVISOR | MARTIN NISHIKAWA
STATE OF CALIFORNIA - DEPARTMENT OF TRANSPORTATION
06-DESIGN
Caltrans

LAST REVISION 05-26-11 | DATE PLOTTED => 29-MAR-2012 | TIME PLOTTED => 16:22

Dist	COUNTY	ROUTE	POST MILES TOTAL PROJECT	SHEET No.	TOTAL SHEETS
10	SJ	4,99	R19.5/R20.1, 15.0/18.6	328	1414

Sean Pledger 12-05-11
REGISTERED CIVIL ENGINEER DATE

3-26-12
PLANS APPROVAL DATE

REGISTERED PROFESSIONAL ENGINEER SEAN M. PLEDGER No. 56328 Exp. 12-31-12 CIVIL STATE OF CALIFORNIA

THE STATE OF CALIFORNIA OR ITS OFFICERS OR AGENTS SHALL NOT BE RESPONSIBLE FOR THE ACCURACY OR COMPLETENESS OF SCANNED COPIES OF THIS PLAN SHEET.

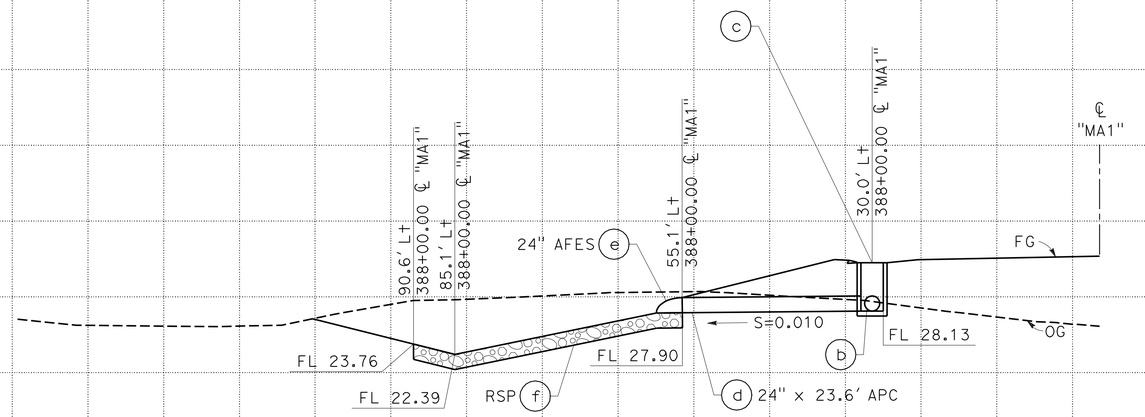

DRAINAGE SYSTEM No. 20

"MA1" Sta 388+00.00

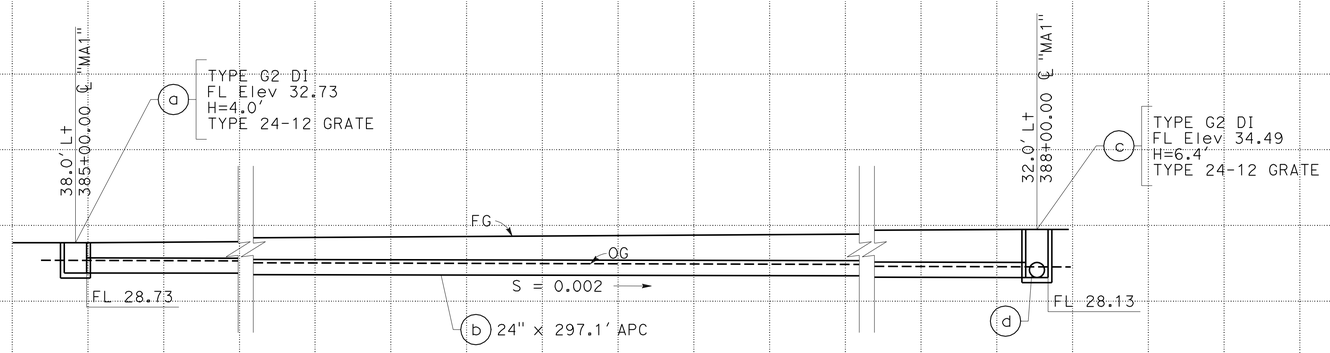

DRAINAGE SYSTEM No. 20

"MA1" Sta 385+00.00

DRAINAGE PROFILES

SCALE: Horiz 1"=10'
Vert 1"=10'

DP-15

STATE OF CALIFORNIA - DEPARTMENT OF TRANSPORTATION
Caltrans
06-DESIGN
FUNCTIONAL SUPERVISOR: MARTIN NISHIKAWA
CALCULATED-DESIGNED BY: JOSE A GONZALEZ
CHECKED BY: ASHLYN SWAN
REVISED BY
DATE REVISED

LAST REVISION 05-26-11
DATE PLOTTED => 29-MAR-2012
TIME PLOTTED => 16:22

Dist	COUNTY	ROUTE	POST MILES TOTAL PROJECT	SHEET No.	TOTAL SHEETS
10	SJ	4,99	R19.5/R20.1, 15.0/18.6	329	1414

REGISTERED CIVIL ENGINEER 12-05-11 DATE

3-26-12
PLANS APPROVAL DATE

REGISTERED PROFESSIONAL ENGINEER SEAN M. PLEDGER No. 56328 Exp. 12-31-12 CIVIL STATE OF CALIFORNIA

THE STATE OF CALIFORNIA OR ITS OFFICERS OR AGENTS SHALL NOT BE RESPONSIBLE FOR THE ACCURACY OR COMPLETENESS OF SCANNED COPIES OF THIS PLAN SHEET.

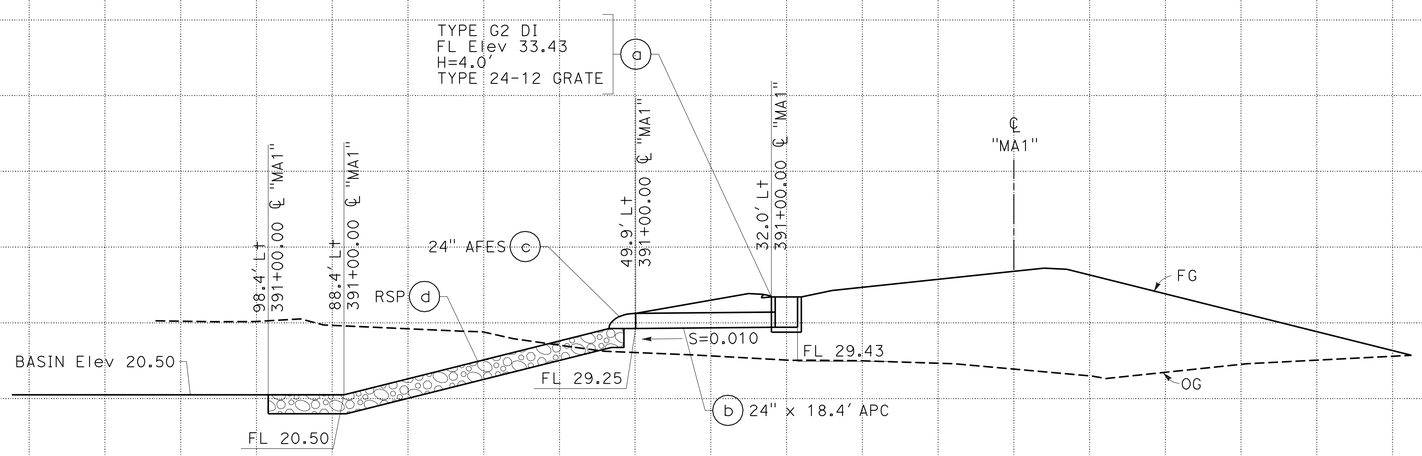

DRAINAGE SYSTEM No. 25

"MA1" Sta 391+00.00

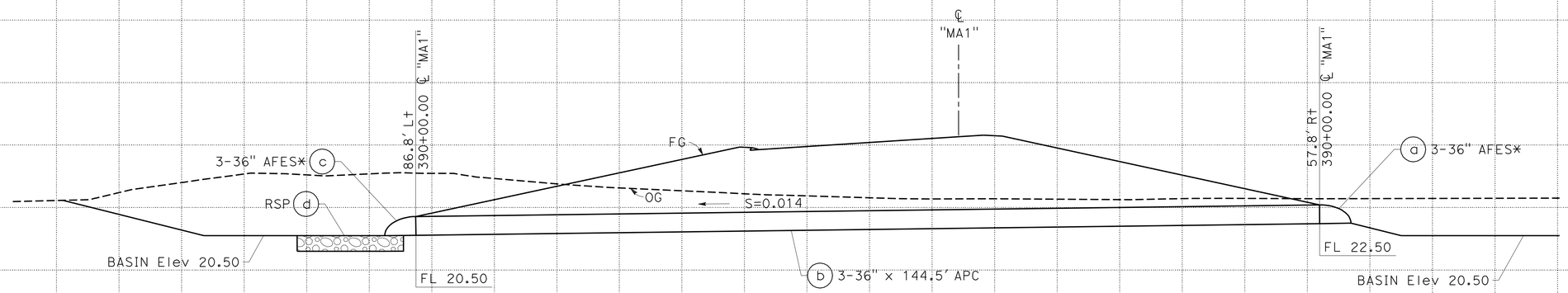

* SEE DRAINAGE DETAILS SHEETS.

DRAINAGE SYSTEM No. 22

"MA1" Sta 390+00.00

DRAINAGE PROFILES

SCALE: Horiz 1" = 10'
Vert 1" = 10'

DP-16

STATE OF CALIFORNIA - DEPARTMENT OF TRANSPORTATION
Caltrans
06-DESIGN

FUNCTIONAL SUPERVISOR: MARTIN NISHIKAWA
CALCULATED-DESIGNED BY: JOSE A GONZALEZ
CHECKED BY: ASHLYN SWAN
REVISED BY
DATE REVISED

LAST REVISION 05-26-11
DATE PLOTTED => 29-MAR-2012
TIME PLOTTED => 16:22

Dist	COUNTY	ROUTE	POST MILES TOTAL PROJECT	SHEET No.	TOTAL SHEETS
10	SJ	4,99	R19.5/R20.1, 15.0/18.6	330	1414

Sean Pledger 12-05-11
REGISTERED CIVIL ENGINEER DATE

3-26-12
PLANS APPROVAL DATE

REGISTERED PROFESSIONAL ENGINEER SEAN M. PLEDGER No. 56328 Exp. 12-31-12 CIVIL STATE OF CALIFORNIA

THE STATE OF CALIFORNIA OR ITS OFFICERS OR AGENTS SHALL NOT BE RESPONSIBLE FOR THE ACCURACY OR COMPLETENESS OF SCANNED COPIES OF THIS PLAN SHEET.

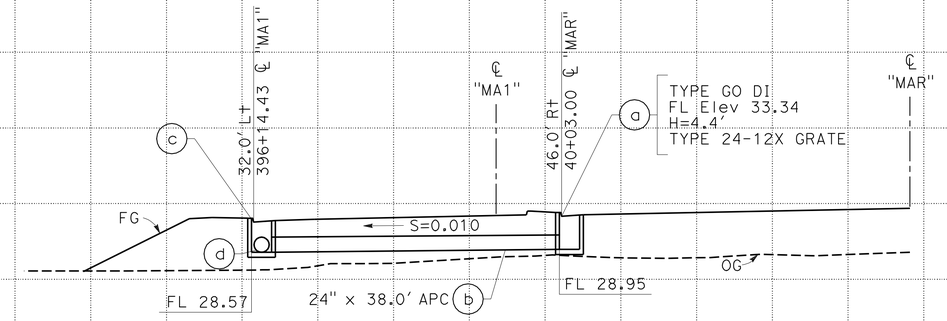

DRAINAGE SYSTEM No. 29

"MA1" Sta 396+14.43

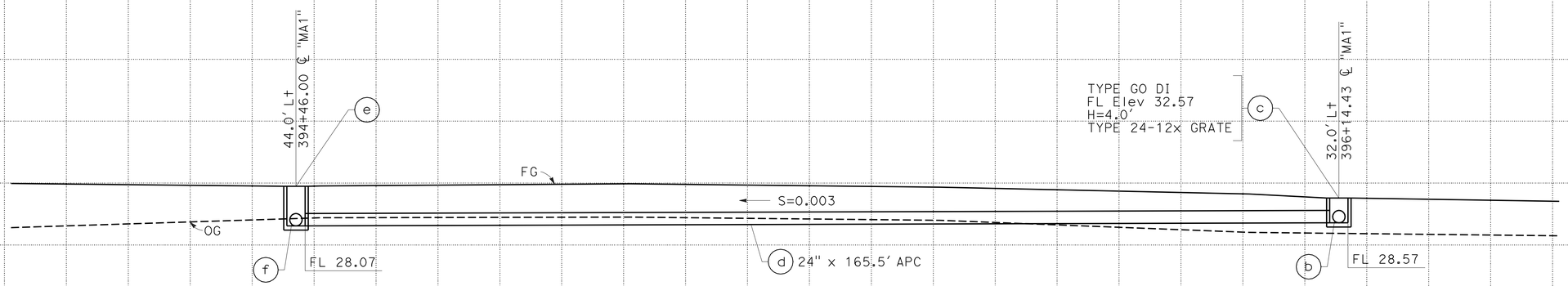

DRAINAGE SYSTEM No. 29

"MA1" Sta 394+46.00

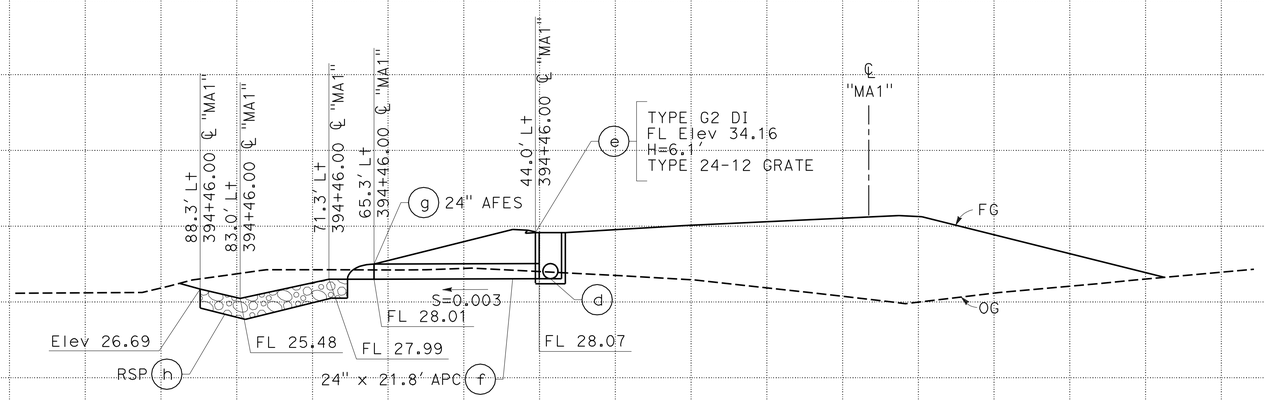

DRAINAGE SYSTEM No. 29

"MA1" Sta 394+46.00

DRAINAGE PROFILES

SCALE: Horiz 1" = 10'
Vert 1" = 10'

DP-17

REVISED BY | DATE REVISED
JOSE A GONZALEZ | ASHLYN SWAN
CALCULATED-DESIGNED BY | CHECKED BY
FUNCTIONAL SUPERVISOR: MARTIN NISHIKAWA

STATE OF CALIFORNIA - DEPARTMENT OF TRANSPORTATION
06-DESIGN
Caltrans

LAST REVISION 05-26-11 | DATE PLOTTED => 29-MAR-2012 | TIME PLOTTED => 16:22

Dist	COUNTY	ROUTE	POST MILES TOTAL PROJECT	SHEET No.	TOTAL SHEETS
10	SJ	4,99	R19.5/R20.1, 15.0/18.6	331	1414

REGISTERED CIVIL ENGINEER 12-05-11 DATE

3-26-12
PLANS APPROVAL DATE

REGISTERED PROFESSIONAL ENGINEER SEAN M. PLEDGER No. 56328 Exp. 12-31-12 CIVIL STATE OF CALIFORNIA

THE STATE OF CALIFORNIA OR ITS OFFICERS OR AGENTS SHALL NOT BE RESPONSIBLE FOR THE ACCURACY OR COMPLETENESS OF SCANNED COPIES OF THIS PLAN SHEET.

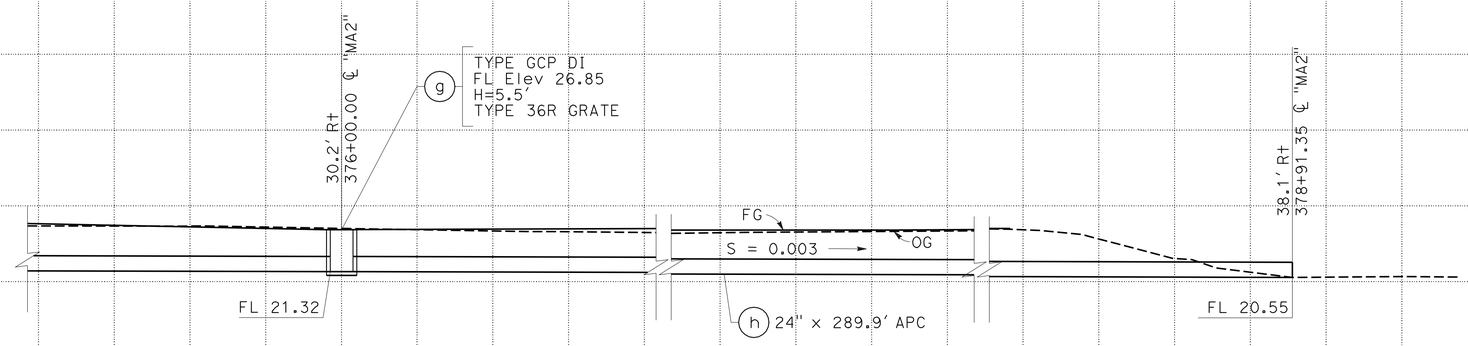

DRAINAGE SYSTEM No. 31

"MA2" Sta 369+73.70

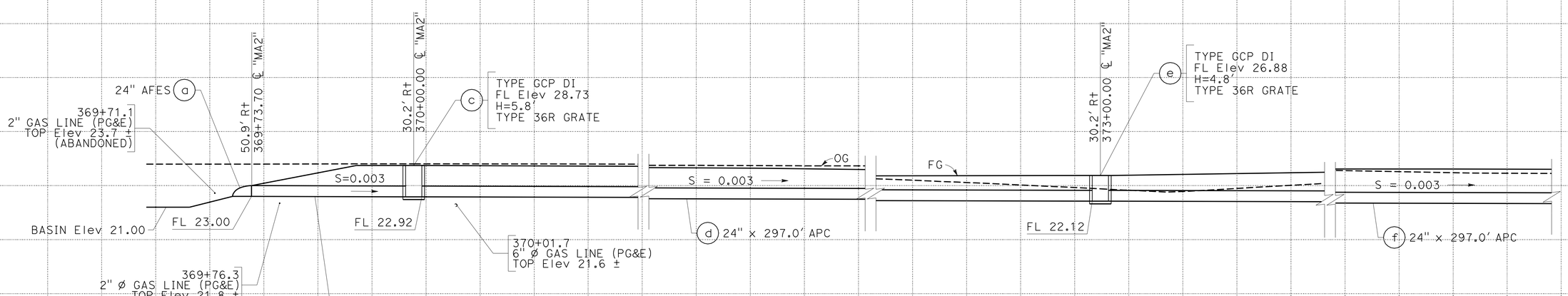

DRAINAGE SYSTEM No. 31

"MA2" Sta 369+73.70

DRAINAGE PROFILES

SCALE: Horiz 1" = 10'
Vert 1" = 10'

DP-18

REVISED BY | DATE REVISED
JOSE A GONZALEZ | ASHLYN SWAN
CALCULATED-DESIGNED BY | CHECKED BY
FUNCTIONAL SUPERVISOR: MARTIN NISHIKAWA
STATE OF CALIFORNIA - DEPARTMENT OF TRANSPORTATION
06-DESIGN
Caltrans

LAST REVISION 05-26-11 | DATE PLOTTED => 29-MAR-2012 | TIME PLOTTED => 16:23

Dist	COUNTY	ROUTE	POST MILES TOTAL PROJECT	SHEET No.	TOTAL SHEETS
10	SJ	4,99	R19.5/R20.1, 15.0/18.6	332	1414

Sean Pledger 12-05-11
REGISTERED CIVIL ENGINEER DATE

3-26-12
PLANS APPROVAL DATE

REGISTERED PROFESSIONAL ENGINEER SEAN M. PLEDGER No. 56328 Exp. 12-31-12 CIVIL STATE OF CALIFORNIA

THE STATE OF CALIFORNIA OR ITS OFFICERS OR AGENTS SHALL NOT BE RESPONSIBLE FOR THE ACCURACY OR COMPLETENESS OF SCANNED COPIES OF THIS PLAN SHEET.

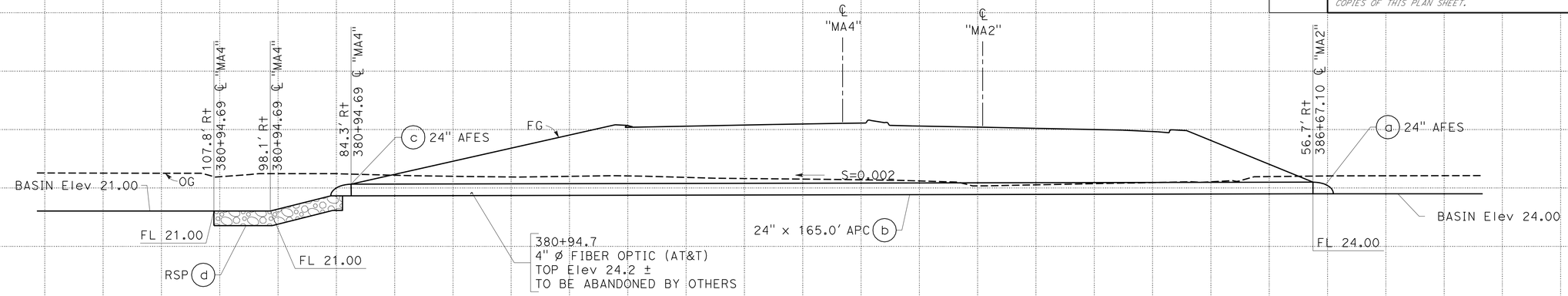

DRAINAGE SYSTEM No. 39

"MA2" Sta 386+67.10

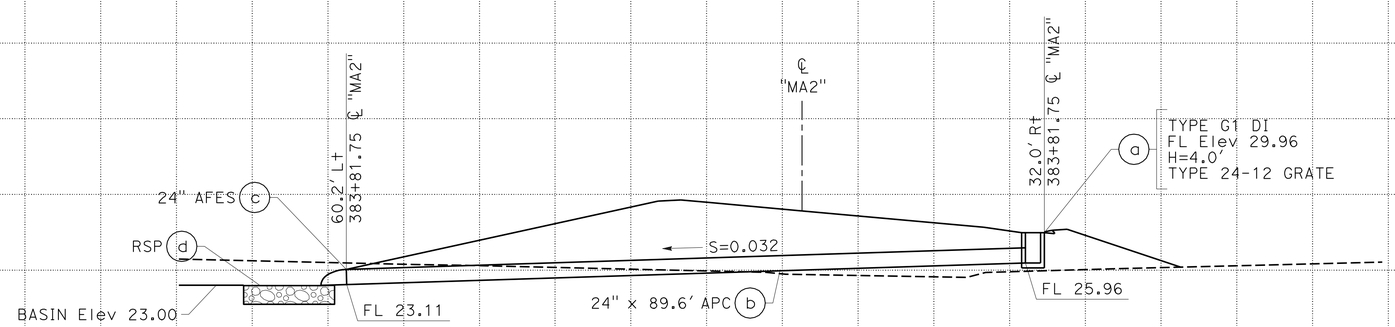

DRAINAGE SYSTEM No. 38

"MA2" Sta 383+81.75

DRAINAGE PROFILES

SCALE: Horiz 1"=10'
Vert 1"=10'

DP-19

STATE OF CALIFORNIA - DEPARTMENT OF TRANSPORTATION
Caltrans 06-DESIGN
FUNCTIONAL SUPERVISOR: MARTIN NISHIKAWA
CALCULATED-DESIGNED BY: JOSE A GONZALEZ
CHECKED BY: ASHLYN SWAN
REVISED BY
DATE REVISED

LAST REVISION 05-26-11
DATE PLOTTED => 29-MAR-2012
TIME PLOTTED => 16:23

Dist	COUNTY	ROUTE	POST MILES TOTAL PROJECT	SHEET No.	TOTAL SHEETS
10	SJ	4,99	R19.5/R20.1, 15.0/18.6	333	1414

Sean Pledger 12-05-11
REGISTERED CIVIL ENGINEER DATE

3-26-12
PLANS APPROVAL DATE

REGISTERED PROFESSIONAL ENGINEER SEAN M. PLEDGER No. 56328 Exp. 12-31-12 CIVIL STATE OF CALIFORNIA

THE STATE OF CALIFORNIA OR ITS OFFICERS OR AGENTS SHALL NOT BE RESPONSIBLE FOR THE ACCURACY OR COMPLETENESS OF SCANNED COPIES OF THIS PLAN SHEET.

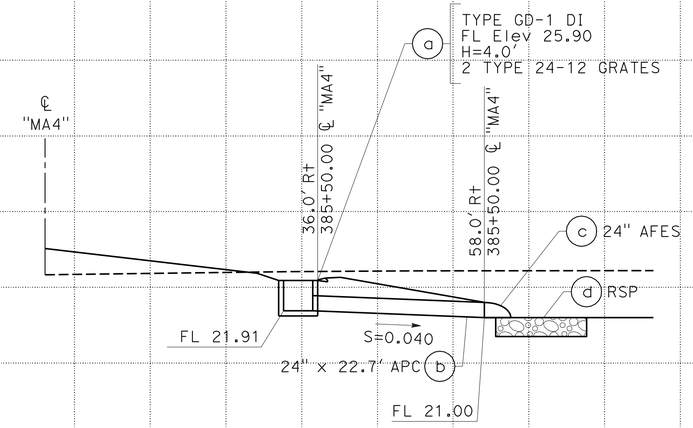

DRAINAGE SYSTEM No. 44

"MA4" Sta 385+50.00

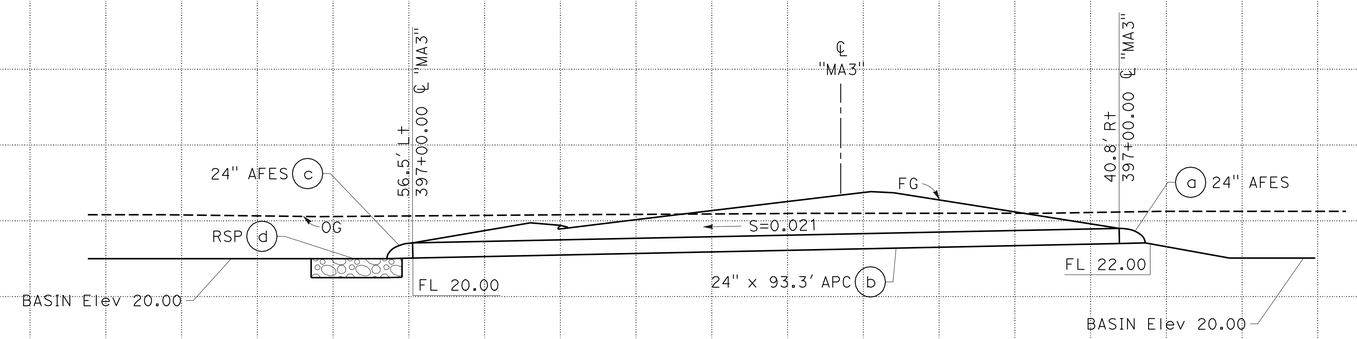

DRAINAGE SYSTEM No. 42

"MA3" Sta 397+00.00

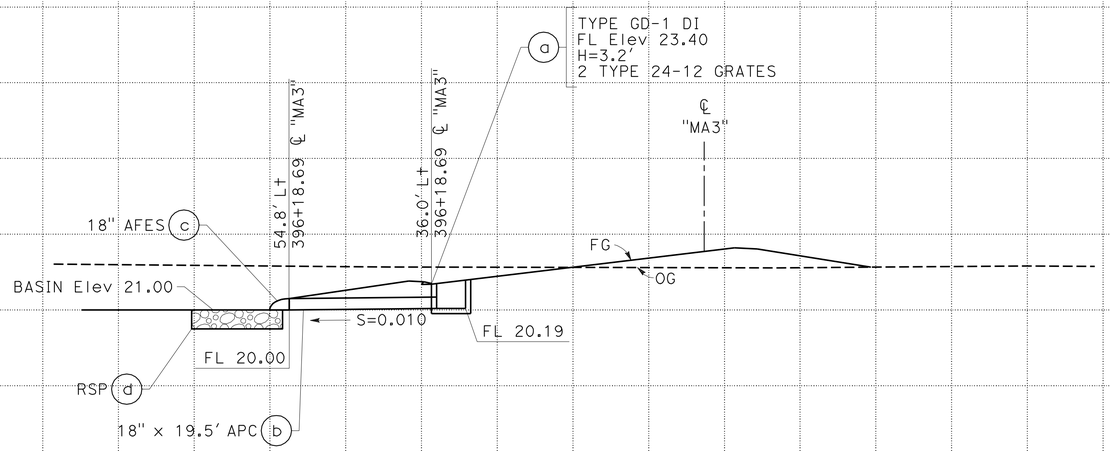

DRAINAGE SYSTEM No. 41

"MA3" Sta 396+18.69

DRAINAGE PROFILES

SCALE: Horiz 1"=10'
Vert 1"=10'

DP-20

REVISED BY | DATE REVISED
JOSE A GONZALEZ | ASHLYN SWAN
CALCULATED-DESIGNED BY | CHECKED BY
FUNCTIONAL SUPERVISOR | MARTIN NISHIKAWA
STATE OF CALIFORNIA - DEPARTMENT OF TRANSPORTATION | 06-DESIGN | Caltrans

LAST REVISION 05-26-11 | DATE PLOTTED => 29-MAR-2012 | TIME PLOTTED => 16:23

Dist	COUNTY	ROUTE	POST MILES TOTAL PROJECT	SHEET No.	TOTAL SHEETS
10	SJ	4,99	R19.5/R20.1, 15.0/18.6	334	1414

Sean Pledger 12-05-11
REGISTERED CIVIL ENGINEER DATE

3-26-12
PLANS APPROVAL DATE

REGISTERED PROFESSIONAL ENGINEER SEAN M. PLEDGER No. 56328 Exp. 12-31-12 CIVIL STATE OF CALIFORNIA

THE STATE OF CALIFORNIA OR ITS OFFICERS OR AGENTS SHALL NOT BE RESPONSIBLE FOR THE ACCURACY OR COMPLETENESS OF SCANNED COPIES OF THIS PLAN SHEET.

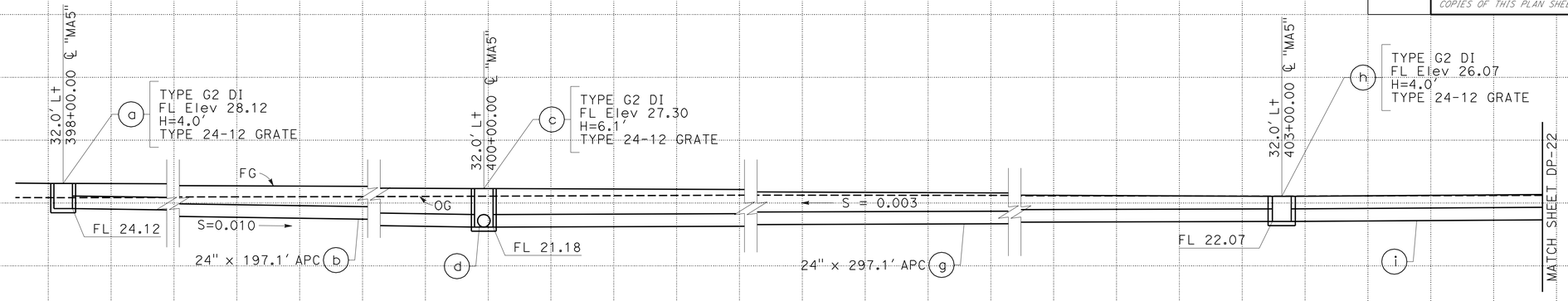

DRAINAGE SYSTEM No. 47

"MA5" Sta 398+00.00

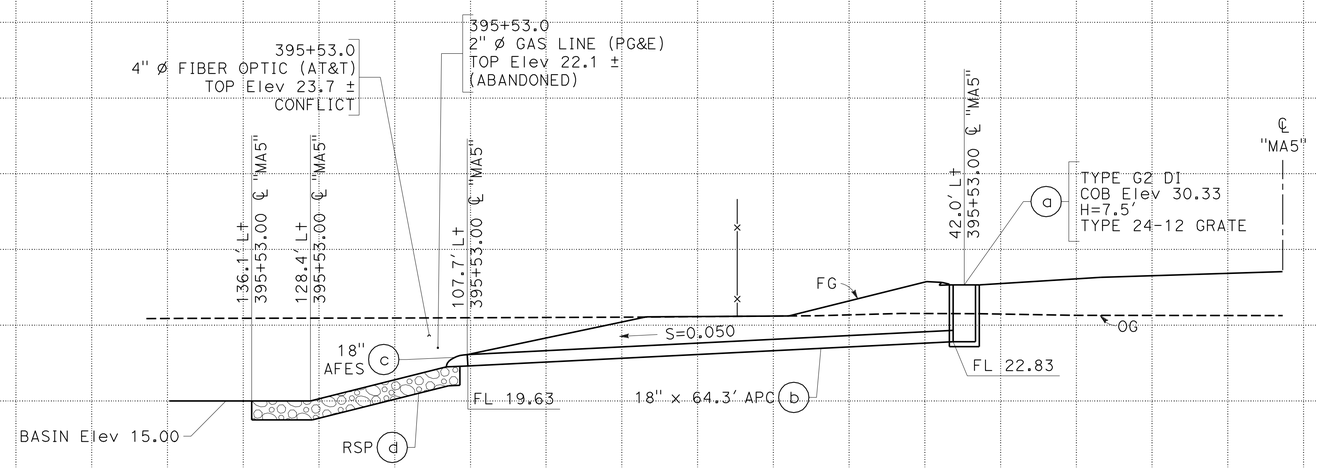

DRAINAGE SYSTEM No. 46

"MA5" Sta 395+53.00

DRAINAGE PROFILES

SCALE: Horiz 1" = 10'
Vert 1" = 10'

DP-21

REVISED BY | DATE REVISED
JOSE A GONZALEZ | ASHLYN SWAN
CALCULATED-DESIGNED BY | CHECKED BY
FUNCTIONAL SUPERVISOR | MARTIN NISHIKAWA
STATE OF CALIFORNIA - DEPARTMENT OF TRANSPORTATION
Caltrans
06-DESIGN

LAST REVISION 05-26-11 | DATE PLOTTED => 29-MAR-2012 | TIME PLOTTED => 16:23

Dist	COUNTY	ROUTE	POST MILES TOTAL PROJECT	SHEET No.	TOTAL SHEETS
10	SJ	4,99	R19.5/R20.1, 15.0/18.6	335	1414

REGISTERED CIVIL ENGINEER 12-05-11 DATE

3-26-12
PLANS APPROVAL DATE

REGISTERED PROFESSIONAL ENGINEER SEAN M. PLEDGER No. 56328 Exp. 12-31-12 CIVIL STATE OF CALIFORNIA

THE STATE OF CALIFORNIA OR ITS OFFICERS OR AGENTS SHALL NOT BE RESPONSIBLE FOR THE ACCURACY OR COMPLETENESS OF SCANNED COPIES OF THIS PLAN SHEET.

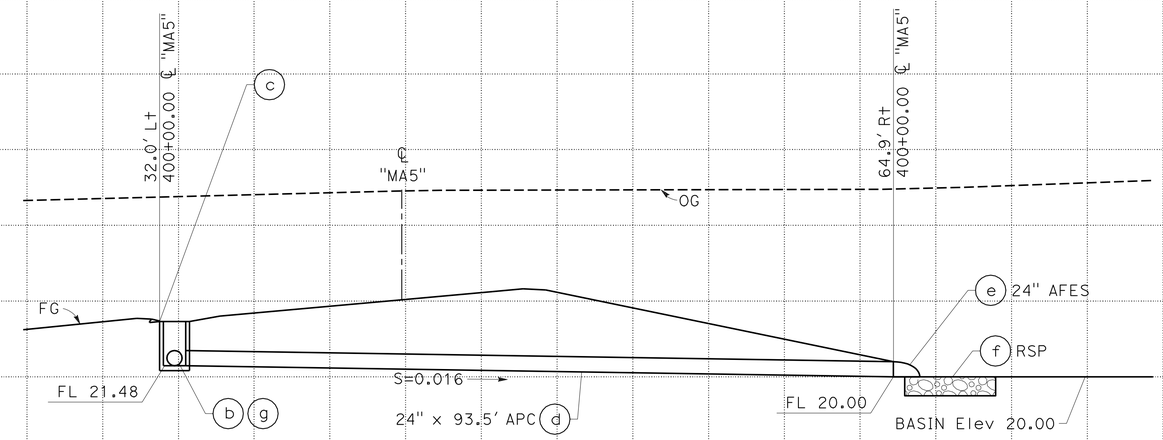

DRAINAGE SYSTEM No. 47

"MA5" Sta 400+00.00

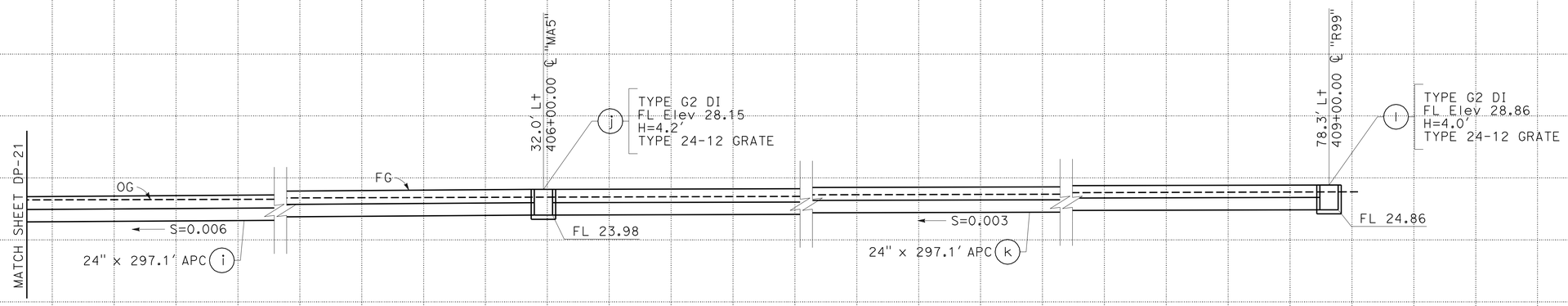

DRAINAGE SYSTEM No. 47

"MA5" Sta 398+00.00

DRAINAGE PROFILES

SCALE: Horiz 1" = 10'
Vert 1" = 10'

DP-22

REVISED BY | DATE REVISED
JOSE A GONZALEZ | ASHLYN SWAN
CALCULATED-DESIGNED BY | CHECKED BY
FUNCTIONAL SUPERVISOR | MARTIN NISHIKAWA

STATE OF CALIFORNIA - DEPARTMENT OF TRANSPORTATION
Caltrans
06-DESIGN

LAST REVISION 05-26-11 | DATE PLOTTED => 29-MAR-2012 | TIME PLOTTED => 16:23

Dist	COUNTY	ROUTE	POST MILES TOTAL PROJECT	SHEET No.	TOTAL SHEETS
10	SJ	4,99	R19.5/R20.1, 15.0/18.6	336	1414

REGISTERED CIVIL ENGINEER 12-05-11 DATE

3-26-12
PLANS APPROVAL DATE

REGISTERED PROFESSIONAL ENGINEER SEAN M. PLEDGER No. 56328 Exp. 12-31-12 CIVIL STATE OF CALIFORNIA

THE STATE OF CALIFORNIA OR ITS OFFICERS OR AGENTS SHALL NOT BE RESPONSIBLE FOR THE ACCURACY OR COMPLETENESS OF SCANNED COPIES OF THIS PLAN SHEET.

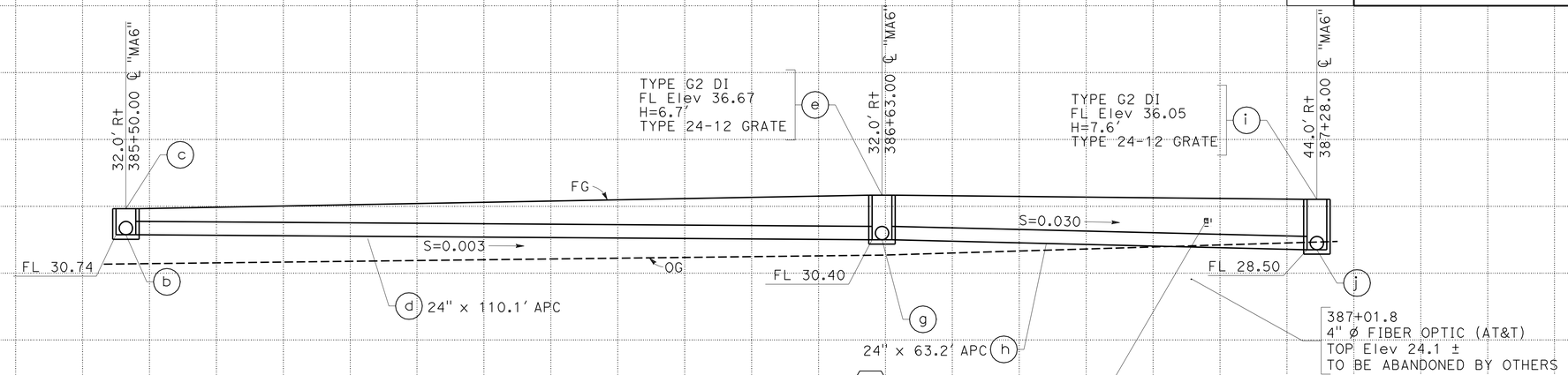

DRAINAGE SYSTEM No. 49

"MA6" Sta 385+50.00

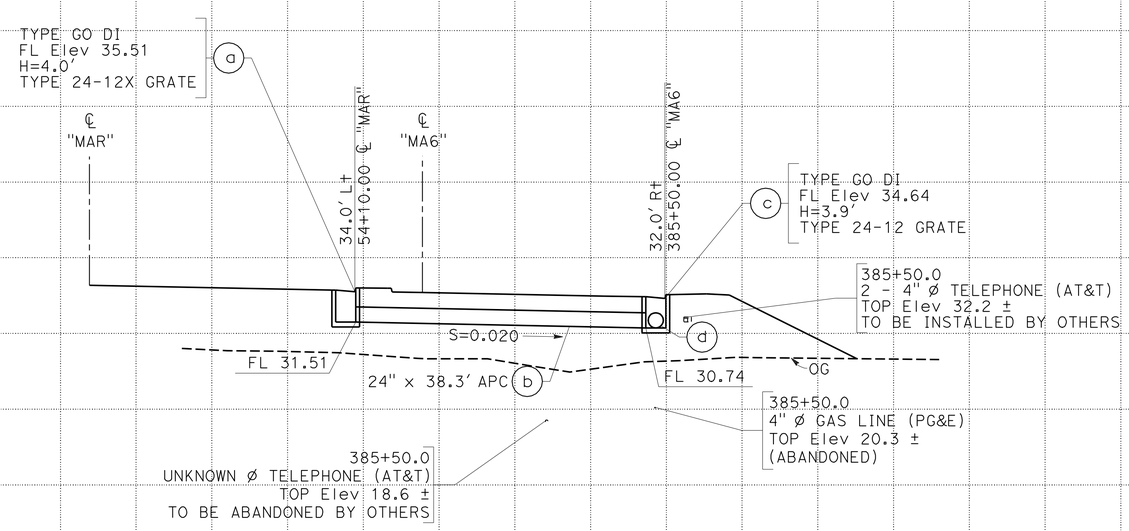

DRAINAGE SYSTEM No. 49

"MA6" Sta 385+50.00

DRAINAGE PROFILES

SCALE: Horiz 1"=10'
Vert 1"=10'

DP-23

REVISED BY | DATE REVISED

JOSE A GONZALEZ | ASHLYN SWAN

CALCULATED-DESIGNED BY | CHECKED BY

FUNCTIONAL SUPERVISOR: MARTIN NISHIKAWA

STATE OF CALIFORNIA - DEPARTMENT OF TRANSPORTATION

Caltrans

06-DESIGN

LAST REVISION 05-26-11 | DATE PLOTTED => 29-MAR-2012 | TIME PLOTTED => 16:23

Dist	COUNTY	ROUTE	POST MILES TOTAL PROJECT	SHEET No.	TOTAL SHEETS
10	SJ	4,99	R19.5/R20.1, 15.0/18.6	337	1414

Sean Pledger 12-05-11
REGISTERED CIVIL ENGINEER DATE

3-26-12
PLANS APPROVAL DATE

REGISTERED PROFESSIONAL ENGINEER SEAN M. PLEDGER No. 56328 Exp. 12-31-12 CIVIL STATE OF CALIFORNIA

THE STATE OF CALIFORNIA OR ITS OFFICERS OR AGENTS SHALL NOT BE RESPONSIBLE FOR THE ACCURACY OR COMPLETENESS OF SCANNED COPIES OF THIS PLAN SHEET.

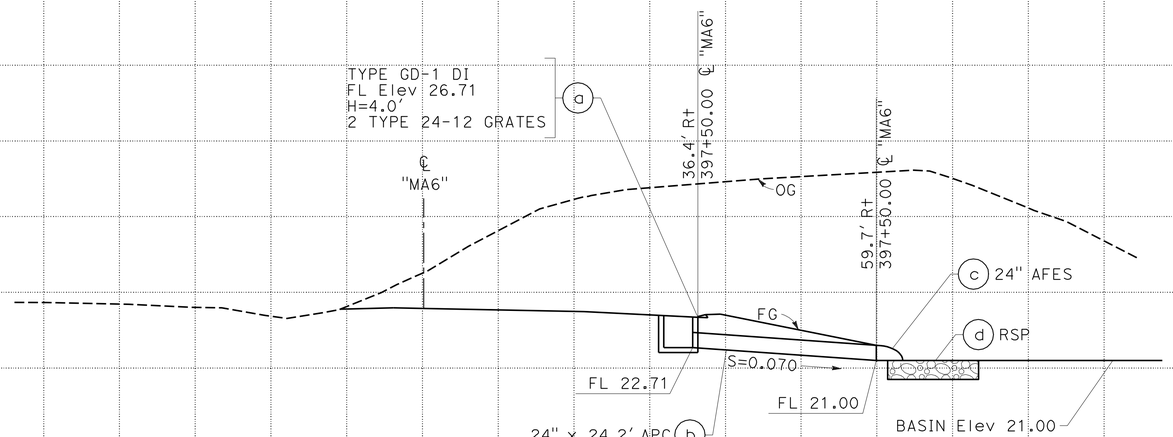

DRAINAGE SYSTEM No. 53
"MA6" Sta 397+50.00

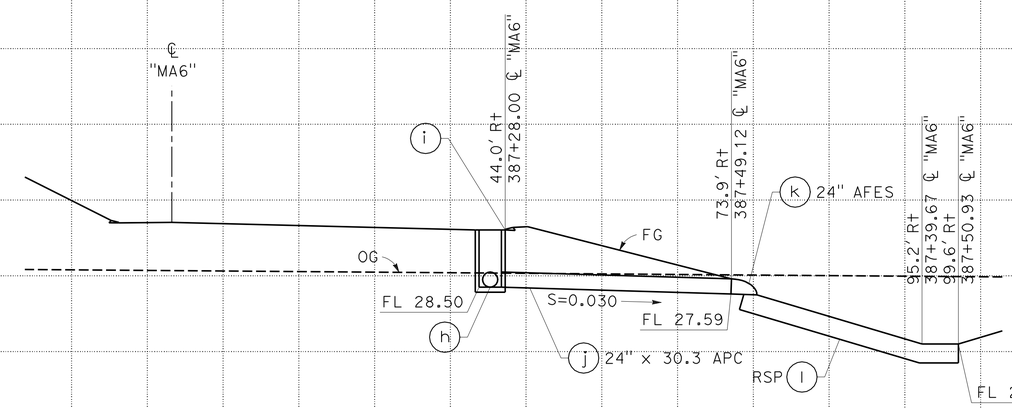

DRAINAGE SYSTEM No. 49
"MA6" Sta 387+28.00

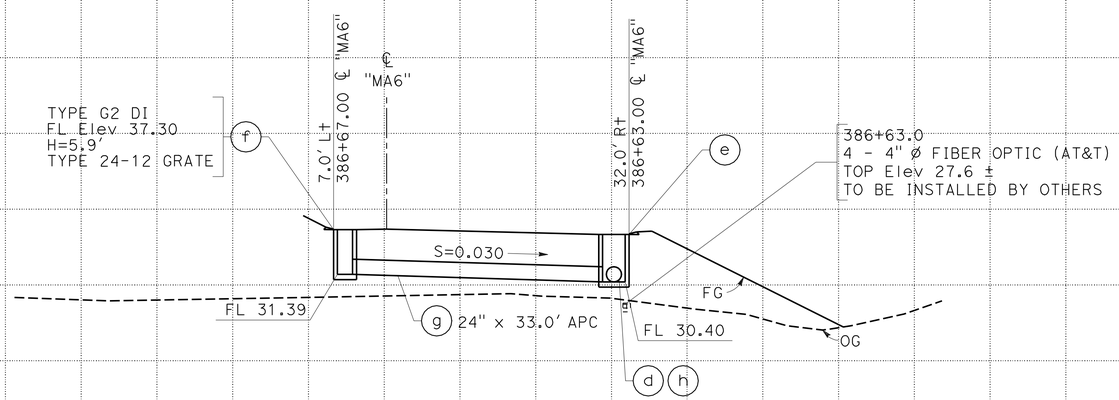

DRAINAGE SYSTEM No. 49
"MA6" Sta 386+63.00

DRAINAGE PROFILES

SCALE: Horiz 1"=10'
Vert 1"=10'

DP-24

REVISED BY | DATE REVISED
JOSE A GONZALEZ | ASHLYN SWAN
CALCULATED-DESIGNED BY | CHECKED BY
FUNCTIONAL SUPERVISOR | MARTIN NISHIKAWA

STATE OF CALIFORNIA - DEPARTMENT OF TRANSPORTATION
Caltrans
06-DESIGN

LAST REVISION 05-26-11 | DATE PLOTTED => 29-MAR-2012 | TIME PLOTTED => 16:23

Dist	COUNTY	ROUTE	POST MILES TOTAL PROJECT	SHEET No.	TOTAL SHEETS
10	SJ	4,99	R19.5/R20.1, 15.0/18.6	338	1414

Sean Pledger 12-05-11
REGISTERED CIVIL ENGINEER DATE

3-26-12
PLANS APPROVAL DATE

REGISTERED PROFESSIONAL ENGINEER SEAN M. PLEDGER No. 56328 Exp. 12-31-12 CIVIL STATE OF CALIFORNIA

THE STATE OF CALIFORNIA OR ITS OFFICERS OR AGENTS SHALL NOT BE RESPONSIBLE FOR THE ACCURACY OR COMPLETENESS OF SCANNED COPIES OF THIS PLAN SHEET.

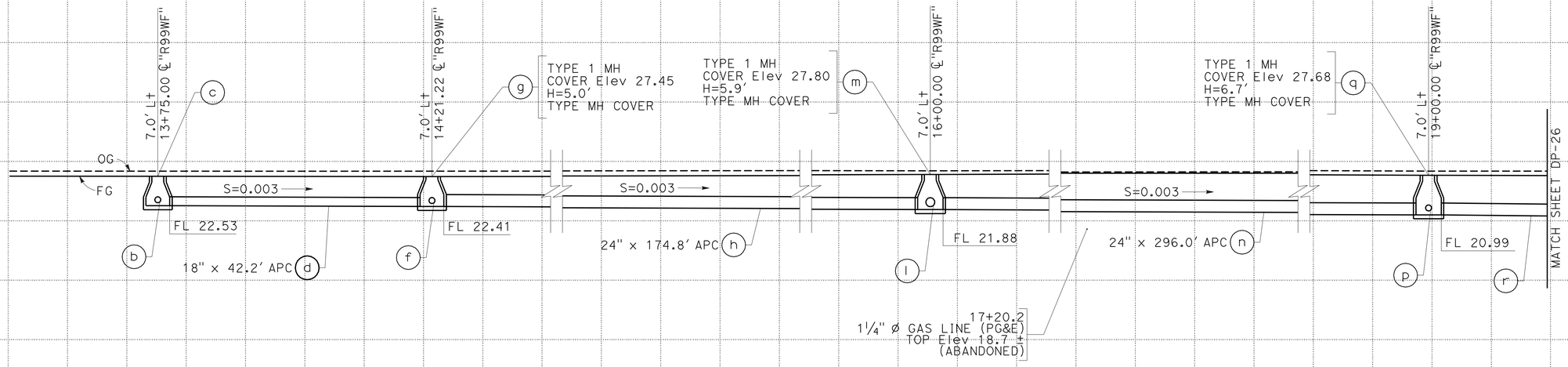

DRAINAGE SYSTEM No. 56

"R99WF" Sta 13+75.00

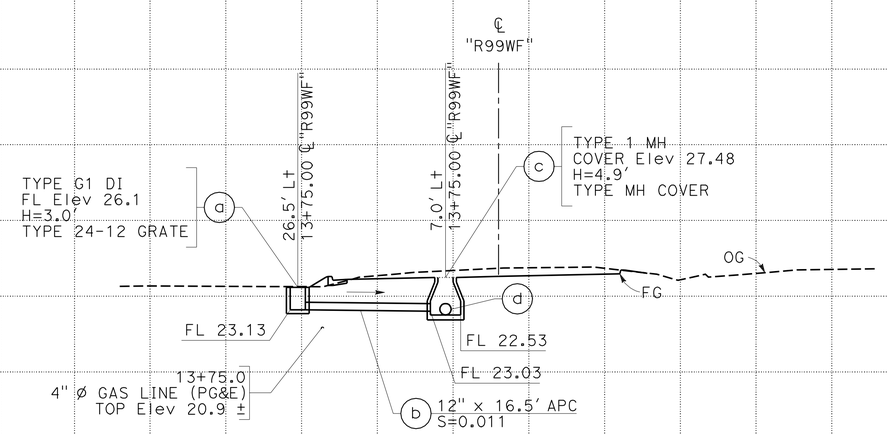

DRAINAGE SYSTEM No. 56

"R99WF" Sta 13+75.00

DRAINAGE PROFILES

SCALE: Horiz 1"=10'
Vert 1"=10'

DP-25

STATE OF CALIFORNIA - DEPARTMENT OF TRANSPORTATION
Caltrans
06-DESIGN

FUNCTIONAL SUPERVISOR: MARTIN NISHIKAWA
CALCULATED-DESIGNED BY: JOSE A GONZALEZ
CHECKED BY: ASHLYN SWAN
REVISED BY
DATE REVISED

LAST REVISION 05-26-11
DATE PLOTTED => 29-MAR-2012
TIME PLOTTED => 16:23

Dist	COUNTY	ROUTE	POST MILES TOTAL PROJECT	SHEET No.	TOTAL SHEETS
10	SJ	4,99	R19.5/R20.1, 15.0/18.6	339	1414

Sean Pledger 12-05-11
REGISTERED CIVIL ENGINEER DATE

3-26-12
PLANS APPROVAL DATE

REGISTERED PROFESSIONAL ENGINEER SEAN M. PLEDGER No. 56328 Exp. 12-31-12 CIVIL STATE OF CALIFORNIA

THE STATE OF CALIFORNIA OR ITS OFFICERS OR AGENTS SHALL NOT BE RESPONSIBLE FOR THE ACCURACY OR COMPLETENESS OF SCANNED COPIES OF THIS PLAN SHEET.

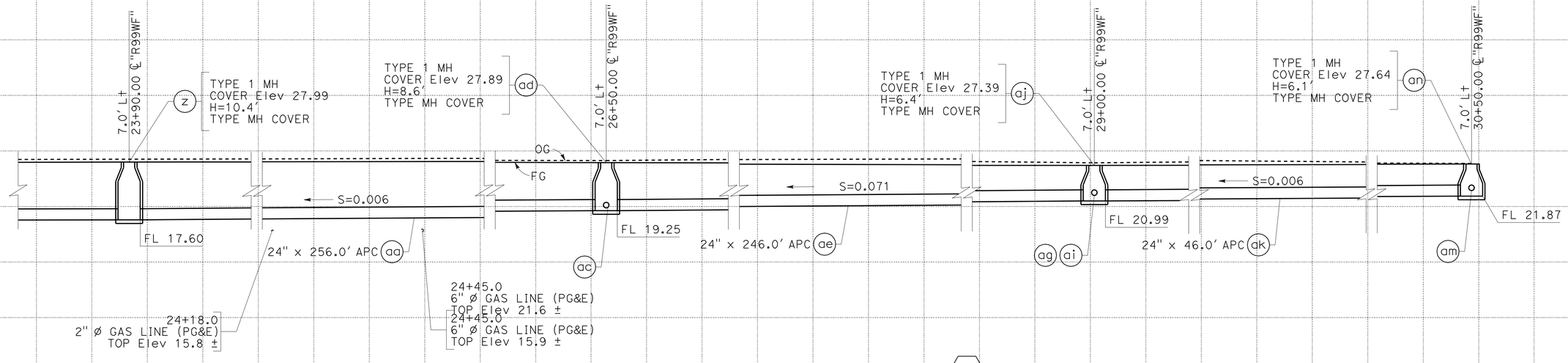

DRAINAGE SYSTEM No. 56

"R99WF" Sta 13+75.00

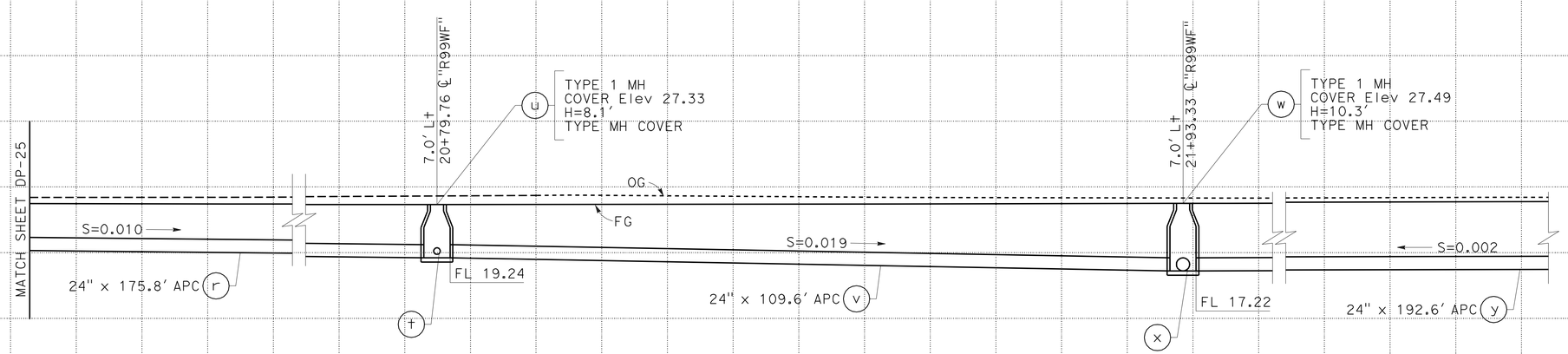

DRAINAGE SYSTEM No. 56

"R99WF" Sta 13+75.00

DRAINAGE PROFILES

SCALE: Horiz 1" = 10'
Vert 1" = 10'

DP-26

STATE OF CALIFORNIA - DEPARTMENT OF TRANSPORTATION
06-DESIGN
Caltrans

FUNCTIONAL SUPERVISOR: MARTIN NISHIKAWA
CALCULATED-DESIGNED BY: JOSE A GONZALEZ
CHECKED BY: ASHLYN SWAN
REVISED BY
DATE REVISED

LAST REVISION 05-26-11
DATE PLOTTED => 29-MAR-2012
TIME PLOTTED => 16:23

Dist	COUNTY	ROUTE	POST MILES TOTAL PROJECT	SHEET No.	TOTAL SHEETS
10	SJ	4,99	R19.5/R20.1, 15.0/18.6	340	1414

Sean Pledger 12-05-11
REGISTERED CIVIL ENGINEER DATE

3-26-12
PLANS APPROVAL DATE

REGISTERED PROFESSIONAL ENGINEER SEAN M. PLEDGER No. 56328 Exp. 12-31-12 CIVIL STATE OF CALIFORNIA

THE STATE OF CALIFORNIA OR ITS OFFICERS OR AGENTS SHALL NOT BE RESPONSIBLE FOR THE ACCURACY OR COMPLETENESS OF SCANNED COPIES OF THIS PLAN SHEET.

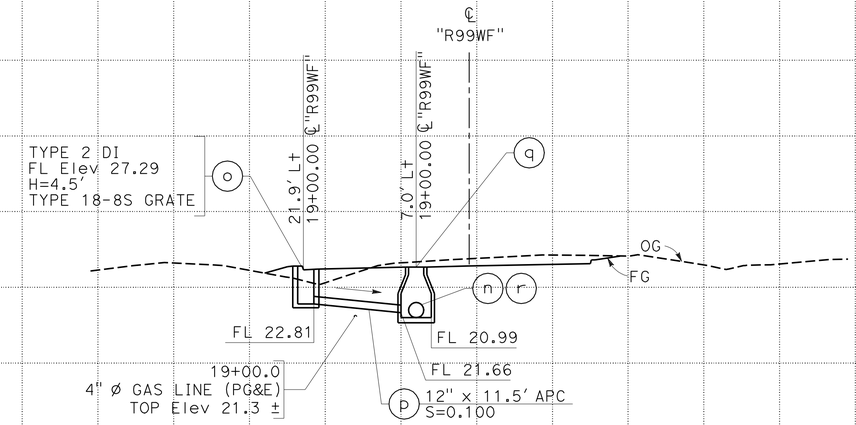

DRAINAGE SYSTEM No. 56
"R99WF" Sta 19+00.00

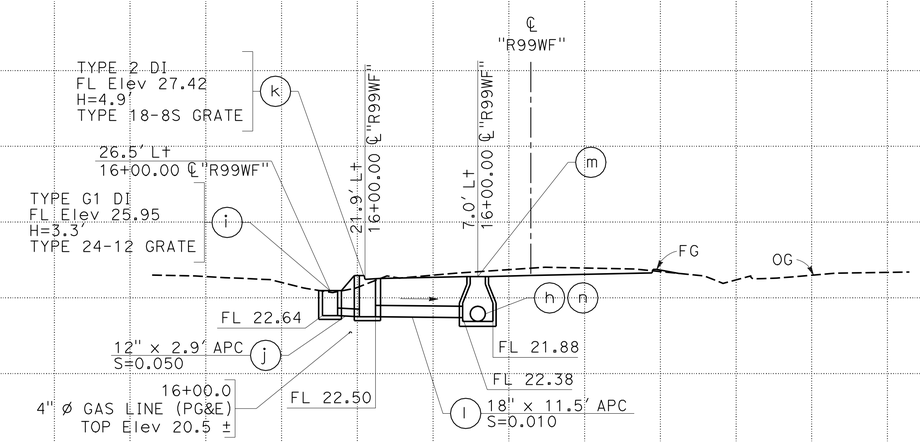

DRAINAGE SYSTEM No. 56
"R99WF" Sta 16+00.00

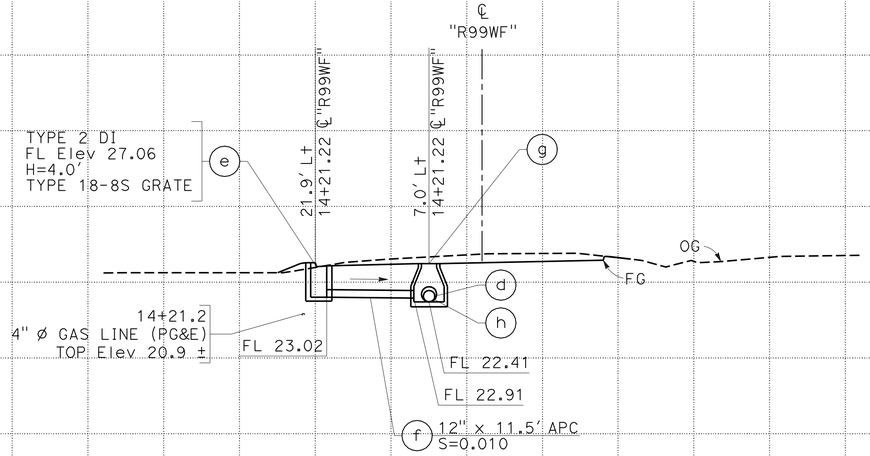

DRAINAGE SYSTEM No. 56
"R99WF" Sta 14+21.22

DRAINAGE PROFILES

SCALE: Horiz 1"=10'
Vert 1"=10'

DP-27

STATE OF CALIFORNIA - DEPARTMENT OF TRANSPORTATION
Caltrans
06-DESIGN

FUNCTIONAL SUPERVISOR: MARTIN NISHIKAWA
CALCULATED-DESIGNED BY: JOSE A GONZALEZ
CHECKED BY: ASHLYN SWAN
REVISED BY / DATE REVISED

LAST REVISION 05-26-11
DATE PLOTTED => 29-MAR-2012
TIME PLOTTED => 16:23

Dist	COUNTY	ROUTE	POST MILES TOTAL PROJECT	SHEET No.	TOTAL SHEETS
10	SJ	4,99	R19.5/R20.1, 15.0/18.6	341	1414

Sean Pledger 12-05-11
REGISTERED CIVIL ENGINEER DATE

3-26-12
PLANS APPROVAL DATE

REGISTERED PROFESSIONAL ENGINEER SEAN M. PLEDGER No. 56328 Exp. 12-31-12 CIVIL STATE OF CALIFORNIA

THE STATE OF CALIFORNIA OR ITS OFFICERS OR AGENTS SHALL NOT BE RESPONSIBLE FOR THE ACCURACY OR COMPLETENESS OF SCANNED COPIES OF THIS PLAN SHEET.

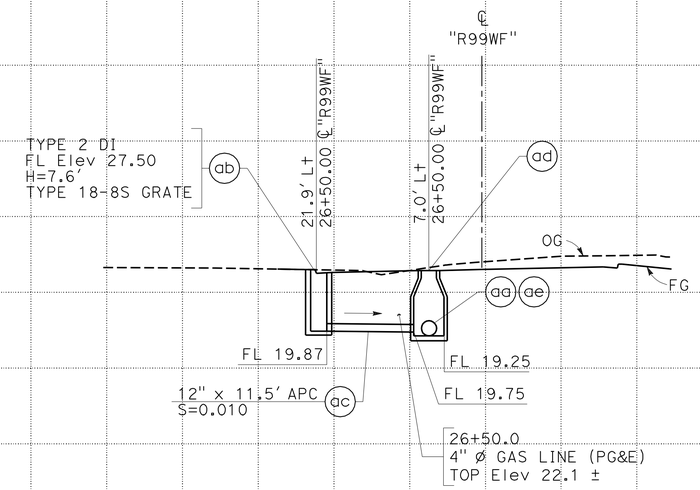

DRAINAGE SYSTEM No. 56
"R99WF" Sta 26+50.00

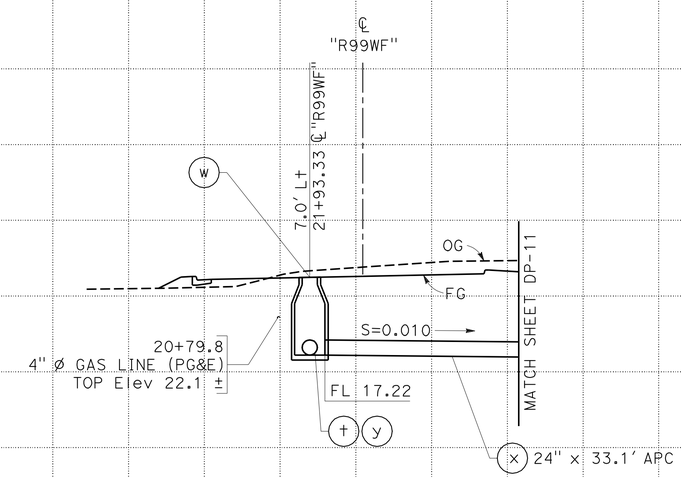

DRAINAGE SYSTEM No. 56
"R99WF" Sta 21+93.33

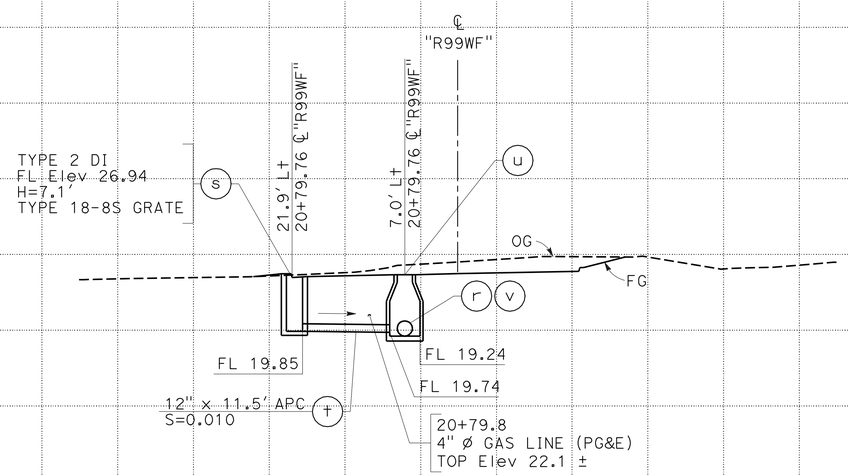

DRAINAGE SYSTEM No. 56
"R99WF" Sta 20+79.76

DRAINAGE PROFILES

SCALE: Horiz 1" = 10'
Vert 1" = 10'

DP-28

REVISED BY | DATE REVISED
JOSE A GONZALEZ | ASHLYN SWAN
CALCULATED-DESIGNED BY | CHECKED BY
FUNCTIONAL SUPERVISOR | MARTIN NISHIKAWA

STATE OF CALIFORNIA - DEPARTMENT OF TRANSPORTATION
06-DESIGN
Caltrans

LAST REVISION 05-26-11 | DATE PLOTTED => 29-MAR-2012 | TIME PLOTTED => 16:23

Dist	COUNTY	ROUTE	POST MILES TOTAL PROJECT	SHEET No.	TOTAL SHEETS
10	SJ	4,99	R19.5/R20.1, 15.0/18.6	342	1414

REGISTERED CIVIL ENGINEER 12-05-11 DATE

3-26-12
PLANS APPROVAL DATE

REGISTERED PROFESSIONAL ENGINEER SEAN M. PLEDGER No. 56328 Exp. 12-31-12 CIVIL STATE OF CALIFORNIA

THE STATE OF CALIFORNIA OR ITS OFFICERS OR AGENTS SHALL NOT BE RESPONSIBLE FOR THE ACCURACY OR COMPLETENESS OF SCANNED COPIES OF THIS PLAN SHEET.

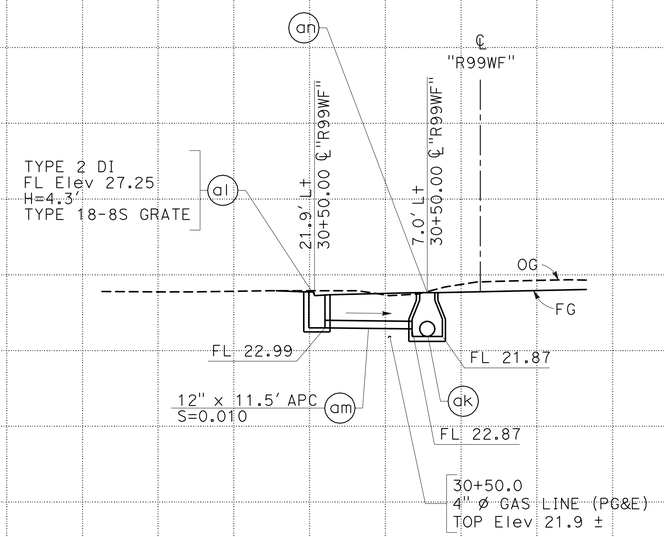

DRAINAGE SYSTEM No. 56

"R99WF" Sta 30+50.00

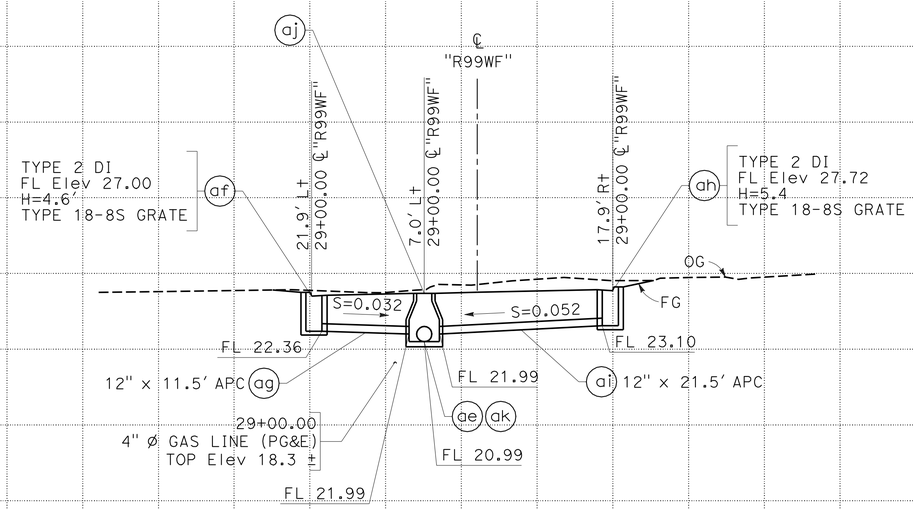

DRAINAGE SYSTEM No. 56

"R99WF" Sta 29+00.00

DRAINAGE PROFILES

SCALE: Horiz 1" = 10'
Vert 1" = 10'

DP-29

STATE OF CALIFORNIA - DEPARTMENT OF TRANSPORTATION
Caltrans
06-DESIGN

FUNCTIONAL SUPERVISOR: MARTIN NISHIKAWA
CALCULATED-DESIGNED BY: JOSE A GONZALEZ
CHECKED BY: ASHLYN SWAN
REVISED BY
DATE REVISED

LAST REVISION 05-26-11
DATE PLOTTED => 29-MAR-2012
TIME PLOTTED => 16:24

Dist	COUNTY	ROUTE	POST MILES TOTAL PROJECT	SHEET No.	TOTAL SHEETS
10	SJ	4,99	R19.5/R20.1, 15.0/18.6	343	1414

Sean Pledger 12-05-11
REGISTERED CIVIL ENGINEER DATE

3-26-12
PLANS APPROVAL DATE

REGISTERED PROFESSIONAL ENGINEER SEAN M. PLEDGER No. 56328 Exp. 12-31-12 CIVIL STATE OF CALIFORNIA

THE STATE OF CALIFORNIA OR ITS OFFICERS OR AGENTS SHALL NOT BE RESPONSIBLE FOR THE ACCURACY OR COMPLETENESS OF SCANNED COPIES OF THIS PLAN SHEET.

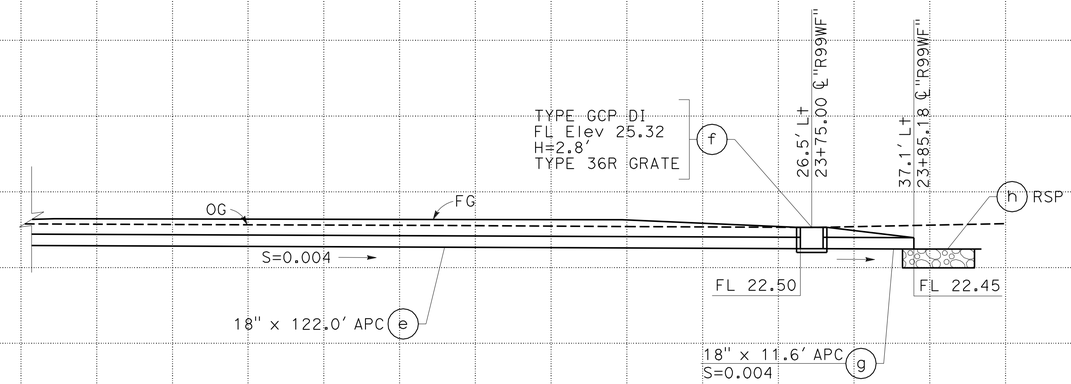

DRAINAGE SYSTEM No. 60
"R99WF" Sta 20+00.00

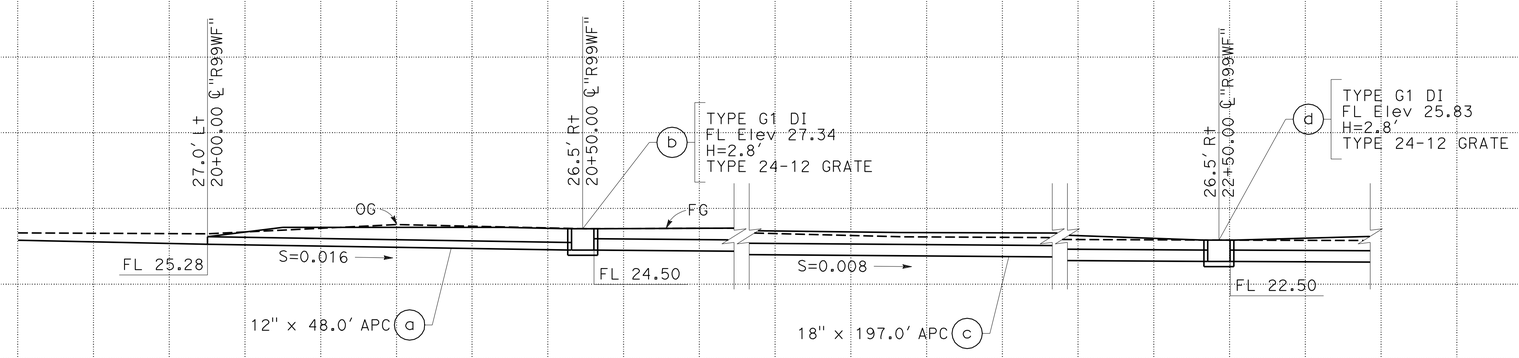

DRAINAGE SYSTEM No. 60
"R99WF" Sta 20+00.00

DRAINAGE PROFILES

SCALE: Horiz 1"=10'
Vert 1"=10'

DP-30

REVISED BY | DATE REVISED
JOSE A GONZALEZ | ASHLYN SWAN
CALCULATED-DESIGNED BY | CHECKED BY
FUNCTIONAL SUPERVISOR | MARTIN NISHIKAWA
STATE OF CALIFORNIA - DEPARTMENT OF TRANSPORTATION
Caltrans
06-DESIGN

LAST REVISION 05-26-11 | DATE PLOTTED => 29-MAR-2012 | TIME PLOTTED => 16:24

Dist	COUNTY	ROUTE	POST MILES TOTAL PROJECT	SHEET No.	TOTAL SHEETS
10	SJ	4,99	R19.5/R20.1, 15.0/18.6	344	1414

Sean Pledger 12-05-11
REGISTERED CIVIL ENGINEER DATE

3-26-12
PLANS APPROVAL DATE

REGISTERED PROFESSIONAL ENGINEER SEAN M. PLEDGER No. 56328 Exp. 12-31-12 CIVIL STATE OF CALIFORNIA

THE STATE OF CALIFORNIA OR ITS OFFICERS OR AGENTS SHALL NOT BE RESPONSIBLE FOR THE ACCURACY OR COMPLETENESS OF SCANNED COPIES OF THIS PLAN SHEET.

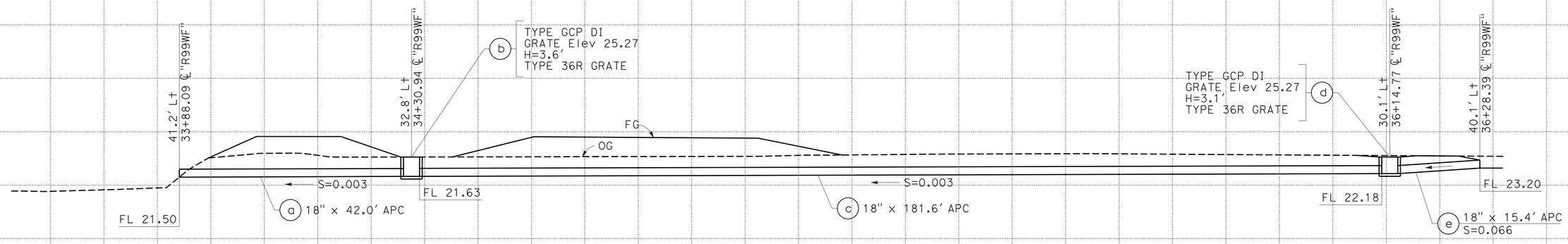

DRAINAGE SYSTEM No. 68

"R99WF" Sta 33+88.09

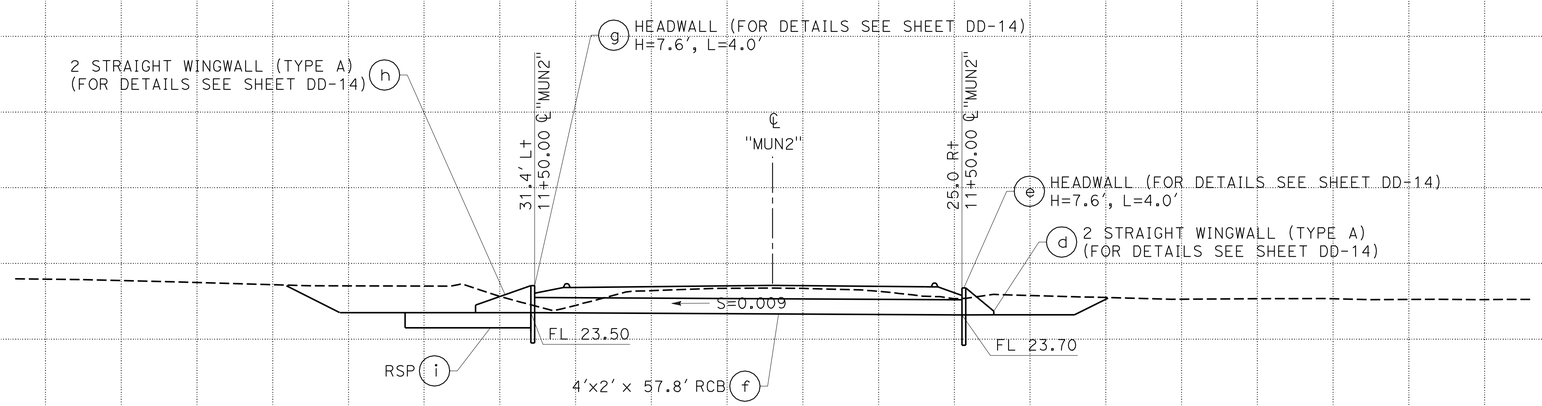

DRAINAGE SYSTEM No. 62

"MUN2" Sta 11+50.00

DRAINAGE PROFILES

SCALE: Horiz 1"=10'
Vert 1"=10'

DP-31

STATE OF CALIFORNIA - DEPARTMENT OF TRANSPORTATION
Caltrans
06-DESIGN
FUNCTIONAL SUPERVISOR: MARTIN NISHIKAWA
CALCULATED-DESIGNED BY: JOSE A GONZALEZ
CHECKED BY: ASHLYN SWAN
REVISED BY
DATE REVISED

LAST REVISION 05-26-11
DATE PLOTTED => 29-MAR-2012
TIME PLOTTED => 16:24

Dist	COUNTY	ROUTE	POST MILES TOTAL PROJECT	SHEET No.	TOTAL SHEETS
10	SJ	4,99	R19.5/R20.1, 15.0/18.6	345	1414

REGISTERED CIVIL ENGINEER 12-05-11 DATE

3-26-12
PLANS APPROVAL DATE

REGISTERED PROFESSIONAL ENGINEER SEAN M. PLEDGER No. 56328 Exp. 12-31-12 CIVIL STATE OF CALIFORNIA

THE STATE OF CALIFORNIA OR ITS OFFICERS OR AGENTS SHALL NOT BE RESPONSIBLE FOR THE ACCURACY OR COMPLETENESS OF SCANNED COPIES OF THIS PLAN SHEET.

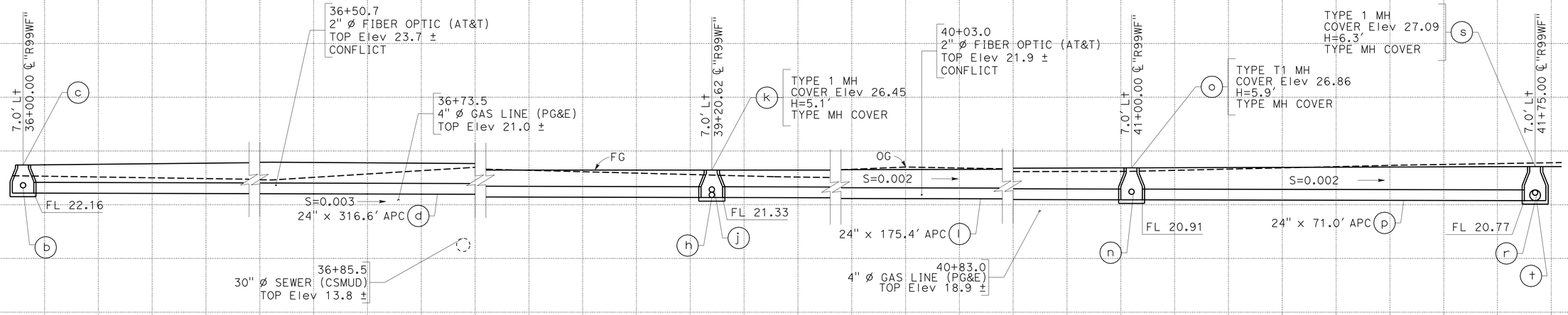

DRAINAGE SYSTEM No. 70

"R99WF" Sta 36+00.00

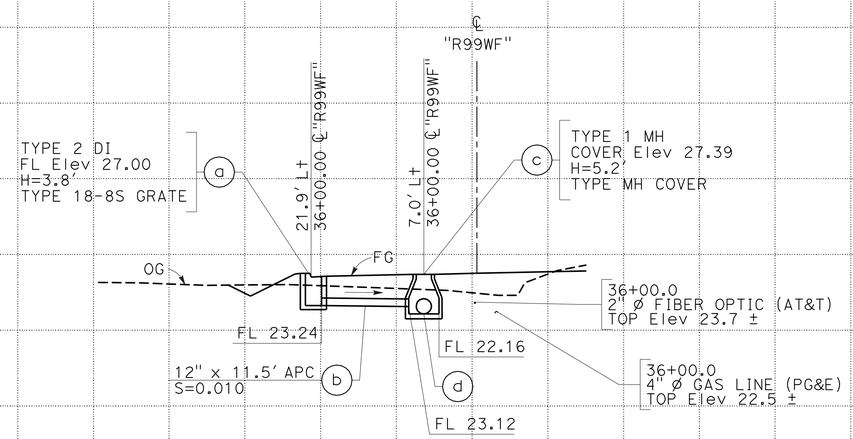

DRAINAGE SYSTEM No. 70

"R99WF" Sta 36+00.00

DRAINAGE PROFILES

SCALE: Horiz 1" = 10'
Vert 1" = 10'

DP-32

STATE OF CALIFORNIA - DEPARTMENT OF TRANSPORTATION
Caltrans
06-DESIGN

FUNCTIONAL SUPERVISOR: MARTIN NISHIKAWA
CALCULATED-DESIGNED BY: JOSE A GONZALEZ
CHECKED BY: ASHLYN SWAN
REVISED BY
DATE REVISED

LAST REVISION 05-26-11
DATE PLOTTED => 29-MAR-2012
TIME PLOTTED => 16:24

Dist	COUNTY	ROUTE	POST MILES TOTAL PROJECT	SHEET No.	TOTAL SHEETS
10	SJ	4,99	R19.5/R20.1, 15.0/18.6	346	1414

REGISTERED CIVIL ENGINEER 12-05-11 DATE

3-26-12
PLANS APPROVAL DATE

REGISTERED PROFESSIONAL ENGINEER SEAN M. PLEDGER No. 56328 Exp. 12-31-12 CIVIL STATE OF CALIFORNIA

THE STATE OF CALIFORNIA OR ITS OFFICERS OR AGENTS SHALL NOT BE RESPONSIBLE FOR THE ACCURACY OR COMPLETENESS OF SCANNED COPIES OF THIS PLAN SHEET.

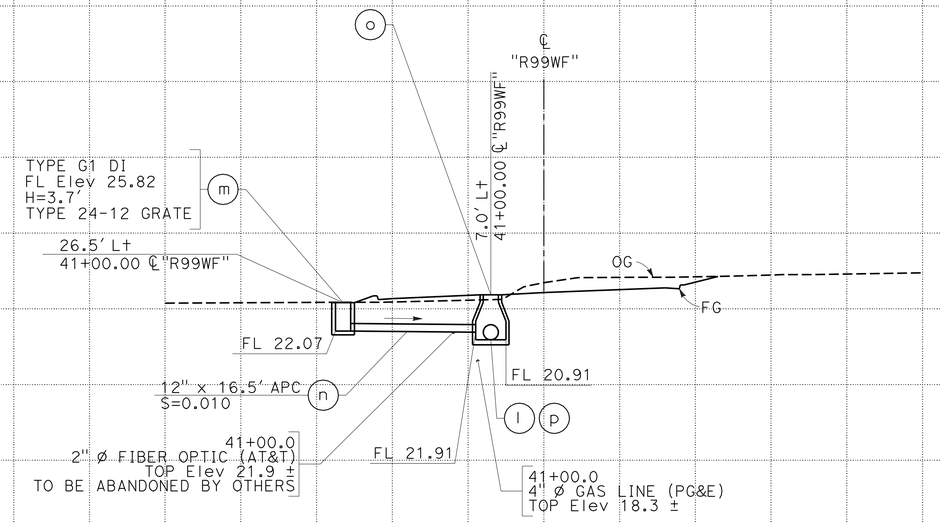

DRAINAGE SYSTEM No. 70

"R99WF" Sta 41+00.00

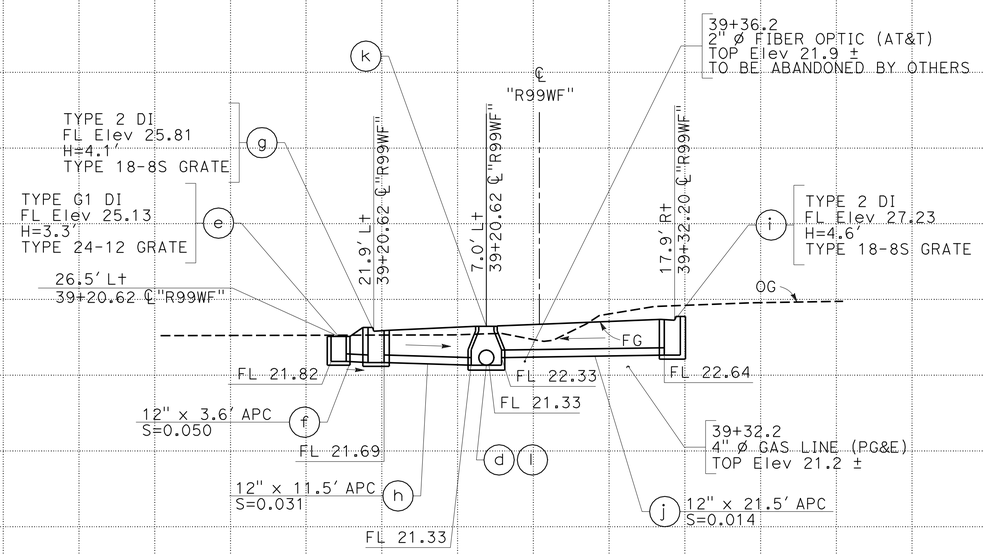

DRAINAGE SYSTEM No. 70

"R99WF" Sta 39+32.20

DRAINAGE PROFILES

SCALE: Horiz 1"=10'
Vert 1"=10'

DP-33

STATE OF CALIFORNIA - DEPARTMENT OF TRANSPORTATION
Caltrans
06-DESIGN

FUNCTIONAL SUPERVISOR: MARTIN NISHIKAWA
CALCULATED-DESIGNED BY: JOSE A GONZALEZ
CHECKED BY: ASHLYN SWAN
REVISED BY / DATE REVISED

LAST REVISION 05-26-11
DATE PLOTTED => 29-MAR-2012
TIME PLOTTED => 16:24

Dist	COUNTY	ROUTE	POST MILES TOTAL PROJECT	SHEET No.	TOTAL SHEETS
10	SJ	4,99	R19.5/R20.1, 15.0/18.6	347	1414

REGISTERED CIVIL ENGINEER 12-05-11 DATE

3-26-12
PLANS APPROVAL DATE

REGISTERED PROFESSIONAL ENGINEER SEAN M. PLEDGER No. 56328 Exp. 12-31-12 CIVIL STATE OF CALIFORNIA

THE STATE OF CALIFORNIA OR ITS OFFICERS OR AGENTS SHALL NOT BE RESPONSIBLE FOR THE ACCURACY OR COMPLETENESS OF SCANNED COPIES OF THIS PLAN SHEET.

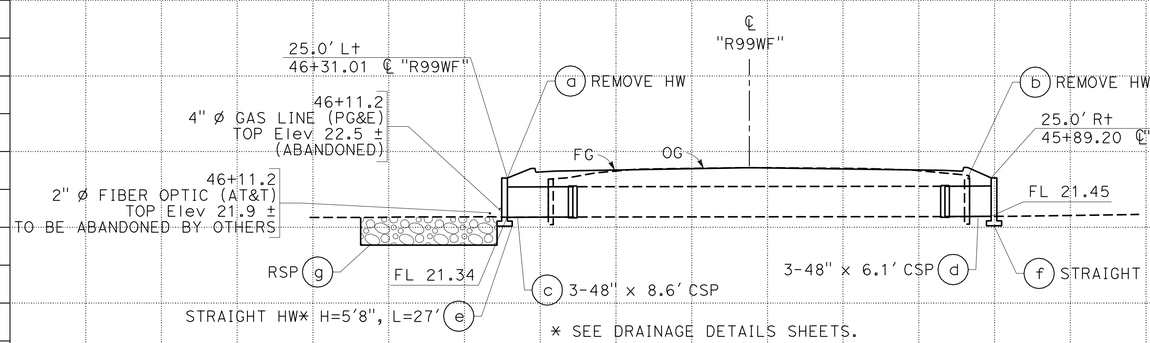

* SEE DRAINAGE DETAILS SHEETS.

DRAINAGE SYSTEM No. 78

"R99WF" Sta 46+11.16

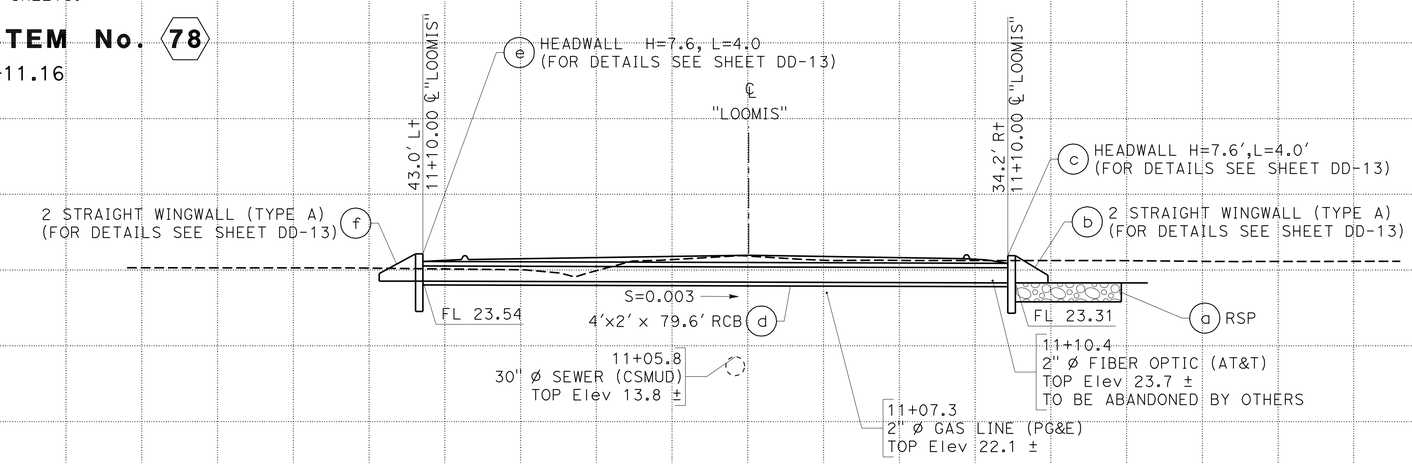

* SEE DRAINAGE DETAIL SHEETS

DRAINAGE SYSTEM No. 72

"LOOMIS" Sta 11+10.00

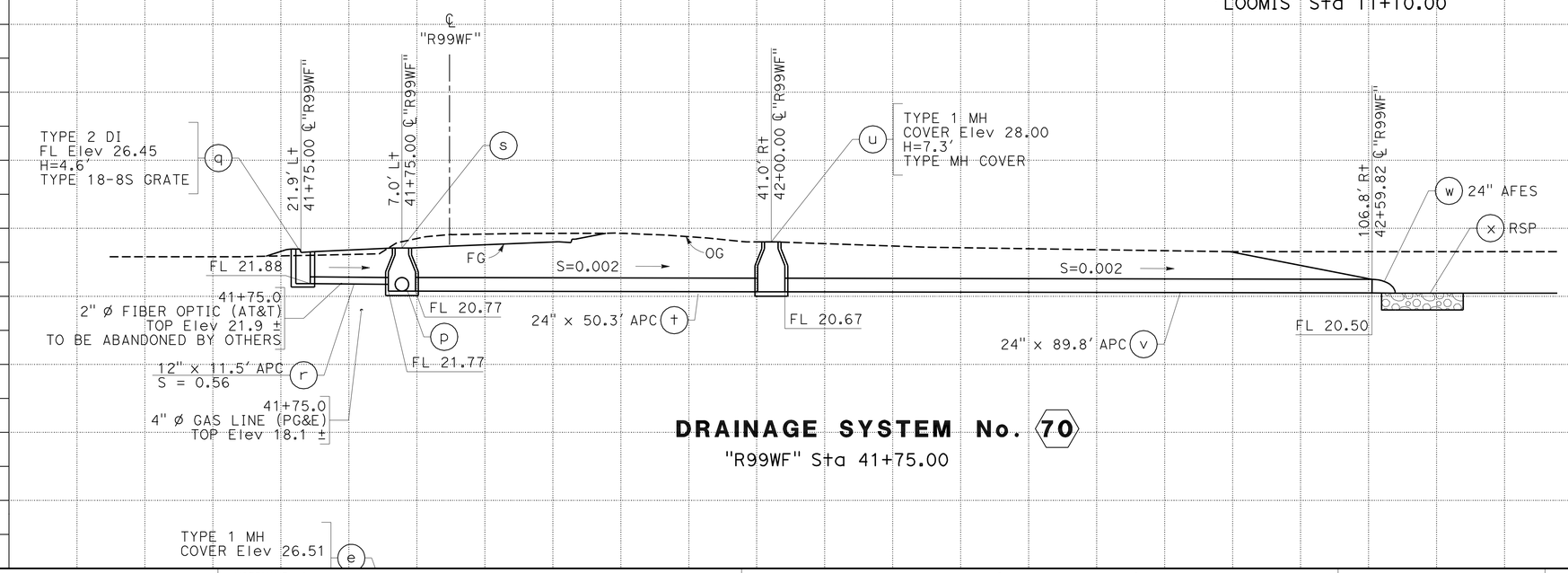

DRAINAGE SYSTEM No. 70

"R99WF" Sta 41+75.00

DRAINAGE PROFILES

SCALE: Horiz 1"=10'
Vert 1"=10'

DP-34

REVISED BY | DATE REVISED
JOSE A GONZALEZ | ASHLYN SWAN
CALCULATED-DESIGNED BY | CHECKED BY
FUNCTIONAL SUPERVISOR | MARTIN NISHIKAWA
STATE OF CALIFORNIA - DEPARTMENT OF TRANSPORTATION
06-DESIGN
Caltrans

LAST REVISION 05-26-11 | DATE PLOTTED => 29-MAR-2012 | TIME PLOTTED => 16:24

Dist	COUNTY	ROUTE	POST MILES TOTAL PROJECT	SHEET No.	TOTAL SHEETS
10	SJ	4,99	R19.5/R20.1, 15.0/18.6	348	1414

REGISTERED CIVIL ENGINEER 12-05-11 DATE

3-26-12
PLANS APPROVAL DATE

REGISTERED PROFESSIONAL ENGINEER SEAN M. PLEDGER No. 56328 Exp. 12-31-12 CIVIL STATE OF CALIFORNIA

THE STATE OF CALIFORNIA OR ITS OFFICERS OR AGENTS SHALL NOT BE RESPONSIBLE FOR THE ACCURACY OR COMPLETENESS OF SCANNED COPIES OF THIS PLAN SHEET.

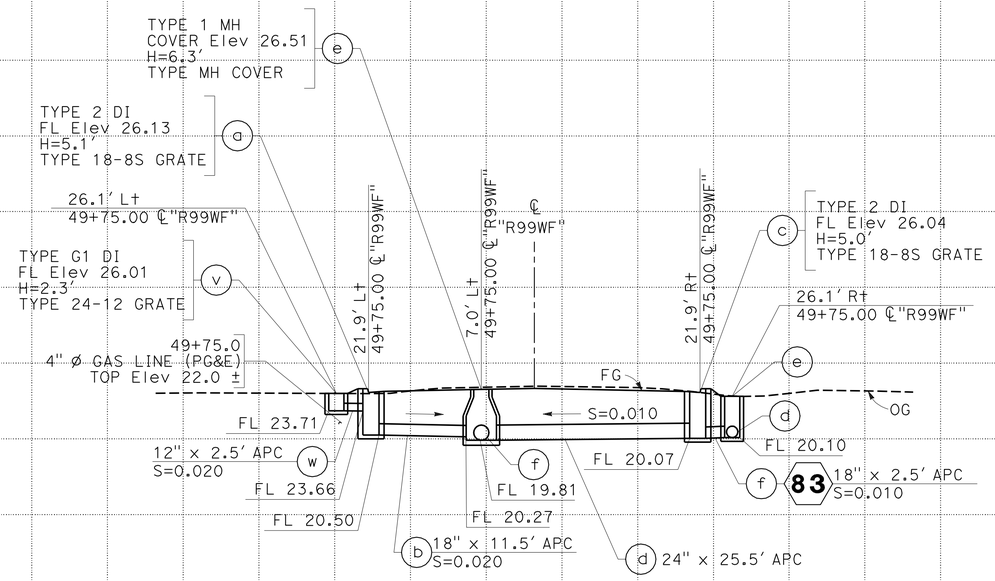

DRAINAGE SYSTEM No. 84

"R99WF" Sta 49+75.00

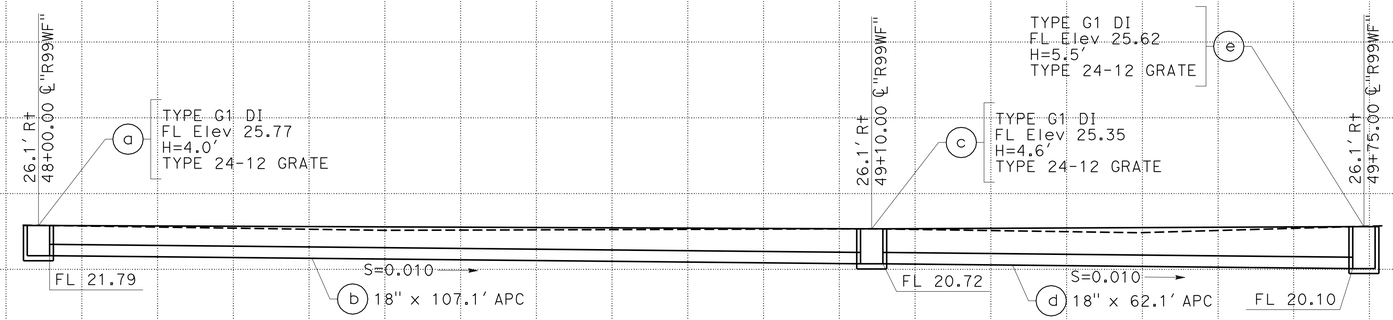

DRAINAGE SYSTEM No. 83

"R99WF" Sta 48+00.00

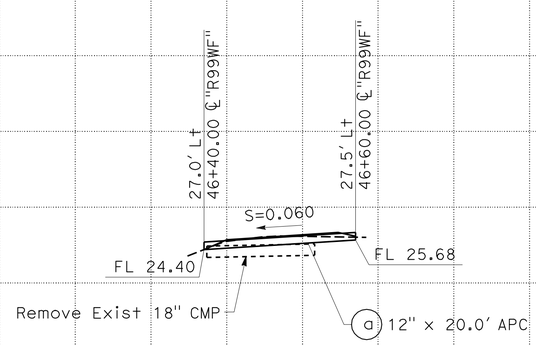

DRAINAGE SYSTEM No. 79

"R99WF" Sta 46+40.00

DRAINAGE PROFILES

SCALE: Horiz 1"=10'
Vert 1"=10'

DP-35

STATE OF CALIFORNIA - DEPARTMENT OF TRANSPORTATION
Caltrans
06-DESIGN
FUNCTIONAL SUPERVISOR: MARTIN NISHIKAWA
CALCULATED-DESIGNED BY: JOSE A GONZALEZ
CHECKED BY: ASHLYN SWAN
REVISED BY
DATE REVISED

LAST REVISION 05-26-11
DATE PLOTTED => 29-MAR-2012
TIME PLOTTED => 16:24

Dist	COUNTY	ROUTE	POST MILES TOTAL PROJECT	SHEET No.	TOTAL SHEETS
10	SJ	4,99	R19.5/R20.1, 15.0/18.6	349	1414

Sean Pledger 12-05-11
REGISTERED CIVIL ENGINEER DATE

3-26-12
PLANS APPROVAL DATE

REGISTERED PROFESSIONAL ENGINEER SEAN M. PLEDGER No. 56328 Exp. 12-31-12 CIVIL STATE OF CALIFORNIA

THE STATE OF CALIFORNIA OR ITS OFFICERS OR AGENTS SHALL NOT BE RESPONSIBLE FOR THE ACCURACY OR COMPLETENESS OF SCANNED COPIES OF THIS PLAN SHEET.

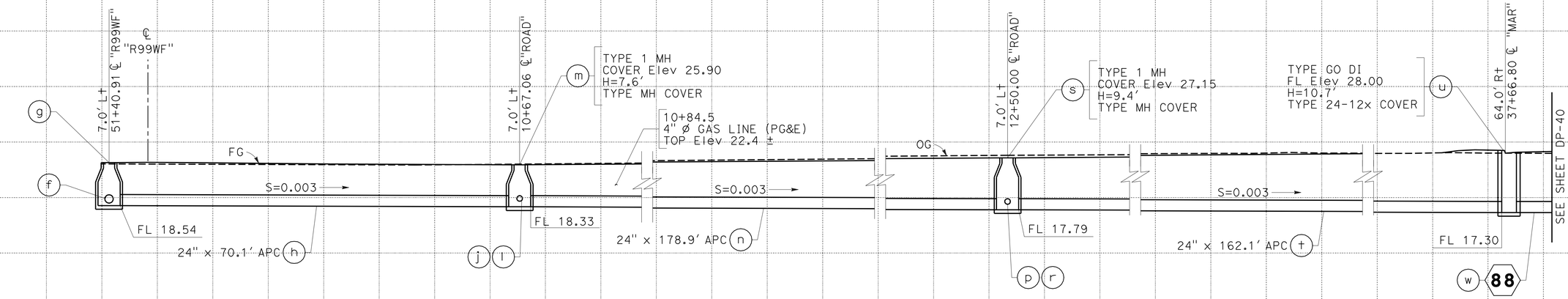

DRAINAGE SYSTEM No. 84

"ROAD" Sta 10+67.43

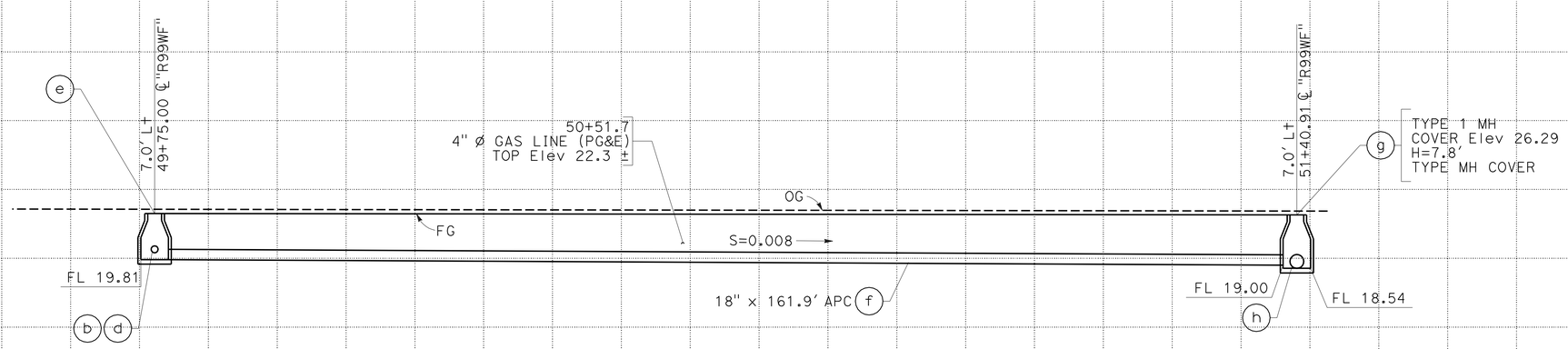

DRAINAGE SYSTEM No. 84

"R99WF" Sta 50+00.00

DRAINAGE PROFILES

SCALE: Horiz 1" = 10'
Vert 1" = 10'

DP-36

STATE OF CALIFORNIA - DEPARTMENT OF TRANSPORTATION
Caltrans
06-DESIGN

FUNCTIONAL SUPERVISOR: MARTIN NISHIKAWA
CALCULATED-DESIGNED BY: JOSE A GONZALEZ
CHECKED BY: ASHLYN SWAN
REVISED BY
DATE REVISED

LAST REVISION 05-26-11
DATE PLOTTED => 29-MAR-2012
TIME PLOTTED => 16:24

Dist	COUNTY	ROUTE	POST MILES TOTAL PROJECT	SHEET No.	TOTAL SHEETS
10	SJ	4,99	R19.5/R20.1, 15.0/18.6	350	1414

Sean Pledger 12-05-11
REGISTERED CIVIL ENGINEER DATE

3-26-12
PLANS APPROVAL DATE

REGISTERED PROFESSIONAL ENGINEER SEAN M. PLEDGER No. 56328 Exp. 12-31-12 CIVIL STATE OF CALIFORNIA

THE STATE OF CALIFORNIA OR ITS OFFICERS OR AGENTS SHALL NOT BE RESPONSIBLE FOR THE ACCURACY OR COMPLETENESS OF SCANNED COPIES OF THIS PLAN SHEET.

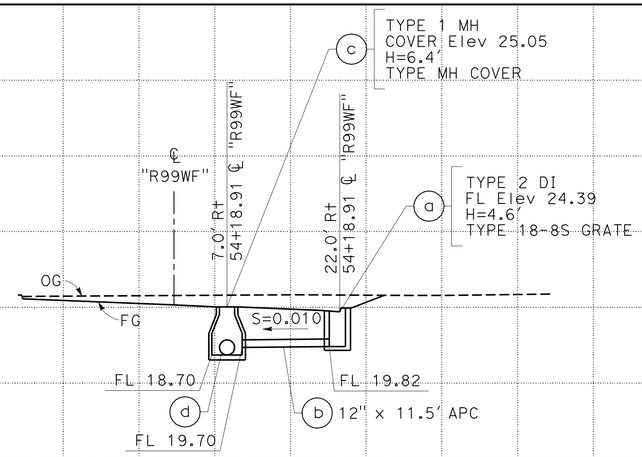

DRAINAGE SYSTEM No. 88
"R99WF" Sta 54+18.91

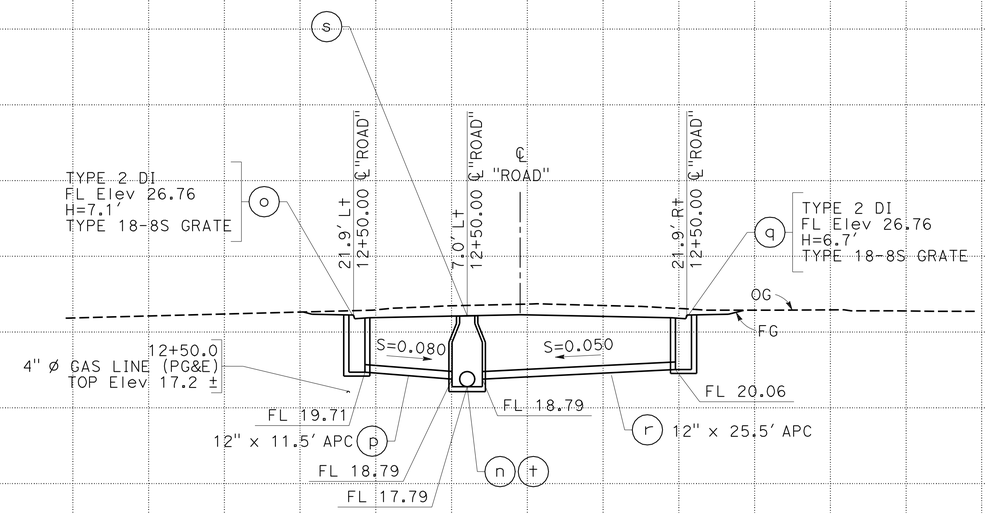

DRAINAGE SYSTEM No. 84
"ROAD" Sta 12+50.00

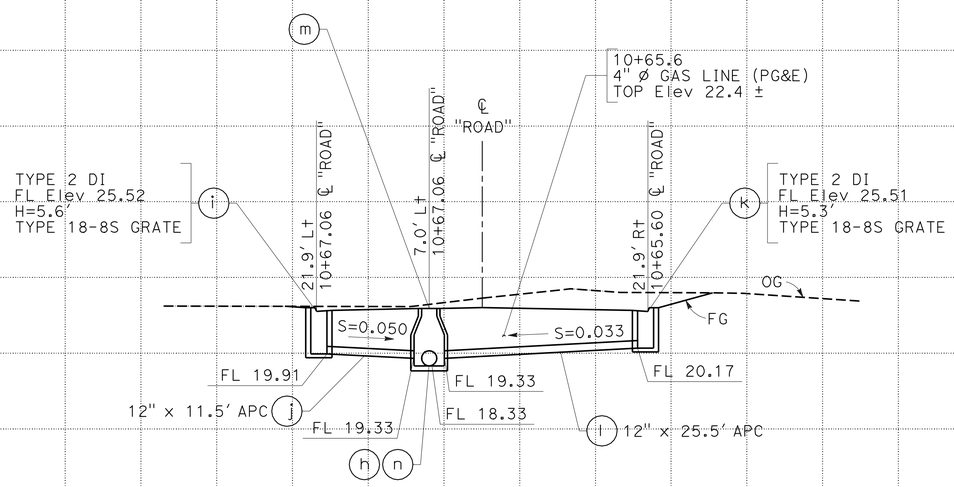

DRAINAGE SYSTEM No. 84
"ROAD" Sta 10+67.06

DRAINAGE PROFILES

SCALE: Horiz 1" = 10'
Vert 1" = 10'

DP-37

REVISED BY | DATE REVISED
JOSE A GONZALEZ | ASHLYN SWAN
CALCULATED-DESIGNED BY | CHECKED BY
FUNCTIONAL SUPERVISOR | MARTIN NISHIKAWA

STATE OF CALIFORNIA - DEPARTMENT OF TRANSPORTATION
Caltrans
06-DESIGN

LAST REVISION 05-26-11 | DATE PLOTTED => 29-MAR-2012 | TIME PLOTTED => 16:24

Dist	COUNTY	ROUTE	POST MILES TOTAL PROJECT	SHEET No.	TOTAL SHEETS
10	SJ	4,99	R19.5/R20.1, 15.0/18.6	351	1414

REGISTERED CIVIL ENGINEER 12-05-11 DATE

3-26-12
PLANS APPROVAL DATE

REGISTERED PROFESSIONAL ENGINEER SEAN M. PLEDGER No. 56328 Exp. 12-31-12 CIVIL STATE OF CALIFORNIA

THE STATE OF CALIFORNIA OR ITS OFFICERS OR AGENTS SHALL NOT BE RESPONSIBLE FOR THE ACCURACY OR COMPLETENESS OF SCANNED COPIES OF THIS PLAN SHEET.

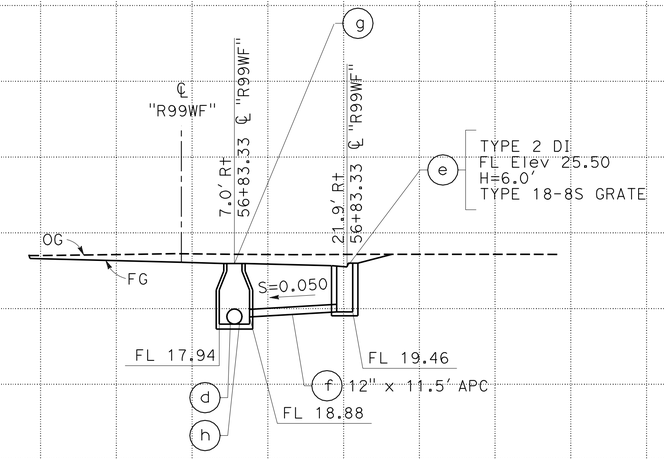

DRAINAGE SYSTEM No. 88

"R99WF" Sta 56+83.33

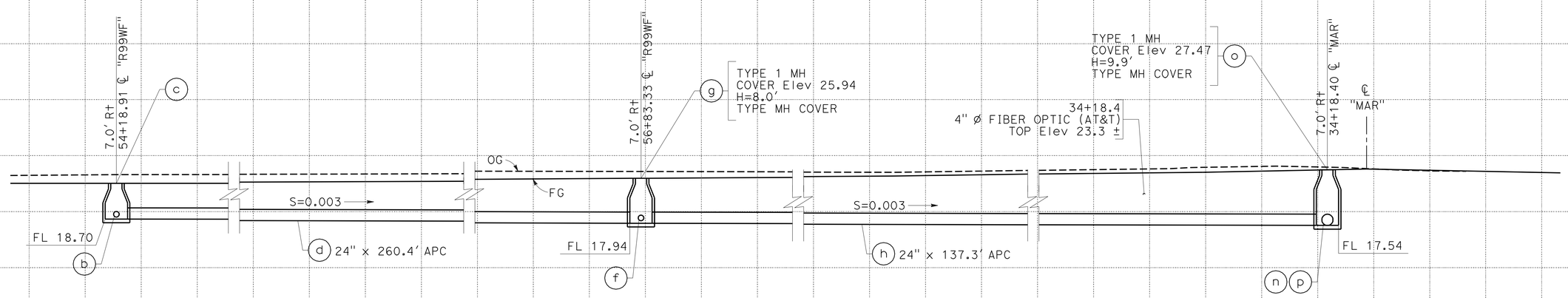

DRAINAGE SYSTEM No. 88

"R99WF" Sta 54+18.91

DRAINAGE PROFILES

SCALE: Horiz 1" = 10'
Vert 1" = 10'

DP-38

STATE OF CALIFORNIA - DEPARTMENT OF TRANSPORTATION
Caltrans
06-DESIGN

FUNCTIONAL SUPERVISOR: MARTIN NISHIKAWA
CALCULATED-DESIGNED BY: JOSE A GONZALEZ
CHECKED BY: ASHLYN SWAN
REVISED BY / DATE REVISED

LAST REVISION 05-26-11 | DATE PLOTTED => 29-MAR-2012 | TIME PLOTTED => 16:24

Dist	COUNTY	ROUTE	POST MILES TOTAL PROJECT	SHEET No.	TOTAL SHEETS
10	SJ	4,99	R19.5/R20.1, 15.0/18.6	352	1414

Sean Pledger 12-05-11
REGISTERED CIVIL ENGINEER DATE

3-26-12
PLANS APPROVAL DATE

REGISTERED PROFESSIONAL ENGINEER SEAN M. PLEDGER No. 56328 Exp. 12-31-12 CIVIL STATE OF CALIFORNIA

THE STATE OF CALIFORNIA OR ITS OFFICERS OR AGENTS SHALL NOT BE RESPONSIBLE FOR THE ACCURACY OR COMPLETENESS OF SCANNED COPIES OF THIS PLAN SHEET.

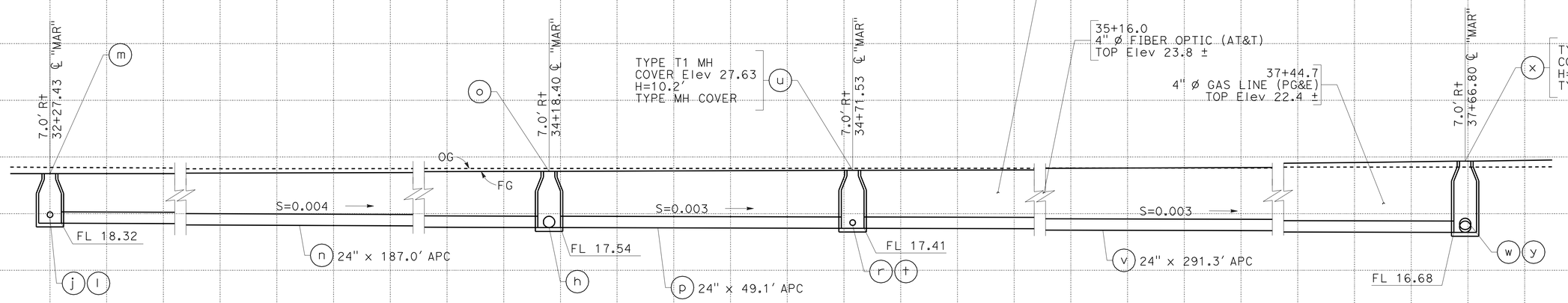

DRAINAGE SYSTEM No. 88

"MAR" Sta 32+27.43

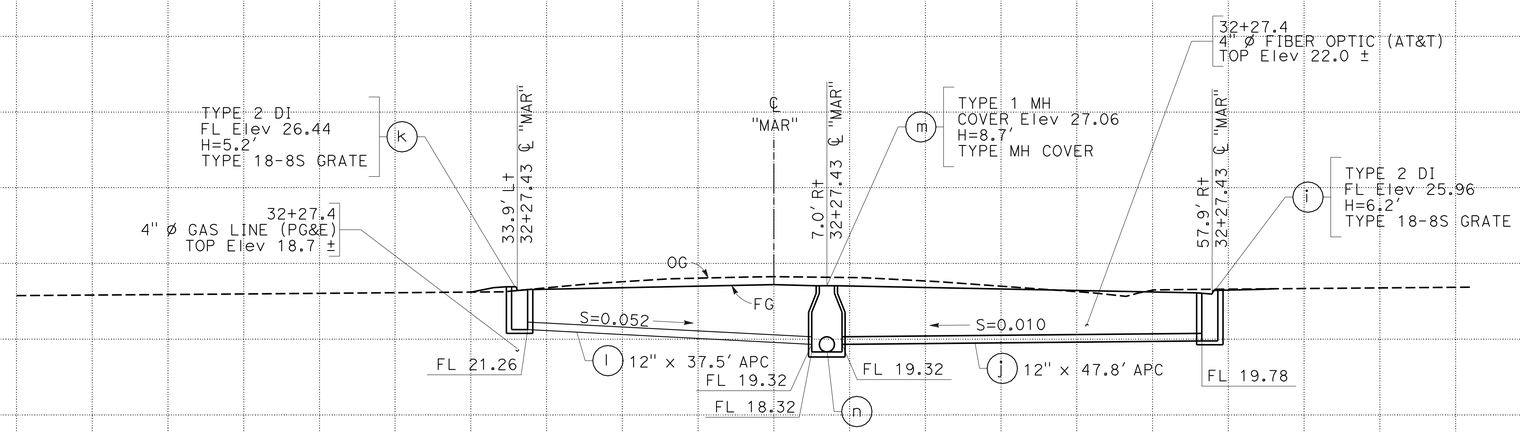

DRAINAGE SYSTEM No. 88

"MAR" Sta 32+27.43

DRAINAGE PROFILES

SCALE: Horiz 1" = 10'
Vert 1" = 10'

DP-39

REVISED BY | DATE REVISED

JOSE A GONZALEZ | ASHLYN SWAN

CALCULATED-DESIGNED BY | CHECKED BY

FUNCTIONAL SUPERVISOR: MARTIN NISHIKAWA

STATE OF CALIFORNIA - DEPARTMENT OF TRANSPORTATION

Caltrans

06-DESIGN

LAST REVISION 05-26-11 | DATE PLOTTED => 29-MAR-2012 | TIME PLOTTED => 16:24

Dist	COUNTY	ROUTE	POST MILES TOTAL PROJECT	SHEET No.	TOTAL SHEETS
10	SJ	4,99	R19.5/R20.1, 15.0/18.6	353	1414

REGISTERED CIVIL ENGINEER 12-05-11 DATE

3-26-12
PLANS APPROVAL DATE

REGISTERED PROFESSIONAL ENGINEER SEAN M. PLEDGER No. 56328 Exp. 12-31-12 CIVIL STATE OF CALIFORNIA

THE STATE OF CALIFORNIA OR ITS OFFICERS OR AGENTS SHALL NOT BE RESPONSIBLE FOR THE ACCURACY OR COMPLETENESS OF SCANNED COPIES OF THIS PLAN SHEET.

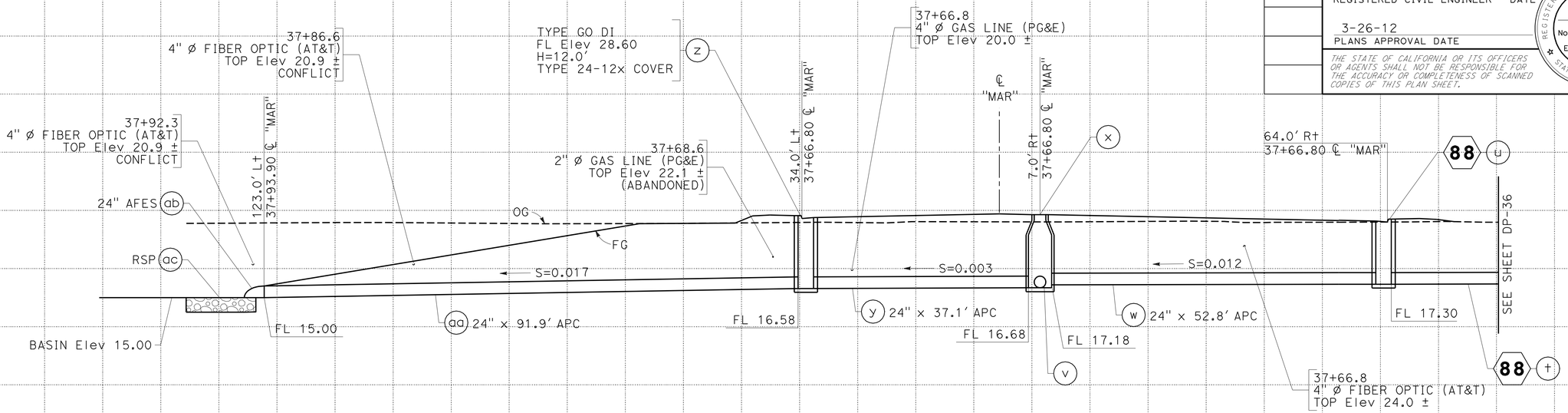

DRAINAGE SYSTEM No. 88

"MAR" Sta 37+66.80

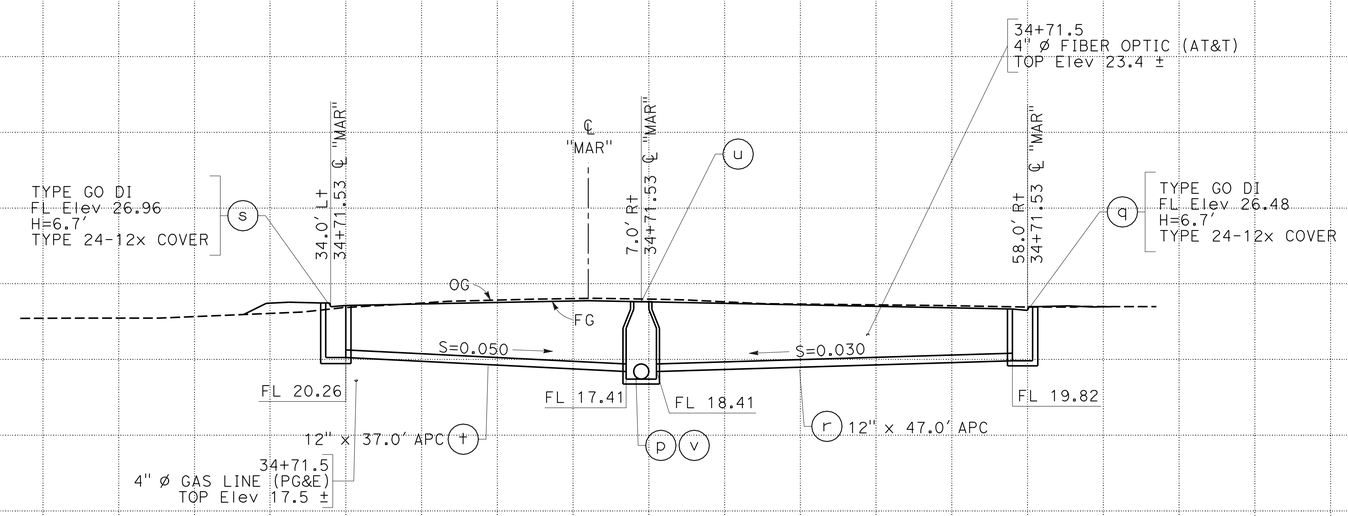

DRAINAGE SYSTEM No. 88

"MAR" Sta 34+71.53

DRAINAGE PROFILES

SCALE: Horiz 1" = 10'
Vert 1" = 10'

DP-40

REVISED BY | DATE REVISED

JOSE A GONZALEZ | ASHLYN SWAN

CALCULATED-DESIGNED BY | CHECKED BY

FUNCTIONAL SUPERVISOR: MARTIN NISHIKAWA

STATE OF CALIFORNIA - DEPARTMENT OF TRANSPORTATION

Caltrans

06-DESIGN

LAST REVISION 05-26-11 | DATE PLOTTED => 29-MAR-2012 | TIME PLOTTED => 16:25

Dist	COUNTY	ROUTE	POST MILES TOTAL PROJECT	SHEET No.	TOTAL SHEETS
10	SJ	4,99	R19.5/R20.1, 15.0/18.6	354	1414

REGISTERED CIVIL ENGINEER 12-05-11 DATE

3-26-12
PLANS APPROVAL DATE

REGISTERED PROFESSIONAL ENGINEER SEAN M. PLEDGER No. 56328 Exp. 12-31-12 CIVIL STATE OF CALIFORNIA

THE STATE OF CALIFORNIA OR ITS OFFICERS OR AGENTS SHALL NOT BE RESPONSIBLE FOR THE ACCURACY OR COMPLETENESS OF SCANNED COPIES OF THIS PLAN SHEET.

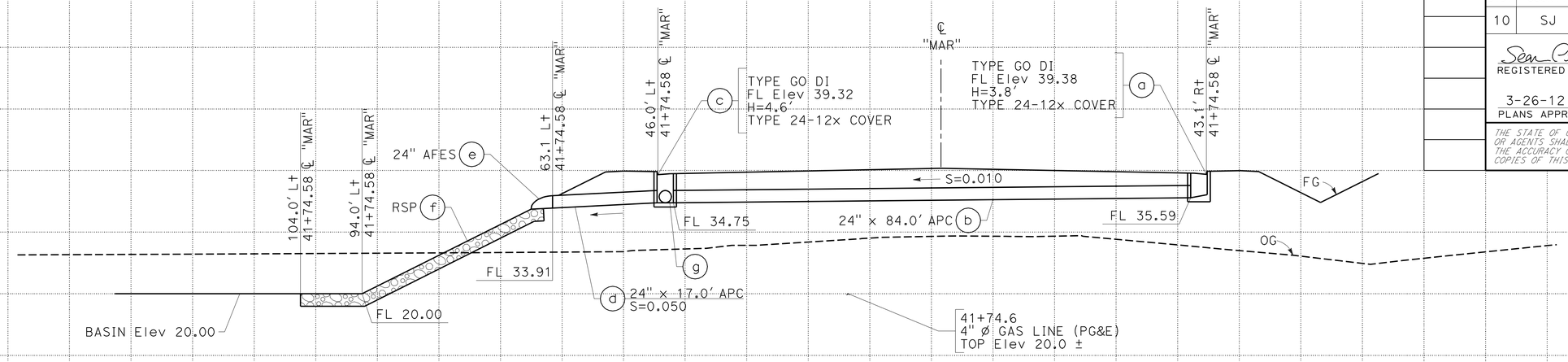

DRAINAGE SYSTEM No. 99

"MAR" Sta 41+74.58

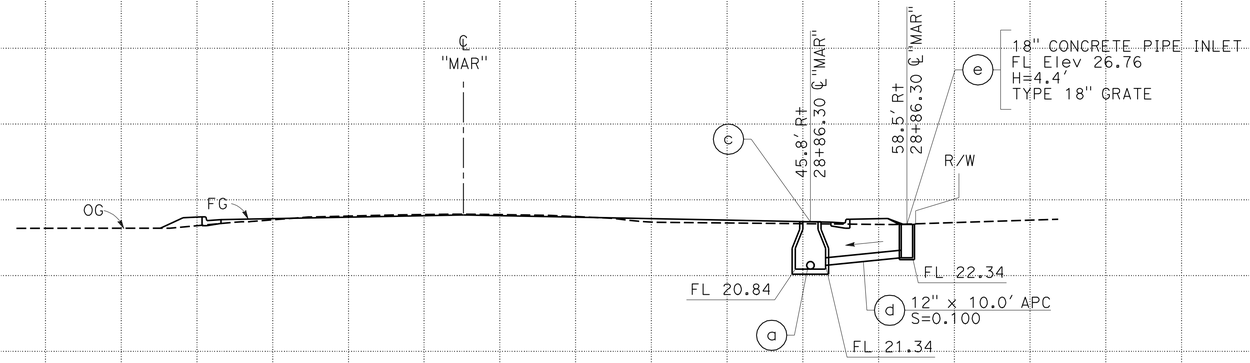

DRAINAGE SYSTEM No. 89

"MAR" Sta 28+86.30

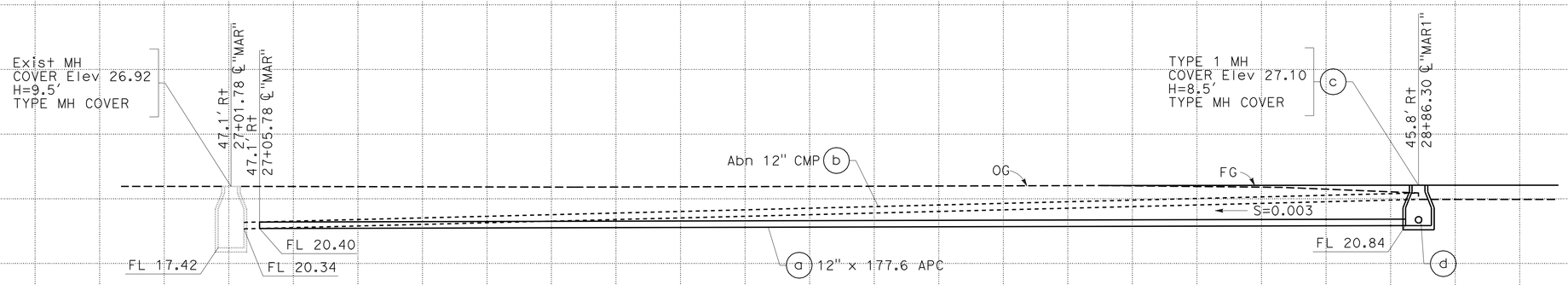

DRAINAGE SYSTEM No. 89

"MAR" Sta 28+86.30

DRAINAGE PROFILES

SCALE: Horiz 1" = 10'
Vert 1" = 10'

DP-41

REVISED BY | DATE REVISED
JOSE A GONZALEZ | ASHLYN SWAN
CALCULATED-DESIGNED BY | CHECKED BY
FUNCTIONAL SUPERVISOR: MARTIN NISHIKAWA
STATE OF CALIFORNIA - DEPARTMENT OF TRANSPORTATION
Caltrans
06-DESIGN

LAST REVISION 05-26-11
DATE PLOTTED => 29-MAR-2012
TIME PLOTTED => 16:25

Dist	COUNTY	ROUTE	POST MILES TOTAL PROJECT	SHEET No.	TOTAL SHEETS
10	SJ	4,99	R19.5/R20.1, 15.0/18.6	355	1414

REGISTERED CIVIL ENGINEER 12-05-11 DATE

3-26-12
PLANS APPROVAL DATE

REGISTERED PROFESSIONAL ENGINEER SEAN M. PLEDGER No. 56328 Exp. 12-31-12 CIVIL STATE OF CALIFORNIA

THE STATE OF CALIFORNIA OR ITS OFFICERS OR AGENTS SHALL NOT BE RESPONSIBLE FOR THE ACCURACY OR COMPLETENESS OF SCANNED COPIES OF THIS PLAN SHEET.

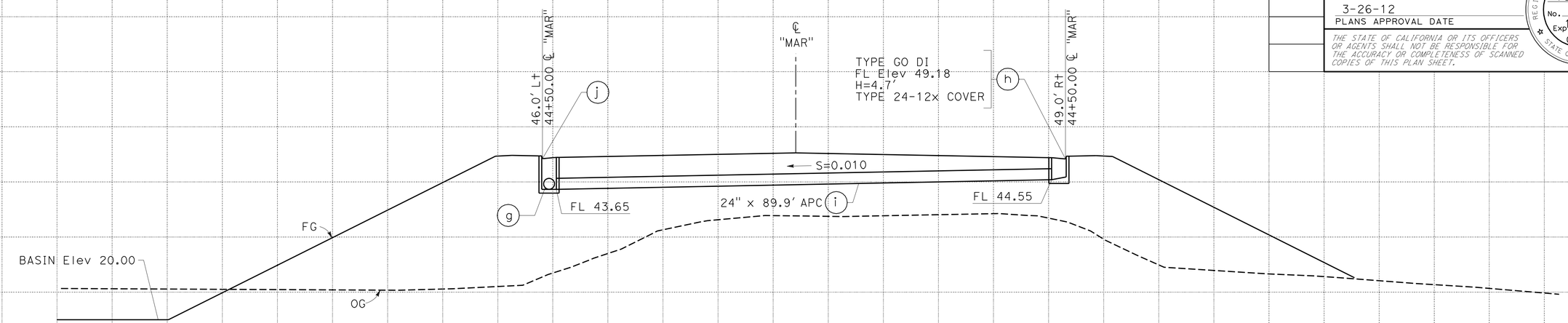

DRAINAGE SYSTEM No. 99

"MAR" Sta 41+74.58

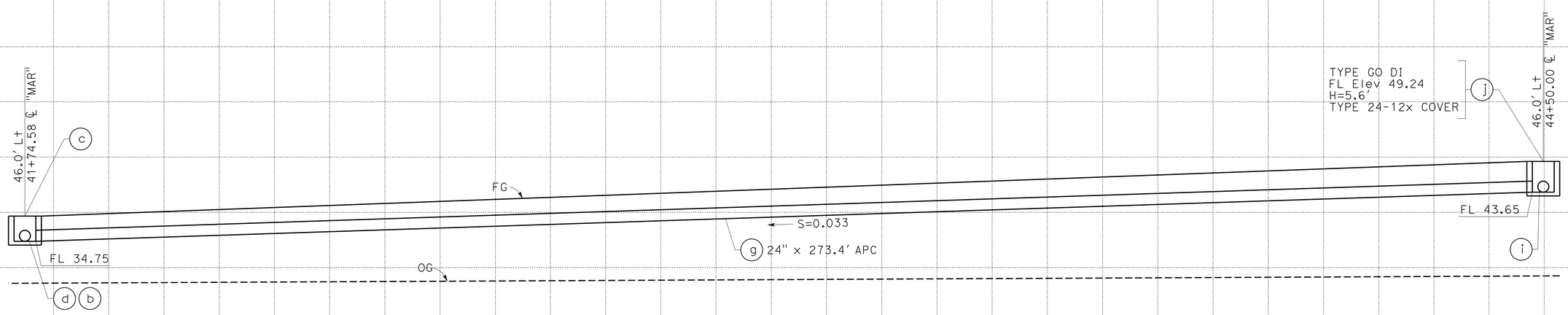

DRAINAGE SYSTEM No. 99

"MAR" Sta 41+74.58

DRAINAGE PROFILES

SCALE: Horiz 1" = 10'
Vert 1" = 10'

DP-42

REVISED BY | DATE REVISED
JOSE A GONZALEZ | ASHLYN SWAN
CALCULATED-DESIGNED BY | CHECKED BY
FUNCTIONAL SUPERVISOR | MARTIN NISHIKAWA
STATE OF CALIFORNIA - DEPARTMENT OF TRANSPORTATION
Caltrans
06-DESIGN

LAST REVISION 05-26-11 | DATE PLOTTED => 29-MAR-2012 | TIME PLOTTED => 16:25

Dist	COUNTY	ROUTE	POST MILES TOTAL PROJECT	SHEET No.	TOTAL SHEETS
10	SJ	4,99	R19.5/R20.1, 15.0/18.6	356	1414

REGISTERED CIVIL ENGINEER 12-05-11 DATE

3-26-12
PLANS APPROVAL DATE

REGISTERED PROFESSIONAL ENGINEER SEAN M. PLEDGER No. 56328 Exp. 12-31-12 CIVIL STATE OF CALIFORNIA

THE STATE OF CALIFORNIA OR ITS OFFICERS OR AGENTS SHALL NOT BE RESPONSIBLE FOR THE ACCURACY OR COMPLETENESS OF SCANNED COPIES OF THIS PLAN SHEET.

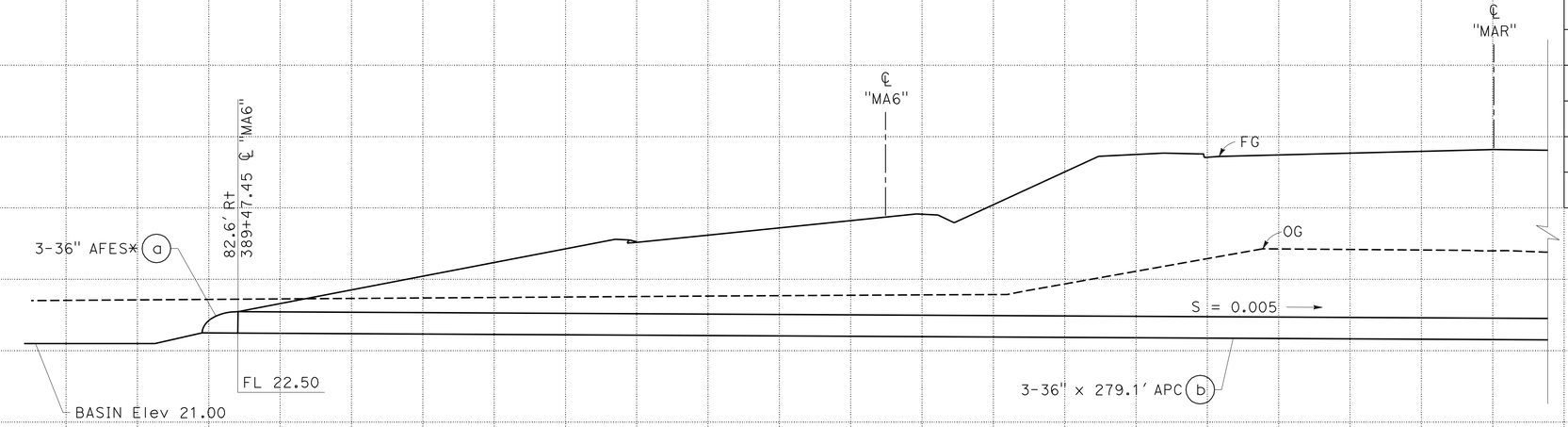

* SEE DRAINAGE DETAILS SHEETS.

DRAINAGE SYSTEM No. 103

"MAR" Sta 50+86.68

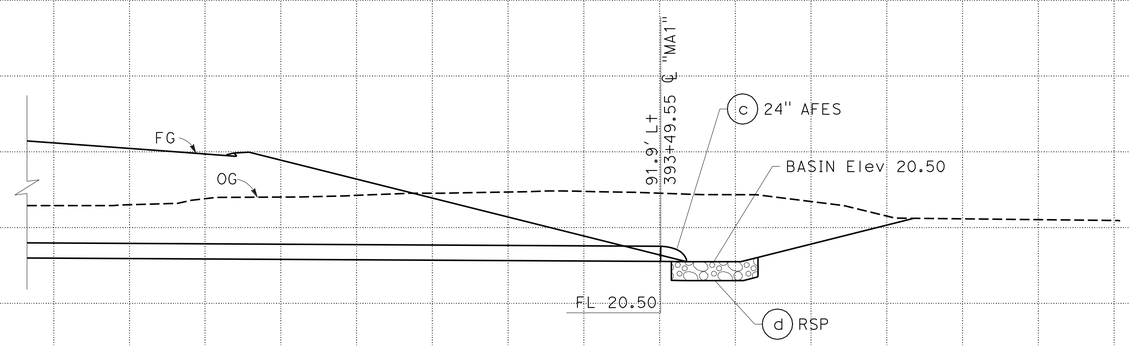

DRAINAGE SYSTEM No. 100

"MAR" Sta 42+50.00

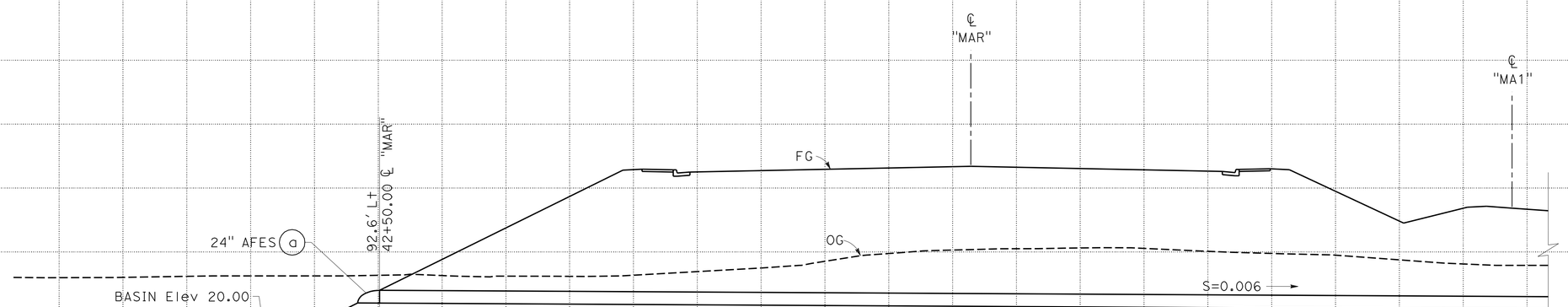

DRAINAGE SYSTEM No. 100

"MAR" Sta 42+50.00

DRAINAGE PROFILES

SCALE: Horiz 1" = 10'
Vert 1" = 10'

DP-43

REVISED BY | DATE REVISED
JOSE A GONZALEZ | ASHLYN SWAN
CALCULATED-DESIGNED BY | CHECKED BY
FUNCTIONAL SUPERVISOR: MARTIN NISHIKAWA
STATE OF CALIFORNIA - DEPARTMENT OF TRANSPORTATION | 06-DESIGN | Caltrans

LAST REVISION 05-26-11 | DATE PLOTTED => 29-MAR-2012 | TIME PLOTTED => 16:25

Dist	COUNTY	ROUTE	POST MILES TOTAL PROJECT	SHEET No.	TOTAL SHEETS
10	SJ	4,99	R19.5/R20.1, 15.0/18.6	357	1414

Sean Pledger 12-05-11
REGISTERED CIVIL ENGINEER DATE

3-26-12
PLANS APPROVAL DATE

REGISTERED PROFESSIONAL ENGINEER SEAN M. PLEDGER No. 56328 Exp. 12-31-12 CIVIL STATE OF CALIFORNIA

THE STATE OF CALIFORNIA OR ITS OFFICERS OR AGENTS SHALL NOT BE RESPONSIBLE FOR THE ACCURACY OR COMPLETENESS OF SCANNED COPIES OF THIS PLAN SHEET.

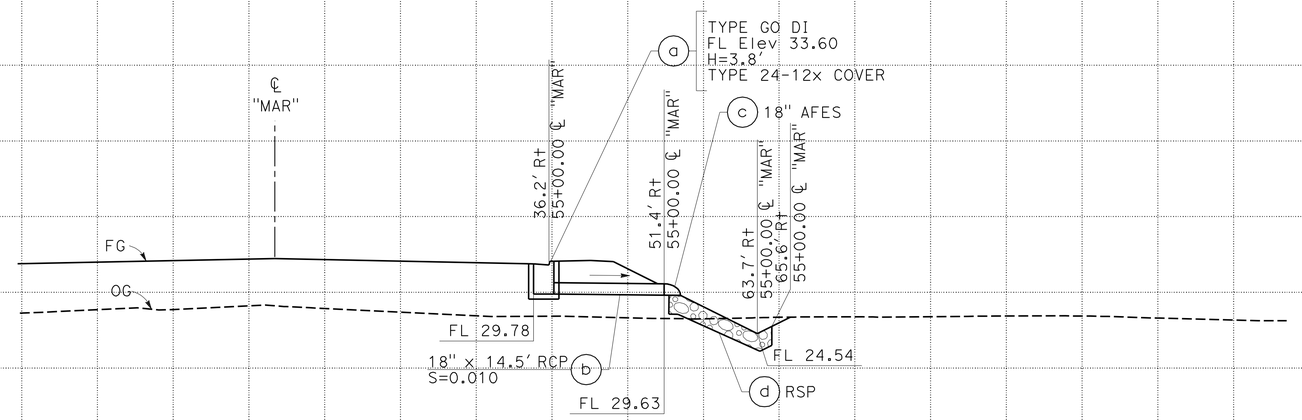

DRAINAGE SYSTEM No. 106

"MAR" Sta 55+00.00

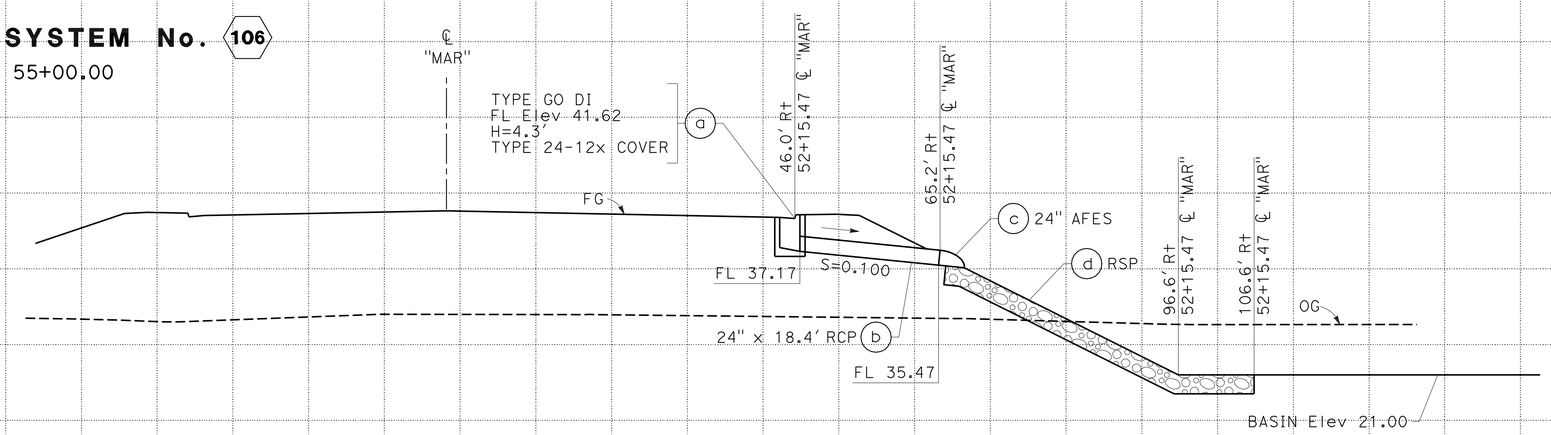

DRAINAGE SYSTEM No. 105

"MAR" Sta 52+15.47

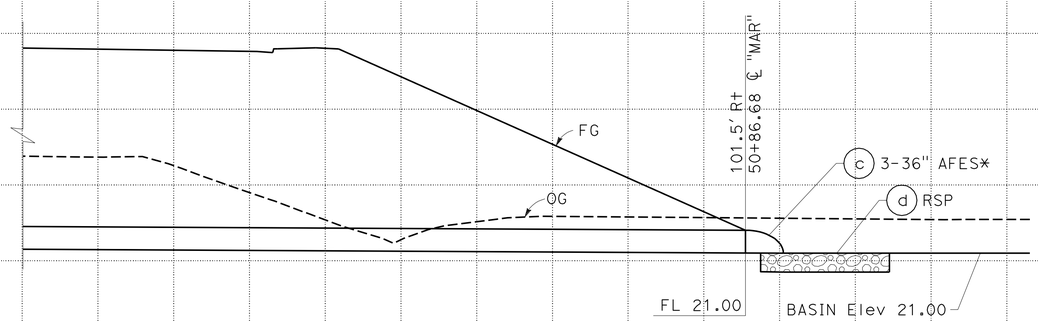

* SEE DRAINAGE DETAILS SHEETS.

DRAINAGE SYSTEM No. 103

"MAR" Sta 50+86.68

DRAINAGE PROFILES

SCALE: Horiz 1" = 10'
Vert 1" = 10'

DP-44

STATE OF CALIFORNIA - DEPARTMENT OF TRANSPORTATION
Caltrans
06-DESIGN
FUNCTIONAL SUPERVISOR: MARTIN NISHIKAWA
CALCULATED-DESIGNED BY: JOSE A GONZALEZ
CHECKED BY: ASHLYN SWAN
REVISED BY / DATE REVISED

LAST REVISION 05-26-11 DATE PLOTTED => 29-MAR-2012 TIME PLOTTED => 16:25

Dist	COUNTY	ROUTE	POST MILES TOTAL PROJECT	SHEET No.	TOTAL SHEETS
10	SJ	4,99	R19.5/R20.1, 15.0/18.6	358	1414

REGISTERED CIVIL ENGINEER 12-05-11 DATE

3-26-12
PLANS APPROVAL DATE

REGISTERED PROFESSIONAL ENGINEER SEAN M. PLEDGER No. 56328 Exp. 12-31-12 CIVIL STATE OF CALIFORNIA

THE STATE OF CALIFORNIA OR ITS OFFICERS OR AGENTS SHALL NOT BE RESPONSIBLE FOR THE ACCURACY OR COMPLETENESS OF SCANNED COPIES OF THIS PLAN SHEET.

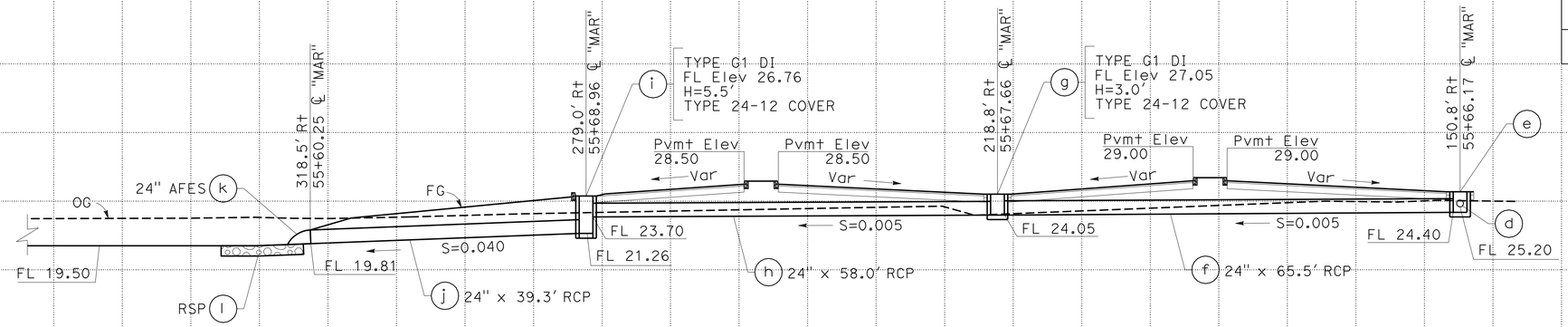

DRAINAGE SYSTEM No. 107

"MAR" Sta 56+01.09

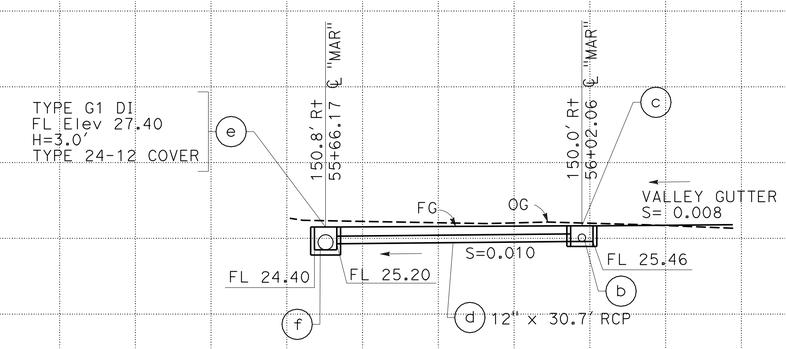

DRAINAGE SYSTEM No. 107

"MAR" Sta 56+01.09

DRAINAGE SYSTEM No. 107

"MAR" Sta 56+01.09

DRAINAGE PROFILES

SCALE: Horiz 1"=10'
Vert 1"=10'

DP-45

STATE OF CALIFORNIA - DEPARTMENT OF TRANSPORTATION
Caltrans 06-DESIGN

FUNCTIONAL SUPERVISOR: MARTIN NISHIKAWA
CALCULATED-DESIGNED BY: JOSE A GONZALEZ
CHECKED BY: ASHLYN SWAN
REVISED BY / DATE REVISED

LAST REVISION 05-26-11
DATE PLOTTED => 29-MAR-2012
TIME PLOTTED => 16:25

Dist	COUNTY	ROUTE	POST MILES TOTAL PROJECT	SHEET No.	TOTAL SHEETS
10	SJ	4,99	R19.5/R20.1, 15.0/18.6	359	1414

Sean Pledger 12-05-11
REGISTERED CIVIL ENGINEER DATE

3-26-12
PLANS APPROVAL DATE

REGISTERED PROFESSIONAL ENGINEER SEAN M. PLEDGER No. 56328 Exp. 12-31-12 CIVIL STATE OF CALIFORNIA

THE STATE OF CALIFORNIA OR ITS OFFICERS OR AGENTS SHALL NOT BE RESPONSIBLE FOR THE ACCURACY OR COMPLETENESS OF SCANNED COPIES OF THIS PLAN SHEET.

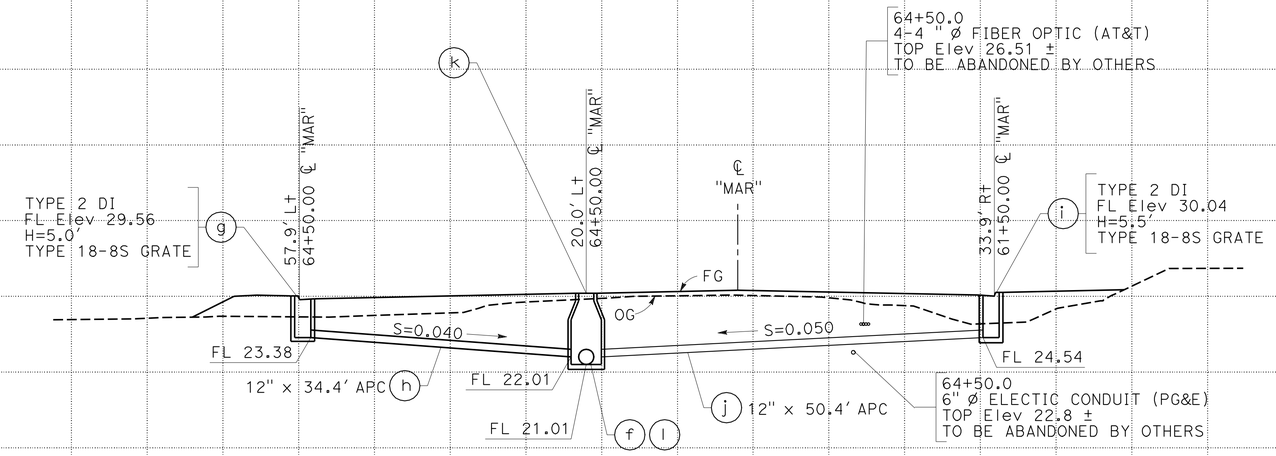

DRAINAGE SYSTEM No. 111

"MAR" Sta 64+50.00

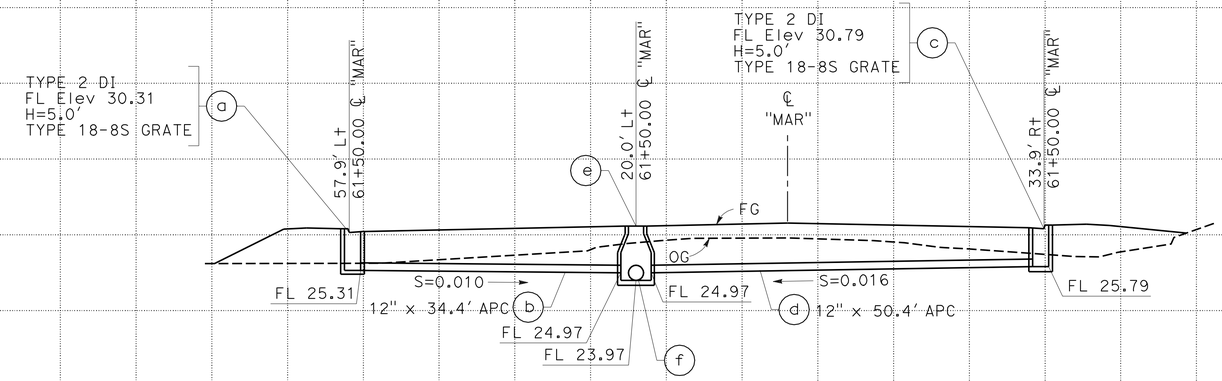

DRAINAGE SYSTEM No. 111

"MAR" Sta 61+50.00

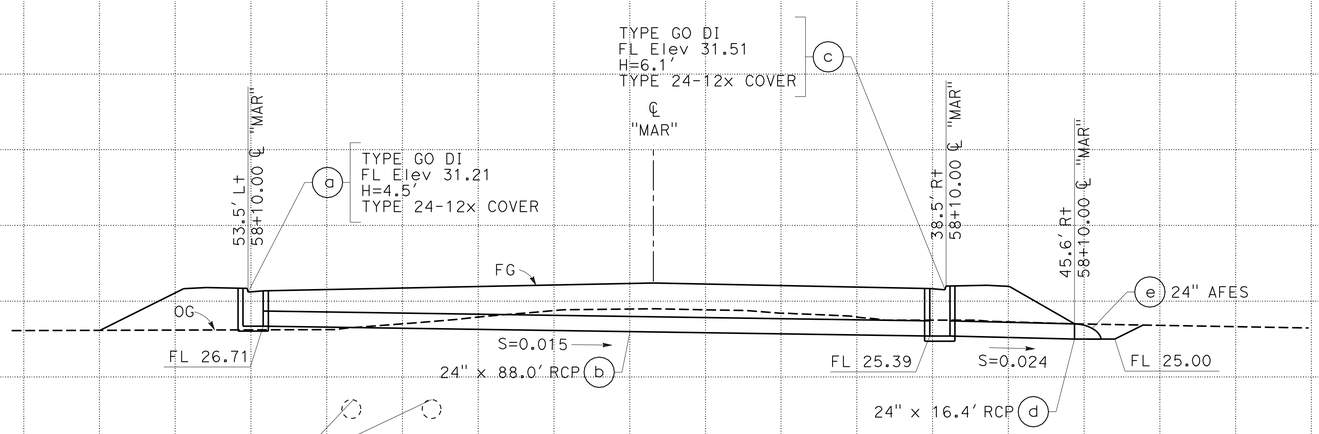

DRAINAGE SYSTEM No. 108

"MAR" Sta 58+10.00

DRAINAGE PROFILES

SCALE: Horiz 1"=10'
Vert 1"=10'

DP-46

STATE OF CALIFORNIA - DEPARTMENT OF TRANSPORTATION
Caltrans
06-DESIGN

FUNCTIONAL SUPERVISOR: MARTIN NISHIKAWA
CALCULATED-DESIGNED BY: JOSE A GONZALEZ
CHECKED BY: ASHLYN SWAN
REVISED BY
DATE REVISED

LAST REVISION 05-26-11
DATE PLOTTED => 29-MAR-2012
TIME PLOTTED => 16:25

Dist	COUNTY	ROUTE	POST MILES TOTAL PROJECT	SHEET No.	TOTAL SHEETS
10	SJ	4,99	R19.5/R20.1, 15.0/18.6	360	1414

Sean Pledger 12-05-11
REGISTERED CIVIL ENGINEER DATE

3-26-12
PLANS APPROVAL DATE

REGISTERED PROFESSIONAL ENGINEER SEAN M. PLEDGER No. 56328 Exp. 12-31-12 CIVIL STATE OF CALIFORNIA

THE STATE OF CALIFORNIA OR ITS OFFICERS OR AGENTS SHALL NOT BE RESPONSIBLE FOR THE ACCURACY OR COMPLETENESS OF SCANNED COPIES OF THIS PLAN SHEET.

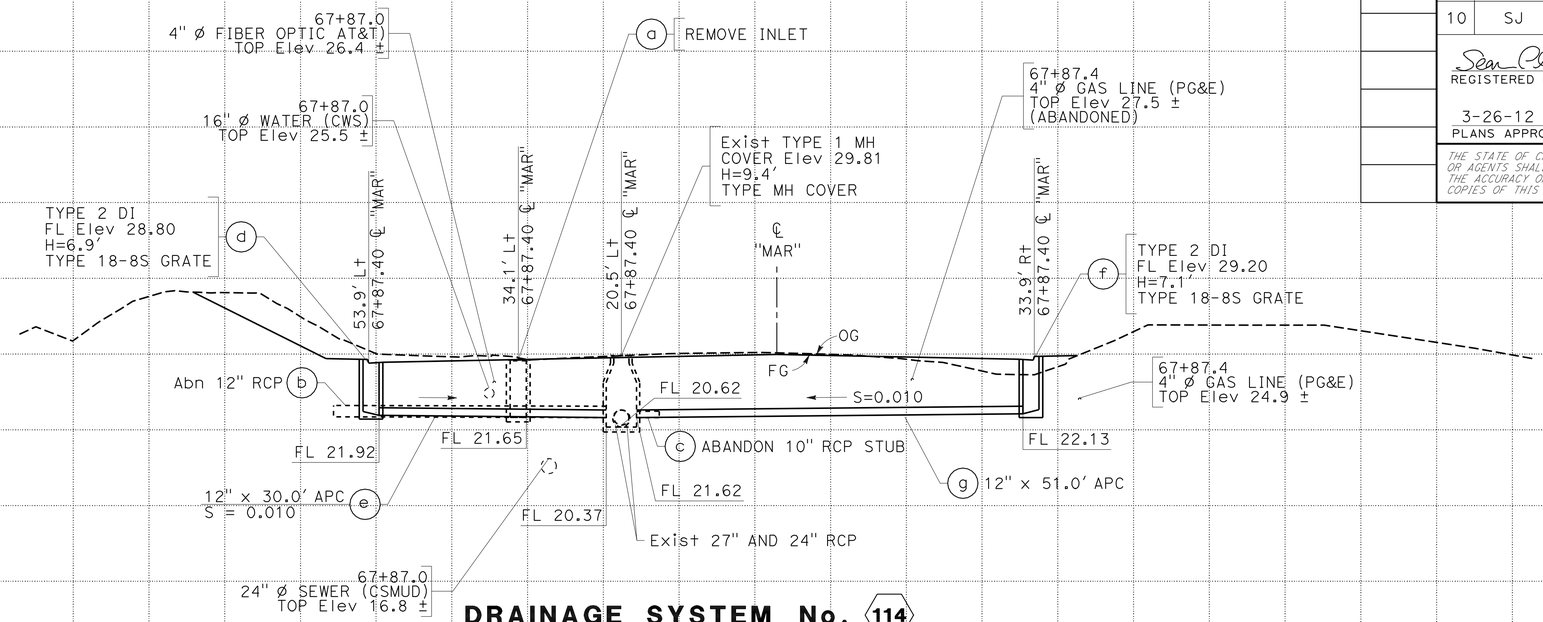

DRAINAGE SYSTEM No. 114

"MAR" Sta 67+87.40

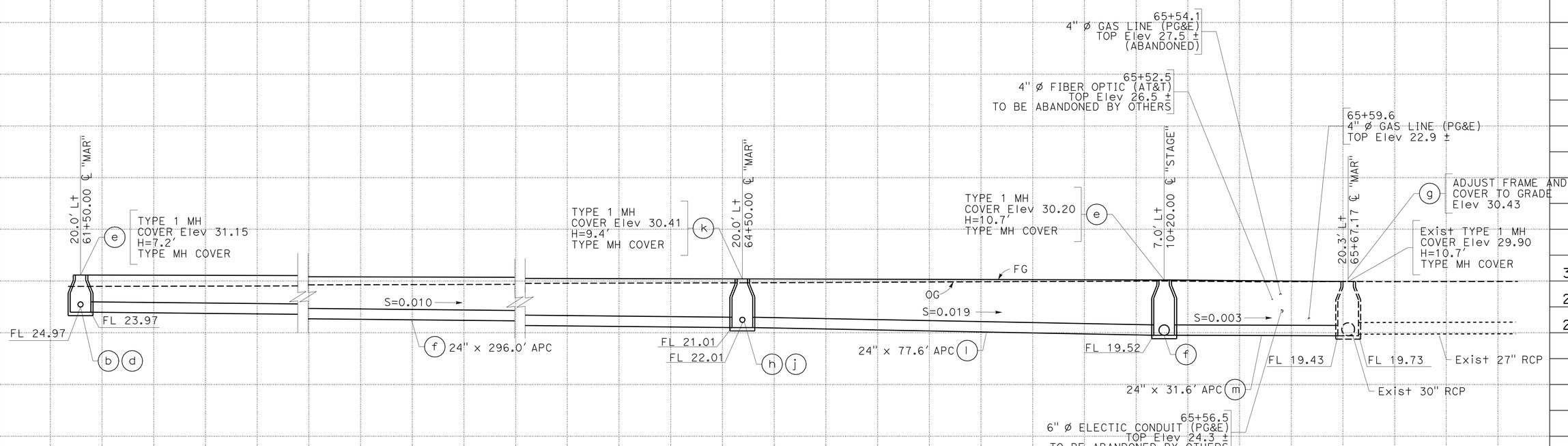

DRAINAGE SYSTEM No. 111

"MAR" Sta 61+50.00

DRAINAGE PROFILES

SCALE: Horiz 1"=10'
Vert 1"=10'

DP-47

REVISED BY | DATE REVISED
JOSE A GONZALEZ | ASHLYN SWAN
CALCULATED-DESIGNED BY | CHECKED BY
FUNCTIONAL SUPERVISOR | MARTIN NISHIKAWA

STATE OF CALIFORNIA - DEPARTMENT OF TRANSPORTATION
Caltrans
06-DESIGN

LAST REVISION 05-26-11 | DATE PLOTTED => 29-MAR-2012 | TIME PLOTTED => 16:25

Dist	COUNTY	ROUTE	POST MILES TOTAL PROJECT	SHEET No.	TOTAL SHEETS
10	SJ	4,99	R19.5/R20.1, 15.0/18.6	361	1414

Sean Pledger 12-05-11
REGISTERED CIVIL ENGINEER DATE

3-26-12
PLANS APPROVAL DATE

REGISTERED PROFESSIONAL ENGINEER SEAN M. PLEDGER No. 56328 Exp. 12-31-12 CIVIL STATE OF CALIFORNIA

THE STATE OF CALIFORNIA OR ITS OFFICERS OR AGENTS SHALL NOT BE RESPONSIBLE FOR THE ACCURACY OR COMPLETENESS OF SCANNED COPIES OF THIS PLAN SHEET.

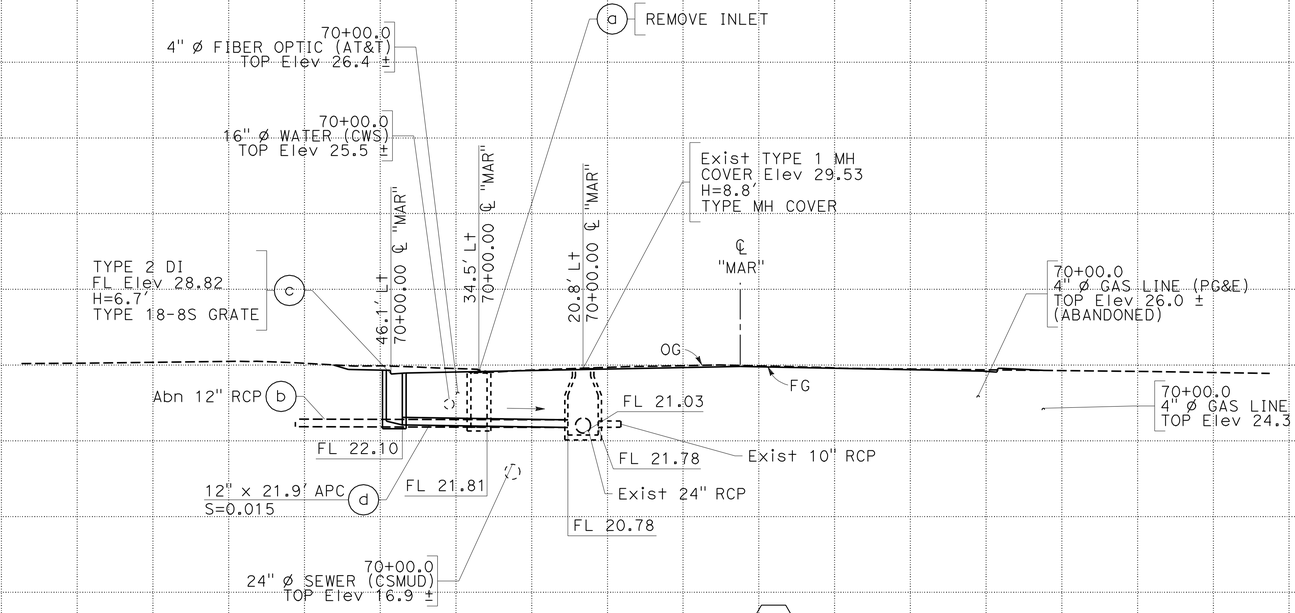

DRAINAGE SYSTEM No. 117

"MAR" Sta 70+00.00

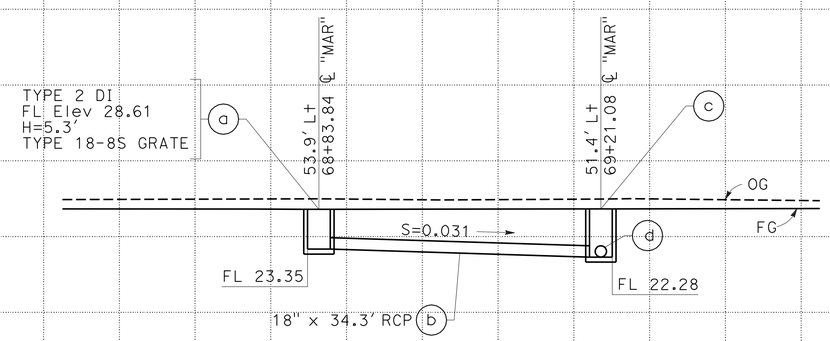

DRAINAGE SYSTEM No. 115

"MAR" Sta 69+21.08

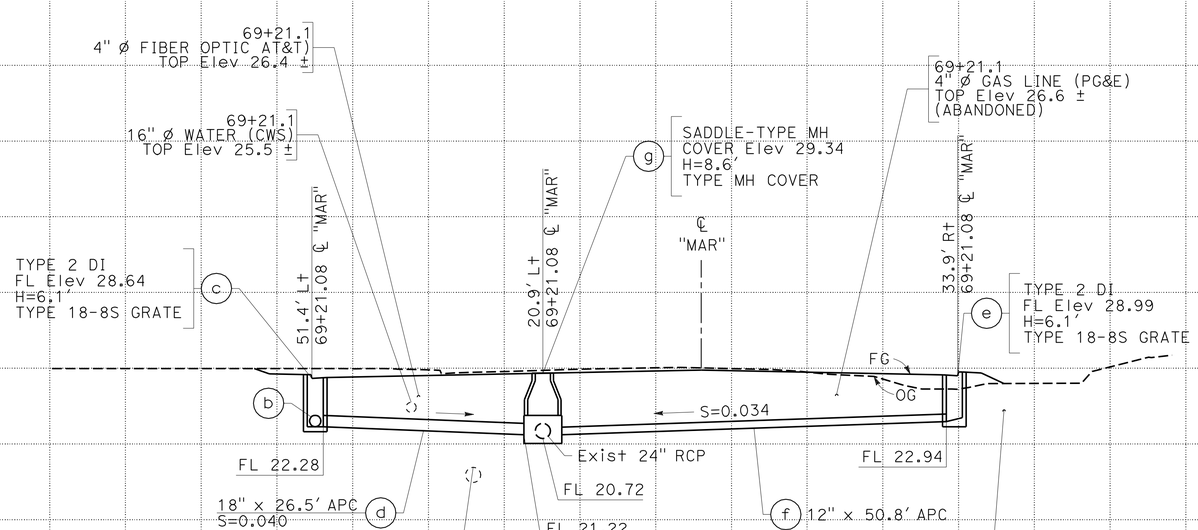

DRAINAGE SYSTEM No. 115

"MAR" Sta 69+21.08

DRAINAGE PROFILES

SCALE: Horiz 1"=10'
Vert 1"=10'

DP-48

REVISED BY | DATE REVISED
JOSE A GONZALEZ | ASHLYN SWAN
CALCULATED-DESIGNED BY | CHECKED BY
FUNCTIONAL SUPERVISOR | MARTIN NISHIKAWA
STATE OF CALIFORNIA - DEPARTMENT OF TRANSPORTATION
Caltrans | 06-DESIGN

LAST REVISION 05-26-11 | DATE PLOTTED => 29-MAR-2012 | TIME PLOTTED => 17:05

Dist	COUNTY	ROUTE	POST MILES TOTAL PROJECT	SHEET No.	TOTAL SHEETS
10	SJ	4,99	R19.5/R20.1, 15.0/18.6	362	1414

Sean Pledger 12-05-11
REGISTERED CIVIL ENGINEER DATE

3-26-12
PLANS APPROVAL DATE

REGISTERED PROFESSIONAL ENGINEER SEAN M. PLEDGER No. 56328 Exp. 12-31-12 CIVIL STATE OF CALIFORNIA

THE STATE OF CALIFORNIA OR ITS OFFICERS OR AGENTS SHALL NOT BE RESPONSIBLE FOR THE ACCURACY OR COMPLETENESS OF SCANNED COPIES OF THIS PLAN SHEET.

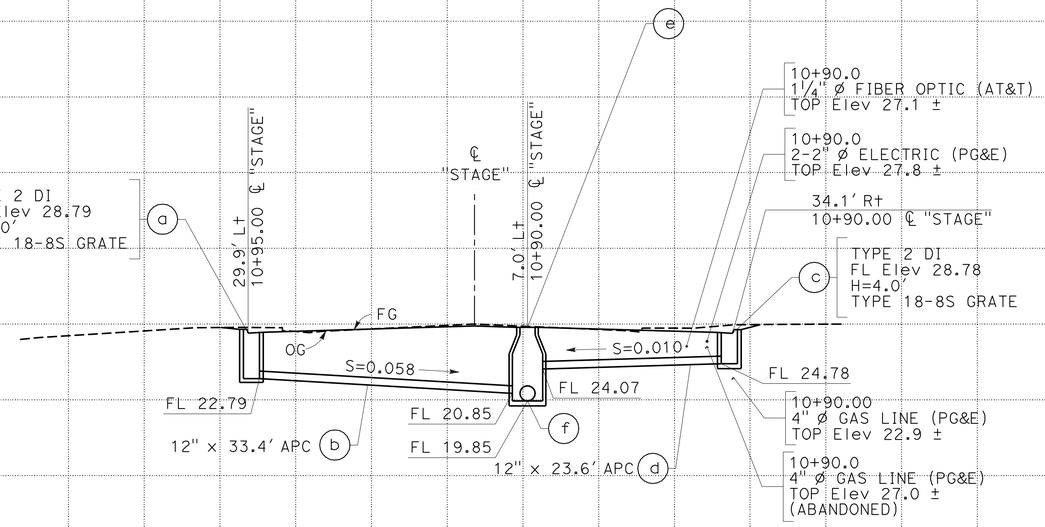

DRAINAGE SYSTEM No. 119

"STAGE" Sta 10+90.00

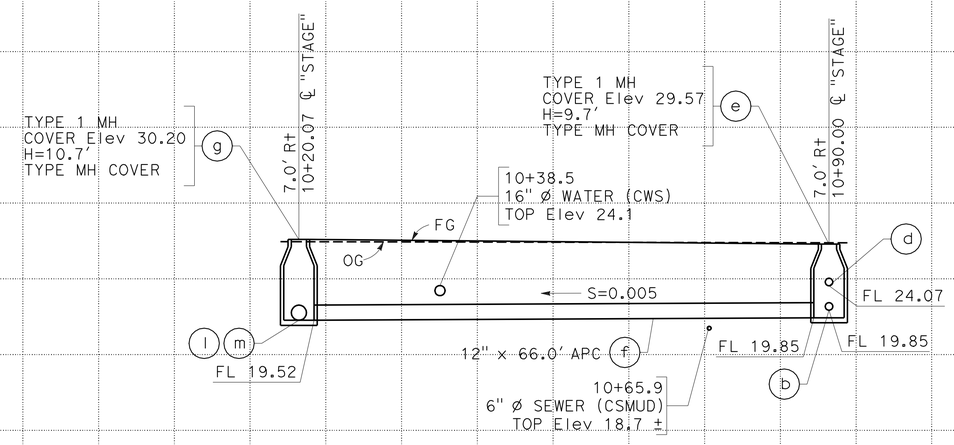

DRAINAGE SYSTEM No. 119

"STAGE" Sta 10+20.07

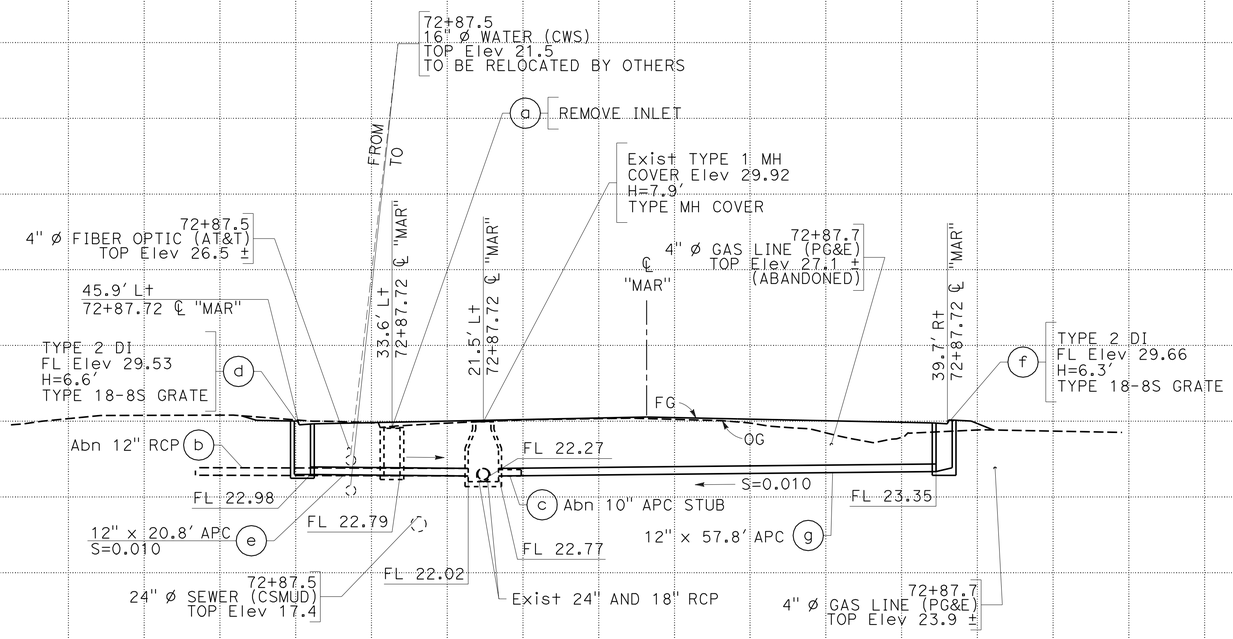

DRAINAGE SYSTEM No. 118

"MAR" Sta 72+87.72

DRAINAGE PROFILES

SCALE: Horiz 1"=10'
Vert 1"=10'

DP-49

STATE OF CALIFORNIA - DEPARTMENT OF TRANSPORTATION
Caltrans
06-DESIGN

FUNCTIONAL SUPERVISOR: MARTIN NISHIKAWA
CALCULATED-DESIGNED BY: JOSE A GONZALEZ
CHECKED BY: ASHLYN SWAN
REVISED BY
DATE REVISED

LAST REVISION 05-26-11
DATE PLOTTED => 29-MAR-2012
TIME PLOTTED => 17:05

Dist	COUNTY	ROUTE	POST MILES TOTAL PROJECT	SHEET No.	TOTAL SHEETS
10	SJ	4,99	R19.5/R20.1, 15.0/18.6	363	1414

REGISTERED CIVIL ENGINEER 12-05-11 DATE

3-26-12
PLANS APPROVAL DATE

REGISTERED PROFESSIONAL ENGINEER SEAN M. PLEDGER No. 56328 Exp. 12-31-12 CIVIL STATE OF CALIFORNIA

THE STATE OF CALIFORNIA OR ITS OFFICERS OR AGENTS SHALL NOT BE RESPONSIBLE FOR THE ACCURACY OR COMPLETENESS OF SCANNED COPIES OF THIS PLAN SHEET.

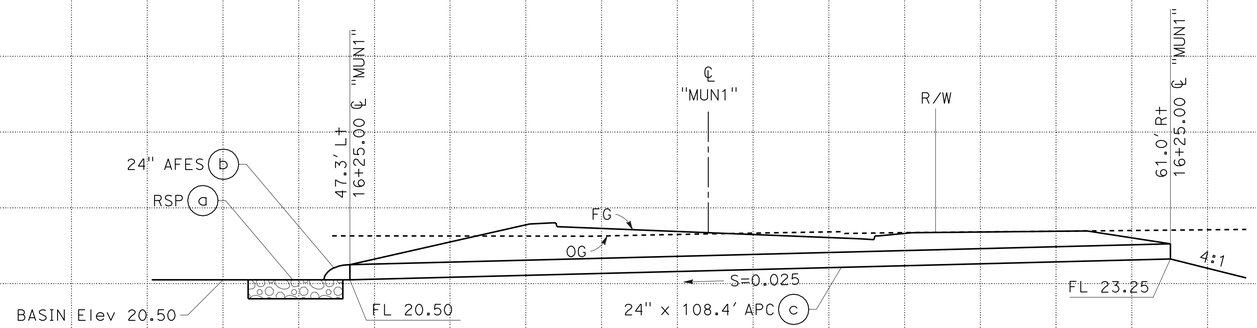

DRAINAGE SYSTEM No. 122

"MUN1" Sta 16+25.00

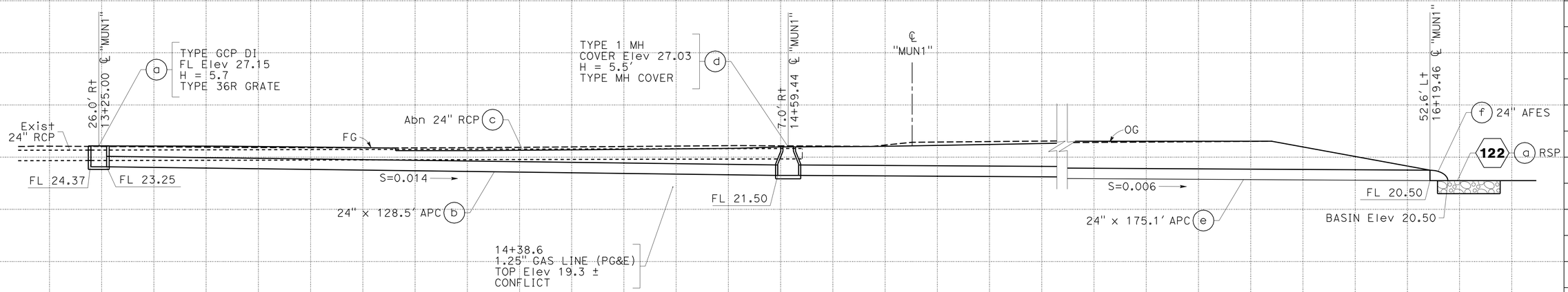

DRAINAGE SYSTEM No. 120

"MUN1" Sta 13+25.00

DRAINAGE PROFILES

SCALE: Horiz 1" = 10'
Vert 1" = 10'

DP-50

REVISED BY | DATE REVISED

JOSE A GONZALEZ | ASHLYN SWAN

CALCULATED-DESIGNED BY | CHECKED BY

FUNCTIONAL SUPERVISOR: MARTIN NISHIKAWA

STATE OF CALIFORNIA - DEPARTMENT OF TRANSPORTATION

Caltrans® 06-DESIGN

LAST REVISION 05-26-11 | DATE PLOTTED => 29-MAR-2012 | TIME PLOTTED => 17:05

Dist	COUNTY	ROUTE	POST MILES TOTAL PROJECT	SHEET No.	TOTAL SHEETS
10	SJ	4,99	R19.5/R20.1, 15.0/18.6	364	1414

Sean Pledger 12-05-11
REGISTERED CIVIL ENGINEER DATE

3-26-12
PLANS APPROVAL DATE

REGISTERED PROFESSIONAL ENGINEER
SEAN M. PLEDGER
No. 56328
Exp. 12-31-12
CIVIL
STATE OF CALIFORNIA

THE STATE OF CALIFORNIA OR ITS OFFICERS OR AGENTS SHALL NOT BE RESPONSIBLE FOR THE ACCURACY OR COMPLETENESS OF SCANNED COPIES OF THIS PLAN SHEET.

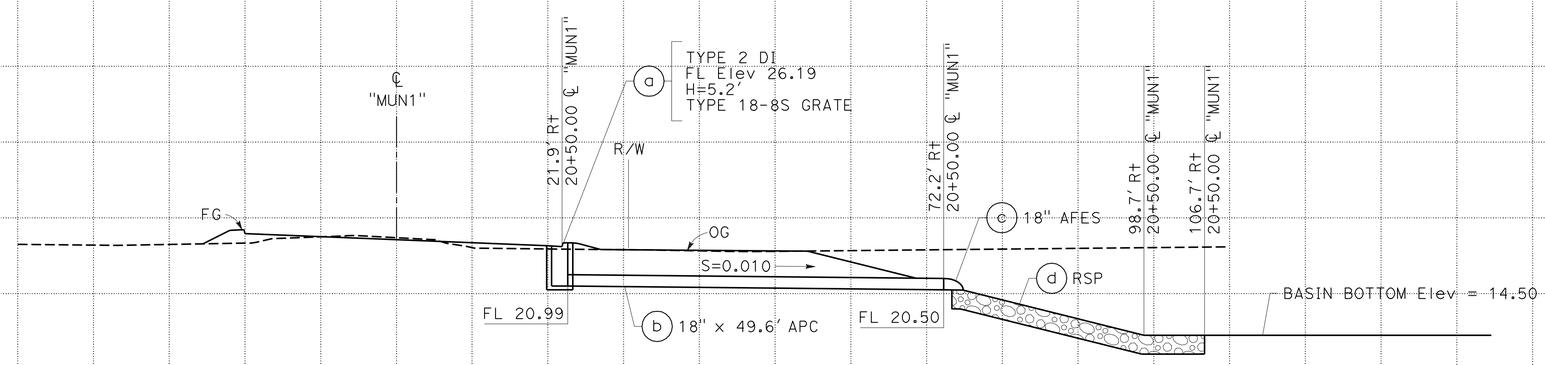

DRAINAGE SYSTEM No. 127

"MUN1" Sta 20+50.00

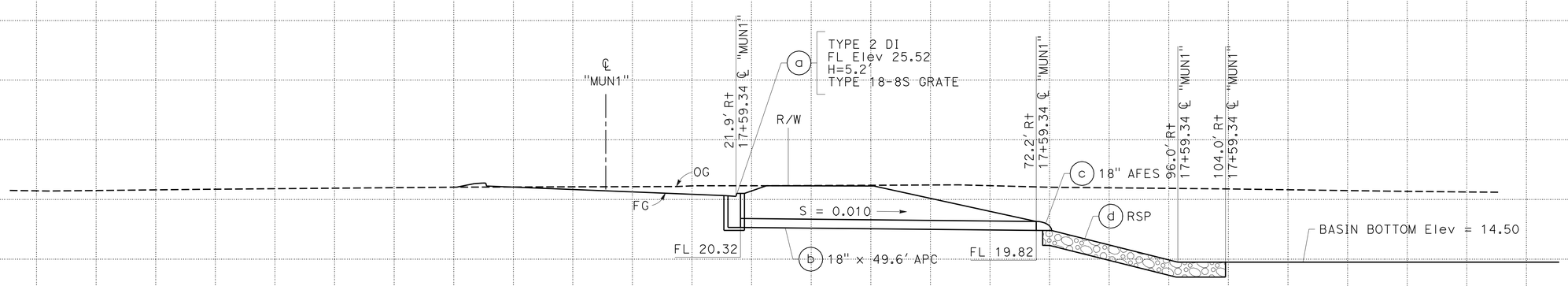

DRAINAGE SYSTEM No. 124

"MUN1" Sta 17+59.34

DRAINAGE PROFILES

SCALE: Horiz 1" = 10'
Vert 1" = 10'

DP-51

REVISED BY	DATE REVISED

CALCULATED-DESIGNED BY	CHECKED BY
JOSE A GONZALEZ	ASHLYN SWAN

FUNCTIONAL SUPERVISOR: MARTIN NISHIKAWA

STATE OF CALIFORNIA - DEPARTMENT OF TRANSPORTATION
Caltrans
06-DESIGN

LAST REVISION 05-26-11 | DATE PLOTTED => 29-MAR-2012 | TIME PLOTTED => 17:05

Dist	COUNTY	ROUTE	POST MILES TOTAL PROJECT	SHEET No.	TOTAL SHEETS
10	SJ	4,99	R19.5/R20.1, 15.0/18.6	365	1414

Sean Pledger 12-05-11
REGISTERED CIVIL ENGINEER DATE

3-26-12
PLANS APPROVAL DATE

REGISTERED PROFESSIONAL ENGINEER SEAN M. PLEDGER No. 56328 Exp. 12-31-12 CIVIL STATE OF CALIFORNIA

THE STATE OF CALIFORNIA OR ITS OFFICERS OR AGENTS SHALL NOT BE RESPONSIBLE FOR THE ACCURACY OR COMPLETENESS OF SCANNED COPIES OF THIS PLAN SHEET.

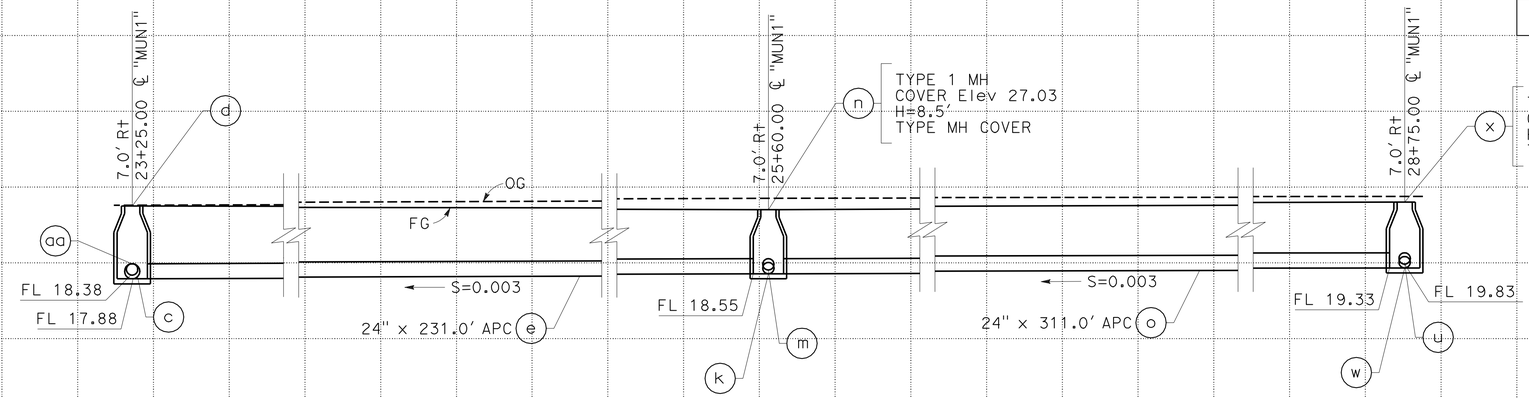

DRAINAGE SYSTEM No. 131

"MUN1" Sta 23+00.00

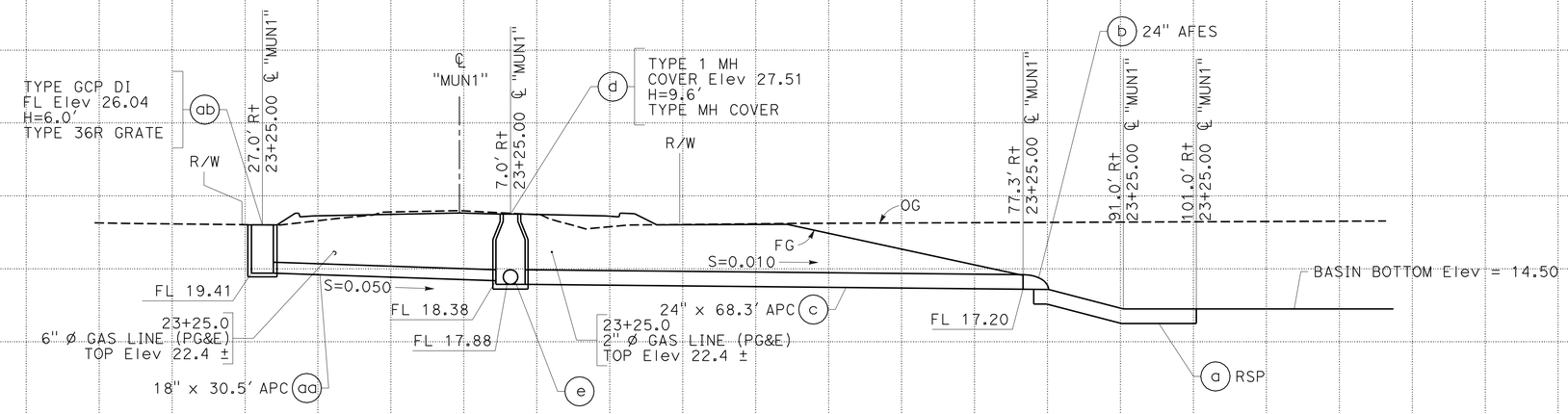

DRAINAGE SYSTEM No. 131

"MUN1" Sta 23+25.00

DRAINAGE PROFILES

SCALE: Horiz 1"=10'
Vert 1"=10'

DP-52

REVISED BY | DATE REVISED
JOSE A GONZALEZ | ASHLYN SWAN
CALCULATED-DESIGNED BY | CHECKED BY
FUNCTIONAL SUPERVISOR | MARTIN NISHIKAWA
STATE OF CALIFORNIA - DEPARTMENT OF TRANSPORTATION | 06-DESIGN | Caltrans

LAST REVISION 05-26-11 | DATE PLOTTED => 29-MAR-2012 | TIME PLOTTED => 17:06

Dist	COUNTY	ROUTE	POST MILES TOTAL PROJECT	SHEET No.	TOTAL SHEETS
10	SJ	4,99	R19.5/R20.1, 15.0/18.6	366	1414

REGISTERED CIVIL ENGINEER 12-05-11 DATE

3-26-12
PLANS APPROVAL DATE

REGISTERED PROFESSIONAL ENGINEER SEAN M. PLEDGER No. 56328 Exp. 12-31-12 CIVIL STATE OF CALIFORNIA

THE STATE OF CALIFORNIA OR ITS OFFICERS OR AGENTS SHALL NOT BE RESPONSIBLE FOR THE ACCURACY OR COMPLETENESS OF SCANNED COPIES OF THIS PLAN SHEET.

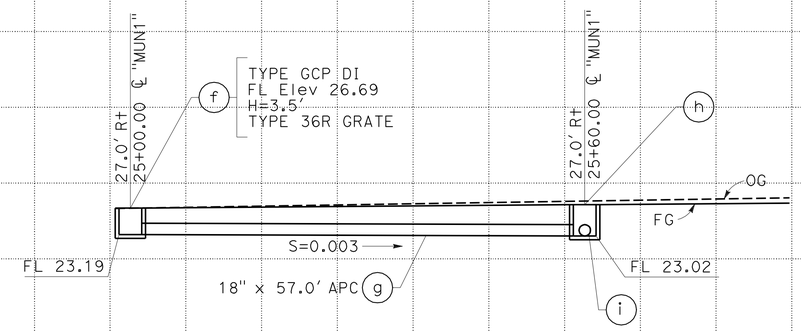

DRAINAGE SYSTEM No. 131

"MUN1" Sta 25+00.00

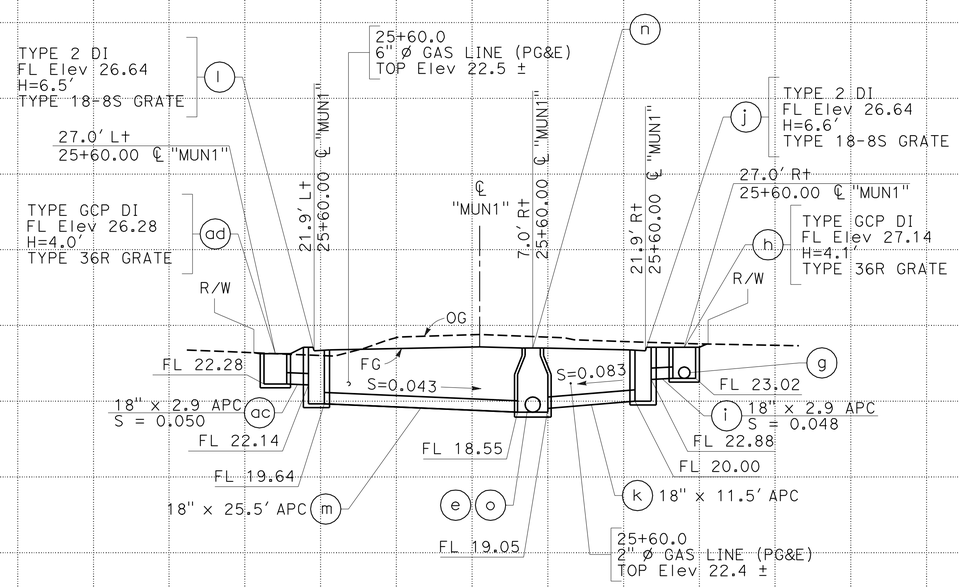

DRAINAGE SYSTEM No. 131

"MUN1" Sta 25+60.00

DRAINAGE PROFILES

SCALE: Horiz 1"=10'
Vert 1"=10'

DP-53

REVISED BY	DATE REVISED
JOSE A GONZALEZ	ASHLYN SWAN
CALCULATED-DESIGNED BY	CHECKED BY
FUNCTIONAL SUPERVISOR	MARTIN NISHIKAWA

STATE OF CALIFORNIA - DEPARTMENT OF TRANSPORTATION
Caltrans
06-DESIGN

LAST REVISION 05-26-11 | DATE PLOTTED => 29-MAR-2012 | TIME PLOTTED => 17:06

Dist	COUNTY	ROUTE	POST MILES TOTAL PROJECT	SHEET No.	TOTAL SHEETS
10	SJ	4,99	R19.5/R20.1, 15.0/18.6	367	1414

REGISTERED CIVIL ENGINEER 12-05-11 DATE

3-26-12
PLANS APPROVAL DATE

REGISTERED PROFESSIONAL ENGINEER SEAN M. PLEDGER No. 56328 Exp. 12-31-12 CIVIL STATE OF CALIFORNIA

THE STATE OF CALIFORNIA OR ITS OFFICERS OR AGENTS SHALL NOT BE RESPONSIBLE FOR THE ACCURACY OR COMPLETENESS OF SCANNED COPIES OF THIS PLAN SHEET.

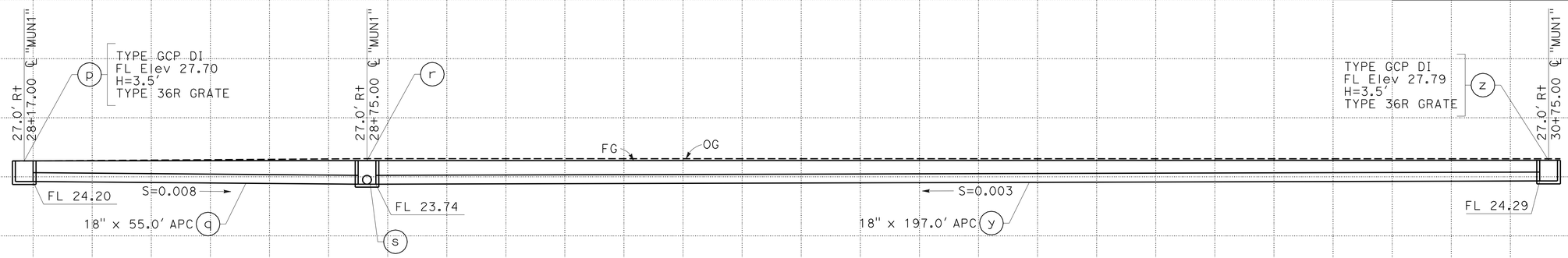

DRAINAGE SYSTEM No. 131

"MUN1" Sta 27+17.00

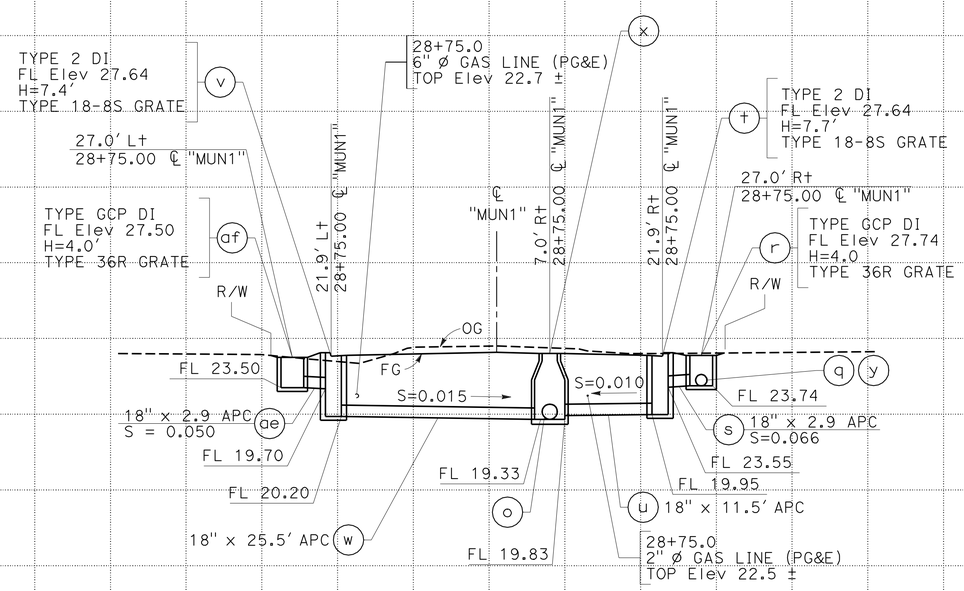

DRAINAGE SYSTEM No. 131

"MUN1" Sta 28+75.00

DRAINAGE PROFILES

SCALE: Horiz 1"=10'
Vert 1"=10'

DP-54

STATE OF CALIFORNIA - DEPARTMENT OF TRANSPORTATION
Caltrans
06-DESIGN
FUNCTIONAL SUPERVISOR: MARTIN NISHIKAWA
CALCULATED-DESIGNED BY: JOSE A GONZALEZ
CHECKED BY: ASHLYN SWAN
REVISED BY
DATE REVISED

LAST REVISION 05-26-11
DATE PLOTTED => 29-MAR-2012
TIME PLOTTED => 17:06

Dist	COUNTY	ROUTE	POST MILES TOTAL PROJECT	SHEET No.	TOTAL SHEETS
10	SJ	4,99	R19.5/R20.1, 15.0/18.6	368	1414

Sean Pledger 12-05-11
REGISTERED CIVIL ENGINEER DATE

3-26-12
PLANS APPROVAL DATE

REGISTERED PROFESSIONAL ENGINEER SEAN M. PLEDGER No. 56328 Exp. 12-31-12 CIVIL STATE OF CALIFORNIA

THE STATE OF CALIFORNIA OR ITS OFFICERS OR AGENTS SHALL NOT BE RESPONSIBLE FOR THE ACCURACY OR COMPLETENESS OF SCANNED COPIES OF THIS PLAN SHEET.

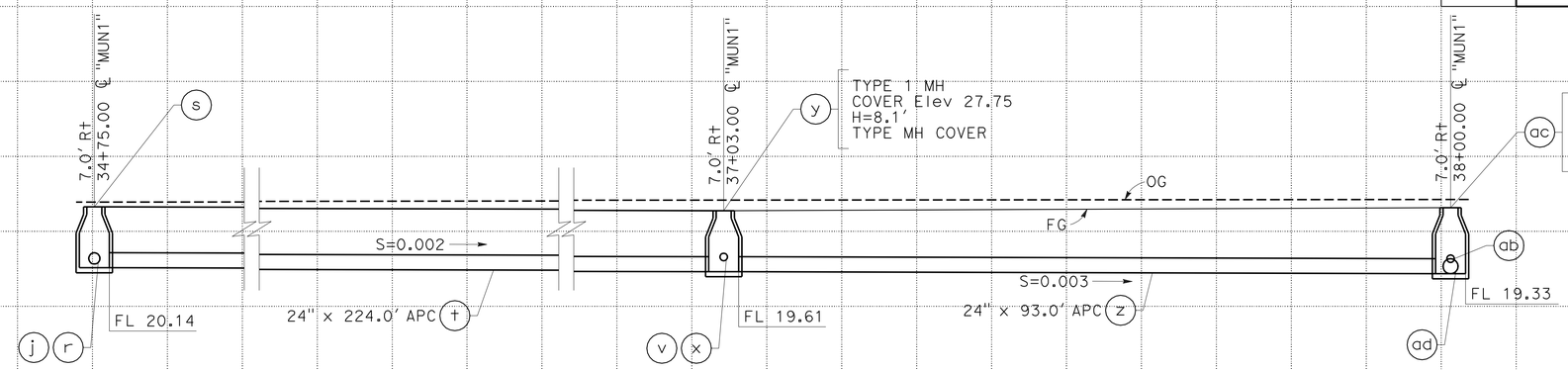

DRAINAGE SYSTEM No. 147

"MUN1" Sta 32+15.62

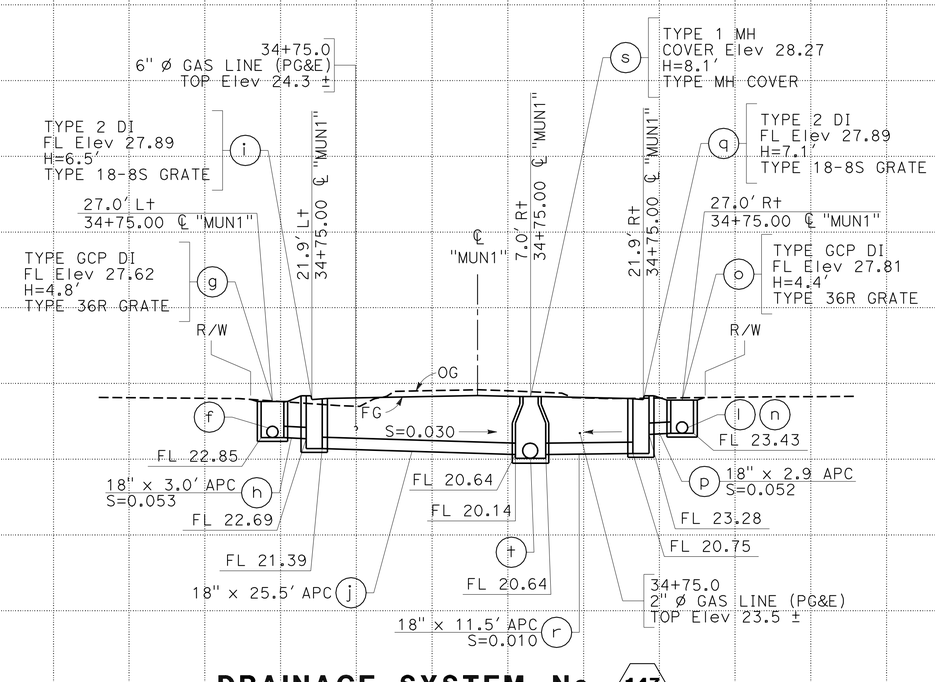

DRAINAGE SYSTEM No. 147

"MUN1" Sta 34+75.00

DRAINAGE PROFILES

SCALE: Horiz 1" = 10'
Vert 1" = 10'

DP-55

REVISED BY | DATE REVISED
JOSE A GONZALEZ | ASHLYN SWAN
CALCULATED-DESIGNED BY | CHECKED BY
FUNCTIONAL SUPERVISOR | MARTIN NISHIKAWA

STATE OF CALIFORNIA - DEPARTMENT OF TRANSPORTATION
Caltrans
06-DESIGN

LAST REVISION 05-26-11 | DATE PLOTTED => 29-MAR-2012 | TIME PLOTTED => 17:06

Dist	COUNTY	ROUTE	POST MILES TOTAL PROJECT	SHEET No.	TOTAL SHEETS
10	SJ	4,99	R19.5/R20.1, 15.0/18.6	369	1414

Sean Pledger 12-05-11
REGISTERED CIVIL ENGINEER DATE

3-26-12
PLANS APPROVAL DATE

REGISTERED PROFESSIONAL ENGINEER SEAN M. PLEDGER No. 56328 Exp. 12-31-12 CIVIL STATE OF CALIFORNIA

THE STATE OF CALIFORNIA OR ITS OFFICERS OR AGENTS SHALL NOT BE RESPONSIBLE FOR THE ACCURACY OR COMPLETENESS OF SCANNED COPIES OF THIS PLAN SHEET.

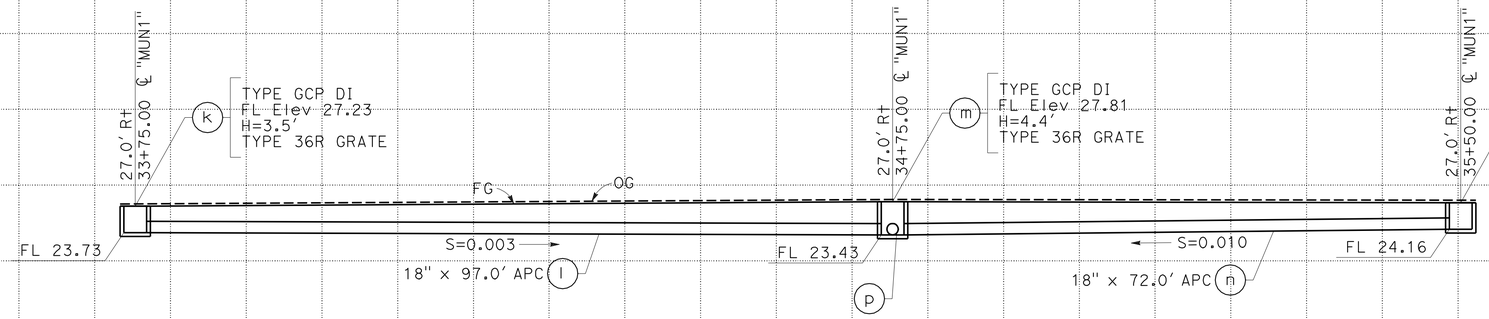

DRAINAGE SYSTEM No. 147

"MUN1" Sta 33+75.00

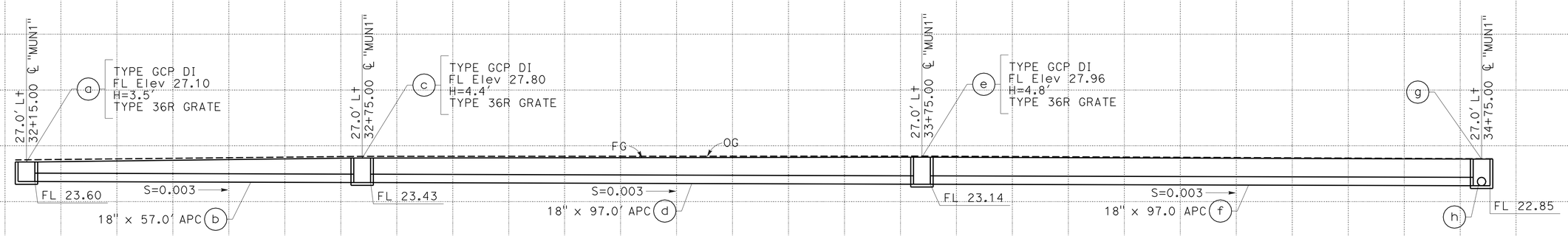

DRAINAGE SYSTEM No. 147

"MUN1" Sta 32+75.00

DRAINAGE PROFILES

SCALE: Horiz 1" = 10'
Vert 1" = 10'

DP-56

REVISED BY | DATE REVISED
JOSE A GONZALEZ | ASHLYN SWAN
CALCULATED-DESIGNED BY | CHECKED BY
FUNCTIONAL SUPERVISOR | MARTIN NISHIKAWA

STATE OF CALIFORNIA - DEPARTMENT OF TRANSPORTATION
Caltrans
06-DESIGN

LAST REVISION 05-26-11 | DATE PLOTTED => 29-MAR-2012 | TIME PLOTTED => 17:06

Dist	COUNTY	ROUTE	POST MILES TOTAL PROJECT	SHEET No.	TOTAL SHEETS
10	SJ	4,99	R19.5/R20.1, 15.0/18.6	370	1414

REGISTERED CIVIL ENGINEER 12-05-11 DATE

3-26-12
PLANS APPROVAL DATE

REGISTERED PROFESSIONAL ENGINEER SEAN M. PLEDGER No. 56328 Exp. 12-31-12 CIVIL STATE OF CALIFORNIA

THE STATE OF CALIFORNIA OR ITS OFFICERS OR AGENTS SHALL NOT BE RESPONSIBLE FOR THE ACCURACY OR COMPLETENESS OF SCANNED COPIES OF THIS PLAN SHEET.

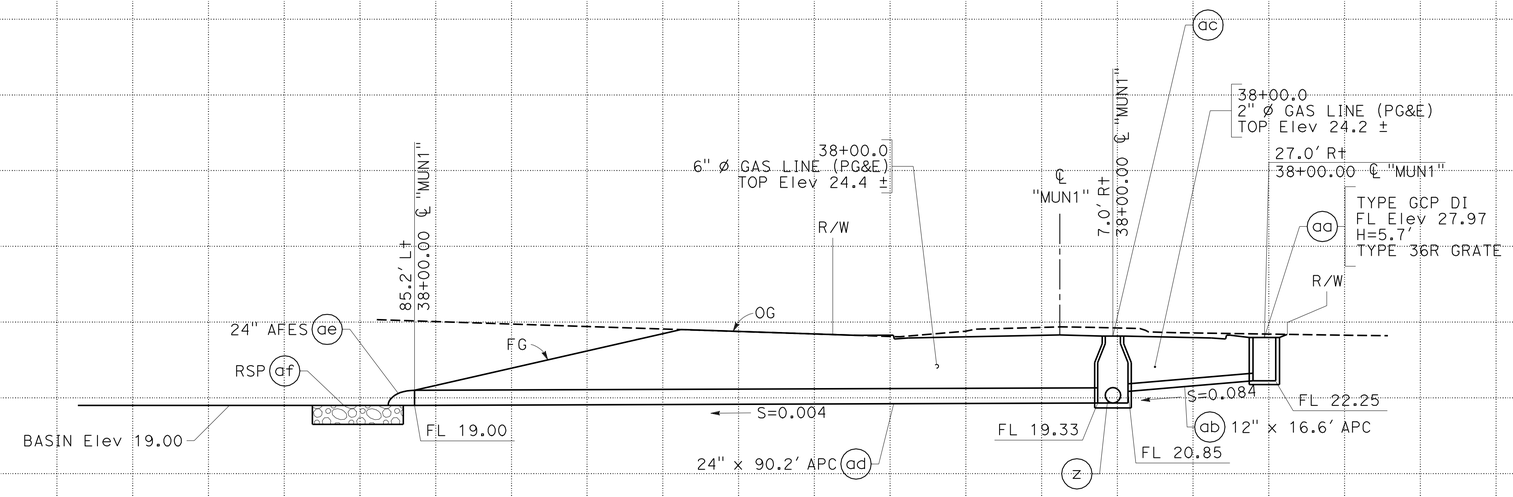

DRAINAGE SYSTEM No. 147

"MUN1" Sta 38+00.00

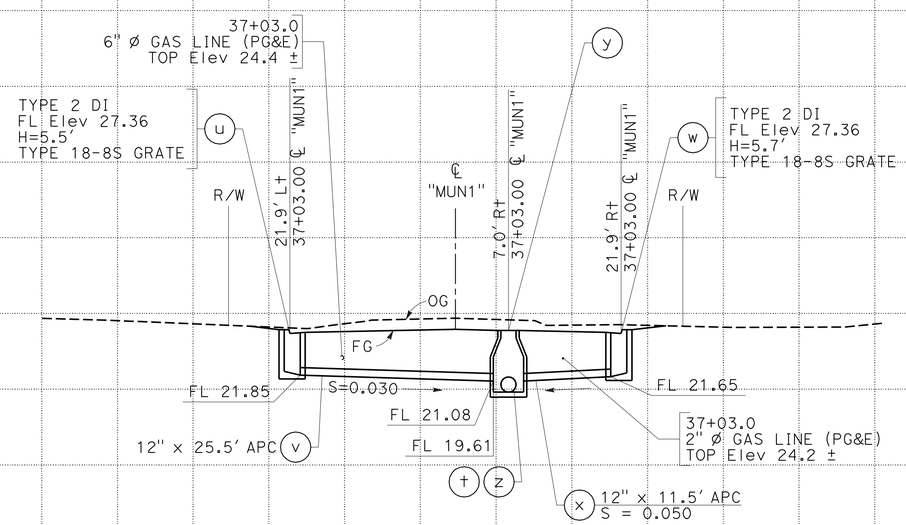

DRAINAGE SYSTEM No. 147

"MUN1" Sta 37+03.00

DRAINAGE PROFILES

SCALE: Horiz 1" = 10'
Vert 1" = 10'

DP-57

REVISED BY | DATE REVISED
JOSE A GONZALEZ | ASHLYN SWAN
CALCULATED-DESIGNED BY | CHECKED BY
FUNCTIONAL SUPERVISOR | MARTIN NISHIKAWA
STATE OF CALIFORNIA - DEPARTMENT OF TRANSPORTATION
Caltrans | 06-DESIGN

LAST REVISION 05-26-11 | DATE PLOTTED => 29-MAR-2012 | TIME PLOTTED => 17:06

Dist	COUNTY	ROUTE	POST MILES TOTAL PROJECT	SHEET No.	TOTAL SHEETS
10	SJ	4,99	R19.5/R20.1, 15.0/18.6	371	1414

Sean Pledger 12-05-11
REGISTERED CIVIL ENGINEER DATE

3-26-12
PLANS APPROVAL DATE

REGISTERED PROFESSIONAL ENGINEER SEAN M. PLEDGER No. 56328 Exp. 12-31-12 CIVIL STATE OF CALIFORNIA

THE STATE OF CALIFORNIA OR ITS OFFICERS OR AGENTS SHALL NOT BE RESPONSIBLE FOR THE ACCURACY OR COMPLETENESS OF SCANNED COPIES OF THIS PLAN SHEET.

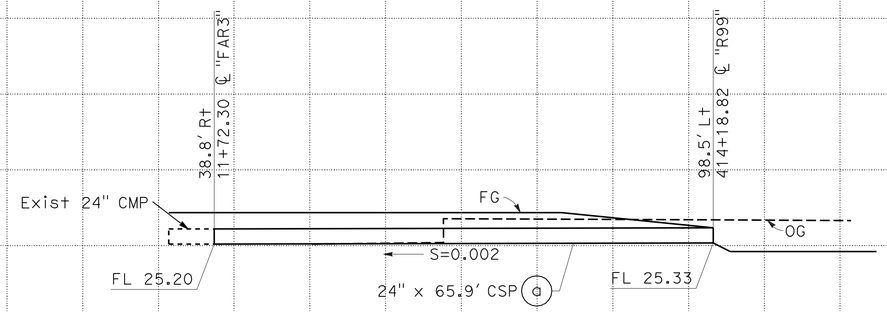

DRAINAGE SYSTEM No. 164

"R99" Sta 414+18.82

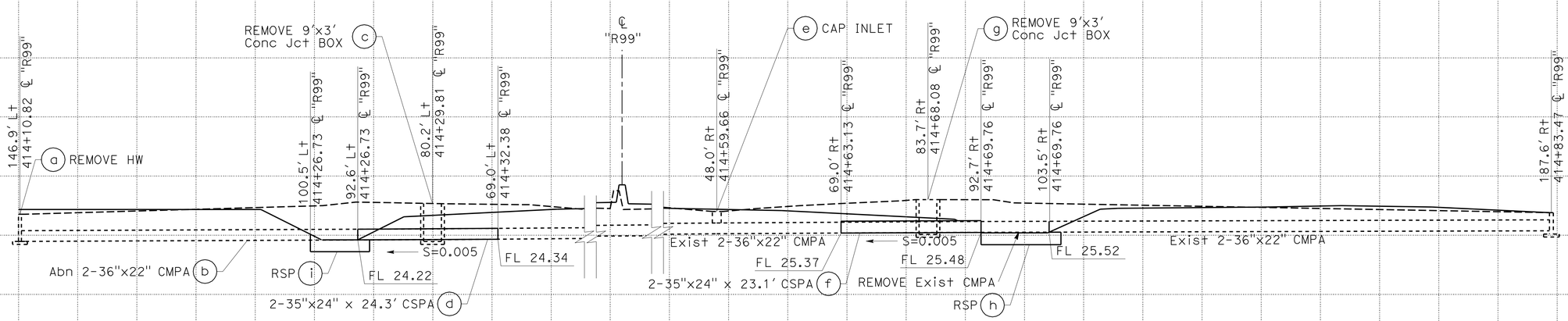

DRAINAGE SYSTEM No. 163

"R99" Sta 414+48.47

DRAINAGE PROFILES

SCALE: Horiz 1"=10'
Vert 1"=10'

DP-58

REVISED BY | DATE REVISED
JOSE A GONZALEZ | ASHLYN SWAN
CALCULATED-DESIGNED BY | CHECKED BY
FUNCTIONAL SUPERVISOR: MARTIN NISHIKAWA
STATE OF CALIFORNIA - DEPARTMENT OF TRANSPORTATION
06-DESIGN
Caltrans

LAST REVISION 05-26-11 | DATE PLOTTED => 29-MAR-2012 | TIME PLOTTED => 17:06

Dist	COUNTY	ROUTE	POST MILES TOTAL PROJECT	SHEET No.	TOTAL SHEETS
10	SJ	4,99	R19.5/R20.1, 15.0/18.6	372	1414

Sean Pledger 12-05-11
REGISTERED CIVIL ENGINEER DATE

3-26-12
PLANS APPROVAL DATE

REGISTERED PROFESSIONAL ENGINEER SEAN M. PLEDGER No. 56328 Exp. 12-31-12 CIVIL STATE OF CALIFORNIA

THE STATE OF CALIFORNIA OR ITS OFFICERS OR AGENTS SHALL NOT BE RESPONSIBLE FOR THE ACCURACY OR COMPLETENESS OF SCANNED COPIES OF THIS PLAN SHEET.

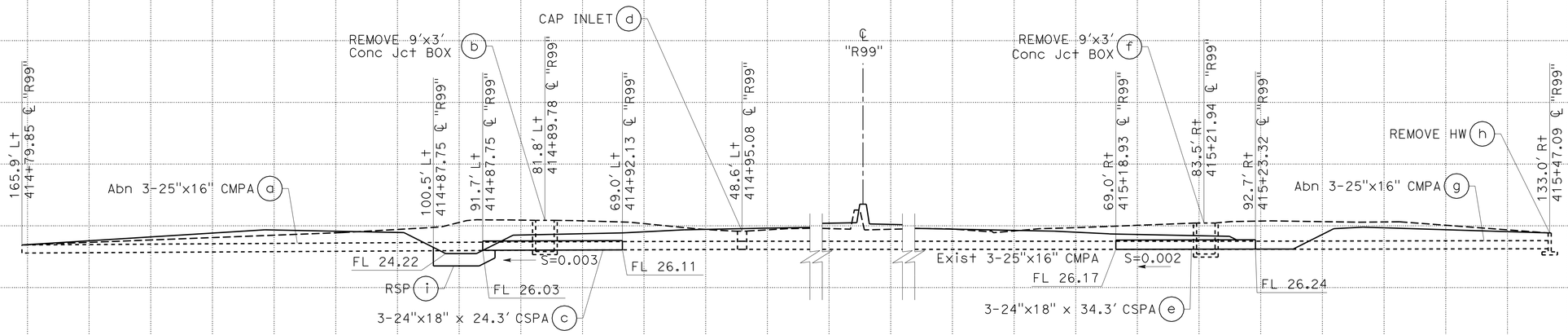

DRAINAGE SYSTEM No. 166

"R99" Sta 415+05.53

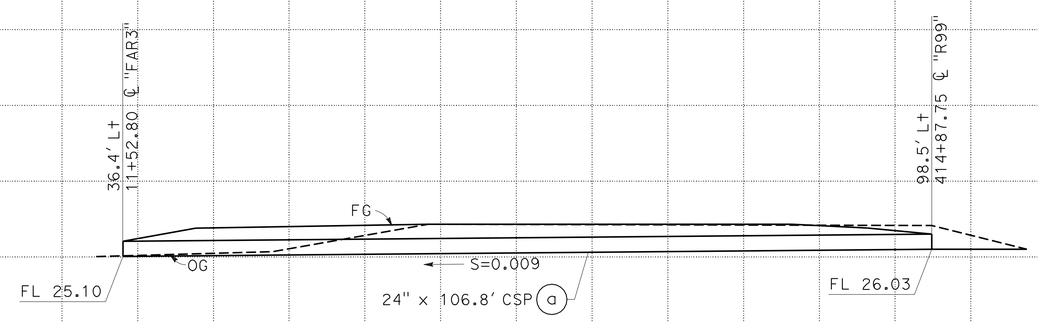

DRAINAGE SYSTEM No. 165

"R99" Sta 414+87.75

DRAINAGE PROFILES

SCALE: Horiz 1"=10'
Vert 1"=10'

DP-59

STATE OF CALIFORNIA - DEPARTMENT OF TRANSPORTATION
Caltrans
06-DESIGN
FUNCTIONAL SUPERVISOR: MARTIN NISHIKAWA
CALCULATED-DESIGNED BY: JOSE A GONZALEZ
CHECKED BY: ASHLYN SWAN
REVISED BY
DATE REVISED

LAST REVISION 05-26-11
DATE PLOTTED => 29-MAR-2012
TIME PLOTTED => 17:06

Dist	COUNTY	ROUTE	POST MILES TOTAL PROJECT	SHEET No.	TOTAL SHEETS
10	SJ	4,99	R19.5/R20.1, 15.0/18.6	373	1414

Sean Pledger 12-05-11
REGISTERED CIVIL ENGINEER DATE

3-26-12
PLANS APPROVAL DATE

REGISTERED PROFESSIONAL ENGINEER SEAN M. PLEDGER No. 56328 Exp. 12-31-12 CIVIL STATE OF CALIFORNIA

THE STATE OF CALIFORNIA OR ITS OFFICERS OR AGENTS SHALL NOT BE RESPONSIBLE FOR THE ACCURACY OR COMPLETENESS OF SCANNED COPIES OF THIS PLAN SHEET.

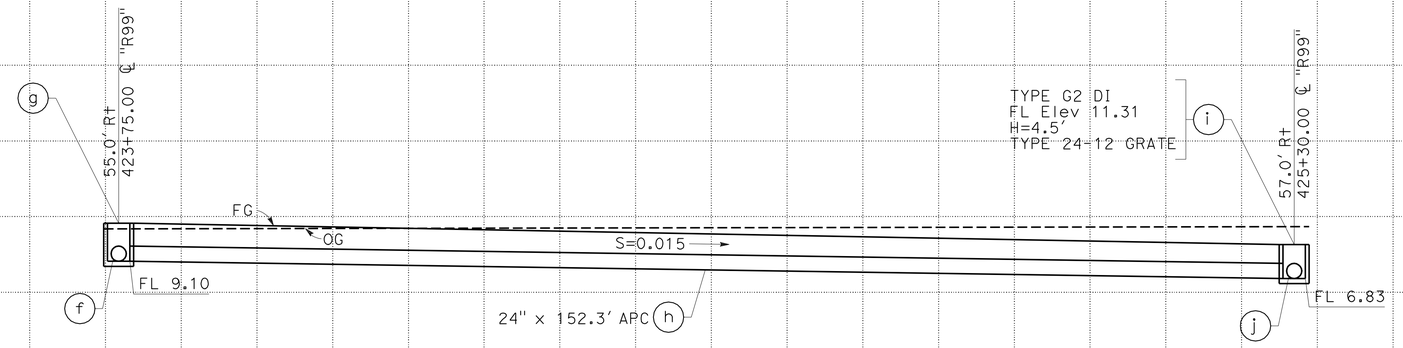

DRAINAGE SYSTEM No. 168
"R99" Sta 423+75.00

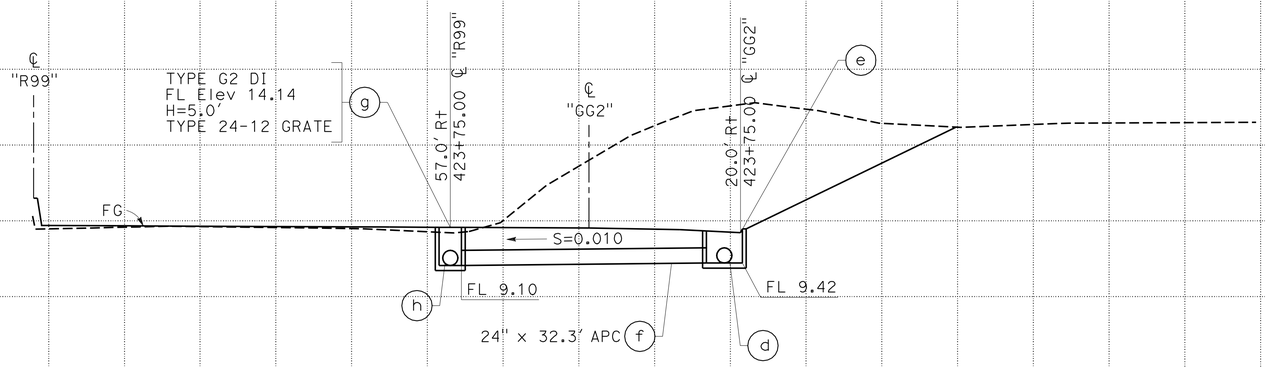

DRAINAGE SYSTEM No. 168
"R99" Sta 423+75.00

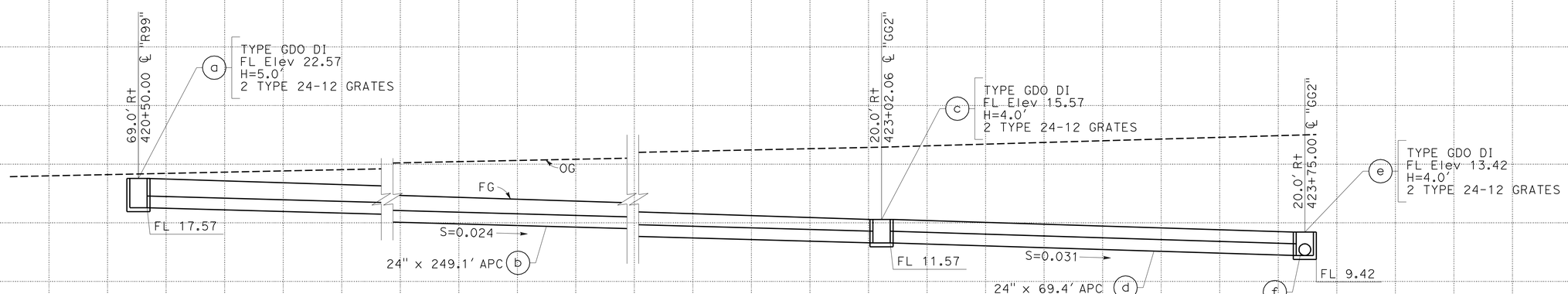

DRAINAGE SYSTEM No. 168
"R99" Sta 420+50.00

DRAINAGE PROFILES

SCALE: Horiz 1" = 10'
Vert 1" = 10'

DP-60

STATE OF CALIFORNIA - DEPARTMENT OF TRANSPORTATION
Caltrans
06-DESIGN
FUNCTIONAL SUPERVISOR: MARTIN NISHIKAWA
CALCULATED-DESIGNED BY: JOSE A GONZALEZ
CHECKED BY: ASHLYN SWAN
REVISED BY / DATE REVISED

LAST REVISION 05-26-11
DATE PLOTTED => 29-MAR-2012
TIME PLOTTED => 17:06

Dist	COUNTY	ROUTE	POST MILES TOTAL PROJECT	SHEET No.	TOTAL SHEETS
10	SJ	4,99	R19.5/R20.1, 15.0/18.6	374	1414

Sean Pledger 12-05-11
REGISTERED CIVIL ENGINEER DATE

3-26-12
PLANS APPROVAL DATE

REGISTERED PROFESSIONAL ENGINEER SEAN M. PLEDGER No. 56328 Exp. 12-31-12 CIVIL STATE OF CALIFORNIA

THE STATE OF CALIFORNIA OR ITS OFFICERS OR AGENTS SHALL NOT BE RESPONSIBLE FOR THE ACCURACY OR COMPLETENESS OF SCANNED COPIES OF THIS PLAN SHEET.

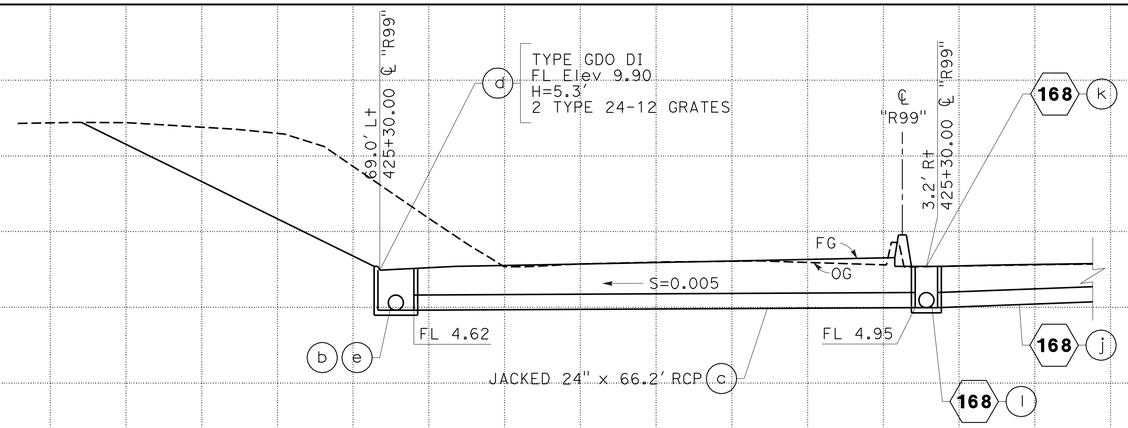

DRAINAGE SYSTEM No. 169

"R99" Sta 425+30.00

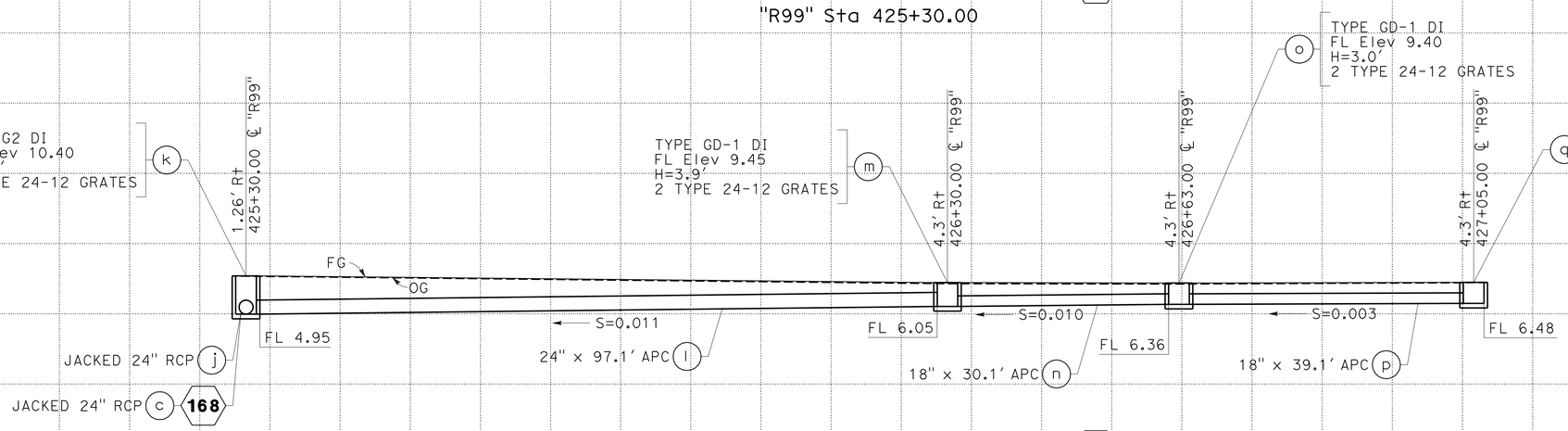

DRAINAGE SYSTEM No. 168

"R99" Sta 425+30.00

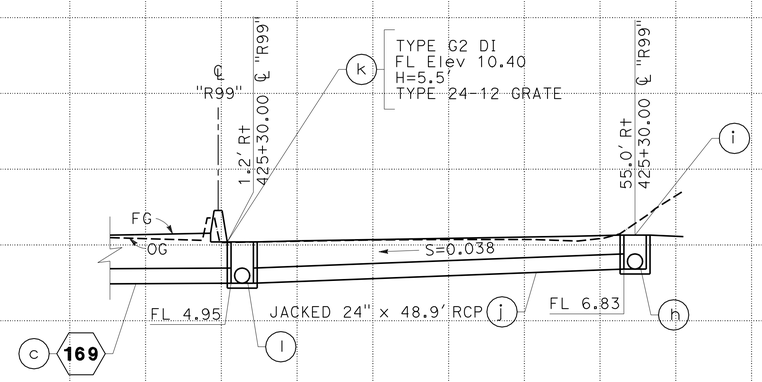

DRAINAGE SYSTEM No. 168

"R99" Sta 425+30.00

DRAINAGE PROFILES

SCALE: Horiz 1"=10'
Vert 1"=10'

DP-61

REVISED BY | DATE REVISED
JOSE A GONZALEZ | ASHLYN SWAN
CALCULATED-DESIGNED BY | CHECKED BY
FUNCTIONAL SUPERVISOR: MARTIN NISHIKAWA
STATE OF CALIFORNIA - DEPARTMENT OF TRANSPORTATION
Caltrans 06-DESIGN

LAST REVISION 05-26-11 | DATE PLOTTED => 29-MAR-2012 | TIME PLOTTED => 17:06

Dist	COUNTY	ROUTE	POST MILES TOTAL PROJECT	SHEET No.	TOTAL SHEETS
10	SJ	4,99	R19.5/R20.1, 15.0/18.6	375	1414

REGISTERED CIVIL ENGINEER 12-05-11 DATE

3-26-12
PLANS APPROVAL DATE

REGISTERED PROFESSIONAL ENGINEER SEAN M. PLEDGER No. 56328 Exp. 12-31-12 CIVIL STATE OF CALIFORNIA

THE STATE OF CALIFORNIA OR ITS OFFICERS OR AGENTS SHALL NOT BE RESPONSIBLE FOR THE ACCURACY OR COMPLETENESS OF SCANNED COPIES OF THIS PLAN SHEET.

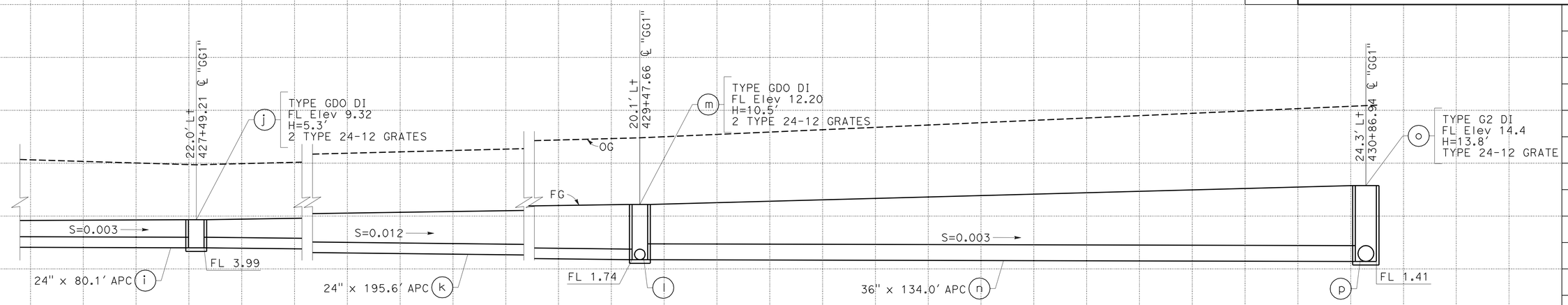

DRAINAGE SYSTEM No. 169

"R99" Sta 422+50.00

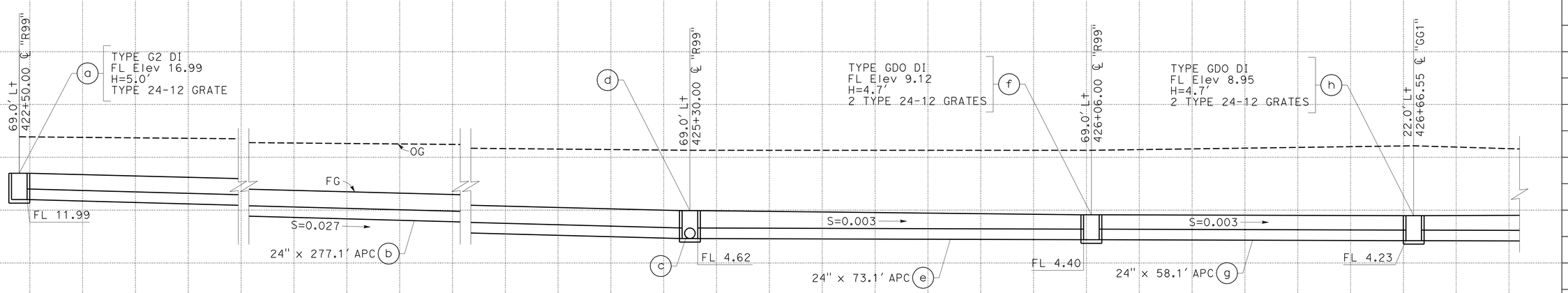

DRAINAGE SYSTEM No. 169

"R99" Sta 422+50.00

DRAINAGE PROFILES

SCALE: Horiz 1" = 10'
Vert 1" = 10'

DP-62

REVISED BY | DATE REVISED
JOSE A GONZALEZ | ASHLYN SWAN
CALCULATED-DESIGNED BY | CHECKED BY
FUNCTIONAL SUPERVISOR | MARTIN NISHIKAWA

STATE OF CALIFORNIA - DEPARTMENT OF TRANSPORTATION
Caltrans
06-DESIGN

LAST REVISION 05-26-11
DATE PLOTTED => 29-MAR-2012
TIME PLOTTED => 17:06

Dist	COUNTY	ROUTE	POST MILES TOTAL PROJECT	SHEET No.	TOTAL SHEETS
10	SJ	4,99	R19.5/R20.1, 15.0/18.6	376	1414

REGISTERED CIVIL ENGINEER 12-05-11 DATE

3-26-12
PLANS APPROVAL DATE

REGISTERED PROFESSIONAL ENGINEER SEAN M. PLEDGER No. 56328 Exp. 12-31-12 CIVIL STATE OF CALIFORNIA

THE STATE OF CALIFORNIA OR ITS OFFICERS OR AGENTS SHALL NOT BE RESPONSIBLE FOR THE ACCURACY OR COMPLETENESS OF SCANNED COPIES OF THIS PLAN SHEET.

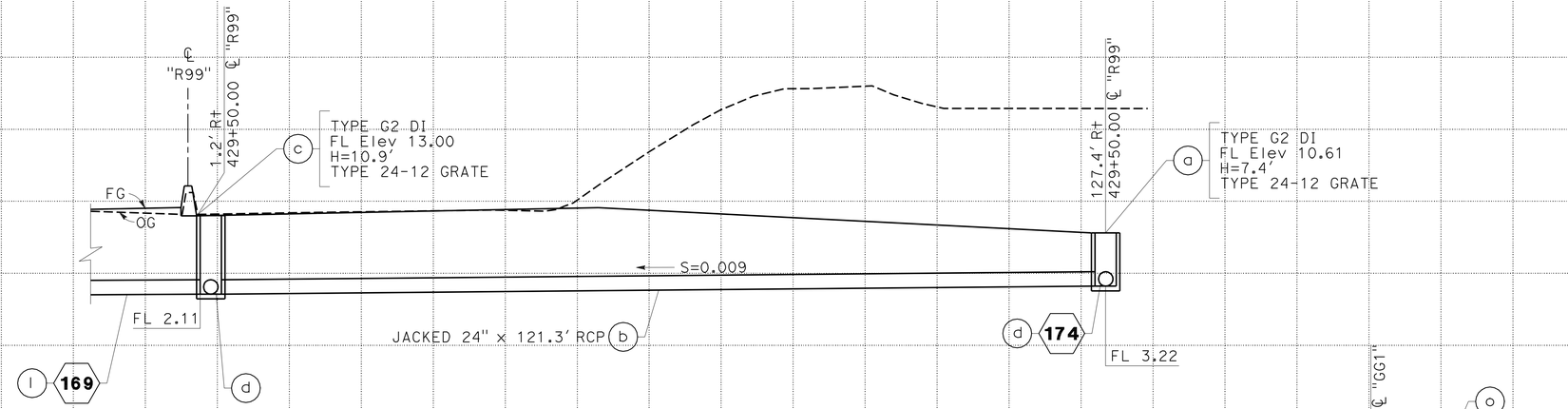

DRAINAGE SYSTEM No. 170
"R99" Sta 429+50.00

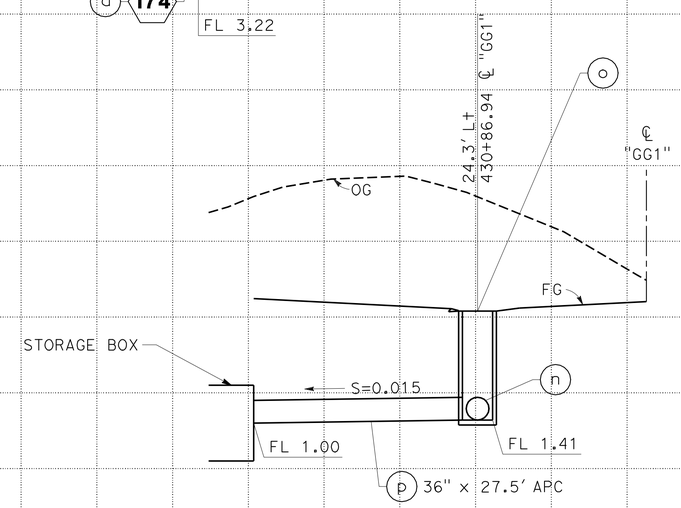

DRAINAGE SYSTEM No. 169
"R99" Sta 430+86.94

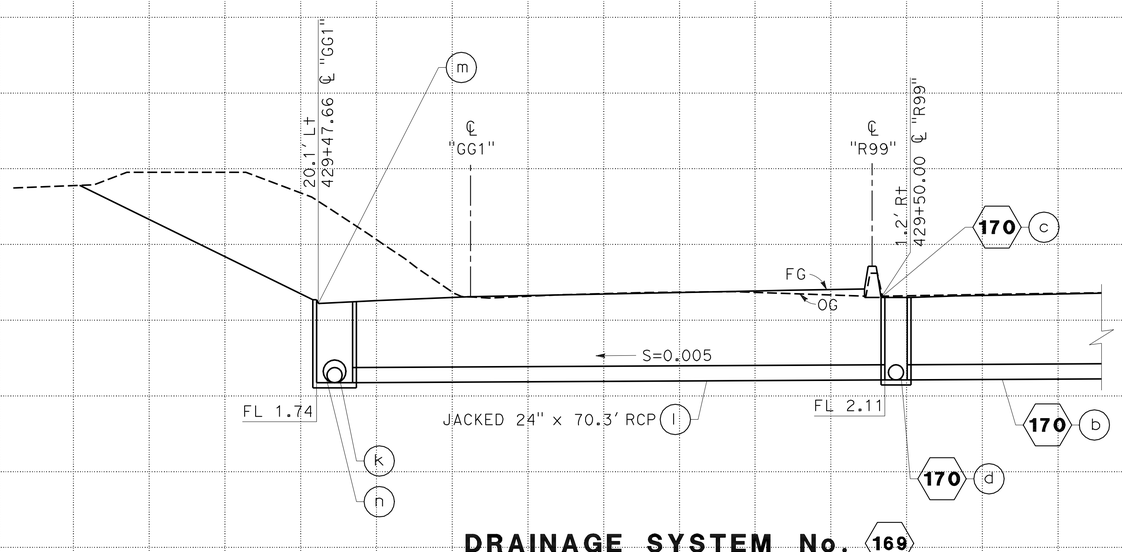

DRAINAGE SYSTEM No. 169
"R99" Sta 429+50.00

DRAINAGE PROFILES

SCALE: Horiz 1" = 10'
Vert 1" = 10'

DP-63

STATE OF CALIFORNIA - DEPARTMENT OF TRANSPORTATION
Caltrans
06-DESIGN

FUNCTIONAL SUPERVISOR: MARTIN NISHIKAWA
CALCULATED-DESIGNED BY: JOSE A GONZALEZ
CHECKED BY: ASHLYN SWAN
REVISED BY / DATE REVISED

LAST REVISION 05-26-11
DATE PLOTTED => 29-MAR-2012
TIME PLOTTED => 17:07

Dist	COUNTY	ROUTE	POST MILES TOTAL PROJECT	SHEET No.	TOTAL SHEETS
10	SJ	4,99	R19.5/R20.1, 15.0/18.6	377	1414

Sean Pledger 12-05-11
REGISTERED CIVIL ENGINEER DATE

3-26-12
PLANS APPROVAL DATE

REGISTERED PROFESSIONAL ENGINEER SEAN M. PLEDGER No. 56328 Exp. 12-31-12 CIVIL STATE OF CALIFORNIA

THE STATE OF CALIFORNIA OR ITS OFFICERS OR AGENTS SHALL NOT BE RESPONSIBLE FOR THE ACCURACY OR COMPLETENESS OF SCANNED COPIES OF THIS PLAN SHEET.

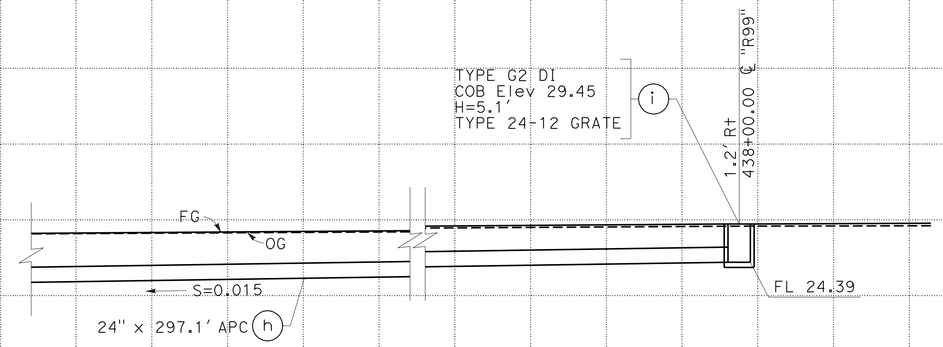

DRAINAGE SYSTEM No. 170
"R99" Sta 429+50.00

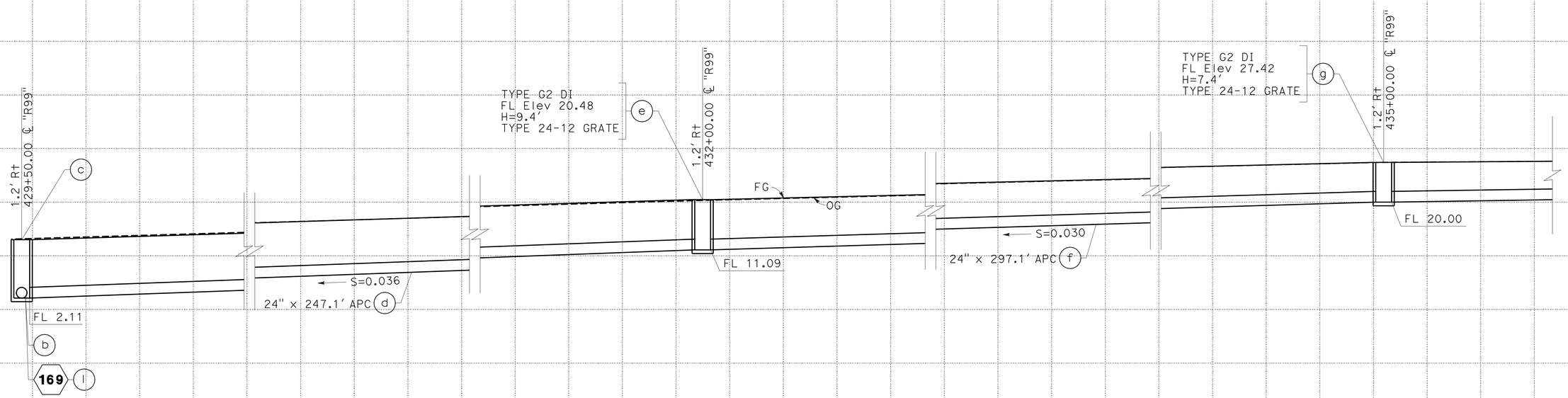

DRAINAGE SYSTEM No. 170
"R99" Sta 426+50.00

DRAINAGE PROFILES

SCALE: Horiz 1" = 10'
Vert 1" = 10'

DP-64

STATE OF CALIFORNIA - DEPARTMENT OF TRANSPORTATION
Caltrans
06-DESIGN

FUNCTIONAL SUPERVISOR: MARTIN NISHIKAWA
CALCULATED-DESIGNED BY: JOSE A GONZALEZ
CHECKED BY: ASHLYN SWAN
REVISED BY
DATE REVISED

LAST REVISION 05-26-11
DATE PLOTTED => 29-MAR-2012
TIME PLOTTED => 17:07

Dist	COUNTY	ROUTE	POST MILES TOTAL PROJECT	SHEET No.	TOTAL SHEETS
10	SJ	4,99	R19.5/R20.1, 15.0/18.6	378	1414

REGISTERED CIVIL ENGINEER 12-05-11 DATE

3-26-12
PLANS APPROVAL DATE

REGISTERED PROFESSIONAL ENGINEER SEAN M. PLEDGER No. 56328 Exp. 12-31-12 CIVIL STATE OF CALIFORNIA

THE STATE OF CALIFORNIA OR ITS OFFICERS OR AGENTS SHALL NOT BE RESPONSIBLE FOR THE ACCURACY OR COMPLETENESS OF SCANNED COPIES OF THIS PLAN SHEET.

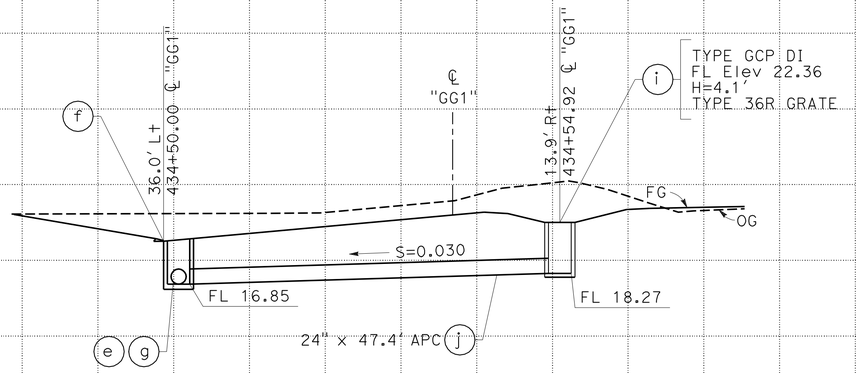

DRAINAGE SYSTEM No. 173

"GG1" Sta 434+50.00

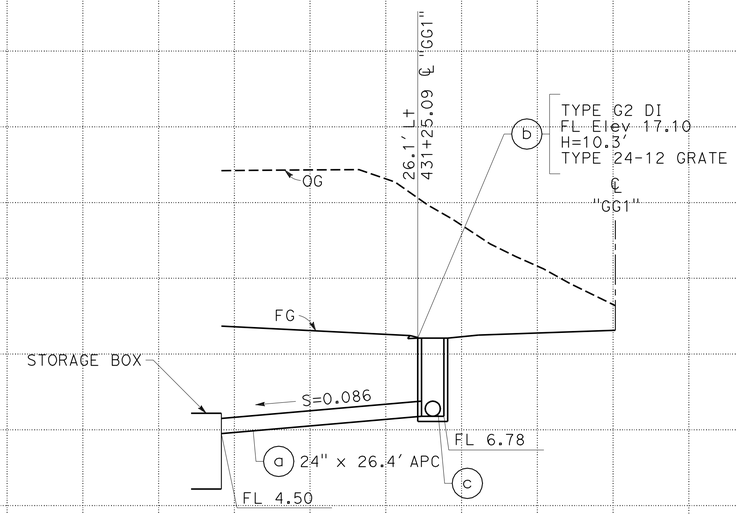

DRAINAGE SYSTEM No. 173

"GG1" Sta 431+23.14

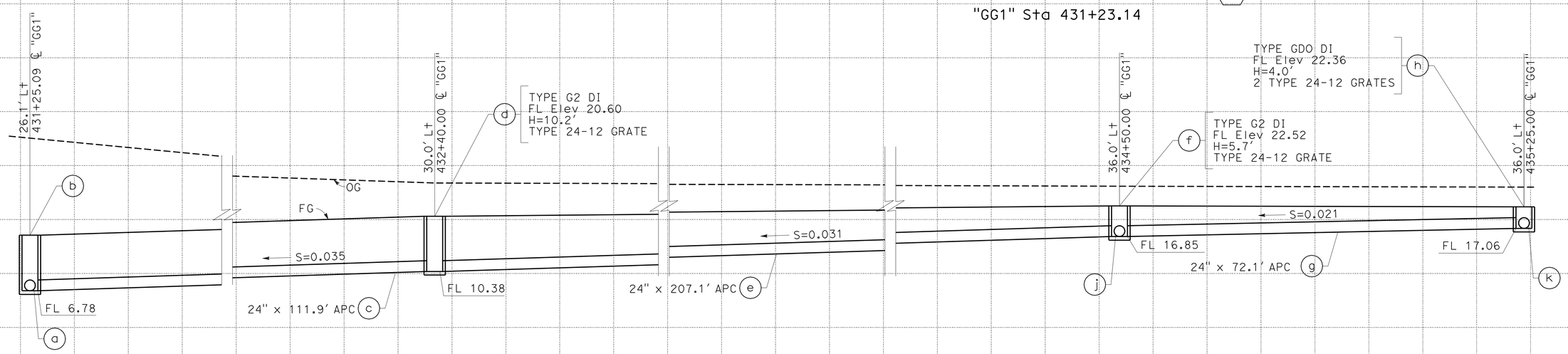

DRAINAGE SYSTEM No. 173

"GG1" Sta 431+23.14

DRAINAGE PROFILES

SCALE: Horiz 1" = 10'
Vert 1" = 10'

DP-65

STATE OF CALIFORNIA - DEPARTMENT OF TRANSPORTATION
06-DESIGN
Caltrans

FUNCTIONAL SUPERVISOR: MARTIN NISHIKAWA
CALCULATED-DESIGNED BY: JOSE A GONZALEZ
CHECKED BY: ASHLYN SWAN
REVISED BY
DATE REVISED

LAST REVISION 05-26-11
DATE PLOTTED => 29-MAR-2012
TIME PLOTTED => 17:07

Dist	COUNTY	ROUTE	POST MILES TOTAL PROJECT	SHEET No.	TOTAL SHEETS
10	SJ	4,99	R19.5/R20.1, 15.0/18.6	379	1414

Sean Pledger 12-05-11
REGISTERED CIVIL ENGINEER DATE

3-26-12
PLANS APPROVAL DATE

REGISTERED PROFESSIONAL ENGINEER SEAN M. PLEDGER No. 56328 Exp. 12-31-12 CIVIL STATE OF CALIFORNIA

THE STATE OF CALIFORNIA OR ITS OFFICERS OR AGENTS SHALL NOT BE RESPONSIBLE FOR THE ACCURACY OR COMPLETENESS OF SCANNED COPIES OF THIS PLAN SHEET.

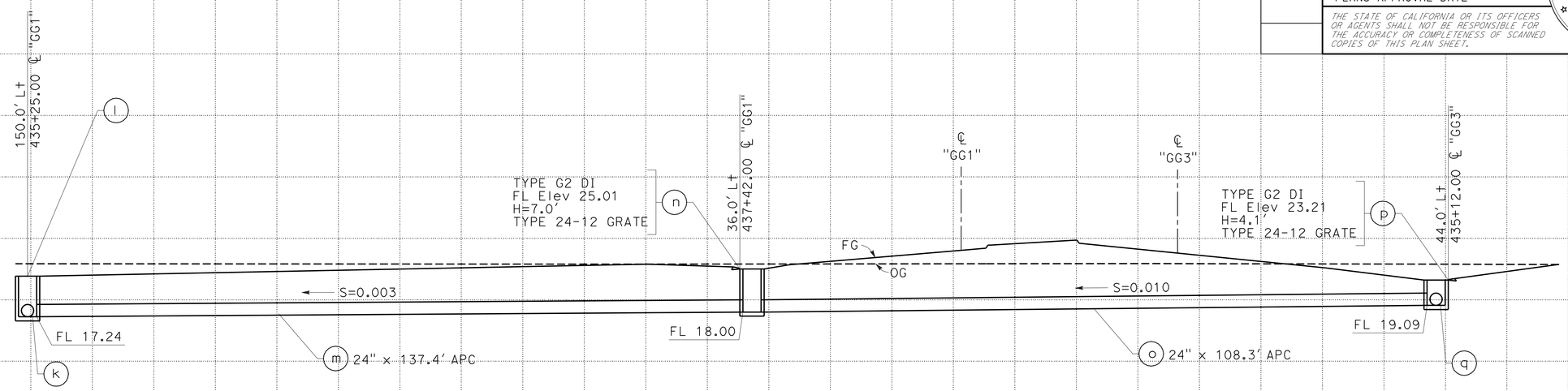

DRAINAGE SYSTEM No. 173

"GG1" Sta 437+42.00

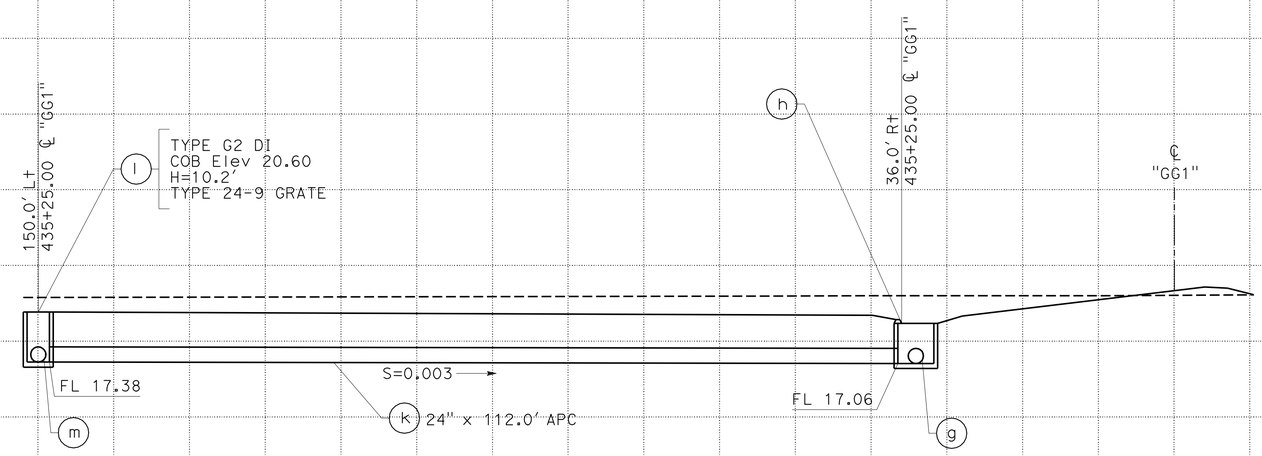

DRAINAGE SYSTEM No. 173

"GG1" Sta 435+25.00

DRAINAGE PROFILES

SCALE: Horiz 1" = 10'
Vert 1" = 10'

DP-66

REVISED BY	DATE REVISED

JOSE A GONZALEZ — ASHLYN SWAN — CALCULATED-DESIGNED BY — CHECKED BY

FUNCTIONAL SUPERVISOR: MARTIN NISHIKAWA

STATE OF CALIFORNIA - DEPARTMENT OF TRANSPORTATION — 06-DESIGN — Caltrans

LAST REVISION 05-26-11 — DATE PLOTTED => 29-MAR-2012 — TIME PLOTTED => 17:07

Dist	COUNTY	ROUTE	POST MILES TOTAL PROJECT	SHEET No.	TOTAL SHEETS
10	SJ	4,99	R19.5/R20.1, 15.0/18.6	380	1414

Sean Pledger 12-05-11
REGISTERED CIVIL ENGINEER DATE

3-26-12
PLANS APPROVAL DATE

REGISTERED PROFESSIONAL ENGINEER SEAN M. PLEDGER No. 56328 Exp. 12-31-12 CIVIL STATE OF CALIFORNIA

THE STATE OF CALIFORNIA OR ITS OFFICERS OR AGENTS SHALL NOT BE RESPONSIBLE FOR THE ACCURACY OR COMPLETENESS OF SCANNED COPIES OF THIS PLAN SHEET.

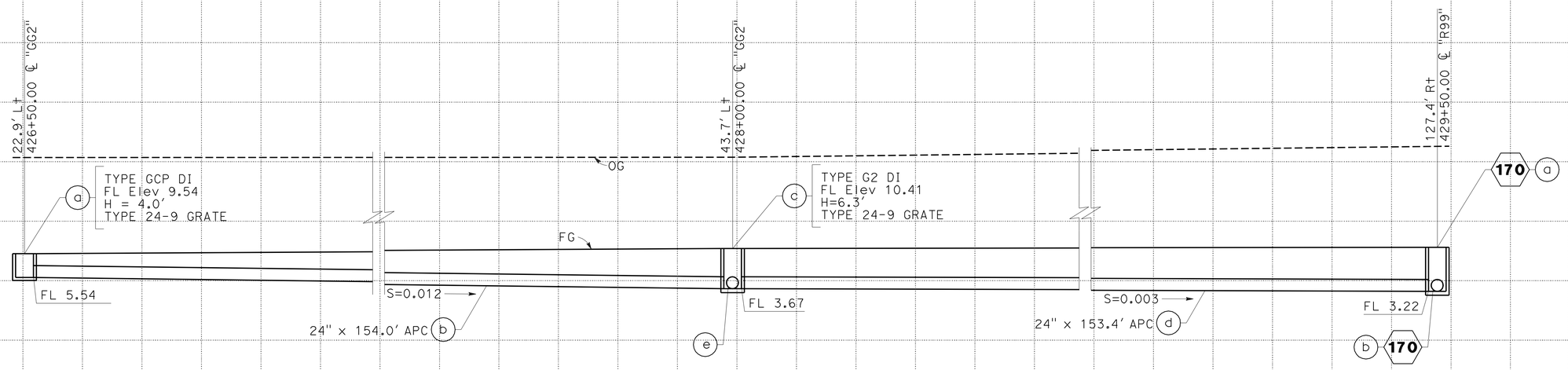

DRAINAGE SYSTEM No. 174

"GG2" Sta 435+12.00

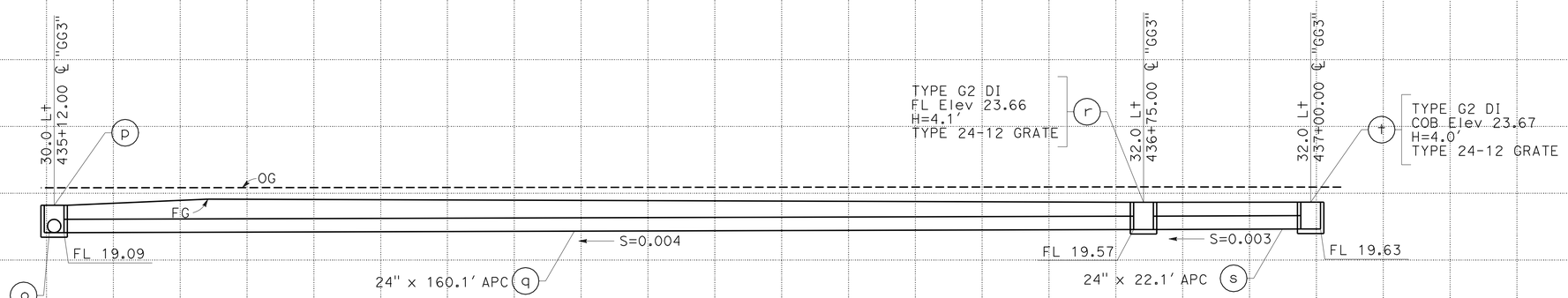

DRAINAGE SYSTEM No. 173

"GG3" Sta 435+12.00

DRAINAGE PROFILES

SCALE: Horiz 1" = 10'
Vert 1" = 10'

DP-67

STATE OF CALIFORNIA - DEPARTMENT OF TRANSPORTATION
Caltrans
06-DESIGN

FUNCTIONAL SUPERVISOR: MARTIN NISHIKAWA
CALCULATED-DESIGNED BY: JOSE A GONZALEZ
CHECKED BY: ASHLYN SWAN
REVISED BY / DATE REVISED

LAST REVISION 05-26-11
DATE PLOTTED => 29-MAR-2012
TIME PLOTTED => 17:07

Dist	COUNTY	ROUTE	POST MILES TOTAL PROJECT	SHEET No.	TOTAL SHEETS
10	SJ	4,99	R19.5/R20.1, 15.0/18.6	381	1414

REGISTERED CIVIL ENGINEER 12-05-11 DATE

3-26-12
PLANS APPROVAL DATE

REGISTERED PROFESSIONAL ENGINEER SEAN M. PLEDGER No. 56328 Exp. 12-31-12 CIVIL STATE OF CALIFORNIA

THE STATE OF CALIFORNIA OR ITS OFFICERS OR AGENTS SHALL NOT BE RESPONSIBLE FOR THE ACCURACY OR COMPLETENESS OF SCANNED COPIES OF THIS PLAN SHEET.

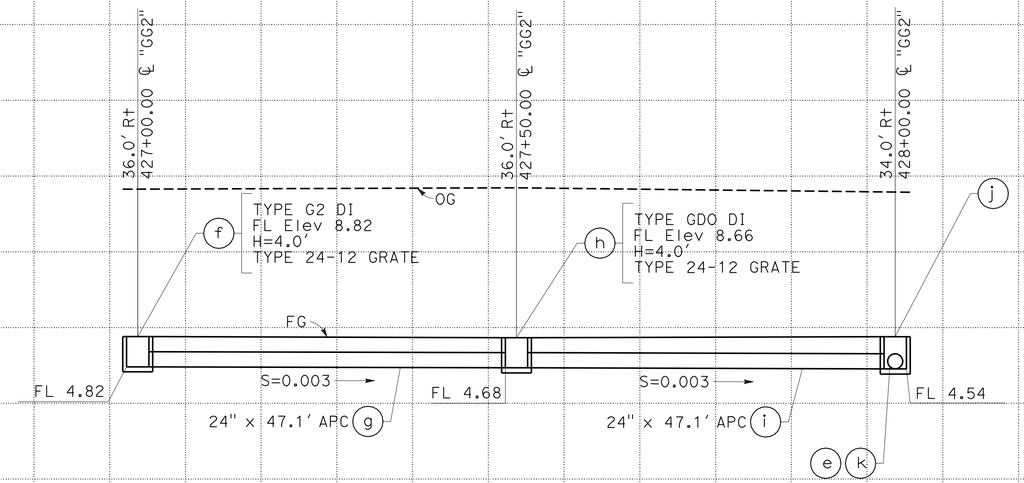

DRAINAGE SYSTEM No. 174

"GG2" Sta 428+00.00

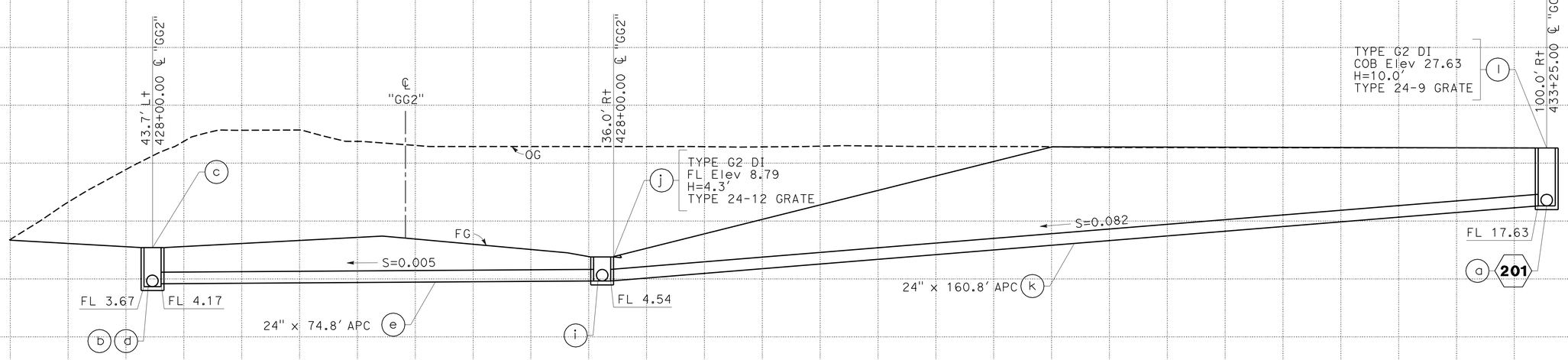

DRAINAGE SYSTEM No. 174

"GG2" Sta 428+00.00

DRAINAGE PROFILES

SCALE: Horiz 1" = 10'
Vert 1" = 10'

DP-68

REVISED BY | DATE REVISED
JOSE A GONZALEZ | ASHLYN SWAN
CALCULATED-DESIGNED BY | CHECKED BY
FUNCTIONAL SUPERVISOR | MARTIN NISHIKAWA
STATE OF CALIFORNIA - DEPARTMENT OF TRANSPORTATION
Caltrans
06-DESIGN

LAST REVISION 05-26-11 | DATE PLOTTED => 29-MAR-2012 | TIME PLOTTED => 17:07

Dist	COUNTY	ROUTE	POST MILES TOTAL PROJECT	SHEET No.	TOTAL SHEETS
10	SJ	4,99	R19.5/R20.1, 15.0/18.6	382	1414

Sean Pledger 12-05-11
REGISTERED CIVIL ENGINEER DATE

3-26-12
PLANS APPROVAL DATE

REGISTERED PROFESSIONAL ENGINEER SEAN M. PLEDGER No. 56328 Exp. 12-31-12 CIVIL STATE OF CALIFORNIA

THE STATE OF CALIFORNIA OR ITS OFFICERS OR AGENTS SHALL NOT BE RESPONSIBLE FOR THE ACCURACY OR COMPLETENESS OF SCANNED COPIES OF THIS PLAN SHEET.

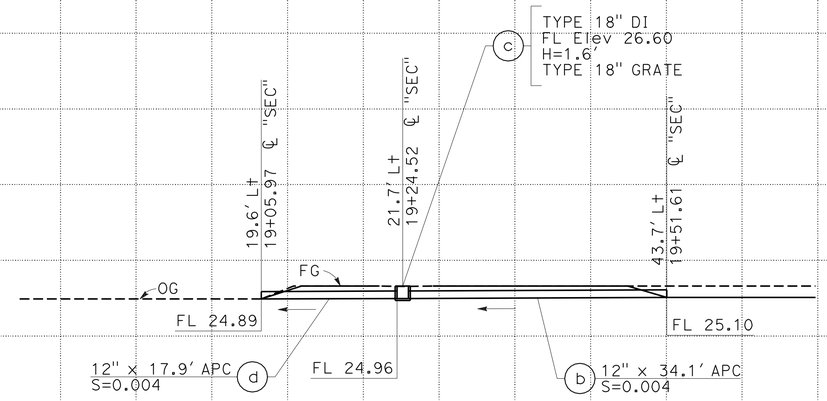

DRAINAGE SYSTEM No. 181

"SEC" Sta 19+24.52

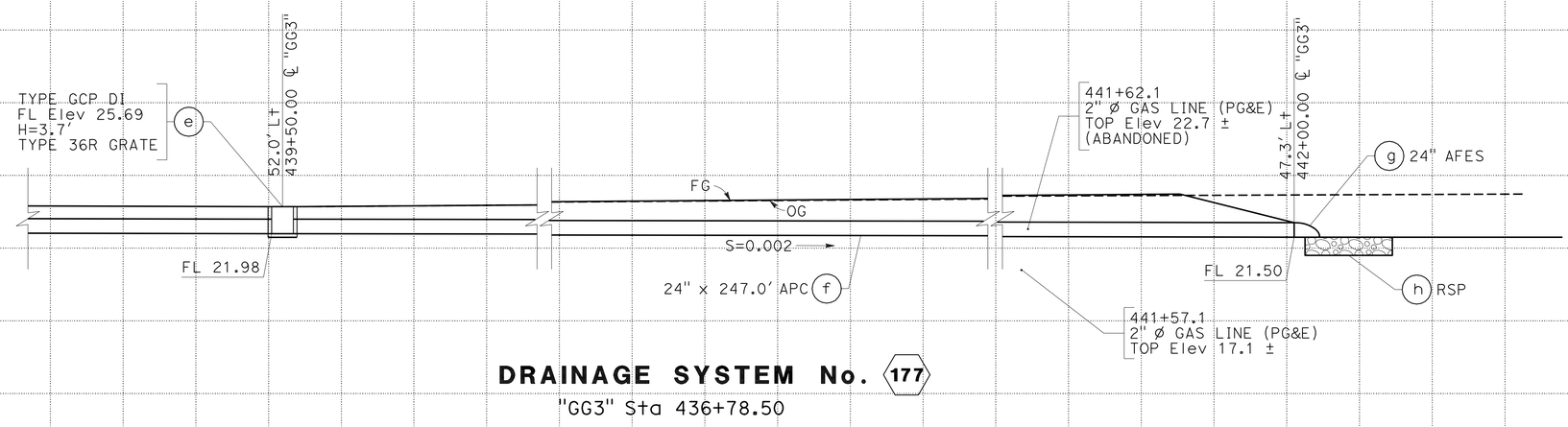

DRAINAGE SYSTEM No. 177

"GG3" Sta 436+78.50

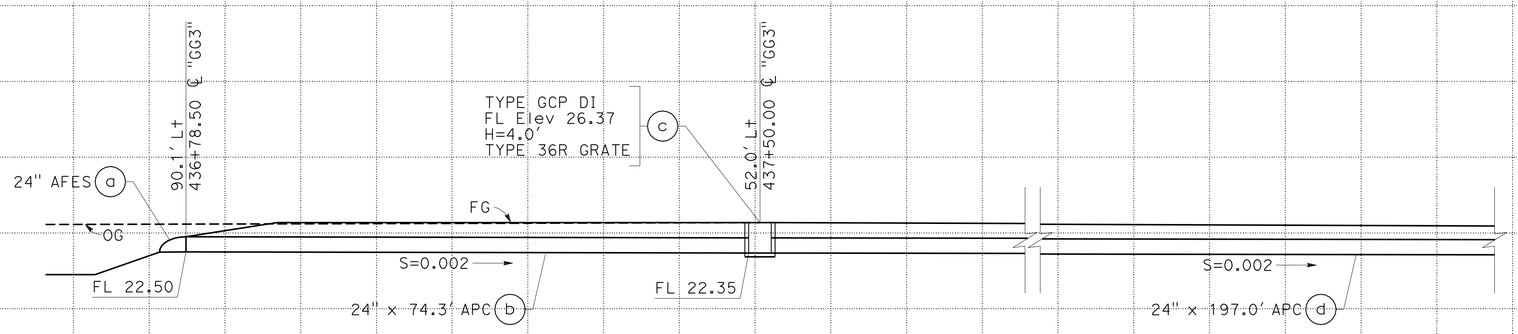

DRAINAGE SYSTEM No. 177

"GG3" Sta 436+78.50

DRAINAGE PROFILES

SCALE: Horiz 1" = 10'
Vert 1" = 10'

DP-69

REVISED BY | DATE REVISED
JOSE A GONZALEZ | ASHLYN SWAN
CALCULATED-DESIGNED BY | CHECKED BY
FUNCTIONAL SUPERVISOR | MARTIN NISHIKAWA

STATE OF CALIFORNIA - DEPARTMENT OF TRANSPORTATION
Caltrans
06-DESIGN

LAST REVISION 05-26-11 | DATE PLOTTED => 29-MAR-2012 | TIME PLOTTED => 17:07

Dist	COUNTY	ROUTE	POST MILES TOTAL PROJECT	SHEET No.	TOTAL SHEETS
10	SJ	4,99	R19.5/R20.1, 15.0/18.6	383	1414

Sean Pledger 12-05-11
REGISTERED CIVIL ENGINEER DATE

3-26-12
PLANS APPROVAL DATE

REGISTERED PROFESSIONAL ENGINEER
SEAN M. PLEDGER
No. 56328
Exp. 12-31-12
CIVIL
STATE OF CALIFORNIA

THE STATE OF CALIFORNIA OR ITS OFFICERS OR AGENTS SHALL NOT BE RESPONSIBLE FOR THE ACCURACY OR COMPLETENESS OF SCANNED COPIES OF THIS PLAN SHEET.

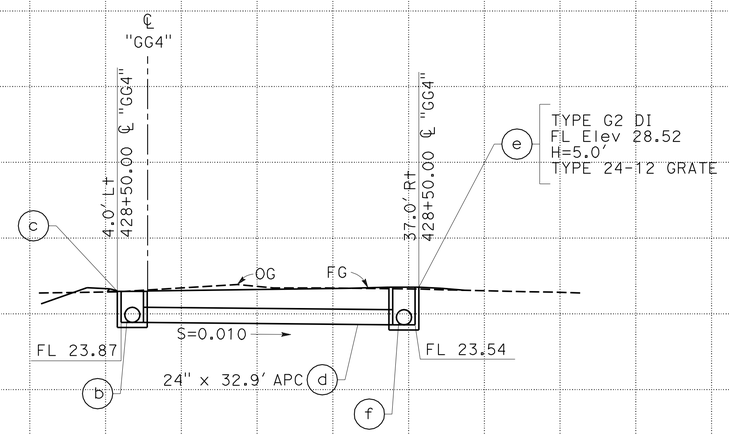

DRAINAGE SYSTEM No. 183

"GG4" Sta 428+50.00

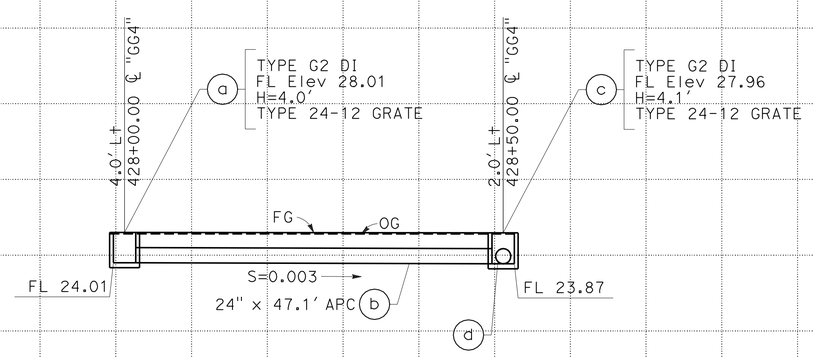

DRAINAGE SYSTEM No. 183

"GG4" Sta 428+50.00

DRAINAGE PROFILES

SCALE: Horiz 1" = 10'
Vert 1" = 10'

DP-70

STATE OF CALIFORNIA - DEPARTMENT OF TRANSPORTATION
Caltrans
06-DESIGN

FUNCTIONAL SUPERVISOR: MARTIN NISHIKAWA
CALCULATED-DESIGNED BY: JOSE A GONZALEZ
CHECKED BY: ASHLYN SWAN
REVISED BY
DATE REVISED

LAST REVISION 05-26-11
DATE PLOTTED => 29-MAR-2012
TIME PLOTTED => 17:07

Dist	COUNTY	ROUTE	POST MILES TOTAL PROJECT	SHEET No.	TOTAL SHEETS
10	SJ	4,99	R19.5/R20.1, 15.0/18.6	384	1414

REGISTERED CIVIL ENGINEER 12-05-11 DATE

3-26-12
PLANS APPROVAL DATE

REGISTERED PROFESSIONAL ENGINEER SEAN M. PLEDGER No. 56328 Exp. 12-31-12 CIVIL STATE OF CALIFORNIA

THE STATE OF CALIFORNIA OR ITS OFFICERS OR AGENTS SHALL NOT BE RESPONSIBLE FOR THE ACCURACY OR COMPLETENESS OF SCANNED COPIES OF THIS PLAN SHEET.

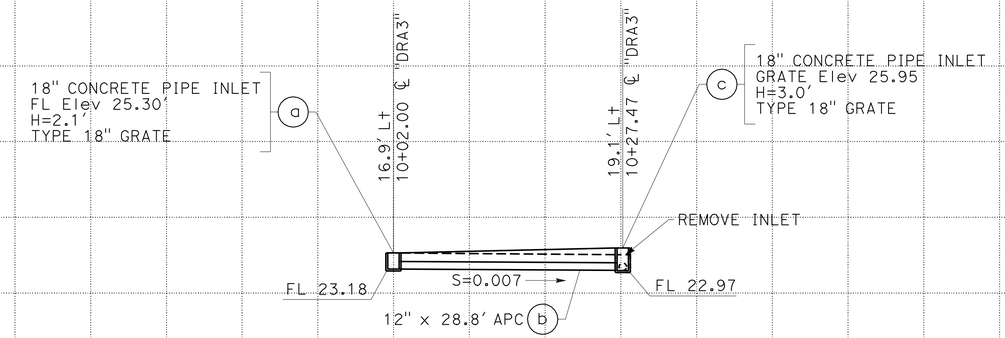

DRAINAGE SYSTEM No. 184

"DRA3" Sta 10+27.47

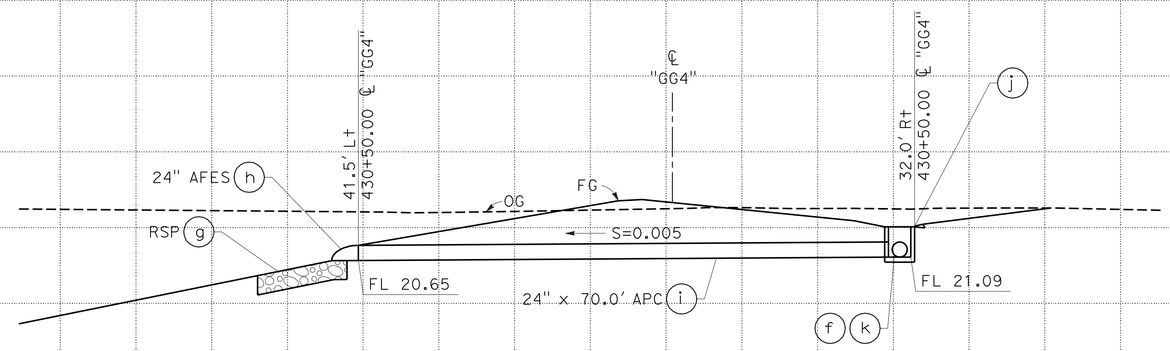

DRAINAGE SYSTEM No. 183

"GG4" Sta 430+50.00

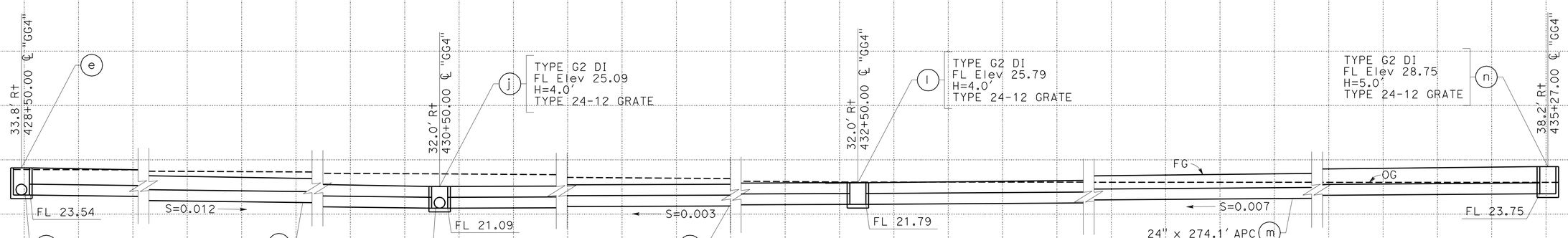

DRAINAGE SYSTEM No. 183

"GG4" Sta 428+50.00

DRAINAGE PROFILES

SCALE: Horiz 1"=10'
Vert 1"=10'

DP-71

STATE OF CALIFORNIA - DEPARTMENT OF TRANSPORTATION
Caltrans
06-DESIGN

FUNCTIONAL SUPERVISOR: MARTIN NISHIKAWA
CALCULATED-DESIGNED BY: JOSE A GONZALEZ
CHECKED BY: ASHLYN SWAN
REVISED BY
DATE REVISED

LAST REVISION 05-26-11 | DATE PLOTTED => 29-MAR-2012 | TIME PLOTTED => 17:07

Dist	COUNTY	ROUTE	POST MILES TOTAL PROJECT	SHEET No.	TOTAL SHEETS
10	SJ	4,99	R19.5/R20.1, 15.0/18.6	385	1414

Sean Pledger 12-05-11
REGISTERED CIVIL ENGINEER DATE

3-26-12
PLANS APPROVAL DATE

REGISTERED PROFESSIONAL ENGINEER SEAN M. PLEDGER No. 56328 Exp. 12-31-12 CIVIL STATE OF CALIFORNIA

THE STATE OF CALIFORNIA OR ITS OFFICERS OR AGENTS SHALL NOT BE RESPONSIBLE FOR THE ACCURACY OR COMPLETENESS OF SCANNED COPIES OF THIS PLAN SHEET.

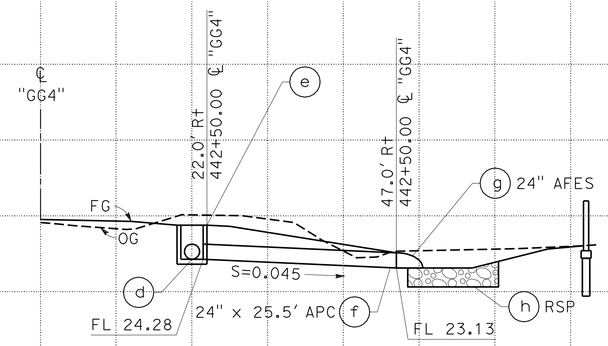

DRAINAGE SYSTEM No. 185

"GG4" Sta 442+50.00

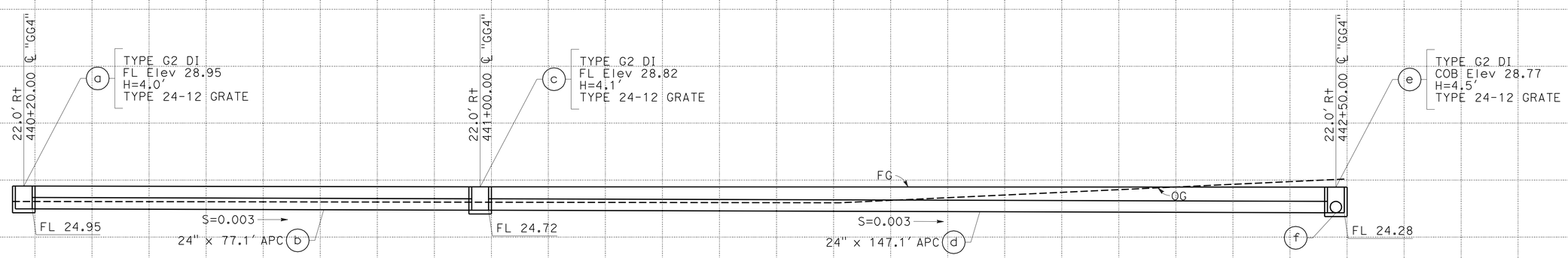

DRAINAGE SYSTEM No. 185

"GG4" Sta 440+20.00

DRAINAGE PROFILES

SCALE: Horiz 1" = 10'
Vert 1" = 10'

DP-72

REVISED BY | DATE REVISED
JOSE A GONZALEZ | ASHLYN SWAN
CALCULATED-DESIGNED BY | CHECKED BY
FUNCTIONAL SUPERVISOR | MARTIN NISHIKAWA

STATE OF CALIFORNIA - DEPARTMENT OF TRANSPORTATION
Caltrans
06-DESIGN

LAST REVISION 05-26-11 | DATE PLOTTED => 29-MAR-2012 | TIME PLOTTED => 17:07

Dist	COUNTY	ROUTE	POST MILES TOTAL PROJECT	SHEET No.	TOTAL SHEETS
10	SJ	4,99	R19.5/R20.1, 15.0/18.6	386	1414

REGISTERED CIVIL ENGINEER 12-05-11 DATE

3-26-12
PLANS APPROVAL DATE

REGISTERED PROFESSIONAL ENGINEER SEAN M. PLEDGER No. 56328 Exp. 12-31-12 CIVIL STATE OF CALIFORNIA

THE STATE OF CALIFORNIA OR ITS OFFICERS OR AGENTS SHALL NOT BE RESPONSIBLE FOR THE ACCURACY OR COMPLETENESS OF SCANNED COPIES OF THIS PLAN SHEET.

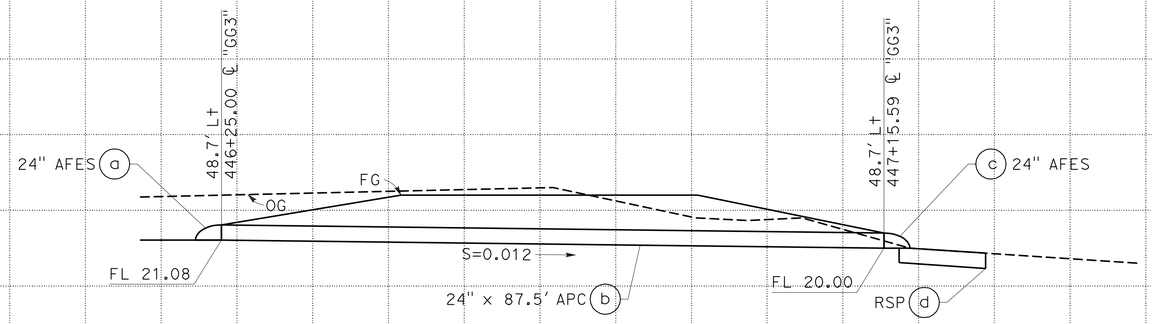

DRAINAGE SYSTEM No. 187

"GG3" Sta 446+25.00

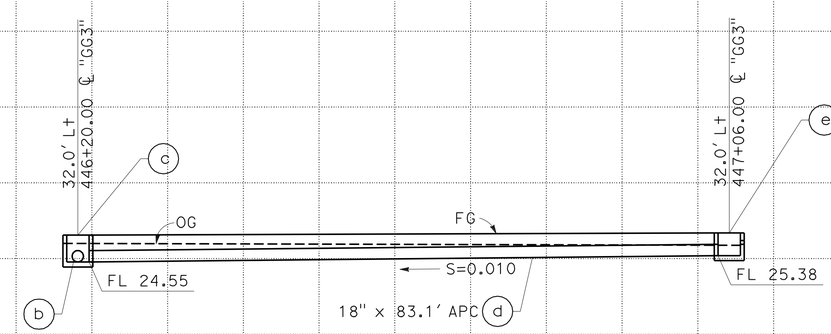

DRAINAGE SYSTEM No. 186

"GG3" Sta 446+20.00

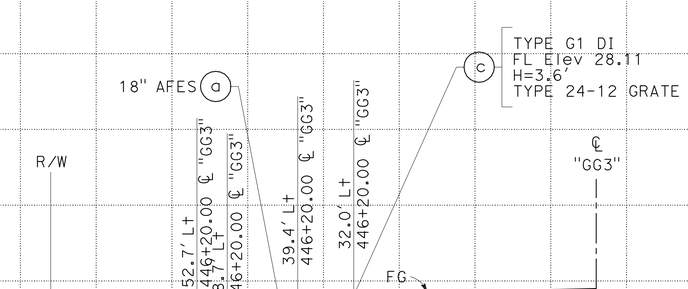

DRAINAGE SYSTEM No. 186

"GG3" Sta 446+20.00

DRAINAGE PROFILES

SCALE: Horiz 1"=10'
Vert 1"=10'

DP-73

STATE OF CALIFORNIA - DEPARTMENT OF TRANSPORTATION
Caltrans
06-DESIGN

FUNCTIONAL SUPERVISOR: MARTIN NISHIKAWA
CALCULATED-DESIGNED BY: JOSE A GONZALEZ
CHECKED BY: ASHLYN SWAN
REVISED BY
DATE REVISED

LAST REVISION 05-26-11
DATE PLOTTED => 29-MAR-2012
TIME PLOTTED => 17:07

Dist	COUNTY	ROUTE	POST MILES TOTAL PROJECT	SHEET No.	TOTAL SHEETS
10	SJ	4,99	R19.5/R20.1, 15.0/18.6	387	1414

REGISTERED CIVIL ENGINEER 12-05-11 DATE

3-26-12
PLANS APPROVAL DATE

REGISTERED PROFESSIONAL ENGINEER SEAN M. PLEDGER No. 56328 Exp. 12-31-12 CIVIL STATE OF CALIFORNIA

THE STATE OF CALIFORNIA OR ITS OFFICERS OR AGENTS SHALL NOT BE RESPONSIBLE FOR THE ACCURACY OR COMPLETENESS OF SCANNED COPIES OF THIS PLAN SHEET.

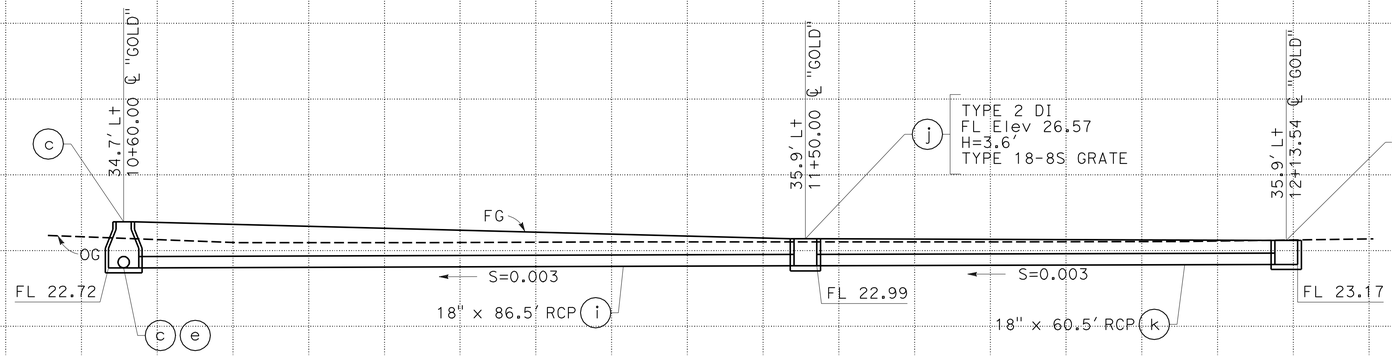

DRAINAGE SYSTEM No. 188

"GOLD" Sta 10+60.00

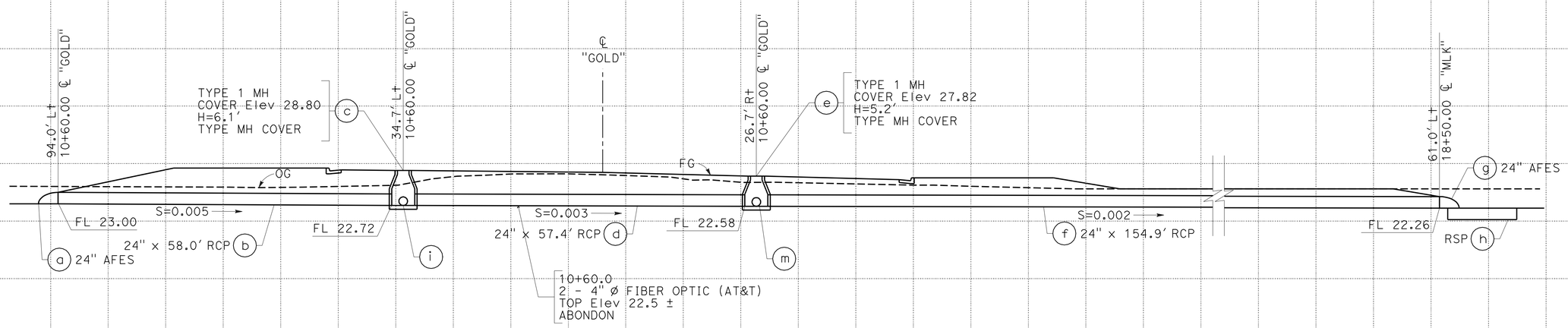

DRAINAGE SYSTEM No. 188

"GOLD" Sta 10+60.00

DRAINAGE PROFILES

SCALE: Horiz 1"=100'
Vert 1"=100'

DP-74

REVISED BY | DATE REVISED
JOSE A GONZALEZ | ASHLYN SWAN
CALCULATED-DESIGNED BY | CHECKED BY
FUNCTIONAL SUPERVISOR | MARTIN NISHIKAWA
STATE OF CALIFORNIA - DEPARTMENT OF TRANSPORTATION | 06-DESIGN | Caltrans

LAST REVISION 05-26-11 | DATE PLOTTED => 29-MAR-2012 | TIME PLOTTED => 17:07

Dist	COUNTY	ROUTE	POST MILES TOTAL PROJECT	SHEET No.	TOTAL SHEETS
10	SJ	4,99	R19.5/R20.1, 15.0/18.6	388	1414

REGISTERED CIVIL ENGINEER 12-05-11 DATE

3-26-12
PLANS APPROVAL DATE

REGISTERED PROFESSIONAL ENGINEER SEAN M. PLEDGER No. 56328 Exp. 12-31-12 CIVIL STATE OF CALIFORNIA

THE STATE OF CALIFORNIA OR ITS OFFICERS OR AGENTS SHALL NOT BE RESPONSIBLE FOR THE ACCURACY OR COMPLETENESS OF SCANNED COPIES OF THIS PLAN SHEET.

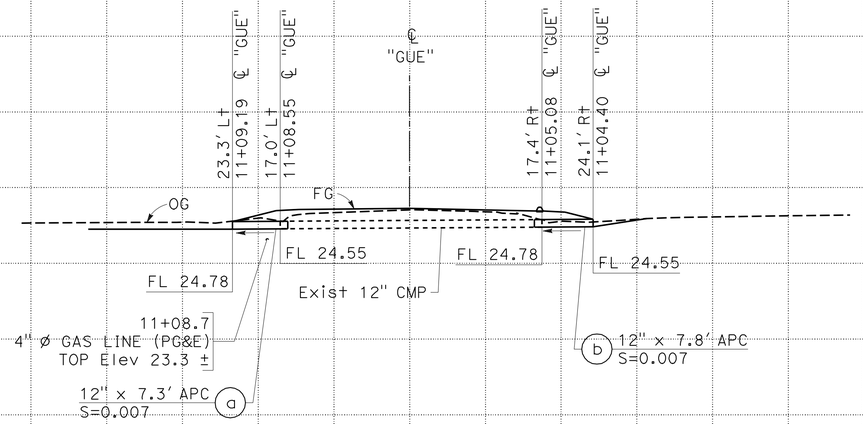

DRAINAGE SYSTEM No. 193

"GUE" Sta 11+06.84

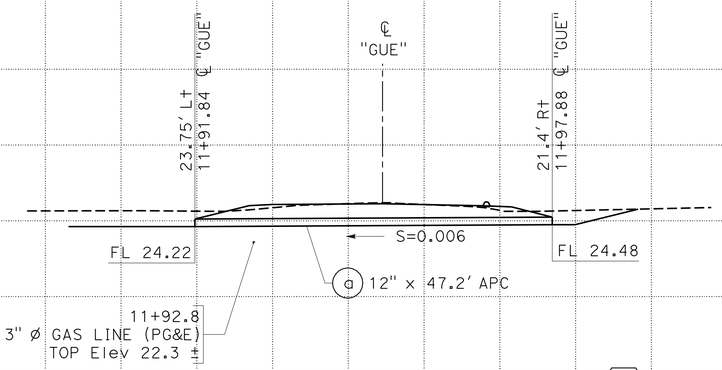

DRAINAGE SYSTEM No. 192

"GUE" Sta 11+91.43

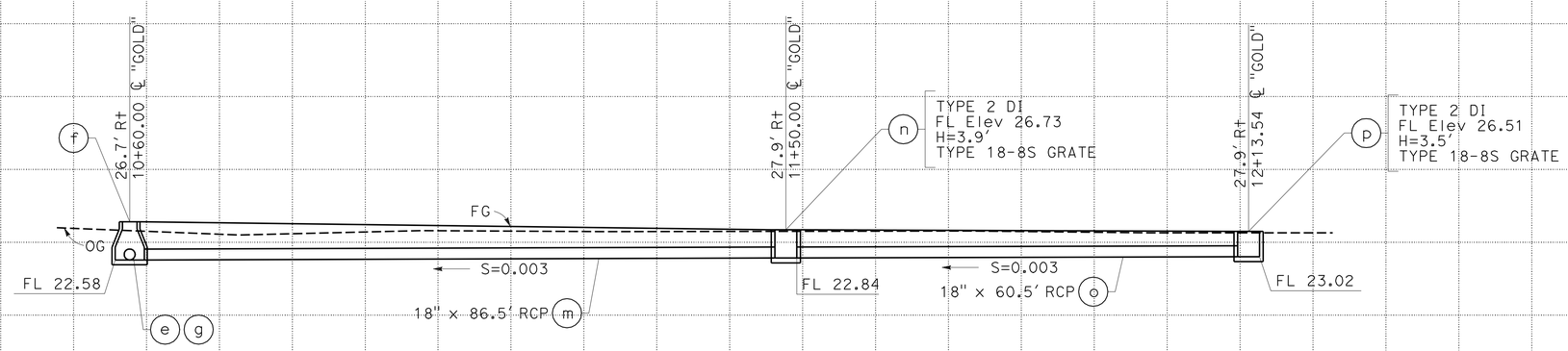

DRAINAGE SYSTEM No. 188

"GOLD" Sta 10+60.00

DRAINAGE PROFILES

SCALE: Horiz 1"=100'
Vert 1"=100'

DP-75

STATE OF CALIFORNIA - DEPARTMENT OF TRANSPORTATION
Caltrans
06-DESIGN

FUNCTIONAL SUPERVISOR: MARTIN NISHIKAWA
CALCULATED-DESIGNED BY: JOSE A GONZALEZ
CHECKED BY: ASHLYN SWAN
REVISED BY
DATE REVISED

LAST REVISION 05-26-11
DATE PLOTTED => 29-MAR-2012
TIME PLOTTED => 17:08

Dist	COUNTY	ROUTE	POST MILES TOTAL PROJECT	SHEET No.	TOTAL SHEETS
10	SJ	4,99	R19.5/R20.1, 15.0/18.6	389	1414

Sean Pledger 12-05-11
REGISTERED CIVIL ENGINEER DATE

3-26-12
PLANS APPROVAL DATE

REGISTERED PROFESSIONAL ENGINEER SEAN M. PLEDGER No. 56328 Exp. 12-31-12 CIVIL STATE OF CALIFORNIA

THE STATE OF CALIFORNIA OR ITS OFFICERS OR AGENTS SHALL NOT BE RESPONSIBLE FOR THE ACCURACY OR COMPLETENESS OF SCANNED COPIES OF THIS PLAN SHEET.

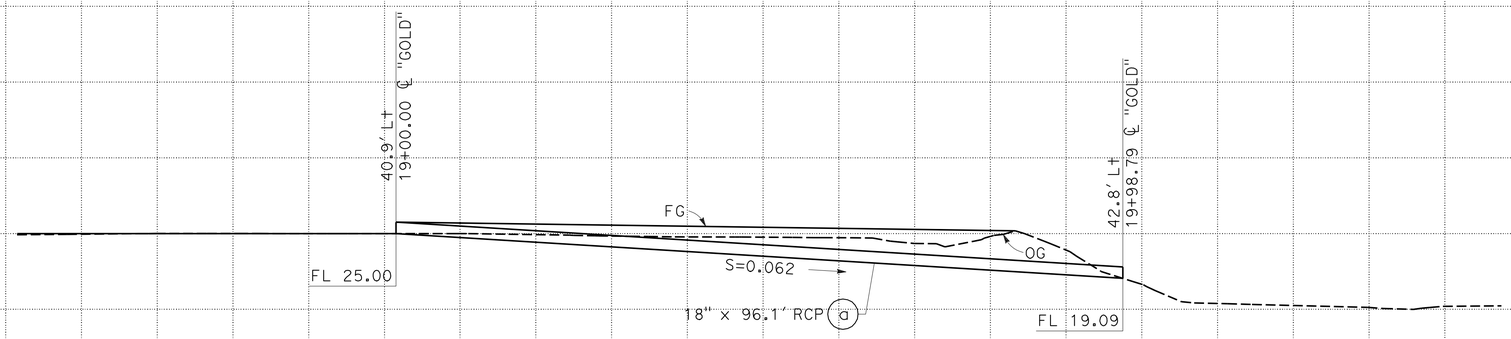

DRAINAGE SYSTEM No. 196
"GOLD" Sta 19+00.00

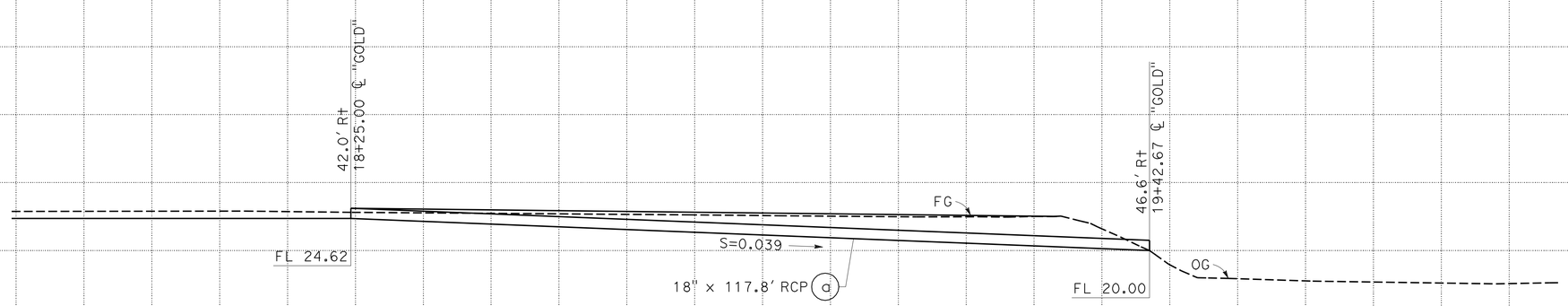

DRAINAGE SYSTEM No. 195
"GOLD" Sta 18+25.00

DRAINAGE PROFILES

SCALE: Horiz 1" = 100'
Vert 1" = 100'

DP-76

REVISED BY | DATE REVISED
JOSE A GONZALEZ | ASHLYN SWAN
CALCULATED-DESIGNED BY | CHECKED BY
FUNCTIONAL SUPERVISOR | MARTIN NISHIKAWA
STATE OF CALIFORNIA - DEPARTMENT OF TRANSPORTATION
Caltrans
06-DESIGN

LAST REVISION 05-26-11 | DATE PLOTTED => 29-MAR-2012 | TIME PLOTTED => 17:08

Dist	COUNTY	ROUTE	POST MILES TOTAL PROJECT	SHEET No.	TOTAL SHEETS
10	SJ	4,99	R19.5/R20.1, 15.0/18.6	390	1414

REGISTERED CIVIL ENGINEER 12-05-11 DATE

3-26-12
PLANS APPROVAL DATE

REGISTERED PROFESSIONAL ENGINEER SEAN M. PLEDGER No. 56328 Exp. 12-31-12 CIVIL STATE OF CALIFORNIA

THE STATE OF CALIFORNIA OR ITS OFFICERS OR AGENTS SHALL NOT BE RESPONSIBLE FOR THE ACCURACY OR COMPLETENESS OF SCANNED COPIES OF THIS PLAN SHEET.

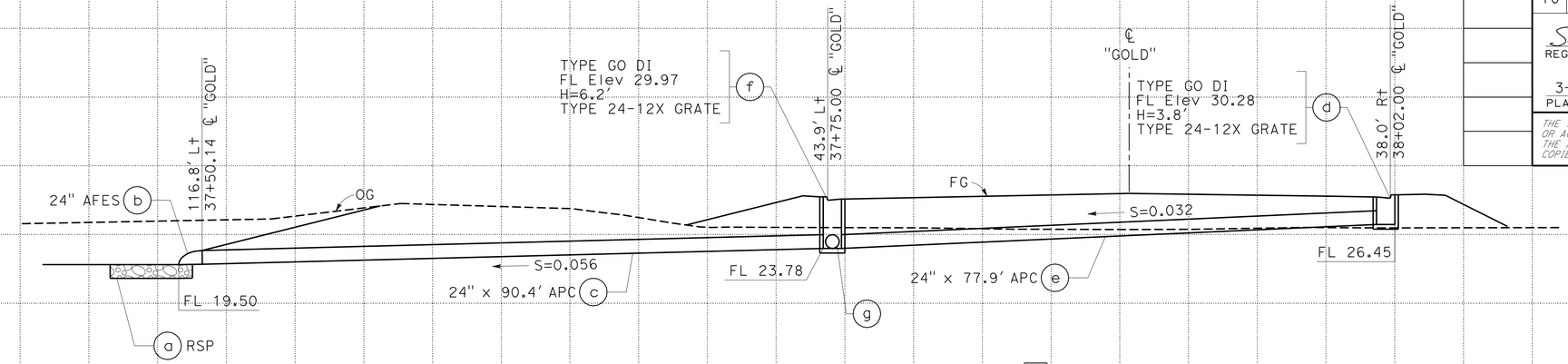

DRAINAGE SYSTEM No. 202

"GOLD" Sta 37+75.00

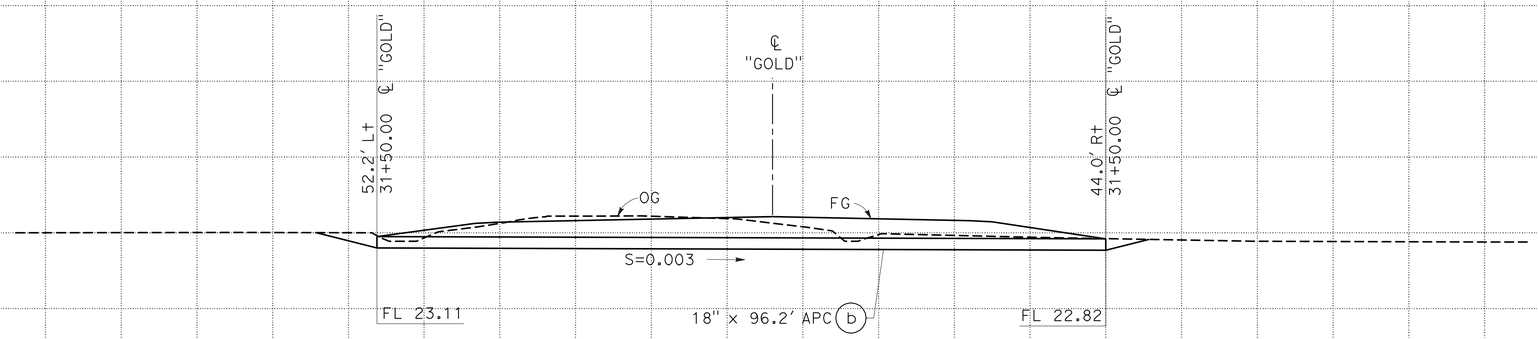

DRAINAGE SYSTEM No. 200

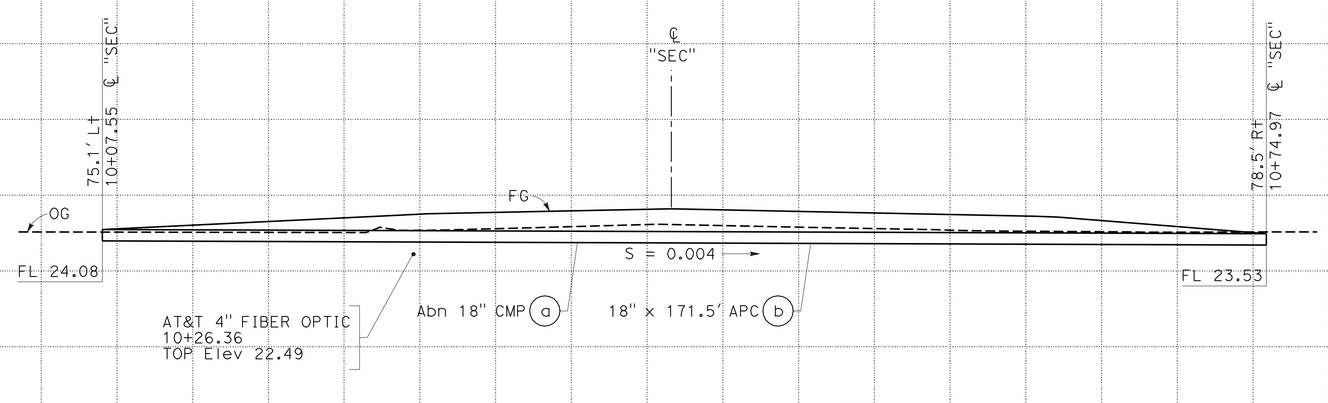

DRAINAGE SYSTEM No. 199

"SEC" Sta 10+38.46

DRAINAGE PROFILES

SCALE: Horiz 1"=100'
Vert 1"=100'

DP-77

REVISED BY | DATE REVISED
JOSE A GONZALEZ | ASHLYN SWAN
CALCULATED-DESIGNED BY | CHECKED BY
FUNCTIONAL SUPERVISOR | MARTIN NISHIKAWA
STATE OF CALIFORNIA - DEPARTMENT OF TRANSPORTATION
06-DESIGN
Caltrans

LAST REVISION 05-26-11 | DATE PLOTTED => 29-MAR-2012 | TIME PLOTTED => 17:08

Dist	COUNTY	ROUTE	POST MILES TOTAL PROJECT	SHEET No.	TOTAL SHEETS
10	SJ	4,99	R19.5/R20.1, 15.0/18.6	391	1414

Sean Pledger 12-05-11
REGISTERED CIVIL ENGINEER DATE

3-26-12
PLANS APPROVAL DATE

REGISTERED PROFESSIONAL ENGINEER SEAN M. PLEDGER No. 56328 Exp. 12-31-12 CIVIL STATE OF CALIFORNIA

THE STATE OF CALIFORNIA OR ITS OFFICERS OR AGENTS SHALL NOT BE RESPONSIBLE FOR THE ACCURACY OR COMPLETENESS OF SCANNED COPIES OF THIS PLAN SHEET.

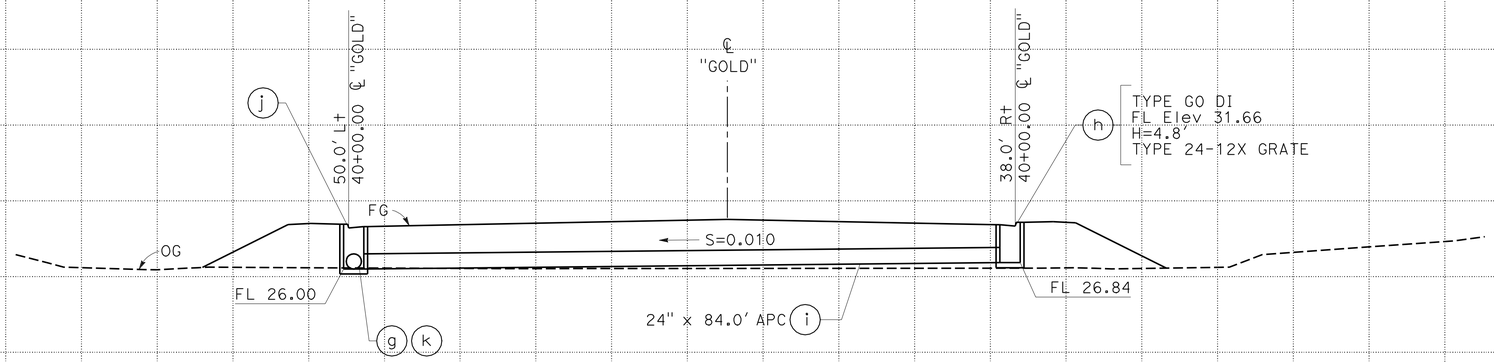

DRAINAGE SYSTEM No. 202

"GOLD" Sta 40+00.00

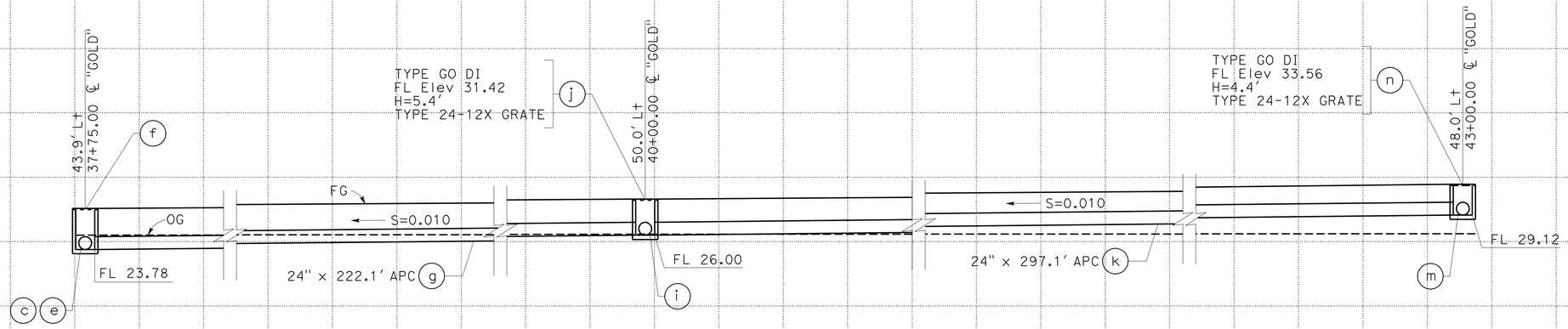

DRAINAGE SYSTEM No. 202

"GOLD" Sta 37+75.00

DRAINAGE PROFILES

SCALE: Horiz 1" = 100'
Vert 1" = 100'

DP-78

REVISED BY | DATE REVISED

JOSE A GONZALEZ | ASHLYN SWAN

CALCULATED-DESIGNED BY | CHECKED BY

FUNCTIONAL SUPERVISOR: MARTIN NISHIKAWA

STATE OF CALIFORNIA - DEPARTMENT OF TRANSPORTATION

Caltrans

06-DESIGN

LAST REVISION 05-26-11 | DATE PLOTTED => 29-MAR-2012 | TIME PLOTTED => 17:08

Dist	COUNTY	ROUTE	POST MILES TOTAL PROJECT	SHEET No.	TOTAL SHEETS
10	SJ	4,99	R19.5/R20.1, 15.0/18.6	392	1414

REGISTERED CIVIL ENGINEER 12-05-11 DATE

3-26-12
PLANS APPROVAL DATE

REGISTERED PROFESSIONAL ENGINEER SEAN M. PLEDGER No. 56328 Exp. 12-31-12 CIVIL STATE OF CALIFORNIA

THE STATE OF CALIFORNIA OR ITS OFFICERS OR AGENTS SHALL NOT BE RESPONSIBLE FOR THE ACCURACY OR COMPLETENESS OF SCANNED COPIES OF THIS PLAN SHEET.

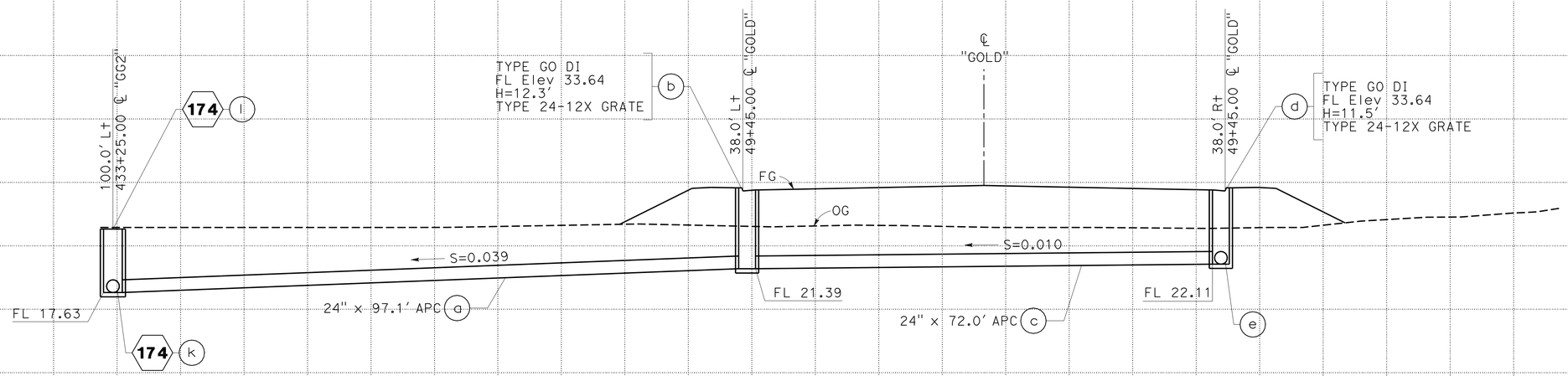

DRAINAGE SYSTEM No. 204

"GOLD" Sta 49+45.00

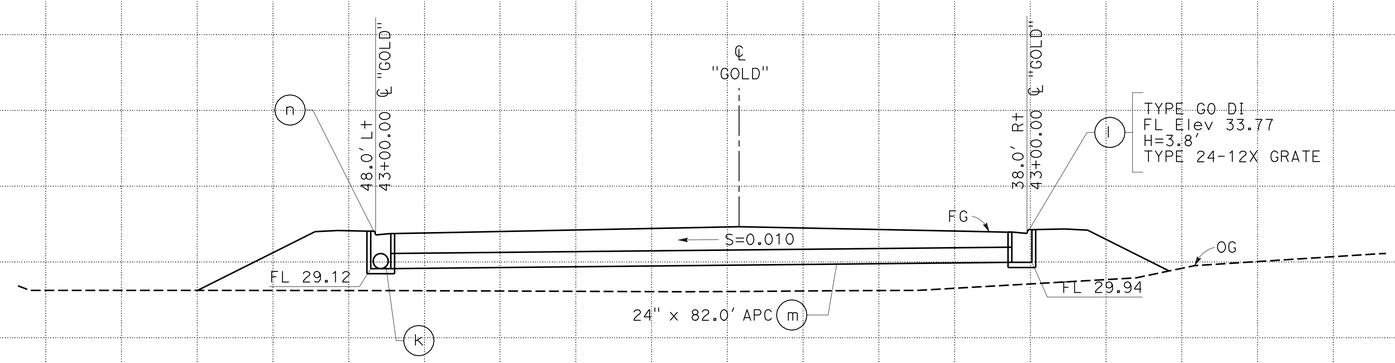

DRAINAGE SYSTEM No. 202

"GOLD" Sta 43+00.00

DRAINAGE PROFILES

SCALE: Horiz 1" = 100'
Vert 1" = 100'

DP-79

STATE OF CALIFORNIA - DEPARTMENT OF TRANSPORTATION
06-DESIGN
Caltrans

FUNCTIONAL SUPERVISOR: MARTIN NISHIKAWA
CALCULATED-DESIGNED BY: JOSE A GONZALEZ
CHECKED BY: ASHLYN SWAN
REVISED BY
DATE REVISED

LAST REVISION 05-26-11
DATE PLOTTED => 29-MAR-2012
TIME PLOTTED => 17:08

Dist	COUNTY	ROUTE	POST MILES TOTAL PROJECT	SHEET No.	TOTAL SHEETS
10	SJ	4,99	R19.5/R20.1, 15.0/18.6	393	1414

REGISTERED CIVIL ENGINEER 12-05-11 DATE

3-26-12
PLANS APPROVAL DATE

REGISTERED PROFESSIONAL ENGINEER SEAN M. PLEDGER No. 56328 Exp. 12-31-12 CIVIL STATE OF CALIFORNIA

THE STATE OF CALIFORNIA OR ITS OFFICERS OR AGENTS SHALL NOT BE RESPONSIBLE FOR THE ACCURACY OR COMPLETENESS OF SCANNED COPIES OF THIS PLAN SHEET.

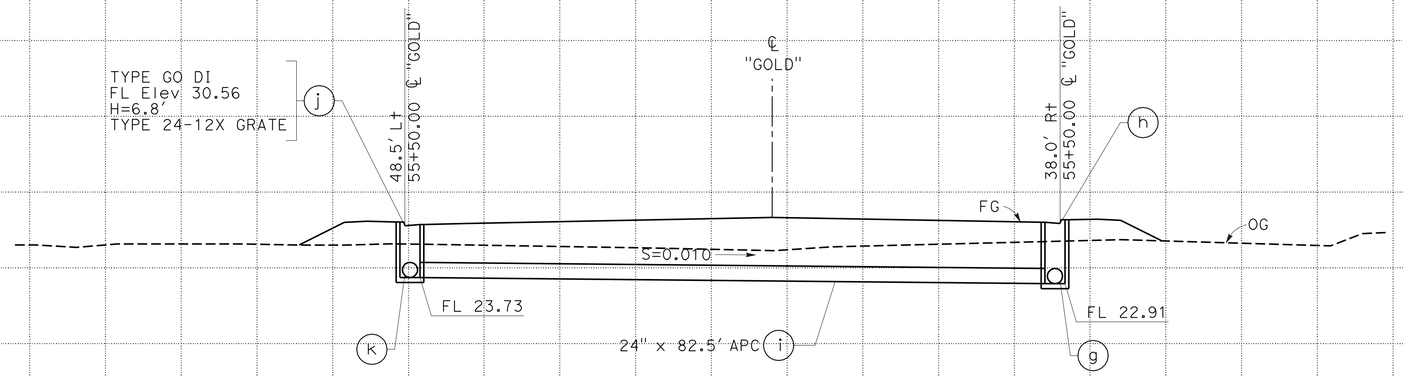

DRAINAGE SYSTEM No. 204

"GOLD" Sta 55+50.00

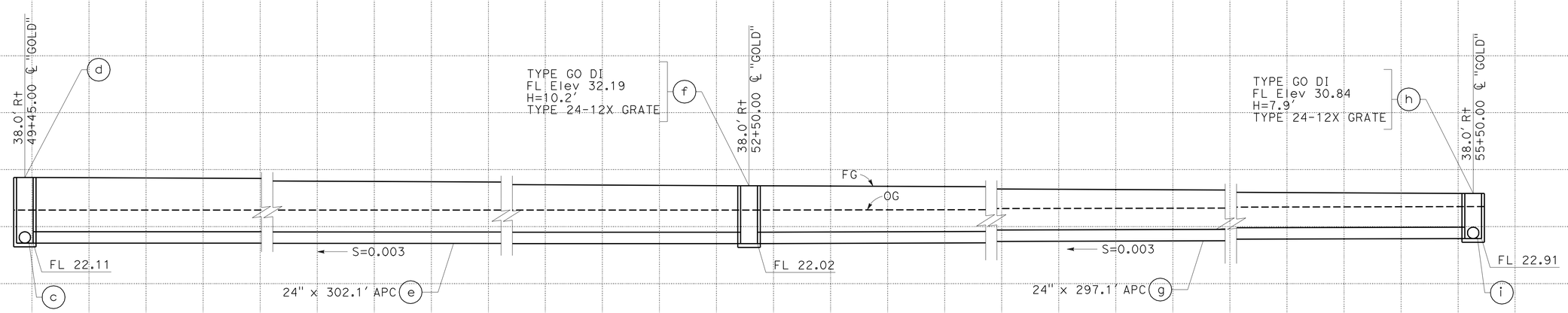

DRAINAGE SYSTEM No. 204

"GOLD" Sta 49+45.00

DRAINAGE PROFILES

SCALE: Horiz 1" = 100'
Vert 1" = 100'

DP-80

REVISED BY | DATE REVISED

JOSE A GONZALEZ | ASHLYN SWAN

CALCULATED-DESIGNED BY | CHECKED BY

FUNCTIONAL SUPERVISOR: MARTIN NISHIKAWA

STATE OF CALIFORNIA - DEPARTMENT OF TRANSPORTATION

Caltrans

06-DESIGN

LAST REVISION 05-26-11 | DATE PLOTTED => 29-MAR-2012 | TIME PLOTTED => 17:08

Dist	COUNTY	ROUTE	POST MILES TOTAL PROJECT	SHEET No.	TOTAL SHEETS
10	SJ	4,99	R19.5/R20.1, 15.0/18.6	394	1414

REGISTERED CIVIL ENGINEER 12-05-11 DATE

3-26-12
PLANS APPROVAL DATE

REGISTERED PROFESSIONAL ENGINEER SEAN M. PLEDGER No. 56328 Exp. 12-31-12 CIVIL STATE OF CALIFORNIA

THE STATE OF CALIFORNIA OR ITS OFFICERS OR AGENTS SHALL NOT BE RESPONSIBLE FOR THE ACCURACY OR COMPLETENESS OF SCANNED COPIES OF THIS PLAN SHEET.

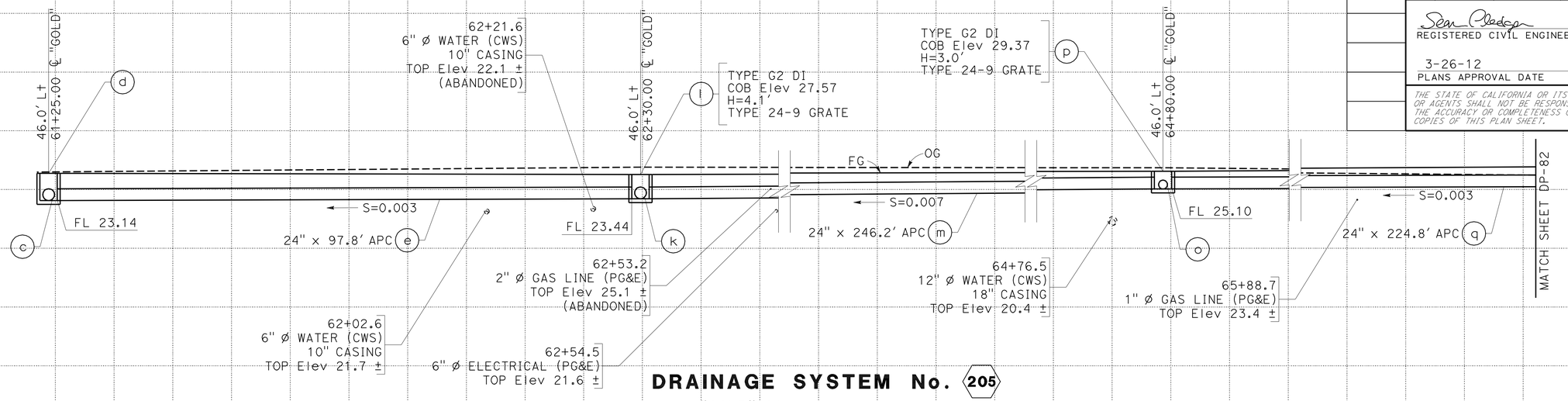

DRAINAGE SYSTEM No. 205
"GOLD" Sta 61+25.00

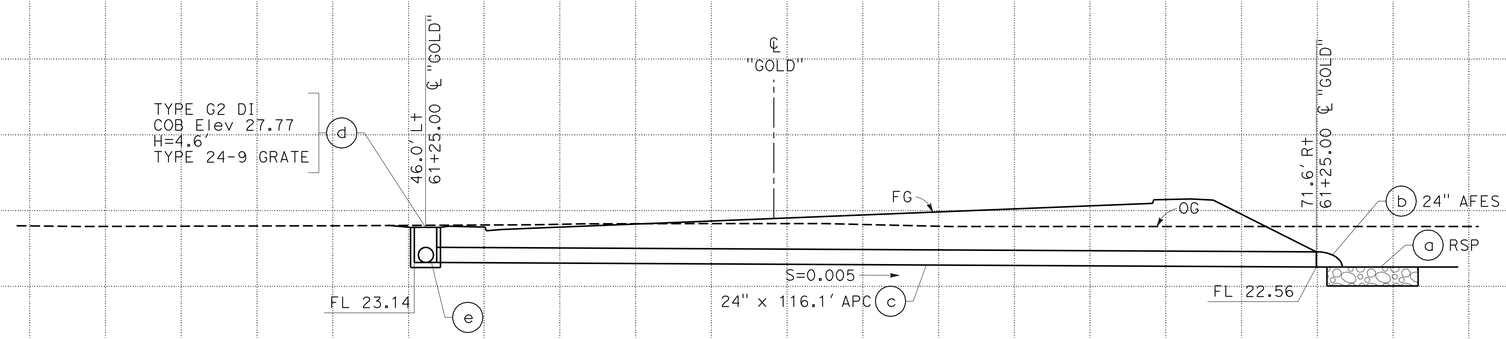

DRAINAGE SYSTEM No. 205
"GOLD" Sta 61+25.00

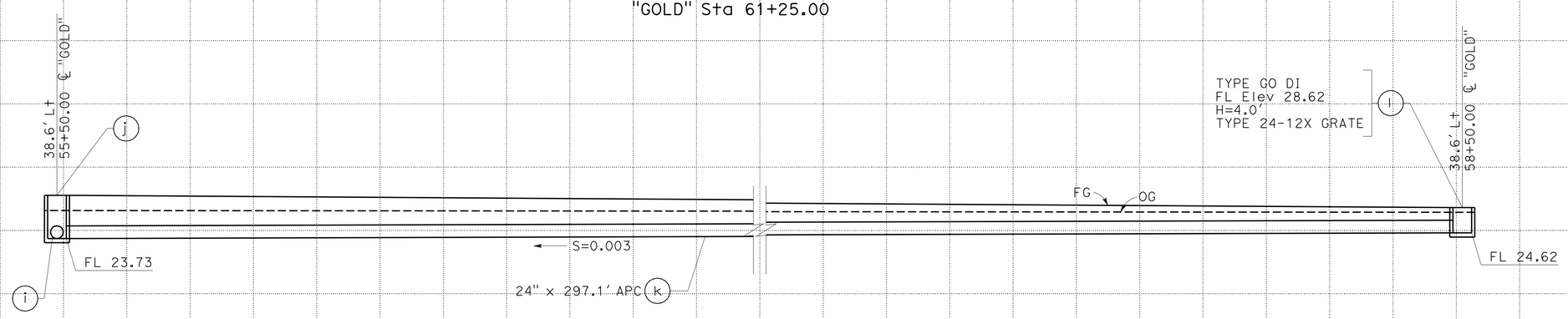

DRAINAGE SYSTEM No. 204
"GOLD" Sta 55+50.00

DRAINAGE PROFILES

SCALE: Horiz 1" = 100'
Vert 1" = 100'

DP-81

STATE OF CALIFORNIA - DEPARTMENT OF TRANSPORTATION
Caltrans
06-DESIGN
FUNCTIONAL SUPERVISOR: MARTIN NISHIKAWA
CALCULATED-DESIGNED BY: JOSE A GONZALEZ
CHECKED BY: ASHLYN SWAN
REVISED BY
DATE REVISED

LAST REVISION 05-26-11
DATE PLOTTED => 29-MAR-2012
TIME PLOTTED => 17:08

Dist	COUNTY	ROUTE	POST MILES TOTAL PROJECT	SHEET No.	TOTAL SHEETS
10	SJ	4,99	R19.5/R20.1, 15.0/18.6	395	1414

REGISTERED CIVIL ENGINEER 12-05-11 DATE

3-26-12
PLANS APPROVAL DATE

REGISTERED PROFESSIONAL ENGINEER SEAN M. PLEDGER No. 56328 Exp. 12-31-12 CIVIL STATE OF CALIFORNIA

THE STATE OF CALIFORNIA OR ITS OFFICERS OR AGENTS SHALL NOT BE RESPONSIBLE FOR THE ACCURACY OR COMPLETENESS OF SCANNED COPIES OF THIS PLAN SHEET.

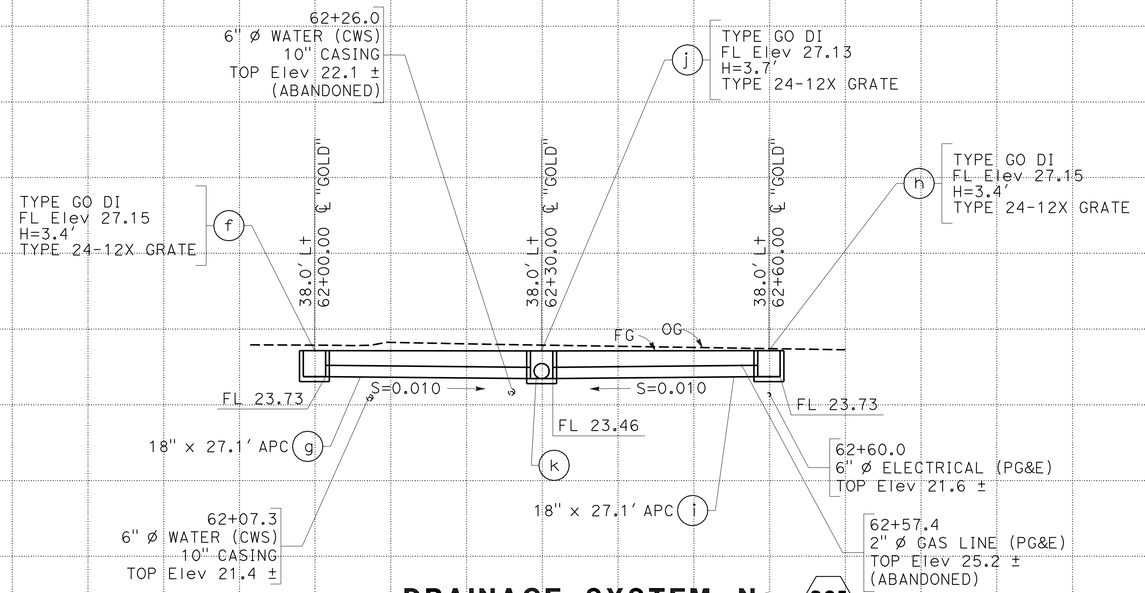

DRAINAGE SYSTEM No. 205

"GOLD" Sta 62+00.00

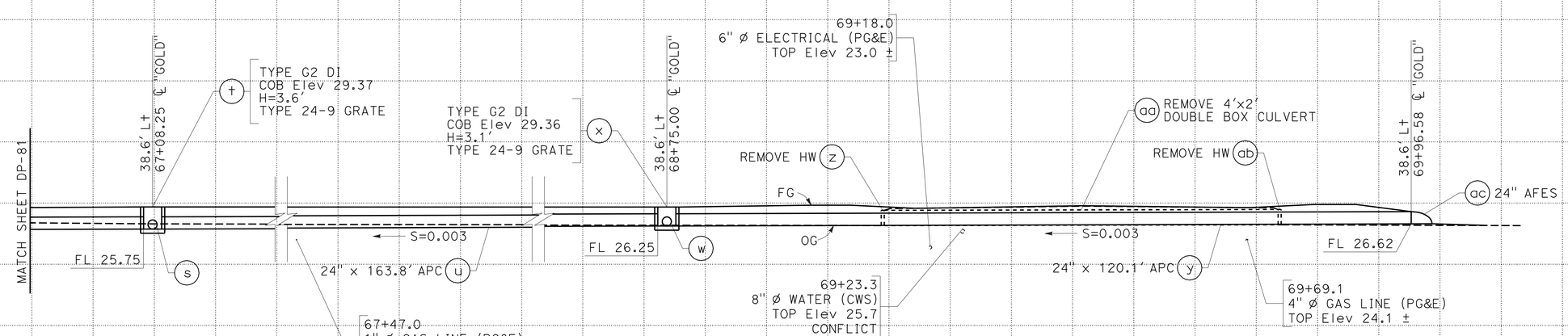

DRAINAGE SYSTEM No. 205

"GOLD" Sta 61+25.00

DRAINAGE PROFILES

SCALE: Horiz 1" = 100'
Vert 1" = 100'

DP-82

REVISED BY | DATE REVISED
JOSE A GONZALEZ | ASHLYN SWAN
CALCULATED-DESIGNED BY | CHECKED BY
FUNCTIONAL SUPERVISOR: MARTIN NISHIKAWA
STATE OF CALIFORNIA - DEPARTMENT OF TRANSPORTATION
Caltrans 06-DESIGN

LAST REVISION 05-26-11 | DATE PLOTTED => 29-MAR-2012 | TIME PLOTTED => 17:08

Dist	COUNTY	ROUTE	POST MILES TOTAL PROJECT	SHEET No.	TOTAL SHEETS
10	SJ	4,99	R19.5/R20.1, 15.0/18.6	396	1414

Sean Pledger 12-05-11
REGISTERED CIVIL ENGINEER DATE

3-26-12
PLANS APPROVAL DATE

REGISTERED PROFESSIONAL ENGINEER SEAN M. PLEDGER No. 56328 Exp. 12-31-12 CIVIL STATE OF CALIFORNIA

THE STATE OF CALIFORNIA OR ITS OFFICERS OR AGENTS SHALL NOT BE RESPONSIBLE FOR THE ACCURACY OR COMPLETENESS OF SCANNED COPIES OF THIS PLAN SHEET.

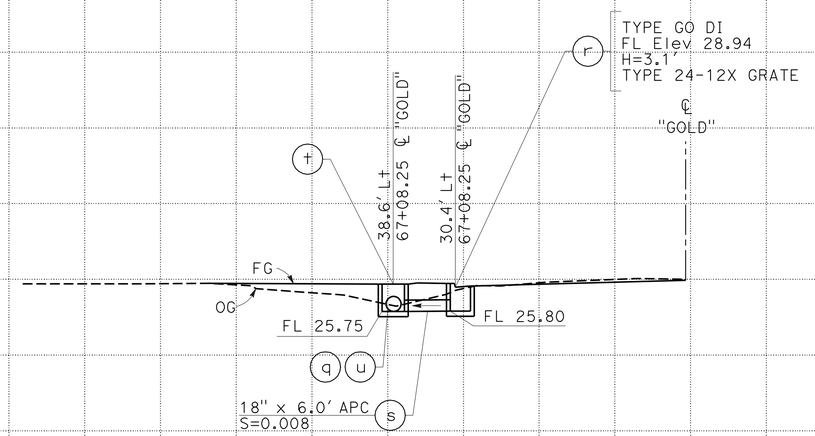

DRAINAGE SYSTEM No. 205
"GOLD" Sta 67+08.25

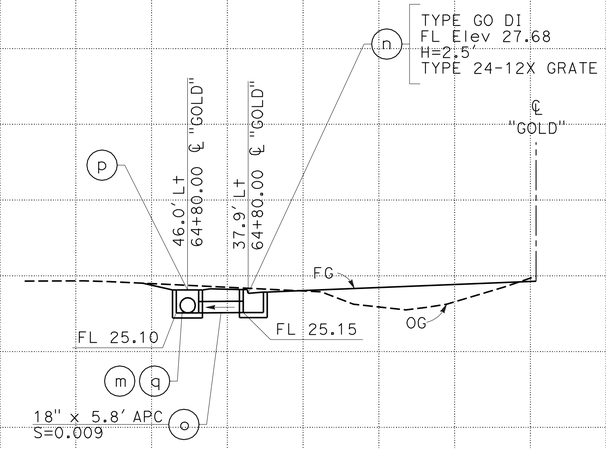

DRAINAGE SYSTEM No. 205
"GOLD" Sta 64+80.00

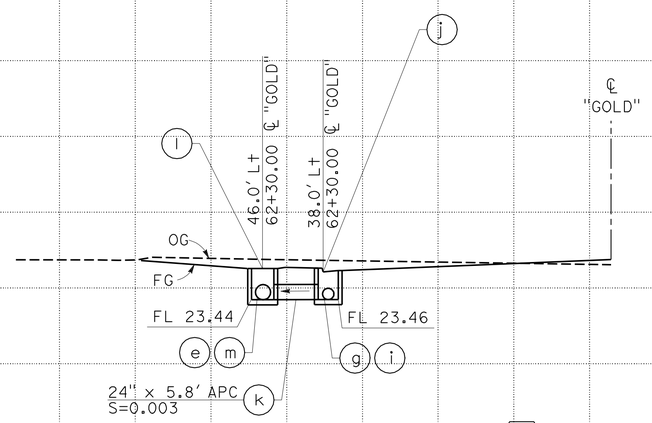

DRAINAGE SYSTEM No. 205
"GOLD" Sta 62+30.00

DRAINAGE PROFILES

SCALE: Horiz 1" = 100'
Vert 1" = 100'

DP-83

STATE OF CALIFORNIA - DEPARTMENT OF TRANSPORTATION
Caltrans
06-DESIGN

FUNCTIONAL SUPERVISOR: MARTIN NISHIKAWA
CALCULATED-DESIGNED BY: JOSE A GONZALEZ
CHECKED BY: ASHLYN SWAN
REVISED BY / DATE REVISED

LAST REVISION 05-26-11 | DATE PLOTTED => 29-MAR-2012 | TIME PLOTTED => 17:08

Dist	COUNTY	ROUTE	POST MILES TOTAL PROJECT	SHEET No.	TOTAL SHEETS
10	SJ	4,99	R19.5/R20.1, 15.0/18.6	397	1414

Sean Pledger 12-05-11
REGISTERED CIVIL ENGINEER DATE

3-26-12
PLANS APPROVAL DATE

REGISTERED PROFESSIONAL ENGINEER SEAN M. PLEDGER No. 56328 Exp. 12-31-12 CIVIL STATE OF CALIFORNIA

THE STATE OF CALIFORNIA OR ITS OFFICERS OR AGENTS SHALL NOT BE RESPONSIBLE FOR THE ACCURACY OR COMPLETENESS OF SCANNED COPIES OF THIS PLAN SHEET.

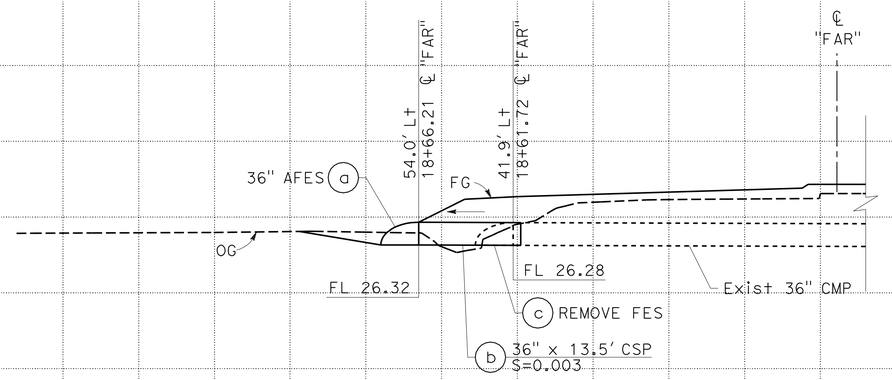

DRAINAGE SYSTEM No. 206

"FAR" Sta 18+51.86

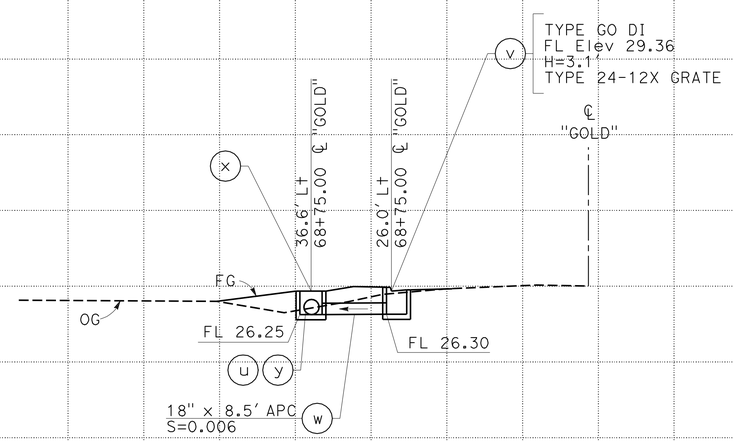

DRAINAGE SYSTEM No. 205

"GOLD" Sta 68+75.00

DRAINAGE PROFILES

SCALE: Horiz 1" = 100'
Vert 1" = 100'

DP-84

REVISED BY | DATE REVISED

JOSE A GONZALEZ | ASHLYN SWAN

CALCULATED-DESIGNED BY | CHECKED BY

FUNCTIONAL SUPERVISOR: MARTIN NISHIKAWA

STATE OF CALIFORNIA - DEPARTMENT OF TRANSPORTATION

Caltrans

06-DESIGN

LAST REVISION 05-26-11 | DATE PLOTTED => 29-MAR-2012 | TIME PLOTTED => 17:08

Dist	COUNTY	ROUTE	POST MILES TOTAL PROJECT	SHEET No.	TOTAL SHEETS
10	SJ	4,99	R19.5/R20.1, 15.0/18.6	398	1414

REGISTERED CIVIL ENGINEER 12-05-11 DATE

3-26-12
PLANS APPROVAL DATE

REGISTERED PROFESSIONAL ENGINEER SEAN M. PLEDGER No. 56328 Exp. 12-31-12 CIVIL STATE OF CALIFORNIA

THE STATE OF CALIFORNIA OR ITS OFFICERS OR AGENTS SHALL NOT BE RESPONSIBLE FOR THE ACCURACY OR COMPLETENESS OF SCANNED COPIES OF THIS PLAN SHEET.

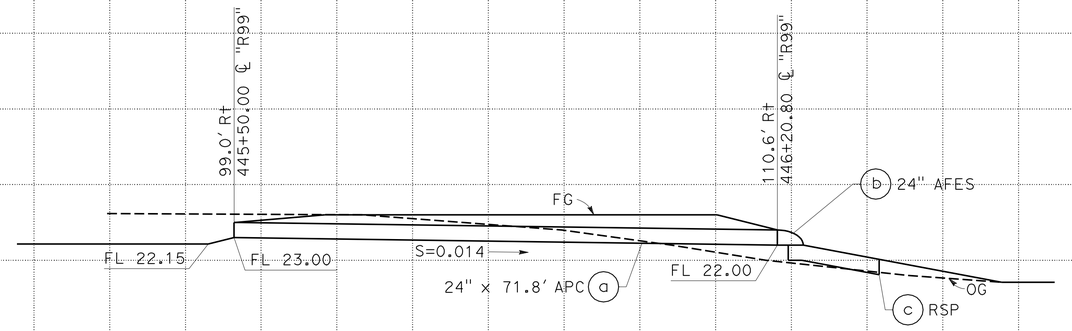

DRAINAGE SYSTEM No. 213

"R99" Sta 445+50.00

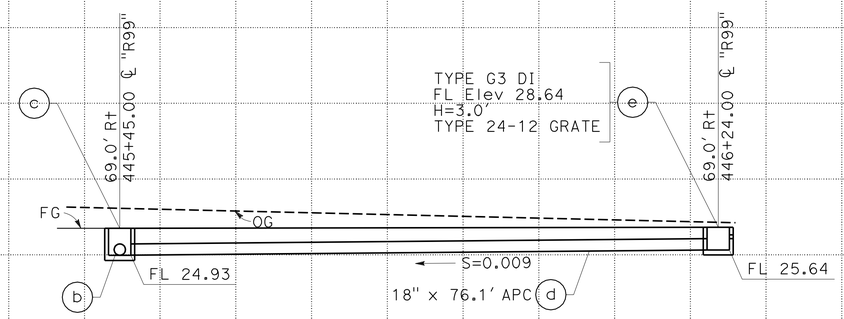

DRAINAGE SYSTEM No. 212

"R99" Sta 445+45.00

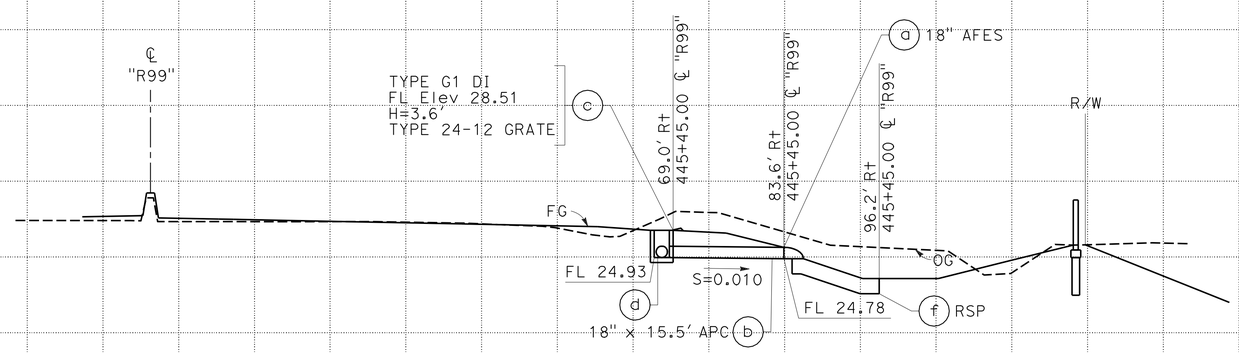

DRAINAGE SYSTEM No. 212

"R99" Sta 445+45.00

DRAINAGE PROFILES

SCALE: Horiz 1"=10'
Vert 1"=10'

DP-85

STATE OF CALIFORNIA - DEPARTMENT OF TRANSPORTATION
Caltrans
06-DESIGN

FUNCTIONAL SUPERVISOR: MARTIN NISHIKAWA
CALCULATED-DESIGNED BY: JOSE A GONZALEZ
CHECKED BY: ASHLYN SWAN
REVISED BY
DATE REVISED

LAST REVISION 05-26-11
DATE PLOTTED => 29-MAR-2012
TIME PLOTTED => 17:08

Dist	COUNTY	ROUTE	POST MILES TOTAL PROJECT	SHEET No.	TOTAL SHEETS
10	SJ	4,99	R19.5/R20.1, 15.0/18.6	399	1414

REGISTERED CIVIL ENGINEER 12-05-11 DATE

3-26-12
PLANS APPROVAL DATE

REGISTERED PROFESSIONAL ENGINEER SEAN M. PLEDGER No. 56328 Exp. 12-31-12 CIVIL STATE OF CALIFORNIA

THE STATE OF CALIFORNIA OR ITS OFFICERS OR AGENTS SHALL NOT BE RESPONSIBLE FOR THE ACCURACY OR COMPLETENESS OF SCANNED COPIES OF THIS PLAN SHEET.

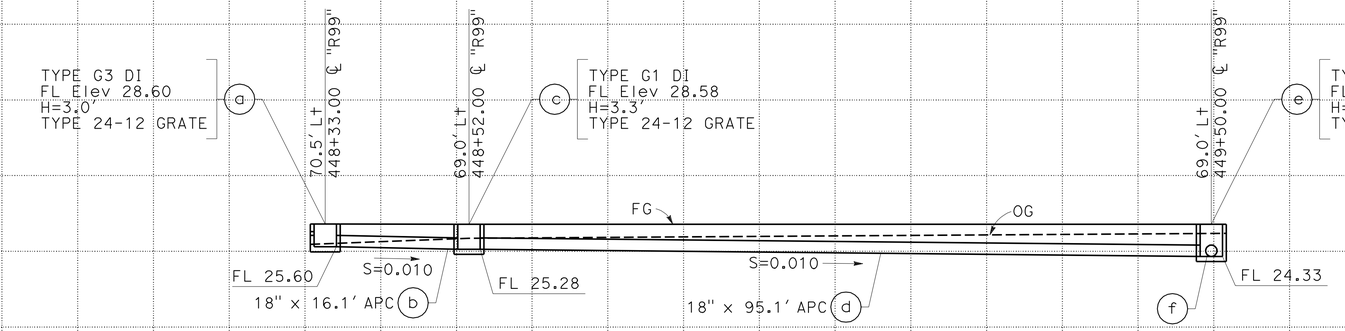

DRAINAGE SYSTEM No. 217

"R99" Sta 449+50.00

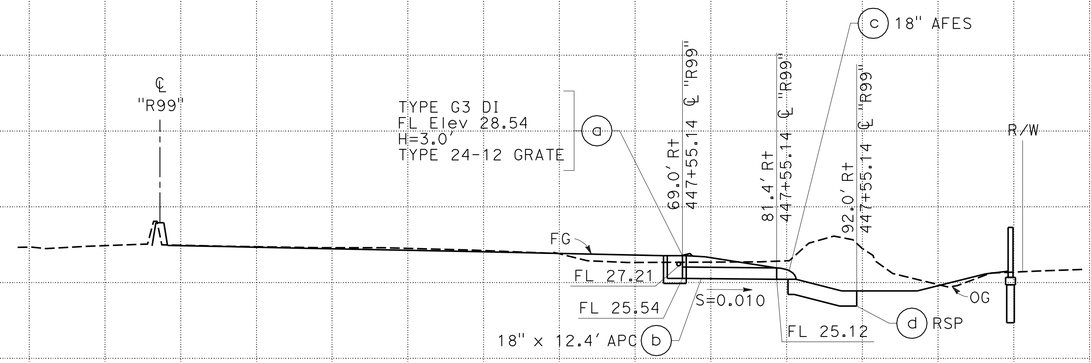

DRAINAGE SYSTEM No. 215

"R99" Sta 447+55.14

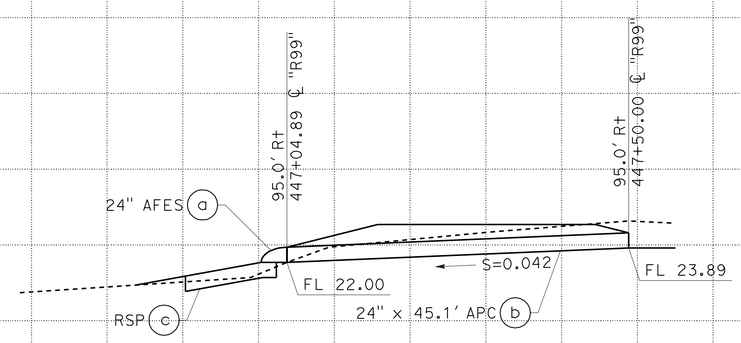

DRAINAGE SYSTEM No. 214

"R99" Sta 447+04.89

DRAINAGE PROFILES

SCALE: Horiz 1"=10'
Vert 1"=10'

DP-86

REVISED BY | DATE REVISED
JOSE A GONZALEZ | ASHLYN SWAN
CALCULATED-DESIGNED BY | CHECKED BY
FUNCTIONAL SUPERVISOR | MARTIN NISHIKAWA
STATE OF CALIFORNIA - DEPARTMENT OF TRANSPORTATION
Caltrans
06-DESIGN

LAST REVISION 05-26-11 | DATE PLOTTED => 29-MAR-2012 | TIME PLOTTED => 17:08

Dist	COUNTY	ROUTE	POST MILES TOTAL PROJECT	SHEET No.	TOTAL SHEETS
10	SJ	4,99	R19.5/R20.1, 15.0/18.6	400	1414

Sean Pledger 12-05-11
REGISTERED CIVIL ENGINEER DATE

3-26-12
PLANS APPROVAL DATE

REGISTERED PROFESSIONAL ENGINEER SEAN M. PLEDGER No. 56328 Exp. 12-31-12 CIVIL STATE OF CALIFORNIA

THE STATE OF CALIFORNIA OR ITS OFFICERS OR AGENTS SHALL NOT BE RESPONSIBLE FOR THE ACCURACY OR COMPLETENESS OF SCANNED COPIES OF THIS PLAN SHEET.

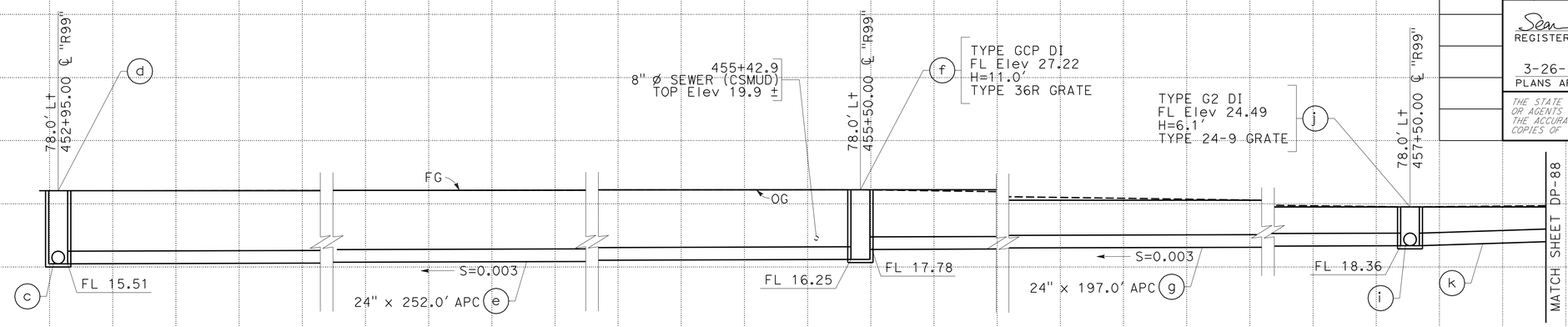

DRAINAGE SYSTEM No. 218
"R99" Sta 452+95.00

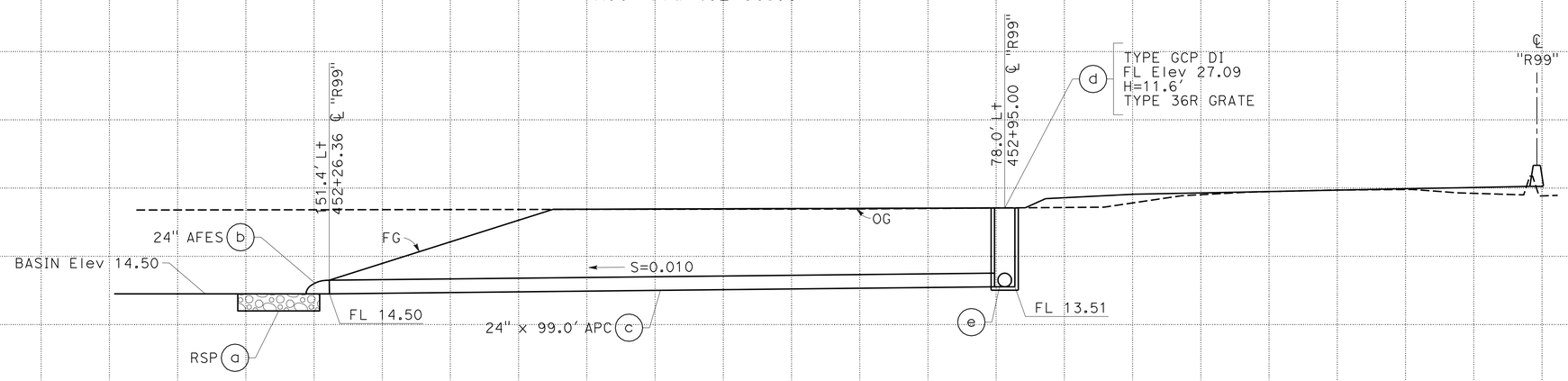

DRAINAGE SYSTEM No. 218
"R99" Sta 452+95.00

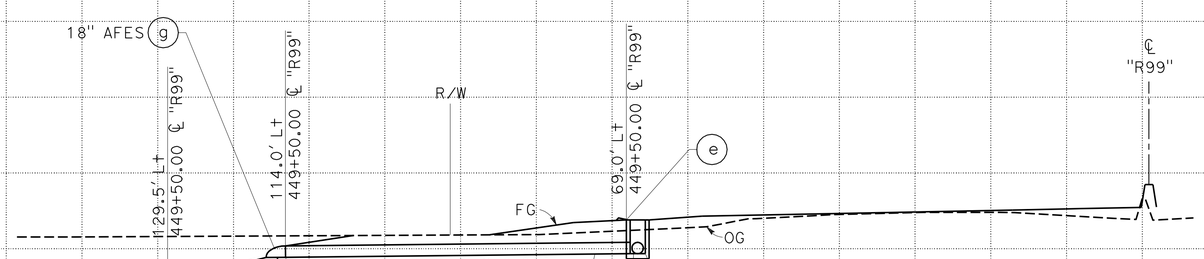

DRAINAGE SYSTEM No. 217
"R99" Sta 449+50.00

DRAINAGE PROFILES

SCALE: Horiz 1"=10'
Vert 1"=10'

DP-87

REVISED BY | DATE REVISED
JOSE A GONZALEZ | ASHLYN SWAN
CALCULATED-DESIGNED BY | CHECKED BY
FUNCTIONAL SUPERVISOR: MARTIN NISHIKAWA
STATE OF CALIFORNIA - DEPARTMENT OF TRANSPORTATION
06-DESIGN
Caltrans

LAST REVISION 05-26-11 | DATE PLOTTED => 29-MAR-2012 | TIME PLOTTED => 17:09