INFORMATION HANDOUT

For Contract No. 10-0X9704
At 10-SJ-4,99-PM 16.0/19.4,18.5

Identified by
Project ID 1013000114

MATERIALS INFORMATION

Alternative Flared Terminal System Details

Geotechnical Recommendations Report

Water Source Information

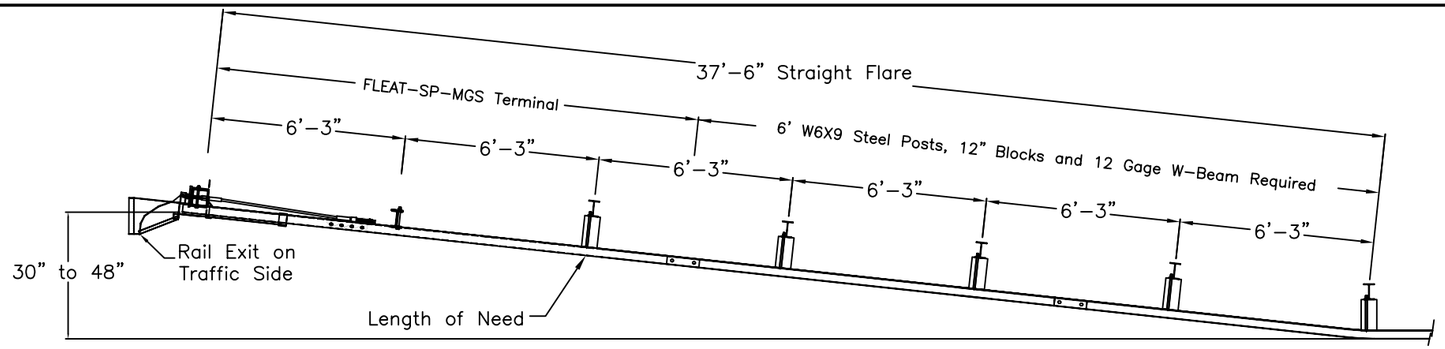

PLAN

TRAFFIC

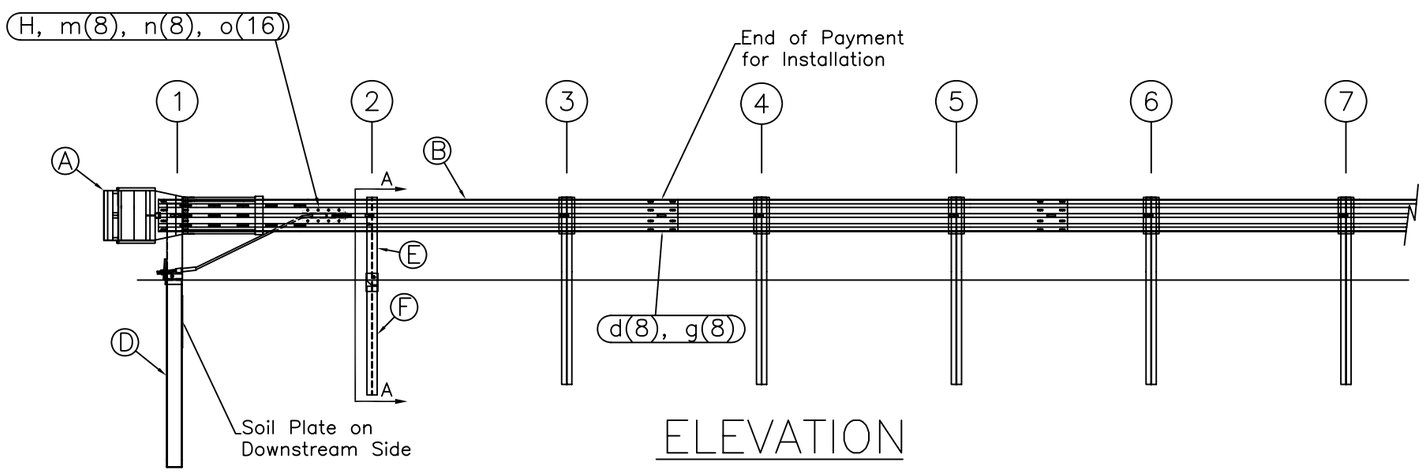

ELEVATION

ITEM	QTY	BILL OF MATERIALS	ITEM NO.
A	1	IMPACT HEAD	F3000
B	1	W-BEAM GUARDRAIL END SECTION, 12 Ga.	MGS-SF1303
C	1	FIRST POST TOP (6X6X$\frac{1}{8}$" Tube)	TPHP1A
D	1	FIRST POST BOTTOM (6' W6X15)	TPHP1B
E	1	SECOND POST ASSEMBLY TOP	UHP2A
F	1	SECOND POST ASSEMBLY BOTTOM	HP3B
G	1	BEARING PLATE	E750
H	1	CABLE ANCHOR BOX	S760
J	1	BCT CABLE ANCHOR ASSEMBLY	E770
		HARDWARE (ALL DIMENSIONS IN INCHES)	
a	2	5/16 x 1 HEX BOLT GRD 5	B5160104A
b	4	5/16 WASHER	W0516
c	2	5/16 HEX NUT	N0516
d	9	5/8 Dia. x 1 1/4 SPLICE BOLT (POST #2)	B580122
e	1	5/8 Dia. x 9 HEX BOLT GRD 5	B580904A
f	3	5/8 WASHER	W050
g	10	5/8 Dia. H.G.R NUT	N050
h	1	3/4 Dia. x 8 1/2 HEX BOLT GRD A449	B340854A
j	1	3/4 Dia. HEX NUT	N030
k	2	1 ANCHOR CABLE HEX NUT	N100
l	2	1 ANCHOR CABLE WASHER	W100
m	8	CABLE ANCHOR BOX SHOULDER BOLT	SB58A
n	8	1/2 A325 STRUCTURAL NUT	N055A
o	16	1 1/16 OD x 9/16 ID A325 STR. WASHER	W050A

GENERAL NOTES:
1. All bolts, nuts, cable assemblies, cable anchors and bearing plates shall be galvanized.
2. The lower sections of the Posts 1&2 shall not protrude more than 4 in above the ground (measured along a 5' cord). Site grading may be necessary to meet this requirement.
3. The lower sections of the hinged posts should not be driven with the upper post attached. If the post is placed in a drilled hole, the backfill material must be satisfactorily compacted to prevent settlement.
4. When competent rock is encountered, a 12" Ø post hole, 20 in. deep cored into the rock surface may be used if approved by the engineer for post 1. Granular material will be placed in the bottom of the hole, approximately 2.5" deep to provide drainage. The first post can be field cut to length, placed in the hole and backfilled with suitable backfill. The soil plate may be trimmed if required.
5. The breakaway cable assembly must be taut. A locking device (vice grips or channel lock pliers) should be used to prevent the cable from twisting when tightening nuts.

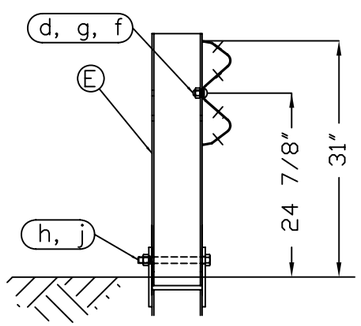

SECTION A-A
Post #2

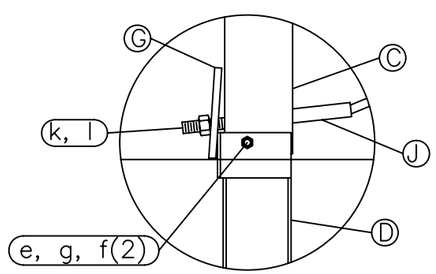

Post #1 Connection Detail

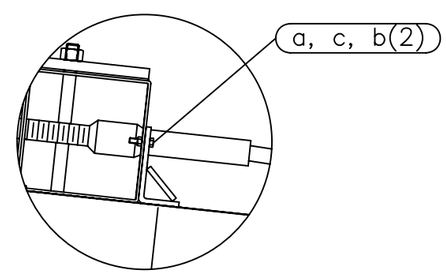

Impact Head Connection Detail

Road Systems, Inc.
Big Spring, TX
Phone: 432-263-2435
or Phone: 330-346-0721

FLEAT-SP-MGS Terminal
Midwest Guardrail System
31" Top of Rail

Sheet: 1
Date: 02/24/10
By: JRR
Drawing Name: FLT-SP-S-MGS
Scale: None
Rev: 0

OFFSET NOTES:
1) POST OFFSET DIMENSIONS ARE GIVEN TO THE CENTER OF THE TRAFFIC FACE OF POSTS, EXCEPT AT POSTS #7 & #8, WHERE DIMENSION IS TO CENTER OF THE TRAFFIC FACE OF THE BLOCKOUTS.
2) GUARDRAIL BETWEEN POST 1-7 IS ON A STRAIGHT LINE FLARE.

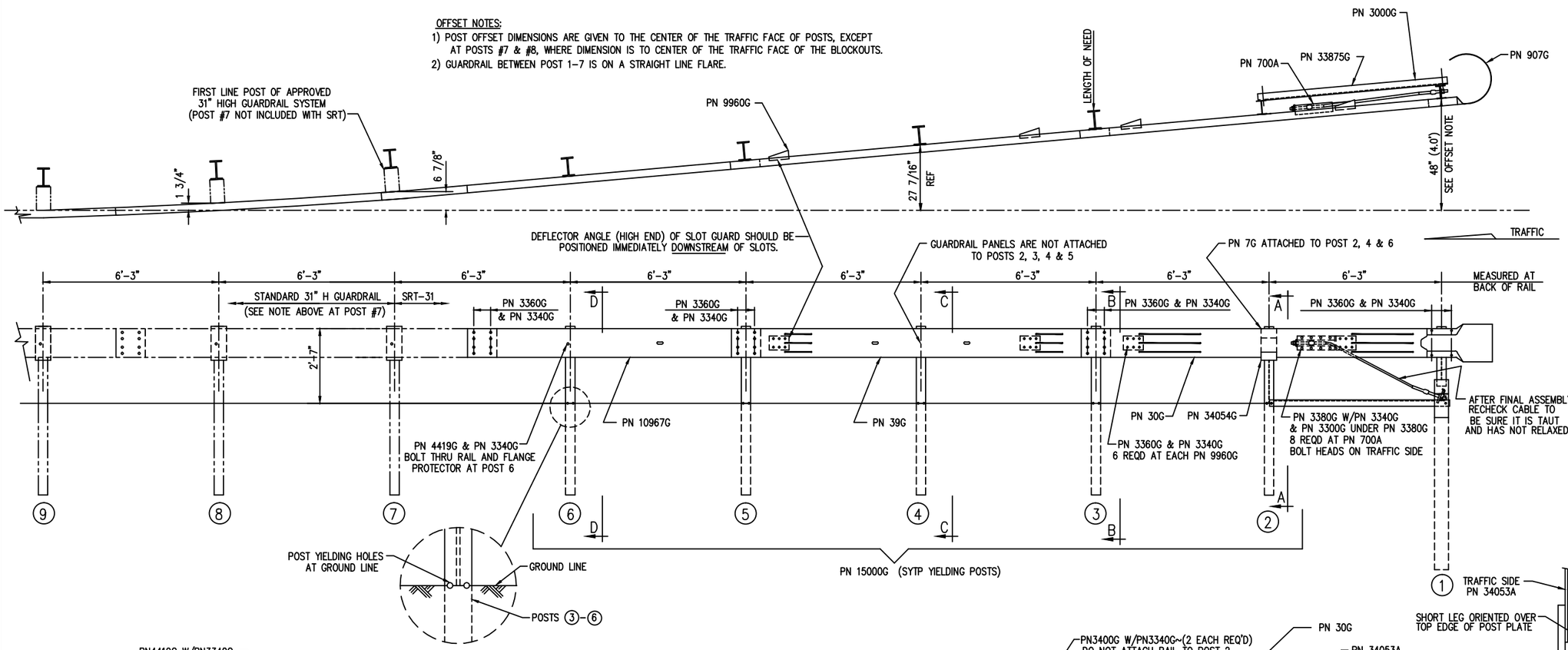

BILL OF MATERIAL

	PN	QTY	DESCRIPTION
	7G	3	12/6"/FLG PROTECTOR (AT POST 2, 4 & 6)
	30G	1	12/12'6/S SRT-1 (GUARDRAIL)
	39G	1	12/12'6/S SRT-2 (GUARDRAIL)
	700A	1	CABLE ANCHOR BRACKET
	907G	1	12/BUFFER/ROLLED (TERMINAL)
	3000G	1	3/4 x 6'-6" CABLE
HARDWARE	3240G	2	5/16" WASHER (AT POST 1)
HARDWARE	3245G	2	5/16" HEX NUT (AT POST 1)
HARDWARE	3300G	12	5/8" WASHER
HARDWARE	3340G	67	5/8" HEX HGR NUT
HARDWARE	3360G	52	5/8"ø x 1 1/4" HGR SPLICE BOLT
HARDWARE	3380G	8	5/8"ø x 1 1/2" HEX HD BOLT
HARDWARE	3400G	4	5/8"ø x 2" HGR POST BOLT (AT POSTS 1, 2 & 4)
HARDWARE	3391G	2	5/8"ø x 1 3/4" HEX BOLT (A325) (AT STRUT)
HARDWARE	3900G	2	1" WASHER (AT CABLE)
HARDWARE	3910G	2	1" HEX NUT (AT CABLE)
HARDWARE	4211G	2	5/16"ø x 1 3/4" HEX BOLT (AT POST 1)
HARDWARE	4419G	1	5/8"ø x 1 3/4" COUNTERSUNK HD BOLT (AT POST 6)
	9960G	4	SLOT GUARD BRACKET
	10967G	1	12/9'4.5/3'1.5/S SRT-3 (GUARDRAIL)
	15000G	5	6'-0" SYT POST (W6 X 8.5)
	33909G	1	CABLE ANCHOR BRACKET (AT POST 1)
	33875G	1	ANGLE STRUT 3 x 3 x 1/4
	34052A	1	CR POST 1 BOT (W6 x 15)
	34053A	1	CR POST 1 TOP (W6 x 8.5)
	34054G	1	POST SHELF ANGLE (AT POST 2)

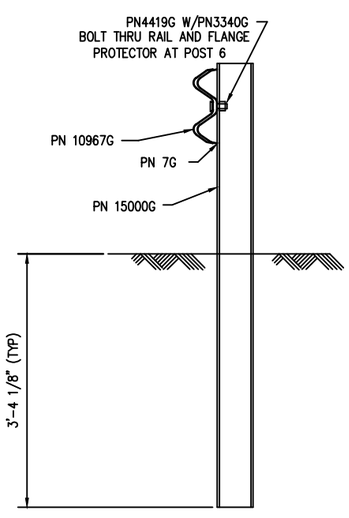

SECTION "D-D"
(@ POST #6)

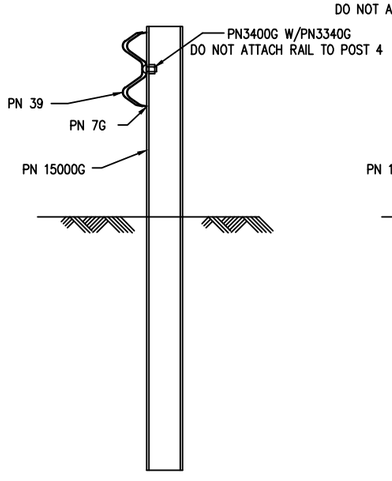

SECTION "C-C"
(@ POST #4)

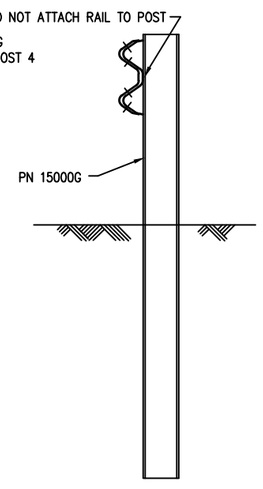

SECTION "B-B"
(@ POST #3 & #5)

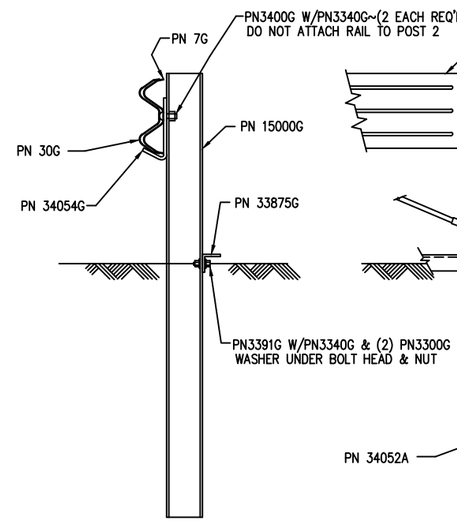

SECTION "A-A"
(@ POST #2)

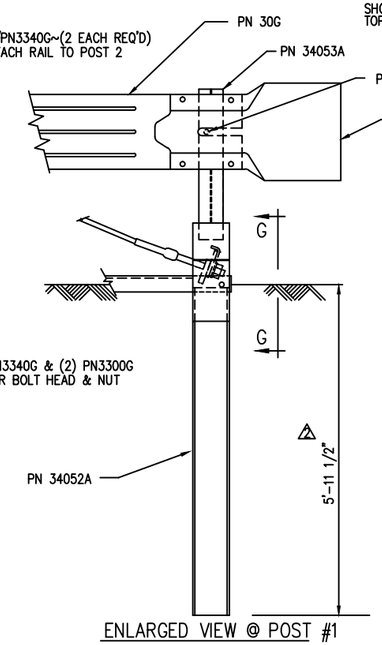

ENLARGED VIEW @ POST #1

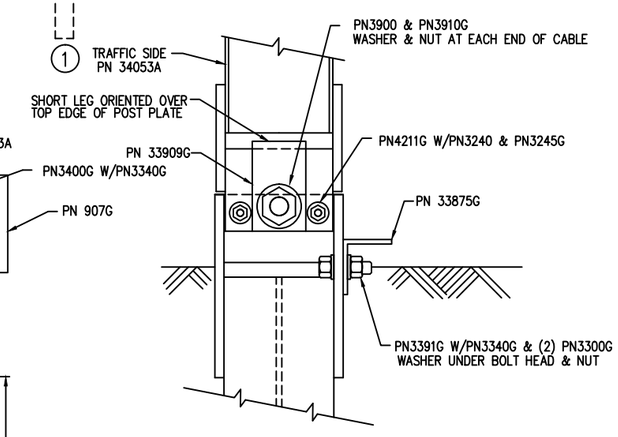

VIEW "G-G"
(@ POST #1)

REV.	CHK'D	BY	DATE	REMARKS
4	BT	LH	10/6/10	OFFSET POSTS #7 & #8
3	BT	LH	2/26/09	REVISED HARDWARE
2	SG	LH	7/28/08	REVISED POST #1 LENGTH IN GROUND
1	SG	LH	1/16/08	REVISED HARDWARE QUANTITY IN BILL OF MATERIAL

SRT-31

SLOTTED RAIL TERMINAL SRT-31 (31" H)
ERECTION DETAILS
(3 PANELS, CR AND SYT POSTS)

DRAWN	BT
CHECKED	SG
SCALE	NTS
DATE	10/30/07
ENG. FILE #	SS436-01E
SHT.No.	E1 OF 1
DRAWING NO.	SS 436
REV.	4

The drawings and the information shown thereon are copyrighted by Trinity Highway Products (2010) and the sole property of Trinity Highway Products. Neither the drawings nor such information is to be used for any purpose other than that for which it was specifically furnished from Trinity Highway Products, LLC., nor is any reproduction authorized without written permission.

TRINITY HIGHWAY PRODUCTS, LLC.
2525 STEMMONS FREEWAY
DALLAS, TX 75207

ITEM NO.	PART NUMBER	DESCRIPTION	QTY	UOM
1	BSI-1301252-KT	X-Tension Terminal Comp, 31 in	1	EACH
2	K070202	X-Tension Hardware Kit, GT,	1	EACH
3	K070206	X-Tension System Hardware Kit,	1	EACH
4	K070210	X-Tension GT Guardrail	1	EACH
5	B061100	BSI, I-Beam Post, Middle, X350	1	EACH
6	MANXT1	X-TENSION Installation Manual	1	EACH

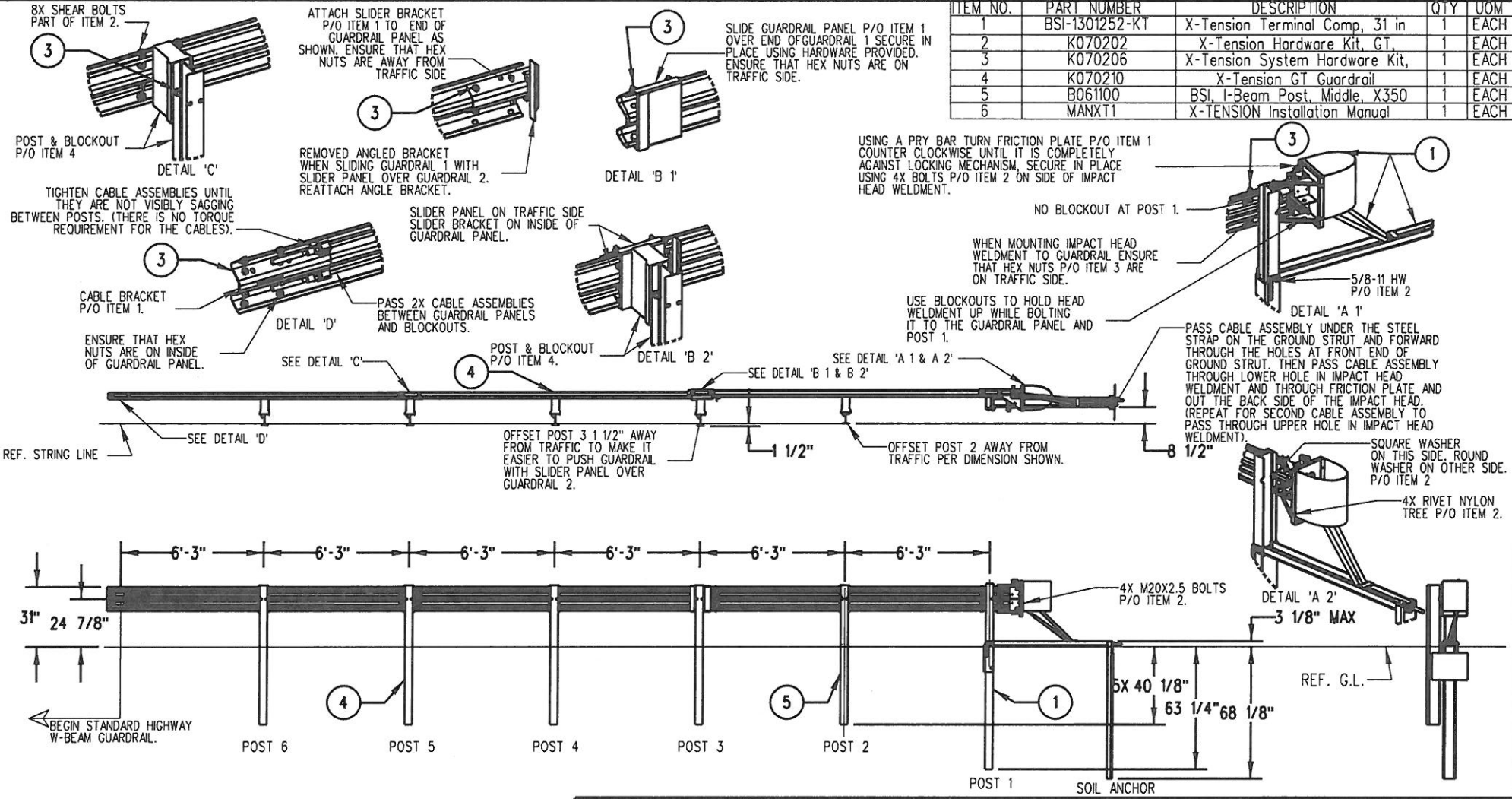

NOTES: UNLESS OTHERWISE SPECIFIED.

1. SYSTEM TO BE INSTALLED PER MANUFACTURER SPECIFICATIONS.
2. ONLY TIGHTEN THE CABLE ASSEMBLIES USING THE NUTS AT THE CABLE BRACKET (SEE DETAIL 'D'). DO NOT TIGHTEN THE CABLES AT THE FRONT OF THE GROUND ANCHOR.
3. WHEN DRIVING STEEL POST, ENSURE THAT A DRIVING CAP WITH TIMBER OR PLASTIC INSERT IS USED TO PREVENT DAMAGE TO THE GALVANIZING TO THE TOP OF THE POST.

© 2012 BARRIER SYSTEMS INC. THE INFORMATION CONTAINED IN THIS DRAWING IS THE SOLE PROPERTY OF BARRIER SYSTEMS INC. ANY REPRODUCTION IN PART OR WHOLE WITHOUT THE WRITTEN PERMISSION OF BARRIER SYSTEMS INC. IS PROHIBITED.

APPROVALS

DRAWN BY:	NMV
DRAWN DATE:	2/08/13
APPR'D BY:	JMT
APPR'D DATE:	2/08/13

UNLESS OTHERWISE SPECIFIED DIMENSIONS ARE IN INCHES. TOLERANCES ARE:
FRACTIONS ±1/16 DECIMAL .XX - ±.03 .XXX - ±.010 ANGLES ±1/2°
INTERPRET DIMENSIONS AND TOLERANCES PER ASME Y14.5-1994
THIRD ANGLE PROJECTION
DO NOT SCALE DRAWING

REV	ECN#	DATE
B	2067	03/02/15
A	2022	2/08/13

LINDSAY TRANSPORTATION SOLUTIONS™

BARRIER SYSTEMS INC.
3333 Vaca Valley Parkway Ste 800
Vacaville, CA 95688
Tel: 888-800-3691
www.barriersystemsinc.com

TITLE
X-TENSION GUARDRAIL TERMINAL SYSTEM STEEL POST WITH COMPOSITE BLOCKOUT 31" RAIL HEIGHT

SIZE	DWG NO.	REV.
B	XTGTSS5	B

SCALE 1:50 SHEET 1 OF 1

State of California
DEPARTMENT OF TRANSPORTATION

Business, Transportation and Housing Agency

M e m o r a n d u m

Flex your power!
Be energy efficient!

To: MR. ABDUL BAKER
Project Development
Design I, Branch A

Attention: Eltahir Ataelgeed

Date: September 6, 2013

File: 10-SJ-4-16.0/19.4
EA: 10-0X970
PID: 1013000014
CMS, CCTV

From: **DEPARTMENT OF TRANSPORTATION**
DIVISION OF ENGINEERING SERVICES
GEOTECHNICAL SERVICES – MS 5

Subject: Foundation Recommendations for Changeable Message Signs and CCTV poles

Introduction

Per your request, we are providing foundation recommendations for the 2 changeable message signs (CMS) and 2 closed-circuit television cameras (CCTV) proposed for the project referenced above. This report is for use by project design engineers, construction personnel, bidders and contractors. The proposed CMS's will be constructed using the Model 500 standard and the CCTV's will be constructed using the Type 40 and 45 standards as shown in the Caltrans Standard Plans (2010).

Pertinent Plans and Data

The following resources were used in the assessment of the site conditions for these recommendations:

1. The project plans dated August 21, 2013 provided by your office.
2. As–built exploratory borings (LOTB) completed in 1984 for Bridge No. 29-0269 R/L, Crosstown Freeway Viaduct.
3. LOTB completed in 1988 for Bridge No. 29-0305, Filbert Street OC.
4. LOTB completed in 1989 for Bridge No. 29-0310G, E4-N99 Connector Separation.
5. CA Department of Water Resources (DWR) water level well data.

CMS and CCTV Locations

The following table shows the locations for the proposed CMS and CCTV foundations and the above referenced bridge LOTB's utilized to characterize the subsurface conditions for pile recommendations:

Table 1

Type	Location	LOTB used	Boring Number
CMS #1, Model 500	1022+65	29-0269 R/L	B-36
CCTV #1 Model 40	1022+40	29-0269 R/L	B-36
CMS #2, Model 500	1093+90	29-0305	B-2
CCTV #2, Model 45	1108+15	29-0310G	B-1

Site Geology and Subsurface Conditions

<u>CMS #1 and CCTV #1</u>

The subsurface materials consist of medium dense to dense clayey silt, silty clay and minor amounts of fine sand.

<u>CMS #2</u>

The subsurface materials consist of dense clayey silt, silty clay and minor amounts of fine sand.

<u>CCTV #2</u>

The subsurface materials consist of very stiff to hard sandy clay and sandy silt.

Ground Water

A DWR well record (DWR Well No. 01N06E12G001M) indicates that regional groundwater was at an elevation of -20 feet in 2010. The LOTB's completed between 1984 and 1989 show groundwater elevations between -20 feet and -38 feet.

Groundwater is not expected to be a factor during construction.

Foundation Recommendations

The subsurface soils at the proposed CMS and CCTV locations exceed the minimum strength requirements for CIDH pile foundations for the minimum depths outlined in the 2010 Caltrans Standard Plans.

Table 2 lists the recommended foundation diameters and depths that should incorporated into the Project plans:

Table 2

Type	CIDH Diameter	Pile depth from FG
CMS #1	5 feet	22 feet
CCTV #1	2.5 feet	8.5 feet
CMS #2	5 feet	22 feet
CCTV #2	2.5 feet	8.5 feet

Construction Considerations

Although not expected to be required, if temporary casing is used by the Contractor during CIDH pile construction to mitigate any caving of fine-grained sands, it shall be removed while the concrete is being placed in order to develop pile capacity.

Project Information

This section discloses to bidders and contractors a list of pertinent information available for their inspection prior to bid opening. The following is information originating from Geotechnical Services.

Data and information attached with the project plans are:

A. None.

Data and Information included in the Information Handout provided to the bidders and Contractors are:

Foundation Recommendations for Changeable Message Signs and CCTV poles, Dated September 6, 2013

Data and Information available for inspection at the District Office:

None

Data and Information available for inspection at the Transportation Laboratory are:

None

If any conceptual changes are proposed during final project design, the Office of Geotechnical Design – North should review those changes to determine if the foundation recommendations contained herein are still applicable.

If you have any questions or comments, or need additional information please contact Christopher Koepke at (916) 227-1040.

Report submitted by:

Christopher Koepke
Engineering Geologist – Range D
Office of Geotechnical Design – North
Branch E

Attachments: Referenced LOTB's

cc: Qiang Huang
GS Archive
D10 DME: Ted Mooradian

DIST.	COUNTY	ROUTE	POST MILES—TOTAL PROJECT	SHEET NO.	TOTAL SHEETS
10	SJ	4	R17.1/R17.7	128	151

Robert L. O. Reynolds #165
ENGINEERING GEOLOGIST — CERTIFIED ENGINEERING GEOLOGIST NUMBER

DATE APPROVED September 23, 1985

LEGEND OF BORING OPERATIONS

LEGEND OF EARTH MATERIALS

CONSISTENCY CLASSIFICATION FOR SOILS

According to the Standard Penetration Test

NOTE: Classification of earth material as shown on this sheet is based upon field inspection and is not to be construed to imply mechanical analysis.

UNIFIED SOIL CLASSIFICATION SYSTEM

BENCH MARK
See sheet "2 of 8"

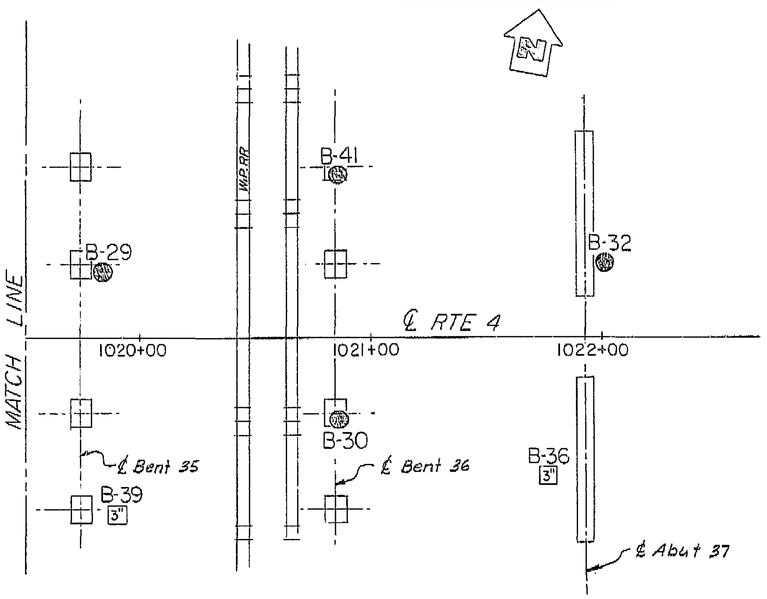

PLAN
1" = 30'

AS BUILT PLANS
Contract No. 10-335904
Date Completed 01/16/88
Document No.

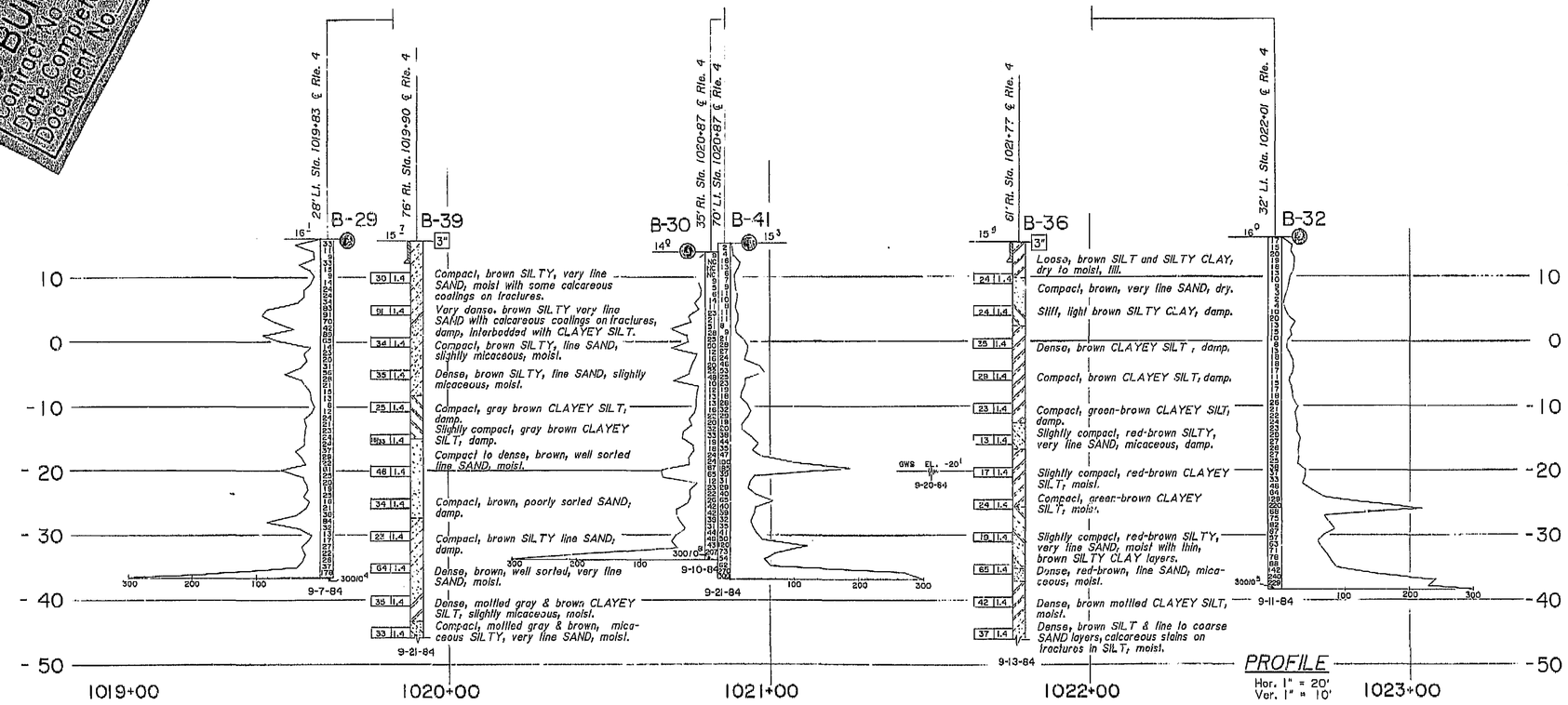

PROFILE
Hor. 1" = 20'
Ver. 1" = 10'

NO AS BUILT CHANGES
AS BUILT PL 9/28/88
CORRECTIONS BY A.R. Petroni
CONTRACT NO. 10-335904
DATE 01/22/88

128

GEOTECHNICAL BRANCH - TRANSPORTATION LABORATORY

DRAWN BY	ED FONG - I. HOWELL	12/84	Approval Recommended By
CHECKED BY	RLR	1/85	PROJECT ENGINEER: Ronald L. Rickman; ENGINEER: K.A. Jackson 22013

CHARGE UNIT | EXPEND. AUTHOR. | SPEC. DESIGN.

State of CALIFORNIA DEPARTMENT OF TRANSPORTATION

STRUCTURES - DESIGN 12
PROJECT ENGINEER: D.R. Moore — REGISTERED CIVIL ENGINEER NO. 31146

BRIDGE NO. 29-269 R/L
POST MILE 17.1

CROSSTOWN FREEWAY VIADUCT
LOG OF TEST BORINGS 8 OF 8

ORIGINAL SCALE IN INCHES FOR REDUCED PLANS 0 1 2 3

CU 10102
WO 335901

Disregard prints bearing earlier revision dates

REVISION DATES (PRELIMINARY STAGE ONLY) 3/11/85 9/6/85

SHEET 57 OF 57

I HEREBY CERTIFY THAT THIS IS A TRUE AND ACCURATE COPY OF THE ABOVE DOCUMENT TAKEN UNDER MY DIRECTION AND CONTROL ON THIS DATE IN SACRAMENTO, CALIFORNIA PURSUANT TO AUTHORIZATION BY THE DIRECTOR OF TRANSPORTATION.
DATE 2-17-89 SIGNATURE Donald Blackford TITLE SUPERVISOR OF MICROFILM SERVICES

MICROFILM - STATE OF CALIFORNIA - DEPARTMENT OF TRANSPORTATION - MICROFILM
SCALE 1" = 50' SCALE 1" = 20' SCALE 1" = 10' or 1" = 100' SCALE 1" = 40'

ClibPDF - www.fastio.com

DIST.	COUNTY	ROUTE	POST MILES TOTAL PROJECT	SHEET NO.	TOTAL SHEETS
10	SJ	4	R17.7/R19.5	201	279

R.C. Wilhelms CEG No. 560
REGISTERED · CERTIFIED ENGINEERING GEOLOGIST
1-16-90
PLANS APPROVAL DATE

REGISTERED GEOLOGIST — R.C. WILHELMS — No. 1719 — Exp. 6/30/90 — STATE OF CALIFORNIA

NO AS BUILT CORRECTIONS

AS BUILT
CORRECTIONS BY B. NELSEN
CONTRACT NO. 10-335921
DATE 1-20-93

LEGEND OF BORING OPERATIONS

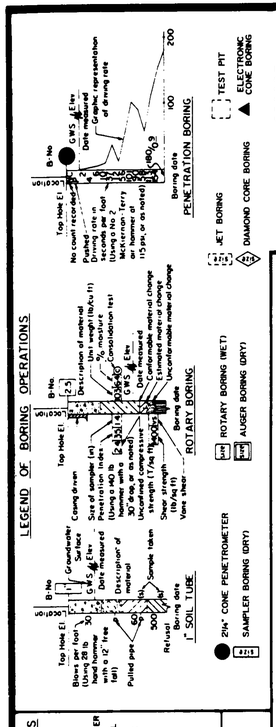

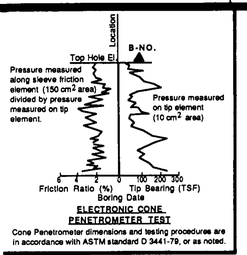

ELECTRONIC CONE PENETROMETER TEST
Cone Penetrometer dimensions and testing procedures are in accordance with ASTM standard D 3441-79, or as noted.

LEGEND OF EARTH MATERIALS

GRAVEL; SAND; SILT; CLAY; SANDY CLAY or CLAYEY SAND; SANDY SILT or SILTY SAND; SILTY CLAY or CLAYEY SILT; PEAT and/or ORGANIC MATTER; FILL MATERIAL; IGNEOUS ROCK; SEDIMENTARY ROCK; METAMORPHIC ROCK

NOTE: Classification of earth material as shown on this sheet is based upon field inspection and is not to be construed to imply mechanical analysis.

CONSISTENCY CLASSIFICATION FOR SOILS

According to the Standard Penetration Test

Penetration Index (Blows/Ft)	Granular	Cohesive
0-4	Very loose	Very soft
5-9	Loose	Soft
10-19	Slightly compact	Stiff
20-34	Compact	Very stiff
35-69	Dense	Hard
> 70	Very dense	Very hard

UNIFIED SOIL CLASSIFICATION SYSTEM

Major Divisions	Group Symbols	Typical Names	Group Symbols	Typical Names
Gravels: Clean gravels (Little or no fines)	GW	Well graded gravels, gravel sand mixtures, little or no fines	GM	Silty gravels, gravel sand silt mixtures
Gravels: Clean gravels (Little or no fines)	GP	Poorly graded gravels, or gravel sand mixtures, little or no fines	GC	Clayey gravels, gravel sand clay mixtures
Sands: Clean sands (Little or no fines)	SW	Well graded sands, gravelly sands, little or no fines	SM	Silty sands, sand silt mixtures
Sands: Clean sands (Little or no fines)	SP	Poorly graded sands, or gravelly sands, little or no fines	SC	Clayey sands, sand clay mixtures

Coarse grained Soils

Major Divisions	Group Symbols	Typical Names	Group Symbols	Typical Names
Silts and Clays (Liquid limit less than 50)	ML	Inorganic silts and very fine sands, rock flour, silty or clayey fine sands, or clayey silts with slight plasticity	MH	Inorganic silts, micaceous or diatomaceous fine sand or silty soils, elastic silts
Silts and Clays (Liquid limit less than 50)	CL	Inorganic clays of low to medium plasticity, gravelly clays, sandy clays, silty clays, lean clays	CH	Inorganic clays of high plasticity, fat clays
Silts and Clays (Liquid limit less than 50)	OL	Organic silts and organic silty clays of low plasticity	OH	Organic clays of medium to high plasticity, organic silts
Highly Organic Soils	Pt	Peat and other highly organic soils		

Fine grained Soils

BENCH MARK

BM Elev. 20.76
Fd. Mon. 159A, spike and 2" disk in roadway; NE corner Filbert and Myrtle St.

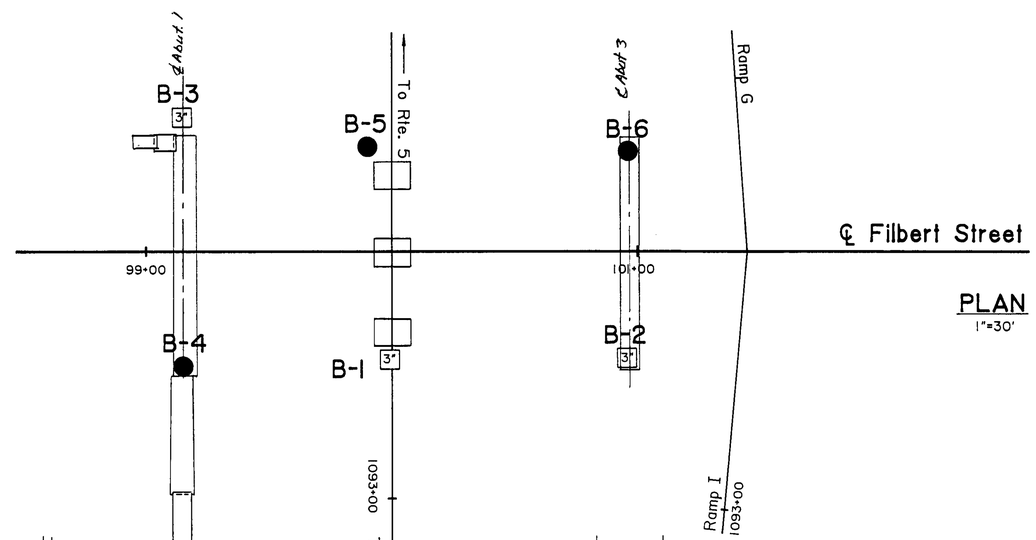

PLAN
1"=30'

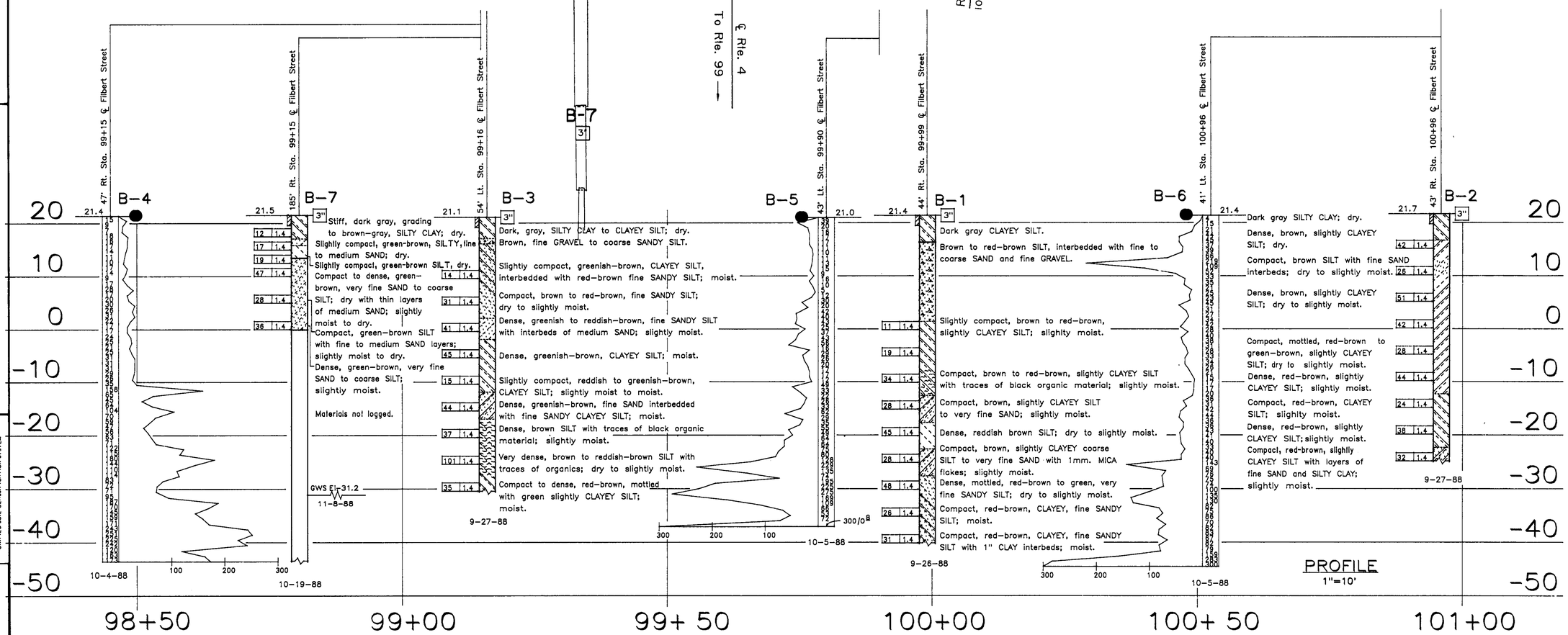

PROFILE
1"=10'

ENGINEERING GEOLOGY BRANCH - TRANSPORTATION LABORATORY		
DRAWN BY	JOHN L. THORNE	12/88
CHECKED BY		

PROJECT GEOLOGIST

State of CALIFORNIA DEPARTMENT OF TRANSPORTATION

STRUCTURES - DESIGN
PROJECT ENGINEER / REGISTERED CIVIL ENGINEER NO.7

BRIDGE NO. 29-305
POST MILE 18.8

FILBERT STREET O.C.
LOG OF TEST BORINGS

ORIGINAL SCALE IN INCHES FOR REDUCED PLANS 0 1 2 3

CU 10200
EA 335921

Disregard prints bearing earlier revision dates

REVISION DATES (PRELIMINARY STAGE ONLY) 10/6/89

SHEET 15 OF 15

BS 8148 REV. 3/88

ClibPDF - www.fastio.com

DIST.	COUNTY	ROUTE	POST MILES TOTAL PROJECT	SHEET NO.	TOTAL SHEETS
10	SJ	4,99	R17.6/R19.5, 17.8/19.2	220	263

H. R. Taber
CERTIFIED ENGINEERING GEOLOGIST

1-27-92
PLANS APPROVAL DATE

REGISTERED GEOLOGIST — H. R. TABER — No. 12 — Exp. 6-30-90 — CERTIFIED ENGINEERING GEOLOGIST — STATE OF CALIFORNIA

TABER CONSULTANTS
536 Galveston Street
West Sacramento, CA 95691

JOB No. IP1/388/72-17

Field Study By: C.J. Connor

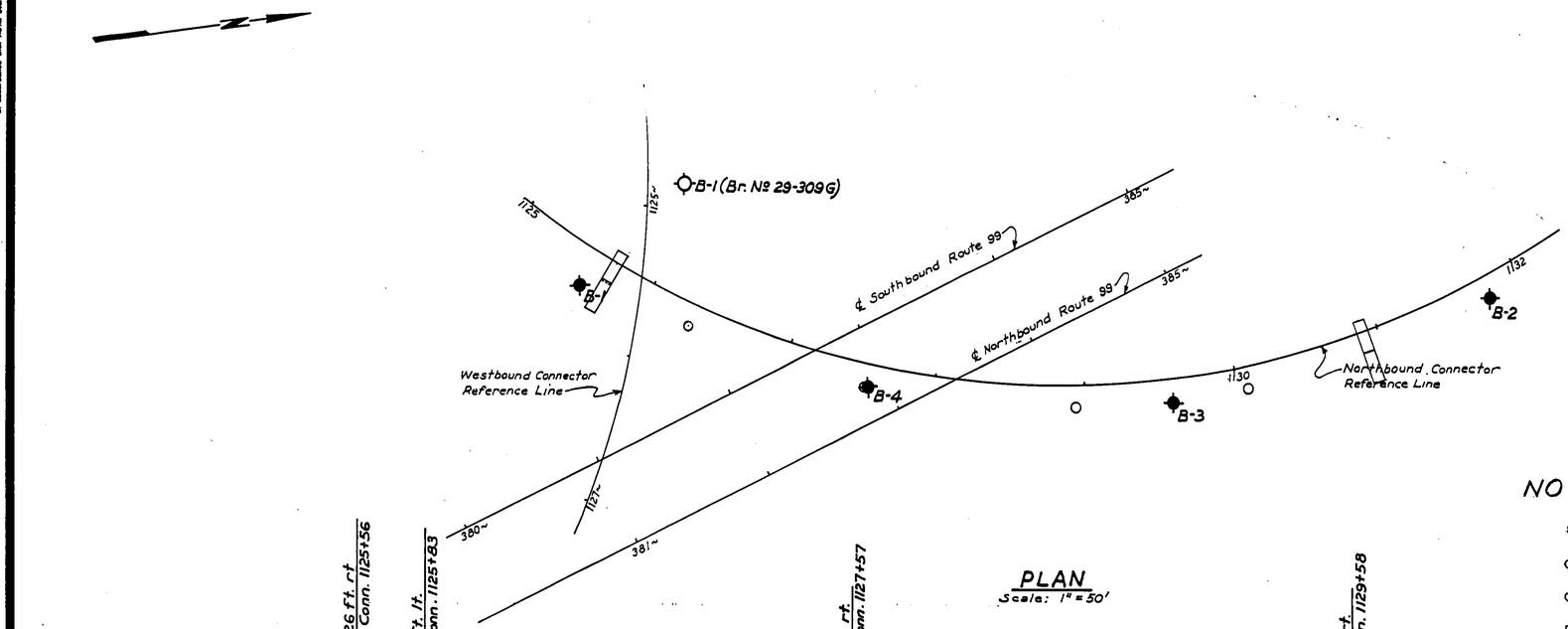

PLAN
Scale: 1" = 50'

Elevation Reference:
Mon. 423-39.01' rt 380+81.1 ℄ Northbound Route 99
RK. nail in traffic island at No. bnd. Rte 99 and Washington, flush with pavement.
Elev. 27.49 - Caltrans datum

NO AS BUILT CHANGES
AS BUILT FRS 6-27-94
CORRECTIONS BY STEPHEN POZZO
CONTRACT NO. 10-335954
DATE 12-93

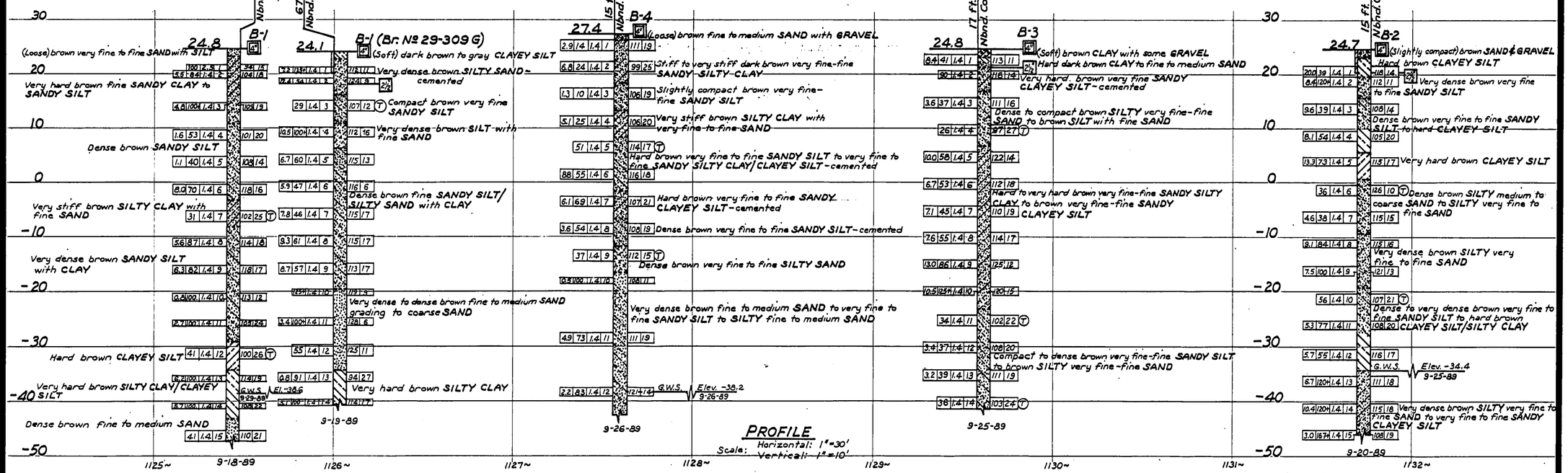

PROFILE
Scale: Horizontal: 1" = 30'
Vertical: 1" = 10'

Scale: As shown

LEGEND OF BORING OPERATIONS

LEGEND OF EARTH MATERIALS: GRAVEL, SAND, SILT, CLAY, PEAT and/or ORGANIC MATTER, FILL MATERIAL, SANDY CLAY or CLAYEY SAND, SANDY SILT or SILTY SAND, SILTY CLAY, IGNEOUS ROCK, SEDIMENTARY ROCK, METAMORPHIC ROCK

CONSISTENCY CLASSIFICATION FOR SOILS — According to the Standard Penetration Test

Penetration Value (Blows/FT)	Granular	Cohesive
0-4	Very loose	Very soft
5-9	Loose	Soft
10-19	Slightly compact	Stiff
20-34	Compact	Very stiff
35-69	Dense	Hard
>70	Very dense	Very hard

NOTE: Classification of earth material as shown on this sheet is based upon field inspection and is not to be construed to imply mechanical analysis.

ENGINEERING GEOLOGY BRANCH - TRANSPORTATION LABORATORY

DRAWN BY J.O.D. 10-89
CHECKED BY C.J.C. 10-89

Paul Snyder, PROJECT ENGINEER

PREPARED FOR: State of CALIFORNIA DEPARTMENT OF TRANSPORTATION

DIVISION OF STRUCTURES
STRUCTURE DESIGN

BRIDGE NO. 29-310G
POST MILE 19.4

NORTHBOUND CONNECTOR SEPARATION
LOG OF TEST BORINGS

ORIGINAL SCALE IN INCHES FOR RECORD PLANS 0 1 2 3

CU 10200
EA 335951

DISREGARD PRINTS BEARING EARLIER REVISION DATES

REVISION DATES (PRELIMINARY STAGE ONLY)

SHEET 15 OF 15

TL 6052 REV. 4/89

ClibPDF - www.fastio.com

Dhillon, Pawanjit K@DOT

From: Allen, Stacie L. <SAllen@calwater.com>
Sent: Thursday, May 14, 2015 2:09 PM
To: Dhillon, Pawanjit K@DOT
Cc: Marin, Susana
Subject: FW: 10-0X9701, Cross-Town Automated Warning System
Attachments: 1013000114ab001.pdf; Fire Hydrant Meter Rental Instructions.docx

Here are our instructions for hydrant meter rentals.

Thanks,

Stacie

From: Dhillon, Pawanjit K@DOT [mailto:pawanjit.dhillon@dot.ca.gov]
Sent: Thursday, May 14, 2015 2:06 PM
To: Allen, Stacie L.
Cc: Baker, Abdul H@DOT; Gill, Gurjot@DOT
Subject: RE: 10-0X9701, Cross-Town Automated Warning System

Hi Stacy,

Per our conversation, can you please send me the water rates and the application process guidelines to rent a construction meter for 'Cross-town Automated Warning System' project. Project location map is attached for your reference.

Thanks.

Pawanjit Dhillon
(559) 243-3853
*_ _*_ _*_ _*_ _*_ _*_ _*_ _*_ _*_ _*_ _*_ _*_ _*
|^^^^^^^^^^^^^^^^||L__
I Cal-Trans _|||L _ _ _
I_..__..__._..__.===|=|_ _|__]+]
(@) '(@) ; ; "" (@)""[redacted]**(@)

Stacie Allen
Operations Clerk
CALIFORNIA WATER SERVICE
209-464-8311

Quality. Service. Value.
calwater.com

This e-mail and any of its attachments may contain California Water Service Group proprietary information and is confidential. This e-mail is intended solely for the use of the individual or entity to which it is addressed. If you are not the intended recipient of this e-mail, please notify the sender immediately by replying to this e-mail and then deleting it from your system.

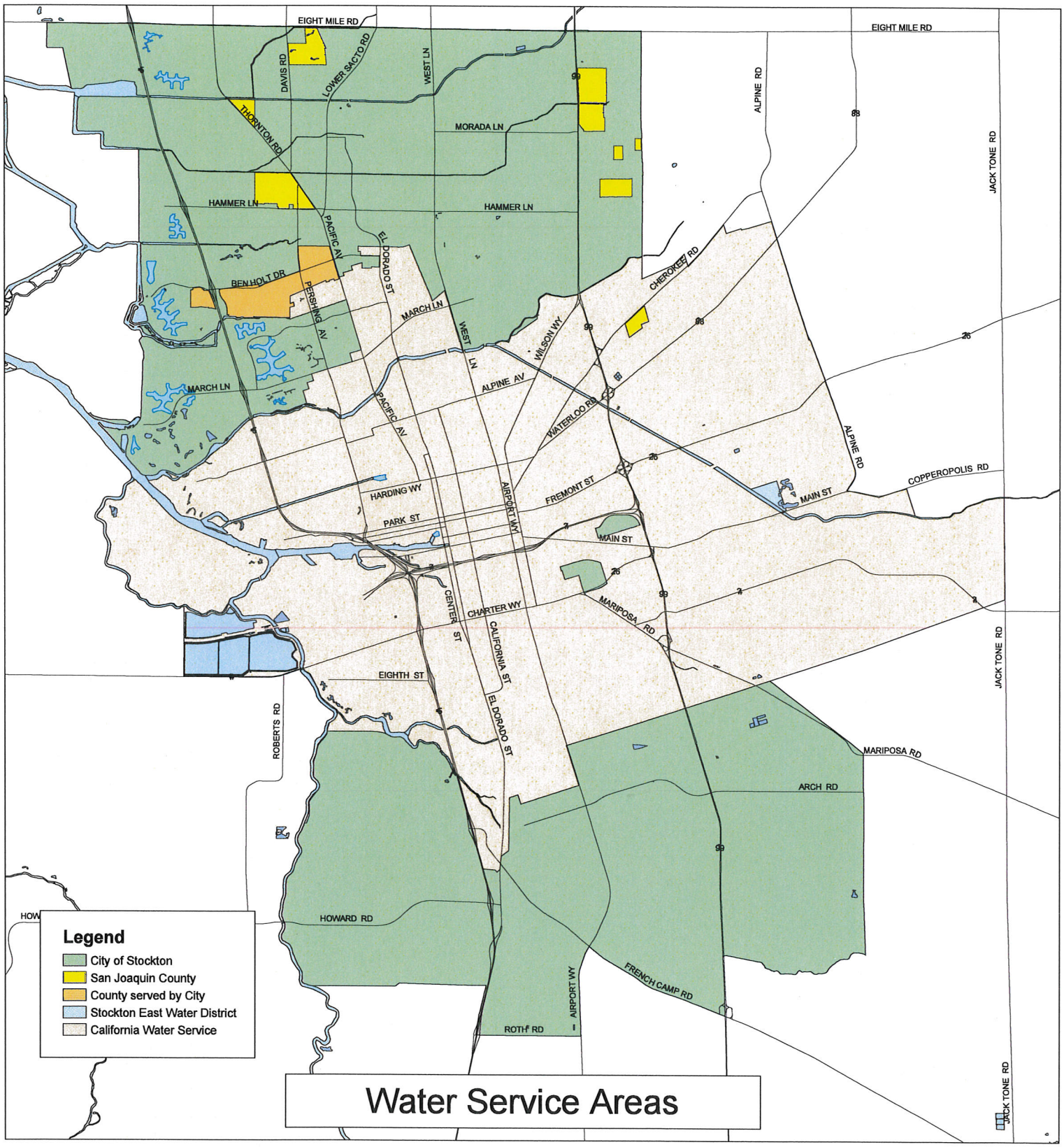

Water Service Areas

In order to obtain a hydrant meter from our Company you will need to bring in the following to our Operations Center located at 1602 E Lafayette St., Stockton, CA. Since our facility is a secured site, you will need to call (209) 464-8311 when at our gate for access to our building:

- **A check made payable to California Water Service Company in the amount of $900 for the rental deposit.**
- **A spanner wrench**
- **The location of the hydrant to be used**
- **The address where the water is going to be used**
- **Your Company Business Card**

Our Company charges $151.38 per month for the hydrant meter and $2.11 per ccf of water used for the first 30,000 ccf and $1.88 per ccf after that. If the meter is not used for a full month, the charges will be pro-rated. Once the meter is returned and after all final charges have been calculated, either a final bill or a refund check will be sent to the customer.

NOTE: A Reduced Pressure Principle (RPP) Device will need to be installed immediately after the meter when involving chemicals.

Dist	COUNTY	ROUTE	POST MILES TOTAL PROJECT	SHEET No.	TOTAL SHEETS
10	SJ	4,99	16.0/19.4,18.5	1	94

STATE OF CALIFORNIA

DEPARTMENT OF TRANSPORTATION

PROJECT PLANS FOR CONSTRUCTION ON

STATE HIGHWAY

IN SAN JOAQUIN COUNTY
IN STOCKTON
ON ROUTE 4 FROM UNION STREET UNDERCROSSING TO ROUTE 99 AND ON ROUTE 99 AT ROUTE 4/99 SEPERATION

TO BE SUPPLEMENTED BY STANDARD PLANS DATED 2010

INDEX OF PLANS

SHEET No.	DESCRIPTION
1	TITLE AND LOCATION MAP
2-3	TYPICAL CROSS SECTIONS
4-9	LAYOUTS
10-12	CONSTRUCTION DETAILS
13-28	UTILITY PLANS
29	CONSTRUCTION AREA SIGNS
30-33	TRAFFIC HANDLING PLANS AND QUANTITIES
34	SUMMARY OF QUANTITIES
35-36	PAVEMENT DELINEATION PLANS
37-69	ELECTRICAL PLANS
70-94	REVISED STANDARD PLANS

STRUCTURE PLANS

XX-XXX AIRPORT WAY UC, Br No. 29-300
XXX-XXX WILSON WAY UC, Br No. 29-306

THE STANDARD PLANS LIST APPLICABLE TO THIS CONTRACT IS INCLUDED IN THE NOTICE TO BIDDERS AND SPECIAL PROVISIONS BOOK.

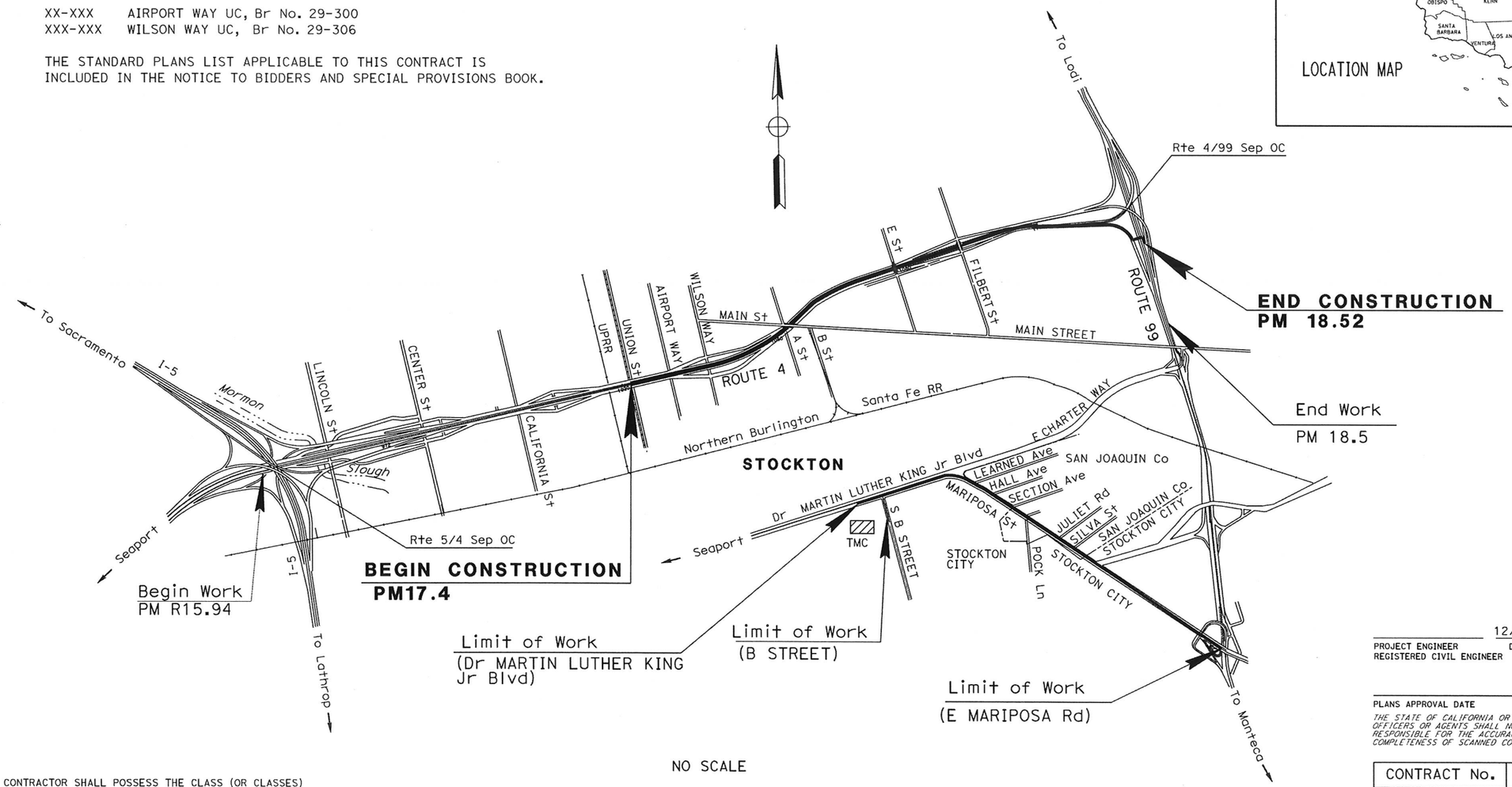

NO SCALE

THE CONTRACTOR SHALL POSSESS THE CLASS (OR CLASSES) OF LICENSE AS SPECIFIED IN THE "NOTICE TO BIDDERS."

PROJECT MANAGER ROBERT NAVARRO
DESIGN ENGINEER ABDUL BAKER

12/27/15
PROJECT ENGINEER REGISTERED CIVIL ENGINEER DATE

REGISTERED PROFESSIONAL ENGINEER GURJOT GILL No. 71647 Exp. 12/31/15 CIVIL STATE OF CALIFORNIA

PLANS APPROVAL DATE

THE STATE OF CALIFORNIA OR ITS OFFICERS OR AGENTS SHALL NOT BE RESPONSIBLE FOR THE ACCURACY OR COMPLETENESS OF SCANNED COPIES OF THIS PLAN SHEET.

DATE PLOTTED => 14-MAY-2015
TIME PLOTTED => 14:04

CONTRACT No.	10-0X9704
PROJECT ID	1013000114

LAST REVISION 05-05-15