Dist	COUNTY	ROUTE	POST MILES TOTAL PROJECT	SHEET No.	TOTAL SHEETS
10	SJ	4,99	16.0/19.4,18.5	1	112

ACNHP-X077(024)E

STATE OF CALIFORNIA
DEPARTMENT OF TRANSPORTATION

PROJECT PLANS FOR CONSTRUCTION ON
STATE HIGHWAY
AND CITY STREET
IN SAN JOAQUIN COUNTY
IN STOCKTON
ON ROUTE 4 FROM UNION STREET UNDERCROSSING TO ROUTE 99 AND ON ROUTE 99 AT ROUTE 4/99 SEPERATION

TO BE SUPPLEMENTED BY STANDARD PLANS DATED 2010

INDEX OF PLANS

SHEET No.	DESCRIPTION
1	TITLE AND LOCATION MAP
2-3	TYPICAL CROSS SECTIONS
4-9	LAYOUTS
10-12	CONSTRUCTION DETAILS
13-28	UTILITY PLANS
29	CONSTRUCTION AREA SIGNS
30-34	TRAFFIC HANDLING PLANS AND QUANTITIES
35-36	PAVEMENT DELINEATION PLANS
37-38	SUMMARY OF QUANTITIES
39-74	ELECTRICAL PLANS
75-103	REVISED STANDARD PLAN

STRUCTURE PLANS

104-107	AIRPORT WAY UC, Br No. 29-0300R
108-111	WILSON WAY UC, Br No. 29-0306R
112	CROSSTOWN FREEWAY VIADUCT

THE STANDARD PLANS LIST APPLICABLE TO THIS CONTRACT IS INCLUDED IN THE NOTICE TO BIDDERS AND SPECIAL PROVISIONS BOOK.

LOCATION MAP

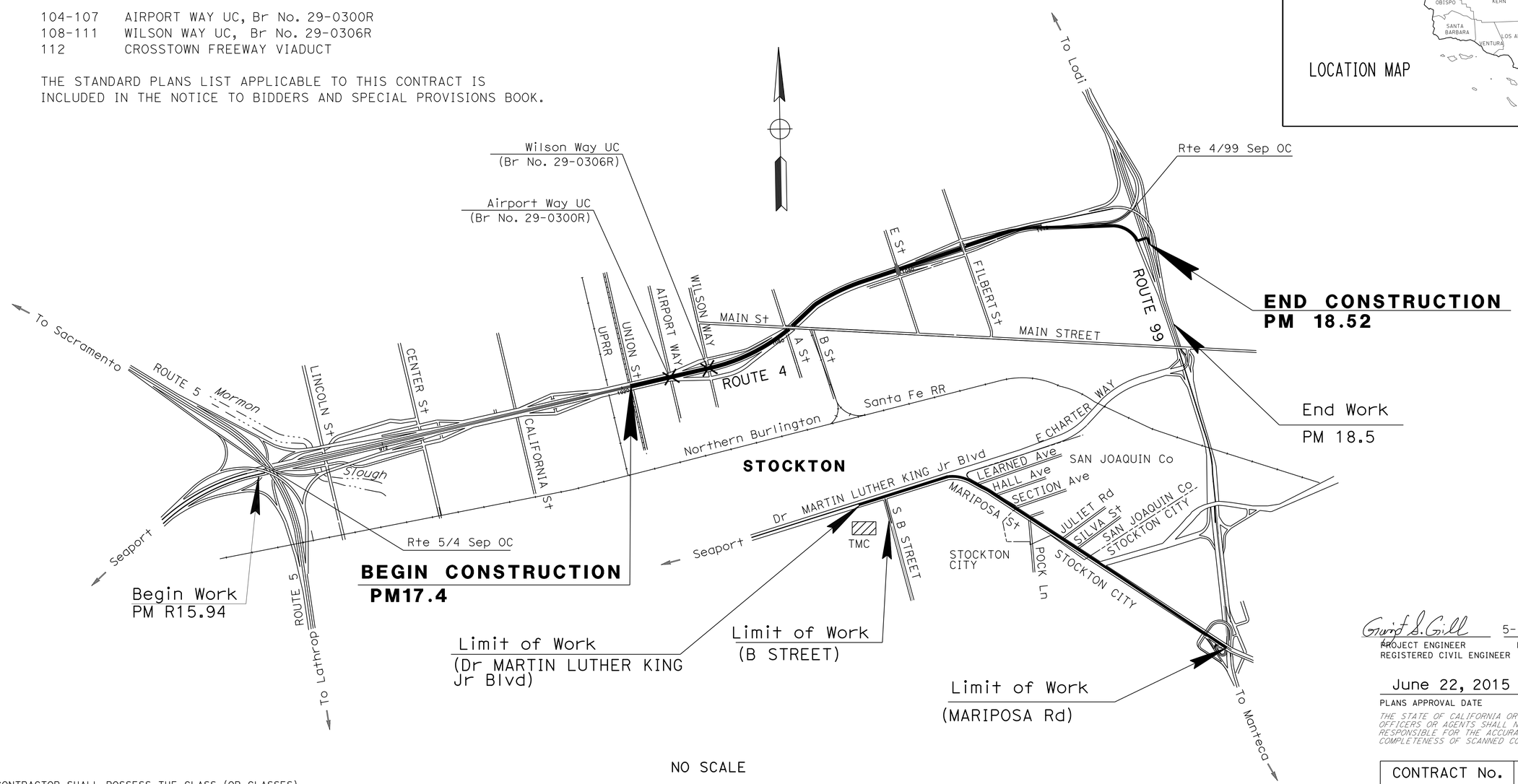

NO SCALE

THE CONTRACTOR SHALL POSSESS THE CLASS (OR CLASSES) OF LICENSE AS SPECIFIED IN THE "NOTICE TO BIDDERS."

Gurjot S. Gill 5-22-15
PROJECT ENGINEER DATE
REGISTERED CIVIL ENGINEER

June 22, 2015
PLANS APPROVAL DATE

REGISTERED PROFESSIONAL ENGINEER GURJOT GILL No. 71647 Exp. 12-31-15 CIVIL STATE OF CALIFORNIA

THE STATE OF CALIFORNIA OR ITS OFFICERS OR AGENTS SHALL NOT BE RESPONSIBLE FOR THE ACCURACY OR COMPLETENESS OF SCANNED COPIES OF THIS PLAN SHEET.

PROJECT MANAGER ROBERT NAVARRO
DESIGN ENGINEER ABDUL BAKER

CONTRACT No.	10-0X9704
PROJECT ID	1013000114

LAST REVISION 05-05-15
DATE PLOTTED => 04-SEP-2015
TIME PLOTTED => 14:06

Dist	COUNTY	ROUTE	POST MILES TOTAL PROJECT	SHEET No.	TOTAL SHEETS
10	SJ	4,99	16.0/19.4,18.5	2	112

REGISTERED CIVIL ENGINEER 5-22-15 DATE

6-22-15
PLANS APPROVAL DATE

REGISTERED PROFESSIONAL ENGINEER GURJOT GILL No. 71647 Exp. 12-31-15 CIVIL STATE OF CALIFORNIA

THE STATE OF CALIFORNIA OR ITS OFFICERS OR AGENTS SHALL NOT BE RESPONSIBLE FOR THE ACCURACY OR COMPLETENESS OF SCANNED COPIES OF THIS PLAN SHEET.

NOTES:

1. DIMENSION OF THE PAVEMENT STRUCTURES (STRUCTURAL SECTIONS) ARE SUBJECT TO TOLERANCES SPECIFIED IN STANDARD SPECIFICATIONS.
2. FOR LOCATIONS OF COLD PLANE, CONCRETE BARRIER, MGS AND THRIE BEAM BARRIER ARE SHOWN ON LAYOUT SHEETS.

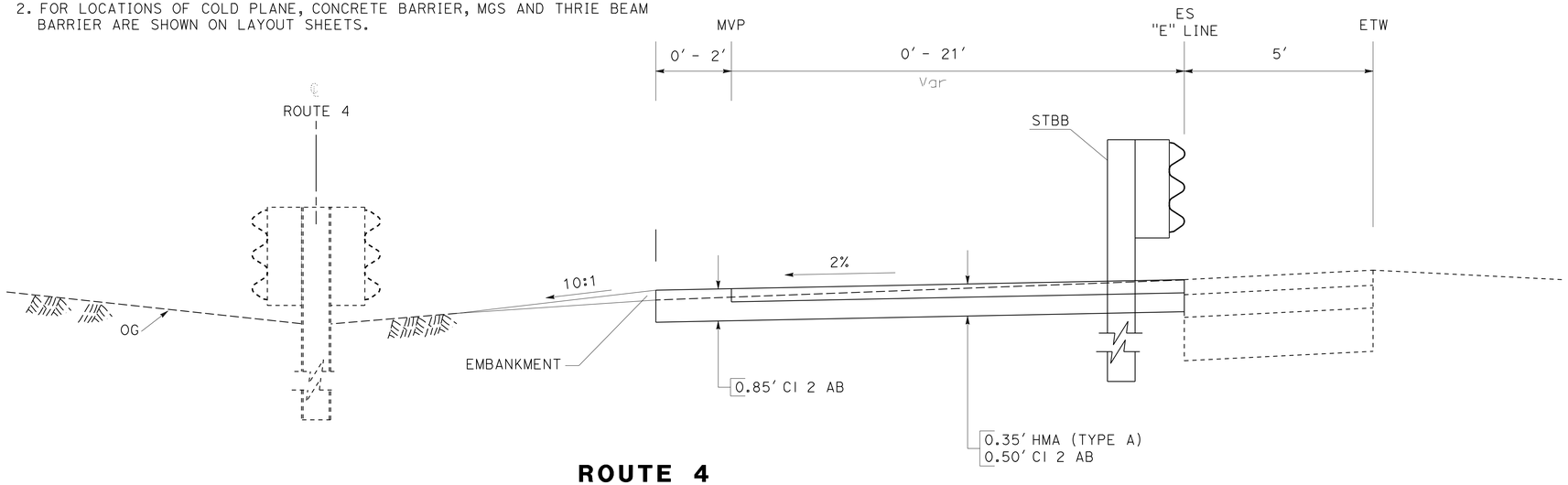

ROUTE 4
EASTBOUND
Sta 10+35 TO Sta 11+85
"E" LINE LOCATION 1

DESIGN DESIGNATION

2014	ADT	104,800	DHV	10,500
2034	ADT	198,800	DHV	19,900
D	55%		T	9%

PAVEMENT CLIMATE REGION

INLAND VALLEY

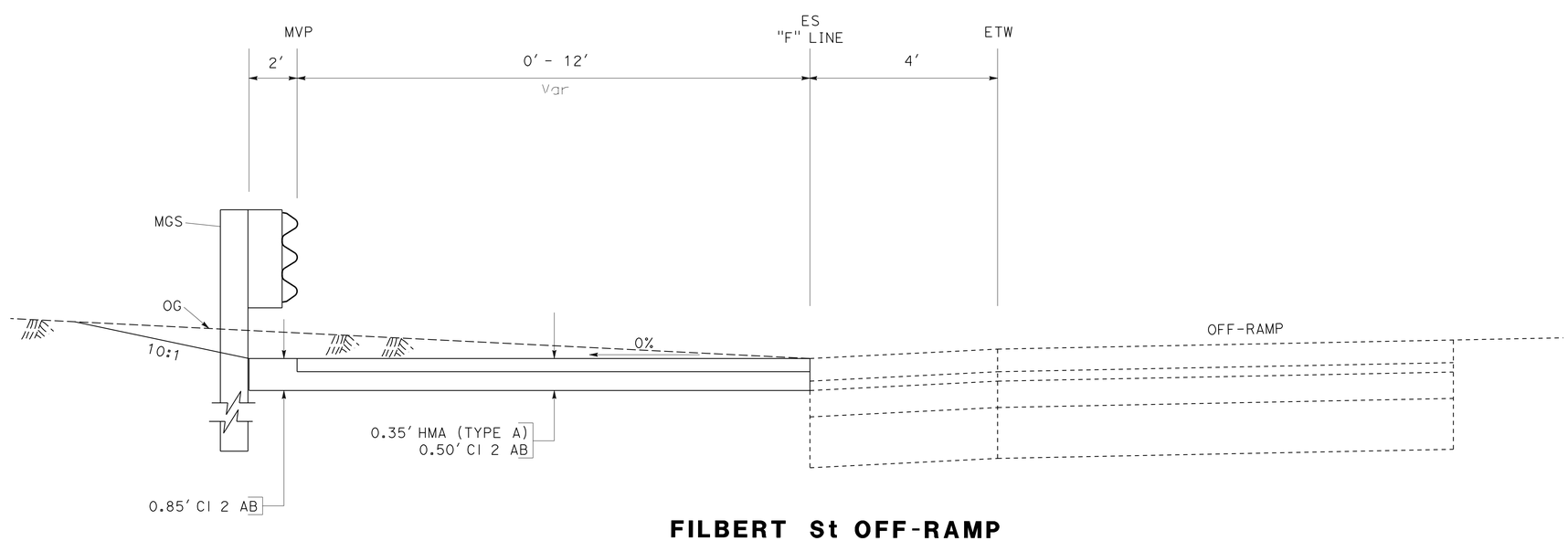

FILBERT St OFF-RAMP
WESTBOUND
Sta 16+55 TO Sta 17+40
"F" LINE LOCATION 2

TYPICAL CROSS-SECTIONS

NO SCALE

X-1

REVISED BY | DATE REVISED
GURJOT GILL | ABDUL BAKER
CALCULATED-DESIGNED BY | CHECKED BY
FUNCTIONAL SUPERVISOR: ABDUL BAKER

STATE OF CALIFORNIA - DEPARTMENT OF TRANSPORTATION
Caltrans
06-DESIGN

LAST REVISION 05-20-15 | DATE PLOTTED => 04-SEP-2015 | TIME PLOTTED => 14:06

Dist	COUNTY	ROUTE	POST MILES TOTAL PROJECT	SHEET No.	TOTAL SHEETS
10	SJ	4,99	16.0/19.4,18.5	3	112

REGISTERED CIVIL ENGINEER 5-22-15 DATE

6-22-15
PLANS APPROVAL DATE

REGISTERED PROFESSIONAL ENGINEER GURJOT GILL No. 71647 Exp. 12-31-15 CIVIL STATE OF CALIFORNIA

THE STATE OF CALIFORNIA OR ITS OFFICERS OR AGENTS SHALL NOT BE RESPONSIBLE FOR THE ACCURACY OR COMPLETENESS OF SCANNED COPIES OF THIS PLAN SHEET.

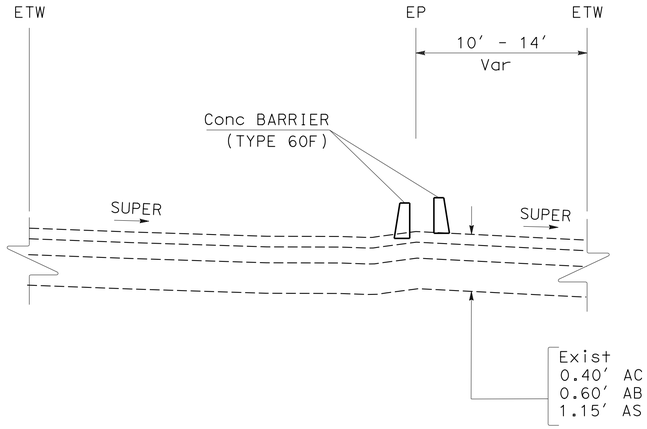

Sta 12+80.00 TO Sta 13+54.00 "G1" LINE

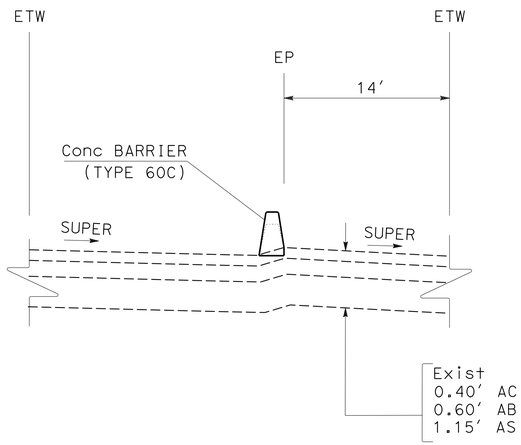

Sta 11+85.00 TO Sta 12+00.00 "G1" LINE

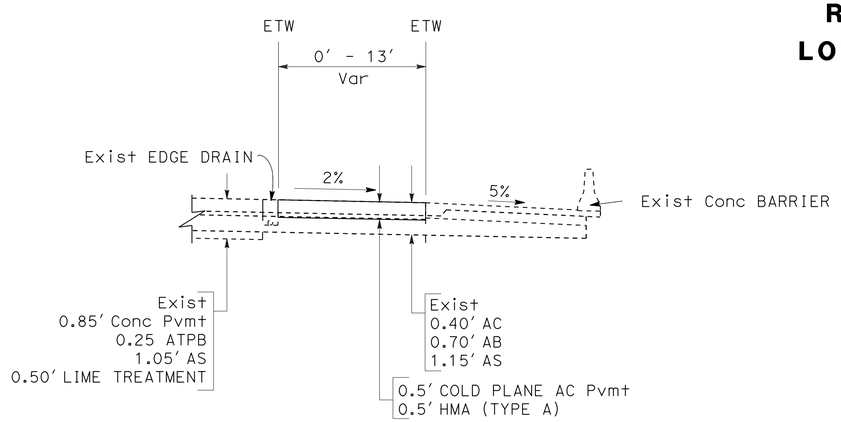

ROUTE 4
EASTBOUND
Sta 1025+50.00 TO Sta 1026+50.00

ROUTE 4
LOCATION 3

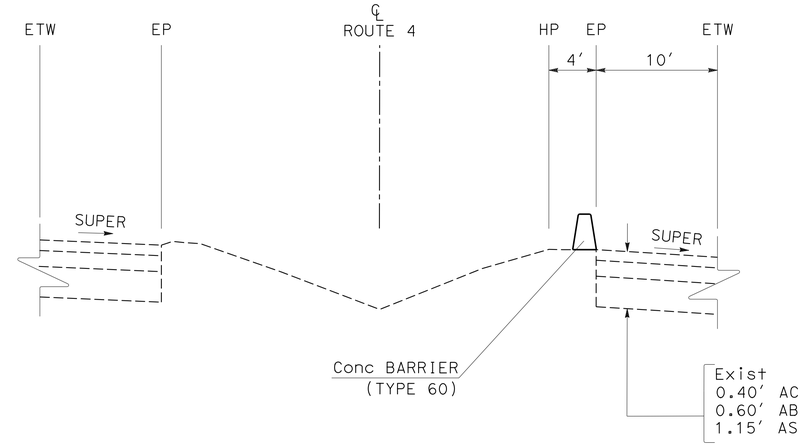

Sta 13+54.00 TO Sta 14+40.00 "G1" LINE

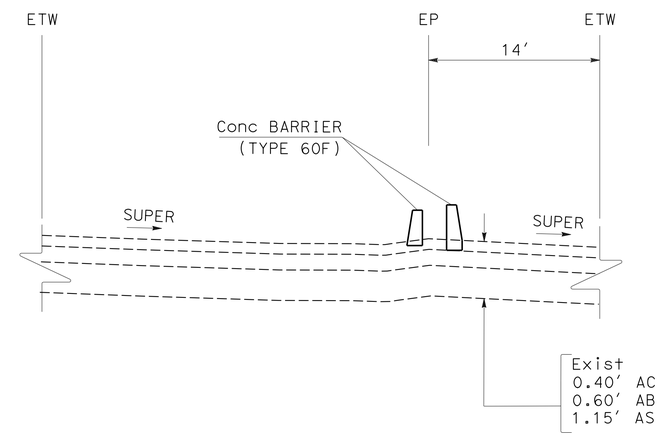

Sta 12+00.00 TO Sta 12+80.00 "G1" LINE

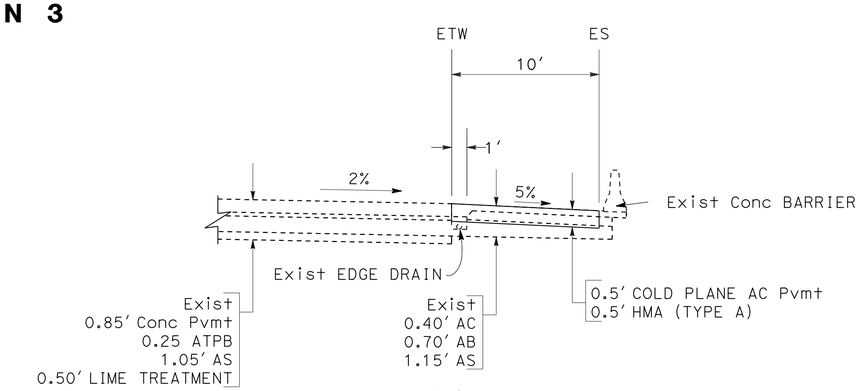

ROUTE 4
EASTBOUND
Sta 1022+40.00 TO Sta 1027+00.00
Sta 1030+00.00 TO Sta 1035+26.81
Sta 1037+76.78 TO Sta 1040+00.00

TYPICAL CROSS SECTIONS
X-2

NO SCALE

STATE OF CALIFORNIA - DEPARTMENT OF TRANSPORTATION
06-DESIGN
Caltrans

FUNCTIONAL SUPERVISOR: ABDUL BAKER
CALCULATED-DESIGNED BY: GURJOT GILL
CHECKED BY: ABDUL BAKER
REVISED BY: GSG
DATE REVISED: 03/19/15

LAST REVISION 05-20-15
DATE PLOTTED => 04-SEP-2015
TIME PLOTTED => 14:06

Dist	COUNTY	ROUTE	POST MILES TOTAL PROJECT	SHEET No.	TOTAL SHEETS
10	SJ	4,99	16.0/19.4,18.5	4	112

REGISTERED CIVIL ENGINEER 5-22-15 DATE

6-22-15
PLANS APPROVAL DATE

REGISTERED PROFESSIONAL ENGINEER GURJOT GILL No. 71647 Exp. 12-31-15 CIVIL STATE OF CALIFORNIA

THE STATE OF CALIFORNIA OR ITS OFFICERS OR AGENTS SHALL NOT BE RESPONSIBLE FOR THE ACCURACY OR COMPLETENESS OF SCANNED COPIES OF THIS PLAN SHEET.

NOTES:

1. FOR ACCURATE RIGHT OF WAY DATA, CONTACT RIGHT OF WAY ENGINEERING AT THE DISTRICT OFFICE.
2. THE FACE OF THE CMS FOUNDATION AND CABINET FOUNDATION MUST BE MINIMUM 4 FEET FROM THE HINGE POINT. SEE SHEET C-2.
3. CAP EXISTING IRRIGATION LATERAL LINES AS NEEDED. VERIFY REMAINING IRRIGATION SYSTEM IS OPERATIONAL AFTER CAPPING.
4. NOT ALL UTILITIES ARE SHOWN ON THE PLANS.

ABBREVIATION:

EMS - EMERGENCY MESSAGE SIGN
AFTS - ALTERNATIVE FLARED TERMINAL SYSTEM
AITS - ALTERNATIVE IN-LINE TERMINAL SYSTEM

LEGEND:

COLD PLANE AC Pvmt HMA (TYPE A)

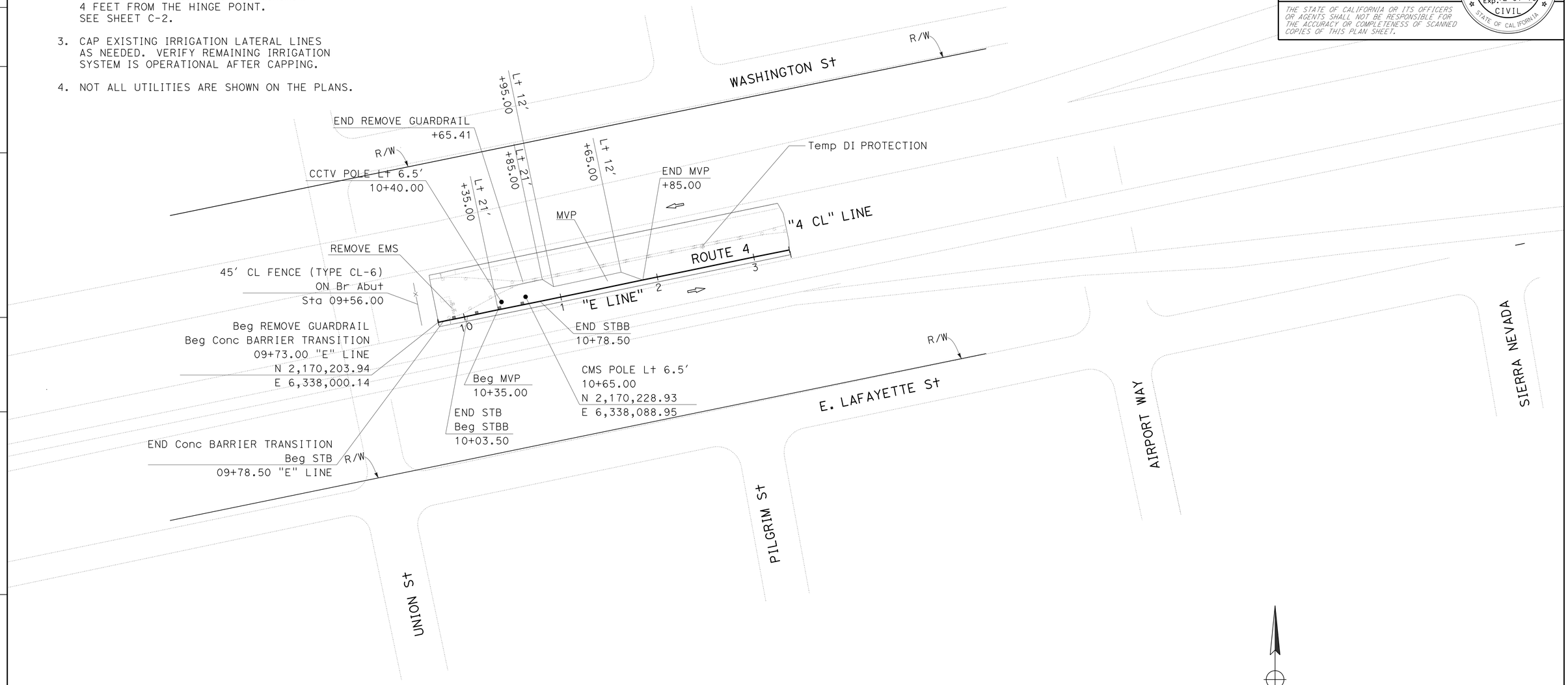

LOCATION 1: SR-4 & S UNION St

LAYOUT

L-1

SCALE: 1"=50'

STATE OF CALIFORNIA - DEPARTMENT OF TRANSPORTATION
Caltrans
06-DESIGN

FUNCTIONAL SUPERVISOR: ABDUL BAKER
CALCULATED-DESIGNED BY: GURJOT GILL
CHECKED BY: ABDUL BAKER
REVISED BY
DATE REVISED

LAST REVISION 05-20-15
DATE PLOTTED => 04-SEP-2015
TIME PLOTTED => 14:06

Dist	COUNTY	ROUTE	POST MILES TOTAL PROJECT	SHEET No.	TOTAL SHEETS
10	SJ	4,99	16.0/19.4,18.5	5	112

Gurjot S. Gill 5-22-15
REGISTERED CIVIL ENGINEER DATE

6-22-15
PLANS APPROVAL DATE

REGISTERED PROFESSIONAL ENGINEER
GURJOT GILL
No. 71647
Exp. 12-31-15
CIVIL
STATE OF CALIFORNIA

THE STATE OF CALIFORNIA OR ITS OFFICERS OR AGENTS SHALL NOT BE RESPONSIBLE FOR THE ACCURACY OR COMPLETENESS OF SCANNED COPIES OF THIS PLAN SHEET.

NOTE:

FOR ACCURATE RIGHT OF WAY DATA, CONTACT
RIGHT OF WAY ENGINEERING AT THE DISTRICT OFFICE.

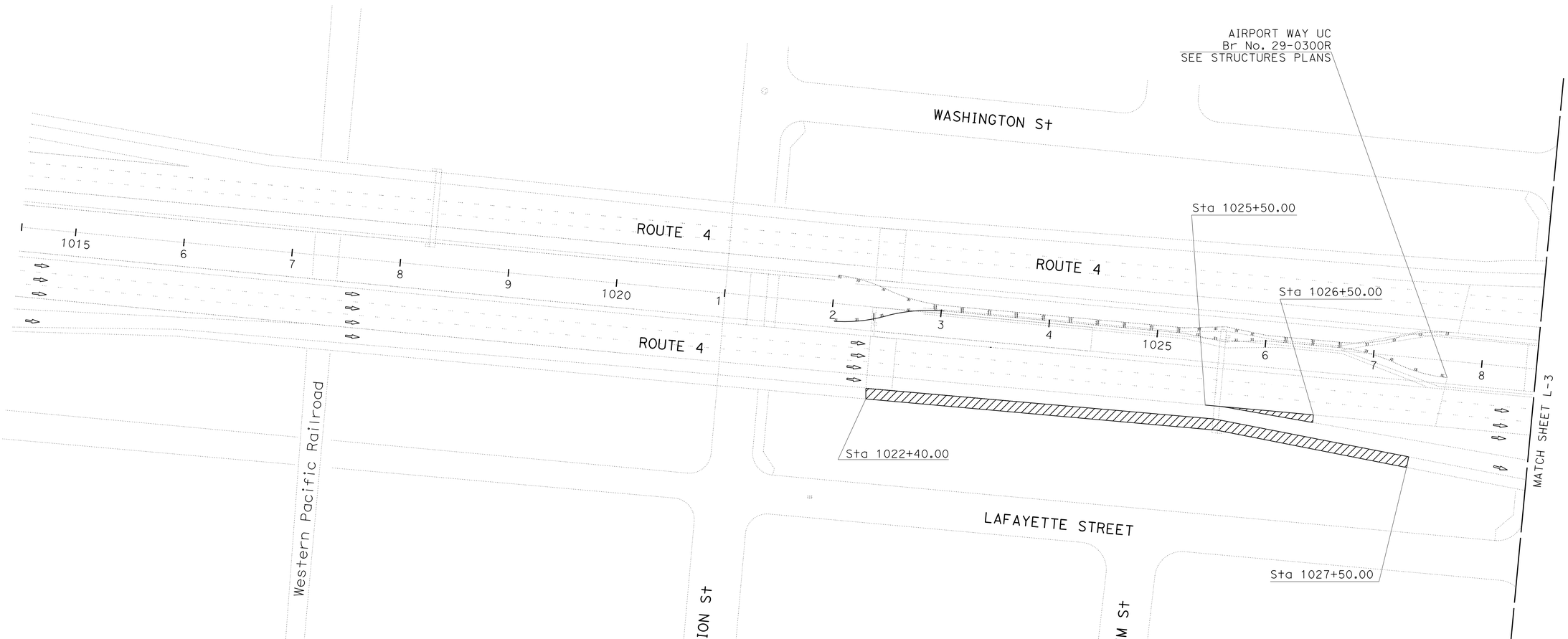

SCALE: 1"=50'

LAYOUT L-2

REVISED BY | DATE REVISED

GURJOT GILL | ABDUL BAKER

CALCULATED-DESIGNED BY | CHECKED BY

FUNCTIONAL SUPERVISOR: ABDUL BAKER

STATE OF CALIFORNIA - DEPARTMENT OF TRANSPORTATION

Caltrans®

06-DESIGN

LAST REVISION 05-20-15 | DATE PLOTTED => 04-SEP-2015 | TIME PLOTTED => 14:06

Dist	COUNTY	ROUTE	POST MILES TOTAL PROJECT	SHEET No.	TOTAL SHEETS
10	SJ	4,99	16.0/19.4,18.5	6	112

REGISTERED CIVIL ENGINEER 5-22-15 DATE

6-22-15
PLANS APPROVAL DATE

REGISTERED PROFESSIONAL ENGINEER GURJOT GILL No. 71647 Exp. 12-31-15 CIVIL STATE OF CALIFORNIA

THE STATE OF CALIFORNIA OR ITS OFFICERS OR AGENTS SHALL NOT BE RESPONSIBLE FOR THE ACCURACY OR COMPLETENESS OF SCANNED COPIES OF THIS PLAN SHEET.

NOTE:

FOR ACCURATE RIGHT OF WAY DATA, CONTACT RIGHT OF WAY ENGINEERING AT THE DISTRICT OFFICE.

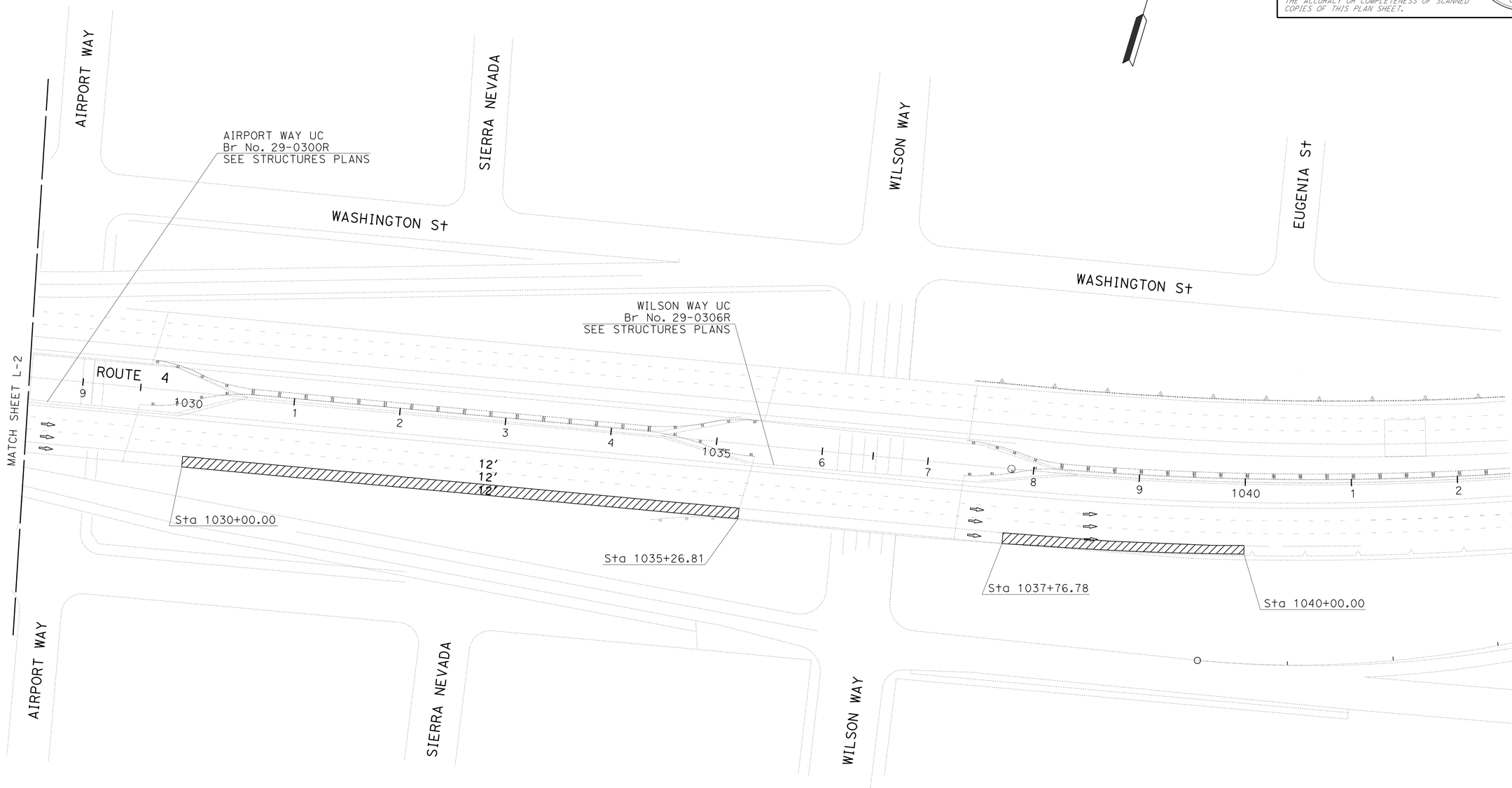

SCALE: 1"=50'

LAYOUT
L-3

REVISED BY	DATE REVISED

CALCULATED-DESIGNED BY	GURJOT GILL
CHECKED BY	ABDUL BAKER
FUNCTIONAL SUPERVISOR	ABDUL BAKER

STATE OF CALIFORNIA - DEPARTMENT OF TRANSPORTATION
Caltrans
06-DESIGN

LAST REVISION 05-20-15
DATE PLOTTED => 04-SEP-2015
TIME PLOTTED => 14:06

Dist	COUNTY	ROUTE	POST MILES TOTAL PROJECT	SHEET No.	TOTAL SHEETS
10	SJ	4,99	16.0/19.4,18.5	7	112

Gurjot S. Gill 5-22-15
REGISTERED CIVIL ENGINEER DATE

6-22-15
PLANS APPROVAL DATE

REGISTERED PROFESSIONAL ENGINEER GURJOT GILL No. 71647 Exp. 12-31-15 CIVIL STATE OF CALIFORNIA

THE STATE OF CALIFORNIA OR ITS OFFICERS OR AGENTS SHALL NOT BE RESPONSIBLE FOR THE ACCURACY OR COMPLETENESS OF SCANNED COPIES OF THIS PLAN SHEET.

NOTE:

FOR ACCURATE RIGHT OF WAY DATA, CONTACT RIGHT OF WAY ENGINEERING AT THE DISTRICT OFFICE.

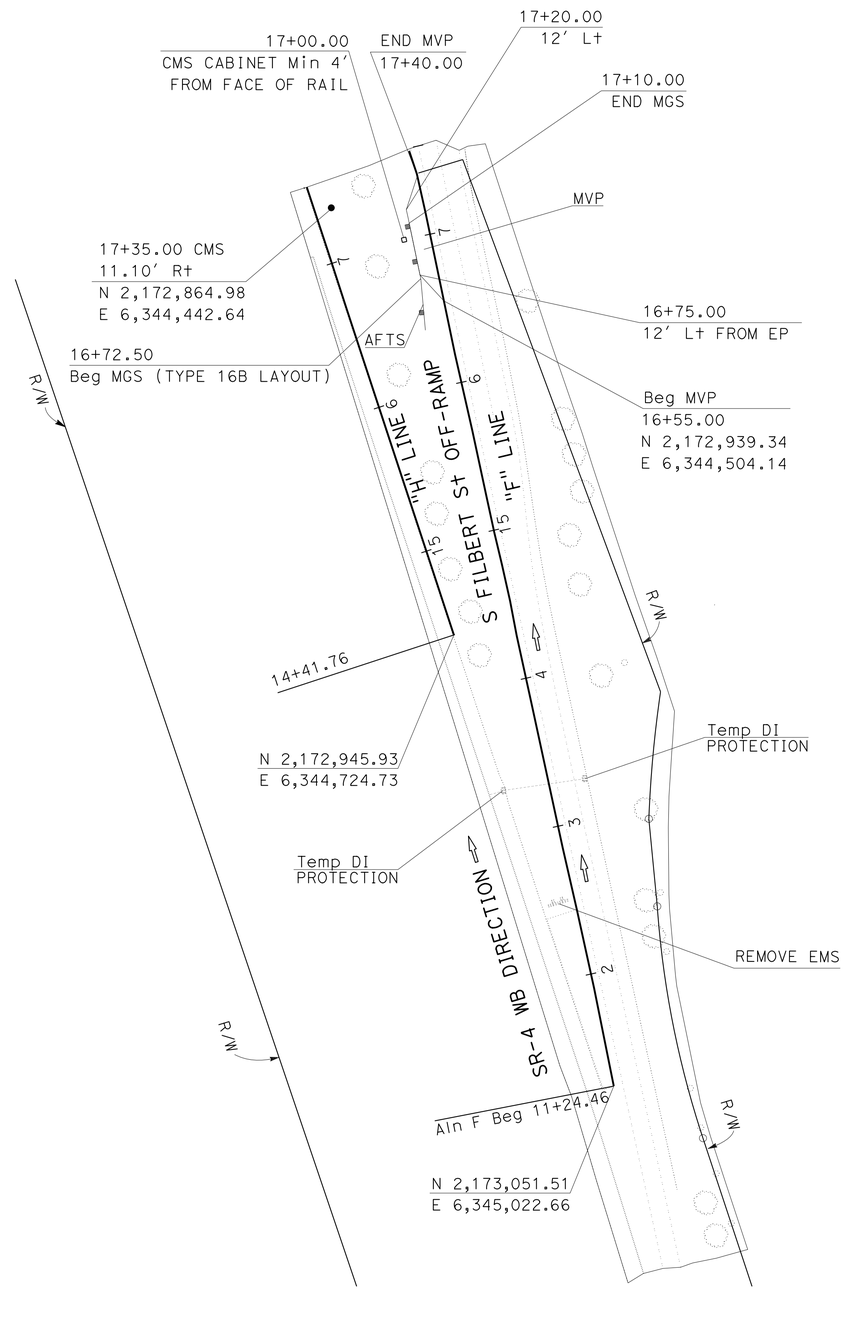

LOCATION 2: SR-4 & S FILBERT St

SCALE: 1"=50'

LAYOUT L-4

STATE OF CALIFORNIA - DEPARTMENT OF TRANSPORTATION
Caltrans
06-DESIGN

FUNCTIONAL SUPERVISOR: ABDUL BAKER
CALCULATED-DESIGNED BY: GURJOT GILL
CHECKED BY: ABDUL BAKER
REVISED BY: GSG
DATE REVISED: 03/23/15

LAST REVISION 05-20-15
DATE PLOTTED => 04-SEP-2015
TIME PLOTTED => 14:06

Dist	COUNTY	ROUTE	POST MILES TOTAL PROJECT	SHEET No.	TOTAL SHEETS
10	SJ	4,99	16.0/19.4,18.5	8	112

REGISTERED CIVIL ENGINEER 5-22-15 DATE

6-22-15
PLANS APPROVAL DATE

REGISTERED PROFESSIONAL ENGINEER GURJOT GILL No. 71647 Exp. 12-31-15 CIVIL STATE OF CALIFORNIA

THE STATE OF CALIFORNIA OR ITS OFFICERS OR AGENTS SHALL NOT BE RESPONSIBLE FOR THE ACCURACY OR COMPLETENESS OF SCANNED COPIES OF THIS PLAN SHEET.

NOTE:

FOR ACCURATE RIGHT OF WAY DATA, CONTACT RIGHT OF WAY ENGINEERING AT THE DISTRICT OFFICE.

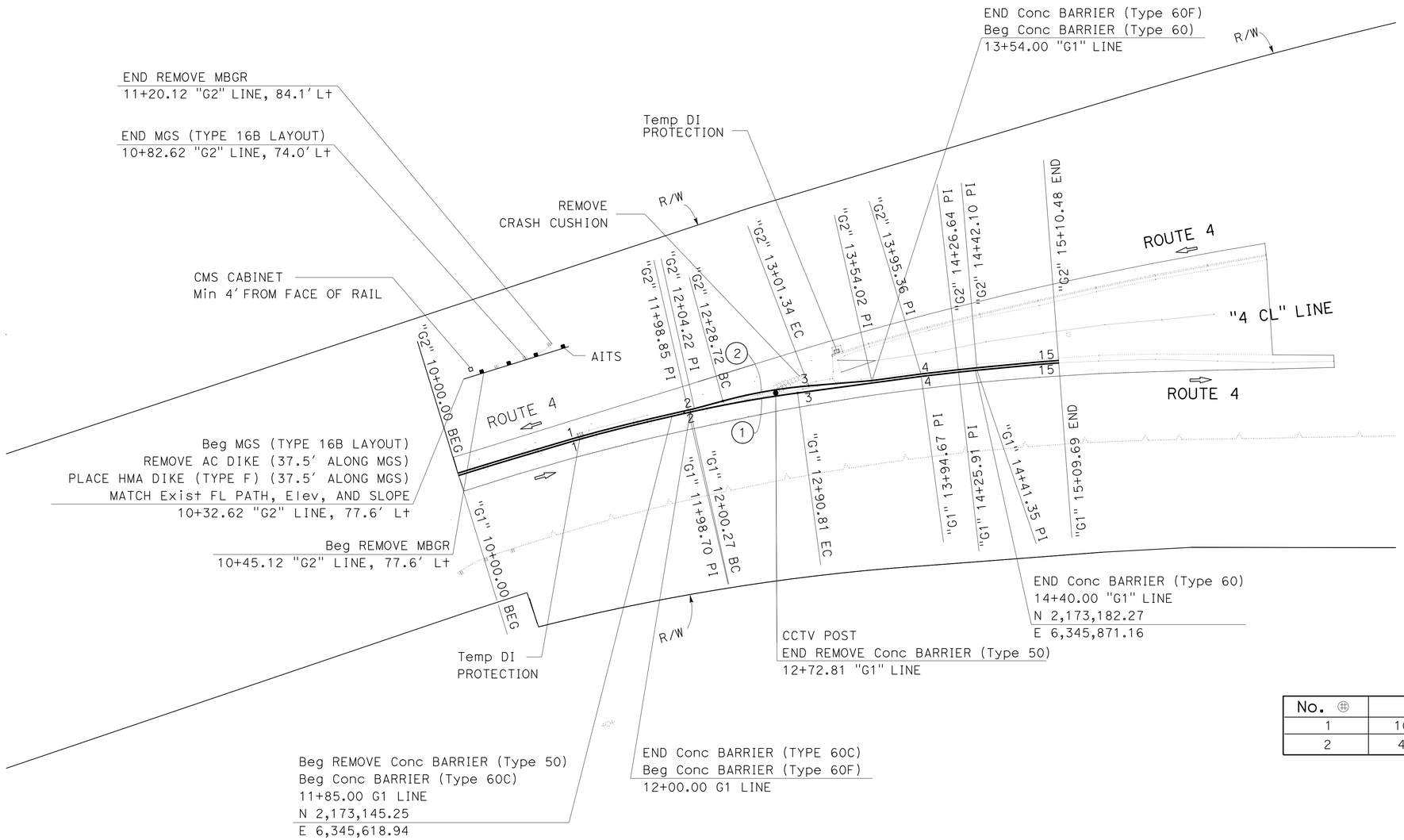

CURVE DATA

No. ⊕	R	Δ	T	L
1	1060'	04°53'37"	45.29'	90.53'
2	400'	10°24'03"	36.41'	72.61'

LOCATION 3: ROUTE 4/99 CONNECTOR RAMP

LAYOUT

L-5

SCALE: 1"=50'

STATE OF CALIFORNIA - DEPARTMENT OF TRANSPORTATION
06-DESIGN
Caltrans

FUNCTIONAL SUPERVISOR: ABDUL BAKER
CALCULATED-DESIGNED BY: GURJOT GILL
CHECKED BY: ABDUL BAKER
REVISED BY: GSG
DATE REVISED: 03/23/15

LAST REVISION 05-20-15
DATE PLOTTED => 04-SEP-2015
TIME PLOTTED => 14:06

Dist	COUNTY	ROUTE	POST MILES TOTAL PROJECT	SHEET No.	TOTAL SHEETS
10	SJ	4,99	16.0/19.4,18.5	9	112

Gurjot S. Gill 5-22-15
REGISTERED CIVIL ENGINEER DATE

6-22-15
PLANS APPROVAL DATE

REGISTERED PROFESSIONAL ENGINEER
GURJOT GILL
No. 71647
Exp. 12-31-15
CIVIL
STATE OF CALIFORNIA

THE STATE OF CALIFORNIA OR ITS OFFICERS OR AGENTS SHALL NOT BE RESPONSIBLE FOR THE ACCURACY OR COMPLETENESS OF SCANNED COPIES OF THIS PLAN SHEET.

NOTE:

FOR ACCURATE RIGHT OF WAY DATA, CONTACT
RIGHT OF WAY ENGINEERING AT THE DISTRICT OFFICE.

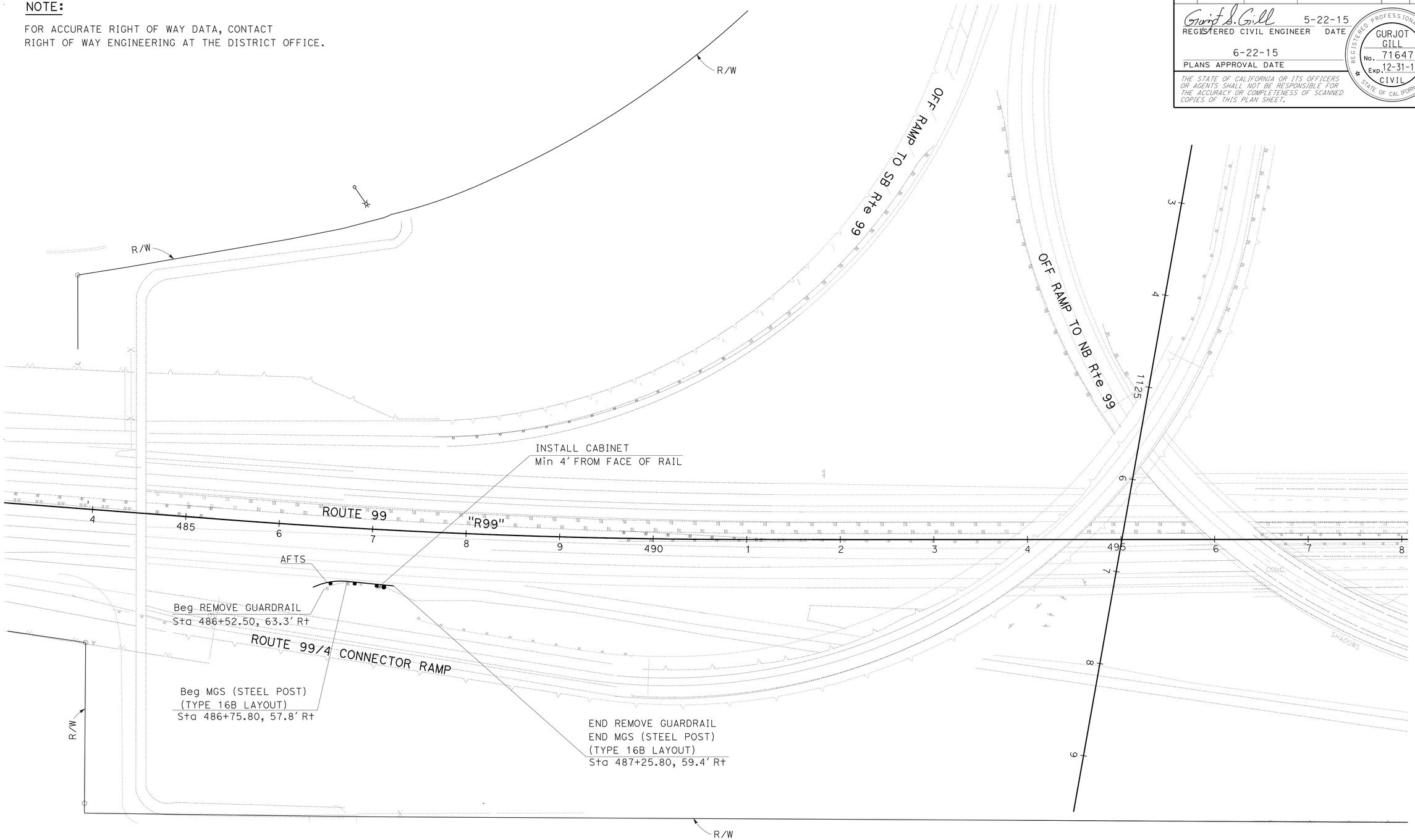

LAYOUT L-6

SCALE: 1"=50'

STATE OF CALIFORNIA - DEPARTMENT OF TRANSPORTATION
Caltrans
06-DESIGN

FUNCTIONAL SUPERVISOR: ABDUL BAKER
CALCULATED-DESIGNED BY: GURJOT GILL
CHECKED BY: ABDUL BAKER
REVISED BY: GSG
DATE REVISED: 02/27/15

LAST REVISION 05-20-15
DATE PLOTTED => 04-SEP-2015
TIME PLOTTED => 14:06

Dist	COUNTY	ROUTE	POST MILES TOTAL PROJECT	SHEET No.	TOTAL SHEETS
10	SJ	4,99	16.0/19.4,18.5	10	112

REGISTERED CIVIL ENGINEER 5-22-15 DATE

6-22-15
PLANS APPROVAL DATE

REGISTERED PROFESSIONAL ENGINEER GURJOT GILL No. 71647 Exp. 12-31-15 CIVIL STATE OF CALIFORNIA

THE STATE OF CALIFORNIA OR ITS OFFICERS OR AGENTS SHALL NOT BE RESPONSIBLE FOR THE ACCURACY OR COMPLETENESS OF SCANNED COPIES OF THIS PLAN SHEET.

NOTES (FOR SHEETS C-1 & C-2):

1. CMS STRUCTURE'S QUANTITIES ARE BASED ON 2-SIDES WALKWAY.
2. THE CONTRACTOR MUST VERIFY ALL CONTROLLING FIELD DIMENSIONS BEFORE ORDERING OR FABRICATING ANY MATERIAL.

ABBREVIATION:

FEBT - FACING EASTBOUND TRAFFIC

FWBT - FACING WESTBOUND TRAFFIC

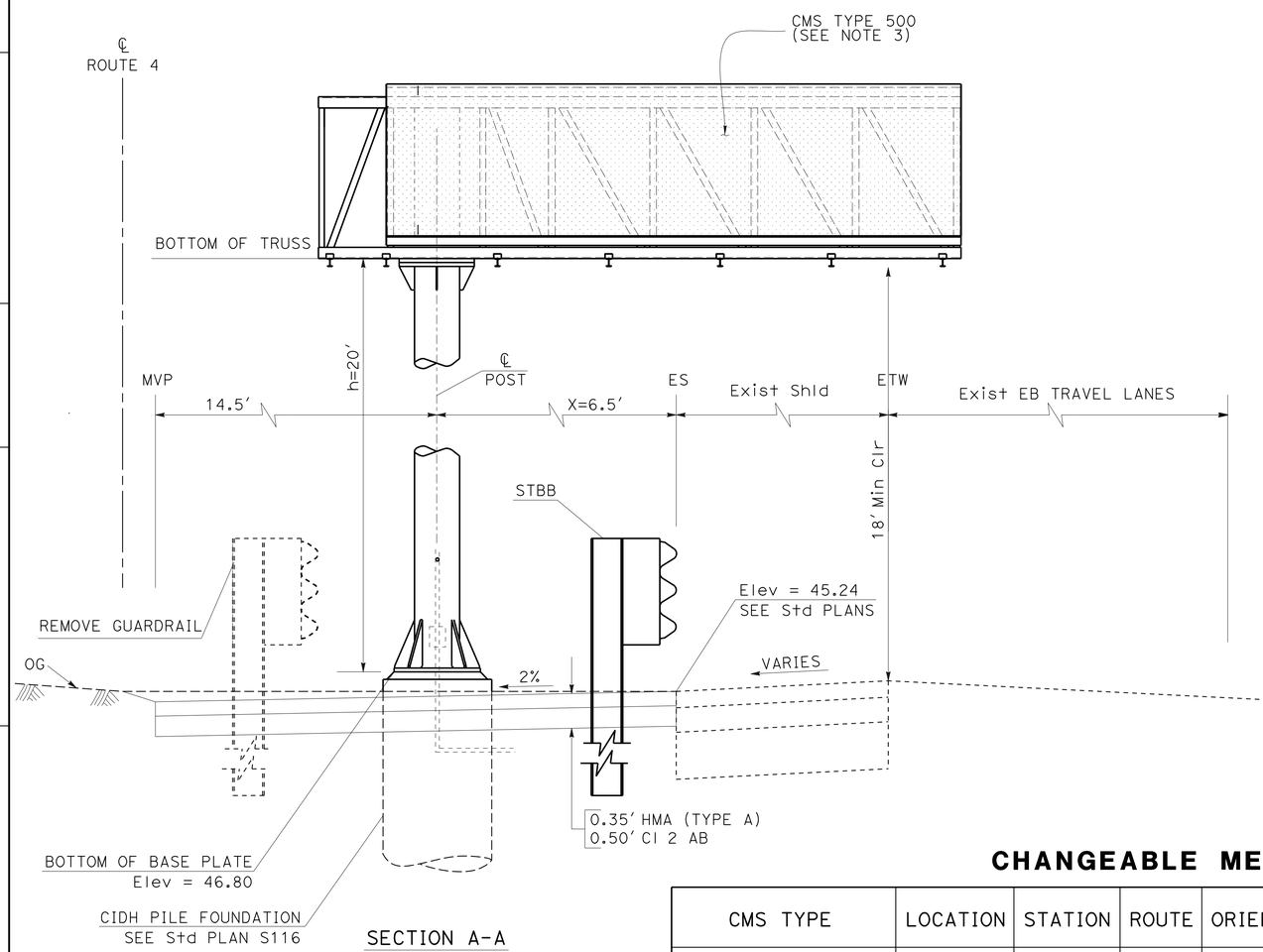

SECTION A-A

ROUTE 4

Sta 10+65.00 "E" LINE

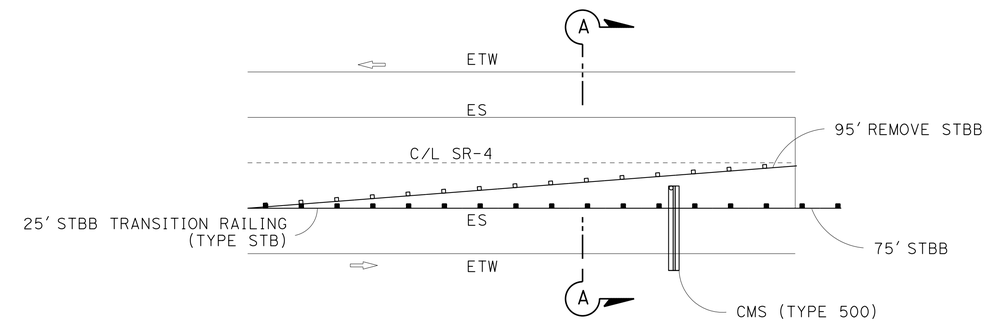

PLAN

CHANGEABLE MESSAGE SIGN STRUCTURES

CMS TYPE	LOCATION	STATION	ROUTE	ORIENTATION	X (ft)	"h" (ft)	Elev A (ft)	* Elev B (ft)	QUANTITIES: FURNISH SIGN STRUCTURE(TRUSS) LB	INSTALL SIGN STRUCTURE(TRUSS) LB	60" CIDH Conc PILE (SIGN FOUNDATION) LF
UNBALANCED BUTTERFLY	1	10+65	4	FEBT	6.5	20	45.24	46.90	16,824	16,824	22
UNBALANCED BUTTERFLY	2	17+35	4	FWBT	11.1	18	-0.94'	5.41	16,568	16,568	22
								TOTAL	33,392	33,392	44

* ASSUMED Elev B IS AT BOTTOM OF BASE PLATE.

CONSTRUCTION DETAIL AND SUMMARY OF QUANTITIES

NO SCALE

C-1

STATE OF CALIFORNIA - DEPARTMENT OF TRANSPORTATION
Caltrans
06-DESIGN

FUNCTIONAL SUPERVISOR: ABDUL BAKER
CALCULATED-DESIGNED BY: GURJOT GILL
CHECKED BY: ABDUL BAKER
REVISED BY
DATE REVISED

LAST REVISION 05-20-15 | DATE PLOTTED => 04-SEP-2015 | TIME PLOTTED => 14:06

Dist	COUNTY	ROUTE	POST MILES TOTAL PROJECT	SHEET No.	TOTAL SHEETS
10	SJ	4,99	16.0/19.4,18.5	11	112

REGISTERED CIVIL ENGINEER 5-22-15 DATE

6-22-15
PLANS APPROVAL DATE

REGISTERED PROFESSIONAL ENGINEER GURJOT GILL No. 71647 Exp. 12-31-15 CIVIL STATE OF CALIFORNIA

THE STATE OF CALIFORNIA OR ITS OFFICERS OR AGENTS SHALL NOT BE RESPONSIBLE FOR THE ACCURACY OR COMPLETENESS OF SCANNED COPIES OF THIS PLAN SHEET.

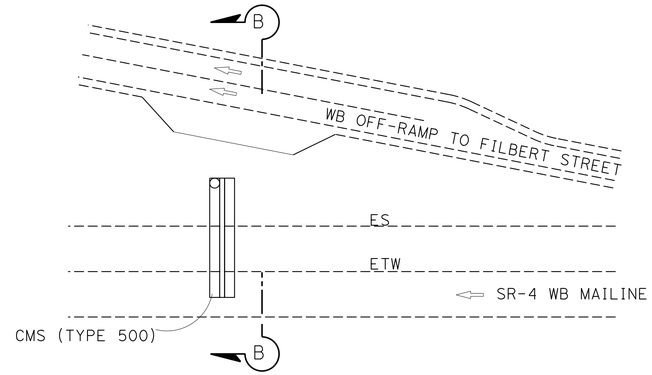

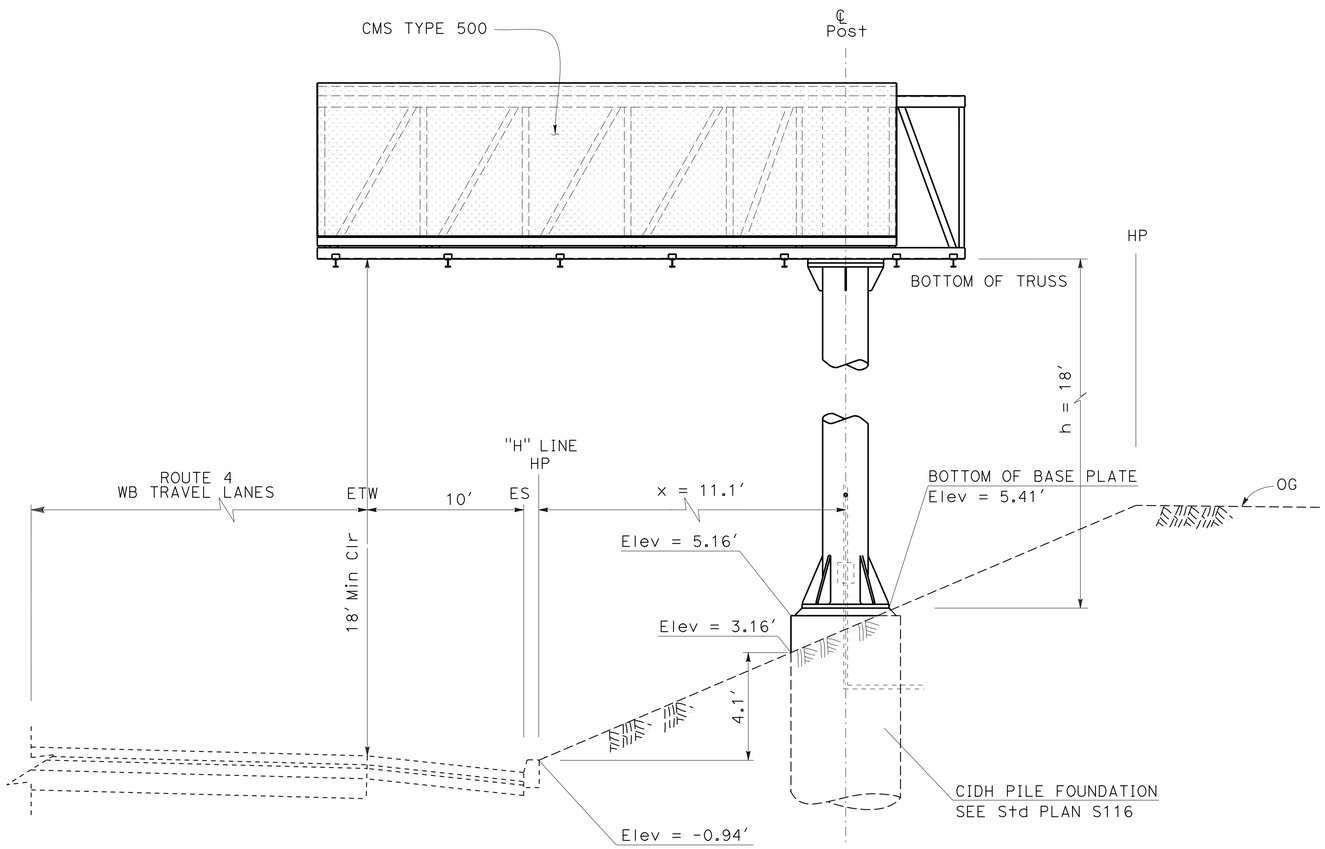

SECTION B-B

LOCATION 2 - SR4

Sta 17+35.00 "H" LINE

CONSTRUCTION DETAIL

NO SCALE

C-2

STATE OF CALIFORNIA - DEPARTMENT OF TRANSPORTATION
Caltrans
06-DESIGN

FUNCTIONAL SUPERVISOR: ABDUL BAKER
CALCULATED-DESIGNED BY: GURJOT GILL
CHECKED BY: ABDUL BAKER
REVISED BY
DATE REVISED

LAST REVISION 05-20-15
DATE PLOTTED => 04-SEP-2015
TIME PLOTTED => 14:06

Dist	COUNTY	ROUTE	POST MILES TOTAL PROJECT	SHEET No.	TOTAL SHEETS
10	SJ	4,99	16.0/19.4,18.5	12	112

Gurjot S. Gill 5-22-15
REGISTERED CIVIL ENGINEER DATE

6-22-15
PLANS APPROVAL DATE

REGISTERED PROFESSIONAL ENGINEER GURJOT GILL No. 71647 Exp. 12-31-15 CIVIL STATE OF CALIFORNIA

THE STATE OF CALIFORNIA OR ITS OFFICERS OR AGENTS SHALL NOT BE RESPONSIBLE FOR THE ACCURACY OR COMPLETENESS OF SCANNED COPIES OF THIS PLAN SHEET.

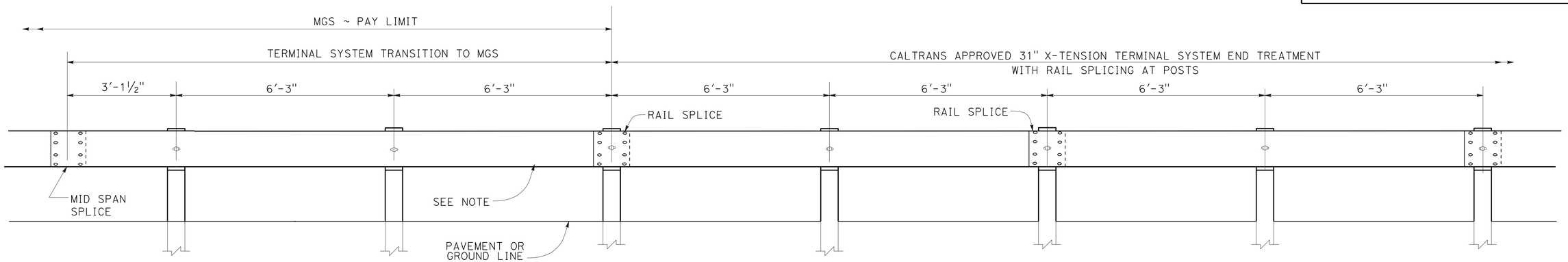

NOTE:

USE 15'-7½" LENGTH RAIL.

TRANSITION DETAIL FOR 31" X-TENSION TERMINAL SYSTEM END TREATMENT WITH RAIL SPLICING AT POSTS TO MIDWEST GUARDRAIL SYSTEM

CONSTRUCTION DETAIL C-3

NO SCALE

REVISED BY | DATE REVISED

GURJOT GILL | ABDUL BAKER

CALCULATED-DESIGNED BY | CHECKED BY

FUNCTIONAL SUPERVISOR: ABDUL BAKER

STATE OF CALIFORNIA - DEPARTMENT OF TRANSPORTATION

Caltrans 06-DESIGN

LAST REVISION 05-05-15 | DATE PLOTTED => 04-SEP-2015 | TIME PLOTTED => 14:06

Dist	COUNTY	ROUTE	POST MILES TOTAL PROJECT	SHEET No.	TOTAL SHEETS
10	SJ	4,99	16.0/19.4,18.5	13	112

Gurjot S. Gill 5-22-15
REGISTERED CIVIL ENGINEER DATE

6-22-15
PLANS APPROVAL DATE

REGISTERED PROFESSIONAL ENGINEER GURJOT GILL No. 71647 Exp. 12-31-15 CIVIL STATE OF CALIFORNIA

THE STATE OF CALIFORNIA OR ITS OFFICERS OR AGENTS SHALL NOT BE RESPONSIBLE FOR THE ACCURACY OR COMPLETENESS OF SCANNED COPIES OF THIS PLAN SHEET.

NOTES:

1. FOR ACCURATE RIGHT OF WAY DATA, CONTACT RIGHT OF WAY ENGINEERING AT THE DISTRICT OFFICE.
2. NOT ALL UTILITIES ARE SHOWN ON THE PLANS.
3. UTILITY OWNERSHIP ON THIS PROJECT:
   ELECTRIC & GAS - PACIFIC GAS & ELECTRIC COMPANY (PG&E)
   TELEPHONE - AMERICAN TELEPHONE AND TELEGRAPH (AT&T)
   WATER SUPPLY - CALIFORNIA WATER SERVICE COMPANY (CL&C)
   SEWER AND DRAINS - CITY OF STOCKTON
   FIBER OPTIC/COMMUNICATION CABLE-
   CENTRAL VALLEY INDEPENDENT
   NETWORK LLC. (CVIN)

LEGEND:

- ABANDONED UTILITY LINE
- POSITIVE LOCATION NUMBER
- POSITIVE LOCATION

ABBREVIATIONS:

CVIN	CENTRAL VALLEY INDEPENDENT NETWORK
St	STEEL
EMS	EMERGENCY MASSAGE SIGN
UPRR	UNION PACIFIC RAILROAD
CL&C	CALIFORNIA WATER SERVICE COMPANY

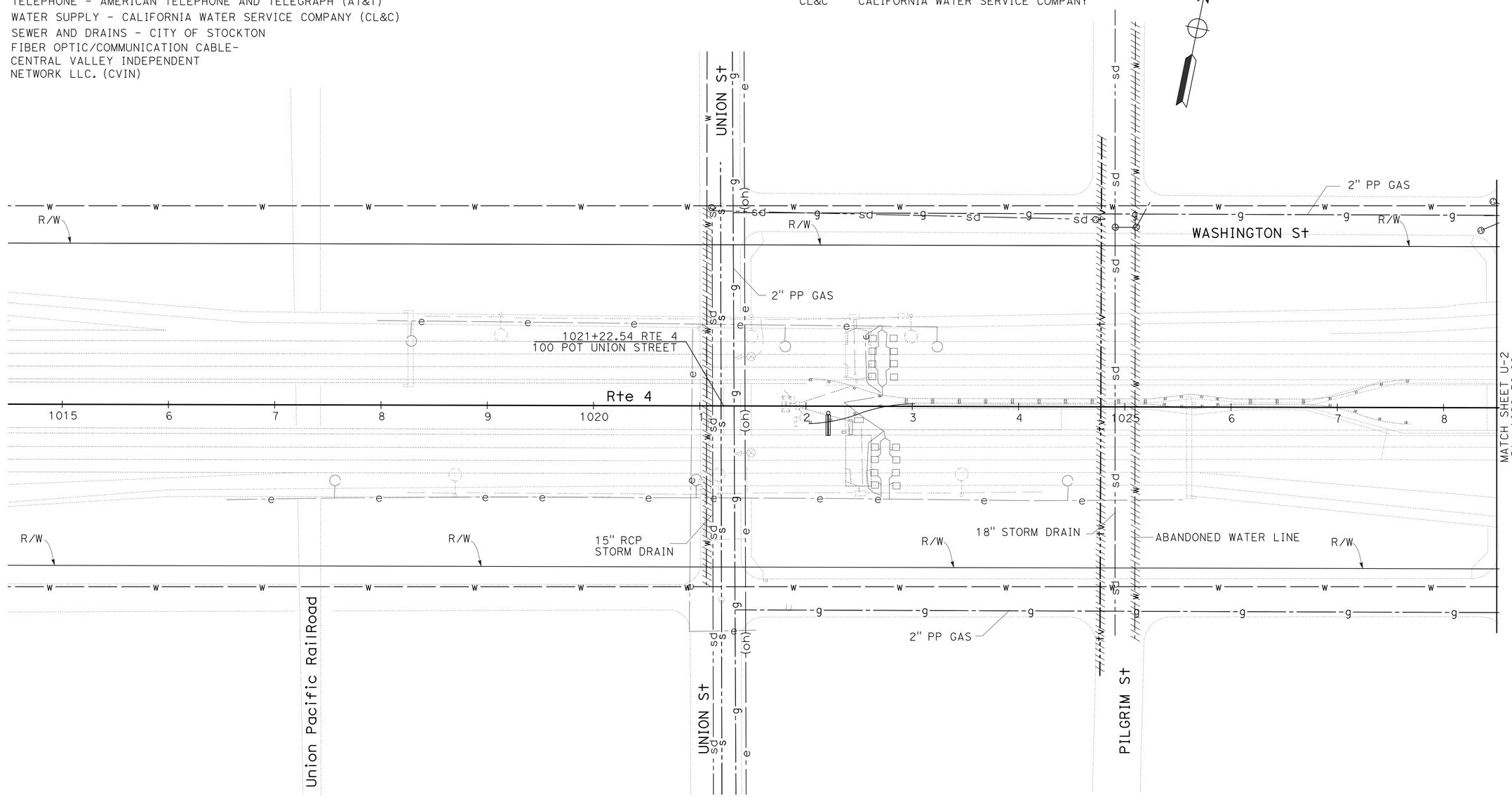

APPROVED FOR UTILITY INFORMATION ONLY

UTILITY PLAN

SCALE: 1"=50'

U-1

STATE OF CALIFORNIA - DEPARTMENT OF TRANSPORTATION
Caltrans
06-DESIGN

FUNCTIONAL SUPERVISOR: ABDUL BAKER
CALCULATED-DESIGNED BY: GURJOT GILL
CHECKED BY: ABDUL BAKER
REVISED BY
DATE REVISED

LAST REVISION 05-20-15
DATE PLOTTED => 04-SEP-2015
TIME PLOTTED => 14:06

BORDER LAST REVISED 7/2/2010
USERNAME => s113541
DGN FILE => 1013000114ka001.dgn
RELATIVE BORDER SCALE IS IN INCHES 0 1 2 3
UNIT 1476
PROJECT NUMBER & PHASE 10130001141

Dist	COUNTY	ROUTE	POST MILES TOTAL PROJECT	SHEET No.	TOTAL SHEETS
10	SJ	4,99	16.0/19.4,18.5	14	112

Gurjot S. Gill 5-22-15
REGISTERED CIVIL ENGINEER DATE

6-22-15
PLANS APPROVAL DATE

REGISTERED PROFESSIONAL ENGINEER GURJOT GILL No. 71647 Exp. 12-31-15 CIVIL STATE OF CALIFORNIA

THE STATE OF CALIFORNIA OR ITS OFFICERS OR AGENTS SHALL NOT BE RESPONSIBLE FOR THE ACCURACY OR COMPLETENESS OF SCANNED COPIES OF THIS PLAN SHEET.

NOTES:

1. FOR ACCURATE RIGHT OF WAY DATA, CONTACT RIGHT OF WAY ENGINEERING AT THE DISTRICT OFFICE.
2. NOT ALL UTILITIES ARE SHOWN ON THE PLANS.

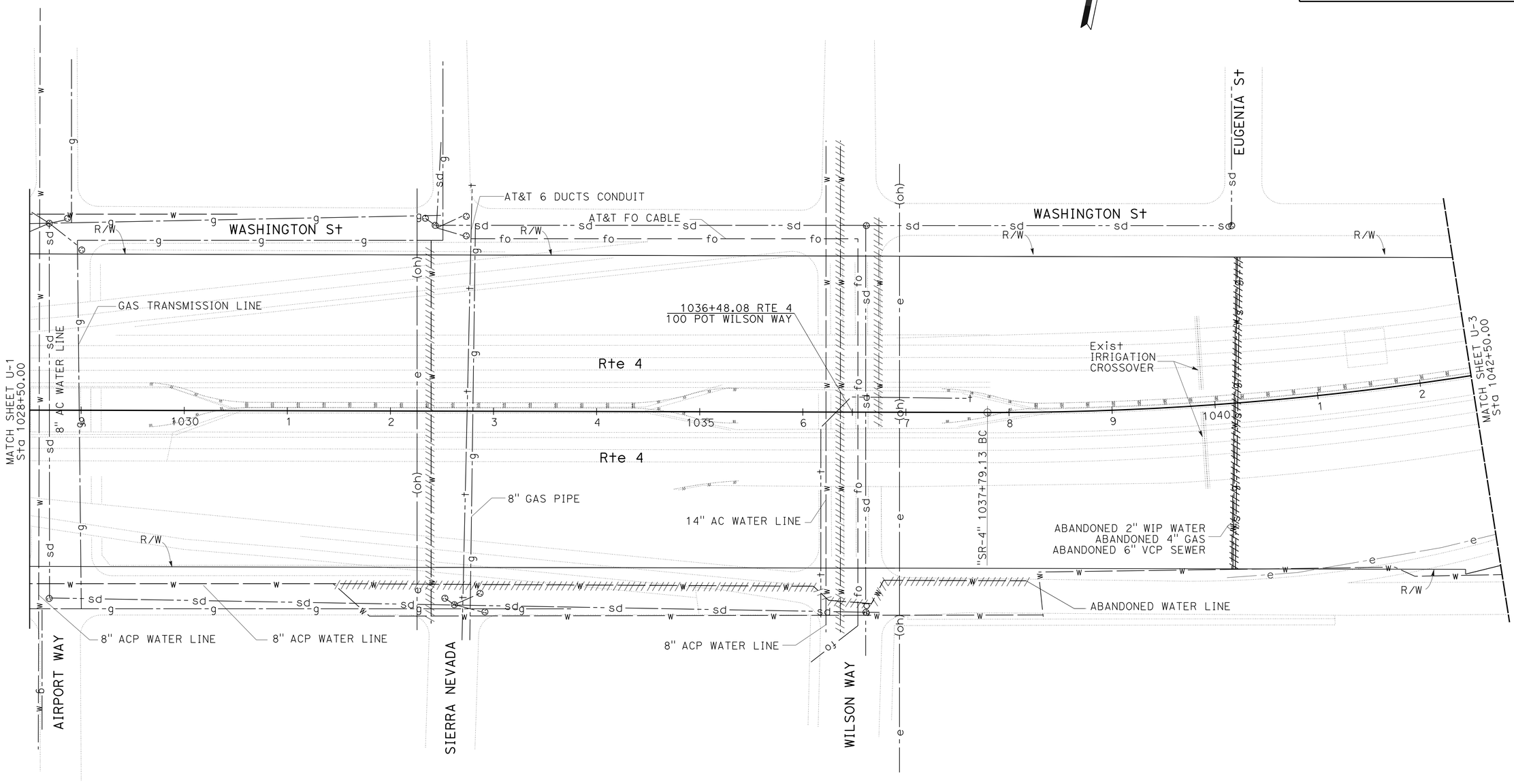

UTILITY PLAN

SCALE: 1"=50'

U-2

APPROVED FOR UTILITY INFORMATION ONLY

STATE OF CALIFORNIA - DEPARTMENT OF TRANSPORTATION
Caltrans
06-DESIGN

FUNCTIONAL SUPERVISOR: ABDUL BAKER
CALCULATED-DESIGNED BY: GURJOT GILL
CHECKED BY: ABDUL BAKER
REVISED BY
DATE REVISED

LAST REVISION 05-20-15
DATE PLOTTED => 04-SEP-2015
TIME PLOTTED => 14:06

BORDER LAST REVISED 7/2/2010
USERNAME => s113541
DGN FILE => 1013000114ka002.dgn
RELATIVE BORDER SCALE IS IN INCHES 0 1 2 3
UNIT 1476
PROJECT NUMBER & PHASE 10130001141

Dist	COUNTY	ROUTE	POST MILES TOTAL PROJECT	SHEET No.	TOTAL SHEETS
10	SJ	4,99	16.0/19.4,18.5	15	112

Gurjot S. Gill 5-22-15
REGISTERED CIVIL ENGINEER DATE

6-22-15
PLANS APPROVAL DATE

REGISTERED PROFESSIONAL ENGINEER
GURJOT GILL
No. 71647
Exp. 12-31-15
CIVIL
STATE OF CALIFORNIA

THE STATE OF CALIFORNIA OR ITS OFFICERS OR AGENTS SHALL NOT BE RESPONSIBLE FOR THE ACCURACY OR COMPLETENESS OF SCANNED COPIES OF THIS PLAN SHEET.

NOTES:

1. FOR ACCURATE RIGHT OF WAY DATA, CONTACT RIGHT OF WAY ENGINEERING AT THE DISTRICT OFFICE.
2. NOT ALL UTILITIES ARE SHOWN ON THE PLANS.

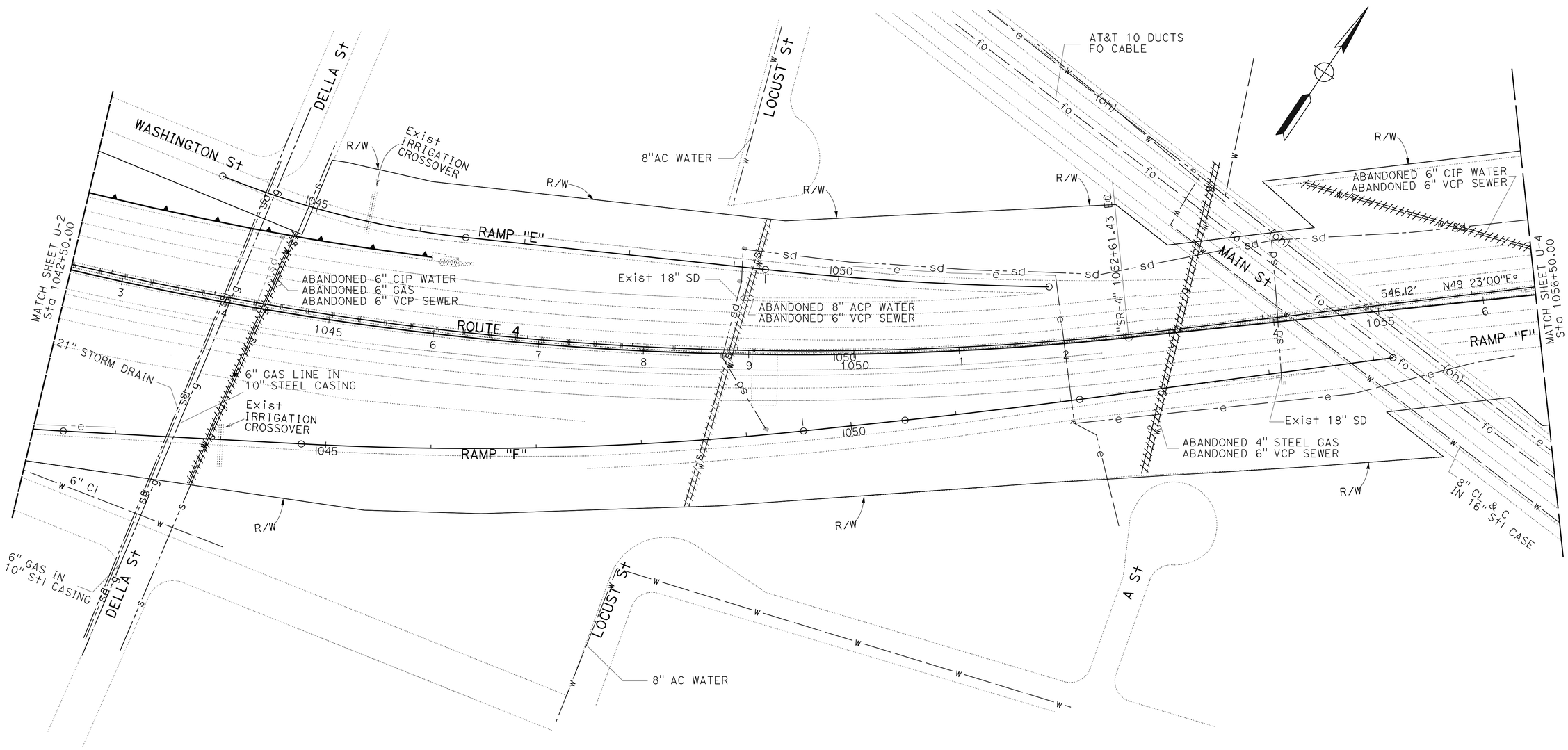

UTILITY PLAN
U-3

SCALE: 1"=50'

STATE OF CALIFORNIA - DEPARTMENT OF TRANSPORTATION
Caltrans
06-DESIGN

FUNCTIONAL SUPERVISOR: ABDUL BAKER
CALCULATED-DESIGNED BY: GURJOT GILL
CHECKED BY: ABDUL BAKER
REVISED BY
DATE REVISED

LAST REVISION 05-20-15
DATE PLOTTED => 04-SEP-2015
TIME PLOTTED => 14:06

Dist	COUNTY	ROUTE	POST MILES TOTAL PROJECT	SHEET No.	TOTAL SHEETS
10	SJ	4,99	16.0/19.4,18.5	16	112

REGISTERED CIVIL ENGINEER 5-22-15 DATE

PLANS APPROVAL DATE 6-22-15

REGISTERED PROFESSIONAL ENGINEER GURJOT GILL No. 71647 Exp. 12-31-15 CIVIL STATE OF CALIFORNIA

THE STATE OF CALIFORNIA OR ITS OFFICERS OR AGENTS SHALL NOT BE RESPONSIBLE FOR THE ACCURACY OR COMPLETENESS OF SCANNED COPIES OF THIS PLAN SHEET.

NOTES:

1. FOR ACCURATE RIGHT OF WAY DATA, CONTACT RIGHT OF WAY ENGINEERING AT THE DISTRICT OFFICE.
2. NOT ALL UTILITIES ARE SHOWN ON THE PLANS.

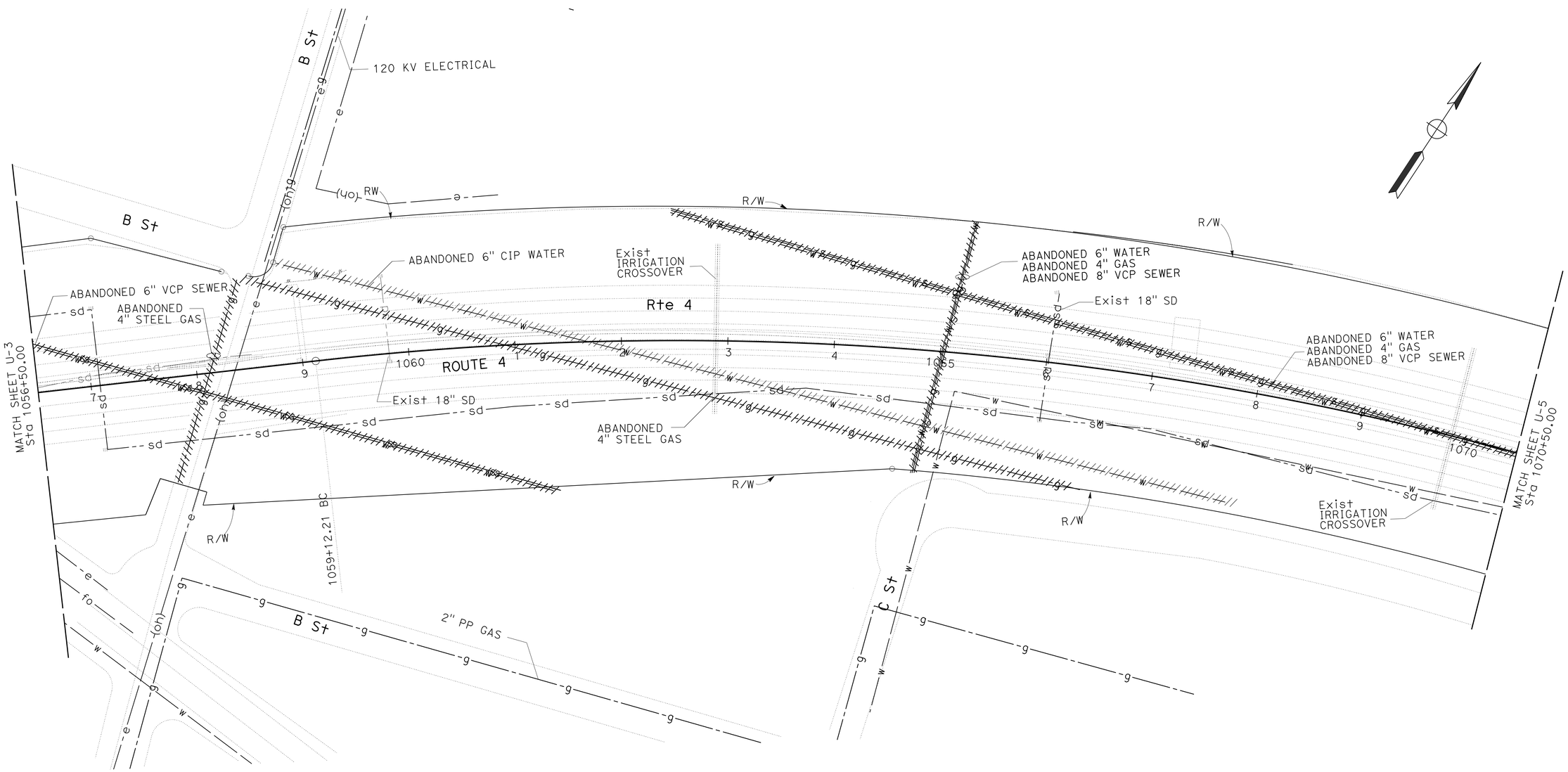

UTILITY PLAN

APPROVED FOR UTILITY INFORMATION ONLY

SCALE: 1"=50'

U-4

STATE OF CALIFORNIA - DEPARTMENT OF TRANSPORTATION

Caltrans

06-DESIGN

FUNCTIONAL SUPERVISOR: ABDUL BAKER

CALCULATED-DESIGNED BY: GURJOT GILL

CHECKED BY: ABDUL BAKER

REVISED BY

DATE REVISED

LAST REVISION 05-20-15

DATE PLOTTED => 04-SEP-2015

TIME PLOTTED => 14:06

BORDER LAST REVISED 7/2/2010

USERNAME => s113541

DGN FILE => 1013000114ka004.dgn

RELATIVE BORDER SCALE IS IN INCHES 0 1 2 3

UNIT 1476

PROJECT NUMBER & PHASE 10130001141

Dist	COUNTY	ROUTE	POST MILES TOTAL PROJECT	SHEET No.	TOTAL SHEETS
10	SJ	4,99	16.0/19.4,18.5	17	112

REGISTERED CIVIL ENGINEER 5-22-15 DATE

6-22-15
PLANS APPROVAL DATE

REGISTERED PROFESSIONAL ENGINEER GURJOT GILL No. 71647 Exp. 12-31-15 CIVIL STATE OF CALIFORNIA

THE STATE OF CALIFORNIA OR ITS OFFICERS OR AGENTS SHALL NOT BE RESPONSIBLE FOR THE ACCURACY OR COMPLETENESS OF SCANNED COPIES OF THIS PLAN SHEET.

NOTES:

1. FOR ACCURATE RIGHT OF WAY DATA, CONTACT RIGHT OF WAY ENGINEERING AT THE DISTRICT OFFICE.
2. NOT ALL UTILITIES ARE SHOWN ON THE PLANS.

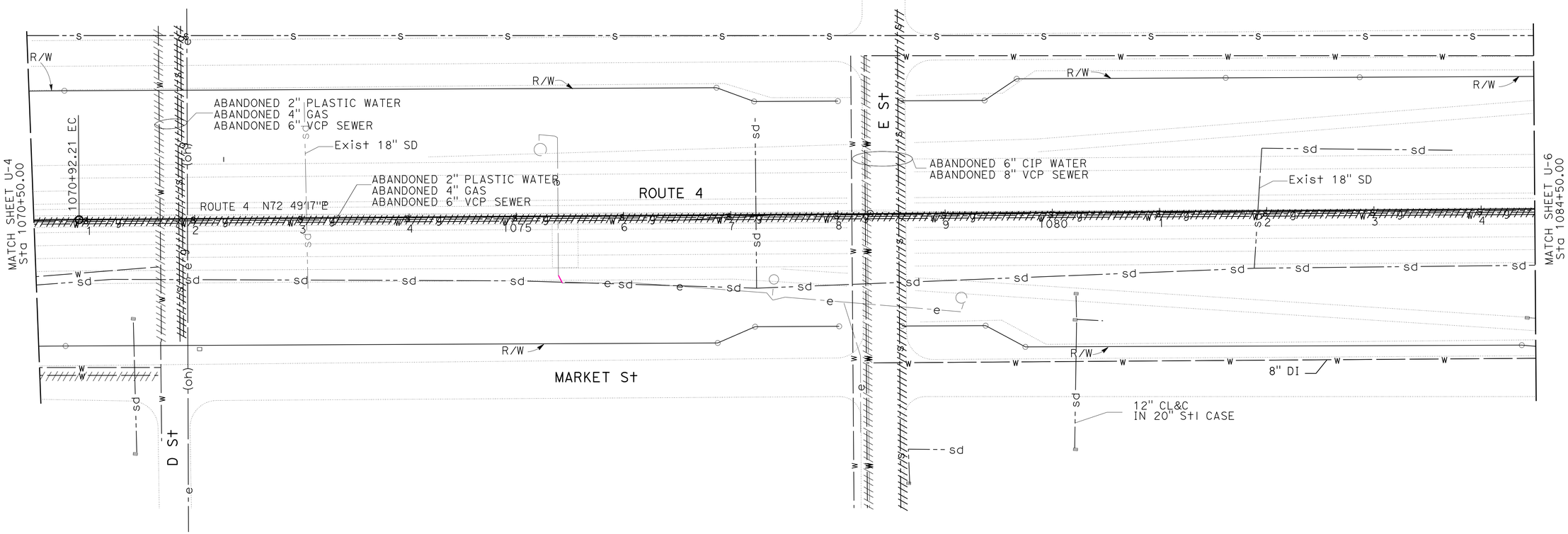

APPROVED FOR UTILITY INFORMATION ONLY

UTILITY PLAN

SCALE: 1"=50'

U-5

STATE OF CALIFORNIA - DEPARTMENT OF TRANSPORTATION
Caltrans
06-DESIGN

FUNCTIONAL SUPERVISOR: ABDUL BAKER
CALCULATED-DESIGNED BY: GURJOT GILL
CHECKED BY: ABDUL BAKER
REVISED BY
DATE REVISED

LAST REVISION 05-20-15
DATE PLOTTED => 04-SEP-2015
TIME PLOTTED => 14:06

Dist	COUNTY	ROUTE	POST MILES TOTAL PROJECT	SHEET No.	TOTAL SHEETS
10	SJ	4,99	16.0/19.4,18.5	18	112

Gurjot S. Gill 5-22-15
REGISTERED CIVIL ENGINEER DATE

6-22-15
PLANS APPROVAL DATE

REGISTERED PROFESSIONAL ENGINEER GURJOT GILL No. 71647 Exp. 12-31-15 CIVIL STATE OF CALIFORNIA

THE STATE OF CALIFORNIA OR ITS OFFICERS OR AGENTS SHALL NOT BE RESPONSIBLE FOR THE ACCURACY OR COMPLETENESS OF SCANNED COPIES OF THIS PLAN SHEET.

NOTES:

1. FOR ACCURATE RIGHT OF WAY DATA, CONTACT RIGHT OF WAY ENGINEERING AT THE DISTRICT OFFICE.
2. NOT ALL UTILITIES ARE SHOWN ON THE PLANS.

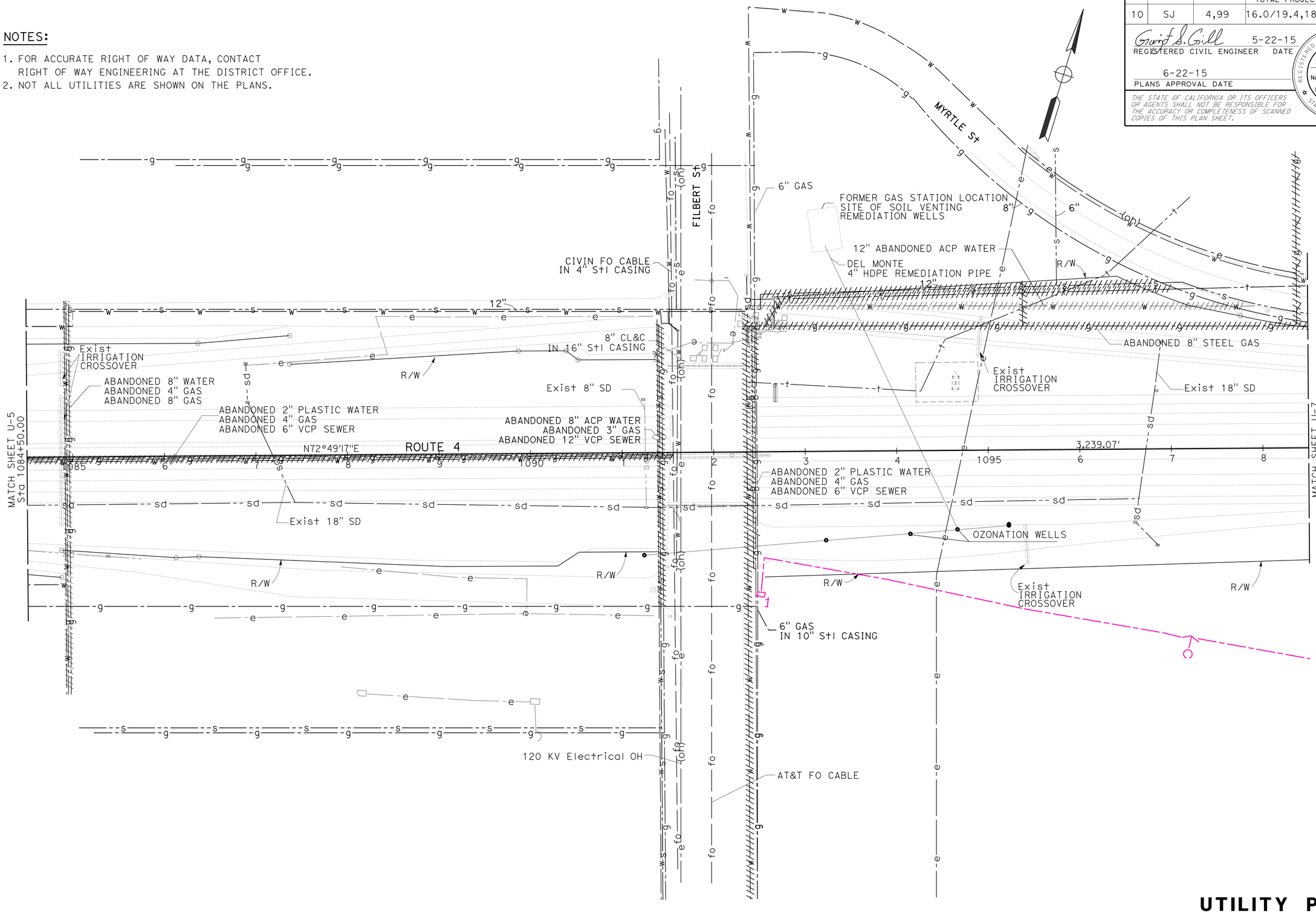

APPROVED FOR UTILITY INFORMATION ONLY

UTILITY PLAN
U-6

SCALE: 1"=50'

STATE OF CALIFORNIA - DEPARTMENT OF TRANSPORTATION
Caltrans
06-DESIGN

FUNCTIONAL SUPERVISOR: ABDUL BAKER
CALCULATED-DESIGNED BY: GURJOT GILL
CHECKED BY: ABDUL BAKER
REVISED BY
DATE REVISED

LAST REVISION 05-20-15
DATE PLOTTED => 04-SEP-2015
TIME PLOTTED => 14:06

Dist	COUNTY	ROUTE	POST MILES TOTAL PROJECT	SHEET No.	TOTAL SHEETS
10	SJ	4,99	16.0/19.4,18.5	19	112

REGISTERED CIVIL ENGINEER 5-22-15 DATE

6-22-15
PLANS APPROVAL DATE

REGISTERED PROFESSIONAL ENGINEER
GURJOT GILL
No. 71647
Exp. 12-31-15
CIVIL
STATE OF CALIFORNIA

THE STATE OF CALIFORNIA OR ITS OFFICERS OR AGENTS SHALL NOT BE RESPONSIBLE FOR THE ACCURACY OR COMPLETENESS OF SCANNED COPIES OF THIS PLAN SHEET.

NOTES:

1. FOR ACCURATE RIGHT OF WAY DATA, CONTACT RIGHT OF WAY ENGINEERING AT THE DISTRICT OFFICE.
2. NOT ALL UTILITIES ARE SHOWN ON THE PLANS.

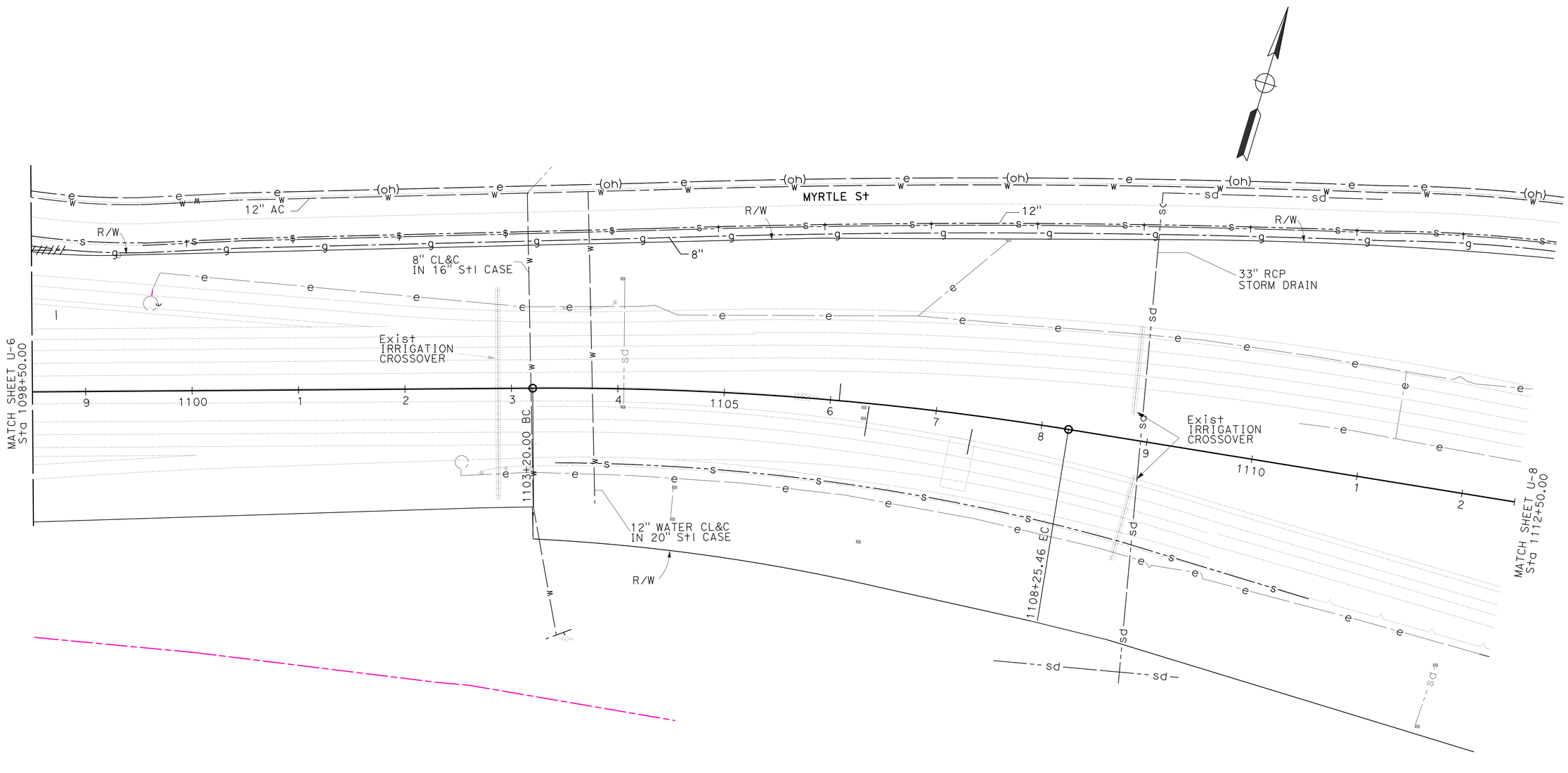

APPROVED FOR UTILITY INFORMATION ONLY

UTILITY PLAN
U-7

SCALE: 1"=50'

STATE OF CALIFORNIA - DEPARTMENT OF TRANSPORTATION
Caltrans
06-DESIGN

FUNCTIONAL SUPERVISOR: ABDUL BAKER
CALCULATED-DESIGNED BY: GURJOT GILL
CHECKED BY: ABDUL BAKER
REVISED BY
DATE REVISED

LAST REVISION 05-20-15
DATE PLOTTED => 04-SEP-2015
TIME PLOTTED => 14:06

Dist	COUNTY	ROUTE	POST MILES TOTAL PROJECT	SHEET No.	TOTAL SHEETS
10	SJ	4,99	16.0/19.4,18.5	20	112

Gurjot S. Gill 5-22-15
REGISTERED CIVIL ENGINEER DATE

6-22-15
PLANS APPROVAL DATE

REGISTERED PROFESSIONAL ENGINEER GURJOT GILL No. 71647 Exp. 12-31-15 CIVIL STATE OF CALIFORNIA

THE STATE OF CALIFORNIA OR ITS OFFICERS OR AGENTS SHALL NOT BE RESPONSIBLE FOR THE ACCURACY OR COMPLETENESS OF SCANNED COPIES OF THIS PLAN SHEET.

NOTES:

1. FOR ACCURATE RIGHT OF WAY DATA, CONTACT RIGHT OF WAY ENGINEERING AT THE DISTRICT OFFICE.
2. NOT ALL UTILITIES ARE SHOWN ON THE PLANS.

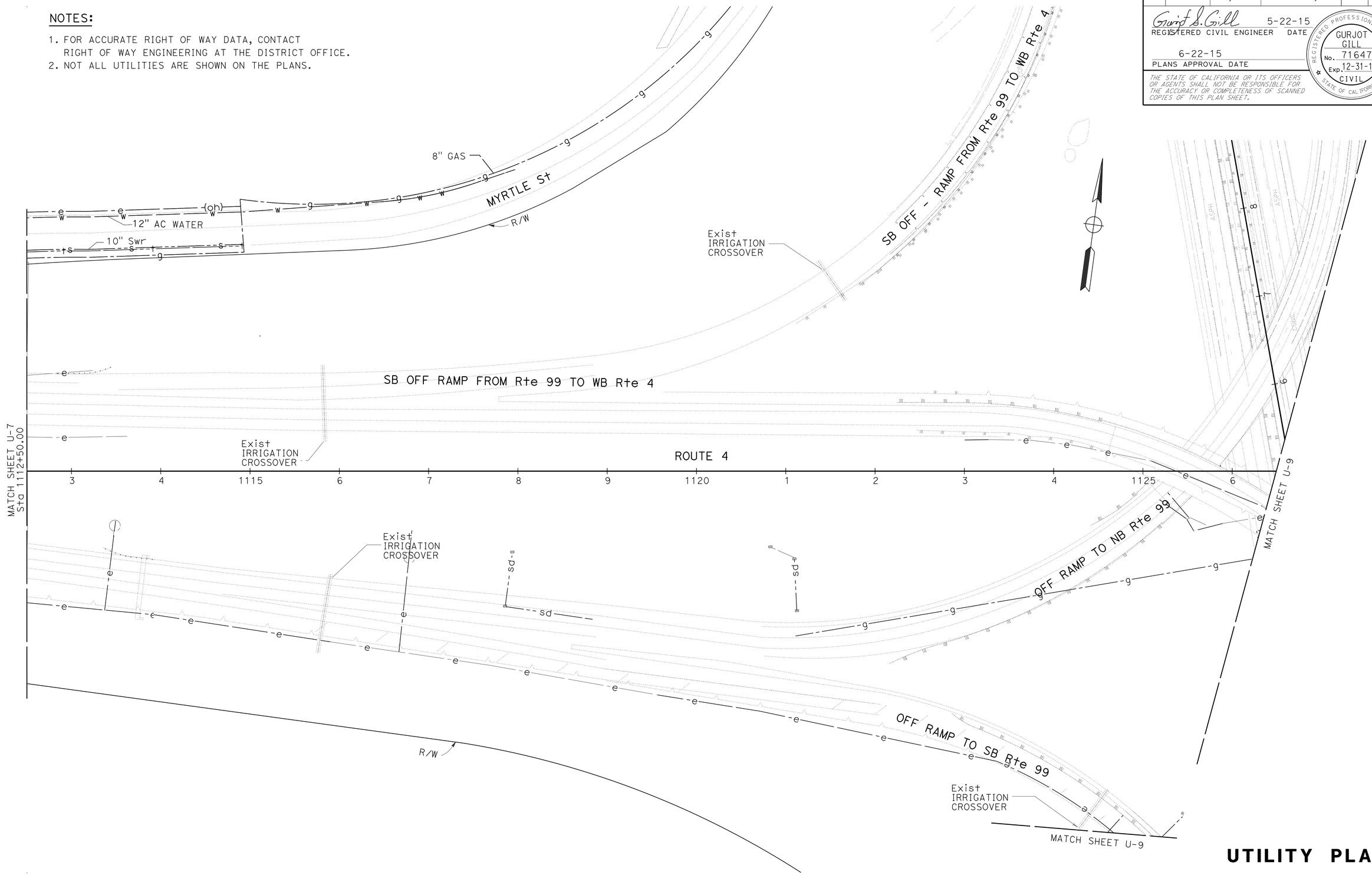

APPROVED FOR UTILITY INFORMATION ONLY

SCALE: 1"=50'

UTILITY PLAN

U-8

STATE OF CALIFORNIA - DEPARTMENT OF TRANSPORTATION
Caltrans
06-DESIGN

FUNCTIONAL SUPERVISOR: ABDUL BAKER
CALCULATED-DESIGNED BY: GURJOT GILL
CHECKED BY: ABDUL BAKER
REVISED BY
DATE REVISED

LAST REVISION 05-20-15
DATE PLOTTED => 04-SEP-2015
TIME PLOTTED => 14:06

Dist	COUNTY	ROUTE	POST MILES TOTAL PROJECT	SHEET No.	TOTAL SHEETS
10	SJ	4,99	16.0/19.4,18.5	21	112

Gurjot S. Gill 5-22-15
REGISTERED CIVIL ENGINEER DATE

6-22-15
PLANS APPROVAL DATE

REGISTERED PROFESSIONAL ENGINEER GURJOT GILL No. 71647 Exp. 12-31-15 CIVIL STATE OF CALIFORNIA

THE STATE OF CALIFORNIA OR ITS OFFICERS OR AGENTS SHALL NOT BE RESPONSIBLE FOR THE ACCURACY OR COMPLETENESS OF SCANNED COPIES OF THIS PLAN SHEET.

NOTES:

1. FOR ACCURATE RIGHT OF WAY DATA, CONTACT RIGHT OF WAY ENGINEERING AT THE DISTRICT OFFICE.
2. NOT ALL UTILITIES ARE SHOWN ON THE PLANS.

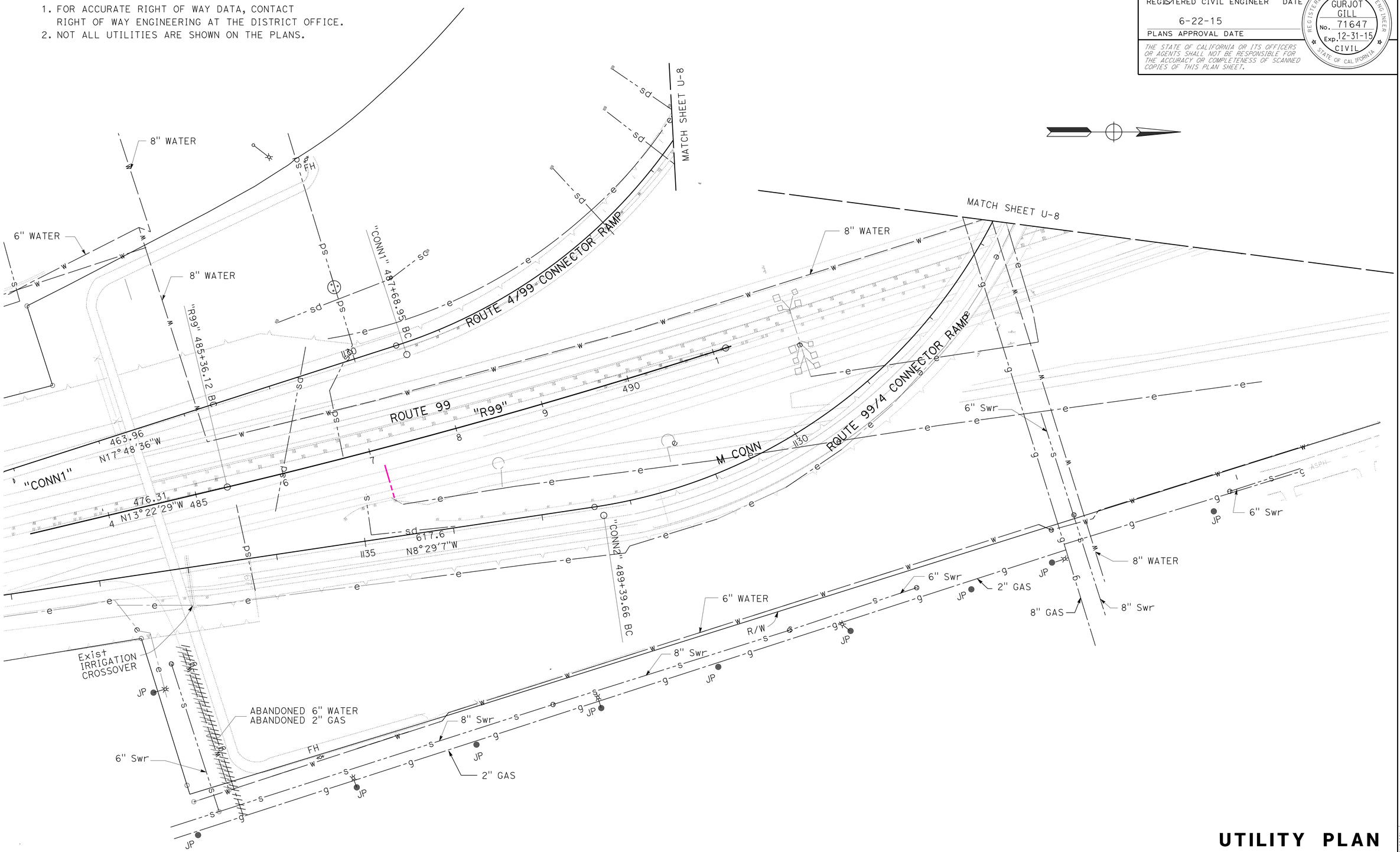

APPROVED FOR UTILITY INFORMATION ONLY

UTILITY PLAN
U-9

SCALE: 1"=50'

STATE OF CALIFORNIA - DEPARTMENT OF TRANSPORTATION
Caltrans
06-DESIGN

FUNCTIONAL SUPERVISOR: ABDUL BAKER
CALCULATED-DESIGNED BY: GURJOT GILL
CHECKED BY: ABDUL BAKER
REVISED BY
DATE REVISED

LAST REVISION 05-20-15
DATE PLOTTED => 04-SEP-2015
TIME PLOTTED => 14:06

Dist	COUNTY	ROUTE	POST MILES TOTAL PROJECT	SHEET No.	TOTAL SHEETS
10	SJ	4,99	16.0/19.4,18.5	22	112

Gurjot S. Gill 5-22-15
REGISTERED CIVIL ENGINEER DATE

6-22-15
PLANS APPROVAL DATE

REGISTERED PROFESSIONAL ENGINEER GURJOT GILL No. 71647 Exp. 12-31-15 CIVIL STATE OF CALIFORNIA

THE STATE OF CALIFORNIA OR ITS OFFICERS OR AGENTS SHALL NOT BE RESPONSIBLE FOR THE ACCURACY OR COMPLETENESS OF SCANNED COPIES OF THIS PLAN SHEET.

NOTES:

1. FOR ACCURATE RIGHT OF WAY DATA, CONTACT RIGHT OF WAY ENGINEERING AT THE DISTRICT OFFICE.
2. NOT ALL UTILITIES ARE SHOWN ON THE PLANS.

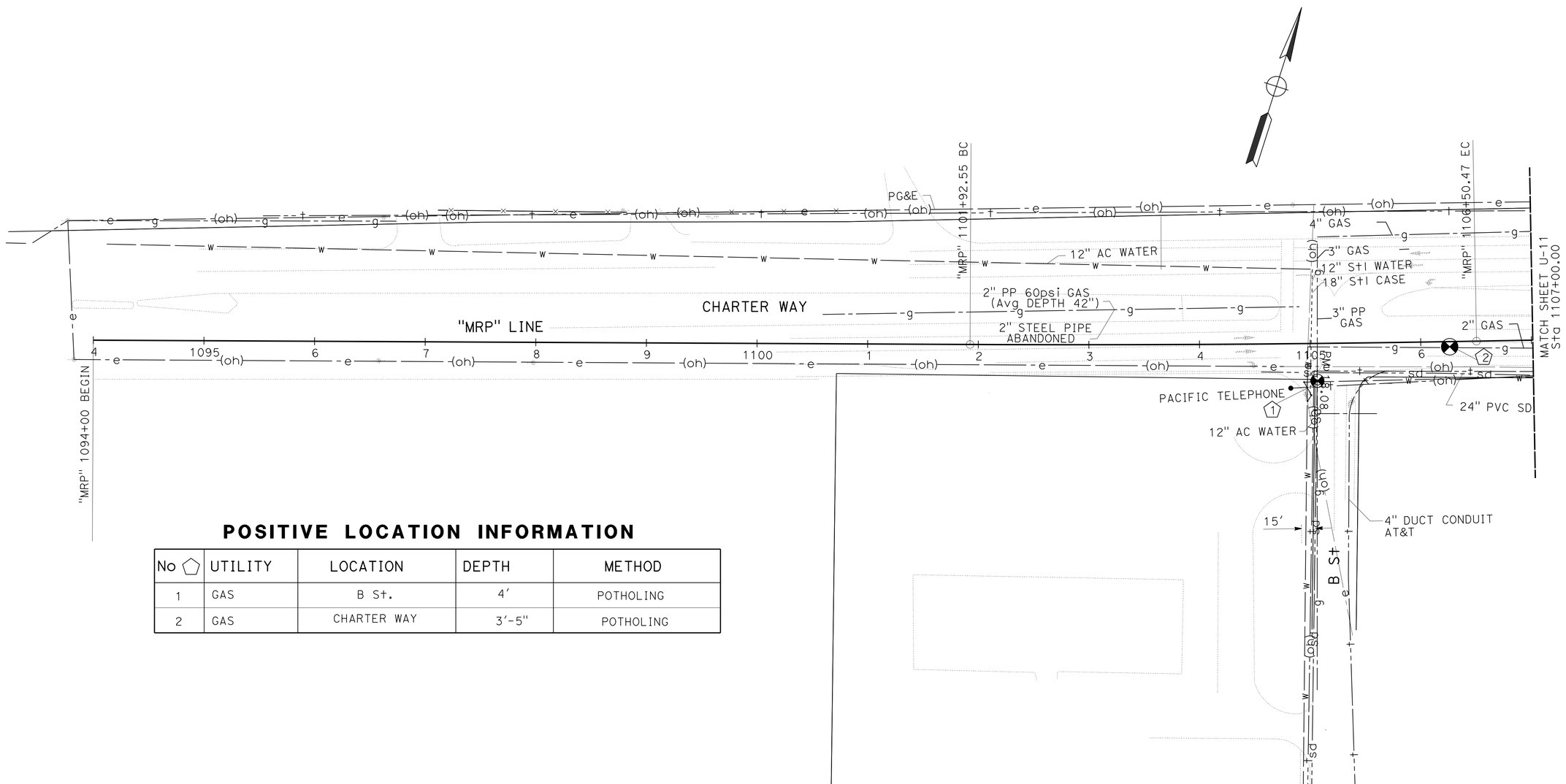

POSITIVE LOCATION INFORMATION

No ⬠	UTILITY	LOCATION	DEPTH	METHOD
1	GAS	B St.	4'	POTHOLING
2	GAS	CHARTER WAY	3'-5"	POTHOLING

APPROVED FOR UTILITY INFORMATION ONLY

SCALE: 1"=50'

UTILITY PLAN
U-10

STATE OF CALIFORNIA - DEPARTMENT OF TRANSPORTATION
Caltrans
06-DESIGN

FUNCTIONAL SUPERVISOR: ABDUL BAKER
CALCULATED-DESIGNED BY: GURJOT GILL
CHECKED BY: ABDUL BAKER
REVISED BY
DATE REVISED

LAST REVISION 05-20-15
DATE PLOTTED => 04-SEP-2015
TIME PLOTTED => 14:06

Dist	COUNTY	ROUTE	POST MILES TOTAL PROJECT	SHEET No.	TOTAL SHEETS
10	SJ	4,99	16.0/19.4,18.5	23	112

REGISTERED CIVIL ENGINEER 5-22-15 DATE

6-22-15
PLANS APPROVAL DATE

REGISTERED PROFESSIONAL ENGINEER GURJOT GILL No. 71647 Exp. 12-31-15 CIVIL STATE OF CALIFORNIA

THE STATE OF CALIFORNIA OR ITS OFFICERS OR AGENTS SHALL NOT BE RESPONSIBLE FOR THE ACCURACY OR COMPLETENESS OF SCANNED COPIES OF THIS PLAN SHEET.

NOTES:

1. FOR ACCURATE RIGHT OF WAY DATA, CONTACT RIGHT OF WAY ENGINEERING AT THE DISTRICT OFFICE.
2. NOT ALL UTILITIES ARE SHOWN ON THE PLANS.

POSITIVE LOCATION INFORMATION

No ⬠	UTILITY	LOCATION	ELEVATION	METHOD
3	GAS	CHARTER WAY	2'-7"	POTHOLING
4	GAS	MARIPOSA Rd	3'-6"	POTHOLING
5	GAS	MARIPOSA Rd	4'-5"	POTHOLING

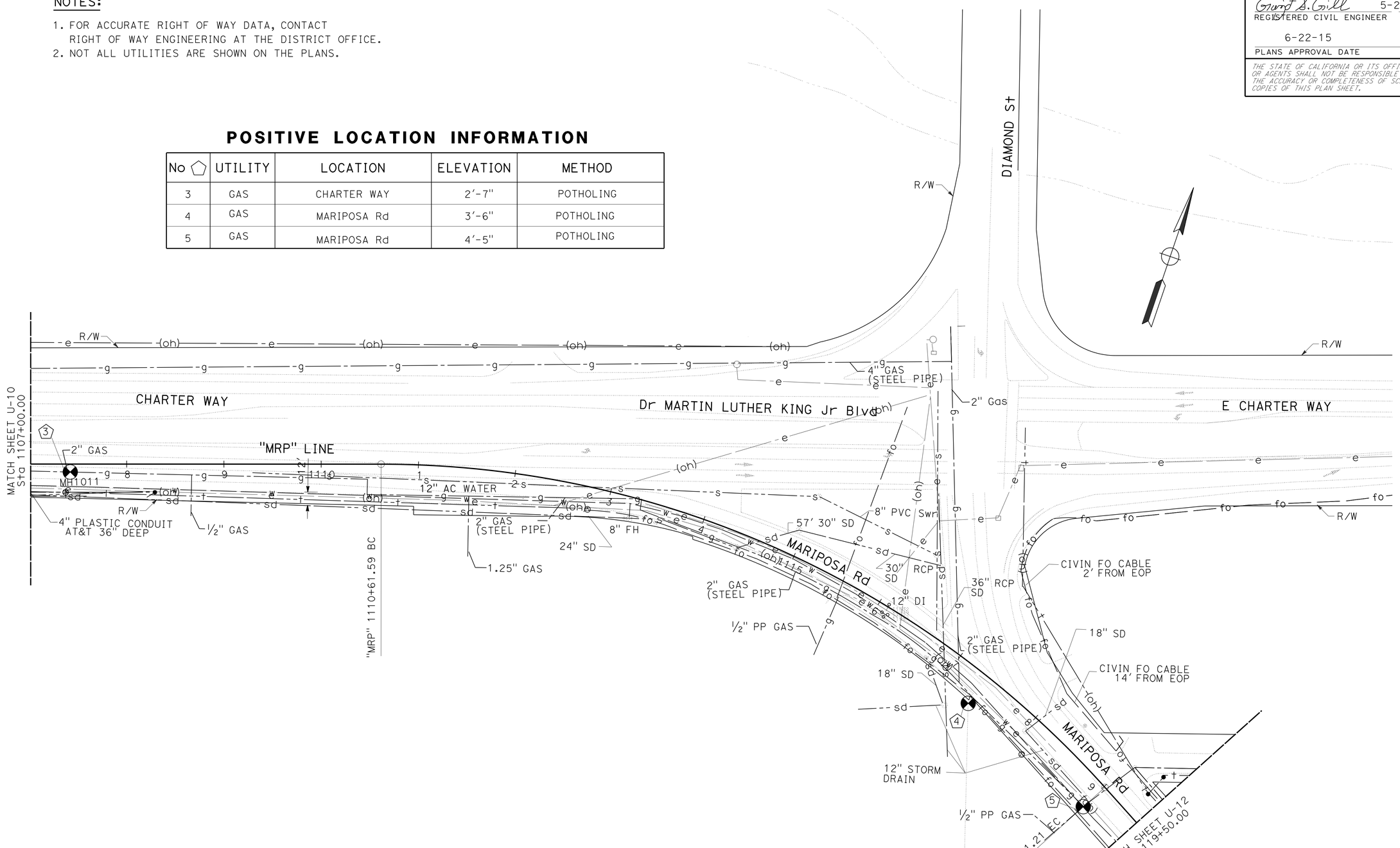

UTILITY PLAN
U-11

APPROVED FOR UTILITY INFORMATION ONLY

SCALE: 1"=50'

STATE OF CALIFORNIA - DEPARTMENT OF TRANSPORTATION
Caltrans
06-DESIGN

FUNCTIONAL SUPERVISOR: ABDUL BAKER
CALCULATED-DESIGNED BY: GURJOT GILL
CHECKED BY: ABDUL BAKER
REVISED BY
DATE REVISED

LAST REVISION 05-20-15
DATE PLOTTED => 04-SEP-2015
TIME PLOTTED => 14:06

Dist	COUNTY	ROUTE	POST MILES TOTAL PROJECT	SHEET No.	TOTAL SHEETS
10	SJ	4,99	16.0/19.4,18.5	24	112

REGISTERED CIVIL ENGINEER 5-22-15 DATE

6-22-15
PLANS APPROVAL DATE

REGISTERED PROFESSIONAL ENGINEER GURJOT GILL No. 71647 Exp. 12-31-15 CIVIL STATE OF CALIFORNIA

THE STATE OF CALIFORNIA OR ITS OFFICERS OR AGENTS SHALL NOT BE RESPONSIBLE FOR THE ACCURACY OR COMPLETENESS OF SCANNED COPIES OF THIS PLAN SHEET.

NOTES:

1. FOR ACCURATE RIGHT OF WAY DATA, CONTACT RIGHT OF WAY ENGINEERING AT THE DISTRICT OFFICE.
2. NOT ALL UTILITIES ARE SHOWN ON THE PLANS.

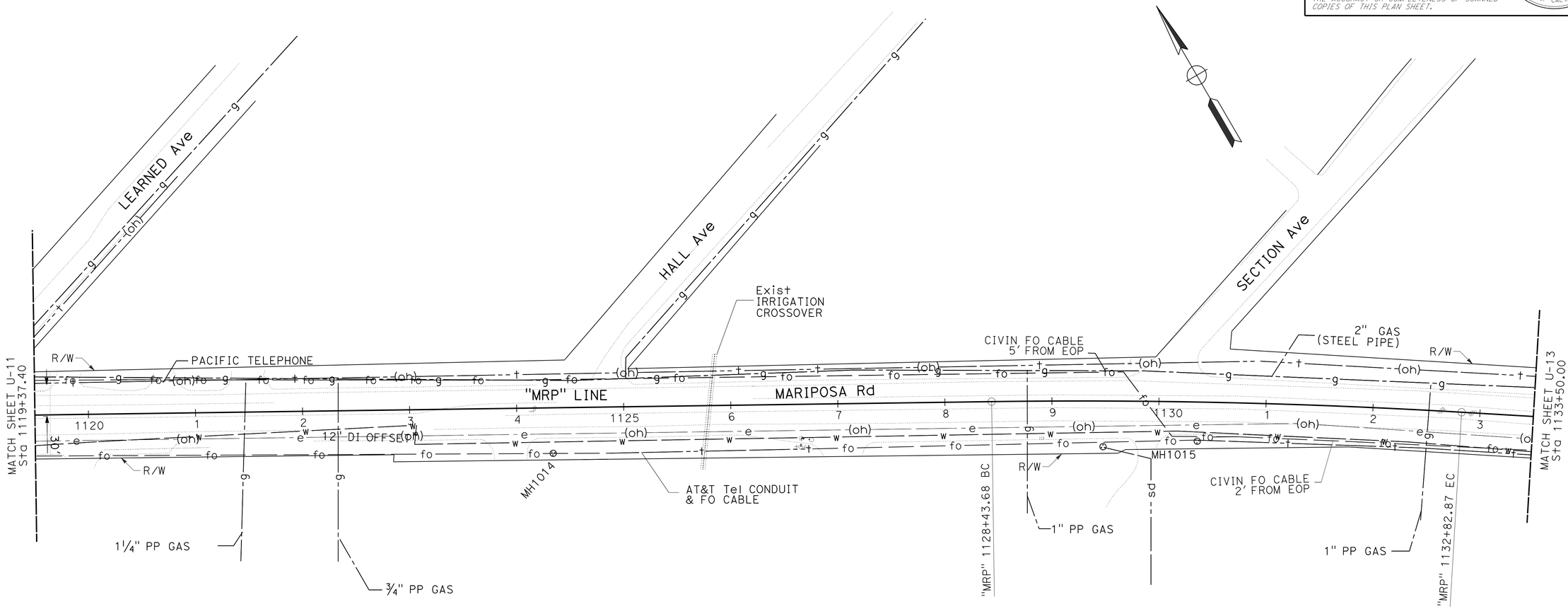

APPROVED FOR UTILITY INFORMATION ONLY

SCALE: 1"=50'

UTILITY PLAN
U-12

STATE OF CALIFORNIA - DEPARTMENT OF TRANSPORTATION
Caltrans
06-DESIGN

FUNCTIONAL SUPERVISOR: ABDUL BAKER
CALCULATED-DESIGNED BY: GURJOT GILL
CHECKED BY: ABDUL BAKER
REVISED BY
DATE REVISED

LAST REVISION 05-20-15
DATE PLOTTED => 04-SEP-2015
TIME PLOTTED => 14:06

Dist	COUNTY	ROUTE	POST MILES TOTAL PROJECT	SHEET No.	TOTAL SHEETS
10	SJ	4,99	16.0/19.4,18.5	25	112

REGISTERED CIVIL ENGINEER 5-22-15 DATE

6-22-15
PLANS APPROVAL DATE

REGISTERED PROFESSIONAL ENGINEER GURJOT GILL No. 71647 Exp. 12-31-15 CIVIL STATE OF CALIFORNIA

THE STATE OF CALIFORNIA OR ITS OFFICERS OR AGENTS SHALL NOT BE RESPONSIBLE FOR THE ACCURACY OR COMPLETENESS OF SCANNED COPIES OF THIS PLAN SHEET.

NOTES:

1. FOR ACCURATE RIGHT OF WAY DATA, CONTACT RIGHT OF WAY ENGINEERING AT THE DISTRICT OFFICE.
2. NOT ALL UTILITIES ARE SHOWN ON THE PLANS.

POSITIVE LOCATION INFORMATION

No ⬠	UTILITY	LOCATION	DEPTH	METHOD
6	GAS	POCK Ln	3'-2"	POTHOLING

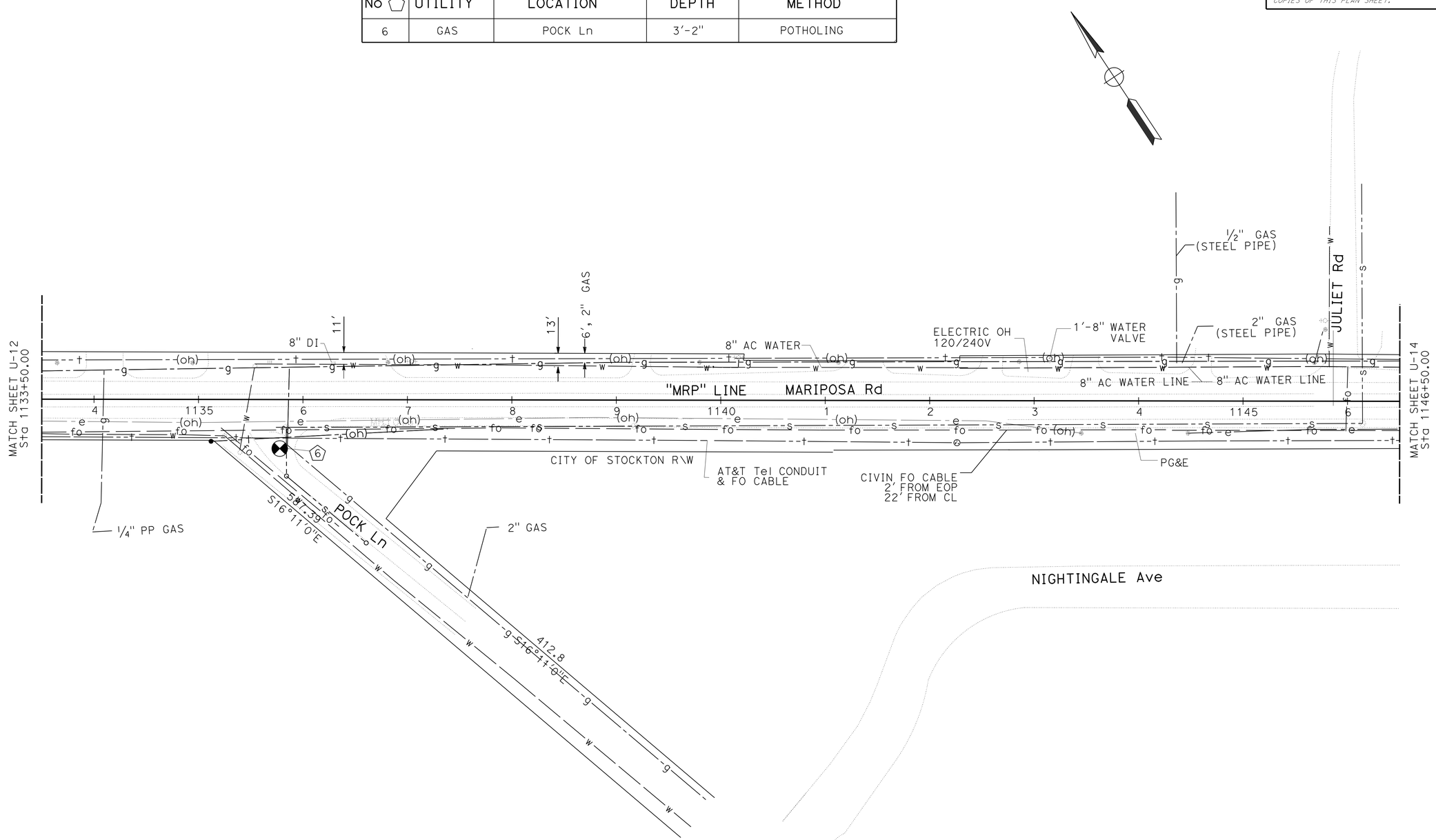

APPROVED FOR UTILITY INFORMATION ONLY

UTILITY PLAN

SCALE:1"=50'

U-13

STATE OF CALIFORNIA - DEPARTMENT OF TRANSPORTATION
06-DESIGN

FUNCTIONAL SUPERVISOR: ABDUL BAKER
CALCULATED-DESIGNED BY: GURJOT GILL
CHECKED BY: ABDUL BAKER
REVISED BY
DATE REVISED

LAST REVISION 05-20-15
DATE PLOTTED => 04-SEP-2015
TIME PLOTTED => 14:06

Dist	COUNTY	ROUTE	POST MILES TOTAL PROJECT	SHEET No.	TOTAL SHEETS
10	SJ	4,99	16.0/19.4,18.5	26	112

Gurjot S. Gill 5-22-15
REGISTERED CIVIL ENGINEER DATE

6-22-15
PLANS APPROVAL DATE

REGISTERED PROFESSIONAL ENGINEER GURJOT GILL No. 71647 Exp. 12-31-15 CIVIL STATE OF CALIFORNIA

THE STATE OF CALIFORNIA OR ITS OFFICERS OR AGENTS SHALL NOT BE RESPONSIBLE FOR THE ACCURACY OR COMPLETENESS OF SCANNED COPIES OF THIS PLAN SHEET.

NOTES:

1. FOR ACCURATE RIGHT OF WAY DATA, CONTACT RIGHT OF WAY ENGINEERING AT THE DISTRICT OFFICE.
2. NOT ALL UTILITIES ARE SHOWN ON THE PLANS.

POSITIVE LOCATION INFORMATION

No ⬠	UTILITY	LOCATION	DEPTH	METHOD
7	GAS	8TH STREET	2'-8"	POTHOLING

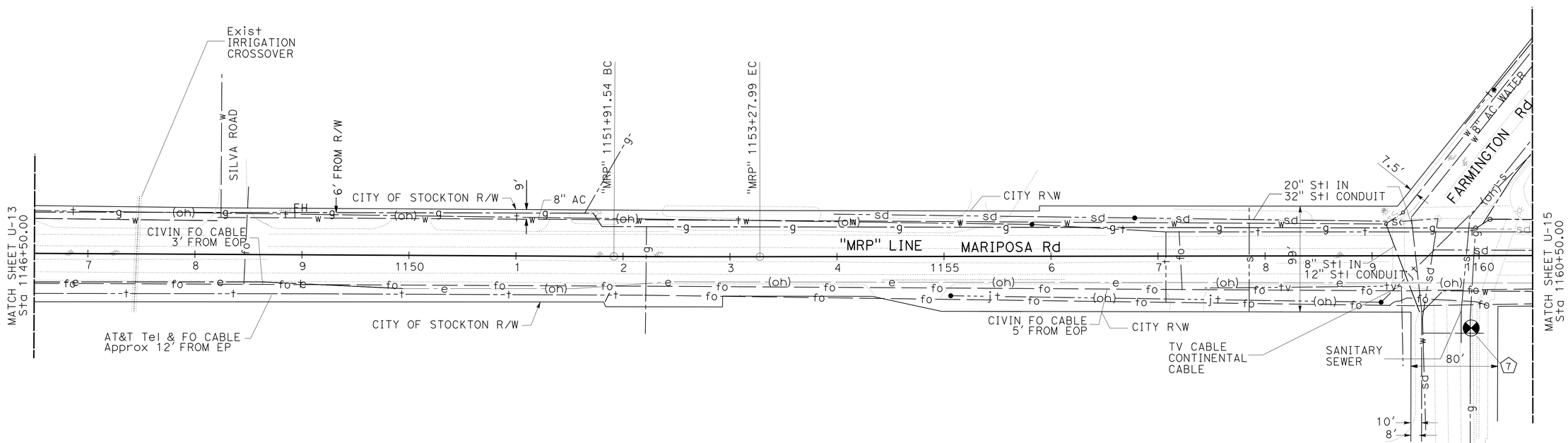

UTILITY PLAN
U-14

SCALE: 1"=50'

STATE OF CALIFORNIA - DEPARTMENT OF TRANSPORTATION
Caltrans
06-DESIGN

FUNCTIONAL SUPERVISOR: ABDUL BAKER
CALCULATED-DESIGNED BY: GURJOT GILL
CHECKED BY: ABDUL BAKER
REVISED BY
DATE REVISED

LAST REVISION 05-20-15
DATE PLOTTED => 04-SEP-2015
TIME PLOTTED => 14:06

Dist	COUNTY	ROUTE	POST MILES TOTAL PROJECT	SHEET No.	TOTAL SHEETS
10	SJ	4,99	16.0/19.4,18.5	27	112

REGISTERED CIVIL ENGINEER 5-22-15 DATE

6-22-15
PLANS APPROVAL DATE

REGISTERED PROFESSIONAL ENGINEER GURJOT GILL No. 71647 Exp. 12-31-15 CIVIL STATE OF CALIFORNIA

THE STATE OF CALIFORNIA OR ITS OFFICERS OR AGENTS SHALL NOT BE RESPONSIBLE FOR THE ACCURACY OR COMPLETENESS OF SCANNED COPIES OF THIS PLAN SHEET.

NOTES:

1. FOR ACCURATE RIGHT OF WAY DATA, CONTACT RIGHT OF WAY ENGINEERING AT THE DISTRICT OFFICE.
2. NOT ALL UTILITIES ARE SHOWN ON THE PLANS.

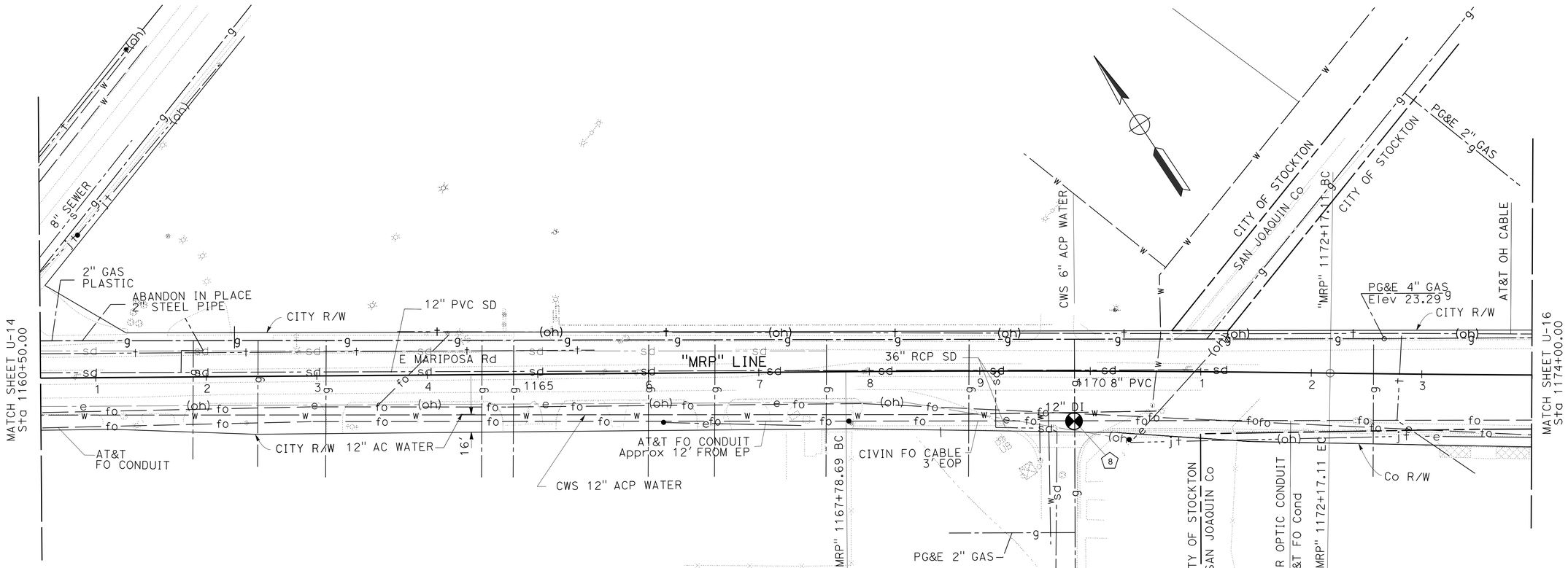

POSITIVE LOCATION INFORMATION

No ⬠	UTILITY	LOCATION	DEPTH	METHOD
8	GAS	MARIPOSA ROAD	4'-2"	POTHOLING

APPROVED FOR UTILITY INFORMATION ONLY

UTILITY PLAN

SCALE: 1"=50'

U-15

REVISED BY | DATE REVISED
GURJOT GILL | ABDUL BAKER
CALCULATED-DESIGNED BY | CHECKED BY
FUNCTIONAL SUPERVISOR | ABDUL BAKER
STATE OF CALIFORNIA - DEPARTMENT OF TRANSPORTATION
Caltrans
06-DESIGN

LAST REVISION 05-20-15 | DATE PLOTTED => 04-SEP-2015 | TIME PLOTTED => 14:06

Dist	COUNTY	ROUTE	POST MILES TOTAL PROJECT	SHEET No.	TOTAL SHEETS
10	SJ	4,99	16.0/19.4,18.5	28	112

REGISTERED CIVIL ENGINEER 5-22-15 DATE

6-22-15
PLANS APPROVAL DATE

REGISTERED PROFESSIONAL ENGINEER GURJOT GILL No. 71647 Exp. 12-31-15 CIVIL STATE OF CALIFORNIA

THE STATE OF CALIFORNIA OR ITS OFFICERS OR AGENTS SHALL NOT BE RESPONSIBLE FOR THE ACCURACY OR COMPLETENESS OF SCANNED COPIES OF THIS PLAN SHEET.

NOTES:

1. FOR ACCURATE RIGHT OF WAY DATA, CONTACT RIGHT OF WAY ENGINEERING AT THE DISTRICT OFFICE.
2. NOT ALL UTILITIES ARE SHOWN ON THE PLANS.

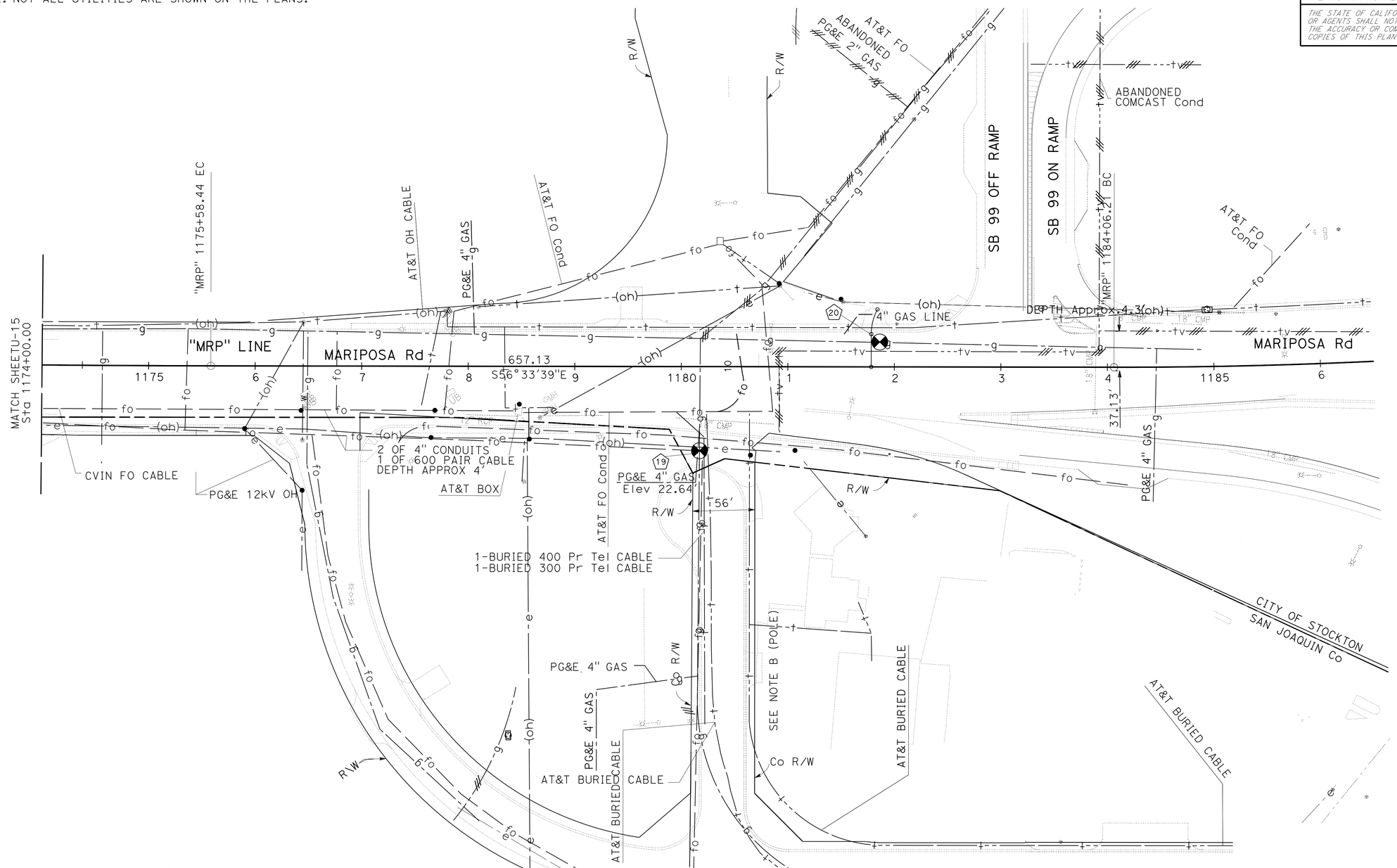

APPROVED FOR UTILITY INFORMATION ONLY

SCALE: 1"=50'

UTILITY PLAN

U-16

REVISED BY	DATE REVISED
GURJOT GILL	
ABDUL BAKER	

CALCULATED- DESIGNED BY
CHECKED BY

FUNCTIONAL SUPERVISOR
ABDUL BAKER

STATE OF CALIFORNIA - DEPARTMENT OF TRANSPORTATION
Caltrans
06-DESIGN

LAST REVISION 05-20-15 | DATE PLOTTED => 04-SEP-2015 | TIME PLOTTED => 14:06

Dist	COUNTY	ROUTE	POST MILES TOTAL PROJECT	SHEET No.	TOTAL SHEETS
10	SJ	4	16.0/19.4,18.5	29	112

Amarjit S Dhillon 04/08/15
REGISTERED CIVIL ENGINEER DATE

6-22-15
PLANS APPROVAL DATE

REGISTERED PROFESSIONAL ENGINEER
AMARJIT S. DHILLON
No. 67458
Exp. 6/30/17
CIVIL
STATE OF CALIFORNIA

THE STATE OF CALIFORNIA OR ITS OFFICERS OR AGENTS SHALL NOT BE RESPONSIBLE FOR THE ACCURACY OR COMPLETENESS OF SCANNED COPIES OF THIS PLAN SHEET.

STATIONARY MOUNTED CONSTRUCTION AREA SIGNS

SIGN No.	SIGN CODE	PANEL SIZE	SIGN MESSAGE	No. OF POSTS AND SIZE	NUMBER OF SIGNS
A	W20-1	60" x 60"	ROAD WORK AHEAD	2 - 6" x 6"	2
B	C14 (CA)	48" x 24"	END ROAD WORK	1 - 4" x 6"	5
C	W20-1	48" x 48"	ROAD WORK AHEAD	1 - 6" x 6"	13
D	C40 (CA)	108" x 42"	TRAFFIC FINES DOUBLED IN CONSTRUCTION ZONES	2 - 6" x 6"	2
E	G20-1	90" x 48"	ROAD WORK NEXT 3 MILES	2 - 6" x 6"	2

NOTES: EXACT SIGN LOCATIONS TO BE DETERMINED BY THE ENGINEER.
FOR ADDITIONAL CONSTRUCTION AREA SIGNS, REFER TO SHEET THQ-1

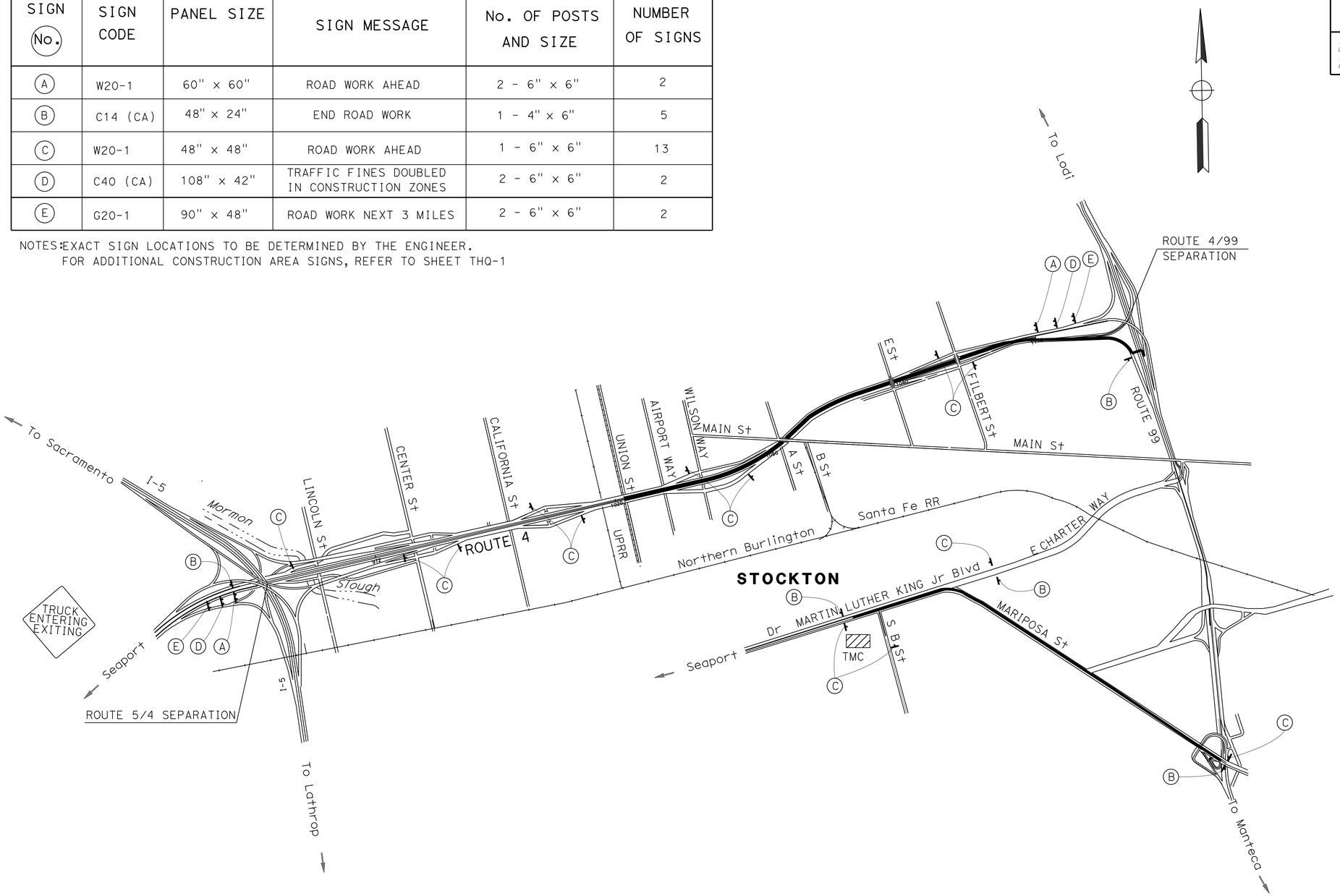

APPROVED FOR CONSTRUCTION AREA SIGN WORK ONLY

CONSTRUCTION AREA SIGNS

NO SCALE

CS-1

STATE OF CALIFORNIA - DEPARTMENT OF TRANSPORTATION
Caltrans
06-TRAFFIC DESIGN

FUNCTIONAL SUPERVISOR: MOHAMMED QATAMI
CALCULATED-DESIGNED BY: AMARJIT S DHILLON
CHECKED BY: HASSAN TAHA
REVISED BY
DATE REVISED

LAST REVISION 04-08-15
DATE PLOTTED => 04-SEP-2015
TIME PLOTTED => 14:06

Dist	COUNTY	ROUTE	POST MILES TOTAL PROJECT	SHEET No.	TOTAL SHEETS
10	SJ	4	16.0/19.4,18.5	30	112

Hassan Taha 03-13-15
REGISTERED CIVIL ENGINEER DATE

6-22-15
S APPROVAL DATE

REGISTERED PROFESSIONAL ENGINEER HASSAN M.TAHA No. 60130 Exp.06/30/16 CIVIL STATE OF CALIFORNIA

THE STATE OF CALIFORNIA OR ITS OFFICERS OR AGENTS SHALL NOT BE RESPONSIBLE FOR THE ACCURACY OR COMPLETENESS OF SCANNED COPIES OF THIS SHEET.

LEGEND:

- Temp RAILING (TYPE K)
- CHANNELIZERS (SURFACED MOUNTED)
- TEMPORARY CRASH CUSHION ARRAY (TS14)
- (X-X) CONSTRUCTION AREA SIGN No.
- (111) TRAFFIC STRIPE DETAIL No. (TAPE)

NOTE:

FOR ADDITIONAL CONSTRUCTION AREA SIGNS, REFER TO SHEET CS-1.

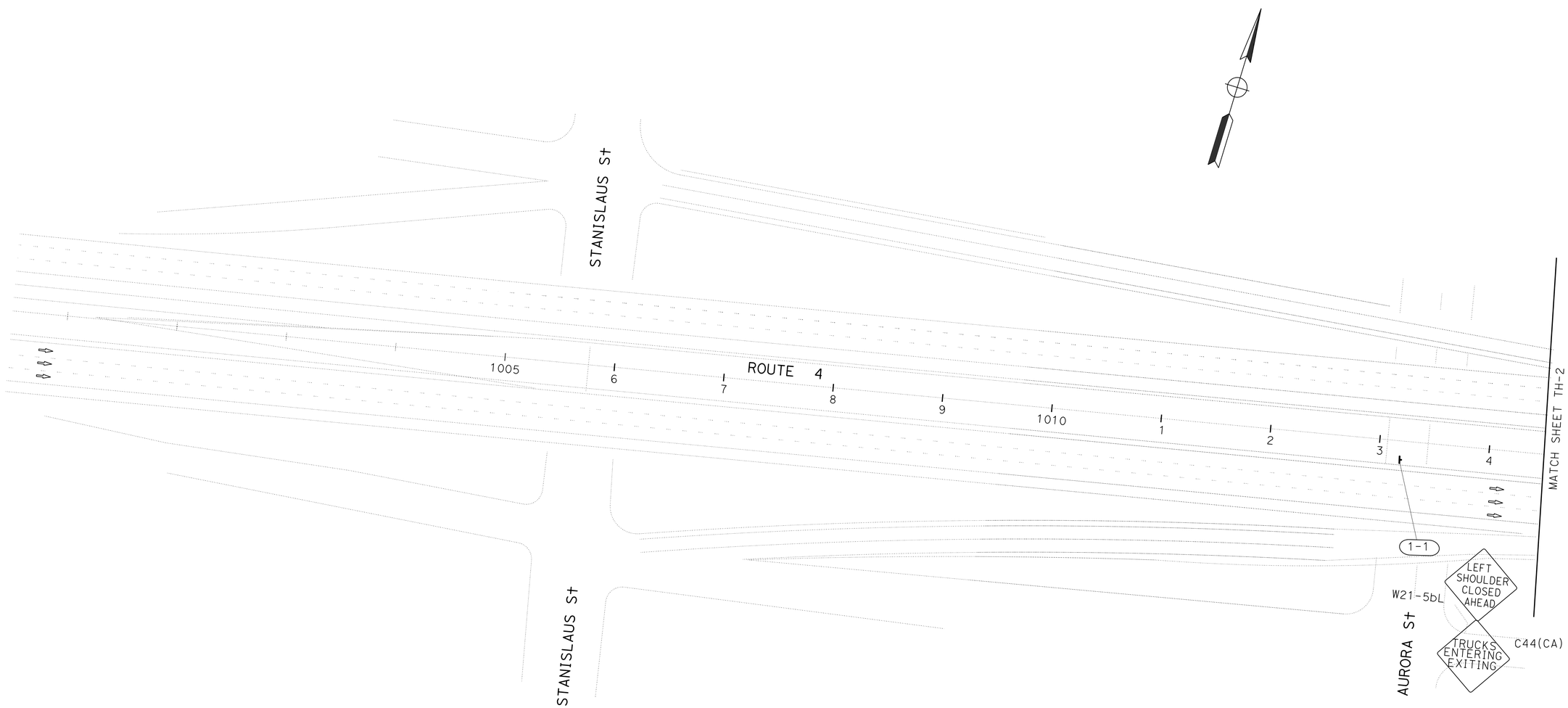

TRAFFIC HANDLING PLAN

SCALE: 1"=50'

TH-1

APPROVED FOR TRAFFIC HANDLING WORK ONLY

STATE OF CALIFORNIA - DEPARTMENT OF TRANSPORTATION
Caltrans® **06-TRAFFIC DESIGN**

FUNCTIONAL SUPERVISOR: MOHAMMED QATAMI
CALCULATED-DESIGNED BY: HASSAN TAHA
CHECKED BY: AMARJIT DHILLON
REVISED BY
DATE REVISED

LAST REVISION 05-14-15
DATE PLOTTED => 04-SEP-2015
TIME PLOTTED => 14:07

Dist	COUNTY	ROUTE	POST MILES TOTAL PROJECT	SHEET No.	TOTAL SHEETS
10	SJ	4	16.0/19.4,18.5	31	112

Hassan Taha 03-13-15
REGISTERED CIVIL ENGINEER DATE

6-22-15
S APPROVAL DATE

REGISTERED PROFESSIONAL ENGINEER
HASSAN M.TAHA
No. 60130
Exp.06/30/16
CIVIL
STATE OF CALIFORNIA

THE STATE OF CALIFORNIA OR ITS OFFICERS OR AGENTS SHALL NOT BE RESPONSIBLE FOR THE ACCURACY OR COMPLETENESS OF SCANNED COPIES OF THIS SHEET.

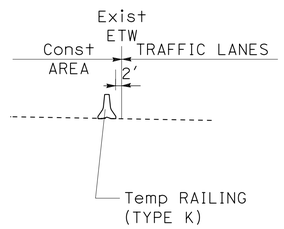

SECTION A-A

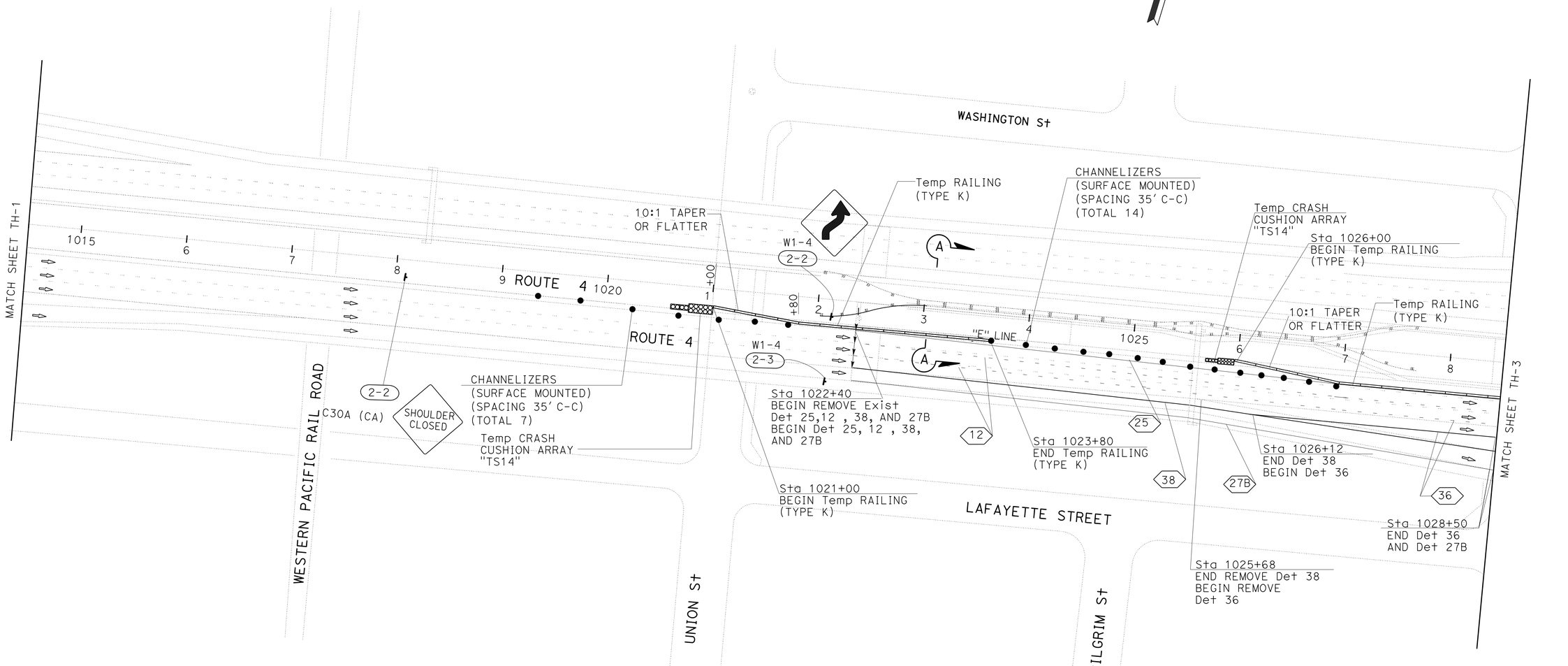

TRAFFIC HANDLING PLAN

SCALE: 1"=50'

TH-2

APPROVED FOR TRAFFIC HANDLING WORK ONLY

STATE OF CALIFORNIA - DEPARTMENT OF TRANSPORTATION
Caltrans 06-TRAFFIC DESIGN

FUNCTIONAL SUPERVISOR: MOHAMMED QATAMI
CALCULATED-DESIGNED BY: HASSAN TAHA
CHECKED BY: AMARJIT DHILLON
REVISED BY
DATE REVISED

LAST REVISION 04-21-15
DATE PLOTTED => 04-SEP-2015
TIME PLOTTED => 14:07

Dist	COUNTY	ROUTE	POST MILES TOTAL PROJECT	SHEET No.	TOTAL SHEETS
10	SJ	4	16.0/19.4,18.5	32	112

Hassan Taha 03-13-15
REGISTERED CIVIL ENGINEER DATE

6-22-15
S APPROVAL DATE

REGISTERED PROFESSIONAL ENGINEER
HASSAN M.TAHA
No. 60130
Exp.06/30/16
CIVIL
STATE OF CALIFORNIA

THE STATE OF CALIFORNIA OR ITS OFFICERS OR AGENTS SHALL NOT BE RESPONSIBLE FOR THE ACCURACY OR COMPLETENESS OF SCANNED COPIES OF THIS SHEET.

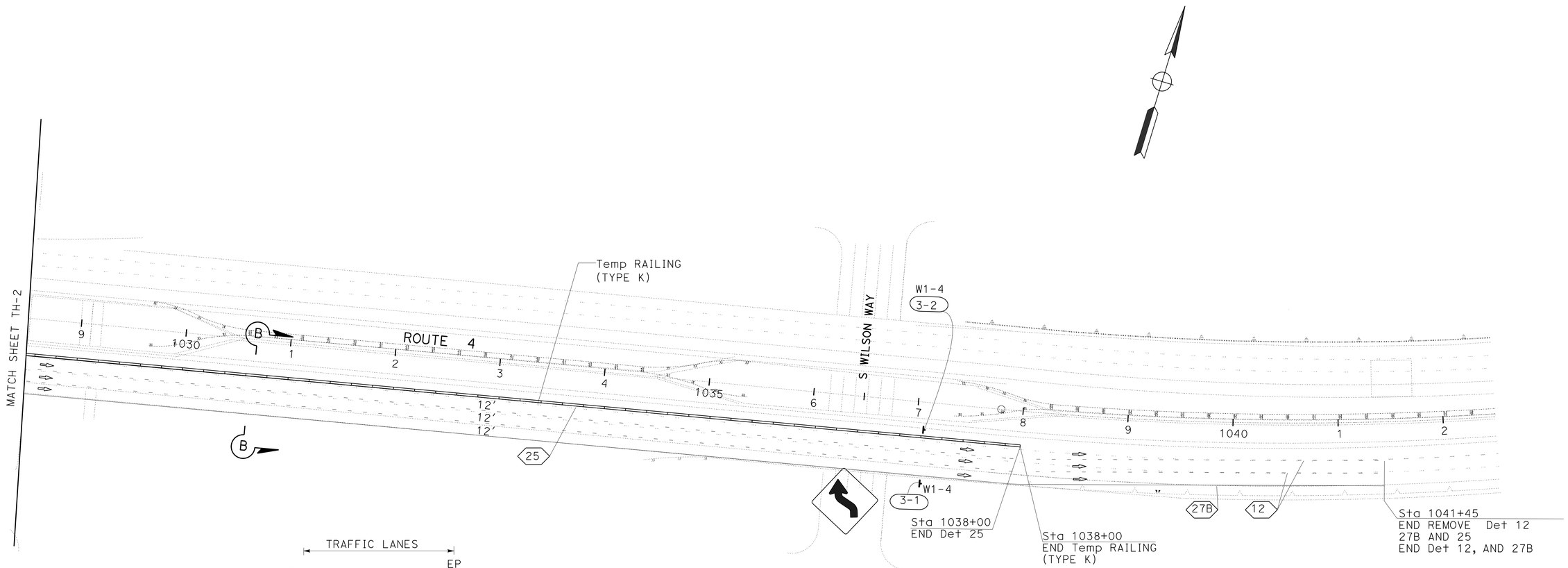

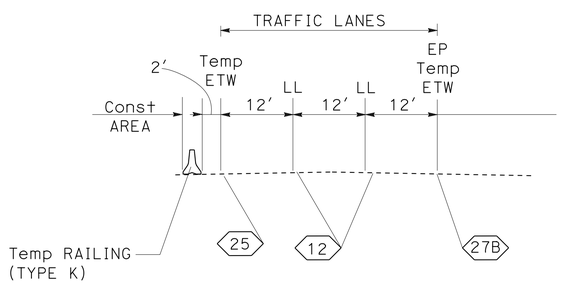

SECTION B-B

TRAFFIC HANDLING PLAN

SCALE: 1"=50'

TH-3

APPROVED FOR TRAFFIC HANDLING WORK ONLY

STATE OF CALIFORNIA - DEPARTMENT OF TRANSPORTATION
Caltrans
06-TRAFFIC DESIGN

FUNCTIONAL SUPERVISOR: MOHAMMED QATAMI

CALCULATED-DESIGNED BY: HASSAN TAHA
CHECKED BY: AMARJIT DHILLON

REVISED BY
DATE REVISED

LAST REVISION 04-21-15
DATE PLOTTED => 04-SEP-2015
TIME PLOTTED => 14:07

Dist	COUNTY	ROUTE	POST MILES TOTAL PROJECT	SHEET No.	TOTAL SHEETS
10	SJ	4	16.0/19.4,18.5	33	112

Hassan Taha 01-14-15
REGISTERED CIVIL ENGINEER DATE

6-22-15
S APPROVAL DATE

REGISTERED PROFESSIONAL ENGINEER HASSAN M. TAHA No. 60130 Exp. 06/30/16 CIVIL STATE OF CALIFORNIA

THE STATE OF CALIFORNIA OR ITS OFFICERS OR AGENTS SHALL NOT BE RESPONSIBLE FOR THE ACCURACY OR COMPLETENESS OF SCANNED COPIES OF THIS SHEET.

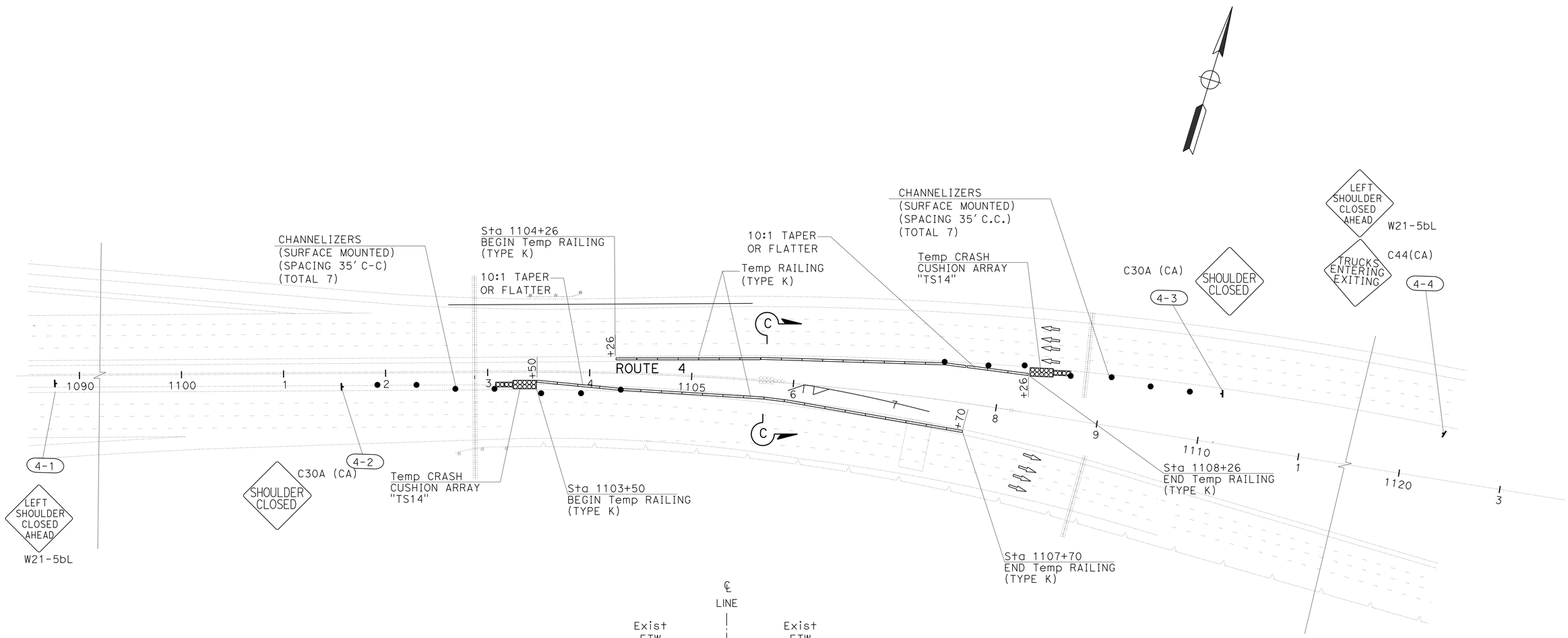

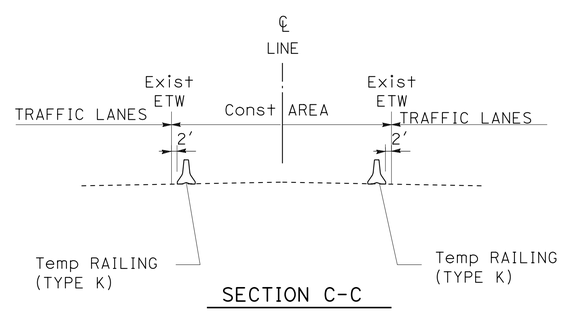

SECTION C-C

TRAFFIC HANDLING PLAN

SCALE: 1"=50'

TH-4

APPROVED FOR TRAFFIC HANDLING WORK ONLY

STATE OF CALIFORNIA - DEPARTMENT OF TRANSPORTATION
Caltrans® 06-TRAFFIC DESIGN

FUNCTIONAL SUPERVISOR: MOHAMMED QATAMI
CALCULATED-DESIGNED BY: HASSAN TAHA
CHECKED BY: AMARJIT DHILLON
REVISED BY
DATE REVISED

LAST REVISION 05-14-15 | DATE PLOTTED => 04-SEP-2015 | TIME PLOTTED => 14:07

Dist	COUNTY	ROUTE	POST MILES TOTAL PROJECT	SHEET No.	TOTAL SHEETS
10	SJ	4	16.0/19.4,18.5	34	112

REGISTERED CIVIL ENGINEER 03-13-15 DATE

6-22-15
S APPROVAL DATE

REGISTERED PROFESSIONAL ENGINEER HASSAN M.TAHA No. 60130 Exp.06/30/16 CIVIL STATE OF CALIFORNIA

THE STATE OF CALIFORNIA OR ITS OFFICERS OR AGENTS SHALL NOT BE RESPONSIBLE FOR THE ACCURACY OR COMPLETENESS OF SCANNED COPIES OF THIS SHEET.

NOTE:

FOR ADDITIONAL CONSTRUCTION AREA SIGNS, REFER TO SHEET CS-1.

STATIONARY MOUNTED CONSTRUCTION AREA SIGNS (TRAFFIC HANDLING)

SHEET No.	SIGN No.	SIGN CODE	SIGN MESSAGE	PANEL SIZE	No. OF POST AND SIZE
TH-1	1-1	W21-5bL	LEFT SHOULDER CLOSED AHEAD	48" x 48"	1 - 6" x 6"
		C40(CA)	TRUCKS ENTERING EXITING	48" x 48"	
TH-2	2-1	C30A (CA)	SHOULDER CLOSED	48" x 48"	1 - 6" x 6"
	2-2	W1-4	CURVE ARROW (R)	48" x 48"	1 - 6" x 6"
	2-3	W1-4	CURVE ARROW (R)	48" x 48"	1 - 6" x 6"
TH-3	3-1	W1-4	CURVE ARROW (L)	48" x 48"	1 - 6" x 6"
	3-2	W1-4	CURVE ARROW (L)	48" x 48"	1 - 6" x 6"
TH-4	4-1	W21-5bL	LEFT SHOULDER CLOSED AHEAD	48" x 48"	1 - 6" x 6"
	4-2	C30A (CA)	SHOULDER CLOSED	48" x 48"	1 - 6" x 6"
	4-3	W21-5bL	LEFT SHOULDER CLOSED AHEAD	48" x 48"	1 - 6" x 6"
	4-4	C30A (CA)	SHOULDER CLOSED	48" x 48"	1 - 6" x 6"
		C40(CA)	TRUCKS ENTERING EXITING	48" x 48"	

TRAFFIC HANDLING QUANTITIES

SHEET No.	LOCATION	TEMPORARY RAILING (TYPE K)	CHANNELIZER (SURFACE MOUNTED)	TEMPORARY CRASH CUSHION MODULE
		LF	EA	EA
TH-2			3	
TH-2	Sta 1021+60 TO Sta 1024+20	260	37	42
	Sta 1021+00 TO Sta 1023+60	260		
TH-2 TO TH-3	Sta 1026+00 TO Sta 1038+00	1200	14	28
TH-4	Sta 1104+26 TO Sta 1108+26	400		
	Sta 1103+50 TO Sta 1107+70	420		
TOTAL		2540	54	70

TEMPORARY PAVEMENT DELINEATION QUANTITIES

SHEET No.	LOCATION Sta TO Sta	DETAIL No.	REMOVE PAVEMENT MARKER	REMOVE THERMOPLASTIC TRAFFIC STRIPE		Temp TRAFFIC STRIPE (TAPE)	Temp PAVEMENT MARKER
				WHITE	YELLOW (HAZARDOUS WASTE)		
			EA	LF	LF	LF	EA
TH-2 To TH-3	1022+40 TO 1041+45 (X2)	12	82	3,810		953	82
	1022+40 TO 1041+45	27B		1,905		1,905	
	1022+40 TO 1041+45	25	41		1,905	1,905	41
	1022+40 TO 1025+68	38	15	328			
	1025+68 TO 1028+50	36	26	1128			
	1022+40 TO 1026+12	38				372	17
	1026+12 TO 1028+50 (X2)	36				952	44
TOTAL			164	7171	1,905	6,087	184

TRAFFIC HANDLING QUANTITIES
THQ-1

STATE OF CALIFORNIA - DEPARTMENT OF TRANSPORTATION
Caltrans® 06-TRAFFIC DESIGN

FUNCTIONAL SUPERVISOR: MOHAMMED QATAMI
CALCULATED-DESIGNED BY: HASSAN TAHA
CHECKED BY: SANDY LE
REVISED BY
DATE REVISED

LAST REVISION 05-14-15 | DATE PLOTTED => 04-SEP-2015 | TIME PLOTTED => 14:07

Dist	COUNTY	ROUTE	POST MILES TOTAL PROJECT	SHEET No.	TOTAL SHEETS
10	SJ	4	16.0/19.4,18.5	35	112

Hassan Taha 03-13-15
REGISTERED CIVIL ENGINEER DATE

6-22-15
S APPROVAL DATE

REGISTERED PROFESSIONAL ENGINEER
HASSAN M.TAHA
No. 60130
Exp.06/30/16
CIVIL
STATE OF CALIFORNIA

THE STATE OF CALIFORNIA OR ITS OFFICERS OR AGENTS SHALL NOT BE RESPONSIBLE FOR THE ACCURACY OR COMPLETENESS OF SCANNED COPIES OF THIS SHEET.

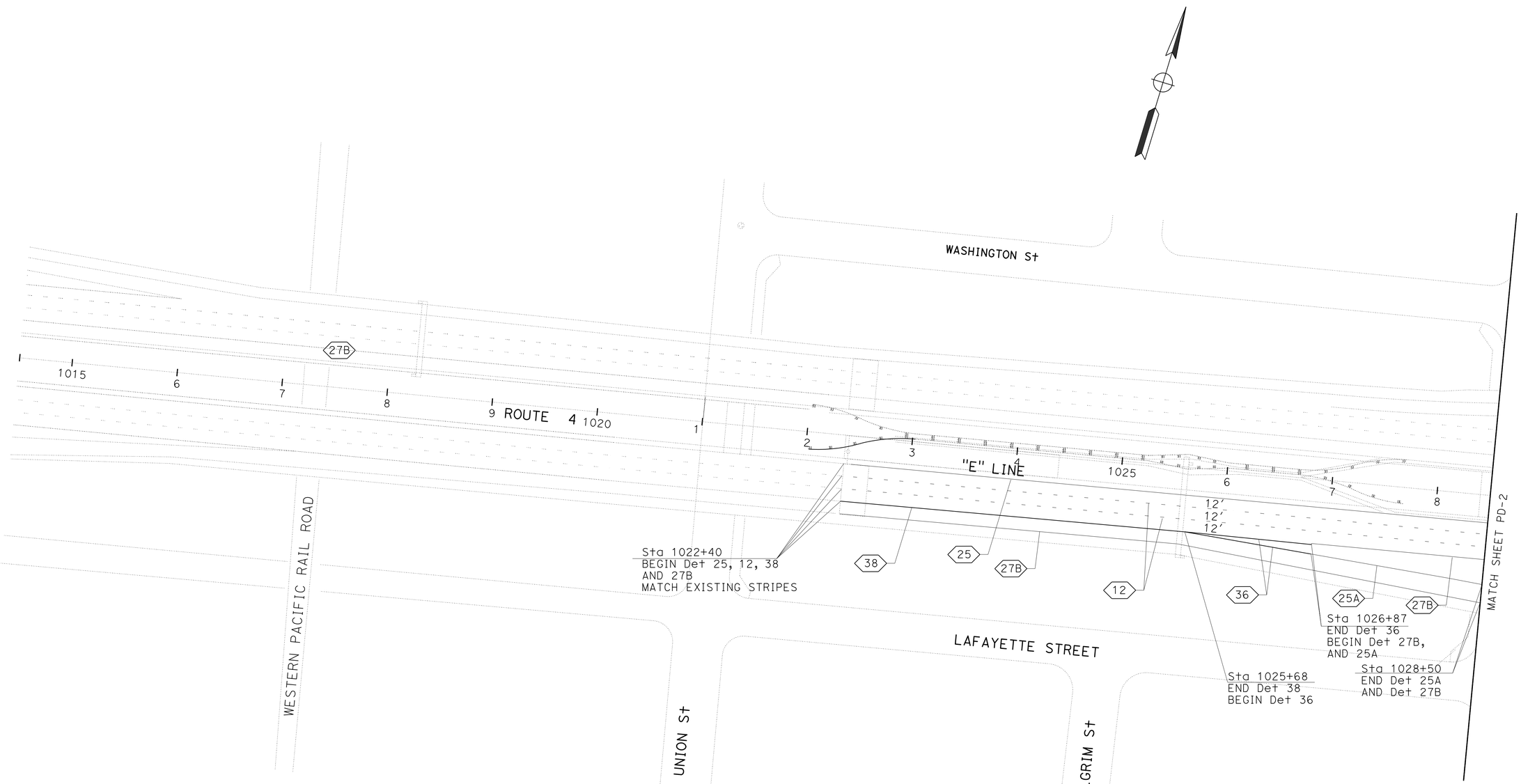

PAVEMENT DELINEATION PLAN

SCALE: 1"=50'

PD-1

APPROVED FOR PAVEMENT DELINEATION WORK ONLY

STATE OF CALIFORNIA - DEPARTMENT OF TRANSPORTATION
Caltrans® **06-TRAFFIC DESIGN**

FUNCTIONAL SUPERVISOR: MOHAMMED QATAMI
CALCULATED-DESIGNED BY: HASSAN TAHA
CHECKED BY: AMARJIT DHILLON
REVISED BY
DATE REVISED

LAST REVISION 04-21-15
DATE PLOTTED => 04-SEP-2015
TIME PLOTTED => 14:07

Dist	COUNTY	ROUTE	POST MILES TOTAL PROJECT	SHEET No.	TOTAL SHEETS
10	SJ	4	16.0/19.4,18.5	36	112

Hassan Taha 03-13-15
REGISTERED CIVIL ENGINEER DATE

6-22-15
S APPROVAL DATE

REGISTERED PROFESSIONAL ENGINEER HASSAN M. TAHA No. 60130 Exp. 06/30/16 CIVIL STATE OF CALIFORNIA

THE STATE OF CALIFORNIA OR ITS OFFICERS OR AGENTS SHALL NOT BE RESPONSIBLE FOR THE ACCURACY OR COMPLETENESS OF SCANNED COPIES OF THIS SHEET.

PAVEMENT DELINEATION QUANTITIES

SHEET No.	LOCATION Sta TO Sta	DIRECTION	DETAIL No.	PAVEMENT MARKER (RETROREFLECTIVE) TYPE G	PAVEMENT MARKER (RETROREFLECTIVE) TYPE H	THERMOPLASTIC TRAFFIC STRIPE SOLID YELLOW 4"	SOLID WHITE 4"	SOLID WHITE 8"	(BROKEN 36-12) 4"
				EA	EA	LF	LF	LF	LF
PD-1 Thru PD-2	Sta 1022+40 To 1041+45	EB	12	41					1,905
	Sta 1022+40 To 1041+45	EB	12	41					1,905
	Sta 1022+40 To 1025+00	EB	27B				260		
	Sta 1025+68 To 1026+87	EB	36	12				238	
	Sta 1026+87 To 1041+45	EB	27B				1,458		
	Sta 1022+40 To 1041+45	EB	25		41	1,905			
	Sta 1022+40 To 1025+68	EB	38	15				328	
	Sta 1026+87 To 1028+50	EB	25A		8	163			
SUB TOTAL				109	49	2,068	1,718	566	3,810
TOTAL				158		3,786		566	3,810

DELINEATORS AND MARKERS

LOCATION	GUARD RAILING DELINEATOR CLASS 1 -TYPE (G) EA	DELINEATORS SPACING	OBJECT MARKER TYPE (L-1) EA
LOCATION 1	4	48′	
LOCATION 3			1
LOCATION 4			1
TOTAL	4		2

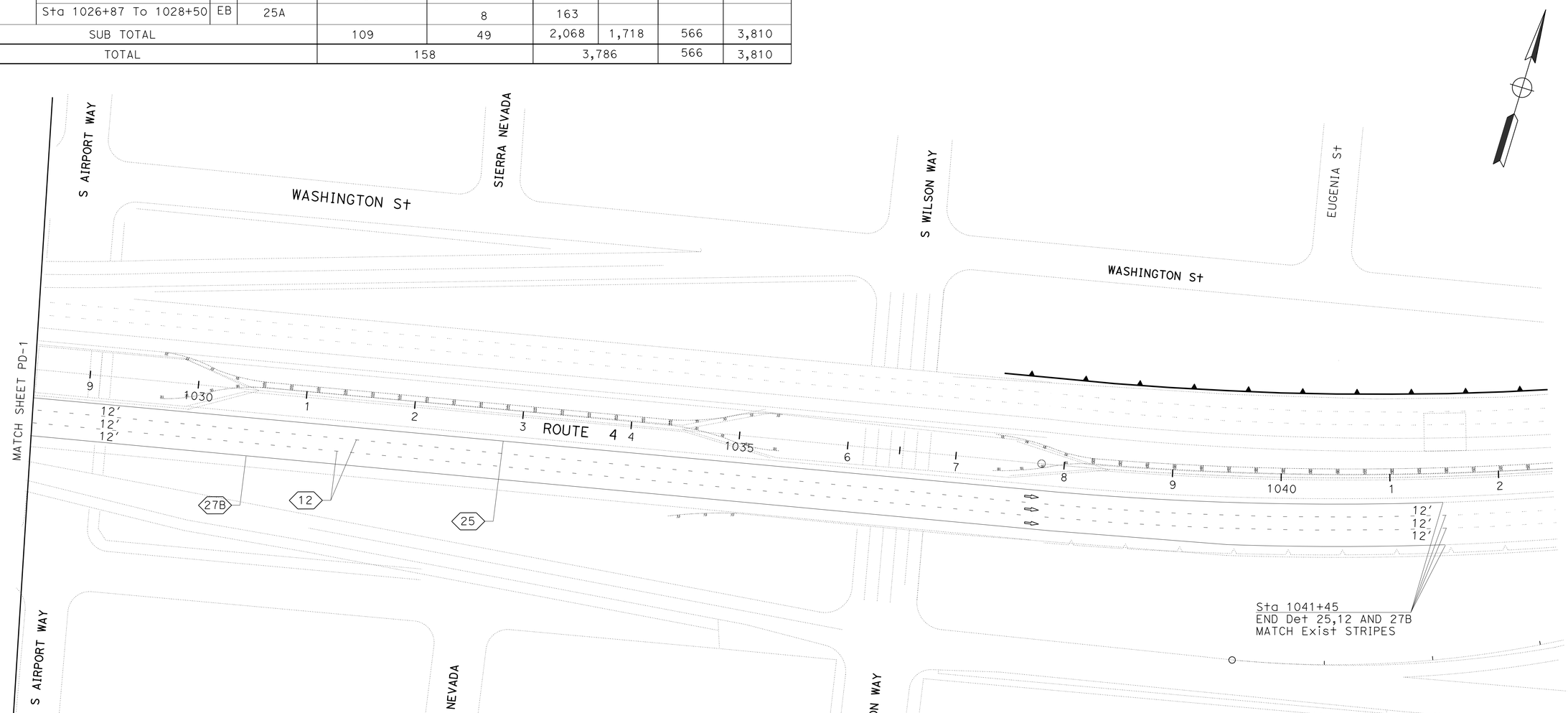

APPROVED FOR PAVEMENT DELINEATION WORK ONLY

PAVEMENT DELINEATION AND QUANTITIES

SCALE: 1"=50′

PD-2

STATE OF CALIFORNIA - DEPARTMENT OF TRANSPORTATION
Caltrans® 06-TRAFFIC DESIGN
FUNCTIONAL SUPERVISOR: MOHAMMED QATAMI
CALCULATED-DESIGNED BY: HASSAN TAHA
CHECKED BY: AMARJIT DHILLON
REVISED BY
DATE REVISED

LAST REVISION 04-21-15
DATE PLOTTED => 04-SEP-2015
TIME PLOTTED => 14:07

Dist	COUNTY	ROUTE	POST MILES TOTAL PROJECT	SHEET No.	TOTAL SHEETS
10	SJ	4	16.0/19.4,18.5	37	112

Gurjot S. Gill 5-22-15
REGISTERED CIVIL ENGINEER DATE

6-22-15
PLANS APPROVAL DATE

REGISTERED PROFESSIONAL ENGINEER GURJOT GILL No. 71647 Exp. 12-31-15 CIVIL STATE OF CALIFORNIA

THE STATE OF CALIFORNIA OR ITS OFFICERS OR AGENTS SHALL NOT BE RESPONSIBLE FOR THE ACCURACY OR COMPLETENESS OF SCANNED COPIES OF THIS PLAN SHEET.

ROADWAY QUANTITIES

LOCATION No.	STATION	CHAIN LINK FENCE (TYPE CL-6)	ROADWAY EXCAVATION	CLASS 2 AB	HOT MIX ASPHALT (TYPE A)	REMOVE Conc BARRIER (TYPE 50)	Conc BARRIER (TYPE 60)	Conc BARRIER (TYPE 60C)	Conc BARRIER (TYPE 60F)	REMOVE CRASH CUSHION	Conc BARRIER (TTYPE 60) END ANCHORAGE (N)	REMOVE AC DIKE	PLACE HMA DIKE (TYPE F)	TACK COAT	COLD PLANE AC Pvmt	DESCRIPTION
		LF	CY	CY	TON	LF	LF	LF	LF	EA	LF	LF	LF	TON	SQYD	
1	9+56.00 "E" LINE	45														
1	10+35.00 TO 11+85.00 "E" LINE		91	48	52.5									0.02		MVP AND CMS
	1022+40.00 TO 1027+00.00 SR-4				221										678	Rt Shld SR-4 BEFORE S AIRPORT WAY
	1025+50.00 TO 1026+50.00 SR-4				50										153	GORE AREA BEFORE S AIRPORT WAY UC
	1030+00.00 TO 1035+26.81 SR-4				191										585	Rt Shld SR-4 BEFORE S WILSON WAY UC
	1037+76.78 TO 1040+00.00 SR-4				81										248	Rt Shld SR-4 AFTER S WILSON WAY UC
2	16+75.00 TO 17+40.00 "F" LINE		30	20	20									0.01		MVP AT FILBERT St
2	17+35.00 "H" LINE		16													CMS
3	10+32.62 TO 10+70.12 "G2" LINE				1							37.5	37.5			HMA DIKE (TYPE F)
3	11+85.00 TO 12+72.81 "G1" LINE					88										
3	11+85.00 TO 12+00.00 "G1" LINE							15								
3	12+75.00 "G1" LINE									1						
3	12+00.00 TO 13+54.00 "G1" LINE								154							
3	13+54.00 TO 14+40.00 "G1" LINE						86				10					
TOTAL		45	137	68	616.5	88	86	15	154	1		37.5	37.5	0.03	1664	

(N) - NOT A SEPARATE PAY ITEM, FOR INFORMATION ONLY.

SUMMARY OF QUANTITIES
Q-1

STATE OF CALIFORNIA - DEPARTMENT OF TRANSPORTATION
Caltrans® 06-DESIGN

FUNCTIONAL SUPERVISOR: ABDUL BAKER
CALCULATED-DESIGNED BY: GURJOT GILL
CHECKED BY: ABDUL BAKER
REVISED BY: A. S.
DATE REVISED: 12-5-14
GSG 03-23-15

LAST REVISION 05-20-15
DATE PLOTTED => 04-SEP-2015
TIME PLOTTED => 14:07

Dist	COUNTY	ROUTE	POST MILES TOTAL PROJECT	SHEET No.	TOTAL SHEETS
10	SJ	4	16.0/19.4,18.5	38	112

REGISTERED CIVIL ENGINEER 5-22-15 DATE

6-22-15
PLANS APPROVAL DATE

REGISTERED PROFESSIONAL ENGINEER GURJOT GILL No. 71647 Exp. 12-31-15 CIVIL STATE OF CALIFORNIA

THE STATE OF CALIFORNIA OR ITS OFFICERS OR AGENTS SHALL NOT BE RESPONSIBLE FOR THE ACCURACY OR COMPLETENESS OF SCANNED COPIES OF THIS PLAN SHEET.

TEMPORARY DRAINAGE INLET PROTECTION

DIRECTION	STATION	LOCATION DESCRIPTION	DRAINAGE INLETS EA
EB	1032+91.77 Rte 4	ON Rt Shld WEST OF S WILSON WAY	1
EB	1055+34.22 Rte 4	ON Lt Shld EAST OF E MAIN St	1
EB	1055+88.93 Rte 4	ON Lt Shld EAST OF E MAIN St	1
EB	1059+48.14 Rte 4	ON Rt Shld EAST OF B STREET	1
EB	1059+77.28 Rte 4	ON Rt Shld EAST OF B STREET	1
EB	1060+07.82 Rte 4	ON Rt Shld EAST OF B STREET	1
EB	1060+36.51 Rte 4	ON Rt Shld EAST OF B STREET	1
EB	1077+20.26 Rte 4	ON Rt Shld WEST OF E STREET	1
EB	1080+17.81 Rte 4	ON Rt Shld NEAR GORE AREA EAST OF E St	1
EB	1081+72.28 Rte 4	ON Rt Shld NEAR GORE AREA EAST OF E St	1
EB	1084+37.36 Rte 4	ON Rt Shld WEST OF FILBERT STREET	1
EB	1086+80.15 Rte 4	ON Rt Shld WEST OF FILBERT STREET	1
EB	1091+91.98 Rte 4	ON Rt Shld AT FILBERT STREET OC	1
EB	1095+36.61 Rte 4	ON Rt Shld EAST OF FILBERT STREET OC	1
EB	1103+79.40 Rte 4	ON Rt Shld AT SB99 OFF RAMP	1
EB	1106+35.58 Rte 4	IN GORE AREA BY CRASH CUSHION AT Loc 3	1
NB	486+53.51 Rte 99	ON Lt Shld AT Loc 4	1
EB	1104+72.55 "MRP" LINE	E CHARTER WAY & B STREET	1
EB	1113+50.23 "MRP" LINE	E CHARTER WAY	1
EB	1116+68.35 "MRP" LINE	E MARIPOSA Rd	1
EB	1128+88.14 "MRP" LINE	E MARIPOSA Rd EAST OF HALL Rd	1
TOTAL			21

WOOD MULCH*

STATION	CY
1023+10 TO 1024+20 "E-LINE"	12.5
16+55 TO 17+39.36 "F-LINE"	12.5
1021+80 TO 1032+10 "E-LINE"	20.5
1032+10 TO 1045+35 "E-LINE"	33.9
1045+35 TO 1056+50 "E-LINE"	41.8
1056+50 TO 1070+50 "E-LINE"	52.4
1070+50 TO 1084+50 "E-LINE"	42.0
1084+50 TO 1098+45 "E-LINE"	52.4
1098+45 TO 1112+40 "E-LINE"	62.1
1112+40 TO 1124+00 "E-LINE"	43.1
485+40 TO 494+20 "E-LINE"	35.8
1104+50 TO 1107+00 "E-LINE"	21.6
1107+00 TO 1119+40 "E-LINE"	42.2
1119+40 TO 1133+55 "E-LINE"	52.1
1133+55 TO 11146+45 "E-LINE"	47.3
1146+45 TO 1160+50 "E-LINE"	51.3
1160+50 TO 1174+00 "E-LINE"	49.5
1174+00 TO 1184+20 "E-LINE"	48.0
TOTAL	721.0

*WOOD MULCH TO BE APPLIED AT A 4" DEPTH
WOOD MULCH MUST BE WOOD CHIP MULCH

MIDWEST GUARDRAIL SYSTEM

LOCATION No.	STATION	LAYOUT TYPE	TRANSITION RAILING (TYPE STB)	Conc BARRIER TRANSITION TO THRIE BEAM BARRIER	SINGLE THRIE BEAM BARRIER (STEEL POST)	REMOVE GUARDRAIL	MIDWEST GUARDRAIL SYSTEM (STEEL POST)	ALTERNATIVE FLARED TERMINAL SYSTEM	ALTERNATIVE IN-LINE TERMINAL SYSTEM	TREATED WOOD WASTE	END ANCHOR ASSEMBLY (TYPE SFT)
			EA	LF	LF	LF	LF	EA	EA	LB	EA
1	09+73.00 TO 10+65.41 "E" LINE					92				1434	
1	09+73.00 TO 09+78.50 "E" LINE			6							
1	09+78.50 TO 10+03.50 "E" LINE		1								
1	09+90.00 "E" LINE									467	
1	10+03.50 TO 10+78.50 "E" LINE				75						1
2	12+75.00 "G1" LINE									467	
2	16+72.50 TO 16+37.50 "F" LINE	16B						1			
2	16+72.50 TO 17+10.00 "F" LINE	16B					37.5				1
3	10+45.12 TO 11+04.46 "G2" LINE					63				1243	
3	10+32.62 TO 10+82.62 "G2" LINE	16B					50				1
3	10+82.62 TO 11+20.12 "G2" LINE	16A							1		
4	486+52.50 TO 487+25.77 "R99"					75				1434	
4	486+52.50 TO 486+88.30 "R99"	16B						1			
4	486+75.80 TO 487+25.80 "R99"	16B					50				1
TOTAL			1	6	75	230	137.5	2	1	5045	4

SUMMARY OF QUANTITIES Q-2

STATE OF CALIFORNIA - DEPARTMENT OF TRANSPORTATION
06-DESIGN
Caltrans

REVISED BY | DATE REVISED
GURJOT GILL | ABDUL BAKER
CALCULATED-DESIGNED BY | CHECKED BY
FUNCTIONAL SUPERVISOR
ABDUL BAKER

LAST REVISION 05-20-15 | DATE PLOTTED => 04-SEP-2015 | TIME PLOTTED => 14:07

Dist	COUNTY	ROUTE	POST MILES TOTAL PROJECT	SHEET No.	TOTAL SHEETS
10	SJ	4,99	16.0/19.4,18.5	39	112

REGISTERED ELECTRICAL ENGINEER DATE 5-26-15

PLANS APPROVAL DATE 6-22-15

REGISTERED PROFESSIONAL ENGINEER JASPAL SINGH No. 16657 Exp. 6/30/16 ELECTRICAL STATE OF CALIFORNIA

THE STATE OF CALIFORNIA OR ITS OFFICERS OR AGENTS SHALL NOT BE RESPONSIBLE FOR THE ACCURACY OR COMPLETENESS OF SCANNED COPIES OF THIS PLAN SHEET.

LEGEND: (FOR SHEETS E-1 THRU E-23)

1 RS Exist 120/240 V, 1Ø, 3-WIRE, TYPE III-AF SERVICE EQUIPMENT ENCLOSURE.

2 120/240 V, 1Ø, 3-WIRE, TYPE III-CF SERVICE EQUIPMENT ENCLOSURE WITH THE FOLLOWING CIRCUIT BREAKERS:

Ctid No. 1029004X017440L

AMPERES	VOLTS	POLES	NAMEPLATE	METER	PHOTOELECTRIC CONTROL TYPE
100	240	2	MAIN BREAKER	YES	-
40	240	2	LIGHTING Ckt-1	YES	-
40	240	2	LIGHTING Ckt-2	YES	-
15	120	1	LIGHTING CONTROL	YES	V
15	120	1	SPARE	YES	-
-	-	1	SPACE	YES	-

Ctid No. 1029004X017440T

AMPERES	VOLTS	POLES	NAMEPLATE	METER	PHOTOELECTRIC CONTROL TYPE
100	240	2	MAIN BREAKER	YES	-
80	240	2	SUB PANEL (CMS)	YES	-
15	120	1	SPARE	YES	-
-	-	1	SPACE	YES	-

3 120/240 V, 1Ø, 3-WIRE, TYPE III-AF SERVICE EQUIPMENT ENCLOSURE WITH THE FOLLOWING CIRCUIT BREAKERS:

SUB PANEL (CMS)

AMPERES	VOLTS	POLES	NAMEPLATE	METER
80	240	2	MAIN BREAKER	NO
50	120	1	CMS CABINET	NO
30	240	2	CMS LAMPS	NO
30	120	1	TMS	NO
30	120	1	SPARE	NO
30	120	1	SPARE	NO

4 Exist 120/240 V, 1Ø, 3-WIRE, TYPE III-AF SERVICE EQUIPMENT ENCLOSURE WITH THE FOLLOWING CIRCUIT BREAKERS:

Ctid No. AS SHOWN ON PLANS

AMPERES	VOLTS	POLES	NAMEPLATE	METER
100	240	2	MAIN BREAKER	YES
80	240	2	BOOSTER PUMP	YES
20	120	1	SPARE 7	YES

5 120/240 V, 1Ø, 3-WIRE, TYPE III-AF SERVICE EQUIPMENT ENCLOSURE WITH THE FOLLOWING CIRCUIT BREAKERS:

Ctid No. 1029004X018740T

AMPERES	VOLTS	POLES	NAMEPLATE	METER	PHOTOELECTRIC CONTROL TYPE
100	240	2	MAIN BREAKER	YES	-
80	240	2	SUB PANEL CMS	YES	-
30	120	1	SPARE	YES	-
30	120	1	SPARE	YES	-
-	-	2	SPACE	YES	-

6 Exist 120/240 V, 1Ø, 3-WIRE, TYPE III-CF SERVICE EQUIPMENT ENCLOSURE WITH THE FOLLOWING CIRCUIT BREAKERS:

Ctid No. 1029004X030525L

AMPERES	VOLTS	POLES	NAMEPLATE	METER	PHOTOELECTRIC CONTROL TYPE
100	240	2	MAIN BREAKER	YES	-
40	240	2	HIGHWAY LIGHTING	YES	-
30	240	2	SIGN LIGHTING	YES	-
15	120	1	LIGHTING CONTROL	YES	V
15	120	1	SPARE	YES	-

Ctid No. 1029004X030525M

AMPERES	VOLTS	POLES	NAMEPLATE	METER	PHOTOELECTRIC CONTROL TYPE
100	240	2	MAIN BREAKER	YES	-
80	240	2	BOOSTER PUMP	YES	-
15	120	1	SPARE	YES	7

7 RC Exist CB AND NAME PLATE,
INSTALL 30 AMPERE, 120 V, 1P CIRCUIT BREAKER AND "TMS" NAME PLATE.

8 DEPARTMENT-FURNISHED MODEL 170E CONTROLLER ASSEMBLY FOR CMS.

9 TYPE CCTV 35 POLE WITH CAMERA ASSEMBLY.

10 DEPARTMENT-FURNISHED MODEL 500 CHANGEABLE MESSAGE SIGN, SEE CONSTRUCTION DETAIL SHEETS FOR EXACT LOCATION.

11 MODEL 334L CABINET FOR TMS, INSTALL DEPARTMENT-FURNISHED 2070E CONTROLLER UNIT.

12 MODEL 334L CABINET FOR TMS/CCTV. FURNISH AND INSTALL VIDEO ENCODER UNIT AND CAMERA CONTROL UNIT FOR CCTV, INSTALL DEPARTMENT-FURNISHED 2070E CONTROLLER UNIT.

13 Exist MODEL 334L CABINET FOR TMS. FURNISH AND INSTALL VIDEO ENCODER UNIT AND CAMERA CONTROL UNIT FOR CCTV, MODIFY CABINET TO ACCOMODATE CCTV EQUIPMENT.

14 3"C, 3#3 (SUB PANEL)

15 Exist 2"C, 4#6 (Ltg Ckt-1&2), 2#10 (TMS) 2#10 (EMS), RC 2#10 (EMS), 2#10 (TMS)

16 Exist 2"C, 2#6 (Ltg Ckt-1), 2#10 (TMS), 2#10 (EMS), RC 2#10 (EMS), 2#10 (TMS)

17 Exist 2"C, 2#6 (Ltg Ckt-1)

18 Exist 2"C, 2#6 (Ltg Ckt-2)

19 Exist 2"C, 4 DLC, 2#10 (TMS), 2#10 (EMS), RC 2#10 (EMS), 2#10 (TMS)

20 Exist 2"C, 8 DLC, 2#10 (TMS), 2#10 (EMS), RC 2#10 (EMS), 2#10 (TMS)

21 Exist 2"C, 16 DLC, 2#10 (TMS), RC 2#10 (TMS), ADD 2#8 (TMS), 1- HYBRID CABLE

22 RS Exist EMS INSTALLATION

23 2"C, 1-HYBRID CABLE

24 3"C, 4#6 (Ltg Ckt-1&2), 3#3 (SUB PANEL)

25 Exist 2"C, 8 DLC

26 Exist 2"C, 3#2 (EEE), ADD 2#6 (TMS)

LEGEND, ABBREVIATIONS AND SYMBOLS

E-1

STATE OF CALIFORNIA - DEPARTMENT OF TRANSPORTATION
Caltrans® ELECTRICAL DESIGN

FUNCTIONAL SUPERVISOR: ALI BAKHDOUD
CALCULATED-DESIGNED BY: JASPAL SINGH
CHECKED BY: PAUL MATOS
REVISED BY: JS
DATE REVISED: 6/18/15

LAST REVISION 00-00-00
DATE PLOTTED => 04-SEP-2015
TIME PLOTTED => 14:07

Dist	COUNTY	ROUTE	POST MILES TOTAL PROJECT	SHEET No.	TOTAL SHEETS
10	SJ	4,99	16.0/19.4,18.5	40	112

REGISTERED ELECTRICAL ENGINEER 5-26-15 DATE

PLANS APPROVAL DATE 6-22-15

REGISTERED PROFESSIONAL ENGINEER JASPAL SINGH No. 16657 Exp. 6/30/16 ELECTRICAL STATE OF CALIFORNIA

THE STATE OF CALIFORNIA OR ITS OFFICERS OR AGENTS SHALL NOT BE RESPONSIBLE FOR THE ACCURACY OR COMPLETENESS OF SCANNED COPIES OF THIS PLAN SHEET.

LEGEND: (FOR SHEETS E-1 THRU E-23)

27 2"C, 2 DLC

28 2"C, 6 DLC

29 3"C, 12 DLC, 1-12 SMFO

30 2-3"C, 12 DLC, 2#6 (TMS), 1-12 SMFO

31 1½"C, 2#6 (TMS)

32 SEE LOOP DETECTOR INDENTIFICATION AND SPACING DETAILS A ON THIS SHEET.

33 Exist 2"C, 3#2 (EEE), 2#8 (Ltg), 2#8 (Sign Ltg), 2#10 (EMS), RC 2#10 (EMS) ADD 2#6 (TMS)

34 Exist 2"C, 3#2 (EEE)

35 Exist 2"C, 2#8 (Ltg), 2#8 (Sign Ltg), 2#10 (EMS), RC 2#10 (EMS) ADD 2#6 (TMS)

36 Exist 2"C, 2#8 (Ltg), 2#8 (Sign Ltg), 2#10 (EMS), RC 2#10 (EMS), ADD 2#6 (TMS), 6 DLC, 1-HYBRID CABLE

37 EACH LOOP DETECTOR MUST HAVE 5 TURNS

38 3"C, 3#3 (SUB PANEL)

39 2"C, 6 DLC, 1-HYBRID CABLE

40 2-3"C, 2#6 (TMS), 6 DLC, 1-HYBRID CABLE, 1-12 SMFO

41 INSTALL 40′ WOOD POLE WITH TYPE H SERVICE PER PG&E REQUIREMENTS.

42 120/240 V, 1Ø, 3-WIRE, TYPE III-AF SERVICE EQUIPMENT ENCLOSURE WITH THE FOLLOWING CIRCUIT BREAKERS:

SUB PANEL (CMS)

AMPERES	VOLTS	POLES	NAMEPLATE	METER
80	240	2	MAIN BREAKER	NO
50	120	1	CMS CABINET	NO
30	240	2	CMS LAMPS	NO
15	120	1	SPARE	NO
15	120	1	SPARE	NO

43 PB PER PG&E REQUIREMENTS.

44 Exist 2"C, 2#8 (Ltg), 2#10 (EMS), RC 2#10 (EMS)

45 Exist 120/240 V, 1Ø, 3-WIRE, TYPE III-AF SERVICE EQUIPMENT ENCLOSURE WITH THE FOLLOWING CIRCUIT BREAKERS:

Ctid No. 10290990018560T

AMPERES	VOLTS	POLES	NAMEPLATE	METER	PHOTOELECTRIC CONTROL TYPE
100	240	2	MAIN	YES	——
30	120	1	TMS	YES	——
30	120	1	FIBER	YES	——
15	120	1	SPARE	YES	66
——	——	6	SPACE	YES	——

Ctid No. 10290990018560L

AMPERES	VOLTS	POLES	NAMEPLATE	METER	PHOTOELECTRIC CONTROL TYPE
100	240	2	MAIN	YES	——
30	240	2	HIGHWAY LIGHTING	YES	V
30	240	2	SIGN LIGHTING	YES	LC3
15	120	1	LIGHTING CONTROL	YES	——
30	240	2	SPARE	YES	——
——	——	6	SPACE	YES	——

46 Exist 2"C, 2#8 (Ltg), 2#6 (TMS), 2#6 (FIBER), ADD 2#8 (CCTV), 2#8 (SIGN Ltg)

47 2"C, 2#8 (CCTV), 2#8 (SIGN Ltg)

48 Exist 2"C, 2#6 (TMS)

49 Exist 2"C, 2#6 (FIBER)

50 Exist MODEL 334L CABINET FOR TMS

51 Exist MODEL 344LX CABINET FOR FIBER HUB

52 2"C, 2#8 (SIGN Ltg), 1-HYBRID CABLE

53 2-2"C, 2#8 (CCTV), 1-HYBRID CABLE, 1-12 SMFO

54 MODEL 334L CABINET FOR CCTV. FURNISH AND INSTALL VIDEO ENCODER UNIT AND CAMERA CONTROL UNIT.

55 TYPE CCTV 15 POLE WITH CAMERA ASSEMBLY ON TOP OF Exist OH SIGN POST.

56 SPLICE VAULT PER DETAILS ON SHEET E-31.

57 FIBER OPTIC CONDUIT PER DETAILS ON SHEET E-32.

58 FIBER OPTIC CONDUIT THROUGH STRUCTURE, SEE STRUCTURE PLAN FOR DETAILS.

59 Exist SPLICE VAULT.

60 COIL 50′ OF FIBER OPTIC CABLES IN THE SV. ENDS OF THE FIBERS MUST BE PROTECTED WITH SPLICE ENCLOSURE.

61 COIL 15′ OF 1-48 FIBER OPTIC CABLE IN THE PB. ENDS OF THE FIBERS MUST BE PROTECTED WITH SPLICE TRAY.

62 TERMINATE FIBER OPTIC CABLES IN FDU AS SHOWN ON SHEET E-30.

63 TERMINATE FIBER OPTIC CABLES IN FDU AS SHOWN ON SHEET E-29.

64 2"C, 2#6 (TMS), 6 DLC, 1-HYBRID CABLE

65 RENUMBER OH SIGN AS SHOWN.

66 RC Exist CB AND NAME PLATE, INSTALL 30 AMPERE, 120 V, 1P CIRCUIT BREAKER AND "CCTV" NAME PLATE.

67 DEPARTMENT-FURNISHED MODEL 344LX CABINET FOR FIBER HUB. SEE SHEET E-33 FOR FOUNDATION DETAILS.

68 COIL 200′ OF FIBER OPTIC CABLES IN THE SV. ENDS OF THE FIBERS MUST BE PROTECTED WITH SPLICE ENCLOSURE.

69 USE DIRECTIONAL BORING METHOD TO INSTALL CONDUIT UNDER PAVEMENT.

ABBREVIATIONS:

PG&E - PACIFIC GAS AND ELECTRIC
EEE - ELECTRICAL EQUIPMENT ENCLOSURE
HDPE - HIGH DENSITY POLYETHYLENE
SMFO - SINGLE MODE FIBER OPTIC CABLE
SV - SPLICE VAULT
DFM - DEPARTMENT-FURNISHED MATERIAL
(2E) - PULL BOX WITH TWO EXTENSIONS

SYMBOLS:

V SPLICE VAULT

ⓜ Exist PUMP MOTOR

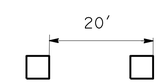

LOOP DETECTOR SPACING

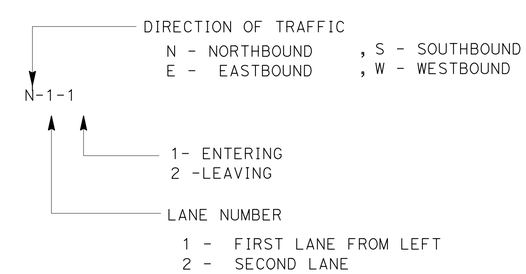

LOOP DETECTOR IDENTIFICATION

DETAIL A

LEGEND, ABBREVIATIONS AND SYMBOLS

E-2

STATE OF CALIFORNIA - DEPARTMENT OF TRANSPORTATION
Caltrans® ELECTRICAL DESIGN
FUNCTIONAL SUPERVISOR: ALI BAKHDOUD
CALCULATED-DESIGNED BY: JASPAL SINGH
CHECKED BY: PAUL MATOS
REVISED BY: JS
DATE REVISED: 6/18/15

LAST REVISION 00-00-00
DATE PLOTTED => 04-SEP-2015
TIME PLOTTED => 14:07

Dist	COUNTY	ROUTE	POST MILES TOTAL PROJECT	SHEET No.	TOTAL SHEETS
10	SJ	4,99	16.0/19.4,18.5	41	112

REGISTERED ELECTRICAL ENGINEER 5-26-15 DATE

PLANS APPROVAL DATE 6-22-15

REGISTERED PROFESSIONAL ENGINEER JASPAL SINGH No. 16657 Exp. 6/30/16 ELECTRICAL STATE OF CALIFORNIA

THE STATE OF CALIFORNIA OR ITS OFFICERS OR AGENTS SHALL NOT BE RESPONSIBLE FOR THE ACCURACY OR COMPLETENESS OF SCANNED COPIES OF THIS PLAN SHEET.

NOTES:

1. FOR LEGEND, ABBREVIATIONS AND SYMBOLS SEE SHEET E-1 AND E-2.
2. FOR ACCURATE RIGHT OF WAY DATA, CONTACT RIGHT OF WAY ENGINEERING AT THE DISTRICT OFFICE.
3. ALL PULL BOXES MUST BE No. 5(T) UNLESS OTHERWISE NOTED.

CONDUIT AND CONDUCTOR SCHEDULE (FOR THIS SHEET ONLY)

CONDUCTOR DESIGNATION		CONDUCTOR RUN NUMBER AND SIZE						
AWG	CIRCUIT	1	2	3	4	5	6	7
#6	334LC CABINET CMS	2						2
#6	CMS LAMPS	2	2			2		
#6	LAMPS NEUTRAL	1	1			1		
#8	Exist 334L CABINET TMS	2	2		2			
	DFM HARNESS #4			1			1	1
	DFM HARNESS #5			1			1	1
	HYBRID CABLE		1		1			
	12 SMFO							1
	CONDUIT SIZE	2"C	3"C	3"C	2"C	2"C	2"C	2-3"C

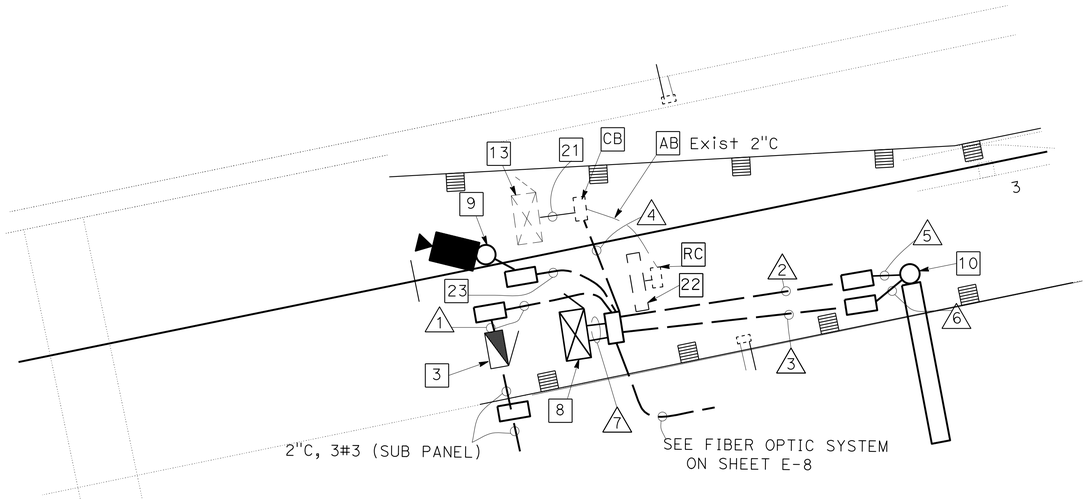

DETAIL A

NO SCALE

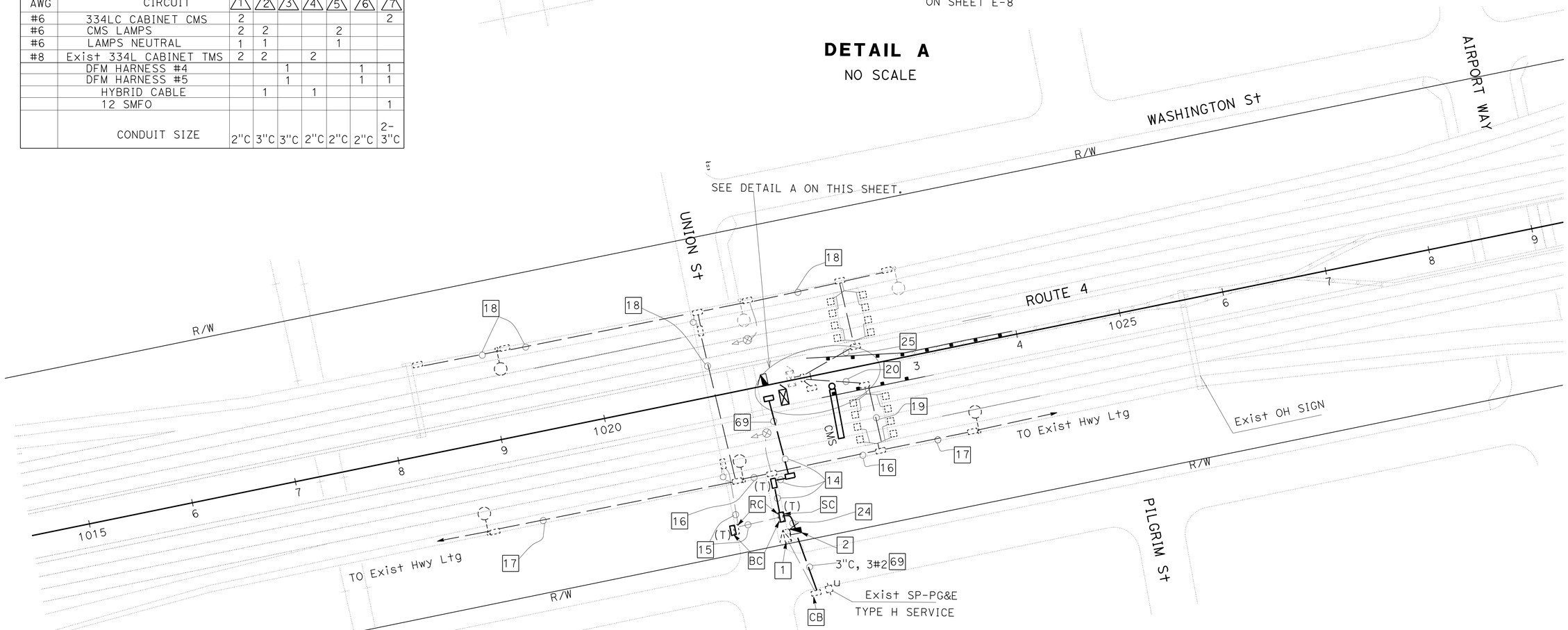

TRAFFIC OPERATION SYSTEM

APPROVED FOR ELECTRICAL WORK ONLY

SCALE: 1"=50'

E-3

STATE OF CALIFORNIA - DEPARTMENT OF TRANSPORTATION

Caltrans® ELECTRICAL DESIGN

FUNCTIONAL SUPERVISOR: ALI BAKHDOUD

CALCULATED-DESIGNED BY: JASPAL SINGH

CHECKED BY: PAUL MATOS

REVISED BY: JS

DATE REVISED: 6/18/15

LAST REVISION 00-00-00

DATE PLOTTED => 04-SEP-2015

TIME PLOTTED => 14:07

Dist	COUNTY	ROUTE	POST MILES TOTAL PROJECT	SHEET No.	TOTAL SHEETS
10	SJ	4,99	16.0/19.4,18.5	42	112

REGISTERED ELECTRICAL ENGINEER 5-26-15 DATE

PLANS APPROVAL DATE 6-22-15

REGISTERED PROFESSIONAL ENGINEER JASPAL SINGH No. 16657 Exp. 6/30/16 ELECTRICAL STATE OF CALIFORNIA

THE STATE OF CALIFORNIA OR ITS OFFICERS OR AGENTS SHALL NOT BE RESPONSIBLE FOR THE ACCURACY OR COMPLETENESS OF SCANNED COPIES OF THIS PLAN SHEET.

NOTES:

1. FOR LEGEND, ABBREVIATIONS AND SYMBOLS SEE SHEET E-1 AND E-2.
2. FOR ACCURATE RIGHT OF WAY DATA, CONTACT RIGHT OF WAY ENGINEERING AT THE DISTRICT OFFICE.
3. ALL PULL BOXES MUST BE No. 5(T) UNLESS OTHERWISE NOTED.

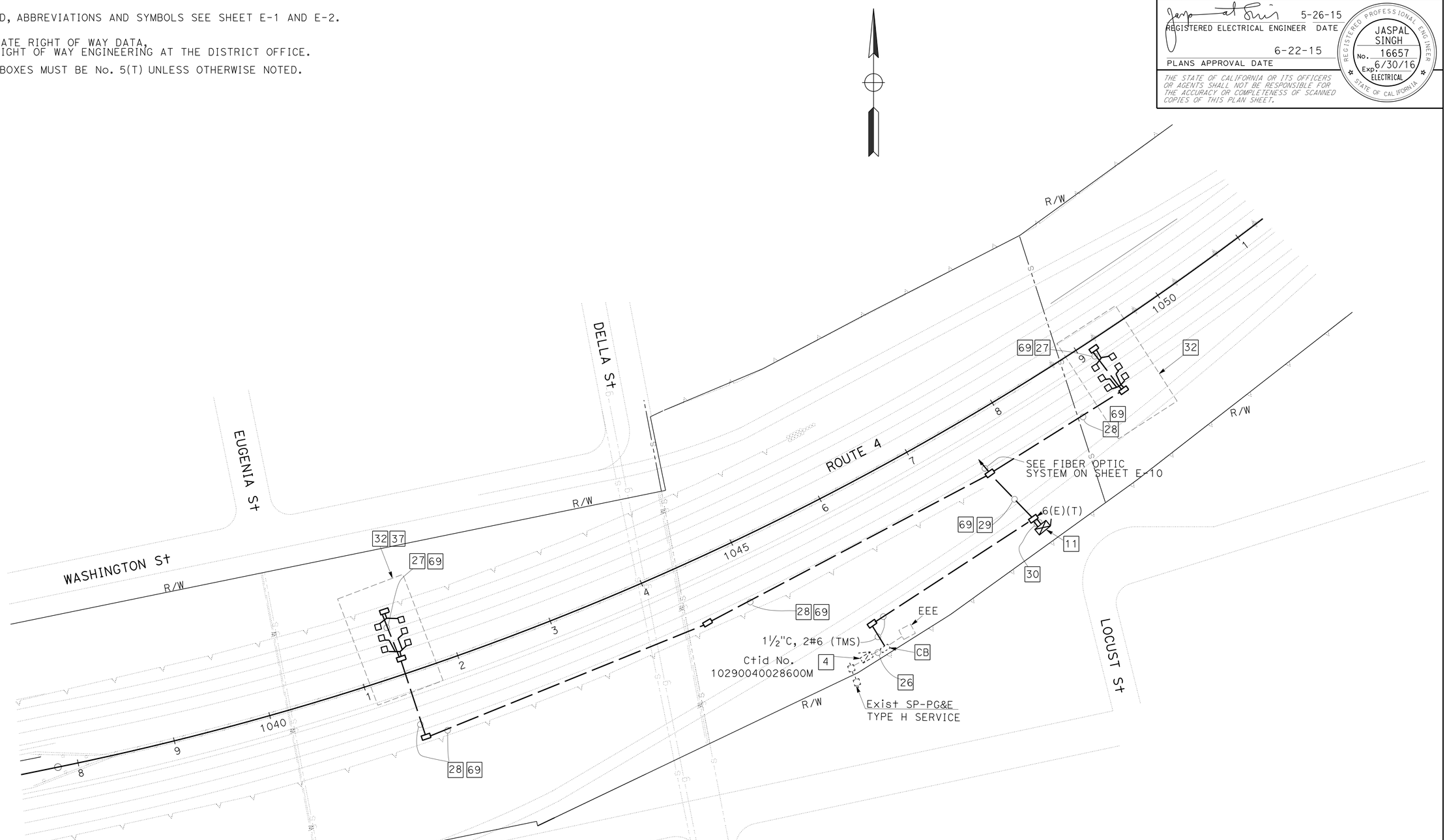

APPROVED FOR ELECTRICAL WORK ONLY

TRAFFIC MONITORING STATION

SCALE: 1"=50'

E-4

STATE OF CALIFORNIA - DEPARTMENT OF TRANSPORTATION

Caltrans® **ELECTRICAL DESIGN**

FUNCTIONAL SUPERVISOR: ALI BAKHDOUD

CALCULATED-DESIGNED BY: JASPAL SINGH

CHECKED BY: PAUL MATOS

REVISED BY: JS

DATE REVISED: 6/18/15

LAST REVISION 00-00-00

DATE PLOTTED => 04-SEP-2015

TIME PLOTTED => 14:07

Dist	COUNTY	ROUTE	POST MILES TOTAL PROJECT	SHEET No.	TOTAL SHEETS
10	SJ	4,99	16.0/19.4,18.5	43	112

REGISTERED ELECTRICAL ENGINEER 5-26-15 DATE

PLANS APPROVAL DATE 6-22-15

REGISTERED PROFESSIONAL ENGINEER JASPAL SINGH No. 16657 Exp. 6/30/16 ELECTRICAL STATE OF CALIFORNIA

THE STATE OF CALIFORNIA OR ITS OFFICERS OR AGENTS SHALL NOT BE RESPONSIBLE FOR THE ACCURACY OR COMPLETENESS OF SCANNED COPIES OF THIS PLAN SHEET.

NOTES:

1. FOR LEGEND, ABBREVIATIONS AND SYMBOLS SEE SHEET E-1 AND E-2.
2. FOR ACCURATE RIGHT OF WAY DATA, CONTACT RIGHT OF WAY ENGINEERING AT THE DISTRICT OFFICE.
3. ALL PULL BOXES MUST BE No. 5(T) UNLESS OTHERWISE NOTED.

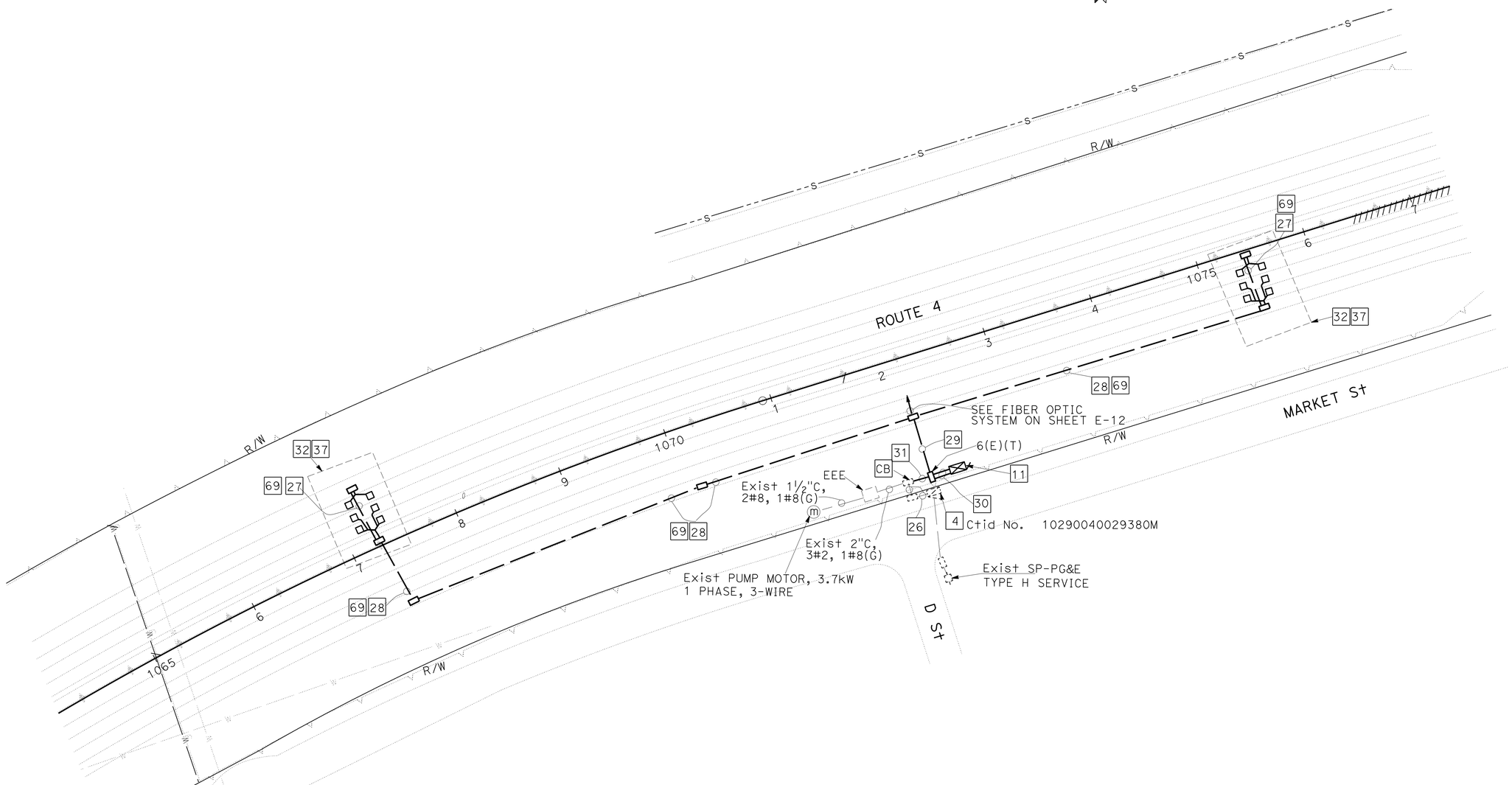

APPROVED FOR ELECTRICAL WORK ONLY

TRAFFIC MONITORING STATION E-5

SCALE: 1"=50'

REVISED BY	DATE REVISED
JS	6/18/15

CALCULATED-DESIGNED BY: JASPAL SINGH
CHECKED BY: PAUL MATOS
FUNCTIONAL SUPERVISOR: ALI BAKHDOUD

STATE OF CALIFORNIA - DEPARTMENT OF TRANSPORTATION
Caltrans® ELECTRICAL DESIGN

LAST REVISION 00-00-00 | DATE PLOTTED => 04-SEP-2015 | TIME PLOTTED => 14:07

Dist	COUNTY	ROUTE	POST MILES TOTAL PROJECT	SHEET No.	TOTAL SHEETS
10	SJ	4,99	16.0/19.4,18.5	44	112

REGISTERED ELECTRICAL ENGINEER 5-26-15 DATE

PLANS APPROVAL DATE 6-22-15

REGISTERED PROFESSIONAL ENGINEER JASPAL SINGH No. 16657 Exp. 6/30/16 ELECTRICAL STATE OF CALIFORNIA

THE STATE OF CALIFORNIA OR ITS OFFICERS OR AGENTS SHALL NOT BE RESPONSIBLE FOR THE ACCURACY OR COMPLETENESS OF SCANNED COPIES OF THIS PLAN SHEET.

NOTES:

1. FOR LEGEND, ABBREVIATIONS AND SYMBOLS SEE SHEET E-1 AND E-2.
2. FOR ACCURATE RIGHT OF WAY DATA, CONTACT RIGHT OF WAY ENGINEERING AT THE DISTRICT OFFICE.
3. ALL PULL BOXES MUST BE No. 5(T) UNLESS OTHERWISE NOTED.

CONDUIT AND CONDUCTOR SCHEDULE (FOR THIS SHEET ONLY)

CONDUCTOR DESIGNATION		CONDUCTOR RUN NUMBER AND SIZE			
AWG	CIRCUIT	1	2	3	4
#6	334LC CABINET CMS	2	2		
#6	CMS LAMPS		2	2	
#6	LAMPS NEUTRAL		1	1	
#6	GROUND		1	1	
	DFM HARNESS #4	1			1
	DFM HARNESS #5	1			1
	12 SMFO	1			
	CONDUIT SIZE	2-3"C	2"C	2"C	2"C

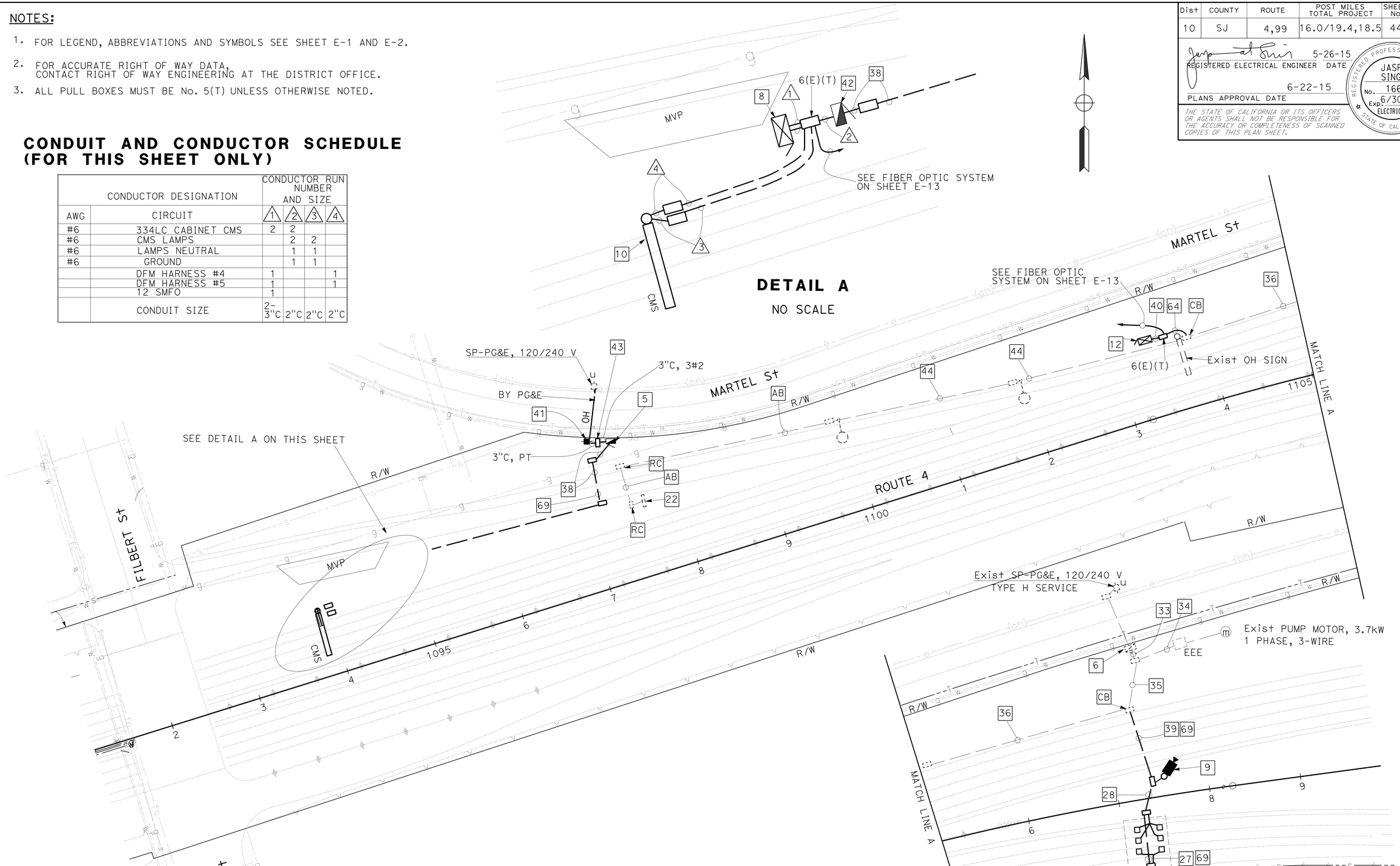

APPROVED FOR ELECTRICAL WORK ONLY

TRAFFIC OPERATION SYSTEM

SCALE: 1"=50'

E-6

REVISED BY	DATE REVISED
JS	6/18/15

JASPAL SINGH — CALCULATED-DESIGNED BY

PAUL MATOS — CHECKED BY

FUNCTIONAL SUPERVISOR: ALI BAKHDOUD

STATE OF CALIFORNIA - DEPARTMENT OF TRANSPORTATION

Caltrans® ELECTRICAL DESIGN

LAST REVISION 00-00-00 — DATE PLOTTED => 04-SEP-2015 — TIME PLOTTED => 14:07

Dist	COUNTY	ROUTE	POST MILES TOTAL PROJECT	SHEET No.	TOTAL SHEETS
10	SJ	4,99	16.0/19.4,18.5	45	112

REGISTERED ELECTRICAL ENGINEER 5-26-15 DATE

PLANS APPROVAL DATE 6-22-15

REGISTERED PROFESSIONAL ENGINEER JASPAL SINGH No. 16657 Exp. 6/30/16 ELECTRICAL STATE OF CALIFORNIA

THE STATE OF CALIFORNIA OR ITS OFFICERS OR AGENTS SHALL NOT BE RESPONSIBLE FOR THE ACCURACY OR COMPLETENESS OF SCANNED COPIES OF THIS PLAN SHEET.

NOTES:

1. FOR LEGEND, ABBREVIATIONS AND SYMBOLS SEE SHEET E-1 AND E-2.
2. FOR ACCURATE RIGHT OF WAY DATA, CONTACT RIGHT OF WAY ENGINEERING AT THE DISTRICT OFFICE.
3. ALL PULL BOXES MUST BE No. 5(T) UNLESS OTHERWISE NOTED.

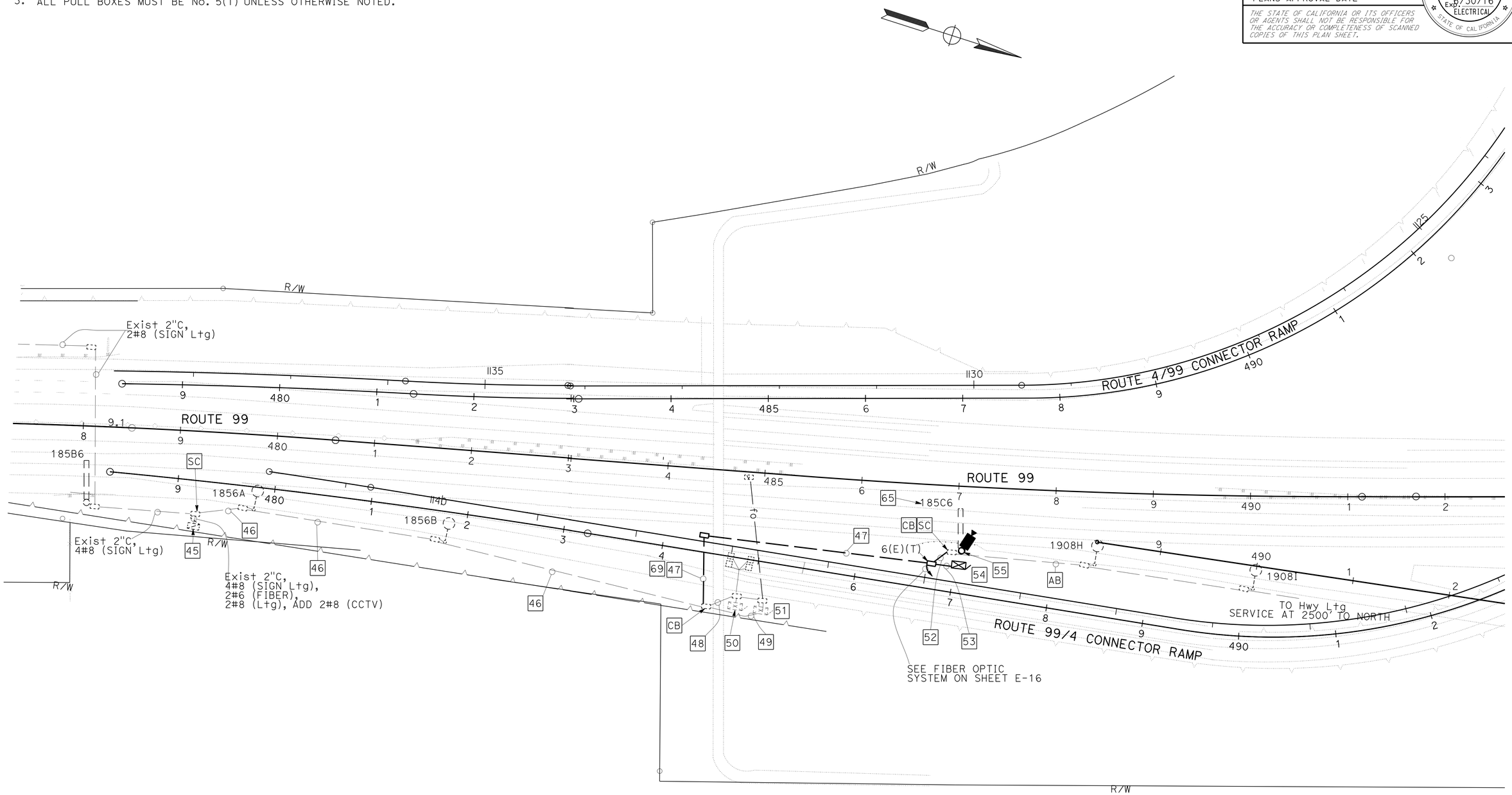

CLOSED CIRCUIT TELEVISION SYSTEM

APPROVED FOR ELECTRICAL WORK ONLY

SCALE: 1"=50'

E-7

STATE OF CALIFORNIA - DEPARTMENT OF TRANSPORTATION

Caltrans® **ELECTRICAL DESIGN**

FUNCTIONAL SUPERVISOR: ALI BAKHDOUD

CALCULATED-DESIGNED BY: JASPAL SINGH

CHECKED BY: PAUL MATOS

REVISED BY: JS

DATE REVISED: 6/18/15

LAST REVISION 00-00-00

DATE PLOTTED => 04-SEP-2015

TIME PLOTTED => 14:07

Dist	COUNTY	ROUTE	POST MILES TOTAL PROJECT	SHEET No.	TOTAL SHEETS
10	SJ	4,99	16.0/19.4,18.5	46	112

REGISTERED ELECTRICAL ENGINEER DATE 5-26-15

PLANS APPROVAL DATE 6-22-15

REGISTERED PROFESSIONAL ENGINEER JASPAL SINGH No. 16657 Exp. 6/30/16 ELECTRICAL STATE OF CALIFORNIA

THE STATE OF CALIFORNIA OR ITS OFFICERS OR AGENTS SHALL NOT BE RESPONSIBLE FOR THE ACCURACY OR COMPLETENESS OF SCANNED COPIES OF THIS PLAN SHEET.

NOTES:

1. FOR LEGEND, ABBREVIATIONS AND SYMBOLS SEE SHEET E-1 AND E-2.
2. FOR ACCURATE RIGHT OF WAY DATA, CONTACT RIGHT OF WAY ENGINEERING AT THE DISTRICT OFFICE.

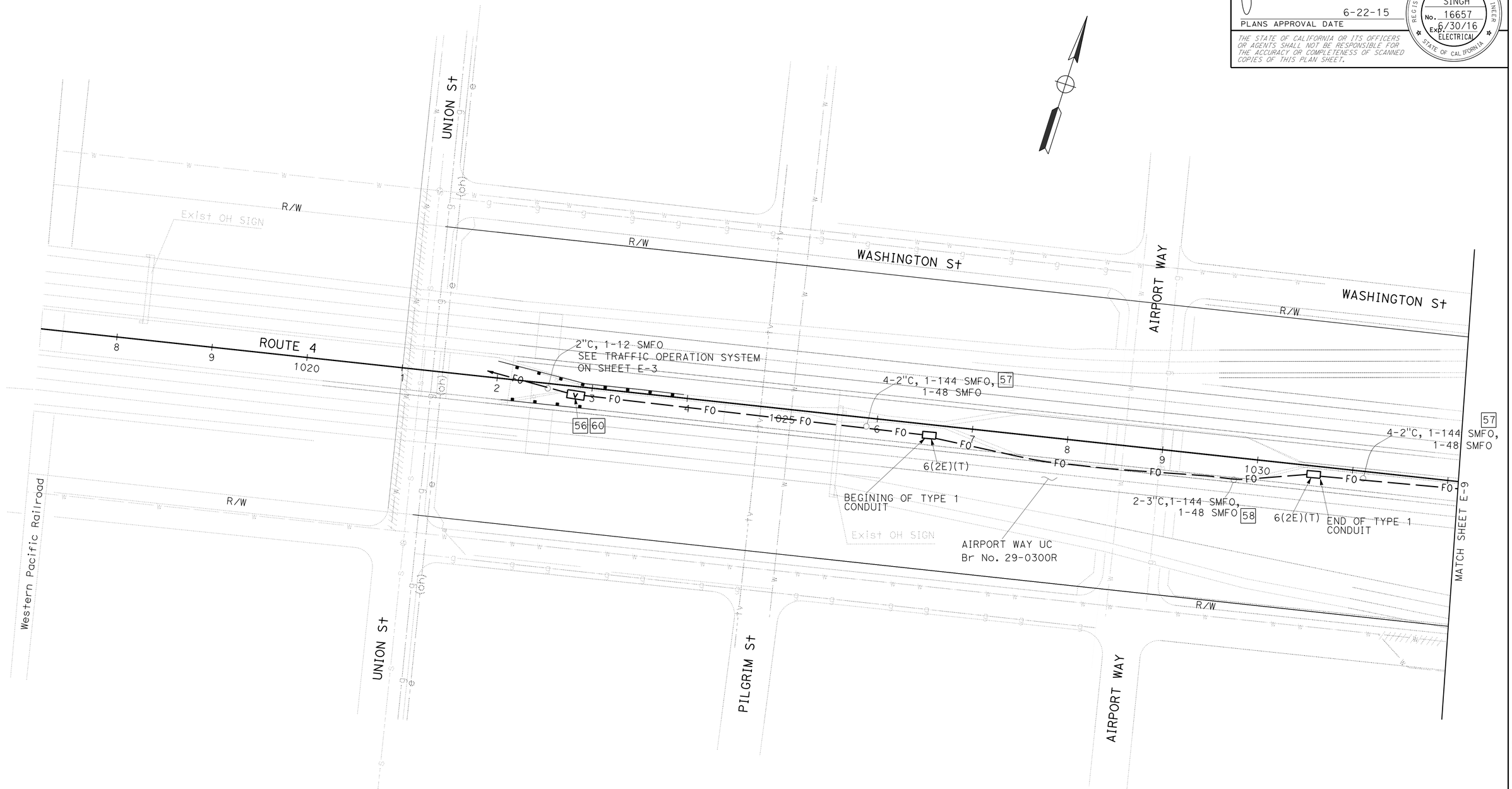

APPROVED FOR ELECTRICAL WORK ONLY

FIBER OPTIC SYSTEM

SCALE: 1"=50'

E-8

STATE OF CALIFORNIA - DEPARTMENT OF TRANSPORTATION

Caltrans ELECTRICAL DESIGN

FUNCTIONAL SUPERVISOR: ALI BAKHDOUD

CALCULATED-DESIGNED BY: JASPAL SINGH

CHECKED BY: PAUL MATOS

REVISED BY: JS

DATE REVISED: 6/18/15

LAST REVISION 00-00-00

DATE PLOTTED => 04-SEP-2015

TIME PLOTTED => 14:07

Dist	COUNTY	ROUTE	POST MILES TOTAL PROJECT	SHEET No.	TOTAL SHEETS
10	SJ	4,99	16.0/19.4,18.5	47	112

REGISTERED ELECTRICAL ENGINEER 5-26-15 DATE

PLANS APPROVAL DATE 6-22-15

REGISTERED PROFESSIONAL ENGINEER JASPAL SINGH No. 16657 Exp. 6/30/16 ELECTRICAL STATE OF CALIFORNIA

THE STATE OF CALIFORNIA OR ITS OFFICERS OR AGENTS SHALL NOT BE RESPONSIBLE FOR THE ACCURACY OR COMPLETENESS OF SCANNED COPIES OF THIS PLAN SHEET.

NOTES:

1. FOR LEGEND, ABBREVIATIONS AND SYMBOLS SEE SHEET E-1 AND E-2.
2. FOR ACCURATE RIGHT OF WAY DATA, CONTACT RIGHT OF WAY ENGINEERING AT THE DISTRICT OFFICE.

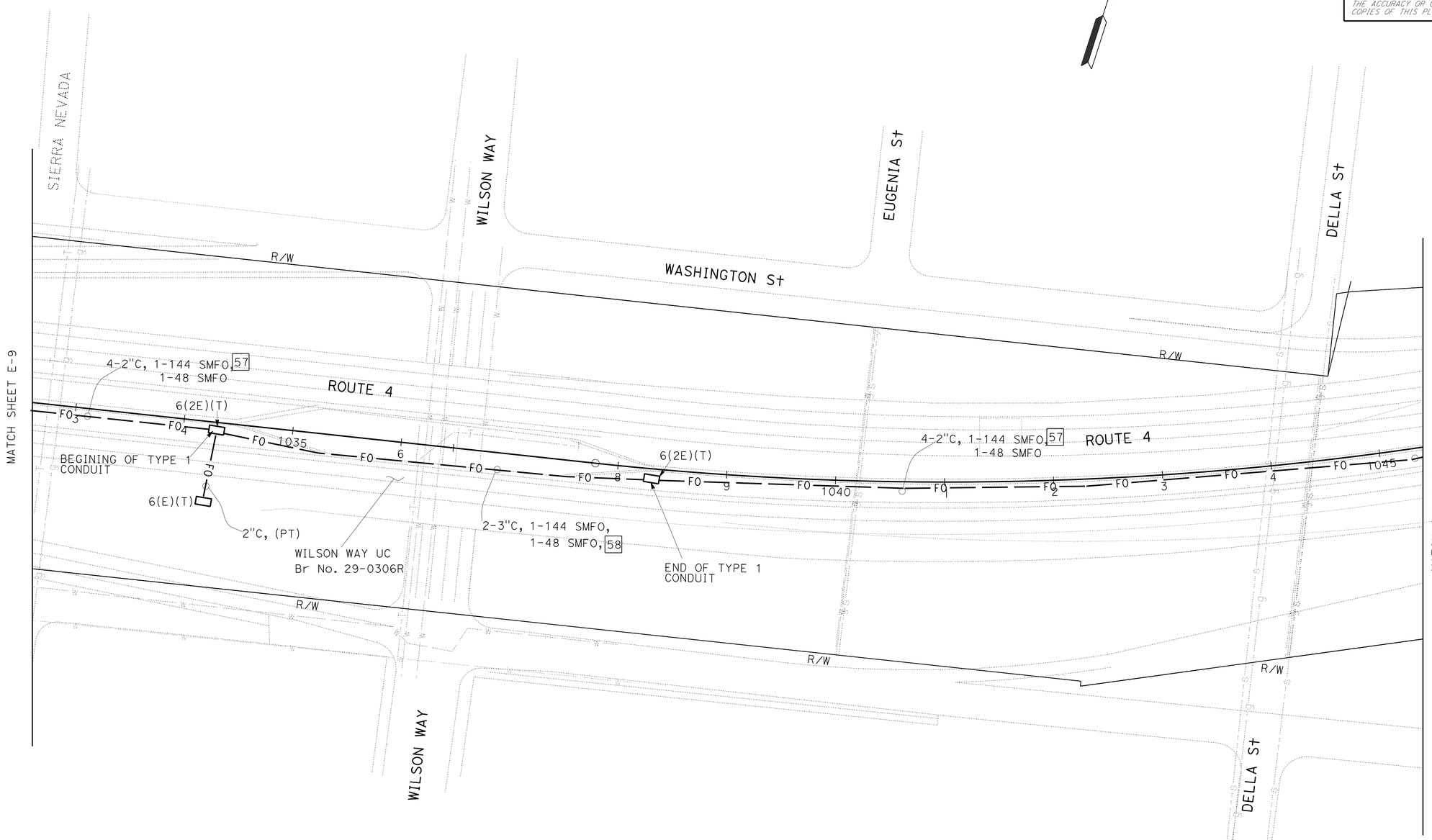

APPROVED FOR ELECTRICAL WORK ONLY

FIBER OPTIC SYSTEM

SCALE: 1"=50'

E-9

CALCULATED-DESIGNED BY	JASPAL SINGH
CHECKED BY	PAUL MATOS
FUNCTIONAL SUPERVISOR	ALI BAKHDOUD
REVISED BY	JS
DATE REVISED	6/18/15

STATE OF CALIFORNIA - DEPARTMENT OF TRANSPORTATION

Caltrans® **ELECTRICAL DESIGN**

LAST REVISION 00-00-00 | DATE PLOTTED => 04-SEP-2015 | TIME PLOTTED => 14:07

Dist	COUNTY	ROUTE	POST MILES TOTAL PROJECT	SHEET No.	TOTAL SHEETS
10	SJ	4,99	16.0/19.4,18.5	48	112

REGISTERED ELECTRICAL ENGINEER DATE 5-26-15

PLANS APPROVAL DATE 6-22-15

REGISTERED PROFESSIONAL ENGINEER JASPAL SINGH No. 16657 Exp. 6/30/16 ELECTRICAL STATE OF CALIFORNIA

THE STATE OF CALIFORNIA OR ITS OFFICERS OR AGENTS SHALL NOT BE RESPONSIBLE FOR THE ACCURACY OR COMPLETENESS OF SCANNED COPIES OF THIS PLAN SHEET.

NOTES:

1. FOR LEGEND, ABBREVIATIONS AND SYMBOLS SEE SHEET E-1 AND E-2.
2. FOR ACCURATE RIGHT OF WAY DATA, CONTACT RIGHT OF WAY ENGINEERING AT THE DISTRICT OFFICE.

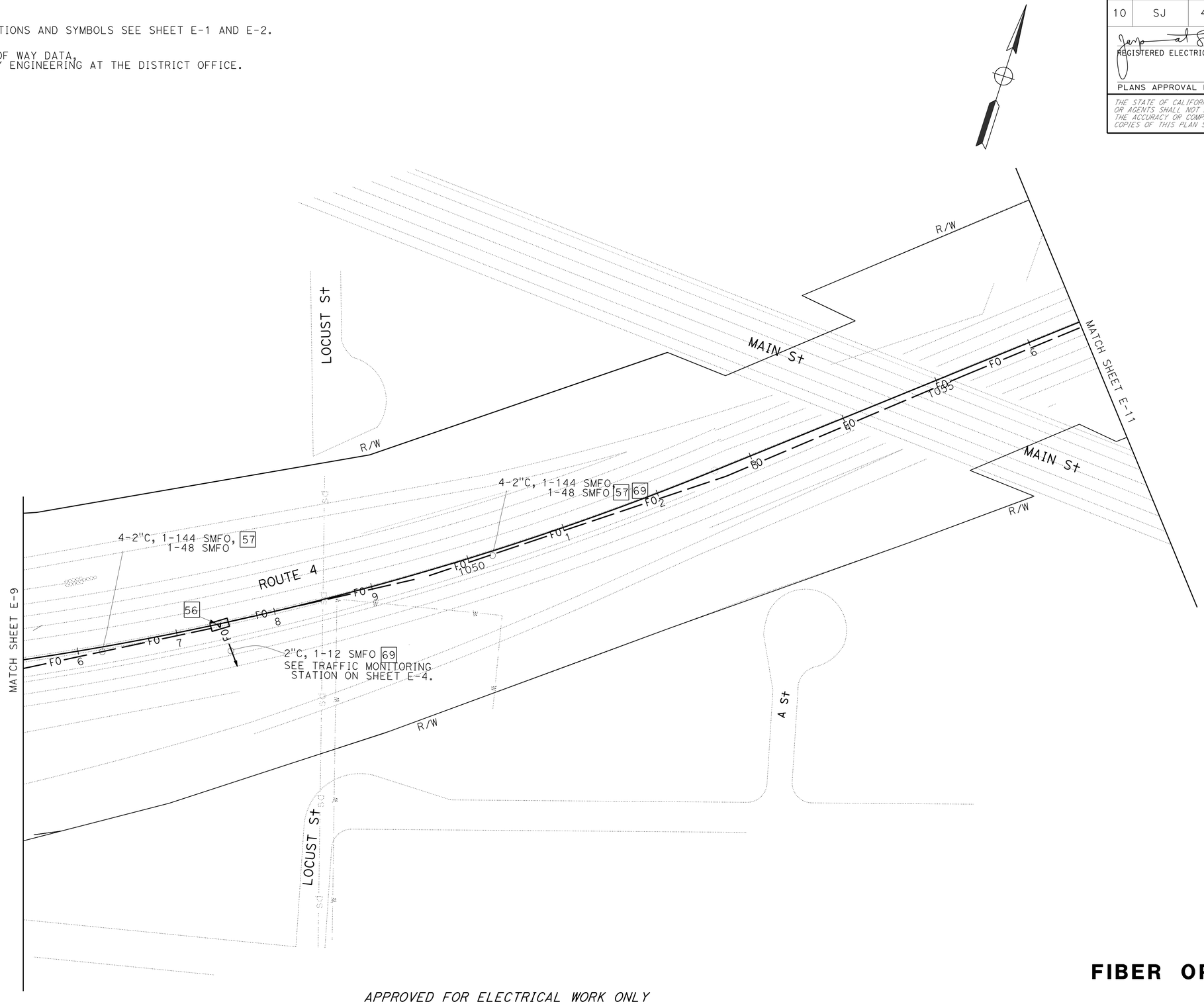

APPROVED FOR ELECTRICAL WORK ONLY

FIBER OPTIC SYSTEM

SCALE: 1"=50'

E-10

STATE OF CALIFORNIA - DEPARTMENT OF TRANSPORTATION

Caltrans® **ELECTRICAL DESIGN**

FUNCTIONAL SUPERVISOR: ALI BAKHDOUD

CALCULATED-DESIGNED BY: JASPAL SINGH

CHECKED BY: PAUL MATOS

REVISED BY: JS

DATE REVISED: 6/18/15

LAST REVISION 00-00-00 | DATE PLOTTED => 04-SEP-2015 | TIME PLOTTED => 14:07

BORDER LAST REVISED 7/2/2010 | USERNAME => s113541 | DGN FILE => 1013000114ua010.dgn | RELATIVE BORDER SCALE IS IN INCHES 0 1 2 3 | UNIT 1515 | PROJECT NUMBER & PHASE 10130001141

Dist	COUNTY	ROUTE	POST MILES TOTAL PROJECT	SHEET No.	TOTAL SHEETS
10	SJ	4,99	16.0/19.4,18.5	49	112

REGISTERED ELECTRICAL ENGINEER 5-26-15 DATE

PLANS APPROVAL DATE 6-22-15

REGISTERED PROFESSIONAL ENGINEER JASPAL SINGH No. 16657 Exp. 6/30/16 ELECTRICAL STATE OF CALIFORNIA

THE STATE OF CALIFORNIA OR ITS OFFICERS OR AGENTS SHALL NOT BE RESPONSIBLE FOR THE ACCURACY OR COMPLETENESS OF SCANNED COPIES OF THIS PLAN SHEET.

NOTES:

1. FOR LEGEND, ABBREVIATIONS AND SYMBOLS SEE SHEET E-1 AND E-2.
2. FOR ACCURATE RIGHT OF WAY DATA, CONTACT RIGHT OF WAY ENGINEERING AT THE DISTRICT OFFICE.

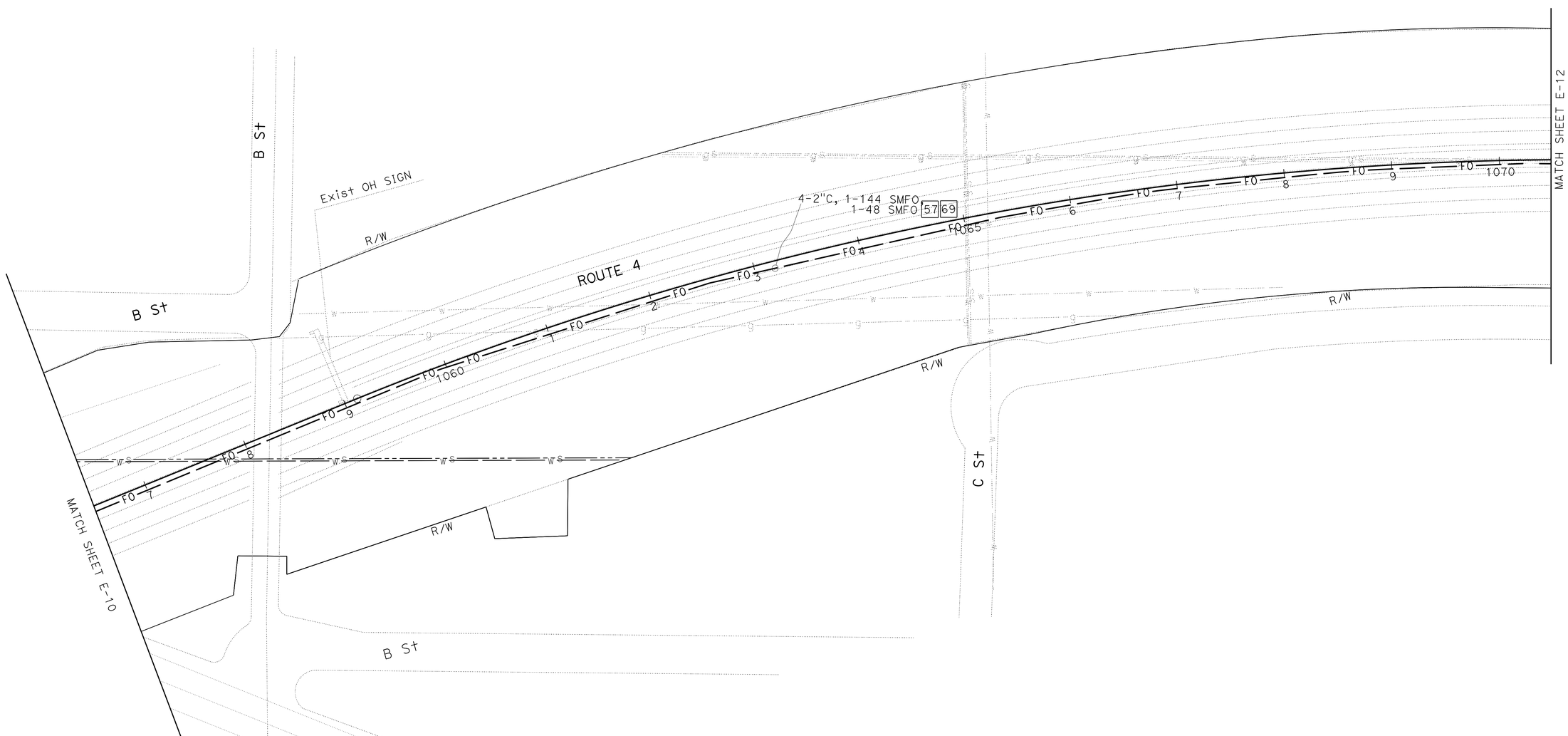

APPROVED FOR ELECTRICAL WORK ONLY

FIBER OPTIC SYSTEM

E-11

SCALE: 1"=50'

STATE OF CALIFORNIA - DEPARTMENT OF TRANSPORTATION

Caltrans® ELECTRICAL DESIGN

FUNCTIONAL SUPERVISOR: ALI BAKHDOUD

CALCULATED-DESIGNED BY: JASPAL SINGH

CHECKED BY: PAUL MATOS

REVISED BY: JS

DATE REVISED: 6/18/15

LAST REVISION 00-00-00

DATE PLOTTED => 04-SEP-2015

TIME PLOTTED => 14:07

Dist	COUNTY	ROUTE	POST MILES TOTAL PROJECT	SHEET No.	TOTAL SHEETS
10	SJ	4,99	16.0/19.4,18.5	50	112

REGISTERED ELECTRICAL ENGINEER 5-26-15 DATE

PLANS APPROVAL DATE 6-22-15

REGISTERED PROFESSIONAL ENGINEER JASPAL SINGH No. 16657 Exp. 6/30/16 ELECTRICAL STATE OF CALIFORNIA

THE STATE OF CALIFORNIA OR ITS OFFICERS OR AGENTS SHALL NOT BE RESPONSIBLE FOR THE ACCURACY OR COMPLETENESS OF SCANNED COPIES OF THIS PLAN SHEET.

NOTES:

1. FOR LEGEND, ABBREVIATIONS AND SYMBOLS SEE SHEET E-1 AND E-2.
2. FOR ACCURATE RIGHT OF WAY DATA, CONTACT RIGHT OF WAY ENGINEERING AT THE DISTRICT OFFICE.

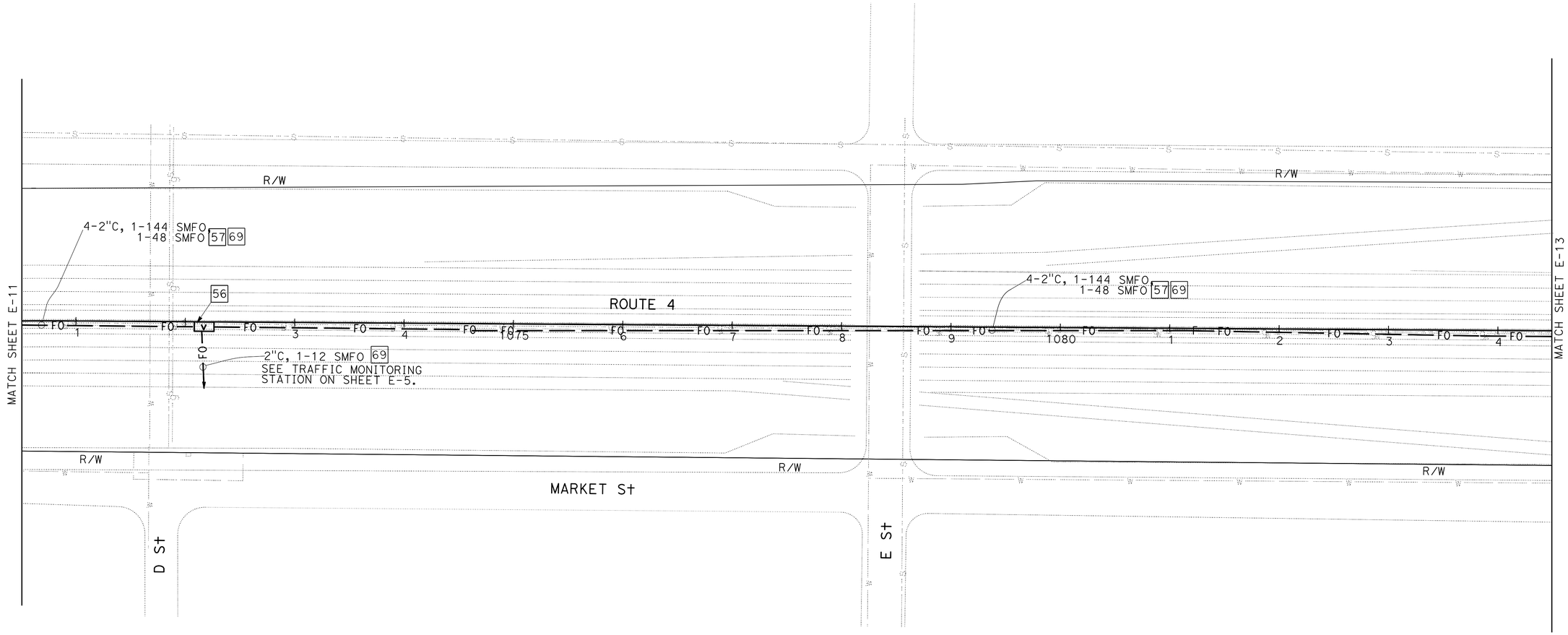

APPROVED FOR ELECTRICAL WORK ONLY

FIBER OPTIC SYSTEM
E-12

SCALE: 1"=50'

JASPAL SINGH	JS
PAUL MATOS	6/18/15
ALI BAKHDOUD	

CALCULATED-DESIGNED BY / REVISED BY
CHECKED BY / DATE REVISED
FUNCTIONAL SUPERVISOR

STATE OF CALIFORNIA - DEPARTMENT OF TRANSPORTATION
Caltrans® ELECTRICAL DESIGN

LAST REVISION 00-00-00 | DATE PLOTTED => 04-SEP-2015 | TIME PLOTTED => 14:07

Dist	COUNTY	ROUTE	POST MILES TOTAL PROJECT	SHEET No.	TOTAL SHEETS
10	SJ	4,99	16.0/19.4,18.5	51	112

REGISTERED ELECTRICAL ENGINEER 5-26-15 DATE

PLANS APPROVAL DATE 6-22-15

REGISTERED PROFESSIONAL ENGINEER JASPAL SINGH No. 16657 Exp. 6/30/16 ELECTRICAL STATE OF CALIFORNIA

THE STATE OF CALIFORNIA OR ITS OFFICERS OR AGENTS SHALL NOT BE RESPONSIBLE FOR THE ACCURACY OR COMPLETENESS OF SCANNED COPIES OF THIS PLAN SHEET.

NOTES:

1. FOR LEGEND, ABBREVIATIONS AND SYMBOLS SEE SHEET E-1 AND E-2.
2. FOR ACCURATE RIGHT OF WAY DATA, CONTACT RIGHT OF WAY ENGINEERING AT THE DISTRICT OFFICE.

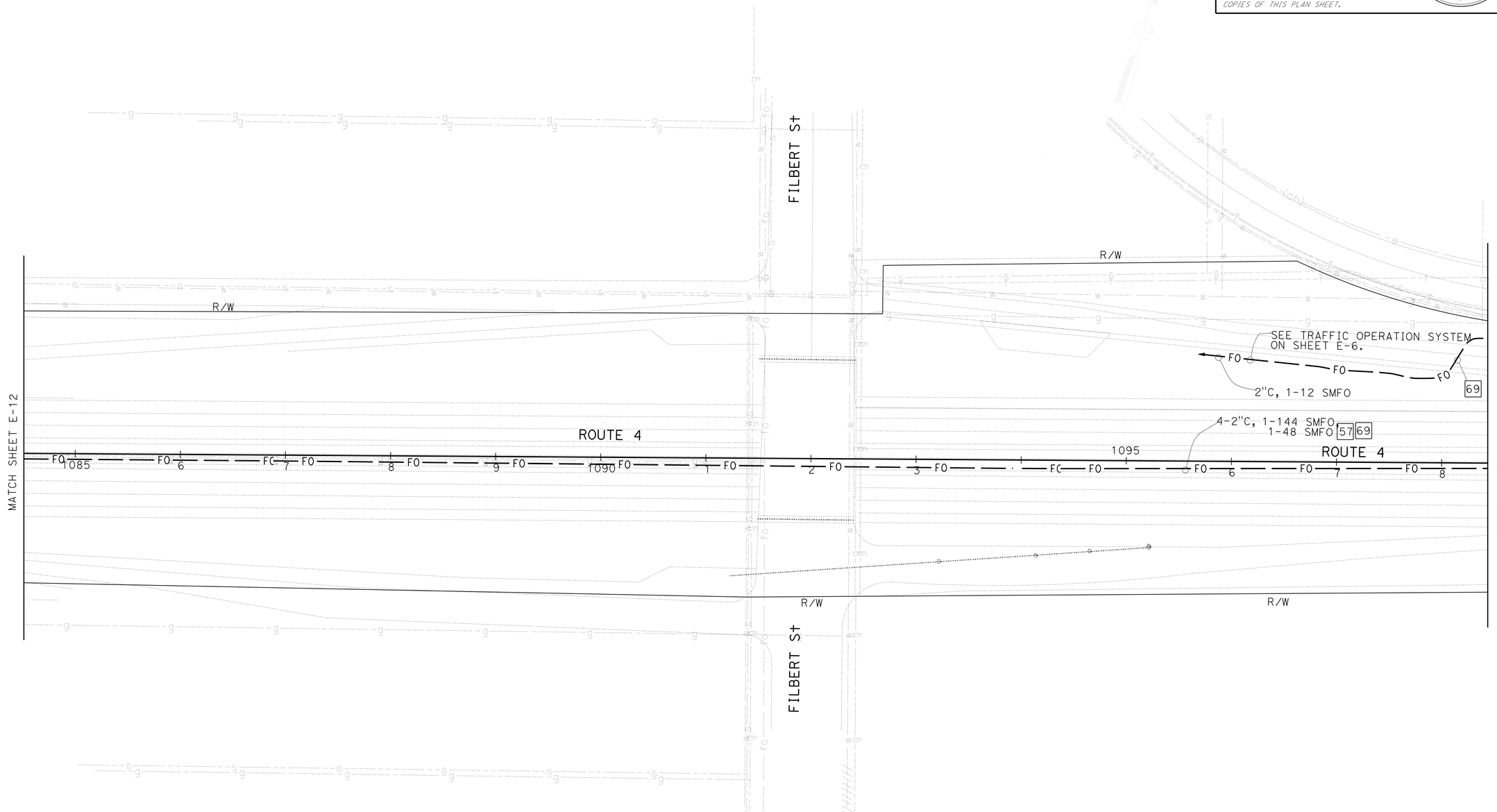

APPROVED FOR ELECTRICAL WORK ONLY

FIBER OPTIC SYSTEM

SCALE: 1"=50'

E-13

STATE OF CALIFORNIA - DEPARTMENT OF TRANSPORTATION

Caltrans® **ELECTRICAL DESIGN**

FUNCTIONAL SUPERVISOR: ALI BAKHDOUD

CALCULATED-DESIGNED BY: JASPAL SINGH

CHECKED BY: PAUL MATOS

REVISED BY: JS

DATE REVISED: 6/18/15

LAST REVISION 00-00-00

DATE PLOTTED => 04-SEP-2015

TIME PLOTTED => 14:07

Dist	COUNTY	ROUTE	POST MILES TOTAL PROJECT	SHEET No.	TOTAL SHEETS
10	SJ	4,99	16.0/19.4,18.5	52	112

REGISTERED ELECTRICAL ENGINEER 5-26-15 DATE

PLANS APPROVAL DATE 6-22-15

REGISTERED PROFESSIONAL ENGINEER JASPAL SINGH No. 16657 Exp. 6/30/16 ELECTRICAL STATE OF CALIFORNIA

THE STATE OF CALIFORNIA OR ITS OFFICERS OR AGENTS SHALL NOT BE RESPONSIBLE FOR THE ACCURACY OR COMPLETENESS OF SCANNED COPIES OF THIS PLAN SHEET.

NOTES:

1. FOR LEGEND, ABBREVIATIONS AND SYMBOLS SEE SHEET E-1 AND E-2.
2. FOR ACCURATE RIGHT OF WAY DATA, CONTACT RIGHT OF WAY ENGINEERING AT THE DISTRICT OFFICE.

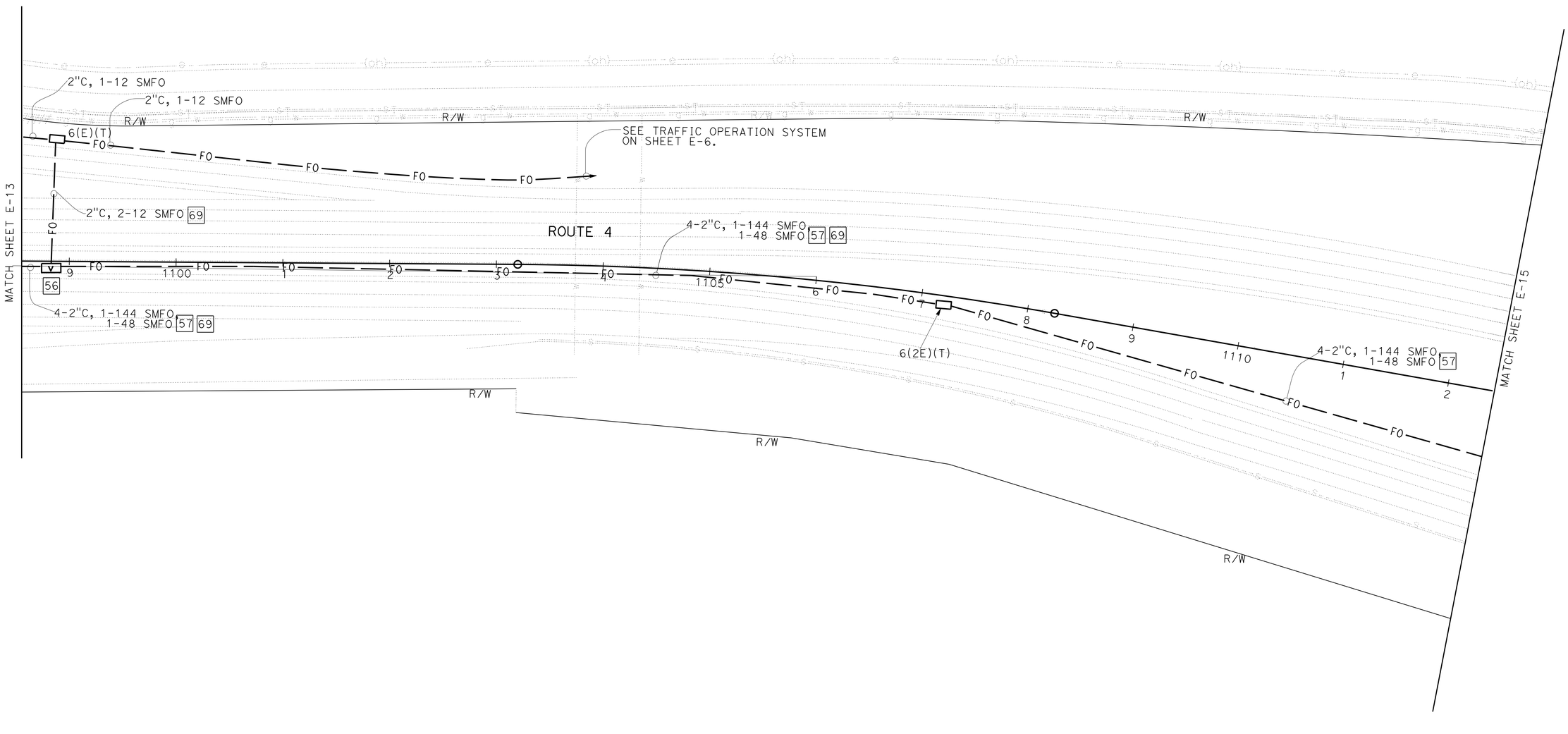

APPROVED FOR ELECTRICAL WORK ONLY

FIBER OPTIC SYSTEM

SCALE: 1" =50'

E-14

JS	6/18/15
REVISED BY	DATE REVISED
JASPAL SINGH	PAUL MATOS
CALCULATED-DESIGNED BY	CHECKED BY
FUNCTIONAL SUPERVISOR	ALI BAKHDOUD

STATE OF CALIFORNIA - DEPARTMENT OF TRANSPORTATION

Caltrans® ELECTRICAL DESIGN

LAST REVISION 00-00-00 | DATE PLOTTED => 04-SEP-2015 | TIME PLOTTED => 14:07

Dist	COUNTY	ROUTE	POST MILES TOTAL PROJECT	SHEET No.	TOTAL SHEETS
10	SJ	4,99	16.0/19.4,18.5	53	112

REGISTERED ELECTRICAL ENGINEER 5-26-15 DATE

PLANS APPROVAL DATE 6-22-15

REGISTERED PROFESSIONAL ENGINEER JASPAL SINGH No. 16657 Exp. 6/30/16 ELECTRICAL STATE OF CALIFORNIA

THE STATE OF CALIFORNIA OR ITS OFFICERS OR AGENTS SHALL NOT BE RESPONSIBLE FOR THE ACCURACY OR COMPLETENESS OF SCANNED COPIES OF THIS PLAN SHEET.

NOTES:

1. FOR LEGEND, ABBREVIATIONS AND SYMBOLS SEE SHEET E-1 AND E-2.
2. FOR ACCURATE RIGHT OF WAY DATA, CONTACT RIGHT OF WAY ENGINEERING AT THE DISTRICT OFFICE.

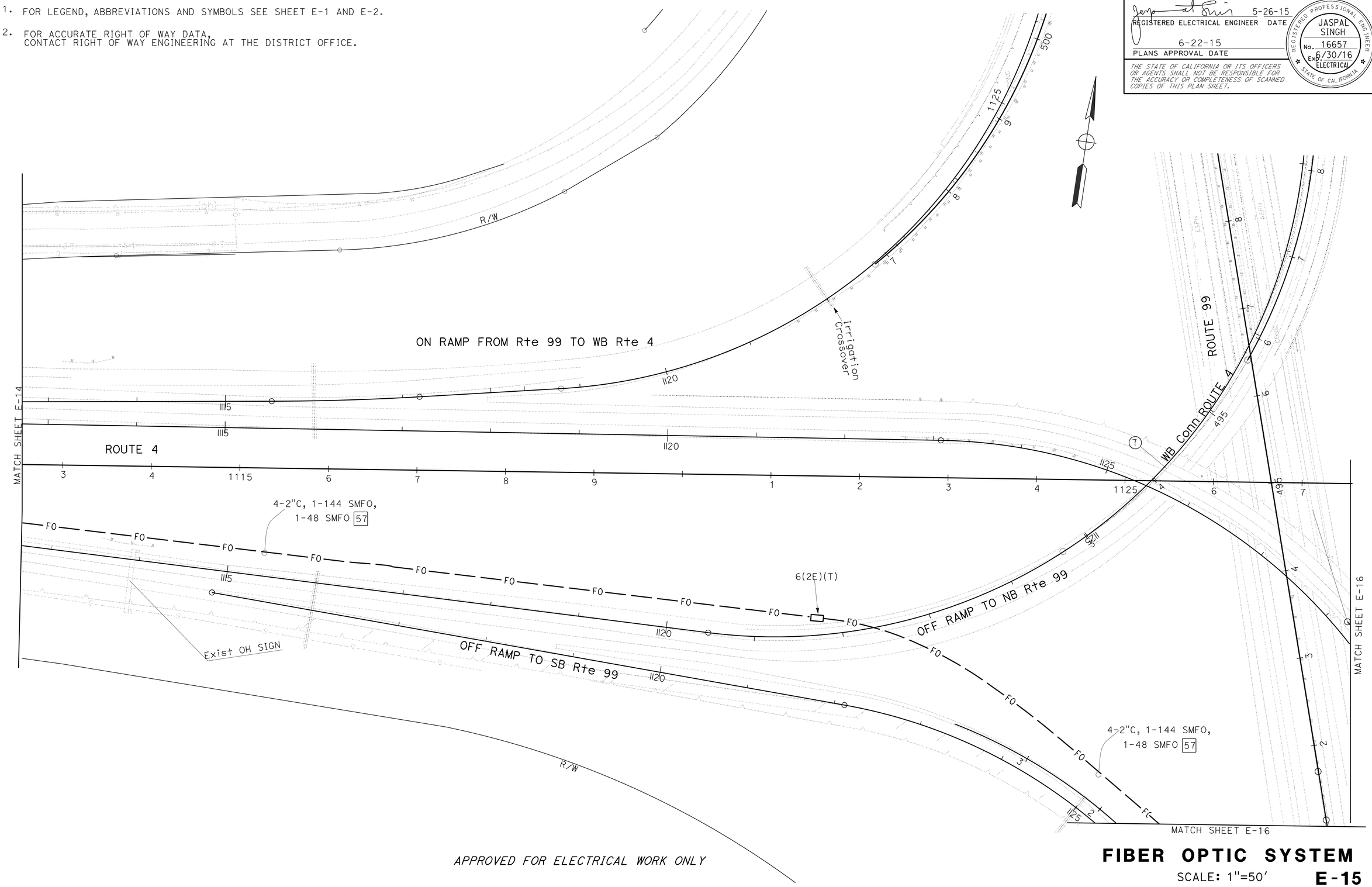

APPROVED FOR ELECTRICAL WORK ONLY

FIBER OPTIC SYSTEM

SCALE: 1"=50'

E-15

STATE OF CALIFORNIA - DEPARTMENT OF TRANSPORTATION

Caltrans® **ELECTRICAL DESIGN**

FUNCTIONAL SUPERVISOR: ALI BAKHDOUD

CALCULATED-DESIGNED BY: JASPAL SINGH

CHECKED BY: PAUL MATOS

REVISED BY: JS

DATE REVISED: 6/18/15

LAST REVISION: 00-00-00

DATE PLOTTED => 04-SEP-2015

TIME PLOTTED => 14:07

BORDER LAST REVISED 7/2/2010

USERNAME => s113541

DGN FILE => 1013000114ua015.dgn

RELATIVE BORDER SCALE IS IN INCHES 0 1 2 3

UNIT 1515

PROJECT NUMBER & PHASE 10130001141

Dist	COUNTY	ROUTE	POST MILES TOTAL PROJECT	SHEET No.	TOTAL SHEETS
10	SJ	4,99	16.0/19.4,18.5	54	112

REGISTERED ELECTRICAL ENGINEER 5-26-15 DATE

PLANS APPROVAL DATE 6-22-15

REGISTERED PROFESSIONAL ENGINEER JASPAL SINGH No. 16657 Exp. 6/30/16 ELECTRICAL STATE OF CALIFORNIA

THE STATE OF CALIFORNIA OR ITS OFFICERS OR AGENTS SHALL NOT BE RESPONSIBLE FOR THE ACCURACY OR COMPLETENESS OF SCANNED COPIES OF THIS PLAN SHEET.

NOTES:

1. FOR LEGEND, ABBREVIATIONS AND SYMBOLS SEE SHEET E-1 AND E-2.
2. FOR ACCURATE RIGHT OF WAY DATA, CONTACT RIGHT OF WAY ENGINEERING AT THE DISTRICT OFFICE.

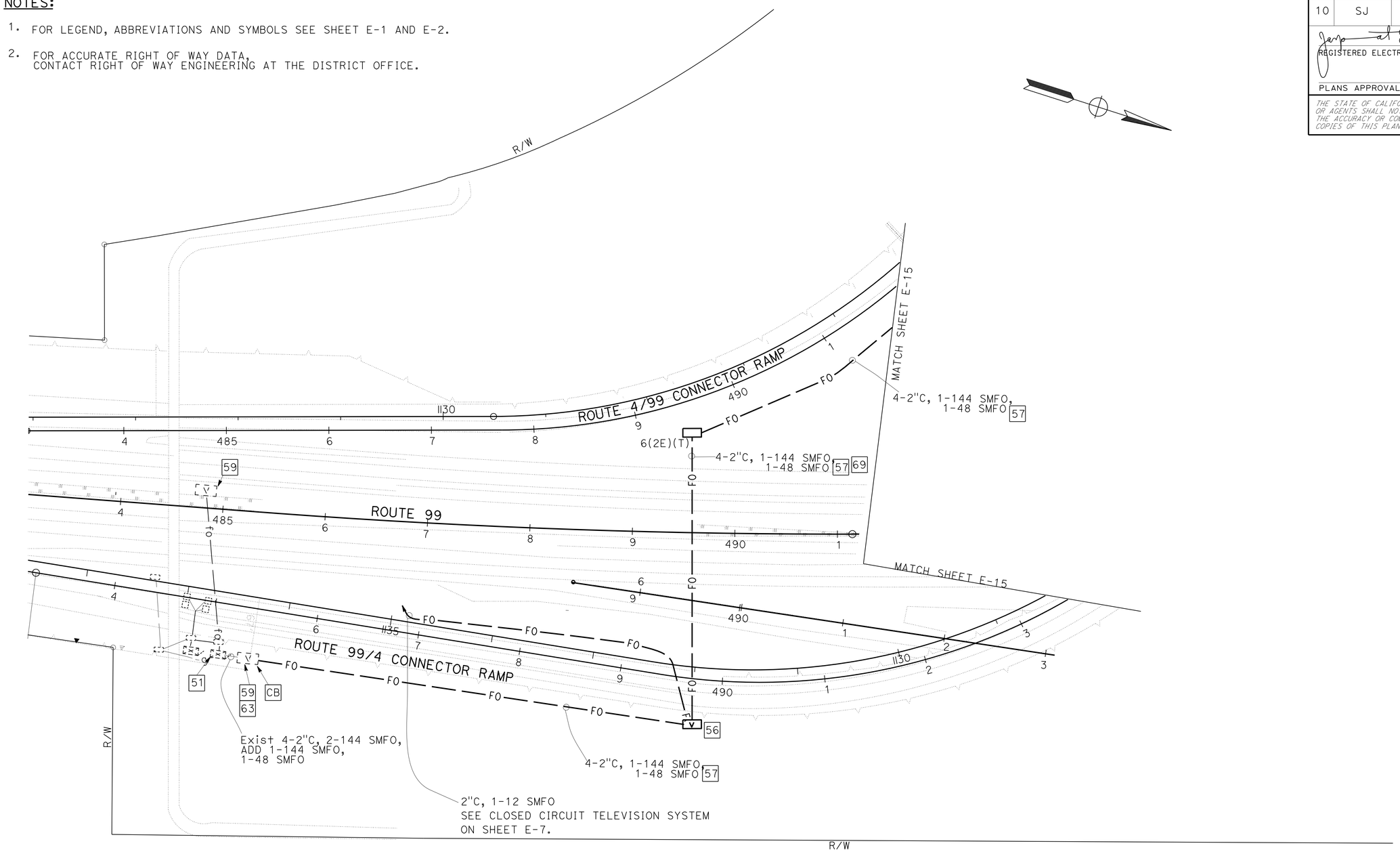

APPROVED FOR ELECTRICAL WORK ONLY

FIBER OPTIC SYSTEM

E-16

SCALE: 1"=50'

STATE OF CALIFORNIA - DEPARTMENT OF TRANSPORTATION

Caltrans® ELECTRICAL DESIGN

FUNCTIONAL SUPERVISOR: ALI BAKHDOUD

CALCULATED-DESIGNED BY: JASPAL SINGH

CHECKED BY: PAUL MATOS

REVISED BY: JS

DATE REVISED: 6/18/15

LAST REVISION 00-00-00 | DATE PLOTTED => 04-SEP-2015 | TIME PLOTTED => 14:07

Dist	COUNTY	ROUTE	POST MILES TOTAL PROJECT	SHEET No.	TOTAL SHEETS
10	SJ	4,99	16.0/19.4,18.5	55	112

REGISTERED ELECTRICAL ENGINEER DATE 5-26-15

PLANS APPROVAL DATE 6-22-15

REGISTERED PROFESSIONAL ENGINEER JASPAL SINGH No. 16657 Exp. 6/30/16 ELECTRICAL STATE OF CALIFORNIA

THE STATE OF CALIFORNIA OR ITS OFFICERS OR AGENTS SHALL NOT BE RESPONSIBLE FOR THE ACCURACY OR COMPLETENESS OF SCANNED COPIES OF THIS PLAN SHEET.

NOTES:

1. FOR LEGEND, ABBREVIATIONS AND SYMBOLS SEE SHEET E-1 AND E-2.
2. FOR ACCURATE RIGHT OF WAY DATA, CONTACT RIGHT OF WAY ENGINEERING AT THE DISTRICT OFFICE.

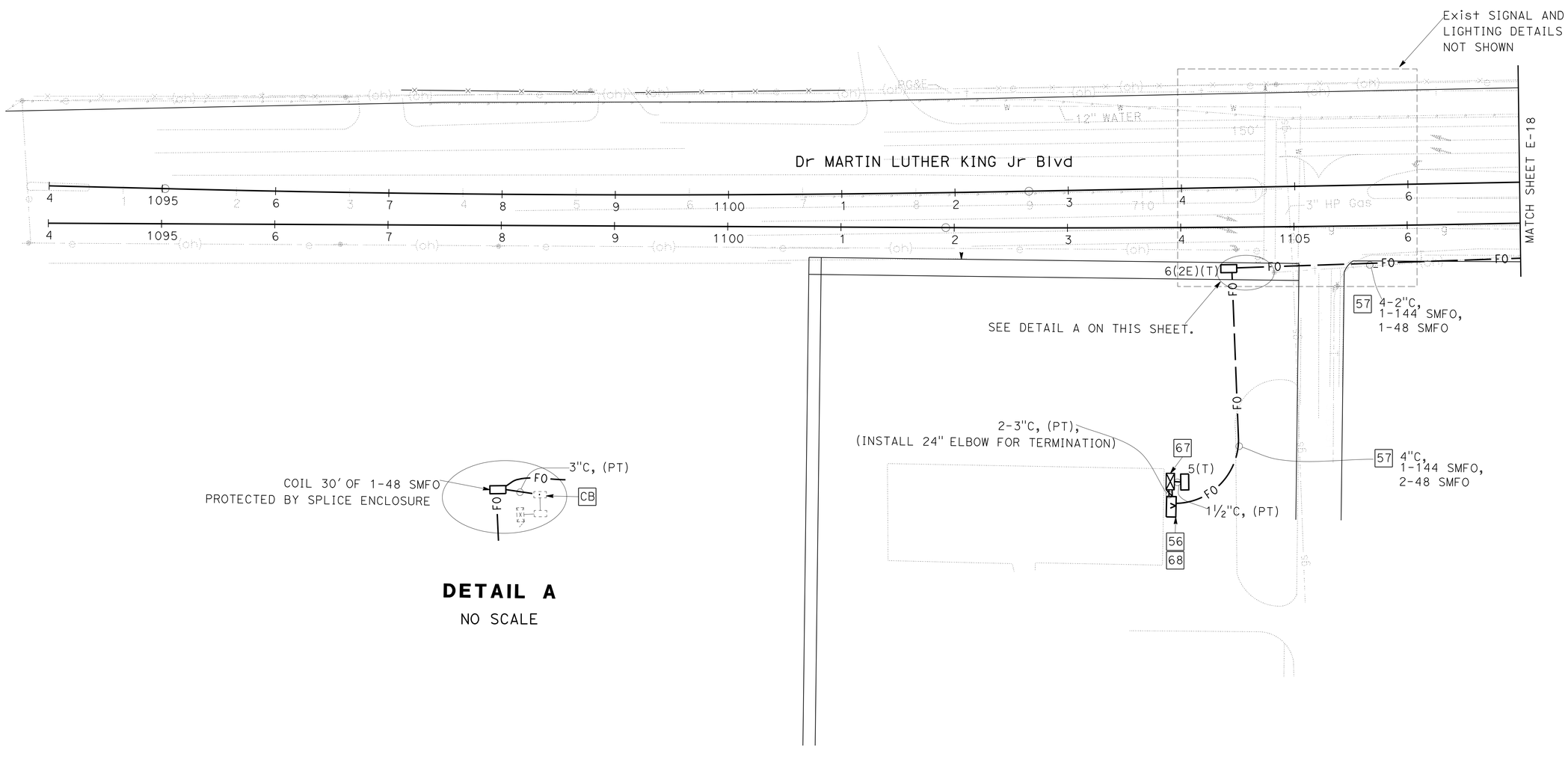

DETAIL A

NO SCALE

APPROVED FOR ELECTRICAL WORK ONLY

FIBER OPTIC SYSTEM

SCALE: 1"=50'

E-17

JS	6/18/15
REVISED BY	DATE REVISED
JASPAL SINGH	PAUL MATOS
CALCULATED-DESIGNED BY	CHECKED BY
FUNCTIONAL SUPERVISOR	ALI BAKHDOUD

STATE OF CALIFORNIA - DEPARTMENT OF TRANSPORTATION

Caltrans ELECTRICAL DESIGN

LAST REVISION 00-00-00 DATE PLOTTED => 04-SEP-2015 TIME PLOTTED => 14:07

Dist	COUNTY	ROUTE	POST MILES TOTAL PROJECT	SHEET No.	TOTAL SHEETS
10	SJ	4,99	16.0/19.4,18.5	56	112

REGISTERED ELECTRICAL ENGINEER 5-26-15 DATE

PLANS APPROVAL DATE 6-22-15

REGISTERED PROFESSIONAL ENGINEER JASPAL SINGH No. 16657 Exp. 6/30/16 ELECTRICAL STATE OF CALIFORNIA

THE STATE OF CALIFORNIA OR ITS OFFICERS OR AGENTS SHALL NOT BE RESPONSIBLE FOR THE ACCURACY OR COMPLETENESS OF SCANNED COPIES OF THIS PLAN SHEET.

NOTES:

1. FOR LEGEND, ABBREVIATIONS AND SYMBOLS SEE SHEET E-1 AND E-2.
2. FOR ACCURATE RIGHT OF WAY DATA, CONTACT RIGHT OF WAY ENGINEERING AT THE DISTRICT OFFICE.

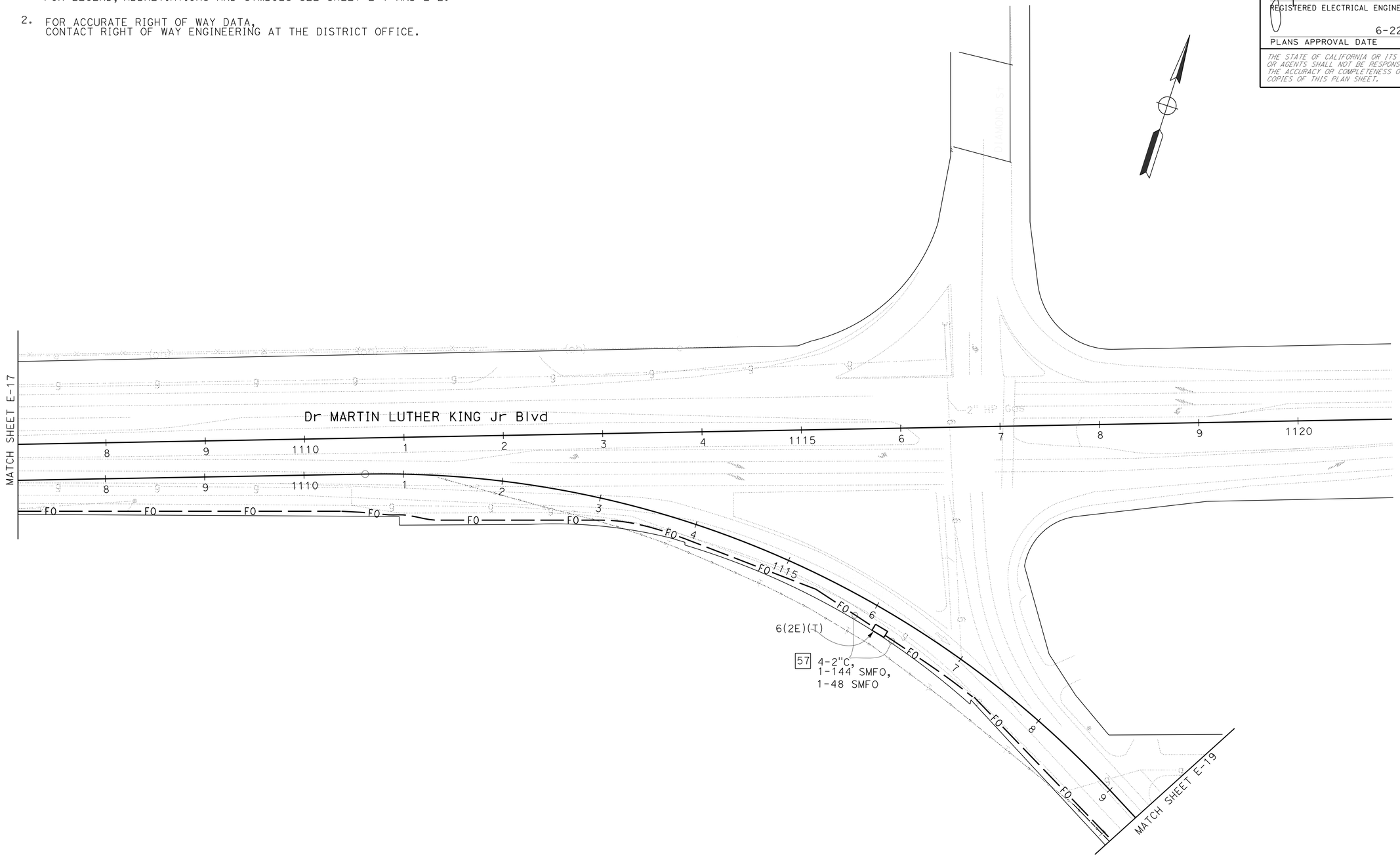

APPROVED FOR ELECTRICAL WORK ONLY

FIBER OPTIC SYSTEM

SCALE: 1"=50'

E-18

STATE OF CALIFORNIA - DEPARTMENT OF TRANSPORTATION

Caltrans® **ELECTRICAL DESIGN**

FUNCTIONAL SUPERVISOR: ALI BAKHDOUD

CALCULATED-DESIGNED BY: JASPAL SINGH

CHECKED BY: PAUL MATOS

REVISED BY: JS

DATE REVISED: 6/18/15

LAST REVISION 00-00-00

DATE PLOTTED => 04-SEP-2015

TIME PLOTTED => 14:07

Dist	COUNTY	ROUTE	POST MILES TOTAL PROJECT	SHEET No.	TOTAL SHEETS
10	SJ	4,99	16.0/19.4,18.5	57	112

REGISTERED ELECTRICAL ENGINEER DATE 5-26-15

PLANS APPROVAL DATE 6-22-15

REGISTERED PROFESSIONAL ENGINEER JASPAL SINGH No. 16657 Exp. 6/30/16 ELECTRICAL STATE OF CALIFORNIA

THE STATE OF CALIFORNIA OR ITS OFFICERS OR AGENTS SHALL NOT BE RESPONSIBLE FOR THE ACCURACY OR COMPLETENESS OF SCANNED COPIES OF THIS PLAN SHEET.

NOTES:

1. FOR LEGEND, ABBREVIATIONS AND SYMBOLS SEE SHEET E-1 AND E-2.
2. FOR ACCURATE RIGHT OF WAY DATA, CONTACT RIGHT OF WAY ENGINEERING AT THE DISTRICT OFFICE.

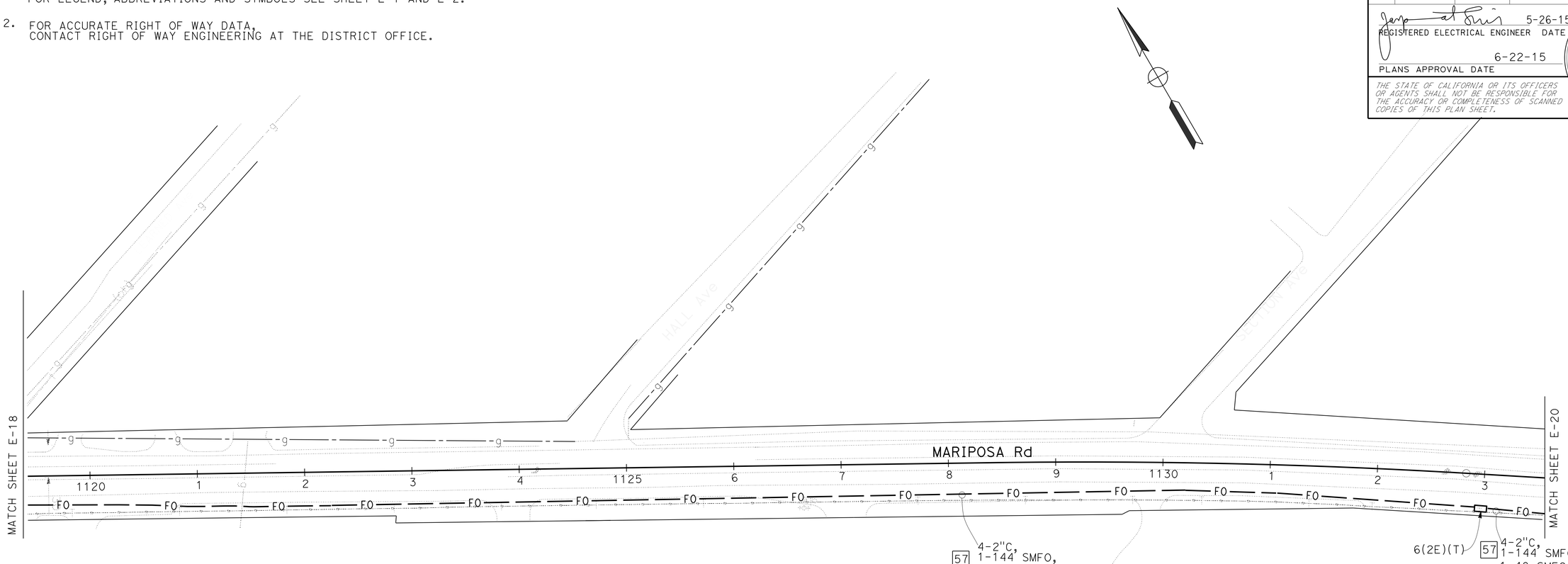

APPROVED FOR ELECTRICAL WORK ONLY

FIBER OPTIC SYSTEM

SCALE: 1"=50'

E-19

REVISED BY	DATE REVISED
JS	6/18/15

CALCULATED-DESIGNED BY: JASPAL SINGH
CHECKED BY: PAUL MATOS
FUNCTIONAL SUPERVISOR: ALI BAKHDOUD

STATE OF CALIFORNIA - DEPARTMENT OF TRANSPORTATION
Caltrans® ELECTRICAL DESIGN

LAST REVISION 08-18-14 | DATE PLOTTED => 04-SEP-2015 | TIME PLOTTED => 14:07

Dist	COUNTY	ROUTE	POST MILES TOTAL PROJECT	SHEET No.	TOTAL SHEETS
10	SJ	4,99	16.0/19.4,18.5	58	112

REGISTERED ELECTRICAL ENGINEER 5-26-15 DATE

PLANS APPROVAL DATE 6-22-15

REGISTERED PROFESSIONAL ENGINEER JASPAL SINGH No. 16657 Exp. 6/30/16 ELECTRICAL STATE OF CALIFORNIA

THE STATE OF CALIFORNIA OR ITS OFFICERS OR AGENTS SHALL NOT BE RESPONSIBLE FOR THE ACCURACY OR COMPLETENESS OF SCANNED COPIES OF THIS PLAN SHEET.

NOTES:

1. FOR LEGEND, ABBREVIATIONS AND SYMBOLS SEE SHEET E-1 AND E-2.
2. FOR ACCURATE RIGHT OF WAY DATA, CONTACT RIGHT OF WAY ENGINEERING AT THE DISTRICT OFFICE.

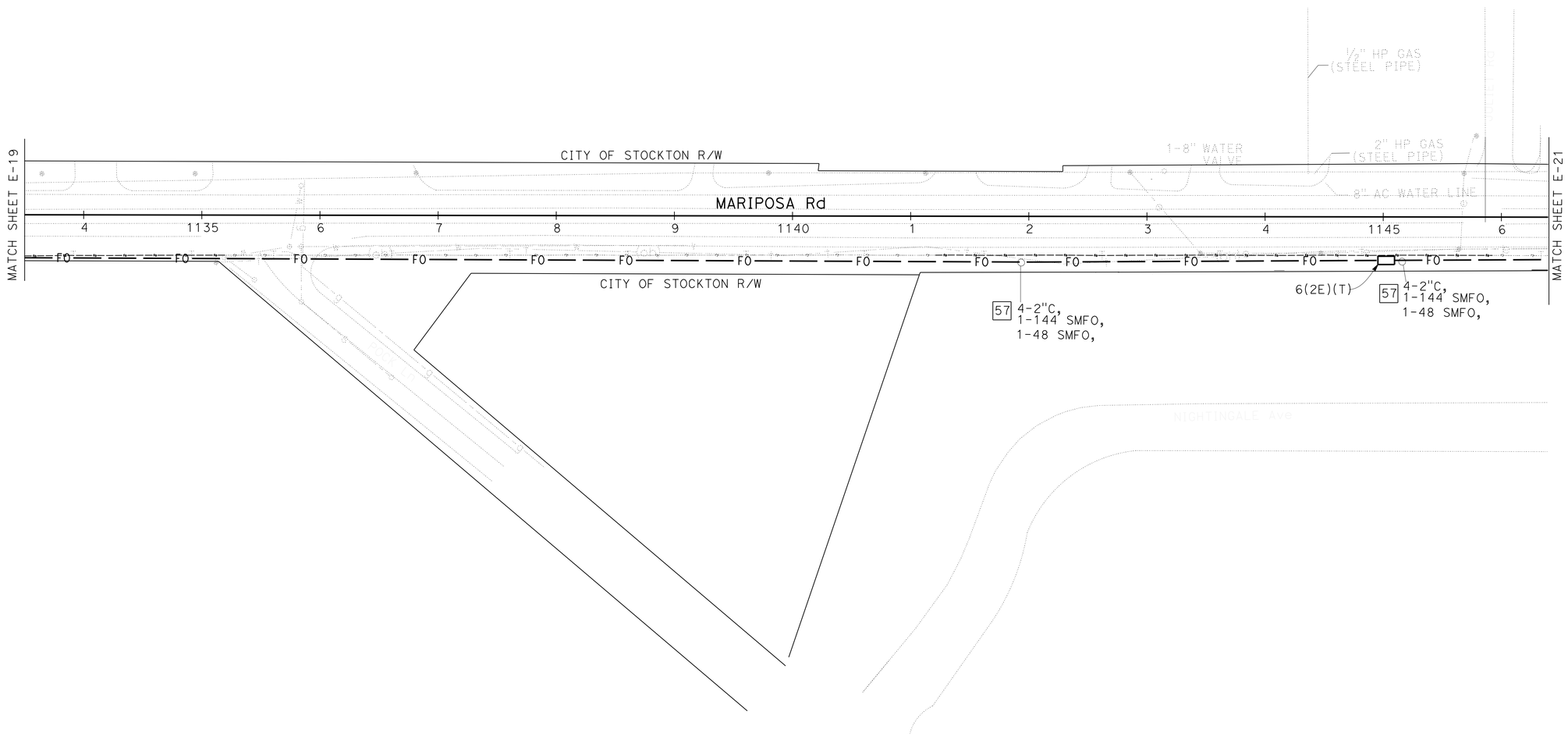

APPROVED FOR ELECTRICAL WORK ONLY

FIBER OPTIC SYSTEM
E-20

SCALE: 1"=50'

STATE OF CALIFORNIA - DEPARTMENT OF TRANSPORTATION
Caltrans ELECTRICAL DESIGN

FUNCTIONAL SUPERVISOR: ALI BAKHDOUD
CALCULATED-DESIGNED BY: JASPAL SINGH
CHECKED BY: PAUL MATOS
REVISED BY: JS
DATE REVISED: 6/18/15

LAST REVISION 08-00-00 DATE PLOTTED => 04-SEP-2015 TIME PLOTTED => 14:07

Dist	COUNTY	ROUTE	POST MILES TOTAL PROJECT	SHEET No.	TOTAL SHEETS
10	SJ	4,99	16.0/19.4,18.5	59	112

REGISTERED ELECTRICAL ENGINEER 5-26-15 DATE

PLANS APPROVAL DATE 6-22-15

REGISTERED PROFESSIONAL ENGINEER JASPAL SINGH No. 16657 Exp. 6/30/16 ELECTRICAL STATE OF CALIFORNIA

THE STATE OF CALIFORNIA OR ITS OFFICERS OR AGENTS SHALL NOT BE RESPONSIBLE FOR THE ACCURACY OR COMPLETENESS OF SCANNED COPIES OF THIS PLAN SHEET.

NOTES:

1. FOR LEGEND, ABBREVIATIONS AND SYMBOLS SEE SHEET E-1 AND E-2.
2. FOR ACCURATE RIGHT OF WAY DATA, CONTACT RIGHT OF WAY ENGINEERING AT THE DISTRICT OFFICE.

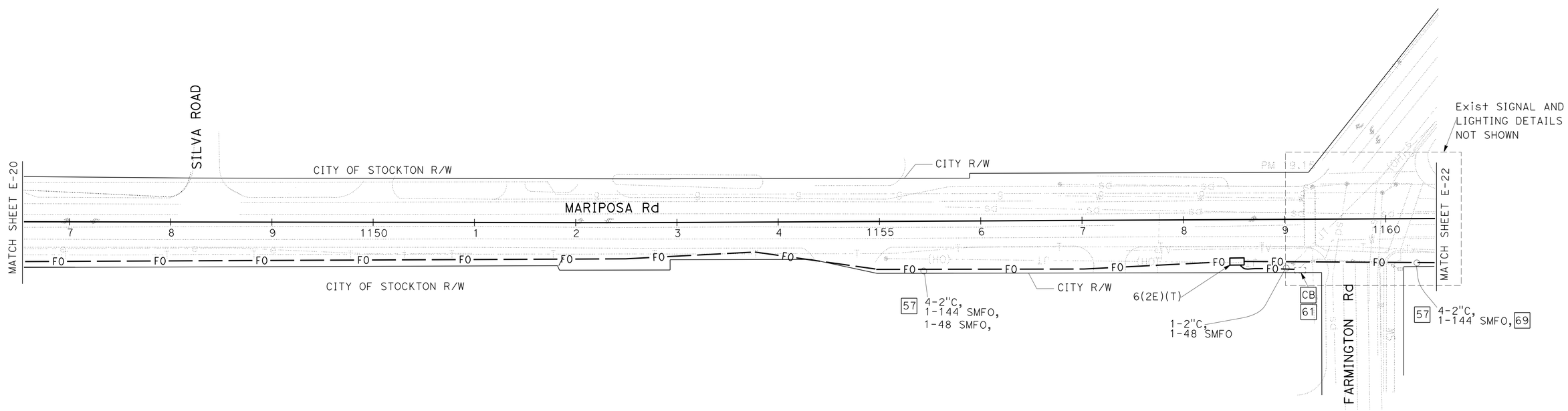

APPROVED FOR ELECTRICAL WORK ONLY

FIBER OPTIC SYSTEM

E-21

SCALE: 1"=50'

STATE OF CALIFORNIA - DEPARTMENT OF TRANSPORTATION

Caltrans® ELECTRICAL DESIGN

FUNCTIONAL SUPERVISOR: ALI BAKHDOUD

CALCULATED-DESIGNED BY: JASPAL SINGH

CHECKED BY: PAUL MATOS

REVISED BY: JS

DATE REVISED: 6/18/15

LAST REVISION DATE PLOTTED => 04-SEP-2015

00-00-00 TIME PLOTTED => 14:07

Dist	COUNTY	ROUTE	POST MILES TOTAL PROJECT	SHEET No.	TOTAL SHEETS
10	SJ	4,99	16.0/19.4,18.5	60	112

REGISTERED ELECTRICAL ENGINEER 5-26-15 DATE

PLANS APPROVAL DATE 6-22-15

REGISTERED PROFESSIONAL ENGINEER JASPAL SINGH No. 16657 Exp. 6/30/16 ELECTRICAL STATE OF CALIFORNIA

THE STATE OF CALIFORNIA OR ITS OFFICERS OR AGENTS SHALL NOT BE RESPONSIBLE FOR THE ACCURACY OR COMPLETENESS OF SCANNED COPIES OF THIS PLAN SHEET.

NOTES:

1. FOR LEGEND, ABBREVIATIONS AND SYMBOLS SEE SHEET E-1 AND E-2.
2. FOR ACCURATE RIGHT OF WAY DATA, CONTACT RIGHT OF WAY ENGINEERING AT THE DISTRICT OFFICE.

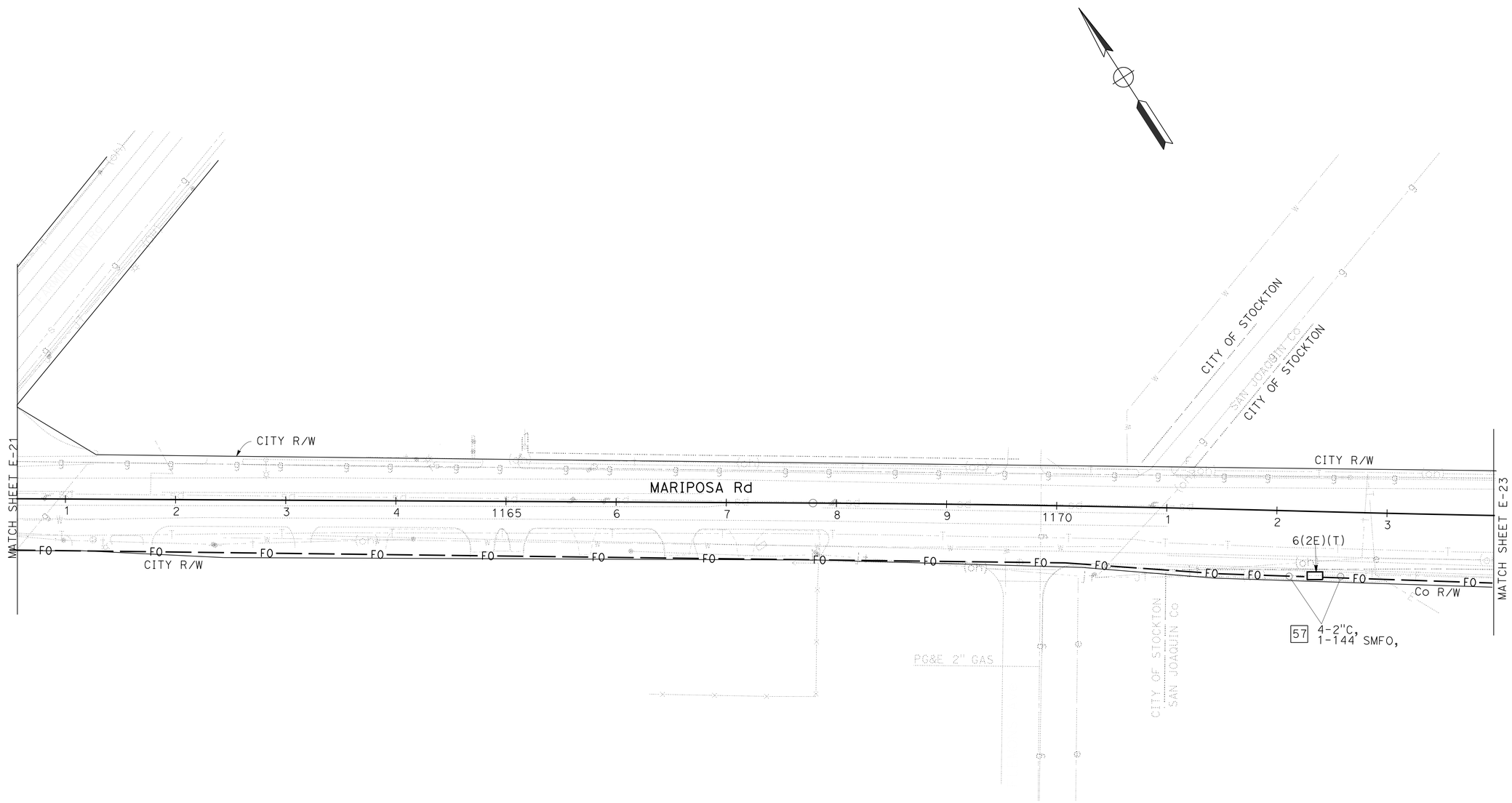

APPROVED FOR ELECTRICAL WORK ONLY

FIBER OPTIC SYSTEM

SCALE: 1"=50'

E-22

STATE OF CALIFORNIA - DEPARTMENT OF TRANSPORTATION

Caltrans® ELECTRICAL DESIGN

FUNCTIONAL SUPERVISOR: ALI BAKHDOUD

CALCULATED-DESIGNED BY: JASPAL SINGH

CHECKED BY: PAUL MATOS

REVISED BY: JS

DATE REVISED: 6/18/15

LAST REVISION DATE PLOTTED => 04-SEP-2015 TIME PLOTTED => 14:07

00-00-00

Dist	COUNTY	ROUTE	POST MILES TOTAL PROJECT	SHEET No.	TOTAL SHEETS
10	SJ	4,99	16.0/19.4,18.5	61	112

REGISTERED ELECTRICAL ENGINEER 5-26-15 DATE

PLANS APPROVAL DATE 6-22-15

REGISTERED PROFESSIONAL ENGINEER JASPAL SINGH No. 16657 Exp. 6/30/16 ELECTRICAL STATE OF CALIFORNIA

THE STATE OF CALIFORNIA OR ITS OFFICERS OR AGENTS SHALL NOT BE RESPONSIBLE FOR THE ACCURACY OR COMPLETENESS OF SCANNED COPIES OF THIS PLAN SHEET.

NOTES:

1. FOR LEGEND, ABBREVIATIONS AND SYMBOLS SEE SHEET E-1 AND E-2.
2. FOR ACCURATE RIGHT OF WAY DATA, CONTACT RIGHT OF WAY ENGINEERING AT THE DISTRICT OFFICE.

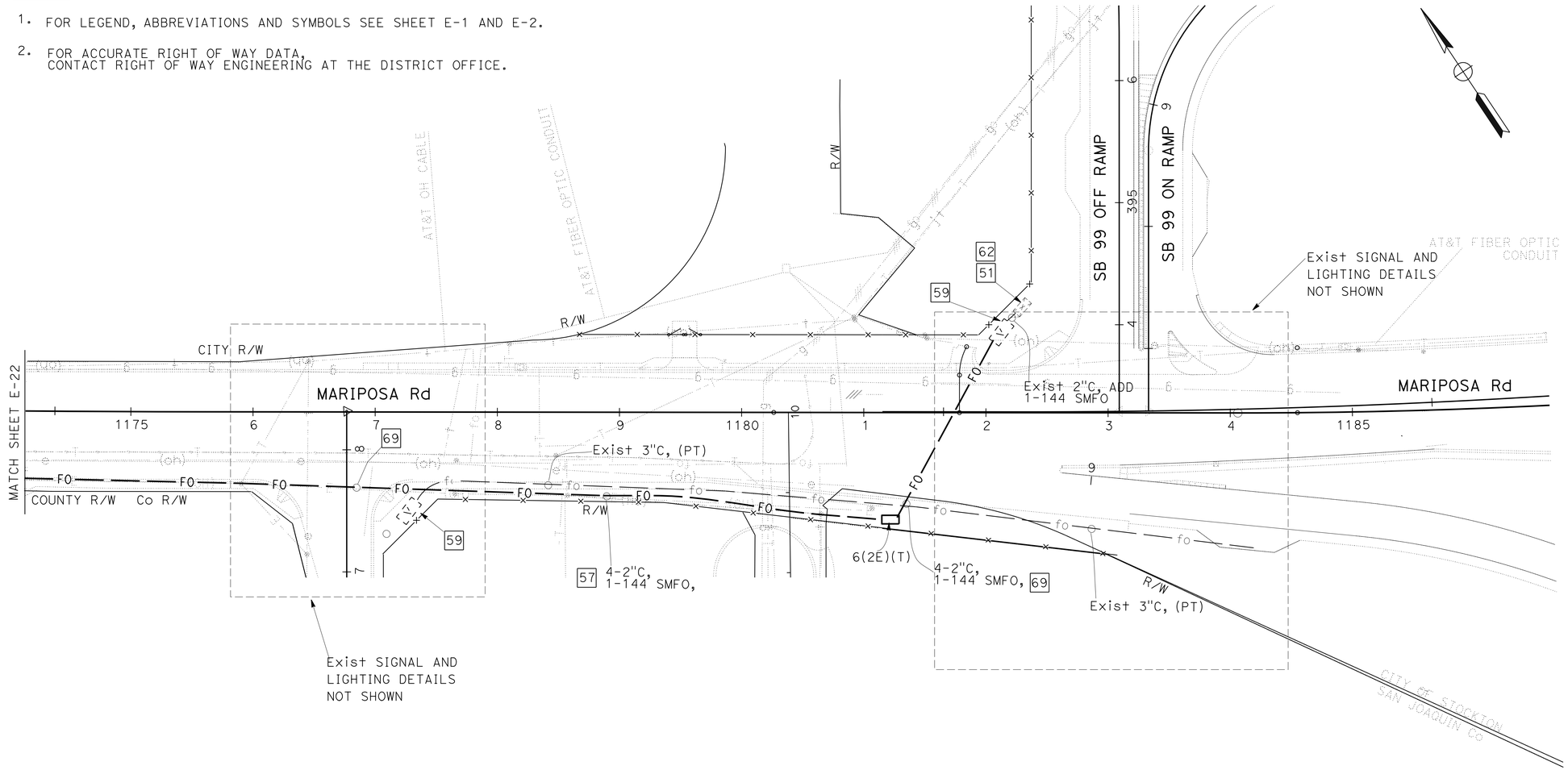

APPROVED FOR ELECTRICAL WORK ONLY

FIBER OPTIC SYSTEM

SCALE: 1"=50'

E-23

STATE OF CALIFORNIA - DEPARTMENT OF TRANSPORTATION

Caltrans® **ELECTRICAL DESIGN**

FUNCTIONAL SUPERVISOR: ALI BAKHDOUD

CALCULATED-DESIGNED BY: JASPAL SINGH

CHECKED BY: PAUL MATOS

REVISED BY: JS

DATE REVISED: 6/18/15

LAST REVISION: 00-00-00

DATE PLOTTED => 04-SEP-2015

TIME PLOTTED => 14:07

Dist	COUNTY	ROUTE	POST MILES TOTAL PROJECT	SHEET No.	TOTAL SHEETS
10	SJ	4,99	16.0/19.4,18.5	62	112

REGISTERED ELECTRICAL ENGINEER 5-26-15 DATE

PLANS APPROVAL DATE 6-22-15

REGISTERED PROFESSIONAL ENGINEER JASPAL SINGH No. 16657 Exp. 6/30/16 ELECTRICAL STATE OF CALIFORNIA

THE STATE OF CALIFORNIA OR ITS OFFICERS OR AGENTS SHALL NOT BE RESPONSIBLE FOR THE ACCURACY OR COMPLETENESS OF SCANNED COPIES OF THIS PLAN SHEET.

LEGEND: (FOR SHEETS E-24 THROUGH E-30)

- —— EXISTING ELEMENT
- ● SPLICE FIBER TO FIBER
- × CUT END OF FIBER
- ▫ SC CONNECTOR ON NEW FDU

ABBREVIATIONS:

FDU	FIBER DISTRIBUTION UNIT
FOM	FIBER OPTIC MODEM (DFM)
SC	COMPRESSION CONNECTOR
(DFM)	DEPARTMENT FURNISHED MATERIAL
SMFO	SINGLE MODE FIBER OPTIC CABLE
SV	SPLICE VAULT
TX	TRANSMIT
RX	RECEIVE
(2E)	PULLBOX WITH TWO EXTENSION

BL	BLUE
OR	ORANGE
GR	GREEN
BR	BROWN
SL	SLATE
WT	WHITE
RD	RED
BK	BLACK
YL	YELLOW
VL	VIOLET
RS	ROSE
AQ	AQUA

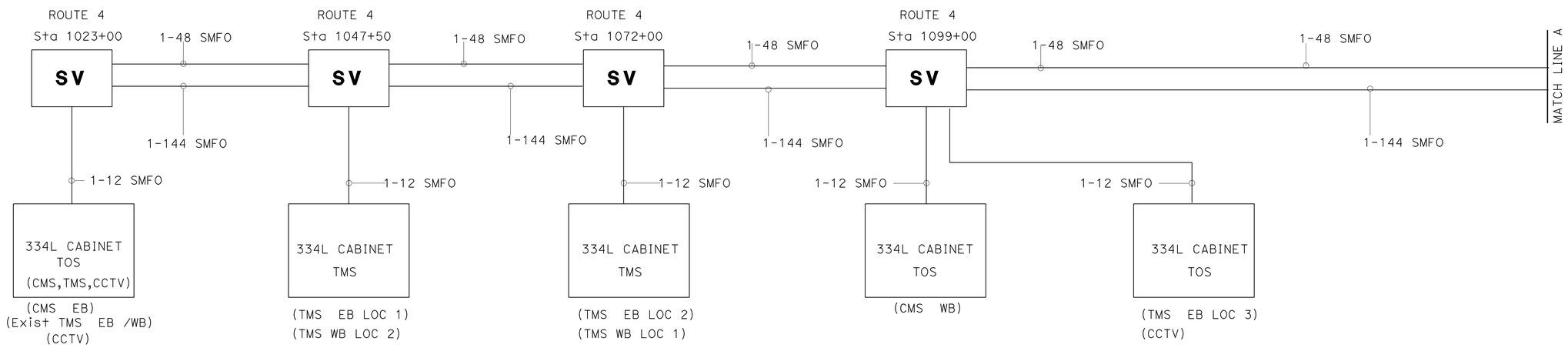

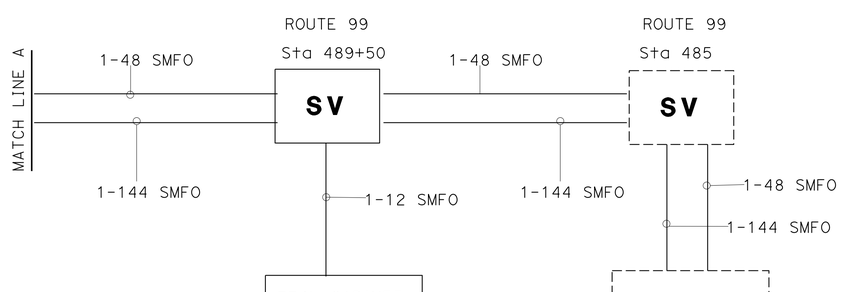

FIBER OPTIC SYSTEM

NO SCALE

E-24

STATE OF CALIFORNIA - DEPARTMENT OF TRANSPORTATION
Caltrans® ELECTRICAL DESIGN

FUNCTIONAL SUPERVISOR: ALI BAKHDOUD
CALCULATED-DESIGNED BY: JASPAL SINGH
CHECKED BY: PAUL MATOS
REVISED BY: JS
DATE REVISED: 6/18/15

LAST REVISION 00-00-00
DATE PLOTTED => 04-SEP-2015
TIME PLOTTED => 14:08

Dist	COUNTY	ROUTE	POST MILES TOTAL PROJECT	SHEET No.	TOTAL SHEETS
10	SJ	4,99	16.0/19.4,18.5	63	112

REGISTERED ELECTRICAL ENGINEER 5-26-15 DATE

PLANS APPROVAL DATE 6-22-15

REGISTERED PROFESSIONAL ENGINEER JASPAL SINGH No. 16657 Exp. 6/30/16 ELECTRICAL STATE OF CALIFORNIA

THE STATE OF CALIFORNIA OR ITS OFFICERS OR AGENTS SHALL NOT BE RESPONSIBLE FOR THE ACCURACY OR COMPLETENESS OF SCANNED COPIES OF THIS PLAN SHEET.

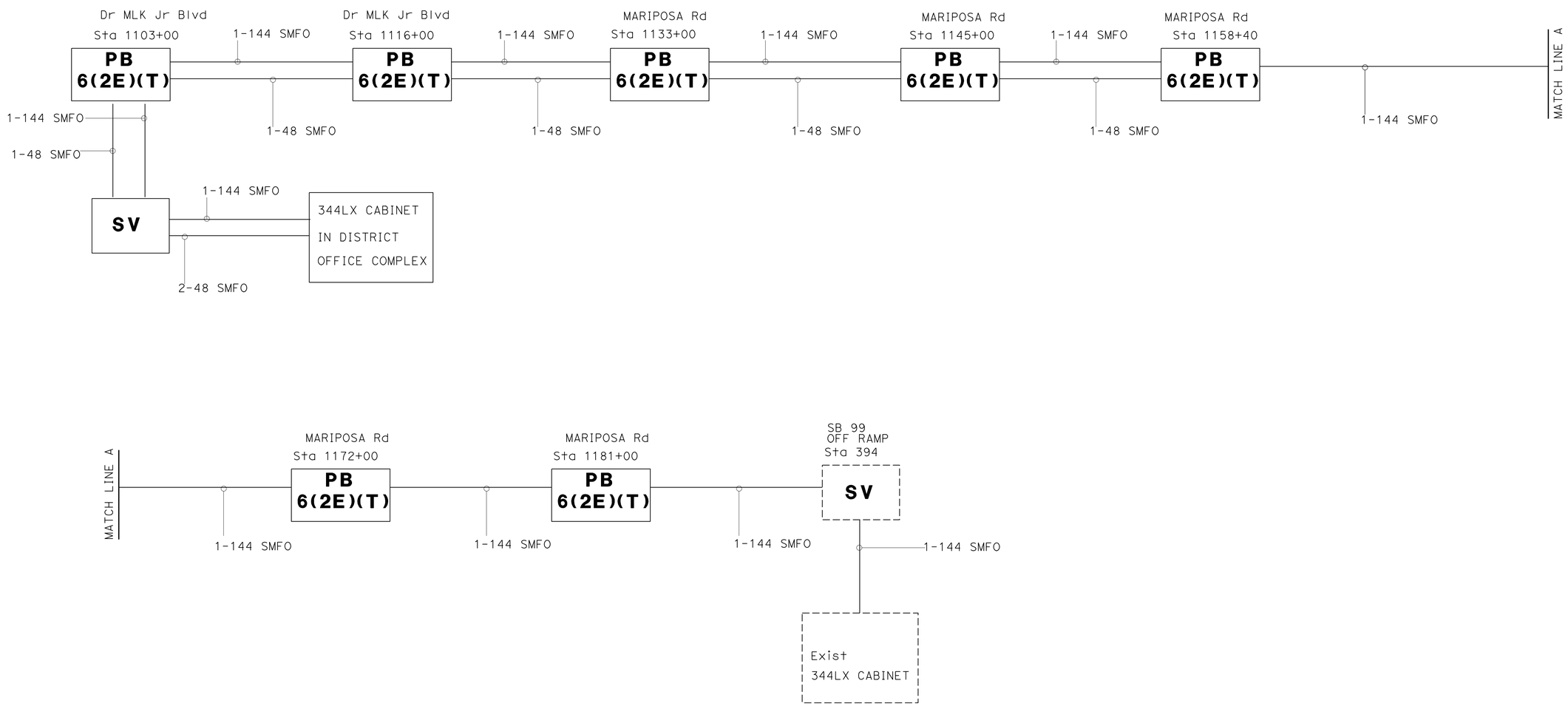

FIBER OPTIC SYSTEM

NO SCALE

E-25

STATE OF CALIFORNIA - DEPARTMENT OF TRANSPORTATION

Caltrans ELECTRICAL DESIGN

FUNCTIONAL SUPERVISOR: ALI BAKHDOUD

CALCULATED-DESIGNED BY: JASPAL SINGH

CHECKED BY: PAUL MATOS

REVISED BY: JS

DATE REVISED: 6/18/15

LAST REVISION 00-00-00

DATE PLOTTED => 04-SEP-2015

TIME PLOTTED => 14:08

Dist	COUNTY	ROUTE	POST MILES TOTAL PROJECT	SHEET No.	TOTAL SHEETS
10	SJ	4,99	16.0/19.4,18.5	64	112

REGISTERED ELECTRICAL ENGINEER 5-26-15 DATE

PLANS APPROVAL DATE 6-22-15

REGISTERED PROFESSIONAL ENGINEER JASPAL SINGH No. 16657 Exp. 6/30/16 ELECTRICAL STATE OF CALIFORNIA

THE STATE OF CALIFORNIA OR ITS OFFICERS OR AGENTS SHALL NOT BE RESPONSIBLE FOR THE ACCURACY OR COMPLETENESS OF SCANNED COPIES OF THIS PLAN SHEET.

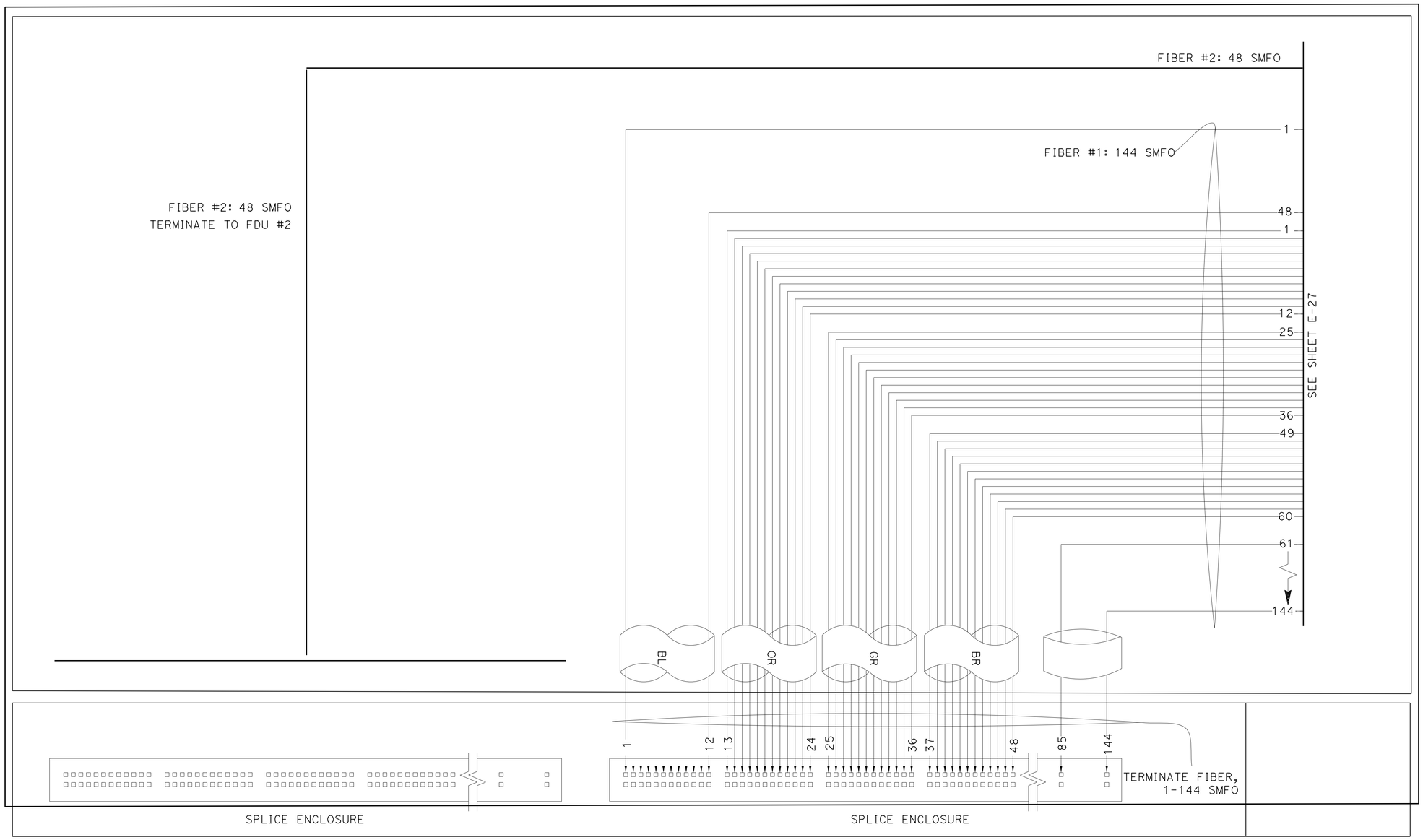

FIBER OPTIC BLOCK BREAKOUT

FIBER OPTIC SYSTEM

NO SCALE

E-26

STATE OF CALIFORNIA - DEPARTMENT OF TRANSPORTATION

Caltrans® ELECTRICAL DESIGN

FUNCTIONAL SUPERVISOR: ALI BAKHDOUD

CALCULATED-DESIGNED BY: JASPAL SINGH

CHECKED BY: PAUL MATOS

REVISED BY: JS

DATE REVISED: 6/18/15

LAST REVISION 06-06-14 | DATE PLOTTED => 04-SEP-2015 | TIME PLOTTED => 14:08

Dist	COUNTY	ROUTE	POST MILES TOTAL PROJECT	SHEET No.	TOTAL SHEETS
10	SJ	4,99	16.0/19.4,18.5	65	112

REGISTERED ELECTRICAL ENGINEER 5-26-15 DATE

PLANS APPROVAL DATE 6-22-15

REGISTERED PROFESSIONAL ENGINEER JASPAL SINGH No. 16657 Exp. 6/30/16 ELECTRICAL STATE OF CALIFORNIA

THE STATE OF CALIFORNIA OR ITS OFFICERS OR AGENTS SHALL NOT BE RESPONSIBLE FOR THE ACCURACY OR COMPLETENESS OF SCANNED COPIES OF THIS PLAN SHEET.

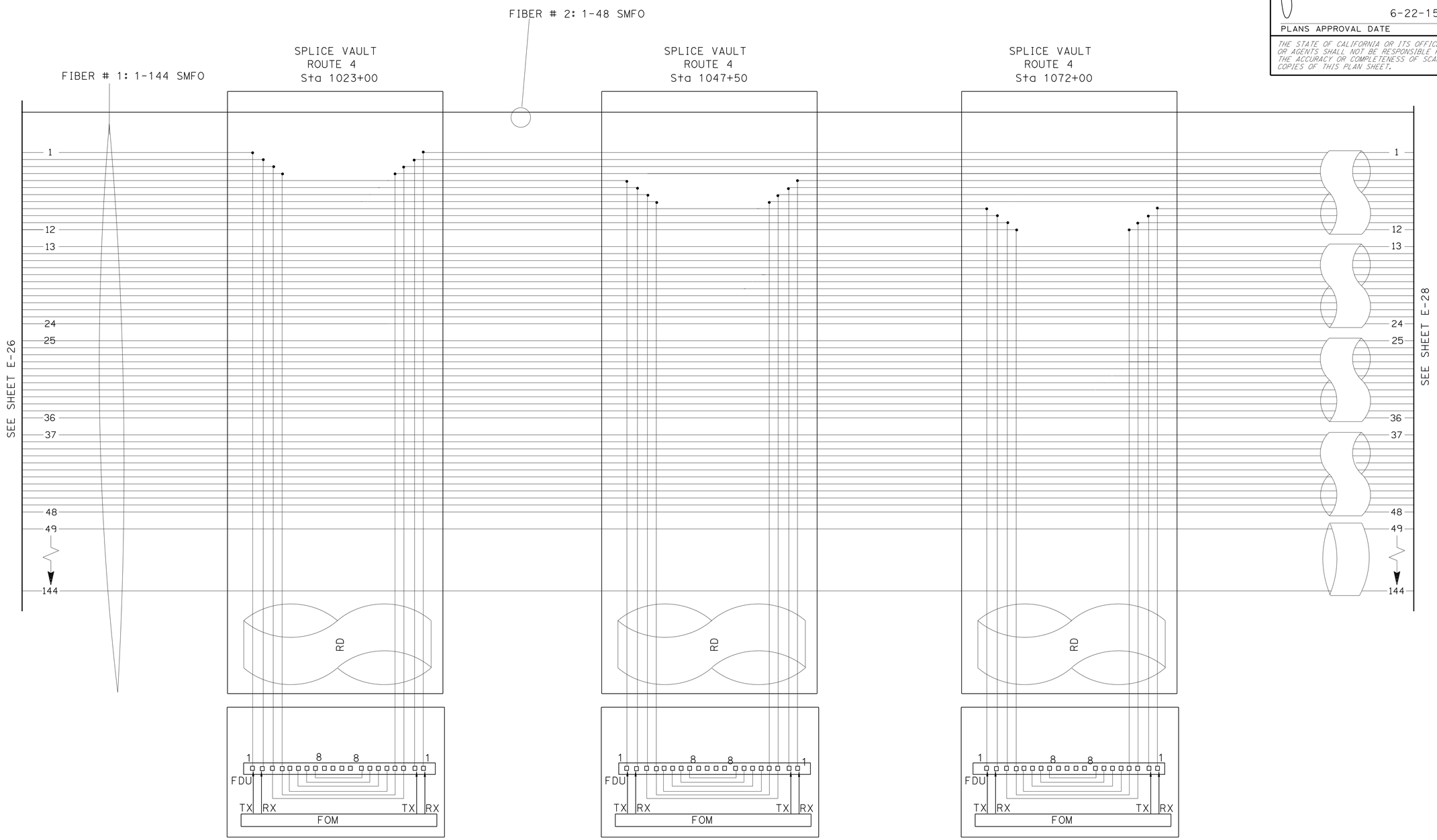

FIBER OPTIC BLOCK BREAKOUT

FIBER OPTIC SYSTEM

NO SCALE

E-27

STATE OF CALIFORNIA - DEPARTMENT OF TRANSPORTATION

Caltrans® **ELECTRICAL DESIGN**

FUNCTIONAL SUPERVISOR: ALI BAKHDOUD

CALCULATED-DESIGNED BY: JASPAL SINGH

CHECKED BY: PAUL MATOS

REVISED BY: JS

DATE REVISED: 6/18/15

LAST REVISION 06-06-14 | DATE PLOTTED => 04-SEP-2015 | TIME PLOTTED => 14:08

Dist	COUNTY	ROUTE	POST MILES TOTAL PROJECT	SHEET No.	TOTAL SHEETS
10	SJ	4,99	16.0/19.4,18.5	66	112

REGISTERED ELECTRICAL ENGINEER 5-26-15 DATE

PLANS APPROVAL DATE 6-22-15

REGISTERED PROFESSIONAL ENGINEER JASPAL SINGH No. 16657 Exp. 6/30/16 ELECTRICAL STATE OF CALIFORNIA

THE STATE OF CALIFORNIA OR ITS OFFICERS OR AGENTS SHALL NOT BE RESPONSIBLE FOR THE ACCURACY OR COMPLETENESS OF SCANNED COPIES OF THIS PLAN SHEET.

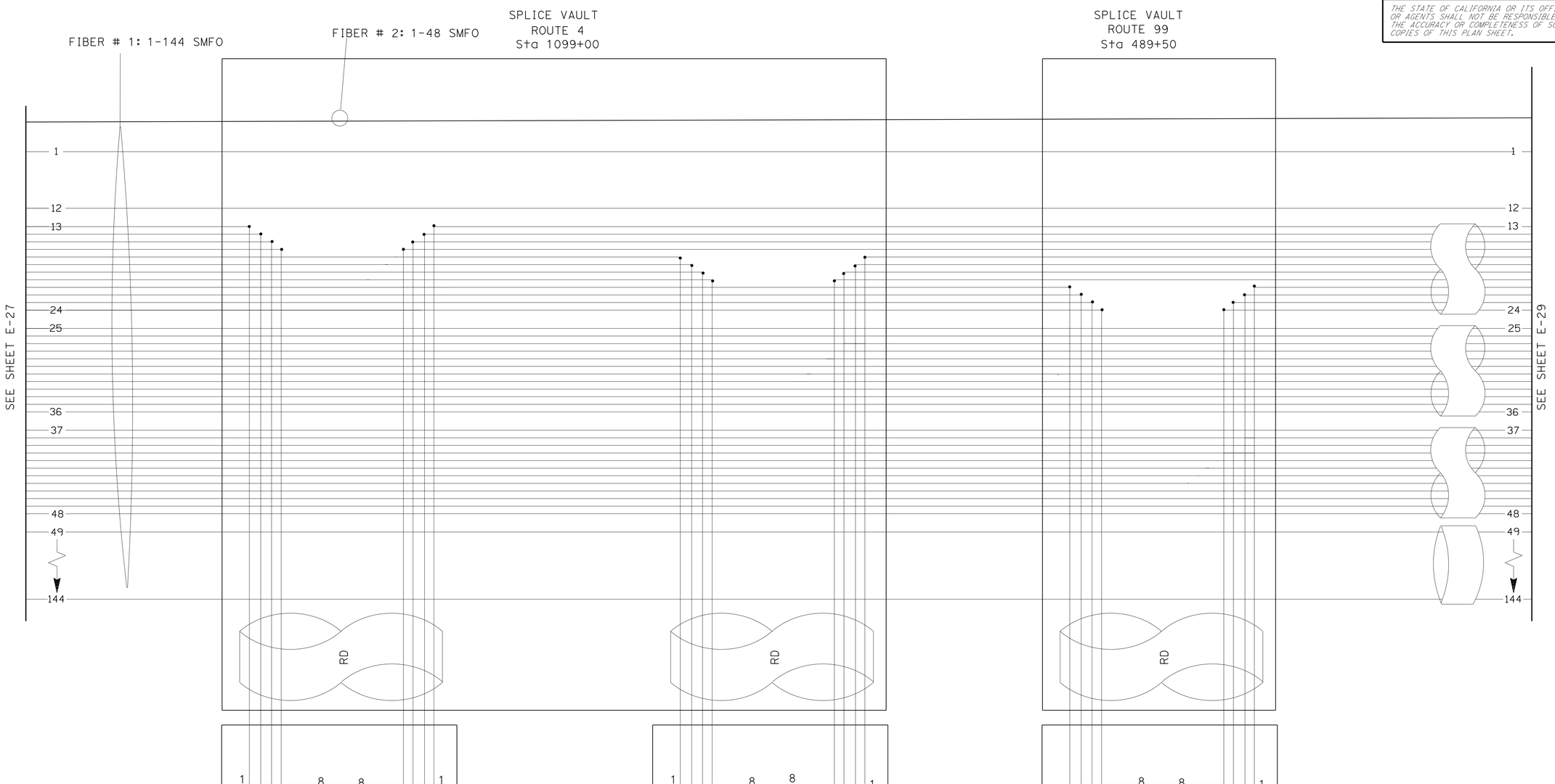

FIBER OPTIC BLOCK BREAKOUT

FIBER OPTIC SYSTEM

NO SCALE

E-28

STATE OF CALIFORNIA - DEPARTMENT OF TRANSPORTATION
Caltrans® ELECTRICAL DESIGN

FUNCTIONAL SUPERVISOR: ALI BAKHDOUD
CALCULATED-DESIGNED BY: JASPAL SINGH
CHECKED BY: PAUL MATOS
REVISED BY: JS
DATE REVISED: 6/18/15

LAST REVISION 06-06-14 | DATE PLOTTED => 04-SEP-2015 | TIME PLOTTED => 14:08

Dist	COUNTY	ROUTE	POST MILES TOTAL PROJECT	SHEET No.	TOTAL SHEETS
10	SJ	4,99	16.0/19.4,18.5	67	112

REGISTERED ELECTRICAL ENGINEER 5-26-15 DATE

PLANS APPROVAL DATE 6-22-15

REGISTERED PROFESSIONAL ENGINEER JASPAL SINGH No. 16657 Exp. 6/30/16 ELECTRICAL STATE OF CALIFORNIA

THE STATE OF CALIFORNIA OR ITS OFFICERS OR AGENTS SHALL NOT BE RESPONSIBLE FOR THE ACCURACY OR COMPLETENESS OF SCANNED COPIES OF THIS PLAN SHEET.

Exist MODIFIED 344LX CABINET
Rte 99 @ Sta 485

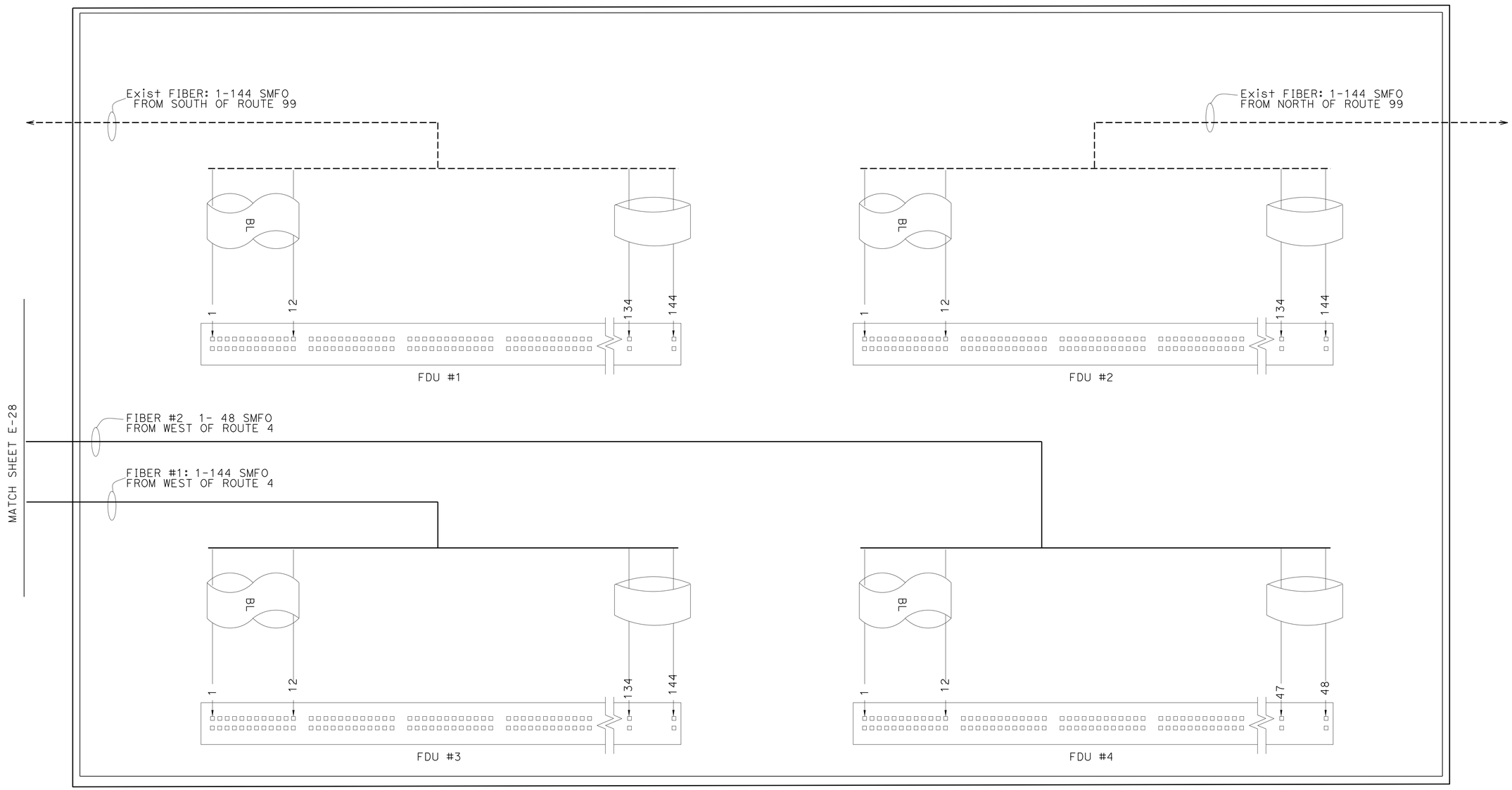

FIBER OPTIC BLOCK BREAKOUT

FIBER OPTIC SYSTEM

NO SCALE

E-29

STATE OF CALIFORNIA - DEPARTMENT OF TRANSPORTATION
Caltrans® ELECTRICAL DESIGN

FUNCTIONAL SUPERVISOR: ALI BAKHDOUD
CALCULATED-DESIGNED BY: JASPAL SINGH
CHECKED BY: PAUL MATOS
REVISED BY: JS
DATE REVISED: 6/18/15

LAST REVISION 06-06-14 | DATE PLOTTED => 04-SEP-2015 | TIME PLOTTED => 14:08

Dist	COUNTY	ROUTE	POST MILES TOTAL PROJECT	SHEET No.	TOTAL SHEETS
10	SJ	4,99	16.0/19.4,18.5	68	112

REGISTERED ELECTRICAL ENGINEER DATE 5-26-15

PLANS APPROVAL DATE 6-22-15

REGISTERED PROFESSIONAL ENGINEER JASPAL SINGH No. 16657 Exp. 6/30/16 ELECTRICAL STATE OF CALIFORNIA

THE STATE OF CALIFORNIA OR ITS OFFICERS OR AGENTS SHALL NOT BE RESPONSIBLE FOR THE ACCURACY OR COMPLETENESS OF SCANNED COPIES OF THIS PLAN SHEET.

Exist MODIFIED 344LX CABINET @ MARIPOSA/
SB 99 OFF RAMP, Sta 394

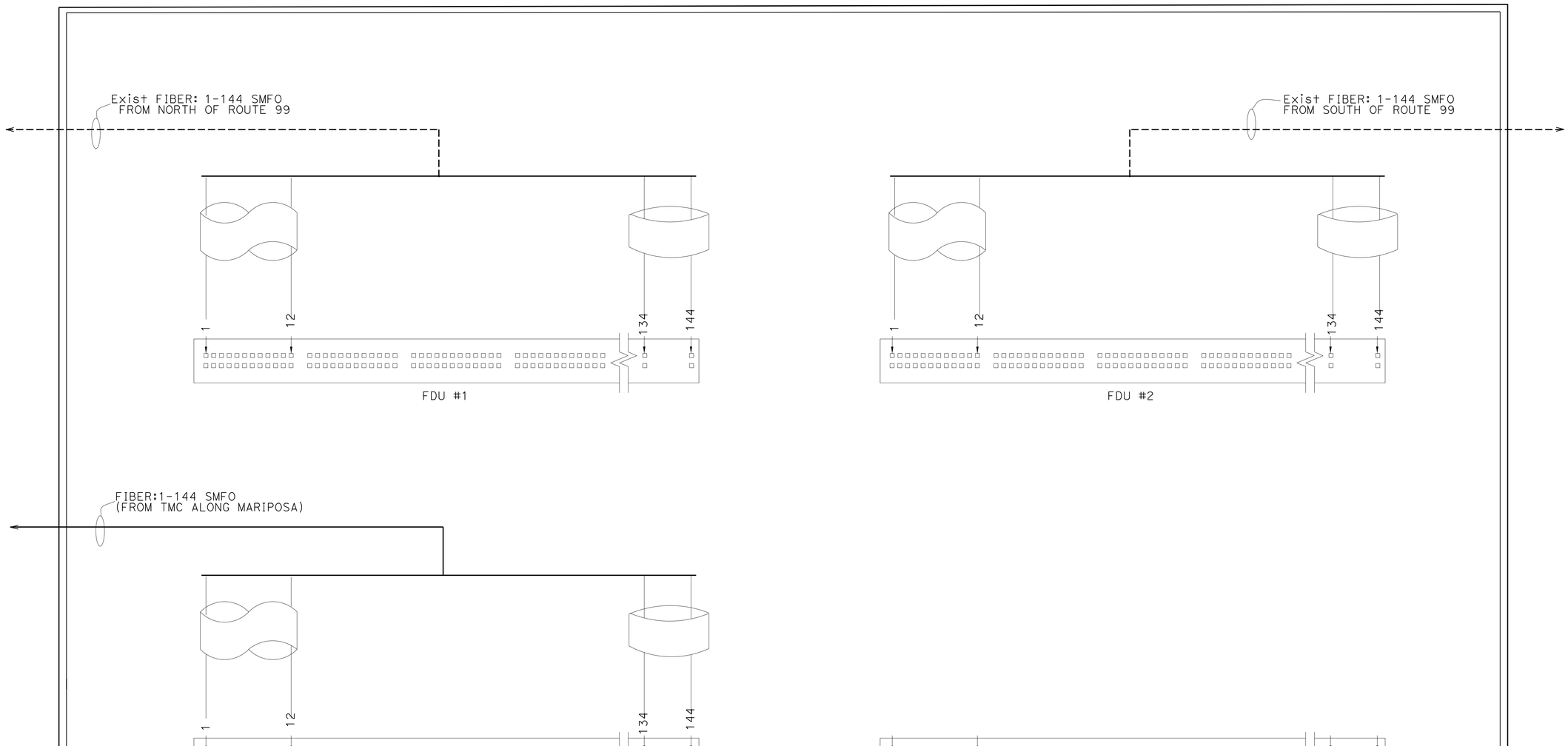

FIBER OPTIC BLOCK BREAKOUT

FIBER OPTIC SYSTEM

NO SCALE

E-30

STATE OF CALIFORNIA - DEPARTMENT OF TRANSPORTATION
Caltrans® **ELECTRICAL DESIGN**

FUNCTIONAL SUPERVISOR: ALI BAKHDOUD
CALCULATED-DESIGNED BY: JASPAL SINGH
CHECKED BY: PAUL MATOS
REVISED BY: JS
DATE REVISED: 6/18/15

LAST REVISION DATE PLOTTED => 04-SEP-2015
06-06-14 TIME PLOTTED => 14:08

Dist	COUNTY	ROUTE	POST MILES TOTAL PROJECT	SHEET No.	TOTAL SHEETS
10	SJ	4,99	16.0/19.4,18.5	69	112

REGISTERED ELECTRICAL ENGINEER DATE 5-26-15

PLANS APPROVAL DATE 6-22-15

REGISTERED PROFESSIONAL ENGINEER JASPAL SINGH No. 16657 Exp. 6/30/16 ELECTRICAL STATE OF CALIFORNIA

THE STATE OF CALIFORNIA OR ITS OFFICERS OR AGENTS SHALL NOT BE RESPONSIBLE FOR THE ACCURACY OR COMPLETENESS OF SCANNED COPIES OF THIS PLAN SHEET.

LEGEND:

1. GALVANIZED CAST-IN ANGLE FRAME.
2. TWO PIECE TRAFFIC RATED TORSION ASSISTED COVER, WITH PICK SLOTS AND BOLT DOWN HOLES. GALVANIZED AFTER FABRICATION.
3. 12" DIAMETER DRAIN HOLE. LOCATE AT CENTER.
4. 7/8" DIAMETER PULL IRONS (4 EA) Typ.
5. 16" x 4" KNOCK-OUTS (8 EA) Typ.

NOTES:

1. VAULT DESIGNED IN ACCORDANCE WITH AASHTO H-20-44 TRAFFIC BRIDGE LOADING USING 25.9 MPa COMPRESSIVE STRENGTH CONCRETE AND 413.7 MPa YIELD STRENGTH ASTM A-706 STEEL REINFORCEMENT PER CALCULATIONS.
2. VAULT MUST BE PLACED ON A 12" BASE OF CRUSHED ROCK
3. EACH VAULT MUST COME PROVIDED WITH TWO SETS BOLT/LID REMOVERS
4. ALL MOUNTING HARDWARE MUST BE GALVANIZED OR STAINLESS STEEL.

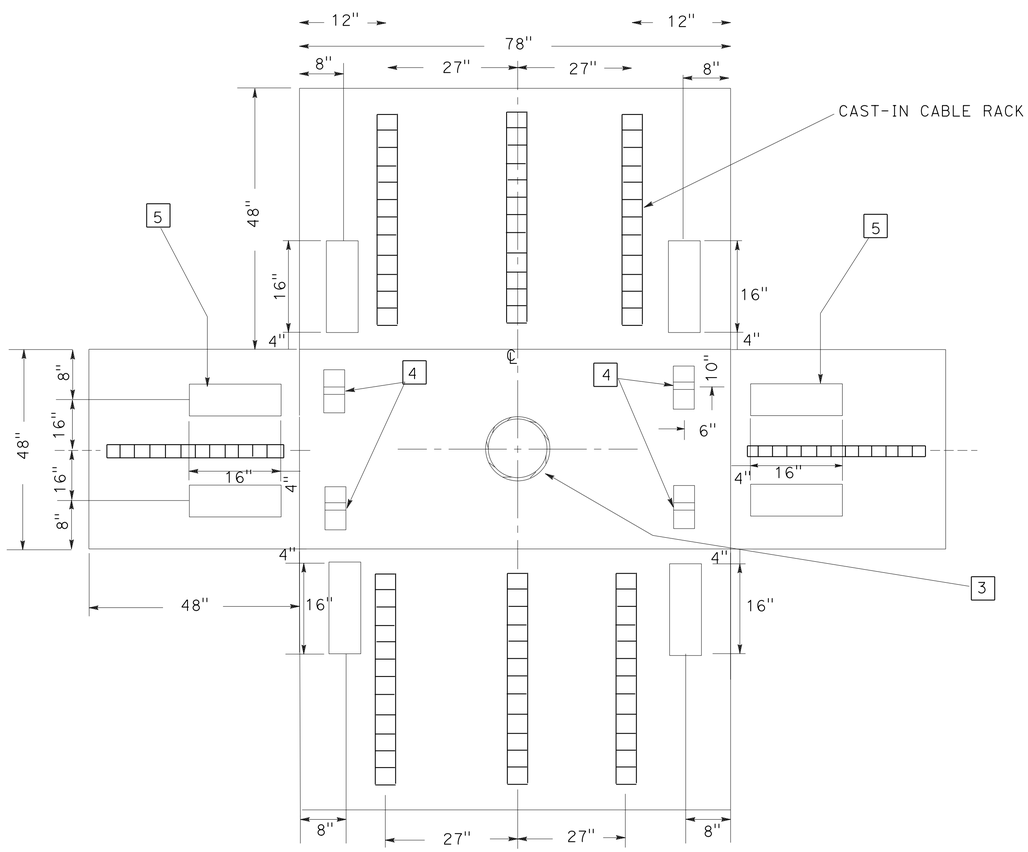

PLAN

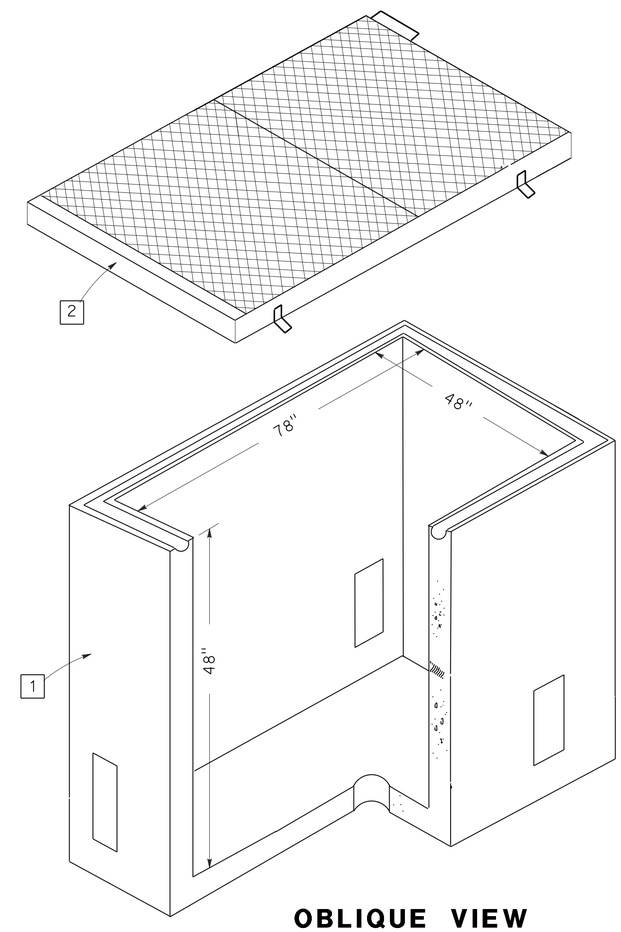

OBLIQUE VIEW

FIBER OPTIC SYSTEM

NO SCALE

E-31

STATE OF CALIFORNIA - DEPARTMENT OF TRANSPORTATION
Caltrans® **ELECTRICAL DESIGN**

FUNCTIONAL SUPERVISOR: ALI BAKHDOUD
CALCULATED-DESIGNED BY: JASPAL SINGH
CHECKED BY: PAUL MATOS
REVISED BY: JS
DATE REVISED: 6/18/15

LAST REVISION 06-06-14
DATE PLOTTED => 04-SEP-2015
TIME PLOTTED => 14:08

Dist	COUNTY	ROUTE	POST MILES TOTAL PROJECT	SHEET No.	TOTAL SHEETS
10	SJ	4,99	16.0/19.4,18.5	70	112

REGISTERED ELECTRICAL ENGINEER 5-26-15 DATE

PLANS APPROVAL DATE 6-22-15

REGISTERED PROFESSIONAL ENGINEER JASPAL SINGH No. 16657 Exp. 6/30/16 ELECTRICAL STATE OF CALIFORNIA

THE STATE OF CALIFORNIA OR ITS OFFICERS OR AGENTS SHALL NOT BE RESPONSIBLE FOR THE ACCURACY OR COMPLETENESS OF SCANNED COPIES OF THIS PLAN SHEET.

NOTES: (FOR THIS SHEET ONLY)

FIBER OPTIC CONDUIT INSTALLED WITHIN 3′ OF GUARDRAIL MUST BE 55" MINIMUM DEPTH TO TOP OF CONDUIT.

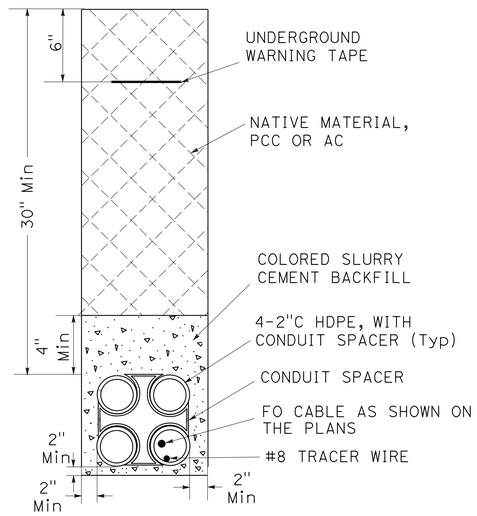

TRENCH IN DIRT/PAVEMENT DETAIL
4-2"C HDPE CONDUIT
DETAIL A

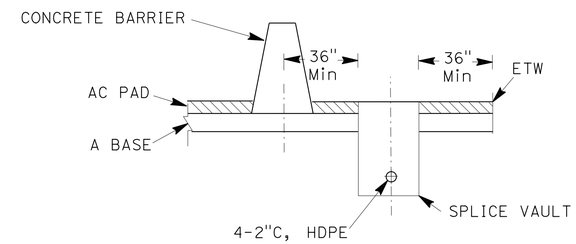

DETAIL B

TYPICAL FIBER OPTIC CONDUIT
PLACEMENT DETAIL UNDER THE MEDIAN

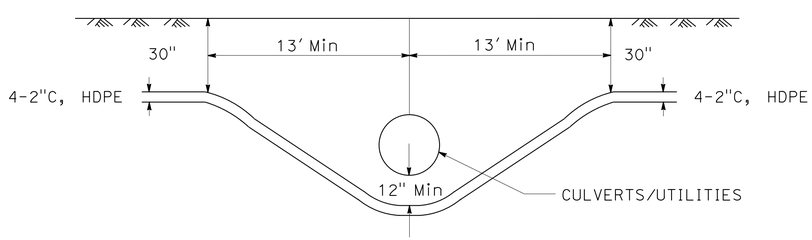

FIBER OPTIC CONDUIT PLACEMENT
UNDER UTILITIES
DETAIL C

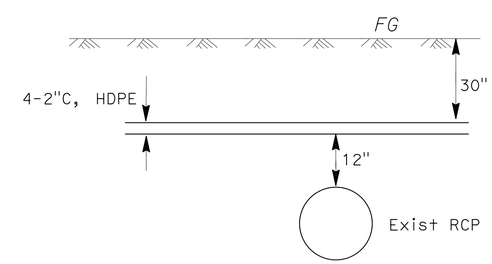

DETAIL D

CONDUIT PLACEMENT ABOVE RCP PIPES

FIBER OPTIC SYSTEM

NO SCALE

E-32

STATE OF CALIFORNIA - DEPARTMENT OF TRANSPORTATION
Caltrans® **ELECTRICAL DESIGN**

FUNCTIONAL SUPERVISOR: ALI BAKHDOUD
CALCULATED-DESIGNED BY: JASPAL SINGH
CHECKED BY: PAUL MATOS
REVISED BY: JS
DATE REVISED: 6/18/15

LAST REVISION 00-00-00 | DATE PLOTTED => 04-SEP-2015 | TIME PLOTTED => 14:08

Dist	COUNTY	ROUTE	POST MILES TOTAL PROJECT	SHEET No.	TOTAL SHEETS
10	SJ	4,99	16.0/19.4,18.5	71	112

REGISTERED ELECTRICAL ENGINEER 5-26-15 DATE

PLANS APPROVAL DATE 6-22-15

REGISTERED PROFESSIONAL ENGINEER JASPAL SINGH No. 16657 Exp. 6/30/16 ELECTRICAL STATE OF CALIFORNIA

THE STATE OF CALIFORNIA OR ITS OFFICERS OR AGENTS SHALL NOT BE RESPONSIBLE FOR THE ACCURACY OR COMPLETENESS OF SCANNED COPIES OF THIS PLAN SHEET.

NOTES:

1. DIMENSIONS ARE NOMINAL.
2. FOUNDATION SHALL BE LOCATED TO PROVIDE 2'-0" MINIMUM CLEARANCE BETWEEN FACE OF CURB AND ANY PORTION OF CABINET.
3. TYPE LX CABINETS SHALL BE INSTALLED WITH THE BACK TOWARD THE NEAREST LANE OF TRAFFIC.
4. THE CONTROLLER CABINET GROUND BUS SHALL BE BONDED TO THE CONTROLLER EQUIPMENT ENCLOSURE.
5. CONDUIT AREA, TO 120 V SERVICE
6. CONDUIT AREA FOR THE CONTROLLER SIDE OF CABINET.
7. IN SIDEWALKS AND OTHER PAVED AREAS, TOP OF FOUNDATION FOR TYPE LX CABINETS SHALL BE 3 ½" ABOVE SURROUNDING GRADE.
8. FOR MODEL 342LX, 344LX AND 346LX CABINETS DETAILS, SEE "TRANSPORTATION ELECTRICAL EQUIPMENT SPECIFICATIONS".
9. ANCHOR BOLTS FOR TYPE LX CABINETS SHALL BE ¾" ø X 1'-6" WITH A 2" - 90° BEND.
10. AN APPROVED MASTIC OR CAULKING COMPOUND SHALL BE PLACED ON THE FOUNDATION PRIOR TO PLACING THE CABINET TO SEAL OPENINGS BETWEEN BOTTOM OF CABINET AND FOUNDATION.
11. CONTROLLER UNITS, PLUG-MOUNTED EQUIPMENT, SHELF-MOUNTED EQUIPMENT AND WALL-MOUNTED EQUIPMENT SHALL BE LOCATED TO PERMIT SAFE AND EASY REMOVAL OR REPLACEMENT WITHOUT REMOVING ANY OTHER PIECE OF EQUIPMENT.
12. WHERE TELEPHONE INTERCONNECT IS REQUIRED, A MINIMUM OF 5" CLEAR VERTICAL SPACE SHALL BE PROVIDED INSIDE THE CABINET FOR THE EQUIPMENT.
13. TELEPHONE INTERCONNECT CONDUCTORS SHALL BE ENCLOSED IN A ¾"C OR LARGER CONDUIT THROUGH THE FOUNDATION. TYPE 4 CONDUIT SHALL BE USED TO SEPARATE TELEPHONE AND POWER CONDUCTORS IN CABINETS.
14. GROUNDING ELECTRODE SHALL BE PLACED IN FRONT OF THE SERVICE CONDUIT AREA.

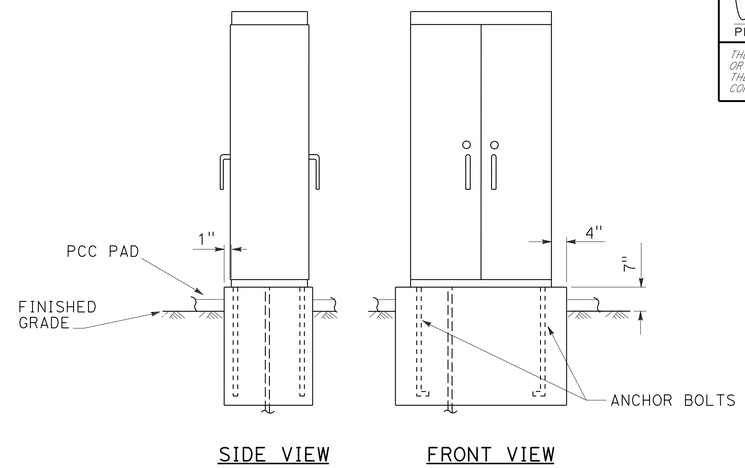

CABINET TYPE	FOUNDATION		
	"W"	"H"	"D"
LX	4'-4½"	1'-6"	2'-4"

FOUNDATION FOR TYPE LX CABINET

DETAIL A

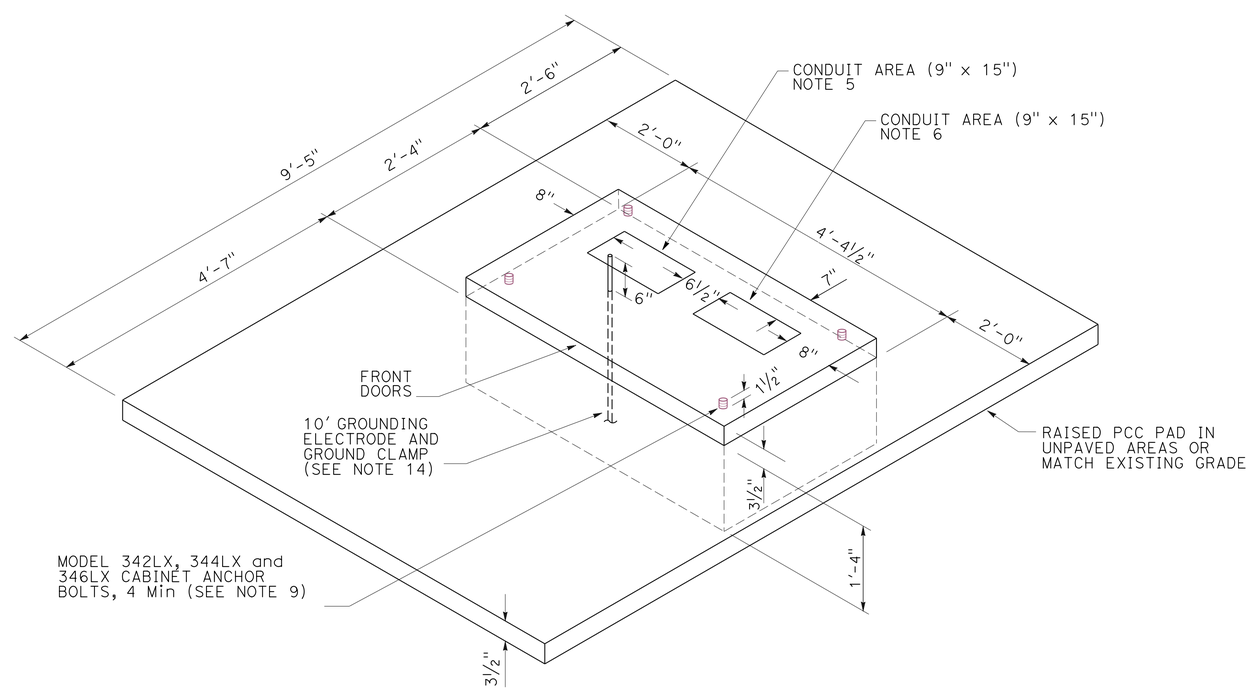

FOUNDATION DETAIL

DETAIL B

FIBER OPTIC SYSTEM

NO SCALE

E-33

STATE OF CALIFORNIA - DEPARTMENT OF TRANSPORTATION
Caltrans ELECTRICAL DESIGN

FUNCTIONAL SUPERVISOR: ALI BAKHDOUD
CALCULATED-DESIGNED BY: JASPAL SINGH
CHECKED BY: PAUL MATOS
REVISED BY: JS
DATE REVISED: 6/18/15

LAST REVISION 00-00-00 | DATE PLOTTED => 04-SEP-2015 | TIME PLOTTED => 14:08

Dist	COUNTY	ROUTE	POST MILES TOTAL PROJECT	SHEET No.	TOTAL SHEETS
10	SJ	4,99	16.0/19.4,18.5	72	112

REGISTERED ELECTRICAL ENGINEER DATE 5-26-15

PLANS APPROVAL DATE 6-22-15

REGISTERED PROFESSIONAL ENGINEER JASPAL SINGH No. 16657 Exp. 6/30/16 ELECTRICAL STATE OF CALIFORNIA

THE STATE OF CALIFORNIA OR ITS OFFICERS OR AGENTS SHALL NOT BE RESPONSIBLE FOR THE ACCURACY OR COMPLETENESS OF SCANNED COPIES OF THIS PLAN SHEET.

NOTE:

THE QUANTITIES SHOWN IN THIS TABLE ARE NOT SEPARATE PAY ITEMS, FOR INFORMATION ONLY.

FOR COMPLETE ELECTRICAL WORK, SEE ELECTRICAL PLANS.

TRAFFIC OPERATION SYSTEM

SHEET No.	2"C TYPE 1	2"C TYPE 3	3"C TYPE 1	3"C TYPE 3	No. 2 CONDUCTOR	No. 3 CONDUCTOR	No. 6 CONDUCTOR	No. 8(G) CONDUCTOR	DLC	HYBRID CABLE	No. 5 (T) PB	No. 6 (T) PB	No. 6 (E)(T) PB	PG&E PB
	LF										EA			
E-3	60	150	90	300	270	510	500	150		100	6	1	1	-
E-6	15	300	10	400	50	1250	1000	200	2700	450	5	1	1	1

TRAFFIC OPERATION SYSTEM

SHEET No.	TYPE III-AF SERVICE EQUIPMENT ENCLOSURE	TYPE III-AF SERVICE EQUIPMENT ENCLOSURE FOUNDATION	TYPE III-CF SERVICE EQUIPMENT ENCLOSURE	LOOP DETECTORS	TYPE III-CF SERVICE EQUIPMENT ENCLOSURE FOUNDATION	MODEL 334L CABINET	MODEL 334L CABINET FOUNDATION	CCTV 35 POLE	CCTV 35 POLE FOUNDATION	CAMERA ASSEMBLY	CAMERA CONTROL UNIT	VIDEO ENCODER	WOOD POLE
	EA												
E-3	1	1	1		1		1		1	1	1	1	
E-6	2	2		6		1	2	1	1	1	1	1	1

TRAFFIC MONITORING STATION

SHEET No.	2"C TYPE 1	1½"C TYPE 3	2"C TYPE 3	3"C TYPE 1	3"C TYPE 3	No. 8 CONDUCTOR	No. 8(G) CONDUCTOR	DLC	LOOP DETECTOR	No. 5 (T) PB	No. 6 (E)(T) PB	MODEL 334L CABINET	MODEL 334L CABINET FOUNDATION
	LF								EA				
E-4	-	230	980	20	80	500	230	6500	12	8	1	1	1
E-5	-	-	1000	20	100	300	150	6900	12	8	1	1	1

CLOSED CIRCUIT TELEVISION SYSTEM

SHEET No.	2"C TYPE 1	No. 8 CONDUCTOR	No. 8(G) CONDUCTOR	HYBRID CABLE	No. 5 (T) PB	No. 6 (E)(T) PB	CAMERA ASSEMBLY	VIDEO ENCODER	CAMERA CONTROL UNIT	CCTV 15 POLE	MODEL 334L CABINET	MODEL 334L CABINET FOUNDATION
	LF				EA							
E-7	360	2900	750	1	1	1	1	1	1	1	1	1

ELECTRICAL QUANTITIES

E-34

JS	6/18/15
REVISED BY	DATE REVISED
JASPAL SINGH	JORGE RAMIREZ
CALCULATED-DESIGNED BY	CHECKED BY
FUNCTIONAL SUPERVISOR	ALI BAKHDOUD

STATE OF CALIFORNIA - DEPARTMENT OF TRANSPORTATION

Caltrans ELECTRICAL DESIGN

LAST REVISION 00-00-00 | DATE PLOTTED => 04-SEP-2015 | TIME PLOTTED => 14:08

Dist	COUNTY	ROUTE	POST MILES TOTAL PROJECT	SHEET No.	TOTAL SHEETS
10	SJ	4,99	16.0/19.4,18.5	73	112

REGISTERED ELECTRICAL ENGINEER 5-26-15 DATE

PLANS APPROVAL DATE 6-22-15

REGISTERED PROFESSIONAL ENGINEER JASPAL SINGH No. 16657 Ex. 6/30/16 ELECTRICAL STATE OF CALIFORNIA

THE STATE OF CALIFORNIA OR ITS OFFICERS OR AGENTS SHALL NOT BE RESPONSIBLE FOR THE ACCURACY OR COMPLETENESS OF SCANNED COPIES OF THIS PLAN SHEET.

NOTE:

THE QUANTITIES SHOWN IN THIS TABLE ARE NOT SEPARATE PAY ITEMS, FOR INFORMATION ONLY.

FOR COMPLETE ELECTRICAL WORK, SEE ELECTRICAL PLANS.

FIBER OPTIC SYSTEM

SHEET No.	2"C HDPE	3"C TYPE 1	2"C TYPE 3	144 SMFO	48 SMFO	12 SMFO	SPLICE VAULT	No. 6(2E)(T) PB	MODEL 344LX CABINET FOUNDATION
	LF						EA		
E-8	2100	850	-	1100	1100	-	1	2	-
E-9	3580	850	150	1300	1300	-	1	1	-
E-10	4800	-	100	1240	1240	200	1	-	-
E-11	5630	-	-	1500	1500	-	-	-	-
E-12	5560	-	150	1500	1500	200	1	-	-
E-13	5600	-	150	1500	1500	200	1	-	-
E-14	5520	-	50	1500	1500	1200	1	1	-
E-15	5500	-	-	1400	1200	-	-	1	-
E-16	3670	-	-	1200	1200	-	1	2	1

ELECTRICAL QUANTITIES

E-35

JS	6/18/15
REVISED BY	DATE REVISED
JASPAL SINGH	JORGE RAMIREZ
CALCULATED-DESIGNED BY	CHECKED BY
FUNCTIONAL SUPERVISOR	ALI BAKHDOUD

STATE OF CALIFORNIA - DEPARTMENT OF TRANSPORTATION

Caltrans® ELECTRICAL DESIGN

LAST REVISION 00-00-00 DATE PLOTTED => 04-SEP-2015 TIME PLOTTED => 14:08

Dist	COUNTY	ROUTE	POST MILES TOTAL PROJECT	SHEET No.	TOTAL SHEETS
10	SJ	4,99	16.0/19.4,18.5	74	112

REGISTERED ELECTRICAL ENGINEER DATE 5-26-15

PLANS APPROVAL DATE 6-22-15

REGISTERED PROFESSIONAL ENGINEER JASPAL SINGH No. 16657 Exp. 6/30/16 ELECTRICAL STATE OF CALIFORNIA

THE STATE OF CALIFORNIA OR ITS OFFICERS OR AGENTS SHALL NOT BE RESPONSIBLE FOR THE ACCURACY OR COMPLETENESS OF SCANNED COPIES OF THIS PLAN SHEET.

NOTE:

THE QUANTITIES SHOWN IN THIS TABLE ARE NOT SEPARATE PAY ITEMS, FOR INFORMATION ONLY.

FOR COMPLETE ELECTRICAL WORK, SEE ELECTRICAL PLANS.

FIBER OPTIC SYSTEM

SHEET No.	2"C HDPE	3"C TYPE 1	2"C TYPE 3	144 SMFO	48 SMFO	12 SMFO	SPLICE VAULT	No. 6(2E)(T) PB	MODEL 344LX CABINET FOUNDATION
	LF						EA		
E-17	2360	-	-	1100	1100	-	1	1	-
E-18	4600	-	-	1200	1200	-	1	1	-
E-19	5680	-	-	1500	1500	-	-	1	-
E-20	5160	-	-	1340	1340	-	-	1	-
E-21	5600	-	-	1500	1500	-	1	1	-
E-22	5400	-	-	1400	1400	-	-	1	-
E-23	6240	-	-	1650	1650	-	1	1	-

ELECTRICAL QUANTITIES

E-36

STATE OF CALIFORNIA - DEPARTMENT OF TRANSPORTATION

Caltrans® ELECTRICAL DESIGN

FUNCTIONAL SUPERVISOR: ALI BAKHDOUD

CALCULATED-DESIGNED BY: JASPAL SINGH

CHECKED BY: JORGE RAMIREZ

REVISED BY: JS

DATE REVISED: 6/18/15

LAST REVISION: 00-00-00

DATE PLOTTED => 04-SEP-2015

TIME PLOTTED => 14:08

M

Maint	MAINTENANCE
Max	MAXIMUM
MB	METAL BEAM
MBB	METAL BEAM BARRIER
MBGR	METAL BEAM GUARD RAILING
Med	MEDIAN
MGS	MIDWEST GUARDRAIL SYSTEM
MH	MANHOLE
Min	MINIMUM
Misc	MISCELLANEOUS
Misc I & S	MISCELLANEOUS IRON AND STEEL
Mkr	MARKER
Mod	MODIFIED,
	MODIFY
Mon	MONUMENT
MP	METAL PLATE
MPGR	METAL PLATE GUARD RAILING
MR	MOVEMENT RATING
MSE	MECHANICALLY STABILIZED EMBANKMENT
Mt	MOUNTAIN, MOUNT
Mtl	MATERIAL
MVP	MAINTENANCE VEHICLE PULLOUT

N

N	NORTH
NB	NORTHBOUND
No.	NUMBER (MUST HAVE PERIOD)
Nos.	NUMBERS (MUST HAVE PERIOD)
NPS	NOMINAL PIPE SIZE
NS	NEAR SIDE
NSP	NEW STANDARD PLAN
NTS	NOT TO SCALE

O

Oblr	OBLITERATE
OC	OVERCROSSING
OD	OUTSIDE DIAMETER
OF	OUTSIDE FACE
OG	ORIGINAL GROUND
OGAC	OPEN GRADED ASPHALT CONCRETE
OGFC	OPEN GRADED FRICTION COURSE
OH	OVERHEAD
OHWM	ORDINARY HIGH WATER MARK
O-O	OUT TO OUT
Opp	OPPOSITE
OSD	OVERSIDE DRAIN

P

P	PAGE
PAP	PERFORATED ALUMINUM PIPE
PB	PULL BOX
PC	POINT OF CURVATURE,
	PRECAST
PCC	POINT OF COMPOUND CURVE,
	PORTLAND CEMENT CONCRETE
PCMS	PORTABLE CHANGEABLE MESSAGE SIGN
PCP	PERFORATED CONCRETE PIPE,
	PRESTRESSED CONCRETE PIPE
PCVC	POINT OF COMPOUND VERTICAL CURVE
PEC	PERMIT TO ENTER AND CONSTRUCT
Ped	PEDESTRIAN
Ped OC	PEDESTRIAN OVERCROSSING
Ped UC	PEDESTRIAN UNDERCROSSING
Perm Mtl	PERMEABLE MATERIAL

P continued

PG	PROFILE GRADE
PI	POINT OF INTERSECTION
PJP	PARTIAL JOINT PENETRATION
Pkwy	PARKWAY
ℙ,PL	PLATE
P/L	PROPERTY LINE
PM	POST MILE,
	TIME FROM NOON TO MIDNIGHT
PN	PAVING NOTCH
POC	POINT OF HORIZONTAL CURVE
POT	POINT OF TANGENT
POVC	POINT OF VERTICAL CURVE
PP	PIPE PILE,
	PLASTIC PIPE,
	POWER POLE
PPL	PREFORMED PERMEABLE LINER
PPP	PERFORATED PLASTIC PIPE
PRC	POINT OF REVERSE CURVE
PRF	PAVEMENT REINFORCING FABRIC
PRVC	POINT OF REVERSE VERTICAL CURVE
PS&E	PLANS, SPECIFICATIONS AND ESTIMATES
PS, P/S	PRESTRESSED
PSP	PERFORATED STEEL PIPE
PT	POINT OF TANGENCY
PVC	POLYVINYL CHLORIDE
Pvmt	PAVEMENT

Q

Qty	QUANTITY

R

R	RADIUS
R & D	REMOVE AND DISPOSE
R & S	REMOVE AND SALVAGE
R/C	RATE OF CHANGE
RCA	REINFORCED CONCRETE ARCH
RCB	REINFORCED CONCRETE BOX
RCP	REINFORCED CONCRETE PIPE
RCPA	REINFORCED CONCRETE PIPE ARCH
Rd	ROAD
Reinf	REINFORCED,
	REINFORCEMENT,
	REINFORCING
Rel	RELOCATE
Repl	REPLACEMENT
Ret	RETAINING
Rev	REVISED, REVISION
Rdwy	ROADWAY
RHMA	RUBBERIZED HOT MIX ASPHALT
Riv	RIVER
RM	ROAD-MIXED
RP	RADIUS POINT,
	REFERENCE POINT
RR	RAILROAD
RSP	ROCK SLOPE PROTECTION,
	REVISED STANDARD PLAN
Rt	RIGHT
Rte	ROUTE
RW	REDWOOD,
	RETAINING WALL
R/W	RIGHT OF WAY
Rwy	RAILWAY

S

S	SOUTH,
	SUPPLEMENT
SAE	STRUCTURE APPROACH EMBANKMENT
Salv	SALVAGE
SAPP	STRUCTURAL ALUMINUM PLATE PIPE
SB	SOUTHBOUND
SC	SAND CUSHION
SCSP	SLOTTED CORRUGATED STEEL PIPE
SD	STORM DRAIN
Sec	SECOND,
	SECTION
Sep	SEPARATION
SG	SUBGRADE
Shld	SHOULDER
Sht	SHEET
Sim	SIMILAR
₤	STATION LINE
SM	SELECTED MATERIAL
Spec	SPECIAL,
	SPECIFICATIONS
SPP	SLOTTED PLASTIC PIPE
SS	SLOPE STAKE
SSBM	STRAP AND SADDLE BRACKET METHOD
SSD	STRUCTURAL SECTION DRAIN
SSPA	STRUCTURAL STEEL PLATE ARCH
SSPP	STRUCTURAL STEEL PLATE PIPE
SSPPA	STRUCTURAL STEEL PLATE PIPE ARCH
SSRP	STEEL SPIRAL RIB PIPE
St	STREET
Sta	STATION
STBB	SINGLE THRIE BEAM BARRIER
Std	STANDARD
Str	STRUCTURE
Surf	SURFACING
SW	SIDEWALK,
	SOUND WALL
Swr	SEWER
Sym	SYMMETRICAL
S4S	SURFACE 4 SIDES

T

T	SEMI-TANGENT
Tan	TANGENT
TBB	THRIE BEAM BARRIER
Tbr	TIMBER
TC	TOP OF CURB
TCB	TRAFFIC CONTROL BOX
TCE	TEMPORARY CONSTRUCTION EASEMENT
Tel	TELEPHONE
Temp	TEMPORARY
TG	TOP OF GRADE
Tot	TOTAL
TP	TELEPHONE POLE
TPB	TREATED PERMEABLE BASE
TPM	TREATED PERMEABLE MATERIAL
Trans	TRANSITION

T continued

TS	TRANSVERSE,
	TRAFFIC SIGNAL,
	TUBULAR STEEL
Typ	TYPICAL

U

UC	UNDERCROSSING
UD	UNDERDRAIN
UG	UNDERGROUND
UON	UNLESS OTHERWISE NOTED
UP	UNDERPASS

V

V	VALVE,
	DESIGN SPEED
Var	VARIABLE,
	VARIES
VC	VERTICAL CURVE
VCP	VITRIFIED CLAY PIPE
Vert	VERTICAL
Via	VIADUCT
Vol	VOLUME

W

W	WEST,
	WIDTH
WB	WESTBOUND
WH	WEEP HOLE
WM	WIRE MESH
WS	WATER SURFACE
WSP	WELDED STEEL PIPE
Wt	WEIGHT
WV	WATER VALVE
WW	WINGWALL
WWLOL	WINGWALL LAYOUT LINE

X

X Sec	CROSS SECTION
Xing	CROSSING

Y

Yr	YEAR
Yrs	YEARS

Dist	COUNTY	ROUTE	POST MILES TOTAL PROJECT	SHEET No.	TOTAL SHEETS
10	SJ	4,99	16.0/19.4, 18.5	75	112

Grace M. Tsushima
REGISTERED CIVIL ENGINEER

July 19, 2013
PLANS APPROVAL DATE

REGISTERED PROFESSIONAL ENGINEER
Grace M. Tsushima
No. C49814
Exp. 9-30-14
CIVIL
STATE OF CALIFORNIA

THE STATE OF CALIFORNIA OR ITS OFFICERS OR AGENTS SHALL NOT BE RESPONSIBLE FOR THE ACCURACY OR COMPLETENESS OF SCANNED COPIES OF THIS PLAN SHEET.

TO ACCOMPANY PLANS DATED 6-22-15

UNIT OF MEASUREMENT SYMBOLS:

Some of the symbols used in the project plan quantity tables and in the Bid Item List are:

TABLE A

SYMBOL USED	DEFINITIONS
ACRE	ACRE
CF	CUBIC FOOT
CY	CUBIC YARD
EA	EACH
GAL	GALLON
LB	POUND
LF	LINEAR FOOT
SQFT	SQUARE FOOT
SQYD	SQUARE YARD
STA	100 FEET
TAB	TABLET
TON	2,000 POUNDS

Some of the symbols used in the plans other than in the project plan quantity tables are:

TABLE B

SYMBOL USED	DEFINITIONS
ksi	KIPS PER SQUARE INCH
ksf	KIPS PER SQUARE FOOT
psi	POUNDS PER SQUARE INCH
psf	POUNDS PER SQUARE FOOT
lb/ft^3, pcf	POUNDS PER CUBIC FOOT
tsf	TONS PER SQUARE FOOT
mph, MPH *	MILES PER HOUR
ø	NOMINAL DIAMETER
oz	OUNCE
lb	POUND
kip	1,000 POUNDS
cal	CALORIE
ft	FOOT OR FEET
gal	GALLON

* For use on a sign panel only

STATE OF CALIFORNIA
DEPARTMENT OF TRANSPORTATION

ABBREVIATIONS (SHEET 2 OF 2)

NO SCALE

RSP A10B DATED JULY 19, 2013 SUPERSEDES STANDARD PLAN A10B DATED MAY 20, 2011 - PAGE 2 OF THE STANDARD PLANS BOOK DATED 2010.

REVISED STANDARD PLAN RSP A10B

2010 REVISED STANDARD PLAN RSP A10B

6-7-13

Dist	COUNTY	ROUTE	POST MILES TOTAL PROJECT	SHEET No.	TOTAL SHEETS
10	SJ	4,99	16.0/19.4, 18.5	76	112

REGISTERED CIVIL ENGINEER

July 19, 2013
PLANS APPROVAL DATE

REGISTERED PROFESSIONAL ENGINEER Roberta L. McLaughlin No. C40375 Exp. 3-31-15 CIVIL STATE OF CALIFORNIA

THE STATE OF CALIFORNIA OR ITS OFFICERS OR AGENTS SHALL NOT BE RESPONSIBLE FOR THE ACCURACY OR COMPLETENESS OF SCANNED COPIES OF THIS PLAN SHEET.

TO ACCOMPANY PLANS DATED 6-22-15

EXIT RAMP NEUTRAL AREA (GORE) TREATMENT

DETAIL 36

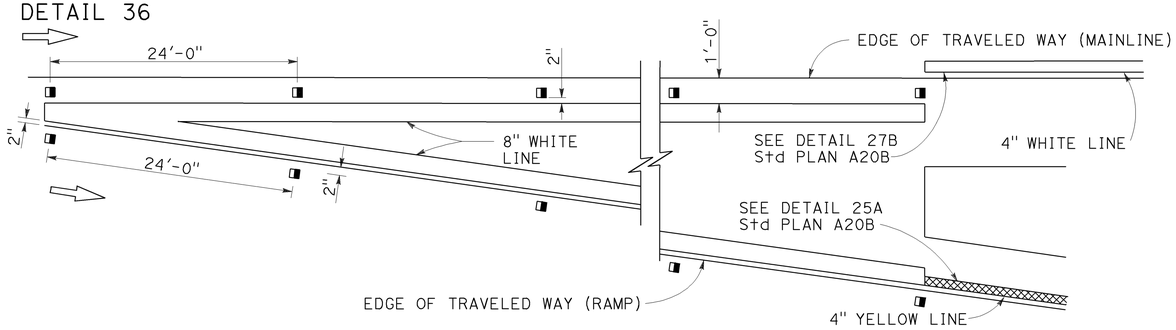

ENTRANCE RAMP NEUTRAL AREA (MERGE) TREATMENT

DETAIL 36A

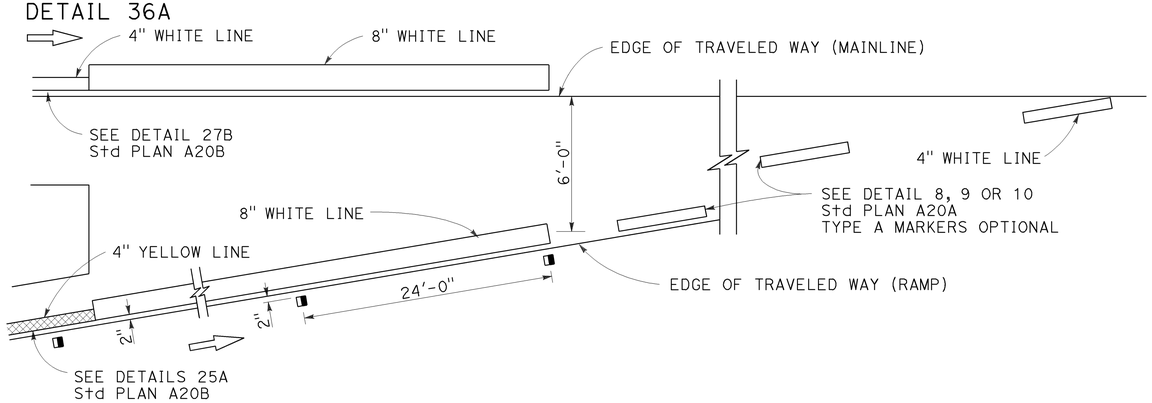

ENTRANCE RAMP NEUTRAL AREA (ACCELERATION LANE) TREATMENT

DETAIL 36B

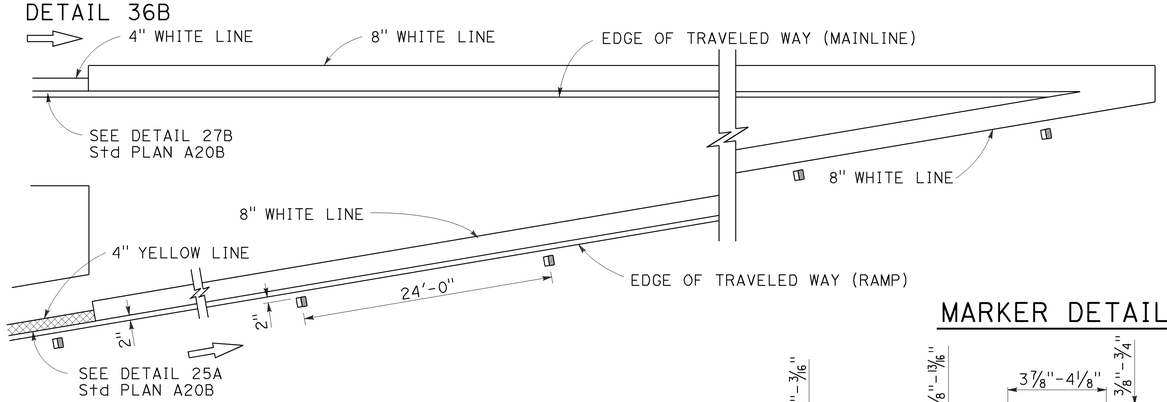

LANE DROP AT EXIT RAMPS

DETAIL 37

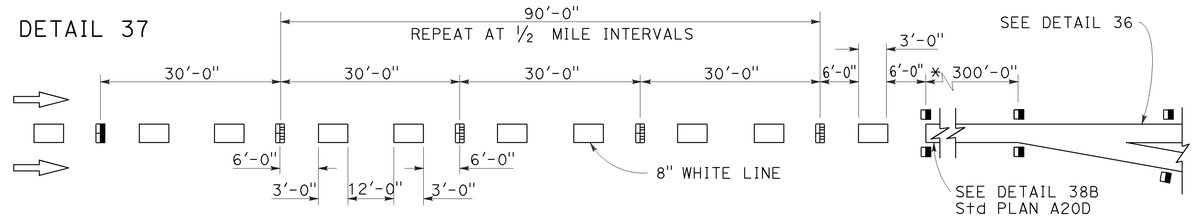

DETAIL 37A

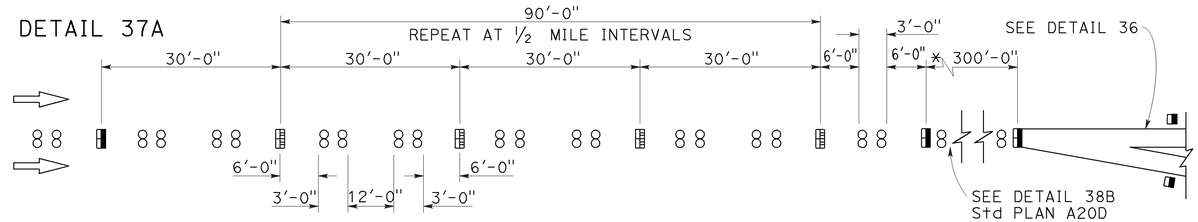

* The solid channelizing line shown may be omitted on short auxiliary lanes where weaving length is critical.

LANE DROP AT INTERSECTIONS

DETAIL 37B

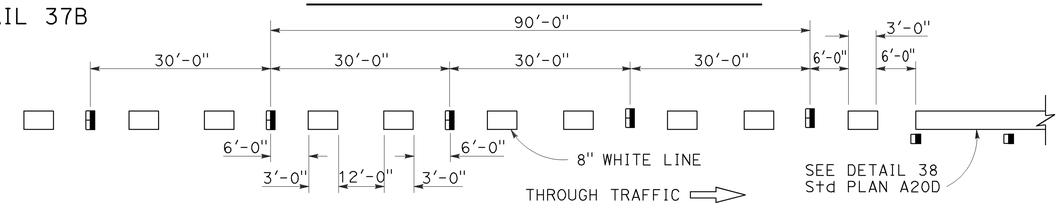

DETAIL 37C

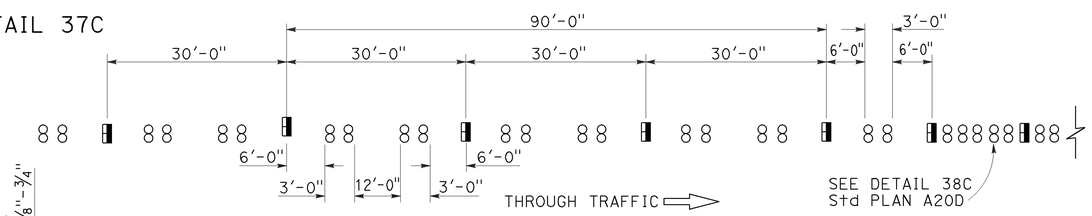

MARKER DETAILS

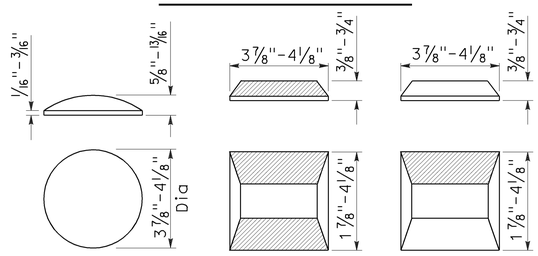

RETROREFLECTIVE FACE

LEGEND:

MARKERS

- TYPE A WHITE NON-REFLECTIVE
- TYPE C RED-CLEAR RETROREFLECTIVE
- TYPE G ONE-WAY CLEAR RETROREFLECTIVE

STATE OF CALIFORNIA
DEPARTMENT OF TRANSPORTATION

PAVEMENT MARKERS AND TRAFFIC LINE TYPICAL DETAILS

NO SCALE

RSP A20C DATED JULY 19, 2013 SUPERSEDES STANDARD PLAN A20C DATED MAY 20, 2011 - PAGE 11 OF THE STANDARD PLANS BOOK DATED 2010.

REVISED STANDARD PLAN RSP A20C

2010 REVISED STANDARD PLAN RSP A20C

4-29-13

Dist	COUNTY	ROUTE	POST MILES TOTAL PROJECT	SHEET No.	TOTAL SHEETS
10	SJ	4,99	16.0/19.4, 18.5	77	112

Randell D. Hiatt
REGISTERED CIVIL ENGINEER

July 19, 2013
PLANS APPROVAL DATE

REGISTERED PROFESSIONAL ENGINEER
Randell D. Hiatt
No. C50200
Exp. 6-30-15
CIVIL
STATE OF CALIFORNIA

THE STATE OF CALIFORNIA OR ITS OFFICERS OR AGENTS SHALL NOT BE RESPONSIBLE FOR THE ACCURACY OR COMPLETENESS OF SCANNED COPIES OF THIS PLAN SHEET.

TO ACCOMPANY PLANS DATED 6-22-15

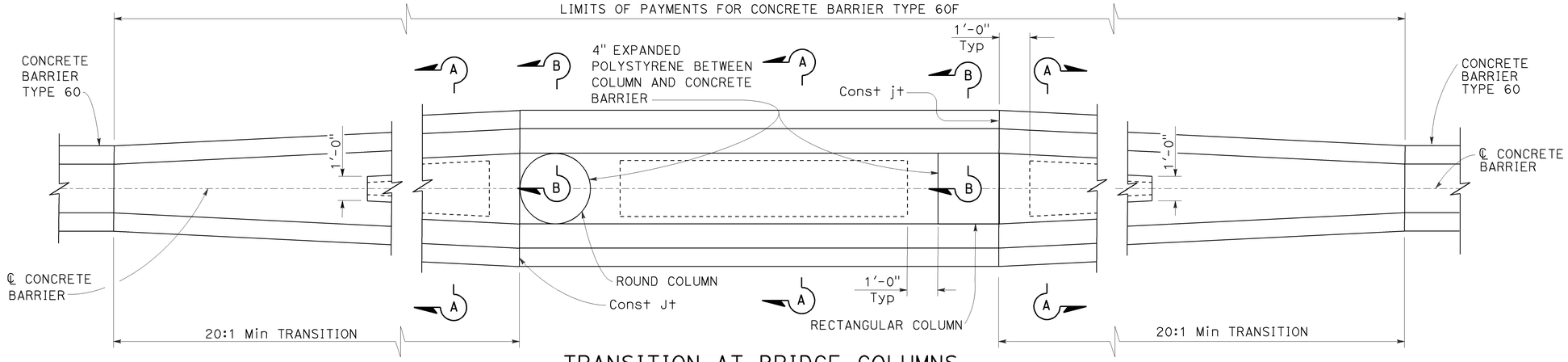

TRANSITION AT BRIDGE COLUMNS

Concrete Barrier Type 60F
See Note 7

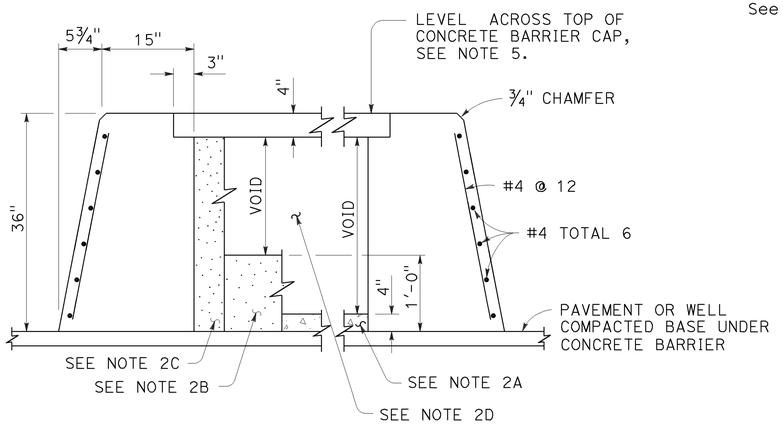

SECTION A-A

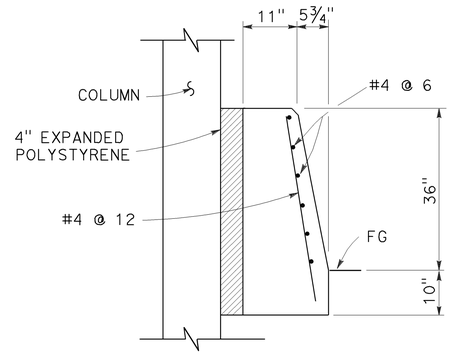

SECTION B-B

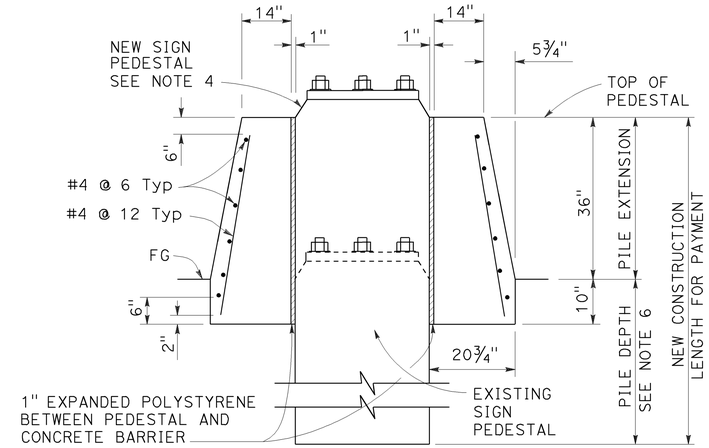

SECTION C-C

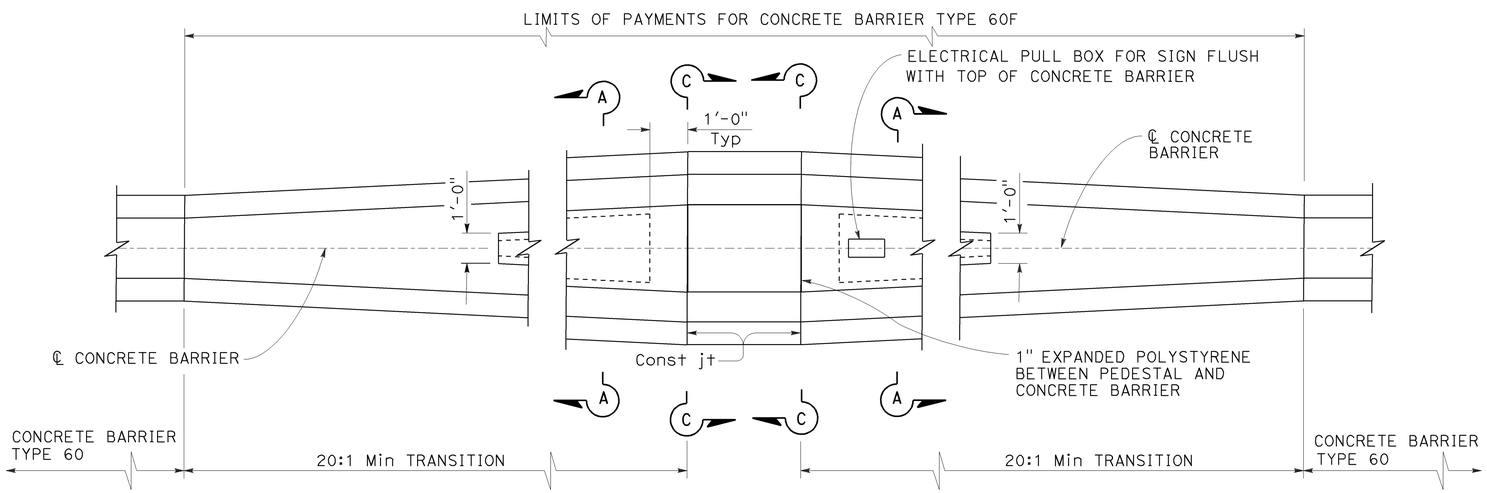

TRANSITION AT SIGN PEDESTAL

Concrete Barrier Type 60F
See Note 7

NOTES:

1. See Standard Plan A76A for Concrete Barrier Type 60.
2. Contractor options for fill between concrete barrier walls:
   A. Place 4" PCC at base between concrete barrier walls.
   B. Place 1'-0" of granular material at base between walls.
   C. Place granular material from base to bottom of 4" cap.
   D. Monolithic concrete with foam blockouts is not permitted.
3. Reinforcing steel shall extend continuous through construction joints.
4. See "Overhead Sign" plans for sign pedestal elevations on new construction.
5. Adjust height of concrete barrier wall on low side of offset or superelevated roadways to provide level grade across top of concrete barrier cap.
6. See Overhead Signs Standard Plan Pile Foundation Tables.
7. All locations with limited shoulder width available for barrier, see Standard Plan A76F for use of Concrette Barrier Type 60GE.

STATE OF CALIFORNIA
DEPARTMENT OF TRANSPORTATION

CONCRETE BARRIER TYPE 60F

NO SCALE

RSP A76C DATED JULY 19, 2013 SUPERSEDES STANDARD PLAN A76C DATED MAY 20, 2011 - PAGE 36 OF THE STANDARD PLANS BOOK DATED 2010.

REVISED STANDARD PLAN RSP A76C

2010 REVISED STANDARD PLAN RSP A76C

7-3-13

Dist	COUNTY	ROUTE	POST MILES TOTAL PROJECT	SHEET No.	TOTAL SHEETS
10	SJ	4,99	16.0/19.4, 18.5	78	112

Randell D. Hiatt
REGISTERED CIVIL ENGINEER

July 19, 2013
PLANS APPROVAL DATE

REGISTERED PROFESSIONAL ENGINEER
Randell D. Hiatt
No. C50200
Exp. 6-30-15
CIVIL
STATE OF CALIFORNIA

THE STATE OF CALIFORNIA OR ITS OFFICERS OR AGENTS SHALL NOT BE RESPONSIBLE FOR THE ACCURACY OR COMPLETENESS OF SCANNED COPIES OF THIS PLAN SHEET.

TO ACCOMPANY PLANS DATED 6-22-15

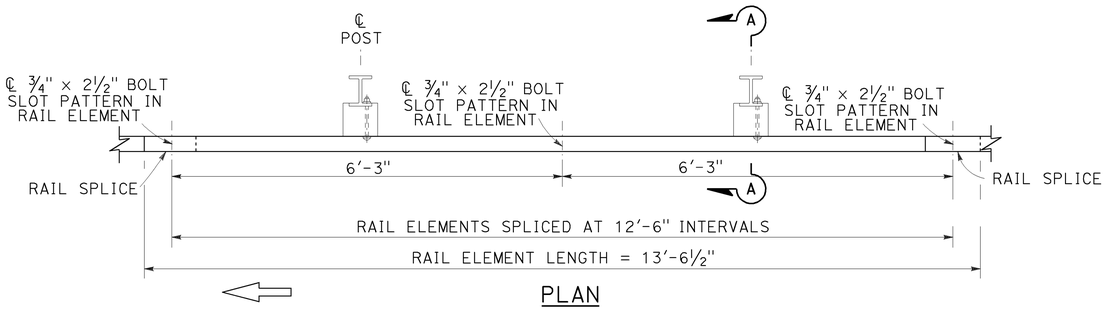

PLAN

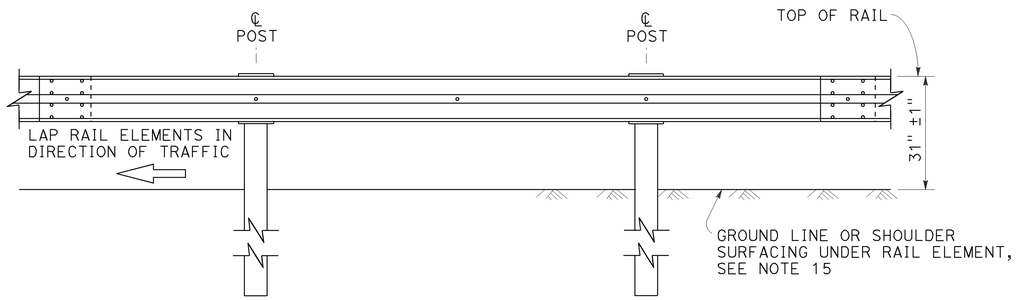

ELEVATION

MIDWEST GUARDRAIL SYSTEM WITH STEEL POSTS AND NOTCHED WOOD OR NOTCHED RECYCLED PLASTIC BLOCKS

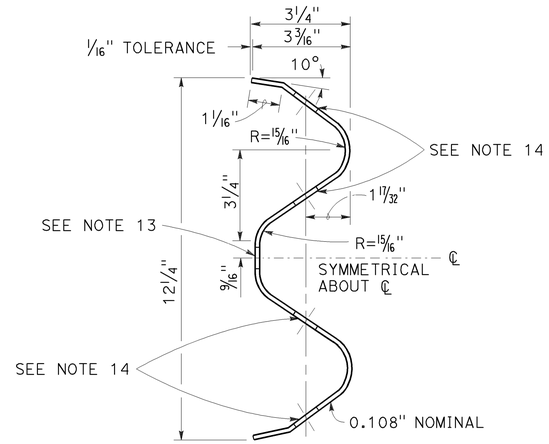

SECTION THRU RAIL ELEMENT

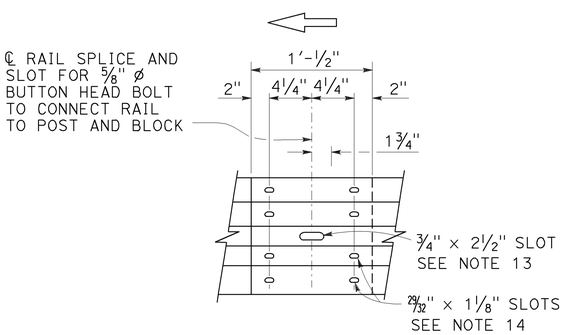

ELEVATION

RAIL ELEMENT SPLICE DETAIL

a) Connect the over lapped end of the rail elements with ⅝" ø × 1⅜" button head oval shoulder splice bolts inserted into the 29⁄32" × 1⅛" slots and bolted together with ⅝" ø recessed hex nuts. Recess of hex nut points toward rail element. A total of 8 bolts and nuts are to be used at each rail splice connection.

b) The ends of the rail elements are to be overlapped in the direction of traffic (see details).

c) Where end cap is to be attached to the end of a rail element, a total of 4 of the above described splice bolts and nuts are to be used.

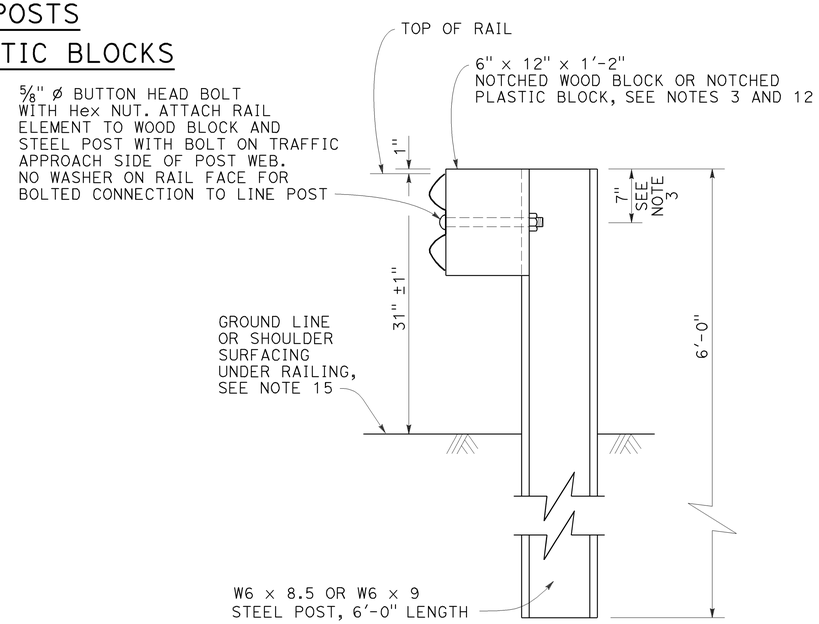

SECTION A-A

TYPICAL STEEL LINE POST INSTALLATION

See Note 4

NOTES:

1. For details of wood post installations, see Revised Standard Plan RSP A77L1.
2. For details of standard hardware used to construct MGS, see Revised Standard Plan RSP A77M1.
3. For details of steel posts and notched wood blocks used to construct MGS, see Revised Standard Plan RSP A77N2.
4. For additional installation details, see Revised Standard Plan RSP A77N3.
5. MGS post spacing to be 6'-3" center to center, except as otherwise noted.
6. For MGS typical layouts, see the A77P, A77Q and A77R Series of Standard Plans.
7. If railing is connected to terminal system end treatment, use 31" height terminal system end treatment.
8. For MGS end anchor details, see Revised Standard Plans RSP A77S1 and RSP A77T2.
9. For details of MGS transition to bridge railing, see Revised Standard Plan RSP A77U4.
10. For additional details of MGS connection to bridge railings, see Revised Standard Plans RSP A77U1, RSP A77U2 and RSP A77V1.
11. For dike positioning and MGS delineation details, see Revised Standard Plan RSP A77N4.
12. Notched face of block faces steel post.
13. Slotted hole for bolted connection of rail element to block and post. See "Section Thru Rail Element".
14. Slotted holes for splice bolts to overlap ends of rail element. See "Section Thru Rail Element".
15. Install posts in soil.

STATE OF CALIFORNIA
DEPARTMENT OF TRANSPORTATION

MIDWEST GUARDRAIL SYSTEM STANDARD RAILING SECTION (STEEL POST WITH NOTCHED WOOD OR NOTCHED RECYCLED PLASTIC BLOCK)

NO SCALE

RSP A77L2 DATED JULY 19, 2013 SUPPLEMENTS THE STANDARD PLANS BOOK DATED 2010.

REVISED STANDARD PLAN RSP A77L2

2010 REVISED STANDARD PLAN RSP A77L2

7-3-13

Dist	COUNTY	ROUTE	POST MILES TOTAL PROJECT	SHEET No.	TOTAL SHEETS
10	SJ	4,99	16.0/19.4, 18.5	79	112

Randell D. Hiatt
REGISTERED CIVIL ENGINEER

July 19, 2013
PLANS APPROVAL DATE

REGISTERED PROFESSIONAL ENGINEER
Randell D. Hiatt
No. C50200
Exp. 6-30-15
CIVIL
STATE OF CALIFORNIA

THE STATE OF CALIFORNIA OR ITS OFFICERS OR AGENTS SHALL NOT BE RESPONSIBLE FOR THE ACCURACY OR COMPLETENESS OF SCANNED COPIES OF THIS PLAN SHEET.

TO ACCOMPANY PLANS DATED 6-22-15

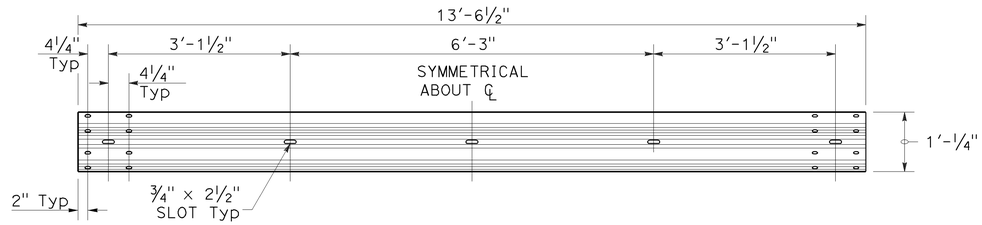

TYPICAL RAIL ELEMENT

NOTE:

1. Slotted holes for splice bolts to overlap ends of rail element.

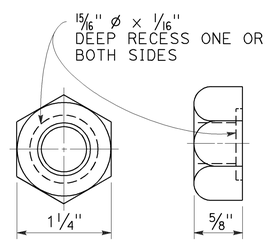

⅝" ø RECESS NUT

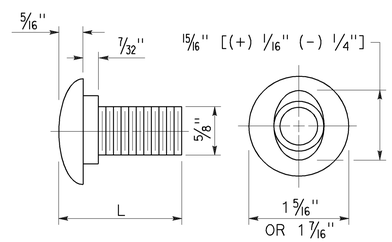

⅝" ø BUTTON HEAD BOLT

BUTTON HEAD BOLT

L	THREAD LENGTH
1⅜"	FULL THREAD LENGTH
2"	FULL THREAD LENGTH
10"	4" Min THREAD LENGTH
18"	4" Min THREAD LENGTH
20"	4" Min THREAD LENGTH
22"	4" Min THREAD LENGTH
26"	4" Min THREAD LENGTH
36"	4" Min THREAD LENGTH
** 2¾"	2" Min THREAD LENGTH
** 19"	4" Min THREAD LENGTH

** For nested rail applications.

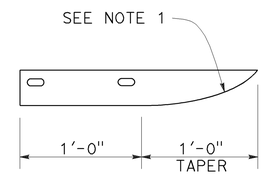

PLAN

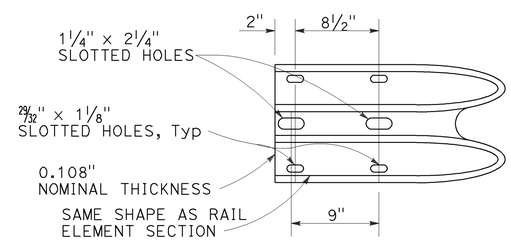

ELEVATION

END CAP
(TYPE A)

STATE OF CALIFORNIA
DEPARTMENT OF TRANSPORTATION

MIDWEST GUARDRAIL SYSTEM STANDARD HARDWARE

NO SCALE

RSP A77M1 DATED JULY 19, 2013 SUPPLEMENTS THE STANDARD PLANS BOOK DATED 2010.

REVISED STANDARD PLAN RSP A77M1

2010 REVISED STANDARD PLAN RSP A77M1

7-3-13

Dist	COUNTY	ROUTE	POST MILES TOTAL PROJECT	SHEET No.	TOTAL SHEETS
10	SJ	4,99	16.0/19.4, 18.5	80	112

Randell D. Hiatt
REGISTERED CIVIL ENGINEER

November 15, 2013
PLANS APPROVAL DATE

REGISTERED PROFESSIONAL ENGINEER
Randell D. Hiatt
No. C50200
Exp. 6-30-15
CIVIL
STATE OF CALIFORNIA

THE STATE OF CALIFORNIA OR ITS OFFICERS OR AGENTS SHALL NOT BE RESPONSIBLE FOR THE ACCURACY OR COMPLETENESS OF SCANNED COPIES OF THIS PLAN SHEET.

TO ACCOMPANY PLANS DATED 6-22-15

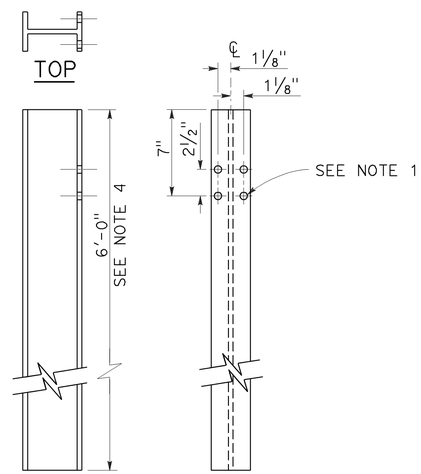

W6 x 9 OR W6 x 8.5
STEEL POST
See Note 4

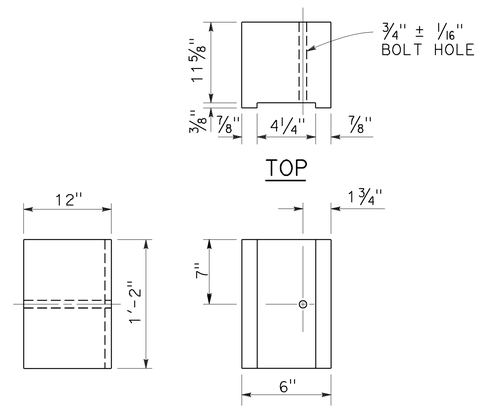

6" x 12"
NOTCHED WOOD BLOCK
See Notes 2 and 3

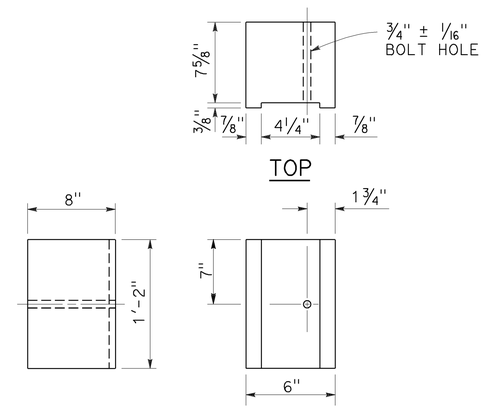

6" x 8"
NOTCHED WOOD BLOCK
Only for use with metal beam guard railing. See Note 5

NOTES:

1. All holes in steel post shall be 13/16" Dia maximum.
2. Dimensions shown for wood block are nominal.
3. Notched face of block faces steel post.
4. 6'-0" length posts to be used for typical roadway installation. See Revised Standard Plan RSP A77N3.
5. See Revised Standard Plan RSP A77L3 for use of 6" x 8" and 8" x 8" notched wood blocks.
6. This post and 8" x 12" block combination to be used for line post sections of MGS on narrow roadways and where strengthened line post sections of MGS are warranted to shield fixed objects.

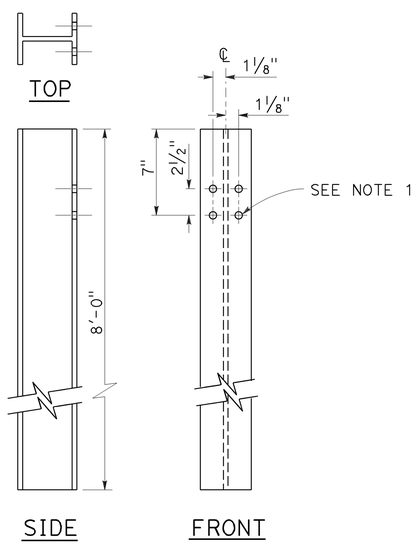

W6 x 15
STEEL POST
See Note 6

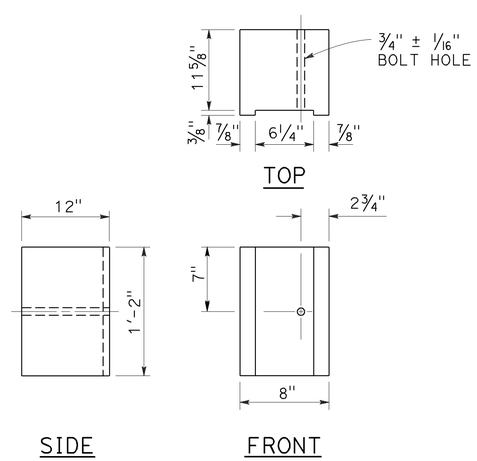

8" x 12"
NOTCHED WOOD BLOCK
See Notes 2 and 3

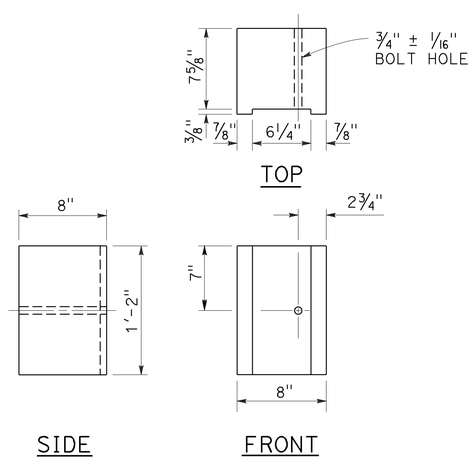

8" x 8"
NOTCHED WOOD BLOCK
Only for use with metal beam guard railing. See Note 5

STATE OF CALIFORNIA
DEPARTMENT OF TRANSPORTATION

MIDWEST GUARDRAIL SYSTEM STEEL POST AND NOTCHED WOOD BLOCK DETAILS

NO SCALE

RSP A77N2 DATED NOVEMBER 15, 2013 SUPERSEDES RSP A77N2
DATED JULY 19, 2013 THAT SUPPLEMENTS THE STANDARD PLANS BOOK DATED 2010.

REVISED STANDARD PLAN RSP A77N2

2010 REVISED STANDARD PLAN RSP A77N2

10-29-13

Dist	COUNTY	ROUTE	POST MILES TOTAL PROJECT	SHEET No.	TOTAL SHEETS
10	SJ	4,99	16.0/19.4, 18.5	81	112

Randell D. Hiatt
REGISTERED CIVIL ENGINEER

July 19, 2013
PLANS APPROVAL DATE

REGISTERED PROFESSIONAL ENGINEER
Randell D. Hiatt
No. C50200
Exp. 6-30-15
CIVIL
STATE OF CALIFORNIA

THE STATE OF CALIFORNIA OR ITS OFFICERS OR AGENTS SHALL NOT BE RESPONSIBLE FOR THE ACCURACY OR COMPLETENESS OF SCANNED COPIES OF THIS PLAN SHEET.

TO ACCOMPANY PLANS DATED 6-22-15

NOTES:

1. When necessary to place dike more than 7" in front of face of MGS, only Type C dike may be used. For dike details, see Revised Standard Plan RSP A87B.
2. For standard railing post embedment, see Revised Standard Plan RSP A77N3.
3. MGS delineation to be used where shown on the Project Plans.
4. When dike or curb is placed under MGS, the maximum height of the dike or curb shall be 6". Mountable dike should not be used. For dike and curb details, see Revised Standard Plans RSP A87A and RSP A87B.
5. For details of typical distance between the face of rail and hinge point, see Revised Standard Plan RSP A77N3.
6. For steel line posts, use 1/4 - 20 self-tapping screws in 0.22" diameter holes or 1/4" bolts in 9/32" diameter holes.

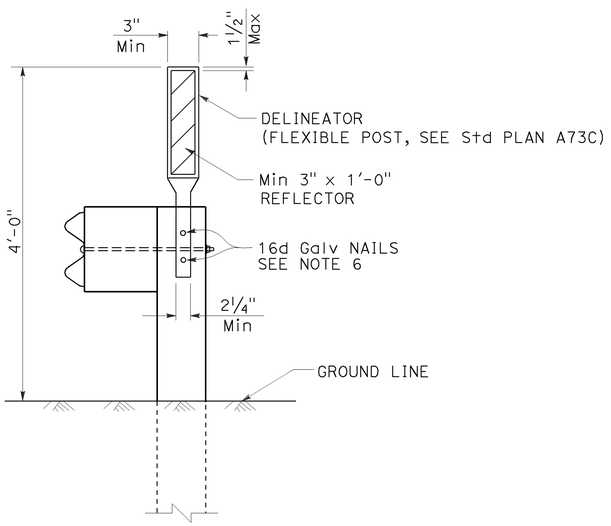

MGS DELINEATION
See Note 3

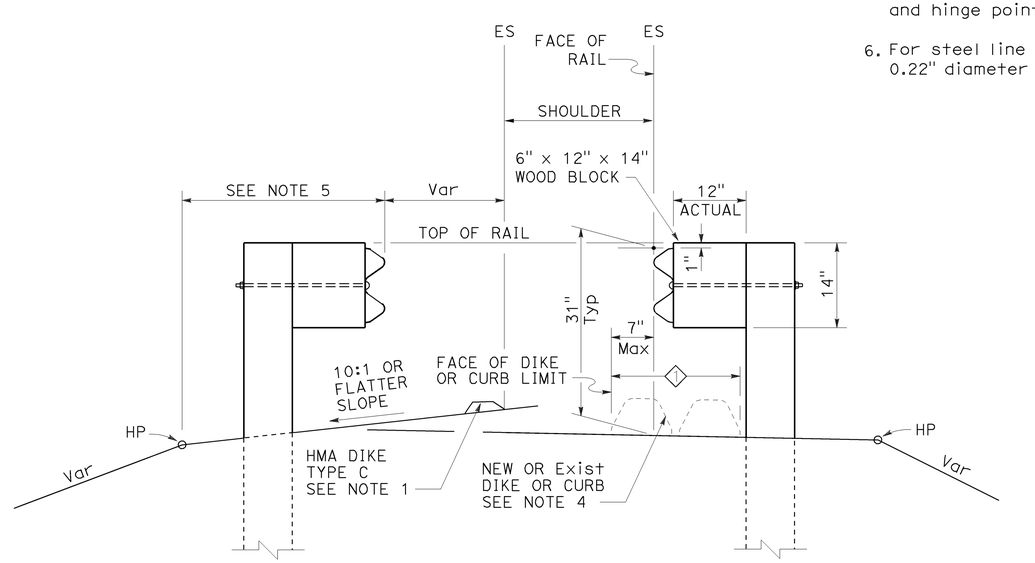

DIKE POSITIONING
See Note 1

1 PERMISSIBLE DIKE OR CURB PLACEMENT AREA

STATE OF CALIFORNIA
DEPARTMENT OF TRANSPORTATION

MIDWEST GUARDRAIL SYSTEM TYPICAL RAILING DELINEATION AND DIKE POSITIONING DETAILS

NO SCALE

RSP A77N4 DATED JULY 19, 2013 SUPPLEMENTS THE STANDARD PLANS BOOK DATED 2010.

REVISED STANDARD PLAN RSP A77N4

2010 REVISED STANDARD PLAN RSP A77N4

7-10-13

Dist	COUNTY	ROUTE	POST MILES TOTAL PROJECT	SHEET No.	TOTAL SHEETS
10	SJ	4,99	16.0/19.4, 18.5	82	112

Randell D. Hiatt
REGISTERED CIVIL ENGINEER

July 19, 2013
PLANS APPROVAL DATE

REGISTERED PROFESSIONAL ENGINEER
Randell D. Hiatt
No. C50200
Exp. 6-30-15
CIVIL
STATE OF CALIFORNIA

THE STATE OF CALIFORNIA OR ITS OFFICERS OR AGENTS SHALL NOT BE RESPONSIBLE FOR THE ACCURACY OR COMPLETENESS OF SCANNED COPIES OF THIS PLAN SHEET.

TO ACCOMPANY PLANS DATED 6-22-15

2010 REVISED STANDARD PLAN RSP A77R3

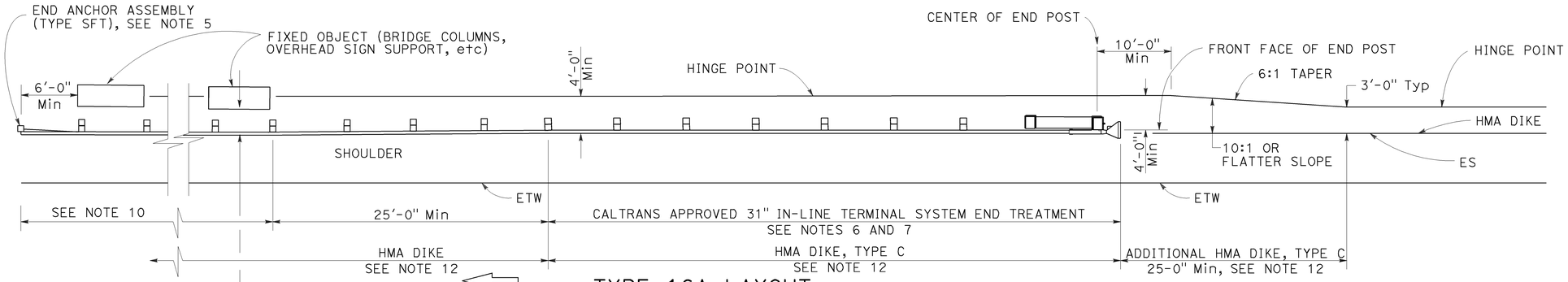

TYPE 16A LAYOUT

(MGS installation at roadside fixed object or objects with 31" in-line end treatment at traffic approach end of railing)
See Notes 11 and 12

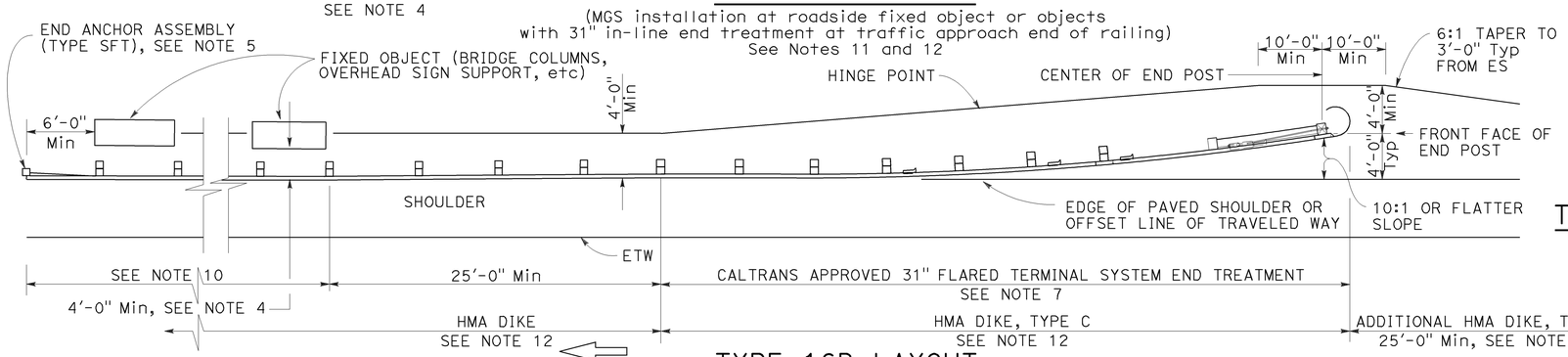

TYPE 16B LAYOUT

(MGS installation at roadside fixed object or objects with 31' flared end treatment at traffic approach end of railing)
See Notes 11 and 12

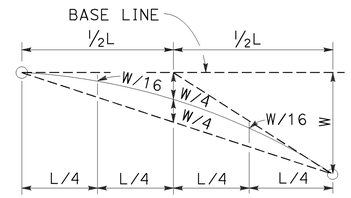

TYPIC AL PARABOLIC LAYOUT

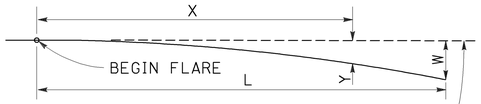

BASE LINE (EDGE OF PAVED SHOULDER OR OFFSET LINE OF EDGE OF TRAVELED WAY)

$$Y = \frac{WX^2}{L^2}$$

Y = OFFSET FROM BASE LINE
W = MAXIMUM OFFSET
X = DISTANCE ALONG BASE LINE
L = LENGTH OF FLARE

PARABOLIC FLARE OFFSETS

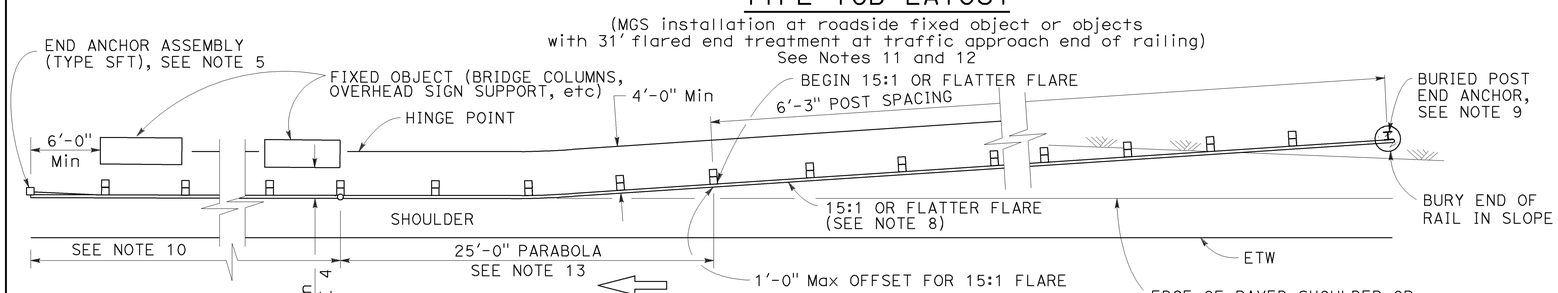

TYPE 16C LAYOUT

(MGS installation at roadside fixed object or objects with a buried end anchor treatment at traffic approach end of railing)
See Notes 11 and 12

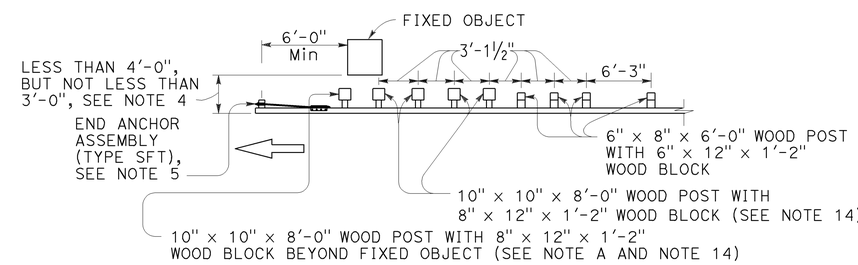

NOTE A: For a series of fixed objects (bridge columns, overhead sign supports, etc.) additional 10" x 10" x 8'-0" wood post with 8" x 12" x 1'-2" wood blocks at 3'-1½" center to center spacing are to be used between fixed objects.

STRENGTHENED MIDWEST GUARDRAIL SYSTEM SECTIONS FOR FIXED OBJECT

Use strengthened MGS sections with Types 16A, 16B or 16C layouts where minimum clearance between the face of the railing and fixed object(s) is less than 4'-0", but not less than 3'-0". See Note 4

NOTES:

1. Line post, blocks and hardware to be used are shown on Revised Standard Plans RSP A77L1, RSP A77L2, RSP A77M1, RSP A77N1 and RSP A77N2.
2. MGS post spacing to be 6'-3" center to center, except as otherwise noted.
3. Except as noted, line posts are 6" x 8" x 6'-0" wood with 6" x 12" x 1'-2" wood blocks. W6 x 8.5 or W6 x 9 steel posts, 6'-0" in length, with 6" x 12" x 1'-2" notched wood blocks or notched recycled plastic blocks may be used for 6" x 8" x 6'-0" wood line posts with 6" x 12" x 1'-2" wood blocks where applicable and when specified.
4. A 4'-0" minimum clearance is required between the face of the railing and the face of a fixed object located directly behind MGS sections with post spacing of 6'-3". Construct MGS as shown in the detail "Strengthened Midwest Guardrail System Sections for Fixed Object" on this plan, where the clearance between the face of the railing and the face of a fixed object is less than 4'-0", but not less than 3'-0". Where the clearance is less than 3'-0", a concrete wall or barrier should be constructed to shield the fixed object(s).
5. For End Anchor Assembly (Type SFT) details, see Revised Standard Plan RSP A77S1.
6. 31" in-line terminal system end treatments are used where site conditions will not accommodate a 31" flared end treatment.
7. The type of 31" terminal system to be used will be shown on the Project Plans.
8. The 15:1 or flatter flare used with Type 16C Layout is based on the edge of the paved shoulder or offset line of edge of the traveled way. The length of MGS within the 15:1 or flatter flare is based on site conditions and should be a length equal to multiples of 12'-6".
9. For details of the Buried Post End Anchor used with Type 16C Layout, see Revised Standard Plan RSP A77T2.
10. As site conditions dictate, construct additional MGS to shield fixed object(s). Additional MGS length equal to multiples of 12'-6". Post spacing at 6'-3" except as specified in Note 4.
11. Layout Types 16A, 16B or 16C are typically used where MGS is recommended to shield roadside fixed object(s) and a crashworthy 31" end treatment is required for only one direction of traffic.
12. Where placement of dike is required with MGS, see Revised Standard Plan RSP A77N4 for dike positioning details.
13. For typical flare offsets for 25'-0" length parabola with maximum offset of 1'-0", see Revised Standard Plan RSP A77P1.
14. W6 x 15 steel post, 8'-0" in length, with 8" x 12" x 1'-2" notched wood block or notched recycled plastic blocks may be used in place of the 10" x 10" x 8'-0" wood post with 8" x 12" x 1'-2" wood block shown in the detail "Strengthened Midwest Guardrail System Sections for Fixed Object".

STATE OF CALIFORNIA
DEPARTMENT OF TRANSPORTATION

MIDWEST GUARDRAIL SYSTEM TYPICAL LAYOUTS FOR ROADSIDE FIXED OBJECTS

NO SCALE

RSP A77R3 DATED JULY 19, 2013 SUPPLEMENTS THE STANDARD PLANS BOOK DATED 2010.

REVISED STANDARD PLAN RSP A77R3

6-20-13

Dist	COUNTY	ROUTE	POST MILES TOTAL PROJECT	SHEET No.	TOTAL SHEETS
10	SJ	4,99	16.0/19.4, 18.5	83	112

Randell D. Hiatt
REGISTERED CIVIL ENGINEER

November 15, 2013
PLANS APPROVAL DATE

REGISTERED PROFESSIONAL ENGINEER
Randell D. Hiatt
No. C50200
Exp. 6-30-15
CIVIL
STATE OF CALIFORNIA

THE STATE OF CALIFORNIA OR ITS OFFICERS OR AGENTS SHALL NOT BE RESPONSIBLE FOR THE ACCURACY OR COMPLETENESS OF SCANNED COPIES OF THIS PLAN SHEET.

TO ACCOMPANY PLANS DATED 6-22-15

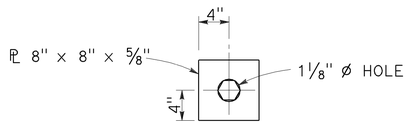

DETAIL "A"
CABLE CONNECTION
END PLATE

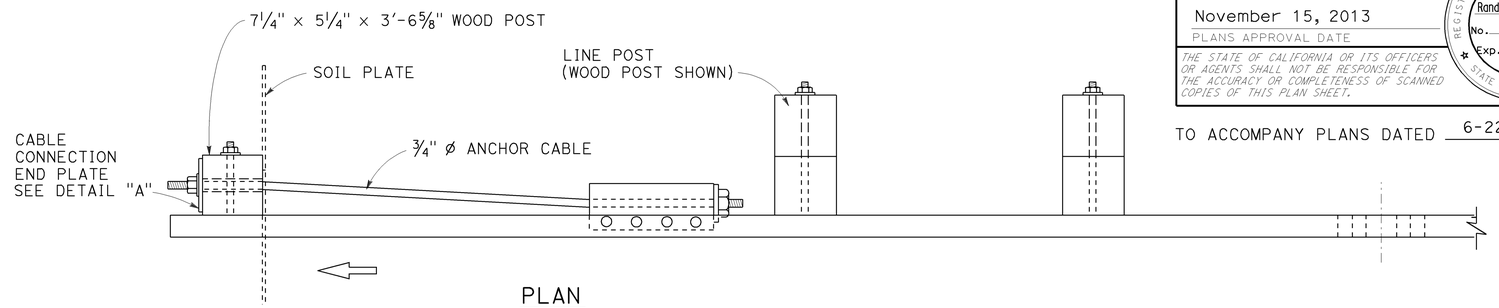

PLAN

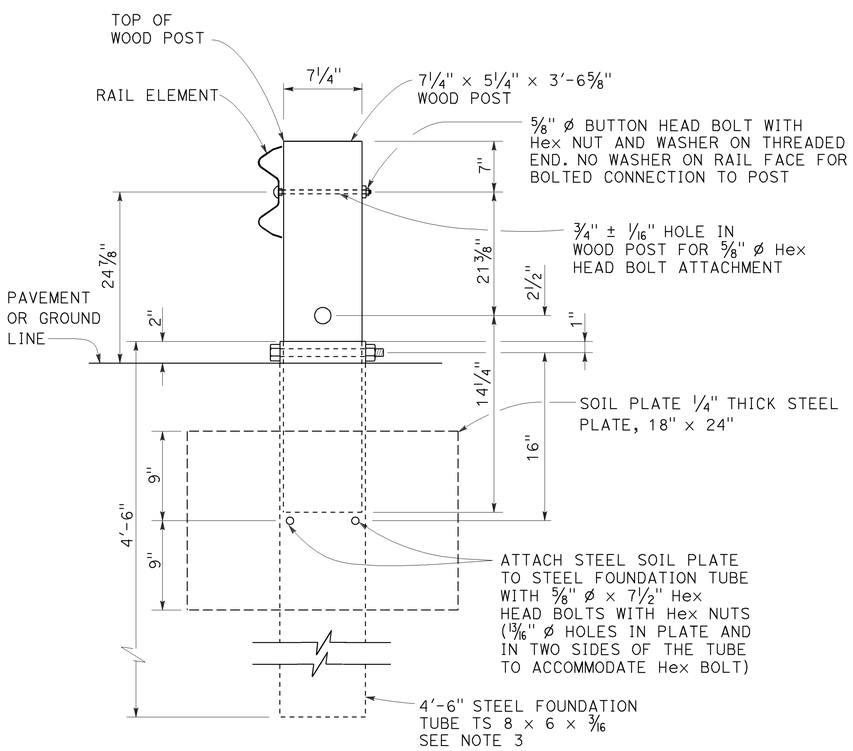

SECTION A-A

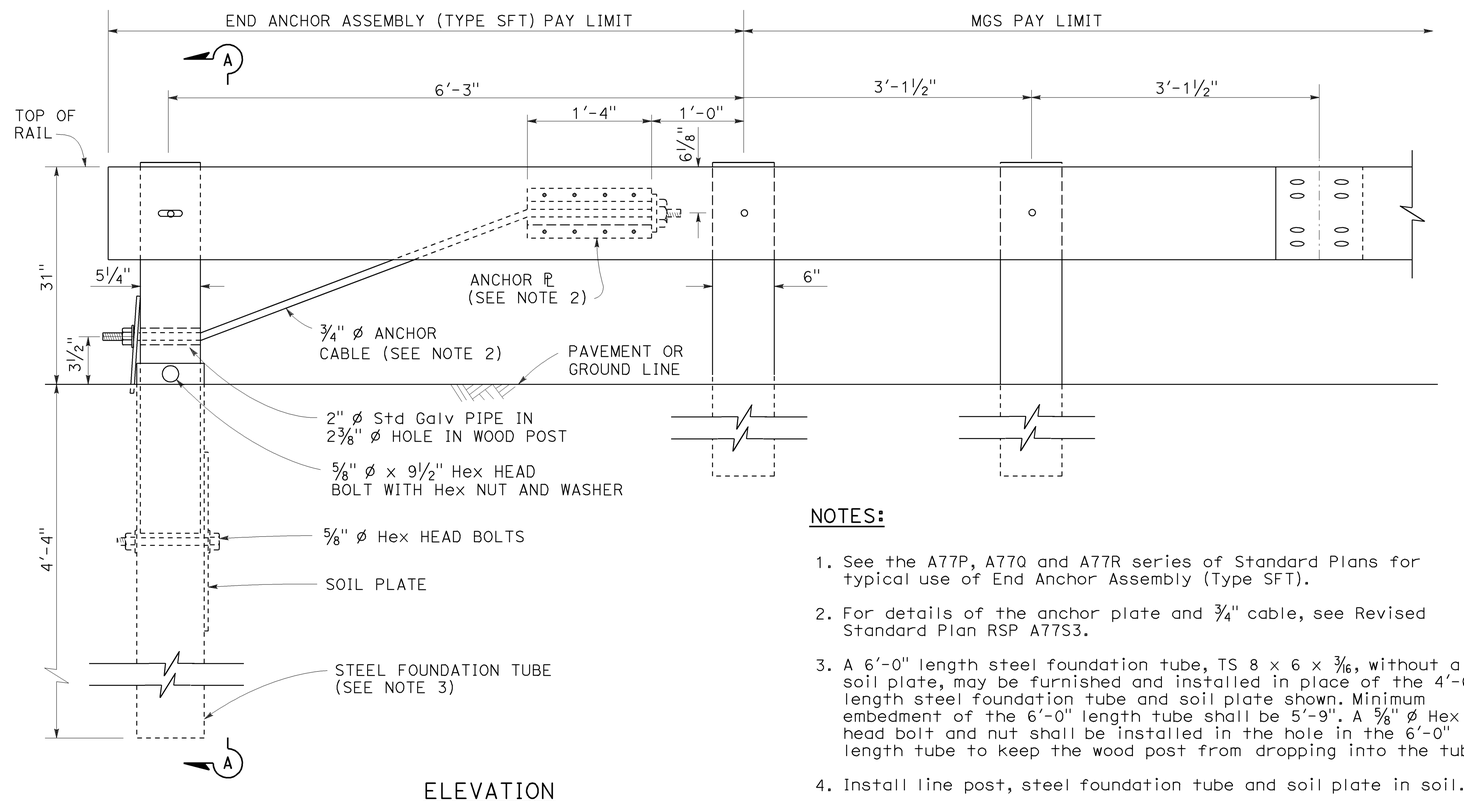

ELEVATION

END ANCHOR
ASSEMBLY (TYPE SFT)
See Note 1

NOTES:

1. See the A77P, A77Q and A77R series of Standard Plans for typical use of End Anchor Assembly (Type SFT).
2. For details of the anchor plate and 3/4" cable, see Revised Standard Plan RSP A77S3.
3. A 6'-0" length steel foundation tube, TS 8 x 6 x 3/16, without a soil plate, may be furnished and installed in place of the 4'-6" length steel foundation tube and soil plate shown. Minimum embedment of the 6'-0" length tube shall be 5'-9". A 5/8" ø Hex head bolt and nut shall be installed in the hole in the 6'-0" length tube to keep the wood post from dropping into the tube.
4. Install line post, steel foundation tube and soil plate in soil.

STATE OF CALIFORNIA
DEPARTMENT OF TRANSPORTATION

MIDWEST GUARDRAIL SYSTEM END ANCHOR ASSEMBLY (TYPE SFT)

NO SCALE

RSP A77S1 DATED NOVEMBER 15, 2013 SUPERSEDES RSP A77S1
DATED JULY 19, 2013 THAT SUPPLEMENTS THE STANDARD PLANS BOOK DATED 2010.

REVISED STANDARD PLAN RSP A77S1

2010 REVISED STANDARD PLAN RSP A77S1

10-4-13

Dist	COUNTY	ROUTE	POST MILES TOTAL PROJECT	SHEET No.	TOTAL SHEETS
10	SJ	4,99	16.0/19.4, 18.5	84	112

Randell D. Hiatt
REGISTERED CIVIL ENGINEER

July 19, 2013
PLANS APPROVAL DATE

REGISTERED PROFESSIONAL ENGINEER
Randell D. Hiatt
No. C50200
Exp. 6-30-15
CIVIL
STATE OF CALIFORNIA

THE STATE OF CALIFORNIA OR ITS OFFICERS OR AGENTS SHALL NOT BE RESPONSIBLE FOR THE ACCURACY OR COMPLETENESS OF SCANNED COPIES OF THIS PLAN SHEET.

TO ACCOMPANY PLANS DATED 6-22-15

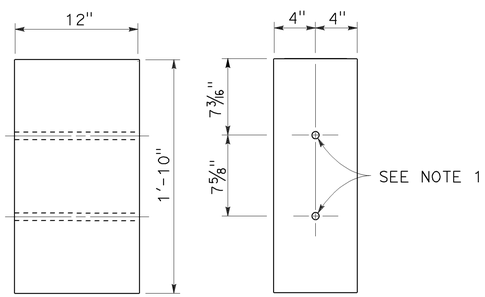

SIDE FRONT

8" x 12"
WOOD BLOCK

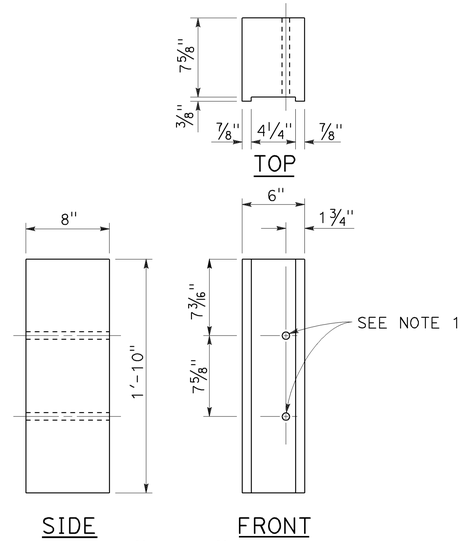

SIDE FRONT

6" x 8"
NOTCHED WOOD BLOCK
See Notes 3 and 5

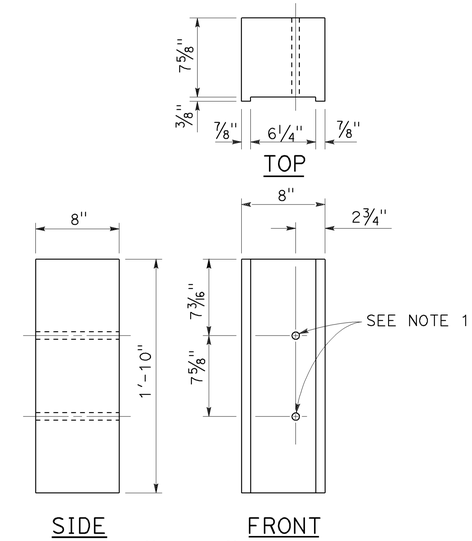

SIDE FRONT

8" x 8"
NOTCHED WOOD BLOCK
See Notes 4 and 5

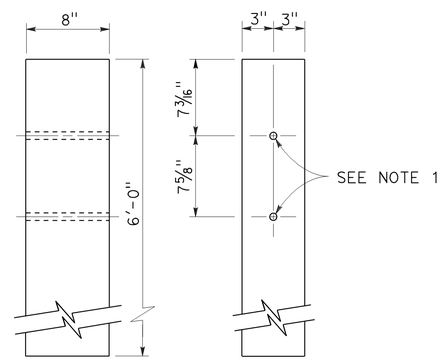

SIDE FRONT

6" x 8"
WOOD POST

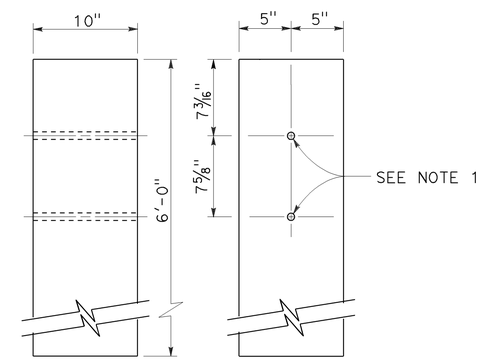

SIDE FRONT

10" x 10"
WOOD POST

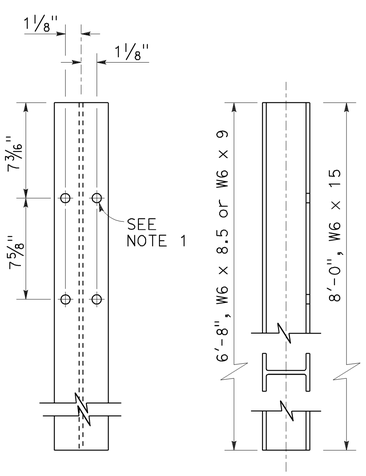

FRONT SIDE

STEEL POST
W6 x 9 or W6 x 8.5 and W6 x 15

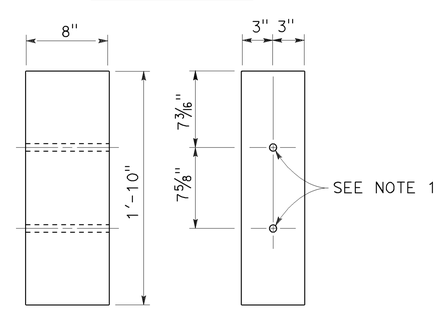

SIDE FRONT

6" x 8"
WOOD BLOCK

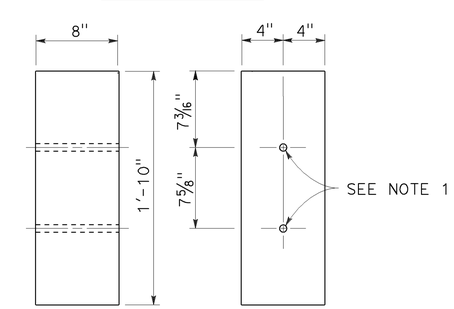

SIDE FRONT

8" x 8"
WOOD BLOCK

NOTES:

1. All holes in steel post to be 13/16" Dia maximum. Holes in wood posts and wood blocks to be 3/4" Dia ±1/16".
2. Dimensions shown for wood post are nominal.
3. For use with W6 x 8.5 or W6 x 9 steel post.
4. For use with W6 x 15 steel post.
5. Notched face of block faces steel post.

STATE OF CALIFORNIA
DEPARTMENT OF TRANSPORTATION

THRIE BEAM BARRIER POST AND BLOCK DETAILS

NO SCALE

RSP A78C2 DATED JULY 19, 2013 SUPERSEDES STANDARD PLAN A78C2 DATED MAY 20, 2011 - PAGE 92 OF THE STANDARD PLANS BOOK DATED 2010.

REVISED STANDARD PLAN RSP A78C2

2010 REVISED STANDARD PLAN RSP A78C2

7-3-13

Dist	COUNTY	ROUTE	POST MILES TOTAL PROJECT	SHEET No.	TOTAL SHEETS
10	SJ	4,99	16.0/19.4, 18.5	85	112

Randell D. Hiatt
REGISTERED CIVIL ENGINEER

July 19, 2013
PLANS APPROVAL DATE

REGISTERED PROFESSIONAL ENGINEER
Randell D. Hiatt
No. C50200
Exp. 6-30-15
CIVIL
STATE OF CALIFORNIA

THE STATE OF CALIFORNIA OR ITS OFFICERS OR AGENTS SHALL NOT BE RESPONSIBLE FOR THE ACCURACY OR COMPLETENESS OF SCANNED COPIES OF THIS PLAN SHEET.

TO ACCOMPANY PLANS DATED 6-22-15

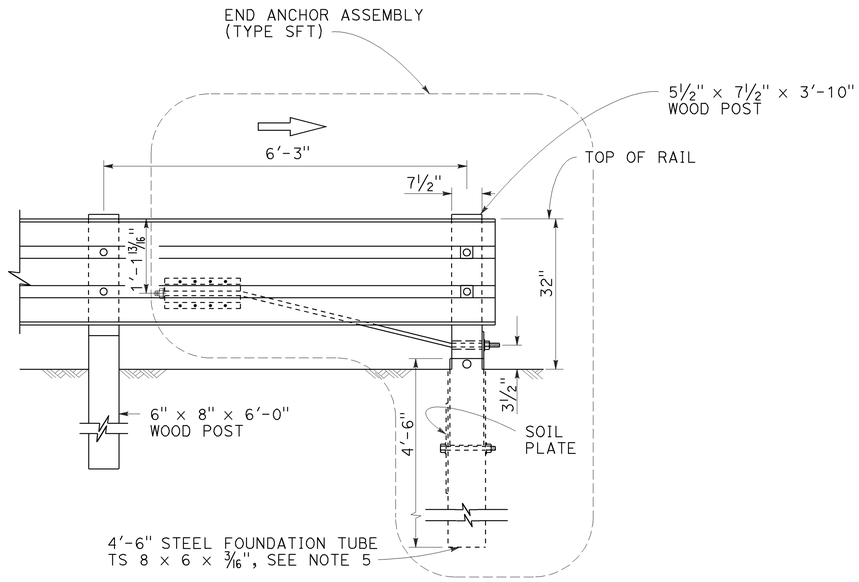

END ANCHOR FOR TRAFFIC DEPARTURE END OF SINGLE THRIE BEAM BARRIER

(For one-way roadways)
See Note 1

NOTES:

1. For additional details of End Anchor Assembly (Type SFT), see Revised Standard Plan RSP A77S1.
2. The "W" beam to thrie beam section is only required where the terminal system connection to the thrie beam barrier is a "W" beam rail.
3. In-line Terminal System End Treatments are used where site conditions will not accommodate a flared end treatment. The type of terminal system to be used will be shown on the Project Plans. Do not use a Caltrans approved 31" end treatment.
4. A Caltrans approved crash cushion should be used in place of a terminal system end treatment where the backside of the railing would be exposed to traffic.
5. A 6'-0" length steel foundation tube, TS 8 × 6 × 3/16, without a soil plate, may be furnished and installed in place of the 4'-6" length steel foundation tube and soil plate shown. Minimum embedment of the 6'-0" length tube shall be 5'-9". A 5/8" Ø hex head bolt and nut shall be installed in the hole in the 6'-0" length tube to keep the wood postfrom dropping into the tube.

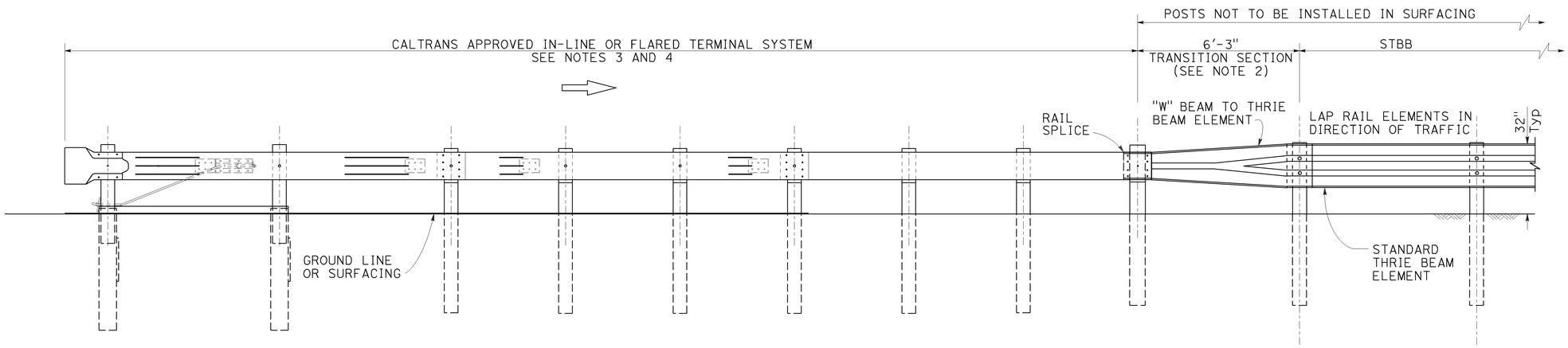

ELEVATION

END TREATMENT FOR TRAFFIC APPROACH END OF SINGLE THRIE BEAM BARRIER

STATE OF CALIFORNIA
DEPARTMENT OF TRANSPORTATION

SINGLE THRIE BEAM BARRIER END ANCHOR ASSEMBLY AND TERMINAL SYSTEM END TREATMENT

NO SCALE

RSP A78E1 DATED JULY 19, 2013 SUPERSEDES STANDARD PLAN A78E1
DATED MAY 20, 2011 - PAGE 99 OF THE STANDARD PLANS BOOK DATED 2010.

REVISED STANDARD PLAN RSP A78E1

2010 REVISED STANDARD PLAN RSP A78E1

7-16-13

Dist	COUNTY	ROUTE	POST MILES TOTAL PROJECT	SHEET No.	TOTAL SHEETS
10	SJ	4,99	16.0/19.4, 18.5	86	112

REGISTERED CIVIL ENGINEER

July 18, 2014
PLANS APPROVAL DATE

REGISTERED PROFESSIONAL ENGINEER Glenn DeCou No. C34547 Exp. 9-30-15 CIVIL STATE OF CALIFORNIA

THE STATE OF CALIFORNIA OR ITS OFFICERS OR AGENTS SHALL NOT BE RESPONSIBLE FOR THE ACCURACY OR COMPLETENESS OF SCANNED COPIES OF THIS PLAN SHEET.

TO ACCOMPANY PLANS DATED 6-22-15

2010 REVISED STANDARD PLAN RSP A85

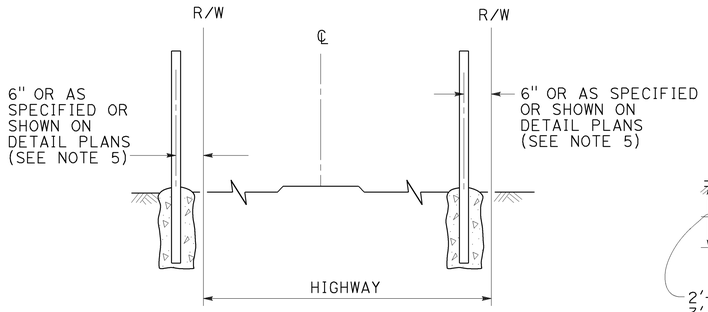

FENCE LOCATION

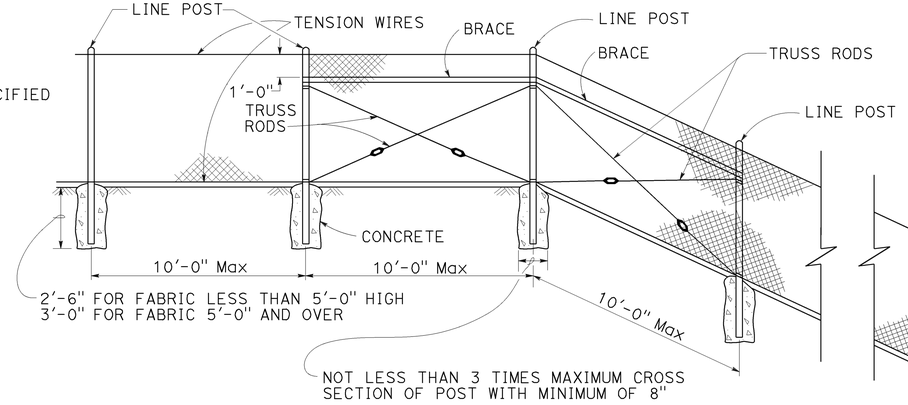

CHAIN LINK FENCE ON SHARP BREAK IN GRADE

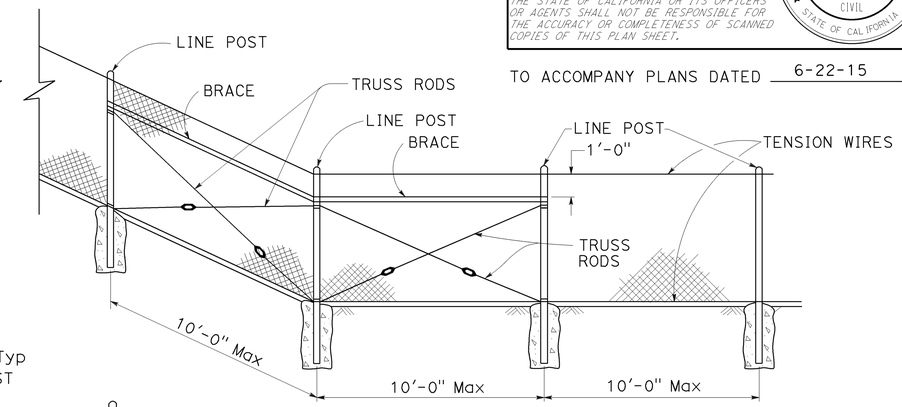

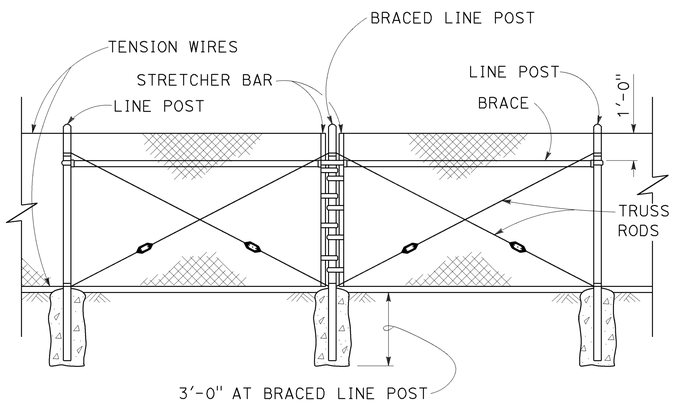

BRACED LINE POST INSTALLATION

Braced line post at intervals not exceeding 1000'

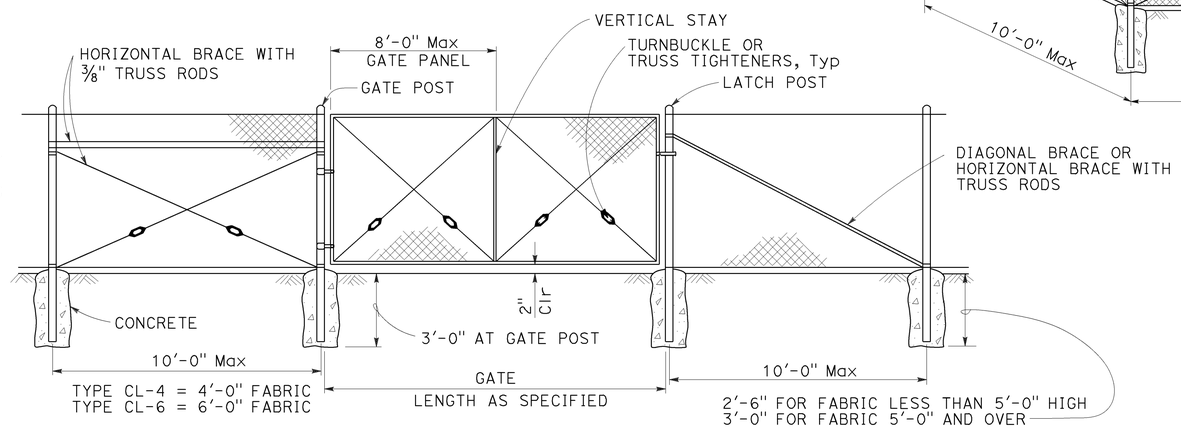

CHAIN LINK GATE INSTALLATION

GATE POST			
FENCE HEIGHT	GATE WIDTHS	ROUND OD PIPE	WEIGHT (lb/ft)
6'-0" AND LESS	UP THRU 6'-0"	2.875"	5.80
	OVER 6'-0" THRU 12'-0"	4.500"	10.80
	OVER 12'-0" THRU 18'-0"	5.563"	14.63
	OVER 18'-0" TO 24'-0" Max	6.625"	18.99
OVER 6'-0" TO 8'-0" Max	UP THRU 6'-0"	3.500"	7.58
	OVER 6'-0" THRU 12'-0"	5.563"	14.63
	OVER 12'-0" THRU 18'-0"	6.625"	18.99
	OVER 18'-0" TO 24'-0" Max	8.625"	28.58

Above post dimensions and weights are minimums. Larger sizes may be used upon approval.

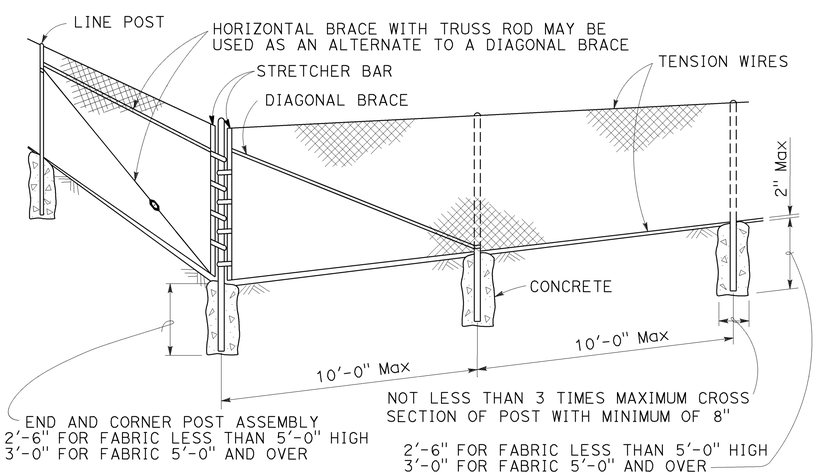

CORNER POST

NOTES:

1. The table below shows minimum sized posts and braces complying with the specifications. Larger or heavier post and brace sizes may be used upon approval.
2. Sections shown in the tables must also comply with the strength requirements and other provisions of the Specifications.
3. Other sections which comply with the strength requirements and other provisions of the Specifications may be used upon approval.
4. Options exercised shall be uniform on any one project.
5. Offset to be 2'-0" at monument locations, measured at right angles to R/W lines. Taper to achieve offset to be at least 20'-0" long.
6. See Revised Standard Plan RSP A85B for Brace, Stretcher Bar, and Truss Tightener Details.

TYPICAL MEMBER DIMENSIONS (See Notes)										
FENCE HEIGHT	LINE POSTS				END, LATCH AND CORNER POSTS		BRACES			
	ROUND OD PIPE	WEIGHT (lb/ft)	ROLL FORMED		ROUND OD PIPE	WEIGHT (lb/ft)	ROUND OD PIPE	WEIGHT (lb/ft)	ROLL FORMED	
			SECTION	WEIGHT (lb/ft)					SECTION	WEIGHT (lb/ft)
6'-0" AND LESS	1.900"	2.72	1.875" x 1.625"	1.85	2.375"	3.65	1.66"	2.27	1.625" x 1.25"	1.35
OVER 6'-0" TO 8'-0" Max	2.375"	3.65	2.25" x 1.70"	2.78	2.875"	5.80	1.66"	2.27	1.625" x 1.25"	1.35

STATE OF CALIFORNIA
DEPARTMENT OF TRANSPORTATION

CHAIN LINK FENCE

NO SCALE

RSP A85 DATED JULY 18, 2014 SUPERSEDES STANDARD PLAN A85 DATED MAY 20, 2011 - PAGE 112 OF THE STANDARD PLANS BOOK DATED 2010.

REVISED STANDARD PLAN RSP A85

7-1-14

Dist	COUNTY	ROUTE	POST MILES TOTAL PROJECT	SHEET No.	TOTAL SHEETS
10	SJ	4,99	16.0/19.4, 18.5	87	112

REGISTERED CIVIL ENGINEER

October 19, 2012
PLANS APPROVAL DATE

REGISTERED PROFESSIONAL ENGINEER Glenn DeCou No. C34547 Exp. 9-30-13 CIVIL STATE OF CALIFORNIA

THE STATE OF CALIFORNIA OR ITS OFFICERS OR AGENTS SHALL NOT BE RESPONSIBLE FOR THE ACCURACY OR COMPLETENESS OF SCANNED COPIES OF THIS PLAN SHEET.

TO ACCOMPANY PLANS DATED 6-22-15

2010 REVISED STANDARD PLAN RSP A85B

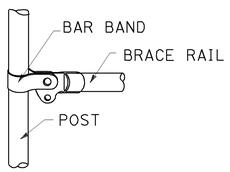

BRACE RAIL

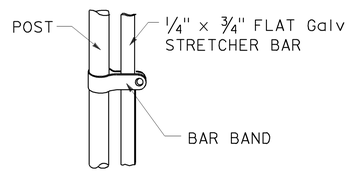

STRETCHER BAR

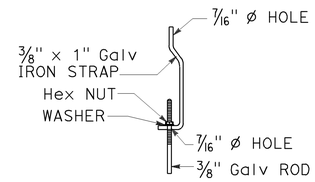

TRUSS TIGHTENER

NOTES:

1. All material for abutment connection to be galvanized.
2. The chain link fabric shall be replaced by barbed wire strands at 12" maximum centers between the double posts.
3. When the width of the culvert makes it necessary to anchor a post to the top of the culvert, a cast iron shoe or other device approved by the Engineer shall be used.
4. Fencing over stream and around headwall may also use Barbed Wire or Wire Mesh fencing with either wood post or steel post installation.
5. See Standard Plan A85 for Chain Link fence dimensions. See Standard Plan A86 for Barbed Wire and Wire Mesh fence dimensions and for wood post and steel post installation.

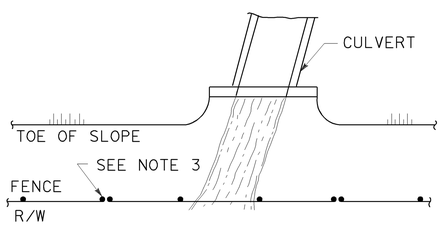

PLAN

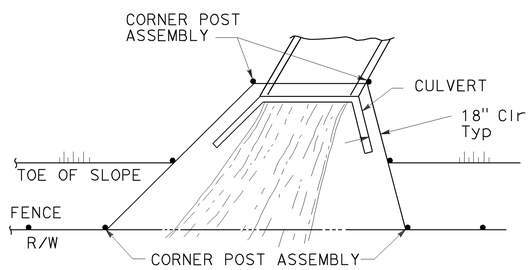

PLAN

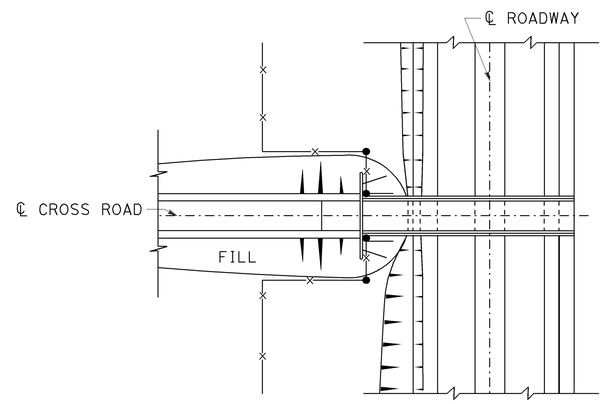

PLAN OF ROADWAY - OVERCROSSING

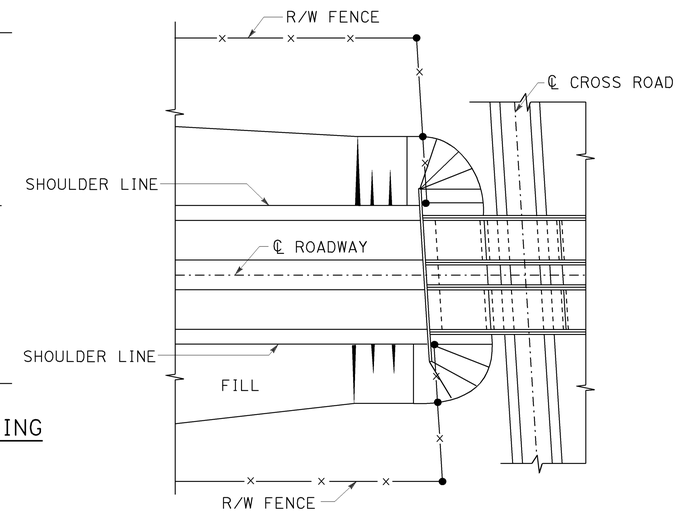

PLAN OF ROADWAY - UNDERCROSSING

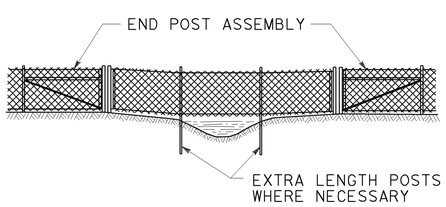

ELEVATION

INSTALLATION OVER STREAM

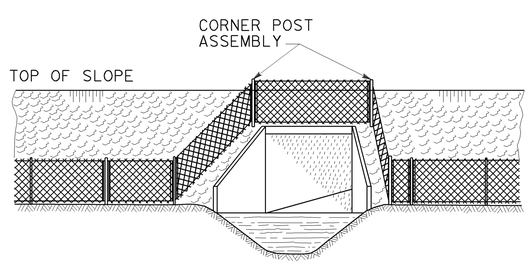

ELEVATION

INSTALLATION AROUND HEADWALL

See Note 4

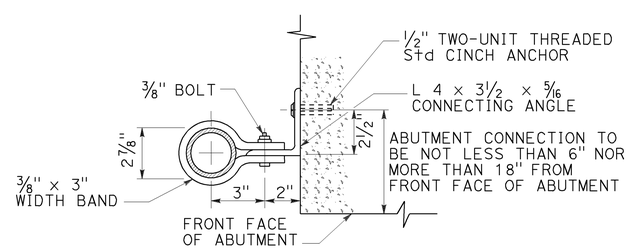

ABUTMENT CONNECTION

TYPICAL INSTALLATION AT BRIDGES

STATE OF CALIFORNIA
DEPARTMENT OF TRANSPORTATION

CHAIN LINK FENCE DETAILS

NO SCALE

RSP A85B DATED OCTOBER 19, 2012 SUPERSEDES STANDARD PLAN A85B DATED MAY 20, 2011 - PAGE 114 OF THE STANDARD PLANS BOOK DATED 2010.

REVISED STANDARD PLAN RSP A85B

7-19-12

Dist	COUNTY	ROUTE	POST MILES TOTAL PROJECT	SHEET No.	TOTAL SHEETS
10	SJ	4,99	16.0/19.4, 18.5	88	112

REGISTERED CIVIL ENGINEER

July 19, 2013
PLANS APPROVAL DATE

REGISTERED PROFESSIONAL ENGINEER
Michael Janzen
No. 44788
Exp. 03-31-14
CIVIL
STATE OF CALIFORNIA

THE STATE OF CALIFORNIA OR ITS OFFICERS OR AGENTS SHALL NOT BE RESPONSIBLE FOR THE ACCURACY OR COMPLETENESS OF SCANNED COPIES OF THIS PLAN SHEET.

TO ACCOMPANY PLANS DATED 6-22-15

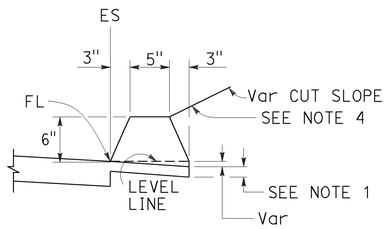

TYPE A
See Note 3

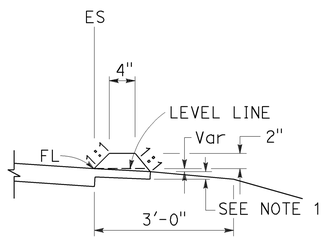

TYPE C

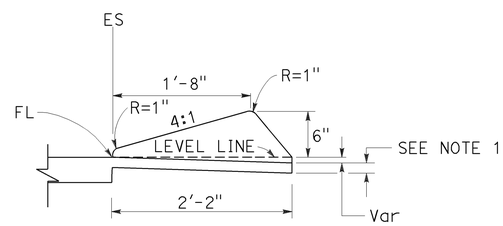

TYPE D

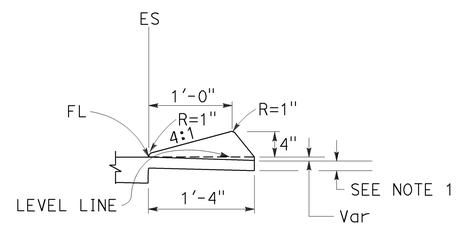

TYPE E

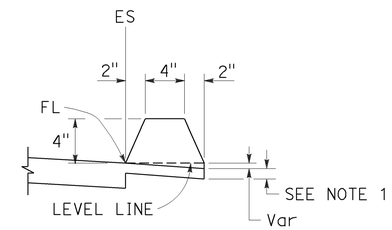

TYPE F
See Note 5

DIKES

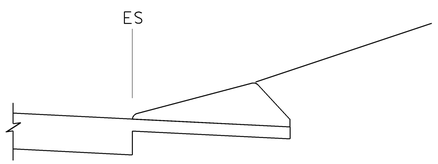

CASE C-1
Cut Slope

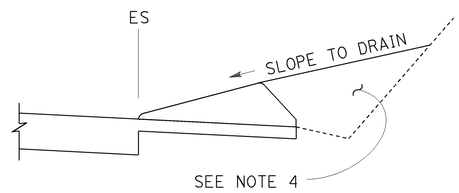

CASE C-2
Cut Slope

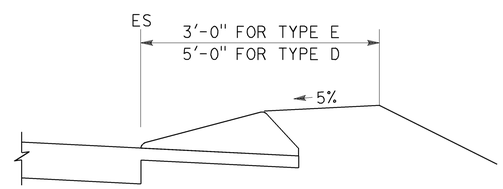

CASE F

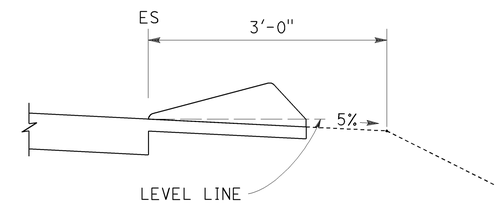

CASE R
See Note 2

TYPE D AND E BACKFILL DETAILS

NOTES:

1. For HMA shoulders only, extend top layer of HMA placed on the shoulder under dike with no joint at the ES. For projects with OGFC shoulders, do not extend OGFC under dike. See project plans for modified dike detail.
2. Case R applies to retrofit only projects where restrictive conditions do not provide enough width for Case F backfill.
3. Type A dike only to be used where restrictive slope conditions do not provide enough width to use Type D or Type E dike.
4. Fill and compact with excavated material to top of dike.
5. Use Type F dike, where dike is required with guard railing installations. See Revised Standard Plan RSP A77N4 for dike positioning details.

DIKE QUANTITIES

TYPE	CUBIC YARDS PER LINEAR FOOT
A	0.0135
C	0.0038
D	0.0293
E	0.0130
F	0.0066

Quantities based on 5% cross slope.

STATE OF CALIFORNIA
DEPARTMENT OF TRANSPORTATION

HOT MIX ASPHALT DIKES

NO SCALE

RSP A87B DATED JULY 19, 2013 SUPERSEDES STANDARD PLAN A87B DATED MAY 20, 2011 - PAGE 120 OF THE STANDARD PLANS BOOK DATED 2010.

REVISED STANDARD PLAN RSP A87B

2010 REVISED STANDARD PLAN RSP A87B

6-27-13

Dist	COUNTY	ROUTE	POST MILES TOTAL PROJECT	SHEET No.	TOTAL SHEETS
10	SJ	4,99	16.0/19.4, 18.5	89	112

Gregory A. Balzer
LICENSED LANDSCAPE ARCHITECT

July 19, 2013
PLANS APPROVAL DATE

LICENSED LANDSCAPE ARCHITECT
Gregory A. Balzer 2516
Gregory A. Balzer
Expiration Date
2-28-15
Renewal Date
7-19-13
Date
STATE OF CALIFORNIA

THE STATE OF CALIFORNIA OR ITS OFFICERS OR AGENTS SHALL NOT BE RESPONSIBLE FOR THE ACCURACY OR COMPLETENESS OF SCANNED COPIES OF THIS PLAN SHEET.

TO ACCOMPANY PLANS DATED 6-22-15

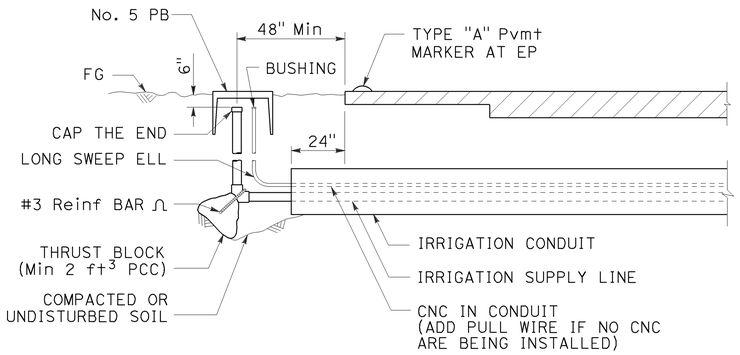

SECTION

IRRIGATION CONDUIT

UNDER TRAVELED WAY

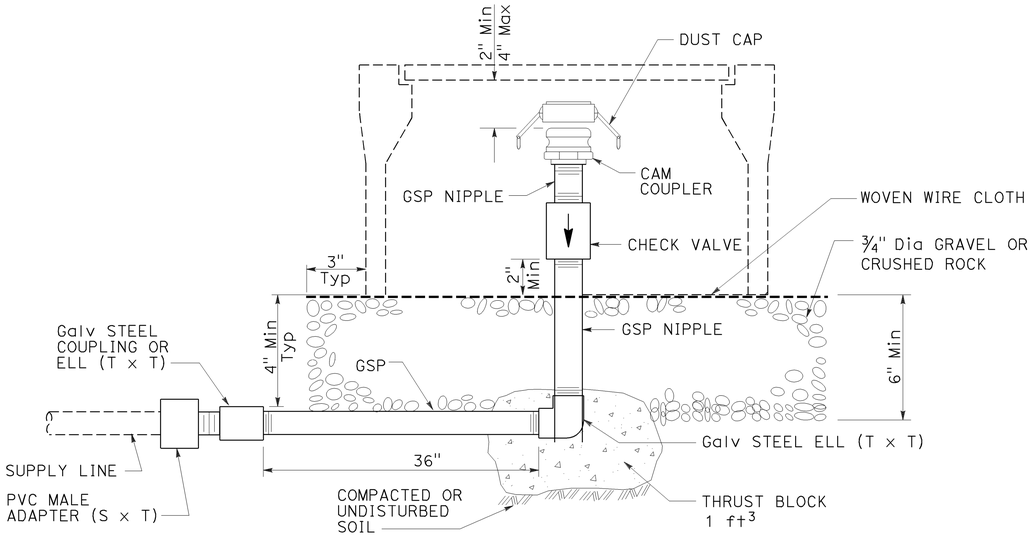

ELEVATION

CAM COUPLER ASSEMBLY

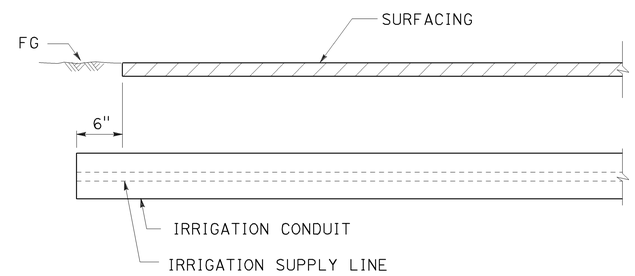

SECTION

IRRIGATION CONDUIT

UNDER SIDEWALKS, DRIVEWAYS AND PATHS

STATE OF CALIFORNIA
DEPARTMENT OF TRANSPORTATION

LANDSCAPE DETAILS

NO SCALE

RSP H9 DATED JULY 19, 2013 SUPERSEDES STANDARD PLAN H9
DATED MAY 20, 2011 - PAGE 226 OF THE STANDARD PLANS BOOK DATED 2010.

REVISED STANDARD PLAN RSP H9

2010 REVISED STANDARD PLAN RSP H9

6-28-13

Dist	COUNTY	ROUTE	POST MILES TOTAL PROJECT	SHEET No.	TOTAL SHEETS
10	SJ	4,99	16.0/19.4, 18.5	90	112

REGISTERED CIVIL ENGINEER

July 19, 2013
PLANS APPROVAL DATE

REGISTERED PROFESSIONAL ENGINEER
Gurinderpal Bhullar
No. C48815
Exp. 9-30-14
CIVIL
STATE OF CALIFORNIA

THE STATE OF CALIFORNIA OR ITS OFFICERS OR AGENTS SHALL NOT BE RESPONSIBLE FOR THE ACCURACY OR COMPLETENESS OF SCANNED COPIES OF THIS PLAN SHEET.

TO ACCOMPANY PLANS DATED 6-22-15

2010 REVISED STANDARD PLAN RSP T9

TABLE 1

TAPER LENGTH CRITERIA AND CHANNELIZING DEVICE SPACING

SPEED (S)	MINIMUM TAPER LENGTH * FOR WIDTH OF OFFSET 12 FEET (W)				MAXIMUM CHANNELIZING DEVICE SPACING		
					X	Y	Z **
	TANGENT 2L	MERGING L	SHIFTING L/2	SHOULDER L/3	TAPER	TANGENT	CONFLICT
mph	ft	ft	ft	ft	ft	ft	ft
20	160	80	40	27	20	40	10
25	250	125	63	42	25	50	12
30	360	180	90	60	30	60	15
35	490	245	123	82	35	70	17
40	640	320	160	107	40	80	20
45	1080	540	270	180	45	90	22
50	1200	600	300	200	50	100	25
55	1320	660	330	220	55	110	27
60	1440	720	360	240	60	120	30
65	1560	780	390	260	65	130	32
70	1680	840	420	280	70	140	35

* - For other offsets, use the following merging taper length formula for L:
For speed of 40 mph or less, $L = WS^2/60$
For speed of 45 mph or more, $L = WS$

Where: L = Taper length in feet
W = Width of offset in feet
S = Posted speed limit, off-peak 85th-percentile speed prior to work starting, or the anticipated operating speed in mph

** - Use for taper and tangent sections where there are no pavement markings or where there is a conflict between existing pavement markings and channelizers (CA).

TABLE 2

LONGITUDINAL BUFFER SPACE AND FLAGGER STATION SPACING

SPEED *	Min D **	DOWNGRADE Min D ***		
		-3%	-6%	-9%
mph	ft	ft	ft	ft
20	115	116	120	126
25	155	158	165	173
30	200	205	215	227
35	250	257	271	287
40	305	315	333	354
45	360	378	400	427
50	425	446	474	507
55	495	520	553	593
60	570	598	638	686
65	645	682	728	785
70	730	771	825	891

* - Speed is posted speed limit, off-peak 85th-percentile speed prior to work starting, or the anticipated operating speed in mph

** - Longitudinal buffer space or flagger station spacing

*** - Use on sustained downgrade steeper than -3 percent and longer than 1 mile.

TABLE 3

ADVANCE WARNING SIGN SPACING

ROAD TYPE	DISTANCE BETWEEN SIGNS *		
	A	B	C
	ft	ft	ft
URBAN - 25 mph OR LESS	100	100	100
URBAN - MORE THAN 25 mph TO 40 mph	250	250	250
URBAN - MORE THAN 40 mph	350	350	350
RURAL	500	500	500
EXPRESSWAY / FREEWAY	1000	1500	2640

* - The distances are approximate, are intended for guidance purposes only, and should be applied with engineering judgment. These distances should be adjusted by the Engineer for field conditions, if necessary, by increasing or decreasing the recommmended distances.

STATE OF CALIFORNIA
DEPARTMENT OF TRANSPORTATION

TRAFFIC CONTROL SYSTEM TABLES FOR LANE AND RAMP CLOSURES

NO SCALE

RSP T9 DATED JULY 19, 2013 SUPERSEDES RSP T9 DATED APRIL 19, 2013 THAT SUPPLEMENTS THE STANDARD PLANS BOOK DATED 2010.

REVISED STANDARD PLAN RSP T9

Dist	COUNTY	ROUTE	POST MILES TOTAL PROJECT	SHEET No.	TOTAL SHEETS
10	SJ	4,99	16.0/19.4, 18.5	91	112

REGISTERED CIVIL ENGINEER

April 19, 2013
PLANS APPROVAL DATE

REGISTERED PROFESSIONAL ENGINEER Gurinderpal Bhullar No. C48815 Exp. 9-30-14 CIVIL STATE OF CALIFORNIA

THE STATE OF CALIFORNIA OR ITS OFFICERS OR AGENTS SHALL NOT BE RESPONSIBLE FOR THE ACCURACY OR COMPLETENESS OF SCANNED COPIES OF THIS PLAN SHEET.

TO ACCOMPANY PLANS DATED 6-22-15

NOTES:

See Revised Standard Plan RSP T9 for tables.

Use cone spacing X for taper segment, Y for tangent segment or Z for conflict situations, as approriate, per Table 1, unless X, Y, or Z cone spacing is shown on this sheet.

Unless otherwise specified in the special provisions, all temporary warning signs shall have black legend on fluorescent orange background.

California codes are designated by (CA). Otherwise, Federal (MUTCD) codes are shown.

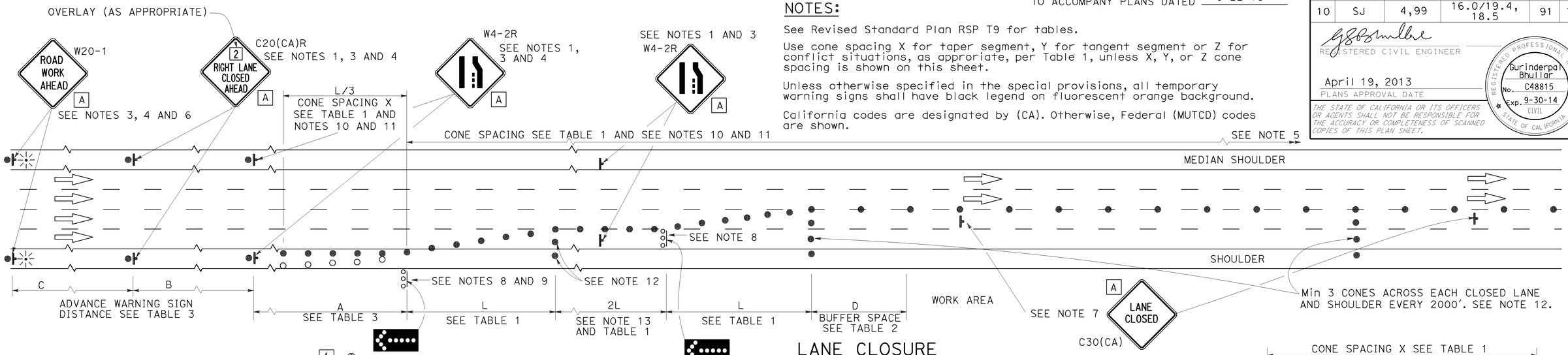

LANE CLOSURE

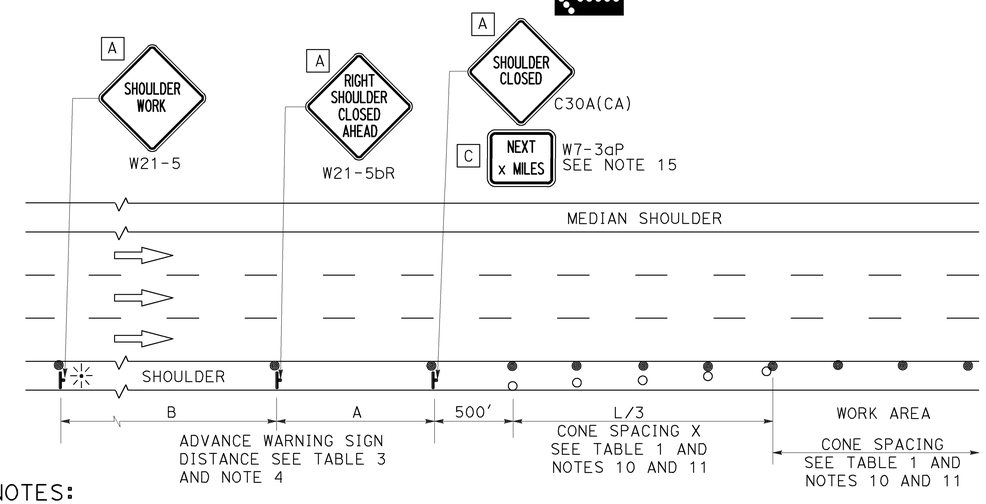

SHOULDER CLOSURE

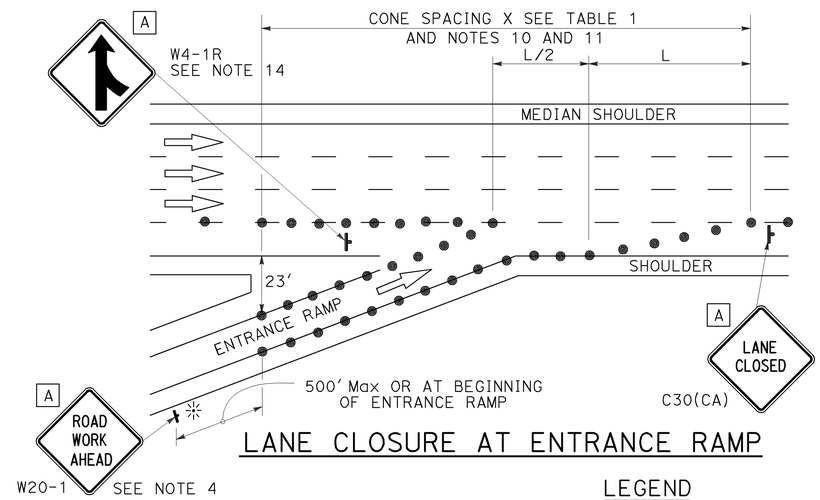

LANE CLOSURE AT ENTRANCE RAMP

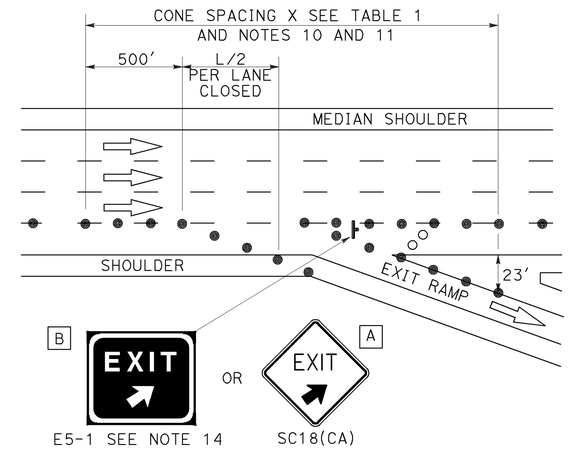

LANE CLOSURE AT EXIT RAMP

NOTES:

1. Median lane closures shall conform to the details as shown except that C20(CA)L and W4-2L signs shall be used.
2. At least one person shall be assigned to provide full time maintenance of traffic control devices for lane closures.
3. Duplicate sign installations are not required:
   a) On opposite shoulder if at least one-half of the available lanes remain open to traffic.
   b) In the median if the width of the median shoulder is less than 8' and the outside lanes are to be closed.
4. Each advance warning sign on each side of the roadway shall be equipped with at least two flags for daytime closure. Each flag shall be at least 16" x 16" in size and shall be orange or fluorescent red-orange in color. Flashing beacons shall be placed at the locations indicated for lane closure during hours of darkness.
5. A G20-2 "END ROAD WORK" sign, with minimum size of 48" x 24" as appropriate, shall be placed at the end of the lane closure unless the end of work area is obvious or ends within a larger project's limits.
6. If the W20-1 sign would follow within 2000' of a stationary W20-1 or G20-1 "ROAD WORK NEXT _____ MILES", use a C20(CA) sign for the first advance warning sign.
7. Place a C30(CA) sign every 2000' throughout length of lane closure.
8. One flashing arrow sign for each lane closed. The flashing arrow signs shall be Type I.
9. A minimum 1500' of sight distance shall be provided where possible for vehicles approaching the first flashing arrow sign. Lane closures shall not begin at top of crest vertical curve or on a horizontal curve.
10. All cones used for lane closures during the hours of darkness shall be fitted with retroreflective bands (or sleeves) as specified in the specifications.
11. Portable delineators, placed at one-half the spacing indicated for traffic cones may be used instead of cones for daytime closures only.
12. Unless otherwise specified in the special provisions, a minimum of 3 cones shall be placed transversely across each closed lane and shoulder at each location where a taper across a traffic lane ends and every 2000' as shown on the "Lane Closure" detail. Two Type II barricades may be used instead of the 3 cones. The transverse alignment of the cones or barricades on the closed shoulder may be shifted from the transverse alignment to provide access to the work.
13. Unless otherwise specified in the special provisions, the 2L tangent shown along lane lines shall be used between the L tapers required for each closed traffic lane.
14. Unless otherwise specified in the special provisions, the E5-1 or SC18(CA) and W4-1 signs shall be used as shown.
15. A W7-3aP "NEXT____ MILES" plaque must be used if theshoulder closure extends beyond the distance that can be perceived by road users.

LEGEND

- TRAFFIC CONE
- TRAFFIC CONE (OPTIONAL TAPER)
- TEMPORARY TRAFFIC CONTROL SIGN
- FLASHING ARROW SIGN (FAS)
- FAS SUPPORT OR TRAILER
- PORTABLE FLASHING BEACON

SIGN PANEL SIZE (Min)

A	48" x 48"
B	72" x 60"
C	36" x 30"

STATE OF CALIFORNIA
DEPARTMENT OF TRANSPORTATION

TRAFFIC CONTROL SYSTEM FOR LANE CLOSURE ON FREEWAYS AND EXPRESSWAYS

NO SCALE

RSP T10 DATED APRIL 19, 2013 SUPERSEDES STANDARD PLAN T10 DATED MAY 20, 2011 - PAGE 237 OF THE STANDARD PLANS BOOK DATED 2010.

REVISED STANDARD PLAN RSP T10

2010 REVISED STANDARD PLAN RSP T10

12-18-12

TO ACCOMPANY PLANS DATED 6-22-15

Dist	COUNTY	ROUTE	POST MILES TOTAL PROJECT	SHEET No.	TOTAL SHEETS
10	SJ	4,99	16.0/19.4, 18.5	92	112

REGISTERED CIVIL ENGINEER

April 19, 2013
PLANS APPROVAL DATE

REGISTERED PROFESSIONAL ENGINEER Gurinderpal Bhullar No. C48815 Exp. 9-30-14 CIVIL STATE OF CALIFORNIA

THE STATE OF CALIFORNIA OR ITS OFFICERS OR AGENTS SHALL NOT BE RESPONSIBLE FOR THE ACCURACY OR COMPLETENESS OF SCANNED COPIES OF THIS PLAN SHEET.

NOTES: See Revised Standard Plan RSP T9 for tables.

Use cone spacing X for taper segment, Y for tangent segment or Z for conflict situations, as approriate, per Table 1, unless X, Y, or Z cone spacing is shown on this sheet.

Unless otherwise specified in the special provisions, all temporary warning signs shall have black legend on fluorescent orange background.

California codes are designated by (CA). Otherwise, Federal (MUTCD) codes are shown.

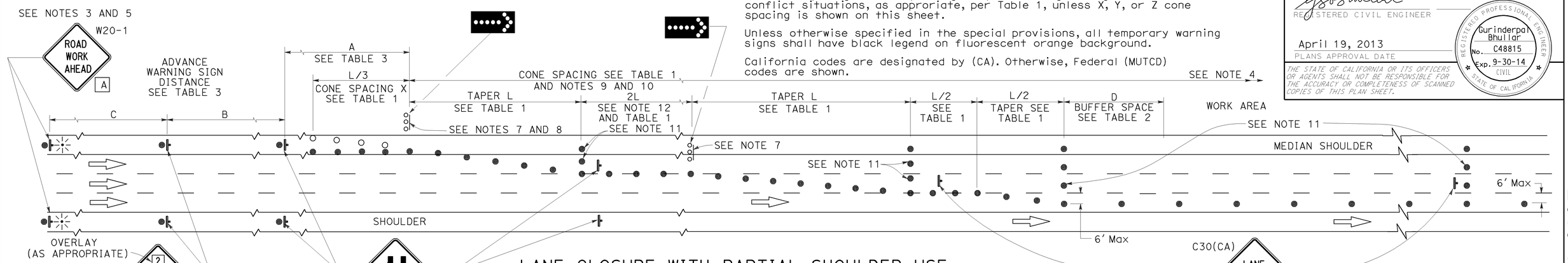

LANE CLOSURE WITH PARTIAL SHOULDER USE

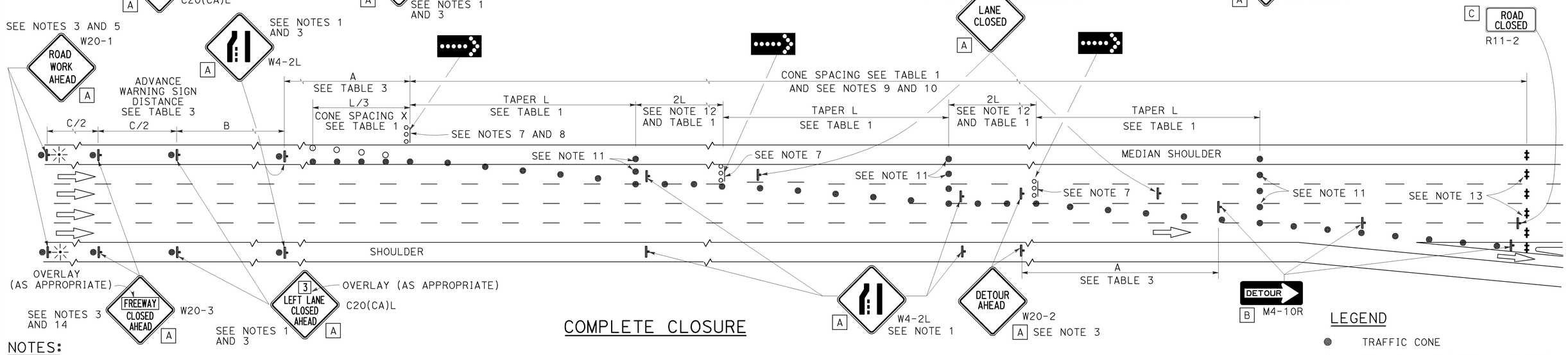

COMPLETE CLOSURE

LEGEND

- TRAFFIC CONE
- TRAFFIC CONE (OPTIONAL TAPER)
- TEMPORARY TRAFFIC CONTROL SIGN
- FLASHING ARROW SIGN (FAS)
- FAS SUPPORT OR TRAILER
- PORTABLE FLASHING BEACON

NOTES:

1. Lane closures on the right side using partial median shoulder as a traffic lane shall conform to the details as shown except that C20(CA)R and W4-2R signs shall be used.
2. At least one person shall be assigned to provide full time maintenance of traffic control devices for lane closures.
3. Each advance warning sign on each side of the roadway shall be equipped with at least two flags for daytime closure. Each flag shall be at least 16" X 16" in size and shall be orange or fluorescent red-orange in color. Flashing beacons shall be placed at the locations indicated for lane closure during hours of darkness.
4. A G20-2 "END ROAD WORK" sign, with minimum size of 48" x 24" as appropriate, shall be placed at the end of the lane closure unless the end of work area is obvious or ends within a larger project's limits.
5. If the W20-1 sign would follow within 2000' of a stationary W20-1 or G20-1 "ROAD WORK NEXT ___ MILES", use a C20(CA) sign for the first advance warning sign.
6. Place a C30(CA) sign every 2000' throughout length of lane closure.
7. One flashing arrow sign for each lane closed. The flashing arrow signs shall be Type I.
8. A minimum 1500' of sight distance shall be provided where possible for vehicles approaching the first flashing arrow sign. Lane closures shall not begin at the top of crest vertical curve or on a horizontal curve.
9. All cones used for lane closures during the hours of darkness shall be fitted with retroreflective bands (or sleeves) as specified in the specifications.
10. Portable delineators, placed at one-half the spacing indicated for traffic cones, may be used instead of cones for daytime closures only.
11. Unless otherwise specified in the special provisions, a minimum of 3 cones shall be placed transversely across each closed lane and shoulder at each location where a taper across a traffic lane ends and every 2000' as shown on the "Lane Closure With Partial Shoulder Use" detail. Two Type II barricades may be used instead of the 3 cones. The transverse alignment of the cones or barricades on the closed shoulder may be shifted from the transverse alignment to provide access to the work.
12. Unless otherwise specified in the special provisions, the 2L tangent shown along lane lines shall be used between the L tapers required for each closed traffic lane.
13. A minimum of Two Type II or III barricades shall be placed across each closed lane and shoulder at the location shown and every 2000' within the complete closure area. Within the complete closure area, the transverse alignment of the barricades on the closed shoulder may be shifted from the transverse alignment to provide access to the work.
14. When specified in the special provisions, a W20-2 "DETOUR AHEAD" sign is to be used in place of the W20-3 "FREEWAY CLOSED AHEAD" sign.

SIGN PANEL SIZE (Min)

A	48" x 48"
B	48" x 18"
C	48" x 30"

STATE OF CALIFORNIA
DEPARTMENT OF TRANSPORTATION

TRAFFIC CONTROL SYSTEM FOR LANE CLOSURES ON FREEWAYS AND EXPRESSWAYS

NO SCALE

RSP T10A DATED APRIL 19, 2013 SUPERSEDES STANDARD PLAN T10A DATED MAY 20, 2011 - PAGE 238 OF THE STANDARD PLANS BOOK DATED 2010.

REVISED STANDARD PLAN RSP T10A

2010 REVISED STANDARD PLAN RSP T10A

12-18-12

Dist	COUNTY	ROUTE	POST MILES TOTAL PROJECT	SHEET No.	TOTAL SHEETS
10	SJ	4,99	16.0/19.4, 18.5	93	112

REGISTERED CIVIL ENGINEER

April 19, 2013
PLANS APPROVAL DATE

REGISTERED PROFESSIONAL ENGINEER Gurinderpal Bhullar No. C48815 Exp. 9-30-14 CIVIL STATE OF CALIFORNIA

THE STATE OF CALIFORNIA OR ITS OFFICERS OR AGENTS SHALL NOT BE RESPONSIBLE FOR THE ACCURACY OR COMPLETENESS OF SCANNED COPIES OF THIS PLAN SHEET.

TO ACCOMPANY PLANS DATED 6-22-15

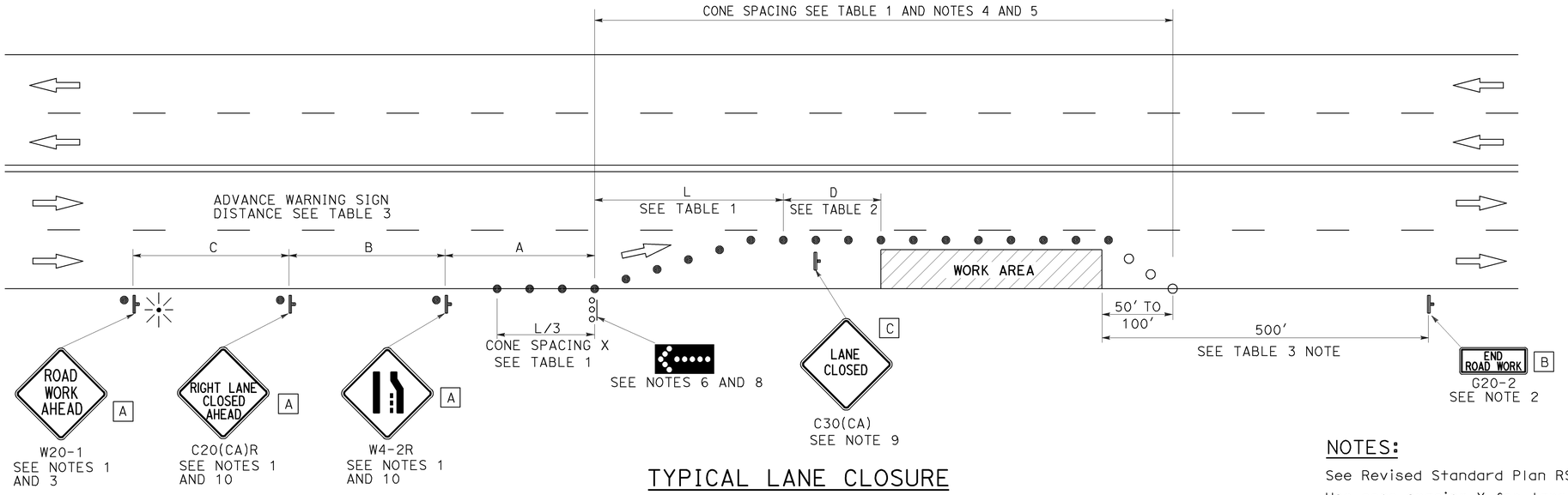

TYPICAL LANE CLOSURE

NOTES:

See Revised Standard Plan RSP T9 for tables.

Use cone spacing X for taper segment, Y for tangent segment or Z for conflict situations, as approriate, per Table 1, unless X, Y, or Z cone spacing is shown on this sheet.

Unless otherwise specified in the special provisions, all temporary warning signs shall have black legend on fluorescent orange background.

California codes are designated by (CA). Otherwise, Federal (MUTCD) codes are shown.

LEGEND

- ● TRAFFIC CONE
- ○ TRAFFIC CONE (OPTIONAL TAPER)
- TEMPORARY TRAFFIC CONTROL SIGN
- FLASHING ARROW SIGN (FAS)
- FAS SUPPORT OR TRAILER
- PORTABLE FLASHING BEACON

SIGN PANEL SIZE (Min)

A	48" x 48"
B	36" x 18"
C	30" x 30"

NOTES:

1. Each advance warning sign shall be equipped with at least two flags for daytime closure. Each flag shall be at least 16" x 16" in size and shall be orange or fluorescent red-orange in color. Flashing beacons shall be placed at the locations indicated for lane closure during hours of darkness.
2. A G20-2 "END ROAD WORK" sign, as appropriate, shall be placed at the end of the lane closure unless the end of work area is obvious, or ends within a larger project's limits.
3. If the W20-1 sign would follow within 2000' of a stationary W20-1 or G20-1 "ROAD WORK NEXT _____ MILES", use a C20(CA) sign for the first advance warning sign.
4. All cones used for lane closures during the hours of darkness shall be fitted with retroreflective bands (or sleeves) as specified in the specifications.
5. Portable delineators, placed at one-half the spacing indicated for traffic cones, may be used instead of cones for daytime closures only.
6. Flashing arrow sign shall be either Type I or Type II.
7. For approach speeds over 50 mph, use the "Traffic Control System for Lane Closure On Freeways And Expressways" plan for lane closure details and requirements.
8. A minimum 1500' of sight distance shall be provided where possible for vehicles approaching the first flashing arrow sign. Lane closures shall not begin at the top of crest vertical curve or on a horizontal curve.
9. Place a C30(CA) sign every 2000' throughout length of lane closure.
10. Median lane closures shall conform to the details as shown except that C20(CA)L and W4-2L signs shall be used.
11. At least one person shall be assigned to provide full time maintenance of traffic control devices for lane closure unless, otherwise directed by the Engineer.

STATE OF CALIFORNIA
DEPARTMENT OF TRANSPORTATION

TRAFFIC CONTROL SYSTEM FOR LANE CLOSURE ON MULTILANE CONVENTIONAL HIGHWAYS

NO SCALE

RSP T11 DATED APRIL 19, 2013 SUPERSEDES STANDARD PLAN T11 DATED MAY 20, 2011 - PAGE 239 OF THE STANDARD PLANS BOOK DATED 2010.

REVISED STANDARD PLAN RSP T11

2010 REVISED STANDARD PLAN RSP T11

4-2-13

Dist	COUNTY	ROUTE	POST MILES TOTAL PROJECT	SHEET No.	TOTAL SHEETS
10	SJ	4,99	16.0/19.4, 18.5	94	112

REGISTERED CIVIL ENGINEER

October 17, 2014
PLANS APPROVAL DATE

REGISTERED PROFESSIONAL ENGINEER Devinder Singh No. C50470 Exp. 6-30-15 CIVIL STATE OF CALIFORNIA

THE STATE OF CALIFORNIA OR ITS OFFICERS OR AGENTS SHALL NOT BE RESPONSIBLE FOR THE ACCURACY OR COMPLETENESS OF SCANNED COPIES OF THIS PLAN SHEET.

TO ACCOMPANY PLANS DATED 6-22-15

2010 REVISED STANDARD PLAN RSP T13

NOTES:

See Revised Standard Plan RSP T9 for tables.

Use cone spacing X for taper segment, Y for tangent segment or Z for conflict situations, as approriate, per Table 1, unless X, Y, or Z cone spacing is shown on this sheet.

Unless otherwise specified in the special provisions, all temporary warning signs shall have black legend on fluorescent orange background.

California codes are designated by (CA). Otherwise, Federal (MUTCD) codes are shown.

TYPICAL LANE CLOSURE WITH REVERSIBLE CONTROL

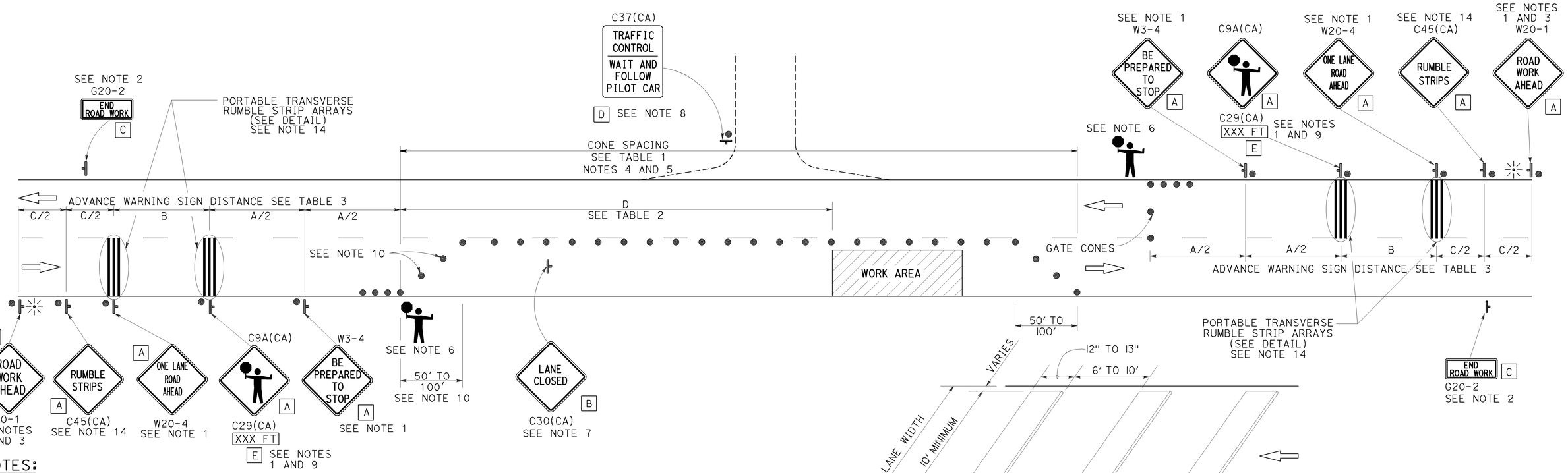

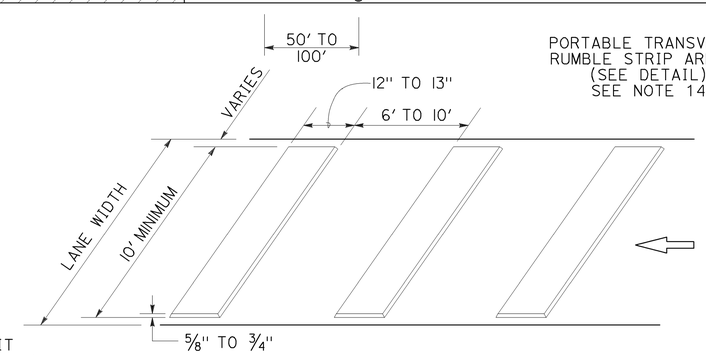

PORTABLE TRANSVERSE RUMBLE STRIP ARRAY DETAIL

NOTES:

1. Each advance warning sign in each direction of travel shall be equipped with at least two flags for daytime closure. Each flag shall be at least 16" x 16" in size and shall be orange or fluorescent red-orange in color. Flashing beacons shall be placed at the locations indicated for lane closure during hours of darkness.
2. A G20-2 "END ROAD WORK" sign, as appropriate, shall be placed at the end of the lane control unless the end of work area is obvious, or ends within a larger project's limits.
3. If the W20-1 sign would follow within 2000' of a stationary W20-1 or G20-1 "ROAD WORK NEXT _____ MILES", use a W20-4 sign for the first advance warning sign.
4. All cones used for lane closures during the hours of darkness shall be fitted with retroreflective bands (or sleeves) as specified in the specifications.
5. Portable delineators, placed at one-half the spacing indicated for traffic cones, may be used instead of cones for daytime closures only.
6. Additional advance flaggers may be required. Flagger should stand in a conspicuous place, be visible to approaching traffic as well as approaching vehicles after the first vehicle has stopped. During the hours of darkness, the flagging-station and flagger shall be illuminated and clearly visible to approaching traffic. The illumination footprint of the lighting on the ground shall be at least 20' in diameter. Place a minimum of four cones at 50' intervals in advance of flagger station as shown.
7. Place C30(CA) "LANE CLOSED" sign at 500' to 1000' intervals throughout extended work areas. They are optional if the work area is visible from the flagger station.
8. When a pilot car is used, place a C37(CA) "TRAFFIC CONTROL-WAIT AND FOLLOW PILOT CAR" sign with black legend on white background at all intersections, driveways and alleys without a flagger within traffic control area. Signs shall be clean and visible at all times. Where traffic can not be effectively self-regulated, at least one flagger shall be used at each intersection within traffic control area.
9. An optional C29(CA) sign may be placed below the C9A(CA) sign.
10. Either traffic cones or barricades shall be placed on the taper. Barricades shall be Type I, II, or III.
11. The color of the portable transverse rumble strips shall be black or orange. Use 2 arrays, each array shall consist of 3 rumble strips.
12. Portable transverse rumble strips shall not be placed on sharp horizontal or vertical curves nor shall they be placed through pedestrian crossings.
13. If the portable transverse rumble strips become out of alignment (skewed) by more than 6 inches, measured from one end to the other, they shall be readjusted to bring the placement back to the original location.
14. Portable transverse rumble strips are not required if any one of the following conditions is satisfied:
    A. Work duration occupies a location for four hours or less
    B. Posted speed limit is below 45 MPH
    C. Work is of emergency nature
    D. Work zone is in snow or icy weather conditions

LEGEND

- TRAFFIC CONE
- TEMPORARY TRAFFIC CONTROL SIGN
- PORTABLE FLASHING BEACON
- FLAGGER

SIGN PANEL SIZE (Min)

A	48" x 48"
B	30" x 30"
C	36" x 18"
D	36" x 42"
E	20" x 7"

STATE OF CALIFORNIA
DEPARTMENT OF TRANSPORTATION

TRAFFIC CONTROL SYSTEM FOR LANE CLOSURE ON TWO LANE CONVENTIONAL HIGHWAYS

NO SCALE

RSP T13 DATED OCTOBER 17, 2014 SUPERSEDES RSP T13 DATED JULY 18, 2014 AND RSP T13 DATED APRIL 19, 2013 AND STANDARD PLAN T13 DATED MAY 20, 2011 - PAGE 241 OF THE STANDARD PLANS BOOK DATED 2010.

REVISED STANDARD PLAN RSP T13

9-26-14

Dist	COUNTY	ROUTE	POST MILES TOTAL PROJECT	SHEET No.	TOTAL SHEETS
10	SJ	4,99	16.0/19.4, 18.5	95	112

REGISTERED CIVIL ENGINEER

July 19, 2013
PLANS APPROVAL DATE

REGISTERED PROFESSIONAL ENGINEER
Stanley P. Johnson
No. C57793
Exp. 3-31-14
CIVIL
STATE OF CALIFORNIA

THE STATE OF CALIFORNIA OR ITS OFFICERS OR AGENTS SHALL NOT BE RESPONSIBLE FOR THE ACCURACY OR COMPLETENESS OF SCANNED COPIES OF THIS PLAN SHEET.

TO ACCOMPANY PLANS DATED 6-22-15

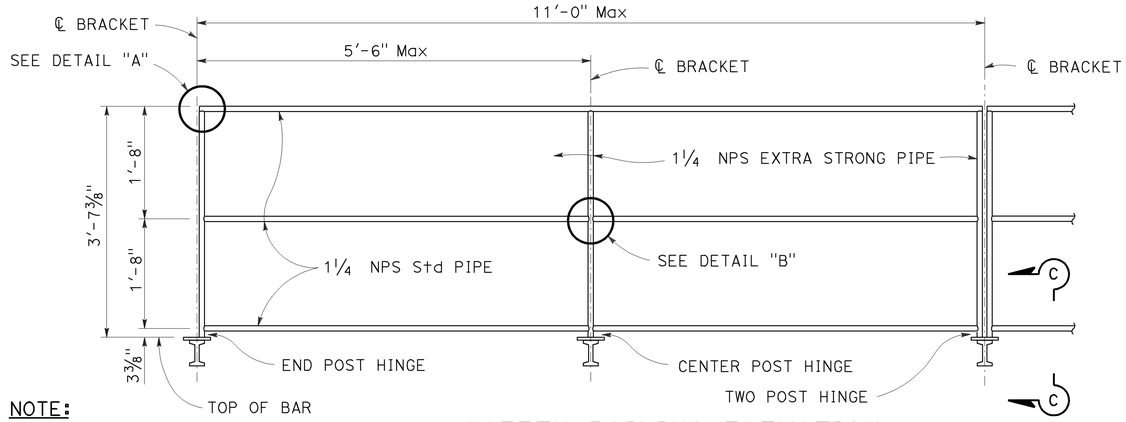

NOTE:
Chain assembly behind (see detail this page)

SAFETY RAILING ELEVATION

NOTE:
See Standard Plans S101 and S105 and S109 for walkway bracket spacing.

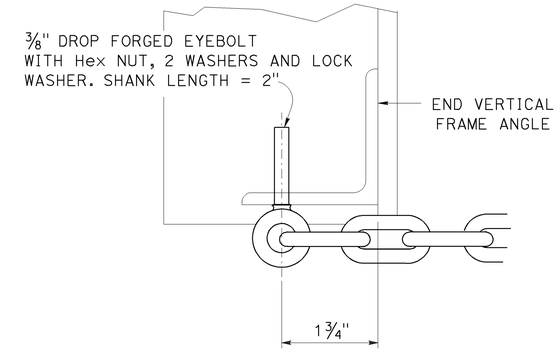

SECTION D-D

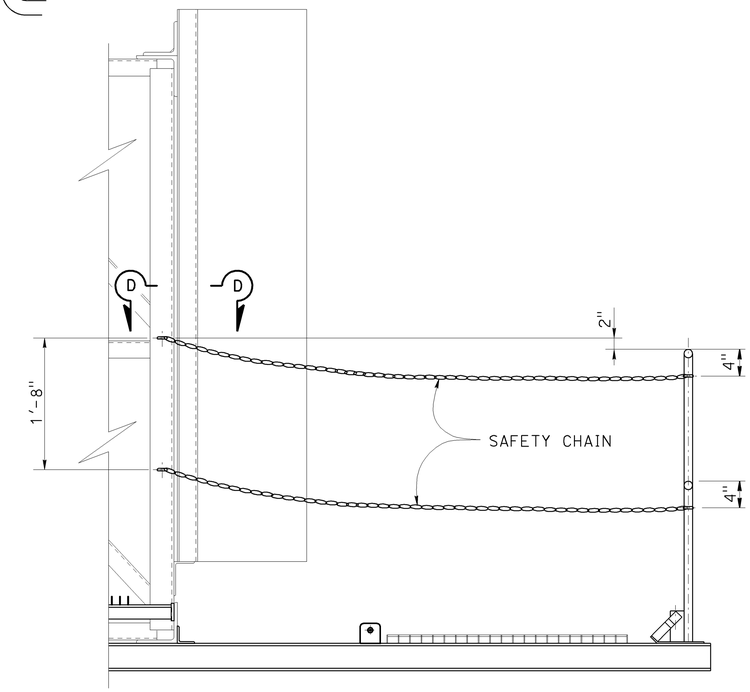

CHAIN ASSEMBLY

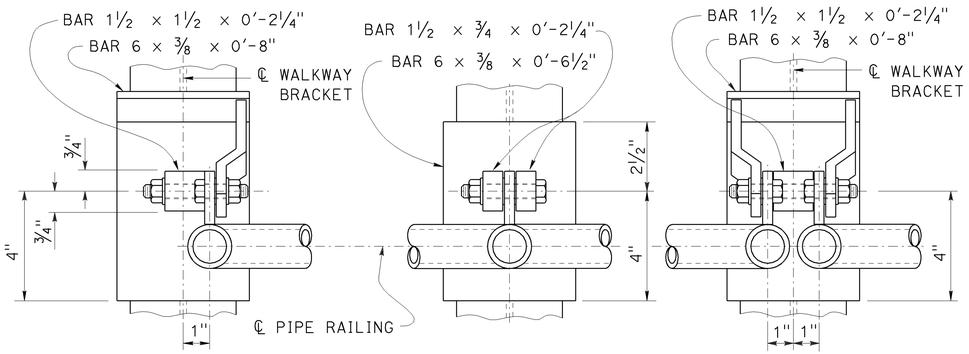

END POST — CENTER POST — TWO POST

WELDED HINGE - PLAN

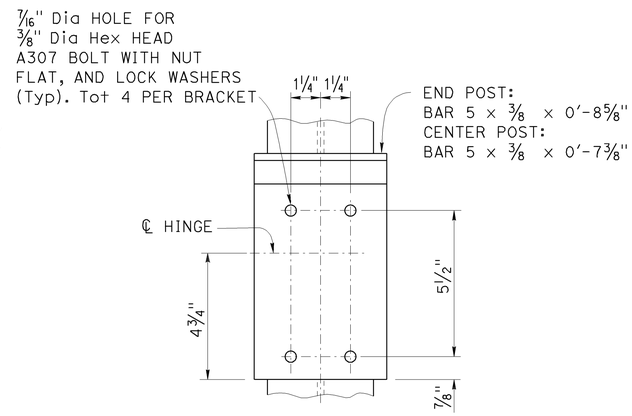

TYPICAL BOLTED (ALTERNATIVE)

HINGED CONNECTION

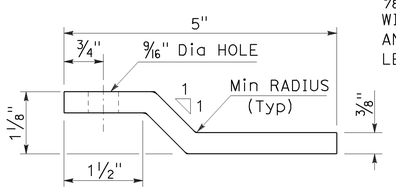

PLAN - KICKER BAR

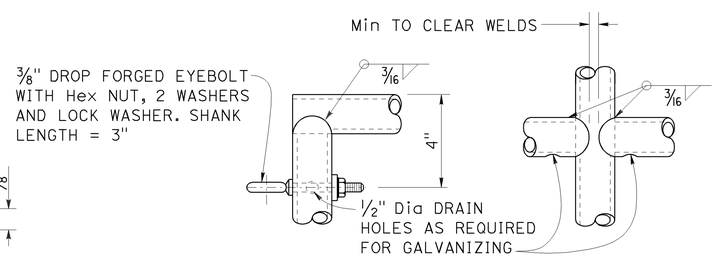

DETAIL "A" — DETAIL "B"

NOTE:
Alternative venting methods may be used if approved by the Engineer.

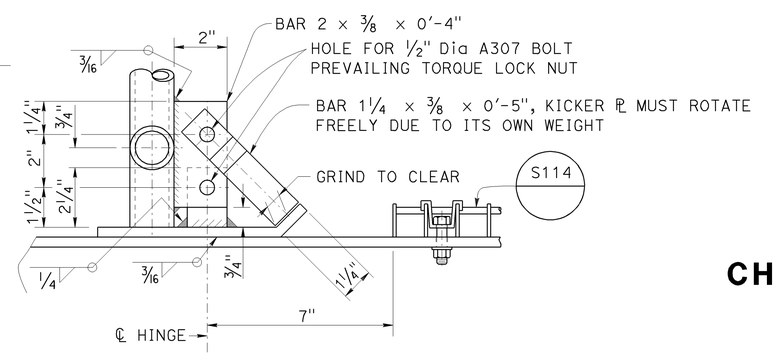

SECTION C-C
ELEVATION VIEW

STATE OF CALIFORNIA
DEPARTMENT OF TRANSPORTATION

OVERHEAD SIGN-TRUSS SINGLE POST TYPE WALKWAY SAFETY RAILING DETAILS CHANGEABLE MESSAGE SIGNS MODEL 500 AND 510

NO SCALE

RSP S140 DATED JULY 19, 2013 SUPERSEDES STANDARD PLAN S140 DATED MAY 20, 2011 - PAGE 422 OF THE STANDARD PLANS BOOK DATED 2010.

REVISED STANDARD PLAN RSP S140

2010 REVISED STANDARD PLAN RSP S140

7-11-13

Dist	COUNTY	ROUTE	POST MILES TOTAL PROJECT	SHEET No.	TOTAL SHEETS
10	SJ	4,99	16.0/19.4, 18.5	96	112

REGISTERED CIVIL ENGINEER

July 19, 2013
PLANS APPROVAL DATE

REGISTERED PROFESSIONAL ENGINEER
Stanley P. Johnson
No. C57793
Exp. 3-31-14
CIVIL
STATE OF CALIFORNIA

THE STATE OF CALIFORNIA OR ITS OFFICERS OR AGENTS SHALL NOT BE RESPONSIBLE FOR THE ACCURACY OR COMPLETENESS OF SCANNED COPIES OF THIS PLAN SHEET.

TO ACCOMPANY PLANS DATED 6-22-15

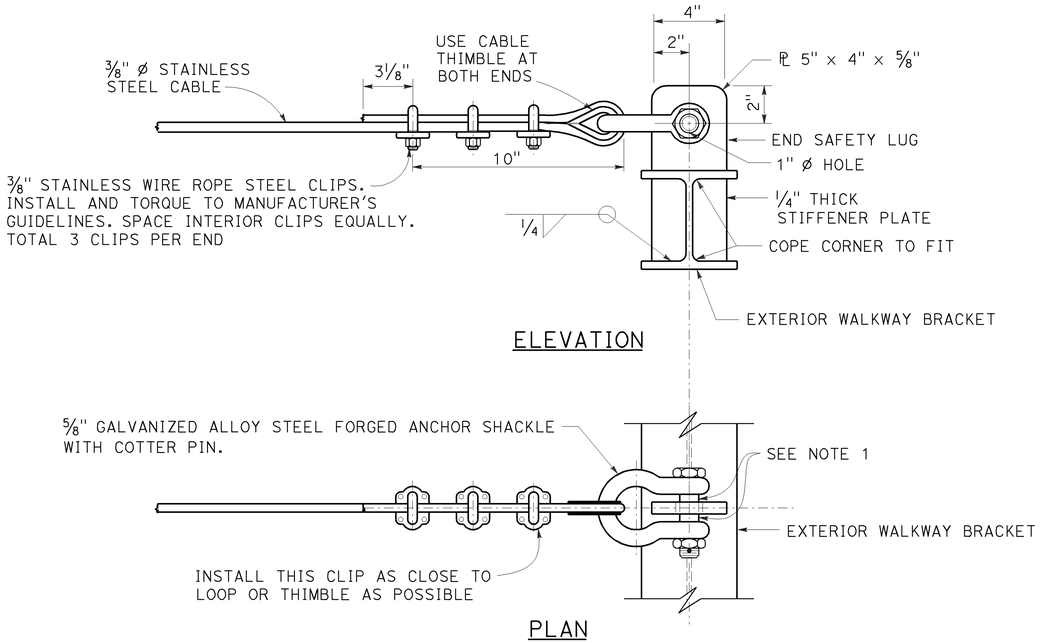

END SAFETY CABLE DETAIL

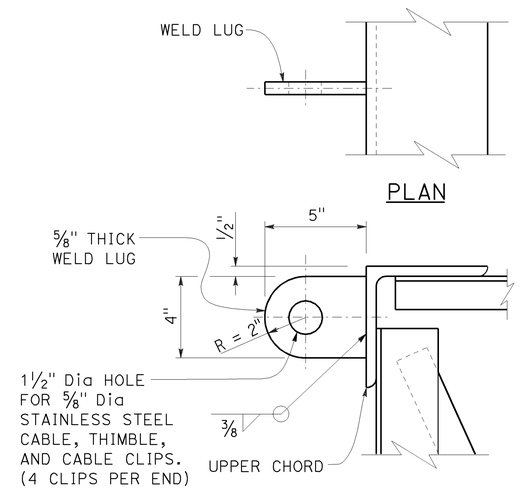

BACKSIDE WELD LUG DETAIL

NOTE: Backside weld lug shall be installed only for projects requiring backside walkways.

NOTES:

1. Place an equal amount of washers on each side to align cable with end lug without restricting shakle bolt rotation or contacting cable.
2. For walkway grating details, see Standard Plan S114.

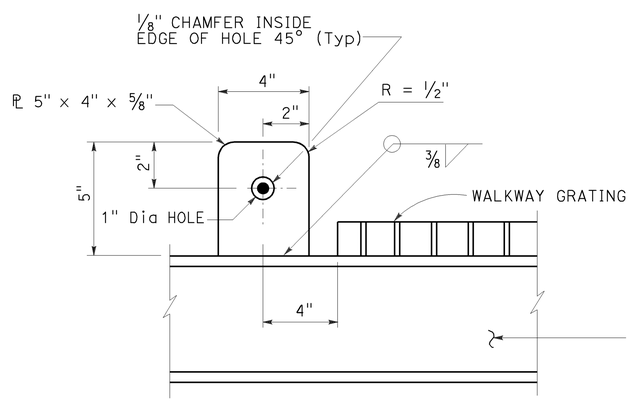

INTERIOR SAFETY LUG DETAIL

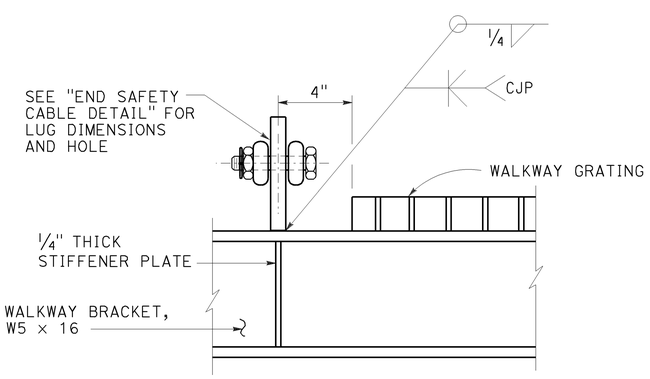

END SAFETY LUG DETAIL

STATE OF CALIFORNIA
DEPARTMENT OF TRANSPORTATION

OVERHEAD SIGN-TRUSS SINGLE POST TYPE SAFETY CABLE ANCHORAGE DETAILS CHANGEABLE MESSAGE SIGNS MODEL 500 AND 510

NO SCALE

RSP S141 DATED JULY 19, 2013 SUPERSEDES STANDARD PLAN S141
DATED MAY 20, 2011 - PAGE 423 OF THE STANDARD PLANS BOOK DATED 2010.

REVISED STANDARD PLAN RSP S141

2010 REVISED STANDARD PLAN RSP S141

7-11-13

Dist	COUNTY	ROUTE	POST MILES TOTAL PROJECT	SHEET No.	TOTAL SHEETS
10	SJ	4,99	16.0/19.4, 18.5	97	112

Theresa Gabriel
REGISTERED ELECTRICAL ENGINEER

July 19, 2013
PLANS APPROVAL DATE

REGISTERED PROFESSIONAL ENGINEER
Theresa Aziz Gabriel
No. E15129
Exp. 6-30-14
ELECTRICAL
STATE OF CALIFORNIA

THE STATE OF CALIFORNIA OR ITS OFFICERS OR AGENTS SHALL NOT BE RESPONSIBLE FOR THE ACCURACY OR COMPLETENESS OF SCANNED COPIES OF THIS PLAN SHEET.

TO ACCOMPANY PLANS DATED 6-22-15

LEGEND:

- AB — ABANDON. IF APPLIED TO CONDUIT, REMOVE CONDUCTORS
- BC — INSTALL PULL BOX IN EXISTING CONDUIT RUN
- BP — PEDESTRIAN BARRICADE, TYPE AS INDICATED ON PLAN
- CB — INSTALL CONDUIT INTO EXISTING PULL BOX
- CC — CONNECT NEW AND EXISTING CONDUIT. REMOVE EXISTING CONDUCTORS AND INSTALL CONDUCTORS AS INDICATED
- CF — CONDUIT TO REMAIN FOR FUTURE USE. REMOVE CONDUCTORS. INSTALL PULL TAPE
- DH — DETECTOR HANDHOLE
- FA — FOUNDATION TO BE ABANDONED
- IS — INSTALL SIGN ON SIGNAL MAST ARM
- NS — NO SLIP BASE ON STANDARD
- PEC — PHOTOELECTRIC CONTROL
- PEU — PHOTOELECTRIC UNIT
- RC — EQUIPMENT OR MATERIAL TO BE REMOVED AND BECOME THE PROPERTY OF THE CONTRACTOR
- RE — REMOVE ELECTROLIER, FUSES AND BALLAST. TAPE ENDS OF CONDUCTORS
- RL — RELOCATE EQUIPMENT
- RR — REMOVE AND REUSE EQUIPMENT
- RS — REMOVE AND SALVAGE EQUIPMENT
- SC — SPLICE NEW TO EXISTING CONDUCTORS
- SD — SERVICE DISCONNECT
- TSP — TELEPHONE SERVICE POINT

ABBREVIATIONS

APS	ACCESSIBLE PEDESTRIAN SIGNAL
BBS	BATTERY BACKUP SYSTEM
BC	BOLT CIRCLE
BPB	BICYCLE PUSH BUTTON
C	CONDUIT
CB	CIRCUIT BREAKER
CCTV	CLOSED CIRCUIT TELEVISION
Ckt	CIRCUIT
CMS	CHANGEABLE MESSAGE SIGN
Ctid	CALTRANS IDENTIFICATION
Comm	COMMUNICATION
DLC	LOOP DETECTOR LEAD-IN CABLE
EMS	EXTINGUISHABLE MESSAGE SIGN
EVUC	EMERGENCY VEHICLE UNIT CABLE
EVUD	EMERGENCY VEHICLE UNIT DETECTOR
FB	FLASHING BEACON
FBCA	FLASHING BEACON CONTROL ASSEMBLY
FBS	FLASHING BEACON WITH SLIP BASE
FO	FIBER OPTIC
G	EQUIPMENT GROUNDING CONDUCTOR
GB	GROUND BUS
GFCI	GROUND FAULT CIRCUIT INTERRUPTER
HAR	HIGHWAY ADVISORY RADIO
Hex	HEXAGONAL
HPS	HIGH PRESSURE SODIUM
IISNS	INTERNALLY ILLUMINATED STREET NAME SIGN
ISL	INDUCTION SIGN LIGHTING
LED	LIGHT EMITTING DIODE
LMA	LUMINAIRE MAST ARM
LPS	LOW PRESSURE SODIUM
Ltg	LIGHTING
Lum	LUMINAIRE
M	METERED
MAT	MAST ARM MOUNTING TOP ATTACHMENT
MAS	MAST ARM MOUNTING SIDE ATTACHMENT
M/M	MULTIPLE TO MULTIPLE TRANSFORMER
Mtg	MOUNTING
MV	MERCURY VAPOR LIGHTING FIXTURE
MVDS	MICROWAVE VEHICLE DETECTION SYSTEM
N	NEUTRAL (GROUNDED CONDUCTOR)
NB	NEUTRAL BUS
NC	NORMALLY CLOSE
NO	NORMALLY OPEN
P	CIRCUIT BREAKER'S POLE
PB	PULL BOX
PBA	PUSH BUTTON ASSEMBLY
PEC	PHOTOELECTRIC CONTROL
Ped	PEDESTRIAN
PEU	PHOTOELECTRIC UNIT
PT	CONDUIT WITH PULL TAPE
RE	RELOCATED EQUIPMENT
RM	RAMP METERING
RWIS	ROADSIDE WEATHER INFORMATION SYSTEM
SB	SLIP BASE
SIC	SIGNAL INTERCONNECT CABLE
Sig	SIGNAL
SMA	SIGNAL MAST ARM
SNS	STREET NAME SIGN
SP	SERVICE POINT
TDC	TELEPHONE DEMARCATION CABINET
TMS	TRAFFIC MONITORING STATION
TOS	TRAFFIC OPERATIONS SYSTEM
Veh	VEHICLE
VIVDS	VIDEO IMAGE VEHICLE DETECTION SYSTEM
WIM	WEIGH-IN-MOTION
Xfmr	TRANSFORMER

SOFFIT AND WALL MOUNTED LUMINAIRES

- PENDANT, 70 W HPS UNLESS OTHERWISE SPECIFIED
- FLUSH, 70 W HPS UNLESS OTHERWISE SPECIFIED
- WALL SURFACE, 70 W HPS UNLESS OTHERWISE SPECIFIED
- EXISTING SOFFIT OR WALL LUMINAIRE TO REMAIN UNMODIFIED
- EXISTING SOFFIT OR WALL LUMINAIRE TO BE MODIFIED AS SPECIFIED

NOTE:
Arrow indicates "street side" of luminaire.

COMMONLY USED SYMBOLS FOR UNITED STATES CUSTOMARY UNITS OF MEASUREMENT:

SYMBOL USED	DEFINITIONS
Ω	OHMS
min	MINUTE
s	SECOND
bps	BITS PER SECOND
Bps	BYTES PER SECOND
A	AMPERE
V	VOLT
V(dc)	VOLT (DIRECT CURRENT)
V(ac)	VOLT (ALTERNATING CURRENT)
FC	FOOT - CANDLE
W	WATTS
VA	VOLT-AMPERE
M	MEGA
k	KILO
m	MILLI
μ	MICRO
P	PICO
Hz	HERTZ

MISCELLANEOUS ELECTROLIERS

NEW	EXISTING	
		LUMINAIRE ON WOOD POLE
		NON-STANDARD ELECTROLIER (SEE PROJECT NOTES OR PROJECT PLANS)
		CITY ELECTROLIER
		ELECTROLIER FOUNDATION (FUTURE INSTALLATION)

NOTES:

1. HPS luminaires shall be 310 W HPS when installed on Type 21, 21D, 30, 31 and 32 Standards, unless otherwise specified. HPS luminaires shall be 200 W when installed on other type standards or poles, unless otherwise specified.
2. LED luminaires shall be 235 W when installed on Type 21, 21D, 30, 31 and 32 Standards, unless otherwise specified. LED luminaires shall be 165 W when installed on other type standards or poles, unless otherwise specified.
3. Luminaires shall be the cutoff type, ANSI Type III medium cutoff lighting distribution, unless otherwise specified.

STANDARD ELECTROLIER

NEW	EXISTING	STANDARD TYPE
		15
		15D
		15 STRUCTURE
		15D STRUCTURE
		21
		21D
		21 STRUCTURE
		21D STRUCTURE
		30
		31
		32

STATE OF CALIFORNIA
DEPARTMENT OF TRANSPORTATION

ELECTRICAL SYSTEMS (LEGEND AND ABBREVIATIONS)

NO SCALE

RSP ES-1A DATED JULY 19, 2013 SUPERSEDES STANDARD PLAN ES-1A DATED MAY 20, 2011 - PAGE 425 OF THE STANDARD PLANS BOOK DATED 2010.

REVISED STANDARD PLAN RSP ES-1A

2010 REVISED STANDARD PLAN RSP ES-1A

7-15-13

Dist	COUNTY	ROUTE	POST MILES TOTAL PROJECT	SHEET No.	TOTAL SHEETS
10	SJ	4,99	16.0/19.4, 18.5	98	112

Theresa Gabriel
REGISTERED ELECTRICAL ENGINEER

July 19, 2013
PLANS APPROVAL DATE

REGISTERED PROFESSIONAL ENGINEER Theresa Aziz Gabriel No. E15129 Exp. 6-30-14 ELECTRICAL STATE OF CALIFORNIA

THE STATE OF CALIFORNIA OR ITS OFFICERS OR AGENTS SHALL NOT BE RESPONSIBLE FOR THE ACCURACY OR COMPLETENESS OF SCANNED COPIES OF THIS PLAN SHEET.

TO ACCOMPANY PLANS DATED 6-22-15

CONDUIT

NEW	EXISTING	
		LIGHTING CONDUIT, UNLESS OTHERWISE INDICATED OR NOTED
		TRAFFIC SIGNAL CONDUIT
C	c	COMMUNICATION CONDUIT
T	t	TELEPHONE CONDUIT
F	f	FIRE ALARM CONDUIT
FO	fo	FIBER OPTIC CONDUIT
		CONDUIT TERMINATION
R	r	CONDUIT RISER ATTACHED TO THE STRUCTURE OR SERVICE POLE

SERVICE EQUIPMENT

NEW	EXISTING	
OH	oh	OVERHEAD LINES
U	U	WOOD POLE, "U" INDICATES UTILITY OWNED
		POLE GUY WITH ANCHOR
		UTILITY TRANSFORMER - GROUND MOUNTED
III	III	SERVICE EQUIPMENT ENCLOSURE TYPE. DOOR INDICATES FRONT OF ENCLOSURE
T	t	TELEPHONE DEMARCATION CABINET

POLE-MOUNTED SERVICE DESIGNATION

TYPE H SERVICE, 28'-10" — TYPE OF INSTALLATION AND POLE HEIGHT ABOVE GRADE

FLASHING BEACON

NEW	EXISTING	
R	R	FLASHING BEACON (ONE VEHICLE SIGNAL HEAD WITH BACKPLATE AND VISOR) "R" INDICATES RED INDICATION, "Y" INDICATES YELLOW INDICATION
Y Y	Y Y	FLASHING BEACON WITH TYPE 15-FBS STANDARD AND A SIGN.
R R	R R	FLASHING BEACON WITH TYPES 9, 9A OR 9B SIGN UNLESS OTHERWISE SPECIFIED OR INDICATED

SIGNAL EQUIPMENT

NEW	EXISTING	
C	C	PEDESTRIAN SIGNAL HEAD "C" INDICATES COUNTDOWN PEDESTRIAN HEAD
		PUSH BUTTON ASSEMBLY POST
		PEDESTRIAN BARRICADE
		VEHICLE SIGNAL HEAD (WITH BACKPLATE AND 3-SECTIONS: RED, YELLOW AND GREEN)
		VEHICLE SIGNAL HEAD WITH ANGLE VISOR
PV	PV	MODIFICATIONS OF BASIC SYMBOL: "L" INDICATES ALL NON-ARROW SECTIONS LOUVERED "LG" INDICATES LOUVERED GREEN SECTION ONLY "PV" INDICATES ALL 12" SECTIONS PROGRAMMED VISIBILITY "8" INDICATES ALL 8" SECTIONS (ONLY WHEN SPECIFIED)
		VEHICLE SIGNAL HEAD CONSISTING OF RED, YELLOW AND GREEN LEFT ARROW SECTIONS
		VEHICLE SIGNAL HEAD CONSISTING OF RED AND YELLOW SECTIONS WITH AN UP GREEN ARROW SECTION
		VEHICLE SIGNAL HEAD (5 SECTION) CONSISTING OF RED, YELLOW AND GREEN SECTIONS WITH YELLOW AND GREEN RIGHT ARROW SECTIONS
		TYPE 15TS STANDARD WITH VEHICLE SIGNAL HEAD AND LUMINAIRE
		TYPE 21TS STANDARD WITH VEHICLE SIGNAL HEAD AND LUMINAIRE
		STANDARD WITH LUMINAIRE AND SIGNAL MAST ARMS AND ATTACHED VEHICLE SIGNAL HEADS
		TYPE 1 STANDARD WITH ATTACHED VEHICLE SIGNAL HEADS
		STANDARD WITH A SIGNAL MAST ARM, ATTACHED VEHICLE SIGNAL HEADS AND INTERNALLY ILLUMINATED STREET NAME SIGN
		CONTROLLER ASSEMBLY. DOOR INDICATES FRONT OF CABINET

SIGNAL EQUIPMENT Cont

NEW	EXISTING	
		GUARD POST
		TYPE 1 STANDARD WITH RAMP METERING SIGN
		OPTICAL DETECTOR FOR THE EMERGENCY VEHICLE DETECTION SYSTEM

NOTES:

1. All signal sections shall be 12" unless shown otherwise.
2. Signal heads shall be provided with backplates unless shown otherwise.

ILLUMINATED OVERHEAD SIGN

NEW	EXISTING	
		SINGLE POST, SINGLE ILLUMINATED SIGN, BALANCED BUTTERFLY
		SINGLE POST, DOUBLE ILLUMINATED SIGN, BALANCED BUTTERFLY
		SINGLE POST, SINGLE ILLUMINATED SIGN, FULL CANTILEVER
		DOUBLE POST, SINGLE ILLUMINATED SIGN
		SINGLE ILLUMINATED SIGN MOUNTED ON STRUCTURE
		DOUBLE POST, SINGLE ILLUMINATED SIGN WITH ELECTROLIER

STATE OF CALIFORNIA
DEPARTMENT OF TRANSPORTATION

ELECTRICAL SYSTEMS (LEGEND AND ABBREVIATIONS)

NO SCALE

RSP ES-1B DATED JULY 19, 2013 SUPERSEDES STANDARD PLAN ES-1B DATED MAY 20, 2011 - PAGE 426 OF THE STANDARD PLANS BOOK DATED 2010.

REVISED STANDARD PLAN RSP ES-1B

2010 REVISED STANDARD PLAN RSP ES-1B

7-15-13

Dist	COUNTY	ROUTE	POST MILES TOTAL PROJECT	SHEET No.	TOTAL SHEETS
10	SJ	4,99	16.0/19.4, 18.5	99	112

Theresa Gabriel
REGISTERED ELECTRICAL ENGINEER

July 19, 2013
PLANS APPROVAL DATE

REGISTERED PROFESSIONAL ENGINEER
Theresa Aziz Gabriel
No. E15129
Exp. 6-30-14
ELECTRICAL
STATE OF CALIFORNIA

THE STATE OF CALIFORNIA OR ITS OFFICERS OR AGENTS SHALL NOT BE RESPONSIBLE FOR THE ACCURACY OR COMPLETENESS OF SCANNED COPIES OF THIS PLAN SHEET.

TO ACCOMPANY PLANS DATED 6-22-15

2010 REVISED STANDARD PLAN RSP ES-1C

EQUIPMENT IDENTIFICATION

ILLUMINATED SIGN IDENTIFICATION NUMBER:

SIGN No. 12345

10 ISL SCI 1.0

- SIGN NUMBER - PLACE ON POST OR STRUCTURE
- TRANSFORMER RATING (kVA)
- LIGHTING CONTROL TYPE
- NUMBER AND TYPE OF FIXTURES

DO NOT PLACE ON STANDARD OR STRUCTURE

ELECTROLIER OR EQUIPMENT IDENTIFICATION NUMBER:

12345 - 15'-0"

- MAST ARM LENGTH, IF SHOWN. DO NOT PLACE ON STANDARD OR STRUCTURE
- EQUIPMENT NUMBER - PLACE ON STANDARD OR STRUCTURE. EXISTING EQUIPMENT NUMBERS ARE SHOWN IN PARENTHESIS

CONDUIT AND CONDUCTOR IDENTIFICATION:

1½"C, 2#10, 15#14, 2 DLC, 12P#18

- PAIR
- NUMBER AND SIZE OF CONDUCTORS AND CABLES
- SIZE OF CONDUIT IN INCHES

ø1, ø2, ø2P, etc.	TRAFFIC PHASE IDENTIFICATION FOR SIGNAL FACES, DETECTORS AND PHASE DIAGRAMS
1 2 3	LEGEND NUMBERS
A B C	EQUIPMENT, SIGNAL POLES, INSTALLATION OR ITEMS
1 2 3	CONDUIT RUN NUMBERS

SIGNAL AND LIGHTING STANDARD (TYPICAL DESIGNATION):

19A - 3 - 100

- WIND VELOCITY = 100 mph
- CASE 3 ARM LOADING
- STANDARD TYPE
- STANDARD PLAN SHEET NUMBER
- DETAIL, NUMBER, SECTION, TYPE OR ELEVATION

MISCELLANEOUS EQUIPMENT

NEW	EXISTING	
CMS	cms	CHANGEABLE MESSAGE SIGN
		CLOSED CIRCUIT TELEVISION CAMERA
		HIGHWAY ADVISORY RADIO POLE AND ANTENNA
EMS	ems	EXTINGUISHABLE MESSAGE SIGN
M V	m v	DETECTION DEVICE M = MICROWAVE SENSOR V = VIDEO IMAGE SENSOR

WIRING DIAGRAM LEGEND

----	EXTERNAL CONDUCTOR
	CONDUCTOR OR BUS
	TIE POINT
	CONTACTOR COIL
	CONTACTOR, NO CONTACT
	TERMINAL BLOCKS
	CONTACTOR, NC CONTACT
	ENCLOSURE BOND
	GROUNDING ELECTRODE
	CIRCUIT BREAKER
	RECEPTACLE

PULL BOXES

NEW	EXISTING	
		PULL BOX, No. 5 UNLESS OTHERWISE INDICATED OR NOTED
3	9A(21)	PULL BOX, ADDITIONAL DESIGNATIONS OR DESCRIPTIONS

3 No. 3½ PULL BOX
5 No. 5 PULL BOX
6 No. 6 PULL BOX
7 No. 7 (CEILING PULL BOX)
8 No. 8 (PENDANT SOFFIT PULL BOX)
9 No. 9 PULL BOX
9A No. 9A PULL BOX

(C) COMMUNICATIONS PULL BOX
(E) PULL BOX WITH EXTENSION
(S) SPRINKLER CONTROL PULL BOX
(21) ANCHOR BOLTS AND CONDUIT FOR FUTURE INSTALLATION OF TYPE 21 STANDARD
(T) TRAFFIC PULL BOX

VEHICLE DETECTORS

5 J 9 U

- VEHICLE DETECTOR DESIGNATION
- U = UPPER
  L = LOWER
- SLOT NUMBER IN INPUT FILE
- INPUT FILE (I OR J)
- PHASE

NEW	EXISTING	
		TYPE A DETECTOR LOOP. OUTLINE OF SAWCUT SHOWN
		TYPE B DETECTOR LOOP. OUTLINE OF SAWCUT SHOWN
		TYPE C DETECTOR LOOP. OUTLINE OF SAWCUT SHOWN
		TYPE D DETECTOR LOOP. OUTLINE OF SAWCUT SHOWN
		TYPE E DETECTOR LOOP. OUTLINE OF SAWCUT SHOWN
		TYPE Q DETECTOR LOOP. OUTLINE OF SAWCUT SHOWN
		MAGNETIC DETECTOR
DH	dh	DETECTOR HANDHOLE
		MICROWAVE OR VIDEO DETECTION ZONE

STATE OF CALIFORNIA
DEPARTMENT OF TRANSPORTATION

ELECTRICAL SYSTEMS (LEGEND AND ABBREVIATIONS)

NO SCALE

RSP ES-1C DATED JULY 19, 2013 SUPERSEDES STANDARD PLAN ES-1C DATED MAY 20, 2011 - PAGE 427 OF THE STANDARD PLANS BOOK DATED 2010.

REVISED STANDARD PLAN RSP ES-1C

Dist	COUNTY	ROUTE	POST MILES TOTAL PROJECT	SHEET No.	TOTAL SHEETS
10	SJ	4,99	16.0/19.4, 18.5	100	112

Theresa Gabriel
REGISTERED ELECTRICAL ENGINEER

July 19, 2013
PLANS APPROVAL DATE

REGISTERED PROFESSIONAL ENGINEER
Theresa Aziz Gabriel
No. E15129
Exp. 6-30-14
ELECTRICAL
STATE OF CALIFORNIA

THE STATE OF CALIFORNIA OR ITS OFFICERS OR AGENTS SHALL NOT BE RESPONSIBLE FOR THE ACCURACY OR COMPLETENESS OF SCANNED COPIES OF THIS PLAN SHEET.

TO ACCOMPANY PLANS DATED 6-22-15

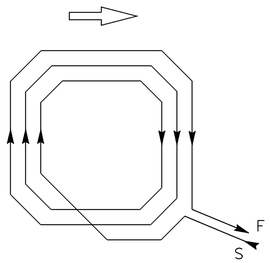

WINDING DETAIL

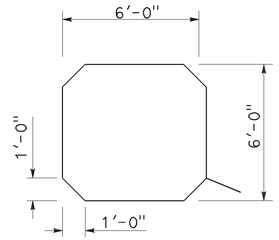

SAWCUT DETAIL

TYPE A LOOP DETECTOR CONFIGURATION

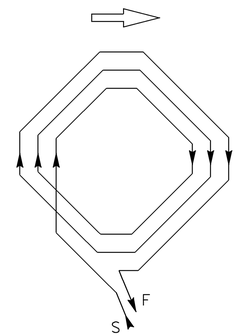

WINDING DETAIL

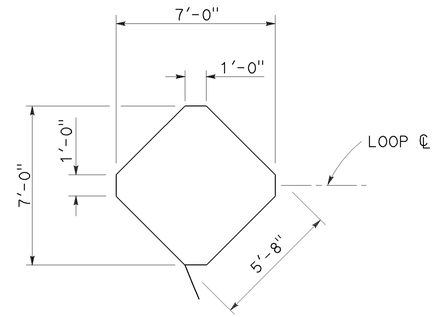

SAWCUT DETAIL

TYPE B LOOP DETECTOR CONFIGURATION

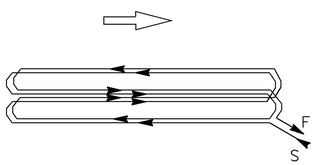

WINDING DETAIL

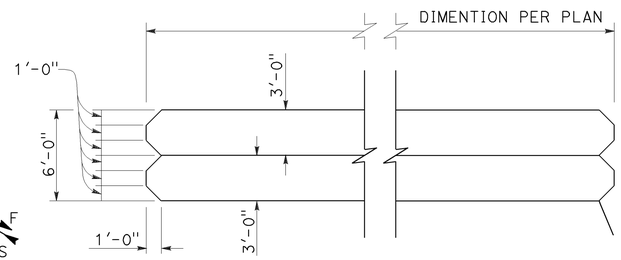

SAWCUT DETAIL

TYPE C LOOP DETECTOR CONFIGURATION

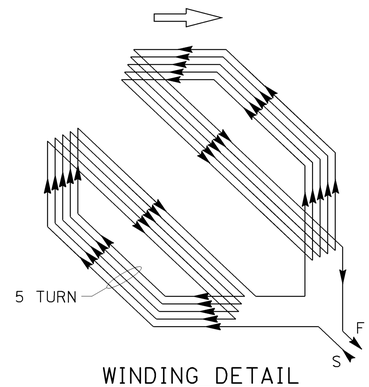

WINDING DETAIL

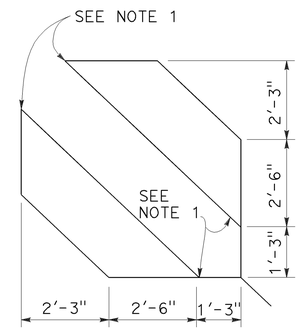

SAWCUT DETAIL

TYPE D LOOP DETECTOR CONFIGURATION

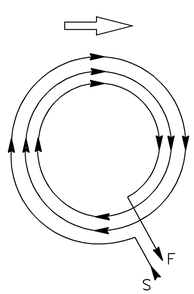

WINDING DETAIL

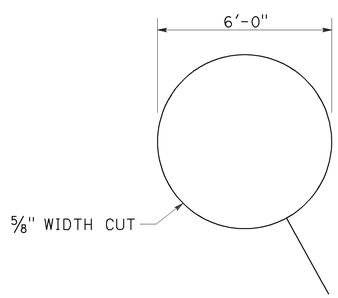

SAWCUT DETAIL

TYPE E LOOP DETECTOR CONFIGURATION

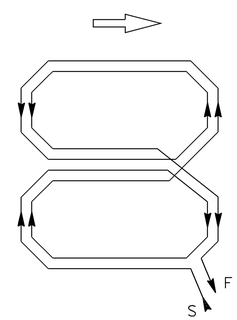

WINDING DETAIL

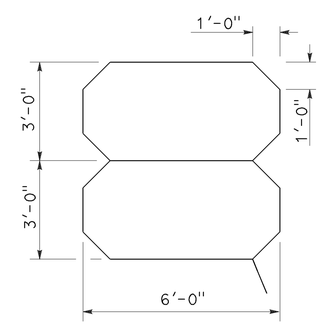

SAWCUT DETAIL

TYPE Q LOOP DETECTOR CONFIGURATION

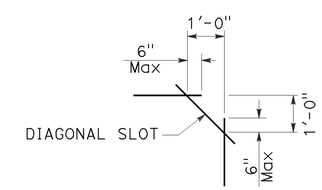

PLAN VIEW OF DIAGONAL SLOT AT CORNERS

NOTES:

1. Round corners of acute angle sawcuts to prevent damage to conductors.
2. Typical distance separating loops from edge to edge is 10' for Type A, B, D and E installation in single lane.

STATE OF CALIFORNIA
DEPARTMENT OF TRANSPORTATION

ELECTRICAL SYSTEMS (DETECTORS)

NO SCALE

RSP ES-5B DATED JULY 19, 2013 SUPERSEDES STANDARD PLAN ES-5B DATED MAY 20, 2011 - PAGE 449 OF THE STANDARD PLANS BOOK DATED 2010.

REVISED STANDARD PLAN RSP ES-5B

2010 REVISED STANDARD PLAN RSP ES-5B

7-9-13

Dist	COUNTY	ROUTE	POST MILES TOTAL PROJECT	SHEET No.	TOTAL SHEETS
10	SJ	4,99	16.0/19.4, 18.5	101	112

Theresa Gabriel
REGISTERED ELECTRICAL ENGINEER

July 19, 2013
PLANS APPROVAL DATE

REGISTERED PROFESSIONAL ENGINEER Theresa Aziz Gabriel No. E15129 Exp. 6-30-14 ELECTRICAL STATE OF CALIFORNIA

THE STATE OF CALIFORNIA OR ITS OFFICERS OR AGENTS SHALL NOT BE RESPONSIBLE FOR THE ACCURACY OR COMPLETENESS OF SCANNED COPIES OF THIS PLAN SHEET.

TO ACCOMPANY PLANS DATED 6-22-15

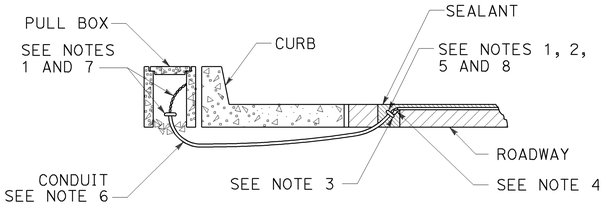

TYPE A
CURB TERMINATION DETAIL

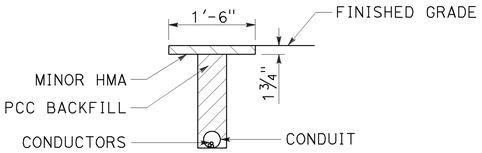

"T" TRENCH
DETAIL T

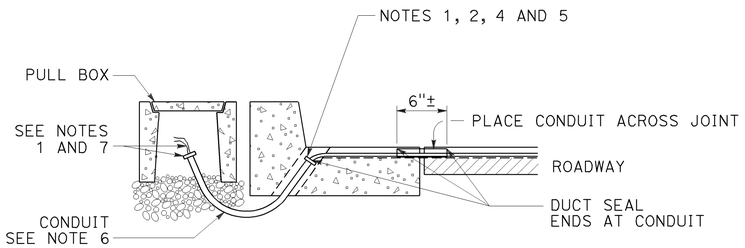

CROSS SECTION

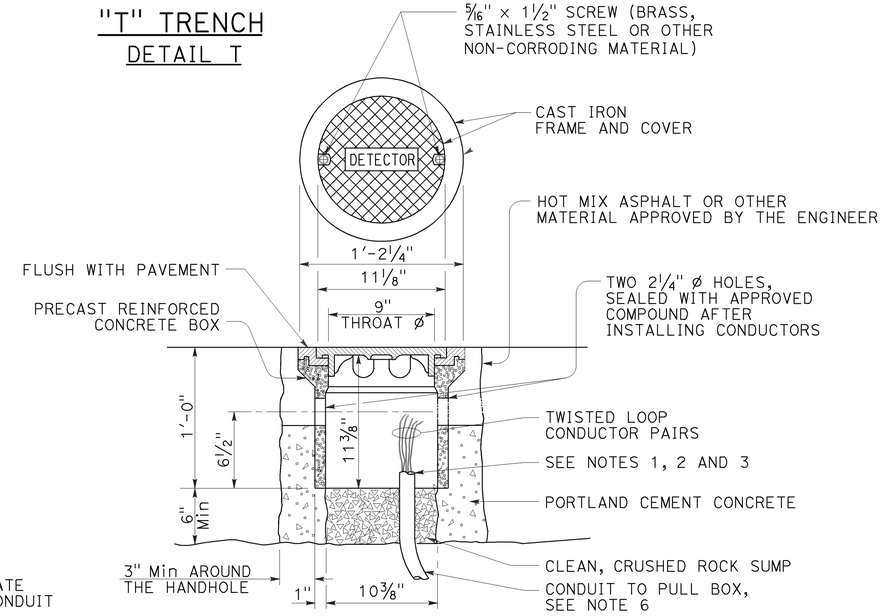

DETECTOR HANDHOLE DETAIL

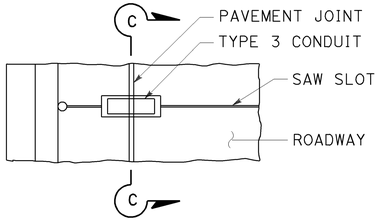

PLAN VIEW

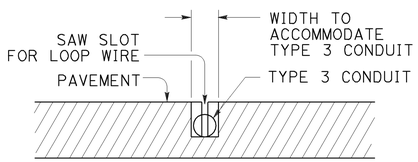

SECTION C-C

TYPE B
CURB TERMINATION DETAIL

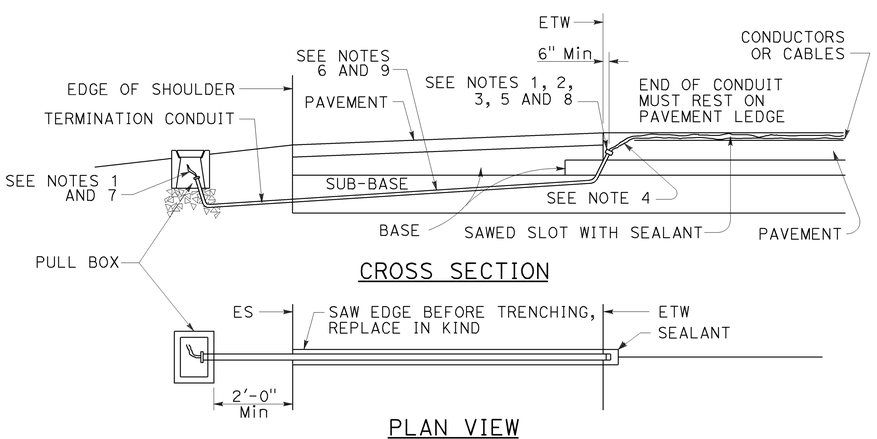

CROSS SECTION

PLAN VIEW

SHOULDER TERMINATION DETAILS

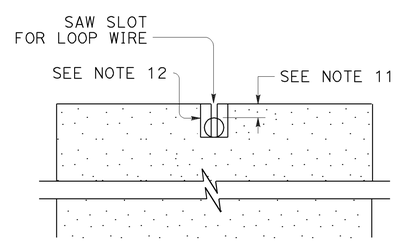

SECTION A-A

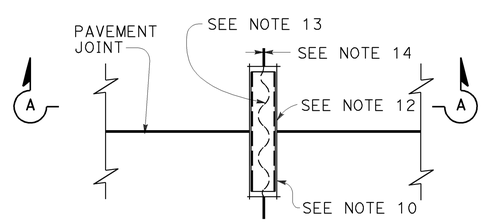

PLAN VIEW

TYPICAL LOOP LEAD-IN DETAIL AT PAVEMENT JOINT

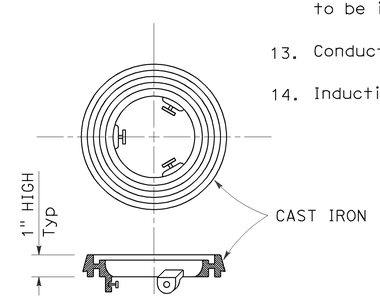

LOCKING GRADE RING

NOTES:

1. Bushing shall be used at end of conduit.
2. Tape detector conductors or cables 3" each side of bushings.
3. Install duct seal compound to each end of termination conduit before installing sealant.
4. Round all sharp edges where detector conductors or cables have to pass.
5. End of conduit shall be 3⅛" below roadway surface.
6.

Conduit size	Loop conductors
1"C minimum	1 to 2 pairs
1½"C minimum	3 to 4 pairs
2"C minimum	5 or more pairs

7. Splice detector conductors or cables to detector lead-in-cable.
8. Location of detector handhole when shown on plans.
9. When the shoulder and traveled way are paved with the same material and there is no joint between them, the conduit shall extend only 2'-0" into the shoulder pavement.
10. ¾"C, Type 3 conduit 6" long minimum, plug both ends with duct compound to keep out sealant.
11. ½" Minimum between top of conduit and pavement surface.
12. Sawcut shall not exceed 1" in width and ⅛" longer than conduit to be installed.
13. Conductors with ½" minimum slack inside conduit.
14. Inductive loop detector saw slot.

STATE OF CALIFORNIA
DEPARTMENT OF TRANSPORTATION

ELECTRICAL SYSTEMS (CURB TERMINATION AND HANDHOLE)

NO SCALE

RSP ES-5D DATED JULY 19, 2013 SUPERSEDES STANDARD PLAN ES-5D DATED MAY 20, 2011 - PAGE 451 OF THE STANDARD PLANS BOOK DATED 2010.

REVISED STANDARD PLAN RSP ES-5D

2010 REVISED STANDARD PLAN RSP ES-5D

7-9-13

DIST	COUNTY	ROUTE	POST MILES TOTAL PROJECT	SHEET NO.	TOTAL SHEETS
10	SJ	4,99	16.0/19.4, 18.5	102	112

Theresa Gabriel
REGISTERED ELECTRICAL ENGINEER

July 19, 2013
PLANS APPROVAL DATE

REGISTERED PROFESSIONAL ENGINEER Theresa Aziz Gabriel No. E15129 Exp. 6-30-14 ELECTRICAL STATE OF CALIFORNIA

THE STATE OF CALIFORNIA OR ITS OFFICERS OR AGENTS SHALL NOT BE RESPONSIBLE FOR THE ACCURACY OR COMPLETENESS OF SCANNED COPIES OF THIS PLAN SHEET.

TO ACCOMPANY PLANS DATED 6-22-15

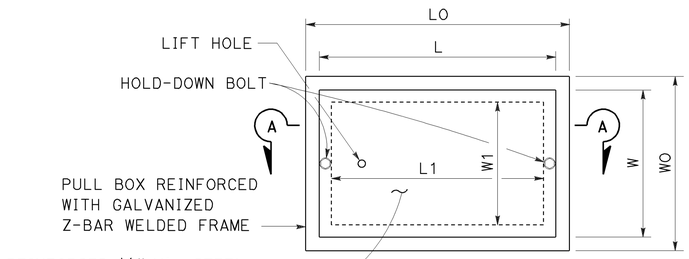

TOP VIEW

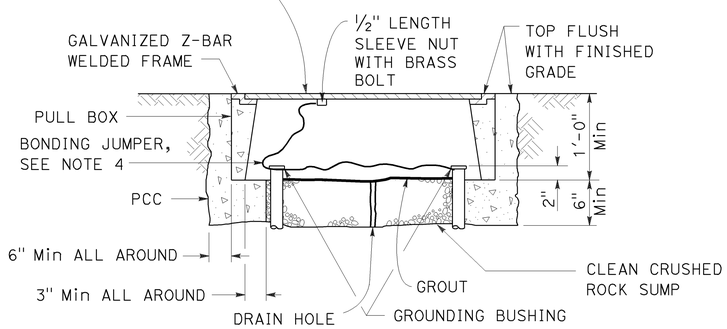

SECTION A-A

No. 3½(T), No. 5(T) AND No. 6(T) TRAFFIC PULL BOX

NOTES:

1. Traffic pull box shall be provided with steel cover and special concrete footing. Steel cover shall have embossed non-skid pattern.
2. Steel reinforcing shall be as regularly used in the standard products of the respective manufacturer.
3. Pull box covers shall be marked as follows: "SERVICE" Service circuits between service point and service disconnect; "SPRINKLER-CONTROL" Sprinkler control circuits, 50 V or less; "CALTRANS" On all pull boxes, except pull boxes marked "SPRINKLER-CONTROL"; and "TELEPHONE" Telephone service.
   - A) No. 3½(T) pull box.
     - 1) "SIGNAL" - Traffic signal circuits with or without lighting or sign lighting circuits.
     - 2) "LIGHTING" - Lighting or sign lighting circuits where voltage is under 600 V.
   - B) No. 5(T) or 6(T) pull box.
     - 1) "TRAFFIC SIGNAL" - Traffic signal circuits with or without lighting or sign lighting circuits.
     - 2) "LIGHTING" - Lighting or sign lighting circuits where voltage is under 600 V.
     - 3) "LIGHTING-HIGH VOLTAGE" - Lighting or sign lighting circuits where voltage is above 600 V.
     - 4) "IRRIGATION" - Circuits to irrigation controller 120 V or more.
     - 5) "RAMP METER" - Ramp meter circuits.
     - 6) "COUNT STATION" - Count or speed monitor circuits.
     - 7) "COMMUNICATION" - Communication circuits.
     - 8) "TOS COMMUNICATIONS" - TOS communications line.
     - 9) "TOS POWER" - TOS power.
     - 10) "TDC POWER" - Telephone demarcation cabinet power.
     - 11) "CCTV" - Closed circuit television circuits.
     - 12) "TMS" - Traffic monitoring station circuits.
     - 13) "CMS" - Changeable message sign circuits.
     - 14) "HAR" - Highway advisory radio circuits.
     - 15) "BOOSTER PUMP" - Booster pump circuit.
4. Bonding jumper for metal covers shall be 3' long, minimum.
5. The nominal dimensions of the opening in which the cover sets shall be the same as the cover dimensions except the length and width dimensions shall be ⅛" greater.
6. Covers and boxes shall be interchangeable with California standard male and female gages. When interchanged with a standard male or female gage, the top surfaces shall be flush within ⅛".

DIMENSION TABLE

PULL BOX	PULL BOX						COVER				
	MINIMUM * THICKNESS	MINIMUM DEPTH BOX AND EXTENSION	WO	LO	L1	W1	L **	W **	R	EDGE THICKNESS	EDGE TAPER
No. 3½(T)	1½"	1'-0"	1'-5"± 1"	1'-8⅞"±	1'-2½"±	10⅝"± 1"	1'-8"±	1'-1¾"±	0"	½"	NONE
No. 5(T)	1¾"	1'-0"	1'-11½"± 1"	2'-5½"±	1'-7"±	1'-1"± 1"	2'-3"±	1'-4"±	0"	½"	NONE
No. 6(T)	2"	1'-0"	2'-6"± 1"	2'-11½"±	1'-11½"±	1'-5"± 1"	2'-9"±	1'-8"±	0"	½"	NONE

* EXCLUDING CONDUIT WEB ** TOP DIMENSION

STATE OF CALIFORNIA
DEPARTMENT OF TRANSPORTATION

ELECTRICAL SYSTEMS (TRAFFIC PULL BOX)

NO SCALE

RSP ES-8B DATED JULY 19, 2013 SUPERSEDES RSP ES-8B DATED JANUARY 20, 2012 THAT SUPPLEMENTS THE STANDARD PLANS BOOK DATED 2010.

REVISED STANDARD PLAN RSP ES-8B

2010 REVISED STANDARD PLAN RSP ES-8B

7-15-13

Dist	COUNTY	ROUTE	POST MILES TOTAL PROJECT	SHEET No.	TOTAL SHEETS
10	SJ	4,99	16.0/19.4, 18.5	103	112

REGISTERED CIVIL ENGINEER

November 15, 2013
PLANS APPROVAL DATE

REGISTERED PROFESSIONAL ENGINEER
Stanley P. Johnson
No. C57793
Exp. 3-31-14
CIVIL
STATE OF CALIFORNIA

THE STATE OF CALIFORNIA OR ITS OFFICERS OR AGENTS SHALL NOT BE RESPONSIBLE FOR THE ACCURACY OR COMPLETENESS OF SCANNED COPIES OF THIS PLAN SHEET.

TO ACCOMPANY PLANS DATED 6-22-15

POLE TYPE	POLE DATA				BASE PLATE DATA				CIDH	
	HEIGHT "h"	Min OD		THICKNESS	"C"	THICKNESS	ANCHOR BOLT SIZE	BC = BOLT CIRCLE	Dia	"d"
		BASE	TOP							
CCTV 25	25′	7⅜"	3¾"	0.1793"	1′-1"	1"	1½" ø x 36"	11½"	2′-6"	7′-0"
CCTV 30	30′	8"			1′-1½"			1′-0"		7′-6"
CCTV 35	35′	8⅝"			1′-2"			1′-1"		8′-0"
CCTV 40	40′	9⅜"			1′-3"			1′-1½"		8′-6"
CCTV 45	45′	10"						1′-2"		

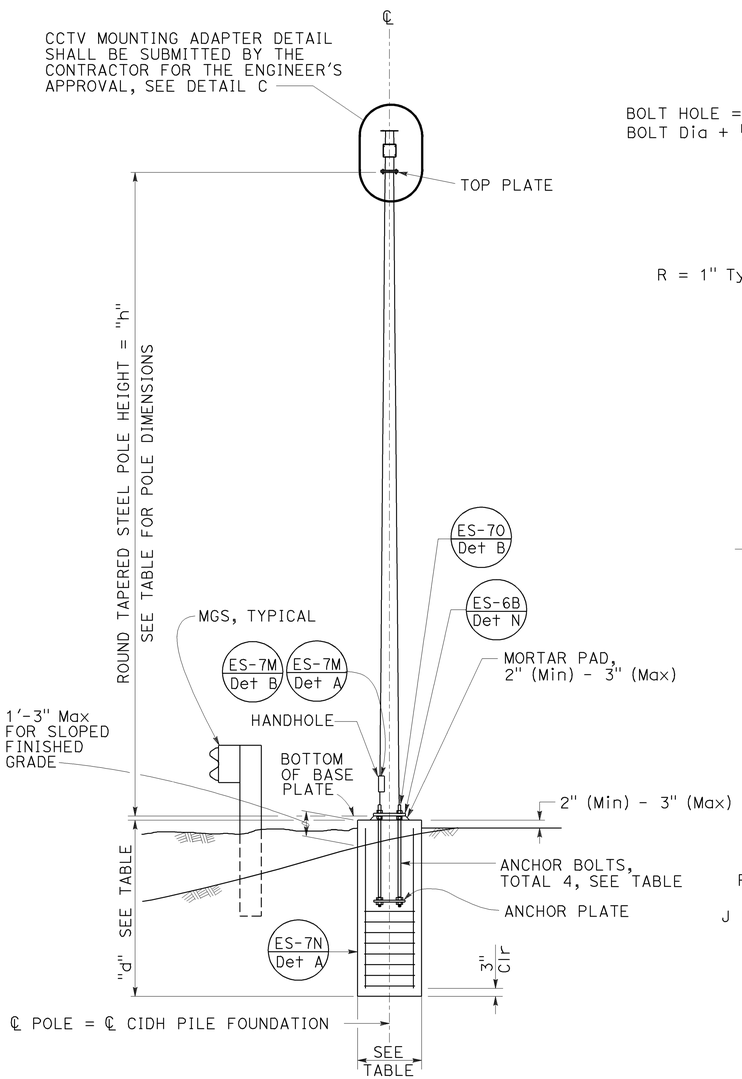

ELEVATION A

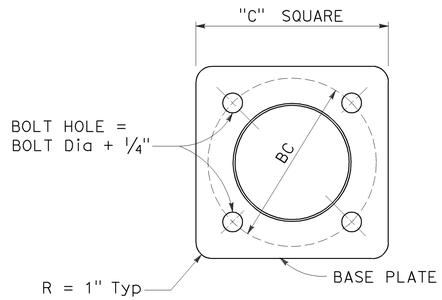

BASE PLATE

DETAIL A

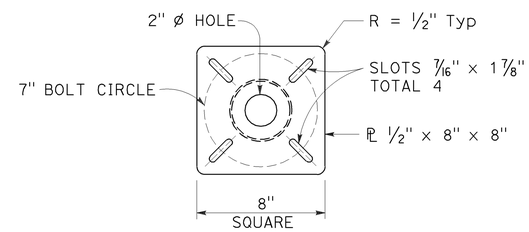

TOP PLATE

DETAIL B

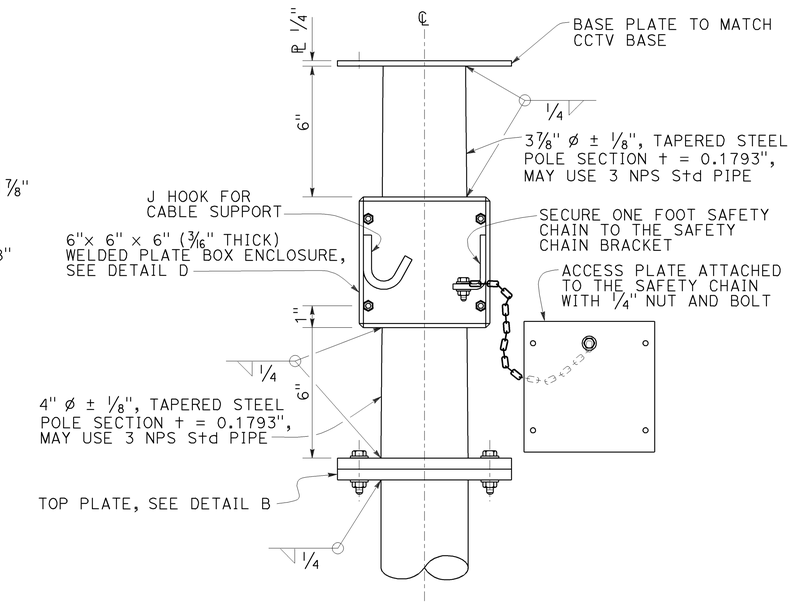

CLOSED CIRCUIT TELEVISION MOUNTING ADAPTER

DETAIL C

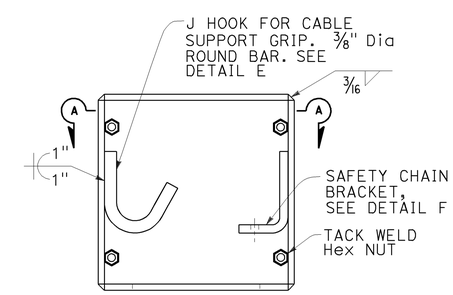

BOX ENCLOSURE

DETAIL D

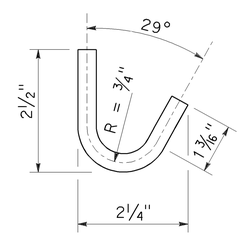

J HOOK

DETAIL E

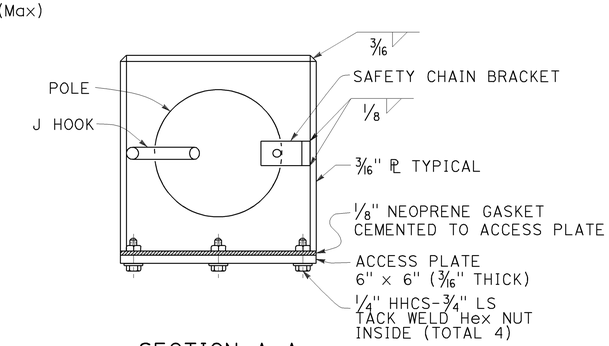

SECTION A-A

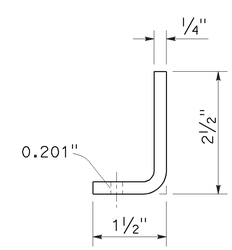

SAFETY CHAIN BRACKET

DETAIL F

NOTES:

1. The Contractor shall verify controlling field dimensions before ordering or fabricating any material.
2. During pole installation, the post shall be raked as necessary with the use of leveling nuts to provide a plumb pole axis.
3. Wind Loadings (3-second gust): 100 mph
4. Unit Stresses (Structural Steel):
   a. fy = 55,000 psi (tapered steel tube and anchor bolts)
   b. fy = 50,000 psi (unless otherwise noted)
5. Unit Stresses (Reinforced Concrete):
   a. f′c = 3,625 psi
   b. fy = 60,000 psi

STATE OF CALIFORNIA
DEPARTMENT OF TRANSPORTATION

ELECTRICAL SYSTEMS (CLOSED CIRCUIT TELEVISION, 25' TO 45' POLE)

NO SCALE

RSP ES-16B DATED NOVEMBER 15, 2013 SUPERSEDES STANDARD PLAN ES-16B DATED MAY 20, 2011 - PAGE 501 OF THE STANDARD PLANS BOOK DATED 2010.

REVISED STANDARD PLAN RSP ES-16B

2010 REVISED STANDARD PLAN RSP ES-16B

10-4-13

DIST	COUNTY	ROUTE	POST MILES TOTAL PROJECT	SHEET No.	TOTAL SHEETS
10	SJ	4,99	16.0/19.4,18.5	104	112

REGISTERED CIVIL ENGINEER 4-8-15 DATE

6-22-15
PLANS APPROVAL DATE

The State of California or its officers or agents shall not be responsible for the accuracy or completeness of scanned copies of this plan sheet.

REGISTERED PROFESSIONAL ENGINEER RICHARD LANCE WARREN No. C78431 Exp. 9/30/15 CIVIL STATE OF CALIFORNIA

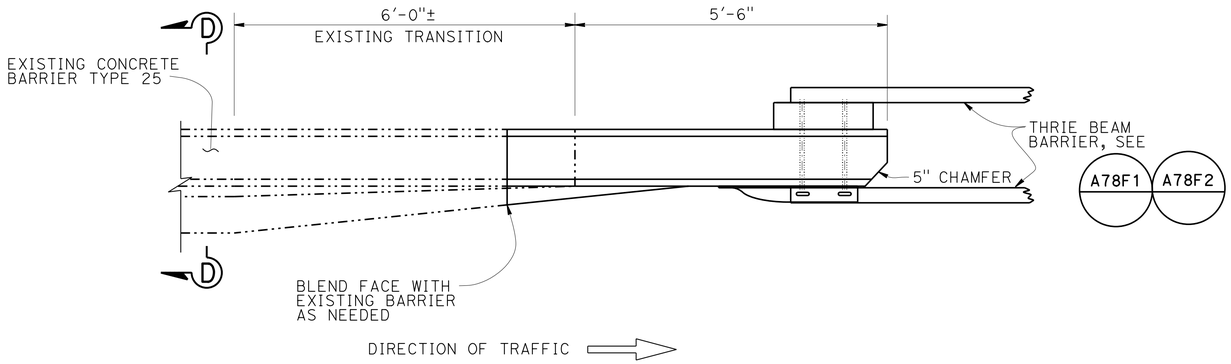

PLAN
3/4" = 1'-0"

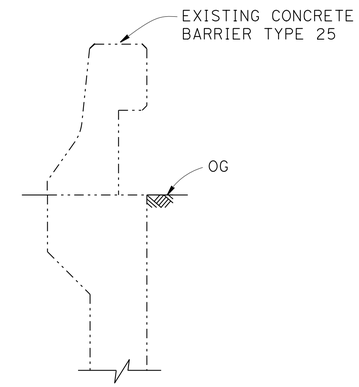

SECTION D-D
3/4" = 1'-0"

NOTES:

1. FOR LIMITS OF EXCAVATION AND BACKFILL SEE "STANDARD PLANS 2010" A62C, SECTION E-E.
2. SEE "ROADWAY PLANS" FOR WORK LOCATION.
3. FOR DETAILS NOT SHOWN, SEE STANDARD PLANS A78F1 AND A78F2.

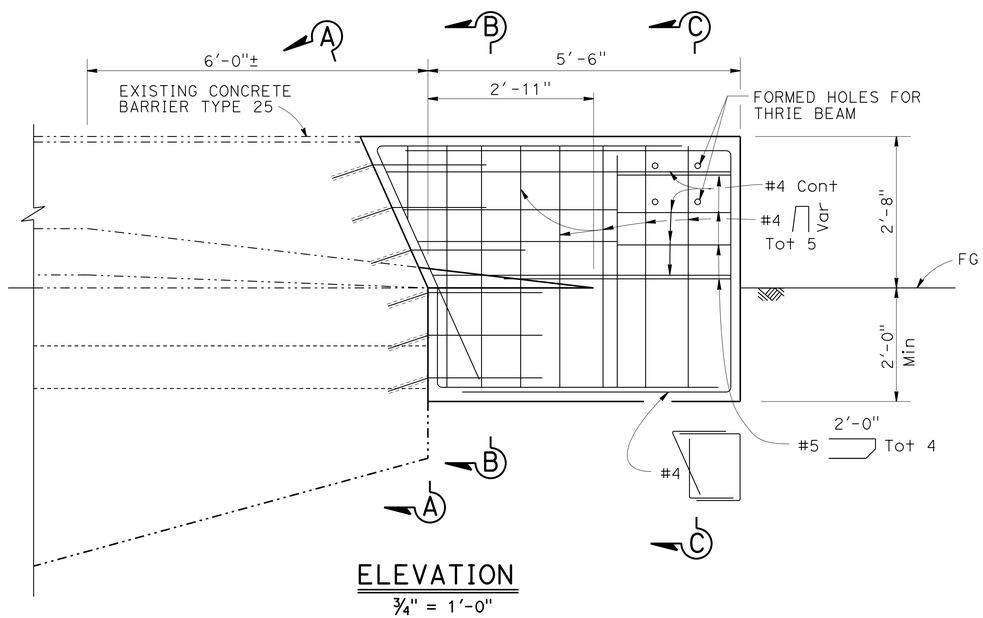

ELEVATION
3/4" = 1'-0"

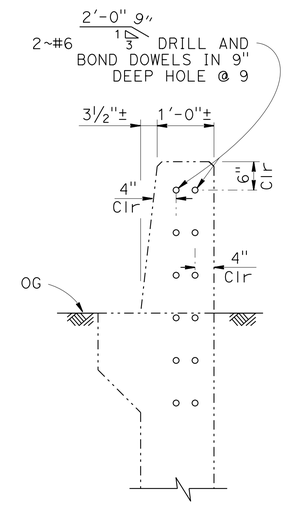

SECTION A-A
3/4" = 1'-0"

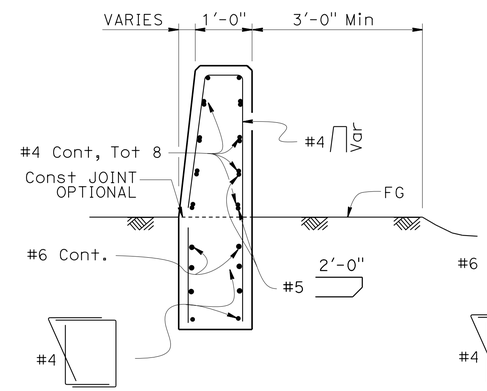

SECTION B-B
3/4" = 1'-0"

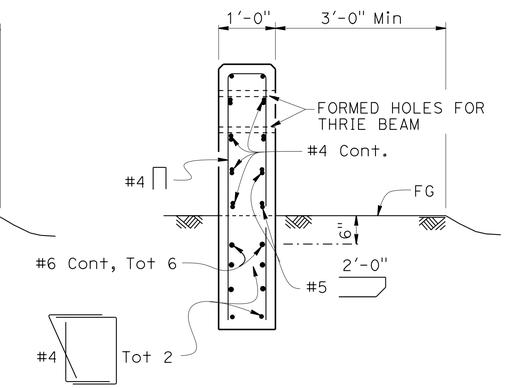

NOTE:
Thrie Beam not shown

SECTION C-C
3/4" = 1'-0"

LEGEND:

-·-·-·- Indicates Existing Structure

——— Indicates New Construction

NOTE:
THE CONTRACTOR MUST VERIFY ALL CONTROLLING FIELD DIMENSIONS BEFORE ORDERING OR FABRICATING ANY MATERIAL.

BRANCH CHIEF DAVID NEUMANN	DESIGN	BY NIRANJEN KANEPATHIPILLAI	CHECKED LANCE WARREN
	DETAILS	BY MARTIN TOMAS	CHECKED LANCE WARREN
	QUANTITIES	BY N/A	CHECKED N/A

STATE OF CALIFORNIA
DEPARTMENT OF TRANSPORTATION

DIVISION OF ENGINEERING SERVICES
DESIGN AND TECHNICAL SERVICES
SPECIAL DESIGNS BRANCH B

BRIDGE No. 29-0269
POST MILE VARIES

CROSSTOWN FREEWAY VIADUCT
CONCRETE BARRIER TRANSITION TO THRIE BEAM BARRIER

SDS-1

SPECIAL DESIGNS BRANCH BORDER SHEET (REV. 8-27-14) Bob Edwards

ORIGINAL SCALE IN INCHES FOR REDUCED PLANS 0 1 2 3

UNIT: 3619
PROJECT NUMBER & PHASE: 1013000114-1
CONTRACT No.: 10-0x9701

DISREGARD PRINTS BEARING EARLIER REVISION DATES

REVISION DATES: 2-19-15 2-26-15 4-02-15

SHEET 1 OF 1

FILE => 10-0x9701uh-misc-sds-dt01.dgn

USERNAME => s113541 DATE PLOTTED => 04-SEP-2015 TIME PLOTTED => 14:12

DIST	COUNTY	ROUTE	POST MILES TOTAL PROJECT	SHEET No.	TOTAL SHEETS
10	SJ	4,99	16.0/19.4,18.5	105	112

REGISTERED CIVIL ENGINEER 4/29/15 DATE

6-22-15
PLANS APPROVAL DATE

REGISTERED PROFESSIONAL ENGINEER JUAN J. JAUREGUI JR. No. C63939 Exp. 9/30/16 CIVIL STATE OF CALIFORNIA

The State of California or its officers or agents shall not be responsible for the accuracy or completeness of scanned copies of this plan sheet.

INDEX TO PLANS

SHEET NO.	TITLE
1	GENERAL PLAN
2	CONDUIT PLAN DETAILS
3	STRUCTURE APPROACH DETAILS No. 1
4	STRUCTURE APPROACH DETAILS No. 2

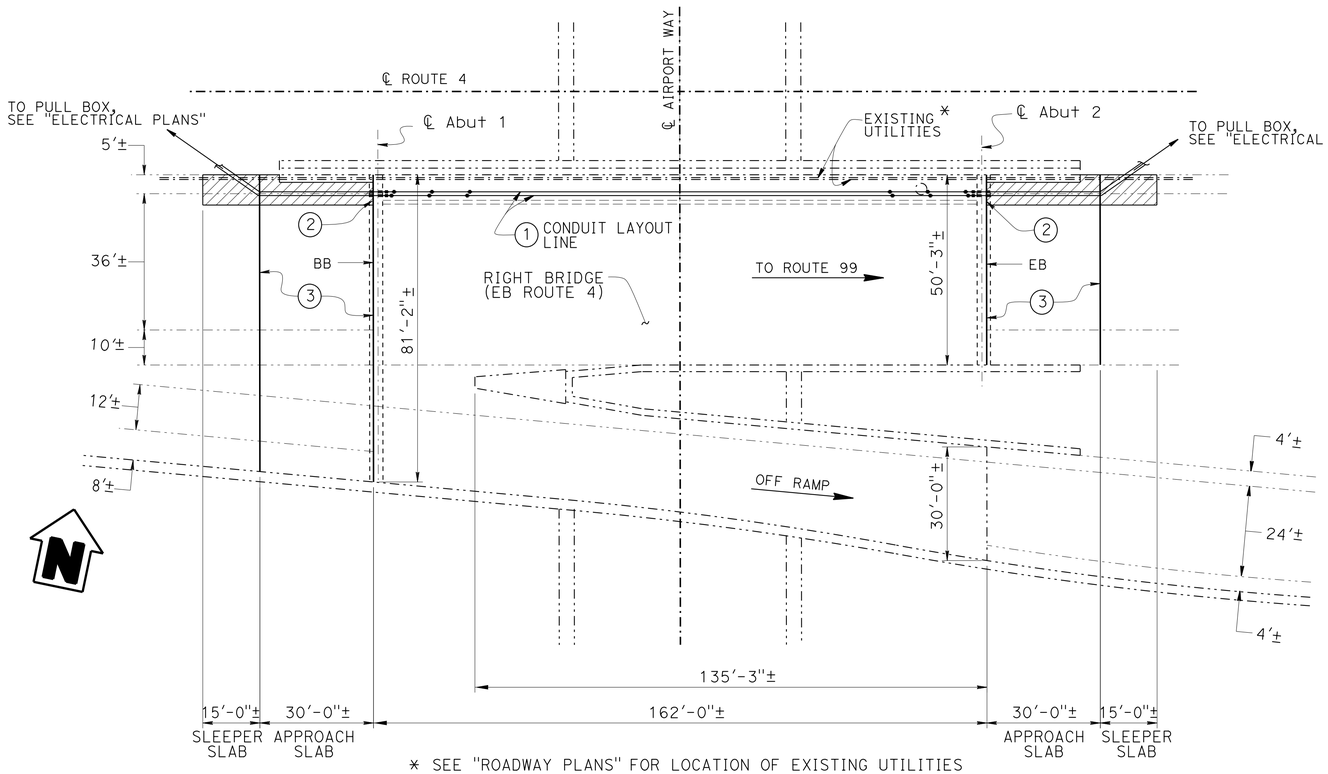

* SEE "ROADWAY PLANS" FOR LOCATION OF EXISTING UTILITIES

PLAN
1" = 20'-0"

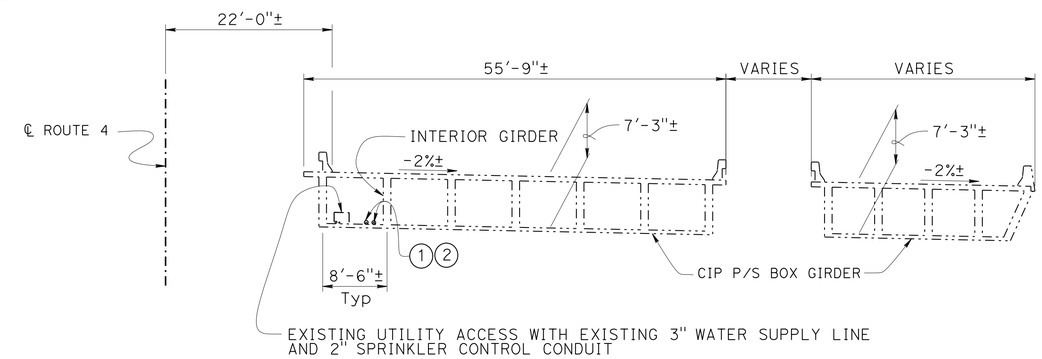

TYPICAL SECTION
1" = 10'-0"

STANDARD PLANS DATED 2010

	A10A	ABBREVIATIONS (SHEET 1 OF 2)
RSP	A10B	ABBREVIATIONS (SHEET 2 OF 2)
	B0-3	BRIDGE DETAILS
	B6-21	JOINT SEALS (MAXIMUM MOVEMENT RATING = 2")
	B14-3	COMMUNICATION AND SPRINKLER CONTROL CONDUITS (CONDUIT LESS THAN 4")
	ES-9B	ELECTRICAL SYSTEMS (CONDUIT RISER AND EXPANSION FITTING, STRUCTURE INSTALLATIONS)

QUANTITIES

CORE CONCRETE (6")	14 LF
BRIDGE REMOVAL (PORTION), LOCATION A	LUMP SUM
STRUCTURE EXCAVATION (BRIDGE)	23 CY
STRUCTURE BACKFILL (BRIDGE)	23 CY
STRUCTURAL CONCRETE, APPROACH SLAB (TYPE N) (MODIFIED)	37 CY
DRILL AND BOND DOWEL	52 LF
CLEAN EXPANSION JOINT	233 LF
JOINT SEAL (MR 1")	222 LF
JOINT SEAL (MR 2")	50 LF

Notes:

1. 2-3" Conduits for Fiber-Optic Communications. See "Roadway Plans".
2. Core Concrete (6").
3. Clean Expansion Joint and place Joint Seal.

Legend:

- Indicates Existing Structure
- Indicates New Constuction
- Indicates Bridge Removal (Portion) and Approach Slab (Type N) (Mod)

NOTE:
THE CONTRACTOR MUST VERIFY ALL CONTROLLING FIELD DIMENSIONS BEFORE ORDERING OR FABRICATING ANY MATERIAL.

STANDARD PLAN SHEET No.
DETAIL No.

FIBER - OPTIC COMMUNICATION CONDUIT
AIRPORT WAY UNDERCROSSING
GENERAL PLAN

Jeff Woody
DESIGN ENGINEER

	BY	CHECKED
DESIGN	Juan Jauregui	John Datiles
DETAILS	Stan Cholda	Juan Jauregui
QUANTITIES	Juan Jauregui	John Datiles
LAYOUT	Juan Jauregui	John Datiles
SPECIFICATIONS	JAMES CORRADO	PLANS AND SPECS COMPARED: Juan Jauregui

ORIGINAL SCALE IN INCHES FOR REDUCED PLANS 0 1 2 3

STATE OF CALIFORNIA
DEPARTMENT OF TRANSPORTATION

DIVISION OF ENGINEERING SERVICES
STRUCTURE DESIGN
SPECIAL DESIGN BRANCH A

BRIDGE NO. 29-0300R
POST MILE R17.56

UNIT: 3619
PROJECT NUMBER & PHASE: 1013000114
CONTRACT NO.: 10-0X9704

DISREGARD PRINTS BEARING EARLIER REVISION DATES

REVISION DATES				SHEET	OF
6-1-15	02-02-15	02-05-15	04-29-15	1	4

USERNAME => s113541 DATE PLOTTED => 04-SEP-2015 TIME PLOTTED => 14:12

STRUCTURES DESIGN GENERAL PLAN SHEET (ENGLISH) (REV.09-01-10)

FILE => 29-0300-a-gp.dgn

DIST	COUNTY	ROUTE	POST MILES TOTAL PROJECT	SHEET No.	TOTAL SHEETS
10	SJ	4,99	16.0/19.4,18.5	106	112

REGISTERED CIVIL ENGINEER 4/29/15 DATE

6-22-15
PLANS APPROVAL DATE

REGISTERED PROFESSIONAL ENGINEER JUAN J. JAUREGUI JR. No. C63939 Exp. 9/30/16 CIVIL STATE OF CALIFORNIA

The State of California or its officers or agents shall not be responsible for the accuracy or completeness of scanned copies of this plan sheet.

Legend:

Indicates Existing Structure

Indicates New Constuction

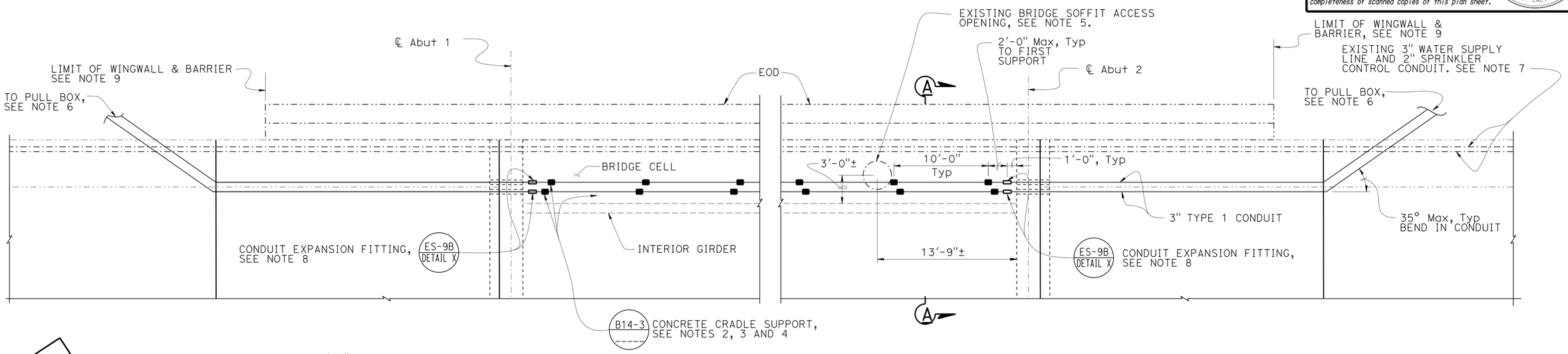

PLAN

3" = 1'-0"

COMMUNICATION CONDUIT LAYOUT

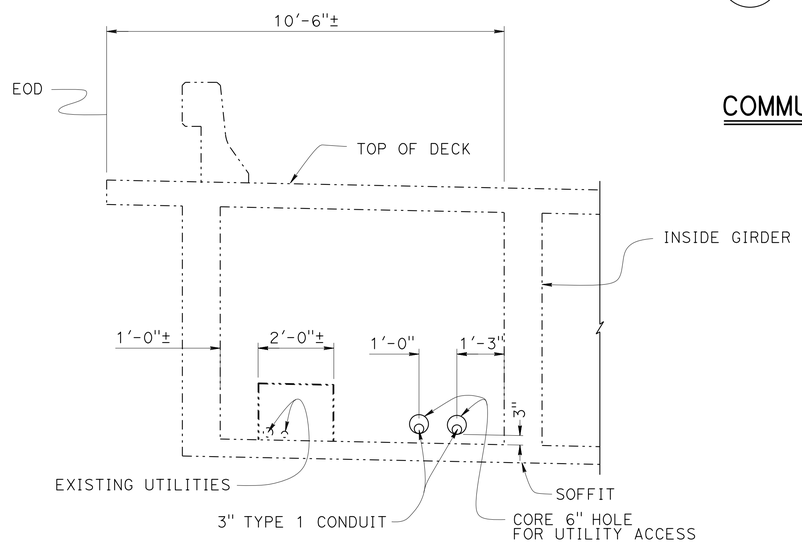

SECTION A-A

1" = 1'-0"

Notes:

1. Seal Utilities at Abutment with mortar after tightly wrapping Utility with two layers of 15 lb building paper.
2. Cradles to be precast concrete.
3. Secure all Cradles to bottom slab of Bridge with adhesive, except under the first Cradle support inside Bridge near Abutment or Hinge, Epoxy 12 Gage galvanized steel sheet 2'-8"x x1'-4" to the floor of cell. Do not secure Cradle to steel sheet. Cradle must be free to slide to accomadate lateral movement.
4. Stagger concrete Cradle Supports as needed to avoid conflicts with adjacent Conduit Support.
5. Locate Conduit to avoid obstructing the Bridge Soffit Access Oppening.
6. See "Electrical Plans" for location of Pull Box and for location of Conduit outside Bridge.
7. See "Roadway Plans" for location of existing Utilities.
8. Expansion Assemblies must provide movement according to adjacent Expansion Joint size. Supports are to be located 2'-0" maximum each side of Expansion Assemblies.
9. See "Roadway Plans" for guardrailing.

NOTE:
THE CONTRACTOR MUST VERIFY ALL CONTROLLING FIELD DIMENSIONS BEFORE ORDERING OR FABRICATING ANY MATERIAL.

FIBER - OPTIC COMMUNICATION CONDUIT

AIRPORT WAY UNDERCROSSING

CONDUIT PLAN DETAILS

	BY	CHECKED
DESIGN	Juan Jauregui	John Datiles
DETAILS	Stan Cholda	Juan Jauregui
QUANTITIES	Juan Jauregui	John Datiles

STATE OF CALIFORNIA
DEPARTMENT OF TRANSPORTATION

DIVISION OF ENGINEERING SERVICES
STRUCTURE DESIGN
SPECIAL DESIGN BRANCH A

BRIDGE NO. 29-0300R
POST MILE R17.56

STRUCTURES DESIGN DETAIL SHEET (ENGLISH) (REV. 09-01-10)

ORIGINAL SCALE IN INCHES FOR REDUCED PLANS 0 1 2 3

UNIT: 3619
PROJECT NUMBER & PHASE: 1013000114
CONTRACT NO.: 10-0X9704

DISREGARD PRINTS BEARING EARLIER REVISION DATES

REVISION DATES: 6-1-15 02-09-15 02-09-15 04-29-15

SHEET 2 OF 4

FILE => 29-0300-k-sdet01.dgn

USERNAME => s113541 DATE PLOTTED => 04-SEP-2015 TIME PLOTTED => 14:12

DIST	COUNTY	ROUTE	POST MILES TOTAL PROJECT	SHEET No.	TOTAL SHEETS
10	SJ	4,99	16.0/19.4,18.5	107	112

REGISTERED CIVIL ENGINEER 4/29/15 DATE

6-22-15
PLANS APPROVAL DATE

REGISTERED PROFESSIONAL ENGINEER JUAN J. JAUREGUI JR. No. C63939 Exp. 9/30/16 CIVIL STATE OF CALIFORNIA

The State of California or its officers or agents shall not be responsible for the accuracy or completeness of scanned copies of this plan sheet.

Legend:

- Indicates Existing Structure
- Indicates Drill and Bond Dowels at Construction Joint
- Indicates New Constuction
- Indicates Bridge Removal (Portion) and Approach Slab (Type N) (Mod)

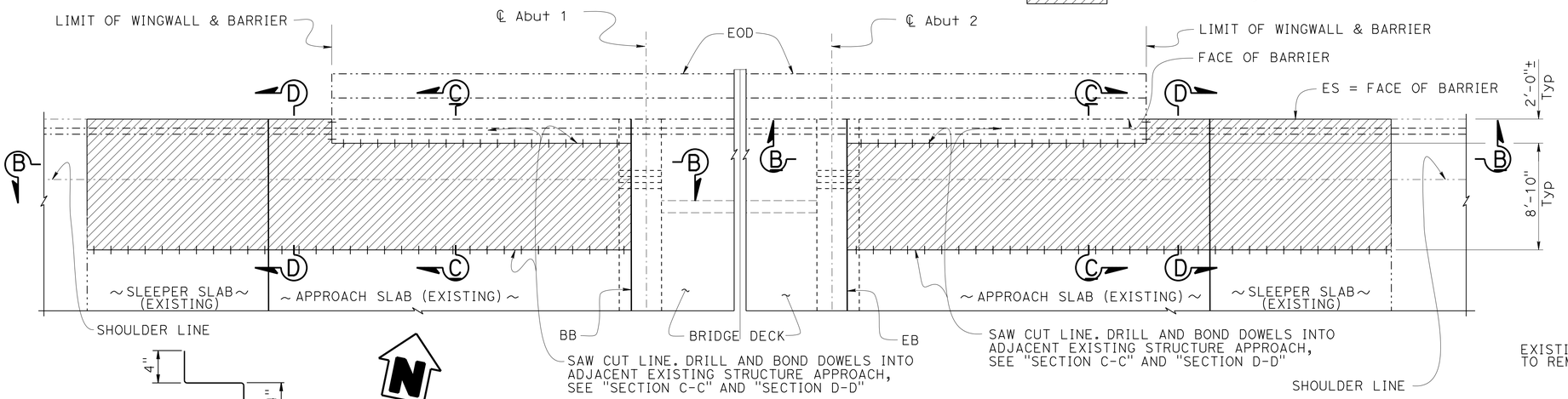

PLAN

3/16" = 1'-0"

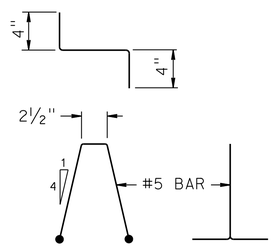

BAR CHAIR DETAIL

Notes:

1. Couple slotted plastic pipe to adjacent existing slotted plastic pipe.
2. Sliding Joint ¼" x 9" Neoprene Strip, coat top with silicone grease and cover with 9" x 0.064" galvanized sheet metal
3. See "JOINT SEAL TABLE" on "STRUCTURE APPROACH DETAILS No. 2" sheet.
4. See sheet "STRUCTURE APPROACH DETAILS No. 2" for "SECTION C-C" AND "SECTION D-D".

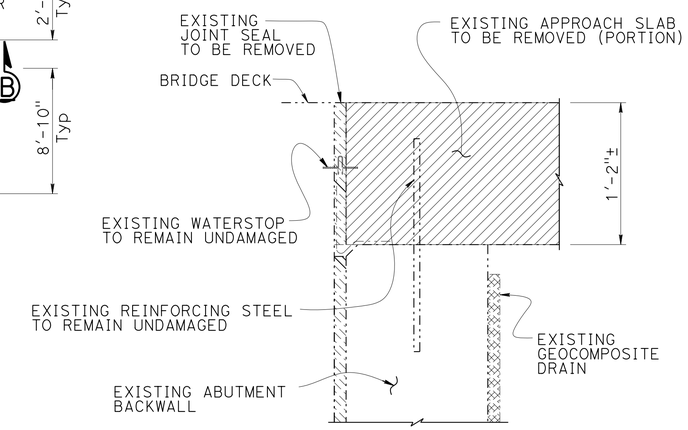

STRUCTURE APPROACH REMOVAL AT ABUTMENT

No Scale

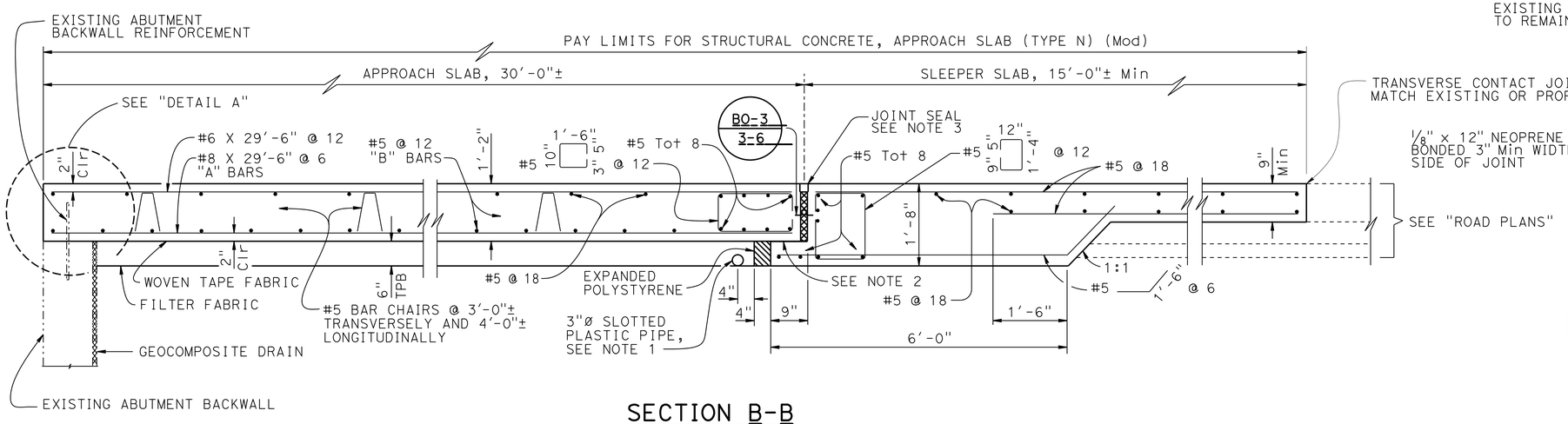

SECTION B-B

3/4" = 1'-0"

STRUCTURE APPROACH TYPE N (45D)

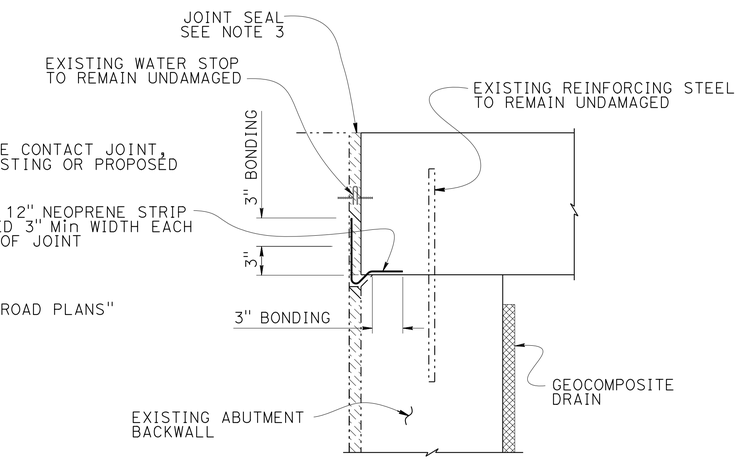

DETAIL A

No Scale

STRUCTURE APPROACH AT ABUTMENT

NOTE:
THE CONTRACTOR MUST VERIFY ALL CONTROLLING FIELD DIMENSIONS BEFORE ORDERING OR FABRICATING ANY MATERIAL.

FIBER - OPTIC COMMUNICATION CONDUIT

	BY	CHECKED
DESIGN	Juan Jauregui	John Datiles
DETAILS	Stan Cholda	Juan Jauregui
QUANTITIES	Juan Jauregui	John Datiles

STATE OF CALIFORNIA DEPARTMENT OF TRANSPORTATION

DIVISION OF ENGINEERING SERVICES STRUCTURE DESIGN SPECIAL DESIGN BRANCH A

BRIDGE NO. 29-0300R
POST MILE R17.56

AIRPORT WAY UNDERCROSSING

STRUCTURE APPROACH DETAILS No. 1

STRUCTURES DESIGN DETAIL SHEET (ENGLISH) (REV. 09-01-10)

ORIGINAL SCALE IN INCHES FOR REDUCED PLANS 0 1 2 3

UNIT: 3619
PROJECT NUMBER & PHASE: 1013000114
CONTRACT NO.: 10-0X9704

DISREGARD PRINTS BEARING EARLIER REVISION DATES

REVISION DATES: 6-1-15 02-26-15 02-26-15 04-29-15

SHEET 3 OF 4

FILE => 29-0300-K-sdet02.dgn

USERNAME => s113541 DATE PLOTTED => 04-SEP-2015 TIME PLOTTED => 14:12

DIST	COUNTY	ROUTE	POST MILES TOTAL PROJECT	SHEET No.	TOTAL SHEETS
10	SJ	4,99	16.0/19.4,18.5	108	112

REGISTERED CIVIL ENGINEER 4/29/15 DATE

6-22-15
PLANS APPROVAL DATE

REGISTERED PROFESSIONAL ENGINEER JUAN J. JAUREGUI JR. No. C63939 Exp. 9/30/16 CIVIL STATE OF CALIFORNIA

The State of California or its officers or agents shall not be responsible for the accuracy or completeness of scanned copies of this plan sheet.

* JOINT SEAL TABLE					
LOCATION	MINIMUM "MR"	JOINT SEAL LENGTH	EXISTING WATERSTOP	** APPROXIMATE DEPTH TO CLEAN EXPANSION JOINT	CLEAN EXPANSION JOINT LENGTH
SLEEPER SLAB (APPROACH)	1"	79'-4"±	YES	9"	71'-4"±
ABUTMENT 1	1"	81'-2"±	YES	9"	75'-2"±
ABUTMENT 2	2"	50'-3"±	YES	9"	44'-3"±
SLEEPER SLAB (DEPARTURE)	1"	50'-3"±	YES	9"	42'-3"±

* SEE "2010 STANDARD PLANS" SHEET B6-21 FOR JOINT SEAL DETAILS
** EXISTING WATERSTOP TO REMAIN UNDAMAGED

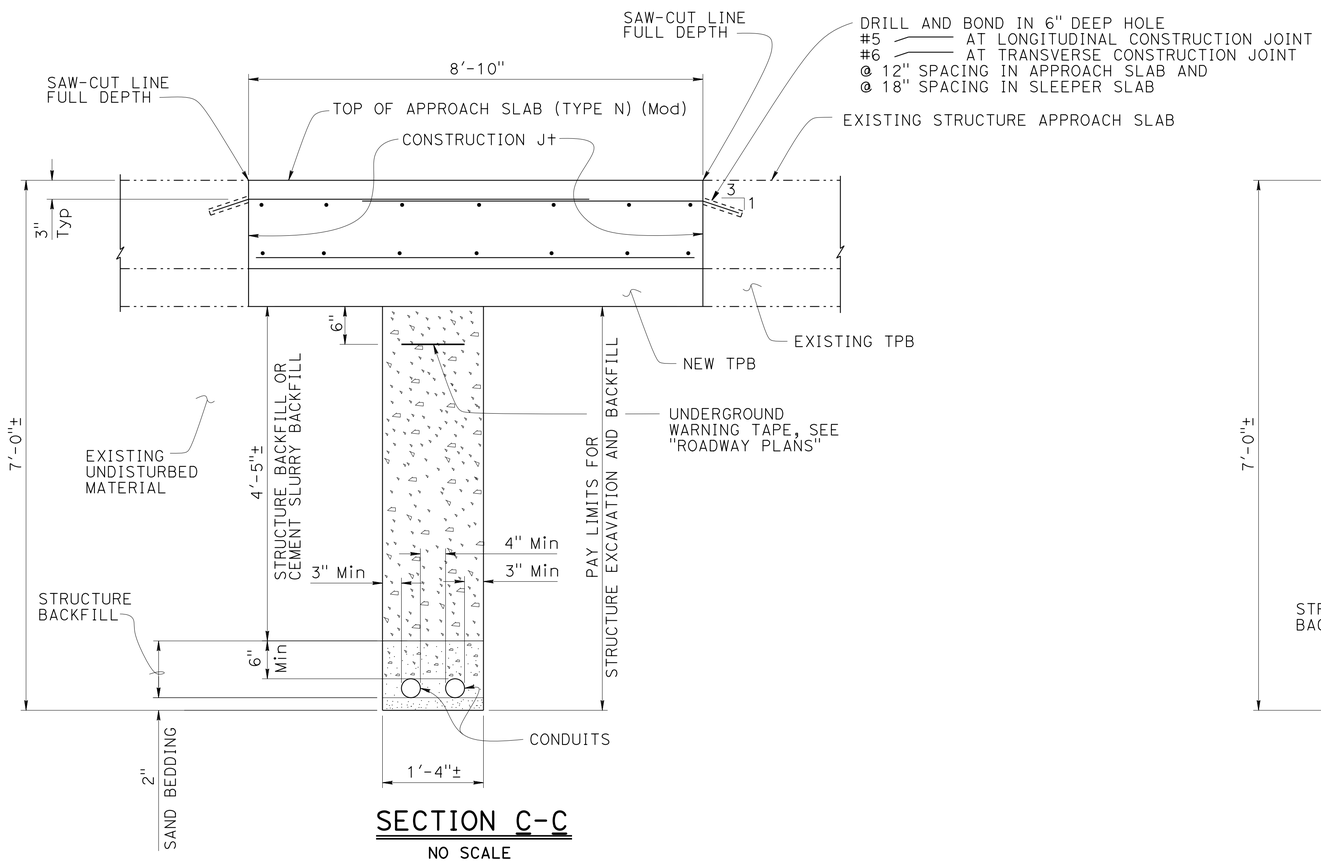

SECTION C-C
NO SCALE

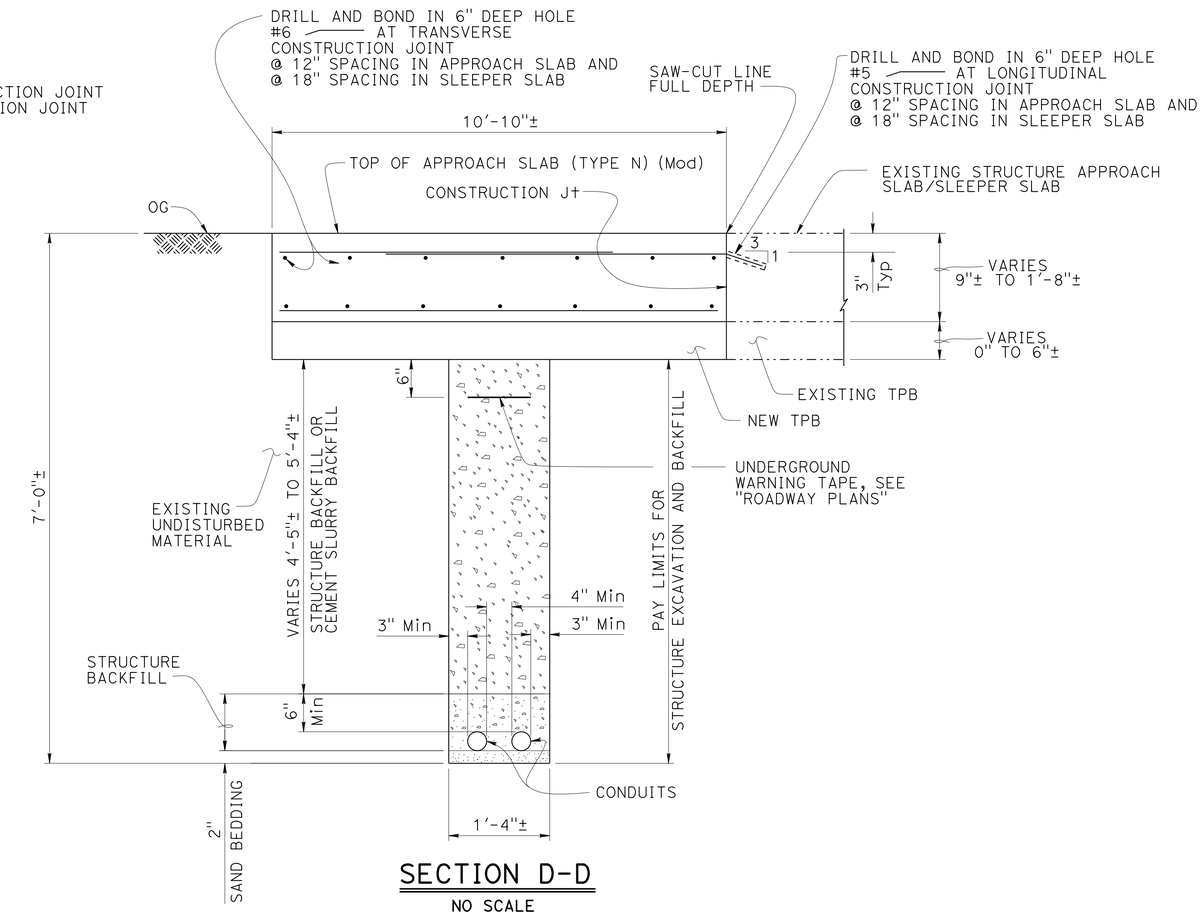

SECTION D-D
NO SCALE

NOTE:
THE CONTRACTOR MUST VERIFY ALL CONTROLLING FIELD DIMENSIONS BEFORE ORDERING OR FABRICATING ANY MATERIAL.

FIBER - OPTIC COMMUNICATION CONDUIT

	BY	CHECKED
DESIGN	Juan Jauregui	John Datiles
DETAILS	Stan Cholda	Juan Jauregui
QUANTITIES	Juan Jauregui	John Detiles

STATE OF CALIFORNIA
DEPARTMENT OF TRANSPORTATION

DIVISION OF ENGINEERING SERVICES
STRUCTURE DESIGN
SPECIAL DESIGN BRANCH A

BRIDGE NO. 29-0300R
POST MILE R17.56

AIRPORT WAY UNDERCROSSING
STRUCTURE APPROACH DETAILS No. 2

STRUCTURES DESIGN DETAIL SHEET (ENGLISH) (REV. 09-01-10)

ORIGINAL SCALE IN INCHES FOR REDUCED PLANS 0 1 2 3

UNIT: 3619
PROJECT NUMBER & PHASE: 1013000114
CONTRACT NO.: 10-0X9704

DISREGARD PRINTS BEARING EARLIER REVISION DATES

REVISION DATES: 01-12-15 02-06-15 04-29-15 6-1-15

SHEET 4 OF 4

FILE => 29-0300-k-sdet03.dgn

USERNAME => s113541 DATE PLOTTED => 04-SEP-2015 TIME PLOTTED => 14:12

DIST	COUNTY	ROUTE	POST MILES TOTAL PROJECT	SHEET No.	TOTAL SHEETS
10	SJ	4,99	16.0/19.4,18.5	109	112

REGISTERED CIVIL ENGINEER 4/29/15 DATE

6-22-15
PLANS APPROVAL DATE

REGISTERED PROFESSIONAL ENGINEER JUAN J. JAUREGUI JR. No. C63939 Exp. 9/30/16 CIVIL STATE OF CALIFORNIA

The State of California or its officers or agents shall not be responsible for the accuracy or completeness of scanned copies of this plan sheet.

INDEX TO PLANS

SHEET NO.	TITLE
1	GENERAL PLAN
2	CONDUIT PLAN DETAILS
3	STRUCTURE APPROACH DETAILS No. 1
4	STRUCTURE APPROACH DETAILS No. 2

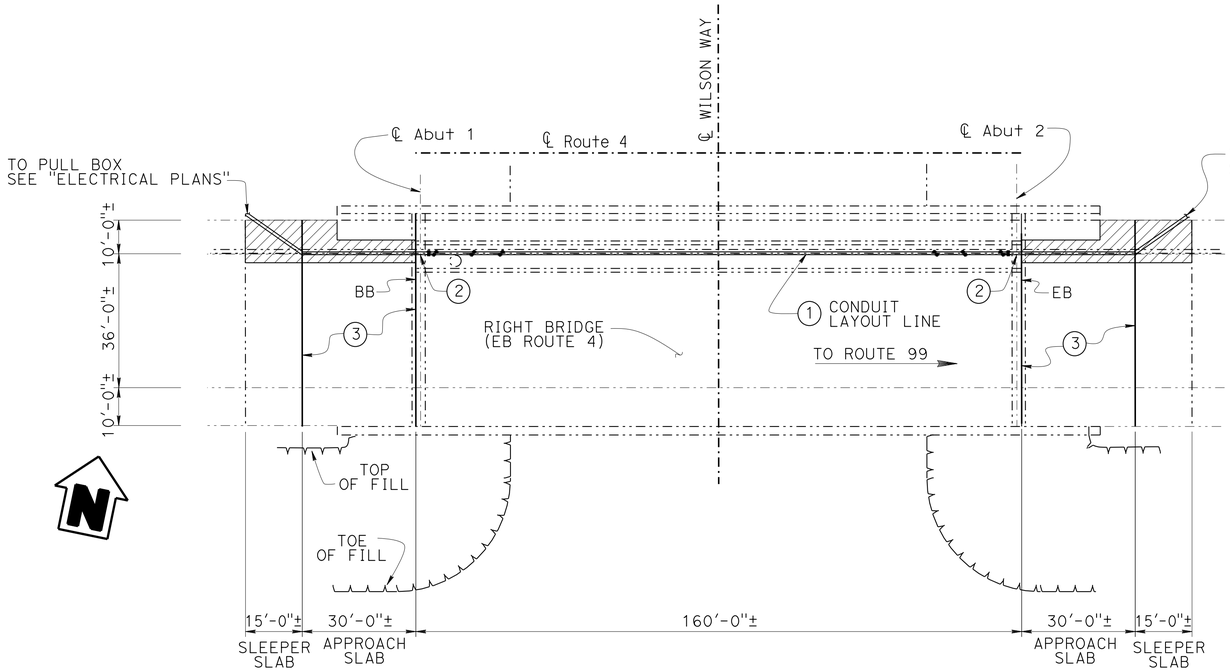

PLAN

1" = 20'-0"

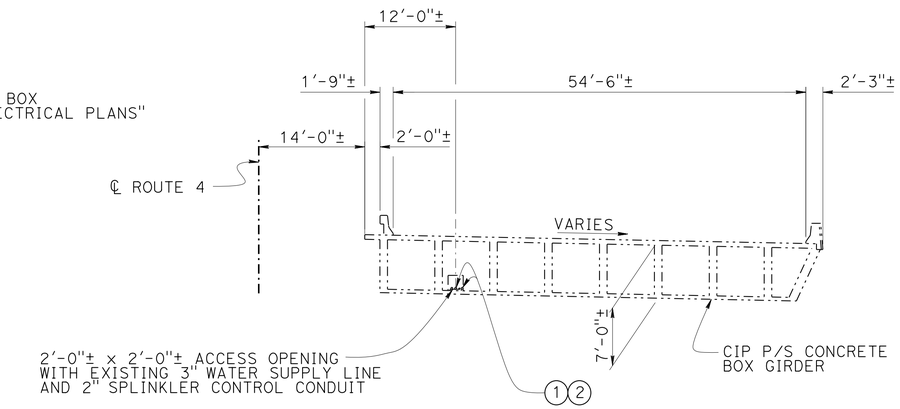

TYPICAL SECTION

1" = 10'-0"

STANDARD PLANS DATED 2010

	A10A	ABBREVIATIONS (SHEET 1 OF 2)
RSP	A10B	ABBREVIATIONS (SHEET 2 OF 2)
	B0-3	BRIDGE DETAILS
	B6-21	JOINT SEALS (MAXIMUM MOVEMENT RATING = 2")
	B14-3	COMMUNICATION AND SPRINKLER CONTROL CONDUITS (CONDUIT LESS THAN 4")
	ES-9B	ELECTRICAL SYSTEMS (CONDUIT RISER AND EXPANSION FITTING , STRUCTURE INSTALLATIONS)

Notes:

1. 2-3" Conduits for Fiber Optic Communications. See "Roadway Plans".
2. Core Concrete (6")
3. Clean Expansion Joint and place Joint Seal.

Legend:

- Indicates Existing Structure
- Indicates New Constuction
- Indicates Bridge Removal (PORTION) and Approach Slab (Type N) (Mod)

QUANTITIES

CORE CONCRETE (6")	4 LF
BRIDGE REMOVAL (PORTION), LOCATION B	LUMP SUM
STRUCTURE EXCAVATION (BRIDGE)	25 CY
STRUCTURE BACKFILL (BRIDGE)	25 CY
STRUCTURAL CONCRETE, APPROACH SLAB (TYPE N) (MODIFIED)	52 CY
DRILL AND BOND DOWEL	53 LF
CLEAN EXPANSION JOINT	171 LF
JOINT SEAL (MR 1")	224 LF

NOTE:
THE CONTRACTOR MUST VERIFY ALL CONTROLLING FIELD DIMENSIONS BEFORE ORDERING OR FABRICATING ANY MATERIAL.

STANDARD PLAN SHEET No.
DETAIL No.

FIBER - OPTIC COMMUNICATION CONDUIT
WILSON WAY UNDERCROSSING
GENERAL PLAN

Jeff Woody
DESIGN ENGINEER

	BY	CHECKED
DESIGN	Juan Jauregui	John Datiles
DETAILS	Stan Cholda	Juan Jauregui
QUANTITIES	Juan Jauregui	John Datiles
LAYOUT	Juan Jauregui	John Datiles
SPECIFICATIONS	James Corrado	PLANS AND SPECS COMPARED Juan Jauregui

ORIGINAL SCALE IN INCHES FOR REDUCED PLANS 0 1 2 3

STATE OF CALIFORNIA
DEPARTMENT OF TRANSPORTATION

DIVISION OF ENGINEERING SERVICES
STRUCTURE DESIGN
SPECIAL DESIGN BRANCH A

BRIDGE NO. 29-0306R
POST MILE R17.71

UNIT: 3619
PROJECT NUMBER & PHASE: 1013000114
CONTRACT NO.: 10-0X9704

DISREGARD PRINTS BEARING EARLIER REVISION DATES

REVISION DATES: 6-1-15 02-02-15 02-05-15 04-29-15

SHEET 1 OF 4

STRUCTURES DESIGN GENERAL PLAN SHEET (ENGLISH) (REV.09-01-10)

FILE => 29-0306-a-gp.dgn

USERNAME => s113541 DATE PLOTTED => 04-SEP-2015 TIME PLOTTED => 14:12

DIST	COUNTY	ROUTE	POST MILES TOTAL PROJECT	SHEET No.	TOTAL SHEETS
10	SJ	4,99	16.0/19.4,18.5	110	112

REGISTERED CIVIL ENGINEER 4/29/15 DATE

6-22-15
PLANS APPROVAL DATE

REGISTERED PROFESSIONAL ENGINEER JUAN J. JAUREGUI JR. No. C63939 Exp. 9/30/16 CIVIL STATE OF CALIFORNIA

The State of California or its officers or agents shall not be responsible for the accuracy or completeness of scanned copies of this plan sheet.

Legend:

Indicates Existing Structure

Indicates New Constuction

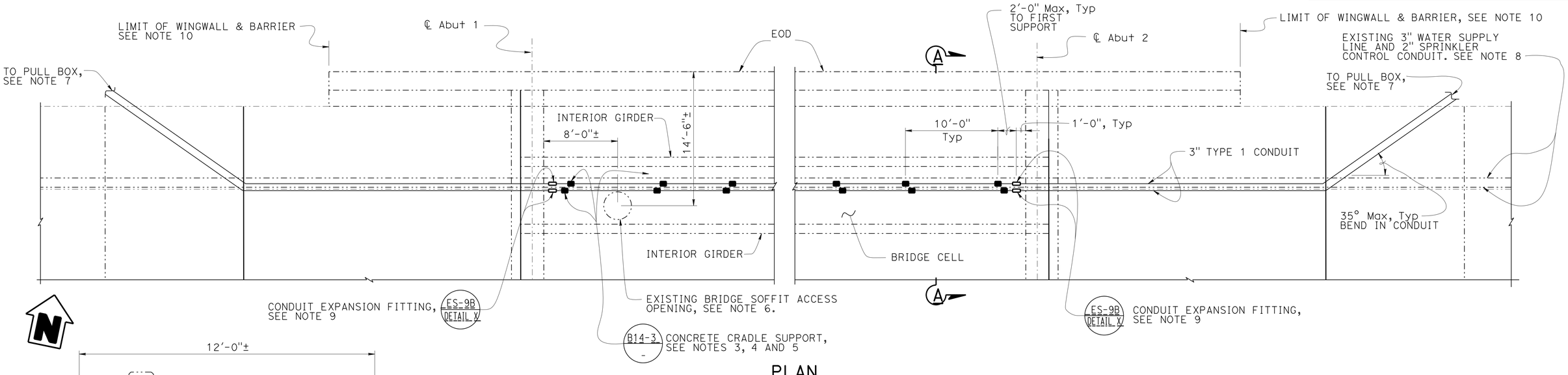

PLAN

3" = 1'-0"

COMMUNICATION CONDUIT LAYOUT

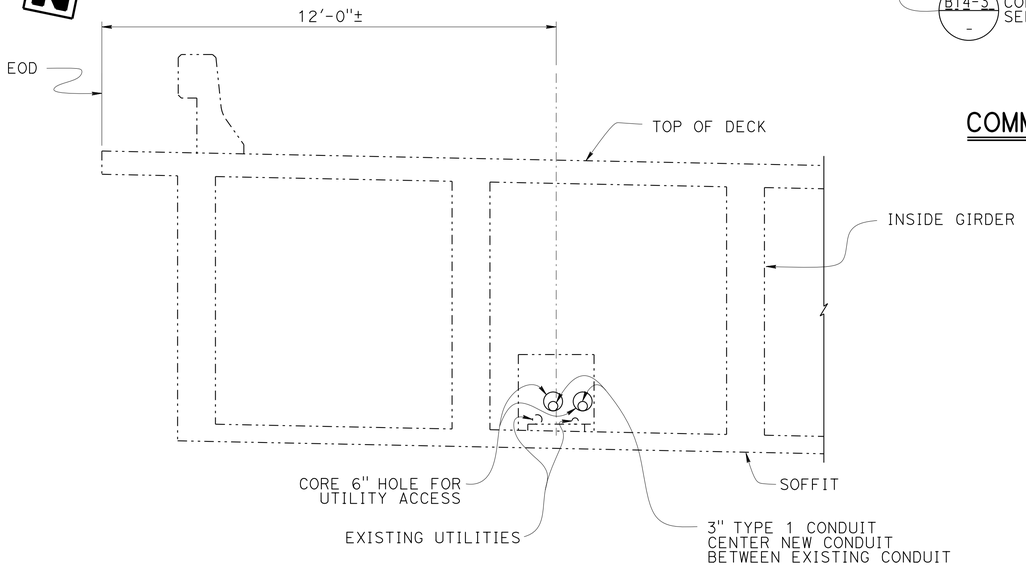

SECTION A-A

1" = 1'-0"

Notes:

1. Verify location of existing utilities in bridge prior to determining where to core new 6" core holes to avoid Existing Utilities.
2. Seal Utilities at Abutment with mortar after tightly wrapping Utility with two layers of 15 lb building paper.
3. Cradles to be precast concrete.
4. Secure all Cradles to bottom slab of Bridge with adhesive, except under the first Cradle support inside Bridge near Abutment or Hinge, Epoxy 12 Gage galvanized steel sheet 2'-8"x x1'-4" to the floor of cell. Do not secure Cradle to steel sheet. Cradle must be free to slide to accomadate lateral movement.
5. Stagger concrete Cradle Supports as needed to avoid conflicts with adjacent Conduit Supports and existing Utility Supports.
6. Locate Conduit to avoid obstructing the Bridge Soffit Access Oppening.
7. See "Electrical Plans" for location of Pull Box and for location of Conduit outside Bridge.
8. See "Roadway Plans" for location of existing Utilities.
9. Expansion Assemblies must provide movement according to adjacent Expansion Joint size. Supports are to be located 2'-0" maximum each side of Expansion Assemblies.
10. See "Roadway Plans" for guardrailing.

NOTE:
THE CONTRACTOR MUST VERIFY ALL CONTROLLING FIELD DIMENSIONS BEFORE ORDERING OR FABRICATING ANY MATERIAL.

FIBER - OPTIC COMMUNICATION CONDUIT

WILSON WAY UNDERCROSSING

CONDUIT PLAN DETAILS

	BY	CHECKED
DESIGN	Juan Jauregui	John Datiles
DETAILS	Stan Cholda	Juan Jauregui
QUANTITIES	Juan Jauregui	John Datiles

STATE OF CALIFORNIA DEPARTMENT OF TRANSPORTATION

DIVISION OF ENGINEERING SERVICES STRUCTURE DESIGN SPECIAL DESIGN BRANCH A

BRIDGE NO. 29-0306R

POST MILE R17.71

STRUCTURES DESIGN DETAIL SHEET (ENGLISH) (REV. 09-01-10)

ORIGINAL SCALE IN INCHES FOR REDUCED PLANS 0 1 2 3

UNIT: 3619
PROJECT NUMBER & PHASE: 1013000114

CONTRACT NO.: 10-0X9704

DISREGARD PRINTS BEARING EARLIER REVISION DATES

REVISION DATES: 6-1-15 02-06-15 02-06-15 04-29-15

SHEET 2 OF 4

FILE => 29-0306-k-sdet01.dgn

USERNAME => s113541 DATE PLOTTED => 04-SEP-2015 TIME PLOTTED => 14:12

DIST	COUNTY	ROUTE	POST MILES TOTAL PROJECT	SHEET No.	TOTAL SHEETS
10	SJ	4,99	16.0/19.4,18.5	111	112

REGISTERED CIVIL ENGINEER 4/29/15 DATE

6-22-15
PLANS APPROVAL DATE

REGISTERED PROFESSIONAL ENGINEER JUAN J. JAUREGUI JR. No. C63939 Exp. 9/30/16 CIVIL STATE OF CALIFORNIA

The State of California or its officers or agents shall not be responsible for the accuracy or completeness of scanned copies of this plan sheet.

Legend:
- Indicates Existing Structure
- Indicates Drill and Bond Dowels at Construction Joint
- Indicates New Construction
- Indicates Bridge Removal (Portion) and Approach Slab (Type N) (Mod)

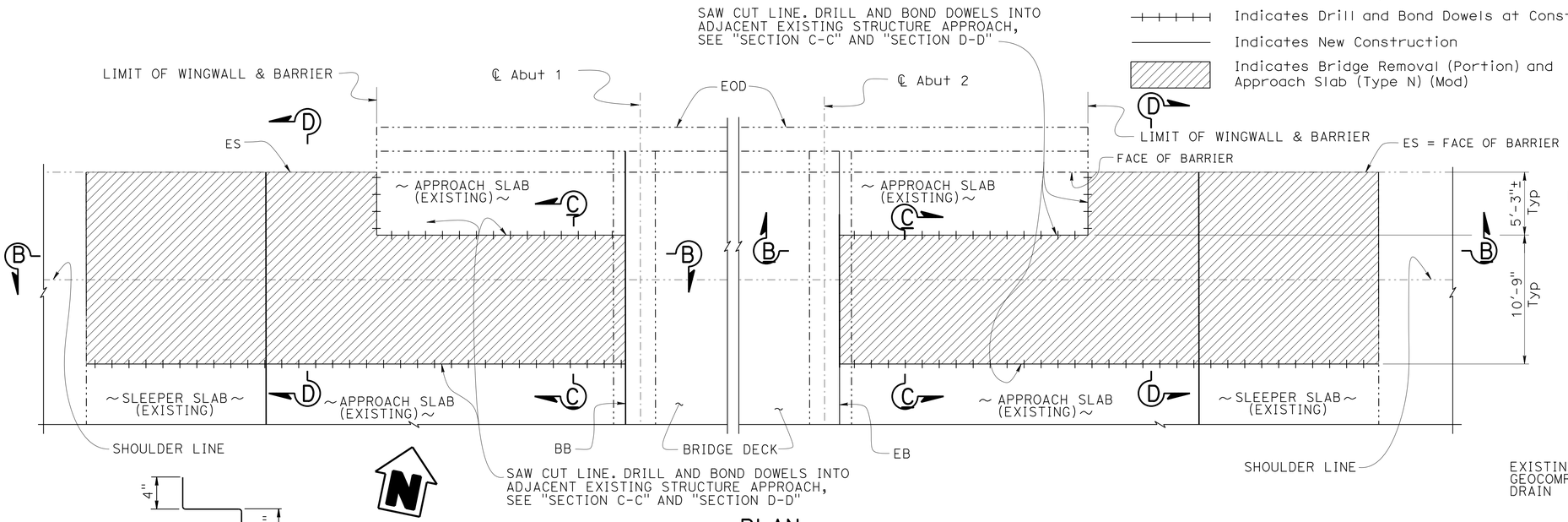

PLAN

3/16" = 1'-0"

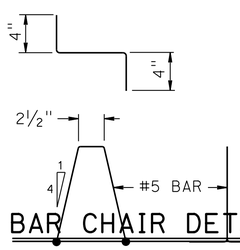

BAR CHAIR DETAIL

Notes:

1. Couple slotted plastic pipe to adjacent existing slotted plastic pipe.
2. Sliding Joint ¼" x 9" Neoprene Strip, coat top with silicone grease and cover with 9" x 0.064" galvanized sheet metal
3. See "JOINT SEAL TABLE" on "STRUCTURE APPROACH DETAILS No. 2" sheet.
4. See Sheet "STRUCTURE APPROACH DETAILS No. 2" for "SECTION C-C" AND "SECTION D-D".

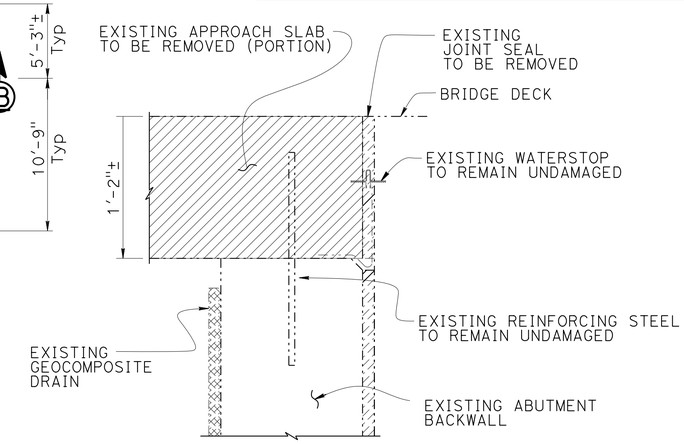

STRUCTURE APPROACH REMOVAL AT ABUTMENT

No Scale

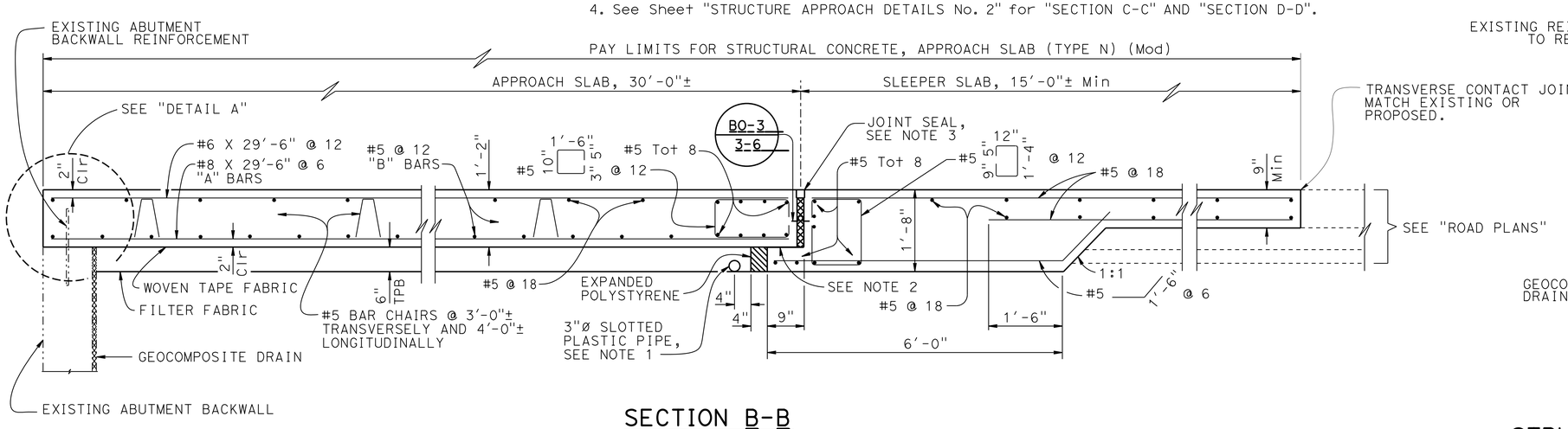

SECTION B-B

¾" = 1'-0"

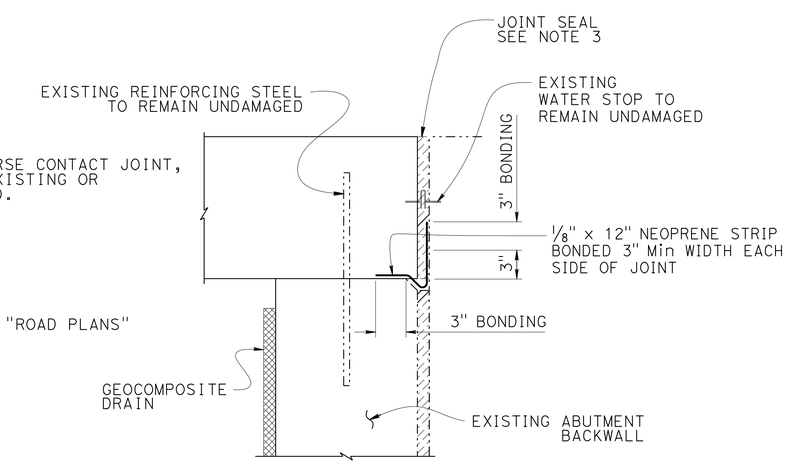

DETAIL A

No Scale

STRUCTURE APPROACH AT ABUTMENT

NOTE:
THE CONTRACTOR MUST VERIFY ALL CONTROLLING FIELD DIMENSIONS BEFORE ORDERING OR FABRICATING ANY MATERIAL.

STRUCTURE APPROACH TYPE N (45D)

FIBER - OPTIC COMMUNICATION CONDUIT

WILSON WAY UNDERCROSSING

STRUCTURE APPROACH DETAILS No. 1

	BY	CHECKED
DESIGN	Juan Jauregui	John Datiles
DETAILS	Stan Cholda	Juan Jauregui
QUANTITIES	Juan Jauregui	John Datiles

STATE OF CALIFORNIA
DEPARTMENT OF TRANSPORTATION

DIVISION OF ENGINEERING SERVICES
STRUCTURE DESIGN
SPECIAL DESIGN BRANCH A

BRIDGE NO. 29-0306R
POST MILE R17.71

STRUCTURES DESIGN DETAIL SHEET (ENGLISH) (REV. 09-01-10)

ORIGINAL SCALE IN INCHES FOR REDUCED PLANS 0 1 2 3

UNIT: 3619
PROJECT NUMBER & PHASE: 1013000114
CONTRACT NO.: 10-0X9704

DISREGARD PRINTS BEARING EARLIER REVISION DATES

REVISION DATES 01-22-15 04-29-15 6-1-15

SHEET 3 OF 4

FILE => 29-0306-k-sdet02.dgn

USERNAME => s113541 DATE PLOTTED => 04-SEP-2015 TIME PLOTTED => 14:12

DIST	COUNTY	ROUTE	POST MILES TOTAL PROJECT	SHEET No.	TOTAL SHEETS
10	SJ	4,99	16.0/19.4,18.5	112	112

REGISTERED CIVIL ENGINEER 4/29/15 DATE

6-22-15
PLANS APPROVAL DATE

REGISTERED PROFESSIONAL ENGINEER JUAN J. JAUREGUI JR. No. C63939 Exp. 9/30/16 CIVIL STATE OF CALIFORNIA

The State of California or its officers or agents shall not be responsible for the accuracy or completeness of scanned copies of this plan sheet.

* JOINT SEAL TABLE

LOCATION	MINIMUM "MR"	JOINT SEAL LENGTH	EXISTING WATERSTOP	** APPROXIMATE DEPTH TO CLEAN EXPANSION JOINT	CLEAN EXPANSION JOINT LENGTH
SLEEPER SLAB (APPROACH)	1"	56'-0"±	YES	9"	44'-9"±
ABUTMENT 1	1"	56'-0"±	YES	9"	50'-0"±
ABUTMENT 2	1"	56'-0"±	YES	9"	50'-0"±
SLEEPER SLAB (DEPARTURE)	1"	56'-0"±	YES	9"	44'-9"±

* SEE "2010 STANDARD PLANS" SHEET B6-21 FOR JOINT SEAL DETAILS
** EXISTING WATERSTOP TO REMAIN UNDAMAGED

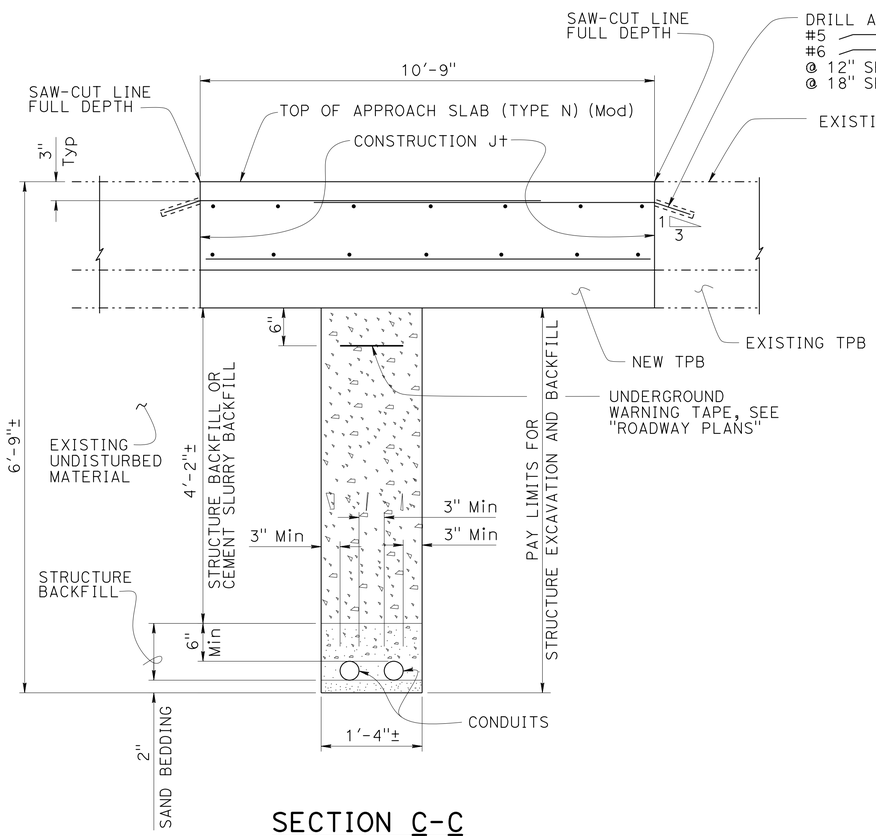

SECTION C-C

NO SCALE

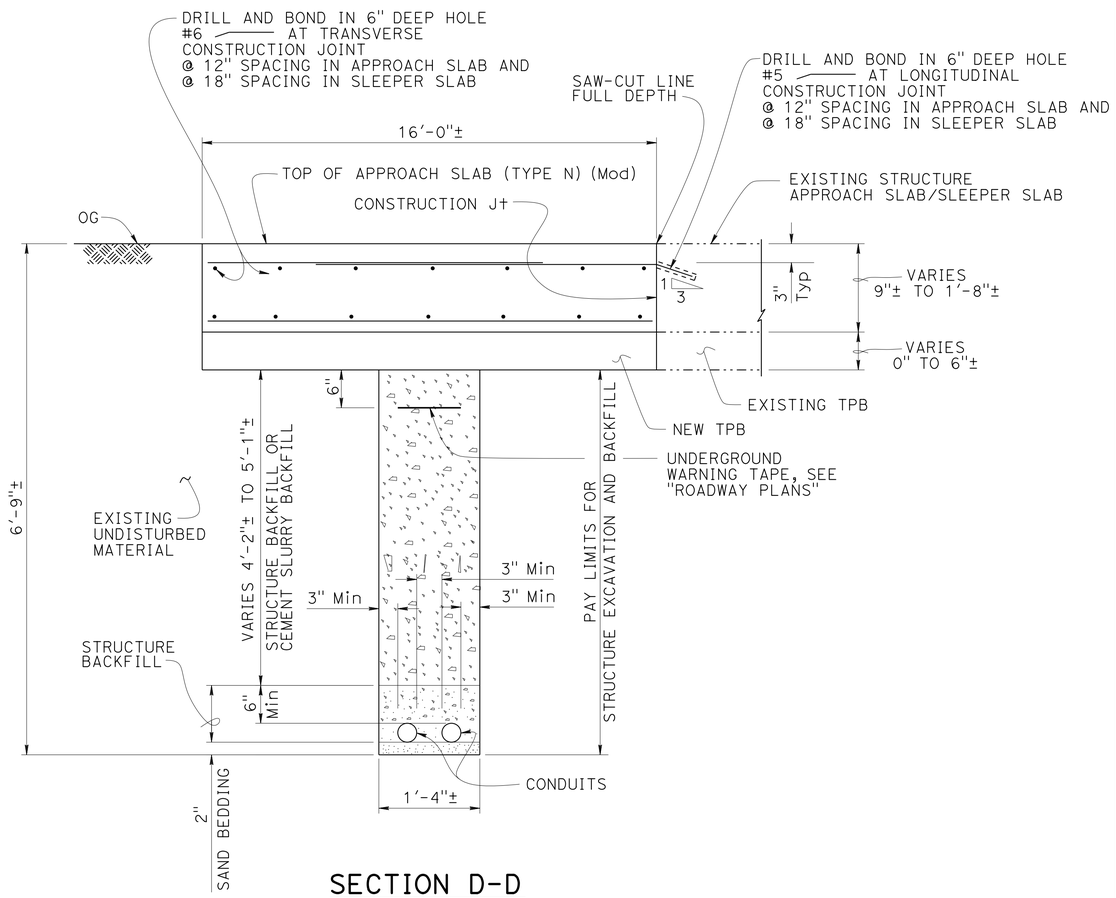

SECTION D-D

NO SCALE

NOTE:
THE CONTRACTOR MUST VERIFY ALL CONTROLLING FIELD DIMENSIONS BEFORE ORDERING OR FABRICATING ANY MATERIAL.

FIBER - OPTIC COMMUNICATION CONDUIT

WILSON WAY UNDERCROSSING

STRUCTURE APPROACH DETAILS No. 2

	BY	CHECKED
DESIGN	Juan Jauregui	John Datiles
DETAILS	Stan Cholda	Juan Jauregui
QUANTITIES	Juan Jauregui	John Datiles

STATE OF CALIFORNIA DEPARTMENT OF TRANSPORTATION

DIVISION OF ENGINEERING SERVICES STRUCTURE DESIGN SPECIAL DESIGN BRANCH A

BRIDGE NO. 29-0306R
POST MILE R17.71

STRUCTURES DESIGN DETAIL SHEET (ENGLISH) (REV. 09-01-10)

ORIGINAL SCALE IN INCHES FOR REDUCED PLANS 0 1 2 3

UNIT: 3619
PROJECT NUMBER & PHASE: 1013000114
CONTRACT NO.: 10-0X9704

DISREGARD PRINTS BEARING EARLIER REVISION DATES

REVISION DATES 01-26-15 02-06-15 04-29-15 6-1-15

SHEET 4 OF 4

FILE => 29-0306-k-sdet03.dgn

USERNAME => s113541 DATE PLOTTED => 04-SEP-2015 TIME PLOTTED => 14:12