Dist	COUNTY	ROUTE	POST MILES TOTAL PROJECT	SHEET No.	TOTAL SHEETS
10	Cal ,Mpa	4,49,140	Var	18	99

REGISTERED CIVIL ENGINEER 4/5/16 DATE

5-9-16
PLANS APPROVAL DATE

REGISTERED PROFESSIONAL ENGINEER Chin Dang No. 77340 Exp. 6/30/17 CIVIL STATE OF CALIFORNIA

THE STATE OF CALIFORNIA OR ITS OFFICERS OR AGENTS SHALL NOT BE RESPONSIBLE FOR THE ACCURACY OR COMPLETENESS OF SCANNED COPIES OF THIS PLAN SHEET.

NOTE:

FOR ACCURATE RIGHT OF WAY DATA, CONTACT RIGHT OF WAY ENGINEERING AT THE DISTRICT OFFICE.

LEGEND:

- FES
- RSP
- GRADE TO DRAIN

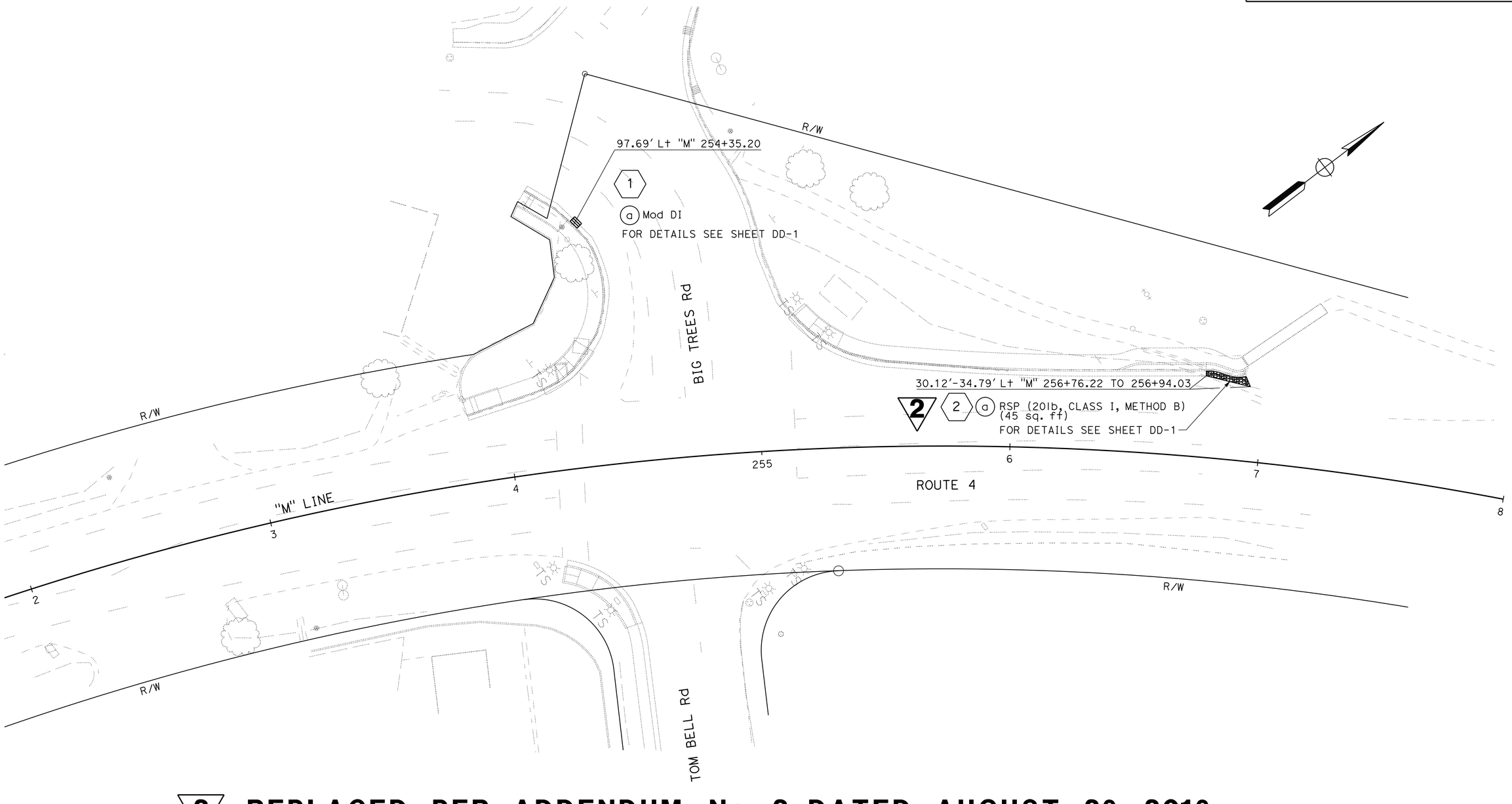

2 REPLACED PER ADDENDUM No. 2 DATED AUGUST 26, 2016

LOCATION 1

APPROVED FOR DRAINAGE WORK ONLY

DRAINAGE PLAN

SCALE: 1"=20'

D-1

STATE OF CALIFORNIA - DEPARTMENT OF TRANSPORTATION

Caltrans® **DESIGN**

FUNCTIONAL SUPERVISOR: CAROLINE REYES

CALCULATED-DESIGNED BY: CHIN DANG

CHECKED BY: CAROLINE REYES

REVISED BY: CD

DATE REVISED: 5/13/16

LAST REVISION 05-13-16

DATE PLOTTED => 23-AUG-2016
TIME PLOTTED => 11:51

Dist	COUNTY	ROUTE	POST MILES TOTAL PROJECT	SHEET No.	TOTAL SHEETS
10	Cal,Mpa	4,49,140	Var	21	99

REGISTERED CIVIL ENGINEER 4/5/16 DATE

5-9-16
PLANS APPROVAL DATE

REGISTERED PROFESSIONAL ENGINEER Chin Dang No. 77340 Exp. 6/30/17 CIVIL STATE OF CALIFORNIA

THE STATE OF CALIFORNIA OR ITS OFFICERS OR AGENTS SHALL NOT BE RESPONSIBLE FOR THE ACCURACY OR COMPLETENESS OF SCANNED COPIES OF THIS PLAN SHEET.

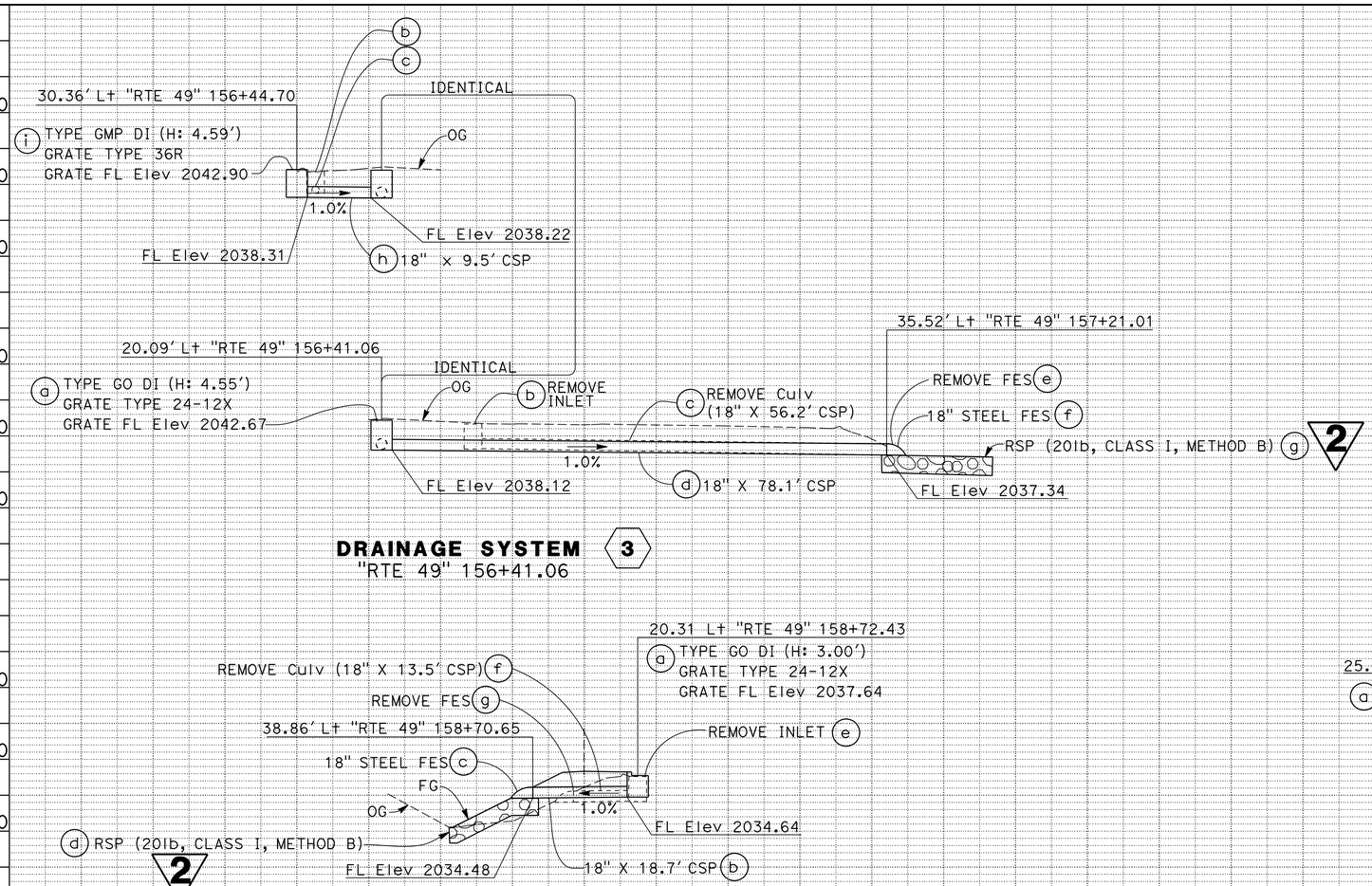

DRAINAGE SYSTEM 3
"RTE 49" 156+41.06

DRAINAGE SYSTEM 4
"RTE 49" 158+72.43

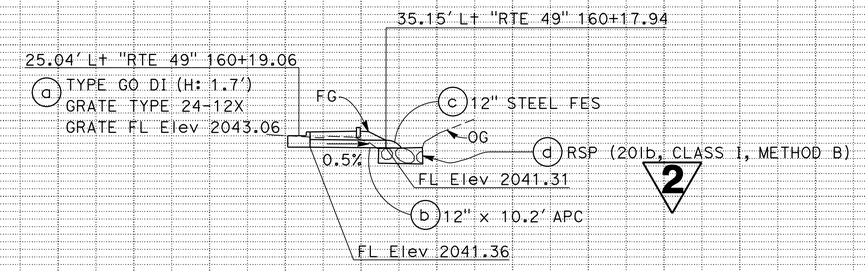

DRAINAGE SYSTEM 6
"RTE 49" 160+19.06

2 REPLACED PER ADDENDUM No. 2 DATED AUGUST 26, 2016

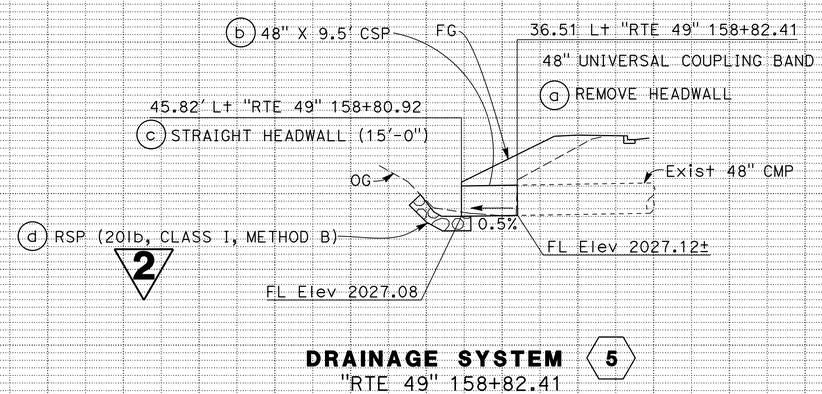

DRAINAGE SYSTEM 5
"RTE 49" 158+82.41

APPROVED FOR DRAINAGE WORK ONLY

DRAINAGE PROFILES
SCALE: Horiz 1" = 10'
Vert 1" = 10'

DP-1

REVISED BY	DATE REVISED
CD	5/13/16

CHIN DANG
CAROLINE REYES
CALCULATED-DESIGNED BY
CHECKED BY
CAROLINE REYES
FUNCTIONAL SUPERVISOR
STATE OF CALIFORNIA - DEPARTMENT OF TRANSPORTATION
Caltrans
DESIGN

LAST REVISION 05-13-16
DATE PLOTTED => 23-AUG-2016
TIME PLOTTED => 11:51

Dist	COUNTY	ROUTE	POST MILES TOTAL PROJECT	SHEET No.	TOTAL SHEETS
10	Cal,Mpa	4,49,140	Var	22	99

REGISTERED CIVIL ENGINEER 4/5/16 DATE

5-9-16
PLANS APPROVAL DATE

REGISTERED PROFESSIONAL ENGINEER Chin Dang No. 77340 Exp. 6/30/17 CIVIL STATE OF CALIFORNIA

THE STATE OF CALIFORNIA OR ITS OFFICERS OR AGENTS SHALL NOT BE RESPONSIBLE FOR THE ACCURACY OR COMPLETENESS OF SCANNED COPIES OF THIS PLAN SHEET.

2 REPLACED PER ADDENDUM No. 2 DATED AUGUST 26, 2016

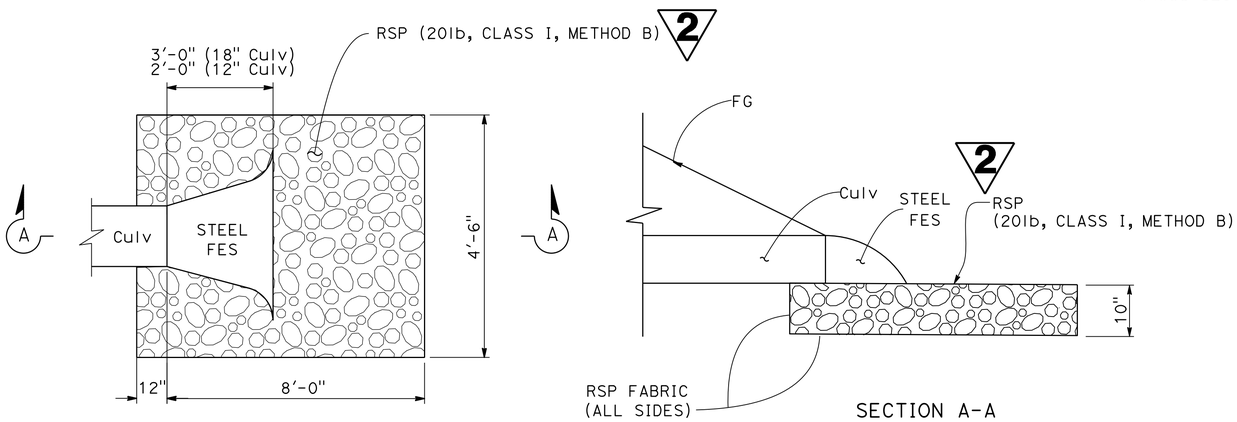

PLAN VIEW

SECTION A-A

RSP AT FES

3 g 4 d 5 e

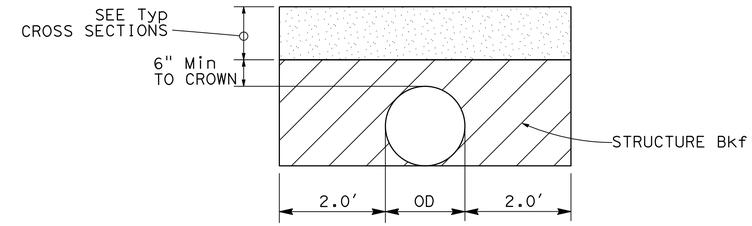

TRENCH PAVING DETAIL

3 h 4 b 5 b 6 b

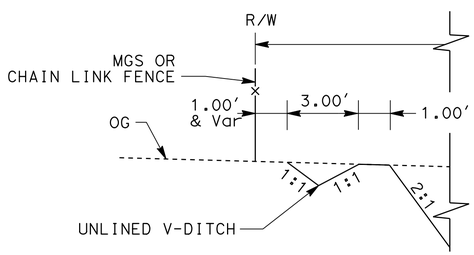

"RTE 49" LINE Sta 152+26 (Lt) TO 156+46 (Lt) UNLINED V-DITCH

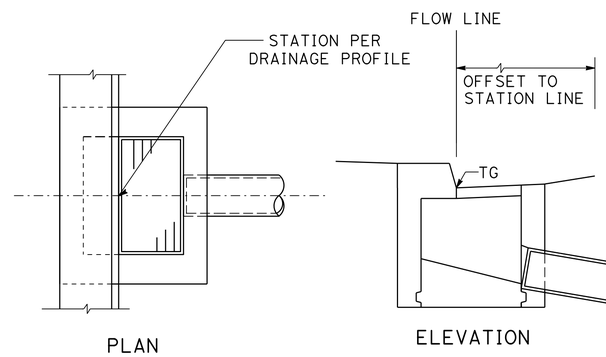

PLAN

ELEVATION

INLET ADJACENT TO CURB

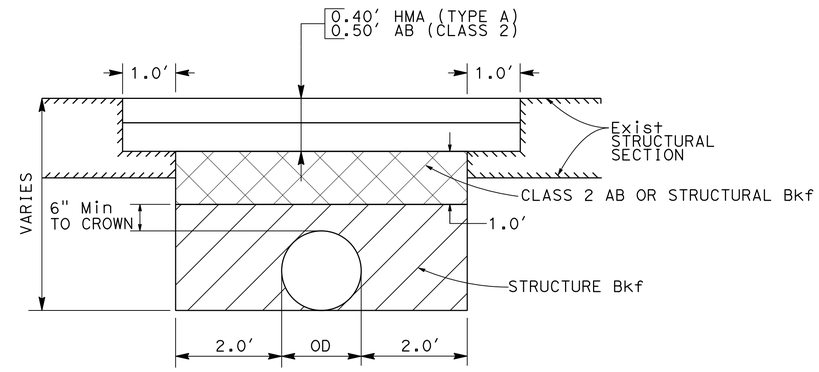

TRENCH PAVING DETAIL

3 d

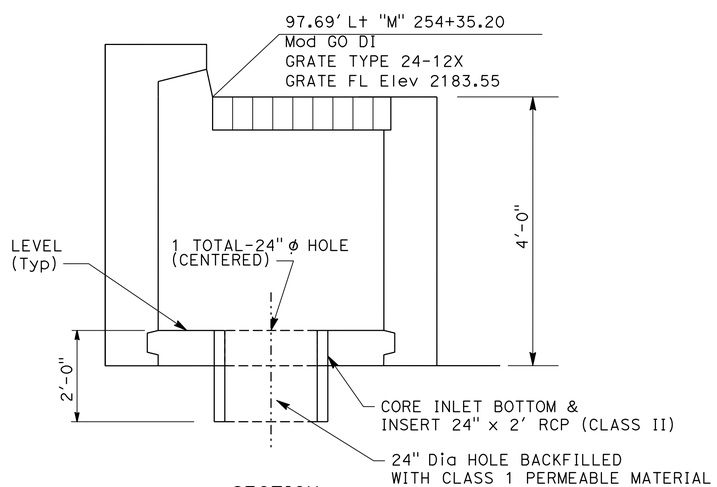

SECTION

Mod GO DI

1 a

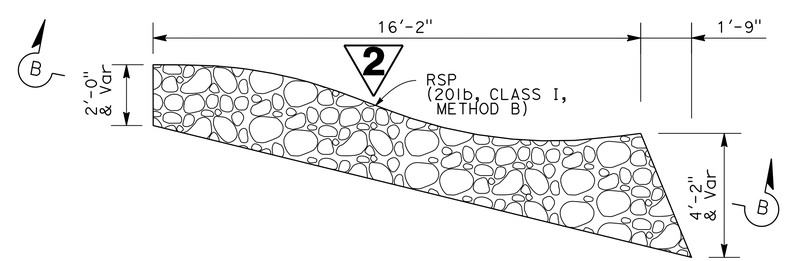

PLAN VIEW

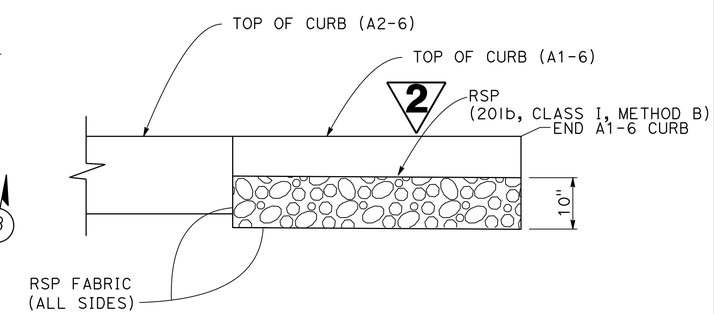

SECTION B-B

RSP DETAILS

2 a

APPROVED FOR DRAINAGE WORK ONLY

DRAINAGE DETAILS

NO SCALE

DD-1

REVISED BY	DATE REVISED
CD	5/17/16

CHIN DANG — CAROLINE REYES — CALCULATED-DESIGNED BY — CHECKED BY

FUNCTIONAL SUPERVISOR: CAROLINE REYES

STATE OF CALIFORNIA - DEPARTMENT OF TRANSPORTATION — DESIGN — Caltrans

LAST REVISION 05-17-16 — DATE PLOTTED => 23-AUG-2016 — TIME PLOTTED => 11:51

Dist	COUNTY	ROUTE	POST MILES TOTAL PROJECT	SHEET No.	TOTAL SHEETS
10	Cal,Mpa	4,49,140	Var	23	99

REGISTERED CIVIL ENGINEER 4/5/16 DATE

5-9-16
PLANS APPROVAL DATE

REGISTERED PROFESSIONAL ENGINEER Chin Dang No. 77340 Exp. 6/30/17 CIVIL STATE OF CALIFORNIA

THE STATE OF CALIFORNIA OR ITS OFFICERS OR AGENTS SHALL NOT BE RESPONSIBLE FOR THE ACCURACY OR COMPLETENESS OF SCANNED COPIES OF THIS PLAN SHEET.

NOTES:

1) (N)= NOT A SEPERATE PAY ITEM, FOR INFORMATION ONLY.
2) Min CSP PIPE THICKNESS 0.064 INCH.

2 **REPLACED PER ADDENDUM No. 2 DATED AUGUST 26, 2016**

2

DRAINAGE QUANTITIES

DRAINAGE PLAN No.	DRAINAGE SYSTEM No. ⬡	DRAINAGE UNIT ◯	REMOVE CULVERT (LF)	UNIVERSAL COUPLING BAND (N) (EA)	REMOVE FES (EA)	REMOVE HEADWALL (EA)	REMOVE INLET (EA)	CLASS 1 PERMEABLE MATERIAL (BLANKET) (CY)	MINOR CONCRETE (MINOR STRUCTURE) (CY)	MISC IRON AND STEEL (LB)	RSP (20lb, CLASS I, METHOD B) (CY)	RSP FABRIC (CLASS 8) (SQYD)	INLET DEPRESSION (EA)	INLET FRAME AND GRATE TYPE (36R) (N) (EA)	INLET FRAME AND GRATE TYPE (24-12X) (N) (EA)	HEIGHT OF INLET (N) (FT)	24" RCP (LF)	12" APC (LF)	18" CSP (0.064" THICK) (LF)	36" CSP (0.064" THICK) (LF)	48" CSP (0.064" THICK) (LF)	12" STEEL FES (EA)	18" STEEL FES (EA)	DITCH EXCAVATION (CY)	DESCRIPTION	STATION LIMITS	DRAINAGE PLAN No.	DRAINAGE SYSTEM No. ⬡	DRAINAGE UNIT ◯
D-1	1	a						1.7	1.5	239			1		1	4.0	2.0								GO DI (Mod)	97.69′ Lt "M" 254+35.20	D-1	1	a
D-1	2	a									1.4	8.9													RSP	34.88′ Lt "M" 256+76.22 TO 34.02′ Lt "M" 156+92.00	D-1	2	a
D-2	3	a							1.6	239			1		1	4.6									GO DI	20.09′ Lt "RTE 49" 156+41.06	D-2	3	a
		b					1																		REMOVE DI	29.11′ Lt "RTE 49" 156+62.17			b
		c	56.2																						REMOVE 18" CSP	29.92′ Lt "RTE 49" 156+63.70 TO 35.52′ Lt "RTE 49" 157+21.01			c
		d																	78.1						18" CSP	19.05′ Lt "RTE 49" 156+51.77 TO 35.52′ Lt "RTE 49" 157+21.01			d
		e			1																				REMOVE STEEL FES	35.52′ Lt "RTE 49" 157+21.01			e
		f																					1		18" STEEL FES	35.52′ Lt "RTE 49" 157+21.01			f
		g									1.3	7.0													RSP	35.52′ Lt "RTE 49" 157+21.01			g
		h																	9.5						18" CSP	30.31′ Lt "RTE 49" 156+51.66 TO 19.05′ Lt "RTE 49" 156+51.77			h
		i							0.4	236				1		4.6				4.4					GMP DI	30.31′ Lt "RTE 49" 156+51.66			i
D-3	4	a							1.3	239			1		1	3.0									GO DI	20.31′ Lt "RTE 49" 158+72.43	D-3	4	a
		b																	18.7						18" CSP	20.31′ Lt "RTE 49" 158+72.43 TO 38.86′ Lt "RTE 49" 158+70.65			b
		c																					1		18" STEEL FES	38.86′ Lt "RTE 49" 158+70.65			c
		d									1.3	7.0													RSP	38.86′ Lt "RTE 49" 158+70.65			d
		e					1																		REMOVE DI	20.31′ Lt "RTE 49" 158+72.43			e
		f	13.5																						REMOVE 18" CSP	20.31′ Lt "RTE 49" 158+72.43 TO 37.08′ Lt "RTE 49" 158+73.04			f
		g			1																				REMOVE STEEL FES	20.31′ Lt "RTE 49" 158+72.43			g
	5	a				1																			REMOVE HEADWALL	36.51′ Lt "RTE 49" 158+82.41		5	a
		b		1																	9.5				48" CSP, ANNULAR BAND	36.51′ Lt "RTE 49" 158+82.41 TO 45.82′ Lt "RTE 49" 158+80.92			b
		c							2.8																STRAIGHT HEADWALL	44.65′ Lt "RTE 49" 158+73.23 TO 46.95′ Lt "RTE 49" 158+88.63			c
		d									1.3	7.0													RSP	45.82′ Lt "RTE 49" 158+80.92			d
	6	a							0.7	239			1		1	1.7									GO DI	25.04′ Lt "RTE 49" 160+19.06		6	a
		b																10.2							12" APC	25.04′ Lt "RTE 49" 160+19.06 TO 35.15′ Lt "RTE 49" 160+17.94			b
		c																				1			12" STEEL FES	35.15′ Lt "RTE 49" 160+17.94			c
D-4		d									1.3	7.0													RSP	35.15′ Lt "RTE 49" 160+17.94	D-4		d
D-2																								33.5	UNLINED V-DITCH	35.20′ TO 54.18′ Lt "RTE 49" 152+26.50 TO 156+37.98	D-2		
TOTAL			69.7		2	1	2	1.7	8.3	1192	6.6	36.9	4				2.0	10.2	106.3	4.4	9.5	1	2	33.5					

ALTERNATIVE PIPE CULVERT (APC)
ALLOWABLE PIPE MATERIAL (SMOOTH INTERIOR)

	RCP	CSP	HDPE
12" APC	X	X	X

APPROVED FOR DRAINAGE WORK ONLY

DRAINAGE QUANTITIES

DQ-1

CHIN DANG — REVISED BY — CD
CAROLINE REYES — DATE REVISED — 5/17/16
CALCULATED-DESIGNED BY — CHECKED BY
FUNCTIONAL SUPERVISOR — CAROLINE REYES
STATE OF CALIFORNIA - DEPARTMENT OF TRANSPORTATION — Caltrans — DESIGN

LAST REVISION 05-17-16 — DATE PLOTTED => 23-AUG-2016 — TIME PLOTTED => 11:51