| Dist | COUNTY | ROUTE | POST MILES TOTAL PROJECT | SHEET No. | TOTAL SHEETS |
|---|---|---|---|---|---|
| 10 | SJ | 5,120, 580 | Var | 1 | 13 |

INDEX OF PLANS


| SHEET No. | DESCRIPTION |
|---|---|
| 1 | TITLE AND LOCATION MAP |
| 2 | CONSTRUCTION AREA SIGNS AND SUMMARY OF QUANTITIES |
| 3-7 | REVISED STANDARD PLANS |

STRUCTURE PLANS

| | |
|---|---|
| 8-13 | ROUTES 5, 120 AND 580 BRIDGES |


THE STANDARD PLANS LIST APPLICABLE TO THIS CONTRACT IS INCLUDED IN THE NOTICE TO BIDDERS AND SPECIAL PROVISIONS BOOK.

STATE OF CALIFORNIA

# DEPARTMENT OF TRANSPORTATION

# PROJECT PLANS FOR CONSTRUCTION ON

# STATE HIGHWAY

## IN SAN JOAQUIN COUNTY AT VARIOUS LOCATIONS

TO BE SUPPLEMENTED BY STANDARD PLANS DATED MAY 2006

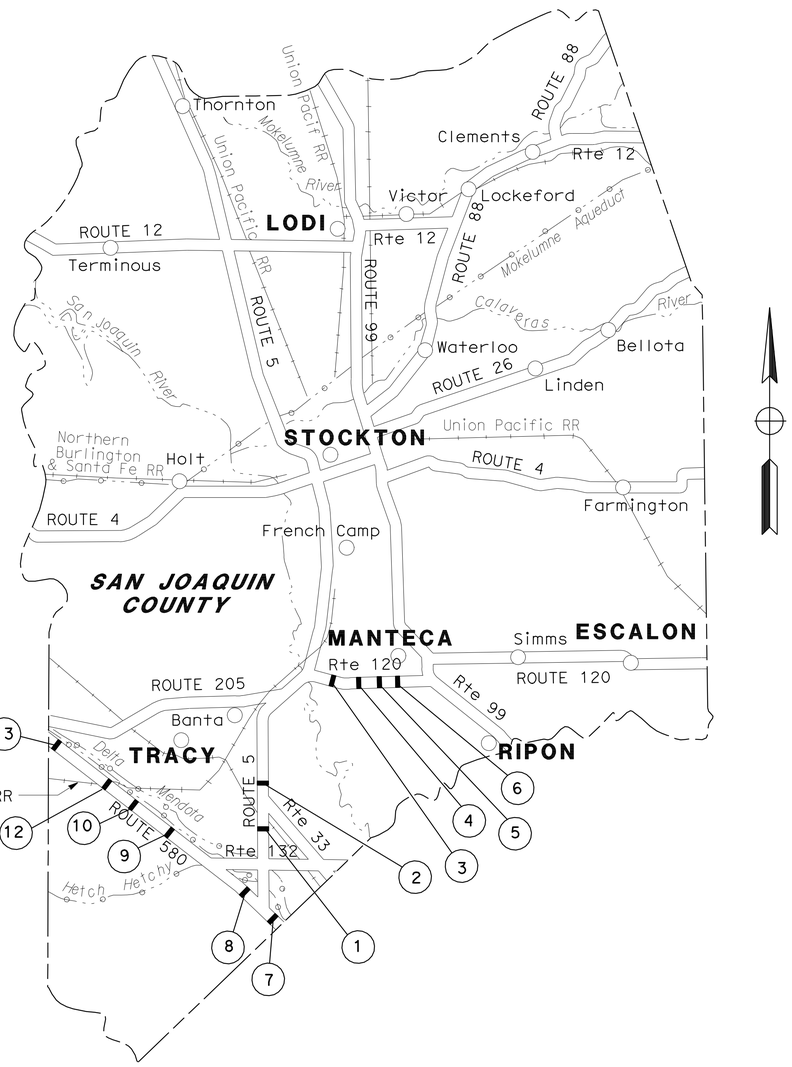

LOCATION MAP

## LOCATIONS OF CONSTRUCTION

| Loc | ROUTE | PM | STRUCTURE NAME | BRIDGE No. |
|---|---|---|---|---|
| 1 | 5 | 5.47 | DURHAM FERRY ROAD OVERCROSSING | 29-0259 |
| 2 | 5 | 7.48 | LINNE ROAD OVERCROSSING | 29-0261 |
| 3 | 120 | R2.29 | McKINLEY AVENUE UNDERCROSSING | 29-0273R |
| 4 | 120 | R3.32 | AIRPORT WAY OVERCROSSING | 29-0274 |
| 5 | 120 | R4.31 | UNION ROAD OVERCROSSING | 29-0275 |
| 6 | 120 | R5.31 | MAIN STREET OVERCROSSING | 29-0276 |
| 7 | 580 | L0.23 | GAFFERY ROAD UNDERCROSSING | 29-0227L |
| 8 | 580 | 1.41 | BIRD ROAD OVERCROSSING | 29-0170 |
| 9 | 580 | 6.57 | TRACY BOULEVARD OVERCROSSING | 29-0094 |
| 10 | 580 | 12.03 | HANSEN ROAD UNDERCROSSING | 29-172L |
| 11 | 580 | 12.74 | EAST MIDWAY OVERHEAD | 29-0082R |
| 12 | 580 | 12.76 | EAST MIDWAY OVERHEAD | 29-0082L |
| 13 | 580 | 13.54 | PATTERSON PASS ROAD OVERCROSSING | 29-0024 |

Rhodel De Claro 11/10/09
PROJECT ENGINEER DATE
REGISTERED CIVIL ENGINEER

January 11, 2010
PLANS APPROVAL DATE

REGISTERED PROFESSIONAL ENGINEER RHODEL De CLARO No. 74058 Exp. 6/30/11 CIVIL STATE OF CALIFORNIA

*THE STATE OF CALIFORNIA OR ITS OFFICERS OR AGENTS SHALL NOT BE RESPONSIBLE FOR THE ACCURACY OR COMPLETENESS OF SCANNED COPIES OF THIS PLAN SHEET.*

PROJECT MANAGER ALVIN MANGINDIN

DESIGN ENGINEER ALVIN MANGINDIN

THE CONTRACTOR SHALL POSSESS THE CLASS (OR CLASSES) OF LICENSE AS SPECIFIED IN THE "NOTICE TO BIDDERS."

NO SCALE

CONTRACT No. **10-0T4304**

LAST REVISION 00-00-00 DATE PLOTTED => 19-JAN-2010 TIME PLOTTED => 08:35

| Dist | COUNTY | ROUTE | POST MILES TOTAL PROJECT | SHEET No. | TOTAL SHEETS |
|---|---|---|---|---|---|
| 10 | SJ | 5,120, 580 | Var | 2 | 13 |

Rhodel De Claro 11/10/09
REGISTERED CIVIL ENGINEER DATE

1-11-10
PLANS APPROVAL DATE

REGISTERED PROFESSIONAL ENGINEER RHODEL De CLARO No. 74058 Exp. 6/30/11 CIVIL STATE OF CALIFORNIA

*THE STATE OF CALIFORNIA OR ITS OFFICERS OR AGENTS SHALL NOT BE RESPONSIBLE FOR THE ACCURACY OR COMPLETENESS OF SCANNED COPIES OF THIS PLAN SHEET.*

## STATIONARY MOUNTED CONSTRUCTION AREA SIGNS

| LOCATION No. | ROUTE | PM | BRIDGE NAME | BRIDGE No. | SIGN CODE | PANEL SIZE | No. OF SIGNS | No. OF POSTS AND SIZE | SIGN MESSAGE |
|---|---|---|---|---|---|---|---|---|---|
| 1 | 5 | 5.47 | DURHAM FERRY ROAD OVERCROSSING | 29-0259 | W20-1 | 36" x 36" | 2 | 1 - 4" x 6" | ROAD WORK AHEAD |
| | | | | | G20-2 | 36" x 18" | 2 | 1 - 4" x 4" | END ROAD WORK |
| 2 | 5 | 7.48 | LINNE ROAD OVERCROSSING | 29-0261 | W20-1 | 36" x 36" | 2 | 1 - 4" x 6" | ROAD WORK AHEAD |
| | | | | | G20-2 | 36" x 18" | 2 | 1 - 4" x 4" | END ROAD WORK |
| 4 | 120 | R3.32 | AIRPORT WAY OVERCROSSING | 29-0274 | W20-1 | 36" x 36" | 2 | 1 - 4" x 6" | ROAD WORK AHEAD |
| | | | | | G20-2 | 36" x 18" | 2 | 1 - 4" x 4" | END ROAD WORK |
| 5 | 120 | R4.31 | UNION ROAD OVERCROSSING | 29-0275 | W20-1 | 36" x 36" | 2 | 1 - 4" x 6" | ROAD WORK AHEAD |
| | | | | | G20-2 | 36" x 18" | 2 | 1 - 4" x 4" | END ROAD WORK |
| 6 | 120 | R5.31 | MAIN STREET OVERCROSSING | 29-0276 | W20-1 | 36" x 36" | 2 | 1 - 4" x 6" | ROAD WORK AHEAD |
| | | | | | G20-2 | 36" x 18" | 2 | 1 - 4" x 4" | END ROAD WORK |
| 7 | 580 | L0.23 | GAFFERY ROAD UNDERCROSSING | 29-0227L | W20-1 | 48" x 48" | 2 | 1 - 6" x 6" | ROAD WORK AHEAD |
| | | | | | G20-2 | 48" x 24" | 2 | 1 - 4" x 6" | END ROAD WORK |
| 8 | 580 | 1.41 | BIRD ROAD OVERCROSSING | 29-0170 | W20-1 | 36" x 36" | 2 | 1 - 4" x 6" | ROAD WORK AHEAD |
| | | | | | G20-2 | 36" x 18" | 2 | 1 - 4" x 4" | END ROAD WORK |
| 9 | 580 | 6.57 | TRACY BOULEVARD OVERCROSSING | 29-0094 | W20-1 | 36" x 36" | 2 | 1 - 4" x 6" | ROAD WORK AHEAD |
| | | | | | G20-2 | 36" x 18" | 2 | 1 - 4" x 4" | END ROAD WORK |
| 10 | 580 | 12.03 | HANSEN ROAD UNDERCROSSING | 29-172L | W20-1 | 48" x 48" | 2 | 1 - 6" x 6" | ROAD WORK AHEAD |
| | | | | | G20-2 | 48" x 24" | 2 | 1 - 4" x 6" | END ROAD WORK |
| 13 | 580 | 13.54 | PATTERSON PASS ROAD OVERCROSSING | 29-0024 | W20-1 | 36" x 36" | 4 | 1 - 4" x 6" | ROAD WORK AHEAD |
| | | | | | G20-2 | 36" x 18" | 4 | 1 - 4" x 4" | END ROAD WORK |

NOTE: EXACT SIGN LOCATIONS TO BE DETERMINED BY THE ENGINEER.

## PAVEMENT DELINEATION ITEMS

| LOCATION | REMOVE YELLOW THERMOPLASTIC TRAFFIC STRIPE (HAZARDOUS WASTE) | REMOVE THERMOPLASTIC TRAFFIC STRIPE | THERMOPLASTIC TRAFFIC STRIPE (SPRAYABLE) | | | | REMOVE PAVEMENT MARKER | PAVEMENT MARKER (RETROREFLECTIVE) | | |
|---|---|---|---|---|---|---|---|---|---|---|
| | | | 4" YELLOW | | 4" WHITE | | | TYPE D | TYPE G | TYPE H |
| | | | DETAIL 22 | DETAIL 25 | DETAIL 12 | DETAIL 27B | | DETAIL 22 | DETAIL 12 | DETAIL 25 |
| | LF | LF | LF | | | | EA | EA | | |
| 1 | 206 | 412 | 206 | | | 412 | 18 | 18 | | |
| 2 | 206 | 412 | 206 | | | 412 | 18 | 18 | | |
| 4 | 215 | 430 | 215 | | | 430 | 18 | 18 | | |
| 5 | 215 | 430 | 215 | | | 430 | 18 | 18 | | |
| 6 | 215 | 430 | 215 | | | 430 | 18 | 18 | | |
| 7 | 92 | 184 | | 92 | 92 | 92 | 4 | | 2 | 2 |
| 8 | | | 352 | | | 704 | 30 | 30 | | |
| 9 | 308 | 616 | 308 | | | 616 | 26 | 26 | | |
| 10 | 68 | 136 | | 68 | 68 | 68 | 4 | | 2 | 2 |
| 13 | 238 | 476 | 238 | | | 476 | 20 | 20 | | |
| SUBTOTAL | 1763 | 3526 | 1955 | 160 | 160 | 4070 | 174 | 166 | 4 | 4 |
| TOTAL | 1763 | 3526 | 6345 | | | | 174 | 174 | | |

THIS PLAN ACCURATE FOR CONSTRUCTION AREA SIGN WORK ONLY.

# CONSTRUCTION AREA SIGNS AND SUMMARY OF QUANTITIES

# CS-1

| | |
|---|---|
| RD | 11/10/09 |
| REVISED BY | DATE REVISED |
| RHODEL DE CLARO | JOSE A. ALICEA II |
| CALCULATED-DESIGNED BY | CHECKED BY |
| FUNCTIONAL SUPERVISOR | ALVIN MANGINDIN |

STATE OF CALIFORNIA - DEPARTMENT OF TRANSPORTATION
Caltrans MAINTENANCE

LAST REVISION 00-00-00 | DATE PLOTTED => 19-JAN-2010 TIME PLOTTED => 08:35

| DIST | COUNTY | ROUTE | POST MILES TOTAL PROJECT | SHEET NO. | TOTAL SHEETS |
|---|---|---|---|---|---|
| 10 | SJ | 5,120, 580 | Var | 3 | 13 |

Randell D. Hiatt
REGISTERED CIVIL ENGINEER

June 6, 2008
PLANS APPROVAL DATE

REGISTERED PROFESSIONAL ENGINEER
Randell D. Hiatt
No. C50200
Exp. 6-30-09
CIVIL
STATE OF CALIFORNIA

*The State of California or its officers or agents shall not be responsible for the accuracy or completeness of electronic copies of this plan sheet.*

*To accompany plans dated* 1-11-10

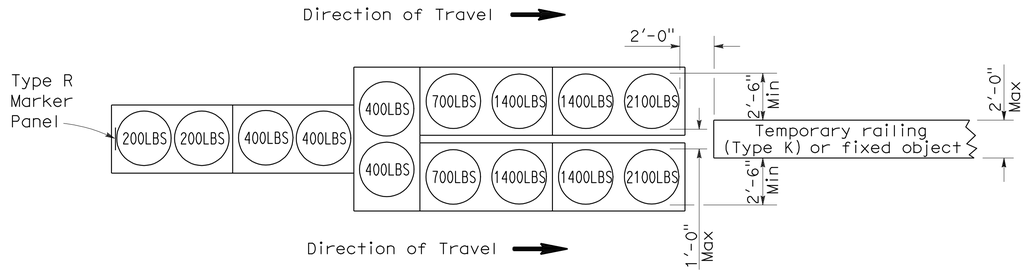


## ARRAY 'TU14'

Approach speed 45 mph or more

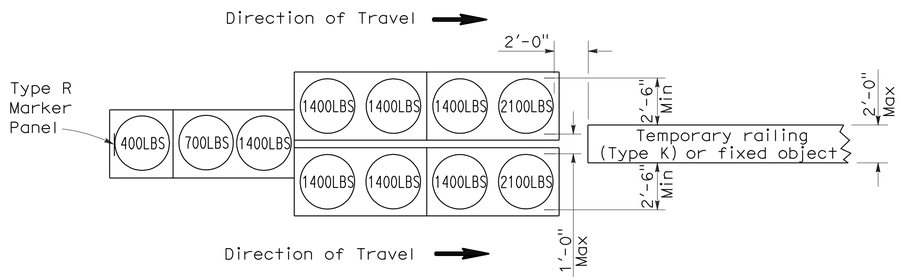


## ARRAY 'TU11'

Approach speed less than 45 mph

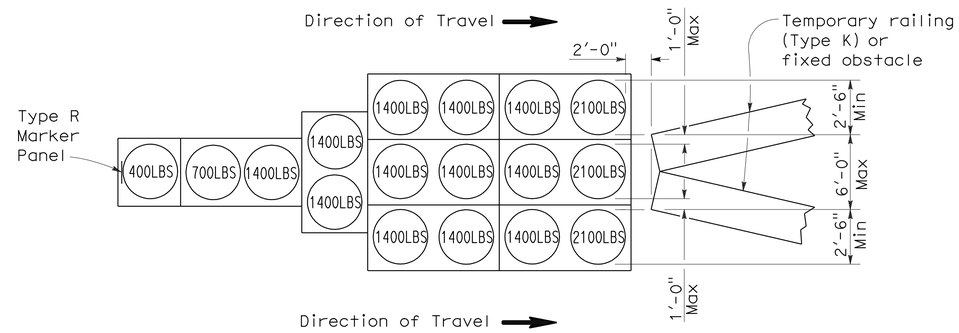


## ARRAY 'TU17'

Approach speed less than 45 mph

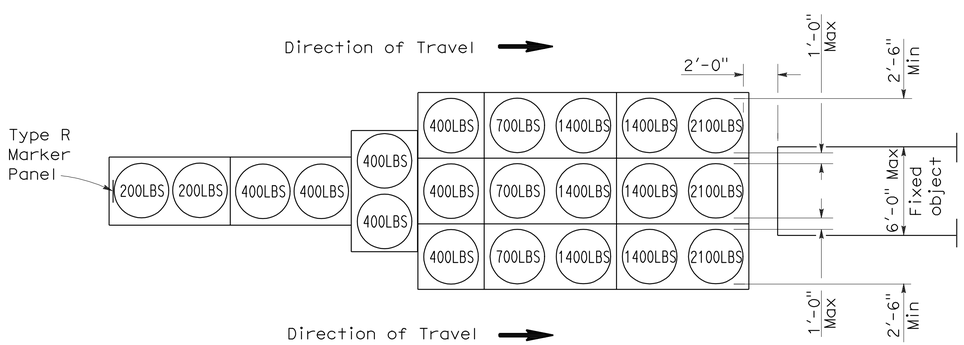


## ARRAY 'TU21'

Approach speed 45 mph or more

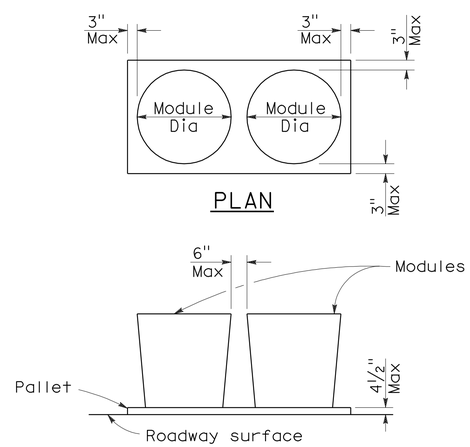


## ELEVATION

## CRASH CUSHION PALLET DETAIL

See Note 7

## NOTES:

1. (XXX) Indicates sand filled module location and weight of sand in pounds for each module. Module spacing is based on the greater diameter of the module.
2. All sand weights are nominal.
3. Temporary crash cushion arrays shall not encroach on the traveled way.
4. Place the top of Type R marker panel 1" below the module lid.
5. Refer to Standard Plan A73B for marker details.
6. Approach speeds indicated conform to NCHRP 350 Report criteria.
7. Use of pallets is optional.

STATE OF CALIFORNIA
DEPARTMENT OF TRANSPORTATION

# TEMPORARY CRASH CUSHION, SAND FILLED (UNIDIRECTIONAL)

NO SCALE

RSP T1A DATED JUNE 6, 2008 SUPERSEDES STANDARD PLAN T1A
DATED MAY 1, 2006 - PAGE 211 OF THE STANDARD PLANS BOOK DATED MAY 2006.

**REVISED STANDARD PLAN RSP T1A**

**2006 REVISED STANDARD PLAN RSP T1A**

| DIST | COUNTY | ROUTE | POST MILES TOTAL PROJECT | SHEET NO. | TOTAL SHEETS |
|---|---|---|---|---|---|
| 10 | SJ | 5,120, 580 | Var | 4 | 13 |

Randell D. Hiatt
REGISTERED CIVIL ENGINEER

June 6, 2008
PLANS APPROVAL DATE

REGISTERED PROFESSIONAL ENGINEER
Randell D. Hiatt
No. C50200
Exp. 6-30-09
CIVIL
STATE OF CALIFORNIA

*The State of California or its officers or agents shall not be responsible for the accuracy or completeness of electronic copies of this plan sheet.*

*To accompany plans dated* 1-11-10

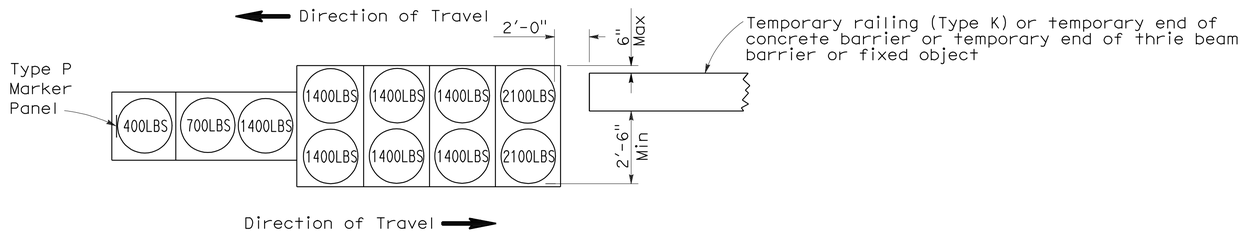


ARRAY 'TB11'

Approach speed less than 45 mph

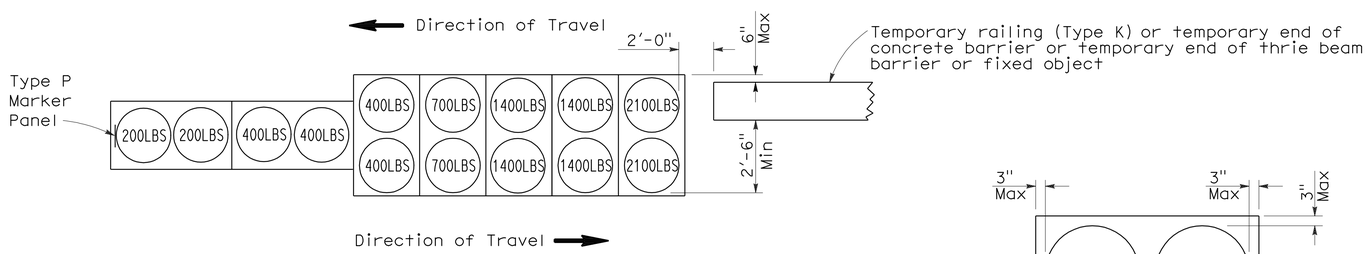


ARRAY 'TB14'

Approach speed 45 mph or more

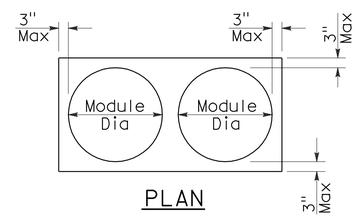


PLAN

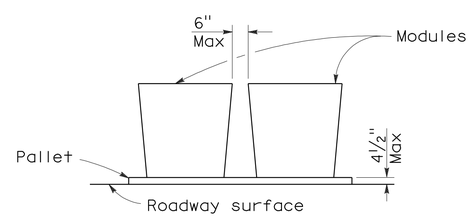


ELEVATION

CRASH CUSHION PALLET DETAIL

See Note 7

NOTES:

1. (XXX) Indicates sand filled module location and weight of sand in pounds for each module. Module spacing is based on the greater diameter of the module.
2. All sand weights are nominal.
3. Temporary crash cushion arrays shall not encroach on the traveled way.
4. Place the Type P marker panel so that the bottom of the panel rests upon the pallet.
5. Refer to Standard Plan A73B for marker details.
6. Approach speeds indicated conform to NCHRP 350 Report criteria.
7. Use of pallets is optional.

STATE OF CALIFORNIA
DEPARTMENT OF TRANSPORTATION

# TEMPORARY CRASH CUSHION, SAND FILLED (BIDIRECTIONAL)

NO SCALE

RSP T1B DATED JUNE 6, 2008 SUPERSEDES STANDARD PLAN T1B
DATED MAY 1, 2006 - PAGE 212 OF THE STANDARD PLANS BOOK DATED MAY 2006.

**REVISED STANDARD PLAN RSP T1B**

**2006 REVISED STANDARD PLAN RSP T1B**

5-15-08

| DIST | COUNTY | ROUTE | POST MILES TOTAL PROJECT | SHEET NO. | TOTAL SHEETS |
|---|---|---|---|---|---|
| 10 | SJ | 5,120, 580 | Var | 5 | 13 |

Randell D. Hiatt
REGISTERED CIVIL ENGINEER

June 6, 2008
PLANS APPROVAL DATE

REGISTERED PROFESSIONAL ENGINEER
Randell D. Hiatt
No. C50200
Exp. 6-30-09
CIVIL
STATE OF CALIFORNIA

*The State of California or its officers or agents shall not be responsible for the accuracy or completeness of electronic copies of this plan sheet.*

*To accompany plans dated* 1-11-10

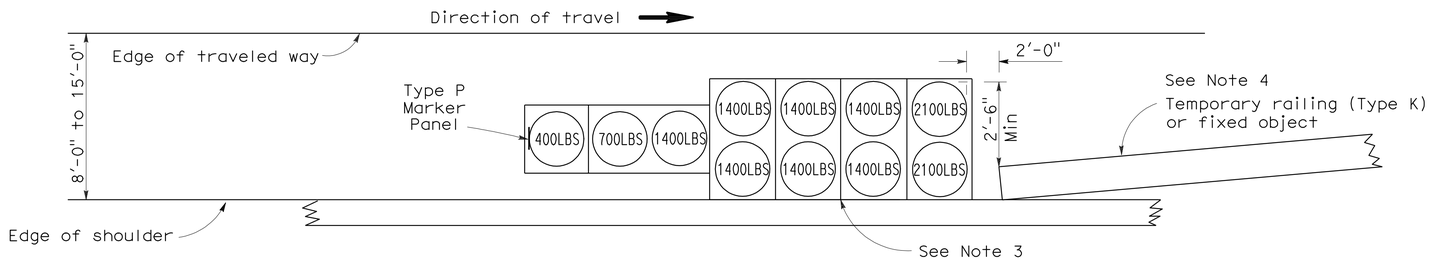


## ARRAY 'TS11'

Approach speed less than 45 mph
See Note 9

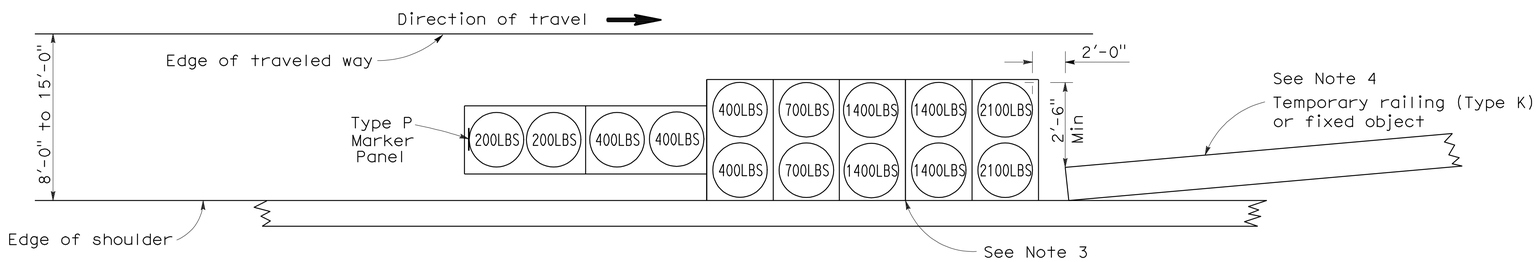


## ARRAY 'TS14'

Approach speed 45 mph or more
See Note 9

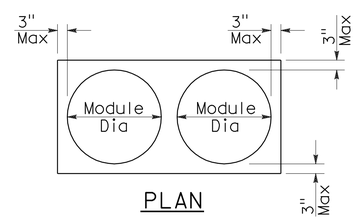


PLAN

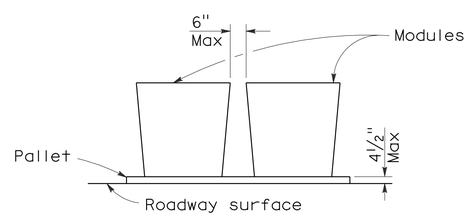


ELEVATION

## CRASH CUSHION PALLET DETAIL

See Note 11

## NOTES:

1. (XXX) Indicates sand filled module location and weight of sand in pounds for each module. Module spacing is based on the greater diameter of the module.
2. All sand weights are nominal.
3. The temporary crash cushion arrays shown on this plan shall be used only in locations where there will be traffic on one side of the temporary crash cushion array.
4. If the fixed object or approach end of the temporary railing is less than 15'-0" from the edge of traveled way, a temporary crash cushion is required in a construction or work zone.
5. Temporary crash cushion arrays shall not encroach on the traveled way.
6. Arrays for median shoulders shall conform to details shown on this plan for outside shoulders.
7. Place the Type P marker panel so that the bottom of the panel rests upon the pallet and faces traffic.
8. Refer to Standard Plan A73B for marker details.
9. For shoulder widths less than 8'-0", appropriate approved crash cushion protection, other than sand filled modules, shall be provided at fixed objects and at approach ends of temporary railing. The specific type of crash cushion shall be as shown on the project plans or as specified in the Special Provisions, or if not shown on the project plans or specified in the Special Provisions, shall be as approved by the Engineer.
10. Approach speeds indicated conform to NCHRP 350 Report criteria.
11. Use of pallets is optional.

STATE OF CALIFORNIA
DEPARTMENT OF TRANSPORTATION

# TEMPORARY CRASH CUSHION, SAND FILLED (SHOULDER INSTALLATIONS)

NO SCALE

RSP T2 DATED JUNE 6, 2008 SUPERSEDES STANDARD PLAN T2
DATED MAY 1, 2006 - PAGE 213 OF THE STANDARD PLANS BOOK DATED MAY 2006.

**REVISED STANDARD PLAN RSP T2**

**2006 REVISED STANDARD PLAN RSP T2**

5-15-08

| DIST | COUNTY | ROUTE | POST MILES TOTAL PROJECT | SHEET NO. | TOTAL SHEETS |
|---|---|---|---|---|---|
| 10 | SJ | 5,120, 580 | Var | 6 | 13 |

REGISTERED CIVIL ENGINEER

October 5, 2007
PLANS APPROVAL DATE

REGISTERED PROFESSIONAL ENGINEER Efthymios Delis No. C51434 Exp. 6-30-08 CIVIL STATE OF CALIFORNIA

*The State of California or its officers or agents shall not be responsible for the accuracy or completeness of electronic copies of this plan sheet.*

*To accompany plans dated* 1-11-10

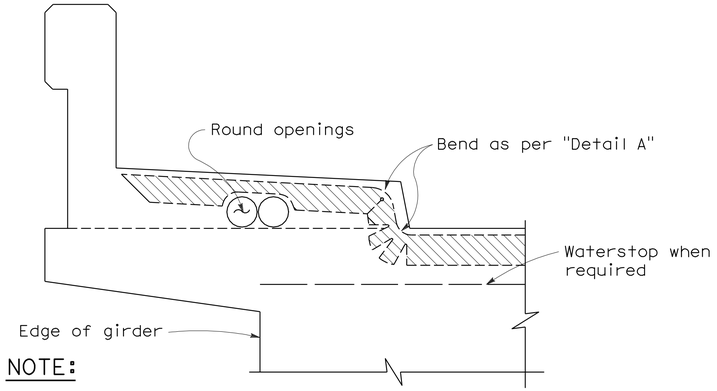


NOTE:

Type "B" seal shown. Type "A" seals to comform to the general path of seal shown, cuts for bending not required. Bend Type "A" seals 3" up into curb or barrier rail on only the low end of the seal.

CONCRETE BARRIER AND SIDEWALK

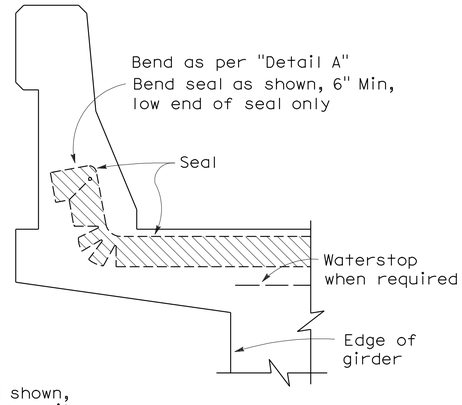


CONCRETE BARRIER

## JOINT SEALS DETAILS

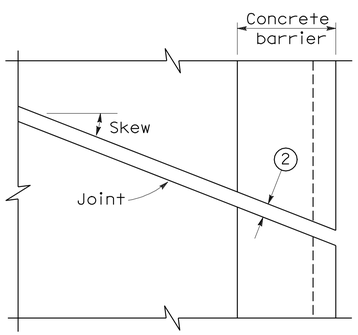


PLAN OF JOINT (SKEW ≤ 20°)

Min ℄ radius to be 4 times uncompressed width of seal or as recommended by the manufacturer, whichever is greater

In lieu of saw cutting, this area may be blocked out and reconstructed to match saw cutting on both sides.

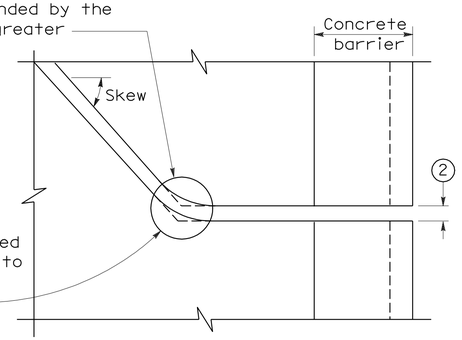


PLAN OF JOINT (SKEW > 20°)

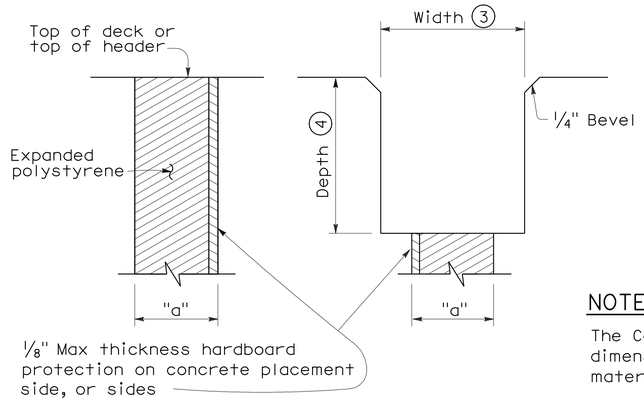


FORMING DETAIL SAWCUT DETAIL

NOTE:

The Contractor shall verify all controlling field dimensions before ordering or fabricatiing any material.

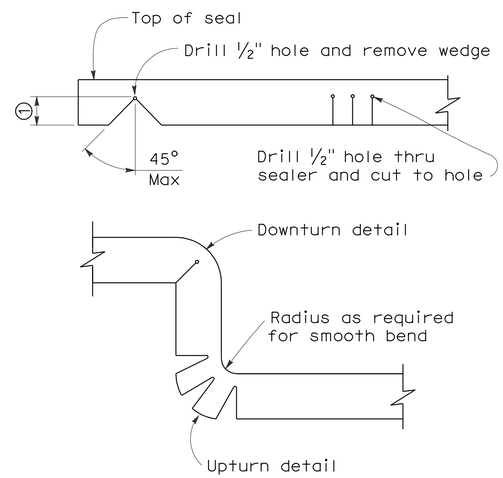


DETAIL A

NOTES:

1. Make smooth cuts from the bottom of seal to 1½" clear of top leaving at least one complete cell between the top of the cut and top of the seal. When necessary cut back of seal to clear conduit and round openings.
2. Opening in barrier to match width of sawn deck joint.
3. Sawcut groove widths shall be as ordered by the Engineer.
4. Depth of sawcut: Type A - Depth to be 2" minimum.
   Type B - Depth to be equal to or greater than the depth of seal measured along the contact surface, when compressed to minimum width position ($W_2$) plus dimensions shown.
5. MR (movement rating) as shown on other plan sheets.
6. Other depths must be approved by the Engineer.

DIMENSIONS "a" OF JOINT REQUIRED

| Movement Rating (MR) 5 | Bridge Type | "a" Dimension Deck Concrete Placed | | |
|---|---|---|---|---|
| | | Winter | Fall-Spring | Summer |
| 2" | All except CIP/PS | 1½" | 1¼" | ¾" |
| | CIP/PS | 1¼" | 1" | ½" |
| 1½" | All except CIP/PS | 1¼" | 1" | ½" |
| | CIP/PS | 1" | ¾" | ½" |
| 1" | All except CIP/PS | 1" | ¾" | ½" |
| | CIP/PS | ¾" | ½" | ½" |
| ½" | All except CIP/PS | ¾" | ¾" | ½" |
| | CIP/PS | ½" | ½" | ½" |

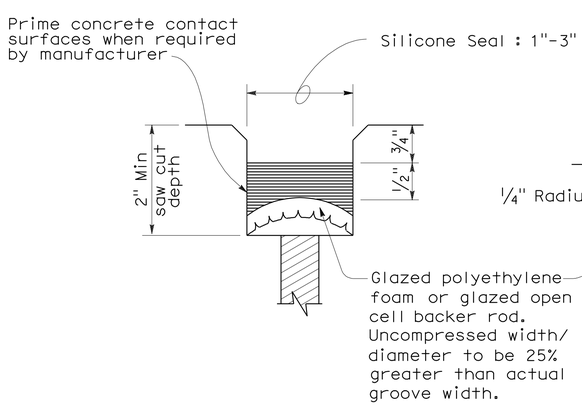


TYPE A SEAL

Movement rating : Silicone = 1" Max

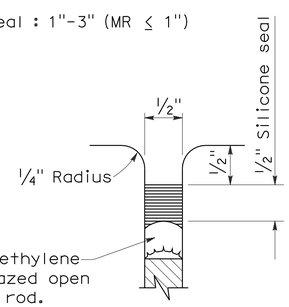


TYPE AL SEAL

Longitudinal joints only

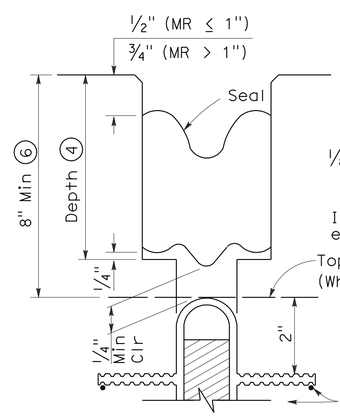


TYPE B JOINT SEAL IN MINIMUM WIDTH POSITION ($W_2$)

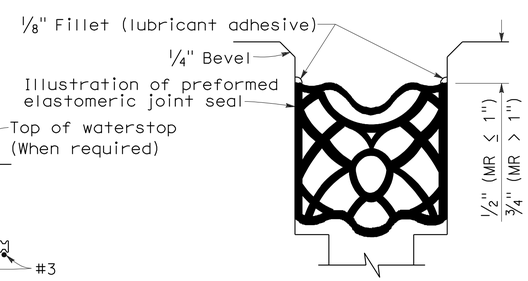


TYPE B SEAL

Movement Rating ≤ 2"

STATE OF CALIFORNIA
DEPARTMENT OF TRANSPORTATION

# JOINT SEALS (MAXIMUM MOVEMENT RATING = 2")

NO SCALE

RSP B6-21 DATED OCTOBER 5, 2007 SUPERSEDES STANDARD PLAN B6-21 DATED MAY 1, 2006 - PAGE 258 OF THE STANDARD PLANS BOOK DATED MAY 2006.

**REVISED STANDARD PLAN RSP B6-21**

**2006 REVISED STANDARD PLAN RSP B6-21**

5-8-07

| DIST | COUNTY | ROUTE | POST MILES TOTAL PROJECT | SHEET NO. | TOTAL SHEETS |
|---|---|---|---|---|---|
| 10 | SJ | 5,120, 580 | Var | 7 | 13 |

REGISTERED CIVIL ENGINEER

January 18, 2008
PLANS APPROVAL DATE

REGISTERED PROFESSIONAL ENGINEER
Tillat Satter
No. C42892
Exp. 03-31-08
CIVIL
STATE OF CALIFORNIA

*The State of California or its officers or agents shall not be responsible for the accuracy or completeness of electronic copies of this plan sheet.*

*To accompany plans dated* 1-11-10

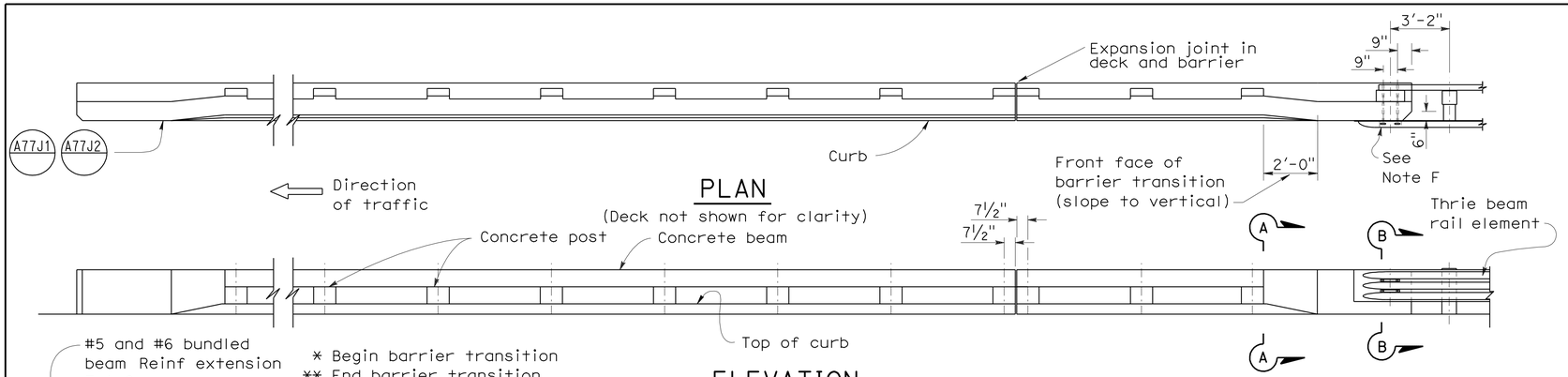


PLAN
(Deck not shown for clarity)

ELEVATION

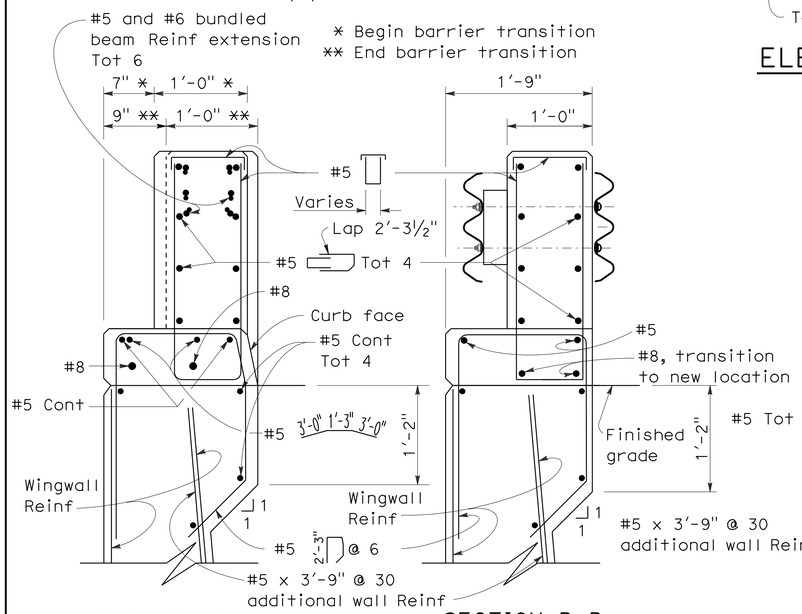


SECTION A-A

SECTION B-B

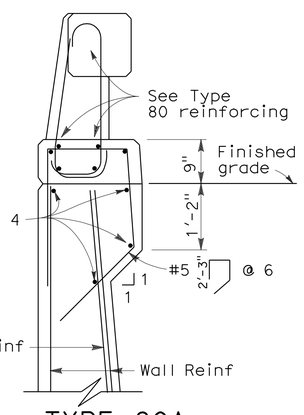


TYPE 80A

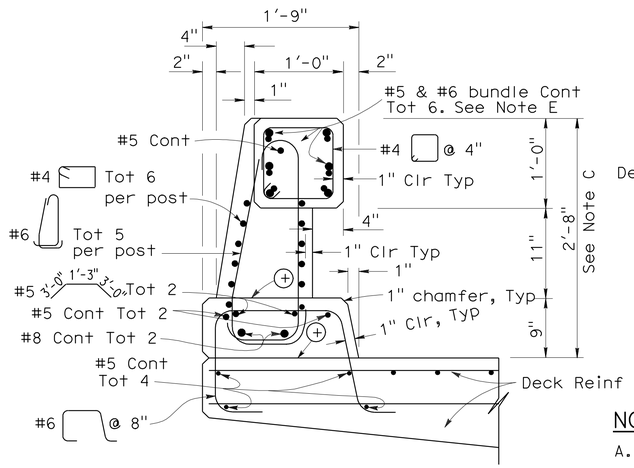


TYPE 80

⊕ Construction joint

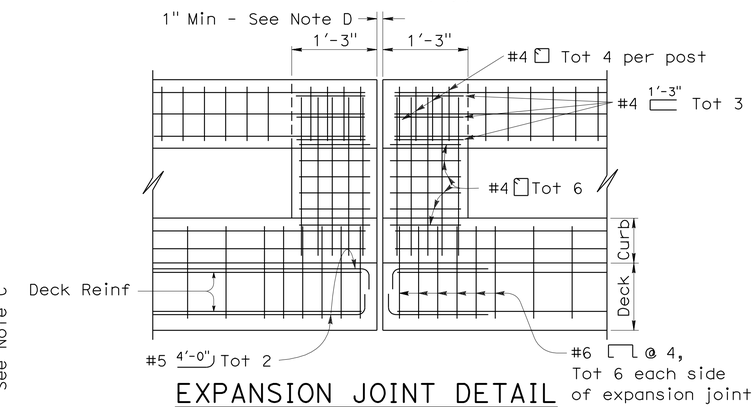


EXPANSION JOINT DETAIL

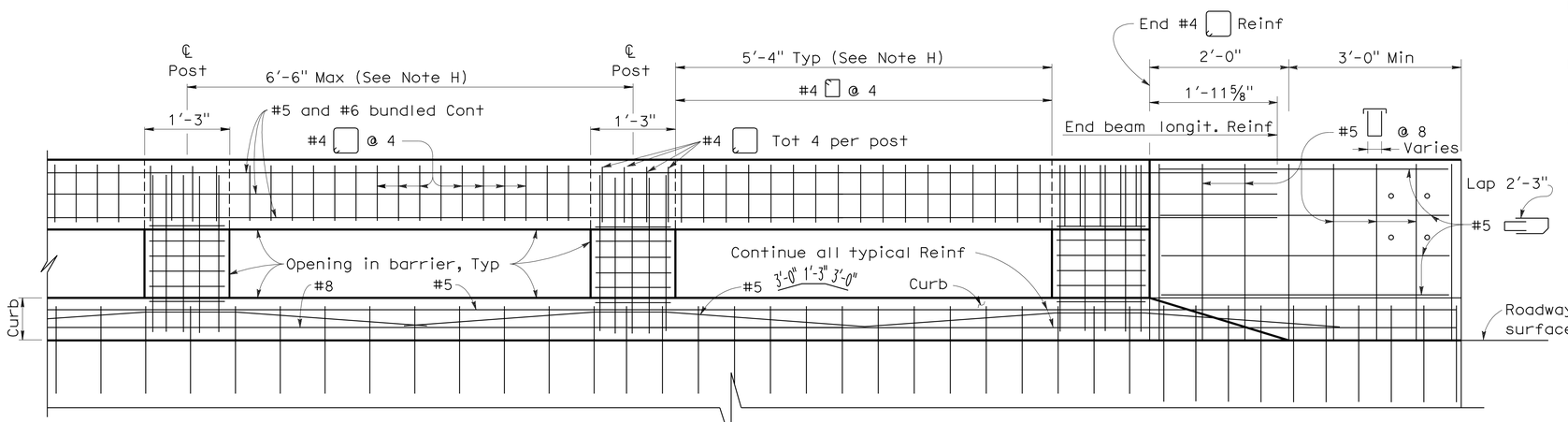


LONGITUDINAL SECTION

(Deck or wingwall reinforcing not shown)

## NOTES:

A. Walls are to be backfilled before the barrier is placed.

B. Longitudinal reinforcing steel to stop at all expansion joints.

C. The front face dimensions are to be constant above the finish roadway profile, but the overall height will vary with certain thicknesses of surfacing and roadway slopes.

D. Expansion joint to match deck joint.

E. No lap splicing allowed on the longitudinal rail reinforcing. Splicing shall be staggered.

F. For typical metal railing connection details not shown, see Standard Plans A77J1 and A77J2.

G. Chain link railing is not allowed on Type 80 Barriers.

H. Post to be spaced equally, typically 6'-6" spacing. Post spacing may be reduced where location of hinges or expansion joints or the length of wingwalls will not accommodate the 6'-6" spacing. Maximum see-through availability is to be strived for, where 6'-6" post spacing can not be achieved.

STATE OF CALIFORNIA
DEPARTMENT OF TRANSPORTATION

# CONCRETE BARRIER TYPE 80 (SHEET 1 OF 2)

NO SCALE

RSP B11-60 DATED JANUARY 18, 2008 SUPERSEDES STANDARD PLAN B11-60 DATED MAY 1, 2006 - PAGE 276 OF THE STANDARD PLANS BOOK DATED MAY 2006.

**REVISED STANDARD PLAN RSP B11-60**

**2006 REVISED STANDARD PLAN RSP B11-60**

10-22-07

| DIST | COUNTY | ROUTE | POST MILES TOTAL PROJECT | SHEET No | TOTAL SHEETS |
|---|---|---|---|---|---|
| 10 | SJ | 5,120,580 | Var | 8 | 13 |

REGISTERED CIVIL ENGINEER 10-27-09 DATE

1-11-10
PLANS APPROVAL DATE

REGISTERED PROFESSIONAL ENGINEER Matt Lee No. 56698 Exp. 6-30-10 CIVIL STATE OF CALIFORNIA

*The State of California or its officers or agents shall not be responsible for the accuracy or completeness of electronic copies of this plan sheet.*

NOTES: (APPLY TO ALL SHEETS)

···-··-··- Indicates existing.

NOTES: (APPLY TO THIS SHEET ONLY)

Indicates limits of clean and treat bridge deck with high molecular weight methacrylate. Prior to bridge deck treatment, remove unsound concrete and patch with rapid setting concrete.

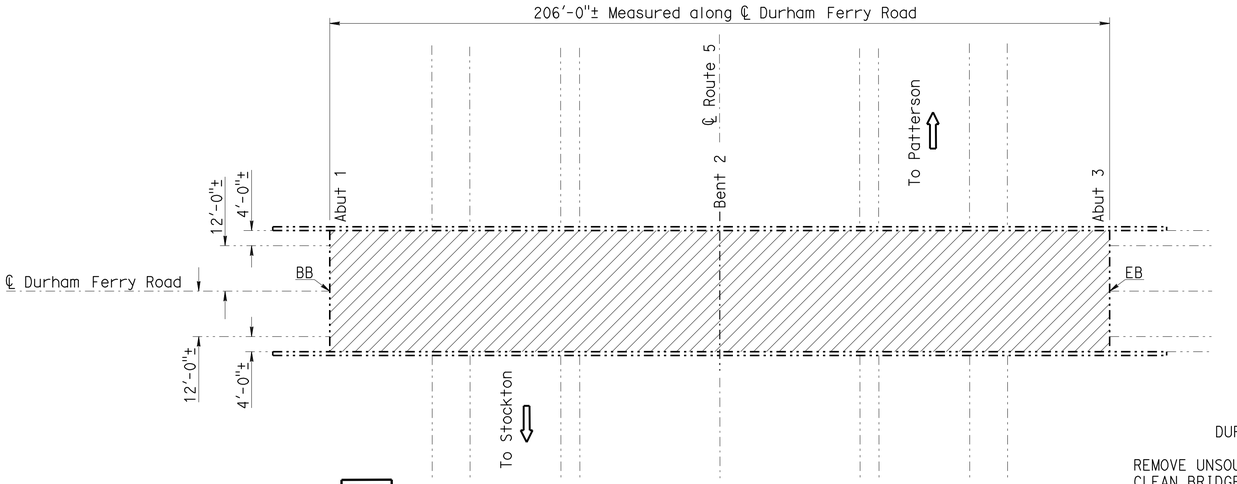


## DURHAM FERRY ROAD OVERCROSSING

Br. No. 29-0259, ROUTE 5, SJ, PM 5.47
1"=20'

DURHAM FERRY ROAD OC 29-0259
QUANTITIES

| | | |
|---|---|---|
| REMOVE UNSOUND CONCRETE | 17 | CF |
| CLEAN BRIDGE DECK | 6,592 | SQFT |
| RAPID SETTING CONCRETE (PATCH) | 17 | CF |
| TREAT BRIDGE DECK | 6,592 | SQFT |
| FURNISH BRIDGE DECK TREATMENT MATERIAL | 73 | GAL |

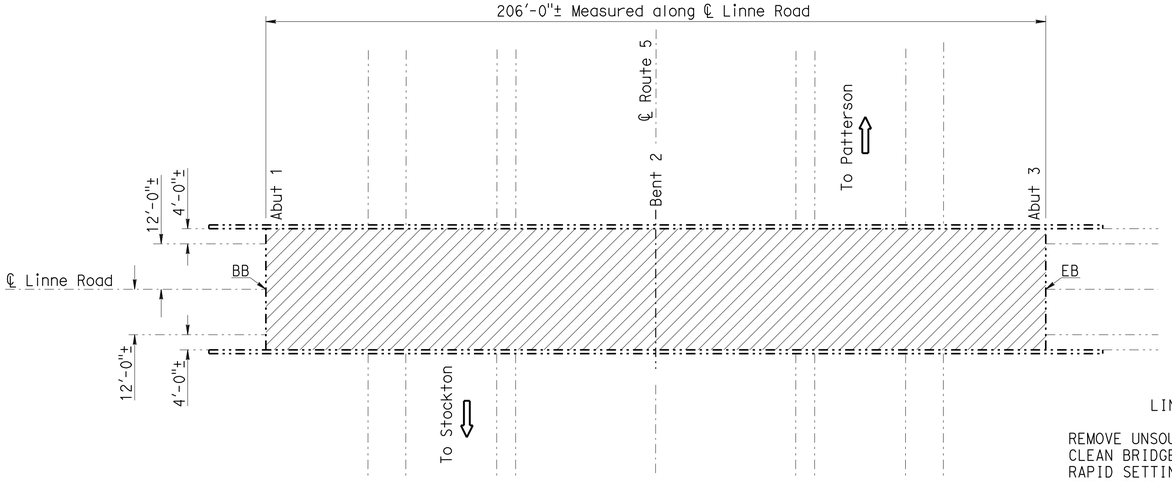


## LINNE ROAD OVERCROSSING

Br. No. 29-0261, ROUTE 5, SJ, PM 7.48
1"=20'

LINNE ROAD OC 29-0261
QUANTITIES

| | | |
|---|---|---|
| REMOVE UNSOUND CONCRETE | 17 | CF |
| CLEAN BRIDGE DECK | 6,592 | SQFT |
| RAPID SETTING CONCRETE (PATCH) | 17 | CF |
| TREAT BRIDGE DECK | 6,592 | SQFT |
| FURNISH BRIDGE DECK TREATMENT MATERIAL | 73 | GAL |

## INDEX TO PLANS


| SHEET NO. | TITLE |
|---|---|
| 1 | GENERAL PLAN NO. 1 |
| 2 | GENERAL PLAN NO. 2 |
| 3 | GENERAL PLAN NO. 3 |
| 4 | GENERAL PLAN NO. 4 |
| 5 | GENERAL PLAN NO. 5 |
| 6 | JOINT SEAL DETAILS |


## STANDARD PLANS DATED MAY 2006

| SHEET NO. | TITLE |
|---|---|
| A10A | ACRONYMS AND ABBREVIATIONS (SHEET 1 OF 2) |
| A10B | ACRONYMS AND ABBREVIATIONS (SHEET 2 OF 2) |
| RSP B6-21 | JOINT SEALS (MAXIMUM MOVEMENT RATING = 2") |

STANDARD PLAN SHEET NO.
DETAIL NO.

NOTE:
THE CONTRACTOR SHALL VERIFY ALL CONTROLLING FIELD DIMENSIONS BEFORE ORDERING OR FABRICATING ANY MATERIAL.

| | | | | | | | | | |
|---|---|---|---|---|---|---|---|---|---|
| 10-27-09 DESIGN ENGINEER | DESIGN | BY M. Hashimoto | CHECKED J. Louie | LAYOUT | BY Dale Kubochi | CHECKED M. Hashimoto | STATE OF CALIFORNIA DEPARTMENT OF TRANSPORTATION | DIVISION OF MAINTENANCE STRUCTURE MAINTENANCE DESIGN | BRIDGE NO. VARIOUS |
| | DETAILS | BY Dale Kubochi | CHECKED J. Louie | SPECIFICATIONS | BY Xiahong Li | PLANS AND SPECS COMPARED Xiahong Li | | | POST MILE VARIES |
| | QUANTITIES | BY M. Hashimoto | CHECKED J. Louie | | | | | | |

ROUTES 5, 120 & 580 BRIDGES
GENERAL PLAN NO. 1

STRUCTURES MAINTENANCE GENERAL PLAN SHEET (ENGLISH) (REV. 10/25/05)

ORIGINAL SCALE IN INCHES FOR REDUCED PLANS 0 1 2 3

CU 10604
EA 0T4301

DISREGARD PRINTS BEARING EARLIER REVISION DATES 5-21-09

REVISION DATES

SHEET 1 OF 6

FILE => 10-0t4301-a-gp01.dgn

USERNAME => trmikesl DATE PLOTTED => 19-JAN-2010 TIME PLOTTED => 08:36

| DIST | COUNTY | ROUTE | POST MILES TOTAL PROJECT | SHEET No | TOTAL SHEETS |
|---|---|---|---|---|---|
| 10 | SJ | 5,120,580 | Var | 9 | 13 |

REGISTERED CIVIL ENGINEER 10-27-09 DATE

1-11-10
PLANS APPROVAL DATE

REGISTERED PROFESSIONAL ENGINEER Matt Lee No. 56698 Exp. 6-30-10 CIVIL STATE OF CALIFORNIA

*The State of California or its officers or agents shall not be responsible for the accuracy or completeness of electronic copies of this plan sheet.*

NOTES: (APPLY TO THIS SHEET ONLY)

Indicates location of existing joint seal removal and placement of new joint seal. Prior to placement of new joint seal repair joint spalls.

Indicates limits of clean and treat bridge deck with high molecular weight methacrylate. Prior to bridge deck treatment, remove unsound concrete and patch with rapid setting concrete.

(1) Repair bridge deck.

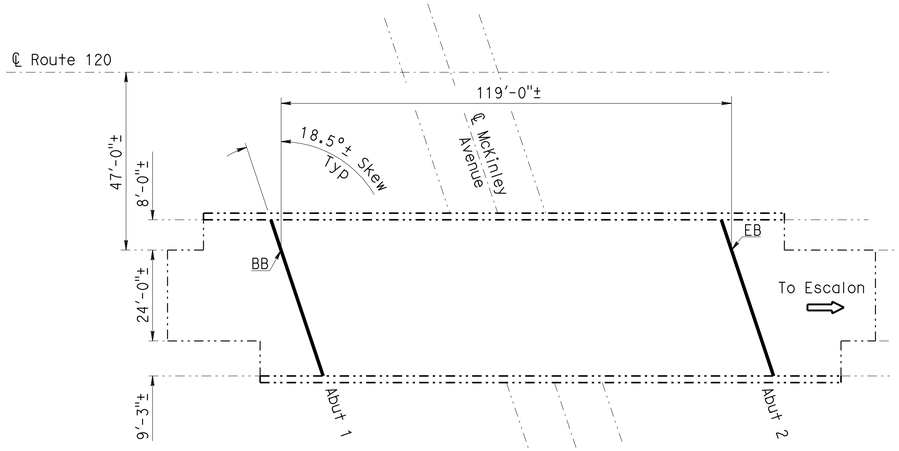


## MCKINLEY AVENUE UNDERCROSSING

Br. No. 29-0273R, ROUTE 120, SJ, PM R002.29
1"=20'

MCKINLEY AVENUE UC 29-0273R
QUANTITIES

| | | |
|---|---|---|
| REMOVE UNSOUND CONCRETE | 2 | CF |
| CLEAN EXPANSION JOINT | 88 | LF |
| RAPID SETTING CONCRETE (PATCH) | 2 | CF |
| JOINT SEAL (MR 1/2") | 88 | LF |

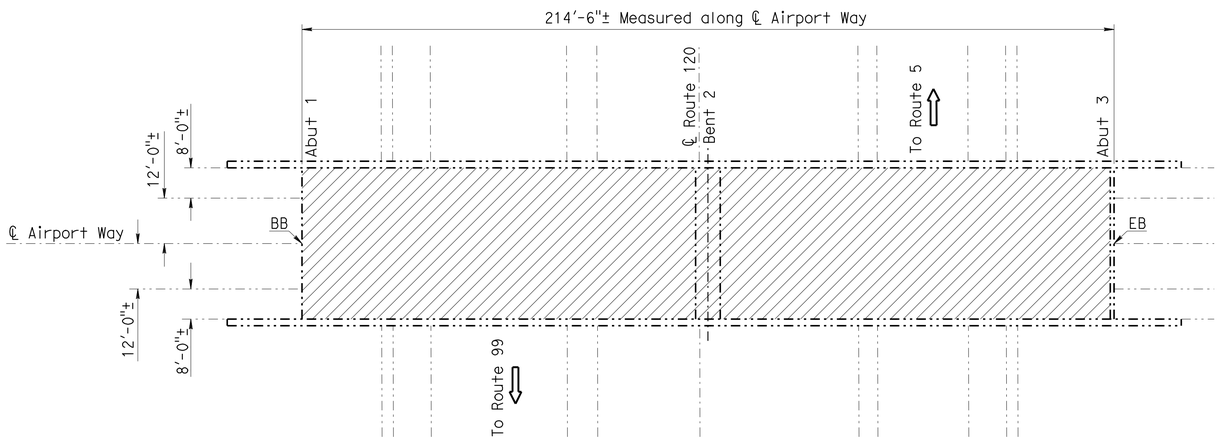


## AIRPORT WAY OVERCROSSING

Br. No. 29-0274, ROUTE 120, SJ, PM R003.32
1"=20'

AIRPORT WAY OC 29-0274
QUANTITIES

| | | |
|---|---|---|
| REMOVE UNSOUND CONCRETE | 22 | CF |
| CLEAN BRIDGE DECK | 8,580 | SQFT |
| RAPID SETTING CONCRETE (PATCH) | 22 | CF |
| TREAT BRIDGE DECK | 8,580 | SQFT |
| FURNISH BRIDGE DECK TREATMENT MATERIAL | 95 | GAL |

NOTE:
THE CONTRACTOR SHALL VERIFY ALL CONTROLLING FIELD DIMENSIONS BEFORE ORDERING OR FABRICATING ANY MATERIAL.

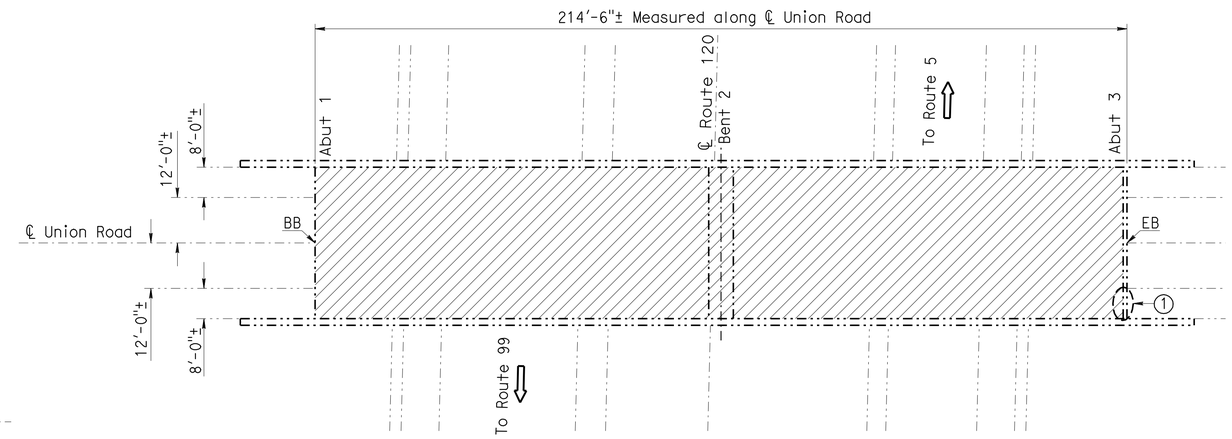


## UNION ROAD OVERCROSSING

Br. No. 29-0275, ROUTE 120, SJ, PM R004.31
1"=20'

UNION ROAD OC 29-0275
QUANTITIES

| | | |
|---|---|---|
| REMOVE UNSOUND CONCRETE | 22 | CF |
| CLEAN BRIDGE DECK | 8,580 | SQFT |
| RAPID SETTING CONCRETE (PATCH) | 22 | CF |
| TREAT BRIDGE DECK | 8,580 | SQFT |
| FURNISH BRIDGE DECK TREATMENT MATERIAL | 95 | GAL |

| | | | | | |
|---|---|---|---|---|---|
| DESIGN ENGINEER 10-27-09 | DESIGN | BY M. Hashimoto | CHECKED J. Louie | LAYOUT | BY Dale Kubochi | CHECKED M. Hashimoto |
| | DETAILS | BY Dale Kubochi | CHECKED J. Louie | SPECIFICATIONS | BY Xiahong Li | PLANS AND SPECS COMPARED Xiahong Li |
| | QUANTITIES | BY M. Hashimoto | CHECKED J. Louie | | | |

STATE OF CALIFORNIA
DEPARTMENT OF TRANSPORTATION

DIVISION OF MAINTENANCE
STRUCTURE MAINTENANCE DESIGN

BRIDGE NO. VARIOUS
POST MILE VARIES

ROUTES 5, 120 & 580 BRIDGES
GENERAL PLAN NO. 2

STRUCTURES MAINTENANCE GENERAL PLAN SHEET (ENGLISH) (REV. 10/25/05)

ORIGINAL SCALE IN INCHES FOR REDUCED PLANS 0 1 2 3

CU 10604
EA 0T4301

DISREGARD PRINTS BEARING EARLIER REVISION DATES 6-16-09

REVISION DATES

SHEET 2 OF 6

FILE => 10-0t4301-a-gp02.dgn

USERNAME => trmikesi DATE PLOTTED => 19-JAN-2010 TIME PLOTTED => 08:37

| DIST | COUNTY | ROUTE | POST MILES TOTAL PROJECT | SHEET No | TOTAL SHEETS |
|---|---|---|---|---|---|
| 10 | SJ | 5,120,580 | Var | 10 | 13 |

REGISTERED CIVIL ENGINEER 10-27-09 DATE

1-11-10
PLANS APPROVAL DATE

REGISTERED PROFESSIONAL ENGINEER Matt Lee No. 56698 Exp. 6-30-10 CIVIL STATE OF CALIFORNIA

*The State of California or its officers or agents shall not be responsible for the accuracy or completeness of electronic copies of this plan sheet.*

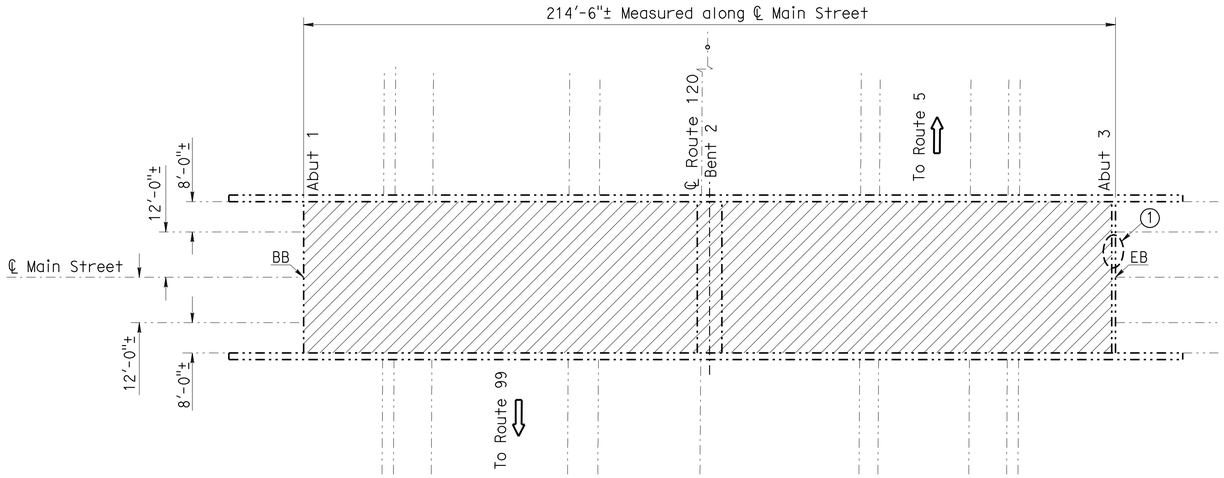


## MAIN STREET OVERCROSSING

Br. No. 29-0276, ROUTE 120, SJ, PM R005.31
1"=20'

MAIN STREET OC 29-0276
QUANTITIES

| | | |
|---|---|---|
| REMOVE UNSOUND CONCRETE | 22 | CF |
| CLEAN BRIDGE DECK | 8,580 | SQFT |
| RAPID SETTING CONCRETE (PATCH) | 22 | CF |
| TREAT BRIDGE DECK | 8,580 | SQFT |
| FURNISH BRIDGE DECK TREATMENT MATERIAL | 95 | GAL |

NOTES: (APPLY TO THIS SHEET ONLY)

Indicates location of existing joint seal removal and placement of new joint seal. Prior to placement of new joint seal repair joint spalls.

Indicates limits of clean and treat bridge deck with high molecular weight methacrylate. Prior to bridge deck treatment, remove unsound concrete and patch with rapid setting concrete.

Indicates limits of remove contrast treatment (chip or slurry seal).

(1) Repair bridge deck.

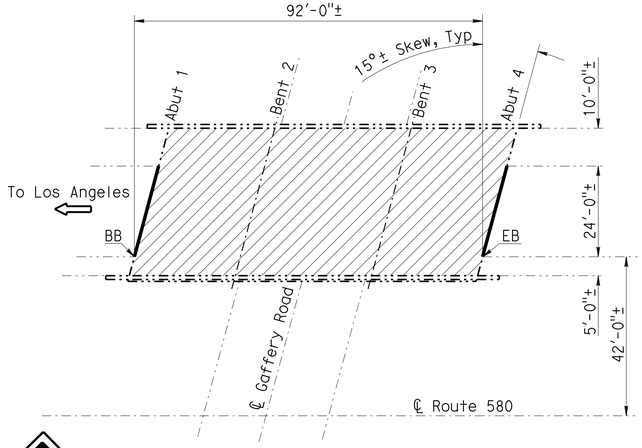


## GAFFERY ROAD UNDERCROSSING

Br. No. 29-0227L, ROUTE 580, SJ, PM L000.23
1"=20'

GAFFERY ROAD UC 29-0227L
QUANTITIES

| | | |
|---|---|---|
| REMOVE UNSOUND CONCRETE | 10 | CF |
| CLEAN BRIDGE DECK | 3,588 | SQFT |
| CLEAN EXPANSION JOINT | 50 | LF |
| RAPID SETTING CONCRETE (PATCH) | 10 | CF |
| JOINT SEAL (MR 1/2") | 50 | LF |
| TREAT BRIDGE DECK | 3,588 | SQFT |
| FURNISH BRIDGE DECK TREATMENT MATERIAL | 40 | GAL |

NOTE:
THE CONTRACTOR SHALL VERIFY ALL CONTROLLING FIELD DIMENSIONS BEFORE ORDERING OR FABRICATING ANY MATERIAL.

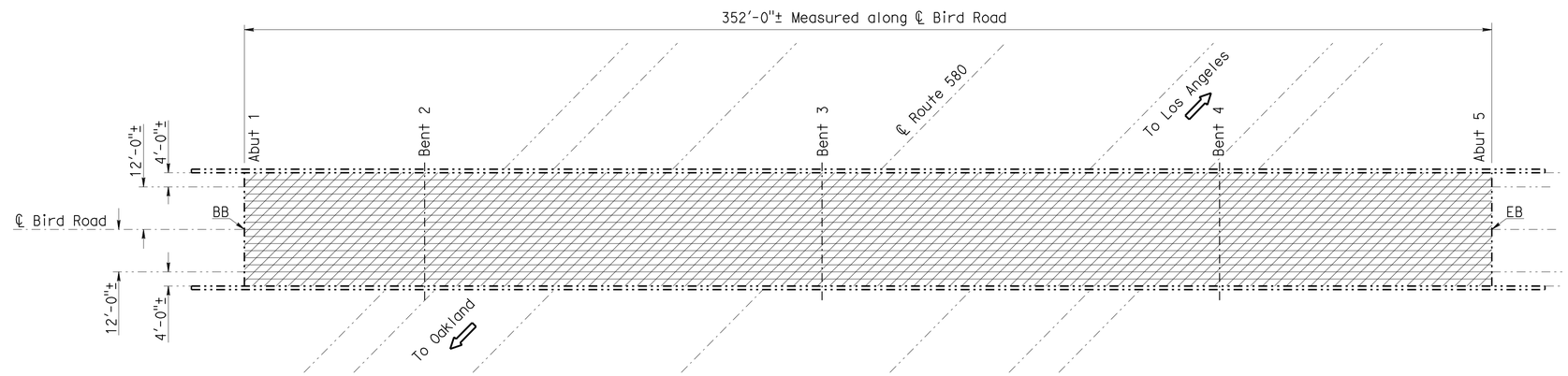


## BIRD ROAD OVERCROSSING

Br. No. 29-0170, ROUTE 580, SJ, PM 1.41
1"=20'

BIRD ROAD OC 29-0170
QUANTITIES

| | | |
|---|---|---|
| REMOVE CONTRAST TREATMENT | 11,264 | SQFT |
| REMOVE UNSOUND CONCRETE | 28 | CF |
| CLEAN BRIDGE DECK | 11,264 | SQFT |
| RAPID SETTING CONCRETE (PATCH) | 28 | CF |
| TREAT BRIDGE DECK | 11,264 | SQFT |
| FURNISH BRIDGE DECK TREATMENT MATERIAL | 125 | GAL |

| | | | | | |
|---|---|---|---|---|---|
| DESIGN ENGINEER 10-27-09 | DESIGN | BY M. Hashimoto | CHECKED J. Louie | LAYOUT | BY Dale Kubochi | CHECKED M. Hashimoto |
| | DETAILS | BY Dale Kubochi | CHECKED J. Louie | SPECIFICATIONS | BY Xiahong Li | PLANS AND SPECS COMPARED Xiahong Li |
| | QUANTITIES | BY M. Hashimoto | CHECKED J. Louie | | | |

STATE OF CALIFORNIA
DEPARTMENT OF TRANSPORTATION

DIVISION OF MAINTENANCE
STRUCTURE MAINTENANCE DESIGN

BRIDGE NO. VARIOUS
POST MILE VARIES

# ROUTES 5, 120 & 580 BRIDGES
# GENERAL PLAN NO. 3

STRUCTURES MAINTENANCE GENERAL PLAN SHEET (ENGLISH) (REV. 10/25/05)

ORIGINAL SCALE IN INCHES FOR REDUCED PLANS 0 1 2 3

CU 10604
EA 0T4301

DISREGARD PRINTS BEARING EARLIER REVISION DATES

REVISION DATES: 5-28-09 6-11-09 6-16-09

SHEET 3 OF 6

FILE => 10-0t4301-a-gp03.dgn

USERNAME => ttmikes; DATE PLOTTED => 19-JAN-2010 TIME PLOTTED => 08:37

| DIST | COUNTY | ROUTE | POST MILES TOTAL PROJECT | SHEET No | TOTAL SHEETS |
|---|---|---|---|---|---|
| 10 | SJ | 5,120,580 | Var | 11 | 13 |

REGISTERED CIVIL ENGINEER 10-27-09 DATE

1-11-10
PLANS APPROVAL DATE

REGISTERED PROFESSIONAL ENGINEER Matt Lee No. 56698 Exp. 6-30-10 CIVIL STATE OF CALIFORNIA

*The State of California or its officers or agents shall not be responsible for the accuracy or completeness of electronic copies of this plan sheet.*

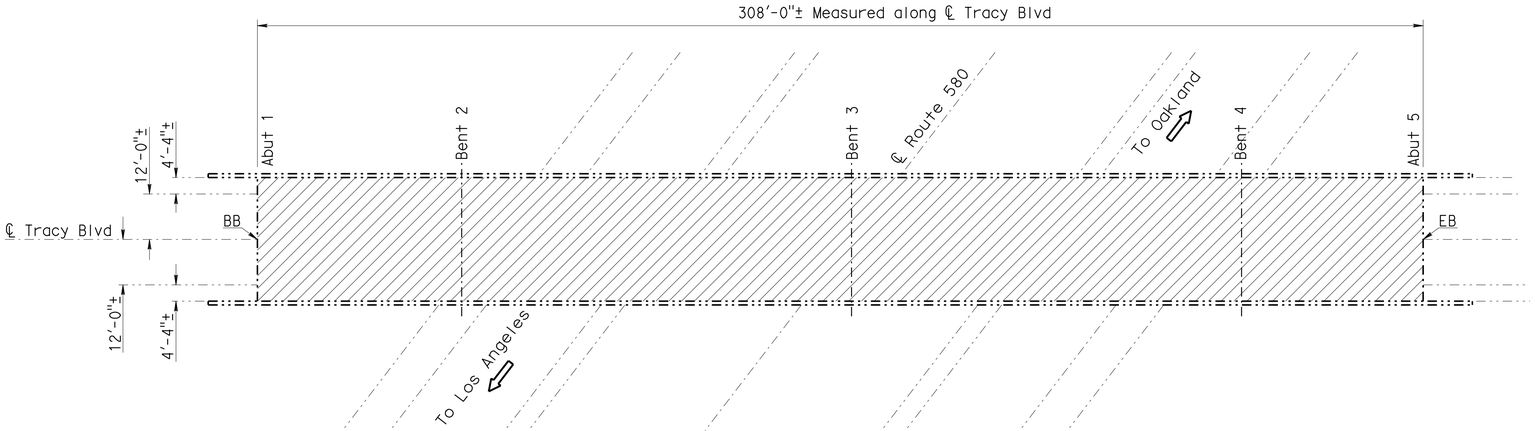


## TRACY BOULEVARD OVERCROSSING

Br. No. 29-0094, ROUTE 580, SJ, PM 6.57
1"=20'

NOTES: (APPLY TO THIS SHEET ONLY)

Indicates limits of clean and treat bridge deck with high molecular weight methacrylate. Prior to bridge deck treatment, remove unsound concrete and patch with rapid setting concrete.

TRACY BLVD OC 29-0094
QUANTITIES

| | | |
|---|---|---|
| REMOVE UNSOUND CONCRETE | 25 | CF |
| CLEAN BRIDGE DECK | 10,062 | SQFT |
| RAPID SETTING CONCRETE (PATCH) | 25 | CF |
| TREAT BRIDGE DECK | 10,062 | SQFT |
| FURNISH BRIDGE DECK TREATMENT MATERIAL | 112 | GAL |

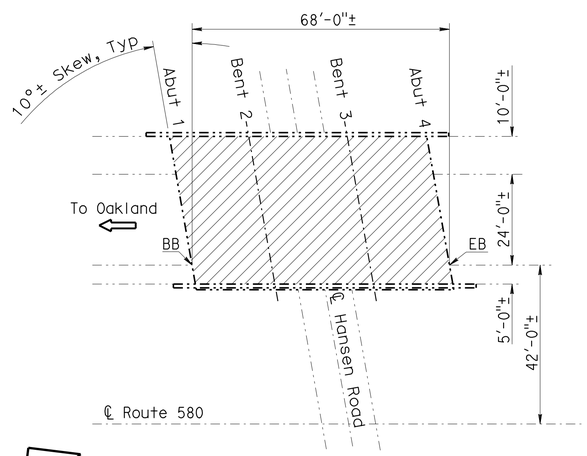


## HANSEN ROAD UNDERCROSSING

Br. No. 29-0172L, ROUTE 580, SJ, PM 12.03
1"=20'

HANSEN ROAD UC 29-0172L
QUANTITIES

| | | |
|---|---|---|
| REMOVE UNSOUND CONCRETE | 7 | CF |
| CLEAN BRIDGE DECK | 2,652 | SQFT |
| RAPID SETTING CONCRETE (PATCH) | 7 | CF |
| TREAT BRIDGE DECK | 2,652 | SQFT |
| FURNISH BRIDGE DECK TREATMENT MATERIAL | 30 | GAL |

NOTE:
THE CONTRACTOR SHALL VERIFY ALL CONTROLLING FIELD DIMENSIONS BEFORE ORDERING OR FABRICATING ANY MATERIAL.

| | | | | | |
|---|---|---|---|---|---|
| 10-27-09 DESIGN ENGINEER | DESIGN | BY M. Hashimoto | CHECKED J. Louie | LAYOUT | BY Dale Kubochi | CHECKED M. Hashimoto |
| | DETAILS | BY Dale Kubochi | CHECKED J. Louie | SPECIFICATIONS | BY Xiahong Li | PLANS AND SPECS COMPARED Xiahong Li |
| | QUANTITIES | BY M. Hashimoto | CHECKED J. Louie | | | |

STATE OF CALIFORNIA
DEPARTMENT OF TRANSPORTATION

DIVISION OF MAINTENANCE
STRUCTURE MAINTENANCE DESIGN

CU 10604
EA 0T4301

BRIDGE NO. VARIOUS
POST MILE VARIES

ROUTES 5, 120 & 580 BRIDGES
GENERAL PLAN NO. 4

STRUCTURES MAINTENANCE GENERAL PLAN SHEET (ENGLISH) (REV. 10/25/05)

ORIGINAL SCALE IN INCHES FOR REDUCED PLANS 0 1 2 3

DISREGARD PRINTS BEARING EARLIER REVISION DATES 5-21-09

REVISION DATES

SHEET 4 OF 6

FILE => 10-0t4301-a-gp04.dgn

USERNAME => trmikesl DATE PLOTTED => 19-JAN-2010 TIME PLOTTED => 08:37

| DIST | COUNTY | ROUTE | POST MILES TOTAL PROJECT | SHEET No | TOTAL SHEETS |
|---|---|---|---|---|---|
| 10 | SJ | 5,120,580 | Var | 12 | 13 |

REGISTERED CIVIL ENGINEER 10-27-09 DATE

1-11-10
PLANS APPROVAL DATE

REGISTERED PROFESSIONAL ENGINEER Matt Lee No. 56698 Exp. 6-30-10 CIVIL STATE OF CALIFORNIA

*The State of California or its officers or agents shall not be responsible for the accuracy or completeness of electronic copies of this plan sheet.*

NOTES: (APPLY TO THIS SHEET ONLY)

Indicates location of existing joint seal removal and placement of new joint seal. Prior to placement of new joint seal repair joint spalls.

Indicates limits of clean and treat bridge deck with high molecular weight methacrylate. Prior to bridge deck treatment, remove unsound concrete and patch with rapid setting concrete.

① Repair bridge deck.

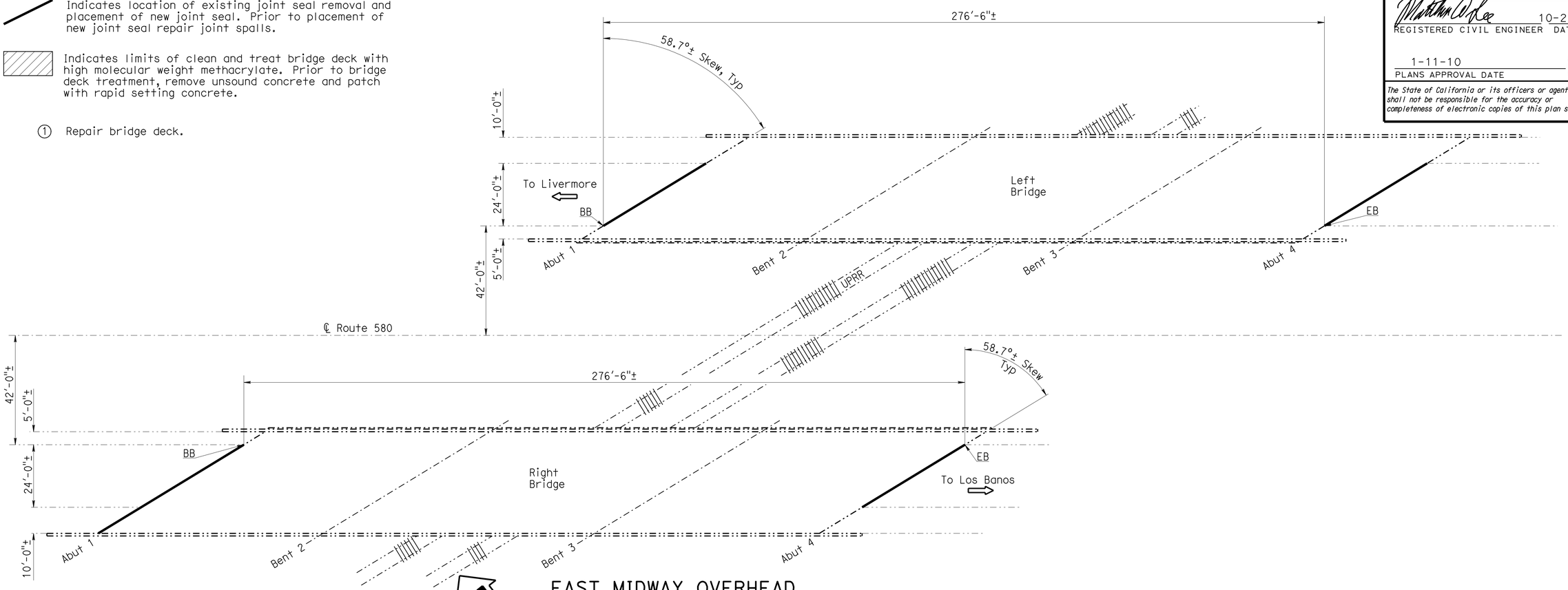


## EAST MIDWAY OVERHEAD

Br. No. 29-0082R/L, ROUTE 580, SJ, PM 12.74
1"=20'

EAST MIDWAY OH 29-0082R/L
QUANTITIES

| | | |
|---|---|---|
| REMOVE UNSOUND CONCRETE | 5 | CF |
| CLEAN EXPANSION JOINT | 207 | LF |
| RAPID SETTING CONCRETE (PATCH) | 5 | CF |
| JOINT SEAL (MR 1") | 207 | LF |

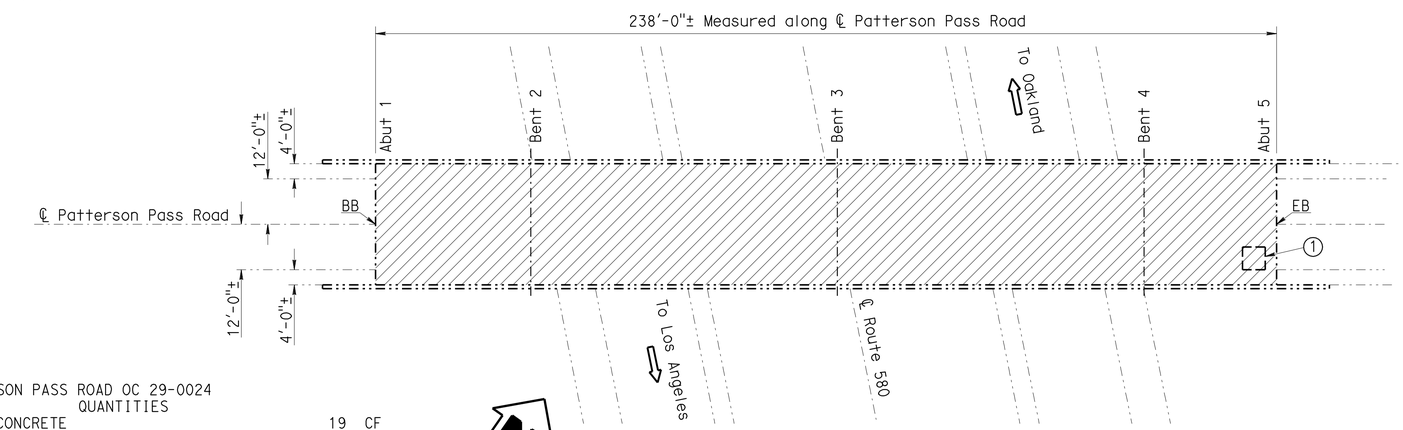


## PATTERSON PASS ROAD OVERCROSSING

Br. No. 29-0024, ROUTE 580, SJ, PM 13.54
1"=20'

PATTERSON PASS ROAD OC 29-0024
QUANTITIES

| | | |
|---|---|---|
| REMOVE UNSOUND CONCRETE | 19 | CF |
| CLEAN BRIDGE DECK | 7,616 | SQFT |
| RAPID SETTING CONCRETE (PATCH) | 19 | CF |
| TREAT BRIDGE DECK | 7,616 | SQFT |
| FURNISH BRIDGE DECK TREATMENT MATERIAL | 85 | GAL |

NOTE:
THE CONTRACTOR SHALL VERIFY ALL CONTROLLING FIELD DIMENSIONS BEFORE ORDERING OR FABRICATING ANY MATERIAL.

| | | | | | |
|---|---|---|---|---|---|
| DESIGN ENGINEER 10-27-09 | DESIGN | BY M. Hashimoto | CHECKED J. Louie | LAYOUT | BY Dale Kubochi | CHECKED M. Hashimoto |
| | DETAILS | BY Dale Kubochi | CHECKED J. Louie | SPECIFICATIONS | BY Xiahong Li | PLANS AND SPECS COMPARED Xiahong Li |
| | QUANTITIES | BY M. Hashimoto | CHECKED J. Louie | | | |

STATE OF CALIFORNIA
DEPARTMENT OF TRANSPORTATION

DIVISION OF MAINTENANCE
STRUCTURE MAINTENANCE DESIGN

BRIDGE NO. VARIOUS
POST MILE VARIES

# ROUTES 5, 120 & 580 BRIDGES
# GENERAL PLAN NO. 5

STRUCTURES MAINTENANCE GENERAL PLAN SHEET (ENGLISH) (REV. 10/25/05)

ORIGINAL SCALE IN INCHES FOR REDUCED PLANS 0 1 2 3

CU 10604
EA 0T4301

DISREGARD PRINTS BEARING EARLIER REVISION DATES

REVISION DATES: 5-25-09 6-16-09

SHEET 5 OF 6

FILE => 10-0t4301-a-gp05.dgn

USERNAME => trmikesl DATE PLOTTED => 19-JAN-2010 TIME PLOTTED => 08:37

| DIST | COUNTY | ROUTE | POST MILES TOTAL PROJECT | SHEET No | TOTAL SHEETS |
|---|---|---|---|---|---|
| 10 | SJ | 5,120,580 | Var | 13 | 13 |

REGISTERED CIVIL ENGINEER 10-27-09 DATE

1-11-10
PLANS APPROVAL DATE

REGISTERED PROFESSIONAL ENGINEER Matt Lee No. 56698 Exp. 6-30-10 CIVIL STATE OF CALIFORNIA

*The State of California or its officers or agents shall not be responsible for the accuracy or completeness of electronic copies of this plan sheet.*

# JOINT SEAL TABLE

| BRIDGE NAME | BRIDGE NUMBER | LOCATION | | MINIMUM "MR" (INCHES) | APPROXIMATE LENGTH (FEET) | EXISTING WATERSTOP | APPROX DEPTH TO CLEAN EXP JOINT (INCHES) | APPROX DEPTH OF JOINT SPALLS (INCHES) | APPROX WIDTH OF JOINT SPALLS (INCHES) | APPROX LENGTH OF JOINT SPALLS (FEET) |
|---|---|---|---|---|---|---|---|---|---|---|
| MCKINLEY AVENUE UNDERCROSSING | 29-0273R | ABUT 1 | BB | ½ | 44 | NO | 12 | 3 | 6 | 9 |
| | | ABUT 2 | EB | ½ | 44 | NO | 12 | 3 | 6 | 9 |
| GAFFERY ROAD UNDERCROSSING | 29-0227L | ABUT 1 | BB | ½ | 25 | NO | 12 | 3 | 6 | 5 |
| | | ABUT 4 | EB | ½ | 25 | NO | 12 | 3 | 6 | 5 |
| EAST MIDWAY OVERHEAD | 29-0082R/L | ABUT 1 (LT) | BB | 1 | 47 | NO | 12 | 3 | 6 | 9 |
| | | ABUT 4 (LT) | EB | 1 | 47 | NO | 12 | 3 | 6 | 9 |
| | | ABUT 1 (RT) | BB | 1 | 66 | NO | 12 | 3 | 6 | 9 |
| | | ABUT 4 (RT) | EB | 1 | 47 | NO | 12 | 3 | 6 | 9 |

LEGEND:

BB - Paving Notch at beginning of bridge
EB - Paving Notch at end of bridge

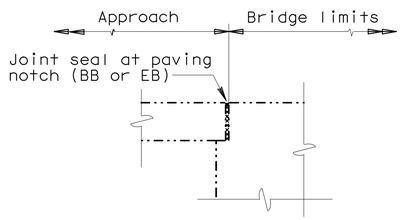


DIAPHRAGM ABUTMENT

## JOINT SEAL LOCATION

The following notes apply to JOINT SEAL TYPE B:

1) Seal must satisfy both minimum Movement Rating (MR) and minimum W1 requirements.
2) Minimum W1 is the calculated maximum width of the joint based on field measurements. After the joints have been cleaned, minimum W1 is to be calculated by the Engineer.
3) W1 shall be the smaller of the values determined as follows:
   A) 0.85 times the manufacturer's designed minimum uncompressed width of the seal.
   B) The width of the seal on the third successive test cycle of the pressure deflection test, when compressed to an average pressure of 3 psi.
4) Bend Type B joint seal 6" up into curb or rail on the low side of the deck where deck joint matches curb or rail joint.
5) For details not shown, see RSP B6-21

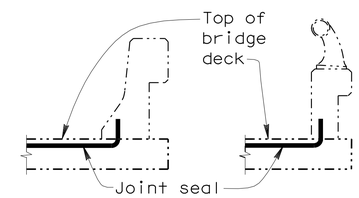


BARRIER RAIL

## JOINT SEAL AT LOW SIDE OF DECK

Notes: Details shown for illustration purposes only. For use only where deck joint matches the sidewalk, curb or barrier rail joint.

**DECK REPAIR TABLE**
**REMOVE UNSOUND CONCRETE AND RAPID SETTING CONCRETE (PATCH)**

| BRIDGE NAME | BRIDGE NUMBER | APPROXIMATE AREA DAMAGED (PERCENT) | APPROXIMATE DEPTH (INCHES) |
|---|---|---|---|
| DURHAM FERRY ROAD OVERCROSSING | 29-0259 | 1 | 3 |
| LINNE ROAD OVERCROSSING | 29-0261 | 1 | 3 |
| AIRPORT WAY OVERCROSSING | 29-0274 | 1 | 3 |
| UNION ROAD OVERCROSSING | 29-0275 | 1 | 3 |
| MAIN STREET OVERCROSSING | 29-0276 | 1 | 3 |
| GAFFERY ROAD OVERCROSSING | 29-0227L | 1 | 3 |
| BIRD ROAD OVERCROSSING | 29-0170 | 1 | 3 |
| TRACY BOULEVARD OVERCROSSING | 29-0094 | 1 | 3 |
| HANSEN ROAD UNDERCROSSING | 29-0172L | 1 | 3 |
| PATTERSON PASS OVERCROSSING | 29-0024 | 1 | 3 |

Locations to be determined by the Engineer. For details see "DECK REPAIR DETAIL".

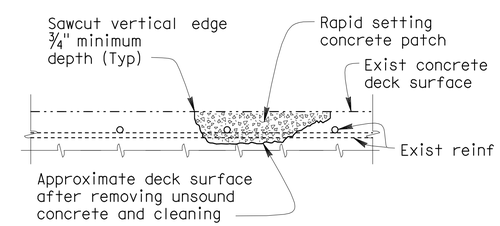


## DECK REPAIR DETAIL

Note: Reinforcement may be encountered during deck concrete removal.

NO SCALE

NOTE:
THE CONTRACTOR SHALL VERIFY ALL CONTROLLING FIELD DIMENSIONS BEFORE ORDERING OR FABRICATING ANY MATERIAL.

| | BY | CHECKED |
|---|---|---|
| DESIGN | M. Hashimoto | J. Louie |
| DETAILS | Dale Kubochi | J. Louie |
| QUANTITIES | M. Hashimoto | J. Louie |

STATE OF CALIFORNIA
DEPARTMENT OF TRANSPORTATION

DIVISION OF MAINTENANCE
STRUCTURE MAINTENANCE DESIGN

BRIDGE NO. VARIOUS
POST MILE VARIES

ROUTES 5, 120 & 580 BRIDGES
JOINT SEAL DETAILS

STRUCTURES MAINTENANCE GENERAL PLAN & DETAIL SHEET (ENGLISH) (REV. 5/17/06)

ORIGINAL SCALE IN INCHES FOR REDUCED PLANS 0 1 2 3

CU 10604
EA 0T4301

DISREGARD PRINTS BEARING EARLIER REVISION DATES

REVISION DATES 2-18-09 6-11-09 6-16-09

SHEET 6 OF 6

FILE => 10-0t4301-e-jtsdet01.dgn

USERNAME => trmikesl DATE PLOTTED => 19-JAN-2010 TIME PLOTTED => 08:37