Dist	COUNTY	ROUTE	POST MILES TOTAL PROJECT	SHEET No.	TOTAL SHEETS
10	SJ	99	32.0/32.6	1	19

STATE OF CALIFORNIA
DEPARTMENT OF TRANSPORTATION

ACNH-P099(561)E

PROJECT PLANS FOR CONSTRUCTION ON
STATE HIGHWAY
IN SAN JOAQUIN COUNTY
NEAR LODI
FROM 0.4 MILE NORTH OF TURNER ROAD OVERCROSSING TO WOODBRIDGE ROAD OVERCROSSING

TO BE SUPPLEMENTED BY STANDARD PLANS DATED 2010

INDEX OF PLANS

SHEET No.	DESCRIPTION
1	TITLE AND LOCATION MAP
2	TYPICAL CROSS SECTIONS
3-4	LAYOUT, PROFILE AND SUPERELEVATION DIAGRAM
5	CONSTRUCTION DETAILS
6	EROSION CONTROL PLAN
7	DRAINAGE PROFILE
8	CONSTRUCTION AREA SIGNS
9	PAVEMENT DELINEATION AND SIGN PLAN
10	PAVEMENT DELINEATION AND SIGN QUANTITIES
11	SUMMARY OF QUANTITIES
12	MODIFY LIGHTING
13-14	MODIFY VEHICLE CLASSIFICATION STATION
15-19	REVISED STANDARD PLANS

THE STANDARD PLANS LIST APPLICABLE TO THIS CONTRACT IS INCLUDED IN THE NOTICE TO BIDDERS AND SPECIAL PROVISIONS BOOK.

LOCATION MAP

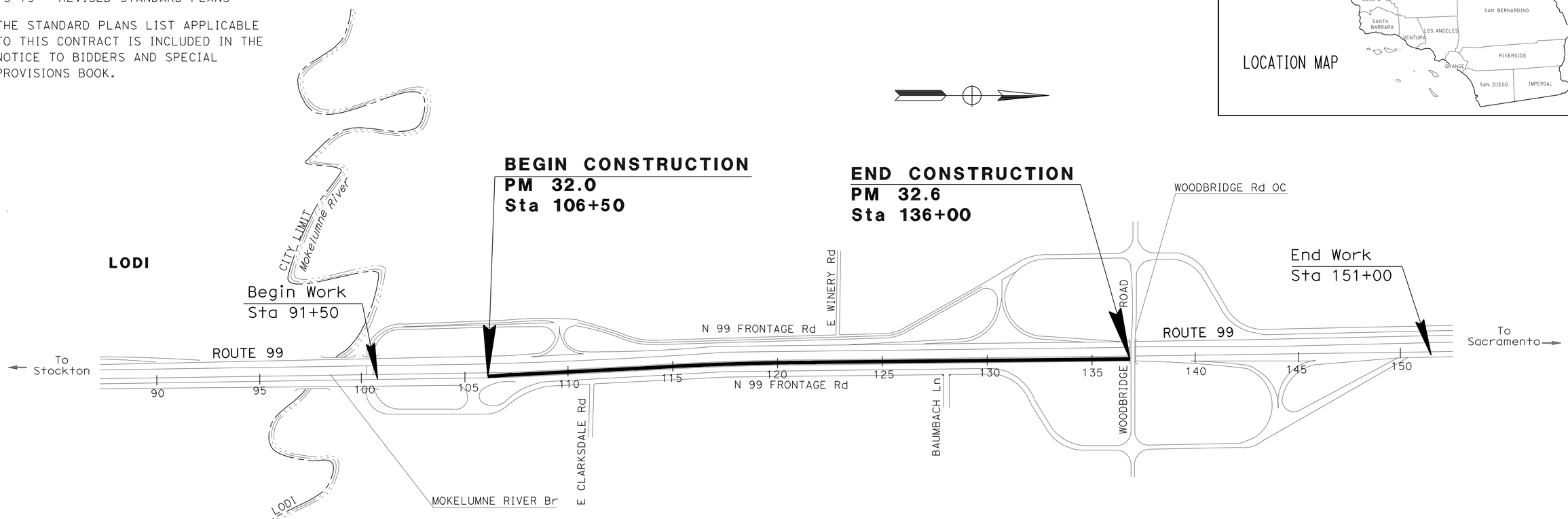

NO SCALE

PROJECT MANAGER: MARK MCAVOY

DESIGN ENGINEER: NICHOLAS CHAN

Cheng Cheng Yew 4-09-12
PROJECT ENGINEER DATE
REGISTERED CIVIL ENGINEER

April 9, 2012
PLANS APPROVAL DATE

REGISTERED PROFESSIONAL ENGINEER
CHEONG YEW CHENG
No. 57900
Exp. 6-30-12
CIVIL
STATE OF CALIFORNIA

THE STATE OF CALIFORNIA OR ITS OFFICERS OR AGENTS SHALL NOT BE RESPONSIBLE FOR THE ACCURACY OR COMPLETENESS OF SCANNED COPIES OF THIS PLAN SHEET.

THE CONTRACTOR SHALL POSSESS THE CLASS (OR CLASSES) OF LICENSE AS SPECIFIED IN THE "NOTICE TO BIDDERS."

CONTRACT No.	10-0S8604
PROJECT ID	1000020207

LAST REVISION 04-09-12

DATE PLOTTED => 02-MAY-2012
TIME PLOTTED => 10:27

Dist	COUNTY	ROUTE	POST MILES TOTAL PROJECT	SHEET No.	TOTAL SHEETS
10	SJ	99	32.0/32.6	2	19

REGISTERED CIVIL ENGINEER 4-9-12 DATE

4-9-12
PLANS APPROVAL DATE

REGISTERED PROFESSIONAL ENGINEER CHEONG YEW CHENG No. 57900 Exp. 6-30-12 CIVIL STATE OF CALIFORNIA

THE STATE OF CALIFORNIA OR ITS OFFICERS OR AGENTS SHALL NOT BE RESPONSIBLE FOR THE ACCURACY OR COMPLETENESS OF SCANNED COPIES OF THIS PLAN SHEET.

NOTES:

1. DIMENSIONS OF THE STRUCTURAL SECTIONS ARE SUBJECT TO TOLERANCES SPECIFIED IN THE STANDARD SPECIFICATIONS.
2. SUPERELEVATION AS SHOWN OR AS DIRECTED BY THE ENGINEER.
3. FOR LOCATION AND TYPE OF HMA DIKE AND RUMBLE STRIP, SEE SUMMARY OF QUANTITIES SHEET.
4. EXISTING UTILITIES ARE SHOWN ON LAYOUT SHEETS.

ABBREVIATIONS:

RHMA-O - RUBBERIZED HOT MIX ASPHALT OPEN GRADED
CTS - CEMENT TREATED SUBGRADE

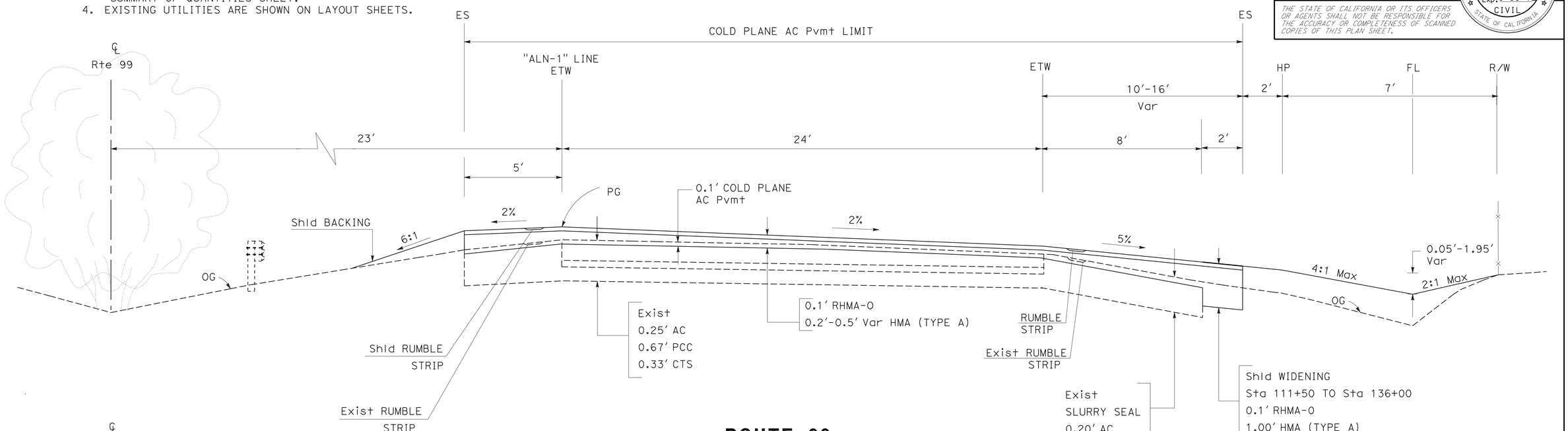

ROUTE 99
NORTHBOUND
Sta 111+50 TO Sta 136+00.00

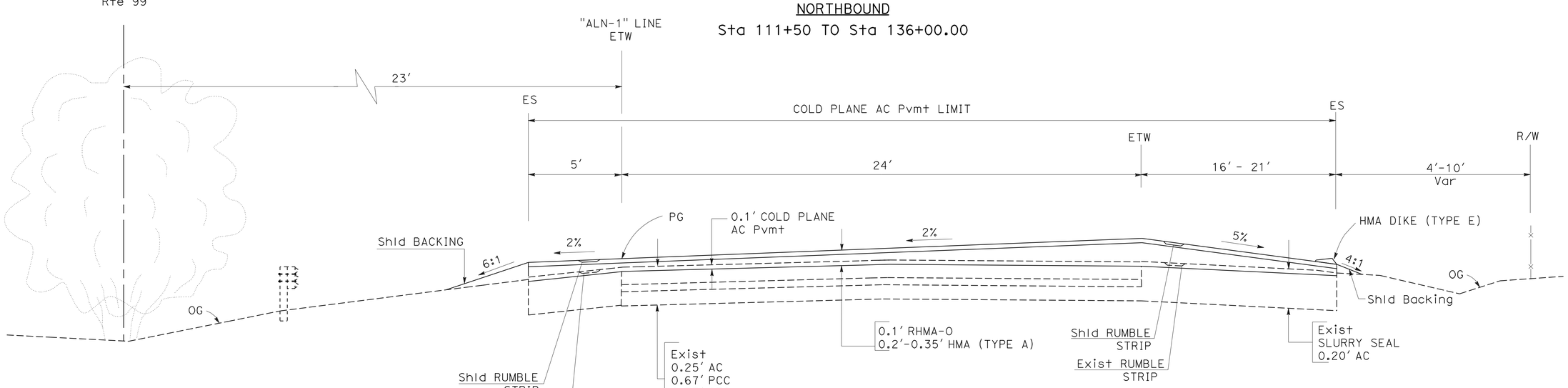

ROUTE 99
NORTHBOUND
Sta 106+50.00 TO Sta 111+50

TYPICAL CROSS SECTIONS

NO SCALE **X-1**

REVISED BY	DATE REVISED
MARLO CARLOS	CHEONG-YEW CHENG
CALCULATED-DESIGNED BY	CHECKED BY
FUNCTIONAL SUPERVISOR	NICHOLAS CHAN

STATE OF CALIFORNIA - DEPARTMENT OF TRANSPORTATION
Caltrans
06-DESIGN

LAST REVISION 04-09-12 | DATE PLOTTED => 02-MAY-2012 | TIME PLOTTED => 08:30

Dist	COUNTY	ROUTE	POST MILES TOTAL PROJECT	SHEET No.	TOTAL SHEETS
10	SJ	99	32.0/32.6	3	19

Cheng Cheong Yew 4-9-12
REGISTERED CIVIL ENGINEER DATE

4-9-12
PLANS APPROVAL DATE

REGISTERED PROFESSIONAL ENGINEER CHEONG YEW CHENG No. 57900 Exp. 6-30-12 CIVIL STATE OF CALIFORNIA

THE STATE OF CALIFORNIA OR ITS OFFICERS OR AGENTS SHALL NOT BE RESPONSIBLE FOR THE ACCURACY OR COMPLETENESS OF SCANNED COPIES OF THIS PLAN SHEET.

NOTE:

FOR ACCURATE RIGHT OF WAY DATA, CONTACT RIGHT OF WAY ENGINEERING AT THE DISTRICT OFFICE

LEGEND:

COLD PLANE AC PAVEMENT

DIRECTION OF TRAVEL

ABBREVIATIONS:

GB - GRADE BREAK

PG&E - PACIFIC GAS & ELECTRIC

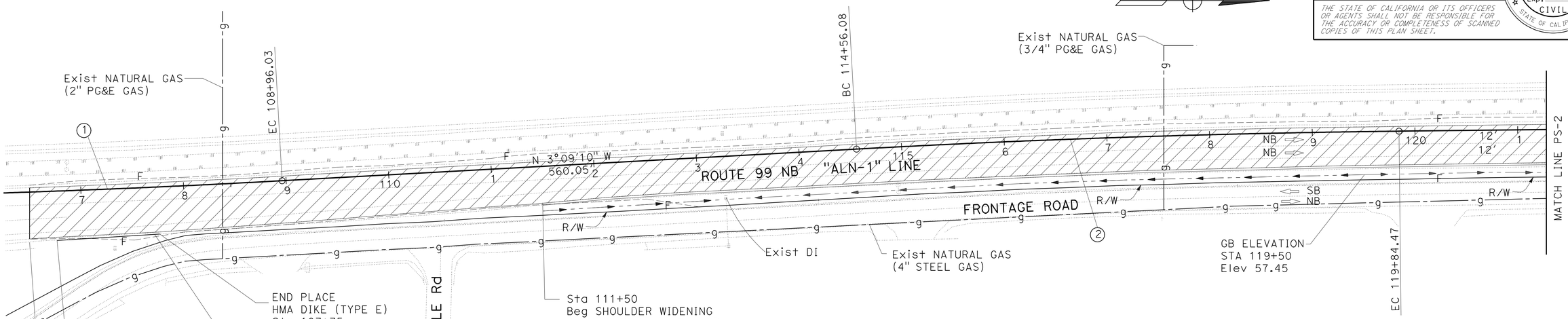

PLAN

SCALE: 1"=50'

CURVE DATA

No. ⊗	R	Δ	T	L
1	12000.00'	2°39'18"	277.80'	555.49'
2	12000.00'	2°31'13"	264.24'	528.39'

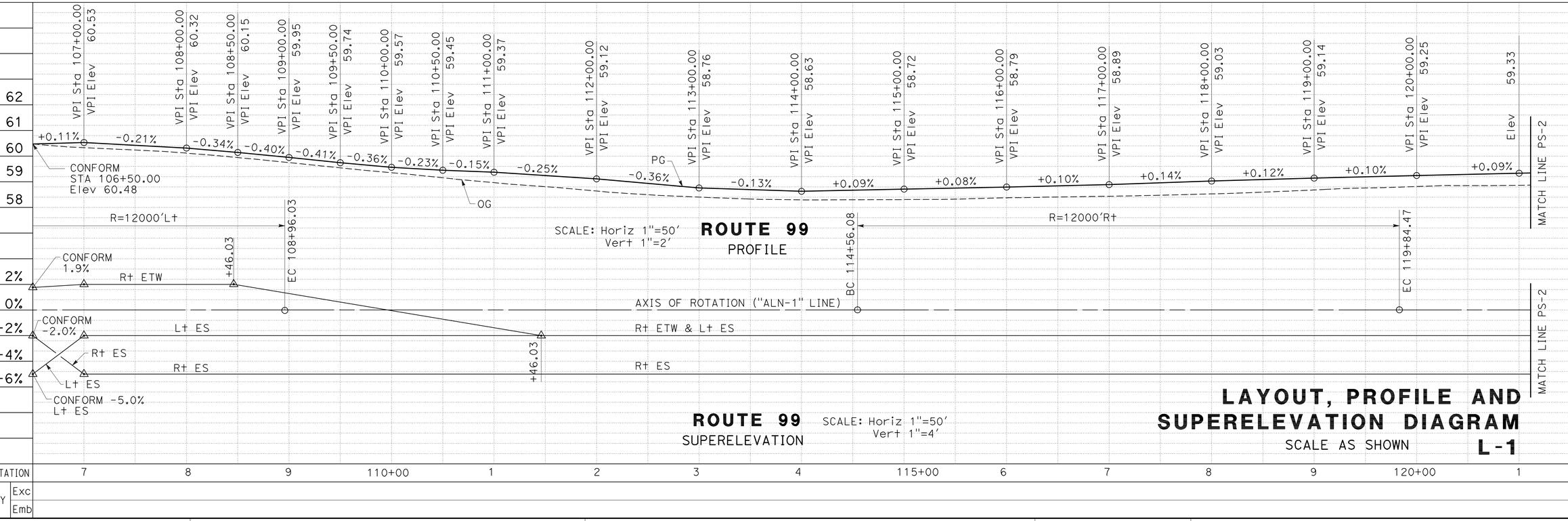

LAYOUT, PROFILE AND SUPERELEVATION DIAGRAM

SCALE AS SHOWN

L-1

STATE OF CALIFORNIA - DEPARTMENT OF TRANSPORTATION

Caltrans 06-DESIGN

FUNCTIONAL SUPERVISOR: NICHOLAS CHAN

CALCULATED-DESIGNED BY: MARLO CARLOS

CHECKED BY: CHEONG-YEW CHENG

REVISED BY / DATE REVISED

LAST REVISION: DATE PLOTTED => 02-MAY-2012 04-09-12 TIME PLOTTED => 08:30

Dist	COUNTY	ROUTE	POST MILES TOTAL PROJECT	SHEET No.	TOTAL SHEETS
10	SJ	99	32.0/32.6	4	19

REGISTERED CIVIL ENGINEER 4-9-12 DATE

4-9-12
PLANS APPROVAL DATE

REGISTERED PROFESSIONAL ENGINEER CHEONG YEW CHENG No. 57900 Exp. 6-30-12 CIVIL STATE OF CALIFORNIA

THE STATE OF CALIFORNIA OR ITS OFFICERS OR AGENTS SHALL NOT BE RESPONSIBLE FOR THE ACCURACY OR COMPLETENESS OF SCANNED COPIES OF THIS PLAN SHEET.

NOTE:

FOR ACCURATE RIGHT OF WAY DATA,CONTACT
RIGHT OF WAY ENGINEERING AT THE DISTRICT OFFICE

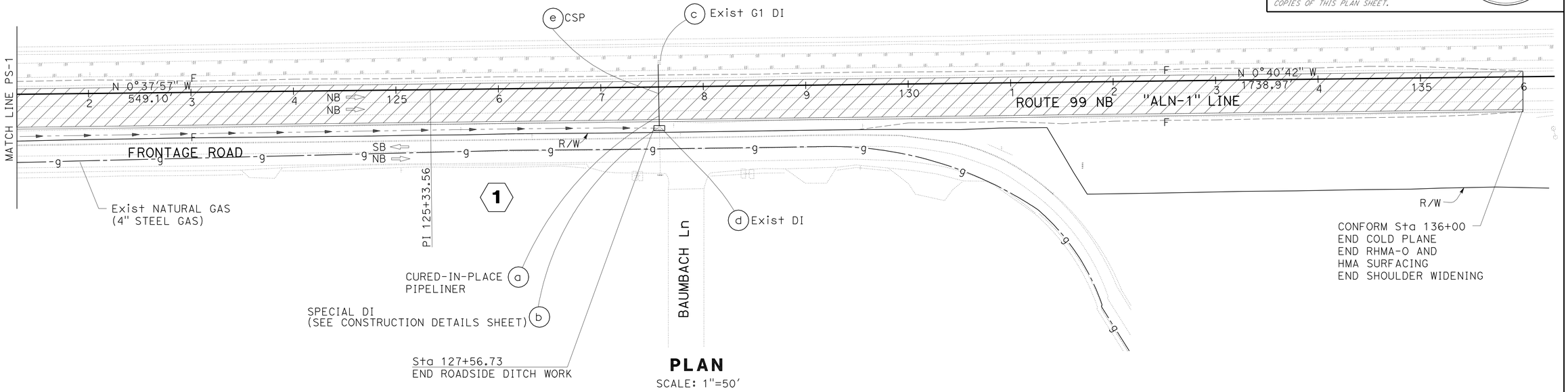

PLAN
SCALE: 1"=50'

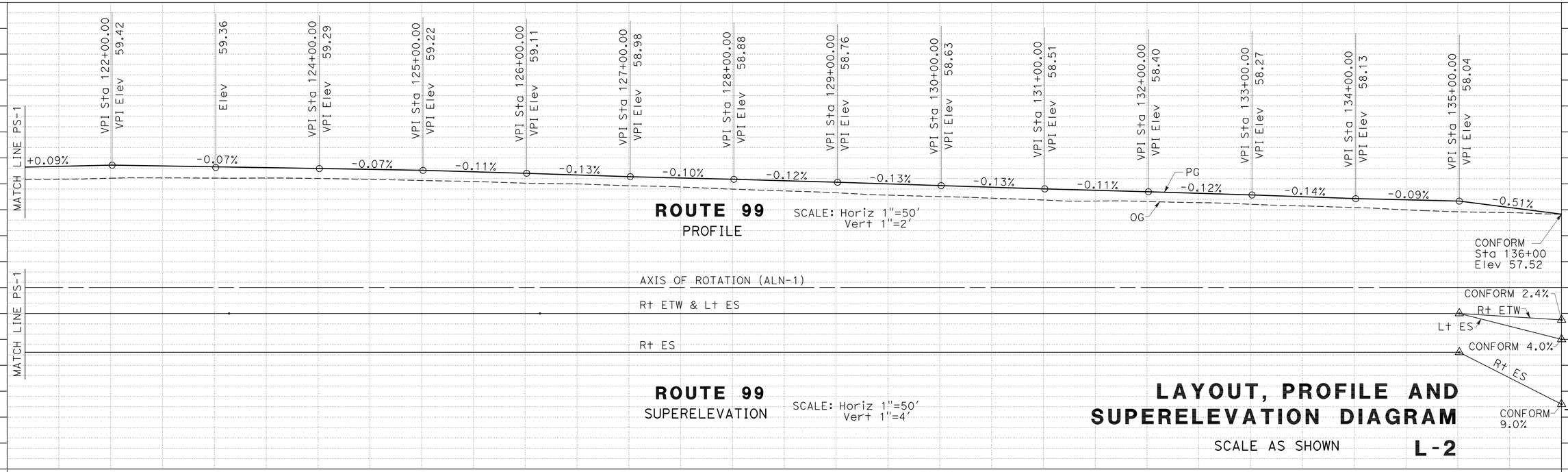

ROUTE 99
PROFILE
SCALE: Horiz 1"=50'
Vert 1"=2'

ROUTE 99
SUPERELEVATION
SCALE: Horiz 1"=50'
Vert 1"=4'

LAYOUT, PROFILE AND SUPERELEVATION DIAGRAM

SCALE AS SHOWN **L-2**

STATION	2	3	4	5	6	7	8	9	130+00	1	2	3	4	5	TOTAL
CY Exc															110
CY Emb															343

REVISED BY	DATE REVISED

MARLO CARLOS — CHEONG-YEW CHENG — CALCULATED-DESIGNED BY — CHECKED BY

FUNCTIONAL SUPERVISOR: NICHOLAS CHAN

STATE OF CALIFORNIA - DEPARTMENT OF TRANSPORTATION
Caltrans 06-DESIGN

LAST REVISION 04-09-12 DATE PLOTTED => 02-MAY-2012 TIME PLOTTED => 08:30

Dist	COUNTY	ROUTE	POST MILES TOTAL PROJECT	SHEET No.	TOTAL SHEETS
10	SJ	99	32.0/32.6	5	19

Cheng Cheong Yew 4-9-12
REGISTERED CIVIL ENGINEER DATE

4-9-12
PLANS APPROVAL DATE

REGISTERED PROFESSIONAL ENGINEER CHEONG YEW CHENG No. 57900 Exp. 6-30-12 CIVIL STATE OF CALIFORNIA

THE STATE OF CALIFORNIA OR ITS OFFICERS OR AGENTS SHALL NOT BE RESPONSIBLE FOR THE ACCURACY OR COMPLETENESS OF SCANNED COPIES OF THIS PLAN SHEET.

LEGEND:

COLD PLANE AC PAVEMENT

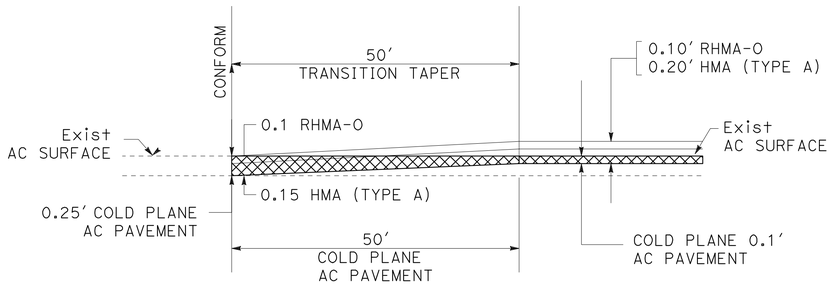

TYPICAL TRANSITION TO CONFORM AC PAVEMENT

ROUTE 99 Sta 106+50 TO 107+00

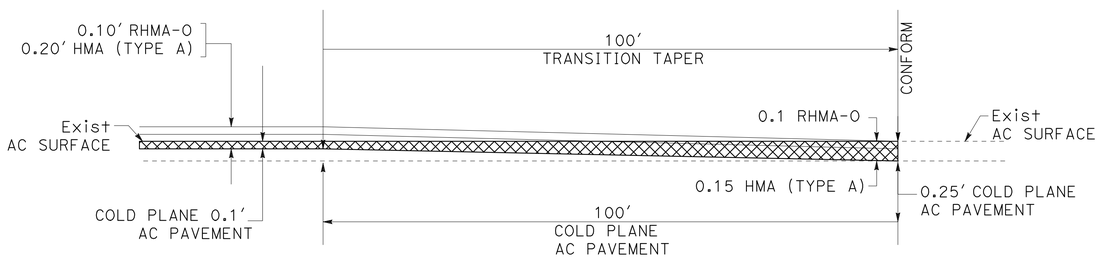

TYPICAL TRANSITION TO CONFORM AC PAVEMENT

ROUTE 99 Sta 135+00 TO 136+00

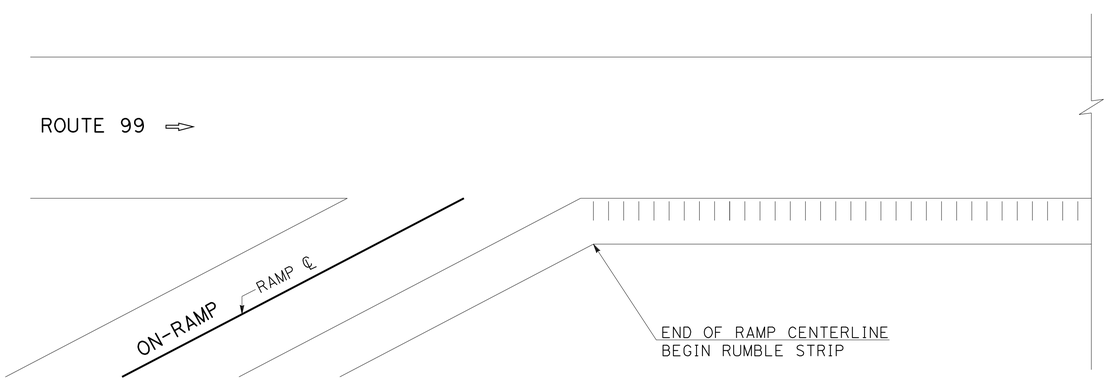

RUMBLE STRIP DETAIL

Sta 106+50 TO Sta 136+00

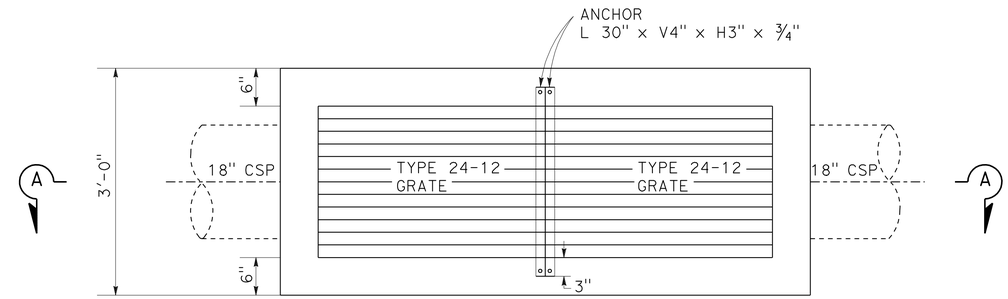

PLAN

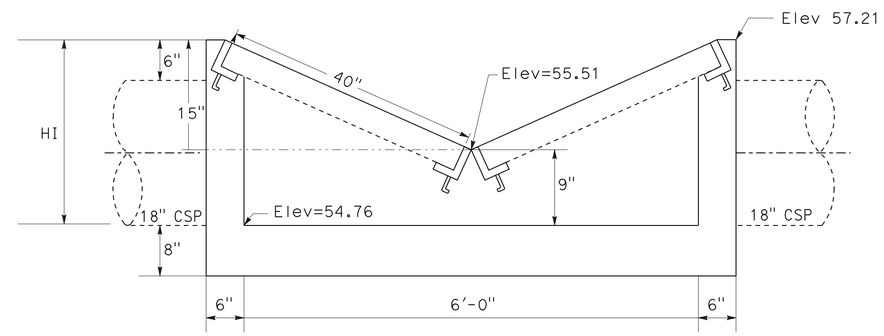

SECTION A-A

SPECIAL DRAINAGE INLET

ROUTE 99 Sta 127+56.73 (Rt 40.6′)

* REFER TO Std PLAN D77A
FOR INFORMATION NOT SHOWN.

CONSTRUCTION DETAILS
C-1

NO SCALE

STATE OF CALIFORNIA - DEPARTMENT OF TRANSPORTATION
Caltrans 06-DESIGN

FUNCTIONAL SUPERVISOR: NICHOLAS CHAN
CALCULATED-DESIGNED BY: MARLO CARLOS
CHECKED BY: CHEONG-YEW CHENG
REVISED BY
DATE REVISED

LAST REVISION 04-09-12
DATE PLOTTED => 02-MAY-2012
TIME PLOTTED => 08:30

Dist	COUNTY	ROUTE	POST MILES TOTAL PROJECT	SHEET No.	TOTAL SHEETS
10	SJ	99	32.0/32.6	6	19

LICENSED LANDSCAPE ARCHITECT

4-9-12
PLANS APPROVAL DATE

LICENSED LANDSCAPE ARCHITECT
William Duttera No. 4242
Signature
9/30/12
Renewal Date
4/2/12
CALIFORNIA

THE STATE OF CALIFORNIA OR ITS OFFICERS OR AGENTS SHALL NOT BE RESPONSIBLE FOR THE ACCURACY OR COMPLETENESS OF SCANNED COPIES OF THIS PLAN SHEET.

NOTE:

FOR ACCURATE RIGHT OF WAY DATA, CONTACT RIGHT OF WAY ENGINEERING AT THE DISTRICT OFFICE.

LEGEND:

- EROSION CONTROL TYPE 1

EROSION CONTROL TYPE 1

SEQUENCE	ITEM	MATERIAL		APPLICATION RATE
		DESCRIPTION	TYPE	
STEP 1	HYDROSEED	SEED	MIX 1	20 LB/ACRE
		FIBER	CELLULOSE	400 LB/ACRE
STEP 2	STRAW	STRAW	RICE	2 TONS/ACRE
STEP 3	HYDROMULCH	FIBER	CELLULOSE	800 LB/ACRE
		TACKIFIER	GUAR	400 LB/ACRE

SEED MIX

SEED	BOTANICAL NAME (COMMON NAME)	PERCENT GERMINATION (MINIMUM)	POUND PURE LIVE SEED PER ACRE (SLOPE MEASUREMENT)
MIX 1	ELYMUS GLAUCUS* (BLUE WILDRYE)	85	6
	ESCHSCHOLZIA CALIFORNICA* (CALIFORNIA POPPY)	80	3
	HORDEUM VULGARE* (COMMON BARLEY)	85	3
	NASSELLA PULCHRA* (PURPLE NEEDLE GRASS)	85	1
	TRIFOLIUM HIRTUM* (ROSE CLOVE)	80	1
	VULPIA MICROSTACHYS* (SMALL FESCUE)	90	6

*SEED PRODUCED IN CALIFORNIA ONLY.

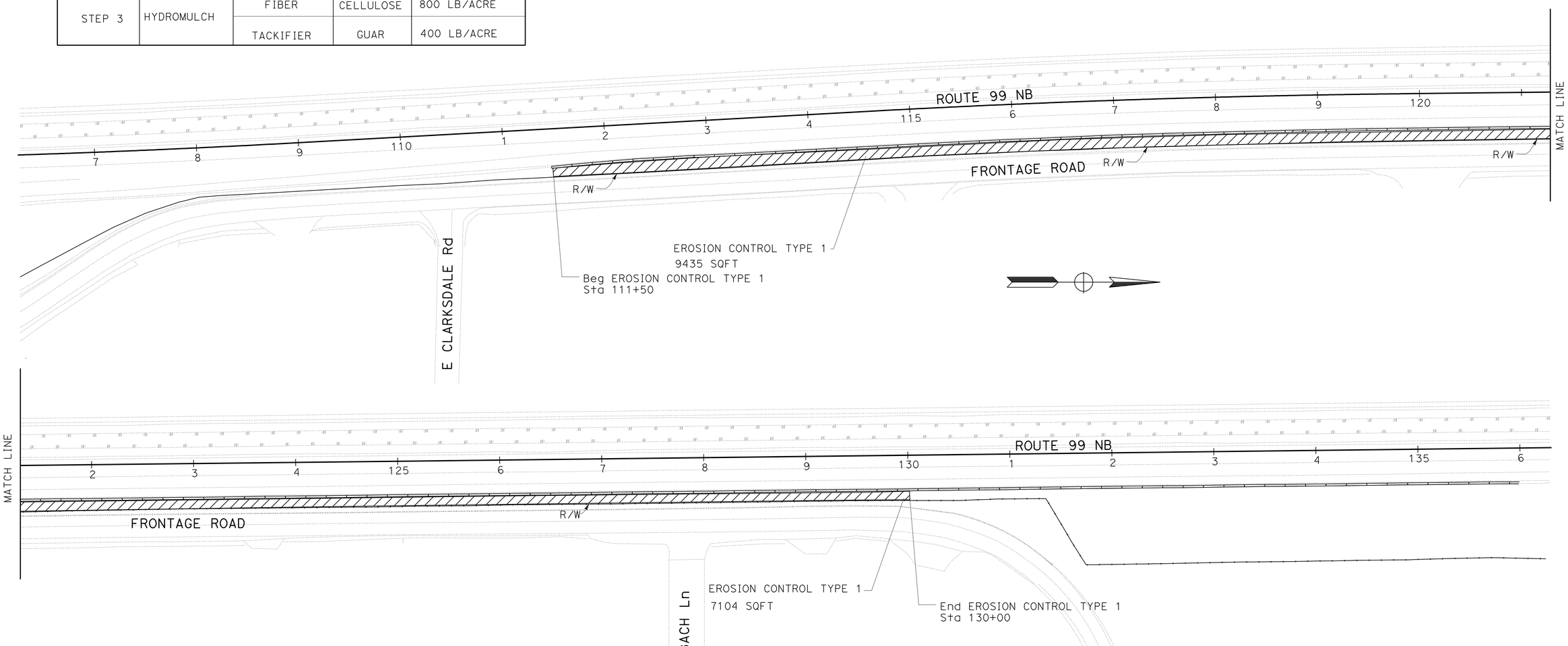

EROSION CONTROL PLAN

SCALE: 1"=50'

EC-1

STATE OF CALIFORNIA - DEPARTMENT OF TRANSPORTATION
Caltrans®
LANDSCAPE ARCHITECTURE

SENIOR LANDSCAPE ARCHITECT: BRAD COLE
CALCULATED-DESIGNED BY: ROBYN FONG
CHECKED BY: WILLIAM DUTTERA
REVISED BY
DATE REVISED

LAST REVISION 04-09-12
DATE PLOTTED => 02-MAY-2012
TIME PLOTTED => 08:30

Dist	COUNTY	ROUTE	POST MILES TOTAL PROJECT	SHEET No.	TOTAL SHEETS
10	SJ	99	32.0/32.6	7	19

Cheong Cheong Yew . 4-9-12
REGISTERED CIVIL ENGINEER DATE

4-9-12
PLANS APPROVAL DATE

REGISTERED PROFESSIONAL ENGINEER
CHEONG YEW CHENG
No. 57900
Exp. 6-30-10
CIVIL
STATE OF CALIFORNIA

THE STATE OF CALIFORNIA OR ITS OFFICERS OR AGENTS SHALL NOT BE RESPONSIBLE FOR THE ACCURACY OR COMPLETENESS OF SCANNED COPIES OF THIS PLAN SHEET.

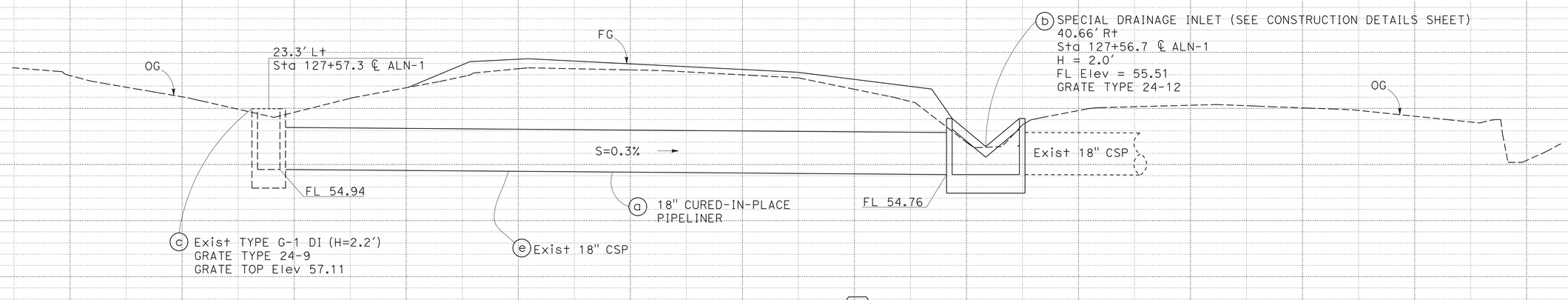

DRAINAGE SYSTEM No. 1

Sta 127+56.70

DRAINAGE PROFILE

DP-1

SCALE: Horiz 1" = 5'
Vert 1" = 2'

STATION		TOTAL
CY	Exc	
	Emb	

STATE OF CALIFORNIA - DEPARTMENT OF TRANSPORTATION
Caltrans
06-DESIGN

FUNCTIONAL SUPERVISOR: NICHOLAS CHAN
CALCULATED-DESIGNED BY: MARLO CARLOS
CHECKED BY: CHEONG-YEW CHENG
REVISED BY
DATE REVISED

LAST REVISION 04-09-12 | DATE PLOTTED => 02-MAY-2012 | TIME PLOTTED => 08:30

Dist	COUNTY	ROUTE	POST MILES TOTAL PROJECT	SHEET No.	TOTAL SHEETS
10	SJ	99	32.0/32.6	8	19

REGISTERED CIVIL ENGINEER 4-9-12 DATE

4-9-12
PLANS APPROVAL DATE

REGISTERED PROFESSIONAL ENGINEER HUE NGUYEN No. 74484 Exp. 12/31/13 CIVIL STATE OF CALIFORNIA

THE STATE OF CALIFORNIA OR ITS OFFICERS OR AGENTS SHALL NOT BE RESPONSIBLE FOR THE ACCURACY OR COMPLETENESS OF SCANNED COPIES OF THIS PLAN SHEET.

STATIONARY MOUNTED CONSTRUCTION AREA SIGNS

SIGN	SIGN CODE	PANEL SIZE	No. OF POST AND SIZE	No. OF SIGNS	SIGN MESSAGE
A	W20-1	48" x 48"	1- 4" x 6"	3	ROAD WORK AHEAD
B	G20-2	36" x 18"	1- 4" x 4"	2	END ROAD WORK

NOTE: EXACT SIGN LOCATIONS TO BE DETERMINED BY THE ENGINEER.

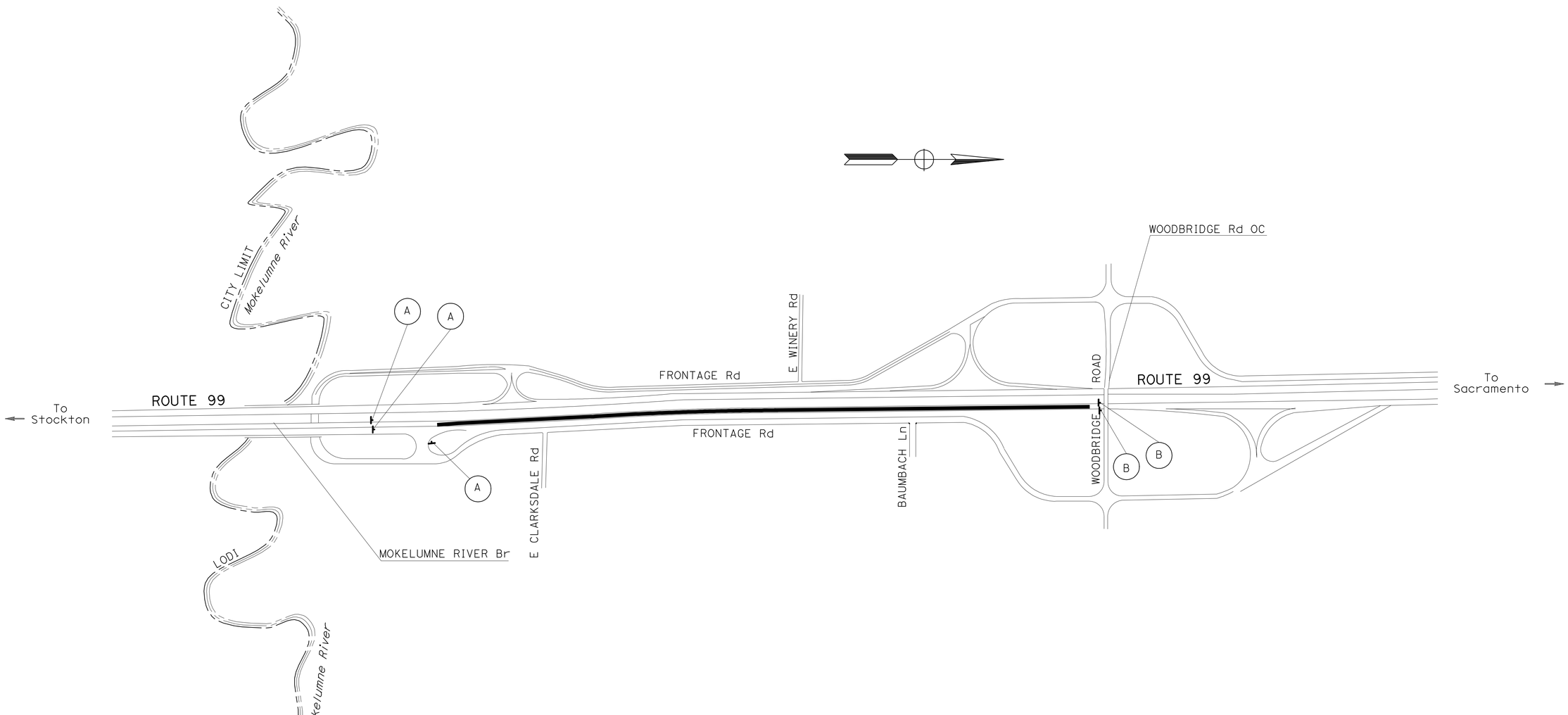

CONSTRUCTION AREA SIGNS

NO SCALE

CS-1

APPROVED FOR CONSTRUCTION AREA SIGN WORK ONLY

STATE OF CALIFORNIA - DEPARTMENT OF TRANSPORTATION
Caltrans
TRAFFIC DESIGN

FUNCTIONAL SUPERVISOR: MOHAMMED QATAMI
CALCULATED-DESIGNED BY: CECILE NGUYEN
CHECKED BY: HUE NGUYEN
REVISED BY
DATE REVISED

LAST REVISION 04-09-12
DATE PLOTTED => 02-MAY-2012
TIME PLOTTED => 08:30

Dist	COUNTY	ROUTE	POST MILES TOTAL PROJECT	SHEET No.	TOTAL SHEETS
10	SJ	99	32.0/32.6	9	19

REGISTERED CIVIL ENGINEER 4-9-12 DATE

4-9-12
PLANS APPROVAL DATE

REGISTERED PROFESSIONAL ENGINEER HUE NGUYEN No. 74484 Exp. 12/31/13 CIVIL STATE OF CALIFORNIA

THE STATE OF CALIFORNIA OR ITS OFFICERS OR AGENTS SHALL NOT BE RESPONSIBLE FOR THE ACCURACY OR COMPLETENESS OF SCANNED COPIES OF THIS PLAN SHEET.

LEGEND:

- XX THERMOPLASTIC TRAFFIC STRIPE
- OBJECT MARKER (TYPE L)
- ROADSIDE SIGN ONE POST
- No. ROADSIDE SIGN NUMBER
- RESET ROADSIDE SIGN
- ROADSIDE SIGN TWO POST

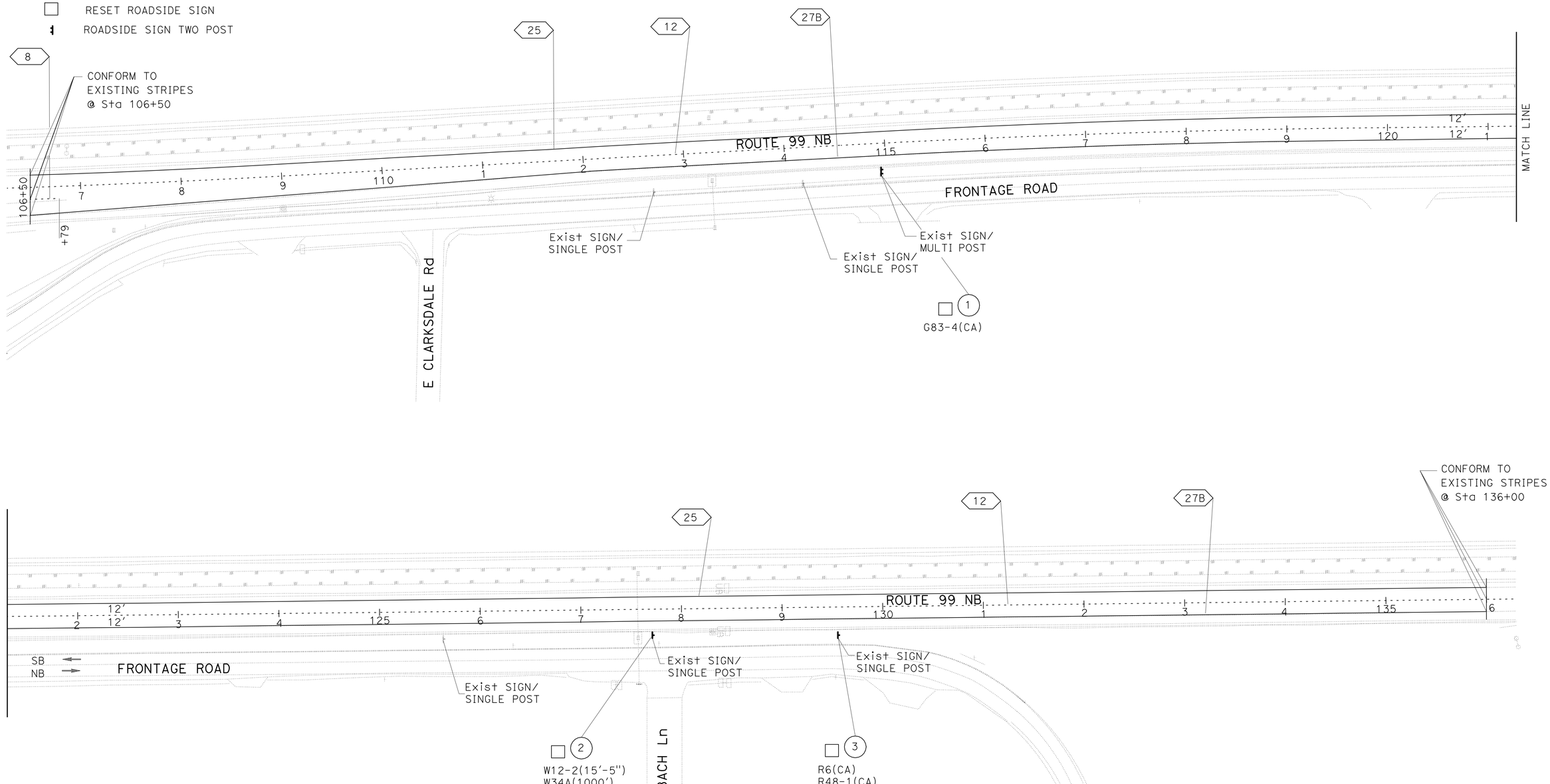

PAVEMENT DELINEATION AND SIGN PLAN

APPROVED FOR PAVEMENT DELINEATION AND SIGN WORK ONLY.

SCALE:1"=50'

PD-1

STATE OF CALIFORNIA - DEPARTMENT OF TRANSPORTATION
Caltrans® TRAFFIC DESIGN

FUNCTIONAL SUPERVISOR: MOHAMMED QATAMI
CALCULATED-DESIGNED BY: CECILE NGUYEN
CHECKED BY: HUE NGUYEN
REVISED BY
DATE REVISED

LAST REVISION 04-09-12
DATE PLOTTED => 02-MAY-2012
TIME PLOTTED => 08:30

Dist	COUNTY	LOCATION CODE	POST MILES TOTAL PROJECT	SHEET No.	TOTAL SHEETS
10	SJ	99	32.0/32.6	10	19

REGISTERED CIVIL ENGINEER 4-9-12 DATE

4-9-12
PLANS APPROVAL DATE

REGISTERED PROFESSIONAL ENGINEER HUE NGUYEN No. 74484 Exp 12/31/13 CIVIL STATE OF CALIFORNIA

THE STATE OF CALIFORNIA OR ITS OFFICERS OR AGENTS SHALL NOT BE RESPONSIBLE FOR THE ACCURACY OR COMPLETENESS OF SCANNED COPIES OF THIS PLAN SHEET.

PAVEMENT DELINEATION AND SIGNS

STATION	THERMOPLASTIC TRAFFIC STRIPE				PAVEMENT MARKER (RETROREFLECTIVE)		THERMOPLASTIC PAVEMENT MARKING	OBJECT MARKER (TYPE L)
	DETAIL 8 4" BROKEN WHITE 17-7	DETAIL 25 4" SOLID YELLOW	DETAIL 27B 4" SOLID WHITE	DETAIL 12 4" BROKEN 36-12 WHITE	TYPE H	TYPE G	SPEED MEASUREMENT MARKING	
	FT	FT	FT	FT	EA		SQFT	EA
106+50 TO 136+00	29	2950	2950	2950	62	67		2
Sta 106+50 (PM 32)							6	
TOTAL	29	5900		2950	129		6	2

SIGN No.	RESET ROADSIDE SIGN	SIGN CODE
	EA	
1	1	G83-4(CA)
2	1	W12-2(15'-5") W34A(1000')
3	1	R6(CA) R48-1(CA)
TOTAL	3	

NOTE: EXACT LOCATIONS TO BE DETERMINED BY THE ENGINEER.

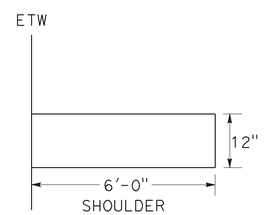

SPEED MEASUREMENT DETAIL

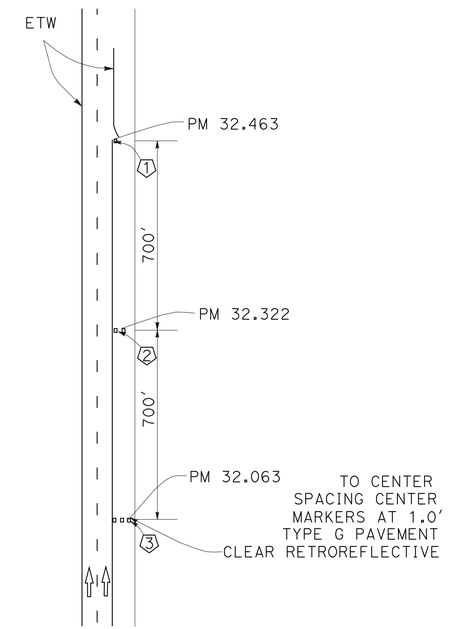

3-2 FOG MARKER DETAIL

PAVEMENT DELINEATION AND SIGN QUANTITIES

NO SCALE

PDQ-1

REVISED BY | DATE REVISED

CECILE NGUYEN | HUE NGUYEN

CALCULATED-DESIGNED BY | CHECKED BY

FUNCTIONAL SUPERVISOR: MOHAMMED QATAMI

STATE OF CALIFORNIA - DEPARTMENT OF TRANSPORTATION

Caltrans® TRAFFIC DESIGN

LAST REVISION 04-09-12 | DATE PLOTTED => 02-MAY-2012 | TIME PLOTTED => 08:30

Dist	COUNTY	ROUTE	POST MILES TOTAL PROJECT	SHEET No.	TOTAL SHEETS
10	SJ	99	32.0/32.6	11	19

Cheng Cheong Yew 4-9-12
REGISTERED CIVIL ENGINEER DATE

4-9-12
PLANS APPROVAL DATE

REGISTERED PROFESSIONAL ENGINEER CHEONG YEW CHENG No. 57900 Exp. 6-30-13 CIVIL STATE OF CALIFORNIA

THE STATE OF CALIFORNIA OR ITS OFFICERS OR AGENTS SHALL NOT BE RESPONSIBLE FOR THE ACCURACY OR COMPLETENESS OF SCANNED COPIES OF THIS PLAN SHEET.

ROADWAY QUANTITIES

LOCATION	COLD PLANE AC PAVEMENT	HMA (TYPE A)	RHMA (OPEN GRADED)	ROADWAY EXCAVATION	IMPORTED BORROW	SHOULDER BACKING	SHOULDER RUMBLE STRIP (HMA, GROUND-IN INDENTATION)	PLACE HMA DIKE (TYPE E)	TACK COAT	PLACE HMA (MISC AREA)	DESCRIPTION
Rte 99 NORTHBOUND	SQYD	TON	TON	CY	CY	TON	LF	LF	TON	SQYD	
106+50 TO 136+00	12,784										HMA PAVEMENT
106+50 TO 136+00		2709	863								HMA PAVEMENT OVERLAY
111+50 TO 136+00				200							ROADWAY EXCAVATION
111+50 TO 136+00					430						ROADWAY BACKFILL
106+50 TO 136+00						327					ROADWAY BACKFILL
106+50 TO 136+00							5500				RUMBLE STRIP
107+70		0.6								3	HMA OVERSIDE DRAIN
106+75 TO 107+75		1.3						100			HMA PAVEMENT
106+50 TO 136+00									6		TACK COAT
TOTAL	12,784	2710.9	863	200	430	327	5500	100	6	3	

DRAINAGE QUANTITIES

DRAINAGE SHEET NUMBER	DRAINAGE SYSTEM No. ⬡	DRAINAGE UNIT ○	18" CURED-IN-PLACE PIPELINER	REMOVE INLET (N)	MINOR CONCRETE (MINOR STRUCTURE)	Misc IRON AND STEEL	DESCRIPTION	LOCATION	DRAINAGE SHEET NUMBER	DRAINAGE SYSTEM No. ⬡
			LF	EA	CY	LB				
L-2	1	a	63.9				18" CURED-IN-PLACE PIPELINER	127+56.60	L-2	1
L-2	1	b			1	652	Const Spec Det DI W/ 24-12 GRATE	127+56.73, 40.6' Rt	L-2	1
L-2	1	b		1			REMOVE DI W/ 24-12 GRATE	127+56.73, 40.6' Rt	L-2	1
			63.9		1	652	TOTALS			

(N) - NOT A SEPARATE PAY ITEM, FOR INFORMATION ONLY

EROSION CONTROL

SHEET	LOCATION	DESCRIPTION	STRAW	HYDROSEED	HYDROMULCH
			SQFT	SQFT	SQFT
EC SHEETS	111+50 TO 130+00	EROSION CONTROL TYPE 1	16,539	16,539	16,539

SUMMARY OF QUANTITIES
Q-1

REVISED BY	DATE REVISED

CALCULATED-DESIGNED BY	CHECKED BY
MARLO CARLOS	CHEONG-YEW CHENG

FUNCTIONAL SUPERVISOR: NICHOLAS CHAN

STATE OF CALIFORNIA - DEPARTMENT OF TRANSPORTATION
Caltrans® 06-DESIGN

LAST REVISION 04-09-12 | DATE PLOTTED => 02-MAY-2012 | TIME PLOTTED => 08:30

Dist	COUNTY	ROUTE	POST MILES TOTAL PROJECT	SHEET No.	TOTAL SHEETS
10	SJ	99	32.0/32.6	12	19

REGISTERED ELECTRICAL ENGINEER 4-9-12

4-9-12
PLANS APPROVAL DATE

REGISTERED PROFESSIONAL ENGINEER PAUL MATOS No. 18757 Exp. 6/30/13 ELECTRICAL STATE OF CALIFORNIA

THE STATE OF CALIFORNIA OR ITS OFFICERS OR AGENTS SHALL NOT BE RESPONSIBLE FOR THE ACCURACY OR COMPLETENESS OF SCANNED COPIES OF THIS PLAN SHEET.

LEGEND: (FOR SHEETS E-1, E-2 AND E-3)

1 TYPE III PHOTOELECTRIC CONTROL.

2 SEE DETAIL A ON SHEET E-3 FOR DETECTOR LOOP AND PIEZO AXLE SENSOR DESIGNATION. SEE DETAILS B AND C ON SHEET E-3 FOR PIEZO AXLE SENSOR INSTALLATION.

3 Exist MODEL P CABINET. FURNISH AND INSTALL AUTOMATED TRAFFIC COUNTER.

ABBREVIATIONS:

VCS = VEHICLE CLASSIFICATION STATION
STC = SCREENED TRANSMISSION CABLE
CTID = CALTRANS IDENTIFICATION
PG&E = PACIFIC GAS AND ELECTRIC

NOTES:

1. ALL PULL BOXES SHALL BE No. 5 WITH EXTENSION UNLESS OTHERWISE NOTED.
2. FOR ACCURATE RIGHT OF WAY DATA, CONTACT RIGHT OF WAY ENGINEERING AT THE DISTRICT OFFICE.

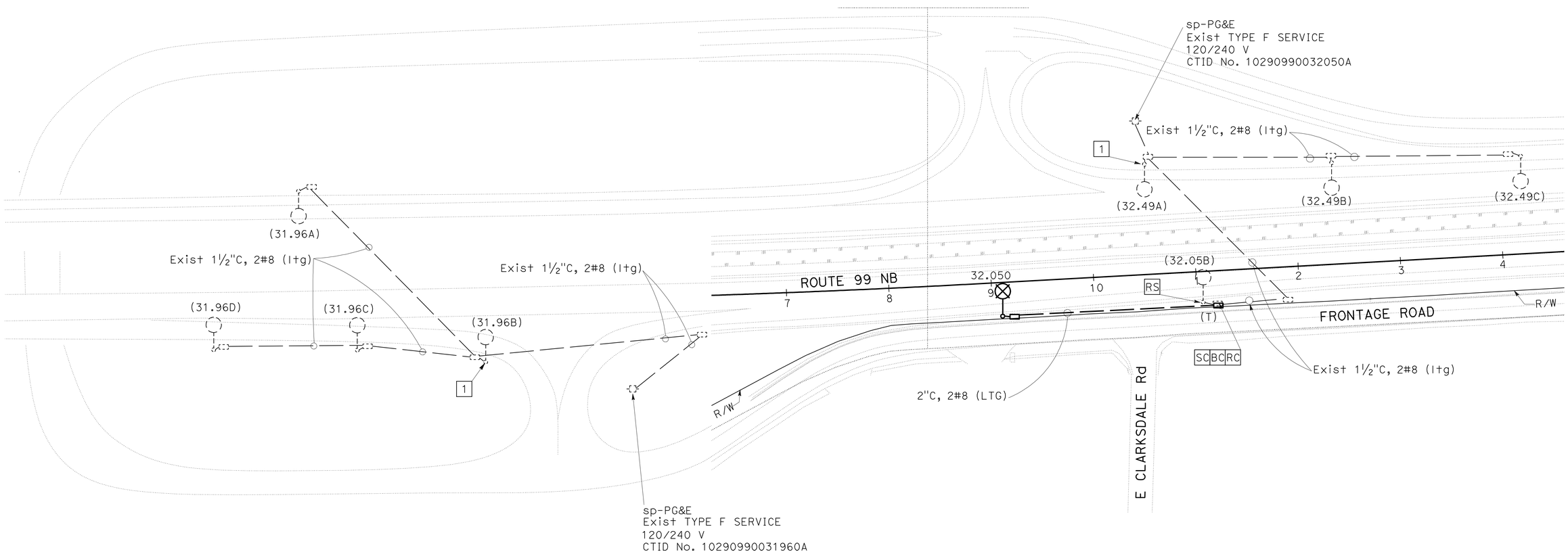

MODIFY LIGHTING

SCALE: 1" = 50′ **E-1**

APPROVED FOR ELECTRICAL WORK ONLY

STATE OF CALIFORNIA - DEPARTMENT OF TRANSPORTATION
Caltrans 06-ELECTRICAL DESIGN

FUNCTIONAL SUPERVISOR: ALI BAKHDOUD
CALCULATED-DESIGNED BY: KARIM ABDOLLAHIAN
CHECKED BY: PAUL MATOS
REVISED BY
DATE REVISED

LAST REVISION 02-14-12
DATE PLOTTED => 02-MAY-2012
TIME PLOTTED => 08:30

Dist	COUNTY	ROUTE	POST MILES TOTAL PROJECT	SHEET No.	TOTAL SHEETS
10	SJ	99	32.0/32.6	13	19

Paul Matos 4-9-12
REGISTERED ELECTRICAL ENGINEER

4-9-12
PLANS APPROVAL DATE

REGISTERED PROFESSIONAL ENGINEER PAUL MATOS No. 18757 Exp. 6/30/13 ELECTRICAL STATE OF CALIFORNIA

THE STATE OF CALIFORNIA OR ITS OFFICERS OR AGENTS SHALL NOT BE RESPONSIBLE FOR THE ACCURACY OR COMPLETENESS OF SCANNED COPIES OF THIS PLAN SHEET.

NOTE: FOR ACCURATE RIGHT OF WAY DATA, CONTACT RIGHT OF WAY ENGINEERING AT THE DISTRICT OFFICE.

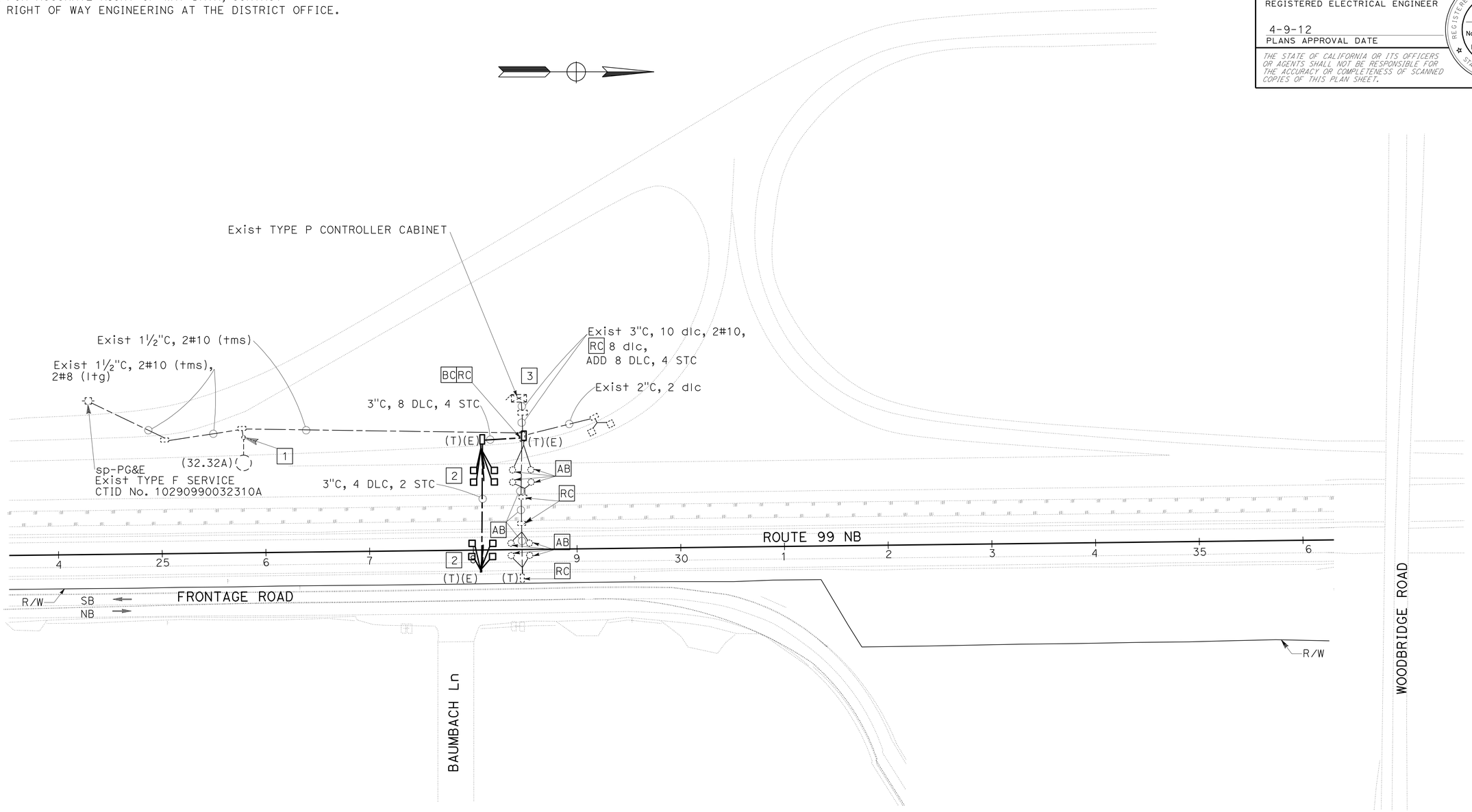

MODIFY VEHICLE CLASSIFICATION STATION

SCALE: 1" = 50′ **E-2**

APPROVED FOR ELECTRICAL WORK ONLY

STATE OF CALIFORNIA - DEPARTMENT OF TRANSPORTATION
Caltrans® 06-ELECTRICAL DESIGN

FUNCTIONAL SUPERVISOR: ALI BAKHDOUD
CALCULATED-DESIGNED BY: KARIM ABDOLLAHIAN
CHECKED BY: PAUL MATOS
REVISED BY
DATE REVISED

LAST REVISION 02-14-12
DATE PLOTTED => 02-MAY-2012
TIME PLOTTED => 08:30

Dist	COUNTY	ROUTE	POST MILES TOTAL PROJECT	SHEET No.	TOTAL SHEETS
10	SJ	99	32.0/32.6	14	19

REGISTERED ELECTRICAL ENGINEER 4-9-12

4-9-12
PLANS APPROVAL DATE

REGISTERED PROFESSIONAL ENGINEER PAUL MATOS No. 18757 Exp. 6/30/13 ELECTRICAL STATE OF CALIFORNIA

THE STATE OF CALIFORNIA OR ITS OFFICERS OR AGENTS SHALL NOT BE RESPONSIBLE FOR THE ACCURACY OR COMPLETENESS OF SCANNED COPIES OF THIS PLAN SHEET.

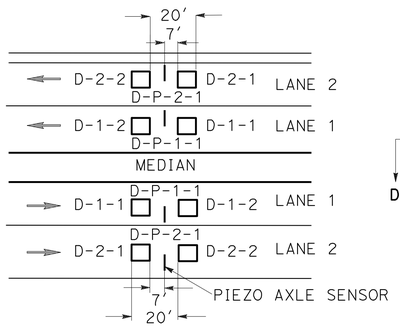

INDUCTIVE LOOP DETECTOR SENSOR DESIGNATION

D-L-N

DIRECTION OF TRAFFIC
N - NORTHBOUND
S - SOUTHBOUND
E - EASTBOUND
W - WESTBOUND

1 - LEADING
2 - TRAILING
LANE NUMBER

PIEZO AXLE SENSOR DESIGNATION

D-P-L-N

DIRECTION OF TRAFFIC
N - NORTHBOUND
S - SOUTHBOUND
E - EASTBOUND
W - WESTBOUND

1 - LEADING
2 - TRAILING
LANE NUMBER

P - PIEZO

INDUCTIVE LOOP DETECTOR SENSOR AND PIEZO AXLE SENSOR DESIGNATION DETAIL A

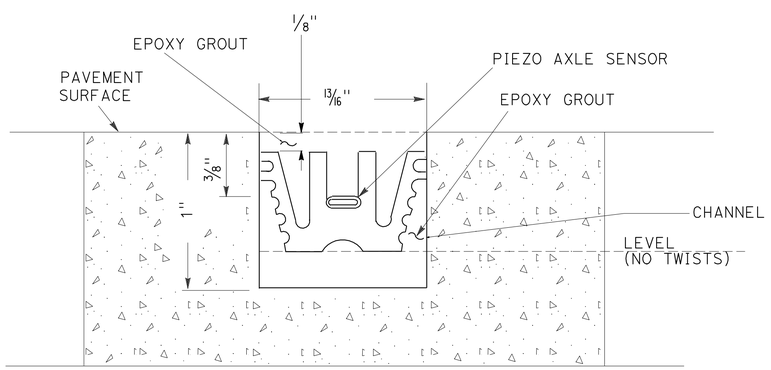

SECTION A-A PIEZO AXLE SENSOR INSTALLATION DETAIL B

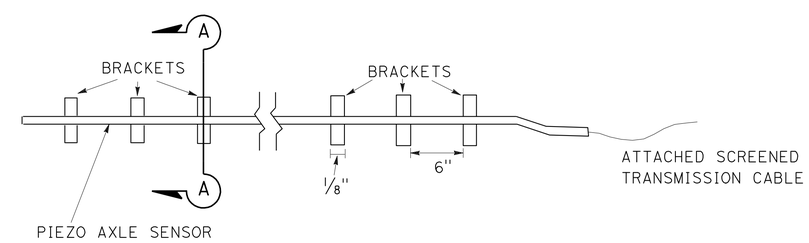

PIEZO AXLE SENSOR INSTALLATION DETAIL C

MODIFY VEHICLE CLASSIFICATION STATION

NO SCALE **E-3**

APPROVED FOR ELECTRICAL WORK ONLY

STATE OF CALIFORNIA - DEPARTMENT OF TRANSPORTATION
Caltrans 06-ELECTRICAL DESIGN

FUNCTIONAL SUPERVISOR: ALI BAKHDOUD
CALCULATED-DESIGNED BY: KARIM ABDOLLAHIAN
CHECKED BY: PAUL MATOS
REVISED BY
DATE REVISED

LAST REVISION 02-14-12
DATE PLOTTED => 02-MAY-2012
TIME PLOTTED => 08:30

DIST	COUNTY	ROUTE	POST MILES TOTAL PROJECT	SHEET No.	TOTAL SHEETS
10	SJ	99	32.0/32.6	15	19

REGISTERED CIVIL ENGINEER

January 20, 2012
PLANS APPROVAL DATE

REGISTERED PROFESSIONAL ENGINEER
Cornelis M. Hakim
No. C55610
Exp. 12-31-12
CIVIL
STATE OF CALIFORNIA

THE STATE OF CALIFORNIA OR ITS OFFICERS OR AGENTS SHALL NOT BE RESPONSIBLE FOR THE ACCURACY OR COMPLETENESS OF SCANNED COPIES OF THIS PLAN SHEET.

TO ACCOMPANY PLANS DATED 4-9-12

ABBREVIATIONS:

SE SAFETY EDGE

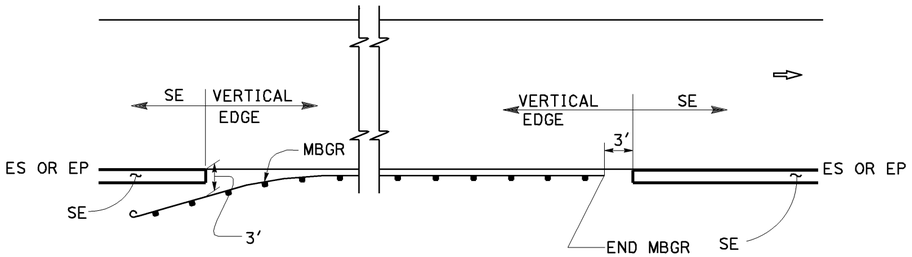

MBGR

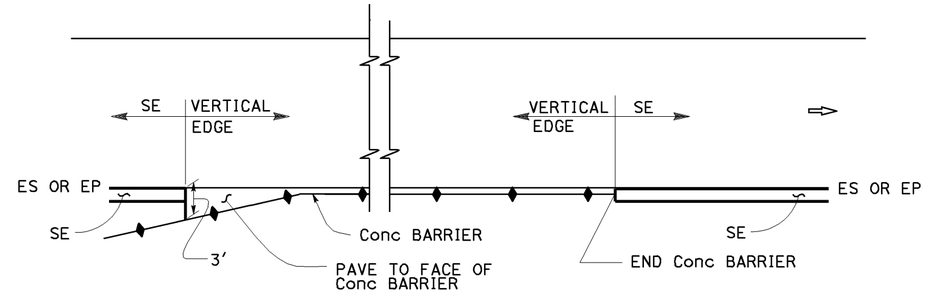

CONCRETE BARRIER

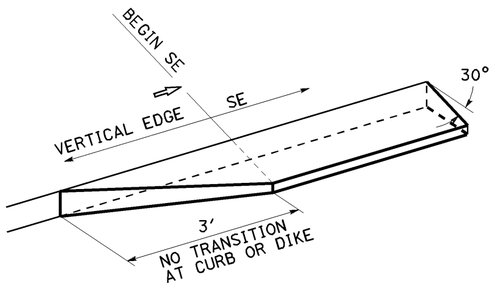

TRANSITION DETAIL FOR CONCRETE ONLY

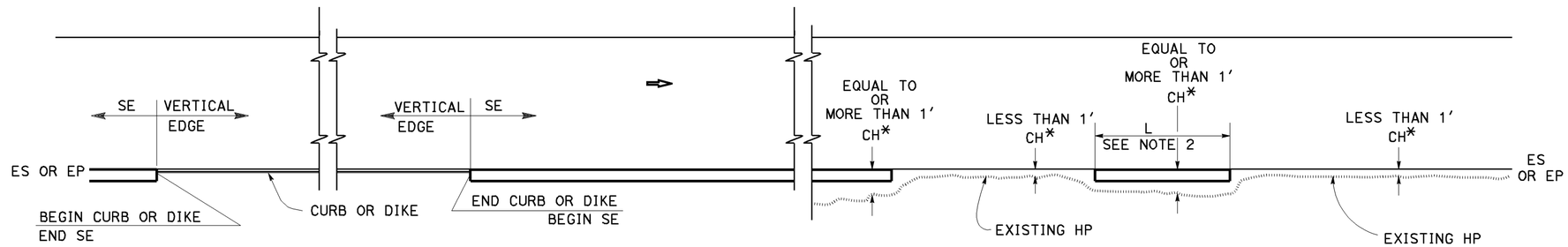

CURB OR DIKE

NARROW SIDE SLOPE

* CH = Distance from ES or EP to existing HP.

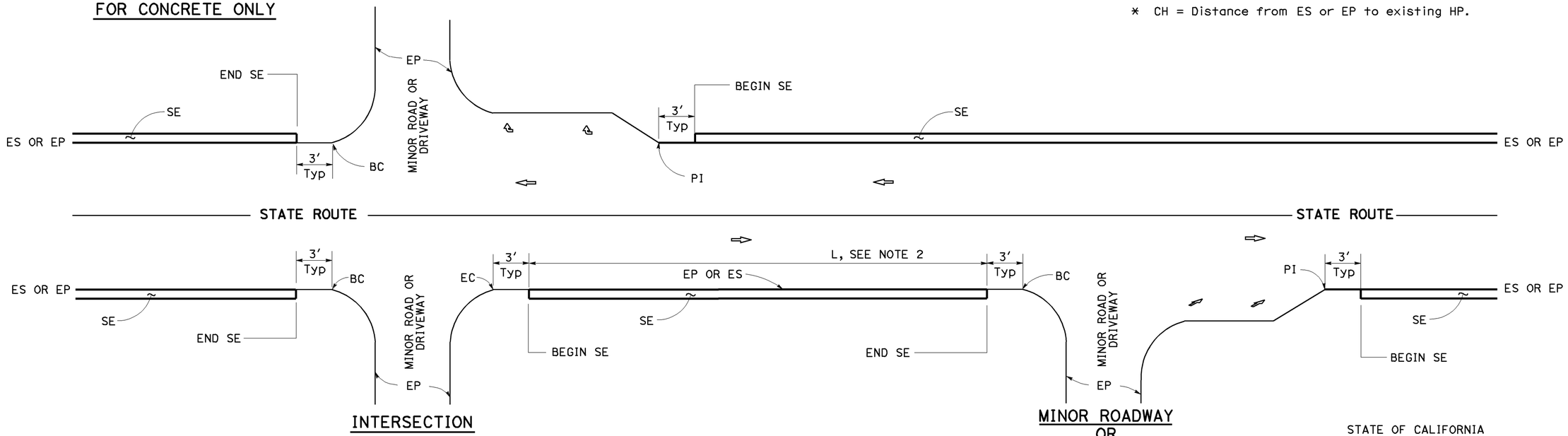

INTERSECTION

DRIVEWAY AND INTERSECTION

MINOR ROADWAY OR DRIVEWAY

NOTES:

1. For details not shown, see Revised Standard Plans RSP P75 and RSP P76.
2. Safety edge is optional when L is less than 30′.

STATE OF CALIFORNIA
DEPARTMENT OF TRANSPORTATION

PAVEMENT EDGE TREATMENTS

NO SCALE

RSP P74 DATED JANUARY 20, 2012 SUPPLEMENTS THE STANDARD PLANS BOOK DATED 2010.

REVISED STANDARD PLAN RSP P74

2010 REVISED STANDARD PLAN RSP P74

01-05-12

DIST	COUNTY	ROUTE	POST MILES TOTAL PROJECT	SHEET No.	TOTAL SHEETS
10	SJ	99	32.0/32.6	16	19

REGISTERED CIVIL ENGINEER

January 20, 2012
PLANS APPROVAL DATE

REGISTERED PROFESSIONAL ENGINEER
Cornelis M. Hakim
No. C55610
Exp. 12-31-12
CIVIL
STATE OF CALIFORNIA

THE STATE OF CALIFORNIA OR ITS OFFICERS OR AGENTS SHALL NOT BE RESPONSIBLE FOR THE ACCURACY OR COMPLETENESS OF SCANNED COPIES OF THIS PLAN SHEET.

TO ACCOMPANY PLANS DATED 4-9-12

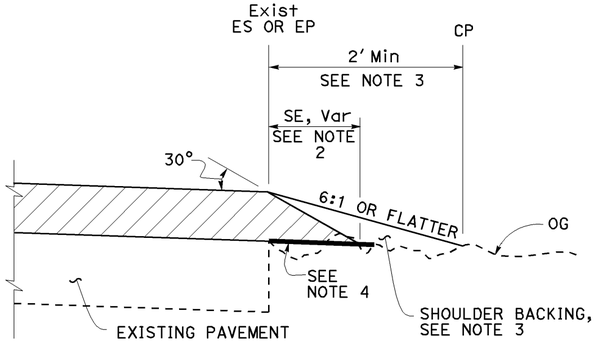

CASE A
Safety Edge

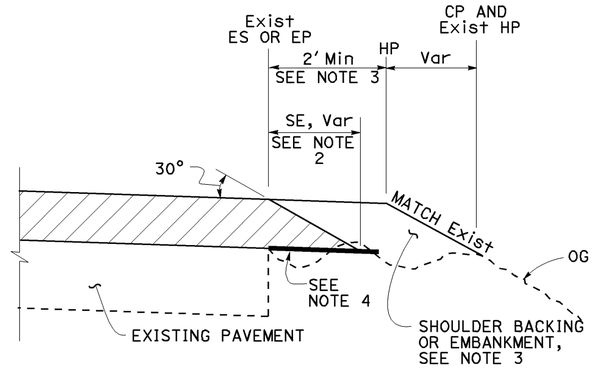

CASE B
Safety Edge

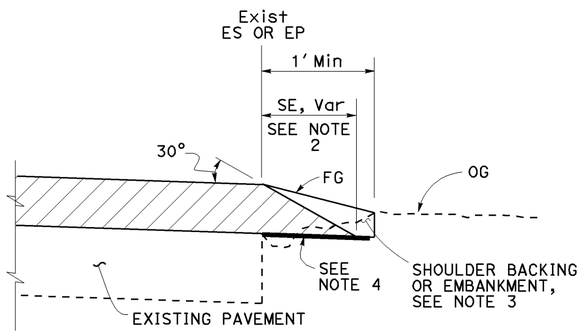

CASE C
Safety Edge

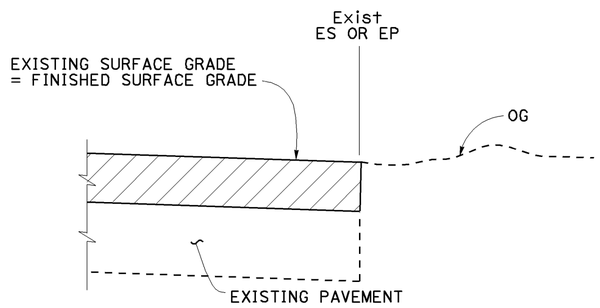

CASE D
Vertical Edge

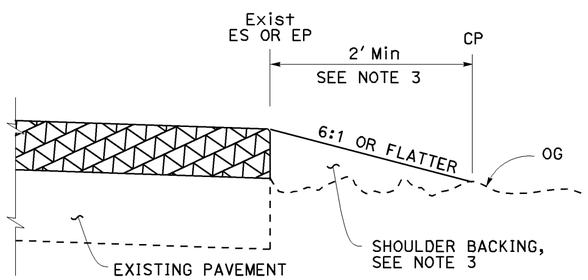

CASE E
Vertical Edge

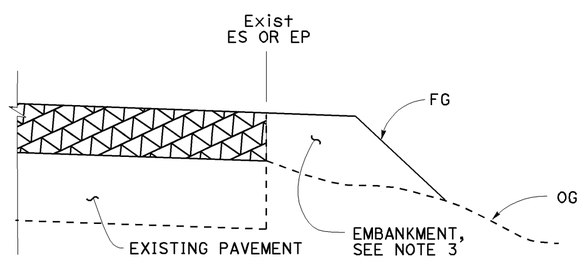

CASE F
Vertical Edge
* See Table A and Revised Std Plan RSP P74

LEGEND:

- HMA OVERLAY
- HMA OR CONCRETE OVERLAY
- CONCRETE OVERLAY

ABBREVIATIONS:

SE SAFETY EDGE
TT TOTAL THICKNESS OF SE

TABLE A
EDGE TREATMENT FOR VARIOUS OVERLAY THICKNESS AND CONDITIONS

	OVERLAY THICKNESS	
FIELD CONDITION	LESS THAN 0.15'	0.15' OR MORE
Exist SLOPE 6:1 OR FLATTER	CASE E	CASE A
Exist SLOPE 3:1 TO 6:1	CASE E	CASE B
Exist SLOPE STEEPER THAN 3:1	CASE F	CASE F
CUT SECTION (REPLACE, COLD PLANE, MILL PAVEMENT)	CASE D	CASE C

ADDITIONAL HMA OR CONCRETE QUANTITIES FOR SE/SIDE/MILE

TYPICAL CROSS SECTION	TT	TOTAL ADDITIONAL MATERIAL FOR SE/SIDE/MILE		
		HMA (TON)	CONCRETE (CY)*	CONCRETE (CY)**
TT	0.15'	NA	NA	NA
	0.20'	13.7	NA	NA
	0.30'	30.9	NA	NA
	0.40'	54.9	NA	NA
	0.45'	69.4	NA	NA
TT 0.43'	0.50'	84.2	NA	NA
	0.60'	113.9	NA	NA
	0.70'	143.6	70.9	94.2
	0.80'	173.3	85.6	112.2
	0.90'	203.0	100.3	130.2
	1.00'	232.7	114.9	148.2
	1.10'	262.4	129.6	166.2
	1.20'	292.1	144.3	184.2

* For Detail "A"
** For Optional Detail "A"

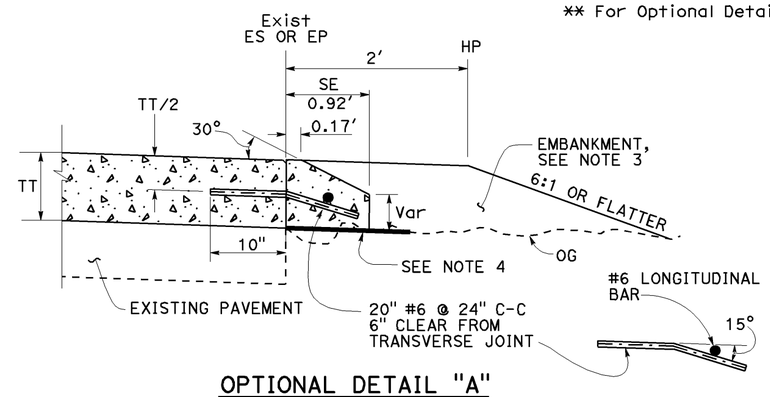

OPTIONAL DETAIL "A"
For concrete overlay
See Note 5

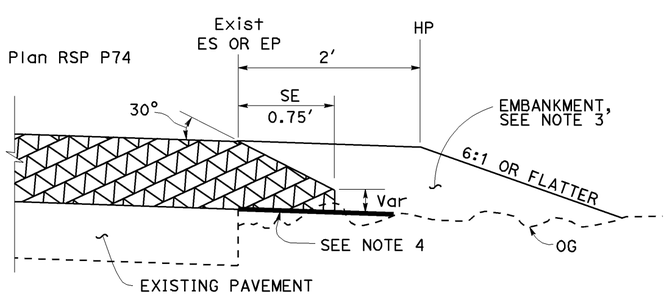

DETAIL "A"
For HMA overlay thickness more than 0.43' or concrete overlay

NOTES:

1. For limits of safety edge and vertical edge treatments, see Revised Standard Plan RSP P74.
2. Details shown for HMA overlay thickness less than 0.43'. See Detail "A" for HMA overlay thickness more than 0.43' or concrete overlay.
3. For locations and limits of shoulder backing or embankment see project plans.
4. Grade existing ground to place safety edge. 1' minimum width
5. Safety edge transverse joint must match overlay transverse joint. End of #6 longitudinal bar must be 2" ±½" clear from transverse joint.
6. Safety edge is not needed in the area of MBGR, barrier, right turn lane and acceleration lane. See Revised Standard Plan RSP P74.

STATE OF CALIFORNIA
DEPARTMENT OF TRANSPORTATION

PAVEMENT EDGE TREATMENTS-OVERLAYS

NO SCALE

RSP P75 DATED JANUARY 20, 2012 SUPPLEMENTS THE STANDARD PLANS BOOK DATED 2010.

REVISED STANDARD PLAN RSP P75

2010 REVISED STANDARD PLAN RSP P75

01-09-12

DIST	COUNTY	ROUTE	POST MILES TOTAL PROJECT	SHEET No.	TOTAL SHEETS
10	SJ	99	32.0/32.6	17	19

REGISTERED CIVIL ENGINEER

January 20, 2012
PLANS APPROVAL DATE

REGISTERED PROFESSIONAL ENGINEER Cornelis M. Hakim No. C55610 Exp. 12-31-12 CIVIL STATE OF CALIFORNIA

THE STATE OF CALIFORNIA OR ITS OFFICERS OR AGENTS SHALL NOT BE RESPONSIBLE FOR THE ACCURACY OR COMPLETENESS OF SCANNED COPIES OF THIS PLAN SHEET.

TO ACCOMPANY PLANS DATED 4-9-12

LEGEND:

- HMA PAVEMENT
- HMA OR CONCRETE PAVEMENT
- CONCRETE PAVEMENT

ABBREVIATIONS:

SE SAFETY EDGE
TT TOTAL THICKNESS OF SE
HW HINGE WIDTH, DISTANCE FROM ES OR EP TO HP

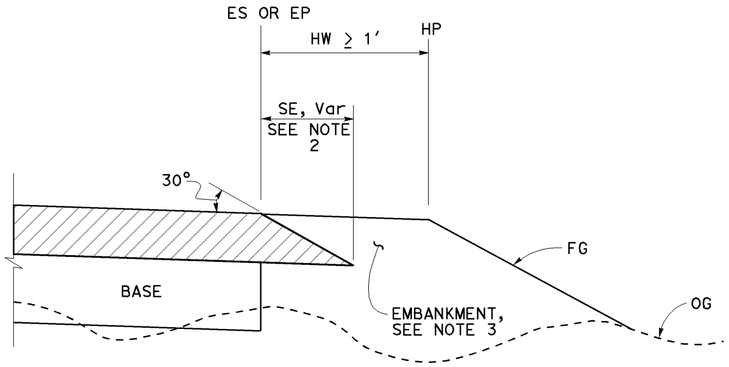

CASE K
Safety Edge - Fill Section, HW ≥ 1′

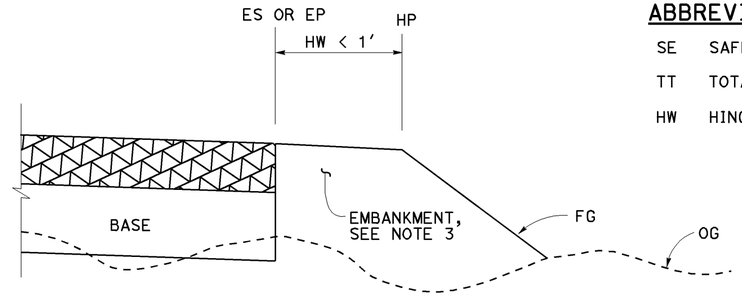

CASE L
Vertical Edge - Fill Section, HW < 1′

FILL SECTION

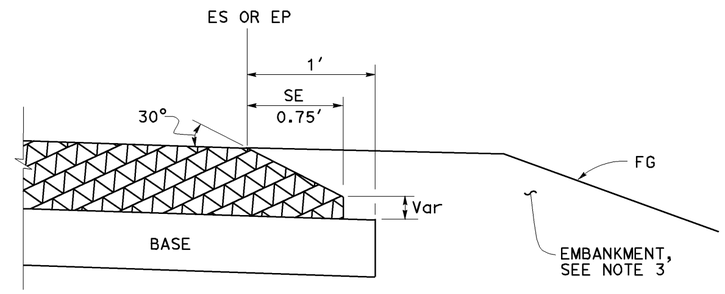

DETAIL "B"
For HMA pavement thickness more than 0.43′ or concrete pavement

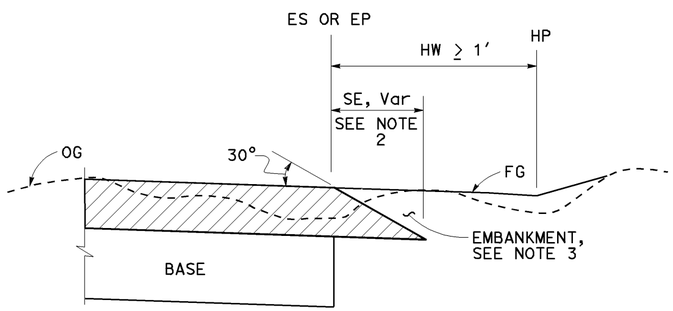

CASE M
Safety Edge - Cut Section, HW ≥ 1′

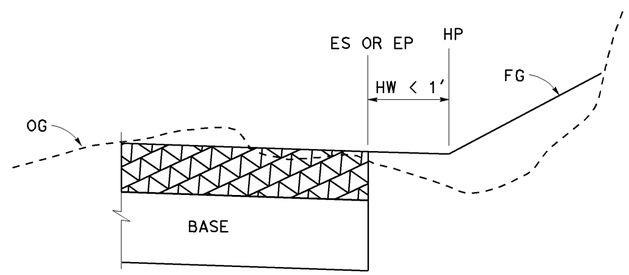

CASE N
Vertical Edge - Cut Section, HW < 1′

CUT SECTION

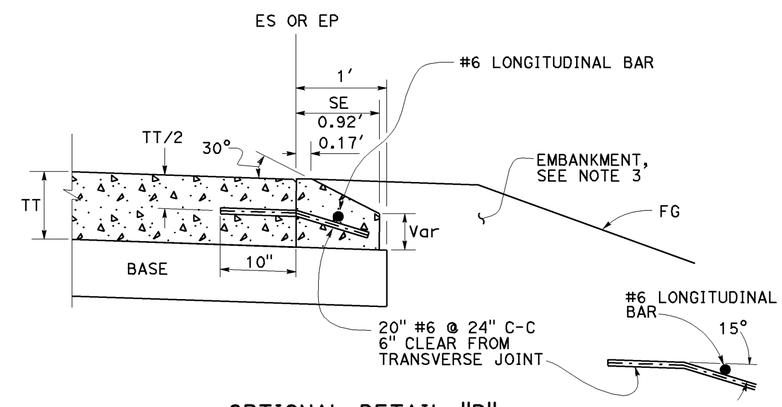

OPTIONAL DETAIL "B"
For concrete pavement
See Note 4

NOTES:

1. For limits of safety edge and vertical edge treatments, see Revised Standard Plan RSP P74
2. Details shown for HMA pavement thickness less than 0.43′. See Detail "B" for HMA pavement thickness more than 0.43′ or concrete pavement.
3. For locations and limits of embankment see project plans.
4. Safety edge transverse joint must match pavement transverse joint. End of #6 longitudinal bar must be 2" ±½" clear from transverse joint.
5. Safety edge is not needed in the area of MBGR, barrier, right turn lane and acceleration lane. See Revised Standard Plan RSP P74.

STATE OF CALIFORNIA
DEPARTMENT OF TRANSPORTATION

PAVEMENT EDGE TREATMENTS-NEW CONSTRUCTION

NO SCALE

RSP P76 DATED JANUARY 20, 2012 SUPPLEMENTS THE STANDARD PLANS BOOK DATED 2010.

REVISED STANDARD PLAN RSP P76

2010 REVISED STANDARD PLAN RSP P76

01-09-12

DIST	COUNTY	ROUTE	POST MILES TOTAL PROJECT	SHEET NO.	TOTAL SHEETS
10	SJ	99	32.0/32.6	18	19

REGISTERED ELECTRICAL ENGINEER

January 20, 2012
PLANS APPROVAL DATE

REGISTERED PROFESSIONAL ENGINEER
Jeffery G. McRae
No. E14512
Exp. 6-30-12
ELECTRICAL
STATE OF CALIFORNIA

THE STATE OF CALIFORNIA OR ITS OFFICERS OR AGENTS SHALL NOT BE RESPONSIBLE FOR THE ACCURACY OR COMPLETENESS OF SCANNED COPIES OF THIS PLAN SHEET.

TO ACCOMPANY PLANS DATED 4-9-12

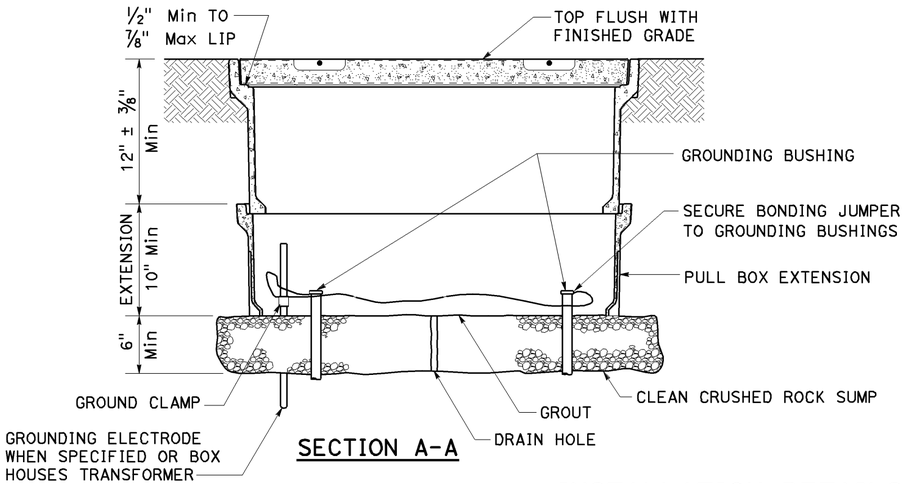

SECTION A-A

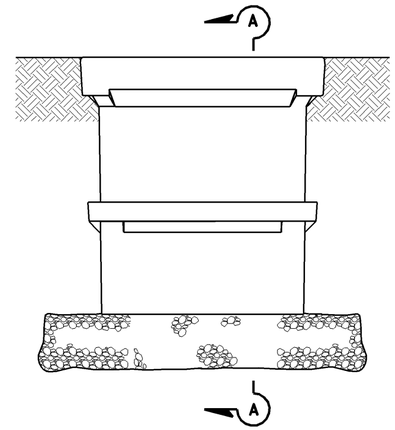

SIDE VIEW

INSTALLATION DETAILS

DETAIL A

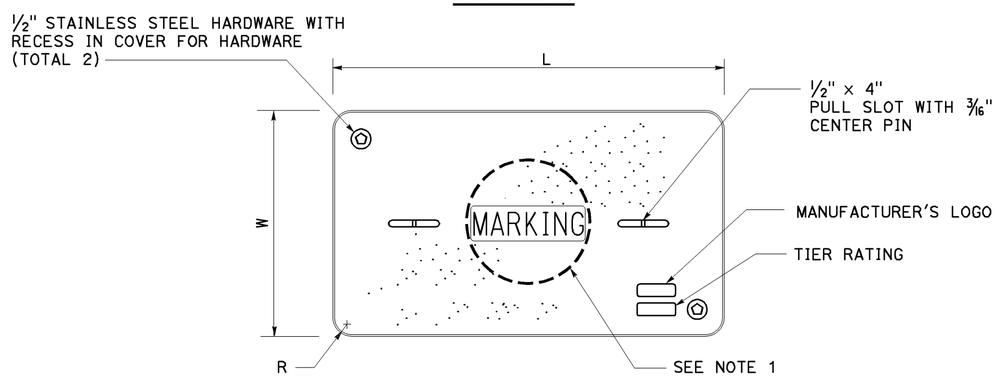

COVER TOP VIEW

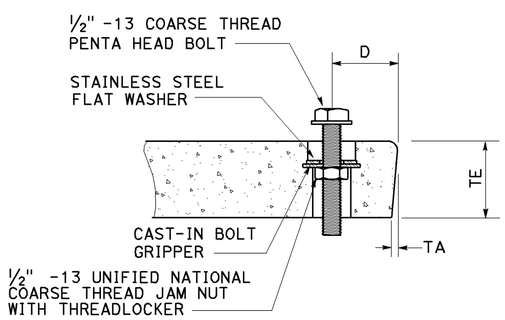

TYPICAL COVER CAPTIVE BOLT
OR SIMILAR

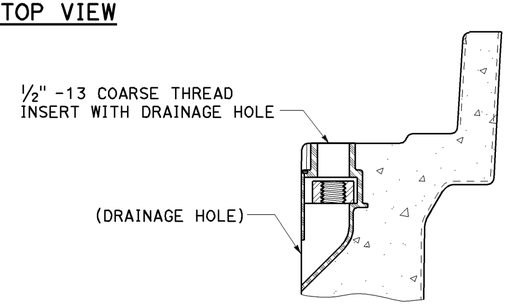

TYPICAL THREADED INSERT
OR SIMILAR

NOTES ON PULL BOXES:

1. Pull box covers must be marked as follows: "SERVICE" Service circuits between service point and service disconnect; "SPRINKLER-CONTROL" sprinkler control circuits, 50 V or less; "CALTRANS" on all pull boxes, except pull boxes marked "SPRINKLER-CONTROL"; and "TELEPHONE" Telephone service;

   A) No. 3½ pull box.
      1) "SIGNAL" - Traffic signal circuits with or without street or sign lighting circuits.
      2) "ST LIGHTING" - Street or sign lighting circuits where voltage is under 600 V.

   B) No. 5, 6, 9 or 9A pull box.
      1) "TRAFFIC SIGNAL" - Traffic signal circuits with or without street or sign lighting circuits.
      2) "STREET LIGHTING" - Street or sign lighting circuits where voltage is under 600 V.
      3) "STREET LIGHTING-HIGH VOLTAGE" - Street or sign lighting circuits where voltage is above 600 V.
      4) "IRRIGATION" - Circuits to irrigation controller 120 V or more.
      5) "RAMP METER" - Ramp meter circuits.
      6) "COUNT STATION" - Count or speed monitor circuits.
      7) "COMMUNICATIONS" - Communication circuits.
      8) "TOS COMMUNICATIONS" - TOS communication line.
      9) "TOS POWER" - TOS power.
      10) "TDC POWER" - Telephone demarcation cabinet power.
      11) "CCTV" - Closed circuit television circuits.
      12) "TMS" - Traffic monitoring station circuits.
      13) "CMS" - Changeable message sign circuits.
      14) "HAR" - Highway advisory radio circuits.

2. The nominal dimensions of the opening in which the cover sets must be the same as the cover dimensions (L and W) plus ⅛" or greater.

3. Covers and boxes must be interchangeable with California Standard. When interchanged with a standard, the top surfaces must be flush within ⅛". Top outside radius of covers and pull boxes must have a ⅛" radius.

4. Pull box extension may be another pull box as long as the bottom edge of the pull box can fit into the cover opening.

DIMENSION TABLE

PULL BOX	PULL BOX			COVER						
	MINIMUM DEPTH BOX	MINIMUM DEPTH EXTENSION	MAXIMUM WEIGHT	L	W	R	TE	TA	D	MAXIMUM WEIGHT
No. 3½	12"	N/A	40 lb	1' - 3⅜"	10⅛"	1⅜"	2"	⅛"	1¾"	30 lb
No. 5	12"	10"	55 lb	1' - 11¼"	1' - 1¾"	1⅜"	2"	⅛"	1¾"	60 lb
No. 6	12"	10"	70 lb	2' - 6½"	1' - 5½"	1⅜"	2"	⅛"	2"	85 lb

STATE OF CALIFORNIA
DEPARTMENT OF TRANSPORTATION

ELECTRICAL SYSTEMS (PULL BOX)

NO SCALE

RSP ES-8A DATED JANUARY 20, 2012 SUPPLEMENTS THE STANDARD PLANS BOOK DATED 2010.

REVISED STANDARD PLAN RSP ES-8A

2010 REVISED STANDARD PLAN RSP ES-8A

DIST	COUNTY	ROUTE	POST MILES TOTAL PROJECT	SHEET NO.	TOTAL SHEETS
10	SJ	99	32.0/32.6	19	19

REGISTERED ELECTRICAL ENGINEER

January 20, 2012
PLANS APPROVAL DATE

REGISTERED PROFESSIONAL ENGINEER
Jeffery G. McRae
No. E14512
Exp. 6-30-12
ELECTRICAL
STATE OF CALIFORNIA

THE STATE OF CALIFORNIA OR ITS OFFICERS OR AGENTS SHALL NOT BE RESPONSIBLE FOR THE ACCURACY OR COMPLETENESS OF SCANNED COPIES OF THIS PLAN SHEET.

TO ACCOMPANY PLANS DATED 4-9-12

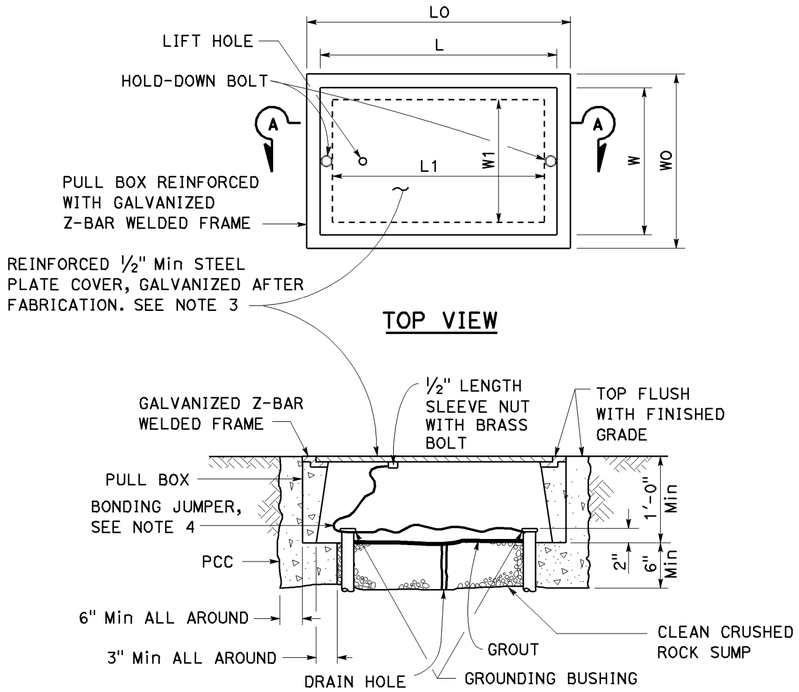

SECTION A-A

No. 3½(T), No. 5(T) AND No. 6(T) TRAFFIC PULL BOX

NOTES ON PULL BOXES:

1. Traffic pull box shall be provided with steel cover and special concrete footing. Steel cover shall have embossed non-skid pattern.
2. Steel reinforcing shall be as regularly used in the standard products of the respective manufacturer.
3. Pull box covers must be marked as follows: "SERVICE" Service circuits between service point and service disconnect; "SPRINKLER-CONTROL" Sprinkler control circuits, 50 V or less; "CALTRANS" On all pull boxes, except pull boxes marked "SPRINKLER-CONTROL"; and "TELEPHONE" Telephone service.
   A) No. 3½(T) pull box.
      1) "SIGNAL" - Traffic signal circuits with or without street or sign lighting circuits.
      2) "ST LIGHTING" - Street or sign lighting circuits where voltage is under 600 V.
   B) No. 5(T) or 6(T) pull box.
      1) "TRAFFIC SIGNAL" - Traffic signal circuits with or without street or sign lighting circuits.
      2) "STREET LIGHTING" - Street or sign lighting circuits where voltage is under 600 V.
      3) "STREET LIGHTING-HIGH VOLTAGE" - Street or sign lighting circuits where voltage is above 600 V.
      4) "IRRIGATION" - Circuits to irrigation controller 120 V or more.
      5) "RAMP METER" - Ramp meter circuits.
      6) "COUNT STATION" - Count or speed monitor circuits.
      7) "COMMUNICATION" - Communication circuits.
      8) "TOS COMMUNICATIONS" - TOS communications line.
      9) "TOS POWER" - TOS power.
      10) "TDC POWER" - Telephone demarcation cabinet power.
      11) "CCTV" - Closed circuit television circuits.
      12) "TMS" - Traffic monitoring station circuits.
      13) "CMS" - Changeable message sign circuits.
      14) "HAR" - Highway advisory radio circuits.
4. Bonding jumper for metal covers shall be 3' long, minimum.
5. The nominal dimensions of the opening in which the cover sets must be the same as the cover dimensions except the length and width dimensions shall be ⅛" greater.
6. Covers and boxes must be interchangeable with California standard male and female gages. When interchanged with a standard male or female gage, the top surfaces must be flush within ⅛".

DIMENSION TABLE

PULL BOX	BOX						COVER				
	MINIMUM * THICKNESS	MINIMUM DEPTH BOX AND EXTENSION	WO	LO	L1	W1	L **	W **	R	EDGE THICKNESS	EDGE TAPER
No. 3½(T)	1½"	1'-0"	1'-5"± 1"	1'-8⅞"±	1'-2½"±	10⅝"± 1"	1'-8"±	1'-1¾"±	0"	½"	NONE
No. 5(T)	1¾"	1'-0"	1'-11½"± 1"	2'-5½"±	1'-7"±	1'-1"± 1"	2'-3"±	1'-4"±	0"	½"	NONE
No. 6(T)	2"	1'-0"	2'-6"± 1"	2'-11½"±	1'-11½"±	1'-5"± 1"	2'-9"±	1'-8"±	0"	½"	NONE

* EXCLUDING CONDUIT WEB ** TOP DIMENSION

STATE OF CALIFORNIA
DEPARTMENT OF TRANSPORTATION

ELECTRICAL SYSTEMS (TRAFFIC RATED PULL BOX)

NO SCALE

RSP ES-8B DATED JANUARY 20, 2012 SUPPLEMENTS THE STANDARD PLANS BOOK DATED 2010.

REVISED STANDARD PLAN RSP ES-8B

2010 REVISED STANDARD PLAN RSP ES-8B