Dist	COUNTY	ROUTE	POST MILES TOTAL PROJECT	SHEET No.	TOTAL SHEETS
10	Mer	165	29.8/30.3	1	68

STATE OF CALIFORNIA

DEPARTMENT OF TRANSPORTATION

ACHSSTP-P165(013)E

PROJECT PLANS FOR CONSTRUCTION ON

STATE HIGHWAY

IN MERCED COUNTY
NEAR HILMAR
FROM 0.2 MILE SOUTH OF WESTSIDE BOULEVARD
TO RIVER ROAD

TO BE SUPPLEMENTED BY STANDARD PLANS DATED 2010

INDEX OF PLANS

SHEET No.	DESCRIPTION
1	TITLE AND LOCATION MAP
2-3	TYPICAL CROSS SECTIONS
4-6	LAYOUTS
7-10	PROFILES AND SUPERELEVATION DIAGRAMS
11-13	CONSTRUCTION DETAILS
14-19	DRAINAGE PLANS, PROFILES, DETAILS AND QUANTITIES
20-22	UTILITY PLANS
23	CONSTRUCTION AREA SIGNS
24-26	STAGE CONSTRUCTION PLANS & DETAILS
27-31	TRAFFIC HANDLING PLANS AND QUANTITIES
32-33	MOTORIST INFORMATION PLAN AND QUANTITIES
34-37	PAVEMENT DELINEATION PLANS, DETAILS AND QUANTITIES
38-41	SIGN PLANS, DETAILS AND QUANTITIES
42	SUMMARY OF QUANTITIES
43	EROSION CONTROL LEGEND AND QUANTITIES
44-45	ELECTRICAL PLANS
46-68	REVISED STANDARD PLANS

THE STANDARD PLANS LIST APPLICABLE TO THIS CONTRACT IS INCLUDED IN THE NOTICE TO BIDDERS AND SPECIAL PROVISIONS BOOK.

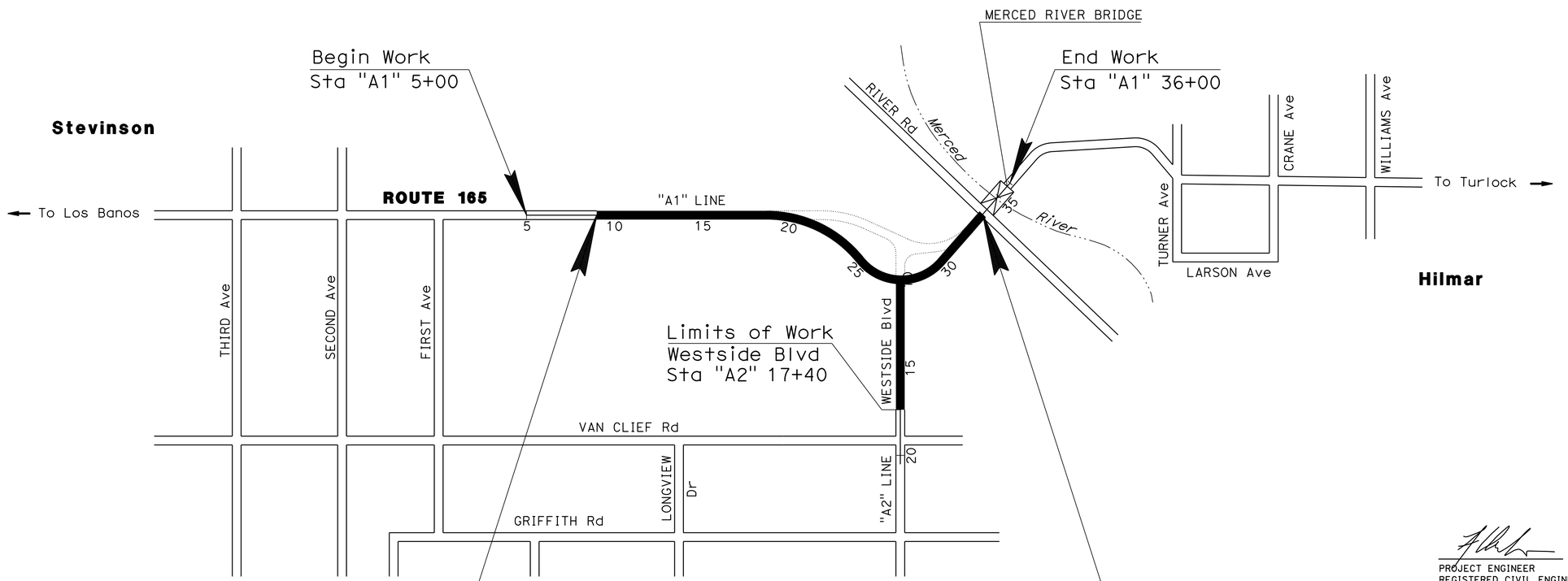

NO SCALE

THE CONTRACTOR SHALL POSSESS THE CLASS (OR CLASSES) OF LICENSE AS SPECIFIED IN THE "NOTICE TO BIDDERS."

PROJECT MANAGER: JAY HAGHPARAST

DESIGN ENGINEER: JOSE HUERTA

PROJECT ENGINEER REGISTERED CIVIL ENGINEER — DATE 4/1/16

REGISTERED PROFESSIONAL ENGINEER — ALLEN LAO — No. 77656 — Exp. 6-30-17 — CIVIL — STATE OF CALIFORNIA

April 4, 2016
PLANS APPROVAL DATE

THE STATE OF CALIFORNIA OR ITS OFFICERS OR AGENTS SHALL NOT BE RESPONSIBLE FOR THE ACCURACY OR COMPLETENESS OF SCANNED COPIES OF THIS PLAN SHEET.

CONTRACT No.	10-0Q2904
PROJECT ID	1000000201

LAST REVISION 03-01-16 — DATE PLOTTED => 09-MAY-2016 — TIME PLOTTED => 09:58

Dist	COUNTY	ROUTE	POST MILES TOTAL PROJECT	SHEET No.	TOTAL SHEETS
10	Mer	165	29.8/30.3	2	68

REGISTERED CIVIL ENGINEER 4/1/16 DATE

4-4-16
PLANS APPROVAL DATE

REGISTERED PROFESSIONAL ENGINEER ALLEN LAO No. 77656 Exp. 6-30-17 CIVIL STATE OF CALIFORNIA

THE STATE OF CALIFORNIA OR ITS OFFICERS OR AGENTS SHALL NOT BE RESPONSIBLE FOR THE ACCURACY OR COMPLETENESS OF SCANNED COPIES OF THIS PLAN SHEET.

NOTES:

1. DIMENSIONS OF THE PAVEMENT STRUCTURES (STRUCTURAL SECTIONS) ARE SUBJECT TO TOLERANCES SPECIFIED IN THE STANDARD SPECIFICATION.
2. SUPERELEVATION ARE SHOWN ON THE SUPERELEVATION DIAGRAMS.
3. FOR LIMITS OF TAPERED EDGE, SEE SUMMARY OF QUANTITITES.

DESIGN DESIGNATION

ADT (2016)	7,400	D	60%
ADT (2036)	13,400	T	7%
DHV	700	V	55 mph
ESAL	134,000	TI_{20}	10.5

PAVEMENT CLIMATE REGION
INLAND VALLEY

ABBREVIATION:

TE TAPERED EDGE

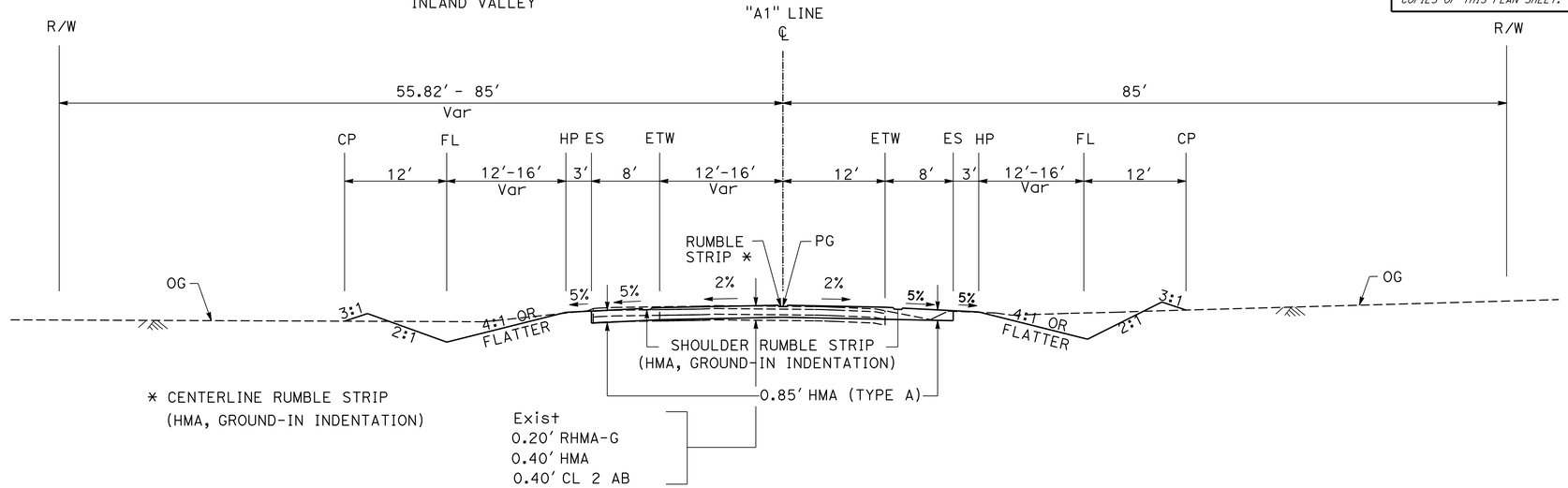

"A1" 32+16.10 TO "A1" 34+30.68
ROUTE 165

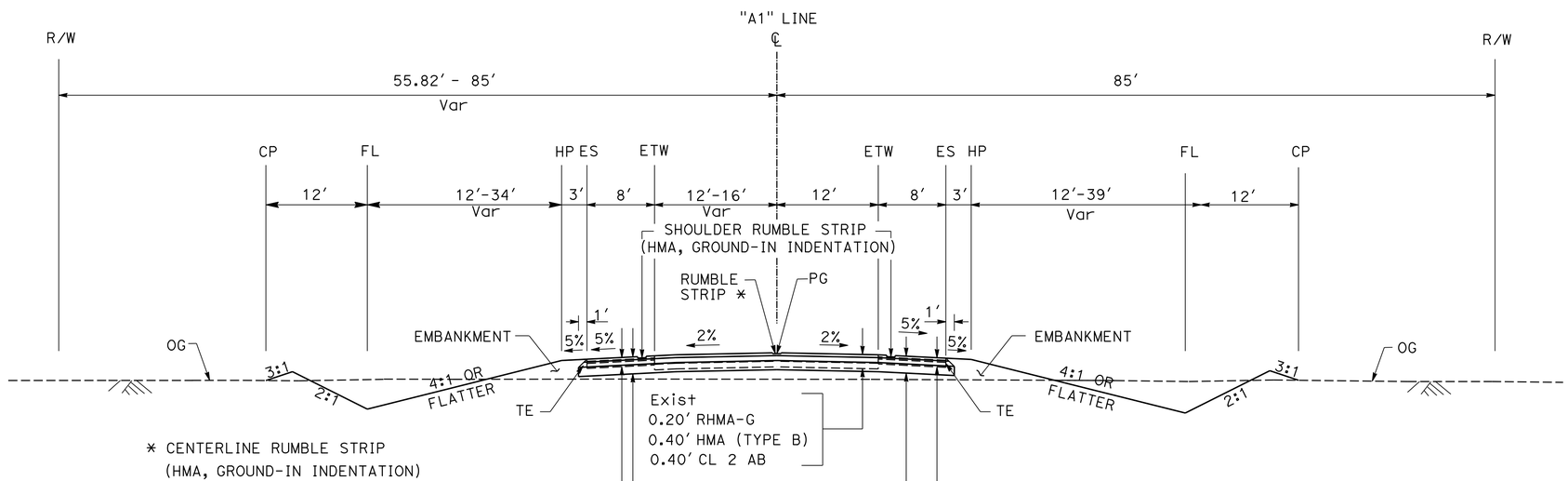

"A1" 11+00.00 TO "A1" 32+16.10
ROUTE 165

TYPICAL CROSS SECTIONS

NO SCALE

X-1

STATE OF CALIFORNIA - DEPARTMENT OF TRANSPORTATION
Caltrans® **DESIGN**

FUNCTIONAL SUPERVISOR: JOSE A. HUERTA
CALCULATED-DESIGNED BY: PERLITA BALBIN
CHECKED BY: ALLEN LAO
REVISED BY: PB
DATE REVISED: 03-21-16

LAST REVISION 03-21-16
DATE PLOTTED => 09-MAY-2016
TIME PLOTTED => 09:59

Dist	COUNTY	ROUTE	POST MILES TOTAL PROJECT	SHEET No.	TOTAL SHEETS
10	Mer	165	29.8/30.3	3	68

REGISTERED CIVIL ENGINEER 4/1/16 DATE

4-4-16
PLANS APPROVAL DATE

REGISTERED PROFESSIONAL ENGINEER ALLEN LAO No. 77656 Exp. 6-30-17 CIVIL STATE OF CALIFORNIA

THE STATE OF CALIFORNIA OR ITS OFFICERS OR AGENTS SHALL NOT BE RESPONSIBLE FOR THE ACCURACY OR COMPLETENESS OF SCANNED COPIES OF THIS PLAN SHEET.

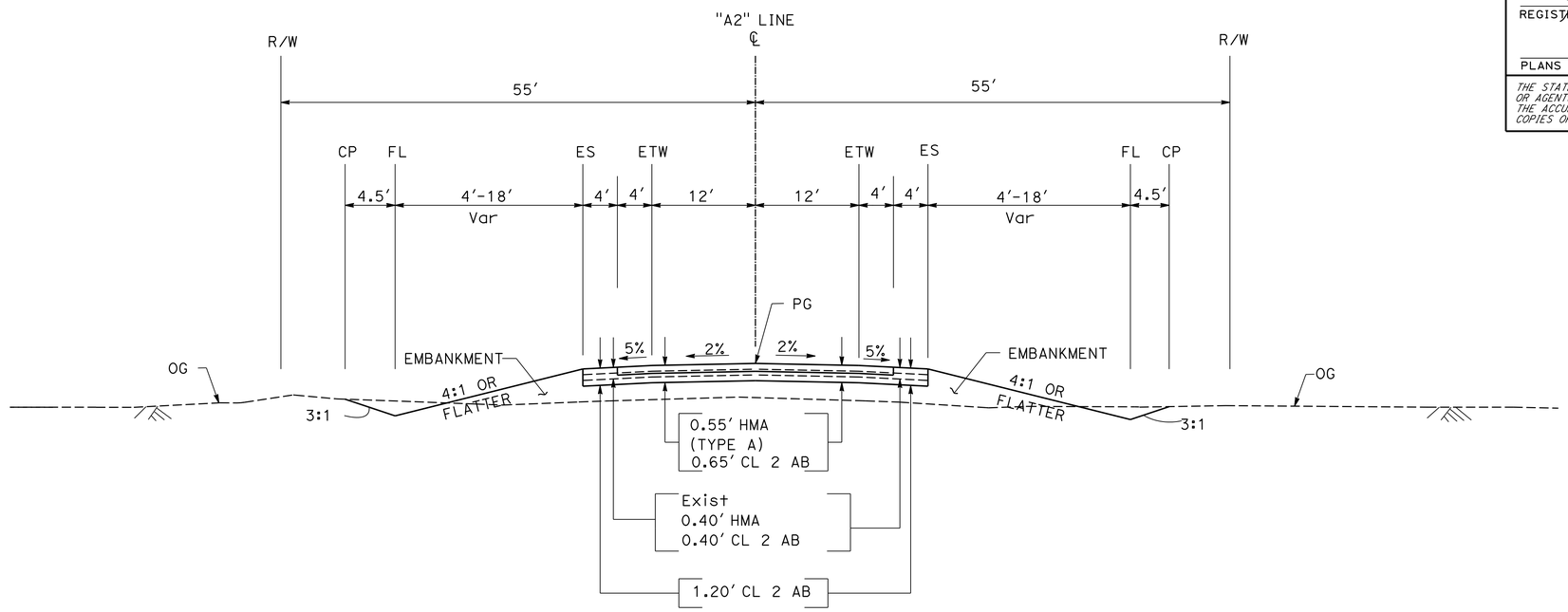

"A2" 11+40.28 TO "A2" 17+40.00
WESTSIDE BOULEVARD

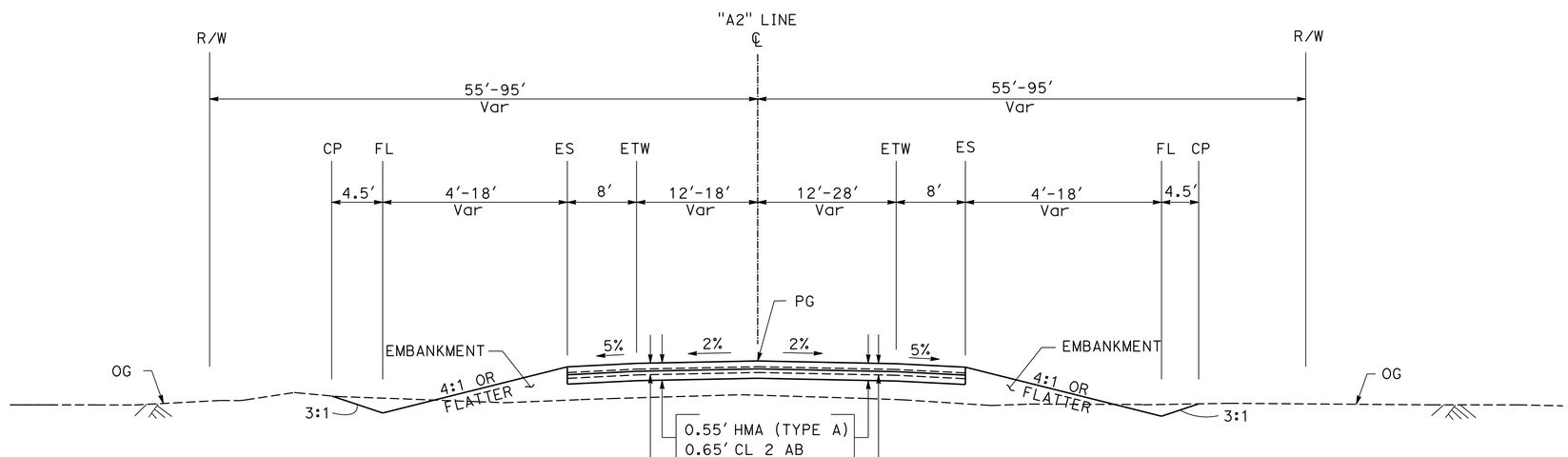

"A2" 10+75.00 TO "A2" 11+40.28
WESTSIDE BOULEVARD

TYPICAL CROSS SECTIONS

NO SCALE

X-2

REVISED BY	DATE REVISED
PB	03-21-16

PERLITA BALBIN — ALLEN LAO

CALCULATED-DESIGNED BY — CHECKED BY

FUNCTIONAL SUPERVISOR: JOSE A. HUERTA

STATE OF CALIFORNIA - DEPARTMENT OF TRANSPORTATION

Caltrans® **DESIGN**

LAST REVISION 03-21-16 | DATE PLOTTED => 09-MAY-2016 | TIME PLOTTED => 09:59

Dist	COUNTY	ROUTE	POST MILES TOTAL PROJECT	SHEET No.	TOTAL SHEETS
10	Mer	165	29.8/30.3	4	68

REGISTERED CIVIL ENGINEER 4/1/16 DATE

4-4-16
PLANS APPROVAL DATE

REGISTERED PROFESSIONAL ENGINEER
ALLEN LAO
No. 77656
Exp. 6-30-17
CIVIL
STATE OF CALIFORNIA

THE STATE OF CALIFORNIA OR ITS OFFICERS OR AGENTS SHALL NOT BE RESPONSIBLE FOR THE ACCURACY OR COMPLETENESS OF SCANNED COPIES OF THIS PLAN SHEET.

NOTE:

FOR ACCURATE RIGHT OF WAY DATA, CONTACT RIGHT OF WAY ENGINEERING AT THE DISTRICT OFFICE.

LEGEND:

TEMPORARY CONSTRUCTION EASEMENT

COLD PLANE AC PAVEMENT

CURVE DATA

No. ⊛	R	Δ	T	L
1	550	34°28′53″	170.68	331.00

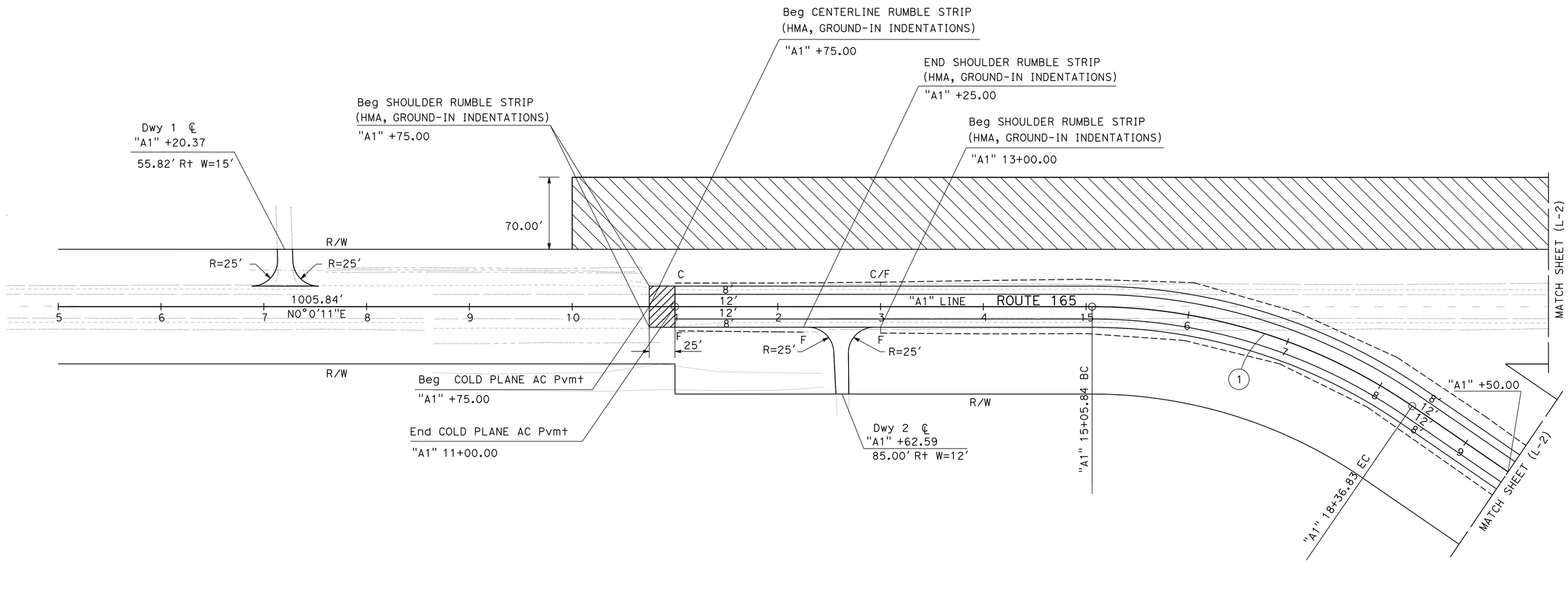

LAYOUT

SCALE: 1″=50′ **L-1**

STATE OF CALIFORNIA - DEPARTMENT OF TRANSPORTATION
Caltrans® DESIGN

FUNCTIONAL SUPERVISOR: JOSE A. HUERTA
CALCULATED-DESIGNED BY: PERLITA BALBIN
CHECKED BY: ALLEN LAO
REVISED BY: PB
DATE REVISED: 03-01-16

LAST REVISION 03-01-16
DATE PLOTTED => 09-MAY-2016
TIME PLOTTED => 09:59

Dist	COUNTY	ROUTE	POST MILES TOTAL PROJECT	SHEET No.	TOTAL SHEETS
10	Mer	165	29.8/30.3	5	68

REGISTERED CIVIL ENGINEER 4/1/16 DATE

4-4-16
PLANS APPROVAL DATE

REGISTERED PROFESSIONAL ENGINEER ALLEN LAO No. 77656 Exp. 6-30-17 CIVIL STATE OF CALIFORNIA

THE STATE OF CALIFORNIA OR ITS OFFICERS OR AGENTS SHALL NOT BE RESPONSIBLE FOR THE ACCURACY OR COMPLETENESS OF SCANNED COPIES OF THIS PLAN SHEET.

NOTE:

FOR ACCURATE RIGHT OF WAY DATA, CONTACT RIGHT OF WAY ENGINEERING AT THE DISTRICT OFFICE.

CURVE DATA

No. ⊛	R	Δ	T	L
②	550	85°00'53"	504.11	816.08

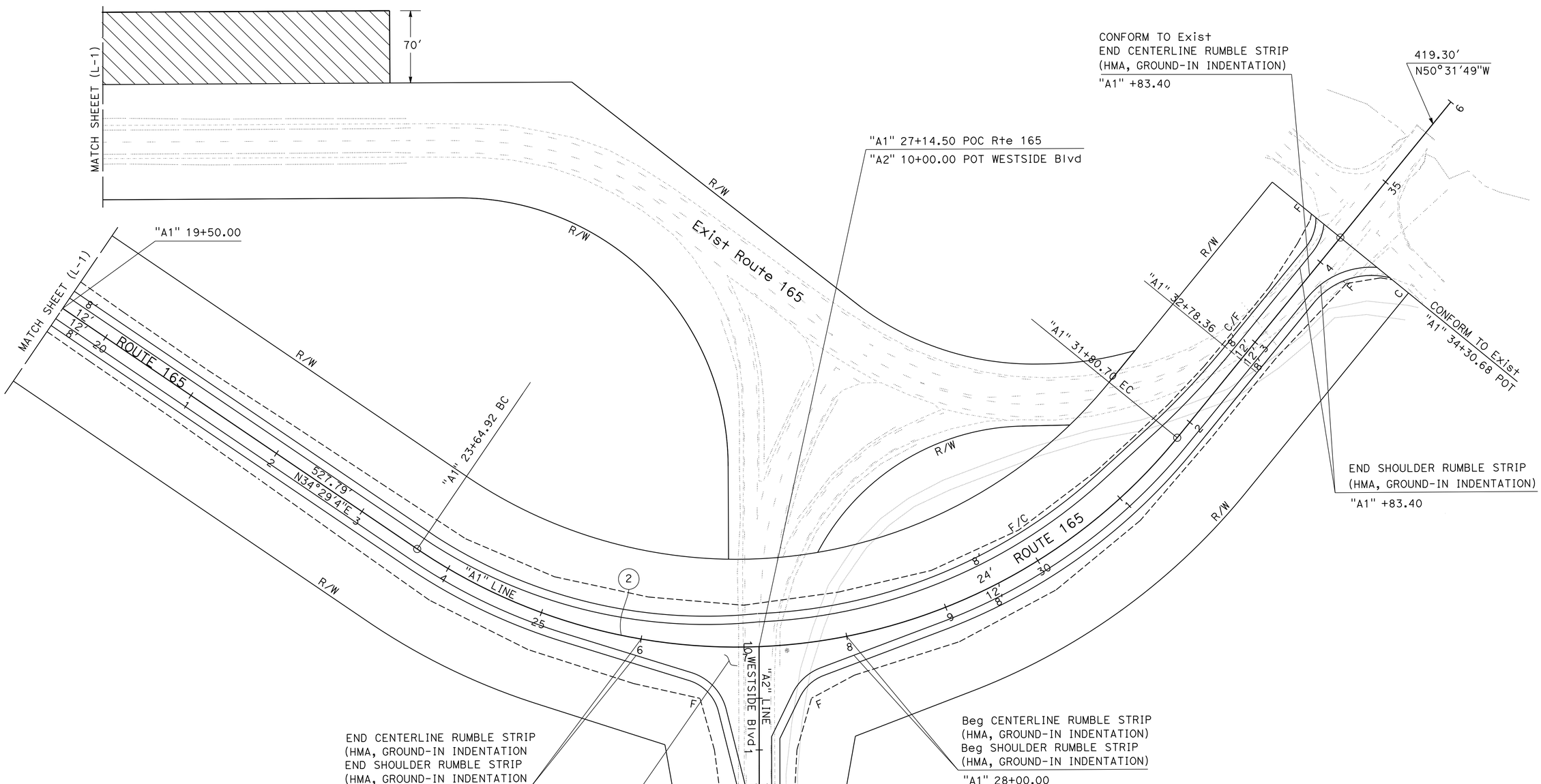

LAYOUT

SCALE: 1"=50' **L-2**

REVISED BY	DATE REVISED
PB	03-01-16

PERLITA BALBIN — ALLEN LAO

CALCULATED-DESIGNED BY — CHECKED BY

FUNCTIONAL SUPERVISOR: JOSE A. HUERTA

STATE OF CALIFORNIA - DEPARTMENT OF TRANSPORTATION — DESIGN

LAST REVISION 03-01-16 | DATE PLOTTED => 09-MAY-2016 | TIME PLOTTED => 09:59

NOTE:

FOR ACCURATE RIGHT OF WAY DATA, CONTACT
RIGHT OF WAY ENGINEERING AT THE DISTRICT OFFICE.

Dist	COUNTY	ROUTE	POST MILES TOTAL PROJECT	SHEET No.	TOTAL SHEETS
10	Mer	165	29.8/30.3	6	68

REGISTERED CIVIL ENGINEER 4/1/16 DATE

4-4-16
PLANS APPROVAL DATE

REGISTERED PROFESSIONAL ENGINEER
ALLEN LAO
No. 77656
Exp. 6-30-17
CIVIL
STATE OF CALIFORNIA

THE STATE OF CALIFORNIA OR ITS OFFICERS OR AGENTS SHALL NOT BE RESPONSIBLE FOR THE ACCURACY OR COMPLETENESS OF SCANNED COPIES OF THIS PLAN SHEET.

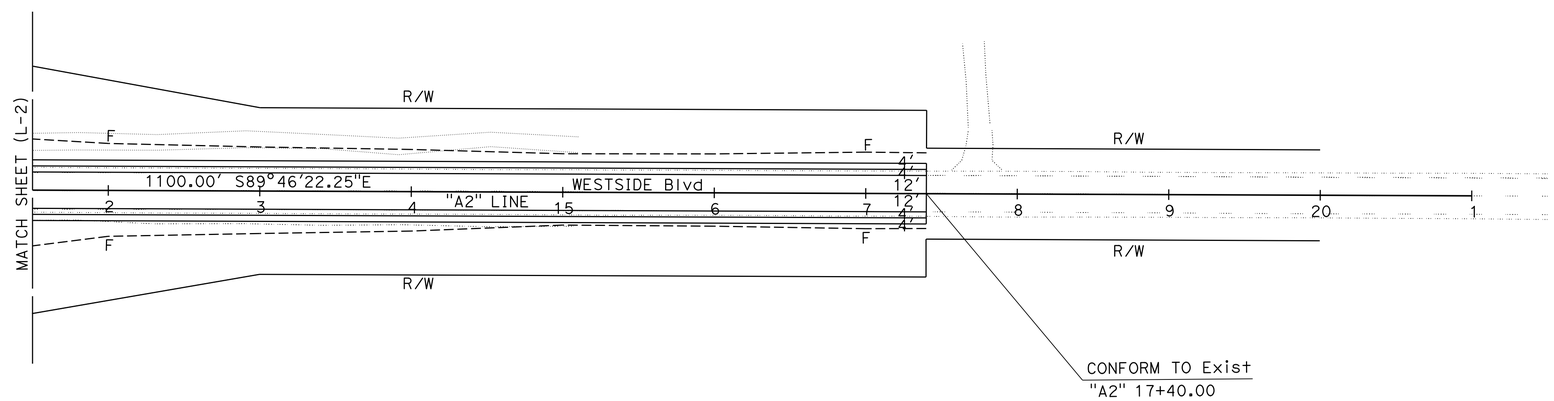

LAYOUT

SCALE: 1"=50' **L-3**

STATE OF CALIFORNIA - DEPARTMENT OF TRANSPORTATION
Caltrans
DESIGN

FUNCTIONAL SUPERVISOR: JOSE A. HUERTA

CALCULATED-DESIGNED BY: PERLITA BALBIN
CHECKED BY: ALLEN LAO

REVISED BY: PB
DATE REVISED: 03-01-16

LAST REVISION 03-01-16
DATE PLOTTED => 09-MAY-2016
TIME PLOTTED => 09:59

Dist	COUNTY	ROUTE	POST MILES TOTAL PROJECT	SHEET No.	TOTAL SHEETS
10	Mer	165	29.8/30.3	7	68

REGISTERED CIVIL ENGINEER 4/1/16 DATE

4-4-16
PLANS APPROVAL DATE

REGISTERED PROFESSIONAL ENGINEER
ALLEN LAO
No. 77656
Exp. 6-30-17
CIVIL
STATE OF CALIFORNIA

THE STATE OF CALIFORNIA OR ITS OFFICERS OR AGENTS SHALL NOT BE RESPONSIBLE FOR THE ACCURACY OR COMPLETENESS OF SCANNED COPIES OF THIS PLAN SHEET.

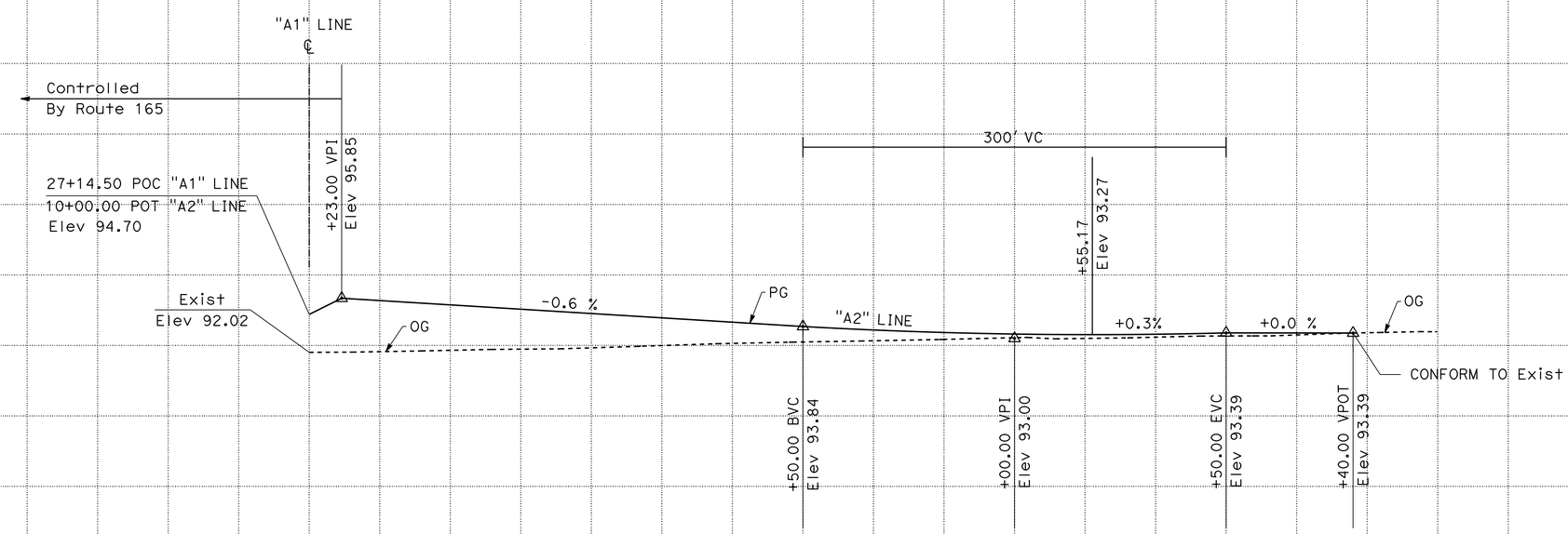

WESTSIDE Blvd
"A2" LINE

PROFILE

SCALE: Horiz: 1" = 50'
Vert: 1" = 5'

P-1

STATION		10	11	12	13	14	15	16	17	TOTAL
CY	Exc					1556				1556
	Emb					1323				1323

STATE OF CALIFORNIA - DEPARTMENT OF TRANSPORTATION
Caltrans
DESIGN
FUNCTIONAL SUPERVISOR: JOSE A. HUERTA
CALCULATED-DESIGNED BY: PERLITA BALBIN
CHECKED BY: ALLEN LAO
REVISED BY: PB
DATE REVISED: 03-01-16

LAST REVISION 03-01-16
DATE PLOTTED => 09-MAY-2016
TIME PLOTTED => 09:59

Dist	COUNTY	ROUTE	POST MILES TOTAL PROJECT	SHEET No.	TOTAL SHEETS
10	Mer	165	29.8/30.3	8	68

REGISTERED CIVIL ENGINEER 4/1/16 DATE

4-4-16
PLANS APPROVAL DATE

REGISTERED PROFESSIONAL ENGINEER
ALLEN LAO
No. 77656
Exp. 6-30-17
CIVIL
STATE OF CALIFORNIA

THE STATE OF CALIFORNIA OR ITS OFFICERS OR AGENTS SHALL NOT BE RESPONSIBLE FOR THE ACCURACY OR COMPLETENESS OF SCANNED COPIES OF THIS PLAN SHEET.

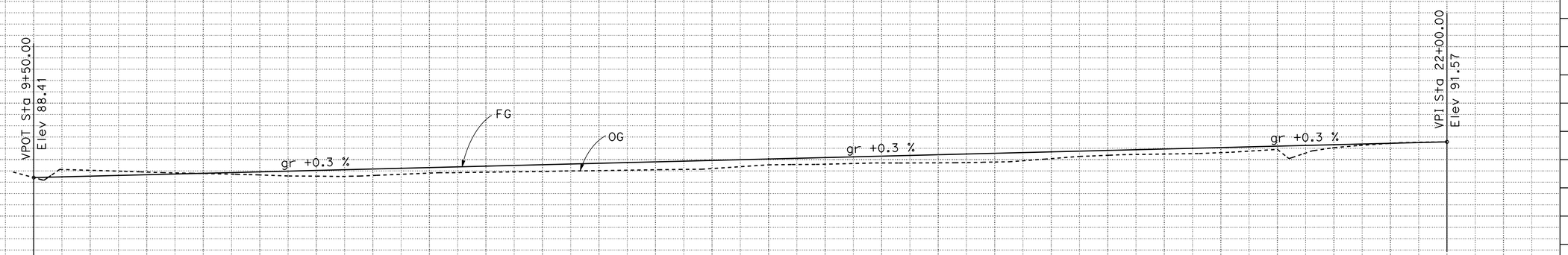

PROFILE
"A3" LINE

APPROVED FOR STAGE CONSTRUCTION ONLY

PROFILE
SCALE Horiz: 1" = 50'
SCALE Vert: 1" = 5'

P-2

STATION	9	10	11	12	13	14	15	16	17	18	19	20	21	22	TOTAL
CY Exc								685							
CY Emb								30							

STATE OF CALIFORNIA - DEPARTMENT OF TRANSPORTATION
Caltrans® DESIGN

FUNCTIONAL SUPERVISOR: JOSE A. HUERTA
CALCULATED-DESIGNED BY: ALLEN LAO
CHECKED BY:
REVISED BY: PERLITA BALBIN
DATE REVISED: 03-21-16
PERLITA BALBIN
03-21-16

09-MAY-2016
09:59

LAST REVISION 03-21-16

Dist	COUNTY	ROUTE	POST MILES TOTAL PROJECT	SHEET No.	TOTAL SHEETS
10	Mer	165	29.8/30.3	9	68

REGISTERED CIVIL ENGINEER 4/1/16 DATE

4-4-16
PLANS APPROVAL DATE

REGISTERED PROFESSIONAL ENGINEER
ALLEN LAO
No. 77656
Exp. 6-30-17
CIVIL
STATE OF CALIFORNIA

THE STATE OF CALIFORNIA OR ITS OFFICERS OR AGENTS SHALL NOT BE RESPONSIBLE FOR THE ACCURACY OR COMPLETENESS OF SCANNED COPIES OF THIS PLAN SHEET.

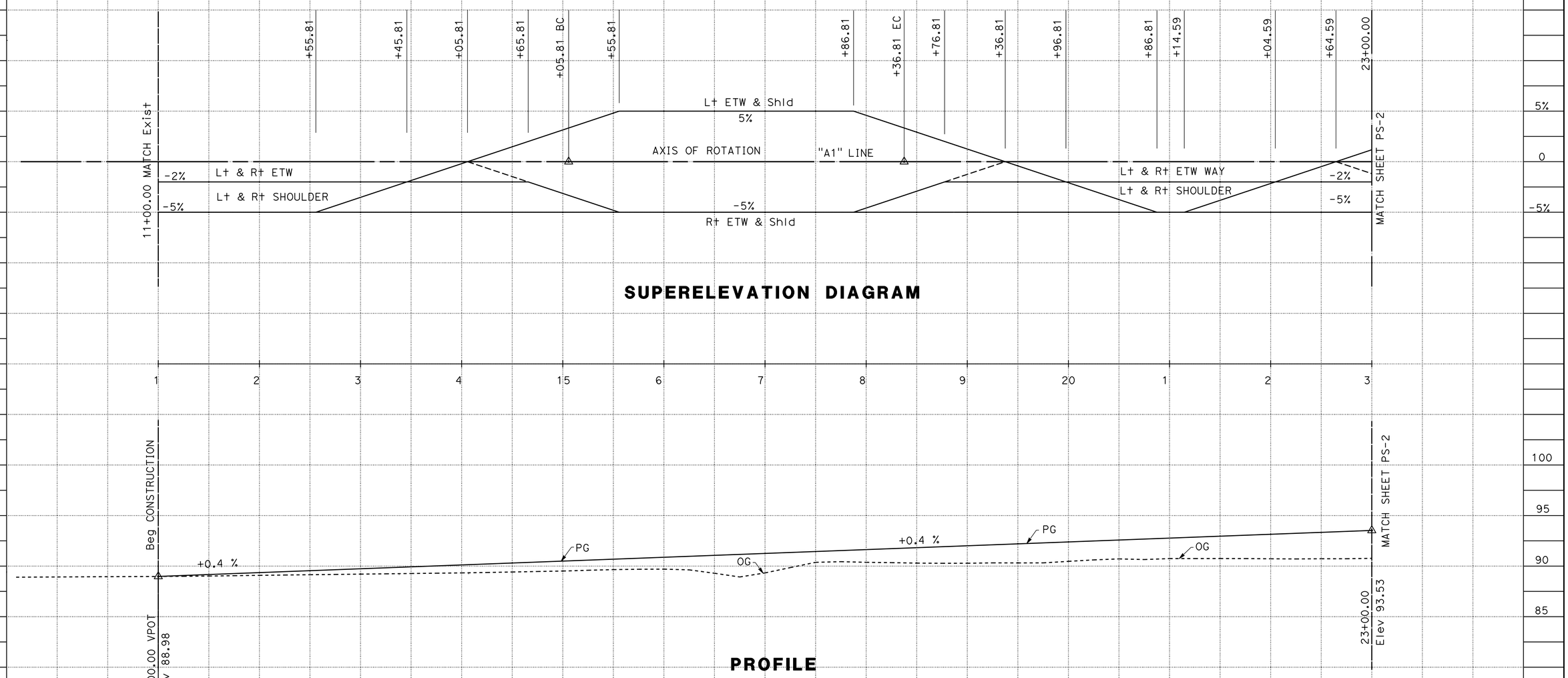

SUPERELEVATION DIAGRAM

PROFILE
"A1" LINE

ROUTE 165

PROFILE AND SUPERELEVATION DIAGRAM

SCALE: Horiz: 1" = 50'
Vert: 1" = 10'

PS-1

STATION		1	2	3	4	15	6	7	8	9	20	1	2	3	TOTAL
CY	Exc	3997													3997
	Emb	1603													1603

REVISED BY	DATE REVISED
PB	03-01-16

PERLITA BALBIN
ALLEN LAO

CALCULATED-DESIGNED BY
CHECKED BY

FUNCTIONAL SUPERVISOR
JOSE A. HUERTA

STATE OF CALIFORNIA - DEPARTMENT OF TRANSPORTATION
Caltrans
DESIGN

LAST REVISION 03-01-16
DATE PLOTTED => 09-MAY-2016
TIME PLOTTED => 09:59

Dist	COUNTY	ROUTE	POST MILES TOTAL PROJECT	SHEET No.	TOTAL SHEETS
10	Mer	165	29.8/30.3	10	68

REGISTERED CIVIL ENGINEER 4/1/16 DATE

4-4-16
PLANS APPROVAL DATE

REGISTERED PROFESSIONAL ENGINEER
ALLEN LAO
No. 77656
Exp. 6-30-17
CIVIL
STATE OF CALIFORNIA

THE STATE OF CALIFORNIA OR ITS OFFICERS OR AGENTS SHALL NOT BE RESPONSIBLE FOR THE ACCURACY OR COMPLETENESS OF SCANNED COPIES OF THIS PLAN SHEET.

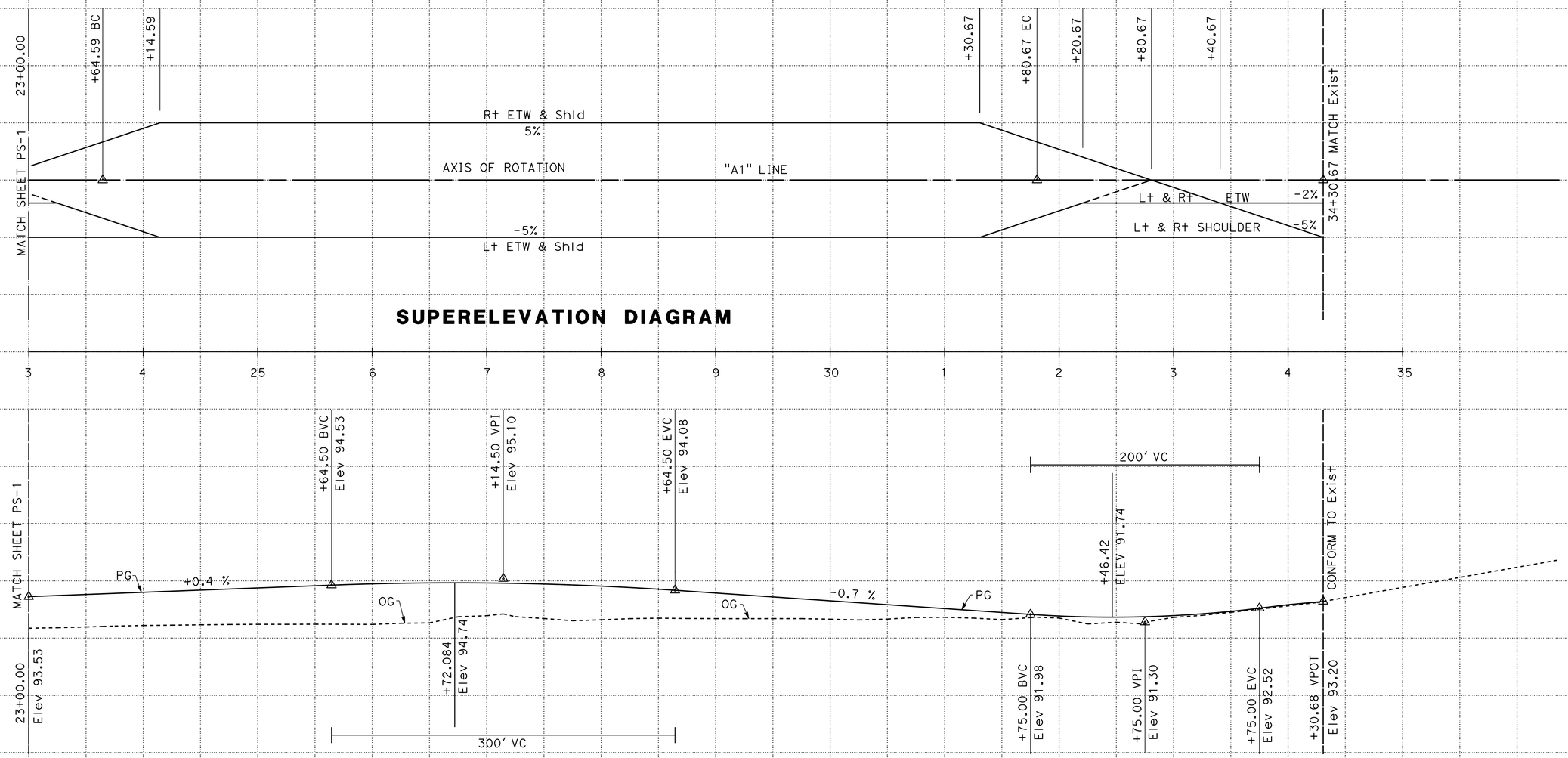

STATION		23	24	25	26	27	28	29	30	31	32	33	34	35	TOTAL
CY	Exc							2879							6876
	Emb							3534							5137

REVISED BY	DATE REVISED
PB	03-01-16

PERLITA BALBIN — ALLEN LAO

CALCULATED-DESIGNED BY — CHECKED BY

FUNCTIONAL SUPERVISOR — JOSE A. HUERTA

STATE OF CALIFORNIA - DEPARTMENT OF TRANSPORTATION — DESIGN

LAST REVISION 03-01-16 — DATE PLOTTED => 09-MAY-2016 TIME PLOTTED => 09:59

Dist	COUNTY	ROUTE	POST MILES TOTAL PROJECT	SHEET No.	TOTAL SHEETS
10	Mer	165	29.8/30.3	11	68

REGISTERED CIVIL ENGINEER 4/1/16 DATE

4-4-16
PLANS APPROVAL DATE

REGISTERED PROFESSIONAL ENGINEER ALLEN LAO No. 77656 Exp. 6-30-17 CIVIL STATE OF CALIFORNIA

THE STATE OF CALIFORNIA OR ITS OFFICERS OR AGENTS SHALL NOT BE RESPONSIBLE FOR THE ACCURACY OR COMPLETENESS OF SCANNED COPIES OF THIS PLAN SHEET.

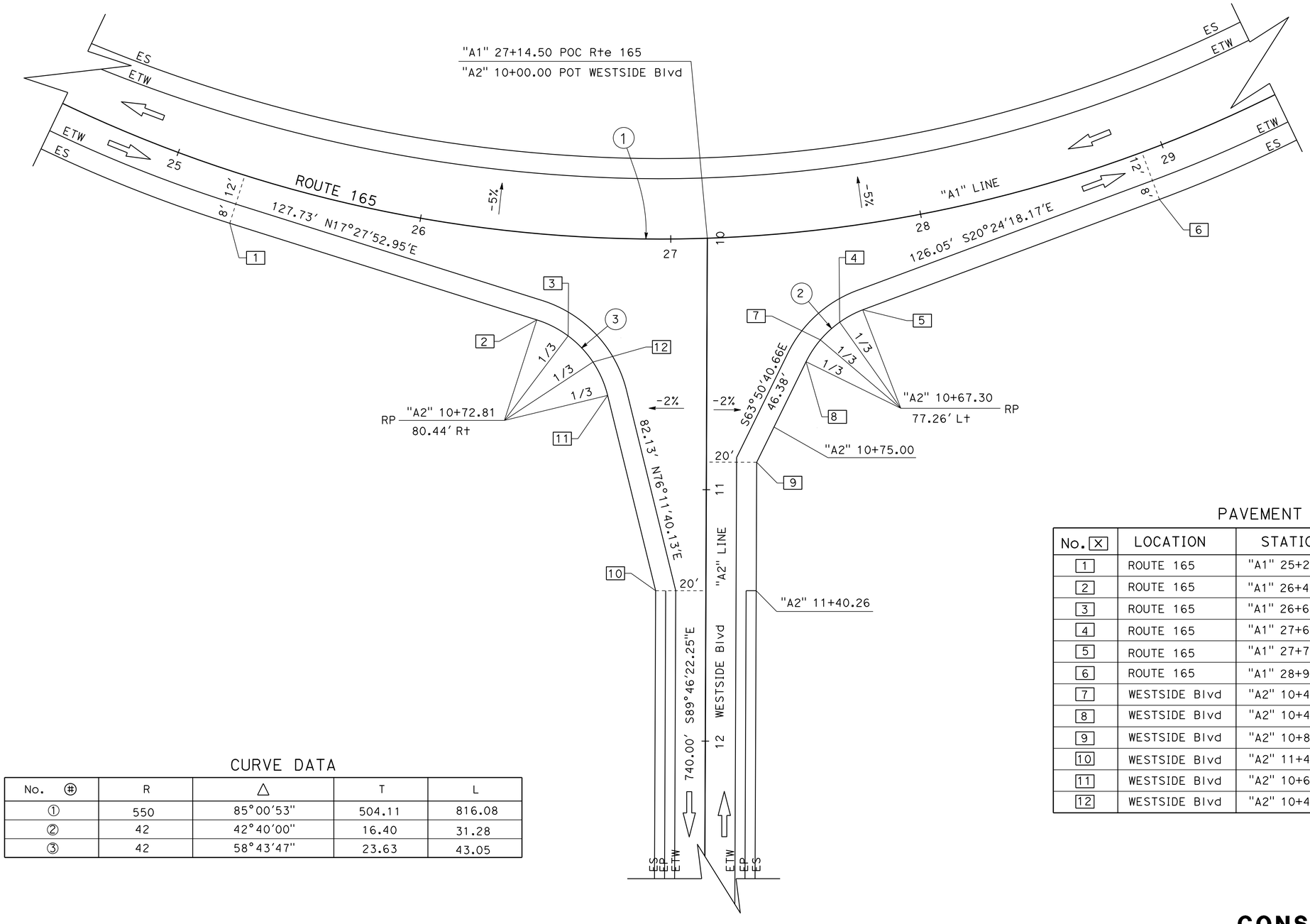

CURVE DATA

No. ⊕	R	△	T	L
①	550	85°00'53"	504.11	816.08
②	42	42°40'00"	16.40	31.28
③	42	58°43'47"	23.63	43.05

PAVEMENT ELEVATION

No. X	LOCATION	STATION	OFFSET	ELEVATION
1	ROUTE 165	"A1" 25+28.00	20.00' Rt	95.39
2	ROUTE 165	"A1" 26+49.27	34.14' Rt	96.43
3	ROUTE 165	"A1" 26+61.58	39.75' Rt	96.72
4	ROUTE 165	"A1" 27+62.82	37.42' Rt	96.46
5	ROUTE 165	"A1" 27+71.95	33.74' Rt	96.25
6	ROUTE 165	"A1" 28+91.52	20.00' Rt	94.90
7	WESTSIDE Blvd	"A2" 10+40.25	45.14' Lt	94.39
8	WESTSIDE Blvd	"A2" 10+48.96	39.48' Lt	94.48
9	WESTSIDE Blvd	"A2" 10+89.02	20.00' Lt	94.80
10	WESTSIDE Blvd	"A2" 11+40.32	20.00' Rt	94.38
11	WESTSIDE Blvd	"A2" 10+62.58	39.68' Rt	94.42
12	WESTSIDE Blvd	"A2" 10+49.53	45.44' Rt	94.35

ROUTE 165 AT WESTSIDE BLVD

CONSTRUCTION DETAILS

NO SCALE

C-1

REVISED BY	DATE REVISED
PB	03-01-16

CALCULATED-DESIGNED BY: PERLITA BALBIN
CHECKED BY: ALLEN LAO
FUNCTIONAL SUPERVISOR: JOSE A. HUERTA

STATE OF CALIFORNIA - DEPARTMENT OF TRANSPORTATION
Caltrans® DESIGN

LAST REVISION 03-01-16 | DATE PLOTTED => 09-MAY-2016 | TIME PLOTTED => 09:59

Dist	COUNTY	ROUTE	POST MILES TOTAL PROJECT	SHEET No.	TOTAL SHEETS
10	Mer	165	29.8/30.3	12	68

REGISTERED CIVIL ENGINEER 4/1/16 DATE

4-4-16
PLANS APPROVAL DATE

REGISTERED PROFESSIONAL ENGINEER
ALLEN LAO
No. 77656
Exp. 6-30-17
CIVIL
STATE OF CALIFORNIA

THE STATE OF CALIFORNIA OR ITS OFFICERS OR AGENTS SHALL NOT BE RESPONSIBLE FOR THE ACCURACY OR COMPLETENESS OF SCANNED COPIES OF THIS PLAN SHEET.

NOTES: (THIS SHEET ONLY)

1. FOR ACCURATE RIGHT OF WAY DATA, CONTACT RIGHT OF WAY ENGINEERING AT THE DISTRICT OFFICE
2. SEE LAYOUT SHEETS FOR "L" AND "W".

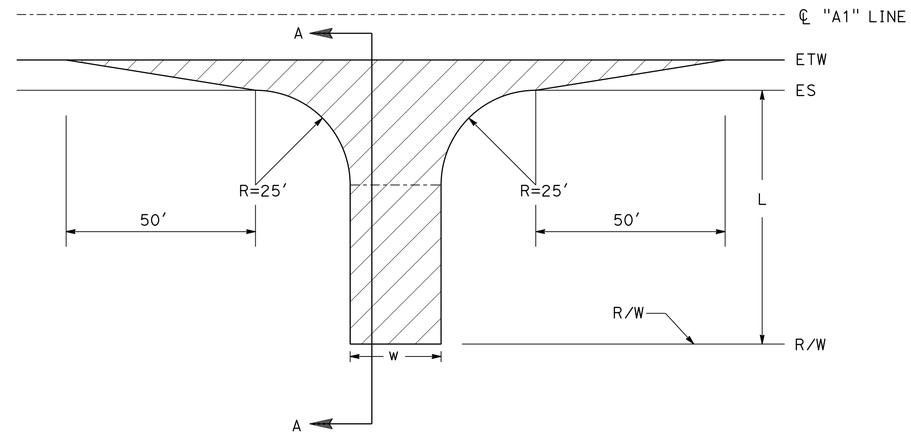

PLAN

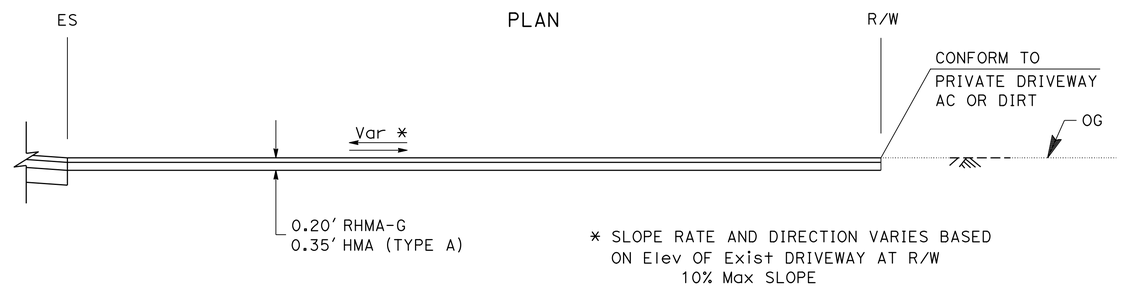

* SLOPE RATE AND DIRECTION VARIES BASED ON Elev OF Exist DRIVEWAY AT R/W
10% Max SLOPE

SECTION A-A

TYPICAL PAVEMENT TRANSITION AT PRIVATE DRIVEWAYS

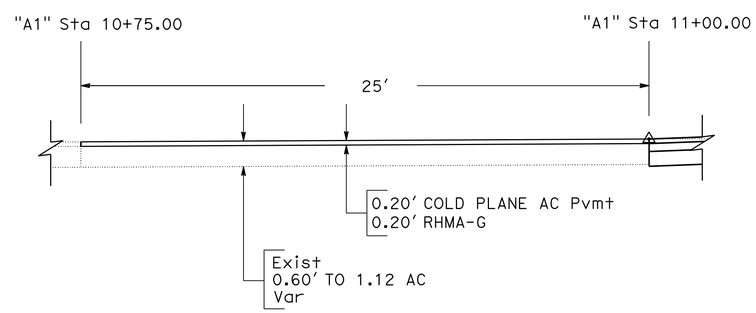

COLD PLANE AC PAVEMENT DETAIL

"A1" 10+75.00 TO 11+00.00

CONSTRUCTION DETAILS

NO SCALE **C-2**

PB	03-01-16
REVISED BY	DATE REVISED
PERLITA BALBIN	ALLEN LAO
CALCULATED-DESIGNED BY	CHECKED BY
FUNCTIONAL SUPERVISOR	JOSE A. HUERTA

STATE OF CALIFORNIA - DEPARTMENT OF TRANSPORTATION
Caltrans® DESIGN

LAST REVISION 03-01-16 | DATE PLOTTED => 09-MAY-2016 | TIME PLOTTED => 09:59

Dist	COUNTY	ROUTE	POST MILES TOTAL PROJECT	SHEET No.	TOTAL SHEETS
10	Mer	165	29.8/30.3	13	68

REGISTERED CIVIL ENGINEER 4/1/16 DATE

4-4-16
PLANS APPROVAL DATE

REGISTERED PROFESSIONAL ENGINEER
ALLEN LAO
No. 77656
Exp. 6-30-17
CIVIL
STATE OF CALIFORNIA

THE STATE OF CALIFORNIA OR ITS OFFICERS OR AGENTS SHALL NOT BE RESPONSIBLE FOR THE ACCURACY OR COMPLETENESS OF SCANNED COPIES OF THIS PLAN SHEET.

LEGEND:

4" THERMOPLASTIC YELLOW STRIPE

TYPE D TWO-WAY YELLOW RETROREFLECTIVE

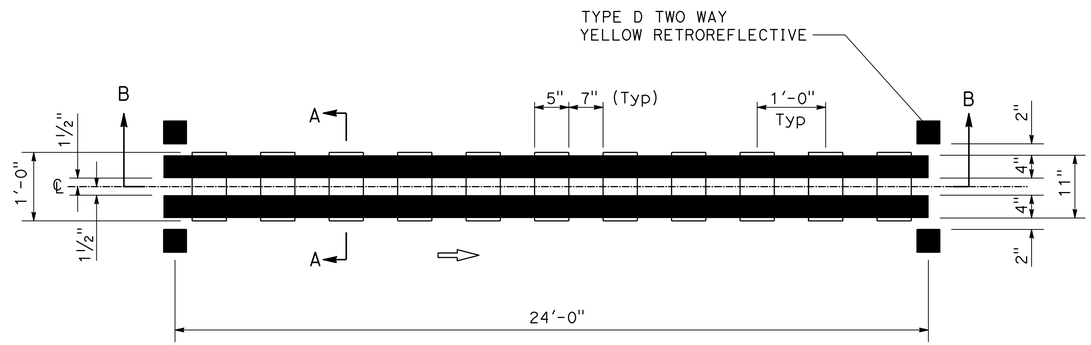

PLAN

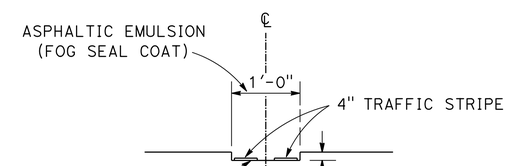

SECTION A-A

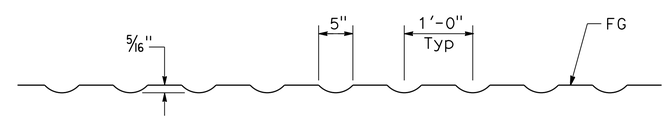

SECTION B-B

Sta 28+00.00 TO Sta 33+83.40
Sta 10+75.00 TO Sta 26+00.00

CENTERLINE RUMBLE STRIPS WITH DETAIL 22 TRAFFIC LINE

CONSTRUCTION DETAILS
NO SCALE
C-3

STATE OF CALIFORNIA - DEPARTMENT OF TRANSPORTATION
Caltrans
DESIGN
FUNCTIONAL SUPERVISOR: JOSE A. HUERTA
CALCULATED-DESIGNED BY: PERLITA BALBIN
CHECKED BY: ALLEN LAO
REVISED BY: PB
DATE REVISED: 03-01-16

LAST REVISION 03-01-16
DATE PLOTTED => 09-MAY-2016
TIME PLOTTED => 09:59

Dist	COUNTY	ROUTE	POST MILES TOTAL PROJECT	SHEET No.	TOTAL SHEETS
10	Mer	165	29.8/30.3	14	68

REGISTERED CIVIL ENGINEER 4/1/16 DATE

4-4-16
PLANS APPROVAL DATE

REGISTERED PROFESSIONAL ENGINEER ALLEN LAO No. 77656 Exp. 6-30-17 CIVIL STATE OF CALIFORNIA

THE STATE OF CALIFORNIA OR ITS OFFICERS OR AGENTS SHALL NOT BE RESPONSIBLE FOR THE ACCURACY OR COMPLETENESS OF SCANNED COPIES OF THIS PLAN SHEET.

NOTES:

1. FOR ACCURATE RIGHT OF WAY DATA, CONTACT RIGHT OF WAY ENGINEERING AT THE DISTRICT OFFICE.
2. FOR LOCATIONS OF CHECK DAMS, SEE DRAINAGE DETAILS.

LEGEND:

TEMPORARY CONSTRUCTION EASEMENT

FLOW LINE

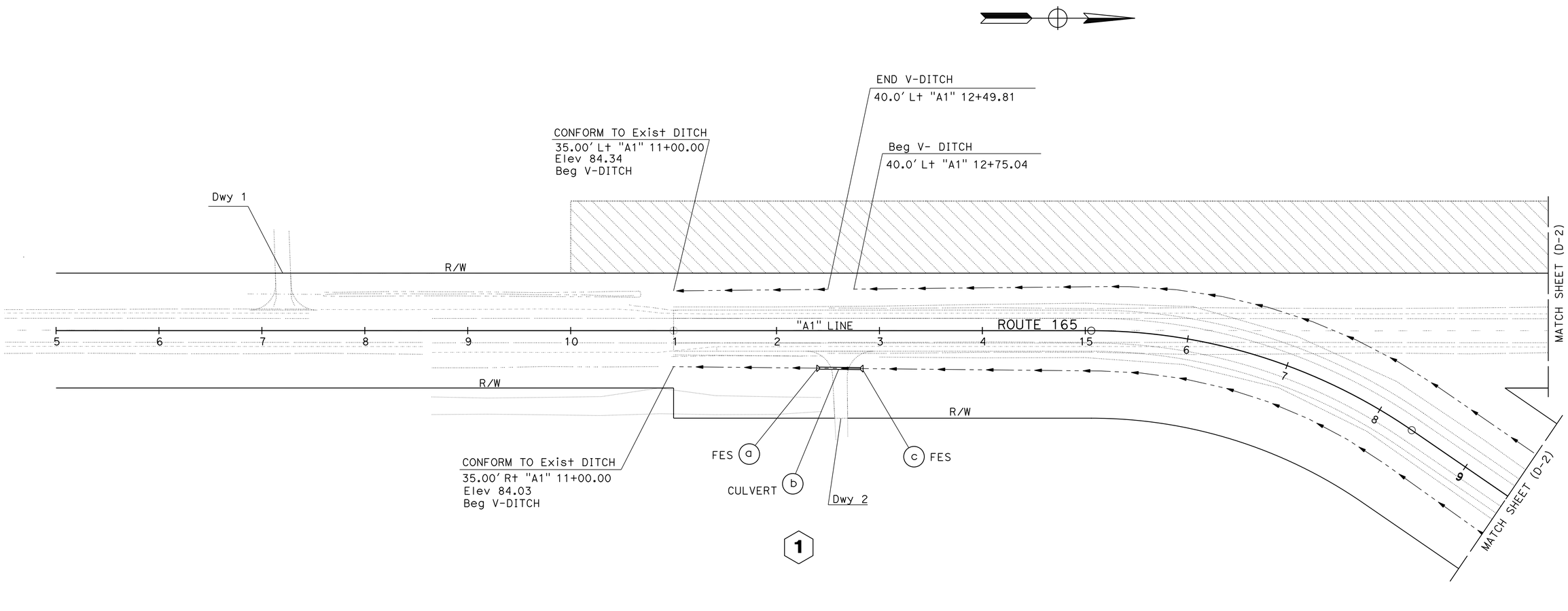

DRAINAGE PLAN

SCALE 1":50' **D-1**

APPROVED FOR DRAINAGE WORK ONLY

PB	REVISED BY
03-21-16	DATE REVISED
PERLITA BALBIN	CALCULATED-DESIGNED BY
ALLEN LAO	CHECKED BY
FUNCTIONAL SUPERVISOR	
JOSE A. HUERTA	

STATE OF CALIFORNIA - DEPARTMENT OF TRANSPORTATION
Caltrans DESIGN

LAST REVISION 03-21-16 | DATE PLOTTED => 09-MAY-2016 | TIME PLOTTED => 09:59

Dist	COUNTY	ROUTE	POST MILES TOTAL PROJECT	SHEET No.	TOTAL SHEETS
10	Mer	165	29.8/30.3	15	68

REGISTERED CIVIL ENGINEER 4/1/16 DATE

4-4-16
PLANS APPROVAL DATE

REGISTERED PROFESSIONAL ENGINEER
ALLEN LAO
No. 77656
Exp. 6-30-17
CIVIL
STATE OF CALIFORNIA

THE STATE OF CALIFORNIA OR ITS OFFICERS OR AGENTS SHALL NOT BE RESPONSIBLE FOR THE ACCURACY OR COMPLETENESS OF SCANNED COPIES OF THIS PLAN SHEET.

NOTE:

FOR ACCURATE RIGHT OF WAY DATA, CONTACT RIGHT OF WAY ENGINEERING AT THE DISTRICT OFFICE.

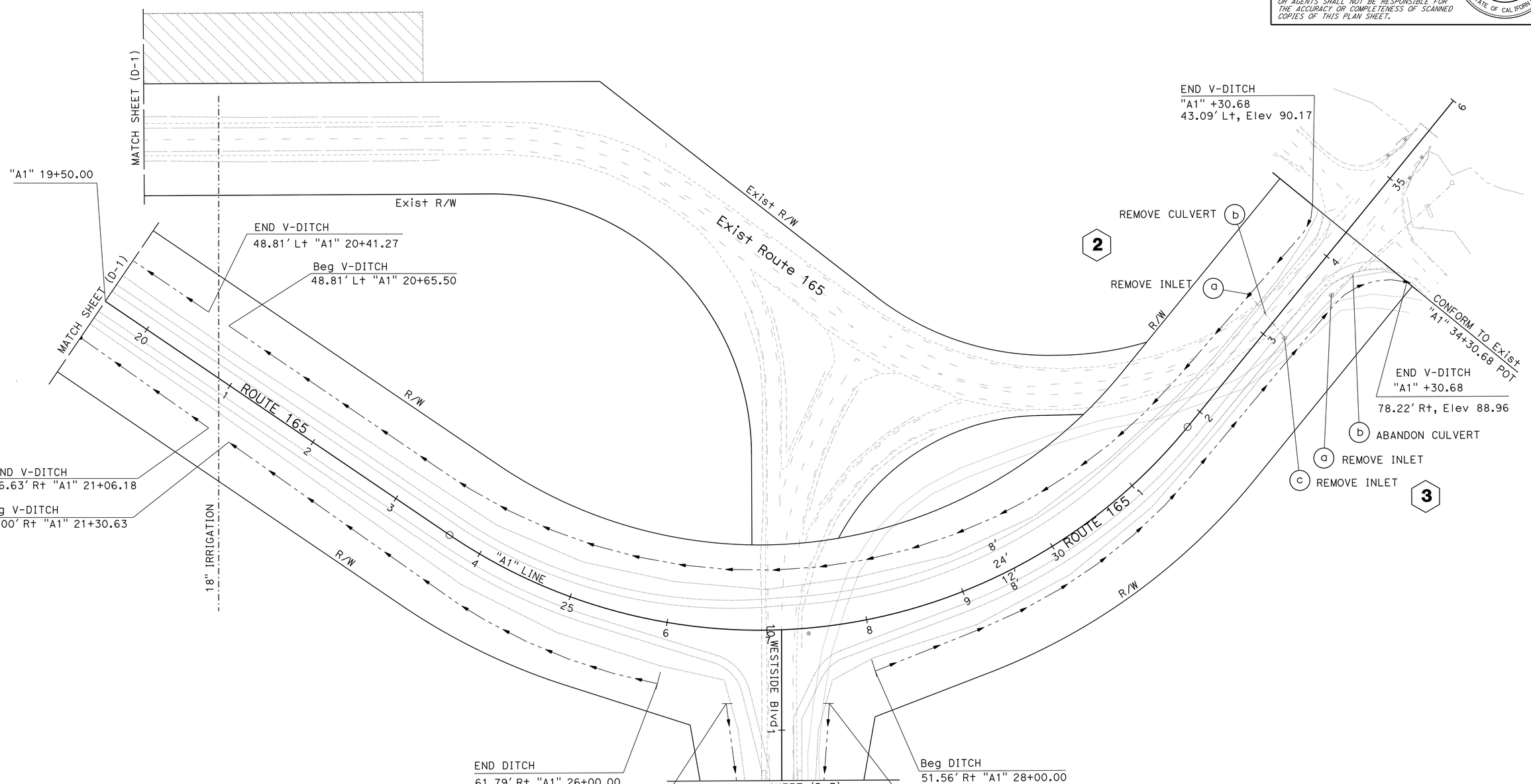

APPROVED FOR DRAINAGE WORK ONLY

DRAINAGE PLAN

SCALE 1":50′ **D-2**

REVISED BY	DATE REVISED
PB	03-01-16

PERLITA BALBIN — ALLEN LAO

CALCULATED-DESIGNED BY — CHECKED BY

FUNCTIONAL SUPERVISOR — JOSE A. HUERTA

STATE OF CALIFORNIA - DEPARTMENT OF TRANSPORTATION

Caltrans® **DESIGN**

LAST REVISION 03-01-16 | DATE PLOTTED => 09-MAY-2016 | TIME PLOTTED => 09:59

Dist	COUNTY	ROUTE	POST MILES TOTAL PROJECT	SHEET No.	TOTAL SHEETS
10	Mer	165	29.8/30.3	16	68

REGISTERED CIVIL ENGINEER 4/1/16 DATE

4-4-16
PLANS APPROVAL DATE

REGISTERED PROFESSIONAL ENGINEER
ALLEN LAO
No. 77656
Exp. 6-30-17
CIVIL
STATE OF CALIFORNIA

THE STATE OF CALIFORNIA OR ITS OFFICERS OR AGENTS SHALL NOT BE RESPONSIBLE FOR THE ACCURACY OR COMPLETENESS OF SCANNED COPIES OF THIS PLAN SHEET.

NOTE:

FOR ACCURATE RIGHT OF WAY DATA, CONTACT
RIGHT OF WAY ENGINEERING AT THE DISTRICT OFFICE.

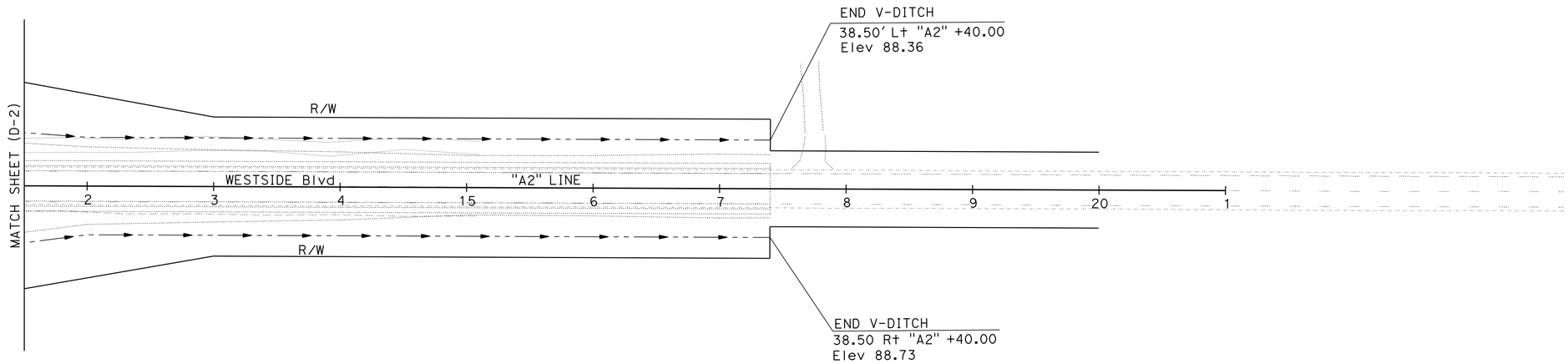

APPROVED FOR DRAINAGE WORK ONLY

DRAINAGE PLAN

SCALE 1":50' **D-3**

PB	03-01-16
REVISED BY	DATE REVISED
PERLITA BALBIN	ALLEN LAO
CALCULATED-DESIGNED BY	CHECKED BY
FUNCTIONAL SUPERVISOR	JOSE A. HUERTA

STATE OF CALIFORNIA - DEPARTMENT OF TRANSPORTATION
Caltrans
DESIGN

LAST REVISION 00-00-00
DATE PLOTTED => 09-MAY-2016
TIME PLOTTED => 09:59

Dist	COUNTY	ROUTE	POST MILES TOTAL PROJECT	SHEET No.	TOTAL SHEETS
10	Mer	165	29.8/30.3	17	68

REGISTERED CIVIL ENGINEER 4/1/16 DATE

4-4-16
PLANS APPROVAL DATE

REGISTERED PROFESSIONAL ENGINEER
ALLEN LAO
No. 77656
Exp. 6-30-17
CIVIL
STATE OF CALIFORNIA

THE STATE OF CALIFORNIA OR ITS OFFICERS OR AGENTS SHALL NOT BE RESPONSIBLE FOR THE ACCURACY OR COMPLETENESS OF SCANNED COPIES OF THIS PLAN SHEET.

ABBREVIATIONS:

CFES - CONCRETE FLARED END SECTION
RGJ - RUBBER GASKET JOINT

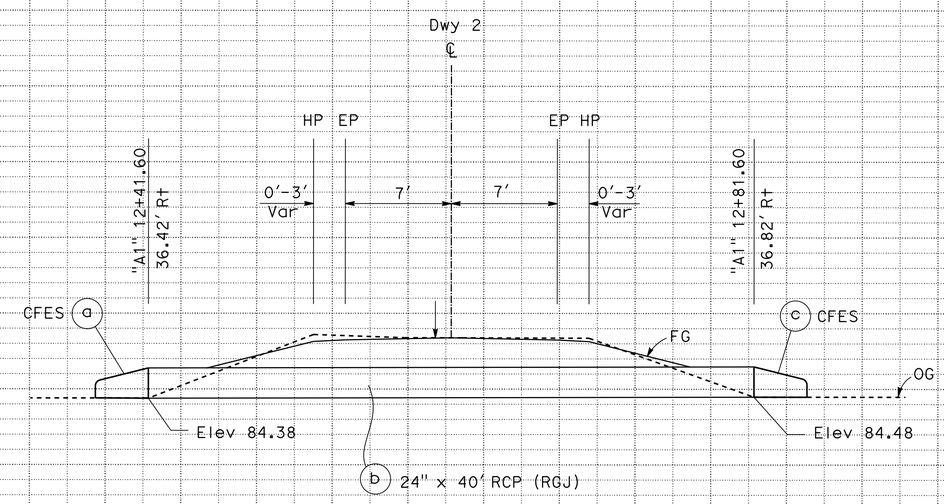

DRAINAGE No. 1
"A1" 12+62.59

95
90
85
80

DRAINAGE PROFILE

SCALE: Horiz : 1" = 10'
Vert : 1" = 5'

DP-1

STATION		TOTAL
CY	Exc	
	Emb	

PB 03-01-16
REVISED BY DATE REVISED
PERLITA BALBIN
ALLEN LAO
CALCULATED-DESIGNED BY
CHECKED BY
FUNCTIONAL SUPERVISOR
JOSE A. HUERTA

STATE OF CALIFORNIA - DEPARTMENT OF TRANSPORTATION
Caltrans
DESIGN

LAST REVISION 03-01-16
DATE PLOTTED => 09-MAY-2016
TIME PLOTTED => 09:59

Dist	COUNTY	ROUTE	POST MILES TOTAL PROJECT	SHEET No.	TOTAL SHEETS
10	Mer	165	29.8/30.3	18	68

REGISTERED CIVIL ENGINEER 4/1/16 DATE

4-4-16
PLANS APPROVAL DATE

REGISTERED PROFESSIONAL ENGINEER
ALLEN LAO
No. 77656
Exp. 6-30-17
CIVIL
STATE OF CALIFORNIA

THE STATE OF CALIFORNIA OR ITS OFFICERS OR AGENTS SHALL NOT BE RESPONSIBLE FOR THE ACCURACY OR COMPLETENESS OF SCANNED COPIES OF THIS PLAN SHEET.

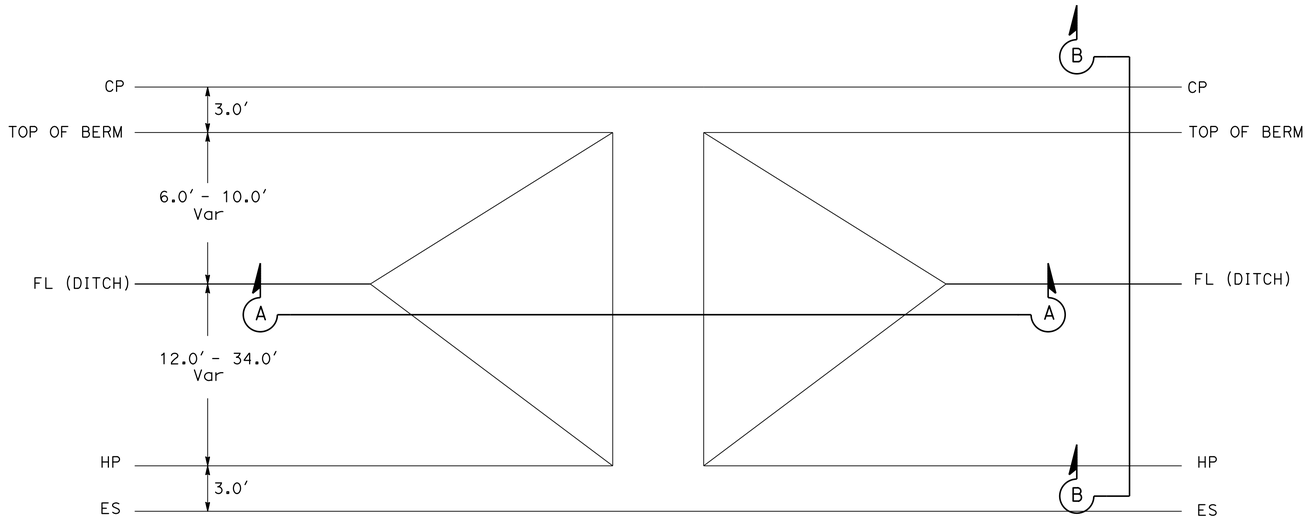

PLAN
CHECK DAMS

CHECK DAMS

LOCATION	Sta	SIDE
ROUTE 165	16+00.00	Lt
ROUTE 165	28+00.00	Lt
ROUTE 165	18+50.00	Rt
ROUTE 165	30+50.00	Rt
WESTSIDE Blvd	14+07.50	Rt
WESTSIDE Blvd	14+07.50	Lt

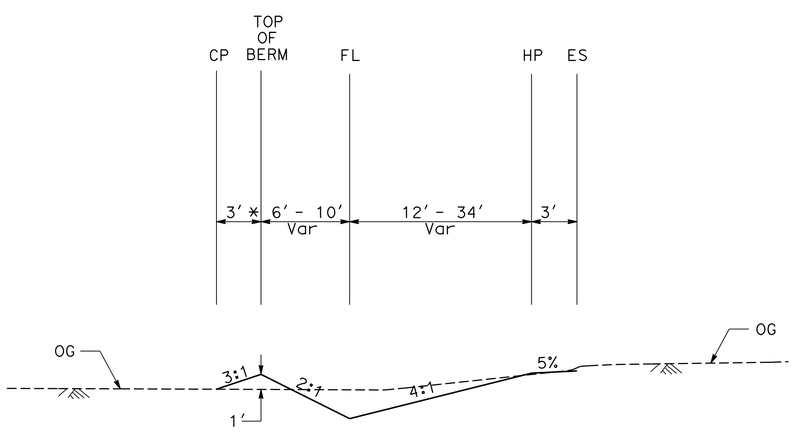

SECTION B-B

* DISTANCE TO CP MAY VARY BASED ON EXISTING TOPOGRAPHY

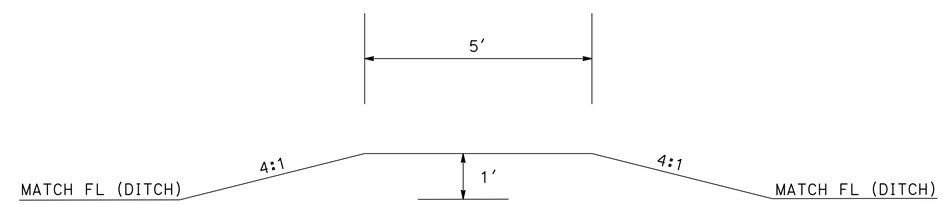

SECTION A-A

DRAINAGE DETAILS

NO SCALE

DD-1

REVISED BY	DATE REVISED
PB	03-01-16

PERLITA BALBIN — ALLEN LAO

CALCULATED-DESIGNED BY — CHECKED BY

FUNCTIONAL SUPERVISOR — JOSE A. HUERTA

STATE OF CALIFORNIA - DEPARTMENT OF TRANSPORTATION — DESIGN

LAST REVISION 03-01-16 — DATE PLOTTED => 09-MAY-2016 — TIME PLOTTED => 09:59

Dist	COUNTY	ROUTE	POST MILES TOTAL PROJECT	SHEET No.	TOTAL SHEETS
10	Mer	165	29.8/30.3	19	68

REGISTERED CIVIL ENGINEER 4/1/16 DATE

4-4-16
PLANS APPROVAL DATE

REGISTERED PROFESSIONAL ENGINEER ALLEN LAO No. 77656 Exp. 6-30-17 CIVIL STATE OF CALIFORNIA

THE STATE OF CALIFORNIA OR ITS OFFICERS OR AGENTS SHALL NOT BE RESPONSIBLE FOR THE ACCURACY OR COMPLETENESS OF SCANNED COPIES OF THIS PLAN SHEET.

ABBREVIATIONS:

CFES - CONCRETE FLARED END SECTION
RGJ - RUBBER GASKET JOINT

DRAINAGE QUANTITIES

DRAINAGE SHEET No.	DRAINAGE SYSTEM No. ⬡	DRAINAGE UNIT ○	DESCRIPTION	LOCATION	SIDE	REMOVE CULVERT	ABANDON CULVERT	REMOVE INLET	24" RCP	24" Conc FES
						LF	EA	EA	LF	EA
D-1	1	a	24" CFES	"A1" 12+41.60	R†					1
		b	24" x 40' RCP (RGJ)	"A1" 12+62.59					40	
		c	24" CFES	"A1" 12+81.60						1
D-2	2	a	REMOVE INLET	"A1" 33+10.40 - "A1" 33+22.00	R† - L†			1		
		b	REMOVE CULVERT (CSP)			55				
		c	REMOVE INLET					1		
D-2	3	a	REMOVE INLET	"A1 33+73.00	R†			1		
		b	ABANDON CULVERT (160' CSP)				1			
				SHEET TOTAL		55	1	3	40	2

STATE OF CALIFORNIA - DEPARTMENT OF TRANSPORTATION
Caltrans® DESIGN

FUNCTIONAL SUPERVISOR: JOSE A. HUERTA
CALCULATED-DESIGNED BY: PERLITA BALBIN
CHECKED BY: ALLEN LAO
REVISED BY: PB
DATE REVISED: 03-01-16

DRAINAGE QUANTITIES
DQ-1

LAST REVISION 03-01-16
DATE PLOTTED => 09-MAY-2016
TIME PLOTTED => 09:59

Dist	COUNTY	ROUTE	POST MILES TOTAL PROJECT	SHEET No.	TOTAL SHEETS
10	Mer	165	29.9/30.3	20	68

REGISTERED CIVIL ENGINEER 4/1/16 DATE

4-4-16
PLANS APPROVAL DATE

REGISTERED PROFESSIONAL ENGINEER
ALLEN LAO
No. 77656
Exp. 6-30-17
CIVIL
STATE OF CALIFORNIA

THE STATE OF CALIFORNIA OR ITS OFFICERS OR AGENTS SHALL NOT BE RESPONSIBLE FOR THE ACCURACY OR COMPLETENESS OF SCANNED COPIES OF THIS PLAN SHEET.

NOTE:

1. FOR ACCURATE RIGHT OF WAY DATA, CONTACT RIGHT OF WAY ENGINEERING AT THE DISTRICT OFFICE.
2. LOCATION OF UTILITY FACILITIES SHOWN ON THIS PLAN ARE APPROXIMATE AND SHALL BE VERIFIED BYT THE CONTRACTOR PRIOR TO CONSTRUCTION.

UTILITY OWNERSHIP:

ELECTRIC - PACIFIC GAS & ELECTRIC COMPANY (PG&E)
TELEPHONE - AT&T

LEGEND:

TEMPORARY CONSTRUCTION EASEMENT

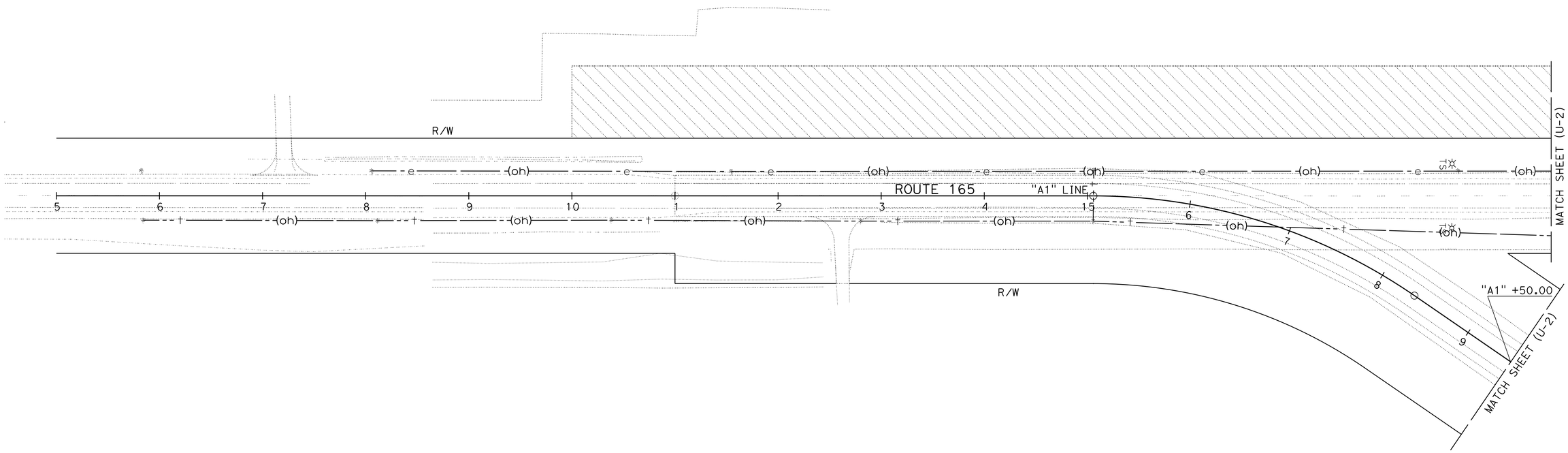

THIS PLAN TO BE USED FOR UTILITY INFORMATION ONLY

UTILITY PLAN

SCALE: 1"=50'

U-1

REVISED BY	DATE REVISED
PB	03-01-16

PERLITA BALBIN — ALLEN LAO
CALCULATED-DESIGNED BY — CHECKED BY
FUNCTIONAL SUPERVISOR — JOSE A. HUERTA

STATE OF CALIFORNIA - DEPARTMENT OF TRANSPORTATION
Caltrans®
DESIGN

LAST REVISION 03-01-16
DATE PLOTTED => 09-MAY-2016
TIME PLOTTED => 09:59

Dist	COUNTY	ROUTE	POST MILES TOTAL PROJECT	SHEET No.	TOTAL SHEETS
10	Mer	165	29.8/30.3	21	68

REGISTERED CIVIL ENGINEER 4/1/16 DATE

4-4-16
PLANS APPROVAL DATE

REGISTERED PROFESSIONAL ENGINEER
ALLEN LAO
No. 77656
Exp. 6-30-17
CIVIL
STATE OF CALIFORNIA

THE STATE OF CALIFORNIA OR ITS OFFICERS OR AGENTS SHALL NOT BE RESPONSIBLE FOR THE ACCURACY OR COMPLETENESS OF SCANNED COPIES OF THIS PLAN SHEET.

NOTE:

FOR ACCURATE RIGHT OF WAY DATA, CONTACT RIGHT OF WAY ENGINEERING AT THE DISTRICT OFFICE.

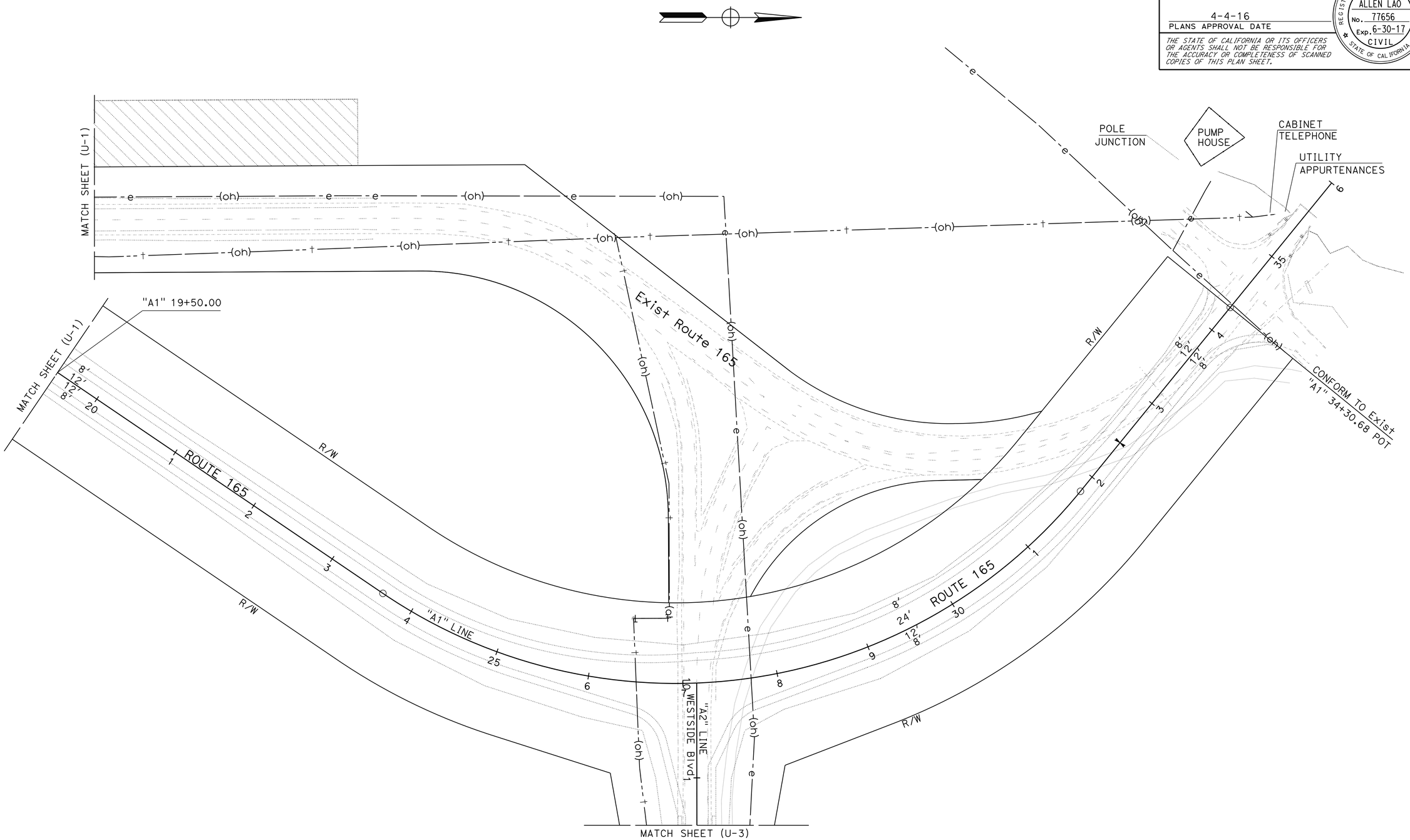

THIS PLAN TO BE USED FOR UTILITY INFORMATION ONLY

UTILITY PLAN

SCALE: 1"=50' **U-2**

REVISED BY	DATE REVISED
PB	03-21-16

CALCULATED-DESIGNED BY: PERLITA BALBIN
CHECKED BY: ALLEN LAO
FUNCTIONAL SUPERVISOR: JOSE A. HUERTA

STATE OF CALIFORNIA - DEPARTMENT OF TRANSPORTATION
Caltrans
DESIGN

LAST REVISION 03-21-16
DATE PLOTTED => 09-MAY-2016
TIME PLOTTED => 09:59

Dist	COUNTY	ROUTE	POST MILES TOTAL PROJECT	SHEET No.	TOTAL SHEETS
10	Mer	165	29.8/30.3	22	68

REGISTERED CIVIL ENGINEER 4/1/16 DATE

4-4-16
PLANS APPROVAL DATE

REGISTERED PROFESSIONAL ENGINEER
ALLEN LAO
No. 77656
Exp. 6-30-17
CIVIL
STATE OF CALIFORNIA

THE STATE OF CALIFORNIA OR ITS OFFICERS OR AGENTS SHALL NOT BE RESPONSIBLE FOR THE ACCURACY OR COMPLETENESS OF SCANNED COPIES OF THIS PLAN SHEET.

NOTE:

FOR ACCURATE RIGHT OF WAY DATA, CONTACT
RIGHT OF WAY ENGINEERING AT THE DISTRICT OFFICE.

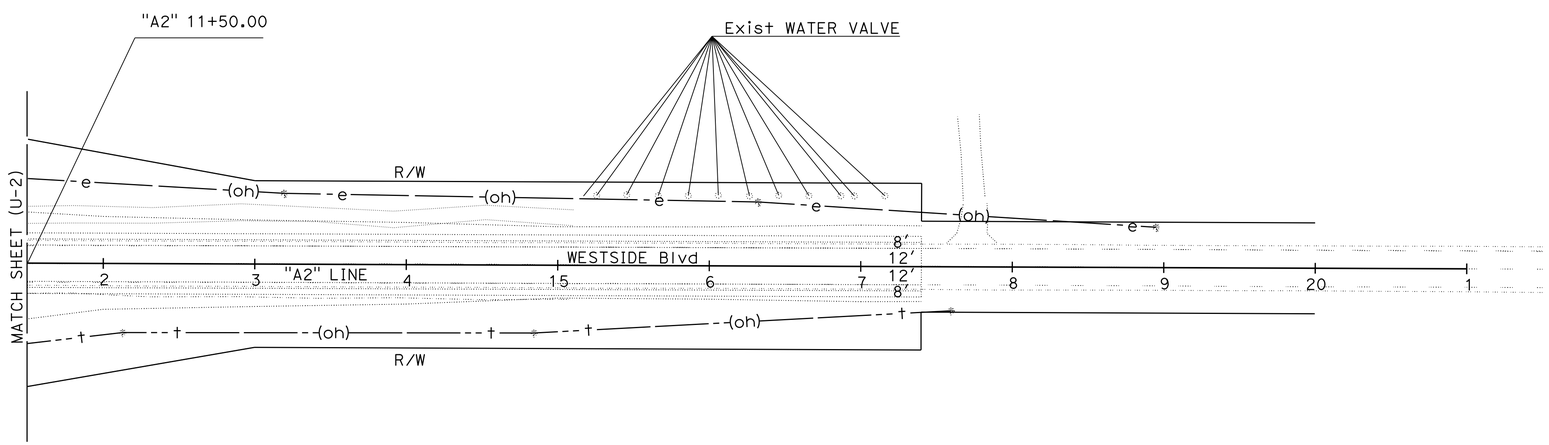

UTILITY PLAN

SCALE: 1"=50' **U-3**

THIS PLAN TO BE USED FOR UTILITY INFORMATION ONLY

STATE OF CALIFORNIA - DEPARTMENT OF TRANSPORTATION
Caltrans® **DESIGN**

FUNCTIONAL SUPERVISOR: JOSE A. HUERTA

CALCULATED-DESIGNED BY: PERLITA BALBIN
CHECKED BY: ALLEN LAO

REVISED BY: PB
DATE REVISED: 03-21-16

LAST REVISION 03-21-16
DATE PLOTTED => 09-MAY-2016
TIME PLOTTED => 09:59

Dist	COUNTY	ROUTE	POST MILES TOTAL PROJECT	SHEET No.	TOTAL SHEETS
10	Mer	165	29.8/30.3	23	68

REGISTERED CIVIL ENGINEER 4/1/16 DATE

4-4-16
PLANS APPROVAL DATE

REGISTERED PROFESSIONAL ENGINEER HUE NGUYEN No. 74484 Exp. 12/31/17 CIVIL STATE OF CALIFORNIA

THE STATE OF CALIFORNIA OR ITS OFFICERS OR AGENTS SHALL NOT BE RESPONSIBLE FOR THE ACCURACY OR COMPLETENESS OF SCANNED COPIES OF THIS PLAN SHEET.

STATIONARY MOUNTED CONSTRUCTION AREA SIGNS

SIGN	SIGN CODE		QUANTITY	PANEL SIZE	No. OF POST AND SIZE	SIGN MESSAGE
	FEDERAL	CALIFORNIA				
A	G20-1		2	60" x 36"	2 - 4" x 4"	ROAD WORK NEXT 1 MILE
B	W20-1		2	48" x 48"	1 - 6" x 6"	ROAD WORK AHEAD
C	W20-1		5	36" x 36"	1 - 4" x 6"	ROAD WORK AHEAD
D	G20-2		5	36" x 18"	1 - 4" x 4"	END ROAD WORK
E	CPFIS		2	90" x 60"	2- 6" x 6"	CONSTRUCTION PROJECT FUNDIGN INFORMATION SIGN

NOTES: 1. CAS EXACT SIGN LOCATIONS TO BE DETERMINED BY THE ENGINEER.
2. SEE TRAFFIC HANDLING PLANS AND QUANTITIES AND MOTORIST INFORMATION SHEETS FOR MORE CAS.

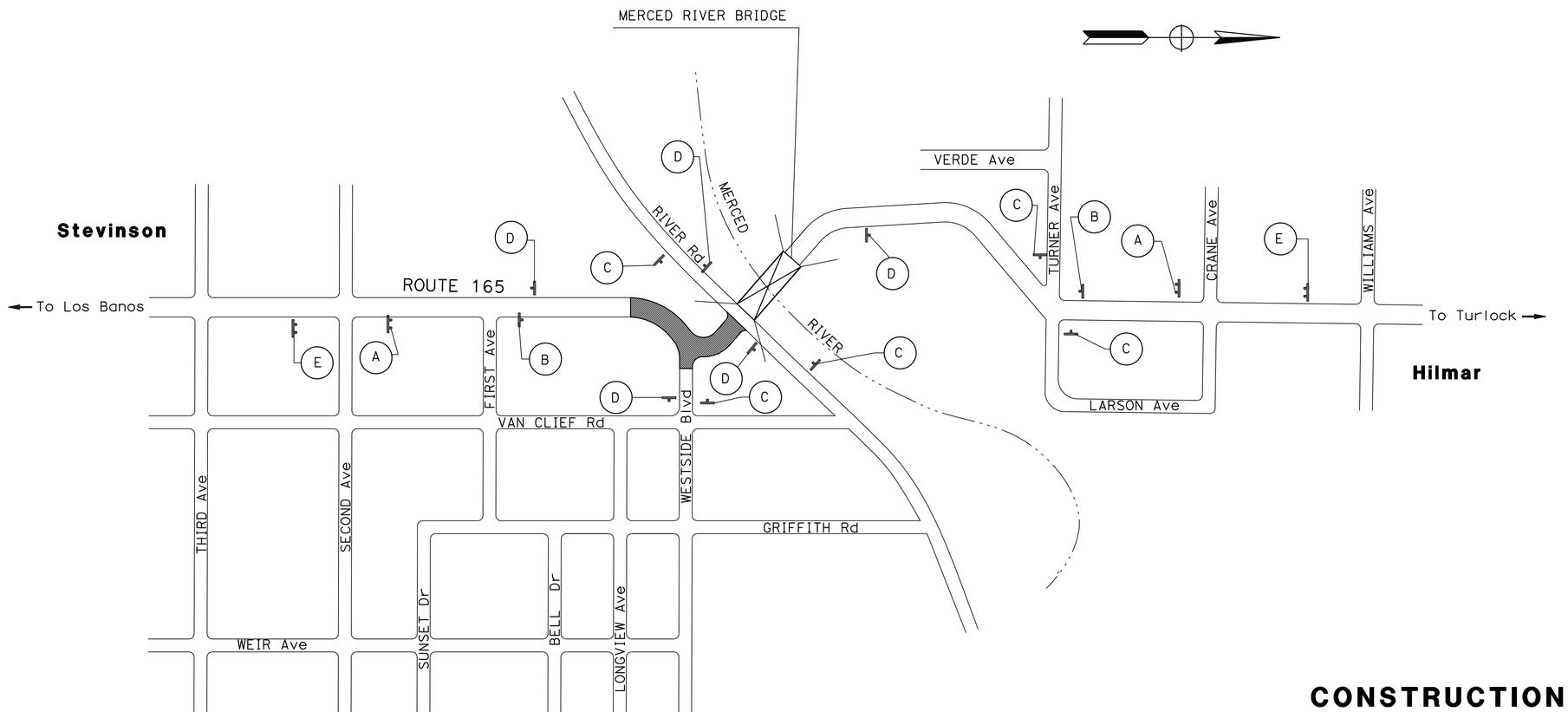

APPROVED FOR CONSTRUCTION AREA SIGN WORK ONLY

CONSTRUCTION AREA SIGNS

NO SCALE

CS-1

STATE OF CALIFORNIA - DEPARTMENT OF TRANSPORTATION
Caltrans **TRAFFIC DESIGN**

FUNCTIONAL SUPERVISOR: MOHAMMED QATAMI
CALCULATED-DESIGNED BY: CECILE NGUYEN
CHECKED BY: HUE NGUYEN
REVISED BY
DATE REVISED

LAST REVISION 03-04-16
DATE PLOTTED => 09-MAY-2016
TIME PLOTTED => 09:59

Dist	COUNTY	ROUTE	POST MILES TOTAL PROJECT	SHEET No.	TOTAL SHEETS
10	Mer	165	29.8/30.3	24	68

REGISTERED CIVIL ENGINEER 4/1/16 DATE

4-4-16
PLANS APPROVAL DATE

REGISTERED PROFESSIONAL ENGINEER ALLEN LAO No. 77656 Exp. 6-30-17 CIVIL STATE OF CALIFORNIA

THE STATE OF CALIFORNIA OR ITS OFFICERS OR AGENTS SHALL NOT BE RESPONSIBLE FOR THE ACCURACY OR COMPLETENESS OF SCANNED COPIES OF THIS PLAN SHEET.

NOTES:

1. FOR ACCURATE RIGHT OF WAY DATA, CONTACT RIGHT OF WAY ENGINEERING AT THE DISTRICT OFFICE.
2. SEE STAGE CONSTRUCTION DETAILS FOR ADDITIONAL INFORMATION ON THE TEMPORARY ROADWAY.
3. SEE TRAFFIC HANDLING PLANS FOR PLACEMENT OF TEMPORARY RAILING (TYPE K) AND CRASH CUSHIONS.
4. WHERE TEMPORARY RAILING (TYPE K) IS PLACED, MAINTAIN A 2 FOOT HORIZONTAL CLEARANCE TO THE EDGE OF TRAVELED WAY.

LEGEND:

- CONSTRUCT THIS STAGE
- CONSTRUCTED IN PREVIOUS STAGE
- CONSTRUCT UNDER TRAFFIC CONTROL SYSTEM
- OBLITERATE ROADWAY
- TEMPORARY CONSTRUCTION EASEMENT

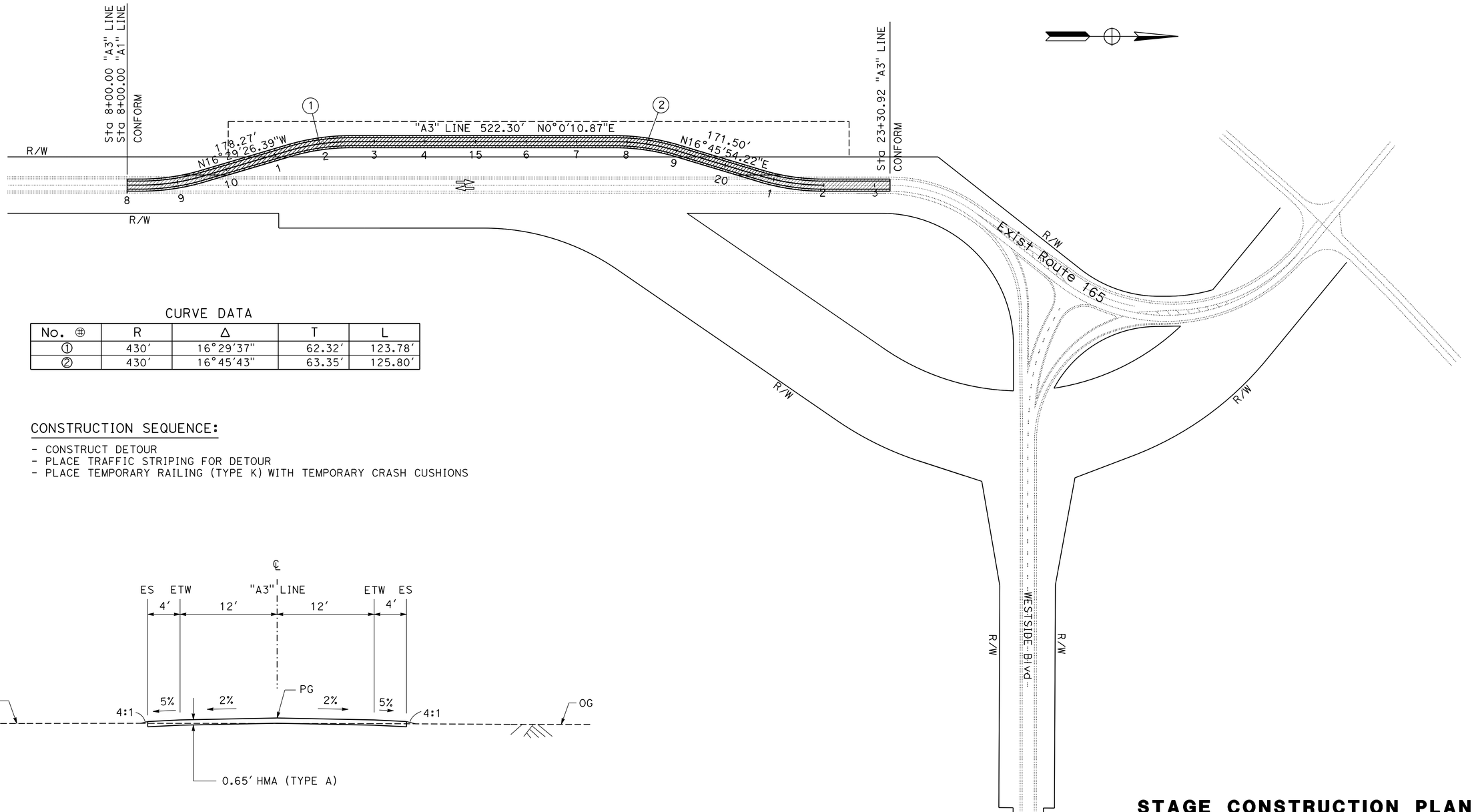

CURVE DATA

No. ⊕	R	Δ	T	L
①	430'	16°29'37"	62.32'	123.78'
②	430'	16°45'43"	63.35'	125.80'

CONSTRUCTION SEQUENCE:

- CONSTRUCT DETOUR
- PLACE TRAFFIC STRIPING FOR DETOUR
- PLACE TEMPORARY RAILING (TYPE K) WITH TEMPORARY CRASH CUSHIONS

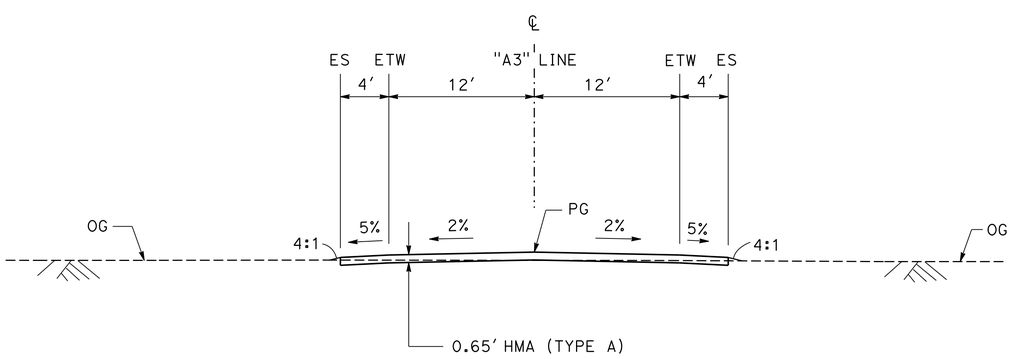

"A3"9+50.00 TO "A3" 22+00.00

DETOUR

STAGE CONSTRUCTION PLAN
STAGE 1

NO SCALE

SC-1

APPROVED FOR STAGE CONSTRUCTION WORK ONLY

REVISED BY	DATE REVISED
PB	03-21-16

CALCULATED-DESIGNED BY: PERLITA BALBIN
CHECKED BY: ALLEN LAO
FUNCTIONAL SUPERVISOR: JOSE A. HUERTA

STATE OF CALIFORNIA - DEPARTMENT OF TRANSPORTATION
Caltrans® DESIGN

LAST REVISION 03-21-16 | DATE PLOTTED => 09-MAY-2016 | TIME PLOTTED => 09:59

Dist	COUNTY	ROUTE	POST MILES TOTAL PROJECT	SHEET No.	TOTAL SHEETS
10	Mer	165	29.8/30.3	25	68

REGISTERED CIVIL ENGINEER 4/1/16 DATE

4-4-16
PLANS APPROVAL DATE

REGISTERED PROFESSIONAL ENGINEER
ALLEN LAO
No. 77656
Exp. 6-30-17
CIVIL
STATE OF CALIFORNIA

THE STATE OF CALIFORNIA OR ITS OFFICERS OR AGENTS SHALL NOT BE RESPONSIBLE FOR THE ACCURACY OR COMPLETENESS OF SCANNED COPIES OF THIS PLAN SHEET.

NOTE:

FOR ACCURATE RIGHT OF WAY DATA, CONTACT RIGHT OF WAY ENGINEERING AT THE DISTRICT OFFICE.

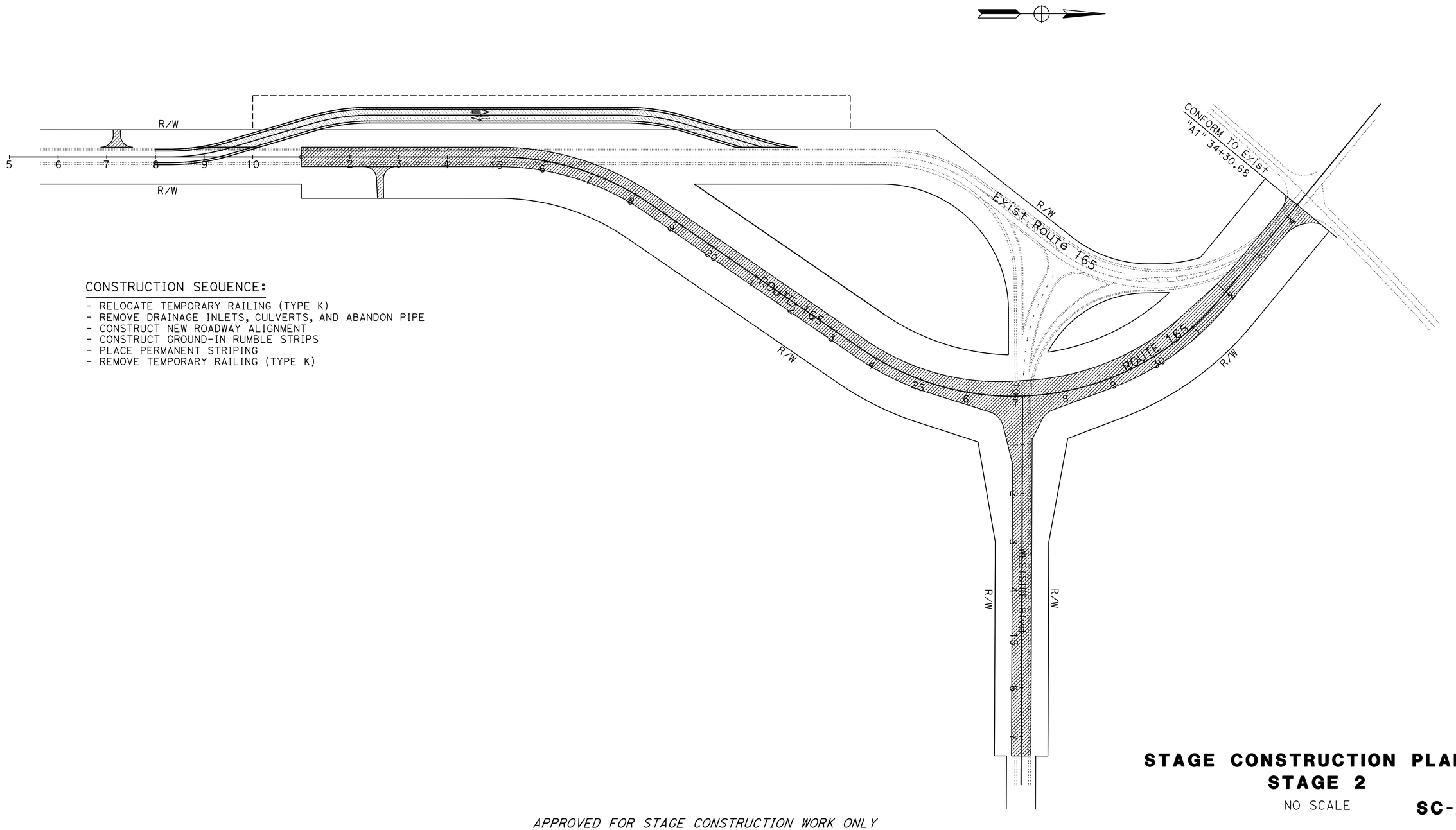

CONSTRUCTION SEQUENCE:

- RELOCATE TEMPORARY RAILING (TYPE K)
- REMOVE DRAINAGE INLETS, CULVERTS, AND ABANDON PIPE
- CONSTRUCT NEW ROADWAY ALIGNMENT
- CONSTRUCT GROUND-IN RUMBLE STRIPS
- PLACE PERMANENT STRIPING
- REMOVE TEMPORARY RAILING (TYPE K)

STAGE CONSTRUCTION PLAN
STAGE 2

NO SCALE

SC-2

APPROVED FOR STAGE CONSTRUCTION WORK ONLY

STATE OF CALIFORNIA - DEPARTMENT OF TRANSPORTATION
Caltrans®
DESIGN

FUNCTIONAL SUPERVISOR: JOSE A. HUERTA

CALCULATED-DESIGNED BY: PERLITA BALBIN
CHECKED BY: ALLEN LAO

REVISED BY: PB
DATE REVISED: 03-21-16

LAST REVISION 03-21-16
DATE PLOTTED => 09-MAY-2016
TIME PLOTTED => 09:59

Dist	COUNTY	ROUTE	POST MILES TOTAL PROJECT	SHEET No.	TOTAL SHEETS
10	Mer	165	29.8/30.3	26	68

REGISTERED CIVIL ENGINEER 4/1/16 DATE

4-4-16
PLANS APPROVAL DATE

REGISTERED PROFESSIONAL ENGINEER
ALLEN LAO
No. 77656
Exp. 6-30-17
CIVIL
STATE OF CALIFORNIA

THE STATE OF CALIFORNIA OR ITS OFFICERS OR AGENTS SHALL NOT BE RESPONSIBLE FOR THE ACCURACY OR COMPLETENESS OF SCANNED COPIES OF THIS PLAN SHEET.

NOTE:
FOR ACCURATE RIGHT OF WAY DATA, CONTACT RIGHT OF WAY ENGINEERING AT THE DISTRICT OFFICE.

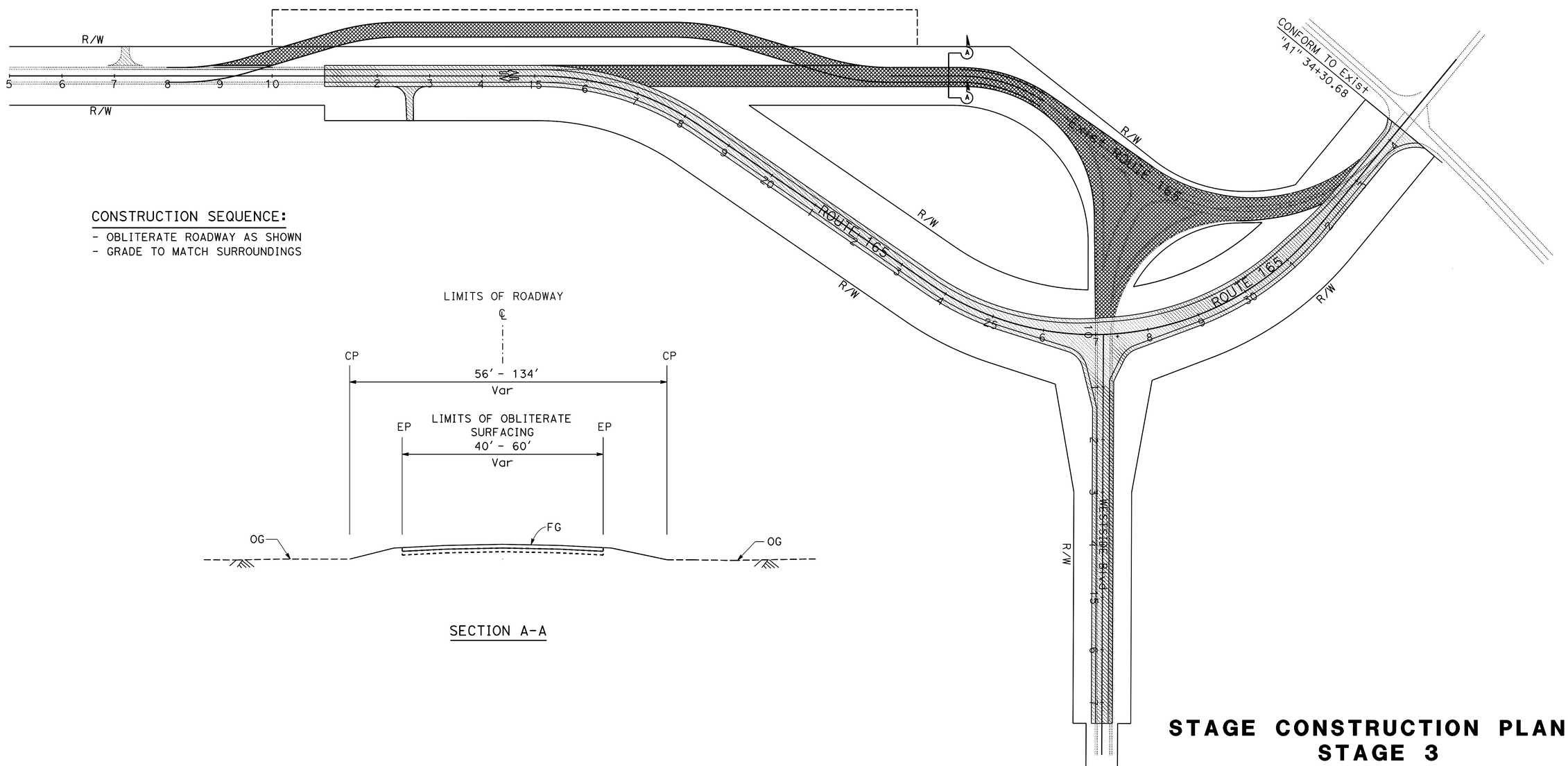

CONSTRUCTION SEQUENCE:
- OBLITERATE ROADWAY AS SHOWN
- GRADE TO MATCH SURROUNDINGS

SECTION A-A

STAGE CONSTRUCTION PLAN
STAGE 3
NO SCALE

SC-3

APPROVED FOR STAGE CONSTRUCTION WORK ONLY

STATE OF CALIFORNIA - DEPARTMENT OF TRANSPORTATION
Caltrans® DESIGN

FUNCTIONAL SUPERVISOR: JOSE A. HUERTA
CALCULATED-DESIGNED BY: PERLITA BALBIN
CHECKED BY: ALLEN LAO
REVISED BY: PB
DATE REVISED: 03-01-16

LAST REVISION 03-01-16
DATE PLOTTED => 09-MAY-2016
TIME PLOTTED => 09:59

Dist	COUNTY	ROUTE	POST MILES TOTAL PROJECT	SHEET No.	TOTAL SHEETS
10	Mer	165	29.8/30.3	27	68

REGISTERED CIVIL ENGINEER 4/1/16 DATE

4-4-16
PLANS APPROVAL DATE

REGISTERED PROFESSIONAL ENGINEER HUE NGUYEN No. 74484 Exp. 12/31/17 CIVIL STATE OF CALIFORNIA

THE STATE OF CALIFORNIA OR ITS OFFICERS OR AGENTS SHALL NOT BE RESPONSIBLE FOR THE ACCURACY OR COMPLETENESS OF SCANNED COPIES OF THIS PLAN SHEET.

LEGEND:

- CONSTRUCT THIS STAGE
- TEMPORARY RAILING (TYPE K)
- Temp CRASH CUSHION ARRAY "TS11"
- XX — REMOVE THERMOPLASTIC TRAFFIC STRIPE
- TEMPORARY TRAFFIC STRIPE (PAINT) DETAIL No.
- CHANNELIZER
- CONSTRUCTION AREA SIGN
- No. — TEMPORARY TRAFFIC CONTROL SIGN No.
- OBJECT MARKER (TYPE P)

NOTES:

1. FOR ACCURATE RIGHT OF WAY DATA, CONTACT RIGHT OF WAY ENGINEERING AT THE DISTRICT OFFICE
2. WHEN TEMPORARY RAILING (TYPE K) IS PLACED, MAINTAIN A 2 FOOT HORIZANTAL CLEARANCE TO THE EDGE OF TRAVALED WAY.

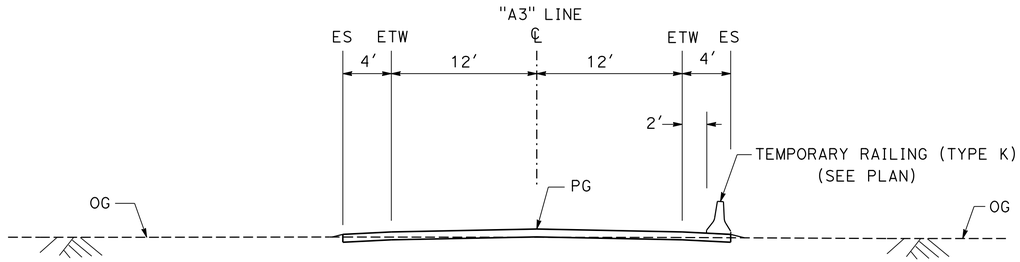

SECTION A-A
"A3"9+50.00 TO "A3" 22+00.00

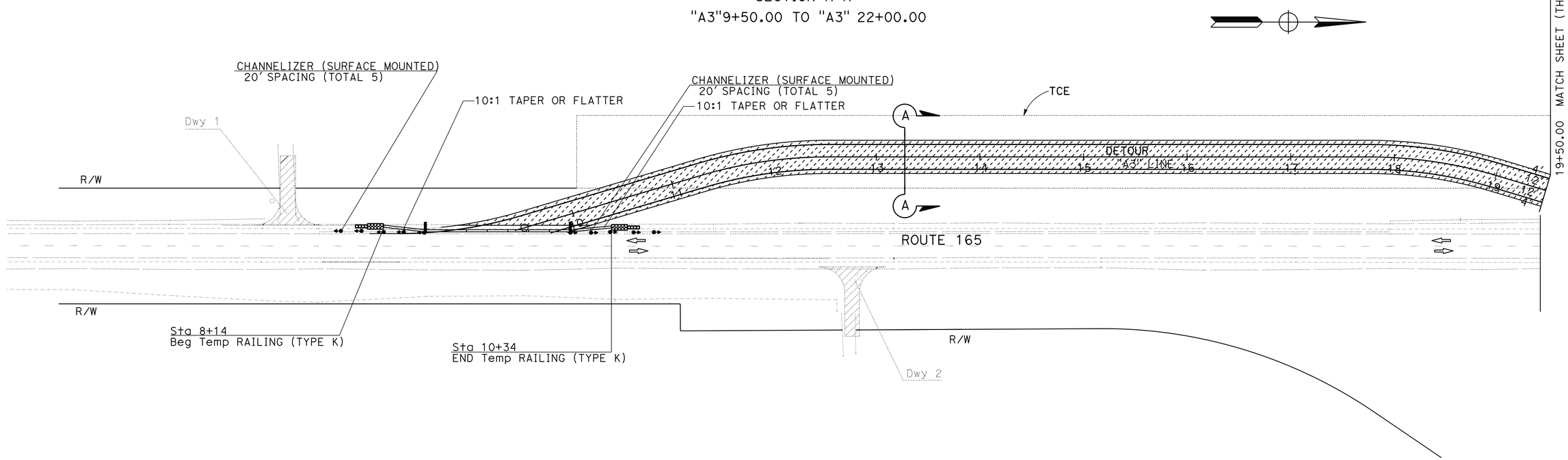

TRAFFIC HANDLING PLAN

(STAGE I)

SCALE: 1" = 50′

TH-1

APPROVED FOR TRAFFIC HANDLING WORK ONLY

STATE OF CALIFORNIA - DEPARTMENT OF TRANSPORTATION
Caltrans® **TRAFFIC DESIGN**

FUNCTIONAL SUPERVISOR: MOHAMMED QATAMI
CALCULATED-DESIGNED BY: CECILE NGUYEN
CHECKED BY: HUE NGUYEN
REVISED BY / DATE REVISED

LAST REVISION 03-21-16
DATE PLOTTED => 09-MAY-2016
TIME PLOTTED => 09:59

Dist	COUNTY	ROUTE	POST MILES TOTAL PROJECT	SHEET No.	TOTAL SHEETS
10	Mer	165	29.8/30.3	28	68

REGISTERED CIVIL ENGINEER 4/1/16 DATE

4-4-16
PLANS APPROVAL DATE

REGISTERED PROFESSIONAL ENGINEER
HUE NGUYEN
No. 74484
Exp. 12/31/17
CIVIL
STATE OF CALIFORNIA

THE STATE OF CALIFORNIA OR ITS OFFICERS OR AGENTS SHALL NOT BE RESPONSIBLE FOR THE ACCURACY OR COMPLETENESS OF SCANNED COPIES OF THIS PLAN SHEET.

NOTE:

FOR ACCURATE RIGHT OF WAY DATA, CONTACT RIGHT OF WAY ENGINEERING AT THE DISTRICT OFFICE.

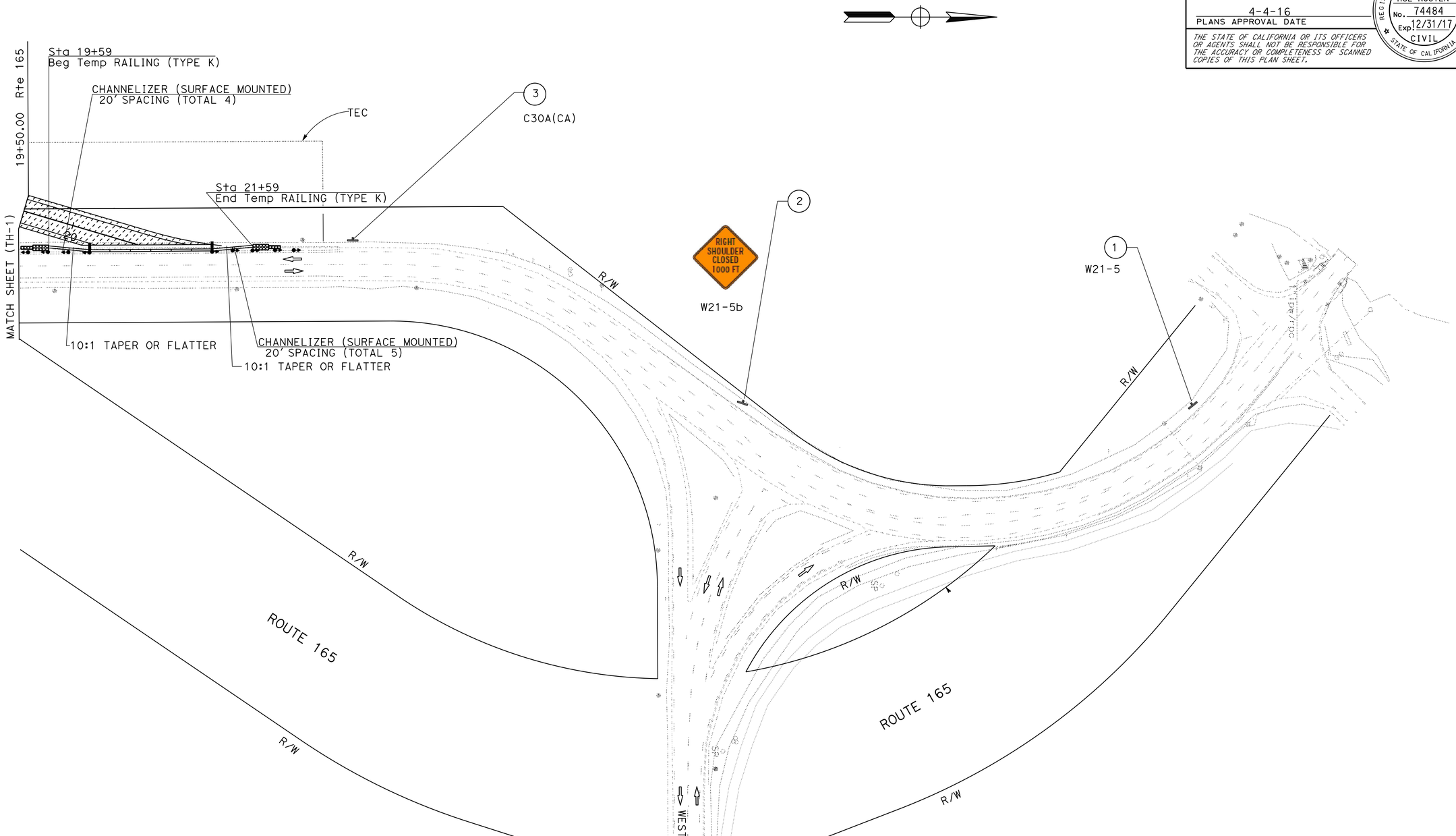

TRAFFIC HANDLING PLAN
(STAGE I)

SCALE: 1" = 50'

TH-2

APPROVED FOR TRAFFIC HANDLING WORK ONLY

STATE OF CALIFORNIA - DEPARTMENT OF TRANSPORTATION
Caltrans
TRAFFIC DESIGN

FUNCTIONAL SUPERVISOR: MOHAMMED QATAMI
CALCULATED-DESIGNED BY: CECILE NGUYEN
CHECKED BY: HUE NGUYEN
REVISED BY
DATE REVISED

LAST REVISION 03-21-16
DATE PLOTTED => 09-MAY-2016
TIME PLOTTED => 09:59

Dist	COUNTY	ROUTE	POST MILES TOTAL PROJECT	SHEET No.	TOTAL SHEETS
10	Mer	165	29.8/30.3	29	68

REGISTERED CIVIL ENGINEER 4/1/16 DATE

4-4-16
PLANS APPROVAL DATE

REGISTERED PROFESSIONAL ENGINEER HUE NGUYEN No. 74484 Exp. 12/31/17 CIVIL STATE OF CALIFORNIA

THE STATE OF CALIFORNIA OR ITS OFFICERS OR AGENTS SHALL NOT BE RESPONSIBLE FOR THE ACCURACY OR COMPLETENESS OF SCANNED COPIES OF THIS PLAN SHEET.

NOTE:

FOR ACCURATE RIGHT OF WAY DATA, CONTACT RIGHT OF WAY ENGINEERING AT THE DISTRICT OFFICE.

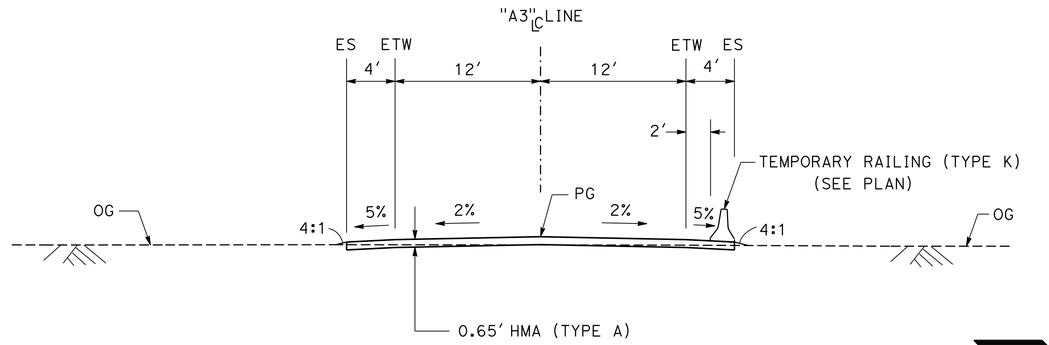

SECTION B-B
"A3"9+50.00 TO "A3" 22+00.00

TEMPORARY ROADWAY

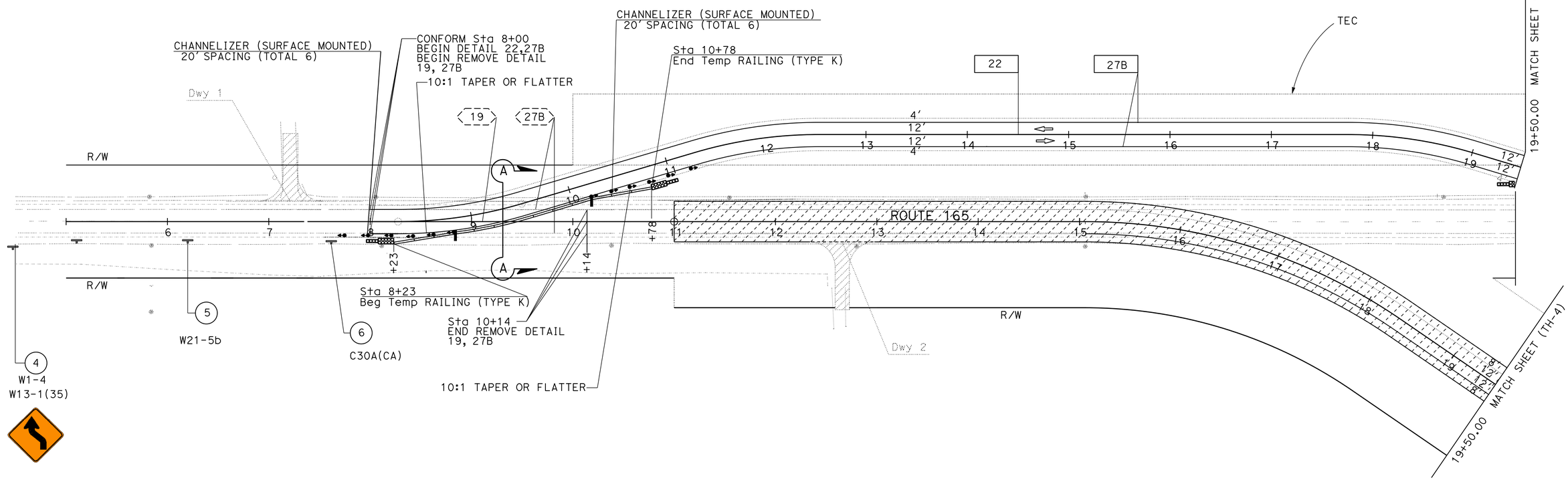

TRAFFIC HANDLING PLAN

(STAGE II)

SCALE: 1" = 50′

TH-3

APPROVED FOR TRAFFIC HANDLING WORK ONLY

STATE OF CALIFORNIA - DEPARTMENT OF TRANSPORTATION
Caltrans
TRAFFIC DESIGN

FUNCTIONAL SUPERVISOR: MOHAMMED QATAMI

CALCULATED-DESIGNED BY: CECILE NGUYEN
CHECKED BY: HUE NGUYEN

REVISED BY
DATE REVISED

LAST REVISION 03-21-16
DATE PLOTTED => 09-MAY-2016
TIME PLOTTED => 09:59

Dist	COUNTY	ROUTE	POST MILES TOTAL PROJECT	SHEET No.	TOTAL SHEETS
10	Mer	165	29.8/30.3	30	68

REGISTERED CIVIL ENGINEER 4/1/16 DATE

4-4-16
PLANS APPROVAL DATE

REGISTERED PROFESSIONAL ENGINEER HUE NGUYEN No. 74484 Exp. 12/31/17 CIVIL STATE OF CALIFORNIA

THE STATE OF CALIFORNIA OR ITS OFFICERS OR AGENTS SHALL NOT BE RESPONSIBLE FOR THE ACCURACY OR COMPLETENESS OF SCANNED COPIES OF THIS PLAN SHEET.

NOTE:

FOR ACCURATE RIGHT OF WAY DATA, CONTACT RIGHT OF WAY ENGINEERING AT THE DISTRICT OFFICE.

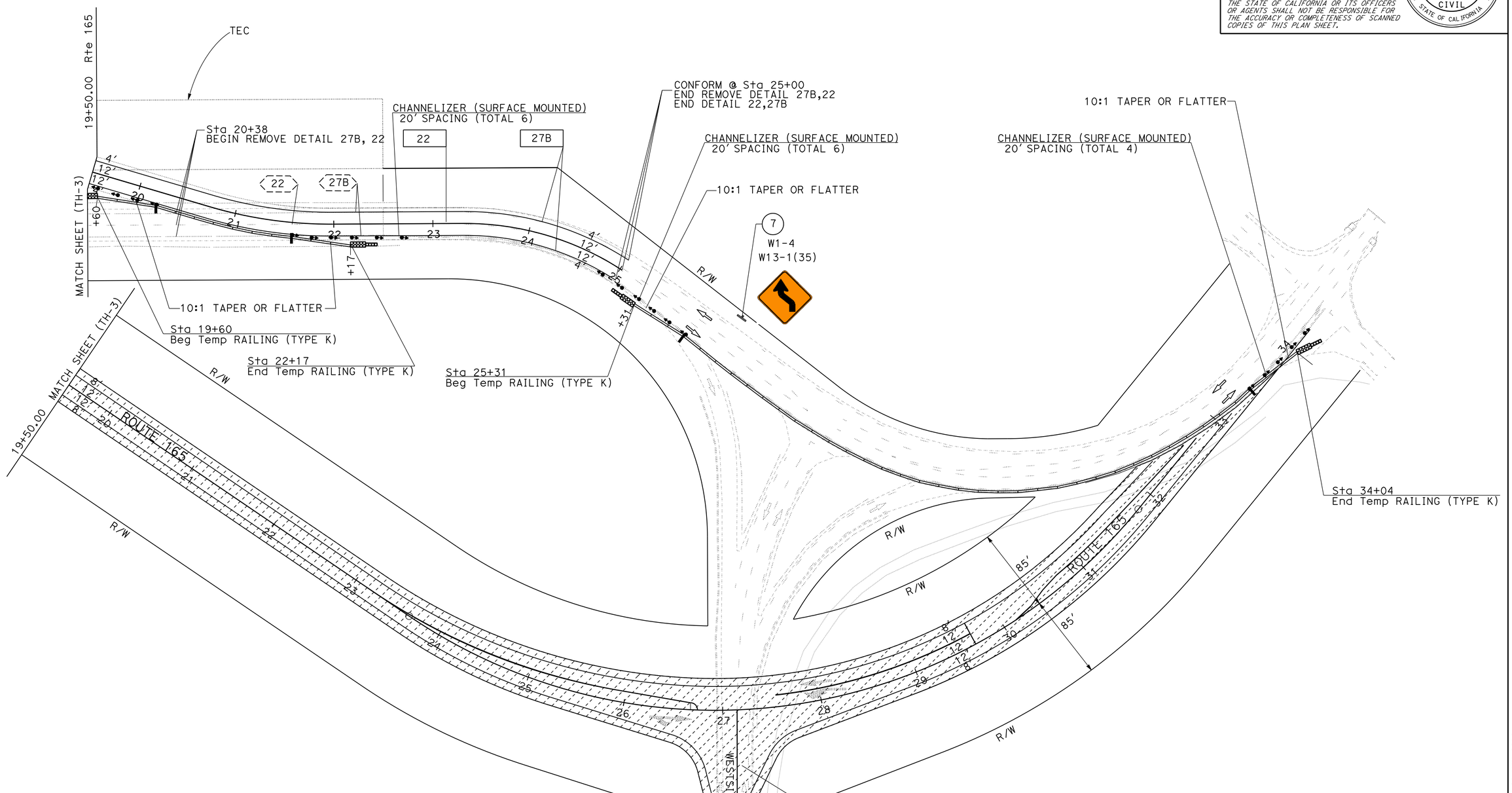

TRAFFIC HANDLING PLAN
(STAGE II)
SCALE: 1" = 50'

TH-4

APPROVED FOR TRAFFIC HANDLING WORK ONLY

REVISED BY | DATE REVISED

CALCULATED-DESIGNED BY: CECILE NGUYEN
CHECKED BY: HUE NGUYEN

FUNCTIONAL SUPERVISOR: MOHAMMED QATAMI

STATE OF CALIFORNIA - DEPARTMENT OF TRANSPORTATION
Caltrans
TRAFFIC DESIGN

LAST REVISION 03-21-16 | DATE PLOTTED => 09-MAY-2016 | TIME PLOTTED => 09:59

Dist	COUNTY	ROUTE	POST MILES TOTAL PROJECT	SHEET No.	TOTAL SHEETS
10	Mer	165	29.8/30.3	31	68

REGISTERED CIVIL ENGINEER 4/1/16 DATE

4-4-16
PLANS APPROVAL DATE

REGISTERED PROFESSIONAL ENGINEER HUE NGUYEN No. 74484 Exp. 12/31/17 CIVIL STATE OF CALIFORNIA

THE STATE OF CALIFORNIA OR ITS OFFICERS OR AGENTS SHALL NOT BE RESPONSIBLE FOR THE ACCURACY OR COMPLETENESS OF SCANNED COPIES OF THIS PLAN SHEET.

NOTES: 1. CAS EXACT SIGN LOCATIONS TO BE DETERMINED BY THE ENGINEER.
2. SEE CONSTRUCTION AREA SIGN AND MOTORIST INFORMATION SHEETS FOR MORE CAS.

STATIONARY MOUNTED CONSTRUCTION AREA SIGN (TRAFFIC HANDLING)

STAGE	SHEET No.	SIGN No.	SIGN CODE FEDERAL	SIGN CODE CALIFORNIA	SIGN MESSAGE	SIGN PANEL	No. OF POST AND SIZE	No. OF SIGN EACH	REMARK
I	TH-2	1	W21-5		SHOULDER WORK	36" x 36"	1- 4" x 6"	1	
		2	W21-5b		RIGHT SHOULDER CLOSED 1000'	36" x 36"	1- 4" x 6"	1	
		3	C30A(CA)		SHOULDER CLOSED	36" x 36"	1- 4" x 6"	1	
II	TH-3	4	W1-4		REVERSE CURVE	36" x 36"	1- 4" x 6"	1	
			W13-1p(35)		ADVISORY SPEED (PLAQUE)	18" x 18"			
		5	W21-5b		RIGHT SHOULDER CLOSED 1000'	36" x 36"	1- 4" x 6"	1	
		6	C30A(CA)		SHOULDER CLOSED	36" x 36"	1- 4" x 6"	1	
	TH-4	7	W1-4		REVERSE CURVE	36" x 36"	1- 4" x 6"	1	
			W13-1p(35)		ADVISORY SPEED (PLAQUE)	18" x 18"			

TEMPORARY RAILING (TYPE K)

SHEET No.	LOCATION	LF
TH-1	Sta 8+14 TO Sta 10+34	220
TH-2	Sta 19+59 TO Sta 21+59	200
TH-3	Sta 8+23 TO Sta 10+78	260
TH-4	Sta 19+60 TO Sta 22+17	260
	Sta 25+31 TO Sta 34+04	880
TOTAL		1,820

CHANNELIZER (SURFACE MOUNTED)

STAGE	SHEET No.	EA
I	TH-1	10
	TH-2	9
II	TH-3	12
	TH-4	22
	TOTAL	53

TEMPORARY PAVEMENT DELINEATION

SHEET No.	LOCATION	REMOVE YELLOW THERMOPLASTIC TRAFFIC STRIPE (HAZARDOUS WASTE)	REMOVE THERMOPLASTIC TRAFFIC STRIPE	REMOVE PAVEMENT MARKER	DETAIL	TEMPORARY PAVEMENT MARKER	TEMPORARY TRAFFIC STRIPE (PAINT) 4" SOLID YELLOW	TEMPORARY TRAFFIC STRIPE (PAINT) 4" SOLID WHITE
		LF	LF	EA		EA	LF	
TH-3	Sta 8+00 TO Sta 10+14	268	428	16	19, 27B			
	Sta 8+00 TO Sta 19+50				22, 27B	98	1,150	2,300
TH-4	Sta 20+38 TO Sta 25+00	924	924	42	22, 27B			
	Sta 19+50 TO Sta 25+00				22, 27B	48	550	1,100
SUBTOTAL		1,192	1,352	58		146	1,700	3,400
TOTAL		1,192	1,352	58		146	5,100	

TEMPORARY CRASH CUSHION MODULE

SHEET No.	ARRAY "TS11" EA
TH-1	22
TH-2	22
TH-4	22
TH-5	44
TOTAL	110

TRAFFIC HANDLING QUANTITIES

THQ-1

REVISED BY | DATE REVISED
CECILE NGUYEN | HUE NGUYEN
CALCULATED-DESIGNED BY | CHECKED BY
FUNCTIONAL SUPERVISOR: MOHAMMED QATAMI
STATE OF CALIFORNIA - DEPARTMENT OF TRANSPORTATION
Caltrans TRAFFIC DESIGN

LAST REVISION 03-04-16 | DATE PLOTTED => 09-MAY-2016 TIME PLOTTED => 09:59

Dist	COUNTY	ROUTE	POST MILES TOTAL PROJECT	SHEET No.	TOTAL SHEETS
10	Mer	165	29.8/30.3	32	68

REGISTERED CIVIL ENGINEER 4/1/16 DATE

4-4-16
PLANS APPROVAL DATE

REGISTERED PROFESSIONAL ENGINEER HUE NGUYEN No. 74484 Exp. 12/31/17 CIVIL STATE OF CALIFORNIA

THE STATE OF CALIFORNIA OR ITS OFFICERS OR AGENTS SHALL NOT BE RESPONSIBLE FOR THE ACCURACY OR COMPLETENESS OF SCANNED COPIES OF THIS PLAN SHEET.

LEGEND:

- TYPE III BARICADE
- LETTER*, CONSTRUCTION AREA SIGN (PORTABLE)
- PORTABLE CHANGABLE MESSAGE SIGN (PCMS)

NOTES:

1. EXACT LOCATION OF SIGNS TO BE DETERMINED BY THE ENGINEER.
2. FOR ADDITIONAL CONSTRUCTION AREA SIGNS, SEE SHEET CS-1 AND TRAFFIC HANDLING SHEETS.

4/14/16

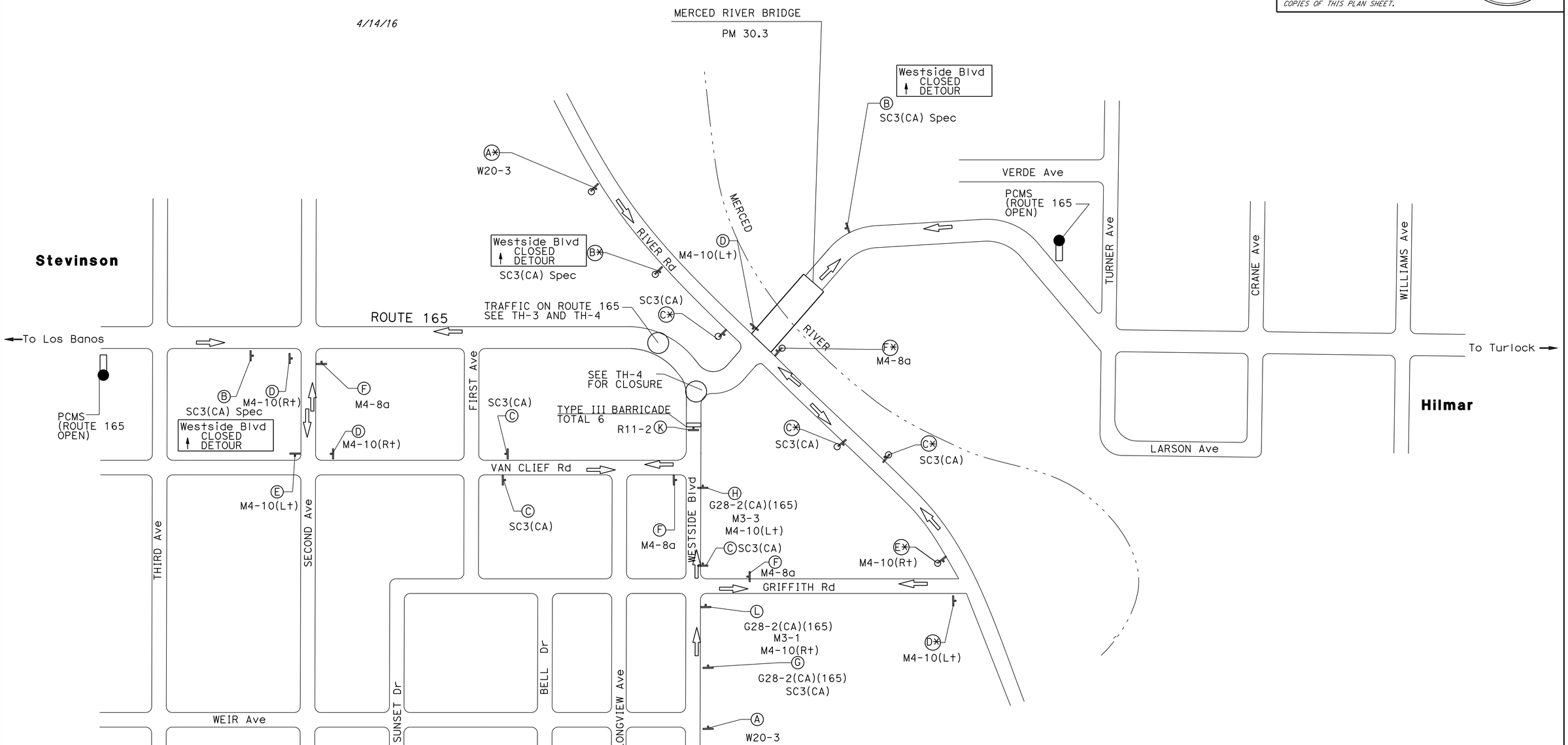

MOTORIST INFORMATION PLAN

NO SCALE

MI-1

APPROVED FOR MOTORIST INFORMATION ONLY

STATE OF CALIFORNIA - DEPARTMENT OF TRANSPORTATION
Caltrans® **TRAFFIC DESIGN**

FUNCTIONAL SUPERVISOR: MOHAMMED QATAMI

CALCULATED-DESIGNED BY: CECILE NGUYEN
CHECKED BY
REVISED BY
DATE REVISED

LAST REVISION 03-21-16
DATE PLOTTED => 09-MAY-2016
TIME PLOTTED => 09:59

Dist	COUNTY	ROUTE	POST MILES TOTAL PROJECT	SHEET No.	TOTAL SHEETS
10	Mer	165	29.8/30.3	33	68

REGISTERED CIVIL ENGINEER 4/14/16 DATE

4-4-16
PLANS APPROVAL DATE

REGISTERED PROFESSIONAL ENGINEER HUE NGUYEN No. 74484 Exp. 12/31/17 CIVIL STATE OF CALIFORNIA

THE STATE OF CALIFORNIA OR ITS OFFICERS OR AGENTS SHALL NOT BE RESPONSIBLE FOR THE ACCURACY OR COMPLETENESS OF SCANNED COPIES OF THIS PLAN SHEET.

NOTES: 1. EXACT SIGN LOCATIONS TO BE DETERMINED BY THE ENGINEER.
2. FOR ADDITIONAL CONSTRUCTION AREA SIGNS, SEE SHEET CS-1 AND TRAFFIC HANDLING SHEETS.

CONSTRUCTION AREA SIGNS (STATIONARY MOUNTED)(TRAFFIC HANDLING) AND BARRICADE

SIGN	SIGN CODE FEDERAL	SIGN CODE CALIFORNIA	PANEL SIZE	SIGN MESSAGE	QUANTITY	No. OF POST	TYPE III BARRICADE (EA)	REMARK
A	W20-3		48" x 48"	ROAD CLOSED AHEAD	2	1- 6" x 6"		
B		SC3(CA)Spec	78" x 42"	WESTSIDE Blvd CLOSED ↑ DETOUR	3	2- 4" x 6"		
C		SC3(CA)	36" x 12"	DETOUR UP ARROW	6	1- 4" x 4"		
D	M4-10(L†)		30" x 24"	DETOUR ARROW (L†)	3	1- 4" x 4"		
E	M4-10(R†)		30" x 24"	DETOUR ARROW (R†)	3	1- 4" x 4"		
F	M4-8a		24" x 12"	END DETOUR	4	1- 4" x 4"		
G		G28-2(CA)(165)	28" x 25"	STATE ROUTE MARKER(165)	1	1- 4" x 4"		
		SC3(CA)	36" x 12"	DETOUR UP ARROW				
H		G28-2(CA)(165)	28" x 25"	STATE ROUTE MARKER(165)	1	1- 4" x 4"		
	M3-3		26" x 12"	SOUTH				
	M4-10(L†)		30" x 24"	DETOUR(L†)				
K		R11-2	48" x 30"	ROAD CLOSED	1		6	MOUNT ON BARRICADES
L		G28-2(CA)(165)	28" x 25"	STATE ROUTE MARKER(165)	1	1- 4" x 4"		
	M3-1		26" x 12"	NORTH				
	M4-10(R†)		30" x 24"	DETOUR(R†)				
TOTAL							6	

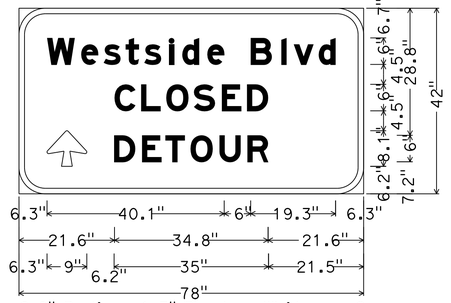

6.0" Radius, 1.3" Border, White on Orange;
[Westside Blvd] Black E Mod;
[CLOSED] Black E Mod;
Arrow 5CAP-2LH - 8.1" 90° Black;
[DETOUR] Black E Mod;

SIGN B

MOTORIST INFORMATION QUANTITIES

MIQ-1

REVISED BY | DATE REVISED
CECILE NGUYEN | HUE NGUYEN
CALCULATED-DESIGNED BY | CHECKED BY
FUNCTIONAL SUPERVISOR: MOHAMMED QATAMI

STATE OF CALIFORNIA - DEPARTMENT OF TRANSPORTATION
Caltrans® TRAFFIC DESIGN

LAST REVISION 03-04-16 | DATE PLOTTED => 09-MAY-2016 | TIME PLOTTED => 09:59

Dist	COUNTY	ROUTE	POST MILES TOTAL PROJECT	SHEET No.	TOTAL SHEETS
10	Mer	165	29.8/30.3	34	68

REGISTERED CIVIL ENGINEER 4/1/16 DATE

4-4-16
PLANS APPROVAL DATE

REGISTERED PROFESSIONAL ENGINEER HUE NGUYEN No. 74484 Exp. 12/31/17 CIVIL STATE OF CALIFORNIA

THE STATE OF CALIFORNIA OR ITS OFFICERS OR AGENTS SHALL NOT BE RESPONSIBLE FOR THE ACCURACY OR COMPLETENESS OF SCANNED COPIES OF THIS PLAN SHEET.

LEGEND:

- CHANGE OF PAVEMENT DELINEATION DETAILS
- REMOVE ROADSIDE SIGN
- REMOVE ROADSIDE SIGN (STRAP AND SADDLE BRACKET METHOD)
- INSTALL SIGN (STRAP AND SADDLE BRACKET METHOD)
- RELOCATE ROADSIDE SIGN FROM / TO
- THERMOPLASTIC PAVEMENT MARKING
- REMOVE THERMOPLASTIC PAVEMENT MARKING
- DELINEATOR. (TYPE E OR F)

NOTES:

FOR ACCURATE RIGHT OF WAY DATA, CONTACT RIGHT OF WAY ENGINEERING AT THE DISTRICT OFFICE.

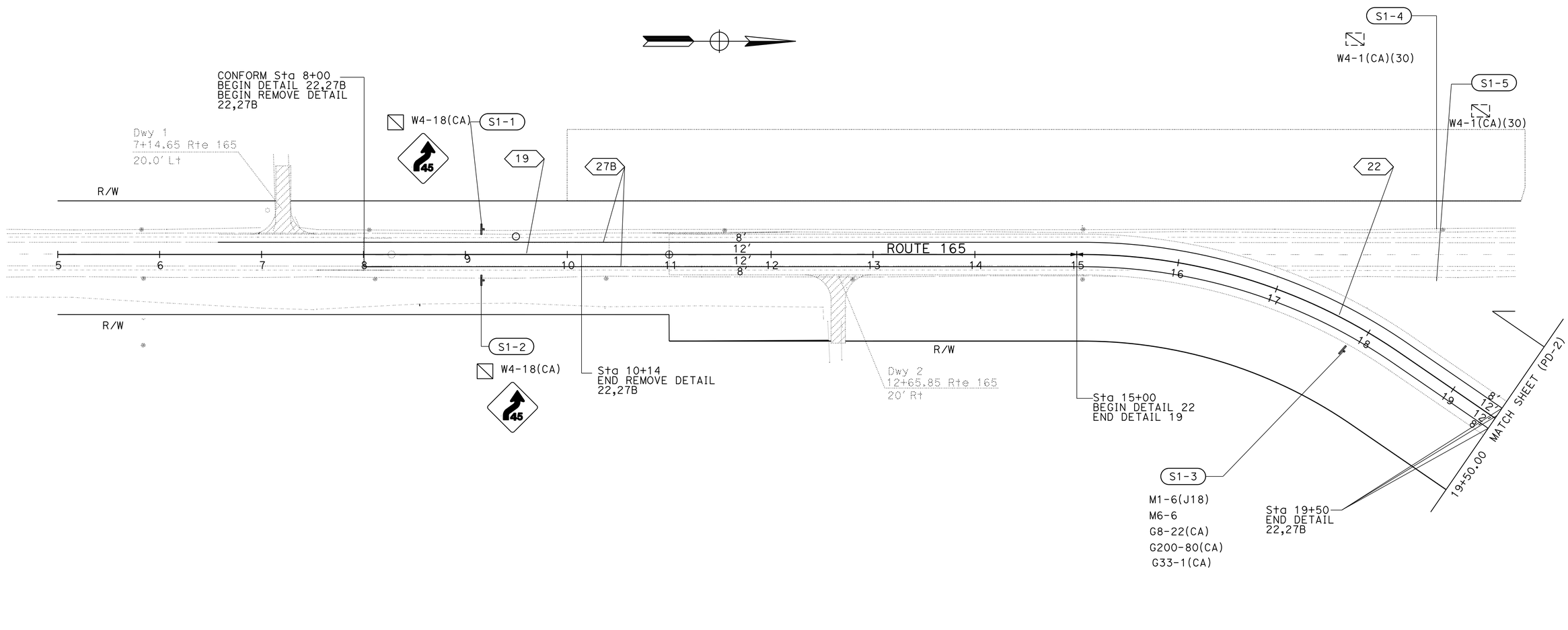

PAVEMENT DELINEATION AND SIGN PLAN

PD-1

SCALE: 1" = 50'

APPROVED FOR PAVEMENT DELINEATION AND SIGN WORK ONLY

STATE OF CALIFORNIA - DEPARTMENT OF TRANSPORTATION
Caltrans® **TRAFFIC DESIGN**

FUNCTIONAL SUPERVISOR: MOHAMMED QATAMI
CALCULATED-DESIGNED BY: CECILE NGUYEN
CHECKED BY: HUE NGUYEN
REVISED BY
DATE REVISED

LAST REVISION 03-04-16
DATE PLOTTED => 09-MAY-2016
TIME PLOTTED => 09:59

Dist	COUNTY	ROUTE	POST MILES TOTAL PROJECT	SHEET No.	TOTAL SHEETS
10	Mer	165	29.8/30.3	35	68

REGISTERED CIVIL ENGINEER 4/1/16 DATE

4-4-16
PLANS APPROVAL DATE

REGISTERED PROFESSIONAL ENGINEER HUE NGUYEN No. 74484 Exp. 12/31/17 CIVIL STATE OF CALIFORNIA

THE STATE OF CALIFORNIA OR ITS OFFICERS OR AGENTS SHALL NOT BE RESPONSIBLE FOR THE ACCURACY OR COMPLETENESS OF SCANNED COPIES OF THIS PLAN SHEET.

NOTE:

FOR ACCURATE RIGHT OF WAY DATA, CONTACT RIGHT OF WAY ENGINEERING AT THE DISTRICT OFFICE.

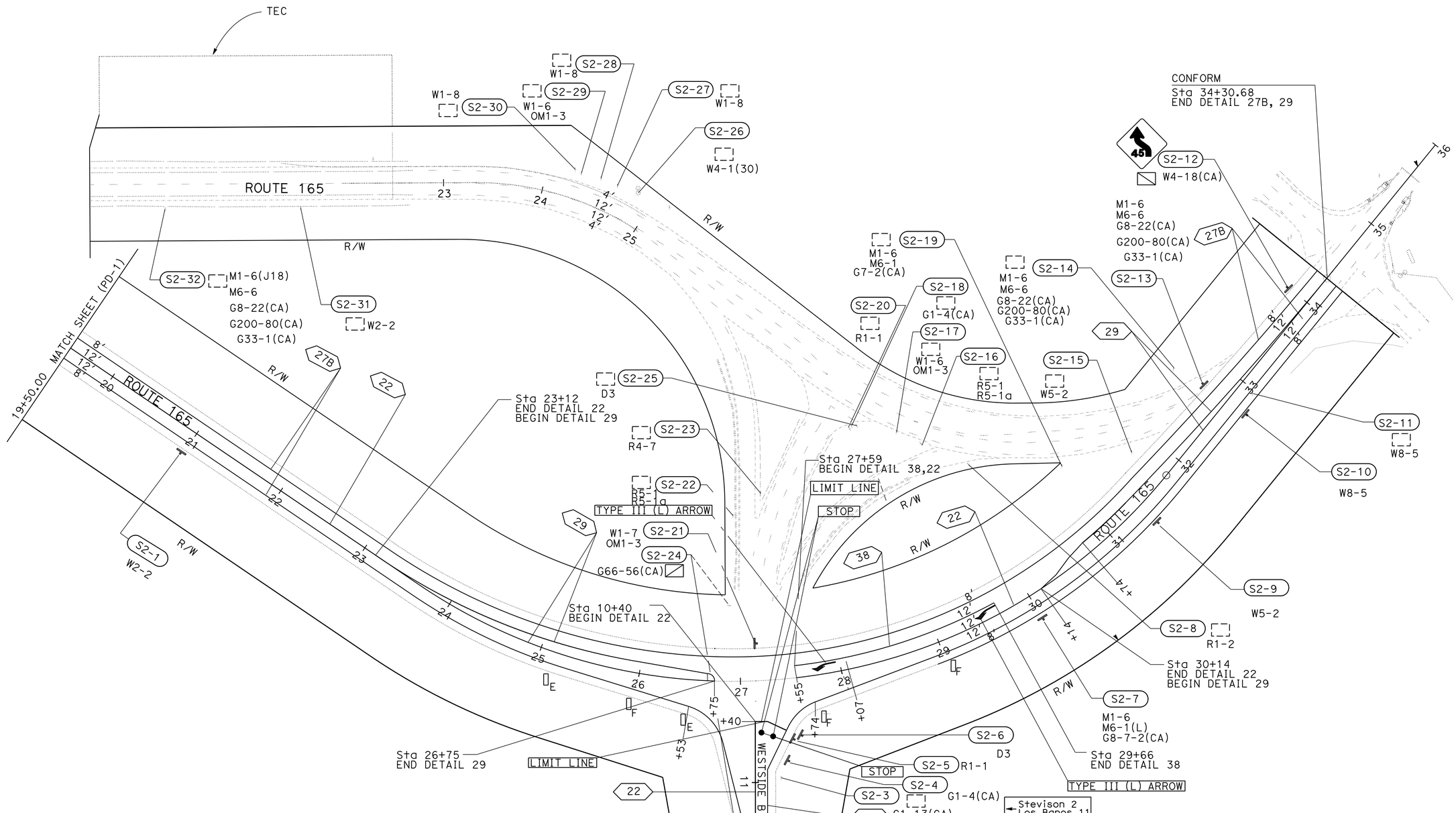

APPROVED FOR PAVEMENT DELINEATION AND SIGN WORK ONLY

PAVEMENT DELINEATION AND SIGN PLAN

PD-2

SCALE: 1" = 50'

REVISED BY	DATE REVISED

CECILE NGUYEN — HUE NGUYEN — CALCULATED-DESIGNED BY — CHECKED BY

FUNCTIONAL SUPERVISOR: MOHAMMED QATAMI

STATE OF CALIFORNIA - DEPARTMENT OF TRANSPORTATION

Caltrans® TRAFFIC DESIGN

LAST REVISION 03-21-16 | DATE PLOTTED => 09-MAY-2016 | TIME PLOTTED => 09:59

Dist	COUNTY	ROUTE	POST MILES TOTAL PROJECT	SHEET No.	TOTAL SHEETS
10	Mer	165	29.8/30.3	36	68

REGISTERED CIVIL ENGINEER 4/14/16 DATE

4-4-16
PLANS APPROVAL DATE

REGISTERED PROFESSIONAL ENGINEER HUE NGUYEN No. 74484 Exp. 12/31/17 CIVIL STATE OF CALIFORNIA

THE STATE OF CALIFORNIA OR ITS OFFICERS OR AGENTS SHALL NOT BE RESPONSIBLE FOR THE ACCURACY OR COMPLETENESS OF SCANNED COPIES OF THIS PLAN SHEET.

NOTE:

FOR ACCURATE RIGHT OF WAY DATA, CONTACT RIGHT OF WAY ENGINEERING AT THE DISTRICT OFFICE.

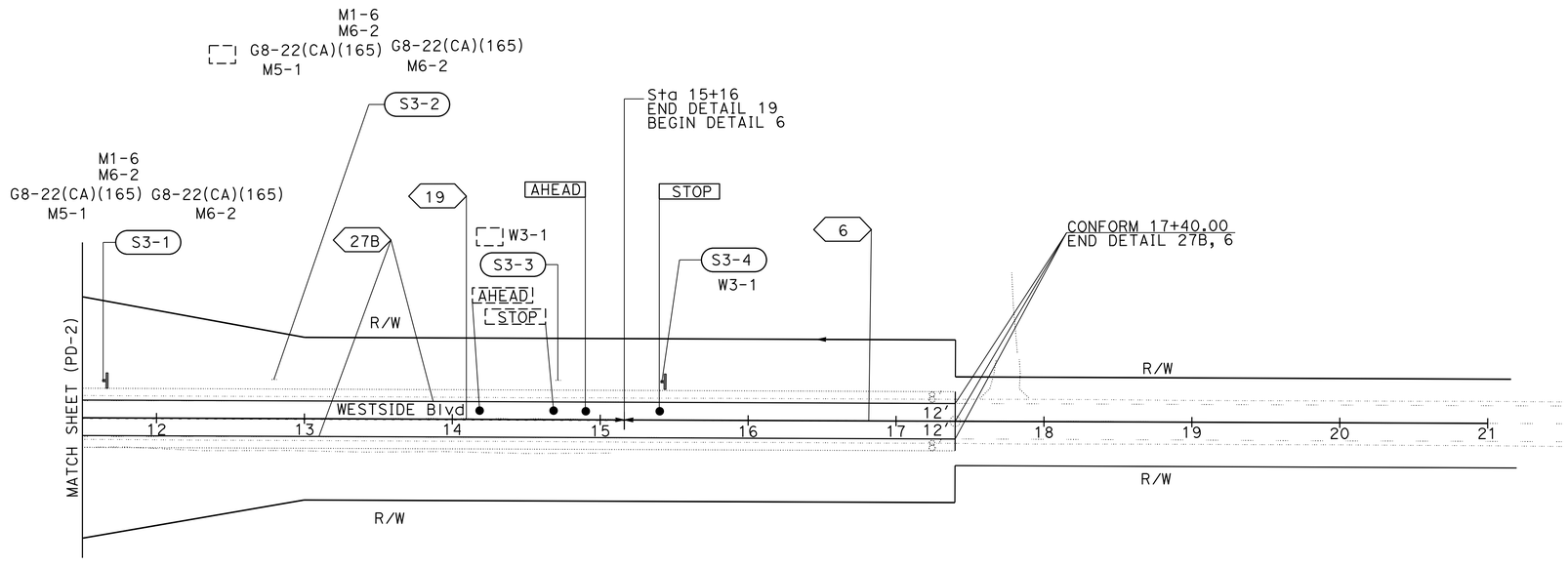

PAVEMENT DELINEATION AND SIGN PLAN

PD-3

SCALE: 1" = 50'

APPROVED FOR PAVEMENT DELINEATION AND SIGN WORK ONLY

STATE OF CALIFORNIA - DEPARTMENT OF TRANSPORTATION

Caltrans® **TRAFFIC DESIGN**

FUNCTIONAL SUPERVISOR: MOHAMMED QATAMI

CALCULATED-DESIGNED BY: CECILE NGUYEN

CHECKED BY: HUE NGUYEN

REVISED BY

DATE REVISED

LAST REVISION 03-04-16 | DATE PLOTTED => 09-MAY-2016 | TIME PLOTTED => 09:59

Dist	COUNTY	ROUTE	POST MILES TOTAL PROJECT	SHEET No.	TOTAL SHEETS
10	Mer	165	29.8/30.3	37	68

REGISTERED CIVIL ENGINEER 4/1/16 DATE

4-4-16
PLANS APPROVAL DATE

REGISTERED PROFESSIONAL ENGINEER HUE NGUYEN No. 74484 Exp. 12/31/17 CIVIL STATE OF CALIFORNIA

THE STATE OF CALIFORNIA OR ITS OFFICERS OR AGENTS SHALL NOT BE RESPONSIBLE FOR THE ACCURACY OR COMPLETENESS OF SCANNED COPIES OF THIS PLAN SHEET.

PAVEMENT DELINEATION ITEMS

SHEET No.	LOCATION	THERMOPLASTIC TRAFFIC STRIPE (SPRAYABLE) DETAIL 6 4" BROKEN YELLOW	19 4" SOLID BROKEN YELLOW	21 4" SOLID YELLOW	22 4" SOLID YELLOW	29 4" DOUBLE SOLID YELLOW	38 8" SOLID WHITE	27B 4" SOLID WHITE	PAVEMENT MARKER (RETROREFLECTIVE) TYPE D	G	H	THERMOPLASTIC PAVEMENT MARKING TYPE III(L) ARROW	LIMIT LINE	STOP	AHEAD	DELINEATOR (CLASS 1) TYPE F	E
		LF	LF	LF	LF	LF	LF	LF	EA			SQFT				EA	
PD-1	Sta 8+00 TO Sta 19+50							2,300									
	Sta 8+00 TO Sta 15+00		700						16		30						
	Sta 15+00 TO Sta 19+50				450				40								
PD-2	Sta 19+50 TO Sta 23+12				362				32								
	Sta 23+12 TO Sta 26+75					726			32								
	Sta 27+55 TO Sta 30+14				259				24			84					
	Sta 27+55 TO Sta 29+66						211			10							
	Sta 30+14 TO Sta 34+31					834			38							3	2
	Sta 19+50 TO Sta 34+31							2,862									
	WESTSIDE Blvd Sta 10+40 TO Sta 11+50			110									33	44			
	Sta 10+05 TO Sta 11+50							290									
PD-3	WESTSIDE Blvd Sta 11+50 TO Sta 15+16		366						10		16						
	Sta 15+16 TO Sta 17+40	224							6					22	31		
	Sta 11+50 TO Sta 17+40							1,180									
SUBTOTAL		224	1066	110	1,071	1560	211	6,632	198	10	46	84	33	66	31	3	2
TOTAL		10,874							254			214				5	

PAVEMENT DELINEATION QUANTITIES
PDQ-1

REVISED BY | DATE REVISED
CECILE NGUYEN | HUE NGUYEN
CALCULATED-DESIGNED BY | CHECKED BY
FUNCTIONAL SUPERVISOR
MOHAMMED QATAMI

STATE OF CALIFORNIA - DEPARTMENT OF TRANSPORTATION
Caltrans® TRAFFIC DESIGN

LAST REVISION 01-20-16 | DATE PLOTTED => 09-MAY-2016 TIME PLOTTED => 09:59

Dist	COUNTY	ROUTE	POST MILES TOTAL PROJECT	SHEET No.	TOTAL SHEETS
10	Mer	165	29.8/30.3	38	68

REGISTERED CIVIL ENGINEER 4/1/16 DATE

4-4-16
PLANS APPROVAL DATE

REGISTERED PROFESSIONAL ENGINEER
HUE NGUYEN
No. 74484
Exp. 12/31/17
CIVIL
STATE OF CALIFORNIA

THE STATE OF CALIFORNIA OR ITS OFFICERS OR AGENTS SHALL NOT BE RESPONSIBLE FOR THE ACCURACY OR COMPLETENESS OF SCANNED COPIES OF THIS PLAN SHEET.

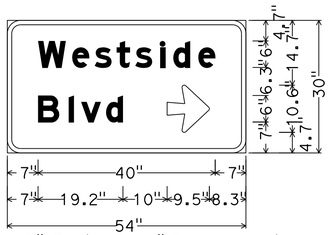

3.0" Radius, 1.0" Border, White on Green;
[Westside] E Mod;
[Blvd] E Mod;
Arrow 6UC-2LH - 9.6" 0°{;

S1-2
G8-22(CA)

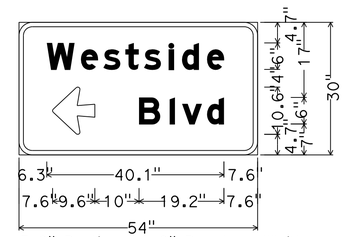

3.0" Radius, 1.0" Border, White on Green;
[Westside] E Mod;
Arrow 6UC-2LH - 9.6" 180°{;
[Blvd] E Mod;

S2-13
G8-22(CA)

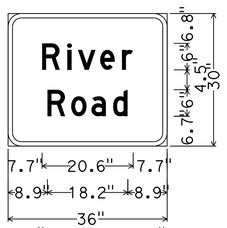

3.0" Radius, 1.0" Border, White on Green;
[River] E Mod; [Road] E Mod;

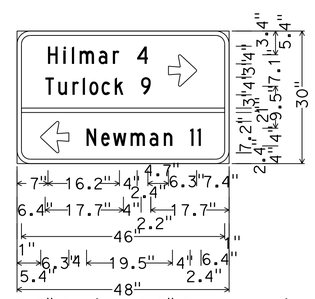

3.0" Radius, 1.0" Border, White on Green;
[Hilmar 4] C; [Turlock 9] C;
Arrow 4UC&CAP-2LH - 6.4" 0°{;
Arrow 4UC&CAP-2LH - 6.4" 180°{;
[Newman 11] C;

S2-3
G1-13(CA)

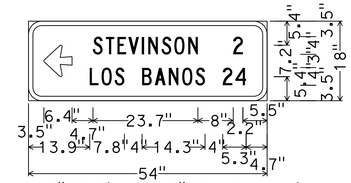

3.0" Radius, 1.0" Border, White on Green;
Arrow 4UC&CAP-2LH - 6.4" 180°{;
[STEVINSON 2] C;
[LOS BANOS 24] C;

S2-5
G1-4(CA)

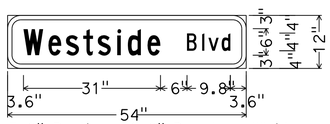

3.0" Radius, 1.0" Border, White on Green;
[Westside Blvd] C;

S2-6
D3

SIGN DETAIL
SD-1

NO SCALE

STATE OF CALIFORNIA - DEPARTMENT OF TRANSPORTATION
Caltrans® TRAFFIC DESIGN

FUNCTIONAL SUPERVISOR: MOHAMMED QATAMI
CALCULATED-DESIGNED BY: CECILE NGUYEN
CHECKED BY: HUE NGUYEN
REVISED BY
DATE REVISED

LAST REVISION 01-20-16
DATE PLOTTED => 09-MAY-2016
TIME PLOTTED => 09:59

NOTE: EXACT SIGN LOCATIONS TO BE DETERMINED BY THE ENGINEER.

Dist	COUNTY	ROUTE	POST MILES TOTAL PROJECT	SHEET No.	TOTAL SHEETS
10	Mer	165	29.8/30.3	39	68

REGISTERED CIVIL ENGINEER 4/14/16 DATE

4-4-16
PLANS APPROVAL DATE

REGISTERED PROFESSIONAL ENGINEER HUE NGUYEN No. 74484 Exp. 12/31/17 CIVIL STATE OF CALIFORNIA

THE STATE OF CALIFORNIA OR ITS OFFICERS OR AGENTS SHALL NOT BE RESPONSIBLE FOR THE ACCURACY OR COMPLETENESS OF SCANNED COPIES OF THIS PLAN SHEET.

ROADSIDE SIGN ITEMS

SHEET No.	DIRECTION	SHEET No.	SIGN CODE FEDERAL	SIGN CODE CALIFORNIA	SIGN MESSAGE	SIZE PANEL	SINGLE FACED	No. OF POST AND SIZE	BACKGROUND LEGEND SHEETING COLOR	RETROREFLECTIVITY ASTM TYPE	SHEETING COLOR	RETROREFLECTIVITY ASTM TYPE	GRAFFITI FLOW STANDARD	GRAFFITI FLOW PREMIUM	FURNISH SINGLE SHEET ALUMINIUM SIGN FOR RETROREFLECTIVE SHEETING (TYPE XI) UNFRAMED 0.080"	0.063"	ROADSIDE SIGN ONE-POST	REMOVE ROADSIDE SIGN	REMOVE ROADSIDE SIGN (STRAP AND SADDLE BRACKET METHOD)	INSTALL SIGN (STRAP AND SADDLE BRACKET METHOD)	TREATED WOOD WASTE	RETROREFLECTIVE SHEETING TYPE XI	RELOCATE ROADSIDE SIGN	REMARK
															SQFT		EA	EA	EA	EA	LB	SQFT	EA	
PD-1	FNBT	S1-1		W4-18(CA)(45)	REVERSE CURVE	36"x36"	x		YELLOW	XI	BLACK	XI		x		9.00				1		9.00		ON FLASHING BEACON
		S1-2		W4-18(CA)(45)	REVERSE CURVE	36"x36"	x		YELLOW	XI	BLACK	XI		x		9.00				1		9.00		
		S1-3	M1-6		COUNTY ROUTE MARKER	18"x30"	x	1-4"x6"	BLUE	XI	YELLOW	XI		x		3.75	1					3.75		
			M6-6		DIRECTION ARROW	21"x15"			BLUE	XI	WHITE	XI				2.20						2.20		
				G8-22(CA)	DESTINATION & STREET NAME WITH ARROW	54"x30"			GREEN	XI	WHITE	XI			11.25							11.25		
				G200-80(CA)	GOLF COURSE	24"x24"			BROWN	XI	WHITE	XI				4.00						4.0		
				G33-1(CA)	DIRECTION ARROW AUXILIARY	24"x6"			BROWN	XI	WHITE	XI				1.00						1.0		
	FSBT	S1-4	W4-1(CA)		COMBINATION TURN / ADVISORY SPEED														1					ON FLASHING BEACON
		S1-5		W4-1(CA)	COMBINATION TURN / ADVISORY SPEED														1					
PD-2	FNBT	S2-1	W2-2		SIDE ROAD PERPENDICULAR	36"x36"	x	1-4"x6"	YELLOW	XI	BLACK	XI		x		9.00	1					9.00		
		S2-2		G1-13(CA)	DESTINATION & STREET NAME WITH ARROW	48"x30"	x	1-4"x6"	GREEN	XI	WHITE	XI		x	10.00		1					10.00		
		S2-3		G1-13(CA)	DESTINATION & STREET NAME WITH ARROW													1			75.00			
		S2-4		G1-4(CA)	DESTINATION	54"x18"	x	1-4"x4"	GREEN	XI	WHITE	XI		x	6.75		1					6.75		
		S2-5	R1-1		STOP	36"x36"	x	1-4"x6"	RED	XI	WHITE	XI		x		9.00	1					9.00		
		S2-6	D3		STREET NAME SIGN	54"x12"		1-4"x4"	GREEN	XI	WHITE	XI			4.50		1					4.50		
		S2-7	M1-6		COUNTY ROUTE MARKER	18"x30"	x	1-4"x4"	BLUE	XI	YELLOW	XI				3.75	1					3.75		
			M6-1(L)		DIRECTION ARROW	21"x15"			BLUE	XI	YELLOW	XI				2.20						2.20		
				G7-2(CA)	RIVER ROAD	36"x30"			GREEN	XI	WHITE	XI		x		7.50						7.50		
		S2-8	R2-1		YIELD													1			75.00			
		S2-9	W5-2		NARROW BRIDGE	36"x36"	x	1-4"x6"	YELLOW	XI	BLACK	XI		x		9.00	1					9.00		
		S2-10	W8-5		SLIPERY WHEN WET (SYMBOL)	36"x36"	x	1-4"x6"	YELLOW	XI	BLACK	XI		x		9.00	1					9.00		
		S2-11	W8-5		SLIPERY WHEN WET (SYMBOL)													1			75.00			
	FSBT	S2-12		W4-18(CA)(45)	REVERSE CURVE	36"x36"	x		YELLOW	XI	BLACK	XI		x		9.00				1		9.00		
		S2-13	M1-6		COUNTY ROUTE MARKER	18"x30"	x	1-4"x6"	BLUE	XI	YELLOW	XI		x		3.75	1					3.75		
			M6-6(L)		DIRECTION ARROW	21"x15"			BLUE	XI	WHITE	XI				2.20						2.20		
				G8-22(CA)	DESTINATION & STREET NAME WITH ARROW	54"x30"			GREEN	XI	WHITE	XI			11.25							11.25		
				G200-80(CA)	GOLF COURSE	24"x24"			BROWN	XI	WHITE	XI				4.00						4.0		
				G33-1(CA)(L)	DIRECTION ARROW AUXILIARY	24"x6"			BROWN	XI	WHITE	XI				1.00						1.0		
		S2-14	M1-6		COUNTY ROUTE MARKER													1			75.00			
			M6-6(L)		DIRECTION ARROW																			
				G8-22(CA)	DESTINATION & STREET NAME WITH ARROW																			
				G200-80(CA)	GOLF COURSE																			
				G33-1(CA)(L)	DIRECTION ARROW AUXILIARY																			
													TOTAL		43.75	98.35	10	4	2	3	300.00	142.10		

SIGN QUANTITIES
SQ-1

REVISED BY | DATE REVISED

CECILE NGUYEN | HUE NGUYEN

CALCULATED-DESIGNED BY | CHECKED BY

FUNCTIONAL SUPERVISOR: MOHAMMED QATAMI

STATE OF CALIFORNIA - DEPARTMENT OF TRANSPORTATION

Caltrans® TRAFFIC DESIGN

LAST REVISION 03-21-16 | DATE PLOTTED => 09-MAY-2016 | TIME PLOTTED => 09:59

Dist	COUNTY	ROUTE	POST MILES TOTAL PROJECT	SHEET No.	TOTAL SHEETS
10	Mer	165	29.8/30.3	40	68

REGISTERED CIVIL ENGINEER 4/1/16 DATE

4-4-16
PLANS APPROVAL DATE

REGISTERED PROFESSIONAL ENGINEER HUE NGUYEN No. 74484 Exp. 12/31/17 CIVIL STATE OF CALIFORNIA

THE STATE OF CALIFORNIA OR ITS OFFICERS OR AGENTS SHALL NOT BE RESPONSIBLE FOR THE ACCURACY OR COMPLETENESS OF SCANNED COPIES OF THIS PLAN SHEET.

NOTE: EXACT SIGN LOCATIONS TO BE DETERMINED BY THE ENGINEER.

ROADSIDE SIGN ITEMS

SHEET No.	DIRECTION	SHEET No.	SIGN CODE FEDERAL	SIGN CODE CALIFORNIA	SIGN MESSAGE	SIZE PANEL	SINGLE FACED	No. OF POST AND SIZE	BACKGROUND SHEETING COLOR	BACKGROUND RETROREFLECTIVITY ASTM TYPE	LEGEND SHEETING COLOR	LEGEND RETROREFLECTIVITY ASTM TYPE	GRAFFITI FLOW STANDARD	GRAFFITI FLOW PREMIUM	FURNISH SINGLE SHEET ALUMINIUM SIGN FOR RETROREFLECTIVE SHEETING (TYPE XI) UNFRAMED 0.080" (SQFT)	FURNISH SINGLE SHEET ALUMINIUM SIGN FOR RETROREFLECTIVE SHEETING (TYPE XI) UNFRAMED 0.063" (SQFT)	ROADSIDE SIGN ONE-POST (EA)	REMOVE ROADSIDE SIGN (EA)	REMOVE ROADSIDE SIGN (STRAP AND SADDLE BRACKET METHOD) (EA)	INSTALL SIGN (STRAP AND SADDLE BRACKET METHOD) (EA)	TREATED WOOD WASTE (LB)	RETROREFLECTIVE SHEETING TYPE XI (SQFT)	RELOCATE ROADSIDE SIGN (EA)	REMARK
FWBT	FNBT	S2-15	W5-2		NARROW BRIDGE													1			75.00			
		S2-16	R5-1		DO NOT ENTER													1			75.00			
			R5-1a		WRONG WAY																			
		S2-17	W1-6		DIRECTION ARROW													1			45.00			
			OM1-3		OBJECT MARKER TYPE N																			
		S2-18	G1-4(CA)		DESTINATION													1			45.00			
		S2-19	M1-6		COUNTY ROUTE MARKER																			
			M6-1(L)		DIRECTION ARROW													1			45.00			
				G7-2(CA)	RIVER ROAD																			
		S2-20	R1-1		STOP													1			75.00			
	FEBT	S2-21	W1-7		LARGE ARROW (2-DIRECTION)	36"x18"	x	1-4"x4"	YELLOW	XI	BLACK	XI		x		4.50	1					4.50		
			OM1-3		OBJECT MARKER TYPE N	18"x18"			YELLOW	XI	BLACK	XI		x		2.25						2.25		
PD-2	FWBT	S2-22	R5-1		DO NOT ENTER													1			75.00			
			R5-1a		WRONG WAY													1			45.00			
		S2-23	R4-7		KEEP RIGHT (SYMBOL)																			
	FNBT	S2-24	G66-56(CA)		BREAK CHECK AREA																		1	METAL POST
		S2-25	D3		STREET NAME													1			45.00			
		S2-26	W4-1(30)		COMBINATION TURN/ADVISORY SPEED													1			45.00			
		S2-27	W1-8		CHEVRON ALIGNMENT													1			45.00			
		S2-28	W1-8		CHEVRON ALIGNMENT													1			45.00			
	FSBT	S2-29	W1-6		DIRECTION ARROW													1			45.00			
			OM1-3		OBJECT MARKER TYPE N																			
	FNBT	S2-30	W1-8		CHEVRON ALIGNMENT													1			45.00			
	FNBT	S2-31	W2-2		SIDE ROAD PERPENDICULAR													1			75.00			
	FNBT	S2-32	M1-6		COUNTY ROUTE MARKER													1			75.00			
			M6-6		DIRECTION ARROW																			
				G8-22(CA)	DESTINATION & STREET NAME WITH ARROW																			
				G200-80(CA)	GOLF COURSE																			
				G33-1(CA)	DIRECTION ARROW AUXILIARY																			
													TOTAL			6.75	1	16			1,005.00	6.75	1	

SIGN QUANTITIES
SQ-2

REVISED BY | DATE REVISED
CECILE NGUYEN | HUE NGUYEN
CALCULATED-DESIGNED BY | CHECKED BY
FUNCTIONAL SUPERVISOR: MOHAMMED QATAMI

STATE OF CALIFORNIA - DEPARTMENT OF TRANSPORTATION
Caltrans® TRAFFIC DESIGN

LAST REVISION 01-20-16 | DATE PLOTTED => 09-MAY-2016 | TIME PLOTTED => 09:59

Dist	COUNTY	ROUTE	POST MILES TOTAL PROJECT	SHEET No.	TOTAL SHEETS
10	Mer	165	29.8/30.3	41	68

REGISTERED CIVIL ENGINEER 4/1/16 DATE

4-4-16
PLANS APPROVAL DATE

REGISTERED PROFESSIONAL ENGINEER HUE NGUYEN No. 74484 Exp. 12/31/17 CIVIL STATE OF CALIFORNIA

THE STATE OF CALIFORNIA OR ITS OFFICERS OR AGENTS SHALL NOT BE RESPONSIBLE FOR THE ACCURACY OR COMPLETENESS OF SCANNED COPIES OF THIS PLAN SHEET.

NOTE: EXACT SIGN LOCATIONS TO BE DETERMINED BY THE ENGINEER.

ROADSIDE SIGN ITEMS

SHEET No.	DIRECTION	SHEET No.	SIGN CODE FEDERAL	SIGN CODE CALIFORNIA	SIGN MESSAGE	SIZE PANEL	SINGLE FACED	No. OF POST AND SIZE	BACKGROUND SHEETING COLOR	BACKGROUND RETROREFLECTIVITY ASTM TYPE	LEGEND SHEETING COLOR	LEGEND RETROREFLECTIVITY ASTM TYPE	GRAFFITI FLOW STANDARD	GRAFFITI FLOW PREMIUM	FURNISH SINGLE SHEET ALUMINIUM SIGN FOR RETROREFLECTIVE SHEETING (TYPE XI) UNFRAMED 0.080"	FURNISH SINGLE SHEET ALUMINIUM SIGN FOR RETROREFLECTIVE SHEETING (TYPE XI) UNFRAMED 0.063"	ROADSIDE SIGN ONE-POST	REMOVE ROADSIDE SIGN	REMOVE ROADSIDE SIGN (STRAP AND SADDLE BRACKET METHOD)	INSTALL SIGN (STRAP AND SADDLE BRACKET METHOD)	TREATED WOOD WASTE	RETROREFLECTIVE SHEETING TYPE XI	RELOCATE ROADSIDE SIGN
															SQFT		EA	EA	EA	EA	LB	SQFT	EA
PD-3	FWBT	S3-1	M1-6		COUNTY ROUTE MARKER	18"x30"	×	1-4"x4"	BLUE	XI	YELLOW	XI		×		3.75	1					3.75	
			M6-2		DIRECTION ARROW	21"x15"			BLUE	XI	YELLOW	XI				2.19						2.19	
				G8-22(CA)(165)	STATE ROUTE MARKER (165)	28"x25"			GREEN	XI	WHITE	XI				4.86						4.86	
				G8-22(CA)(165)	STATE ROUTE MARKER (165)	28"x25"			GREEN	XI	WHITE	XI				4.86						4.86	
			M5-1		ADVANCE TURN ARROW	21"x15"			GREEN	XI	WHITE	XI				2.19						2.19	
			M6-2		DIRECTION ARROW AUXILIARY	21"x15"			GREEN	XI	WHITE	XI				2.19						2.19	
	FNBT	S3-2	M1-6		COUNTY ROUTE MARKER													1			75.00		
			M6-2		DIRECTION ARROW																		
				G8-22(CA)(165)	STATE ROUTE MARKER (165)																		
				G8-22(CA)(165)	STATE ROUTE MARKER (165)																		
			M5-1		ADVANCE TURN ARROW																		
			M6-2		DIRECTION ARROW AUXILIARY																		
		S3-3	W3-1		STOP AHEAD													1			75.00		
		S3-4	W3-1		STOP AHEAD	36"x36"	×	1-4"x6"	YELLOW	XI	RED/BLACK	XI		×		9.00	1					9.00	
TOTAL THIS SHEET																29.04	2	2			150.00	29.04	
TOTAL SHEET SQ-1															43.75	98.35	10	4	2	3	300.00	142.10	
TOTAL SHEET SQ-2																6.75	1	16			1,005.00	6.75	1
TOTAL															43.75	134.14	13	22	2	3	1,455.00	177.89	1

SIGN QUANTITIES
SQ-3

REVISED BY | DATE REVISED
CECILE NGUYEN | HUE NGUYEN
CALCULATED-DESIGNED BY | CHECKED BY
FUNCTIONAL SUPERVISOR: MOHAMMED QATAMI
STATE OF CALIFORNIA - DEPARTMENT OF TRANSPORTATION
Caltrans® TRAFFIC DESIGN

LAST REVISION 03-04-16 | DATE PLOTTED => 09-MAY-2016 | TIME PLOTTED => 09:59

Dist	COUNTY	ROUTE	POST MILES TOTAL PROJECT	SHEET No.	TOTAL SHEETS
10	Mer	165	29.8/30.3	42	68

REGISTERED CIVIL ENGINEER 4/1/16 DATE

4-4-16
PLANS APPROVAL DATE

REGISTERED PROFESSIONAL ENGINEER ALLEN LAO No. 77656 Exp. 6-30-17 CIVIL STATE OF CALIFORNIA

THE STATE OF CALIFORNIA OR ITS OFFICERS OR AGENTS SHALL NOT BE RESPONSIBLE FOR THE ACCURACY OR COMPLETENESS OF SCANNED COPIES OF THIS PLAN SHEET.

NOTES:

1. (N) NOT A SEPARATE PAY ITEM. FOR INFORMATION ONLY.
2. * QUANTITY INCLUDED IN ROADWAY SUMMARY QUANTITY TABLE.

ROADWAY QUANTITY SUMMARY

LOCATION	STATION	RHMA-G	HMA (TYPE A)	CL 2 AB	TACK COAT	ROADWAY EXCAVATION	ASPHALTIC EMULSION (FOG SEAL COAT)	COLD PLANE AC PVMT	IMPORTED BORROW	EMBANKMENT (N)
		TON	TON	CY	TON	CY	TON	SQYD	CY	CY
ROUTE 165	11+00.00 TO 34+30.68	1,360	2,992	2,208	11	7,445	5		2,263	9,708
WESTSIDE Blvd	10+23.00 TO 17+40.00		1,130	882	3	1,556			546	2,102
Temp Rdwy	8+24.67 TO 22+00.00		1,926		3	618				618
TAPERED EDGE/ROUTE 165	11+00.00 TO 34+30.68		397		2					
DRIVEWAYS		29	41		1					
COLD PLANE PVMT (ROUTE 165)	10+75.00 TO 11+00.00	15	26		1			120		
OBLITERATE SURFACING										
SUBTOTAL		1,404	6,512	3,090	21	9,619	5	120	2,809	12,428
GRADING FACTOR ADJUSTMENT FOR ROADWAY EXCAVATION										1,243
GRAND TOTAL		1,404	6,512	3,090	21	9,619	5	120	2,809	13,671

DRIVEWAYS

LOCATION	STATION	SIDE	PLACE HOT MIX ASPHALT (Misc AREA)	RHMA-G	HMA (TYPE A)
			SQFT	TON	TON
DRIVEWAY 1	7+20.37	L+	802	12	21
DRIVEWAY 2	12+62.59	R+	1,159	17	30
TOTAL			1,961	29 *	41 *

TAPERED EDGE

LOCATION	STATION	SIDE	(N) LENGTH	(N) WIDTH	(N) DEPTH	HMA (TYPE A)
			LF	LF	LF	TON
ROUTE 165	11+00.00 TO 34+30.68	L+	2330	1	1.2	207
ROUTE 165	11+00.00 TO 34+30.68	R+	2130	1	1.2	190
TOTAL						397 *

RUMBLE STRIP (HMA, GROUND-IN INDENTATION)

LOCATION	STATION	SIDE	SHOULDER	CENTERLINE
	PM/PM		STA	STA
ROUTE 165	11+00.00 TO 34+30.45	L+	23	
ROUTE 165	11+00.00 TO 34+30.45	R+	21	
ROUTE 165	11+00.00 TO 34+30.45			22
TOTAL			44	22

OBLITERATE SURFACING

LOCATION	STATION	AREA
		SQYD
Temp Rdwy	8+87.38 TO 21+38.97	3,951
ROUTE 165/ WESTSIDE Blvd	15+05.84 TO 33+23.60	9,677
TOTAL		13,628

SUMMARY OF QUANTITIES

Q-1

REVISED BY	DATE REVISED
PB	03-08-16

PERLITA BALBIN — ALLEN LAO

CALCULATED-DESIGNED BY — CHECKED BY

FUNCTIONAL SUPERVISOR — JOSE A. HUERTA

STATE OF CALIFORNIA - DEPARTMENT OF TRANSPORTATION

Caltrans® DESIGN

LAST REVISION 03-08-16 | DATE PLOTTED => 09-MAY-2016 | TIME PLOTTED => 09:59

Dist	COUNTY	ROUTE	POST MILES TOTAL PROJECT	SHEET No.	TOTAL SHEETS
10	Mer	165	29.8/30.30	43	68

Edward A. Hibbs
LICENSED LANDSCAPE ARCHITECT

4-4-16
PLANS APPROVAL DATE

LICENSED LANDSCAPE ARCHITECT
Edward A. Hibbs No. 1
Signature
2/28/18
Renewal Date
02/05/16
Date
STATE OF CALIFORNIA

THE STATE OF CALIFORNIA OR ITS OFFICERS OR AGENTS SHALL NOT BE RESPONSIBLE FOR THE ACCURACY OR COMPLETENESS OF SCANNED COPIES OF THIS PLAN SHEET.

EROSION CONTROL QUANTITIES

SHEET	LOCATION			AREA (N)		COMPOST	DRY SEED	HYDROMULCH	REMARKS
				L† SIDE	R† SIDE				
	STATION	L†	R†	SQFT		SQFT			
NOT SHOWN ON PLANS	"A1" 10+00 TO 23+00	X		3100.00		3100.00	3100.00	3100.00	TCE
	"A1" 11+00 TO 12+00	X	X	2319.40	2152.70	4472.10	4472.10	4472.10	ROADSIDE SHOULDER
	"A1" 12+00 TO 13+00	X	X	2507.45	2350.15	4857.60	4857.60	4857.60	
	"A1" 13+00 TO 14+00	X	X	2725.45	2540.60	5266.05	5266.05	5266.05	
	"A1" 14+00 TO 15+00	X	X	2967.95	2644.60	5612.55	5612.55	5612.55	
	"A1" 15+00 TO 16+00	X	X	3263.25	2713.75	5977.00	5977.00	5977.00	
	"A1" 16+00 TO 17+00	X	X	3438.70	2734.90	6173.60	6173.60	6173.60	
	"A1" 17+00 TO 18+00	X	X	3381.15	2814.65	6195.80	6195.80	6195.80	
	"A1" 18+00 TO 19+00	X	X	3306.25	2995.55	6301.80	6301.80	6301.80	
	"A1" 19+00 TO 20+00	X	X	3298.90	3181.75	6480.65	6480.65	6480.65	
	"A1" 20+00 TO 21+00	X	X	3277.60	3348.15	6625.75	6625.75	6625.75	
	"A1" 21+00 TO 22+00	X	X	3225.30	3529.50	6754.80	6754.80	6754.80	
	"A1" 22+00 TO 23+00	X	X	3163.90	3700.50	6864.40	6864.40	6864.40	
	"A1" 23+00 TO 24+00	X	X	3234.60	3931.10	7165.70	7165.70	7165.70	
	"A1" 24+00 TO 25+00	X	X	3390.75	4416.45	7807.20	7807.20	7807.20	
	"A1" 25+00 TO 26+00	X	X	3412.70	4596.90	8009.60	8009.60	8009.60	
	"A1" 26+00 TO 27+00	X		3328.80		3328.80	3328.80	3328.80	
	"A1" 27+00 TO 28+00	X		3176.35		3176.35	3176.35	3176.35	
	"A1" 28+00 TO 29+00	X	X	2982.65	2463.45	5446.10	5446.10	5446.10	
	"A1" 29+00 TO 30+00	X	X	2701.95	2390.50	5092.45	5092.45	5092.45	
	"A1" 30+00 TO 31+00	X	X	2233.35	2277.70	4511.05	4511.05	4511.05	
	"A1" 31+00 TO 32+00	X	X	1775.95	2061.10	3837.05	3837.05	3837.05	
	"A1" 32+00 TO 33+00	X	X	1622.45	2039.80	3662.25	3662.25	3662.25	
	"A1" 33+00 TO 34+00	X	X	1730.90	2227.35	3958.25	3958.25	3958.25	
	"A1" 34+00 TO 34+30.68	X	X	574.13	744.62	1318.75	1318.75	1318.75	
	"A2" 10+75 TO 11+00	X	X	694.63	563.63	1258.26	1258.26	1258.26	
	"A2" 11+00 TO 12+00	X	X	2731.00	2443.50	5174.50	5174.50	5174.50	
	"A2" 12+00 TO 13+00	X	X	2432.00	2491.00	4923.00	4923.00	4923.00	
	"A2" 13+00 TO 14+00	X	X	2465.00	2556.00	5021.00	5021.00	5021.00	
	"A2" 14+00 TO 15+00	X	X	2513.00	2598.50	5111.50	5111.50	5111.50	
	"A2" 15+00 TO 16+00	X	X	2533.00	2615.50	5148.50	5148.50	5148.50	
	"A2" 16+00 TO 17+00	X	X	2520.50	2631.50	5152.00	5152.00	5152.00	
	"A2" 17+00 TO 17+40	X	X	1013.60	1063.60	2077.20	2077.20	2077.20	
					TOTAL	165,861.61	165,861.61	165,861.61	

(N) - NOT A SEPARATE PAY ITEM, FOR INFORMATION ONLY

SEED MIX

BOTANICAL NAME (COMMON NAME)	PERCENT GERMINATION (MINIMUM)	POUNDS PURE LIVE SEED PER ACRE (SLOPE MEASUREMENT)
ELYMUS GLAUCUS (BLUE WILDRYE)	85	7.5
ESCHSCHOLZIA CALIFORNICA (CALIFORNIA POPPY)	60	0.7
LASTHENIA CALIFORNICA (CALIFORNIA GOLDFIELDS)	50	1.6
LAYIA PLATYGLOSSA (TIDYTIPS)	70	1.2
LUPINUS BICOLOR (BICOLOR LUPINE)	85	1.6
NASSELLA PULCHRA (PURPLE NEEDLEGRASS)	80	8.8
TRIFOLIUM HIRTUM 'HYKON' (HYKON ROSE CLOVER)	80	1.2

EROSION CONTROL

SEQUENCE	ITEM	MATERIAL		APPLICATION RATE	REMARKS
		DESCRIPTION	TYPE		
STEP 1	COMPOST	COMPOST	MEDIUM	270 CY/ACRE	APPLY SIMULTANEOUSLY
	DRY SEED	SEED	MIX	22.6 LB/ACRE	
STEP 2	HYDROMULCH	FIBER	CELLULOSE	1000 LB/ACRE	
			WOOD	1000 LB/ACRE	
		TACKIFIER	PSYLLIUM	200 LB/ACRE	

EROSION CONTROL LEGEND AND QUANTITIES

ECL-1

REVISED BY	DATE REVISED
ED HIBBS	02/02/16
ED HIBBS	02/05/16

CALCULATED-DESIGNED BY: ED HIBBS
CHECKED BY: KEVIN GALLO
SENIOR LANDSCAPE ARCHITECT: BRAD COLE

STATE OF CALIFORNIA - DEPARTMENT OF TRANSPORTATION
Caltrans® LANDSCAPE ARCHITECTURE

LAST REVISION 02-05-16
DATE PLOTTED => 09-MAY-2016
TIME PLOTTED => 09:59

Dist	COUNTY	ROUTE	POST MILES TOTAL PROJECT	SHEET No.	TOTAL SHEETS
10	Mer	165	29.8/30.3	44	68

REGISTERED ELECTRICAL ENGINEER 4/1/16 DATE

4-4-16
PLANS APPROVAL DATE

REGISTERED PROFESSIONAL ENGINEER JASPAL SINGH No. 16657 Exp. 6/30/16 ELECTRICAL STATE OF CALIFORNIA

THE STATE OF CALIFORNIA OR ITS OFFICERS OR AGENTS SHALL NOT BE RESPONSIBLE FOR THE ACCURACY OR COMPLETENESS OF SCANNED COPIES OF THIS PLAN SHEET.

LEGEND:

1 RL Exist 120/240 V, 1Ø, 3-WIRE, TYPE III-AF SERVICE EQUIPMENT ENCLOSURE TO LOCATION AT Sta 10+55.

2 INSTALL 120/240 V, 1Ø, 3-WIRE, TYPE III-AF SERVICE EQUIPMENT ENCLOSURE RELOCATED FROM Sta 16+20. WITH THE FOLLOWING CIRCUIT BREAKERS:

Ctid No. 1039165R029800S

AMPERES	VOLTS	POLES	NAMEPLATE	METER	PEC TYPE
100	240	2	MAIN	YES	-
15	120	1	FLASHING BEACON	YES	-
30	120	1	SPARE	YES	-
-	-	2	SPACE	YES	-

3 RL Exist TYPE 15-FBS TO LOCATION AT Sta 9+20.

4 INSTALL TYPE 15-FBS RELOCATED FROM Sta 18+10 AND INSTALL W4-18 SIGN. SEE SIGN PLANS FOR DETAILS.

5 PB PER PG&E REQUIREMENTS.

NOTES:

1. FOR ACCURATE RIGHT OF WAY DATA, CONTACT RIGHT OF WAY ENGINEERING AT THE DISTRICT OFFICE.
2. ALL PULL BOXES MUST BE No. 5(T) UNLESS OTHERWISE NOTED.
3. THE CONTRACTOR MUST COORDINATE WITH PG&E FOR ALL SERVICE REQUIREMENTS.

ABBREVIATION:

PG&E - PACIFIC GAS AND ELECTRIC
Cu - COPPER
Al - ALUMINUM

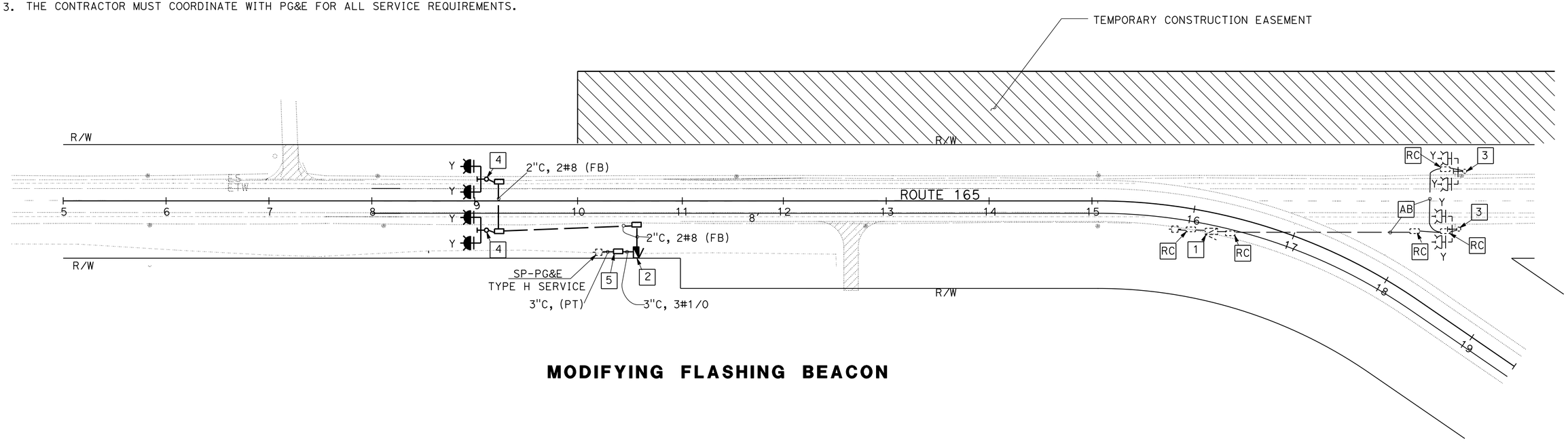

MODIFYING FLASHING BEACON

APPROVED FOR ELECTRICAL WORK ONLY

MODIFYING EXISTING ELECTRICAL SYSTEM

SCALE: 1" = 50'

E-1

STATE OF CALIFORNIA - DEPARTMENT OF TRANSPORTATION
Caltrans® ELECTRICAL DESIGN

FUNCTIONAL SUPERVISOR: ALI BAKHDOUD
CALCULATED-DESIGNED BY: JASPAL SINGH
CHECKED BY: PAUL MATOS
REVISED BY: JS
DATE REVISED: 04/04/16

LAST REVISION 04-04-16
DATE PLOTTED => 09-MAY-2016
TIME PLOTTED => 09:59

Dist	COUNTY	ROUTE	POST MILES TOTAL PROJECT	SHEET No.	TOTAL SHEETS
10	Mer	165	29.8/30.3	45	68

REGISTERED ELECTRICAL ENGINEER 4/1/16 DATE

4-4-16
PLANS APPROVAL DATE

REGISTERED PROFESSIONAL ENGINEER JASPAL SINGH No. 16657 Exp. 6/30/16 ELECTRICAL STATE OF CALIFORNIA

THE STATE OF CALIFORNIA OR ITS OFFICERS OR AGENTS SHALL NOT BE RESPONSIBLE FOR THE ACCURACY OR COMPLETENESS OF SCANNED COPIES OF THIS PLAN SHEET.

NOTE:

THE QUANTITIES SHOWN IN THE TABLE ARE NOT A SEPARATE PAY ITEM, FOR INFORMATION ONLY.

MODIFYING EXISTING ELECTRICAL SYSTEM

SHEET No.	No. 5 (T) PB	PG&E PB	TYPE III-AF SERVICE EQUIPMENT ENCLOSURE FOUNDATION	TYPE 15-FBS STANDARD FOUNDATION	3"C, TYPE 1	3"C, TYPE 3	1½"C TYPE 1	2"C, TYPE 3	No. 1/0 CONDUCTOR (Al)	No. 8 CONDUCTOR (Al)	No. 8(G) CONDUCTOR (Cu)
	EA				LF						
E-2	3	1	1	2	10	10	25	150	35	380	185

ELECTRICAL QUANTITIES

E-2

STATE OF CALIFORNIA - DEPARTMENT OF TRANSPORTATION
Caltrans® ELECTRICAL DESIGN

FUNCTIONAL SUPERVISOR: ALI BAKHDOUD

CALCULATED-DESIGNED BY: JASPAL SINGH
CHECKED BY: PAUL MATOS

REVISED BY: JS
DATE REVISED: 04/04/16

LAST REVISION 04/04/16
DATE PLOTTED => 09-MAY-2016
TIME PLOTTED => 09:59

M

Maint	MAINTENANCE
Max	MAXIMUM
MB	METAL BEAM
MBB	METAL BEAM BARRIER
MBGR	METAL BEAM GUARD RAILING
Med	MEDIAN
MGS	MIDWEST GUARDRAIL SYSTEM
MH	MANHOLE
Min	MINIMUM
Misc	MISCELLANEOUS
Misc I & S	MISCELLANEOUS IRON AND STEEL
Mkr	MARKER
Mod	MODIFIED,
	MODIFY
Mon	MONUMENT
MP	METAL PLATE
MPGR	METAL PLATE GUARD RAILING
MR	MOVEMENT RATING
MSE	MECHANICALLY STABILIZED EMBANKMENT
Mt	MOUNTAIN, MOUNT
Mtl	MATERIAL
MVP	MAINTENANCE VEHICLE PULLOUT

N

N	NORTH
NB	NORTHBOUND
No.	NUMBER (MUST HAVE PERIOD)
Nos.	NUMBERS (MUST HAVE PERIOD)
NPS	NOMINAL PIPE SIZE
NS	NEAR SIDE
NSP	NEW STANDARD PLAN
NTS	NOT TO SCALE

O

Oblr	OBLITERATE
OC	OVERCROSSING
OD	OUTSIDE DIAMETER
OF	OUTSIDE FACE
OG	ORIGINAL GROUND
OGAC	OPEN GRADED ASPHALT CONCRETE
OGFC	OPEN GRADED FRICTION COURSE
OH	OVERHEAD
OHWM	ORDINARY HIGH WATER MARK
O-O	OUT TO OUT
Opp	OPPOSITE
OSD	OVERSIDE DRAIN

P

P	PAGE
PAP	PERFORATED ALUMINUM PIPE
PB	PULL BOX
PC	POINT OF CURVATURE,
	PRECAST
PCC	POINT OF COMPOUND CURVE,
	PORTLAND CEMENT CONCRETE
PCMS	PORTABLE CHANGEABLE MESSAGE SIGN
PCP	PERFORATED CONCRETE PIPE,
	PRESTRESSED CONCRETE PIPE
PCVC	POINT OF COMPOUND VERTICAL CURVE
PEC	PERMIT TO ENTER AND CONSTRUCT
Ped	PEDESTRIAN
Ped OC	PEDESTRIAN OVERCROSSING
Ped UC	PEDESTRIAN UNDERCROSSING
Perm Mtl	PERMEABLE MATERIAL

P continued

PG	PROFILE GRADE
PI	POINT OF INTERSECTION
PJP	PARTIAL JOINT PENETRATION
Pkwy	PARKWAY
ℙ,PL	PLATE
P/L	PROPERTY LINE
PM	POST MILE,
	TIME FROM NOON TO MIDNIGHT
PN	PAVING NOTCH
POC	POINT OF HORIZONTAL CURVE
POT	POINT OF TANGENT
POVC	POINT OF VERTICAL CURVE
PP	PIPE PILE,
	PLASTIC PIPE,
	POWER POLE
PPL	PREFORMED PERMEABLE LINER
PPP	PERFORATED PLASTIC PIPE
PRC	POINT OF REVERSE CURVE
PRF	PAVEMENT REINFORCING FABRIC
PRVC	POINT OF REVERSE VERTICAL CURVE
PS&E	PLANS, SPECIFICATIONS AND ESTIMATES
PS, P/S	PRESTRESSED
PSP	PERFORATED STEEL PIPE
PT	POINT OF TANGENCY
PVC	POLYVINYL CHLORIDE
Pvmt	PAVEMENT

Q

Qty	QUANTITY

R

R	RADIUS
R & D	REMOVE AND DISPOSE
R & S	REMOVE AND SALVAGE
R/C	RATE OF CHANGE
RCA	REINFORCED CONCRETE ARCH
RCB	REINFORCED CONCRETE BOX
RCP	REINFORCED CONCRETE PIPE
RCPA	REINFORCED CONCRETE PIPE ARCH
Rd	ROAD
Reinf	REINFORCED,
	REINFORCEMENT,
	REINFORCING
Rel	RELOCATE
Repl	REPLACEMENT
Ret	RETAINING
Rev	REVISED, REVISION
Rdwy	ROADWAY
RHMA	RUBBERIZED HOT MIX ASPHALT
Riv	RIVER
RM	ROAD-MIXED
RP	RADIUS POINT,
	REFERENCE POINT
RR	RAILROAD
RSP	ROCK SLOPE PROTECTION,
	REVISED STANDARD PLAN
Rt	RIGHT
Rte	ROUTE
RW	REDWOOD,
	RETAINING WALL
R/W	RIGHT OF WAY
Rwy	RAILWAY

S

S	SOUTH,
	SUPPLEMENT
SAE	STRUCTURE APPROACH EMBANKMENT
Salv	SALVAGE
SAPP	STRUCTURAL ALUMINUM PLATE PIPE
SB	SOUTHBOUND
SC	SAND CUSHION
SCSP	SLOTTED CORRUGATED STEEL PIPE
SD	STORM DRAIN
Sec	SECOND,
	SECTION
Sep	SEPARATION
SG	SUBGRADE
Shld	SHOULDER
Sht	SHEET
Sim	SIMILAR
℄	STATION LINE
SM	SELECTED MATERIAL
Spec	SPECIAL,
	SPECIFICATIONS
SPP	SLOTTED PLASTIC PIPE
SS	SLOPE STAKE
SSBM	STRAP AND SADDLE BRACKET METHOD
SSD	STRUCTURAL SECTION DRAIN
SSPA	STRUCTURAL STEEL PLATE ARCH
SSPP	STRUCTURAL STEEL PLATE PIPE
SSPPA	STRUCTURAL STEEL PLATE PIPE ARCH
SSRP	STEEL SPIRAL RIB PIPE
St	STREET
Sta	STATION
STBB	SINGLE THRIE BEAM BARRIER
Std	STANDARD
Str	STRUCTURE
Surf	SURFACING
SW	SIDEWALK,
	SOUND WALL
Swr	SEWER
Sym	SYMMETRICAL
S4S	SURFACE 4 SIDES

T

T	SEMI-TANGENT
Tan	TANGENT
TBB	THRIE BEAM BARRIER
Tbr	TIMBER
TC	TOP OF CURB
TCB	TRAFFIC CONTROL BOX
TCE	TEMPORARY CONSTRUCTION EASEMENT
Tel	TELEPHONE
Temp	TEMPORARY
TG	TOP OF GRADE
Tot	TOTAL
TP	TELEPHONE POLE
TPB	TREATED PERMEABLE BASE
TPM	TREATED PERMEABLE MATERIAL
Trans	TRANSITION

T continued

TS	TRANSVERSE,
	TRAFFIC SIGNAL,
	TUBULAR STEEL
Typ	TYPICAL

U

UC	UNDERCROSSING
UD	UNDERDRAIN
UG	UNDERGROUND
UON	UNLESS OTHERWISE NOTED
UP	UNDERPASS

V

V	VALVE,
	DESIGN SPEED
Var	VARIABLE,
	VARIES
VC	VERTICAL CURVE
VCP	VITRIFIED CLAY PIPE
Vert	VERTICAL
Via	VIADUCT
Vol	VOLUME

W

W	WEST,
	WIDTH
WB	WESTBOUND
WH	WEEP HOLE
WM	WIRE MESH
WS	WATER SURFACE
WSP	WELDED STEEL PIPE
Wt	WEIGHT
WV	WATER VALVE
WW	WINGWALL
WWLOL	WINGWALL LAYOUT LINE

X

X Sec	CROSS SECTION
Xing	CROSSING

Y

Yr	YEAR
Yrs	YEARS

Dist	COUNTY	ROUTE	POST MILES TOTAL PROJECT	SHEET No.	TOTAL SHEETS
10	Mer	165	29.8/30.3	46	68

Grace M. Tsushima
REGISTERED CIVIL ENGINEER

July 19, 2013
PLANS APPROVAL DATE

REGISTERED PROFESSIONAL ENGINEER
Grace M. Tsushima
No. C49814
Exp. 9-30-14
CIVIL
STATE OF CALIFORNIA

THE STATE OF CALIFORNIA OR ITS OFFICERS OR AGENTS SHALL NOT BE RESPONSIBLE FOR THE ACCURACY OR COMPLETENESS OF SCANNED COPIES OF THIS PLAN SHEET.

TO ACCOMPANY PLANS DATED 4-4-16

UNIT OF MEASUREMENT SYMBOLS:

Some of the symbols used in the project plan quantity tables and in the Bid Item List are:

TABLE A

SYMBOL USED	DEFINITIONS
ACRE	ACRE
CF	CUBIC FOOT
CY	CUBIC YARD
EA	EACH
GAL	GALLON
LB	POUND
LF	LINEAR FOOT
SQFT	SQUARE FOOT
SQYD	SQUARE YARD
STA	100 FEET
TAB	TABLET
TON	2,000 POUNDS

Some of the symbols used in the plans other than in the project plan quantity tables are:

TABLE B

SYMBOL USED	DEFINITIONS
ksi	KIPS PER SQUARE INCH
ksf	KIPS PER SQUARE FOOT
psi	POUNDS PER SQUARE INCH
psf	POUNDS PER SQUARE FOOT
lb/ft^3, pcf	POUNDS PER CUBIC FOOT
tsf	TONS PER SQUARE FOOT
mph, MPH *	MILES PER HOUR
ø	NOMINAL DIAMETER
oz	OUNCE
lb	POUND
kip	1,000 POUNDS
cal	CALORIE
ft	FOOT OR FEET
gal	GALLON

* For use on a sign panel only

STATE OF CALIFORNIA
DEPARTMENT OF TRANSPORTATION

ABBREVIATIONS (SHEET 2 OF 2)

NO SCALE

RSP A10B DATED JULY 19, 2013 SUPERSEDES STANDARD PLAN A10B DATED MAY 20, 2011 - PAGE 2 OF THE STANDARD PLANS BOOK DATED 2010.

REVISED STANDARD PLAN RSP A10B

2010 REVISED STANDARD PLAN RSP A10B

6-7-13

Dist	COUNTY	ROUTE	POST MILES TOTAL PROJECT	SHEET No.	TOTAL SHEETS
10	Mer	165	29.8/30.3	47	68

REGISTERED CIVIL ENGINEER

April 20, 2012
PLANS APPROVAL DATE

REGISTERED PROFESSIONAL ENGINEER
Roberta L. McLaughlin
No. C40375
Exp. 3-31-13
CIVIL
STATE OF CALIFORNIA

THE STATE OF CALIFORNIA OR ITS OFFICERS OR AGENTS SHALL NOT BE RESPONSIBLE FOR THE ACCURACY OR COMPLETENESS OF SCANNED COPIES OF THIS PLAN SHEET.

TO ACCOMPANY PLANS DATED 4-4-16

2010 REVISED STANDARD PLAN RSP A24A

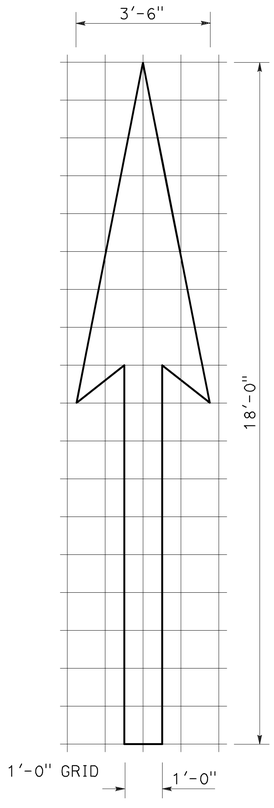

A=25 ft^2

TYPE I 18'-0" ARROW

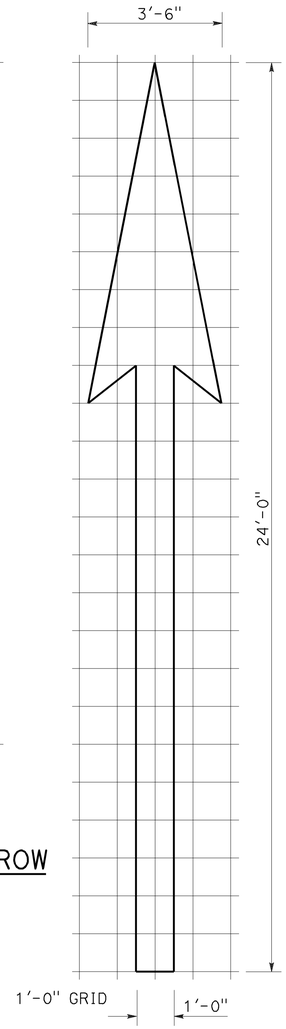

A=31 ft^2

TYPE I 24'-0" ARROW

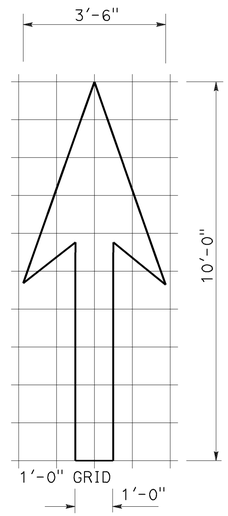

A=14 ft^2

TYPE I 10'-0" ARROW

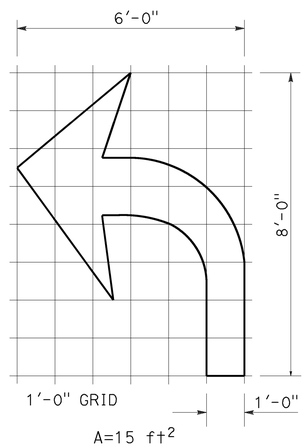

A=15 ft^2

TYPE IV (L) ARROW

(For Type IV (R) arrow, use mirror image)

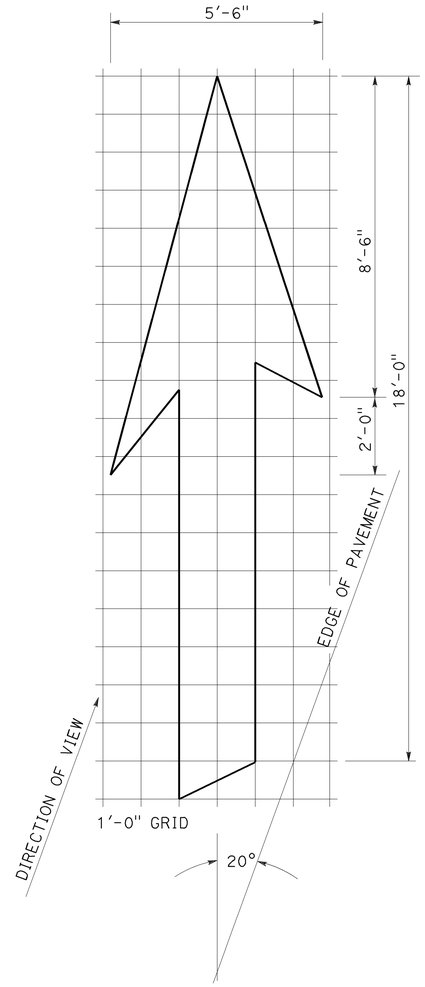

A=42 ft^2

TYPE VI ARROW

Right lane drop arrow
(For left lane, use mirror image)

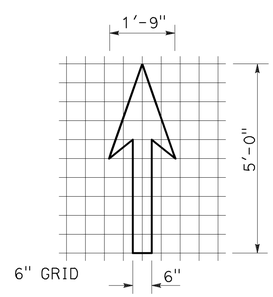

A=3.5 ft^2

BIKE LANE ARROW

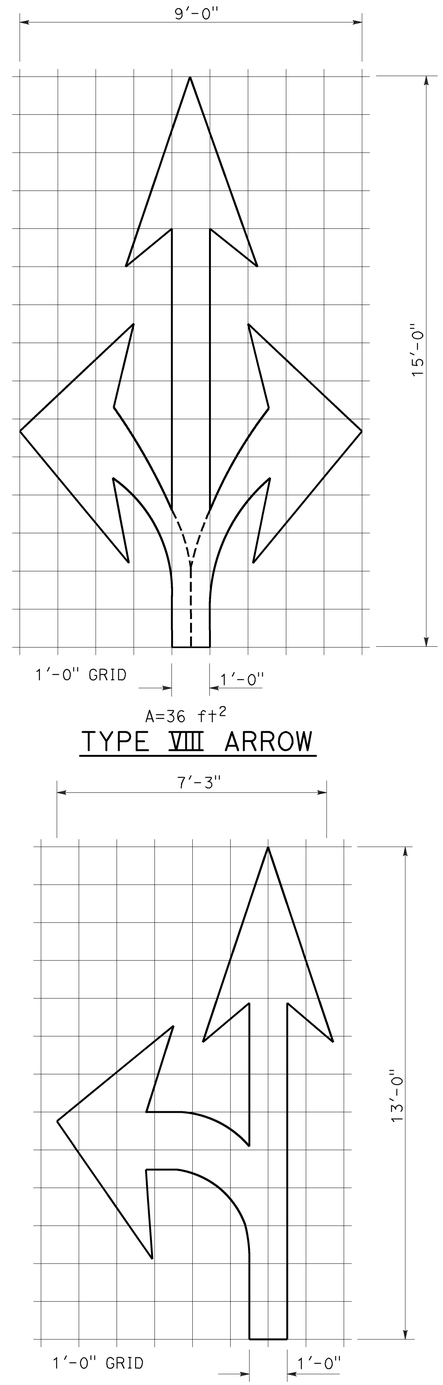

A=36 ft^2

TYPE VIII ARROW

A=27 ft^2

TYPE VII (L) ARROW

(For Type VII (R) arrow, use mirror image)

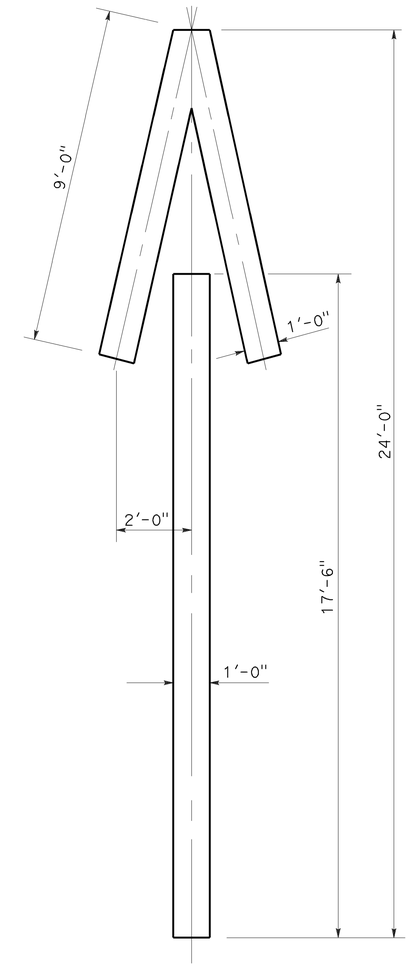

A=33 ft^2

TYPE V ARROW

NOTE:
Minor variations in dimensions may be accepted by the Engineer.

STATE OF CALIFORNIA
DEPARTMENT OF TRANSPORTATION

PAVEMENT MARKINGS ARROWS

NO SCALE

RSP A24A DATED APRIL 20, 2012 SUPERSEDES STANDARD PLAN A24A DATED MAY 20, 2011 - PAGE 13 OF THE STANDARD PLANS BOOK DATED 2010.

REVISED STANDARD PLAN RSP A24A

3-14-12

Dist	COUNTY	ROUTE	POST MILES TOTAL PROJECT	SHEET No.	TOTAL SHEETS
10	Mer	165	29.8/30.3	48	68

REGISTERED CIVIL ENGINEER

July 20, 2012
PLANS APPROVAL DATE

REGISTERED PROFESSIONAL ENGINEER
Roberta L. McLaughlin
No. C40375
Exp. 3-31-13
CIVIL
STATE OF CALIFORNIA

THE STATE OF CALIFORNIA OR ITS OFFICERS OR AGENTS SHALL NOT BE RESPONSIBLE FOR THE ACCURACY OR COMPLETENESS OF SCANNED COPIES OF THIS PLAN SHEET.

TO ACCOMPANY PLANS DATED 4-4-16

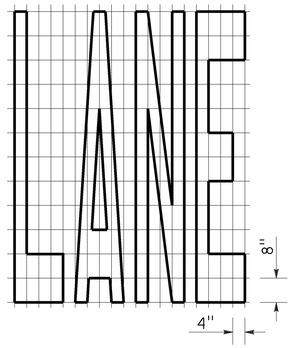

A=24 ft²

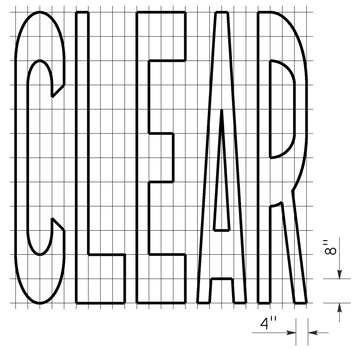

A=27 ft²

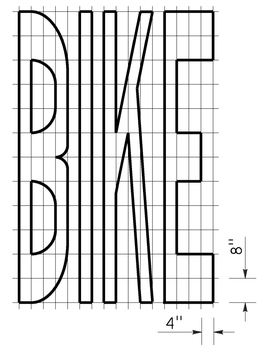

A=21 ft²

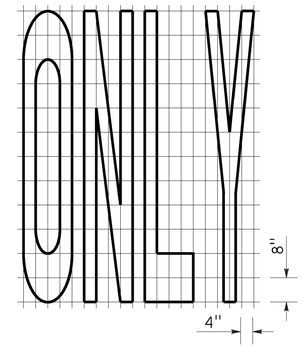

A=22 ft²

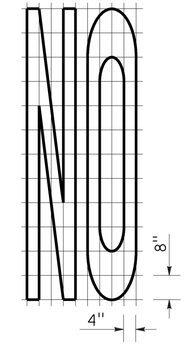

A=14 ft²

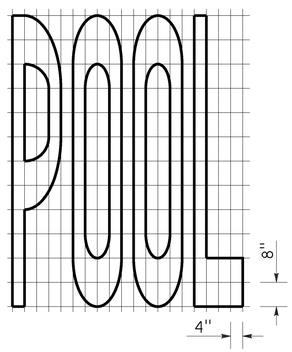

A=23 ft²

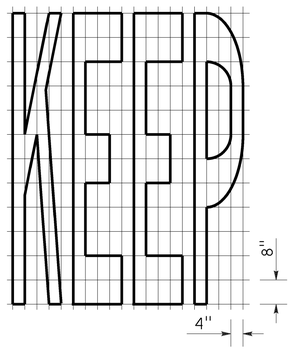

A=24 ft²

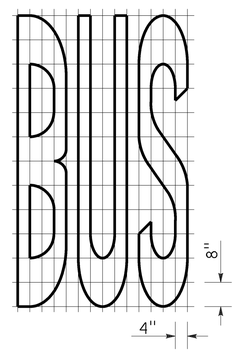

A=20 ft²

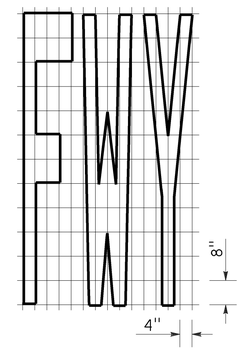

A=16 ft²

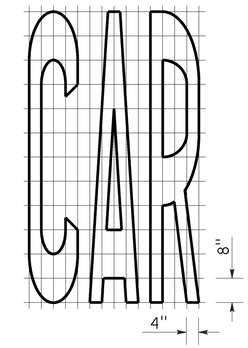

A=17 ft²

WORD MARKINGS			
ITEM	ft²	ITEM	ft²
LANE	24	NO	14
POOL	23	BIKE	21
CAR	17	BUS	20
CLEAR	27	ONLY	22
KEEP	24	FWY	16

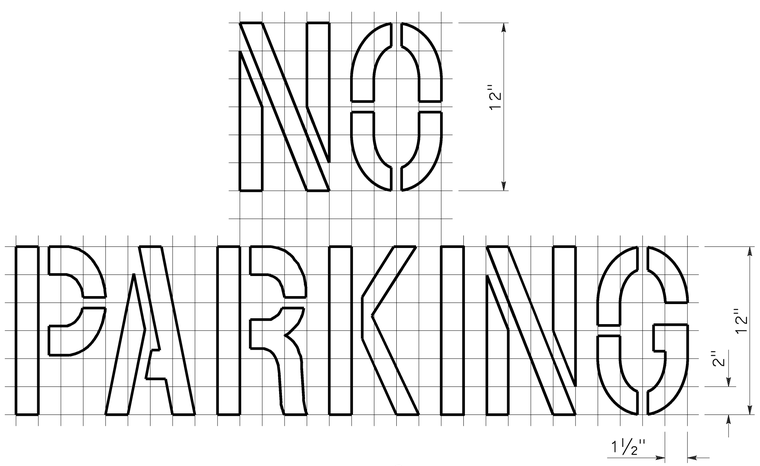

A=2 ft²
See Notes 6 and 7

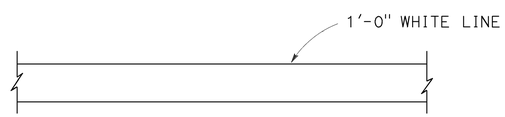

LIMIT LINE (STOP LINE)

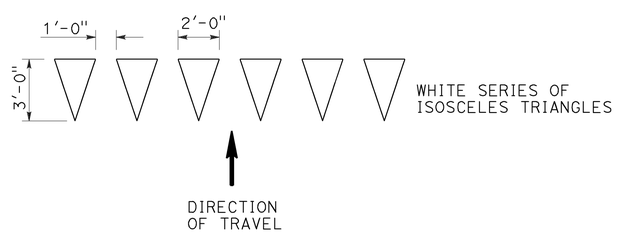

YIELD LINE

NOTES:

1. If a message consists of more than one word, it should read "UP", i.e., the first word should be nearest the driver.
2. The space between words should be at least four times the height of the characters for low speed roads, but not more than ten times the height of the characters. The space may be reduced appropriately where there is limited space because of local conditions.
3. Minor variations in dimensions may be accepted by the Engineer.
4. Portions of a letter, number or symbol may be separated by connecting segments not to exceed 2" in width.
5. The words "NO PARKING" pavement marking is to be used for parking facilities. For typical locations of markings, see Standard Plans A90A and A90B.
6. The words "NO PARKING", shall be painted in white letters no less than 1'-0" high on a contrasting background and located so that it is visible to traffic enforcement officials.

STATE OF CALIFORNIA
DEPARTMENT OF TRANSPORTATION

PAVEMENT MARKINGS WORDS, LIMIT AND YIELD LINES

NO SCALE

RSP A24E DATED JULY 20, 2012 SUPERSEDES STANDARD PLAN A24E
DATED MAY 20, 2011 - PAGE 17 OF THE STANDARD PLANS BOOK DATED 2010.

REVISED STANDARD PLAN RSP A24E

2010 REVISED STANDARD PLAN RSP A24E

Dist	COUNTY	ROUTE	POST MILES TOTAL PROJECT	SHEET No.	TOTAL SHEETS
10	Mer	165	29.8/30.3	49	68

REGISTERED CIVIL ENGINEER

July 18, 2014
PLANS APPROVAL DATE

REGISTERED PROFESSIONAL ENGINEER Carl M. Duan No. C59976 Exp. 6-30-16 CIVIL STATE OF CALIFORNIA

THE STATE OF CALIFORNIA OR ITS OFFICERS OR AGENTS SHALL NOT BE RESPONSIBLE FOR THE ACCURACY OR COMPLETENESS OF SCANNED COPIES OF THIS PLAN SHEET.

TO ACCOMPANY PLANS DATED 4-4-16

2010 REVISED STANDARD PLAN RSP A62DA

DESIGN NOTES:

Design: AASHTO LRFD Bridge Design Specifications, 4th edition with California Amendments. ACPA DESIGN DATA 1, October 2007. INDIRECT DESIGN METHOD

Soil: w Fe = 162 pcf Installation Type 1
w Fe = 168 pcf Installation Types 2 & 3
w = Unit weight of soil (pcf)
Fe = Soil-structure interaction factor

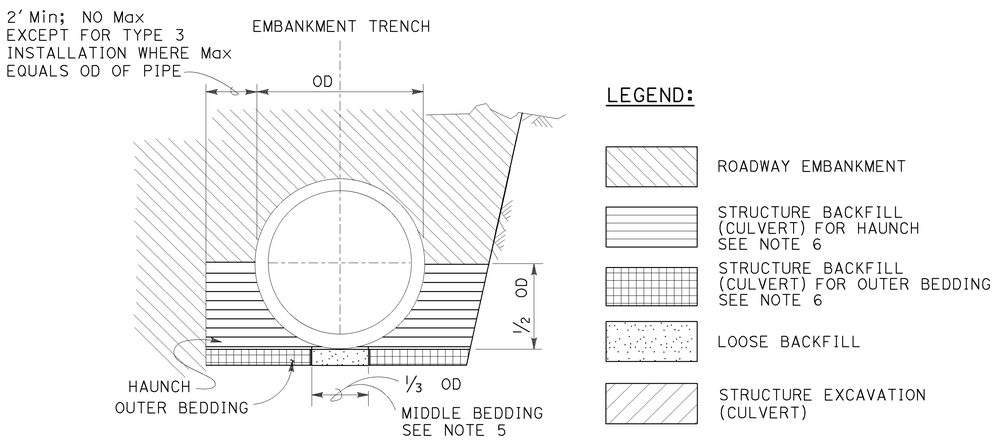

BACKFILL

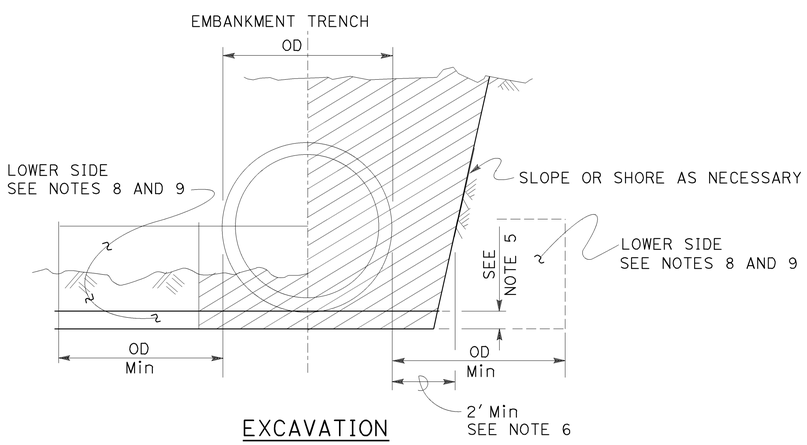

EXCAVATION

INSTALLATION TYPE 1:

The haunch and outer bedding shall be compacted to a minimum 90 percent relative compaction. In addition, the minimum sand equivalent in these areas shall be 30 and the maximum percentage passing the No. 200 sieve size shall be 12.

INSTALLATION TYPE 2:

The haunch and outer bedding shall be compacted to a minimum 90 percent relative compaction. In addition, the minimum sand equivalent in these areas shall be 25.

INSTALLATION TYPE 3:

The haunch and outer bedding shall be compacted to a minimum 85 percent relative compaction. 90 percent relative compaction will be required where the fill over the pipe is less than 4′-0″ or 1/2 OD. In addition, the minimum sand equivalent in these areas shall be 25 and the material shall not contain rocks, broken concrete, or other solid material exceeding 3″ in greatest dimension.

INSTALLATION TYPE 1

MINIMUM CLASS AND D-LOAD	COVER	
	60″ Dia AND SMALLER	OVER 60″ Dia TO 120″ Dia Max
CLASS II 1000D	14.9′	12.9′
CLASS III 1350D	15.0′ - 21.9′	13.0′ - 18.9′
CLASS III SPECIAL 1700D	22.0′ - 27.9′	19.0′ - 24.9′
CLASS IV 2000D	28.0′ - 32.9′	25.0′ - 29.9′
CLASS IV SPECIAL 2500D	33.0′ - 41.9′	30.0′ - 38.9′
CLASS V 3000D	42.0′ - 49.9′	39.0′ - 46.9′
CLASS V SPECIAL 3600D	50.0′ - 60.0′	47.0′ - 58.0′

INSTALLATION TYPE 2

MINIMUM CLASS AND D-LOAD	COVER	
	60″ Dia AND SMALLER	OVER 60″ Dia TO 120″ Dia Max
CLASS II 1000D	11.9′	9.9′
CLASS III 1350D	12.0′ - 15.9′	10.0′ - 14.9′
CLASS III SPECIAL 1700D	16.0′ - 20.9′	15.0′ - 19.9′
CLASS IV 2000D	21.0′ - 24.9′	20.0′ - 23.9′
CLASS IV SPECIAL 2500D	25.0′ - 31.9′	24.0′ - 30.9′
CLASS V 3000D	32.0′ - 37.9′	31.0′ - 37.9′
CLASS V SPECIAL 3600D	38.0′ - 46.0′	38.0′ - 46.0′

INSTALLATION TYPE 3

MINIMUM CLASS AND D-LOAD	COVER	
	60″ Dia AND SMALLER	OVER 60″ Dia TO 120″ Dia Max
CLASS II 1000D	8.9′	5.9′
CLASS III 1350D	9.0′ - 11.9′	6.0′ - 10.9′
CLASS III SPECIAL 1700D	12.0′ - 15.9′	11.0′ - 13.9′
CLASS IV 2000D	16.0′ - 18.9′	14.0′ - 17.9′
CLASS IV SPECIAL 2500D	19.0′ - 24.9′	18.0′ - 22.9′
CLASS V 3000D	25.0′ - 29.9′	23.0′ - 28.9′
CLASS V SPECIAL 3600D	30.0′ - 36.0′	29.0′ - 35.0′

NOTES:

1. Unless otherwise shown on the plans or specified in the special provision, the Contractor shall have the option of selecting the class of RCP and the type of installation to be used, provided the height of cover does not exceed the value shown for the RCP selected.
   Example: 24″ RCP culvert with maximum cover of 24′-0″ the options are:
   a) Class III Special or stronger with Installation Type 1.
   b) Class IV or stronger with Installation Type 2.
   c) Class IV Special or stronger with Installation Type 3.
   Cover is defined as the maximum vertical distance from top of the pipe to finished grade within the length of any given culvert.
2. The class of RCP and Installation Type selected shall be the same throughout the length of any given culvert.
3. The "length of any culvert" is defined as the culvert between:
   a) Successive drainage structure (inlets, junction boxes, headwalls, etc.).
   b) A drainage structure and the inlet or outlet end of the culvert.
   c) The inlet and outlet end of the culvert when there are no intervening drainage structures.
4. Oval and arch shaped RCP shall not be used.
5. Bedding depth: 1/25 OD Min, not less than 3″.
6. Slurry cement backfill may be substituted for backfill in the outer bedding and haunch areas. If slurry is used, the outer and middle beddings shall be omitted. Prior to installation, the soil under the middle 1/3 of the outside diameter of the pipe shall be softened by scarifying or other means to a minimum depth of 1/25 OD, but not less than 3″. Where slurry cement backfill is used, clear distance to trench wall may be reduced as set forth in the Standard Specifications.
7. Backfill shall be placed full width of excavation except where dimensions are shown for backfill width or thickness. Dimensions shown are minimum.
8. Lower side shall be suitable material as determined by the Engineer. Otherwise it shall be considered unsuitable as set forth in of the Standard Specifications. See Note 9.
9. Where the pipe is placed in a trench, if the trench walls are sloped at 5 vertical to 1 horizontal or steeper for at least 90 percent of the trench height or up to not less than 12″ from the grading plane, the firmness of the soil in the lower side need not be considered.
10. Non-reinforced precast concrete pipe sizes 3′-0″ or smaller may be placed under installation Types 1, 2 or 3.

STATE OF CALIFORNIA
DEPARTMENT OF TRANSPORTATION

EXCAVATION AND BACKFILL CONCRETE PIPE CULVERTS INDIRECT DESIGN METHOD

NO SCALE

RSP A62DA DATED JULY 18, 2014 SUPERSEDES STANDARD PLAN A62DA DATED MAY 20, 2011 - PAGE 24 OF THE STANDARD PLANS BOOK DATED 2010.

REVISED STANDARD PLAN RSP A62DA

Dist	COUNTY	ROUTE	POST MILES TOTAL PROJECT	SHEET No.	TOTAL SHEETS
10	Mer	165	29.8/30.3	50	68

Srikanth Balasubramanian
REGISTERED CIVIL ENGINEER

October 30, 2015
PLANS APPROVAL DATE

REGISTERED PROFESSIONAL ENGINEER Srikanth N. Balasubramanian No. C56426 Exp. 6-30-17 CIVIL STATE OF CALIFORNIA

THE STATE OF CALIFORNIA OR ITS OFFICERS OR AGENTS SHALL NOT BE RESPONSIBLE FOR THE ACCURACY OR COMPLETENESS OF SCANNED COPIES OF THIS PLAN SHEET.

TO ACCOMPANY PLANS DATED 4-4-16

ABBREVIATIONS:

TE TAPERED EDGE

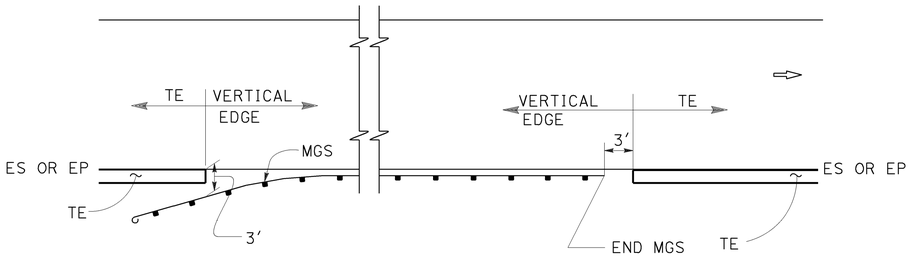

MGS

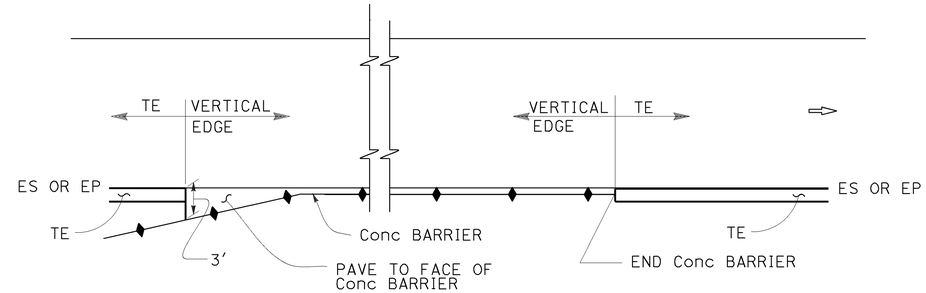

CONCRETE BARRIER

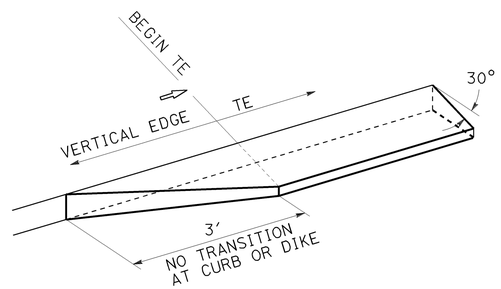

TRANSITION DETAIL FOR CONCRETE ONLY

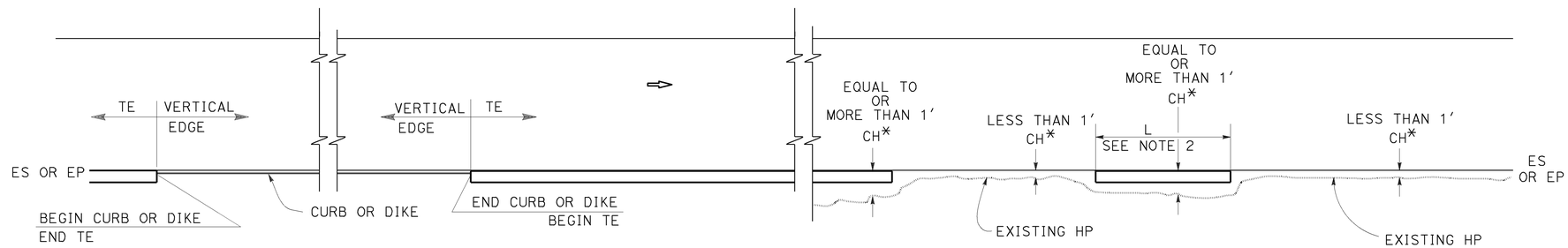

CURB OR DIKE

NARROW SIDE SLOPE

* CH = Distance from ES or EP to existing HP.

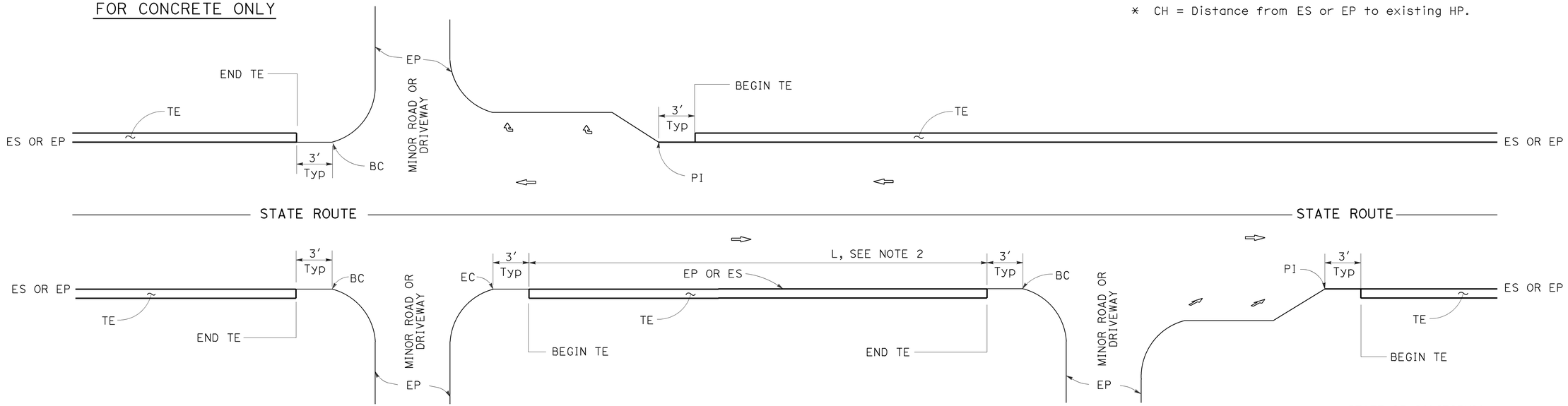

INTERTECTION

DRIVEWAY AND INTERSECTION

MINOR ROADWAY OR DRIVEWAY

STATE OF CALIFORNIA
DEPARTMENT OF TRANSPORTATION

PAVEMENT EDGE TREATMENTS

NO SCALE

NOTES:

1. For details not shown, see Revised Standard Plans RSP P75 and RSP P76.
2. Tapered edge is optional when L is less than 30′.

RSP P74 DATED OCTOBER 30, 2015 SUPERSEDES RSP P74 DATED NOVEMBER 15, 2013 AND RSP P74 DATED JANUARY 20, 2012 THAT SUPPLEMENTS THE STANDARD PLANS BOOK DATED 2010.

REVISED STANDARD PLAN RSP P74

2010 REVISED STANDARD PLAN RSP P74

10-13-15

Dist	COUNTY	ROUTE	POST MILES TOTAL PROJECT	SHEET No.	TOTAL SHEETS
10	Mer	165	29.8/30.3	51	68

Srikanth Balasubramanian
REGISTERED CIVIL ENGINEER

October 30, 2015
PLANS APPROVAL DATE

REGISTERED PROFESSIONAL ENGINEER
Srikanth N. Balasubramanian
No. C56426
Exp. 6-30-17
CIVIL
STATE OF CALIFORNIA

THE STATE OF CALIFORNIA OR ITS OFFICERS OR AGENTS SHALL NOT BE RESPONSIBLE FOR THE ACCURACY OR COMPLETENESS OF SCANNED COPIES OF THIS PLAN SHEET.

TO ACCOMPANY PLANS DATED 4-4-16

LEGEND:

- HMA PAVEMENT
- HMA OR CONCRETE PAVEMENT
- CONCRETE PAVEMENT

ABBREVIATIONS:

TE TAPERED EDGE
TT TOTAL THICKNESS OF TE
HW HINGE WIDTH, DISTANCE FROM ES OR EP TO HP

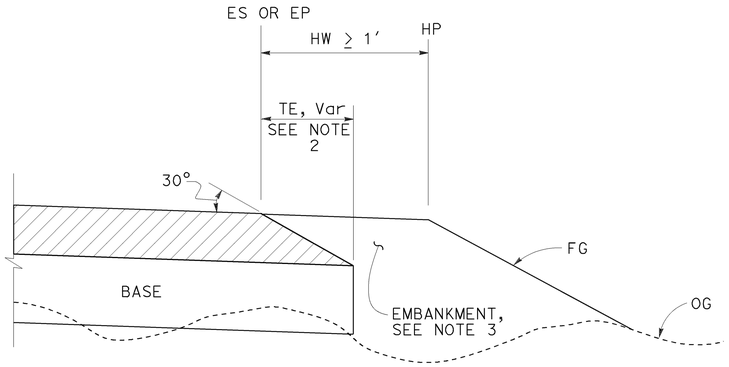

CASE K
Tapered Edge - Fill Section, HW ≥ 1′

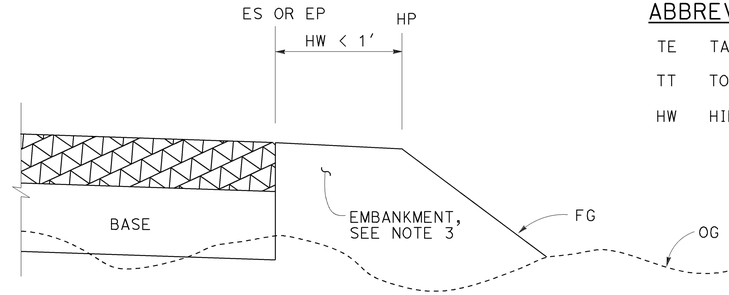

CASE L
Vertical Edge - Fill Section, HW < 1′

FILL SECTION

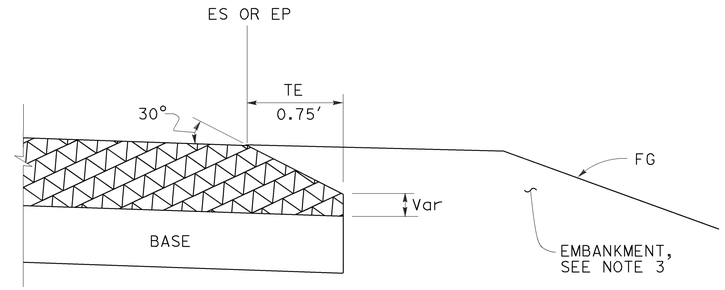

DETAIL "B"
For HMA pavement thickness more than 0.43′ or concrete pavement

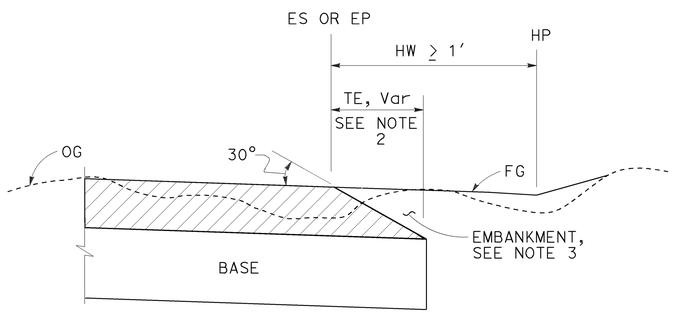

CASE M
Tapered Edge - Cut Section, HW ≥ 1′

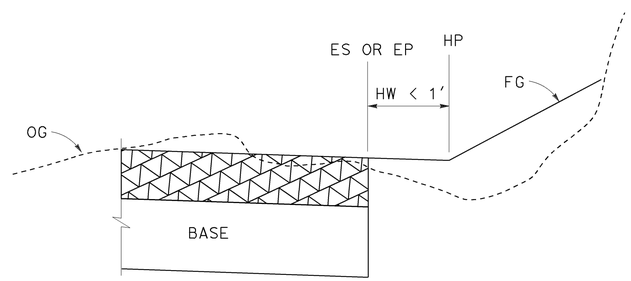

CASE N
Vertical Edge - Cut Section, HW < 1′

CUT SECTION

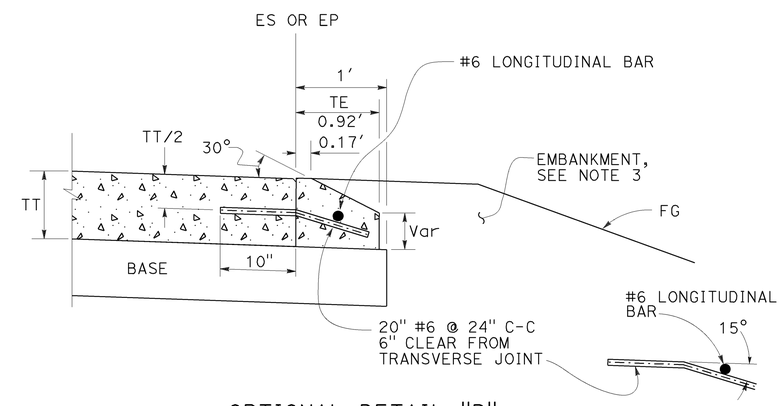

OPTIONAL DETAIL "B"
For concrete pavement
See Note 4

NOTES:

1. For limits of tapered edge and vertical edge treatments, see Revised Standard Plan RSP P74
2. Details shown for HMA pavement thickness less than 0.43′. See Detail "B" for HMA pavement thickness more than 0.43′ or concrete pavement.
3. For locations and limits of embankment see project plans.
4. Tapered edge transverse joint must match pavement transverse joint. End of #6 longitudinal bar must be 2" ±½" clear from transverse joint.
5. Tapered edge is not needed in the area of MGS, barrier, right turn lane and acceleration lane. See Revised Standard Plan RSP P74.

STATE OF CALIFORNIA
DEPARTMENT OF TRANSPORTATION

PAVEMENT EDGE TREATMENTS-NEW CONSTRUCTION

NO SCALE

RSP P76 DATED OCTOBER 30, 2015 SUPERSEDES RSP P76 DATED NOVEMBER 15, 2013 AND RSP P76 DATED JANUARY 20, 2012 THAT SUPPLEMENTS THE STANDARD PLANS BOOK DATED 2010.

REVISED STANDARD PLAN RSP P76

2010 REVISED STANDARD PLAN RSP P76

7-2-15

Dist	COUNTY	ROUTE	POST MILES TOTAL PROJECT	SHEET No.	TOTAL SHEETS
10	Mer	165	29.8/30.3	52	68

REGISTERED CIVIL ENGINEER

July 19, 2013
PLANS APPROVAL DATE

REGISTERED PROFESSIONAL ENGINEER
Gurinderpal Bhullar
No. C48815
Exp. 9-30-14
CIVIL
STATE OF CALIFORNIA

THE STATE OF CALIFORNIA OR ITS OFFICERS OR AGENTS SHALL NOT BE RESPONSIBLE FOR THE ACCURACY OR COMPLETENESS OF SCANNED COPIES OF THIS PLAN SHEET.

TO ACCOMPANY PLANS DATED 4-4-16

2010 REVISED STANDARD PLAN RSP T9

TABLE 1

TAPER LENGTH CRITERIA AND CHANNELIZING DEVICE SPACING

SPEED (S)	MINIMUM TAPER LENGTH * FOR WIDTH OF OFFSET 12 FEET (W)				MAXIMUM CHANNELIZING DEVICE SPACING		
					X	Y	Z **
	TANGENT 2L	MERGING L	SHIFTING L/2	SHOULDER L/3	TAPER	TANGENT	CONFLICT
mph	ft	ft	ft	ft	ft	ft	ft
20	160	80	40	27	20	40	10
25	250	125	63	42	25	50	12
30	360	180	90	60	30	60	15
35	490	245	123	82	35	70	17
40	640	320	160	107	40	80	20
45	1080	540	270	180	45	90	22
50	1200	600	300	200	50	100	25
55	1320	660	330	220	55	110	27
60	1440	720	360	240	60	120	30
65	1560	780	390	260	65	130	32
70	1680	840	420	280	70	140	35

* - For other offsets, use the following merging taper length formula for L:
For speed of 40 mph or less, $L = WS^2/60$
For speed of 45 mph or more, $L = WS$

Where: L = Taper length in feet
W = Width of offset in feet
S = Posted speed limit, off-peak 85th-percentile speed prior to work starting, or the anticipated operating speed in mph

** - Use for taper and tangent sections where there are no pavement markings or where there is a conflict between existing pavement markings and channelizers (CA).

TABLE 2

LONGITUDINAL BUFFER SPACE AND FLAGGER STATION SPACING

SPEED *	Min D **	DOWNGRADE Min D ***		
		-3%	-6%	-9%
mph	ft	ft	ft	ft
20	115	116	120	126
25	155	158	165	173
30	200	205	215	227
35	250	257	271	287
40	305	315	333	354
45	360	378	400	427
50	425	446	474	507
55	495	520	553	593
60	570	598	638	686
65	645	682	728	785
70	730	771	825	891

* - Speed is posted speed limit, off-peak 85th-percentile speed prior to work starting, or the anticipated operating speed in mph

** - Longitudinal buffer space or flagger station spacing

*** - Use on sustained downgrade steeper than -3 percent and longer than 1 mile.

TABLE 3

ADVANCE WARNING SIGN SPACING

ROAD TYPE	DISTANCE BETWEEN SIGNS *		
	A	B	C
	ft	ft	ft
URBAN - 25 mph OR LESS	100	100	100
URBAN - MORE THAN 25 mph TO 40 mph	250	250	250
URBAN - MORE THAN 40 mph	350	350	350
RURAL	500	500	500
EXPRESSWAY / FREEWAY	1000	1500	2640

* - The distances are approximate, are intended for guidance purposes only, and should be applied with engineering judgment. These distances should be adjusted by the Engineer for field conditions, if necessary, by increasing or decreasing the recommmended distances.

STATE OF CALIFORNIA
DEPARTMENT OF TRANSPORTATION

TRAFFIC CONTROL SYSTEM TABLES FOR LANE AND RAMP CLOSURES

NO SCALE

RSP T9 DATED JULY 19, 2013 SUPERSEDES RSP T9 DATED APRIL 19, 2013 THAT SUPPLEMENTS THE STANDARD PLANS BOOK DATED 2010.

REVISED STANDARD PLAN RSP T9

Dist	COUNTY	ROUTE	POST MILES TOTAL PROJECT	SHEET No.	TOTAL SHEETS
10	Mer	165	29.8/30.3	53	68

Devinder Singh
REGISTERED CIVIL ENGINEER

October 30, 2015
PLANS APPROVAL DATE

REGISTERED PROFESSIONAL ENGINEER
Devinder Singh
No. C50470
Exp. 6-30-17
CIVIL
STATE OF CALIFORNIA

THE STATE OF CALIFORNIA OR ITS OFFICERS OR AGENTS SHALL NOT BE RESPONSIBLE FOR THE ACCURACY OR COMPLETENESS OF SCANNED COPIES OF THIS PLAN SHEET.

TO ACCOMPANY PLANS DATED 4-4-16

2010 REVISED STANDARD PLAN RSP T13

NOTES:

See Revised Standard Plan RSP T9 for tables.

Use cone spacing X for taper segment, Y for tangent segment or Z for conflict situations, as approriate, per Table 1, unless X, Y, or Z cone spacing is shown on this sheet.

Unless otherwise specified in the special provisions, all temporary warning signs shall have black legend on fluorescent orange background.

California codes are designated by (CA). Otherwise, Federal (MUTCD) codes are shown.

TYPICAL LANE CLOSURE WITH REVERSIBLE CONTROL

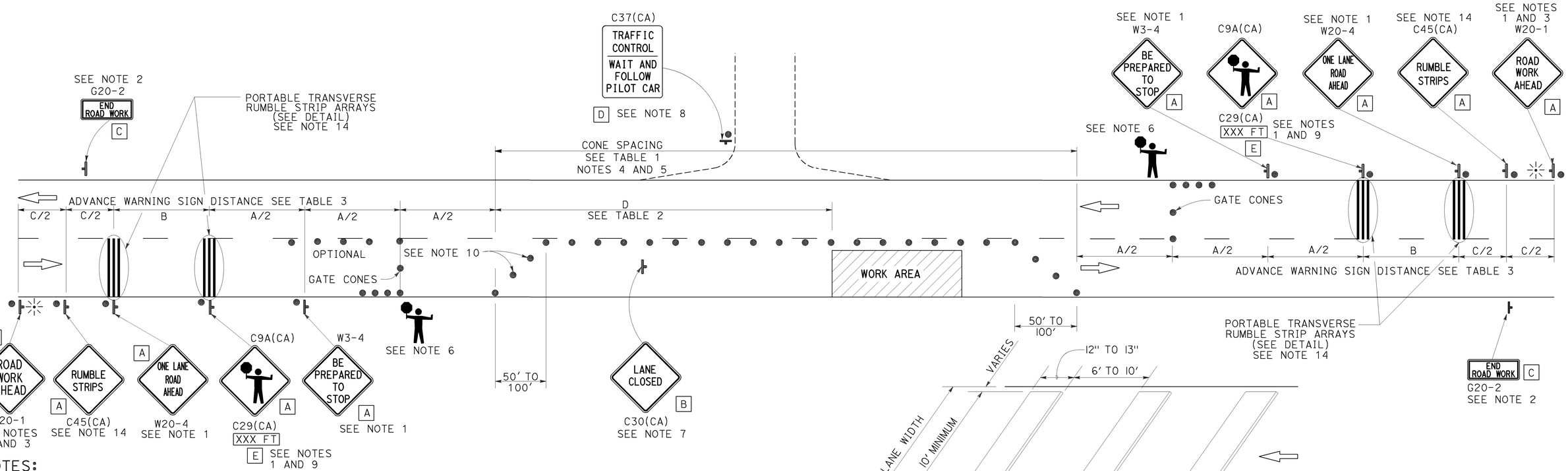

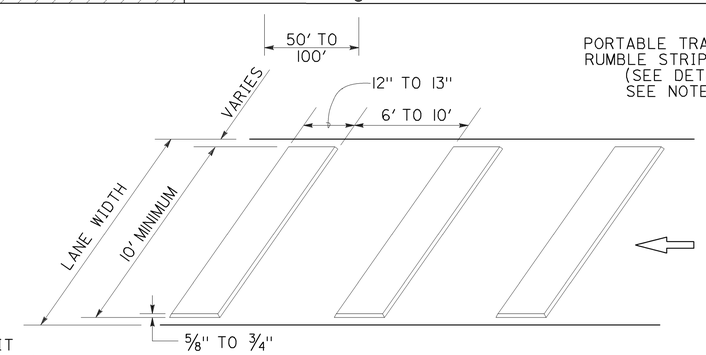

PORTABLE TRANSVERSE RUMBLE STRIP ARRAY DETAIL

NOTES:

1. Each advance warning sign in each direction of travel shall be equipped with at least two flags for daytime closure. Each flag shall be at least 16" x 16" in size and shall be orange or fluorescent red-orange in color. Flashing beacons shall be placed at the locations indicated for lane closure during hours of darkness.
2. A G20-2 "END ROAD WORK" sign, as appropriate, shall be placed at the end of the lane control unless the end of work area is obvious, or ends within a larger project's limits.
3. If the W20-1 sign would follow within 2000' of a stationary W20-1 or G20-1 "ROAD WORK NEXT _____ MILES", use a W20-4 sign for the first advance warning sign.
4. All cones used for lane closures during the hours of darkness shall be fitted with retroreflective bands (or sleeves) as specified in the specifications.
5. Portable delineators, placed at one-half the spacing indicated for traffic cones, may be used instead of cones for daytime closures only.
6. Additional advance flaggers may be required. Flagger should stand in a conspicuous place, be visible to approaching traffic as well as approaching vehicles after the first vehicle has stopped. During the hours of darkness, the flagging-station and flagger shall be illuminated and clearly visible to approaching traffic. The illumination footprint of the lighting on the ground shall be at least 20' in diameter. Place a minimum of four cones at 50' intervals in advance of flagger station as shown.
7. Place C30(CA) "LANE CLOSED" sign at 500' to 1000' intervals throughout extended work areas. They are optional if the work area is visible from the flagger station.
8. When a pilot car is used, place a C37(CA) "TRAFFIC CONTROL-WAIT AND FOLLOW PILOT CAR" sign with black legend on white background at all intersections, driveways and alleys without a flagger within traffic control area. Signs shall be clean and visible at all times. Where traffic can not be effectively self-regulated, at least one flagger shall be used at each intersection within traffic control area.
9. An optional C29(CA) sign may be placed below the C9A(CA) sign.
10. Either traffic cones or barricades shall be placed on the taper. Barricades shall be Type I, II, or III.
11. The color of the portable transverse rumble strips shall be black or orange. Use 2 arrays, each array shall consist of 3 rumble strips.
12. Portable transverse rumble strips shall not be placed on sharp horizontal or vertical curves nor shall they be placed through pedestrian crossings.
13. If the portable transverse rumble strips become out of alignment (skewed) by more than 6 inches, measured from one end to the other, they shall be readjusted to bring the placement back to the original location.
14. Portable transverse rumble strips are not required if any one of the following conditions is satisfied:
    A. Work duration occupies a location for four hours or less
    B. Posted speed limit is below 45 MPH
    C. Work is of emergency nature
    D. Work zone is in snow or icy weather conditions

SIGN PANEL SIZE (Min)

A	48" x 48"
B	30" x 30"
C	36" x 18"
D	36" x 42"
E	20" x 7"

LEGEND

- TRAFFIC CONE
- TEMPORARY TRAFFIC CONTROL SIGN
- PORTABLE FLASHING BEACON
- FLAGGER

STATE OF CALIFORNIA
DEPARTMENT OF TRANSPORTATION

TRAFFIC CONTROL SYSTEM FOR LANE CLOSURE ON TWO LANE CONVENTIONAL HIGHWAYS

NO SCALE

RSP T13 DATED OCTOBER 30, 2015 SUPERSEDES RSP T13 DATED OCTOBER 17, 2014, RSP T13 DATED JULY 18, 2014 AND RSP T13 DATED APRIL 19, 2013 AND STANDARD PLAN T13 DATED MAY 20, 2011 - PAGE 241 OF THE STANDARD PLANS BOOK DATED 2010.

REVISED STANDARD PLAN RSP T13

10-13-15

Dist	COUNTY	ROUTE	POST MILES TOTAL PROJECT	SHEET No.	TOTAL SHEETS
10	Mer	165	29.8/30.3	54	68

REGISTERED CIVIL ENGINEER

April 19, 2013
PLANS APPROVAL DATE

REGISTERED PROFESSIONAL ENGINEER Gurinderpal Bhullar No. C48815 Exp. 9-30-14 CIVIL STATE OF CALIFORNIA

THE STATE OF CALIFORNIA OR ITS OFFICERS OR AGENTS SHALL NOT BE RESPONSIBLE FOR THE ACCURACY OR COMPLETENESS OF SCANNED COPIES OF THIS PLAN SHEET.

TO ACCOMPANY PLANS DATED 4-4-16

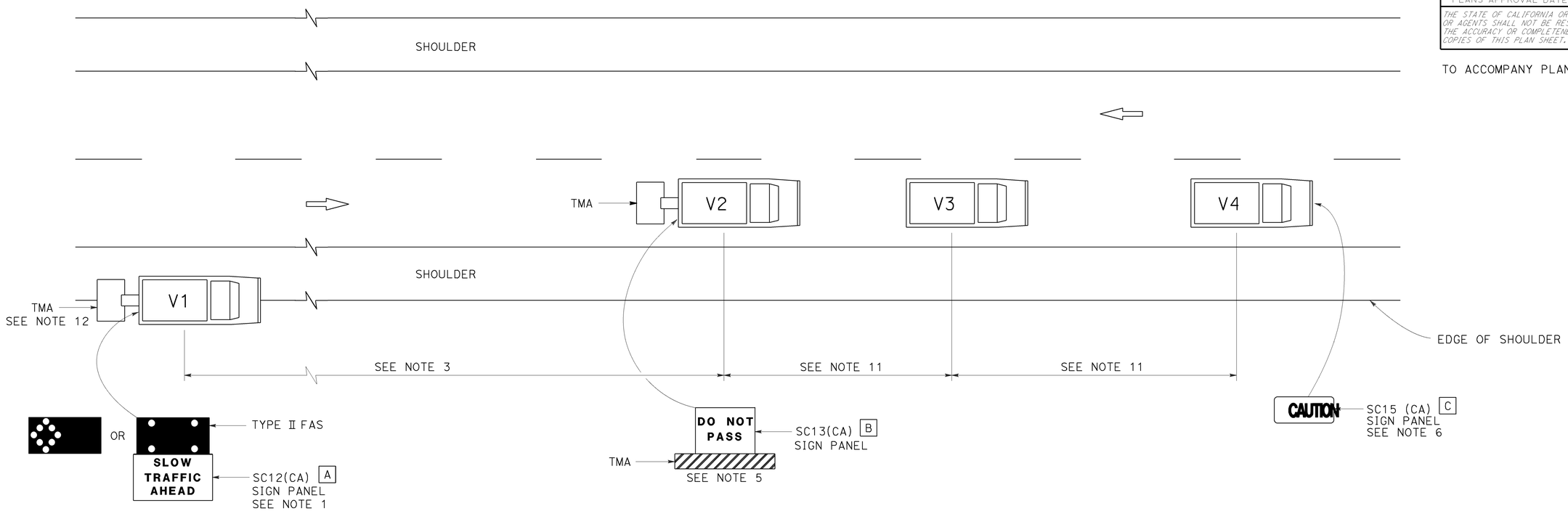

LEGEND

V1	SIGN VEHICLE
V2	SHADOW VEHICLE
V3	WORK/APPLICATION VEHICLE
V4	SIGN VEHICLE
TMA	TRUCK-MOUNTED ATTENUATOR
	FLASHING ARROW SIGN (FAS) IN FLASHING CAUTION MODE
	FLASHING ARROW SIGN (FAS) IN ALTERNATING DIAMOND CAUTION

SIGN PANEL SIZE (Min)

A	72" x 42"
B	54" x 42"
C	54" x 24"

NOTES:

1. Either a changeable message sign or a SC12(CA) "SLOW TRAFFIC AHEAD" sign shall be mounted on the rear of sign vehicle V1. The changeable message sign shall be sequenced to show the "CAUTION" message first, follow by the "SLOW TRAFFIC AHEAD" message. A Type II flashing arrow sign may be used with the SC12(CA) sign panel.
2. Sign vehicle V1 should be positioned where highly visible when shoulders are not available.
3. If traffic queues develop, sign vehicle V1 should be positioned upstream from the end of queue.
4. Vehicle-mounted sign panels shall have Type III or above retroreflective sheeting, black on white, or black on fluorescent orange, with 6" minimum series D letters per Caltrans sign specifications.
5. Shadow vehicle shall be equipped with a truck-mounted attenuator. The sign panel shown shall be mounted on the rear of shadow vehicle V2. The message "LANE CLOSED" may be used in place of the "DO NOT PASS" message.
6. The sign panel shown shall be mounted on the front of sign vehicle V4, facing opposing traffic.
7. All vehicles shall be equipped with flashing or rotating amber lights.
8. Sign vehicle V4 will not be required when the work and vehicles V2 and V3 are 2′ or more from the centerline of the highway during the work or application operations.
9. All vehicles used for lane closures shall be equipped with two-way radios and the vehicle operators shall maintain communication during the work or application operation.
10. This plan shall not be used where workers would be on foot in the work area. Use a stationary type lane closure (Revised Standard Plan T13) for this condition.
11. Minimize spacing between vehicles V2 and V3 and vehicles V3 and V4 to deter road users from driving in between them.
12. If sign vehicle V1 encroaches into the traffic lane due to insufficient shoulder width, sign vehicle V1 shall be equipped with a truck-mounted attenuator. Sign vehicle V1 shall stay as close to the edge of shoulder as practicable.

STATE OF CALIFORNIA
DEPARTMENT OF TRANSPORTATION

TRAFFIC CONTROL SYSTEM FOR MOVING LANE CLOSURE ON TWO LANE HIGHWAYS

NO SCALE

RSP T17 DATED APRIL 19, 2013 SUPERSEDES STANDARD PLAN T17
DATED MAY 20, 2011 - PAGE 245 OF THE STANDARD PLANS BOOK DATED 2010.

REVISED STANDARD PLAN RSP T17

2010 REVISED STANDARD PLAN RSP T17

12-18-12

Dist	COUNTY	ROUTE	POST MILES TOTAL PROJECT	SHEET No.	TOTAL SHEETS
10	Mer	165	29.8/30.3	55	68

Theresa Gabriel
REGISTERED ELECTRICAL ENGINEER

October 30, 2015
PLANS APPROVAL DATE

REGISTERED PROFESSIONAL ENGINEER
Theresa Aziz Gabriel
No. E15129
Exp. 6-30-16
ELECTRICAL
STATE OF CALIFORNIA

THE STATE OF CALIFORNIA OR ITS OFFICERS OR AGENTS SHALL NOT BE RESPONSIBLE FOR THE ACCURACY OR COMPLETENESS OF SCANNED COPIES OF THIS PLAN SHEET.

TO ACCOMPANY PLANS DATED 4-4-16

LEGEND:

- AB — ABANDON. IF APPLIED TO CONDUIT, REMOVE CONDUCTORS
- BC — INSTALL PULL BOX IN EXISTING CONDUIT RUN
- BP — PEDESTRIAN BARRICADE, TYPE AS INDICATED ON PLAN
- CB — INSTALL CONDUIT INTO EXISTING PULL BOX
- CC — CONNECT NEW AND EXISTING CONDUIT. REMOVE EXISTING CONDUCTORS AND INSTALL CONDUCTORS AS INDICATED
- CF — CONDUIT TO REMAIN FOR FUTURE USE. REMOVE CONDUCTORS. INSTALL PULL TAPE
- DH — DETECTOR HANDHOLE
- FA — FOUNDATION TO BE ABANDONED
- IS — INSTALL SIGN ON SIGNAL MAST ARM
- NS — NO SLIP BASE ON STANDARD
- PEC — PHOTOELECTRIC CONTROL
- PEU — PHOTOELECTRIC UNIT
- RC — EQUIPMENT OR MATERIAL TO BE REMOVED AND BECOME THE PROPERTY OF THE CONTRACTOR
- RE — REMOVE ELECTROLIER, FUSES AND BALLAST. TAPE ENDS OF CONDUCTORS
- RL — RELOCATE EQUIPMENT
- RR — REMOVE AND REUSE EQUIPMENT
- RS — REMOVE AND SALVAGE EQUIPMENT
- SC — SPLICE NEW TO EXISTING CONDUCTORS
- SD — SERVICE DISCONNECT
- TSP — TELEPHONE SERVICE POINT

ABBREVIATIONS

AC+	UNDERGROUNDED CONDUCTOR
APS	ACCESSIBLE PEDESTRIAN SIGNAL
Batt	BATTERY
BBS	BATTERY BACKUP SYSTEM
BC	BOLT CIRCLE
Blk	BLACK
BP	BYPASS
BPB	BICYCLE PUSH BUTTON
C	CONDUIT
CB	CIRCUIT BREAKER
CCTV	CLOSED CIRCUIT TELEVISION
Ckt	CIRCUIT
CMS	CHANGEABLE MESSAGE SIGN
Ctid	CALTRANS IDENTIFICATION
Comm	COMMUNICATION
Cntl	CONTROL
DF	DEPARTMENT-FURNISHED
DLC	LOOP DETECTOR LEAD-IN CABLE
EMS	EXTINGUISHABLE MESSAGE SIGN
EVUC	EMERGENCY VEHICLE UNIT CABLE
EVUD	EMERGENCY VEHICLE UNIT DETECTOR
FB	FLASHING BEACON
FBCA	FLASHING BEACON CONTROL ASSEMBLY
FBS	FLASHING BEACON WITH SLIP BASE
FO	FIBER OPTIC
G	EQUIPMENT GROUNDING CONDUCTOR
GB	GROUND BUS
GFCI	GROUND FAULT CIRCUIT INTERRUPTER
Grn	GREEN
HAR	HIGHWAY ADVISORY RADIO
Hex	HEXAGONAL
HPS	HIGH PRESSURE SODIUM
IISNS	INTERNALLY ILLUMINATED STREET NAME SIGN
ISL	INDUCTION SIGN LIGHTING
LED	LIGHT EMITTING DIODE
LMA	LUMINAIRE MAST ARM
LPS	LOW PRESSURE SODIUM
Ltg	LIGHTING
Lum	LUMINAIRE
M	METERED
MAT	MAST ARM MOUNTING TOP ATTACHMENT
MAS	MAST ARM MOUNTING SIDE ATTACHMENT
MBPS	MANUAL BYPASS SWITCH
M/M	MULTIPLE TO MULTIPLE TRANSFORMER
Mtg	MOUNTING
MV	MERCURY VAPOR LIGHTING FIXTURE
MVDS	MICROWAVE VEHICLE DETECTION SYSTEM
N	NEUTRAL (GROUNDED CONDUCTOR)
NB	NEUTRAL BUS
NC	NORMALLY CLOSE
NO	NORMALLY OPEN
P	CIRCUIT BREAKER'S POLE
PB	PULL BOX
PBA	PUSH BUTTON ASSEMBLY
PEC	PHOTOELECTRIC CONTROL
Ped	PEDESTRIAN
PEU	PHOTOELECTRIC UNIT
PT	CONDUIT WITH PULL TAPE
PTR	POWER TRANSFER RELAY
RE	RELOCATED EQUIPMENT
RM	RAMP METERING
RWIS	ROADSIDE WEATHER INFORMATION SYSTEM
SB	SLIP BASE
SIC	SIGNAL INTERCONNECT CABLE
Sig	SIGNAL
SMA	SIGNAL MAST ARM
SNS	STREET NAME SIGN
SP	SERVICE POINT
TB	TERMINAL BOARD
TDC	TELEPHONE DEMARCATION CABINET
Temp	TEMPERATURE
TMS	TRAFFIC MONITORING STATION
TOS	TRAFFIC OPERATIONS SYSTEM
UPS	UNINTERRUPTABLE POWER SUPPLY
UPSC	UNINTERRUPTABLE POWER SUPPLY CONTROLLER
Veh	VEHICLE
VIVDS	VIDEO IMAGE VEHICLE DETECTION SYSTEM
Wht	WHITE
WIM	WEIGH-IN-MOTION
Xfmr	TRANSFORMER

SOFFIT AND WALL-MOUNTED LUMINAIRES

- PENDANT SOFFIT LUMINAIRE, 70 W HPS UNLESS OTHERWISE SPECIFIED
- FLUSH-MOUNTED SOFFIT LUMINAIRE, 70 W HPS UNLESS OTHERWISE SPECIFIED
- WALL-MOUNTED LUMINAIRE, 70 W HPS UNLESS OTHERWISE SPECIFIED
- EXISTING SOFFIT OR WALL-MOUNTED LUMINAIRE TO REMAIN UNMODIFIED
- EXISTING SOFFIT OR WALL-MOUNTED LUMINAIRE TO BE MODIFIED AS SPECIFIED

NOTE:
Arrow indicates "street side" of luminaire.

COMMONLY USED SYMBOLS FOR UNITED STATES CUSTOMARY UNITS OF MEASUREMENT:

SYMBOL	DEFINITIONS
Ω	OHMS
min	MINUTE
s	SECOND
bps	BITS PER SECOND
Bps	BYTES PER SECOND
A	AMPERE
V	VOLT
V(dc)	VOLT (DIRECT CURRENT)
V(ac)	VOLT (ALTERNATING CURRENT)
FC	FOOT - CANDLE
W	WATTS
VA	VOLT-AMPERE
M	MEGA
k	KILO
m	MILLI
μ	MICRO
P	PICO
Hz	HERTZ

MISCELLANEOUS ELECTROLIERS

NEW	EXISTING	
		LUMINAIRE ON WOOD POLE
		NON-STANDARD ELECTROLIER (SEE PROJECT LEGEND)
		CITY ELECTROLIER
		ELECTROLIER FOUNDATION (FUTURE INSTALLATION)

NOTES:

1. LED luminaires shall be 235 W when installed on Type 21, 21D, 30, 31 and 32 Standards, unless otherwise specified. LED luminaires shall be 165 W when installed on other type standards or poles, unless otherwise specified.
2. Luminaires shall be the cutoff type, ANSI Type III medium cutoff lighting distribution, unless otherwise specified.

STANDARD ELECTROLIER

NEW	EXISTING	STANDARD TYPE
		15
		15D
		15 STRUCTURE
		15D STRUCTURE
		21
		21D
		21 STRUCTURE
		21D STRUCTURE
		30
		31
		32

STATE OF CALIFORNIA
DEPARTMENT OF TRANSPORTATION

ELECTRICAL SYSTEMS (LEGEND AND ABBREVIATIONS)

NO SCALE

RSP ES-1A DATED OCTOBER 30, 2015 SUPERSEDES RSP ES-1A DATED JULY 19, 2013 AND STANDARD PLAN ES-1A DATED MAY 20, 2011 - PAGE 425 OF THE STANDARD PLANS BOOK DATED 2010.

REVISED STANDARD PLAN RSP ES-1A

2010 REVISED STANDARD PLAN RSP ES-1A

9-29-15

Dist	COUNTY	ROUTE	POST MILES TOTAL PROJECT	SHEET No.	TOTAL SHEETS
10	Mer	165	29.8/30.3	56	68

Theresa Gabriel
REGISTERED ELECTRICAL ENGINEER

October 30, 2015
PLANS APPROVAL DATE

REGISTERED PROFESSIONAL ENGINEER
Theresa Aziz Gabriel
No. E15129
Exp. 6-30-16
ELECTRICAL
STATE OF CALIFORNIA

THE STATE OF CALIFORNIA OR ITS OFFICERS OR AGENTS SHALL NOT BE RESPONSIBLE FOR THE ACCURACY OR COMPLETENESS OF SCANNED COPIES OF THIS PLAN SHEET.

TO ACCOMPANY PLANS DATED 4-4-16

CONDUIT

NEW	EXISTING	
		LIGHTING CONDUIT, UNLESS OTHERWISE INDICATED OR NOTED
		TRAFFIC SIGNAL CONDUIT
C	c	COMMUNICATION CONDUIT
T	t	TELEPHONE CONDUIT
F	f	FIRE ALARM CONDUIT
FO	fo	FIBER OPTIC CONDUIT
		CONDUIT TERMINATION
R	r	CONDUIT RISER ATTACHED TO THE STRUCTURE OR SERVICE POLE

SERVICE EQUIPMENT

NEW	EXISTING	
OH	oh	OVERHEAD LINES
U	U	WOOD POLE, "U" INDICATES UTILITY OWNED
		POLE GUY WITH ANCHOR
		UTILITY TRANSFORMER - GROUND MOUNTED
III	III	SERVICE EQUIPMENT ENCLOSURE TYPE. DOOR INDICATES FRONT OF ENCLOSURE
T	t	TELEPHONE DEMARCATION CABINET

POLE-MOUNTED SERVICE DESIGNATION

TYPE H SERVICE, 28'-10" — TYPE OF INSTALLATION AND POLE HEIGHT ABOVE GRADE

FLASHING BEACON

NEW	EXISTING	
R	R	FLASHING BEACON (ONE VEHICLE SIGNAL HEAD WITH BACKPLATE AND VISOR) "R" INDICATES RED INDICATION, "Y" INDICATES YELLOW INDICATION
Y Y	Y Y	FLASHING BEACON WITH TYPE 15-FBS STANDARD AND A SIGN.
R R	R R	FLASHING BEACON WITH TYPES 9, 9A OR 9B SIGN UNLESS OTHERWISE SPECIFIED OR INDICATED

SIGNAL EQUIPMENT

NEW	EXISTING	
		PEDESTRIAN SIGNAL HEAD
		PUSH BUTTON ASSEMBLY POST
		PEDESTRIAN BARRICADE
		VEHICLE SIGNAL HEAD (WITH BACKPLATE AND 3-SECTIONS: RED, YELLOW AND GREEN)
		VEHICLE SIGNAL HEAD WITH ANGLE VISOR
PV	PV	MODIFICATIONS OF BASIC SYMBOL: "L" INDICATES ALL NON-ARROW SECTIONS LOUVERED "LG" INDICATES LOUVERED GREEN SECTION ONLY "PV" INDICATES ALL 12" SECTIONS PROGRAMMED VISIBILITY "8" INDICATES ALL 8" SECTIONS (ONLY WHEN SPECIFIED)
		VEHICLE SIGNAL HEAD CONSISTING OF RED, YELLOW AND GREEN LEFT ARROW SECTIONS
		VEHICLE SIGNAL HEAD CONSISTING OF RED AND YELLOW SECTIONS WITH AN UP GREEN ARROW SECTION
		VEHICLE SIGNAL HEAD (5 SECTION) CONSISTING OF RED, YELLOW AND GREEN SECTIONS WITH YELLOW AND GREEN RIGHT ARROW SECTIONS
		TYPE 15TS STANDARD WITH VEHICLE SIGNAL HEAD AND LUMINAIRE
		TYPE 21TS STANDARD WITH VEHICLE SIGNAL HEAD AND LUMINAIRE
		STANDARD WITH LUMINAIRE AND SIGNAL MAST ARMS AND ATTACHED VEHICLE SIGNAL HEADS
		TYPE 1 STANDARD WITH ATTACHED VEHICLE SIGNAL HEADS
		STANDARD WITH A SIGNAL MAST ARM, ATTACHED VEHICLE SIGNAL HEADS AND INTERNALLY ILLUMINATED STREET NAME SIGN
		CONTROLLER ASSEMBLY. DOOR INDICATES FRONT OF CABINET

SIGNAL EQUIPMENT Cont

NEW	EXISTING	
		GUARD POST
		TYPE 1 STANDARD WITH RAMP METERING SIGN
		OPTICAL DETECTOR FOR THE EMERGENCY VEHICLE DETECTION

NOTES:

1. All signal sections shall be 12" unless shown otherwise.
2. Signal heads shall be provided with backplates unless shown otherwise.

ILLUMINATED OVERHEAD SIGN

NEW	EXISTING	
		SINGLE POST, SINGLE ILLUMINATED SIGN, BALANCED BUTTERFLY
		SINGLE POST, DOUBLE ILLUMINATED SIGN, BALANCED BUTTERFLY
		SINGLE POST, SINGLE ILLUMINATED SIGN, FULL CANTILEVER
		DOUBLE POST, SINGLE ILLUMINATED SIGN
		SINGLE ILLUMINATED SIGN MOUNTED ON STRUCTURE
		DOUBLE POST, SINGLE ILLUMINATED SIGN WITH ELECTROLIER

STATE OF CALIFORNIA
DEPARTMENT OF TRANSPORTATION

ELECTRICAL SYSTEMS (LEGEND AND ABBREVIATIONS)

NO SCALE

RSP ES-1B DATED OCTOBER 30, 2015 SUPERSEDES RSP ES-1B DATED JULY 19, 2013 AND STANDARD PLAN ES-1B DATED MAY 20, 2011 - PAGE 426 OF THE STANDARD PLANS BOOK DATED 2010.

REVISED STANDARD PLAN RSP ES-1B

2010 REVISED STANDARD PLAN RSP ES-1B

8-19-15

Dist	COUNTY	ROUTE	POST MILES TOTAL PROJECT	SHEET No.	TOTAL SHEETS
10	Mer	165	29.8/30.3	57	68

Theresa Gabriel
REGISTERED ELECTRICAL ENGINEER

October 30, 2015
PLANS APPROVAL DATE

REGISTERED PROFESSIONAL ENGINEER Theresa Aziz Gabriel No. E15129 Exp. 6-30-16 ELECTRICAL STATE OF CALIFORNIA

THE STATE OF CALIFORNIA OR ITS OFFICERS OR AGENTS SHALL NOT BE RESPONSIBLE FOR THE ACCURACY OR COMPLETENESS OF SCANNED COPIES OF THIS PLAN SHEET.

TO ACCOMPANY PLANS DATED 4-4-16

EQUIPMENT IDENTIFICATION

ILLUMINATED SIGN IDENTIFICATION NUMBER:

SIGN No. 12345

10 ISL SCI 1.0

- SIGN NUMBER - PLACE ON POST OR STRUCTURE
- TRANSFORMER RATING (kVA)
- LIGHTING CONTROL TYPE
- NUMBER AND TYPE OF FIXTURES

} DO NOT PLACE ON STANDARD OR STRUCTURE

ELECTROLIER OR EQUIPMENT IDENTIFICATION NUMBER:

12345 - 15'-0"

- MAST ARM LENGTH, IF SHOWN. DO NOT PLACE ON STANDARD OR STRUCTURE
- EQUIPMENT NUMBER - PLACE ON STANDARD OR STRUCTURE. EXISTING EQUIPMENT NUMBERS ARE SHOWN IN PARENTHESIS

CONDUIT AND CONDUCTOR IDENTIFICATION:

1½"C, 2#10, 15#14, 2 DLC, 12P#18 (PAIR)

- NUMBER AND SIZE OF CONDUCTORS AND CABLES
- SIZE OF CONDUIT IN INCHES

ø1, ø2, ø2P, etc.	TRAFFIC PHASE IDENTIFICATION FOR SIGNALS, DETECTORS AND PHASE DIAGRAMS
1 2 3	LEGEND NUMBERS
A B C	EQUIPMENT, SIGNAL POLES, INSTALLATION OR ITEMS
1 2 3	CONDUIT RUN NUMBERS

SIGNAL AND LIGHTING STANDARD (TYPICAL DESIGNATION):

19A - 3 - 100

- WIND VELOCITY = 100 mph
- CASE 3 ARM LOADING
- STANDARD TYPE
- STANDARD PLAN SHEET NUMBER
- DETAIL, NUMBER, SECTION, TYPE OR ELEVATION

MISCELLANEOUS EQUIPMENT

NEW	EXISTING	
CMS	cms	CHANGEABLE MESSAGE SIGN
		CLOSED CIRCUIT TELEVISION CAMERA
		HIGHWAY ADVISORY RADIO POLE AND ANTENNA
EMS	ems	LED EXTINGUISHABLE MESSAGE SIGN
M V	m v	DETECTION DEVICE M = MICROWAVE SENSOR V = VIDEO IMAGE SENSOR

WIRING DIAGRAM LEGEND

- EXTERNAL CONDUCTOR
- CONDUCTOR OR BUS
- TIE POINT
- CONTACTOR COIL
- CONTACTOR, NO CONTACT
- TERMINAL BLOCKS
- CONTACTOR, NC CONTACT
- ENCLOSURE BOND
- GROUNDING ELECTRODE
- CIRCUIT BREAKER
- RECEPTACLE

PULL BOXES

NEW	EXISTING	
		PULL BOX, No. 5 UNLESS OTHERWISE INDICATED OR NOTED
3	9A(21)	PULL BOX, ADDITIONAL DESIGNATIONS OR DESCRIPTIONS

3 No. 3½ PULL BOX
5 No. 5 PULL BOX
6 No. 6 PULL BOX
7 No. 7 (CEILING PULL BOX)
8 No. 8 (PENDANT SOFFIT PULL BOX)
9 No. 9 PULL BOX
9A No. 9A PULL BOX

(C) COMMUNICATIONS PULL BOX
(E) PULL BOX WITH EXTENSION
(S) SPRINKLER CONTROL PULL BOX
(21) ANCHOR BOLTS AND CONDUIT FOR FUTURE INSTALLATION OF TYPE 21 STANDARD
(T) TRAFFIC PULL BOX

VEHICLE DETECTORS

5 J 9 U

- VEHICLE DETECTOR DESIGNATION
- U = UPPER
  L = LOWER
- SLOT NUMBER IN INPUT FILE
- INPUT FILE (I OR J)
- PHASE

NEW	EXISTING	
		TYPE A LOOP DETECTOR. OUTLINE OF SAWCUT SHOWN
		TYPE B LOOP DETECTOR. OUTLINE OF SAWCUT SHOWN
		TYPE C LOOP DETECTOR. OUTLINE OF SAWCUT SHOWN
		TYPE D LOOP DETECTOR. OUTLINE OF SAWCUT SHOWN
		TYPE E LOOP DETECTOR. OUTLINE OF SAWCUT SHOWN
		TYPE Q LOOP DETECTOR. OUTLINE OF SAWCUT SHOWN
DH	dh	DETECTOR HANDHOLE
		MICROWAVE OR VIDEO DETECTION ZONE

STATE OF CALIFORNIA
DEPARTMENT OF TRANSPORTATION

ELECTRICAL SYSTEMS (LEGEND AND ABBREVIATIONS)

NO SCALE

RSP ES-1C DATED OCTOBER 30, 2015 SUPERSEDES RSP ES-1C DATED JULY 19, 2013 AND STANDARD PLAN ES-1C DATED MAY 20, 2011 - PAGE 427 OF THE STANDARD PLANS BOOK DATED 2010.

REVISED STANDARD PLAN RSP ES-1C

2010 REVISED STANDARD PLAN RSP ES-1C

8-19-15

Dist	COUNTY	ROUTE	POST MILES TOTAL PROJECT	SHEET No.	TOTAL SHEETS
10	Mer	165	29.8/30.3	58	68

REGISTERED ELECTRICAL ENGINEER

October 30, 2015
PLANS APPROVAL DATE

THE STATE OF CALIFORNIA OR ITS OFFICERS OR AGENTS SHALL NOT BE RESPONSIBLE FOR THE ACCURACY OR COMPLETENESS OF SCANNED COPIES OF THIS PLAN SHEET.

REGISTERED PROFESSIONAL ENGINEER Theresa Aziz Gabriel No. E15129 Exp. 6-30-16 ELECTRICAL STATE OF CALIFORNIA

TO ACCOMPANY PLANS DATED 4-4-16

2010 REVISED STANDARD PLAN RSP ES-2A

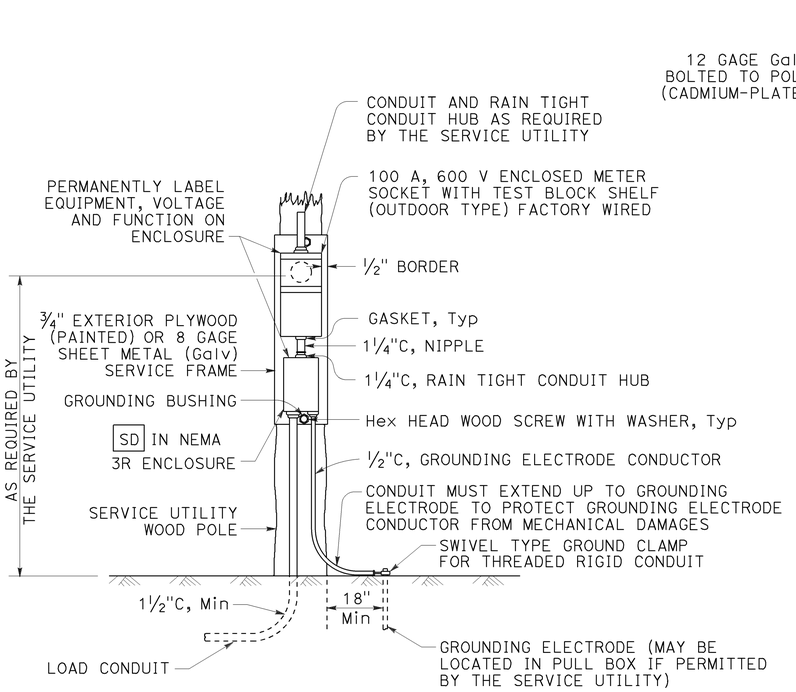

TYPE SCE-1
DETAIL A

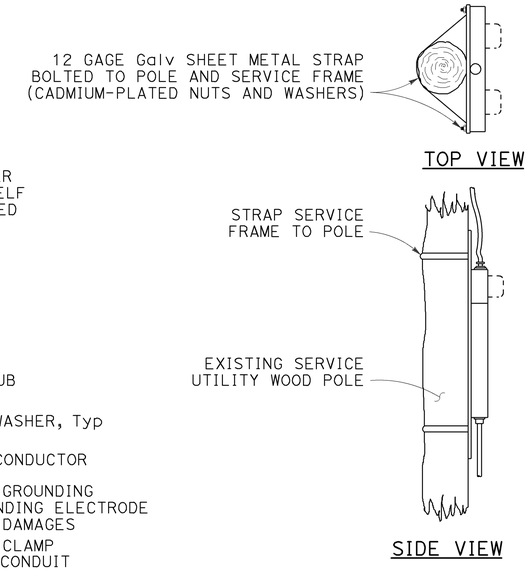

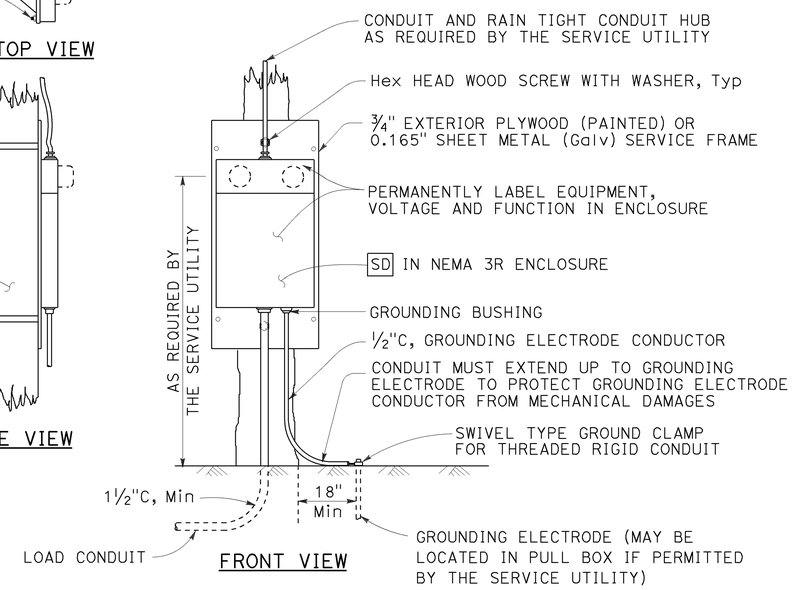

TYPE SCE-2
DETAIL B

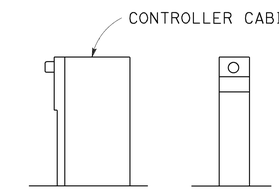

TYPE OF SERVICE (TYPICAL)
DETAIL C

See Notes 1 and 2

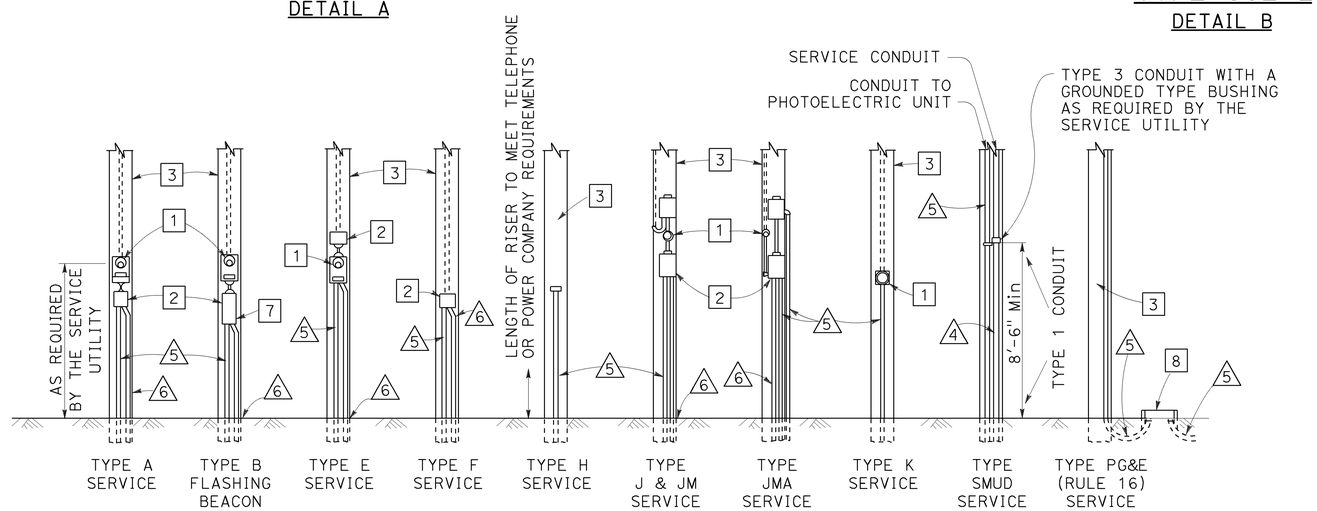

POLE MOUNTED SERVICE INSTALLATIONS
DETAIL D

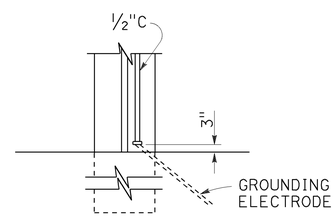

TYPE A
See Note 3

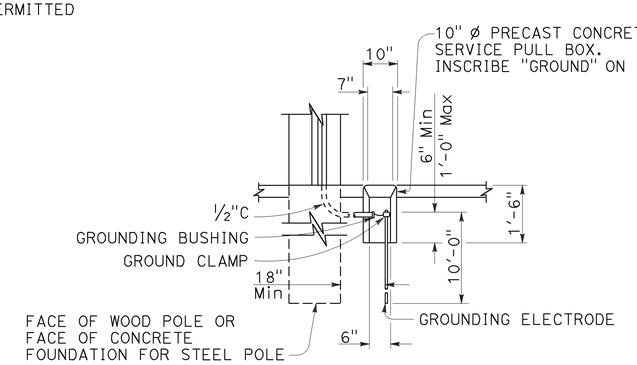

TYPE B
See Note 4

SERVICE GROUNDING
DETAIL E

LEGEND:

1. METER SOCKET.
2. SERVICE ENCLOSURE WITH A MINIMUM 60 A RATED MAIN CIRCUIT BREAKER, UNLESS OTHERWISE SHOWN.
3. A. UTILITY OWNED POLE. THE SERVICE UTILITY WILL FURNISH AND INSTALL REQUIRED SERVICE RISER, PEU WITH CONDUCTORS AND OTHER EQUIPMENT AS NEEDED.
   B. STATE OWNED POLE. THE CONTRACTOR SHALL FURNISH AND INSTALL REQUIRED SERVICE RISER AND EQUIPMENT.
4. 2"C, SERVICE CONDUIT MUST HAVE A GROUNDED TYPE BUSHING INSTALLED AT UPPER END OF THE METALLIC POLE RISER CONDUIT. A GROUNDING CONDUCTOR MUST BE ATTACHED TO THE BUSHING, CARRIED THROUGH THE CONDUIT RUN AND ATTACHED TO THE SERVICE EQUIPMENT ENCLOSURE'S GROUNDING ELECTRODE.
5. CONDUIT, LENGTH AND SIZE AS REQUIRED.
6. ½"C, 1#6. SEE DETAIL E.
7. FLASHING BEACON CONTROL ASSEMBLY.
8. SERVICE PULL BOX, No. 5 UNLESS OTHERWISE NOTED, FURNISHED AND INSTALLED BY THE CONTRACTOR. SERVICE UTILITY SHALL DETERMINE THE EXACT LOCATION.

NOTES:

1. Type II service equipment enclosure mounted on the side of a controller cabinet.
2. Type III complete free-standing service equipment enclosure.
3. Ground clamp and required fittings must be accessible. Conduit must extend to protect grounding electrode conductor from mechanical damage.
4. Use where service utility requires 18" clearance between grounding electrode and the pole or service equipment enclosure. Installation shown is for sidewalk or paved areas. In unpaved areas, omit special service pull box and locate ground clamp above ground or locate ground clamp in nearest pull box.

STATE OF CALIFORNIA
DEPARTMENT OF TRANSPORTATION

ELECTRICAL SYSTEMS (SERVICE EQUIPMENT)

NO SCALE

RSP ES-2A DATED OCTOBER 30, 2015 SUPERSEDES STANDARD PLAN ES-2A DATED MAY 20, 2011 - PAGE 428 OF THE STANDARD PLANS BOOK DATED 2010.

REVISED STANDARD PLAN RSP ES-2A

8-20-15

Dist	COUNTY	ROUTE	POST MILES TOTAL PROJECT	SHEET No.	TOTAL SHEETS
10	Mer	165	29.8/30.3	59	68

Theresa Gabriel
REGISTERED ELECTRICAL ENGINEER

October 30, 2015
PLANS APPROVAL DATE

REGISTERED PROFESSIONAL ENGINEER Theresa Aziz Gabriel No. E15129 Exp. 6-30-16 ELECTRICAL STATE OF CALIFORNIA

THE STATE OF CALIFORNIA OR ITS OFFICERS OR AGENTS SHALL NOT BE RESPONSIBLE FOR THE ACCURACY OR COMPLETENESS OF SCANNED COPIES OF THIS PLAN SHEET.

TO ACCOMPANY PLANS DATED 4-4-16

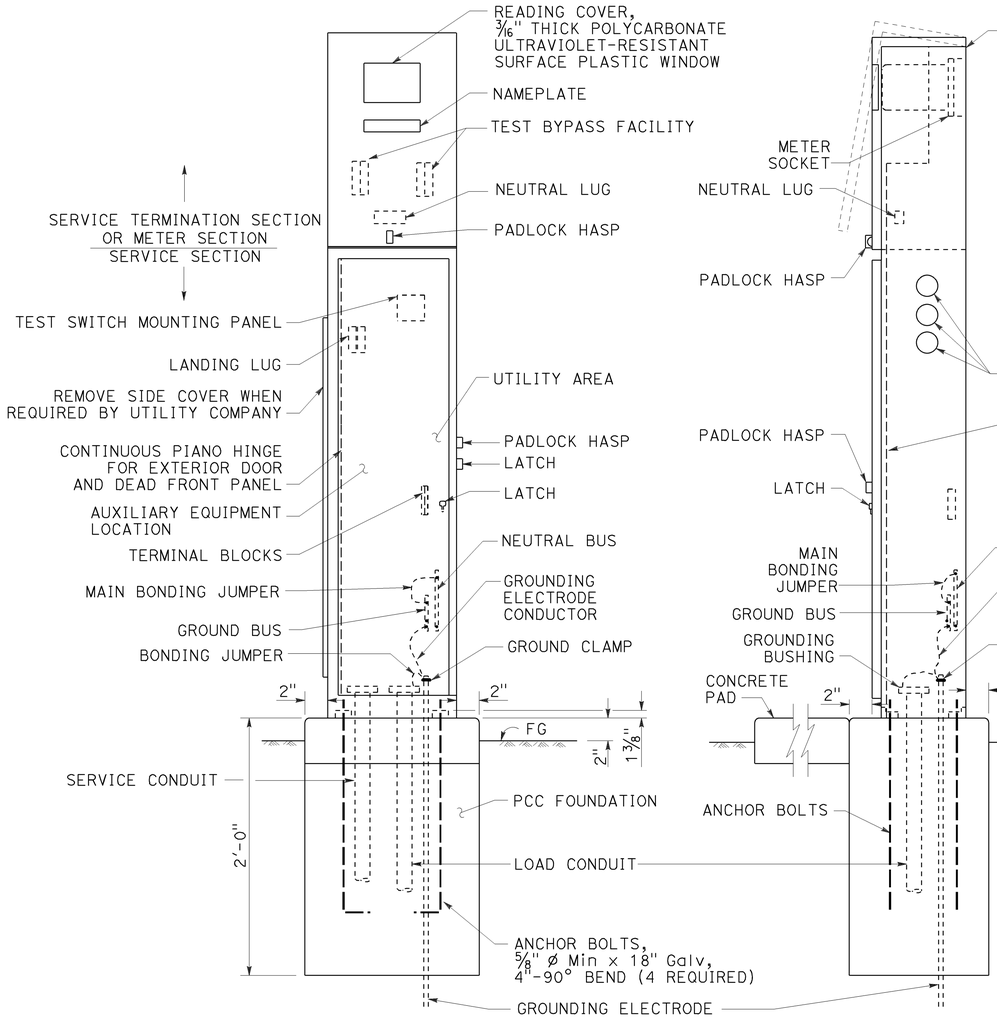

FRONT VIEW

SIDE VIEW

TYPE III-AF SERVICE EQUIPMENT ENCLOSURE (TYPICAL)

DETAIL A

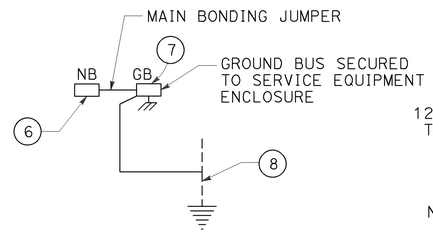

DETAIL D

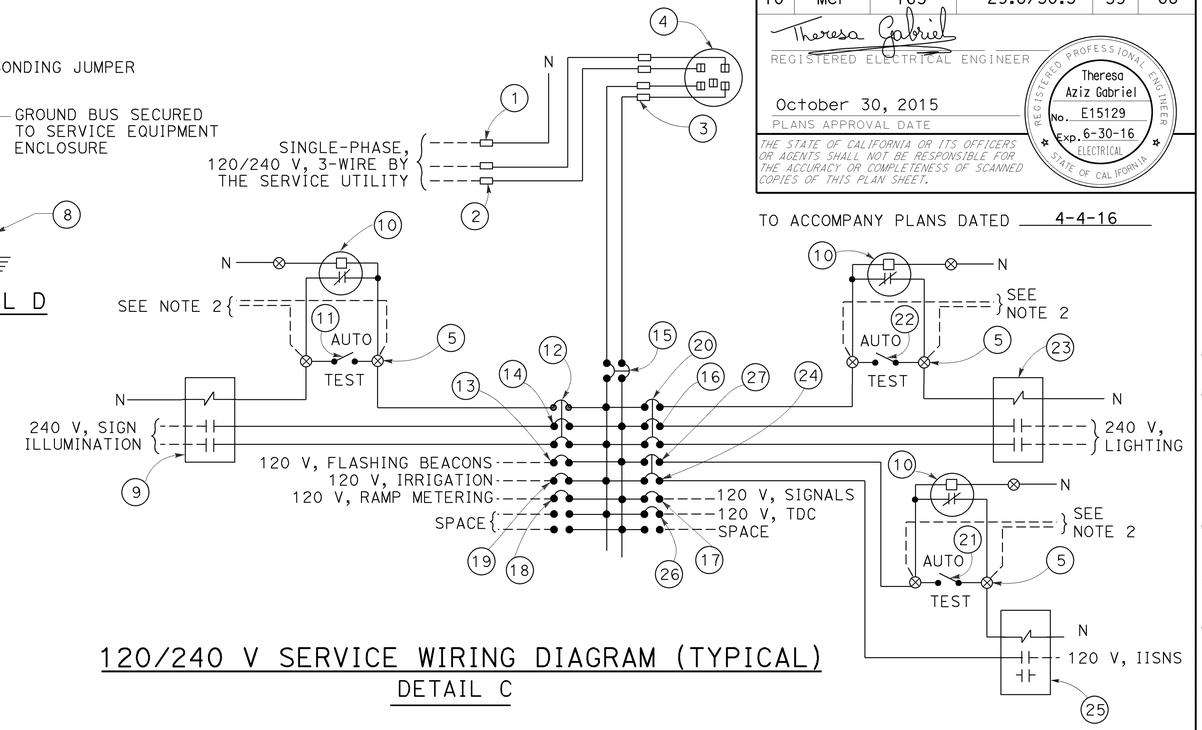

120/240 V SERVICE WIRING DIAGRAM (TYPICAL)

DETAIL C

TYPE III-A SERVICE EQUIPMENT ENCLOSURE LEGEND (120/240 V)					
ITEM	COMPONENT	NAMEPLATE DESCRIPTION	ITEM	COMPONENT	NAMEPLATE DESCRIPTION
1	NEUTRAL LUG		14	30 A, 240 V, 2P, CB	SIGN ILLUMINATION
2	LANDING LUG		15	100 A, 240 V, 2P, CB	MAIN BREAKER
3	TEST BYPASS FACILITY		16	30 A, 240 V, 2P, CB	LIGHTING
4	METER SOCKET AND SUPPORT		17	50 A, 120 V, 1P, CB	SIGNALS
5	TERMINAL BLOCKS		18	30 A, 120 V, 1P, CB	RAMP METERING
6	NEUTRAL BUS		19	20 A, 120 V, 1P, CB	IRRIGATION
7	GROUND BUS		20	15 A, 120 V, 1P, CB	LIGHTING CONTROL
8	GROUNDING ELECTRODE		21	15 A, 1P, TEST SWITCH	IISNS TEST SWITCH
9	30 A, 2P, NO CONTACTOR	SIGN ILLUMINATION	22	15 A, 1P, TEST SWITCH	LIGHTING TEST SWITCH
10	PHOTOELECTRIC UNIT (NOTE 4)	PEU	23	60 A, 2P, NO CONTACTOR	LIGHTING
11	15 A, 1P, TEST SWITCH	SIGN ILLUMINATION TEST SWITCH	24	15 A, 120 V, 1P, CB	IISNS
12	15 A, 120 V, 1P, CB	SIGN ILLUMINATION CONTROL	25	30 A, 2P, NO CONTACTOR	IISNS
13	15 A, 120 V, 1P, CB	FLASHING BEACON	26	20 A, 120 V, 1P, CB	TELEPHONE DEMARCATION CABINET
			27	15 A, 120 V, 1P, CB	IISNS CONTROL

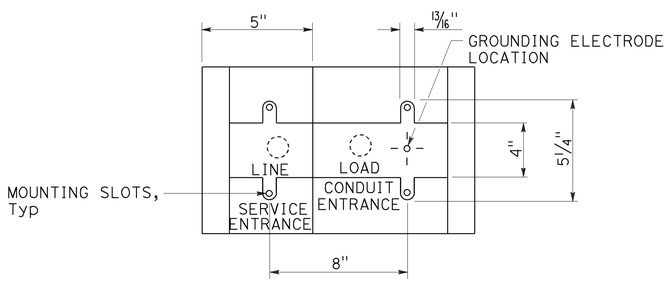

BASE FOR TYPE III-A SERVICE EQUIPMENT ENCLOSURE

DETAIL B

NOTES:

1. Unless otherwise indicated on the plans, service equipment items shall be provided for each service equipment enclosure as shown.
2. Connect to remote test switch mounted on lighting standards, sign post or structure when required.
3. Items 1 and 6 shall be isolated from the service equipment enclosure.
4. Type V photoelectric control shall be used unless otherwise indicated on the plans.
5. Item 12, 20 and 27 shall be ganged operated CB.

STATE OF CALIFORNIA
DEPARTMENT OF TRANSPORTATION

ELECTRICAL SYSTEMS (SERVICE EQUIPMENT ENCLOSURE AND TYPICAL WIRING DIAGRAM, TYPE III-A SERIES)

NO SCALE

RSP ES-2D DATED OCTOBER 30, 2015 SUPERSEDES STANDARD PLAN ES-2D DATED MAY 20, 2011 - PAGE 431 OF THE STANDARD PLANS BOOK DATED 2010.

REVISED STANDARD PLAN RSP ES-2D

2010 REVISED STANDARD PLAN RSP ES-2D

Dist	COUNTY	ROUTE	POST MILES TOTAL PROJECT	SHEET No.	TOTAL SHEETS
10	Mer	165	29.8/30.3	60	68

REGISTERED CIVIL ENGINEER

October 30, 2015
PLANS APPROVAL DATE

REGISTERED PROFESSIONAL ENGINEER
Stanley P. Johnson
No. C57793
Exp. 3-31-16
CIVIL
STATE OF CALIFORNIA

THE STATE OF CALIFORNIA OR ITS OFFICERS OR AGENTS SHALL NOT BE RESPONSIBLE FOR THE ACCURACY OR COMPLETENESS OF SCANNED COPIES OF THIS PLAN SHEET.

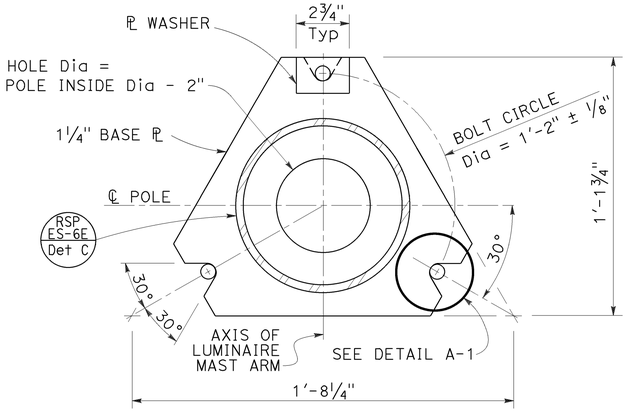

BASE PLATE
DETAIL A

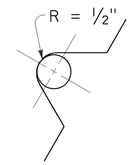

DETAIL A-1

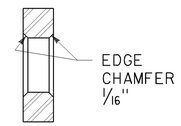

SECTION A-A

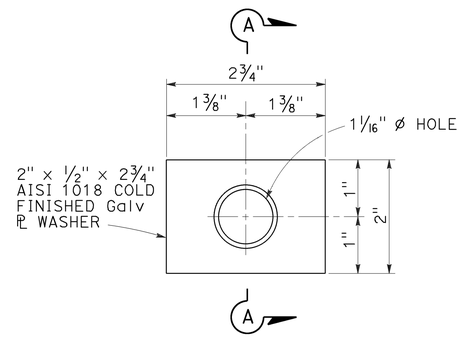

PLATE WASHER
DETAIL D

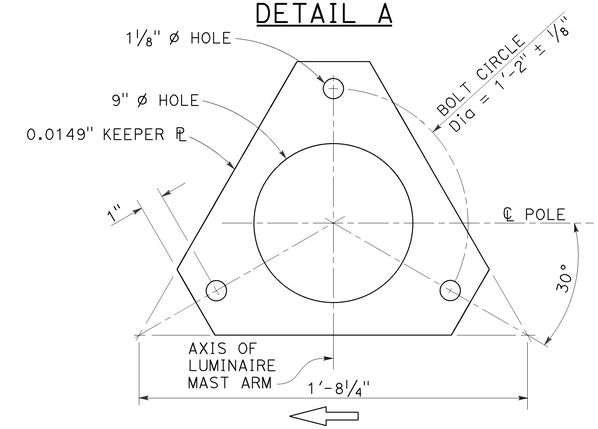

KEEPER PLATE
DETAIL B

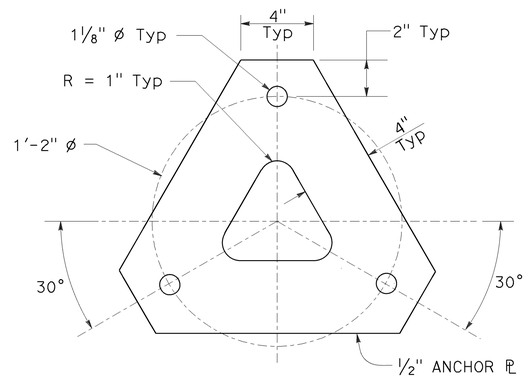

ANCHOR PLATE
DETAIL E

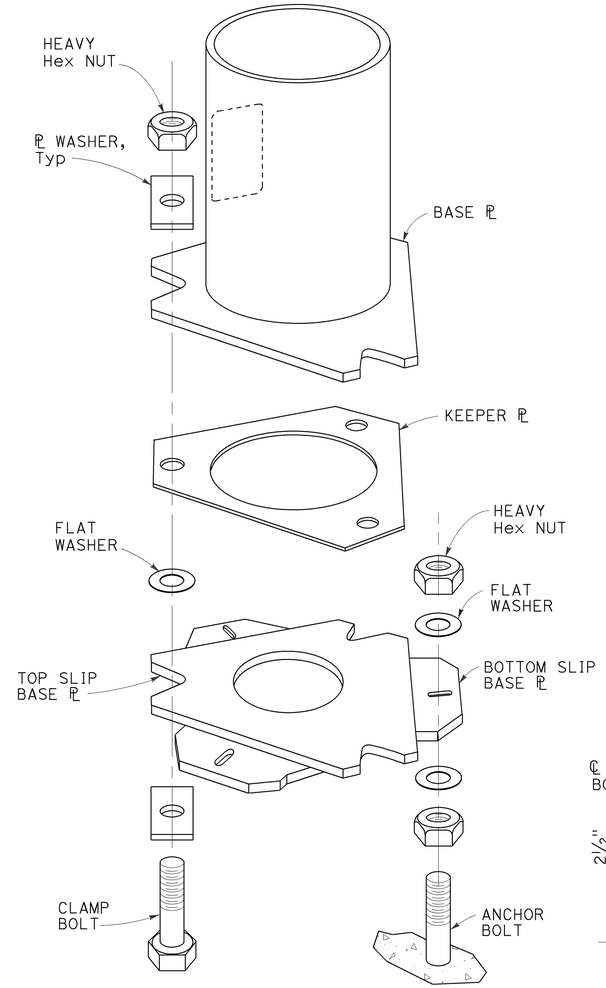

SLIP BASE DETAIL
DETAIL F

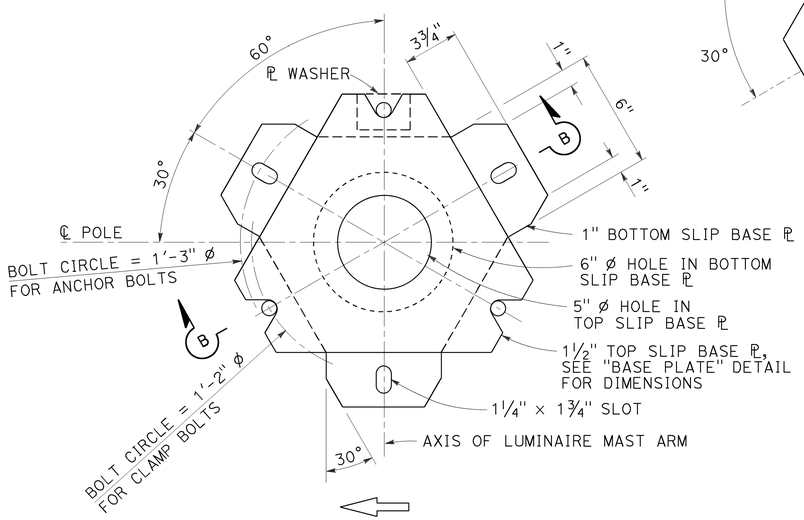

BOTTOM PLATE
DETAIL C

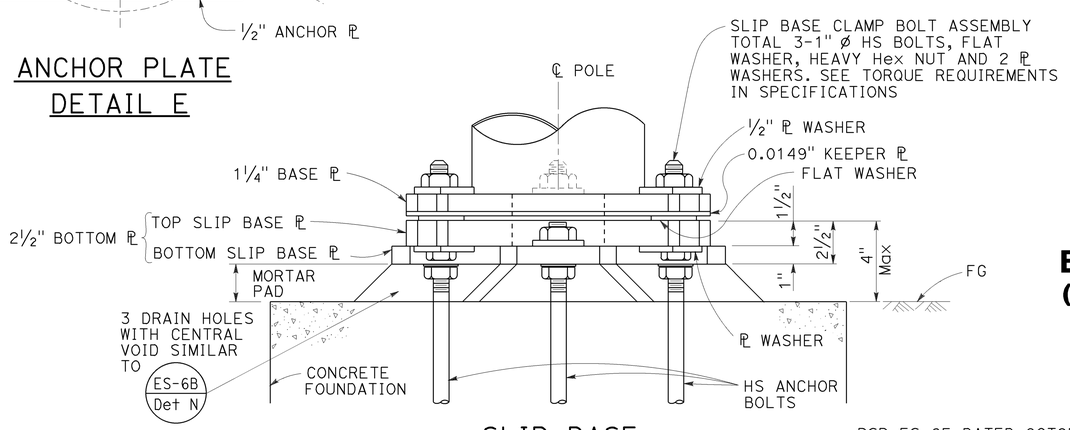

SLIP BASE
ELEVATION A

NOTES: TO ACCOMPANY PLANS DATED 4-4-16

1. 1" ø HS anchor bolts. For clamp bolts, see specifications.
2. Conduit shall not protrude more than 2" above top of foundation.
3. Handhole shall be located on the downstream side of traffic.
4. For Type 30 fixed base and for Type 31 fixed base, see Notes 3 and 4 on Revised Standard Plan RSP ES-6E.

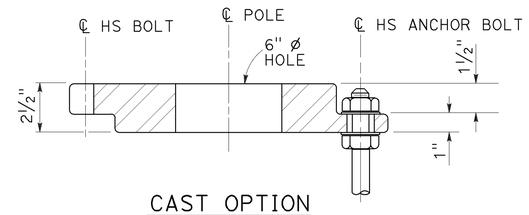

CAST OPTION

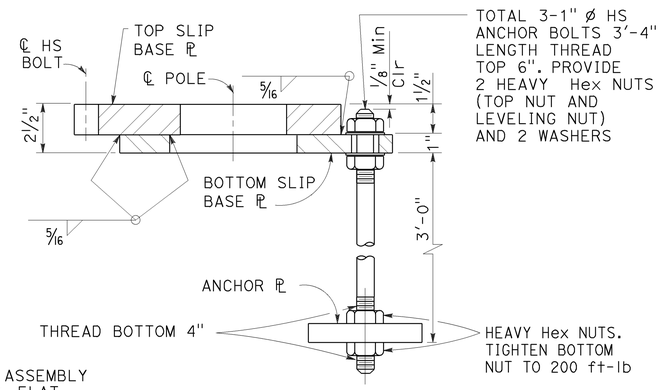

WELDED OPTION

SECTION B-B

STATE OF CALIFORNIA
DEPARTMENT OF TRANSPORTATION

ELECTRICAL SYSTEMS (LIGHTING STANDARD, SLIP BASE PLATE)

NO SCALE

RSP ES-6F DATED OCTOBER 30, 2015 SUPERSEDES STANDARD PLAN ES-6F DATED MAY 20, 2011 - PAGE 457 OF THE STANDARD PLANS BOOK DATED 2010.

REVISED STANDARD PLAN RSP ES-6F

2010 REVISED STANDARD PLAN RSP ES-6F

8-20-15

Dist	COUNTY	ROUTE	POST MILES TOTAL PROJECT	SHEET No.	TOTAL SHEETS
10	Mer	165	29.8/30.3	61	68

REGISTERED CIVIL ENGINEER

October 30, 2015
PLANS APPROVAL DATE

REGISTERED PROFESSIONAL ENGINEER
Stanley P. Johnson
No. C57793
Exp. 3-31-16
CIVIL
STATE OF CALIFORNIA

THE STATE OF CALIFORNIA OR ITS OFFICERS OR AGENTS SHALL NOT BE RESPONSIBLE FOR THE ACCURACY OR COMPLETENESS OF SCANNED COPIES OF THIS PLAN SHEET.

TO ACCOMPANY PLANS DATED 4-4-16

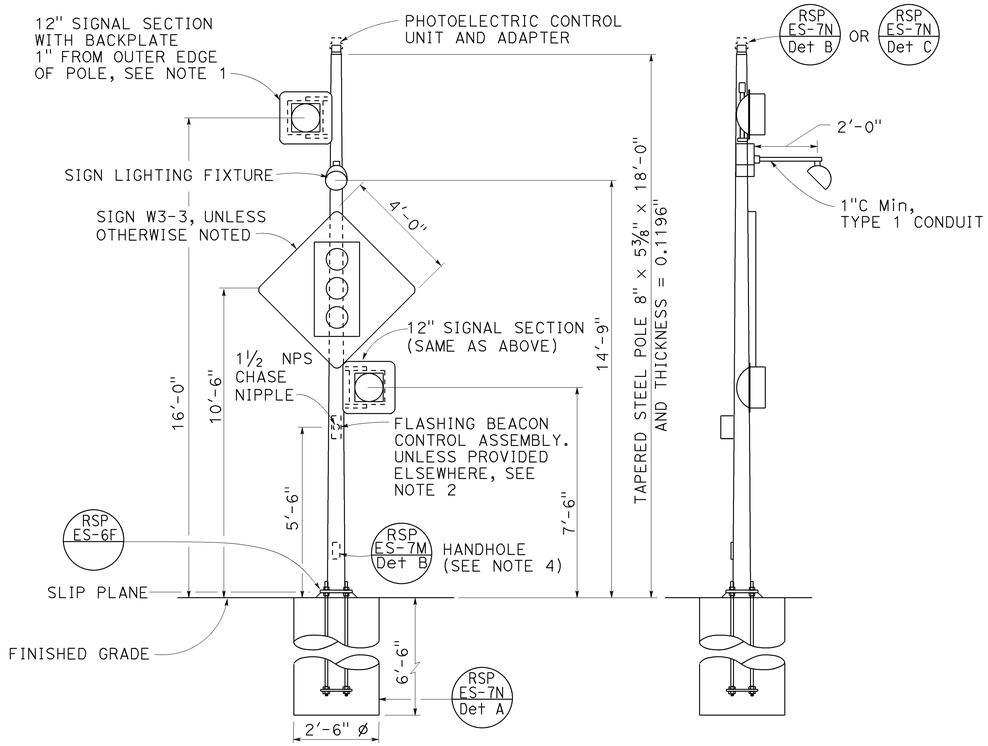

FRONT VIEW

SIDE VIEW

TYPE 15-FBS
ADVANCE FLASHING BEACON WITH SLIP BASE INSTALLATION
DETAIL A

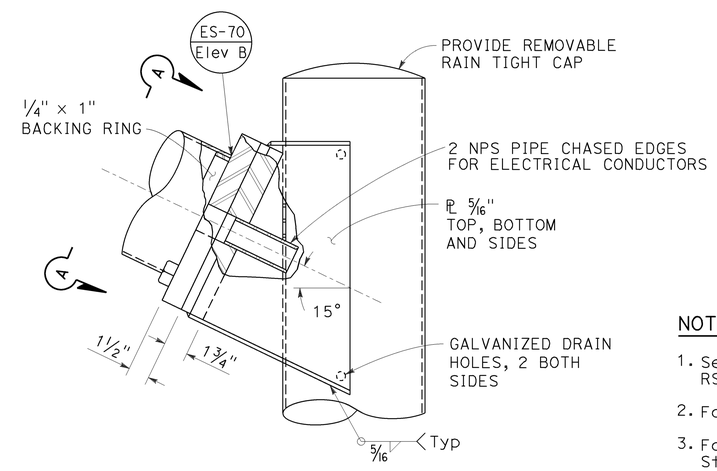

ELEVATION B

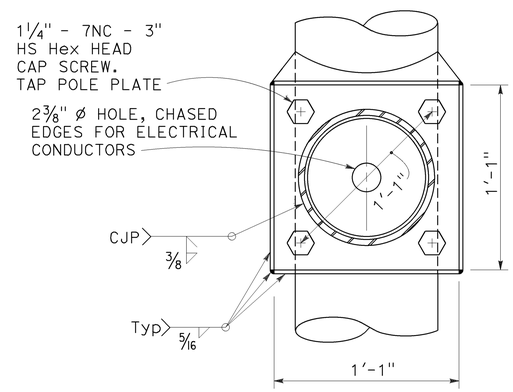

VIEW A-A

FLASHING BEACON MAST ARM CONNECTION DETAIL
DETAIL B

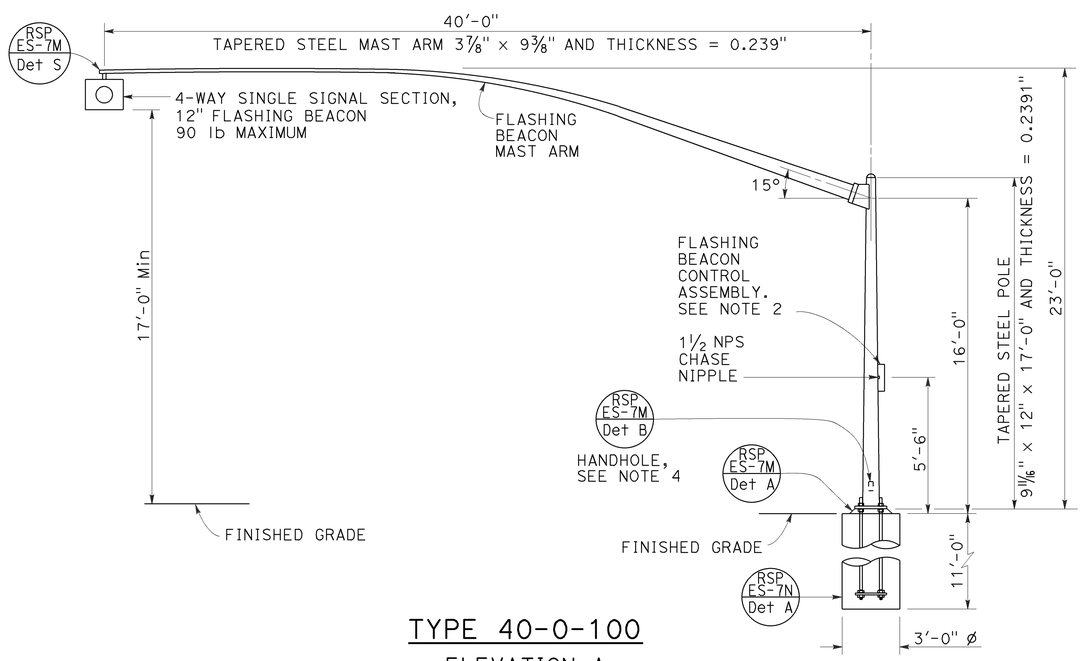

TYPE 40-0-100
ELEVATION A

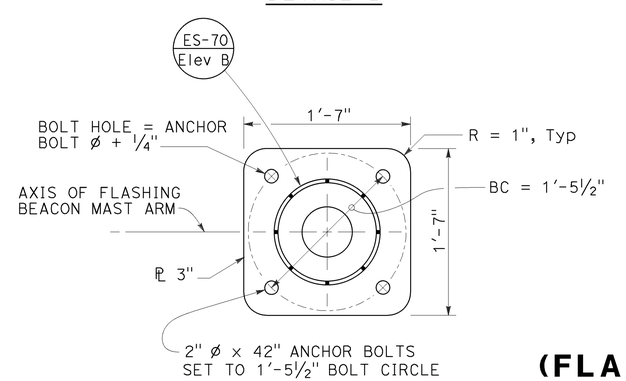

BASE PLATE
DETAIL C

NOTES:

1. See Revised Standard Plans RSP ES-4A and RSP ES-4D for attachment fitting details.
2. For wiring diagram, see Standard Plan ES-14B.
3. For additional notes and details, see Revised Standard Plans RSP ES-7M and RSP ES-7N.
4. Handhole shall be located on the downstream side of traffic.
5. See project plans for type of standard to be installed.

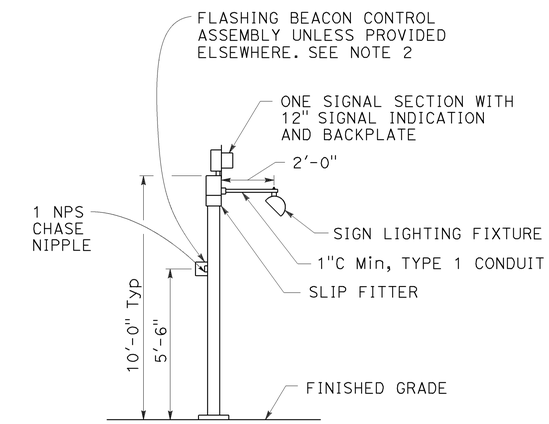

TYPE 1-A, 1-B, 1-C, AND 1-D
ADVANCE FLASHING BEACON INSTALLATION
DETAIL D
See Note 5

STATE OF CALIFORNIA
DEPARTMENT OF TRANSPORTATION

ELECTRICAL SYSTEMS (FLASHING BEACON ON A TYPE 1, TYPE 15-FBS, AND TYPE 40 STANDARD)

NO SCALE

RSP ES-7J DATED OCTOBER 30, 2015 SUPERSEDES RSP ES-7J DATED JULY 19, 2013 AND STANDARD PLAN ES-7J DATED MAY 20, 2011 - PAGE 471 OF THE STANDARD PLANS BOOK DATED 2010.

REVISED STANDARD PLAN RSP ES-7J

2010 REVISED STANDARD PLAN RSP ES-7J

9-1-15

Dist	COUNTY	ROUTE	POST MILES TOTAL PROJECT	SHEET No.	TOTAL SHEETS
10	Mer	165	29.8/30.3	62	68

REGISTERED CIVIL ENGINEER

October 30, 2015
PLANS APPROVAL DATE

REGISTERED PROFESSIONAL ENGINEER — Stanley P. Johnson — No. C57793 — Exp. 3-31-16 — CIVIL — STATE OF CALIFORNIA

THE STATE OF CALIFORNIA OR ITS OFFICERS OR AGENTS SHALL NOT BE RESPONSIBLE FOR THE ACCURACY OR COMPLETENESS OF SCANNED COPIES OF THIS PLAN SHEET.

TO ACCOMPANY PLANS DATED 4-4-16

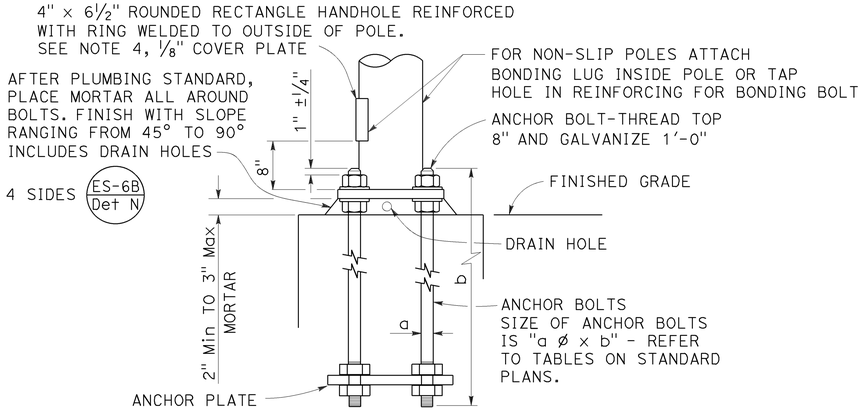

HANDHOLE AND ANCHORAGE
DETAIL A

IDENTIFICATION NUMBER

1. Attach a stamped metal tag with pole's identification number above the handhole. ¼" high number, minimum.
2. Attach a stamped metal tag with mast arm's identification number to the bottom of the signal mast arm near the pole plate. ¼" high number, minimum.

Type — Load case (Use SL for special load case) — Design wind velocity (mph) — Signal mast arm length (ft) {Near handhole: Maximum signal mast arm length for pole type; Near pole plate: Installed signal mast arm length} — Standard plan year — Only for poles or mast arms using Detail F — Only for poles or mast arms using ES-7D

26A - 3 - 100 - 45 - 10 - F or FB

SAMPLE IDENTIFICATION NUMBER

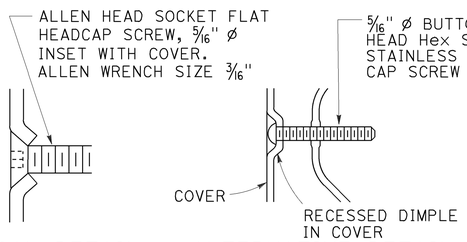

TYPICAL DETAIL
DETAIL B-1

ALTERNATIVE DETAIL
DETAIL B-2

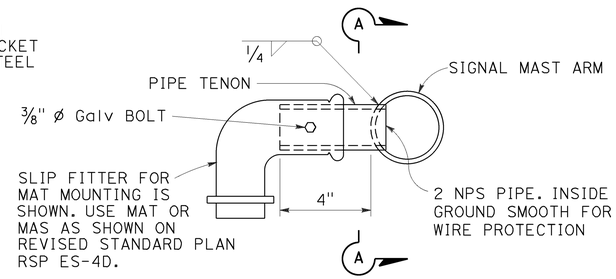

SIDE TENON
DETAIL S-1

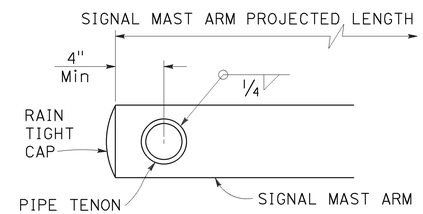

SECTION A-A

PIPE TENONS
DETAIL S

NOTES:

1. Provide a Hex nut, leveling nut and 2 washers for each bolt.
2. Luminaire mast arms shall be round, tapered steel tubes, taper of 0.1375" to 0.143-inch per foot with an end section 2⅜" OD for mounting hardware. Extensions of 2 NPS Standard pipe and 7" long may be used at the option of the manufacturer. When low pressure sodium luminaires are required, the extension shall be 1'-3".
3. Signal mast arms shall be round, tapered steel tubes, maximum taper 0.143-inch per foot.
4. Handhole reinforcement ring shall be ¼" x 2" for 0.1196" to 0.2391" thick poles, ⅜" x 2" for 0.3125" thick poles.
5. Handholes shall be located on the downstream side of traffic.
6. Detail F, fatigue resistant weld, is required at socket welded signal mast arm plate and pole base plate.
7. Cap screws shall be tightened by the turn-of-nut method ⅓ turn from a snug tight condition. No washer will be required.
8. Outside diameter, wall thickness, and corresponding section properties of poles and mast arms as shown in the Standard Plans are minimums. Unless otherwise specified, alternative sections shall require approval by the Engineer.
9. Wind Loading (3 seconds gust): 100 mph
10. Unit Stresses (Structural steel):
    fy = 55,000 psi (tapered steel tube and anchor bolts)
    fy = 50,000 psi (unless otherwise noted)
11. Unit Stresses (Reinforced concrete):
    f'c = 3,625 psi
    fy = 60,000 psi

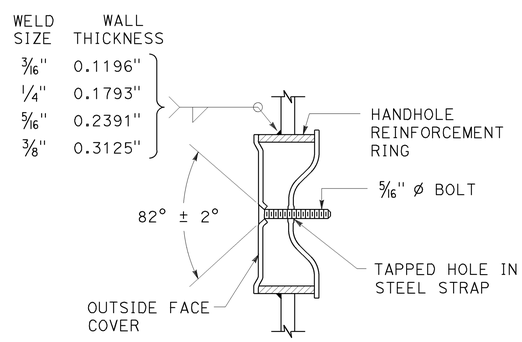

TAMPER RESISTANT HANDHOLE COVER
DETAIL B

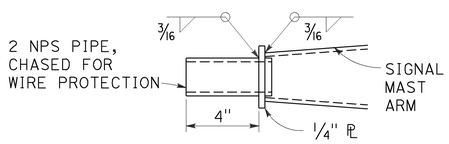

TIP TENON
DETAIL TL

This detail supersedes Detail S when so designated

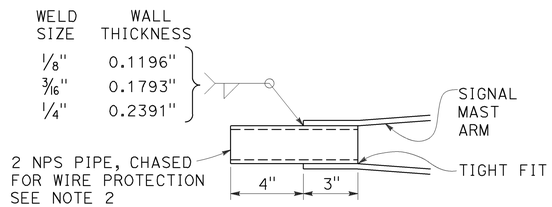

TIP TENON
DETAIL TS

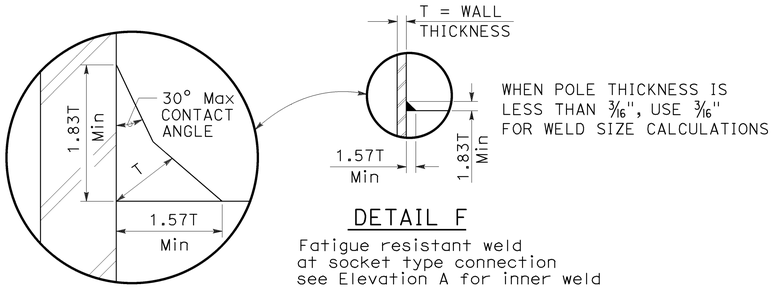

DETAIL F

Fatigue resistant weld at socket type connection see Elevation A for inner weld

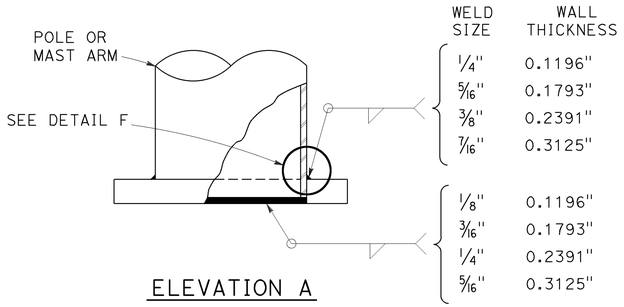

ELEVATION A

STATE OF CALIFORNIA
DEPARTMENT OF TRANSPORTATION

ELECTRICAL SYSTEMS (SIGNAL AND LIGHTING STANDARD, DETAIL No. 1)

NO SCALE

RSP ES-7M DATED OCTOBER 30, 2015 SUPERSEDES STANDARD PLAN ES-7M DATED MAY 20, 2011 - PAGE 474 OF THE STANDARD PLANS BOOK DATED 2010.

REVISED STANDARD PLAN RSP ES-7M

2010 REVISED STANDARD PLAN RSP ES-7M

9-1-15

Dist	COUNTY	ROUTE	POST MILES TOTAL PROJECT	SHEET No.	TOTAL SHEETS
10	Mer	165	29.8/30.3	63	68

REGISTERED CIVIL ENGINEER

October 30, 2015
PLANS APPROVAL DATE

REGISTERED PROFESSIONAL ENGINEER
Stanley P. Johnson
No. C57793
Exp. 3-31-16
CIVIL
STATE OF CALIFORNIA

THE STATE OF CALIFORNIA OR ITS OFFICERS OR AGENTS SHALL NOT BE RESPONSIBLE FOR THE ACCURACY OR COMPLETENESS OF SCANNED COPIES OF THIS PLAN SHEET.

TO ACCOMPANY PLANS DATED 4-4-16

2010 REVISED STANDARD PLAN RSP ES-7N

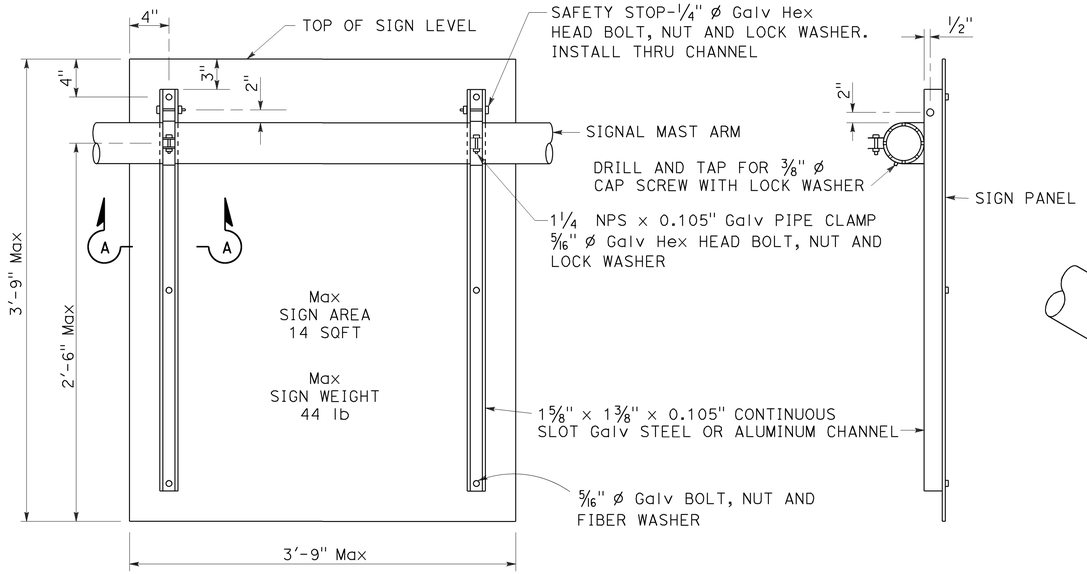

REAR VIEW

SIDE VIEW

SIGN MOUNTING DETAILS
DETAIL U

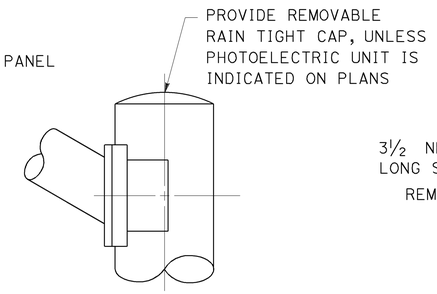

STANDARD TOP
DETAIL B-1

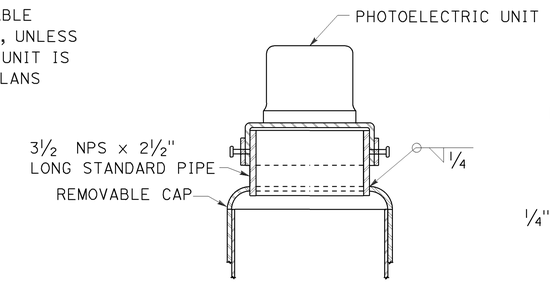

MOUNTING ADAPTER FOR
PHOTOELECTRIC UNIT
DETAIL B-2

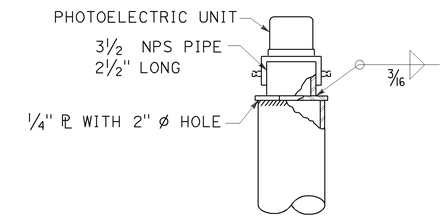

ALTERNATIVE
MOUNTING ADAPTER
DETAIL B-3

POLE TOP DETAILS
DETAIL B

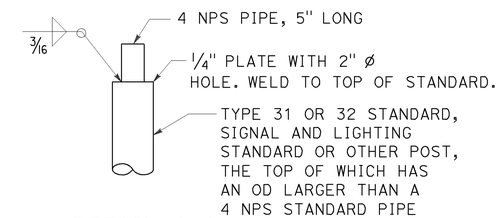

DETAIL C-1

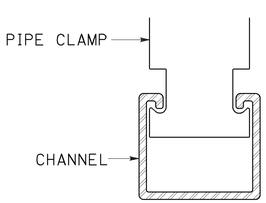

SECTION A-A

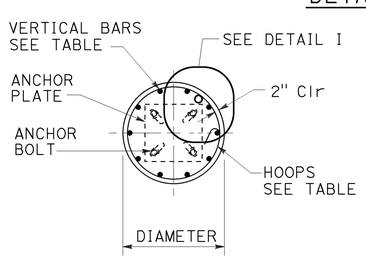

SECTION B-B

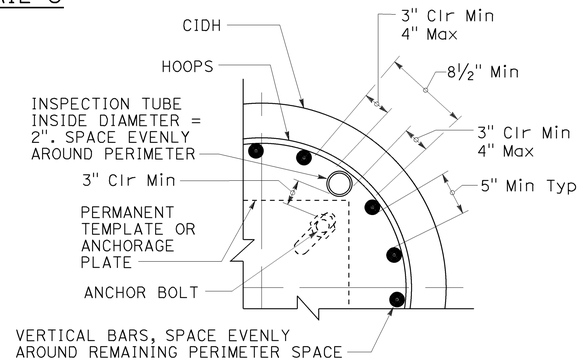

INSPECTION TUBE PLACEMENT
DETAIL I

CIDH REINFORCING AND INSPECTION TUBE SCHEDULE			
CIDH DIAMETER	VERTICAL BARS	HOOPS (WELDED)	INSPECTION TUBE
2 ft	8-#5	#4 AT 6	2
2.5 ft	10-#6		4*
3 ft	12-#7	#5 AT 6	
3.5 ft	14-#8		4
4 ft	18-#9	2-#4 AT 7	5
5 ft	22-#10	2-#5 AT 7	6
6 ft	26-#11	2-#6 AT 7	7

* FOR SLIP BASE VERSIONS WITH 3 ANCHOR BOLTS USE 3 INSPECTION TUBES.

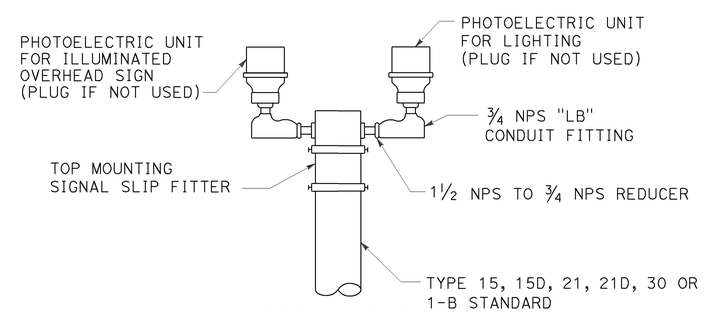

DETAIL C-2

DUAL PHOTOELECTRIC UNIT MOUNTING DETAIL
DETAIL C

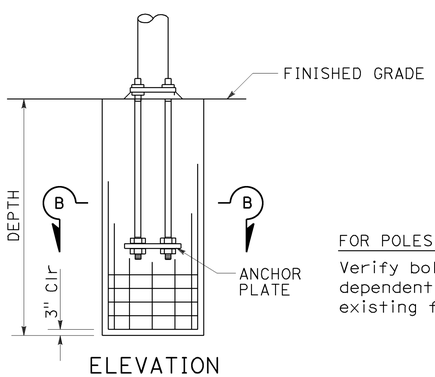

ELEVATION

CAST-IN-DRILLED-HOLE PILE FOUNDATION, REINFORCED PILE
DETAIL A

FOR POLES TO BE INSTALLED ON EXISTING FOUNDATION:

Verify bolt circles, anchor bolt sizes and dependent dimensions for poles to be installed on existing foundations before fabricating the poles.

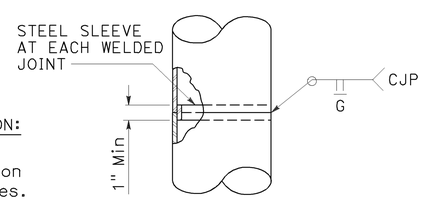

FOR UNIFORM TUBE THICKNESS
DETAIL T-1

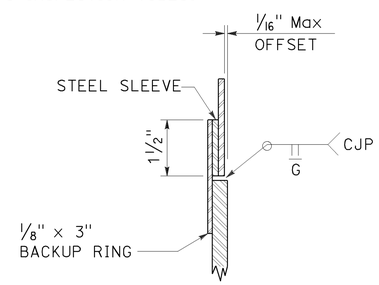

AT TUBE THICKNESS CHANGE
DETAIL T-2

POLE SPLICES
DETAIL T

STATE OF CALIFORNIA
DEPARTMENT OF TRANSPORTATION

ELECTRICAL SYSTEMS (SIGNAL AND LIGHTING STANDARD, DETAIL No. 2)

NO SCALE

RSP ES-7N DATED OCTOBER 30, 2015 SUPERSEDES STANDARD PLAN ES-7N DATED MAY 20, 2011 - PAGE 475 OF THE STANDARD PLANS BOOK DATED 2010.

REVISED STANDARD PLAN RSP ES-7N

9-1-15

DIST	COUNTY	ROUTE	POST MILES TOTAL PROJECT	SHEET NO.	TOTAL SHEETS
10	Mer	165	29.8/30.3	64	68

Theresa Gabriel
REGISTERED ELECTRICAL ENGINEER

October 30, 2015
PLANS APPROVAL DATE

REGISTERED PROFESSIONAL ENGINEER Theresa Aziz Gabriel No. E15129 Exp. 6-30-16 ELECTRICAL STATE OF CALIFORNIA

THE STATE OF CALIFORNIA OR ITS OFFICERS OR AGENTS SHALL NOT BE RESPONSIBLE FOR THE ACCURACY OR COMPLETENESS OF SCANNED COPIES OF THIS PLAN SHEET.

TO ACCOMPANY PLANS DATED 4-4-16

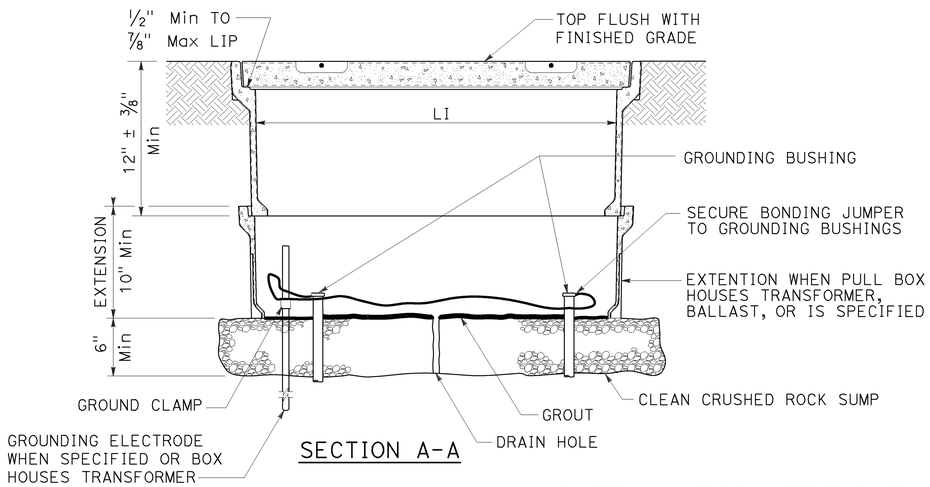

SECTION A-A

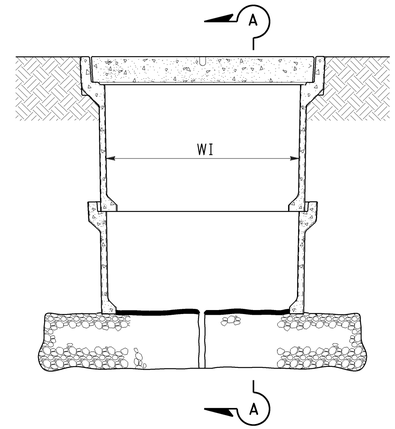

SIDE VIEW

INSTALLATION DETAILS

DETAIL A

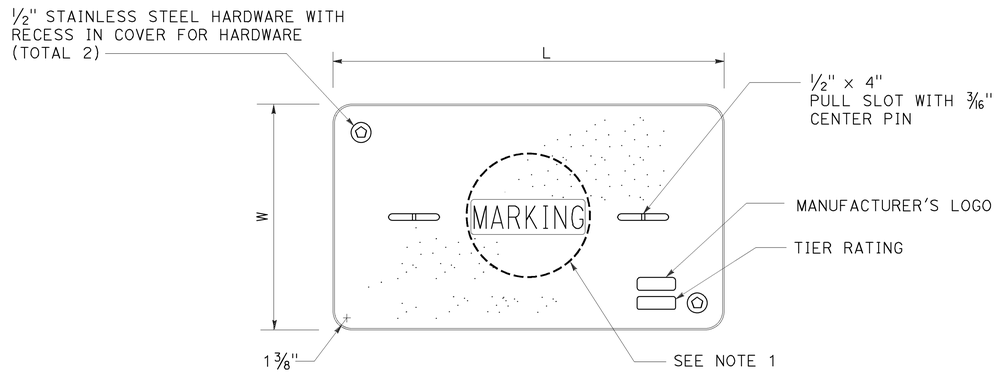

COVER TOP VIEW

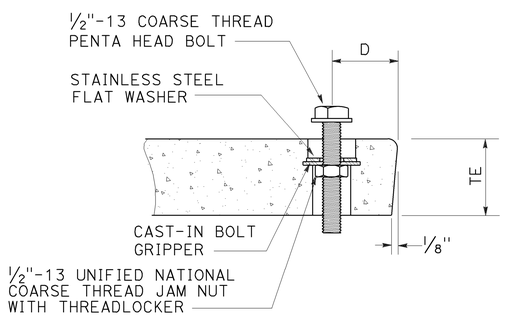

TYPICAL COVER CAPTIVE BOLT

OR SIMILAR

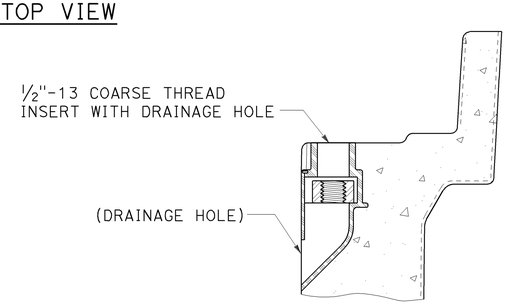

TYPICAL THREADED INSERT

OR SIMILAR

DIMENSION TABLE										
PULL BOX	PULL BOX					COVER				
	MINIMUM DEPTH BOX	MINIMUM DEPTH EXTENSION	MINIMUM WEIGHT	LI Min	WI Min	TE	D	L	W	MINIMUM WEIGHT
No. 3 1/2	12"	N/A	40 lb	1' - 3"	9"	1 3/4"	1 3/4"	1'-3 1/4" - 1'-3 3/8"	10" - 10 1/8"	30 lb
No. 5	12"	10"	55 lb	1' - 8"	11"	2"	1 3/4"	1'-11 1/4"	1'-1 3/4"	60 lb
No. 6	12"	10"	70 lb	2' - 4 1/4"	1' - 3 1/4"	2"	2"	2'-6 1/2"	1'-5 1/2"	85 lb

NOTES:

1. Pull box covers shall be marked as follows: "SERVICE" Service circuits between service point and service disconnect; "SPRINKLER-CONTROL" sprinkler control circuits, 50 V or less; "CALTRANS" on all pull boxes, except pull boxes marked "SPRINKLER-CONTROL"; and "TELEPHONE" Telephone service;
   - A) No. 3 1/2 pull box.
     - 1) "SIGNAL" - Traffic signal circuits with or without lighting or sign lighting circuits.
     - 2) "LIGHTING" - Lighting or sign lighting circuits where voltage is under 600 V.
   - B) No. 5, 6, 9 or 9A pull box.
     - 1) "TRAFFIC SIGNAL" - Traffic signal circuits with or without lighting or sign lighting circuits.
     - 2) "LIGHTING" - Lighting or sign lighting circuits where voltage is under 600 V.
     - 3) "LIGHTING-HIGH VOLTAGE" - Lighting or sign lighting circuits where voltage is above 600 V.
     - 4) "IRRIGATION" - Circuits to irrigation controller 120 V or more.
     - 5) "RAMP METER" - Ramp meter circuits.
     - 6) "COUNT STATION" - Count or speed monitor circuits.
     - 7) "COMMUNICATIONS" - Communication circuits.
     - 8) "TOS COMMUNICATIONS" - TOS communication line.
     - 9) "TOS POWER" - TOS power.
     - 10) "TDC POWER" - Telephone demarcation cabinet power.
     - 11) "CCTV" - Closed circuit television circuits.
     - 12) "TMS" - Traffic monitoring station circuits.
     - 13) "CMS" - Changeable message sign circuits.
     - 14) "HAR" - Highway advisory radio circuits.
     - 15) "BOOSTER PUMP" - Booster pump circuit.
2. The nominal dimensions of the opening in which the cover sets shall be the same as the cover dimensions except the length and width dimensions shall be 1/8" greater.
3. Covers and boxes shall be interchangeable with California standard male and female gages. When interchanged with a standard male or female gage, the top surfaces shall be flush within 1/8". Top outside radius of covers and pull boxes shall have a 1/8" radius.
4. Pull box extension may be another pull box as long as the bottom edge of the pull box can fit into the cover opening.
5. Dimensions for the cover for non-traffic pull box are nominal values.

STATE OF CALIFORNIA
DEPARTMENT OF TRANSPORTATION

ELECTRICAL SYSTEMS (NON-TRAFFIC PULL BOX)

NO SCALE

RSP ES-8A DATED OCTOBER 30, 2015 SUPERSEDES RSP ES-8A DATED JULY 19, 2013 AND RSP ES-8A DATED JANUARY 20, 2012 THAT SUPPLEMENTS THE STANDARD PLANS BOOK DATED 2010.

REVISED STANDARD PLAN RSP ES-8A

2010 REVISED STANDARD PLAN RSP ES-8A

DIST	COUNTY	ROUTE	POST MILES TOTAL PROJECT	SHEET NO.	TOTAL SHEETS
10	Mer	165	29.8/30.3	65	68

Theresa Gabriel
REGISTERED ELECTRICAL ENGINEER

October 30, 2015
PLANS APPROVAL DATE

REGISTERED PROFESSIONAL ENGINEER
Theresa Aziz Gabriel
No. E15129
Exp. 6-30-16
ELECTRICAL
STATE OF CALIFORNIA

THE STATE OF CALIFORNIA OR ITS OFFICERS OR AGENTS SHALL NOT BE RESPONSIBLE FOR THE ACCURACY OR COMPLETENESS OF SCANNED COPIES OF THIS PLAN SHEET.

TO ACCOMPANY PLANS DATED 4-4-16

2010 REVISED STANDARD PLAN RSP ES-8B

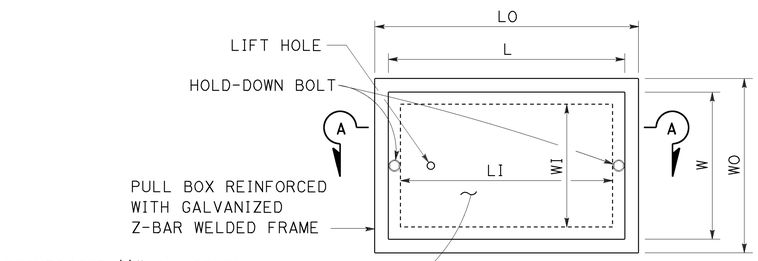

TOP VIEW

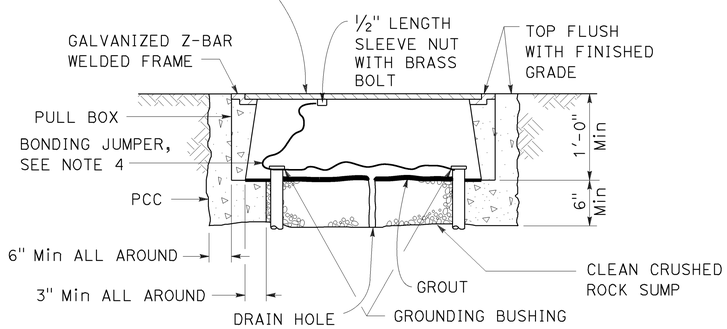

SECTION A-A

No. 3½(T), No. 5(T) AND No. 6(T) TRAFFIC PULL BOX

NOTES:

1. Traffic pull box shall be provided with steel cover and special concrete footing. Steel cover shall have embossed non-skid pattern.
2. Steel reinforcing shall be as regularly used in the standard products of the respective manufacturer.
3. Pull box covers shall be marked as follows: "SERVICE" Service circuits between service point and service disconnect; "SPRINKLER-CONTROL" Sprinkler control circuits, 50 V or less; "CALTRANS" On all pull boxes, except pull boxes marked "SPRINKLER-CONTROL"; and "TELEPHONE" Telephone service.
   - A) No. 3½(T) pull box.
     - 1) "SIGNAL" - Traffic signal circuits with or without lighting or sign lighting circuits.
     - 2) "LIGHTING" - Lighting or sign lighting circuits where voltage is under 600 V.
   - B) No. 5(T) or 6(T) pull box.
     - 1) "TRAFFIC SIGNAL" - Traffic signal circuits with or without lighting or sign lighting circuits.
     - 2) "LIGHTING" - Lighting or sign lighting circuits where voltage is under 600 V.
     - 3) "LIGHTING-HIGH VOLTAGE" - Lighting or sign lighting circuits where voltage is above 600 V.
     - 4) "IRRIGATION" - Circuits to irrigation controller 120 V or more.
     - 5) "RAMP METER" - Ramp meter circuits.
     - 6) "COUNT STATION" - Count or speed monitor circuits.
     - 7) "COMMUNICATION" - Communication circuits.
     - 8) "TOS COMMUNICATIONS" - TOS communications line.
     - 9) "TOS POWER" - TOS power.
     - 10) "TDC POWER" - Telephone demarcation cabinet power.
     - 11) "CCTV" - Closed circuit television circuits.
     - 12) "TMS" - Traffic monitoring station circuits.
     - 13) "CMS" - Changeable message sign circuits.
     - 14) "HAR" - Highway advisory radio circuits.
     - 15) "BOOSTER PUMP" - Booster pump circuit.
4. Bonding jumper for metal covers shall be 3' long, minimum.
5. The nominal dimensions of the opening in which the cover sets shall be the same as the cover dimensions except the length and width dimensions shall be ⅛" greater.
6. Covers and boxes shall be interchangeable with California standard male and female gages. When interchanged with a standard male or female gage, the top surfaces shall be flush within ⅛".

DIMENSION TABLE

PULL BOX	PULL BOX						COVER	
	MINIMUM * THICKNESS	MINIMUM DEPTH BOX AND EXTENSION	LO	LI	WO	WI	L **	W **
No. 3½(T)	1½"	1'-0"	1'-10" - 1'-11"	1'-5" - 1'-6½"	1'-3" - 1'-4"	10" - 1'-0"	1'-8" -1'-8½"	1'-1" - 1'-2"
No. 5(T)	1¾"	1'-0"	2'-5" - 2'-6"	2'-0" - 2'-1"	1'-6" - 1'-7"	1'-1" - 1'-2"	2'-3" - 2'-3½"	1'-4" - 1'-4½"
No. 6(T)	2"	1'-0"	2'-11" - 3'-1"	2'-6" - 2'-7"	1'-10" - 2'-0"	1'-5" - 1'-6"	2'-9" - 2'-9½"	1'-8" - 1'-8½"

* EXCLUDING CONDUIT WEB ** TOP DIMENSION

STATE OF CALIFORNIA
DEPARTMENT OF TRANSPORTATION

ELECTRICAL SYSTEMS (TRAFFIC PULL BOX)

NO SCALE

RSP ES-8B DATED OCTOBER 30, 2015 SUPERSEDES RSP ES-8B DATED JULY 19, 2013 AND RSP ES-8B DATED JANUARY 20, 2012 THAT SUPPLEMENTS THE STANDARD PLANS BOOK DATED 2010.

REVISED STANDARD PLAN RSP ES-8B

Dist	COUNTY	ROUTE	POST MILES TOTAL PROJECT	SHEET No.	TOTAL SHEETS
10	Mer	165	29.8/30.3	66	68

REGISTERED CIVIL ENGINEER

July 19, 2013
PLANS APPROVAL DATE

REGISTERED PROFESSIONAL ENGINEER
Stanley P. Johnson
No. C57793
Exp. 3-31-14
CIVIL
STATE OF CALIFORNIA

THE STATE OF CALIFORNIA OR ITS OFFICERS OR AGENTS SHALL NOT BE RESPONSIBLE FOR THE ACCURACY OR COMPLETENESS OF SCANNED COPIES OF THIS PLAN SHEET.

TO ACCOMPANY PLANS DATED 4-4-16

STANDARD TYPE	SETBACK (DIMENSION A)
32	30'-0" (Min)
31	20'-0" (Min)
15, 15D, 15-SB, 21, 21D, 30	ARM LENGTH (Min)

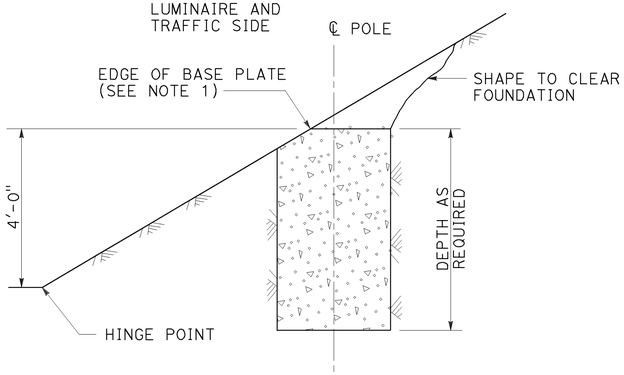

CUT SLOPES
STEEPER THAN 4:1,
LESS THAN 2:1
DETAIL A-1
See Note 2 and 3

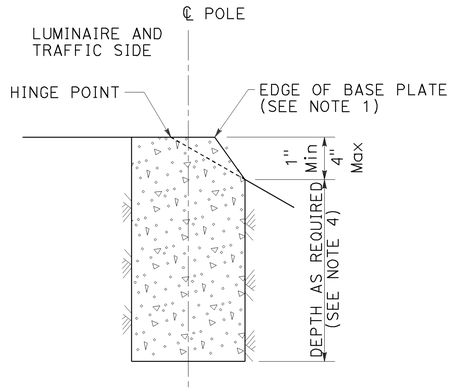

FILL SLOPES
STEEPER THAN 4:1,
LESS THAN 2:1
DETAIL A-2
See Note 2 and 3

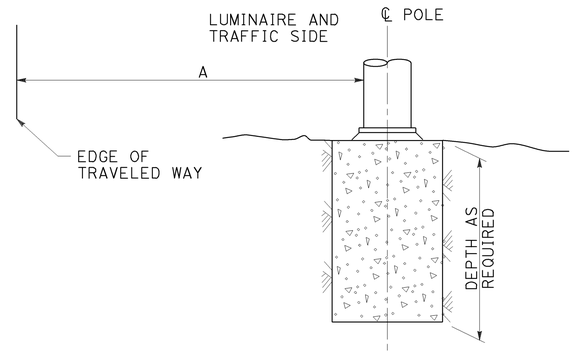

FLAT SECTIONS, CUT OR FILL SLOPES
4:1 OR FLATTER
DETAIL A-3
See Note 2

FOUNDATIONS ADJACENT TO ALL ROADWAYS EXCEPT
IN SIDEWALK, MEDIAN AND ISLAND AREAS
DETAIL A

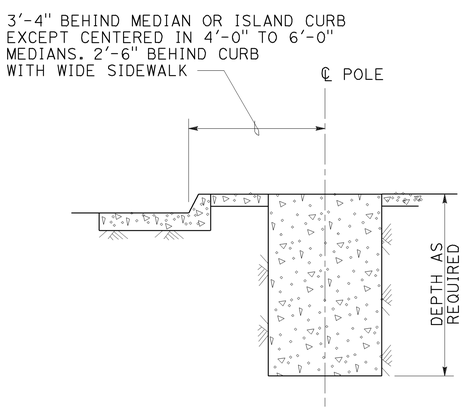

MEDIAN, ISLAND
OR WIDE SIDEWALK
DETAIL B-1
7' Wide and wider

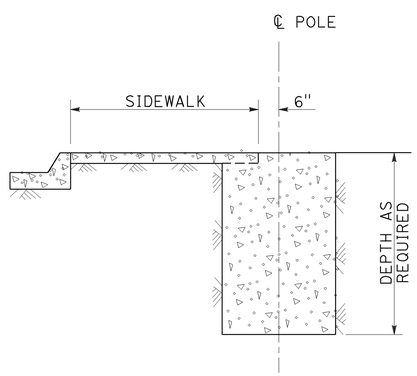

NARROW SIDEWALK
DETAIL B-2
Less than 7' wide

FOUNDATIONS IN SIDEWALK, MEDIAN AND ISLAND AREAS
DETAIL B

NOTES:

1. Where a portion of the foundation is above grade, the top edges shall have a 1" chamfer.
2. Slopes shall be horizontal to vertical ratio (Horizontal : Vertical).
3. Horizontal setbacks on cut and fill slopes steeper than 4:1 shall not exceed the distance shown for flat sections.
4. CIDH embedment depth shall be increased beyond standard depths by the diameter of the CIDH.

STATE OF CALIFORNIA
DEPARTMENT OF TRANSPORTATION

ELECTRICAL SYSTEMS (FOUNDATION INSTALLATIONS)

NO SCALE

RSP ES-11 DATED JULY 19, 2013 SUPERSEDES STANDARD PLAN ES-11
DATED MAY 20, 2011 - PAGE 488 OF THE STANDARD PLANS BOOK DATED 2010.

REVISED STANDARD PLAN RSP ES-11

2010 REVISED STANDARD PLAN RSP ES-11

7-9-13

Dist	COUNTY	ROUTE	POST MILES TOTAL PROJECT	SHEET No.	TOTAL SHEETS
10	Mer	165	29.8/30.3	67	68

Theresa Gabriel
REGISTERED ELECTRICAL ENGINEER

October 30, 2015
PLANS APPROVAL DATE

REGISTERED PROFESSIONAL ENGINEER
Theresa Aziz Gabriel
No. E15129
Exp. 6-30-16
ELECTRICAL
STATE OF CALIFORNIA

THE STATE OF CALIFORNIA OR ITS OFFICERS OR AGENTS SHALL NOT BE RESPONSIBLE FOR THE ACCURACY OR COMPLETENESS OF SCANNED COPIES OF THIS PLAN SHEET.

TO ACCOMPANY PLANS DATED 4-4-16

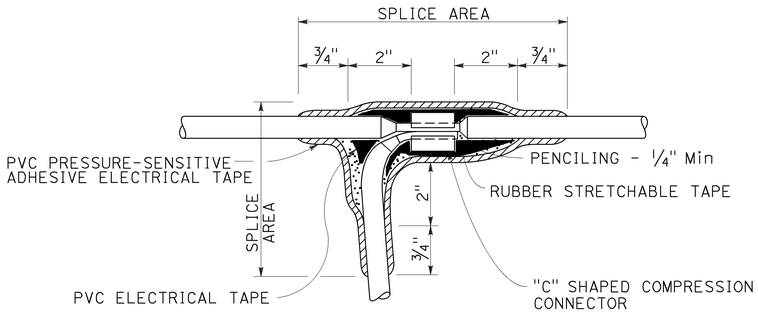

TYPE C SPLICE

See Note 3

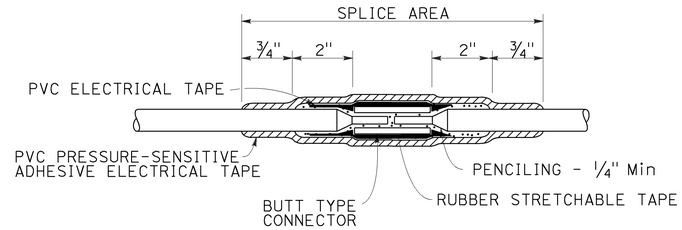

TYPE S SPLICE

See Note 4

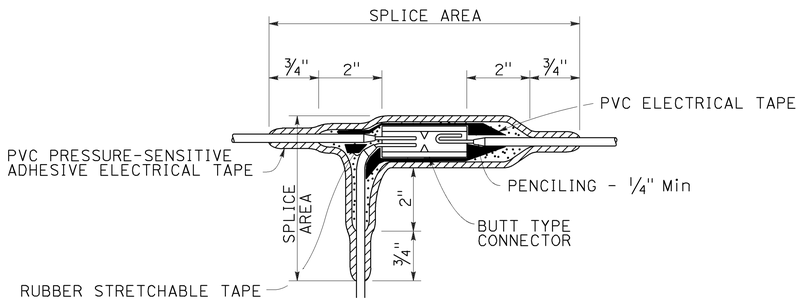

TYPE ST SPLICE

See Note 5

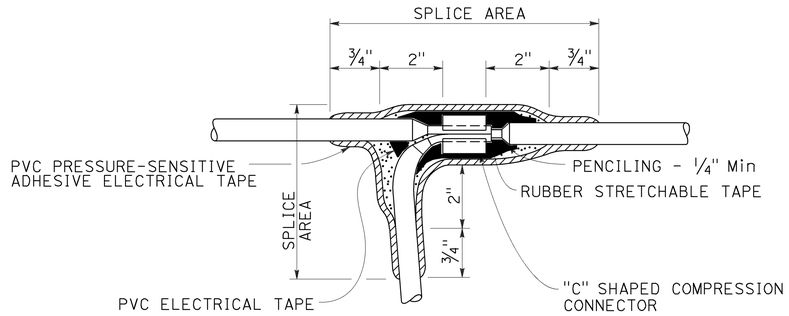

TYPE T SPLICE

See Note 5

NOTES:

1. Dimensions are minimum.
2. Rubber tapes shall be rolled after application.
3. Between 1 free-end and 1 through conductor.
4. Between 2 free-end conductors.
5. Between 3 free-end conductors.

STATE OF CALIFORNIA
DEPARTMENT OF TRANSPORTATION

ELECTRICAL SYSTEMS (SPLICING DETAILS)

NO SCALE

RSP ES-13A DATED OCTOBER 30, 2015 SUPERSEDES STANDARD PLAN ES-13A DATED MAY 20, 2011 - PAGE 491 OF THE STANDARD PLANS BOOK DATED 2010.

REVISED STANDARD PLAN RSP ES-13A

2010 REVISED STANDARD PLAN RSP ES-13A

9-28-15

Dist	COUNTY	ROUTE	POST MILES TOTAL PROJECT	SHEET No.	TOTAL SHEETS
10	Mer	165	29.8/30.3	68	68

Theresa Gabriel
REGISTERED ELECTRICAL ENGINEER

April 15, 2016
PLANS APPROVAL DATE

REGISTERED PROFESSIONAL ENGINEER
Theresa Aziz Gabriel
No. E15129
Exp. 6-30-16
ELECTRICAL
STATE OF CALIFORNIA

THE STATE OF CALIFORNIA OR ITS OFFICERS OR AGENTS SHALL NOT BE RESPONSIBLE FOR THE ACCURACY OR COMPLETENESS OF SCANNED COPIES OF THIS PLAN SHEET.

TO ACCOMPANY PLANS DATED 4-4-16

CIRCUIT VOLTAGE	FUSE VOLTAGE RATING	FUSE CURRENT RATING						
		HPS LAMP BALLAST		LOW PRESSURE SODIUM BALLAST	INDUCTION SIGN LIGHTING	SINGLE PHASE (TWO WIRE) TRANSFORMERS (PRIMARY SIDE)		
		70 W	100 W	180 W	85 W	1 kVA	2 kVA	3 kVA
120 V	250 V	5 A	5 A	5 A	5 A	10 A	20 A	30 A
240 V	250 V	5 A	5 A	5 A	5 A	6 A	10 A	20 A
480 V	500-600 V	5 A	5 A	3 A	1 A (SEE NOTE 2)	3 A	6 A	10 A

NOTES:

1. Primary lines of multiple ballasts shall be provided with fused connectors. Fuse ratings shall be as noted above.
2. See Revised Standard Plan RSP ES-15D, Type SC3 control.

FUSE RATINGS FOR FUSED CONNECTORS

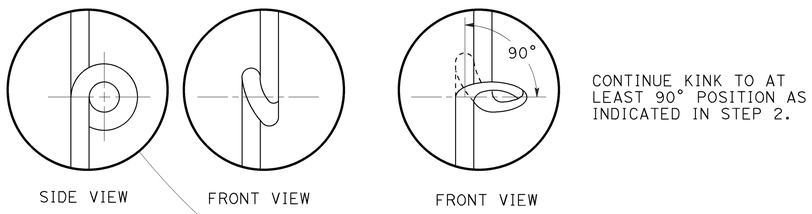

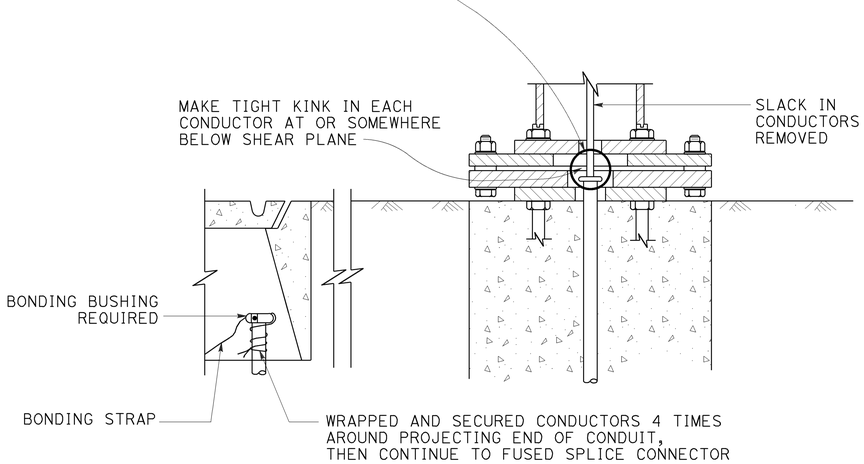

KINKING DETAIL FOR SLIP BASE STANDARDS

DETAIL A

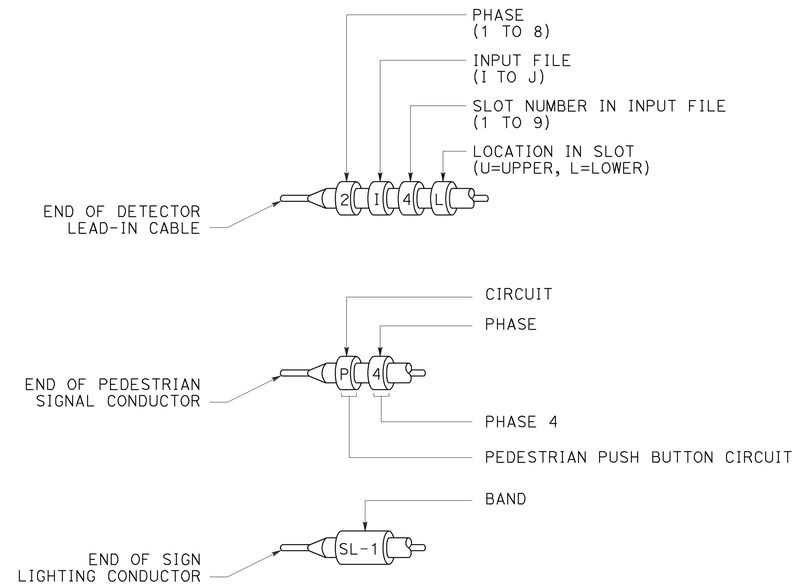

TYPICAL BANDING DETAILS

DETAIL B

STATE OF CALIFORNIA
DEPARTMENT OF TRANSPORTATION

ELECTRICAL SYSTEMS (FUSE RATING, KINKING AND BANDING DETAIL)

NO SCALE

RSP ES-13B DATED APRIL 15, 2016 SUPERSEDES STANDARD PLAN ES-13B DATED MAY 20, 2011 - PAGE 492 OF THE STANDARD PLANS BOOK DATED 2010.

REVISED STANDARD PLAN RSP ES-13B

2010 REVISED STANDARD PLAN RSP ES-13B

1-12-16