Dist	COUNTY	ROUTE	POST MILES TOTAL PROJECT	SHEET No.	TOTAL SHEETS
10	SJ	5	25.1/28.6	131	485

REGISTERED CIVIL ENGINEER 12-30-11 DATE

6-4-12
PLANS APPROVAL DATE

REGISTERED PROFESSIONAL ENGINEER HARJINDER DHILLON No. 68254 Exp. 9-30-13 CIVIL STATE OF CALIFORNIA

THE STATE OF CALIFORNIA OR ITS OFFICERS OR AGENTS SHALL NOT BE RESPONSIBLE FOR THE ACCURACY OR COMPLETENESS OF SCANNED COPIES OF THIS PLAN SHEET.

2

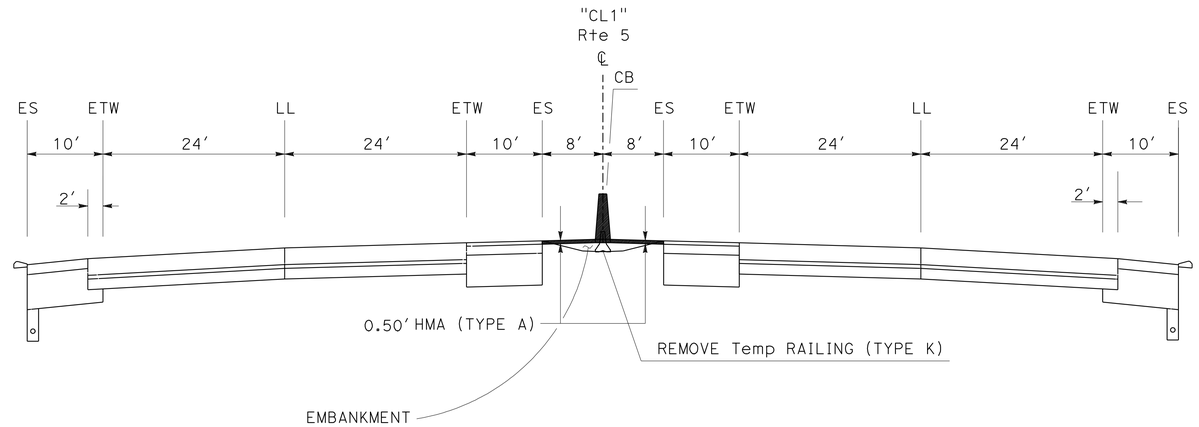

STAGE 3

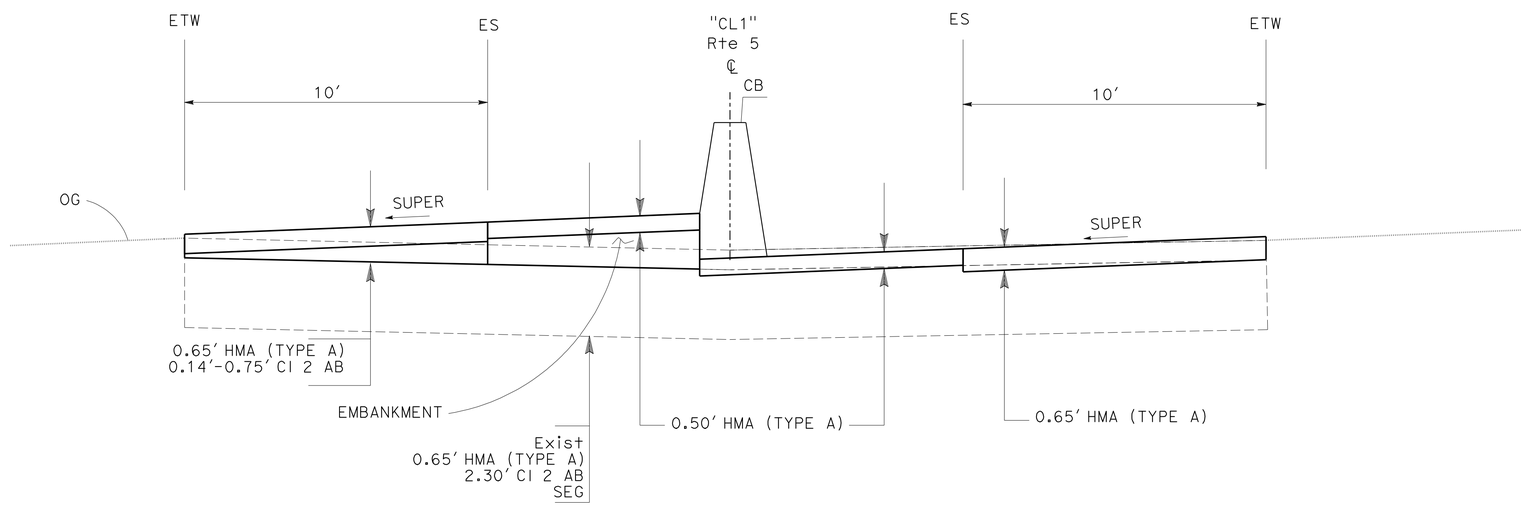

TYPICAL CROSS SECTION OF FINISH MEDIAN WITH CONCRETE BARRIER IN SUPER SECTION OF CROSS OVER

STAGE CONSTRUCTION
(TYPICAL CROSS SECTIONS)
NO SCALE

2 **REVISED PER ADDENDUM No. 2 DATED OCTOBER 18, 2012**
APPROVED FOR STAGE CONSTRUCTION WORK ONLY

SC-5

STATE OF CALIFORNIA - DEPARTMENT OF TRANSPORTATION
Caltrans
06-DESIGN

FUNCTIONAL SUPERVISOR: DAVID SANGHA
CALCULATED-DESIGNED BY: HARJINDER DHILLON
CHECKED BY: AMRITPAL BADHESHA
REVISED BY
DATE REVISED

LAST REVISION 01-30-12
DATE PLOTTED => 17-OCT-2012
TIME PLOTTED => 12:37

Dist	COUNTY	ROUTE	POST MILES TOTAL PROJECT	SHEET No.	TOTAL SHEETS
10	SJ	5	25.1/28.6	385	485

REGISTERED CIVIL ENGINEER 12-30-11 DATE

6-4-12
PLANS APPROVAL DATE

REGISTERED PROFESSIONAL ENGINEER HARJINDER DHILLON No. 68254 Exp. 9-30-13 CIVIL STATE OF CALIFORNIA

THE STATE OF CALIFORNIA OR ITS OFFICERS OR AGENTS SHALL NOT BE RESPONSIBLE FOR THE ACCURACY OR COMPLETENESS OF SCANNED COPIES OF THIS PLAN SHEET.

NOTE:

(N) NOT A SEPARATE PAY ITEM, FOR INFORMATION ONLY.

ABBREVIATIONS:

MVP - MAINTENANCE VEHICLE PULLOUT
Temp CO - TEMPORARY CROSS-OVER
APDD - ALTERNATIVE PIPE DOWNDRAIN

ROADWAY QUANTITIES

SHEET No.	LOCATION	HMA (TYPE A)	CRCP	CRCP (RAPID STRENGTH Conc)	CLASS 2 AGGREGATE BASE	CLASS 2 AGGREGATE SUBBASE	TACK COAT	ROADWAY EXCAVATION	EMBANKMENT (N)	SHOULDER BACKING	SEAL PAVEMENT JOINT	CRCP (TERMINAL JOINT, TYPE D)	CRCP (TERMINAL JOINT, TYPE E)	CRCP (WIDE FLANGE BEAM TERMINAL)	CRCP (EXPANSION JOINT, TYPE WF)	CRCP RSC (WIDE FLANGE BEAM TERMINAL)	CRCP RSC (TERMINAL JOINT, TYPE E)	CRCP RSC (EXPANSION JOINT, TYPE WF)	JOINT SEAL (TYPE A)	JOINT SEAL (MR 1½")	LEAN CONCRETE BASE	LEAN CONCRETE BASE RAPID SETTING	SUBGRADE ENHANCEMENT GEOTEXTILE	COLD PLANE AC Pvmt	REMOVE CONCRETE Pvmt	MINOR CONCRETE (TEXTURED PAVING)	REMARKS
	STA TO STA ALIGNMENT	TON	CY	CY	CY	CY	TON	CY	CY	TON	LF	LF	LF	LF	LF	LF	LF	LF	LF	LF	CY	CY	SQYD	SQYD	SQYD	SQFT	
L-1 TO L-12	1410+77.00 TO 1577+00.00 NBETW1	29,370	22,142	571	22,000 ~~24,593~~	14,650	26	72,000 ~~75000~~	5500	30	34,000	66	916	300	916	26	24	24	326	940	850	26	95,000		60,250		
L-1 TO L-12	1410+69.00 TO 1576+92.00 SBETW1	29,411	22,618	650	22,000 ~~25,115~~	14,500	26	72,000 ~~75000~~	5500	30	34,000	66	876	248	876	26	42	42	274	918	912	148	95,000		60,250		
L-2	1415+14.8 TO 1416+07.5 NBETW1																									1437	
L-2	1415+59.3 TO 1416+88.8 SBETW1																									1878	
L-3	1437+13.34 TO 1438+02.94 SBETW1																									1389	
L-7	1505+59.44 TO 1507+05.04 NBETW1																									2111	
L-7	1507+13.05 TO 1507+74.31 SBETW1																									704	
L-9	1531+03.72 TO 1531+33.72 MDOFFR1																							67			
L-10	1549+59.93 TO 1550+64.62 NBETW1																									1413	
L-10	1539+99.43 TO 1540+99.69 SBETW1																									1555	
L-11	1554+12.27 TO 1555+03.83 SBETW1																									1426	
L-12	1570+83.41 TO 1572+36.02 NBETW1																									2364	
L-12	1571+95.30 TO 1572+99.00 SBETW1																									1607	
L-2	1415+77.45 TO 1416+07.45 CWONR1																							88			
L-2	1416+58.79 TO 1416+88.86 CWSBOFR1																							90			
L-3	1437+14.09 TO 1437+44.09 RT4SBONR1																							140			
L-7	1506+48.34 TO 1506+78.34 PERON1																							80			
L-7	1507+43.58 TO 1507+73.58 FRSBOFR1																							83			
L-10	1550+37.65 TO 1550+67.65 MDONR1																							80			
L-10	1540+10.61 TO 1540+40.61 MDSBONR1																							85			
L-11	1554+73.76 TO 1555+03.76 MDSBOFR1																							81			
L-12	1570+83.29 TO 1571+13.29 CCOFFR1																							85			
L-12	1571+99.21 TO 1572+29.21 CCSBONR1																							80			
L-1	1404+45.00 TO 1406+80.00 NBETW1	72			141		0.2	100	174																		MVP
SC-8	1534+00.00 TO 1543+74.14 CL1	1864			2987		3.3	3788															3897				Temp CO
SC-8	1546+79.00 TO 1558+00.00 CL1	2145			3438		3.7	4359															4484				Temp CO
SC-21	1496+36.00 TO 1508+45.00 CL1	2313			3708		2.8	4702															4836				Temp CO
SC-40	1401+45.00 TO 1408+20.00 CL1	1292			2070		4.2	2625															2700				Temp CO
Q-4	DIKE QUANTITIES	313.1																									
DQ-11	HMA OVERSIDE DRAIN	6.12																									
	TOTAL	66,786.22	44,760	1221	~~62,052~~ 56,344	29,150	67	~~150,100~~ 159,574		60	68,000	132	1792	548	1792	52	66	66	600	1858	1762	174	205,917	959	120,500	15,884	

(N) - NOT A SEPERATE PAY ITEM, FOR INFORMATION ONLY.

2 REVISED PER ADDENDUM No. 2 DATED OCTOBER 18, 2012

SUMMARY OF QUANTITIES

Q-1

STATE OF CALIFORNIA - DEPARTMENT OF TRANSPORTATION
Caltrans
06-DESIGN
FUNCTIONAL SUPERVISOR: DAVID SANGHA
CALCULATED-DESIGNED BY: HARJINDER DHILLON
CHECKED BY: AMRITPAL BADHESHA
REVISED BY
DATE REVISED

LAST REVISION 02-05-12
DATE PLOTTED => 17-OCT-2012
TIME PLOTTED => 12:37