ACNHP-P120(058)E

Dist	COUNTY	ROUTE	POST MILES TOTAL PROJECT	SHEET No.	TOTAL SHEETS
10	Tuo	120	R19.4/R20.0	1	119

STATE OF CALIFORNIA
DEPARTMENT OF TRANSPORTATION

PROJECT PLANS FOR CONSTRUCTION ON
STATE HIGHWAY

IN TUOLUMNE COUNTY NEAR MOCCASIN FROM 0.3 MILE WEST TO 0.3 MILE EAST OF THE TUOLUMNE RIVER BRIDGE

TO BE SUPPLEMENTED BY STANDARD PLANS DATED 2010

INDEX OF PLANS

SHEET No.	DESCRIPTION
1	TITLE AND LOCATION MAP
2-3	TYPICAL CROSS SECTIONS
4-5	LAYOUTS
6-7	PROFILES AND SUPERELEVATION DIAGRAMS
8-10	CONSTRUCTION DETAILS
11	CONSTRUCTION AREA SIGNS
12-13	MOTORIST INFORMATION PLANS AND QUANTITIES
14-16	TRAFFIC HANDLING PLANS AND QUANTITIES
17-18	PAVEMENT DELINEATION AND SIGN PLANS, AND QUANTITIES
19	SUMMARY OF QUANTITIES
20	EROSION CONTROL LEGEND AND QUANTITIES
21-35	ELECTRICAL PLANS
36-69	REVISED STANDARD PLANS

STRUCTURE PLANS

70-119	TUOLUMNE RIVER BRIDGE REHAB, Br No. 32-0018

THE STANDARD PLANS LIST APPLICABLE TO THIS CONTRACT IS INCLUDED IN THE NOTICE TO BIDDERS AND SPECIAL PROVISIONS BOOK.

LOCATION MAP

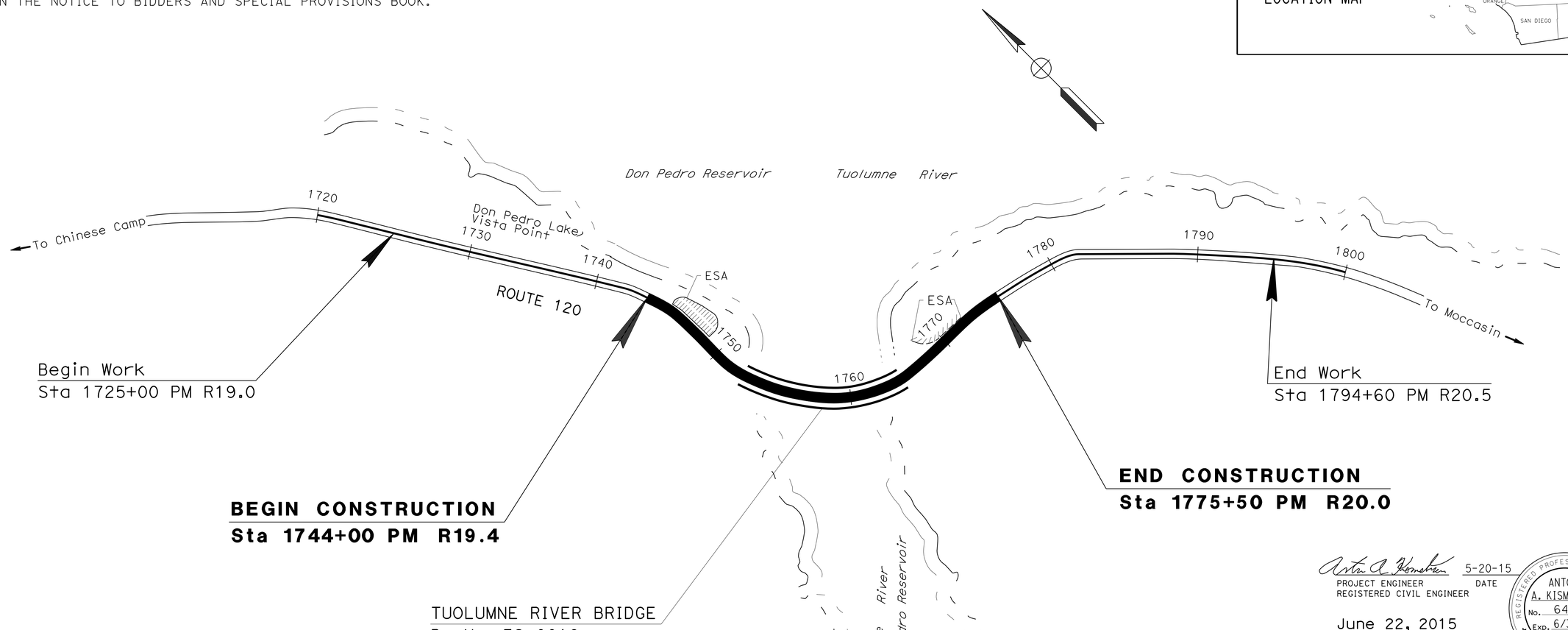

PROJECT MANAGER: SAM SHERMAN

DESIGN MANAGER: KAL DAHER

THE CONTRACTOR SHALL POSSESS THE CLASS (OR CLASSES) OF LICENSE AS SPECIFIED IN THE "NOTICE TO BIDDERS."

Anton A. Kismetian 5-20-15
PROJECT ENGINEER DATE
REGISTERED CIVIL ENGINEER

June 22, 2015
PLANS APPROVAL DATE

REGISTERED PROFESSIONAL ENGINEER ANTON A. KISMETIAN No. 64466 Exp. 6/30/17 CIVIL STATE OF CALIFORNIA

THE STATE OF CALIFORNIA OR ITS OFFICERS OR AGENTS SHALL NOT BE RESPONSIBLE FOR THE ACCURACY OR COMPLETENESS OF SCANNED COPIES OF THIS PLAN SHEET.

CONTRACT No.	10-0L9704
PROJECT ID	1012000053

LAST REVISION 06-17-15

DATE PLOTTED => 12-NOV-2015
TIME PLOTTED => 09:31

Dist	COUNTY	ROUTE	POST MILES TOTAL PROJECT	SHEET No.	TOTAL SHEETS
10	Tuo	120	R19.4/R20.0	2	119

REGISTERED CIVIL ENGINEER 5-20-15 DATE

6-22-15
PLANS APPROVAL DATE

REGISTERED PROFESSIONAL ENGINEER ANTON A. KISMETIAN No. 64466 Exp. 6/30/17 CIVIL STATE OF CALIFORNIA

THE STATE OF CALIFORNIA OR ITS OFFICERS OR AGENTS SHALL NOT BE RESPONSIBLE FOR THE ACCURACY OR COMPLETENESS OF SCANNED COPIES OF THIS PLAN SHEET.

NOTES:

1. DIMENSIONS OF THE PAVEMENT STRUCTURES (STRUCTURAL SECTIONS) ARE SUBJECT TO TOLERANCES SPECIFIED IN THE STANDARD SPECIFICATIONS.
2. SUPERELEVATION AS SHOWN OR AS DIRECTED BY THE ENGINEER.
3. FOR LOCATIONS OF MGS, SEE LAYOUT SHEETS.

DESIGN DESIGNATION

ADT (2017)	4,900	D	70%
ADT (2037)	6,200	T	6%
DHV (2037)	620	V	65 mph
ESAL	1,159,000	TI_{20}	9.0

PAVEMENT CLIMATE REGION: LOW MOUNTAIN

ABBREVIATIONS:

RHMA-G RUBBERIZED HOT MIX ASPHALT (GAP GRADED)
RM RUBBER MAT

SEE STRUCTURE PLANS

Sta 1752+33.47 TO Sta 1766+77.42

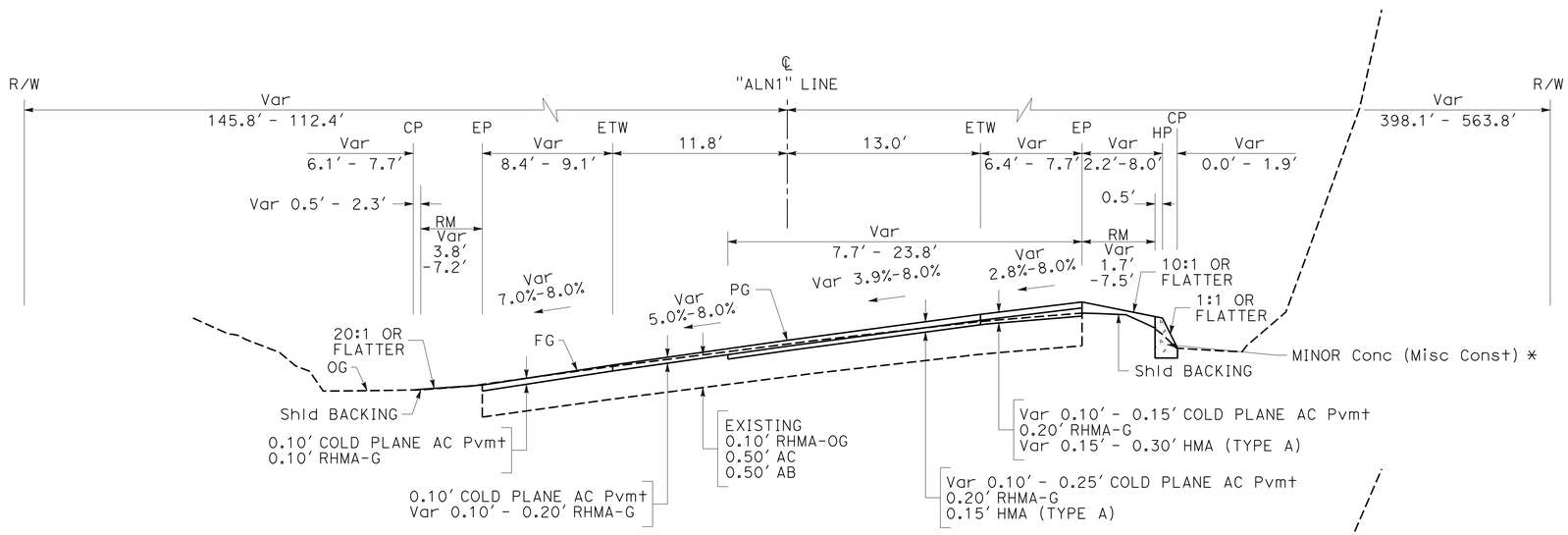

Sta 1751+54.00 TO Sta 1752+33.47

* Sta 1752+00.00 Rt TO Sta 1752+15.00 Rt

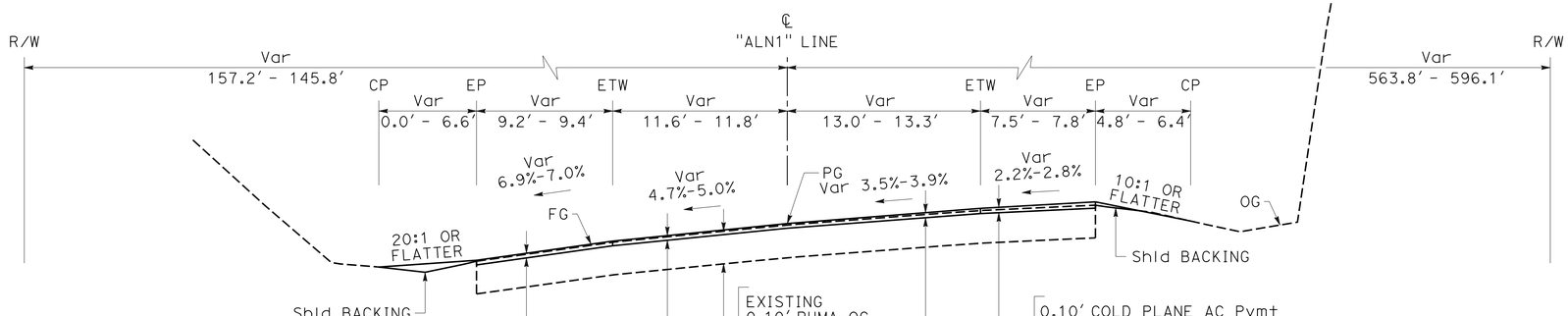

ROUTE 120

Sta 1751+44.44 TO Sta 1751+54.00

TYPICAL CROSS SECTION

NO SCALE

X-1

STATE OF CALIFORNIA - DEPARTMENT OF TRANSPORTATION
Caltrans®
06-DESIGN

FUNCTIONAL SUPERVISOR: KAL DAHER
CALCULATED-DESIGNED BY: ASHLYN SWAN
CHECKED BY: ANTON KISMETIAN
REVISED BY
DATE REVISED

LAST REVISION 06-17-15
DATE PLOTTED => 12-NOV-2015
TIME PLOTTED => 09:31

Dist	COUNTY	ROUTE	POST MILES TOTAL PROJECT	SHEET No.	TOTAL SHEETS
10	Tuo	120	R19.4/R20.0	3	119

REGISTERED CIVIL ENGINEER 5-20-15 DATE

6-22-15
PLANS APPROVAL DATE

REGISTERED PROFESSIONAL ENGINEER
ANTON A. KISMETIAN
No. 64466
Exp. 6/30/17
CIVIL
STATE OF CALIFORNIA

THE STATE OF CALIFORNIA OR ITS OFFICERS OR AGENTS SHALL NOT BE RESPONSIBLE FOR THE ACCURACY OR COMPLETENESS OF SCANNED COPIES OF THIS PLAN SHEET.

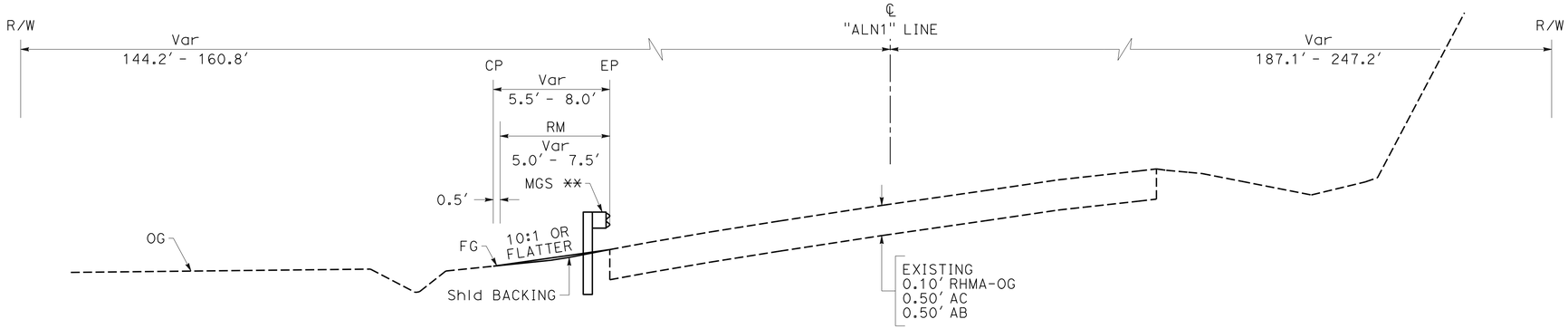

Sta 1768+00.00 TO Sta 1768+52.67
**Sta 1768+00.00 TO Sta 1768+04.57

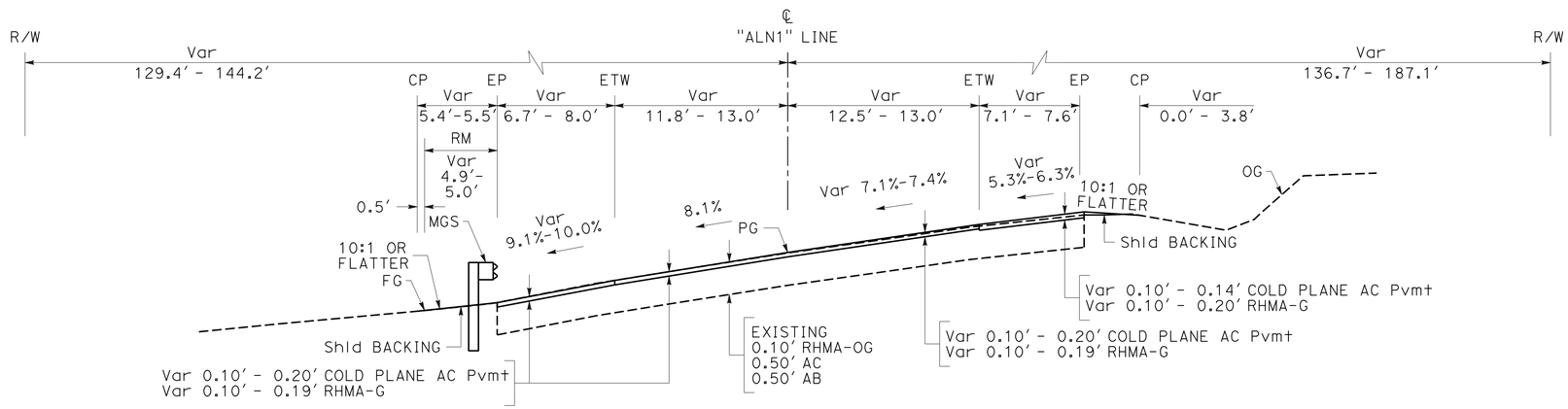

Sta 1767+55.21 TO Sta 1768+00.00

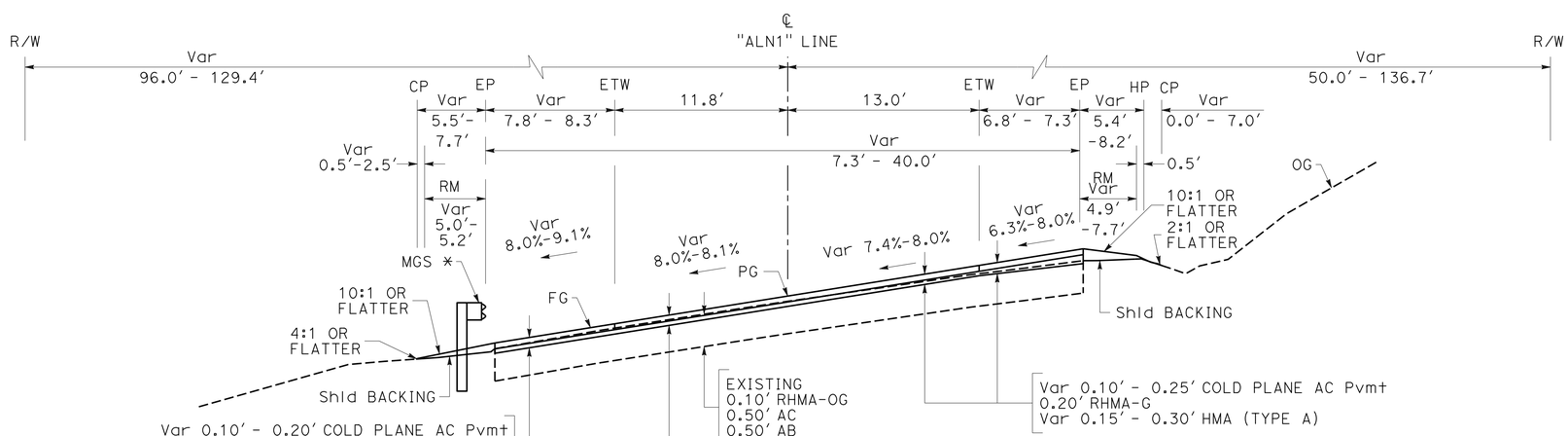

ROUTE 120

Sta 1766+77.42 TO Sta 1767+55.21
*Sta 1767+02.85 TO Sta 1767+55.21

TYPICAL CROSS SECTION

NO SCALE

X-2

STATE OF CALIFORNIA - DEPARTMENT OF TRANSPORTATION
Caltrans
06-DESIGN

FUNCTIONAL SUPERVISOR: KAL DAHER
CALCULATED-DESIGNED BY: ASHLYN SWAN
CHECKED BY: ANTON KISMETIAN
REVISED BY
DATE REVISED

LAST REVISION 06-18-15
DATE PLOTTED => 12-NOV-2015
TIME PLOTTED => 09:31

Dist	COUNTY	ROUTE	POST MILES TOTAL PROJECT	SHEET No.	TOTAL SHEETS
10	Tuo	120	R19.4/R20.0	4	119

REGISTERED CIVIL ENGINEER 5-20-15 DATE

6-22-15
PLANS APPROVAL DATE

REGISTERED PROFESSIONAL ENGINEER ANTON A. KISMETIAN No. 64466 Exp. 6/30/17 CIVIL STATE OF CALIFORNIA

THE STATE OF CALIFORNIA OR ITS OFFICERS OR AGENTS SHALL NOT BE RESPONSIBLE FOR THE ACCURACY OR COMPLETENESS OF SCANNED COPIES OF THIS PLAN SHEET.

NOTES:

1. COORDINATE WITH ENGINEER REGARDING USE OF DON PEDRO RESERVOIR VISTA POINT AND ABANDONED ROADWAY FOR CONTRACTOR STAGING AREA.
2. FOR ACCURATE RIGHT OF WAY DATA, CONTACT RIGHT OF WAY ENGINEERING AT THE DISTRICT OFFICE.

LEGEND:

COLD PLANE AC Pvmt

ABBREVIATION:

TRSESAF TEMPORARY REINFORCED SILT FENCE (TYPE 1)

CURVE DATA

No. ⊕	R	Δ	T	L
1	1138′	23°16′51″	234.43′	462.40′
2	1184′	93°35′54″	1260.79′	1934.18′

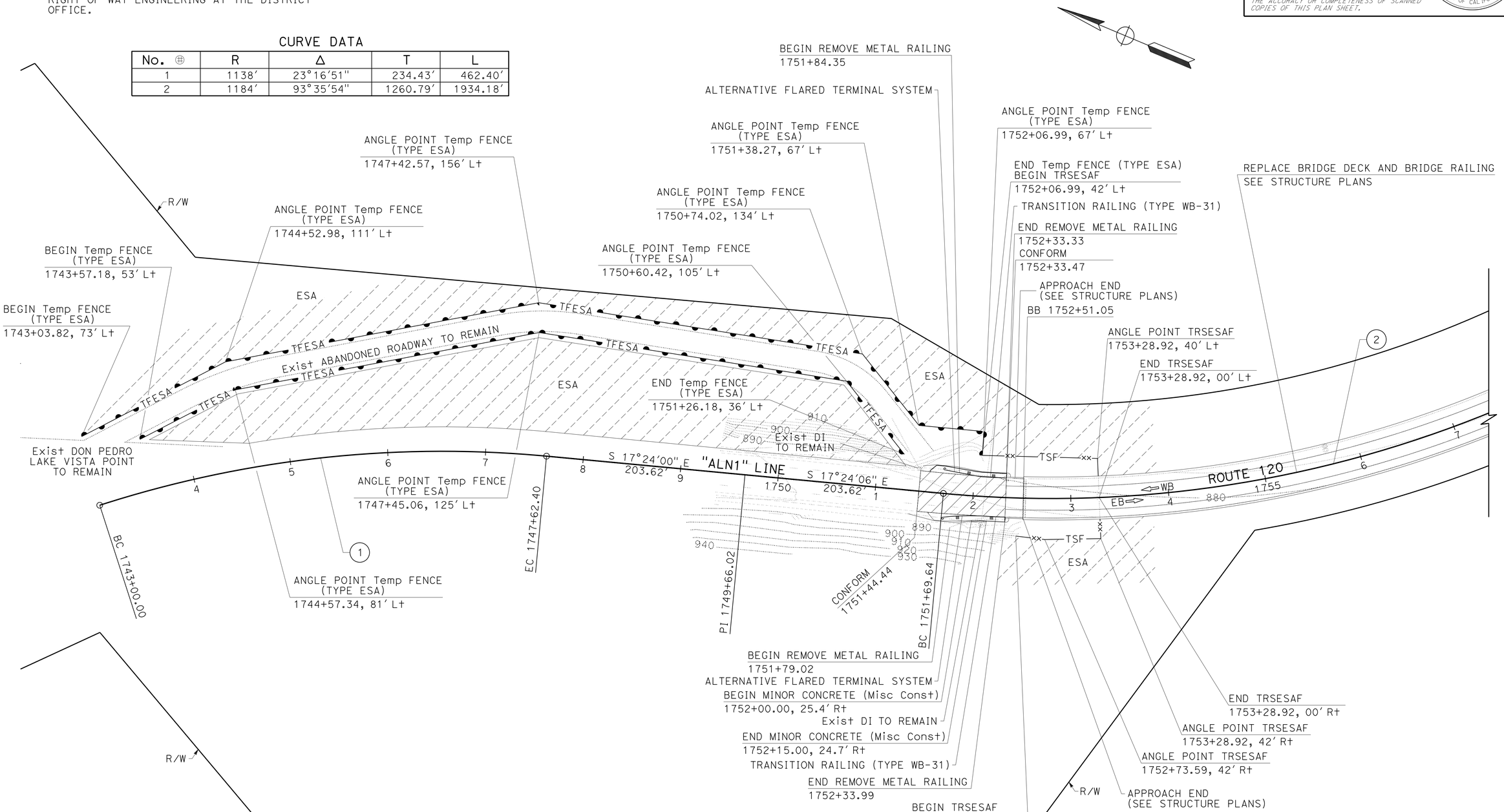

SCALE: 1"=50′

LAYOUT L-1

REVISED BY	DATE REVISED

CALCULATED-DESIGNED BY	CHECKED BY
ASHLYN SWAN	ANTON KISMETIAN

FUNCTIONAL SUPERVISOR: KAL DAHER

STATE OF CALIFORNIA - DEPARTMENT OF TRANSPORTATION
Caltrans
06-DESIGN

LAST REVISION 06-17-15 | DATE PLOTTED => 12-NOV-2015 | TIME PLOTTED => 09:31

Dist	COUNTY	ROUTE	POST MILES TOTAL PROJECT	SHEET No.	TOTAL SHEETS
10	Tuo	120	R19.4/R20.0	5	119

REGISTERED CIVIL ENGINEER 5-20-15 DATE

6-22-15
PLANS APPROVAL DATE

REGISTERED PROFESSIONAL ENGINEER ANTON A. KISMETIAN No. 64466 Exp. 6/30/17 CIVIL STATE OF CALIFORNIA

THE STATE OF CALIFORNIA OR ITS OFFICERS OR AGENTS SHALL NOT BE RESPONSIBLE FOR THE ACCURACY OR COMPLETENESS OF SCANNED COPIES OF THIS PLAN SHEET.

NOTE:

FOR ACCURATE RIGHT OF WAY DATA, CONTACT RIGHT OF WAY ENGINEERING AT THE DISTRICT OFFICE.

CURVE DATA

No. ⊕	R	Δ	T	L
3	1988′	52°17′14″	975.79′	1814.22′

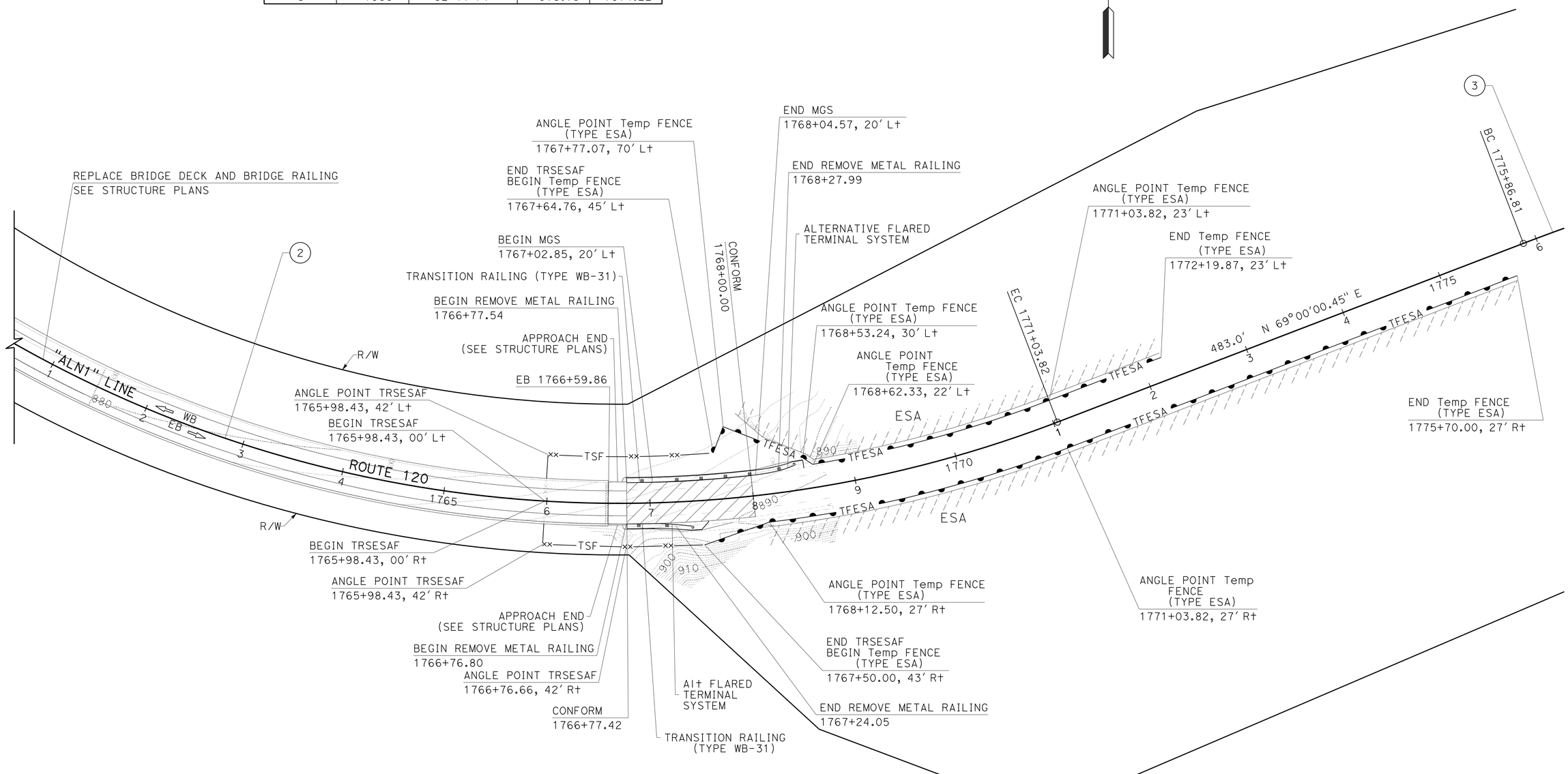

SCALE: 1"=50′

LAYOUT
L-2

STATE OF CALIFORNIA - DEPARTMENT OF TRANSPORTATION
Caltrans
06-DESIGN

FUNCTIONAL SUPERVISOR: KAL DAHER
CALCULATED-DESIGNED BY: ASHLYN SWAN
CHECKED BY: ANTON KISMETIAN
REVISED BY
DATE REVISED

LAST REVISION 06-17-15
DATE PLOTTED => 12-NOV-2015
TIME PLOTTED => 09:31

Dist	COUNTY	ROUTE	POST MILES TOTAL PROJECT	SHEET No.	TOTAL SHEETS
10	Tuo	120	R19.4/R20.0	6	119

REGISTERED CIVIL ENGINEER 5-20-15 DATE

6-22-15
PLANS APPROVAL DATE

REGISTERED PROFESSIONAL ENGINEER ANTON A. KISMETIAN No. 64466 Exp. 6/30/17 CIVIL STATE OF CALIFORNIA

THE STATE OF CALIFORNIA OR ITS OFFICERS OR AGENTS SHALL NOT BE RESPONSIBLE FOR THE ACCURACY OR COMPLETENESS OF SCANNED COPIES OF THIS PLAN SHEET.

NOTE:

ORIGINAL SURVEY DATUM
US FEET ZONE 3 (0403)
HORIZONTAL: NAD1983 (1991.35)
VERTICAL: NAVD88

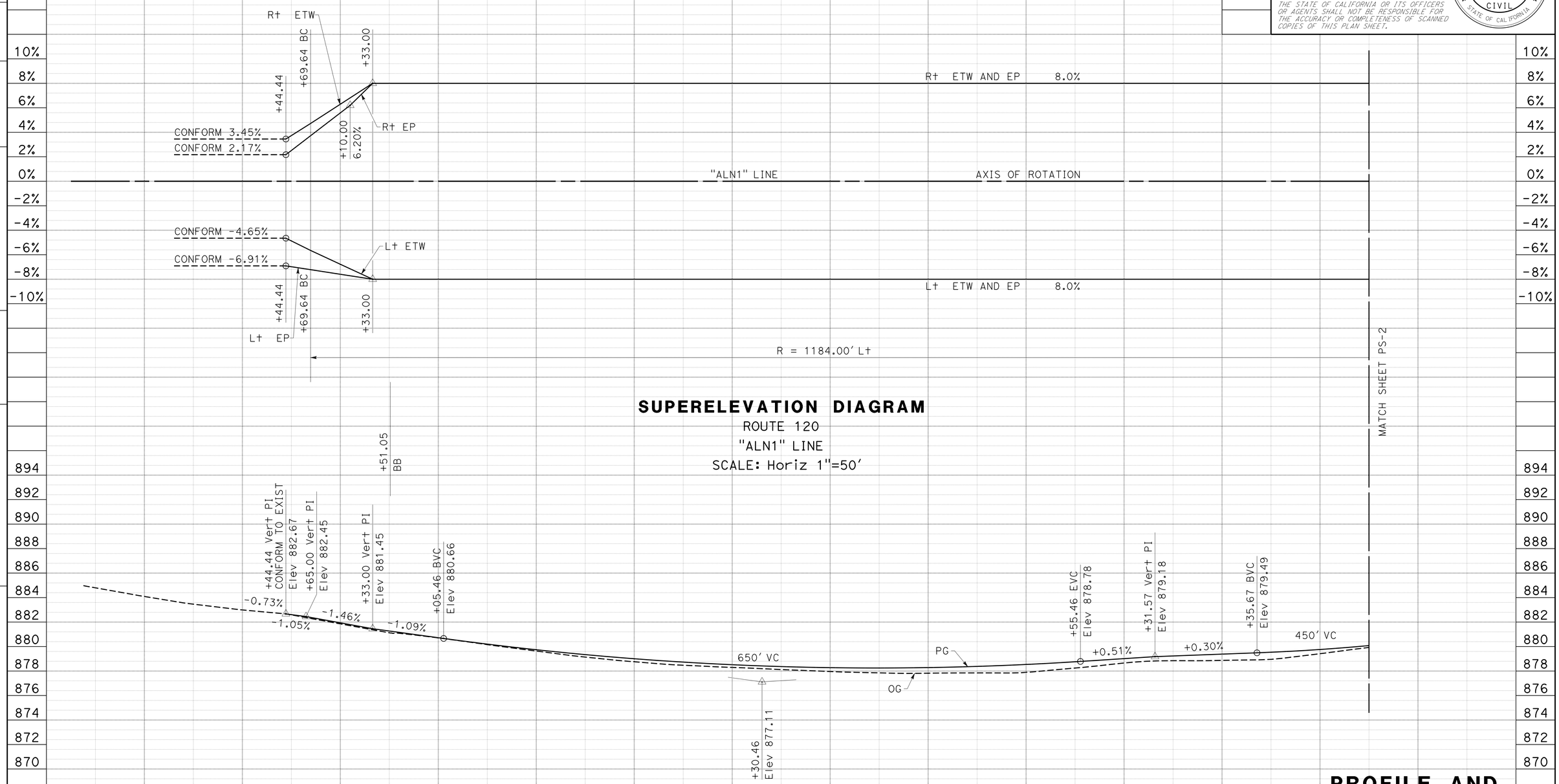

SUPERELEVATION DIAGRAM
ROUTE 120
"ALN1" LINE
SCALE: Horiz 1"=50'

PROFILE
ROUTE 120
"ALN1" LINE
SCALE: Horiz 1"=50'
Vert 1"=4'

PROFILE AND SUPERELEVATION DIAGRAM
PS-1

STATE OF CALIFORNIA - DEPARTMENT OF TRANSPORTATION
Caltrans
06-DESIGN

FUNCTIONAL SUPERVISOR: KAL DAHER
CALCULATED-DESIGNED BY: ANTON KISMETIAN
CHECKED BY: ASHLYN SWAN
REVISED BY / DATE REVISED

LAST REVISION 06-17-15
DATE PLOTTED => 12-NOV-2015
TIME PLOTTED => 09:31

Dist	COUNTY	ROUTE	POST MILES TOTAL PROJECT	SHEET No.	TOTAL SHEETS
10	Tuo	120	R19.4/R20.0	7	119

REGISTERED CIVIL ENGINEER 5-20-15 DATE

6-22-15
PLANS APPROVAL DATE

REGISTERED PROFESSIONAL ENGINEER ANTON A. KISMETIAN No. 64466 Exp. 6/30/17 CIVIL STATE OF CALIFORNIA

THE STATE OF CALIFORNIA OR ITS OFFICERS OR AGENTS SHALL NOT BE RESPONSIBLE FOR THE ACCURACY OR COMPLETENESS OF SCANNED COPIES OF THIS PLAN SHEET.

NOTE:

ORIGINAL SURVEY DATUM
US FEET ZONE 3 (0403)
HORIZONTAL: NAD1983 (1991.35)
VERTICAL: NAVD88

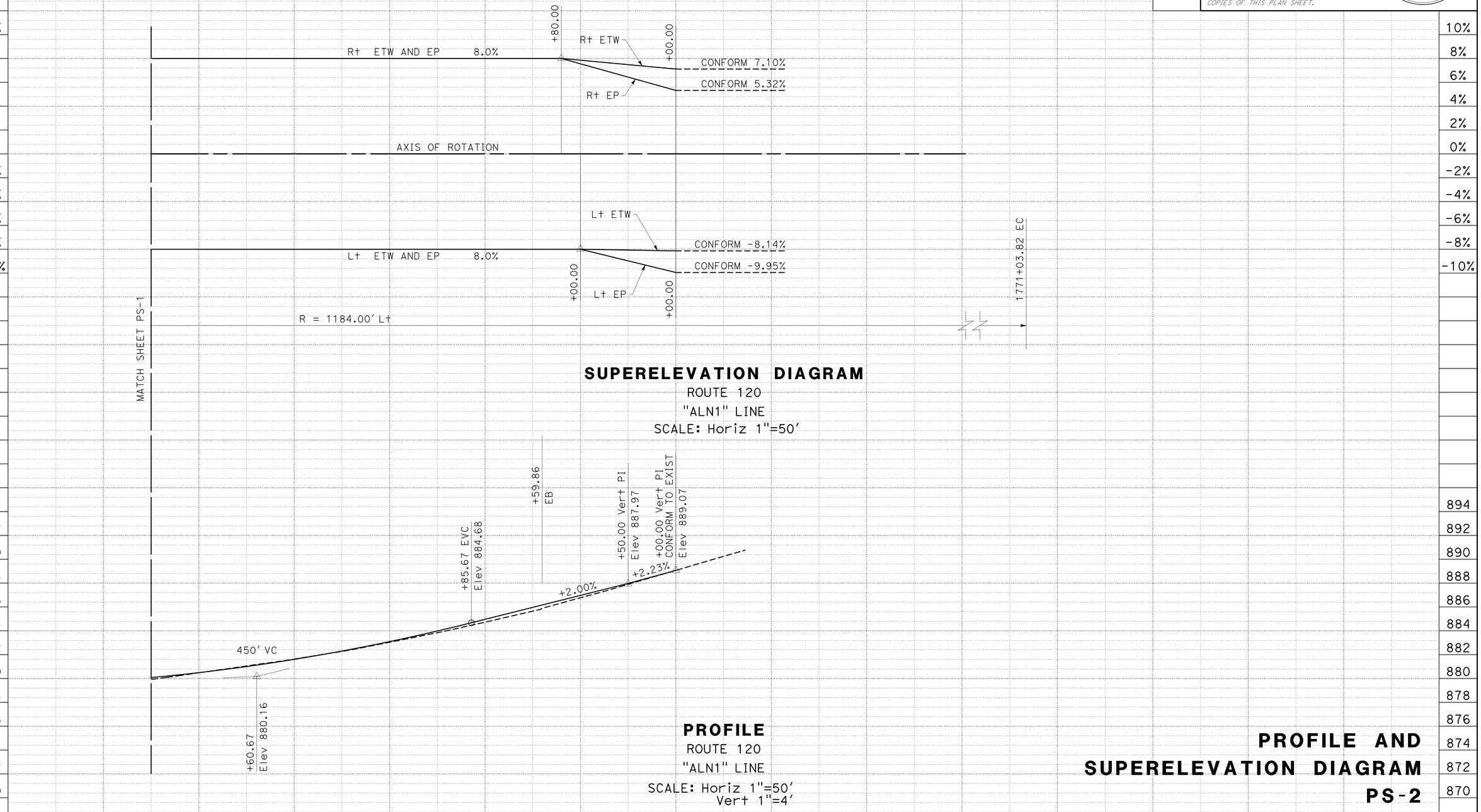

STATION		3	4	1765+00	6	7	8	9	1768+00	TOTAL
CY	Exc					0.2				0.2
	Emb					9.0				9.0

PROFILE AND SUPERELEVATION DIAGRAM

PS-2

STATE OF CALIFORNIA - DEPARTMENT OF TRANSPORTATION
Caltrans
06-DESIGN

FUNCTIONAL SUPERVISOR: KAL DAHER

CALCULATED-DESIGNED BY: ANTON KISMETIAN
CHECKED BY: ASHLYN SWAN

REVISED BY | DATE REVISED

LAST REVISION 06-17-15
DATE PLOTTED => 12-NOV-2015
TIME PLOTTED => 09:31

Dist	COUNTY	ROUTE	POST MILES TOTAL PROJECT	SHEET No.	TOTAL SHEETS
10	Tuo	120	R19.4/R20.0	8	119

REGISTERED CIVIL ENGINEER 5-20-15 DATE

6-22-15
PLANS APPROVAL DATE

REGISTERED PROFESSIONAL ENGINEER ANTON A. KISMETIAN No. 64466 Exp. 6/30/17 CIVIL STATE OF CALIFORNIA

THE STATE OF CALIFORNIA OR ITS OFFICERS OR AGENTS SHALL NOT BE RESPONSIBLE FOR THE ACCURACY OR COMPLETENESS OF SCANNED COPIES OF THIS PLAN SHEET.

NOTES:

1. RUBBER MAT MUST BE 48" WIDE INDIVIDUAL MATS OR 48" WIDE CONTINUOUS ROLL PRODUCT. INDIVIDUAL MATS ARE SHOWN.
2. EDGES OF RUBBER MAT TO ABUT EDGES OF POST.
3. WHERE EDGE OF PAVED SHOULDER IS MORE THAN 24" FROM BACK OF POST, EDGE OF RUBBER MAT MUST BE 24" FROM BACK OF POST. WHERE PAVED SHOULDER IS CONSTRUCTED 24" OR LESS FROM BACK OF POST, ABUT EDGE OF RUBBER MAT AGAINST EDGE OF PAVED SHOULDER. WHERE DIKE IS CONSTRUCTED UNDER RAILING, ABUT EDGE OF RUBBER MAT AGAINST BACK OF DIKE.
4. LAP RUBBER MAT IN DIRECTION OF WATER FLOW.
5. FOR CONTINUOUS ROLL PRODUCT LOCATE OVERLAP JOINT AT OR BETWEEN POSTS AS SHOWN.

ABBREVIATION:

RM RUBBER MAT

LEGEND:

RUBBER MAT

MINOR Conc (Misc Const)

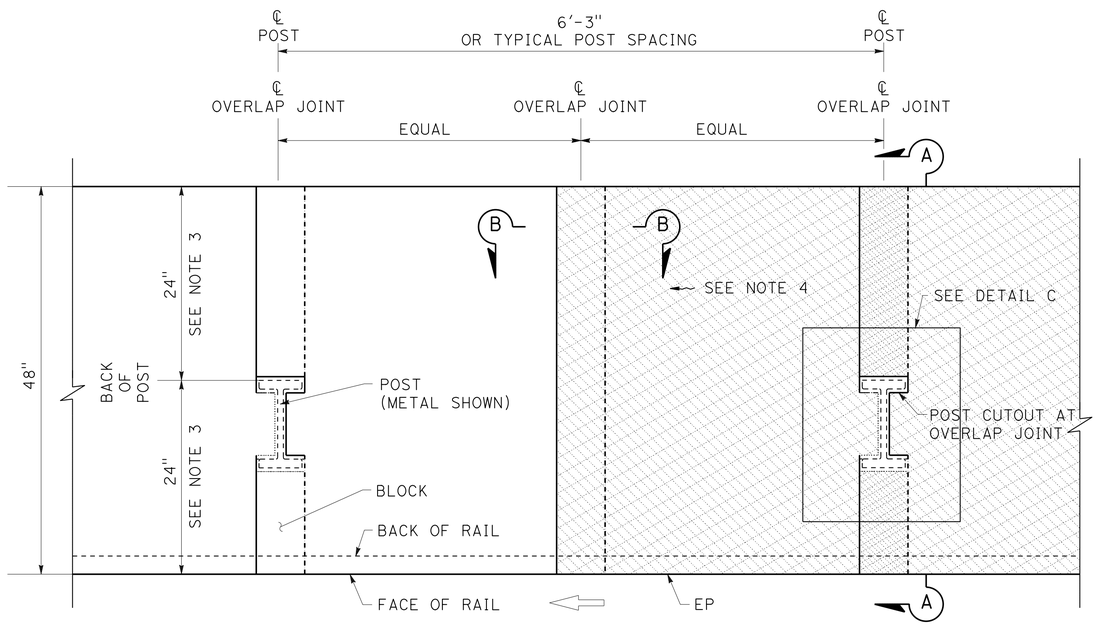

PLAN

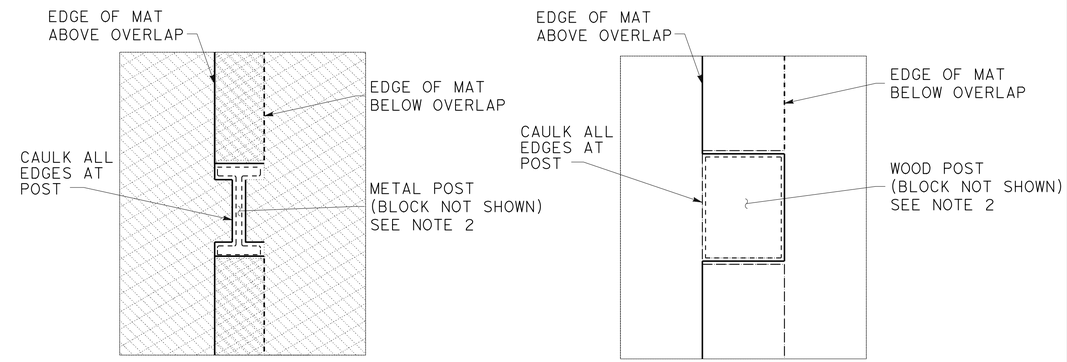

METAL POST

WOOD POST

DETAIL C

POST CUTOUT AT OVERLAP JOINT

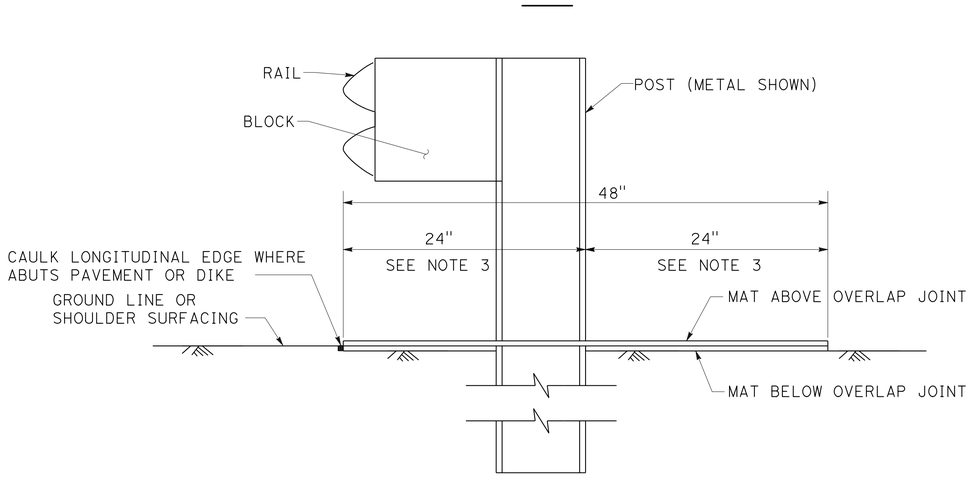

SECTION A-A

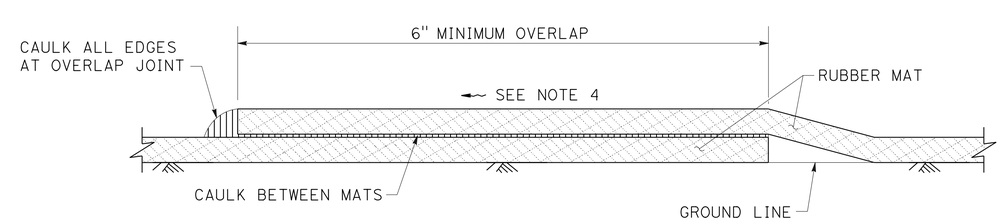

SECTION B-B

OVERLAP JOINT

RUBBER MAT UNDER MIDWEST GUARDRAIL SYSTEM AND TRANSITION RAILING

CONSTRUCTION DETAIL C-1

NO SCALE

STATE OF CALIFORNIA - DEPARTMENT OF TRANSPORTATION
Caltrans
06-DESIGN

FUNCTIONAL SUPERVISOR: KAL DAHER
CALCULATED-DESIGNED BY: ASHLYN SWAN
CHECKED BY: ANTON KISMETIAN
REVISED BY
DATE REVISED

LAST REVISION 06-17-15
DATE PLOTTED => 12-NOV-2015
TIME PLOTTED => 09:31

Dist	COUNTY	ROUTE	POST MILES TOTAL PROJECT	SHEET No.	TOTAL SHEETS
10	Tuo	120	R19.4/R20.0	9	119

REGISTERED CIVIL ENGINEER 5-20-15 DATE

6-22-15
PLANS APPROVAL DATE

REGISTERED PROFESSIONAL ENGINEER ANTON A. KISMETIAN No. 64466 Exp. 6/30/17 CIVIL STATE OF CALIFORNIA

THE STATE OF CALIFORNIA OR ITS OFFICERS OR AGENTS SHALL NOT BE RESPONSIBLE FOR THE ACCURACY OR COMPLETENESS OF SCANNED COPIES OF THIS PLAN SHEET.

NOTE (THIS SHEET ONLY):

1. CONTINUE ALIGNMENT OF RUBBER MAT EDGE AT OFFSET FROM BACK OF POST.

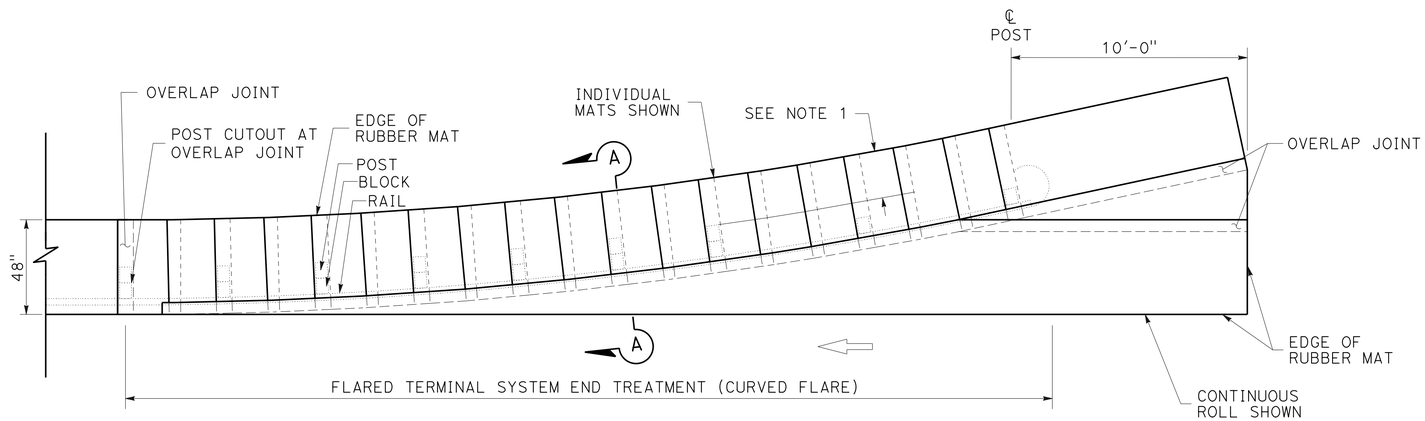

PLAN

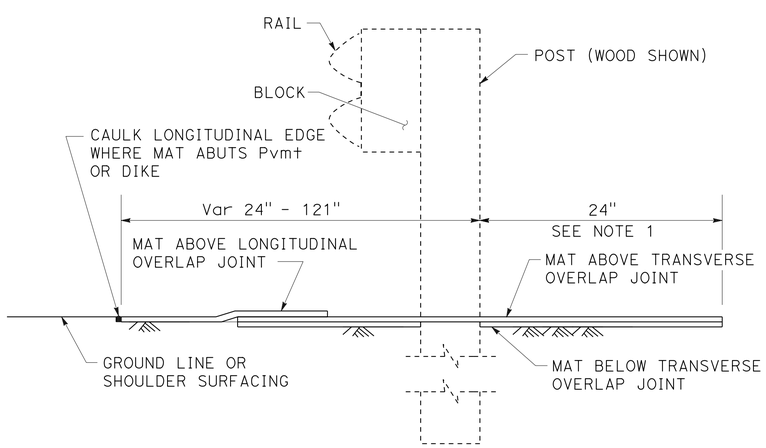

SECTION A-A

FOR INDIVIDUAL MATS

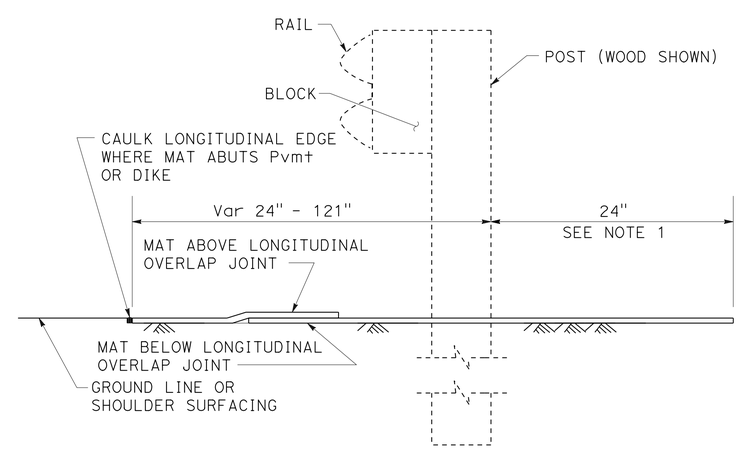

SECTION A-A

FOR CONTINUOUS ROLL

RUBBER MAT UNDER ALTERNATIVE FLARED TERMINAL SYSTEM END TREATMENTS

CONSTRUCTION DETAIL C-2

NO SCALE

REVISED BY | DATE REVISED

ASHLYN SWAN | ANTON KISMETIAN

CALCULATED-DESIGNED BY | CHECKED BY

FUNCTIONAL SUPERVISOR: KAL DAHER

STATE OF CALIFORNIA - DEPARTMENT OF TRANSPORTATION

Caltrans® 06-DESIGN

LAST REVISION 06-18-15 | DATE PLOTTED => 12-NOV-2015 | TIME PLOTTED => 09:31

Dist	COUNTY	ROUTE	POST MILES TOTAL PROJECT	SHEET No.	TOTAL SHEETS
10	Tuo	120	R19.4/R20.0	10	119

REGISTERED CIVIL ENGINEER 5-20-15 DATE

6-22-15
PLANS APPROVAL DATE

REGISTERED PROFESSIONAL ENGINEER ANTON A. KISMETIAN No. 64466 Exp. 6/30/17 CIVIL STATE OF CALIFORNIA

THE STATE OF CALIFORNIA OR ITS OFFICERS OR AGENTS SHALL NOT BE RESPONSIBLE FOR THE ACCURACY OR COMPLETENESS OF SCANNED COPIES OF THIS PLAN SHEET.

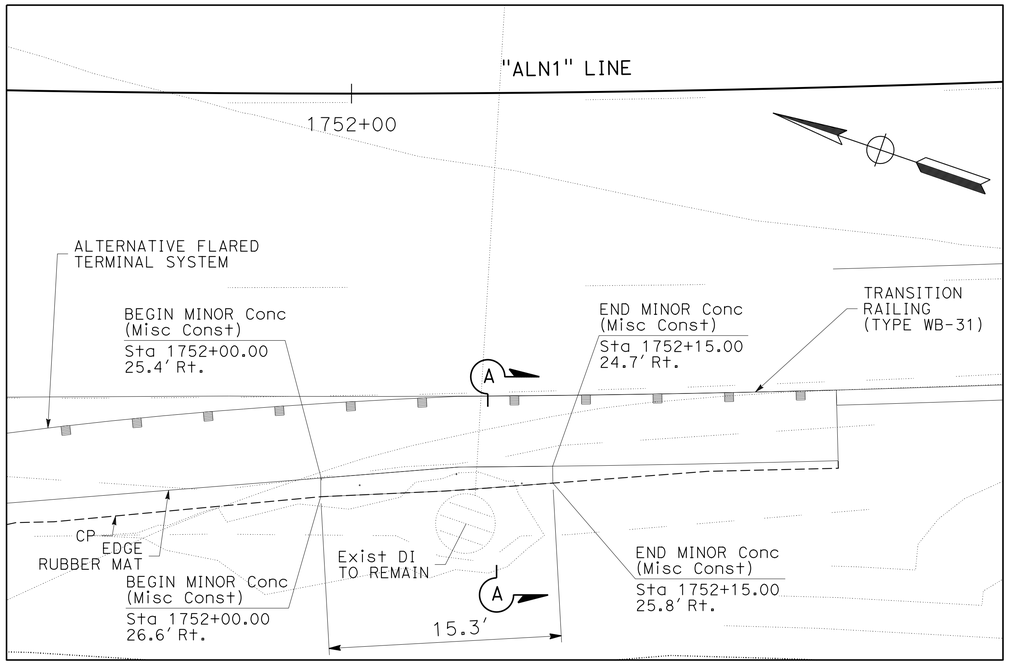

PLAN VIEW

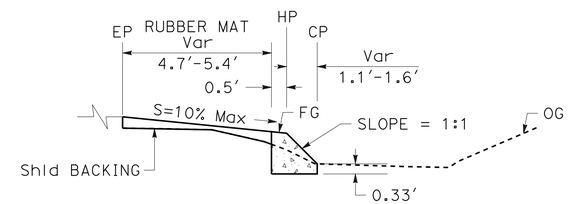

SECTION A-A

MINOR CONCRETE (MISCELLANEOUS CONSTRUCTION)

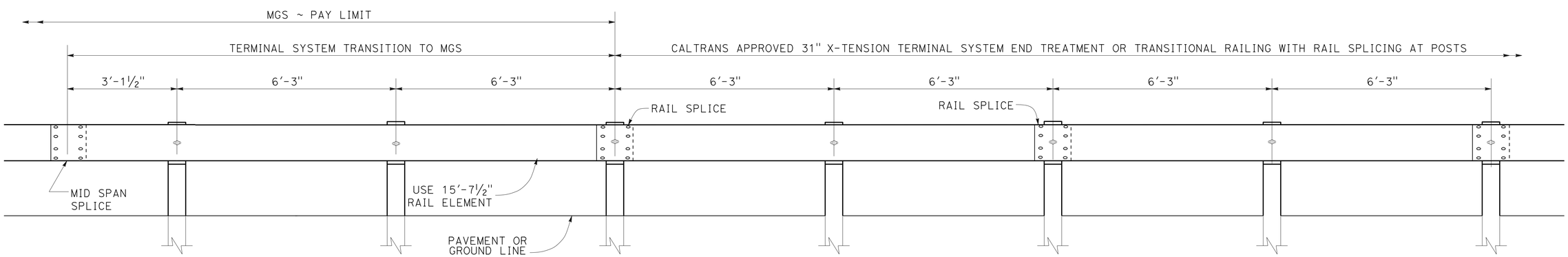

TRANSITION DETAIL FOR 31" X-TENSION TERMINAL SYSTEM END TREATMENT OR TRANSITIONAL RAILING WITH RAIL SPLICING AT POSTS TO MIDWEST GUARDRAIL SYSTEM

CONSTRUCTION DETAIL

C-3

NO SCALE

STATE OF CALIFORNIA - DEPARTMENT OF TRANSPORTATION
Caltrans
06-DESIGN

FUNCTIONAL SUPERVISOR: KAL DAHER
CALCULATED-DESIGNED BY: ASHLYN SWAN
CHECKED BY: ANTON KISMETIAN
REVISED BY
DATE REVISED

LAST REVISION 06-18-15
DATE PLOTTED => 12-NOV-2015
TIME PLOTTED => 09:31

Dist	COUNTY	ROUTE	POST MILES TOTAL PROJECT	SHEET No.	TOTAL SHEETS
10	Tuo	120	R19.4/R20.0	11	119

REGISTERED CIVIL ENGINEER 4-08-15 DATE

6-22-15
PLANS APPROVAL DATE

REGISTERED PROFESSIONAL ENGINEER HUE NGUYEN No. 74484 Exp. 12/31/15 CIVIL STATE OF CALIFORNIA

THE STATE OF CALIFORNIA OR ITS OFFICERS OR AGENTS SHALL NOT BE RESPONSIBLE FOR THE ACCURACY OR COMPLETENESS OF SCANNED COPIES OF THIS PLAN SHEET.

STATIONARY MOUNTED CONSTRUCTION AREA SIGNS

SIGN	SIGN CODE		PANEL SIZE	SIGN MESSAGE	No. OF POST AND POST SIZE	No. OF SIGNS
	FEDERAL	CALIFORNIA				EA
A	W20-1		36" x 36"	ROAD WORK AHEAD	1 - 4" x 4"	2
B	G20-2		36" x 18"	END ROAD WORK	1 - 4" x 4"	2

NOTES:

1. SIGN LOCATIONS SHOWN ARE APPROXIMATE, EXACT LOCATIONS WILL BE DETERMINED BY THE ENGINEER.
2. SEE MOTORIST INFORMATION AND TRAFFIC HANDLING SHEETS FOR ADDITIONAL CONSTRUCTION AREA SIGNS.

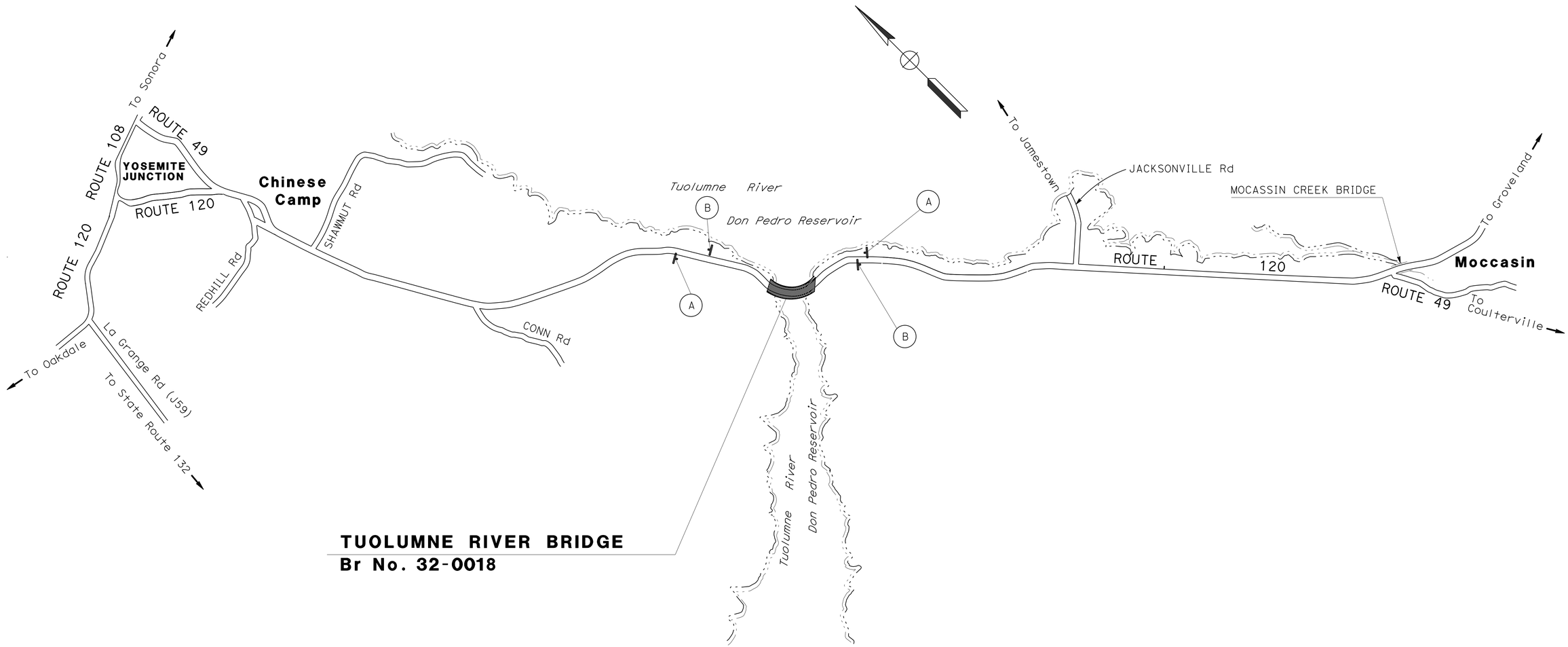

TUOLUMNE RIVER BRIDGE
Br No. 32-0018

APPROVED FOR CONSTRUCTION AREA SIGN WORK ONLY

CONSTRUCTION AREA SIGNS

NO SCALE

CS-1

STATE OF CALIFORNIA - DEPARTMENT OF TRANSPORTATION
Caltrans® 06-TRAFFIC DESIGN

FUNCTIONAL SUPERVISOR: MOHAMMED QATAMI
CALCULATED-DESIGNED BY: HUE NGUYEN
CHECKED BY: RAJINI TEKALKOTE
REVISED BY
DATE REVISED

LAST REVISION 06-17-15
DATE PLOTTED => 12-NOV-2015
TIME PLOTTED => 09:31

Dist	COUNTY	ROUTE	POST MILES TOTAL PROJECT	SHEET No.	TOTAL SHEETS
10	Tuo	120	R19.4/R20.0	12	119

REGISTERED CIVIL ENGINEER 5-20-15 DATE

6-22-15
PLANS APPROVAL DATE

REGISTERED PROFESSIONAL ENGINEER ANTON A. KISMETIAN No. 64466 Exp. 6/30/17 CIVIL STATE OF CALIFORNIA

THE STATE OF CALIFORNIA OR ITS OFFICERS OR AGENTS SHALL NOT BE RESPONSIBLE FOR THE ACCURACY OR COMPLETENESS OF SCANNED COPIES OF THIS PLAN SHEET.

NOTES:

1. GUIDE SIGNS ARE TO BE PLACED ON EXISTING SIGN POSTS WHERE POSSIBLE AND AS DETERMINED BY THE ENGINEER.
2. EXACT LOCATIONS AND MESSAGES OF ALL SIGNS TO BE DETERMINED BY THE ENGINEER.
3. LOCATIONS OF ALL SIGNS MUST BE "FIREBREAK" CLEAR OF VEGETATIONS AND VISIBLE TO THE PUBLIC.

ABBREVIATION:

CR COUNTY ROAD

LEGEND:

- PORTABLE CHANGEABLE MESSAGE SIGN
- CAS (PORTABLE)
- (X) CAS No. (SEE Sht MIQ-1)
- TYPE III BARRICADE
- PORTABLE LIGHTING SYSTEM

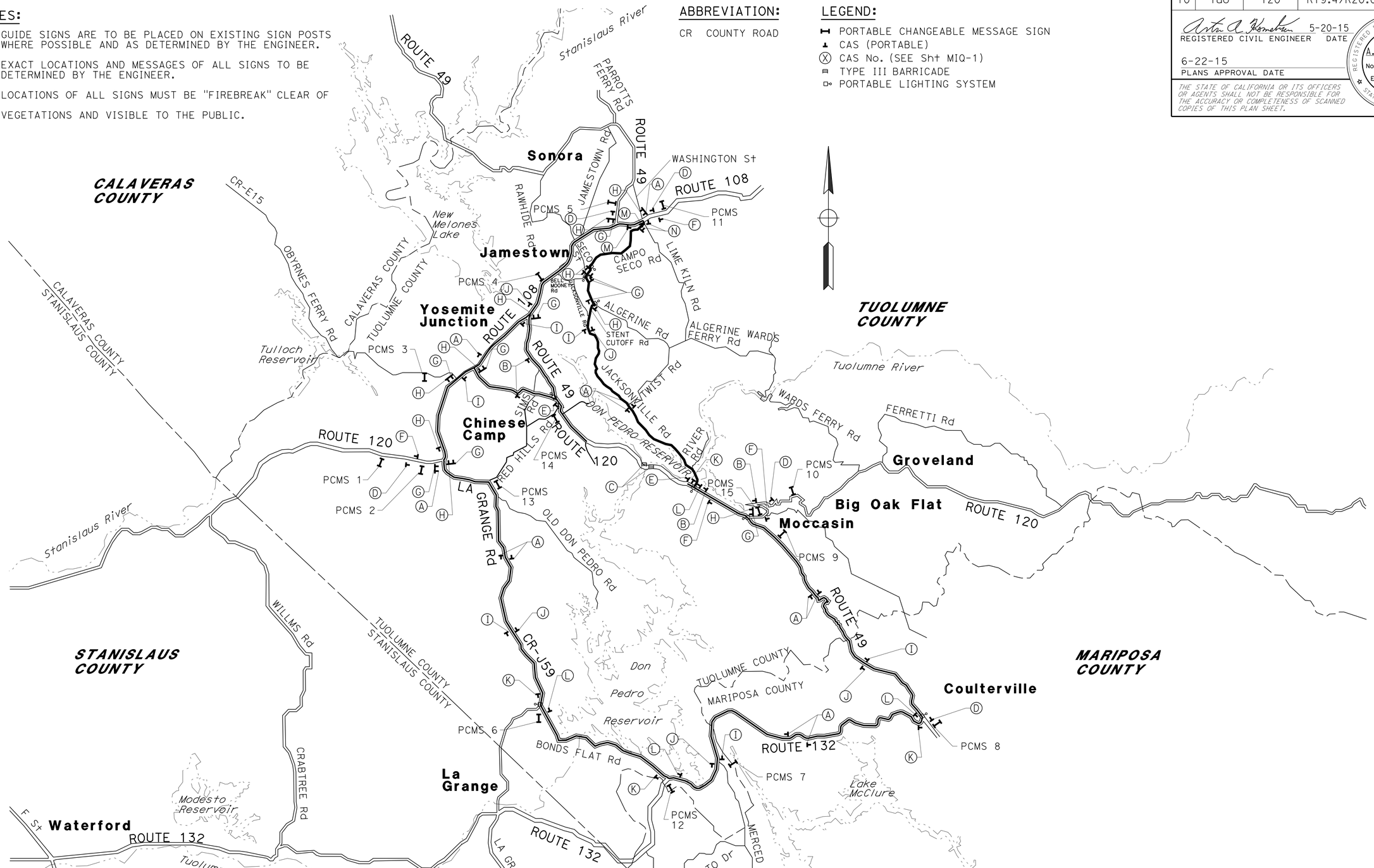

APPROVED FOR MOTORIST INFORMATION WORK ONLY

MOTORIST INFORMATION PLAN

NO SCALE

MI- 1

STATE OF CALIFORNIA - DEPARTMENT OF TRANSPORTATION
Caltrans
06-DESIGN

FUNCTIONAL SUPERVISOR: KAL DAHER
CALCULATED-DESIGNED BY: ASHLYN SWAN
CHECKED BY: ANTON KISMETIAN
REVISED BY
DATE REVISED

LAST REVISION 06-17-15
DATE PLOTTED => 12-NOV-2015
TIME PLOTTED => 09:32

BORDER LAST REVISED 7/2/2010
USERNAME => s113541
DGN FILE => 10120000531b001.dgn
RELATIVE BORDER SCALE IS IN INCHES 0 1 2 3
UNIT 1443
PROJECT NUMBER & PHASE 10120000531

Dist	COUNTY	ROUTE	POST MILES TOTAL PROJECT	SHEET No.	TOTAL SHEETS
10	Tuo	120	R19.4/R20.0	13	119

REGISTERED CIVIL ENGINEER 5-20-15 DATE

6-22-15
PLANS APPROVAL DATE

REGISTERED PROFESSIONAL ENGINEER ANTON A. KISMETIAN No. 64466 Exp. 6/30/17 CIVIL STATE OF CALIFORNIA

THE STATE OF CALIFORNIA OR ITS OFFICERS OR AGENTS SHALL NOT BE RESPONSIBLE FOR THE ACCURACY OR COMPLETENESS OF SCANNED COPIES OF THIS PLAN SHEET.

PORTABLE CHANGEABLE MESSAGE SIGNS

CONSTRUCTION PERIOD	PCMS	PCMS MESSAGE		
		FRAME 1	FRAME 2	FRAME 3
14-DAY ADVANCE WARNING	2, 3, 5, 6, 7, 8, 9, 10, 11	HWY 120 CLOSED WEEKNITS	MMM DD - MMM DD 10PM-6AM	TUNE RADIO 1610 AM
DURING ONE-WAY TRAFFIC CONTROL	2, 3, 4, 9, 10	HWY 120 ONE-WAY TRAFFIC	AT DON PEDRO LAKE	EXPECT DELAYS
DURING FULL CLOSURE	1, 2	HWY 120 CLOSED	AUTOS STAY ON HWY 108	TRUCKS RT TO LA GRANGE
	3, 14	HWY 120 CLOSED	AUTOS USE EB HWY 108	TRUCKS RT TO LA GRANGE
	5, 11	HWY 120 CLOSED	AUTOS USE LIME KILN Rd	TRUCKS USE LA GRANGE
	6, 7	HWY 120 CLOSED	RIGHT TURN FOR YOSEMITE	LEFT TURN FOR SONORA
	4, 8, 9, 13	HWY 120 CLOSED	AT DON PEDRO LAKE	
	10, 15	HWY 120 CLOSED	AUTOS STAY ON HWY 120	TRUCKS TURN LT HWY 49
	12	HWY 120 CLOSED	THRU FOR YOSEMITE	LEFT TURN FOR SONORA

PORTABLE LIGHTING SYSTEM

INTERSECTION DESCRIPTION	EA
LaGrange Rd / BONDS FLAT Rd	1
SR-49 / SR-132, COULTERVILLE, CA	1
SR-49 / SR-120, CHINESE CAMP, CA	1
SR-49 / SR-120, MOCCASIN, CA	1
JACKSONVILLE Rd / SR-120	1
STENT CUT-OFF Rd / ALGERINE Rd	1
JACKSONVILLE Rd / ALGERINE Rd	1
JACKSONVILLE Rd / CAMPO SECO Rd	1
TOTAL	8

NOTES:

1. EXACT SIGN LOCATIONS AND MESSAGES TO BE DETERMINED BY THE ENGINEER.
2. SEE CONSTRUCTION AREA SIGNS AND TRAFFIC HANDLING SHEETS FOR ADDITIONAL CONSTRUCTION AREA SIGNS.

ABBREVIATION:

WEEKNITS WEEKNIGHTS

CONSTRUCTION AREA SIGNS (PORTABLE)

SIGN (X)	SIGN CODE		PANEL SIZE	SIGN MESSAGE	NUMBER OF POSTS AND SIZE	NUMBER OF SIGNS	TYPE III BARRICADE (N)
	FEDERAL	CALIFORNIA					EA
A		SC9(CA)	36" x 36"	DETOUR WITH ARROW	1 - 4" x 4"	11	
B	R11-3b		60" x 30"	BRIDGE OUT __ MILES AWAY LOCAL TRAFFIC ONLY	2 - 4" x 4"	4	
C		C2(CA)	48" x 30"	BRIDGE CLOSED	MOUNT TO BARRICADE	2	2
D	W20-2		36" x 36"	DETOUR AHEAD	1 - 4" x 4"	5	
E	R11-4		60" x 30"	ROAD CLOSED TO THRU TRAFFIC	1 - 4" x 4"	2	
F	M4-8a		24" x 18"	END DETOUR	1 - 4" x 4"	4	
G	M4-9R		30" x 24"	DETOUR	1 - 4" x 4"	10	
H	M4-9L		30" x 24"	DETOUR	1 - 4" x 4"	11	
I		SC9(CA)	48" x 18"	DETOUR WITH ARROW	1 - 6" x 6"	6	
		G28-2(CA)(120)	36" x 36"	ROUTE 120			
	M3-2		30" x 15"	EAST			
J		SC9(CA)	48" x 18"	DETOUR WITH ARROW	1 - 6" x 6"	5	
		G28-2(CA)(120)	36" x 36"	ROUTE 120			
	M3-4		30" x 15"	WEST			
K		G28-2(CA)(120)	36" x 36"	ROUTE 120	1 - 6" x 6"	4	
	M3-2		30" x 15"	EAST			
	M4-9L		30" x 24"	DETOUR			
L		G28-2(CA)(120)	36" x 36"	ROUTE 120	1 - 6" x 6"	4	
	M3-4		30" x 15"	WEST			
	M4-9R		30" x 24"	DETOUR			
M		G28-2(CA)(120)	36" x 36"	ROUTE 120	1 - 6" x 6"	2	
	M3-2		30" x 15"	EAST			
	M4-9R		30" x 24"	DETOUR			
N		G28-2(CA)(120)	36" x 36"	ROUTE 120	1 - 6" x 6"	2	
	M3-4		30" x 15"	WEST			
	M4-9L		30" x 24"	DETOUR			

(N) - NOT A SEPARATE PAY ITEM, FOR INFORMATION ONLY.

MOTORIST INFORMATION QUANTITIES

MIQ- 1

STATE OF CALIFORNIA - DEPARTMENT OF TRANSPORTATION
Caltrans
06-DESIGN

FUNCTIONAL SUPERVISOR: KAL DAHER
CALCULATED-DESIGNED BY: ANTON KISMETIAN
CHECKED BY:
REVISED BY: ASHLYN SWAN
DATE REVISED:

LAST REVISION 06-17-15
DATE PLOTTED => 12-NOV-2015
TIME PLOTTED => 09:32

Dist	COUNTY	ROUTE	POST MILES TOTAL PROJECT	SHEET No.	TOTAL SHEETS
10	Tuo	120	R19.5/R20.0	14	119

REGISTERED CIVIL ENGINEER 4-08-15 DATE

6-22-15
PLANS APPROVAL DATE

REGISTERED PROFESSIONAL ENGINEER HUE NGUYEN No. 74484 Exp.12/31/15 CIVIL STATE OF CALIFORNIA

THE STATE OF CALIFORNIA OR ITS OFFICERS OR AGENTS SHALL NOT BE RESPONSIBLE FOR THE ACCURACY OR COMPLETENESS OF SCANNED COPIES OF THIS PLAN SHEET.

LEGEND:

- TEMPORARY RAILING (TYPE K)
- PORTABLE DELINEATOR (DOUBLE BASE)
- CONSTRUCTION AREA SIGN No.
- OBJECT MARKER (TYPE P)
- TEMPORARY CRASH CUSHION (ARRAY AS NOTED)
- TEMPORARY PAVEMENT MARKING (PAINT)

NOTES:

1. FOR ACCURATE RIGHT OF WAY DATA, CONTACT RIGHT OF WAY ENGINEERING AT THE DISTRICT OFFICE.
2. STAKED TEMPORARY RAILING (TYPE K) MUST BE SUPPORTED BY AT LEAST 4" THICK CONCRETE , HOT MIX ASPHALT OR EXISTING ASPHALT CONCRETE PAVEMENT.
3. PROVIDE ONE PCMS ONE MILE IN ADVANCE OF W20-4 SIGN IN EACH DIRECTION OF TRAVEL. EXACT MESSAGE OF PCMS TO BE DETERMINED BY THE ENGINEER.
4. EXACT LOCATION OF SIGNS TO BE DETERMINED BY THE ENGINEER.

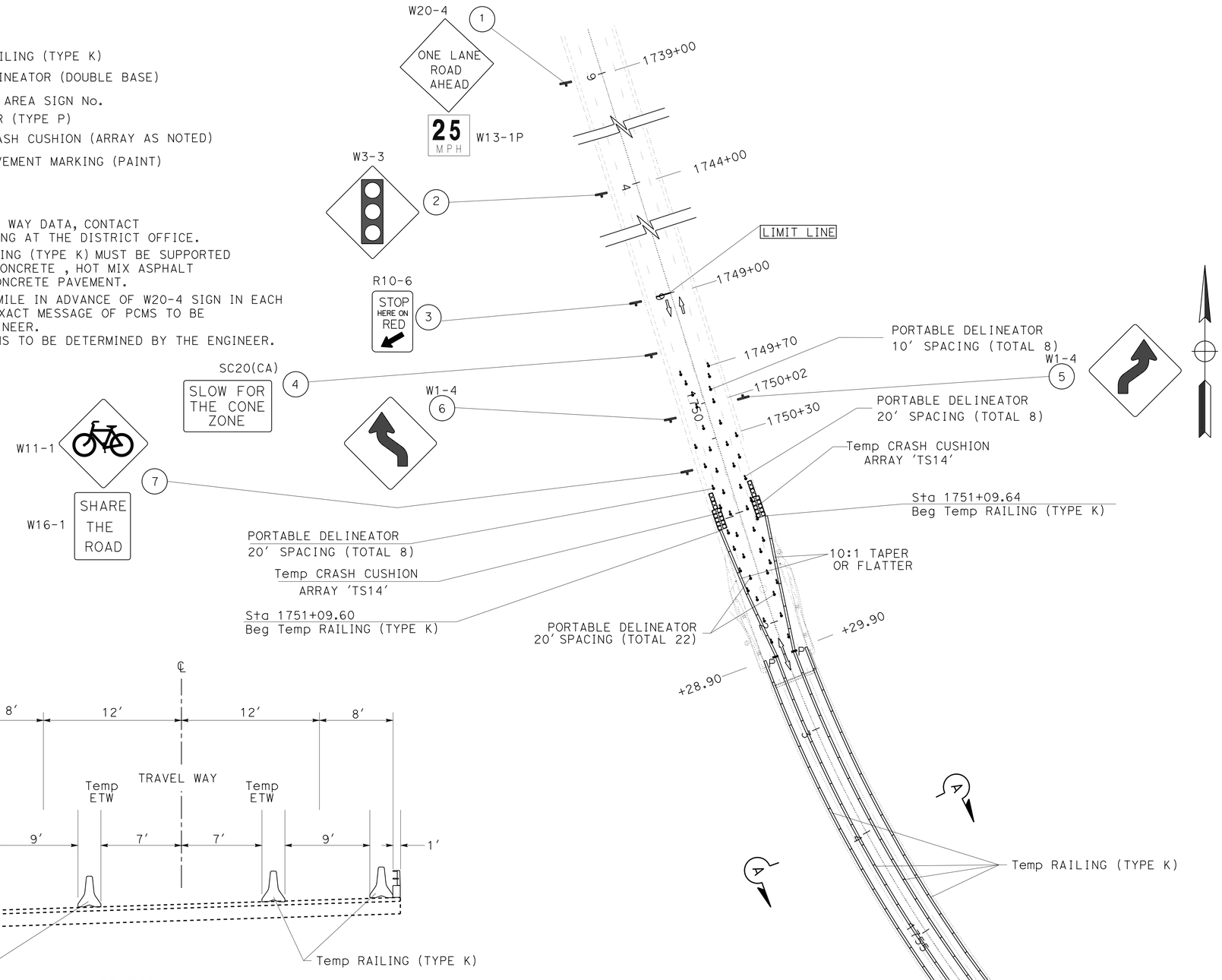

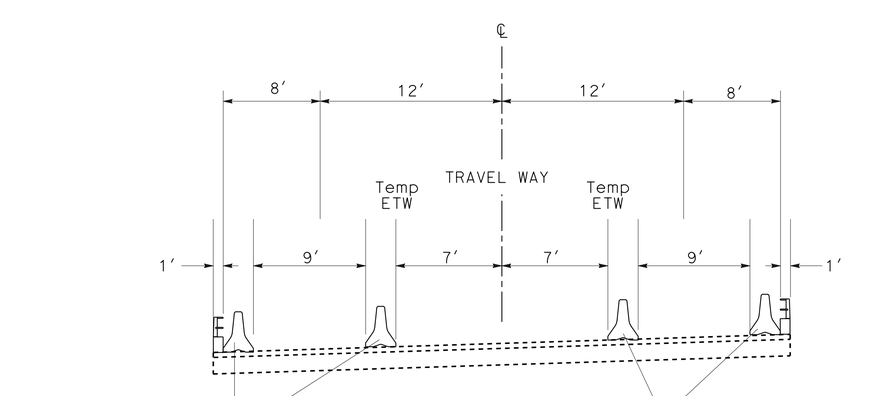

SECTION A-A
NO SCALE

APPROVED FOR TRAFFIC HANDLING WORK ONLY

TRAFFIC HANDLING PLAN
TH-1

SCALE: 1"=100'

STATE OF CALIFORNIA - DEPARTMENT OF TRANSPORTATION
Caltrans
06-TRAFFIC DESIGN

FUNCTIONAL SUPERVISOR: MOHAMMED QATAMI
CALCULATED-DESIGNED BY: RAJINI TEKALKOTE
CHECKED BY: HUE NGUYEN
REVISED BY
DATE REVISED

LAST REVISION 06-17-15 | DATE PLOTTED => 12-NOV-2015 | TIME PLOTTED => 09:32

Dist	COUNTY	ROUTE	POST MILES TOTAL PROJECT	SHEET No.	TOTAL SHEETS
10	Tuo	120	R19.5/R20.0	15	119

REGISTERED CIVIL ENGINEER 4-08-15 DATE

6-22-15
PLANS APPROVAL DATE

REGISTERED PROFESSIONAL ENGINEER HUE NGUYEN No. 74484 Exp 12/31/15 CIVIL STATE OF CALIFORNIA

THE STATE OF CALIFORNIA OR ITS OFFICERS OR AGENTS SHALL NOT BE RESPONSIBLE FOR THE ACCURACY OR COMPLETENESS OF SCANNED COPIES OF THIS PLAN SHEET.

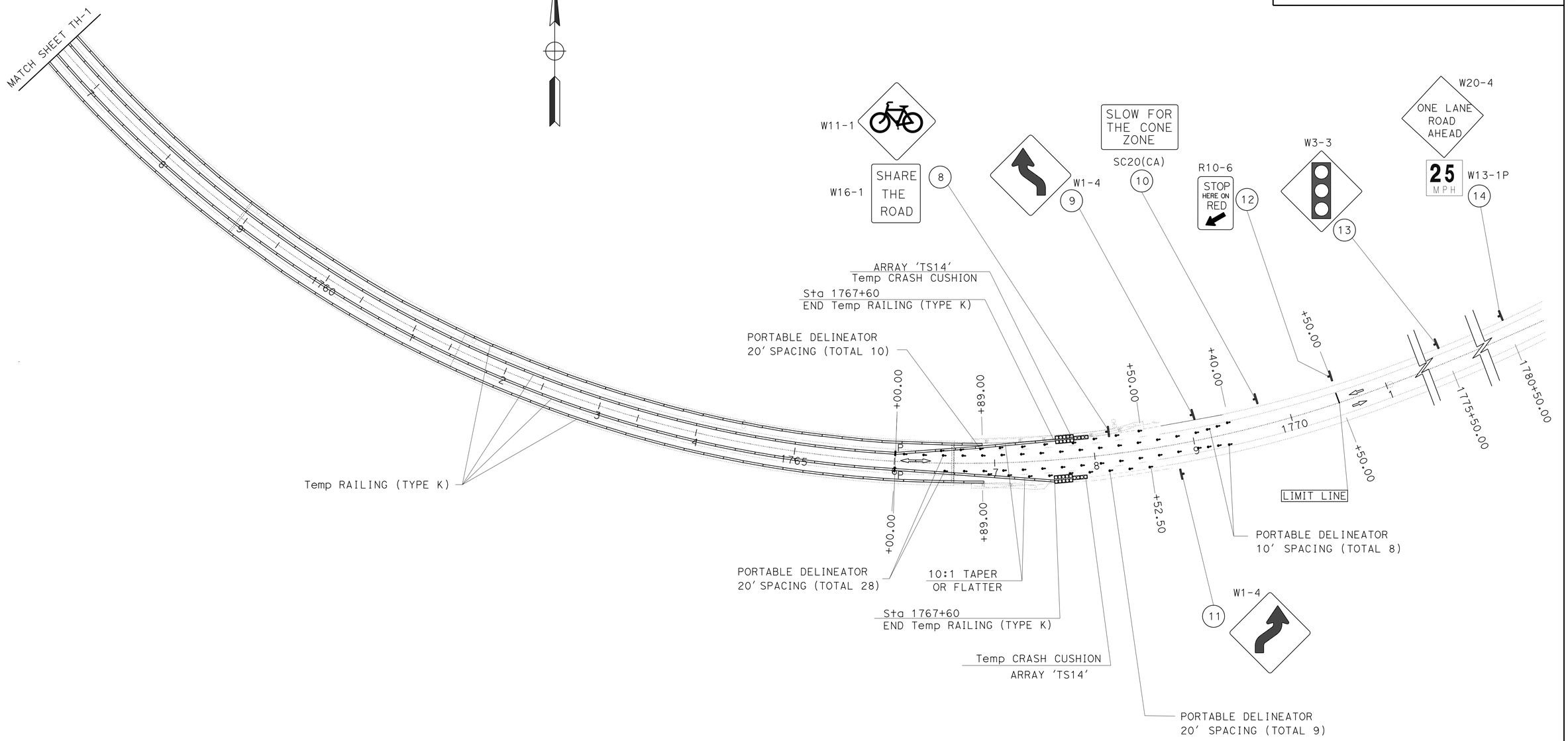

APPROVED FOR TRAFFIC HANDLING WORK ONLY

TRAFFIC HANDLING PLAN
TH-2

SCALE: 1"=100'

STATE OF CALIFORNIA - DEPARTMENT OF TRANSPORTATION
Caltrans
06-TRAFFIC DESIGN

FUNCTIONAL SUPERVISOR: MOHAMMED QATAMI
CALCULATED-DESIGNED BY: RAJINI TEKALKOTE
CHECKED BY: HUE NGUYEN
REVISED BY
DATE REVISED

LAST REVISION 06-17-15
DATE PLOTTED => 12-NOV-2015
TIME PLOTTED => 09:32

Dist	COUNTY	ROUTE	POST MILES TOTAL PROJECT	SHEET No.	TOTAL SHEETS
10	Tuo	120	R19.5/R20.0	16	119

REGISTERED CIVIL ENGINEER 4-08-15 DATE

6-22-15
PLANS APPROVAL DATE

REGISTERED PROFESSIONAL ENGINEER HUE NGUYEN No. 74484 Exp 12/31/15 CIVIL STATE OF CALIFORNIA

THE STATE OF CALIFORNIA OR ITS OFFICERS OR AGENTS SHALL NOT BE RESPONSIBLE FOR THE ACCURACY OR COMPLETENESS OF SCANNED COPIES OF THIS PLAN SHEET.

NOTES:

1. SEE CONSTRUCTION AREA SIGNS AND MOTORIST INFORMATION SHEETS FOR ADDITIONAL CONSTRUCTION AREA SIGNS.
2. (N) - NOT A SEPARATE PAY ITEM, FOR INFORMATION ONLY.

STATIONARY MOUNTED CONSTRUCTION AREA SIGNS

SHEET No.	SIGN No.	SIGN CODE FEDERAL	SIGN CODE CALIFORNIA	SIGN MESSAGE	PANEL SIZE	No. POST AND SIZE	No. OF SIGNS EA	REMARKS
TH-1	1	W20-4		ONE LANE ROAD AHEAD	36" x 36"	1 - 4" x 4"	1	
		W13-1P		ADVISORY SPEED (25 MPH)	18" x 18"			
	2	W3-3		SIGNAL AHEAD	36" x 36"		1	ON TEMP FLASHING BEACON
	3	R10-6		STOP HERE ON RED	24" x 36"	1 - 4" x 4"	1	
	4		SC20(CA)	SLOW FOR THE CONE ZONE	36" x 36"	1 - 4" x 4"	1	
	5	W1-4		REVERSE CURVE RIGHT (SYMBOL)	30" x 30"	1 - 4" x 4"	1	
	6	W1-4		REVERSE CURVE LEFT (SYMBOL)	30" x 30"	1 - 4" x 4"	1	
	7	W11-1		BICYCLE	30" x 30"	1 - 4" x 4"	1	
		W16-1		SHARE THE ROAD	18" x 24"			
TH-2	8	W11-1		BICYCLE	30" x 30"	1 - 4" x 4"	1	
		W16-1		SHARE THE ROAD	18" x 24"			
	9	W1-4		REVERSE CURVE LEFT (SYMBOL)	30" x 30"		1	ON Exist W50 POST
	10		SC20(CA)	SLOW FOR THE CONE ZONE	36" x 36"	1 - 4" x 4"	1	
	11	W1-4		REVERSE CURVE RIGHT (SYMBOL)	30" x 30"	1 - 4" x 4"	1	
	12	R10-6		STOP HERE ON RED	24" x 36"		1	ON Exist R6-1 POST
	13	W3-3		SIGNAL AHEAD	36" x 36"		1	ON TEMP FLASHING BEACON
	14	W20-4		ONE LANE ROAD AHEAD	36" x 36"	1 - 4" x 4"	1	
		W13-1P		ADVISORY SPEED (25 MPH)	18" x 18"			

TRAFFIC HANDLING DELINEATION QUANTITIES

SHEET No.	LOCATION/STATION	TEMPORARY RAILING (TYPE K)	TEMPORARY CRASH CUSHION MODULE ARRAY 'TS14'	PORTABLE DELINEATOR DOUBLE BASE	TEMPORARY PAVEMENT MARKING (PAINT) LIMIT LINE	OBJECT MARKER TYPE P (N)	REMOVE PAINTED PAVEMENT MARKING
		LF	EA	EA	SQFT	EA	SQFT
TH-1	Sta 1751+10 TO Sta 1767+60	18,320	28	46	12	2	12
TH-2			28	55	12	2	12
TOTAL		18,320	56	101	24		24

TRAFFIC HANDLING QUANTITIES
THQ-1

REVISED BY | DATE REVISED
RAJINI TEKALKOTE | HUE NGUYEN
CALCULATED-DESIGNED BY | CHECKED BY
FUNCTIONAL SUPERVISOR: MOHAMMED QATAMI
STATE OF CALIFORNIA - DEPARTMENT OF TRANSPORTATION
Caltrans 06-TRAFFIC DESIGN

LAST REVISION 06-17-15 | DATE PLOTTED => 12-NOV-2015 TIME PLOTTED => 09:32

Dist	COUNTY	ROUTE	POST MILES TOTAL PROJECT	SHEET No.	TOTAL SHEETS
10	Tuo	120	R19.5/R20.0	17	119

REGISTERED CIVIL ENGINEER 4-08-15 DATE

6-22-15
PLANS APPROVAL DATE

REGISTERED PROFESSIONAL ENGINEER
HUE NGUYEN
No. 74484
Exp 12/31/15
CIVIL
STATE OF CALIFORNIA

THE STATE OF CALIFORNIA OR ITS OFFICERS OR AGENTS SHALL NOT BE RESPONSIBLE FOR THE ACCURACY OR COMPLETENESS OF SCANNED COPIES OF THIS PLAN SHEET.

LEGEND:

☐ - RESET ROADSIDE SIGN

NOTE:

FOR ACCURATE RIGHT OF WAY DATA, CONTACT RIGHT OF WAY ENGINEERING AT THE DISTRICT OFFICE.

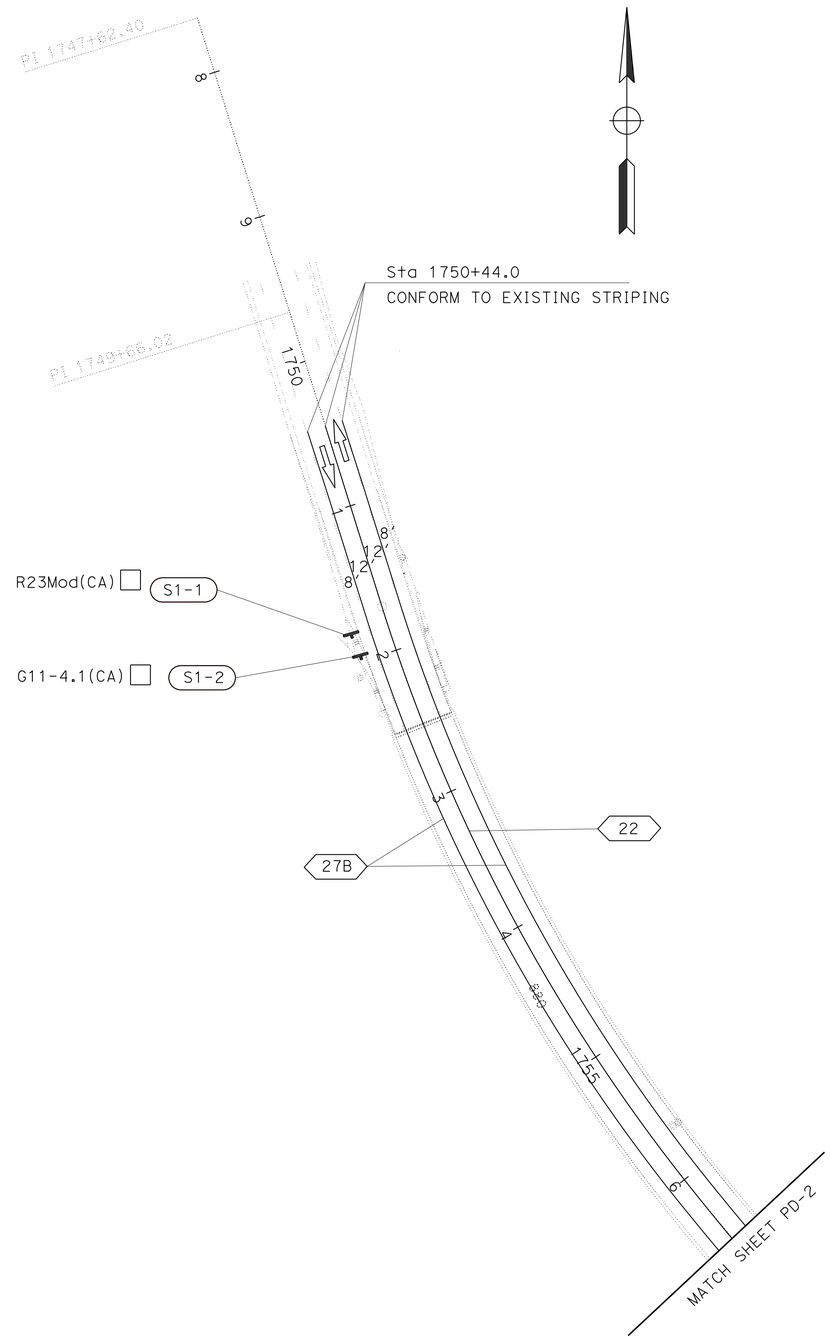

APPROVED FOR PAVEMENT DELINEATION AND SIGN WORK ONLY

PAVEMENT DELINEATION AND SIGN PLAN

SCALE: 1"=100'

PD-1

STATE OF CALIFORNIA - DEPARTMENT OF TRANSPORTATION
Caltrans
06-TRAFFIC DESIGN

FUNCTIONAL SUPERVISOR: MOHAMMED QATAMI
CALCULATED-DESIGNED BY: RAJINI TEKALKOTE
CHECKED BY: HUE NGUYEN
REVISED BY
DATE REVISED

LAST REVISION 05-20-15
DATE PLOTTED => 12-NOV-2015
TIME PLOTTED => 09:32

Dist	COUNTY	ROUTE	POST MILES TOTAL PROJECT	SHEET No.	TOTAL SHEETS
10	Tuo	120	R19.5/R20.0	18	119

REGISTERED CIVIL ENGINEER 4-08-15 DATE

6-22-15
PLANS APPROVAL DATE

REGISTERED PROFESSIONAL ENGINEER HUE NGUYEN No. 74484 Exp. 12/31/15 CIVIL STATE OF CALIFORNIA

THE STATE OF CALIFORNIA OR ITS OFFICERS OR AGENTS SHALL NOT BE RESPONSIBLE FOR THE ACCURACY OR COMPLETENESS OF SCANNED COPIES OF THIS PLAN SHEET.

NOTE:

FOR ACCURATE RIGHT OF WAY DATA, CONTACT RIGHT OF WAY ENGINEERING AT THE DISTRICT OFFICE.

PAVEMENT DELINEATION QUANTITIES

SHEET No.	LOCATION	THERMOPLASTIC TRAFFIC STRIPE (SPRAYABLE)		PAVEMENT MARKER (RETRO-REFLECTIVE)
		DETAIL 22	DETAIL 27B	TYPE D
		4" YELLOW SOILD	4" WHITE SOLID	
		LF	LF	EA
PD-1	STA 1750+44.0 TO STA 1756+50.0	606	1012	40
PD-2	STA 1756+50.0 TO STA 1768+00.0	1150	2500	110
SUBTOTAL		1756	3512	
TOTAL		5268		150

ROADSIDE SIGN QUANTITIES

SHEET No.	SIGN No. (XX-X)	DIRECTION	SIGN CODE		SIGN MESSAGE	RESET ROADSIDE SIGN
			FEDERAL	CALIFORNIA		EA
PD-1	S1-1	EB		R23Mod(CA)	NO DIVING OR FISHING FROM BRIDGE	1
	S1-2			G11-4.1(CA)	INVENTORY MARKER	1
PD-2	S2-1	WB		R23Mod(CA)	NO DIVING OR FISHING FROM BRIDGE	1
	S2-2			G11-4.1(CA)	INVENTORY MARKER	1
TOTAL						4

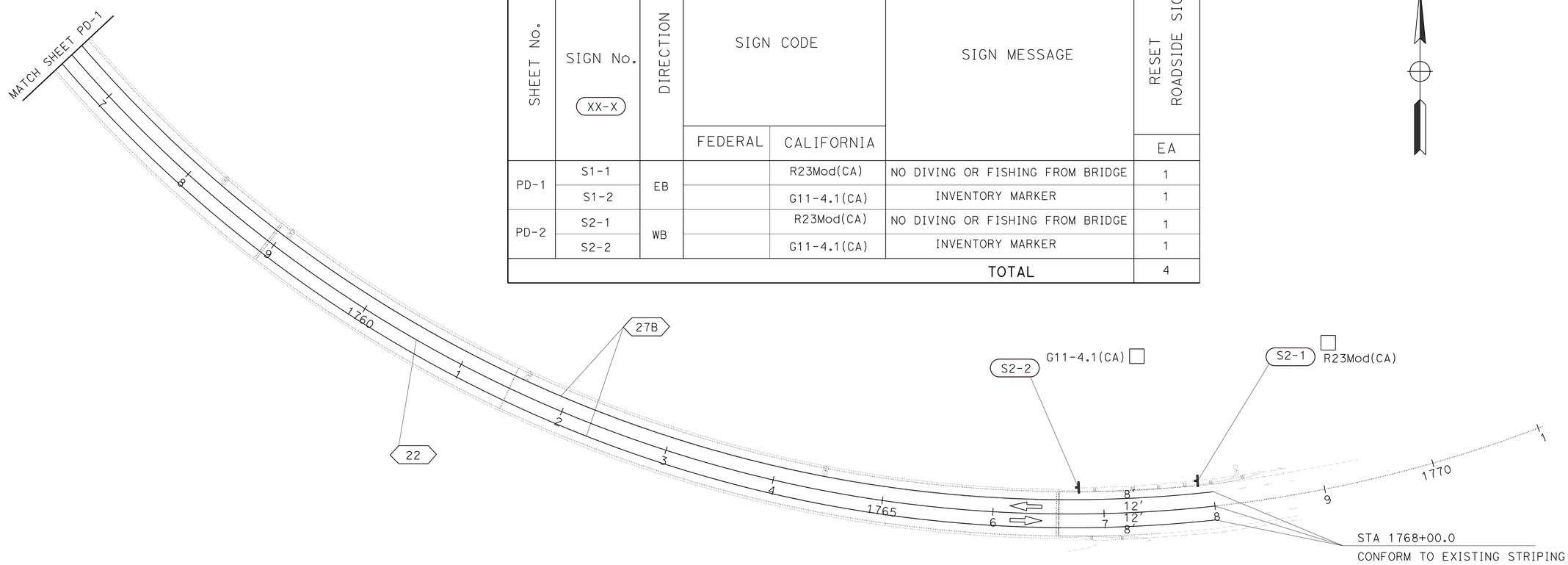

APPROVED FOR PAVEMENT DELINEATION AND SIGN WORK ONLY

PAVEMENT DELINEATION AND SIGN PLAN AND QUANTITIES PD-2

SCALE: 1"=100'

STATE OF CALIFORNIA - DEPARTMENT OF TRANSPORTATION
Caltrans
06-TRAFFIC DESIGN

FUNCTIONAL SUPERVISOR: MOHAMMED QATAMI
CALCULATED-DESIGNED BY: RAJINI TEKALKOTE
CHECKED BY: HUE NGUYEN
REVISED BY
DATE REVISED

LAST REVISION 05-20-15
DATE PLOTTED => 12-NOV-2015
TIME PLOTTED => 09:32

Dist	COUNTY	ROUTE	POST MILES TOTAL PROJECT	SHEET No.	TOTAL SHEETS
10	Tuo	120	R19.4/R20.0	19	119

REGISTERED CIVIL ENGINEER 5-20-15 DATE

6-22-15
PLANS APPROVAL DATE

REGISTERED PROFESSIONAL ENGINEER ANTON A. KISMETIAN No. 64466 Exp. 6/30/17 CIVIL STATE OF CALIFORNIA

THE STATE OF CALIFORNIA OR ITS OFFICERS OR AGENTS SHALL NOT BE RESPONSIBLE FOR THE ACCURACY OR COMPLETENESS OF SCANNED COPIES OF THIS PLAN SHEET.

ROADWAY QUANTITIES

STATION RANGE	ROADWAY EXCAVATION	SHOULDER BACKING	COLD PLANE AC PAVEMENT	RUBBERIZED HOT MIX ASPHALT (GAP GRADED)	HOT MIX ASPHALT (TYPE A)	TACK COAT
	CY	TON	SQYD	TON	TON	TON
1751+44.44 - 1752+32.55	0.1	31	407	54	21	0.3
1766+78.36 - 1768+52.67	0.2	67	544	68	29	0.3
TOTAL	0.3	98	951	122	50	0.6

MGS QUANTITIES

LOCATION	MGS (STEEL POST)	TRANSITION RAILING (TYPE WB-31)	LAYOUT TYPE (N)	ALTERNATIVE FLARED TERMINAL SYSTEM	RUBBER MAT	REMOVE METAL RAILING
	LF	EA		EA	SQFT	LF
APPROACH WEST OF STRUCTURE		1	12B	1	478	59
DEPARTURE WEST OF STRUCTURE		1	12BB	1	433	48
APPROACH EAST OF STRUCTURE		1	12B	1	903	148
Sta 1767+02.85 Lt to 1768+04.57 Lt	101					
DEPARTURE EAST OF STRUCTURE		1	12BB	1	449	48
TOTAL	101	4		4	2263	303

(N) - NOT A SEPERATE PAY ITEM, FOR INFORMATION ONLY.

TEMPORARY DRAINAGE INLET PROTECTION

LOCATION	EA
Const STAGING AREA DI's	2
Const STAGING AREA AC DRAIN	1
1751+10.21, Lt	1
1751+42.76, Lt	1
1752+09.33, Rt	1
1755+66.71, Lt	1
1758+28.78, Lt	1
1759+05.79, Lt	1
1761+59.38, Lt	1
1764+44.61, Lt	1
TOTAL	11

TEMPORARY STRAW BALE BARRIER

LOCATION	LF
WEST Const STAGING AREA	625
EXIST PAVED ROADWAY	84
WEST ABUTMENT	283
EAST ABUTMENT	221
EAST Const STAGING AREA	565
TOTAL	1778

TEMPORARY FENCING

LOCATION	TEMPORARY REINFORCED SILT FENCE (TYPE 1)	Temp FENCE (TYPE ESA)
	LF	LF
WEST OF STRUCTURE	287	1,849
EAST OF STRUCTURE	404	1,305
TOTAL	691	3,154

TEMPORARY FIBER ROLL

LOCATION	LF
WEST CONSTRUCTION STAGING AREA	202
EAST CONSTRUCTION STAGING AREA	202
TOTAL	404

MINOR CONCRETE (Misc Const)

LOCATION	CY
"A1n1" Sta 1752+00 TO Sta 1752+15	0.6
TOTAL	0.6

TEMPORARY COVER

LOCATION	SQYD
WEST Const STAGING AREA	315
EAST Const STAGING AREA	315
TOTAL	630

TEMPORARY HYDRAULIC MULCH (BONDED FIBER MATRIX)

LOCATION	SQYD
WEST Const STAGING AREA	315
EAST Const STAGING AREA	315
TOTAL	630

TEMPORARY Const ENTRANCE

LOCATION	TYPE 2
	EA
Const AREA WEST OF STRUCTURE	2
Const AREA EAST OF STRUCTURE	1
TOTAL	3

SALVAGE GRATE

LOCATION	EA
1755+66.71, Lt	1
1758+28.78, Lt	1
1759+05.79, Lt	1
1761+59.38, Lt	1
1764+44.61, Lt	1
TOTAL	5

SUMMARY OF QUANTITIES

Q-1

STATE OF CALIFORNIA - DEPARTMENT OF TRANSPORTATION
Caltrans 06-DESIGN

FUNCTIONAL SUPERVISOR: KAL DAHER
CALCULATED-DESIGNED BY: ASHLYN SWAN
CHECKED BY: ANTON KISMETIAN
REVISED BY
DATE REVISED

LAST REVISION 05-20-15
DATE PLOTTED => 12-NOV-2015
TIME PLOTTED => 09:32

Dist	COUNTY	ROUTE	POST MILES TOTAL PROJECT	SHEET No.	TOTAL SHEETS
10	Tuo	120	R19.4/R20.0	20	119

LICENSED LANDSCAPE ARCHITECT

6-22-15
PLANS APPROVAL DATE

LICENSED LANDSCAPE ARCHITECT WILLIAM L. DUTTERA 4882 STATE OF CALIFORNIA
Signature
9/30/16
Renewal Date
4/8/15
Date

THE STATE OF CALIFORNIA OR ITS OFFICERS OR AGENTS SHALL NOT BE RESPONSIBLE FOR THE ACCURACY OR COMPLETENESS OF SCANNED COPIES OF THIS PLAN SHEET.

FIBER ROLLS

SEQUENCE	ITEM	MATERIAL		REMARKS
		DESCRIPTION	TYPE	
FIBER ROLLS MUST BE INSTALLED BEFORE EROSION CONTROL	FIBER ROLLS	FIBER ROLLS	8" TO 10" Dia	TYPE 1 FIBER ROLL INSTALLATION

EROSION CONTROL QUANTITIES

SHEET	LOCATION			DESCRIPTION	HYDROSEED	HYDROMULCH	FIBER ROLLS	REMARKS
	STATION	L†	R†		SQFT	SQFT	LF	
NOT SHOWN ON PLANS	1742+56 TO 1743+00	X		EROSION CONTROL	2,500	2,500	240	INSTALL AROUND BASE OF BERMS AT EACH ABANDONED ROADWAY TERMINUS (AT THE EAST & WEST ENDS).
	1751+85 TO 1752+15	X		EROSION CONTROL	2,500	2,500	240	
	1750+00 TO 1753+28	X	X	EROSION CONTROL	7,000	7,000		NEAR BRIDGE ABUTMENTS
	1766+00 TO 1768+60	X	X	EROSION CONTROL	9,000	9,000		
	1766+77 TO 1767+55		X	FIBER ROLLS			196	INSTALL AT HP AND ALONG TOE OF SLOPE. EXTEND FR 10' BEYOND STATIONING LIMITS, BOTH ENDS.
	1766+77 TO 1767+55	X		FIBER ROLLS			98	INSTALL ALONG TOE OF SLOPE. EXTEND FR 10' BEYOND STATIONING LIMITS, BOTH ENDS.
TOTAL					21,000	21,000	774	

SEED MIX

BOTANICAL NAME (COMMON NAME)	PERCENT GERMINATION (MINIMUM)	POUND PURE LIVE SEED PER ACRE (SLOPE MEASUREMENT)
BROMUS CARINATUS* (CALIFORNIA BROME)	85	7
ELYMUS GLAUCUS* (BLUE WILDRYE)	85	5
ESCHSCHOLZIA CALIFORNICA* (CALIFORNIA POPPY)	80	8
HORDEUM VULGARE* (COMMON BARLEY)	85	15
NASSELLA PULCHRA* (PURPLE NEEDLE GRASS)	85	10
LOTUS PURSHIANUS* (PURSHING LOTUS)	80	15
LUPINUS BICOLOR* (MINIATURE LUPINE)	80	15
VULPIA MICROSTACHYS* (SMALL FESCUE)	90	5

*SEED PRODUCED IN CALIFORNIA ONLY.

EROSION CONTROL

SEQUENCE	ITEM	MATERIAL		APPLICATION RATE
		DESCRIPTION	TYPE	
STEP 1	HYDROSEED	SEED	MIX	80 LB/ACRE
		FIBER	CELLULOSE	200 LB/ACRE
STEP 2	HYDROMULCH	FIBER	CELLULOSE	400 LB/ACRE
		TACKIFIER	PSYLLIUM	200 LB/ACRE
		ALTERNATE FIBER	STRAW	600 LB/ACRE

EROSION CONTROL LEGEND AND QUANTITIES

ECL-1

REVISED BY 4/8/15
DATE REVISED 4/8/15
WILLIAM L. DUTTERA
GUS ESCUTIA
CALCULATED-DESIGNED BY
CHECKED BY
SENIOR LANDSCAPE ARCHITECT
BRAD COLE

STATE OF CALIFORNIA - DEPARTMENT OF TRANSPORTATION
Caltrans® LANDSCAPE ARCHITECTURE

LAST REVISION 05-20-15
DATE PLOTTED => 12-NOV-2015
TIME PLOTTED => 09:32

Dist	COUNTY	ROUTE	POST MILES TOTAL PROJECT	SHEET No.	TOTAL SHEETS
10	Tuo	120	R19.4/R20.0	21	119

REGISTERED ELECTRICAL ENGINEER 5/20/15 DATE

6-22-15
PLANS APPROVAL DATE

REGISTERED PROFESSIONAL ENGINEER ALVARO ARAICA No. 15558 Exp. 12/31/15 ELECTRICAL STATE OF CALIFORNIA

THE STATE OF CALIFORNIA OR ITS OFFICERS OR AGENTS SHALL NOT BE RESPONSIBLE FOR THE ACCURACY OR COMPLETENESS OF SCANNED COPIES OF THIS PLAN SHEET.

Ø2 Ø4

PHASE DIAGRAM
STEADY DEMAND SEQUENCE

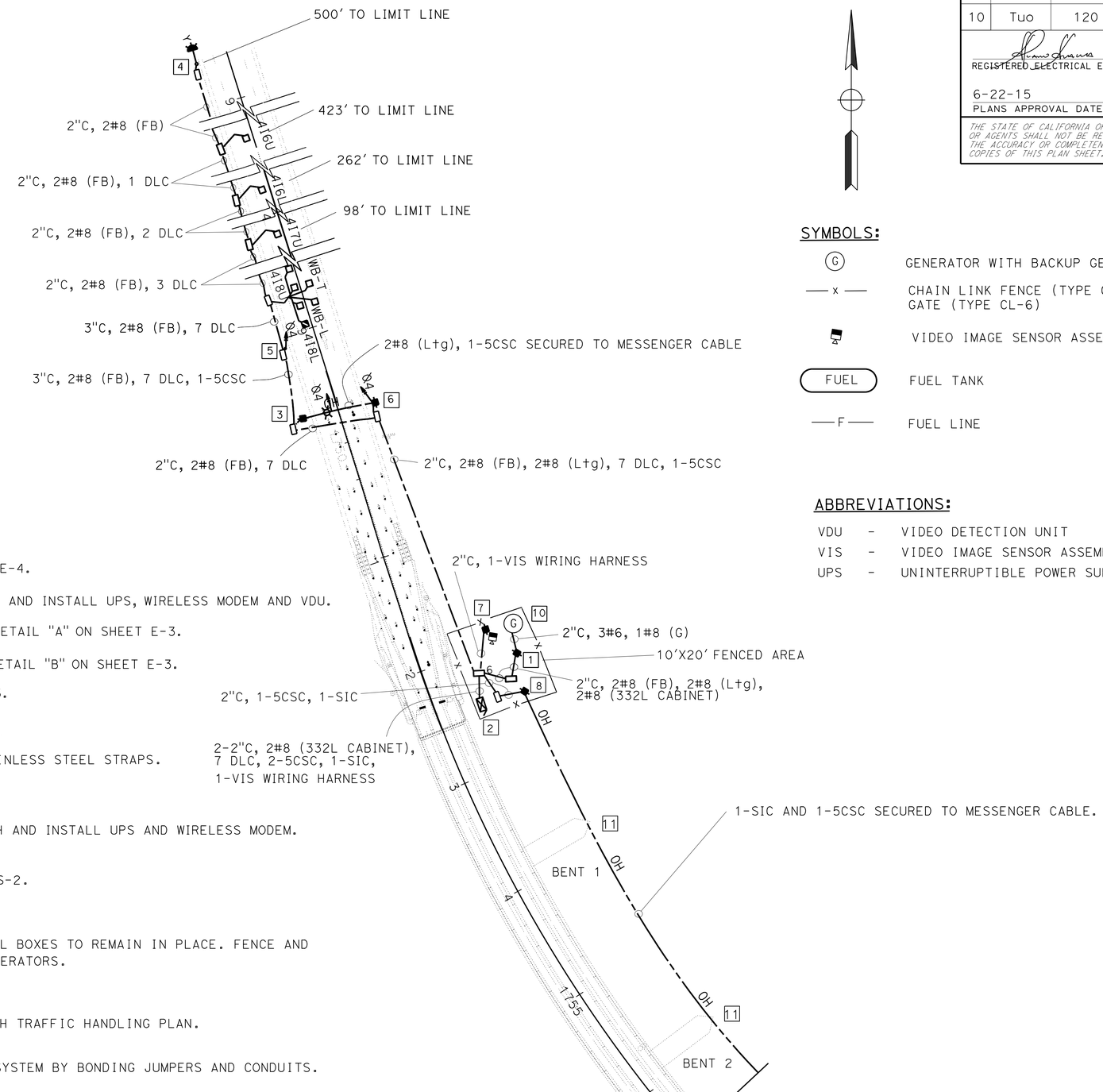

SYMBOLS:

(G)	GENERATOR WITH BACKUP GENERATOR
—x—	CHAIN LINK FENCE (TYPE CL-6) WITH 4' CHAIN LINK GATE (TYPE CL-6)
	VIDEO IMAGE SENSOR ASSEMBLY
FUEL	FUEL TANK
—F—	FUEL LINE

ABBREVIATIONS:

VDU - VIDEO DETECTION UNIT
VIS - VIDEO IMAGE SENSOR ASSEMBLY
UPS - UNINTERRUPTIBLE POWER SUPPLY

LEGEND:

1. 120/240 V, 1Ø, 3-WIRE, TYPE A SERVICE, SEE DETAIL "H" ON SHEET E-4.
2. DEPARTMENT-FURNISHED MODEL 2070E CONTROLLER ASSEMBLY. FURNISH AND INSTALL UPS, WIRELESS MODEM AND VDU.
3. TEMPORARY WOOD POLE WITH SIGNAL AND LIGHTING EQUIPMENT, SEE DETAIL "A" ON SHEET E-3.
4. TEMPORARY WOOD POLE WITH FLASHING BEACON INSTALLATION. SEE DETAIL "B" ON SHEET E-3.
5. TEMPORARY WOOD POLE WITH SIGNAL, SEE DETAIL "D" ON SHEET E-3.
6. TEMPORARY WOOD POLE WITH SIGNAL, SEE DETAIL "C" ON SHEET E-3.
7. INSTALL VIDEO IMAGE SENSOR ASSEMBLY ON WOOD POLE USING STAINLESS STEEL STRAPS. SEE VIS INSTALLATION DETAIL "E" ON SHEET E-4.
8. TEMPORARY WOOD POLE. SEE DETAIL "F" ON SHEET E-4.
9. DEPARTMENT-FURNISHED MODEL 2070E CONTROLLER ASSEMBLY. FURNISH AND INSTALL UPS AND WIRELESS MODEM.
10. GENERATOR SYSTEM. SEE DETAIL "G" ON SHEET E-4.
11. FOR MESSENGER CABLE ABUTMENT BRACKET DETAILS, SEE SHEET SES-2.

NOTES:

1. ALL LOOP DETECTORS AND CORRESPONDING DLC, CONDUITS, AND PULL BOXES TO REMAIN IN PLACE. FENCE AND EQUIPMENT INSIDE FENCE AREAS TO REMAIN IN PLACE, EXCEPT GENERATORS.
2. TERMINATE SIC IN SIGNAL CABINET AS DIRECTED BY ENGINEER.
3. VIDEO IMAGE SENSOR ZONES MUST BE ADJUSTED IN ACCORDANCE WITH TRAFFIC HANDLING PLAN.
4. ESTABLISH CONTINUOUS SYSTEM GROUND TO ALL METAL PARTS IN SYSTEM BY BONDING JUMPERS AND CONDUITS.
5. REFER TO SES SHEETS FOR TEMPORARY WOOD POLE DETAILS AND ANCHORAGE DETAILS FOR MESSENGER CABLE.
6. FOR LIMIT LINE LOCATION SEE PD SHEETS.
7. FOR ACCURATE RIGHT OF WAY DATA, CONTACT RIGHT OF WAY ENGINEERING AT THE DISTRICT OFFICE.

APPROVED FOR ELECTRICAL WORK ONLY

TEMPORARY SIGNAL SYSTEM
E-1

SCALE: 1"=50'

STATE OF CALIFORNIA - DEPARTMENT OF TRANSPORTATION
Caltrans® ELECTRICAL DESIGN

FUNCTIONAL SUPERVISOR: ALI BAKHDOUD
CALCULATED-DESIGNED BY: ALVARO ARAICA
CHECKED BY: JASPAL SINGH
REVISED BY
DATE REVISED

LAST REVISION 05-20-15
DATE PLOTTED => 12-NOV-2015
TIME PLOTTED => 09:32

Dist	COUNTY	ROUTE	POST MILES TOTAL PROJECT	SHEET No.	TOTAL SHEETS
10	Tuo	120	R19.4/R20.0	22	119

REGISTERED ELECTRICAL ENGINEER 5/20/15 DATE

6-22-15
PLANS APPROVAL DATE

REGISTERED PROFESSIONAL ENGINEER ALVARO ARAICA No. 15558 Exp. 12/31/15 ELECTRICAL STATE OF CALIFORNIA

THE STATE OF CALIFORNIA OR ITS OFFICERS OR AGENTS SHALL NOT BE RESPONSIBLE FOR THE ACCURACY OR COMPLETENESS OF SCANNED COPIES OF THIS PLAN SHEET.

NOTE:

1. FOR ADDITIONAL NOTES, SYMBOLS, ABBREVIATIONS AND LEGEND SEE SHEET E-1.
2. FOR ACCURATE RIGHT OF WAY DATA, CONTACT RIGHT OF WAY ENGINEERING AT THE DISTRICT OFFICE.

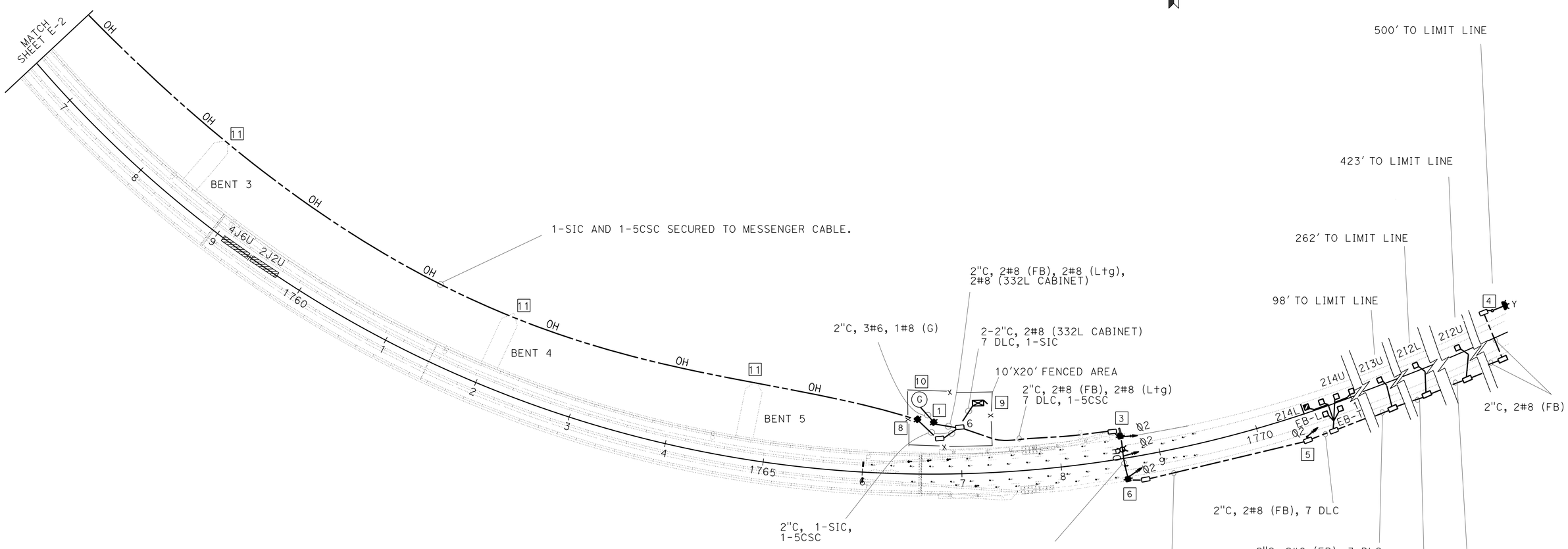

TEMPORARY SIGNAL SYSTEM

SCALE: 1"=50'

E-2

APPROVED FOR ELECTRICAL WORK ONLY

STATE OF CALIFORNIA - DEPARTMENT OF TRANSPORTATION
Caltrans
ELECTRICAL DESIGN

FUNCTIONAL SUPERVISOR: ALI BAKHDOUD
CALCULATED-DESIGNED BY: ALVARO ARAICA
CHECKED BY: JASPAL SINGH
REVISED BY
DATE REVISED

LAST REVISION 05-20-15
DATE PLOTTED => 12-NOV-2015
TIME PLOTTED => 09:32

Dist	COUNTY	ROUTE	POST MILES TOTAL PROJECT	SHEET No.	TOTAL SHEETS
10	Tuo	120	R19.4/R20.0	23	119

REGISTERED ELECTRICAL ENGINEER 5/20/15 DATE

6-22-15
PLANS APPROVAL DATE

REGISTERED PROFESSIONAL ENGINEER ALVARO ARAICA No. 15558 Exp. 12/31/15 ELECTRICAL STATE OF CALIFORNIA

THE STATE OF CALIFORNIA OR ITS OFFICERS OR AGENTS SHALL NOT BE RESPONSIBLE FOR THE ACCURACY OR COMPLETENESS OF SCANNED COPIES OF THIS PLAN SHEET.

NOTE:

FOR WOOD POLE DETAILS, SEE SHEETS SES-1, SES-2, AND XS SHEETS.

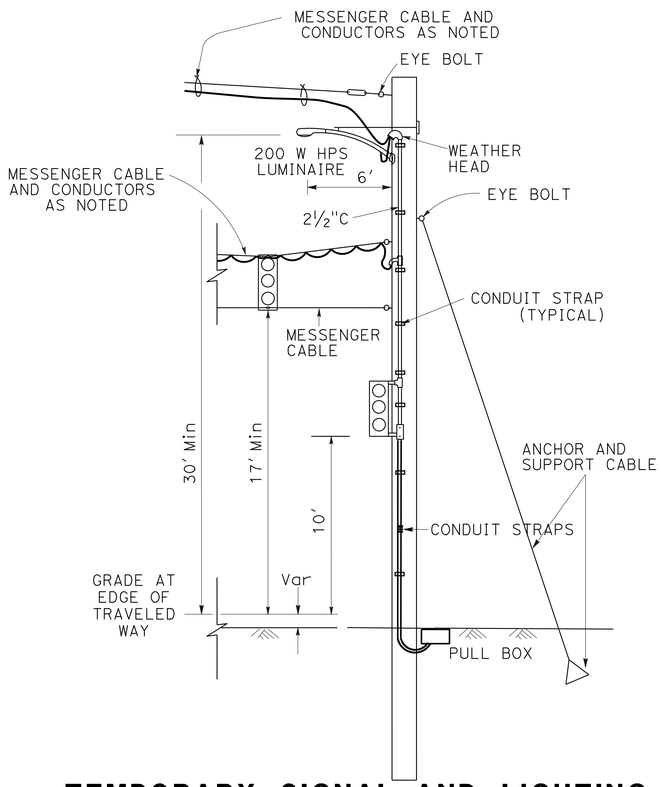

TEMPORARY SIGNAL AND LIGHTING INSTALLATION

DETAIL A

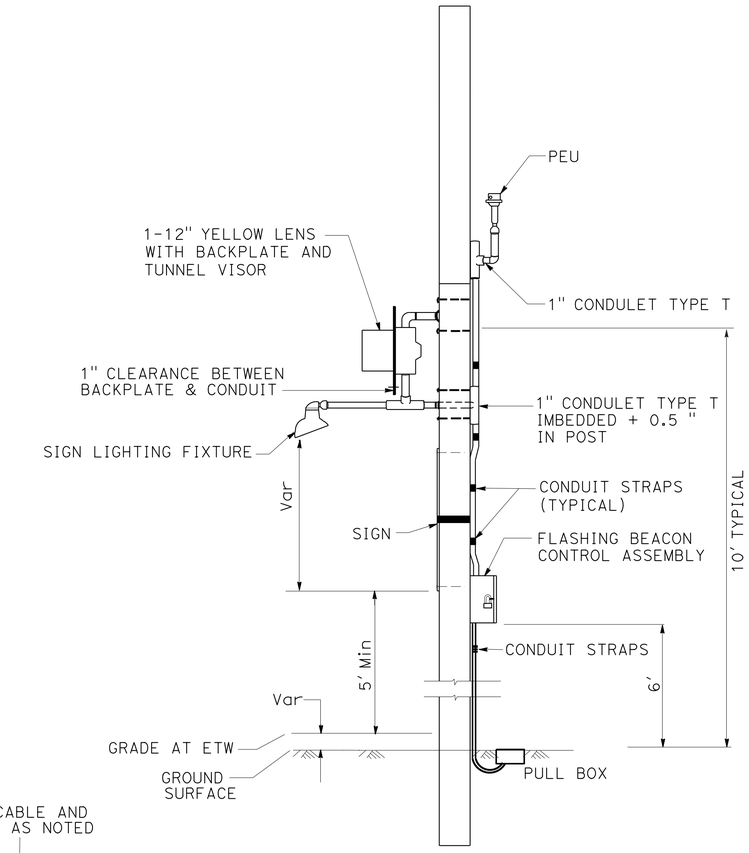

TEMPORARY FLASHING BEACON INSTALLATION

DETAIL B

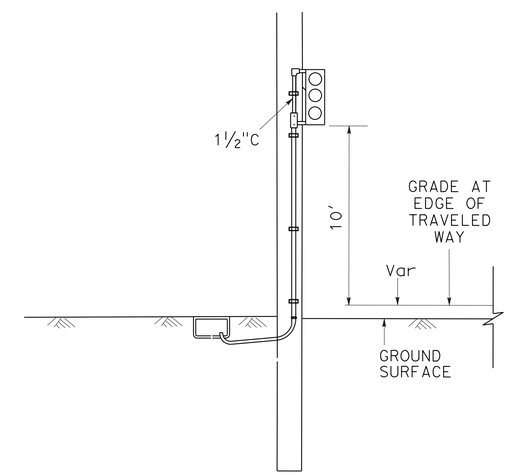

TEMPORARY SIGNAL INSTALLATION

DETAIL D

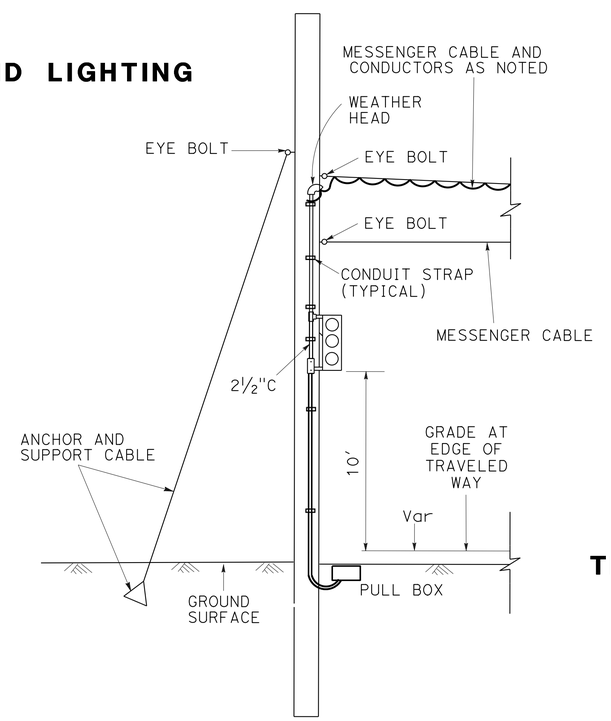

TEMPORARY SIGNAL INSTALLATION

DETAIL C

ELECTRICAL DETAILS
E-3

NO SCALE

STATE OF CALIFORNIA - DEPARTMENT OF TRANSPORTATION
Caltrans® ELECTRICAL DESIGN

FUNCTIONAL SUPERVISOR: ALI BAKHDOUD
CALCULATED-DESIGNED BY: ALVARO ARAICA
CHECKED BY: JASPAL SINGH
REVISED BY
DATE REVISED

LAST REVISION 05-20-15
DATE PLOTTED => 12-NOV-2015
TIME PLOTTED => 09:32

Dist	COUNTY	ROUTE	POST MILES TOTAL PROJECT	SHEET No.	TOTAL SHEETS
10	Tuo	120	R19.4/R20.0	24	119

REGISTERED ELECTRICAL ENGINEER 5/20/15 DATE

6-22-15
PLANS APPROVAL DATE

REGISTERED PROFESSIONAL ENGINEER ALVARO ARAICA No. 15558 Exp. 12/31/15 ELECTRICAL STATE OF CALIFORNIA

THE STATE OF CALIFORNIA OR ITS OFFICERS OR AGENTS SHALL NOT BE RESPONSIBLE FOR THE ACCURACY OR COMPLETENESS OF SCANNED COPIES OF THIS PLAN SHEET.

NOTE:

FOR WOOD POLE DETAILS, SEE SHEETS SES-1, SES-2, AND XS SHEETS.

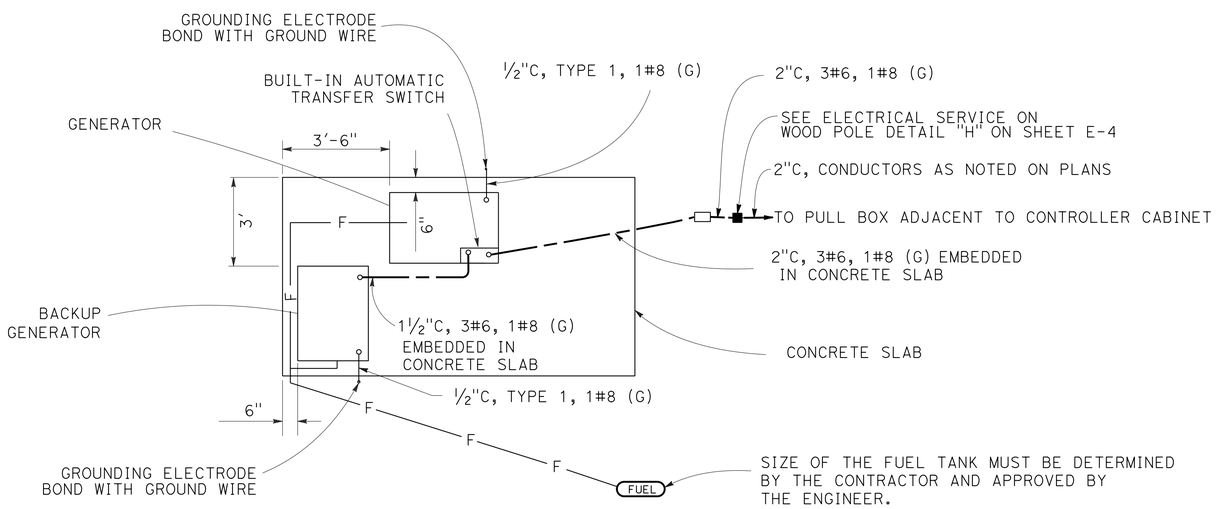

GENERATOR SYSTEM
DETAIL G

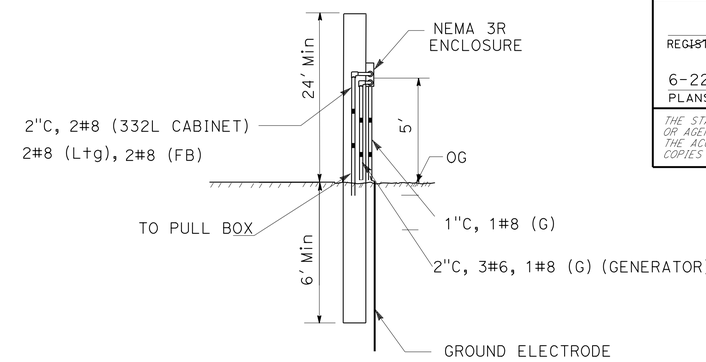

ELECTRICAL SERVICE ON WOOD POLE
DETAIL H

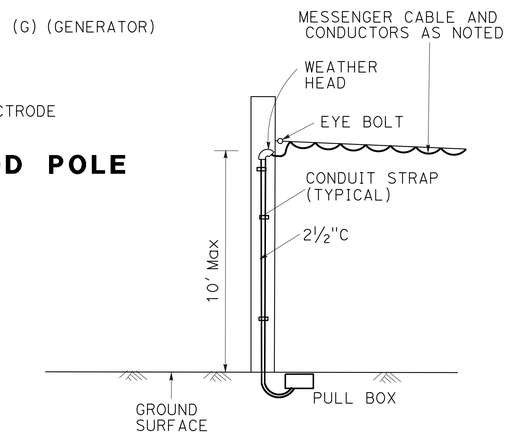

TEMPORARY WOOD POLE
DETAIL F

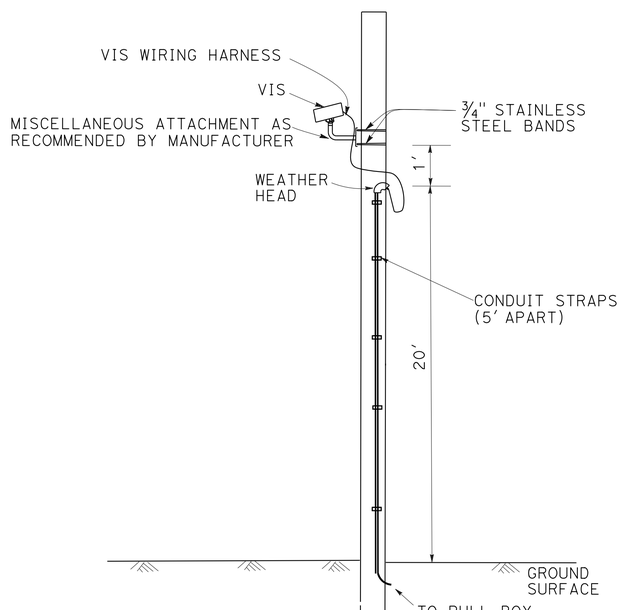

VIS INSTALLATION ON WOOD POLE
DETAIL E

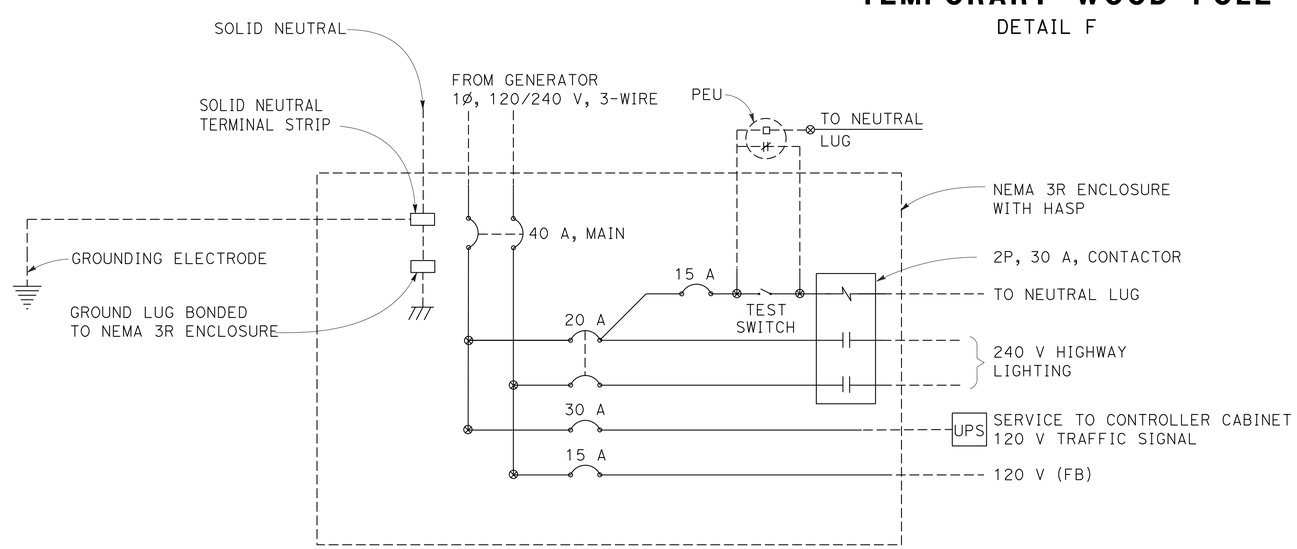

PROVIDE ITEMS SHOWN IN THIS DIAGRAM
SEE ES-2A FOR MORE INFORMATION.

120/240 V

SERVICE WIRING DIAGRAM

ELECTRICAL DETAILS
NO SCALE

E-4

REVISED BY | DATE REVISED
ALVARO ARAICA | JASPAL SINGH
CALCULATED-DESIGNED BY | CHECKED BY
FUNCTIONAL SUPERVISOR: ALI BAKHDOUD
STATE OF CALIFORNIA - DEPARTMENT OF TRANSPORTATION
Caltrans
ELECTRICAL DESIGN

LAST REVISION 05-20-15 | DATE PLOTTED => 12-NOV-2015 | TIME PLOTTED => 09:32

Dist	COUNTY	ROUTE	POST MILES TOTAL PROJECT	SHEET No.	TOTAL SHEETS
10	Tuo	120	R19.4/R20.0	25	119

REGISTERED ELECTRICAL ENGINEER 5/20/15 DATE

6-22-15
PLANS APPROVAL DATE

REGISTERED PROFESSIONAL ENGINEER ALVARO ARAICA No. 15558 Exp. 12/31/15 ELECTRICAL STATE OF CALIFORNIA

THE STATE OF CALIFORNIA OR ITS OFFICERS OR AGENTS SHALL NOT BE RESPONSIBLE FOR THE ACCURACY OR COMPLETENESS OF SCANNED COPIES OF THIS PLAN SHEET.

NOTE:

THE QUANTITIES SHOWN IN TABLES ARE NOT SEPARATE PAY ITEMS, FOR INFORMATION ONLY. FOR COMPLETE ELECTRICAL WORK, SEE ELECTRICAL PLAN SHEETS.

TEMPORARY SIGNAL SYSTEM

SHEET No.	No. 5 PB	No. 6 PB	TEMPORARY WOOD POLE FLASHING BEACON	GENERATOR SYSTEM	MODEL 332L FOUNDATION	TEMPORARY WOOD POLE SIGNAL	TEMPORARY WOOD POLE SERVICE ENCLOSURE	UPS	TYPE A DETECTOR LOOP	TYPE D DETECTOR LOOP	4' CHAIN LINK GATE (TYPE CL-6)	VIS	VDU
	EA												
E-1	10	1	1	1	1	3	1	1	8	1	1	1	1
E-2	9	1	1	1	1	3	1	1	8	1	1		

TEMPORARY SIGNAL SYSTEM

SHEET No.	2" C TYPE 3	2" C TYPE 1	MESSENGER CABLE	5CSC	SIC	No. 6 CONDUCTOR	No. 8 CONDUCTOR	DLC	VIS WIRING HARNESS	CHAIN LINK FENCE (TYPE CL-6)
	LF									
E-1	920	40	537	910	465	50	2520	2963	50	56
E-2	1000	20	1227	1627	1330	50	2280	3393		56

ELECTRICAL QUANTITIES

E-5

REVISED BY | DATE REVISED
ALVARO ARAICA | JASPAL SINGH
CALCULATED-DESIGNED BY | CHECKED BY
FUNCTIONAL SUPERVISOR
ALI BAKHDOUD

STATE OF CALIFORNIA - DEPARTMENT OF TRANSPORTATION
Caltrans ELECTRICAL DESIGN

LAST REVISION 05-20-15 | DATE PLOTTED => 12-NOV-2015 | TIME PLOTTED => 09:32

DIST	COUNTY	ROUTE	POST MILES TOTAL PROJECT	SHEET No.	TOTAL SHEETS
10	Tuo	120	R19.4/R20.0	26	119

REGISTERED CIVIL ENGINEER 5-20-15 DATE

6-22-15
PLANS APPROVAL DATE

REGISTERED PROFESSIONAL ENGINEER ANTON A. KISMETIAN No. 64466 Exp. 6/30/17 CIVIL STATE OF CALIFORNIA

The State of California or its officers or agents shall not be responsible for the accuracy or completeness of electronic copies of this plan sheet.

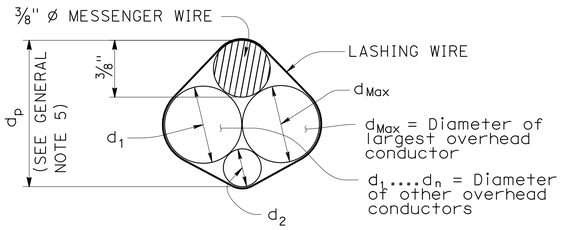

$d_p = 3/8'' + d_{Max} + 0.30 * (d_1 + d_2 + \ldots d_n)$

PROJECTED DEPTH OF OVERHEAD BUNDLE, (d_p)

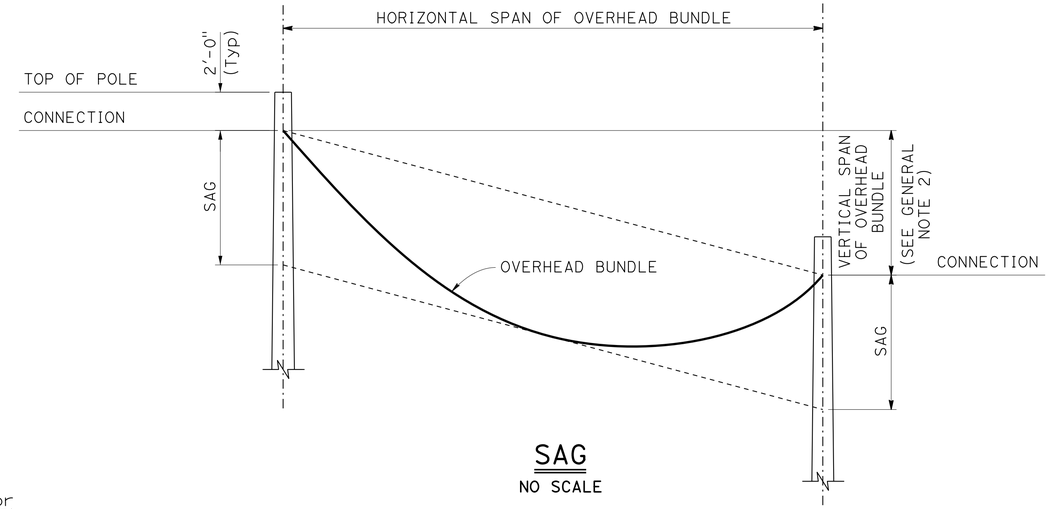

SAG

NO SCALE

Design: AASHTO Standard Specifications for Structural Supports for Highway Signs, Luminaires and Traffic Signals, Fifth Edition (LTS-5).

GROUP LOAD COMBINATIONS:

I Dead Load
II Dead Load + Wind Load
III Dead Load + 0.5 (Wind Load) + Ice Load
IV Fatigue: Not used

LOADING:

Wind Loading: 100 mph (3-second gust)
Wind Recurrence Interval: 10 years
Combined height, exposure, and elevated terrain factor = 1.05
(Exposure C, structure is not located on or over the top half of a ridge, hill, or escarpment)

Ice Loading: 3.0 psf on surfaces, 0.60 in radial thickness of ice at a unit weight of 60 pcf on overhead bundles

BASIC DESIGN VALUES:

Timber Poles: Fb = 1850 psi
Fv = 110 psi
Fcp = 230 psi
Fc = 950 psi
E = 1500 x 10^3 psi

DESIGN WIRE BREAKING STRENGTHS:

ASTM A475, Utilities Grade, 7 strand modified by termination efficiency factor of 0.8

FOUNDATION DESIGN NOTES:

1. Pole embedment depth design is based on Broms' approximate procedure as described in Article 13.6 of AASHTO LTS-5.
2. Embedment depth is calculated based on following soil parameters,
   Cohesive Soil:
   Shear strength of soil c = 1500 psf.
   Cohesionless Soil:
   Ø = 30 deg, γ = 120 pcf.
   Soil assumed to be unsaturated.
3. An overload factor of 2.0 and an undercapacity factor of 0.7 were used for safety factor of 2.86.
4. Allowable vertical bearing pressure at the end bearing of poles is 3000 psf at 6 feet or more embedment.
5. Guy wire anchor minimum allowable tension capacity, "Qa" = 8,900 lbs.

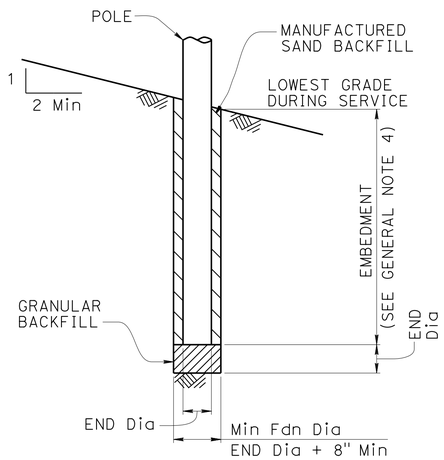

POLE FOUNDATION

GENERAL NOTES:

1. The messenger wire and any combination of overhead conductors must not exceed either a self weight of 3.0 lb/ft or the maximum d in the pole selection tables.
2. The maximum vertical span is 10% of the horizontal span.
3. For poles with adjacent unbalanced horizontal spans, the shortest horizontal span must be at least 50% of the largest horizontal span.
4. Add 2'-0" for slopes above 1V:4H.
5. For a pole supporting multiple spans, calculate d_p for each span and use the largest value.
6. Do not exceed the attachments shown.

DIAMETERS AND SELF WEIGHT OF OVERHEAD CONDUCTORS

CONDUCTOR OR CABLE TYPE	DIAMETER d (in)	WEIGHT w (plf)
3 CONDUCTOR SIGNAL CABLE (3CSC)	0.400	0.0980
5 CONDUCTOR SIGNAL CABLE (5CSC)	0.500	0.1560
9 CONDUCTOR SIGNAL CABLE (9CSC)	0.650	0.2760
12 CONDUCTOR SIGNAL CABLE (12CSC)	0.800	0.3970
28 CONDUCTOR SIGNAL CABLE (28CSC)	0.900	0.6490
1-#14	0.166	0.0235
1-#12	0.185	0.0330
1-#10	0.210	0.0476
1-#8	0.271	0.0774
1-#6	0.310	0.1130
1-#4	0.359	0.1690
1-#3	0.388	0.2080
1-#2	0.420	0.2560
1-#1	0.498	0.3340
6-CONDUCTOR SIGNAL INTERCONNECT CABLE (SIC)	0.350	0.0860
12-CONDUCTOR SIGNAL INTERCONNECT CABLE (SIC)	0.500	0.1440
DETECTOR LEAD-IN CABLE (DLC)	0.310	0.0440
12 to 48-STRAND FIBER OPTIC CABLE (48FOC)	0.424	0.0600
72-STRAND FIBER OPTIC CABLE (72FOC)	0.484	0.0770
96-STRAND FIBER OPTIC CABLE (96FOC)	0.535	0.1050
144-STRAND FIBER OPTIC CABLE (144FOC)	0.670	0.1890
3/8" Ø MESSENGER WIRE	0.375	0.2730

NO SCALE

STANDARD DRAWING
FILE NO. xs18-010
APPROVAL DATE July 2014

STATE OF CALIFORNIA
DEPARTMENT OF TRANSPORTATION

DIVISION OF ENGINEERING SERVICES

BRIDGE NO. 32-0018
POST MILE R19.61

TEMPORARY WOOD POLES
GENERAL NOTES

DS OSD 2147A (ENGLISH STANDARD DRAWING "XS" BORDER REV. (02-02-11)

ORIGINAL SCALE IN INCHES FOR REDUCED PLANS 0 1 2 3

UNIT: 1443
PROJECT NUMBER & PHASE: 10120000531
CONTRACT NO.: 10-0L9704

DISREGARD PRINTS BEARING EARLIER REVISION DATES

REVISION DATES 6-19-14

SHEET 1 OF 8

FILE => xs18-010.dgn

USERNAME => s113541 DATE PLOTTED => 12-NOV-2015 TIME PLOTTED => 10:09

DIST	COUNTY	ROUTE	POST MILES TOTAL PROJECT	SHEET No.	TOTAL SHEETS
10	Tuo	120	R19.4/R20.0	27	119

REGISTERED CIVIL ENGINEER 5-20-15 DATE

6-22-15
PLANS APPROVAL DATE

REGISTERED PROFESSIONAL ENGINEER ANTON A. KISMETIAN No. 64466 Exp. 6/30/17 CIVIL STATE OF CALIFORNIA

The State of California or its officers or agents shall not be responsible for the accuracy or completeness of electronic copies of this plan sheet.

LEGEND

- A — Wood Pole with Attachments
- —TS— Overhead Bundle with Signal Faces (See Note 2)
- —OH— Overhead Bundle
- Guy Anchor

POLE SELECTION TABLE

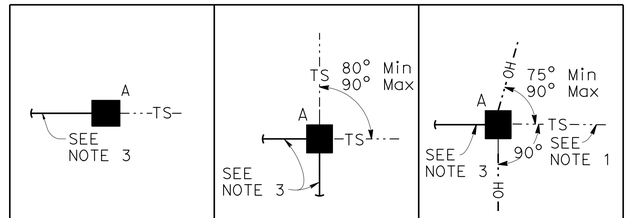

OVERHEAD BUNDLE HORIZONTAL SPAN Max		CASE 1GT			CASE 2GT			CASE 3GT		
	MAXIMUM dp	1"	1.5"	2.0"	1"	1.5"	2.0"	1"	1.5"	2.0"
50′	MINIMUM POLE CLASS	H-2	H-3	H-3	H-2	H-2	H-2	H-3	H-4	H-4
	POLE EMBEDMENT (E)	10′			10′			11′		
100′	MINIMUM POLE CLASS	H-3	H-3	H-4	H-2	H-3	H-3	H-4	H-4	H-5
	POLE EMBEDMENT (E)	11′			10′			11′		
150′	MINIMUM POLE CLASS	H-3	H-4	H-4	H-2	H-3	H-4	H-4	H-5	H-5
	POLE EMBEDMENT (E)	11′			10′			11′		

NOTES:

1. In addition to other restrictions on maximum horizontal span, this horizontal span must not exceed 100′.
2. Maximum of 2 SIGNAL FACES per span within the hatched regions indicated by "LOCATION OF SIGNAL FACES".
3. Guy wire in line with opposing span ± 5°.

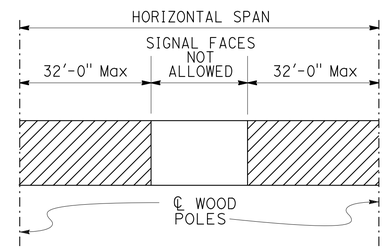

LOCATION OF SIGNAL FACES

1. CCTV camera assembly or vehicle detection system
2. Overhead bundle consisting of ⅜" ø messenger wire and overhead conductors and lashing wire
3. Luminaire with mast arm
4. Pedestrian push button assembly or accessible push button assembly
5. Signal face with 3 indications or single sheet sign panel (10 SQFT Max)
6. Riser with weather head as required
7. Pull box as required
8. Grounding as required
9. ⅜" ø tether wire
10. ½" ø guy wire with white guy marker and strain insulator. For anchorage see "TEMPORARY WOOD POLES-DETAILS No. 2" sheet
11. Pedestrian signal head

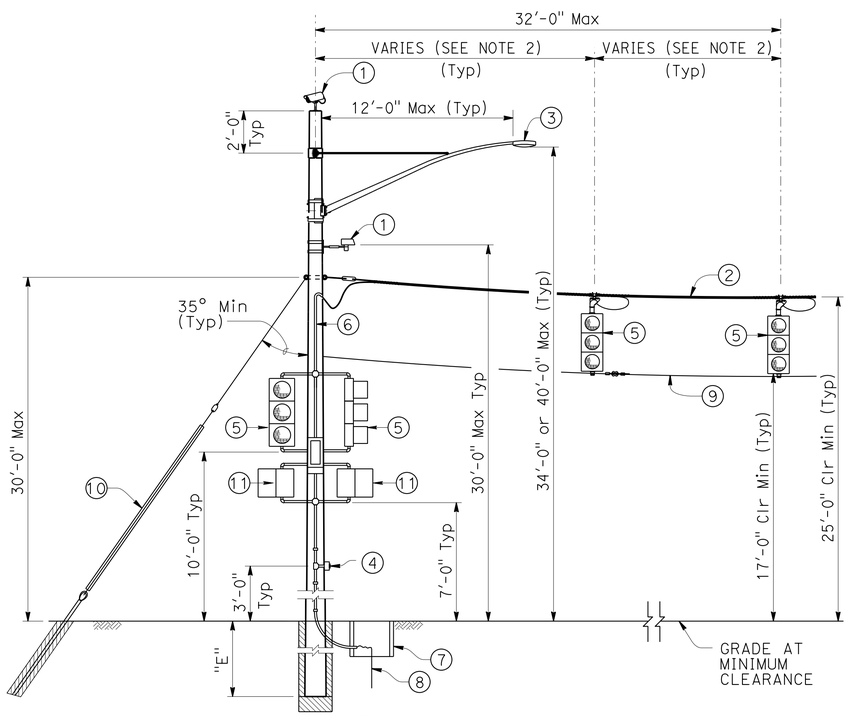

CASE 1GT
POLE AT DEAD END
WITH ATTACHMENTS

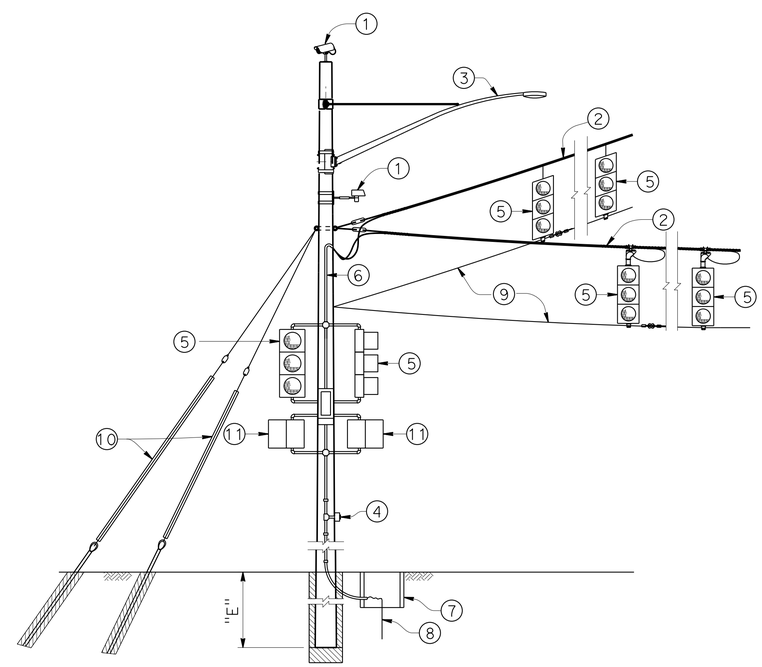

CASE 2GT
POLE AT CORNER
WITH ATTACHMENTS

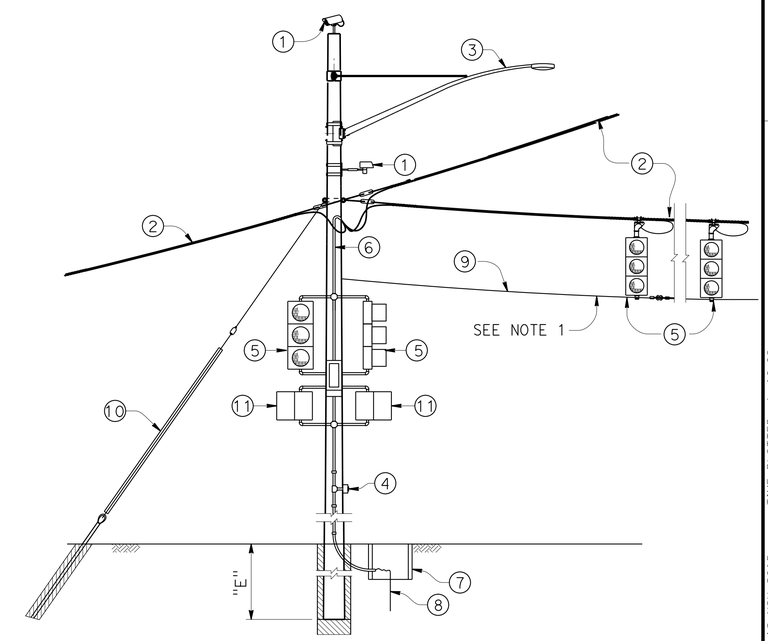

CASE 3GT
POLE AT JUNCTION
WITH ATTACHMENTS

NO SCALE

STANDARD DRAWING
FILE NO. xs18-040
APPROVAL DATE July 2014

STATE OF CALIFORNIA DEPARTMENT OF TRANSPORTATION

DIVISION OF ENGINEERING SERVICES

BRIDGE NO. 32-0018
POST MILE R19.61

TEMPORARY WOOD POLES
GUYED-WITH SIGNAL FACES ON SPANS

DS OSD 2147A (ENGLISH STANDARD DRAWING "XS" BORDER REV. (02-02-11)

ORIGINAL SCALE IN INCHES FOR REDUCED PLANS 0 1 2 3

UNIT: 1443
PROJECT NUMBER & PHASE: 10120000531
CONTRACT NO.: 10-0L9704

DISREGARD PRINTS BEARING EARLIER REVISION DATES
REVISION DATES 6-27-14
SHEET 2 OF 8

FILE => xs18-040.dgn

USERNAME => s113541 DATE PLOTTED => 12-NOV-2015 TIME PLOTTED => 10:09

DIST	COUNTY	ROUTE	POST MILES TOTAL PROJECT	SHEET No.	TOTAL SHEETS
10	Tuo	120	R19.4/R20.0	28	119

REGISTERED CIVIL ENGINEER 5-20-15 DATE

6-22-15
PLANS APPROVAL DATE

REGISTERED PROFESSIONAL ENGINEER ANTON A. KISMETIAN No. 64466 Exp. 6/30/17 CIVIL STATE OF CALIFORNIA

The State of California or its officers or agents shall not be responsible for the accuracy or completeness of electronic copies of this plan sheet.

LEGEND

A — Wood Pole with Attachments

—··TS—··· Overhead Bundle with Signal Faces (See Note 1)

POLE SELECTION TABLE

			A —··TS—···		
			CASE 1NT		
OVERHEAD BUNDLE HORIZONTAL SPAN (Max)	75′	MAXIMUM d_p	1"	1.5"	2.0"
		MINIMUM POLE CLASS	H-5	H-6	H-6
		POLE EMBEDMENT (E)	13′		

1. CCTV camera assembly or vehicle detection system
2. Overhead bundle consisting of a ⅜" ø messenger wire and overhead conductors and lashing wire
3. Luminaire with mast arm
4. Pedestrian push button assembly or accessible push button assembly
5. Signal face with 3 indications or single sheet sign panel (10 SQFT Max)
6. Riser with weather head as required
7. Pull box as required
8. Grounding as required
9. ⅜" ø tether wire
10. Pedestrian signal head

NOTE:

1. Maximum of 2 SIGNAL FACES per span within the hatched regions indicated by "LOCATION OF SIGNAL FACES".

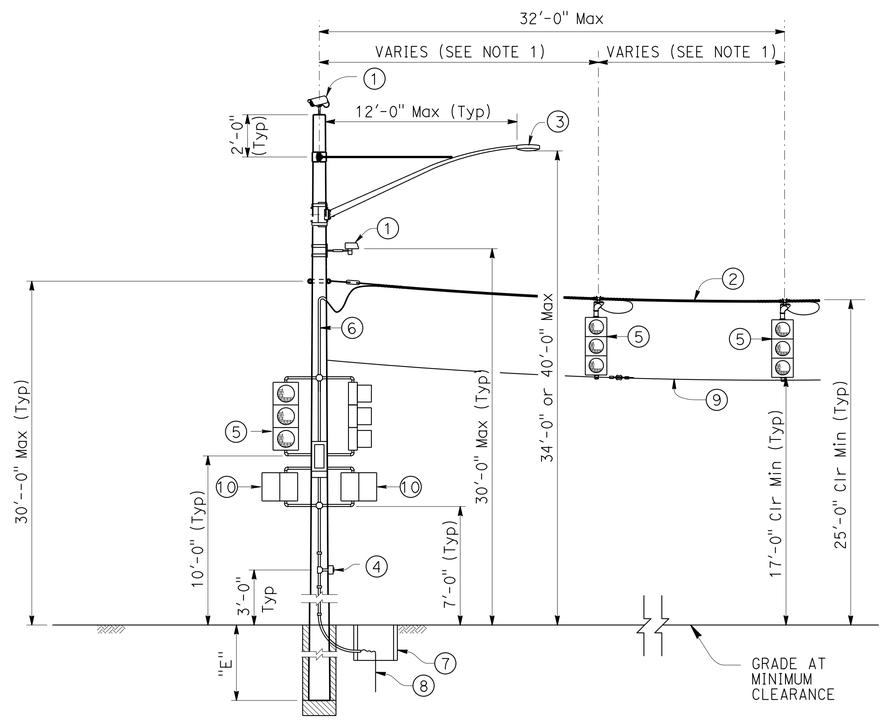

CASE 1NT
POLE AT DEAD END WITH ATTACHMENTS

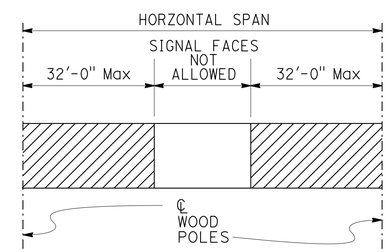

LOCATION OF SIGNAL FACES

NO SCALE

STANDARD DRAWING		STATE OF CALIFORNIA DEPARTMENT OF TRANSPORTATION	DIVISION OF ENGINEERING SERVICES	BRIDGE NO. 32-0018	TEMPORARY WOOD POLES
FILE NO. xs18-050	APPROVAL DATE July 2014			POST MILE R19.61	NON-GUYED-WITH SIGNAL FACES ON SPAN

DS OSD 2147A (ENGLISH STANDARD DRAWING "XS" BORDER REV. (02-02-11)

ORIGINAL SCALE IN INCHES FOR REDUCED PLANS 0 1 2 3

UNIT: 1443
PROJECT NUMBER & PHASE: 10120000531 CONTRACT NO.: 10-0L9704

DISREGARD PRINTS BEARING EARLIER REVISION DATES

REVISION DATES 6-27-14 | SHEET 3 | OF 8

FILE => xs18-050.dgn

USERNAME => s113541 DATE PLOTTED => 12-NOV-2015 TIME PLOTTED => 10:10

DIST	COUNTY	ROUTE	POST MILES TOTAL PROJECT	SHEET No.	TOTAL SHEETS
10	Tuo	120	R19.4/R20.0	29	119

REGISTERED CIVIL ENGINEER 5-20-15 DATE

6-22-15
PLANS APPROVAL DATE

REGISTERED PROFESSIONAL ENGINEER ANTON A. KISMETIAN No. 64466 Exp. 6/30/17 CIVIL STATE OF CALIFORNIA

The State of California or its officers or agents shall not be responsible for the accuracy or completeness of electronic copies of this plan sheet.

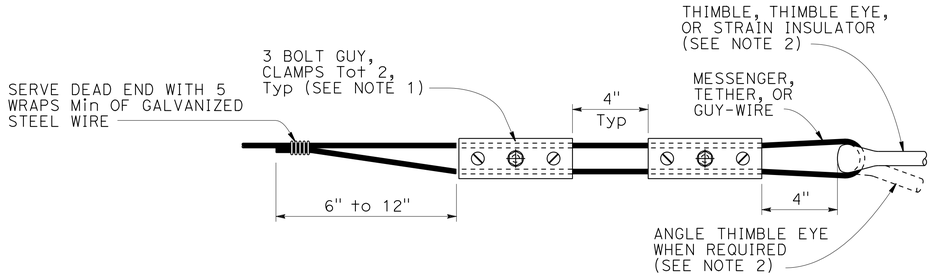

ALTERNATIVE TERMINATION OF MESSENGER WIRES USING GUY CLAMPS

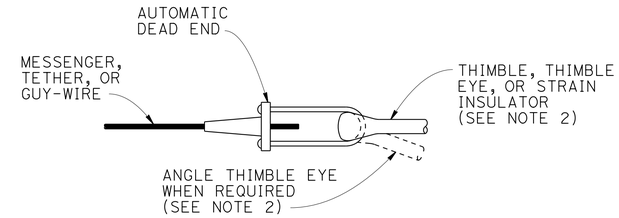

TERMINATION OF WIRES USING AUTOMATIC DEAD END

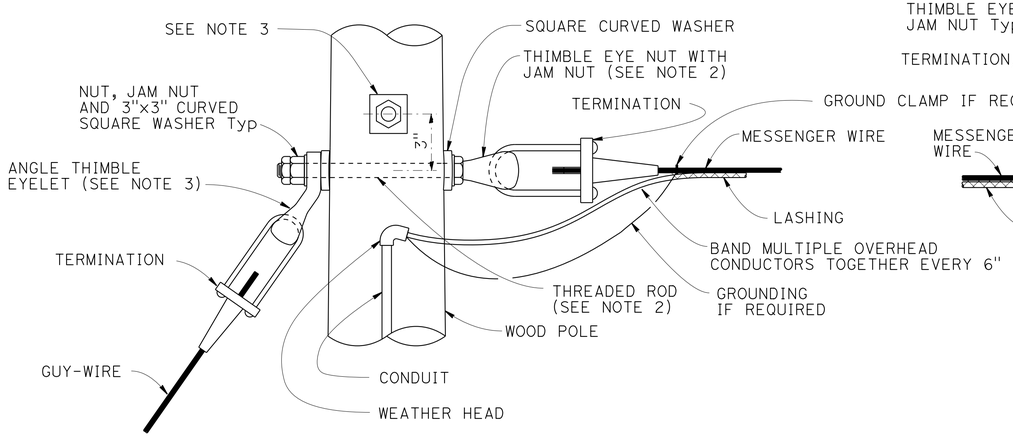

POLE AT DEAD END WITH GUY-WIRE CONNECTION

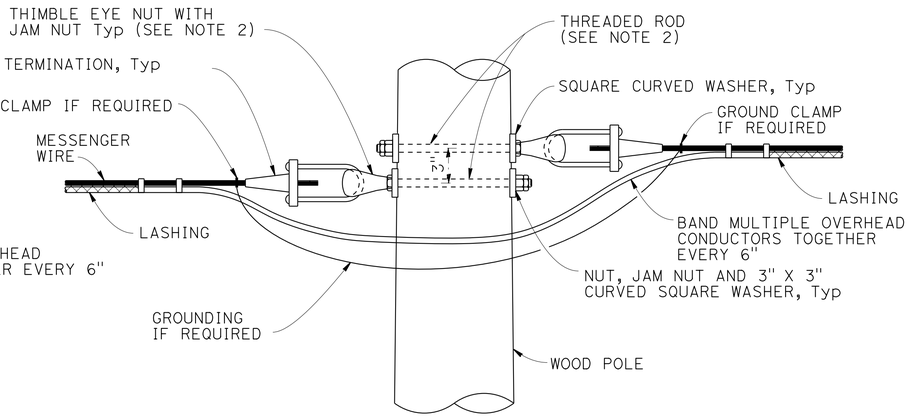

POLE AT TANGENT OR CORNER CONNECTION

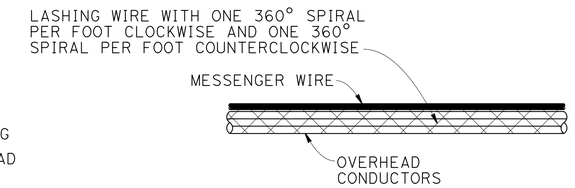

DOUBLE LASHING DETAIL

USE IF d_p IS GREATER THAN 1½"

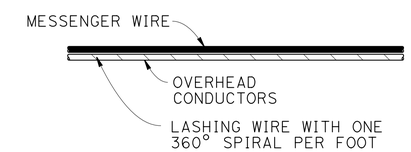

TYPICAL LASHING DETAIL

USE IF d_p IS 1½" OR LESS

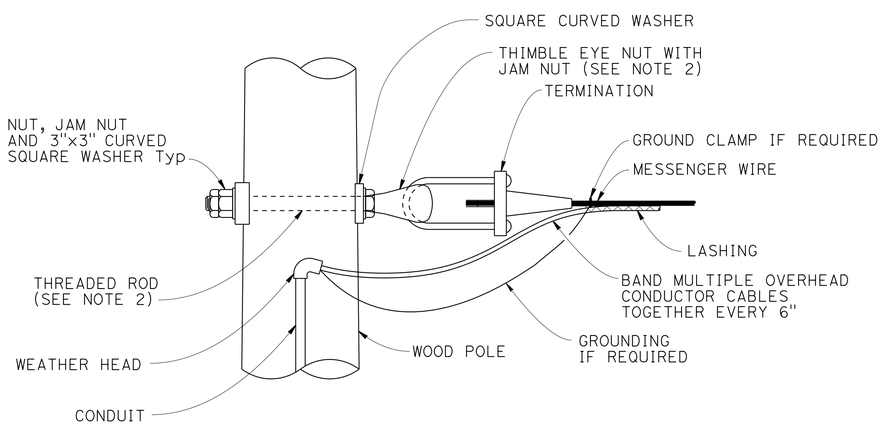

POLE AT DEAD END CONNECTION

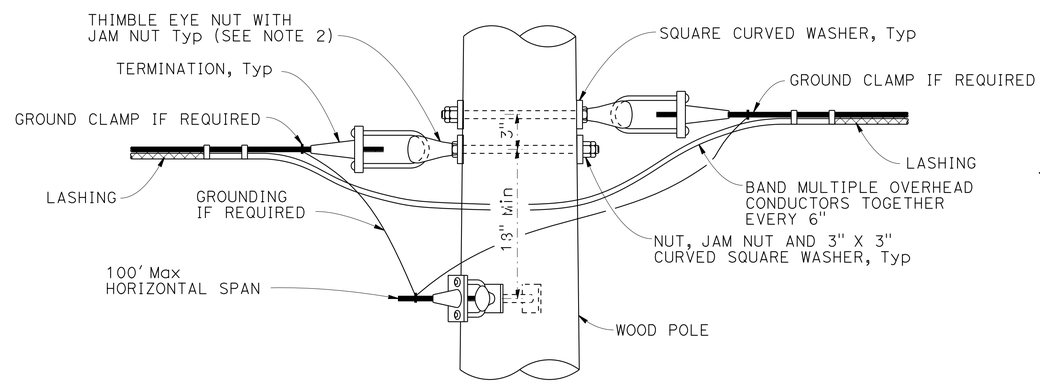

POLE AT JUNCTION CONNECTION

NOTES:

1. For guy wires use 3 clamps.
2. Use ⅝" ø except ¾" ø at guyed wires
3. Install additional angle thimble eyelet at poles with two guy wires.

NO SCALE

STANDARD DRAWING

FILE NO. **xs18-080-1**

APPROVAL DATE July 2014

STATE OF **CALIFORNIA** DEPARTMENT OF TRANSPORTATION

DIVISION OF ENGINEERING SERVICES

BRIDGE NO. 32-0018

POST MILE R19.61

TEMPORARY WOOD POLES DETAILS No. 1

DS OSD 2147A (ENGLISH STANDARD DRAWING "XS" BORDER REV. (02-02-11)

ORIGINAL SCALE IN INCHES FOR REDUCED PLANS 0 1 2 3

UNIT: 1443
PROJECT NUMBER & PHASE: 10120000531
CONTRACT NO.: 10-0L9704

DISREGARD PRINTS BEARING EARLIER REVISION DATES

REVISION DATES 6-27-14

SHEET 4 OF 8

FILE => xs18-080-1.dgn

USERNAME => s113541 DATE PLOTTED => 12-NOV-2015 TIME PLOTTED => 10:10

DIST	COUNTY	ROUTE	POST MILES TOTAL PROJECT	SHEET No.	TOTAL SHEETS
10	Tuo	120	R19.4/R20.0	30	119

REGISTERED CIVIL ENGINEER 5-20-15 DATE

6-22-15
PLANS APPROVAL DATE

REGISTERED PROFESSIONAL ENGINEER ANTON A. KISMETIAN No. 64466 Exp. 6/30/17 CIVIL STATE OF CALIFORNIA

The State of California or its officers or agents shall not be responsible for the accuracy or completeness of electronic copies of this plan sheet.

NOTE:

1. For minimum allowable tension capacity of anchors see "Temporary Wood Poles - General Notes" sheet.

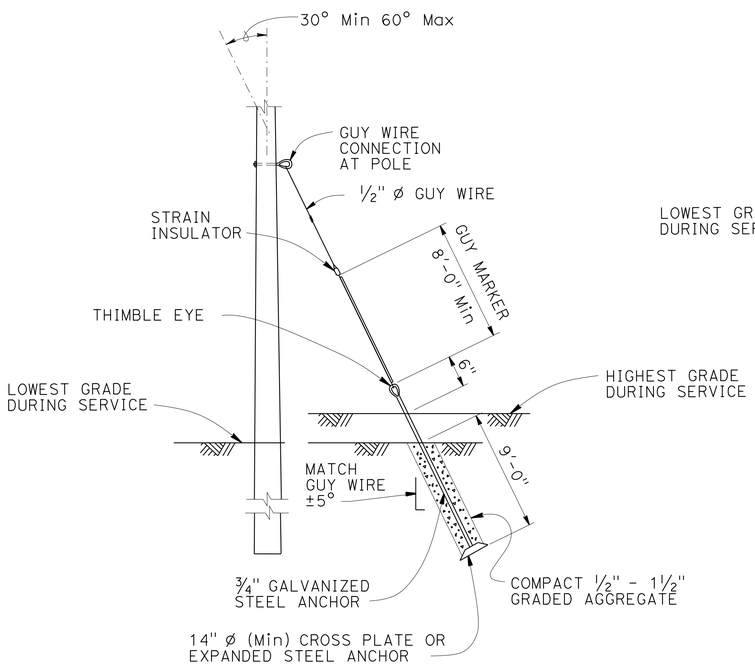

NOTE:

Helical anchor detail may be used in place of expanded steel anchors.

EXPANDED STEEL ANCHOR DETAIL

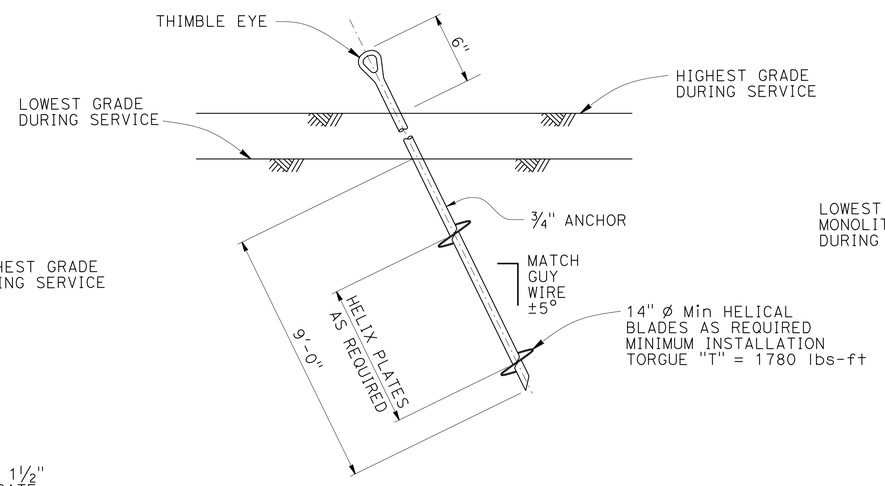

HELICAL ANCHOR DETAIL

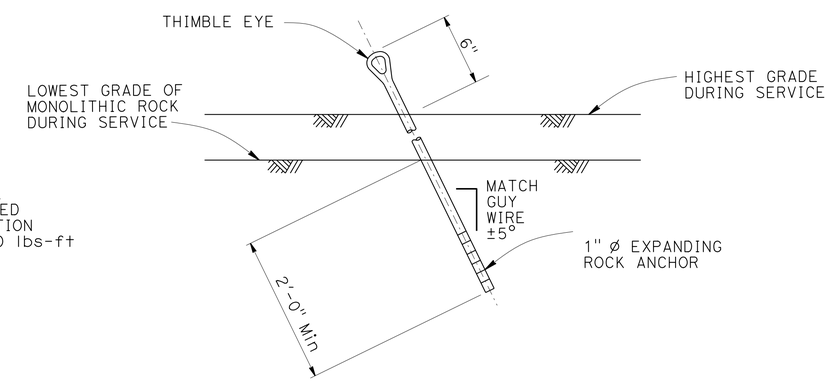

EXPANDING ROCK ANCHOR DETAIL

NO SCALE

STANDARD DRAWING

FILE NO. xs18-080-2

APPROVAL DATE July 2014

STATE OF CALIFORNIA DEPARTMENT OF TRANSPORTATION

DIVISION OF ENGINEERING SERVICES

BRIDGE NO. 32-0018

POST MILE R19.61

TEMPORARY WOOD POLES DETAILS No. 2

DS OSD 2147A (ENGLISH STANDARD DRAWING "XS" BORDER REV. (02-02-11)

ORIGINAL SCALE IN INCHES FOR REDUCED PLANS 0 1 2 3

UNIT: 1443
PROJECT NUMBER & PHASE: 10120000531
CONTRACT NO.: 10-0L9704

DISREGARD PRINTS BEARING EARLIER REVISION DATES

REVISION DATES 6-27-14

SHEET 5 OF 8

FILE => xs18-080-2.dgn

USERNAME => s113541 DATE PLOTTED => 12-NOV-2015 TIME PLOTTED => 10:10

DIST	COUNTY	ROUTE	POST MILES TOTAL PROJECT	SHEET No.	TOTAL SHEETS
10	Tuo	120	R19.4/R20.0	31	119

REGISTERED CIVIL ENGINEER — DATE 5-20-15

6-22-15
PLANS APPROVAL DATE

REGISTERED PROFESSIONAL ENGINEER — ANTON A. KISMETIAN — No. 64466 — Exp. 6/30/17 — CIVIL — STATE OF CALIFORNIA

The State of California or its officers or agents shall not be responsible for the accuracy or completeness of electronic copies of this plan sheet.

NOTES:

1. Luminaire mast arms must be in compliance with Standard Plan ES-6D with noted modifications.
2. Verify pole dimensions at tie-rod attachment height. Fabricate 8" flat bar with "L" Dimension to maintain an open gap between flanges in finished installation.
3. Not all screw heads and bolt heads are shown for clarity.
4. Mast arm not shown for clarity.

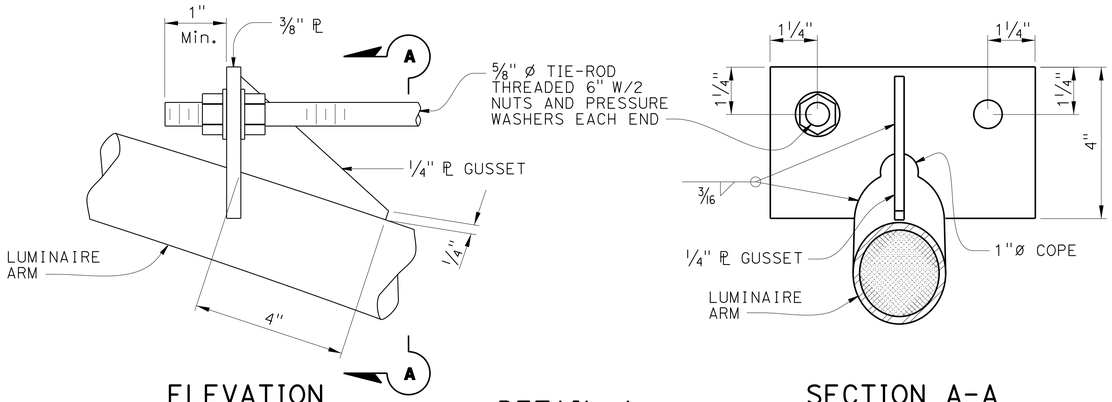

ELEVATION

SECTION A-A

DETAIL A
TIE-ROD AT LUMINAIRE ARM
NO SCALE

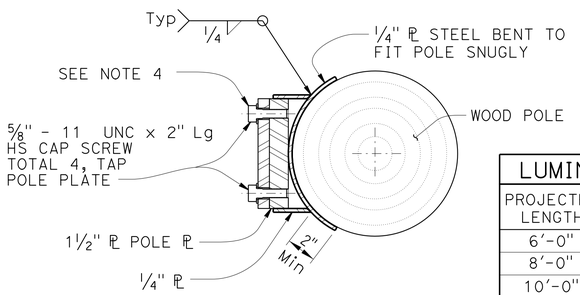

SECTION E-E

LUMINAIRE MAST ARM DATA			
PROJECTED LENGTH	N RISE	Min OD AT POLE	NOMINAL THICKNESS
6'-0"	2'-0"±	3 1/4"	0.1196"
8'-0"	2'-6"±	3 1/2"	
10'-0"	3'-3"±	3 7/8"	
12'-0"	4'-3"±		

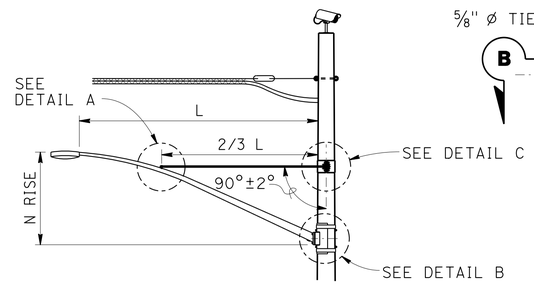

LUMINAIRE MAST ARM

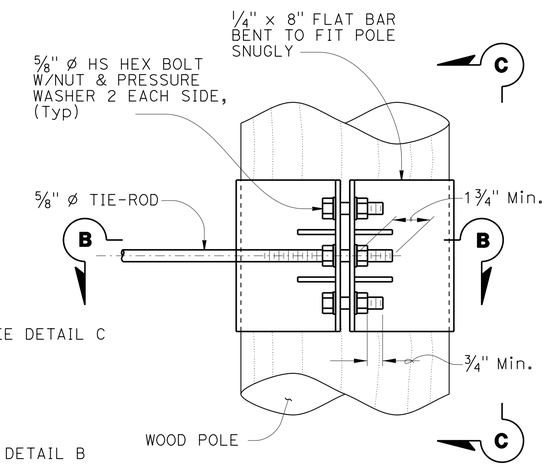

ELEVATION

NOTE:
Not all screw and bolt heads shown for clarity.

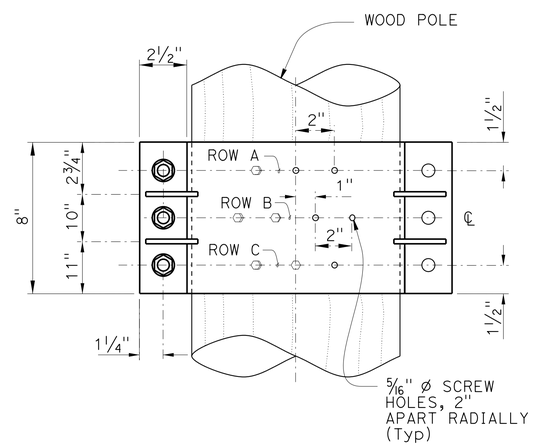

VIEW C-C

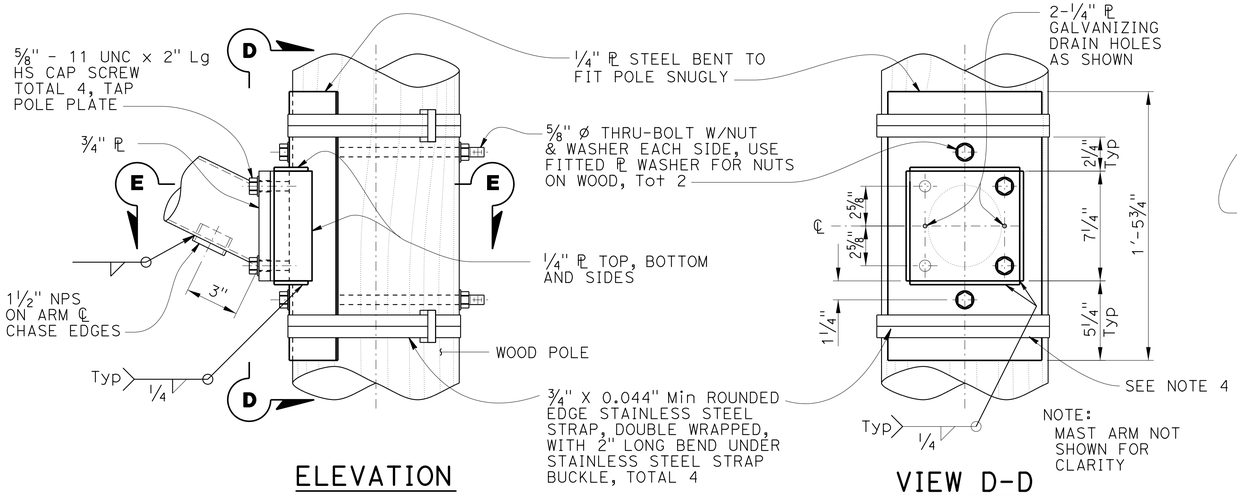

ELEVATION

VIEW D-D

DETAIL B
ARM CONNECTION DETAILS
NO SCALE

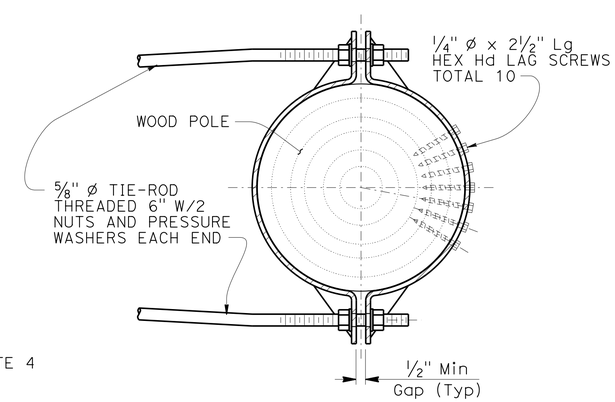

SECTION B-B

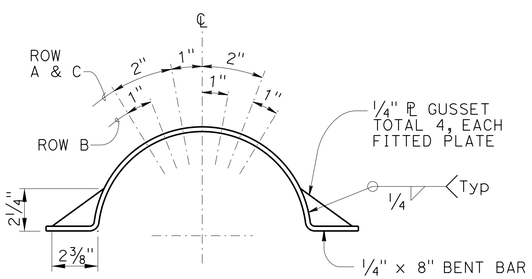

LAG SCREW AND
GUSSET PLATE LAYOUT

DETAIL C
TIE-ROD AT POLE
NO SCALE

STANDARD DRAWING					
FILE NO. xs18-080-3	APPROVAL DATE July 2014	STATE OF CALIFORNIA DEPARTMENT OF TRANSPORTATION	DIVISION OF ENGINEERING SERVICES	BRIDGE NO. 32-0018 / POST MILE R19.61	TEMPORARY WOOD POLES DETAILS No. 3

DS OSD 2147A (ENGLISH STANDARD DRAWING "XS" BORDER REV. (02-02-11))

ORIGINAL SCALE IN INCHES FOR REDUCED PLANS 0 1 2 3

UNIT: 1443
PROJECT NUMBER & PHASE: 10120000531
CONTRACT NO.: 10-0L9704

DISREGARD PRINTS BEARING EARLIER REVISION DATES

REVISION DATES: 6-27-14

SHEET 6 OF 8

FILE => xs18-080-3.dgn

USERNAME => s113541 DATE PLOTTED => 12-NOV-2015 TIME PLOTTED => 10:10

DIST	COUNTY	ROUTE	POST MILES TOTAL PROJECT	SHEET No.	TOTAL SHEETS
10	Tuo	120	R19.4/R20.0	32	119

REGISTERED CIVIL ENGINEER 5-20-15 DATE

6-22-15
PLANS APPROVAL DATE

REGISTERED PROFESSIONAL ENGINEER ANTON A. KISMETIAN No. 64466 Exp. 6/30/17 CIVIL STATE OF CALIFORNIA

The State of California or its officers or agents shall not be responsible for the accuracy or completeness of electronic copies of this plan sheet.

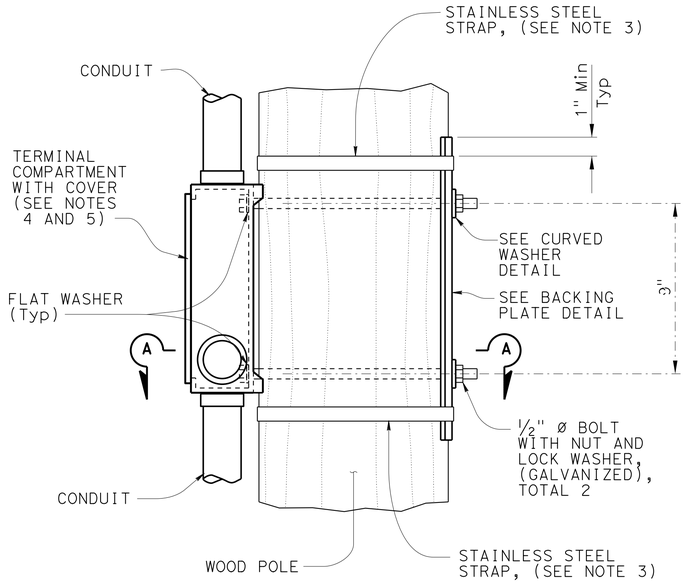

ELEVATION

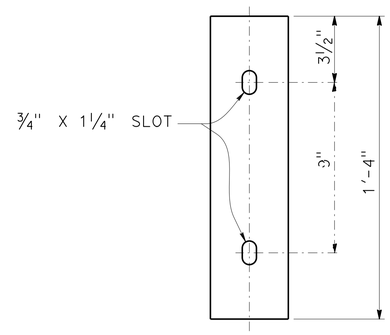

ELEVATION

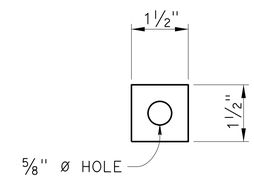

ELEVATION

PLAN

BACKING PLATE DETAIL

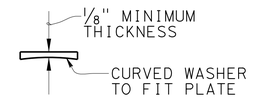

PLAN

CURVED WASHER DETAIL

NOTES:

1. Verify pole dimensions at terminal compartment for fabrication of backing plate and curved washer.
2. Backing plate to be galvanized after fabrication.
3. ¾" x 0.044" minimum, rounded edge stainless steel straps, double wrapped with 2" long bend under stainless steel strap buckle.
4. For miscellaneous details for signal mounting not shown see Standard Plan ES-4D.
5. If the terminal compartment has a cable entry guide on the rear face, remove the cable entry guide to a level that will not interfere with the wood post. Close any unused cable entry locations with raintight cap.

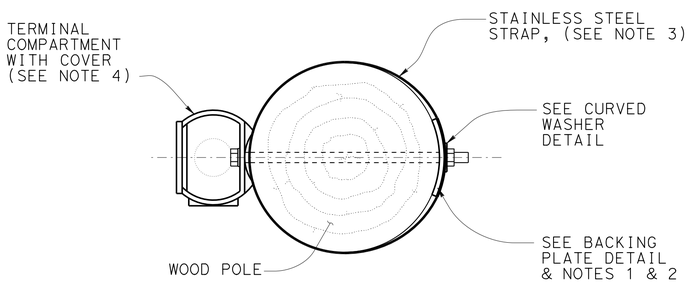

SECTION A-A

SIDE MOUNTING TERMINAL COMPARTMENT

NO SCALE

STANDARD DRAWING

FILE NO. xs18-080-4

APPROVAL DATE July 2014

STATE OF CALIFORNIA DEPARTMENT OF TRANSPORTATION

DIVISION OF ENGINEERING SERVICES

BRIDGE NO. 32-0018

POST MILE R19.61

TEMPORARY WOOD POLES DETAILS No. 4

DS OSD 2147A (ENGLISH STANDARD DRAWING "XS" BORDER REV. (02-02-11)

ORIGINAL SCALE IN INCHES FOR REDUCED PLANS 0 1 2 3

UNIT: 1443
PROJECT NUMBER & PHASE: 10120000531
CONTRACT NO.: 10-0L9704

DISREGARD PRINTS BEARING EARLIER REVISION DATES

REVISION DATES 6-27-14

SHEET 7 OF 8

FILE => xs18-080-4.dgn

USERNAME => s113541 DATE PLOTTED => 12-NOV-2015 TIME PLOTTED => 10:10

DIST	COUNTY	ROUTE	POST MILES TOTAL PROJECT	SHEET No.	TOTAL SHEETS
10	Tuo	120	R19.4/R20.0	33	119

REGISTERED CIVIL ENGINEER 5-20-15 DATE

6-22-15
PLANS APPROVAL DATE

REGISTERED PROFESSIONAL ENGINEER ANTON A. KISMETIAN No. 64466 Exp. 6/30/17 CIVIL STATE OF CALIFORNIA

The State of California or its officers or agents shall not be responsible for the accuracy or completeness of electronic copies of this plan sheet.

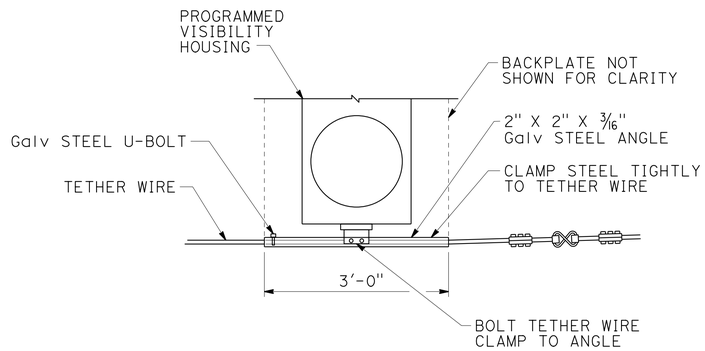

TETHER WIRE ATTACHMENT FOR PROGRAMMED VISIBILITY SIGNAL FACE

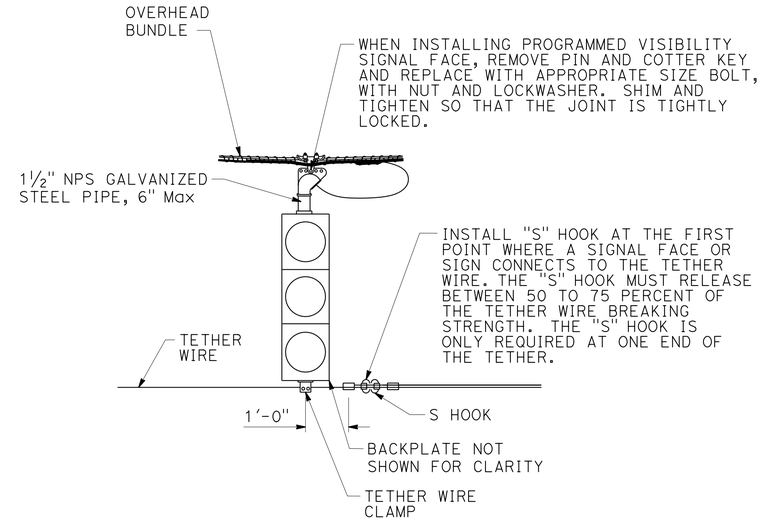

SIGNAL FACE SUPPORT

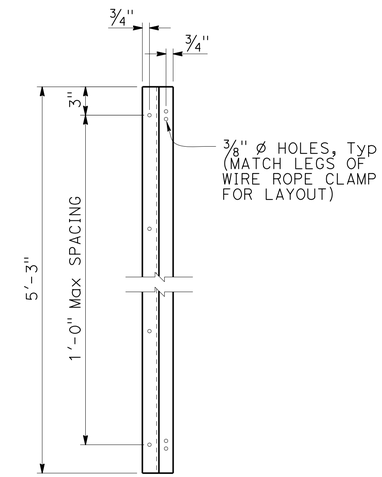

Z-BAR ELEVATION

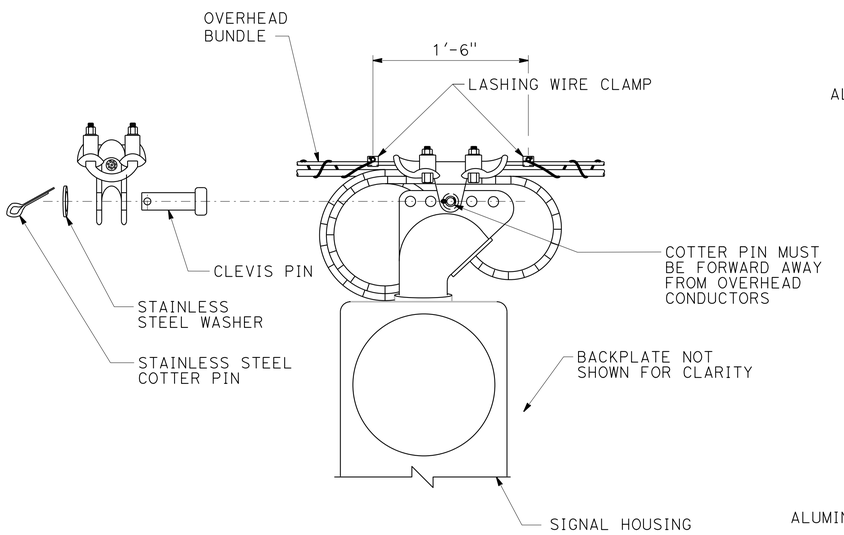

MESSENGER WIRE CLAMP COTTER PIN DETAIL

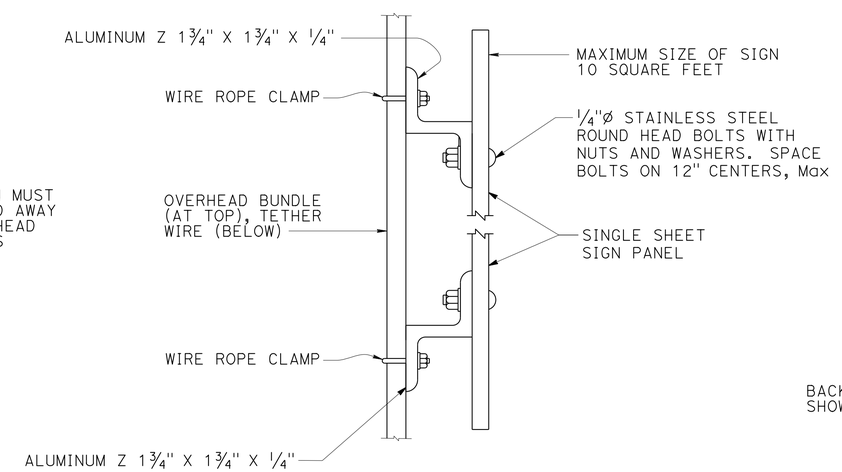

THE OVERLAPPED CONNECTION OF ADJUSTABLE HANGERS MUST USE A MINIMUM OF 2 BOLTS WITH A MINIMUM SPACING BETWEEN BOLTS OF 2"

SIGN MOUNTING DETAIL

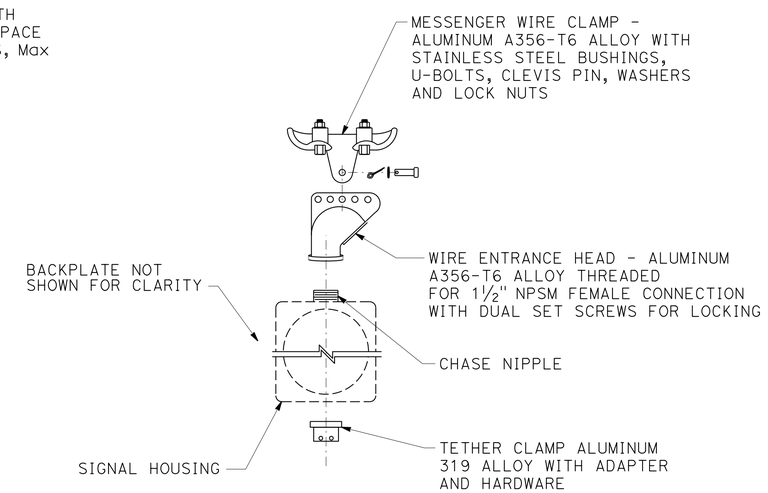

SIGNAL FACE SUPPORT EXPLODED VIEW

NO SCALE

STANDARD DRAWING

FILE NO. xs18-080-5

APPROVAL DATE July 2014

STATE OF CALIFORNIA DEPARTMENT OF TRANSPORTATION

DIVISION OF ENGINEERING SERVICES

BRIDGE NO. 32-0018

POST MILE R19.61

TEMPORARY WOOD POLES DETAILS No. 5

DS OSD 2147A (ENGLISH STANDARD DRAWING "XS" BORDER REV. (02-02-11)

ORIGINAL SCALE IN INCHES FOR REDUCED PLANS 0 1 2 3

UNIT: 1443
PROJECT NUMBER & PHASE: 10120000531
CONTRACT NO.: 10-0L9704

DISREGARD PRINTS BEARING EARLIER REVISION DATES

REVISION DATES 6-27-14

SHEET 8 OF 8

FILE => xs18-080-5.dgn

USERNAME => s113541 DATE PLOTTED => 12-NOV-2015 TIME PLOTTED => 10:10

DIST	COUNTY	ROUTE	POST MILES TOTAL PROJECT	SHEET No.	TOTAL SHEETS
10	Tuo	120	R19.4/R20.0	34	119

REGISTERED CIVIL ENGINEER 2-27-15 DATE

6-22-15
PLANS APPROVAL DATE

REGISTERED PROFESSIONAL ENGINEER RICHARD LANCE WARREN No. C78431 Exp. 9/30/15 CIVIL STATE OF CALIFORNIA

The State of California or its officers or agents shall not be responsible for the accuracy or completeness of scanned copies of this plan sheet.

NOTES:

1. For details not shown, see "TEMPORARY WOOD POLES" sheets.

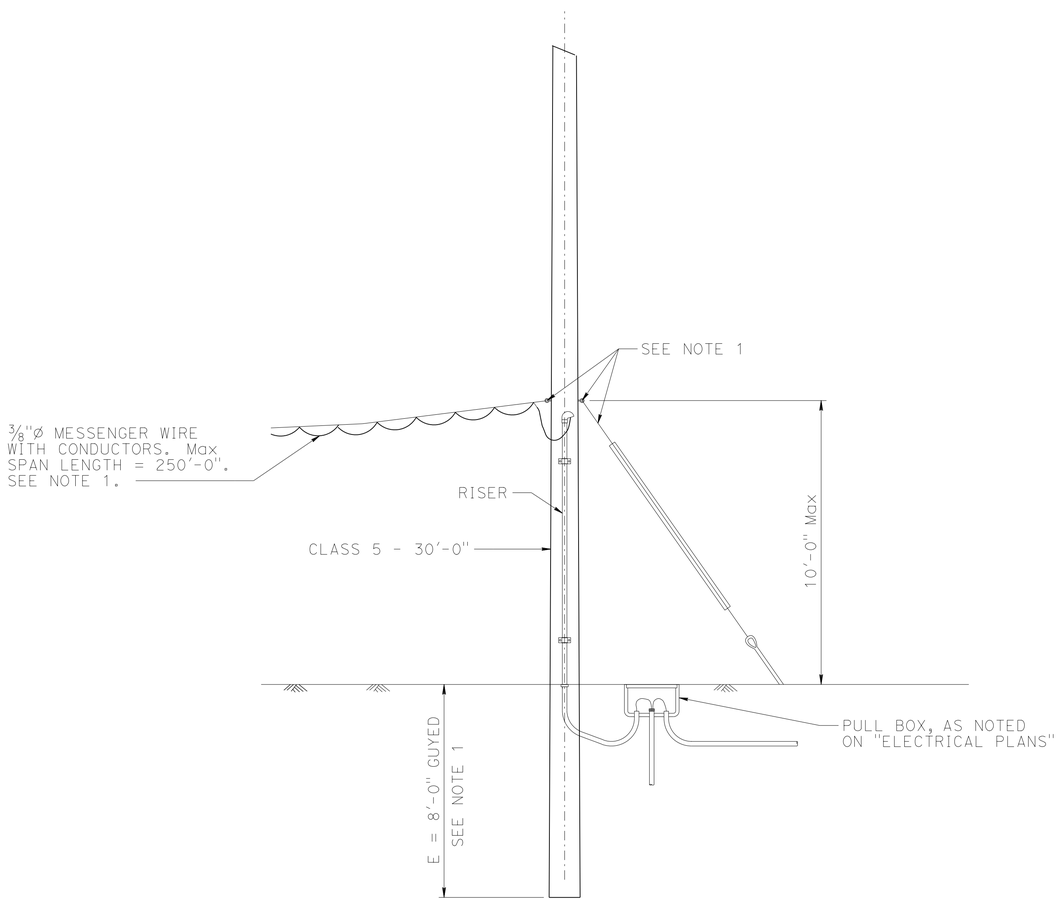

OPTION 1 - GUYED

3/8" = 1'-0"

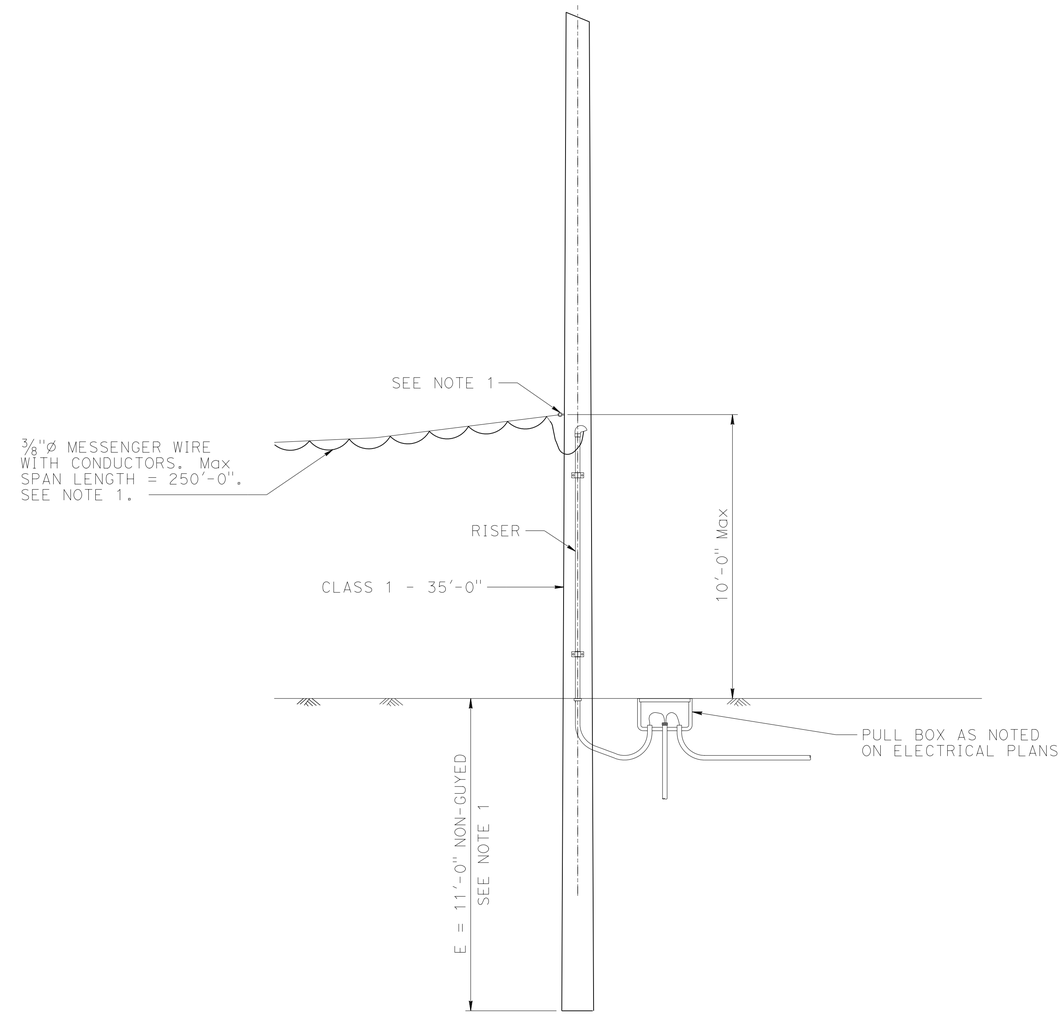

OPTION 2 - NON-GUYED

3/8" = 1'-0"

BRANCH CHIEF DAVID NEUMANN	DESIGN	BY LANCE WARREN	CHECKED JOEL MAGANA
	DETAILS	BY BOB EDWARDS/SHUMEI JIANG	CHECKED JOEL MAGANA
	QUANTITIES	BY	CHECKED

STATE OF CALIFORNIA
DEPARTMENT OF TRANSPORTATION

DIVISION OF ENGINEERING SERVICES
DESIGN AND TECHNICAL SERVICES
SPECIAL DESIGNS BRANCH B

BRIDGE No. 32-0018
POST MILE R19.61

TUOLUMNE RIVER BRIDGE (REHAB)

TEMPORARY WOOD POLE AT BRIDGE ABUTMENTS

SES-1

SPECIAL DESIGNS BRANCH BORDER SHEET (REV. 8-27-14) Bob Edwards

ORIGINAL SCALE IN INCHES FOR REDUCED PLANS 0 1 2 3

UNIT: 3619
PROJECT NUMBER & PHASE: 10120000531
CONTRACT No.: 10-0L9704

DISREGARD PRINTS BEARING EARLIER REVISION DATES

REVISION DATES: 4-28-15 2-26-15 2-25-15 6-15-15 SHEET 1 OF 2

FILE => 10--01970-uh-misc-ses-st01.dgn

USERNAME => s113541 DATE PLOTTED => 12-NOV-2015 TIME PLOTTED => 10:20

DIST	COUNTY	ROUTE	POST MILES TOTAL PROJECT	SHEET No.	TOTAL SHEETS
10	Tuo	120	R19.4/R20.0	35	119

REGISTERED CIVIL ENGINEER 5-27-15 DATE

6-22-15
PLANS APPROVAL DATE

REGISTERED PROFESSIONAL ENGINEER RICHARD LANCE WARREN No. C78431 Exp. 9/30/15 CIVIL STATE OF CALIFORNIA

The State of California or its officers or agents shall not be responsible for the accuracy or completeness of scanned copies of this plan sheet.

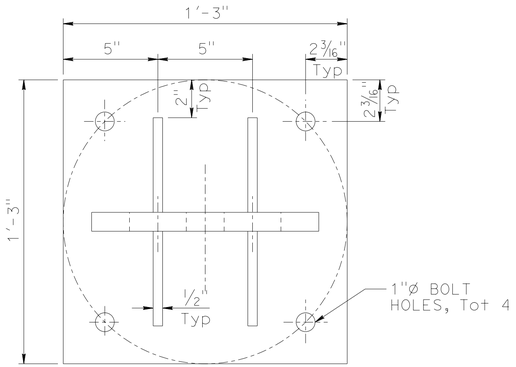

PLAN VIEW

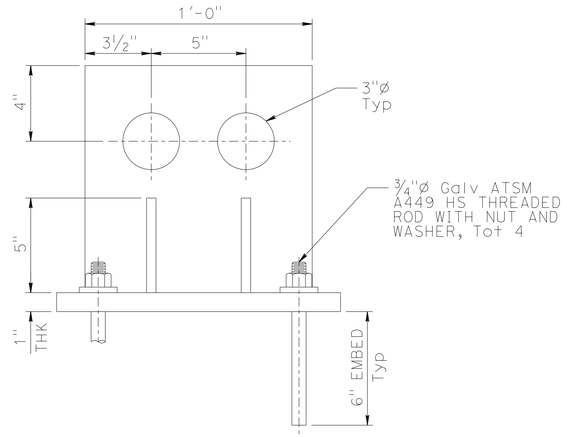

FRONT ELEVATION

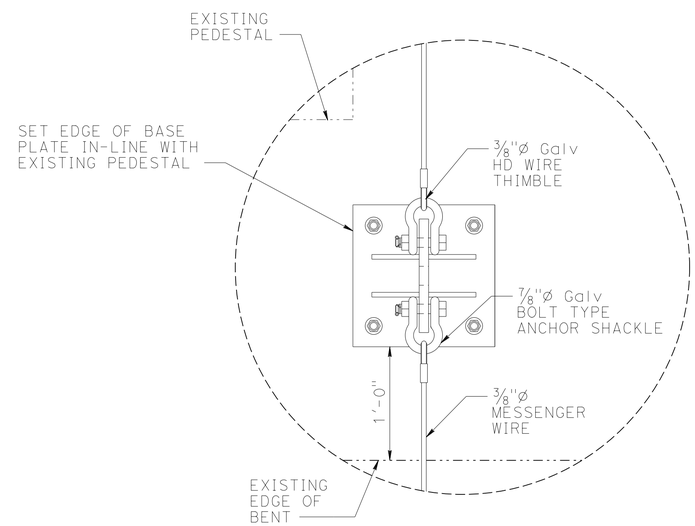

DETAIL A

1 1/2" = 1'-0"

NOTES:

1. All steel components shall be galvanized and comply with ASTM A36 standards, unless otherwise noted.
2. Conductors must be suspended from span messenger wire as follows:
   a.) Main run 3/8" messenger wire with ± 5% sag.
   b.) No spare conductors allowed, unless approved by the Engineer.
3. See Electrical sheets for conductors.

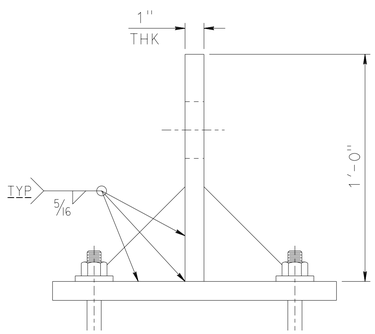

END ELEVATION

MESSENGER WIRE BENT ATTACHMENT

3" = 1'-0"

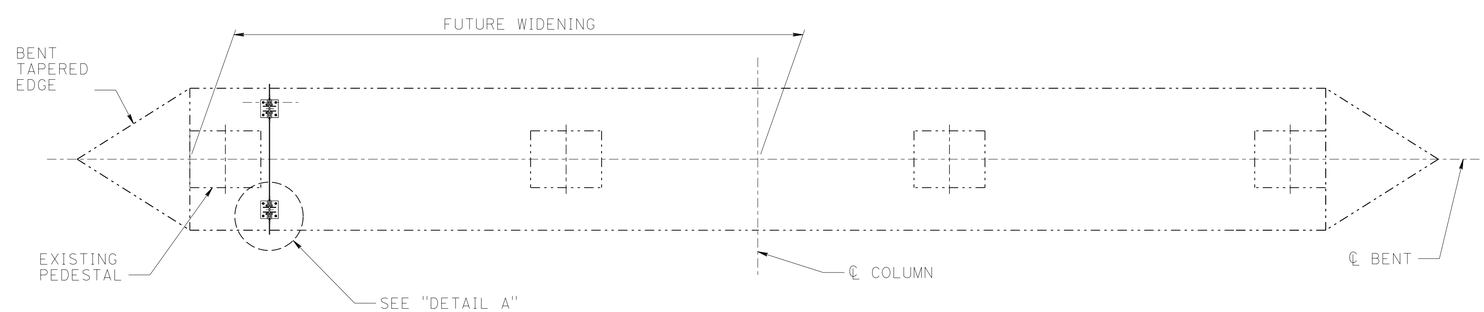

BENT PLAN

3/4" = 1'-0"

NOTE:
The contractor must verify all controlling field dimensions before ordering or fabricating any material.

BRANCH CHIEF	DAVID NEUMANN		
DESIGN	BY LANCE WARREN	CHECKED JOEL MAGANA	
DETAILS	BY BOB EDWARDS	CHECKED JOEL MAGANA	
QUANTITIES	BY	CHECKED	

STATE OF CALIFORNIA
DEPARTMENT OF TRANSPORTATION

DIVISION OF ENGINEERING SERVICES
DESIGN AND TECHNICAL SERVICES
SPECIAL DESIGNS BRANCH B

BRIDGE No. 32-0018
POST MILE R19.61

TUOLUMNE RIVER BRIDGE (REHAB)

MESSENGER WIRE BRACKET AT BRIDGE BENTS

SES-2

SPECIAL DESIGNS BRANCH BORDER SHEET (REV. 8-27-14) Bob Edwards

ORIGINAL SCALE IN INCHES FOR REDUCED PLANS 0 1 2 3

UNIT: 3619
PROJECT NUMBER & PHASE: 1012000531
CONTRACT No.: 10-0L9704

DISREGARD PRINTS BEARING EARLIER REVISION DATES

REVISION DATES 5-26-15 5-26-15 5-27-15 ..... SHEET 2 OF 2

FILE => 10--01970-uh-misc-ses-st02.dgn

USERNAME => s113541 DATE PLOTTED => 12-NOV-2015 TIME PLOTTED => 10:20

M

Maint	MAINTENANCE
Max	MAXIMUM
MB	METAL BEAM
MBB	METAL BEAM BARRIER
MBGR	METAL BEAM GUARD RAILING
Med	MEDIAN
MGS	MIDWEST GUARDRAIL SYSTEM
MH	MANHOLE
Min	MINIMUM
Misc	MISCELLANEOUS
Misc I & S	MISCELLANEOUS IRON AND STEEL
Mkr	MARKER
Mod	MODIFIED, MODIFY
Mon	MONUMENT
MP	METAL PLATE
MPGR	METAL PLATE GUARD RAILING
MR	MOVEMENT RATING
MSE	MECHANICALLY STABILIZED EMBANKMENT
Mt	MOUNTAIN, MOUNT
Mtl	MATERIAL
MVP	MAINTENANCE VEHICLE PULLOUT

N

N	NORTH
NB	NORTHBOUND
No.	NUMBER (MUST HAVE PERIOD)
Nos.	NUMBERS (MUST HAVE PERIOD)
NPS	NOMINAL PIPE SIZE
NS	NEAR SIDE
NSP	NEW STANDARD PLAN
NTS	NOT TO SCALE

O

Oblr	OBLITERATE
OC	OVERCROSSING
OD	OUTSIDE DIAMETER
OF	OUTSIDE FACE
OG	ORIGINAL GROUND
OGAC	OPEN GRADED ASPHALT CONCRETE
OGFC	OPEN GRADED FRICTION COURSE
OH	OVERHEAD
OHWM	ORDINARY HIGH WATER MARK
O-O	OUT TO OUT
Opp	OPPOSITE
OSD	OVERSIDE DRAIN

P

P	PAGE
PAP	PERFORATED ALUMINUM PIPE
PB	PULL BOX
PC	POINT OF CURVATURE, PRECAST
PCC	POINT OF COMPOUND CURVE, PORTLAND CEMENT CONCRETE
PCMS	PORTABLE CHANGEABLE MESSAGE SIGN
PCP	PERFORATED CONCRETE PIPE, PRESTRESSED CONCRETE PIPE
PCVC	POINT OF COMPOUND VERTICAL CURVE
PEC	PERMIT TO ENTER AND CONSTRUCT
Ped	PEDESTRIAN
Ped OC	PEDESTRIAN OVERCROSSING
Ped UC	PEDESTRIAN UNDERCROSSING
Perm Mtl	PERMEABLE MATERIAL

P continued

PG	PROFILE GRADE
PI	POINT OF INTERSECTION
PJP	PARTIAL JOINT PENETRATION
Pkwy	PARKWAY
ℙ,PL	PLATE
P/L	PROPERTY LINE
PM	POST MILE, TIME FROM NOON TO MIDNIGHT
PN	PAVING NOTCH
POC	POINT OF HORIZONTAL CURVE
POT	POINT OF TANGENT
POVC	POINT OF VERTICAL CURVE
PP	PIPE PILE, PLASTIC PIPE, POWER POLE
PPL	PREFORMED PERMEABLE LINER
PPP	PERFORATED PLASTIC PIPE
PRC	POINT OF REVERSE CURVE
PRF	PAVEMENT REINFORCING FABRIC
PRVC	POINT OF REVERSE VERTICAL CURVE
PS&E	PLANS, SPECIFICATIONS AND ESTIMATES
PS, P/S	PRESTRESSED
PSP	PERFORATED STEEL PIPE
PT	POINT OF TANGENCY
PVC	POLYVINYL CHLORIDE
Pvmt	PAVEMENT

Q

Qty	QUANTITY

R

R	RADIUS
R & D	REMOVE AND DISPOSE
R & S	REMOVE AND SALVAGE
R/C	RATE OF CHANGE
RCA	REINFORCED CONCRETE ARCH
RCB	REINFORCED CONCRETE BOX
RCP	REINFORCED CONCRETE PIPE
RCPA	REINFORCED CONCRETE PIPE ARCH
Rd	ROAD
Reinf	REINFORCED, REINFORCEMENT, REINFORCING
Rel	RELOCATE
Repl	REPLACEMENT
Ret	RETAINING
Rev	REVISED, REVISION
Rdwy	ROADWAY
RHMA	RUBBERIZED HOT MIX ASPHALT
Riv	RIVER
RM	ROAD-MIXED
RP	RADIUS POINT, REFERENCE POINT
RR	RAILROAD
RSP	ROCK SLOPE PROTECTION, REVISED STANDARD PLAN
Rt	RIGHT
Rte	ROUTE
RW	REDWOOD, RETAINING WALL
R/W	RIGHT OF WAY
Rwy	RAILWAY

S

S	SOUTH, SUPPLEMENT
SAE	STRUCTURE APPROACH EMBANKMENT
Salv	SALVAGE
SAPP	STRUCTURAL ALUMINUM PLATE PIPE
SB	SOUTHBOUND
SC	SAND CUSHION
SCSP	SLOTTED CORRUGATED STEEL PIPE
SD	STORM DRAIN
Sec	SECOND, SECTION
Sep	SEPARATION
SG	SUBGRADE
Shld	SHOULDER
Sht	SHEET
Sim	SIMILAR
₤	STATION LINE
SM	SELECTED MATERIAL
Spec	SPECIAL, SPECIFICATIONS
SPP	SLOTTED PLASTIC PIPE
SS	SLOPE STAKE
SSBM	STRAP AND SADDLE BRACKET METHOD
SSD	STRUCTURAL SECTION DRAIN
SSPA	STRUCTURAL STEEL PLATE ARCH
SSPP	STRUCTURAL STEEL PLATE PIPE
SSPPA	STRUCTURAL STEEL PLATE PIPE ARCH
SSRP	STEEL SPIRAL RIB PIPE
St	STREET
Sta	STATION
STBB	SINGLE THRIE BEAM BARRIER
Std	STANDARD
Str	STRUCTURE
Surf	SURFACING
SW	SIDEWALK, SOUND WALL
Swr	SEWER
Sym	SYMMETRICAL
S4S	SURFACE 4 SIDES

T

T	SEMI-TANGENT
Tan	TANGENT
TBB	THRIE BEAM BARRIER
Tbr	TIMBER
TC	TOP OF CURB
TCB	TRAFFIC CONTROL BOX
TCE	TEMPORARY CONSTRUCTION EASEMENT
Tel	TELEPHONE
Temp	TEMPORARY
TG	TOP OF GRADE
Tot	TOTAL
TP	TELEPHONE POLE
TPB	TREATED PERMEABLE BASE
TPM	TREATED PERMEABLE MATERIAL
Trans	TRANSITION

T continued

TS	TRANSVERSE, TRAFFIC SIGNAL, TUBULAR STEEL
Typ	TYPICAL

U

UC	UNDERCROSSING
UD	UNDERDRAIN
UG	UNDERGROUND
UON	UNLESS OTHERWISE NOTED
UP	UNDERPASS

V

V	VALVE, DESIGN SPEED
Var	VARIABLE, VARIES
VC	VERTICAL CURVE
VCP	VITRIFIED CLAY PIPE
Vert	VERTICAL
Via	VIADUCT
Vol	VOLUME

W

W	WEST, WIDTH
WB	WESTBOUND
WH	WEEP HOLE
WM	WIRE MESH
WS	WATER SURFACE
WSP	WELDED STEEL PIPE
Wt	WEIGHT
WV	WATER VALVE
WW	WINGWALL
WWLOL	WINGWALL LAYOUT LINE

X

X Sec	CROSS SECTION
Xing	CROSSING

Y

Yr	YEAR
Yrs	YEARS

Dist	COUNTY	ROUTE	POST MILES TOTAL PROJECT	SHEET No.	TOTAL SHEETS
10	Tuo	120	R19.4/R20.0	36	119

Grace M. Tsushima
REGISTERED CIVIL ENGINEER

July 19, 2013
PLANS APPROVAL DATE

REGISTERED PROFESSIONAL ENGINEER
Grace M. Tsushima
No. C49814
Exp. 9-30-14
CIVIL
STATE OF CALIFORNIA

THE STATE OF CALIFORNIA OR ITS OFFICERS OR AGENTS SHALL NOT BE RESPONSIBLE FOR THE ACCURACY OR COMPLETENESS OF SCANNED COPIES OF THIS PLAN SHEET.

TO ACCOMPANY PLANS DATED 6-22-15

UNIT OF MEASUREMENT SYMBOLS:

Some of the symbols used in the project plan quantity tables and in the Bid Item List are:

TABLE A

SYMBOL USED	DEFINITIONS
ACRE	ACRE
CF	CUBIC FOOT
CY	CUBIC YARD
EA	EACH
GAL	GALLON
LB	POUND
LF	LINEAR FOOT
SQFT	SQUARE FOOT
SQYD	SQUARE YARD
STA	100 FEET
TAB	TABLET
TON	2,000 POUNDS

Some of the symbols used in the plans other than in the project plan quantity tables are:

TABLE B

SYMBOL USED	DEFINITIONS
ksi	KIPS PER SQUARE INCH
ksf	KIPS PER SQUARE FOOT
psi	POUNDS PER SQUARE INCH
psf	POUNDS PER SQUARE FOOT
lb/ft^3, pcf	POUNDS PER CUBIC FOOT
tsf	TONS PER SQUARE FOOT
mph, MPH *	MILES PER HOUR
ø	NOMINAL DIAMETER
oz	OUNCE
lb	POUND
kip	1,000 POUNDS
cal	CALORIE
ft	FOOT OR FEET
gal	GALLON

* For use on a sign panel only

STATE OF CALIFORNIA
DEPARTMENT OF TRANSPORTATION

ABBREVIATIONS (SHEET 2 OF 2)

NO SCALE

RSP A10B DATED JULY 19, 2013 SUPERSEDES STANDARD PLAN A10B DATED MAY 20, 2011 - PAGE 2 OF THE STANDARD PLANS BOOK DATED 2010.

REVISED STANDARD PLAN RSP A10B

2010 REVISED STANDARD PLAN RSP A10B

6-7-13

Dist	COUNTY	ROUTE	POST MILES TOTAL PROJECT	SHEET No.	TOTAL SHEETS
10	Tuo	120	R19.4/R20.0	37	119

REGISTERED CIVIL ENGINEER

July 20, 2012
PLANS APPROVAL DATE

REGISTERED PROFESSIONAL ENGINEER
Roberta L. McLaughlin
No. C40375
Exp. 3-31-13
CIVIL
STATE OF CALIFORNIA

THE STATE OF CALIFORNIA OR ITS OFFICERS OR AGENTS SHALL NOT BE RESPONSIBLE FOR THE ACCURACY OR COMPLETENESS OF SCANNED COPIES OF THIS PLAN SHEET.

TO ACCOMPANY PLANS DATED 6-22-15

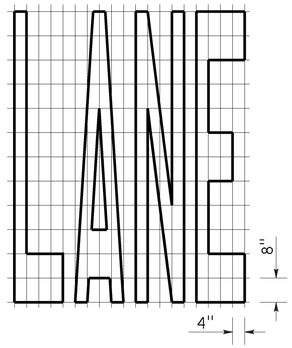

A=24 ft²

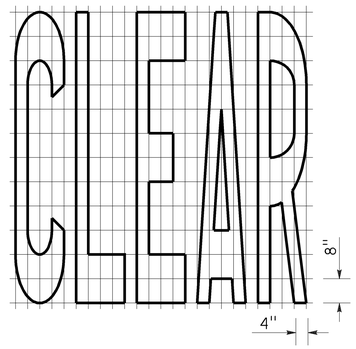

A=27 ft²

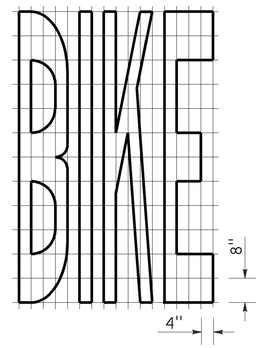

A=21 ft²

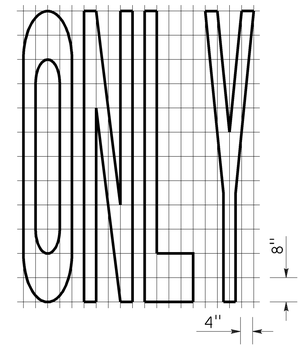

A=22 ft²

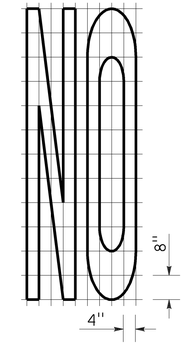

A=14 ft²

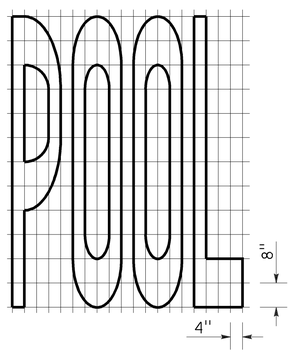

A=23 ft²

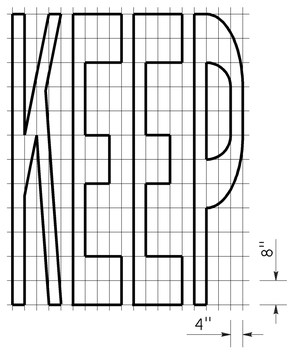

A=24 ft²

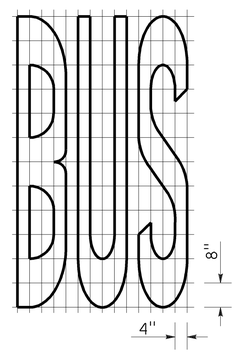

A=20 ft²

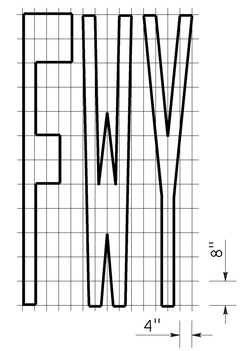

A=16 ft²

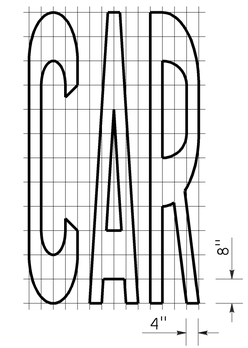

A=17 ft²

WORD MARKINGS			
ITEM	ft²	ITEM	ft²
LANE	24	NO	14
POOL	23	BIKE	21
CAR	17	BUS	20
CLEAR	27	ONLY	22
KEEP	24	FWY	16

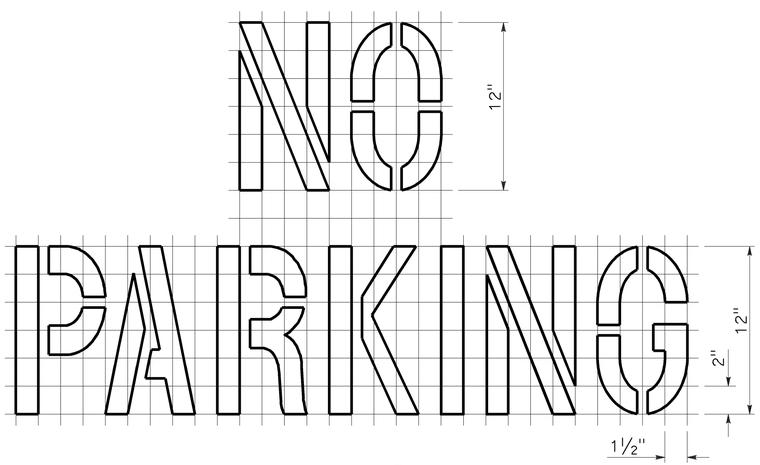

A=2 ft²
See Notes 6 and 7

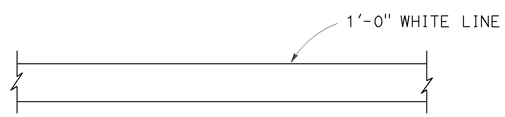

LIMIT LINE (STOP LINE)

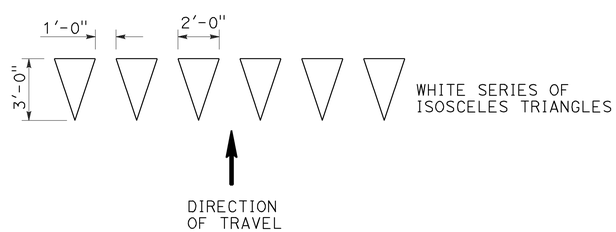

YIELD LINE

NOTES:

1. If a message consists of more than one word, it should read "UP", i.e., the first word should be nearest the driver.
2. The space between words should be at least four times the height of the characters for low speed roads, but not more than ten times the height of the characters. The space may be reduced appropriately where there is limited space because of local conditions.
3. Minor variations in dimensions may be accepted by the Engineer.
4. Portions of a letter, number or symbol may be separated by connecting segments not to exceed 2" in width.
5. The words "NO PARKING" pavement marking is to be used for parking facilities. For typical locations of markings, see Standard Plans A90A and A90B.
6. The words "NO PARKING", shall be painted in white letters no less than 1'-0" high on a contrasting background and located so that it is visible to traffic enforcement officials.

STATE OF CALIFORNIA
DEPARTMENT OF TRANSPORTATION

PAVEMENT MARKINGS WORDS, LIMIT AND YIELD LINES

NO SCALE

RSP A24E DATED JULY 20, 2012 SUPERSEDES STANDARD PLAN A24E
DATED MAY 20, 2011 - PAGE 17 OF THE STANDARD PLANS BOOK DATED 2010.

REVISED STANDARD PLAN RSP A24E

2010 REVISED STANDARD PLAN RSP A24E

6-12-12

Dist	COUNTY	ROUTE	POST MILES TOTAL PROJECT	SHEET No.	TOTAL SHEETS
10	Tuo	120	R19.4/R20.0	38	119

Randell D. Hiatt
REGISTERED CIVIL ENGINEER

July 19, 2013
PLANS APPROVAL DATE

REGISTERED PROFESSIONAL ENGINEER
Randell D. Hiatt
No. C50200
Exp. 6-30-15
CIVIL
STATE OF CALIFORNIA

THE STATE OF CALIFORNIA OR ITS OFFICERS OR AGENTS SHALL NOT BE RESPONSIBLE FOR THE ACCURACY OR COMPLETENESS OF SCANNED COPIES OF THIS PLAN SHEET.

TO ACCOMPANY PLANS DATED 6-22-15

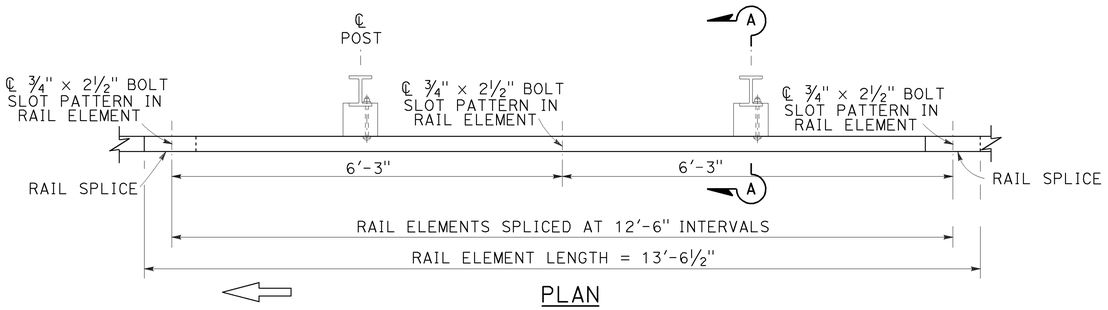

PLAN

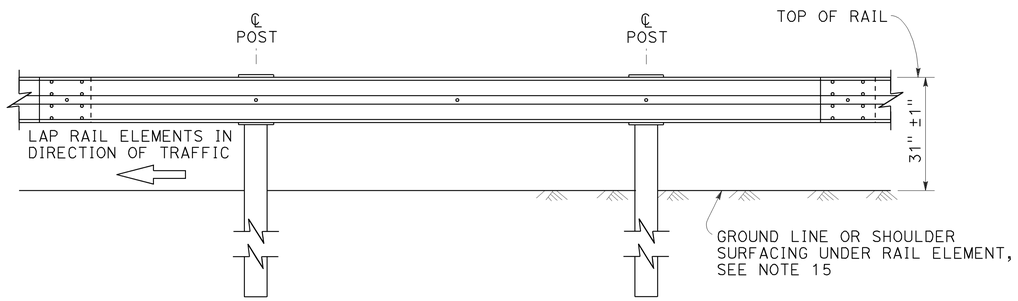

ELEVATION

MIDWEST GUARDRAIL SYSTEM WITH STEEL POSTS AND NOTCHED WOOD OR NOTCHED RECYCLED PLASTIC BLOCKS

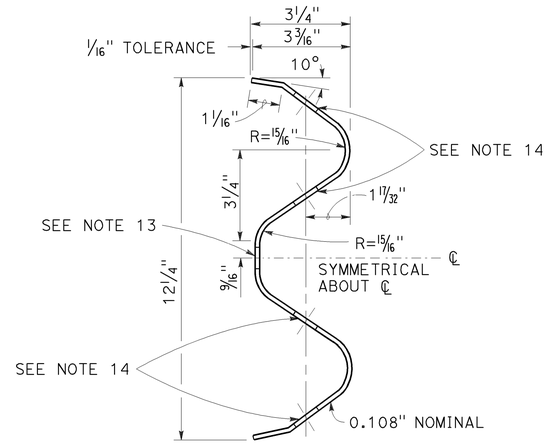

SECTION THRU RAIL ELEMENT

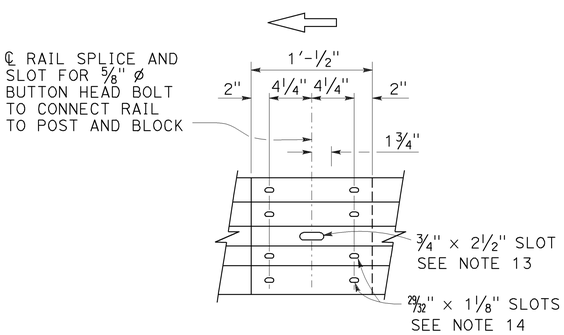

ELEVATION

RAIL ELEMENT SPLICE DETAIL

a) Connect the over lapped end of the rail elements with ⅝" ø × 1⅜" button head oval shoulder splice bolts inserted into the 29⁄32" × 1⅛" slots and bolted together with ⅝" ø recessed hex nuts. Recess of hex nut points toward rail element. A total of 8 bolts and nuts are to be used at each rail splice connection.

b) The ends of the rail elements are to be overlapped in the direction of traffic (see details).

c) Where end cap is to be attached to the end of a rail element, a total of 4 of the above described splice bolts and nuts are to be used.

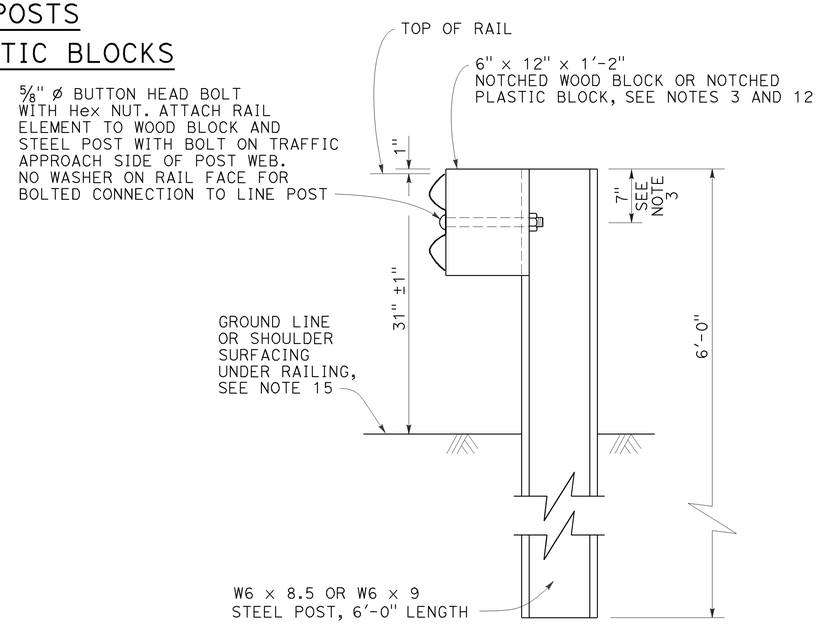

SECTION A-A

TYPICAL STEEL LINE POST INSTALLATION

See Note 4

NOTES:

1. For details of wood post installations, see Revised Standard Plan RSP A77L1.
2. For details of standard hardware used to construct MGS, see Revised Standard Plan RSP A77M1.
3. For details of steel posts and notched wood blocks used to construct MGS, see Revised Standard Plan RSP A77N2.
4. For additional installation details, see Revised Standard Plan RSP A77N3.
5. MGS post spacing to be 6'-3" center to center, except as otherwise noted.
6. For MGS typical layouts, see the A77P, A77Q and A77R Series of Standard Plans.
7. If railing is connected to terminal system end treatment, use 31" height terminal system end treatment.
8. For MGS end anchor details, see Revised Standard Plans RSP A77S1 and RSP A77T2.
9. For details of MGS transition to bridge railing, see Revised Standard Plan RSP A77U4.
10. For additional details of MGS connection to bridge railings, see Revised Standard Plans RSP A77U1, RSP A77U2 and RSP A77V1.
11. For dike positioning and MGS delineation details, see Revised Standard Plan RSP A77N4.
12. Notched face of block faces steel post.
13. Slotted hole for bolted connection of rail element to block and post. See "Section Thru Rail Element".
14. Slotted holes for splice bolts to overlap ends of rail element. See "Section Thru Rail Element".
15. Install posts in soil.

STATE OF CALIFORNIA
DEPARTMENT OF TRANSPORTATION

MIDWEST GUARDRAIL SYSTEM STANDARD RAILING SECTION (STEEL POST WITH NOTCHED WOOD OR NOTCHED RECYCLED PLASTIC BLOCK)

NO SCALE

RSP A77L2 DATED JULY 19, 2013 SUPPLEMENTS THE STANDARD PLANS BOOK DATED 2010.

REVISED STANDARD PLAN RSP A77L2

2010 REVISED STANDARD PLAN RSP A77L2

7-3-13

Dist	COUNTY	ROUTE	POST MILES TOTAL PROJECT	SHEET No.	TOTAL SHEETS
10	Tuo	120	R19.4/R20.0	39	119

Randell D. Hiatt
REGISTERED CIVIL ENGINEER

July 19, 2013
PLANS APPROVAL DATE

REGISTERED PROFESSIONAL ENGINEER
Randell D. Hiatt
No. C50200
Exp. 6-30-15
CIVIL
STATE OF CALIFORNIA

THE STATE OF CALIFORNIA OR ITS OFFICERS OR AGENTS SHALL NOT BE RESPONSIBLE FOR THE ACCURACY OR COMPLETENESS OF SCANNED COPIES OF THIS PLAN SHEET.

TO ACCOMPANY PLANS DATED 6-22-15

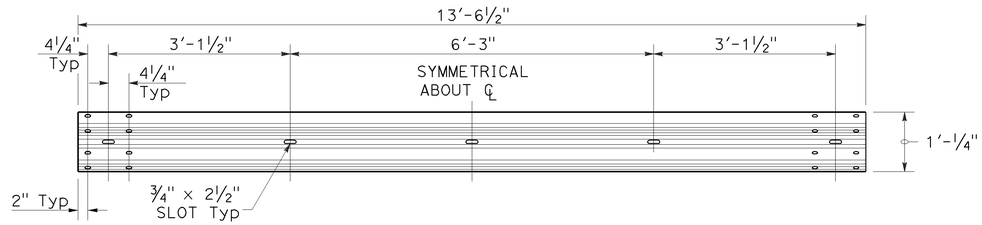

TYPICAL RAIL ELEMENT

NOTE:

1. Slotted holes for splice bolts to overlap ends of rail element.

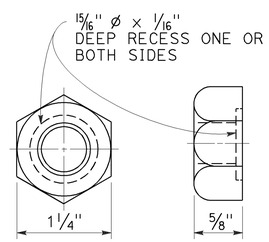

⅝" ø RECESS NUT

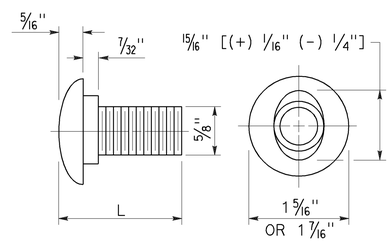

⅝" ø BUTTON HEAD BOLT

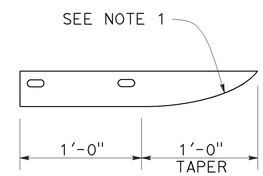

PLAN

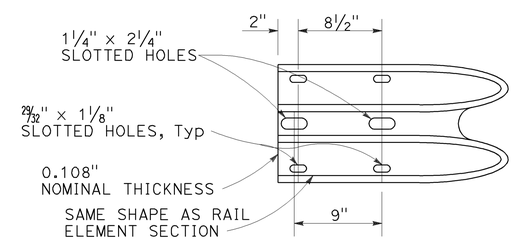

ELEVATION

END CAP
(TYPE A)

BUTTON HEAD BOLT

L	THREAD LENGTH
1⅜"	FULL THREAD LENGTH
2"	FULL THREAD LENGTH
10"	4" Min THREAD LENGTH
18"	4" Min THREAD LENGTH
20"	4" Min THREAD LENGTH
22"	4" Min THREAD LENGTH
26"	4" Min THREAD LENGTH
36"	4" Min THREAD LENGTH
** 2¾"	2" Min THREAD LENGTH
** 19"	4" Min THREAD LENGTH

** For nested rail applications.

STATE OF CALIFORNIA
DEPARTMENT OF TRANSPORTATION

MIDWEST GUARDRAIL SYSTEM STANDARD HARDWARE

NO SCALE

RSP A77M1 DATED JULY 19, 2013 SUPPLEMENTS THE STANDARD PLANS BOOK DATED 2010.

REVISED STANDARD PLAN RSP A77M1

2010 REVISED STANDARD PLAN RSP A77M1

Dist	COUNTY	ROUTE	POST MILES TOTAL PROJECT	SHEET No.	TOTAL SHEETS
10	Tuo	120	R19.4/R20.0	40	119

Randell D. Hiatt
REGISTERED CIVIL ENGINEER

November 15, 2013
PLANS APPROVAL DATE

REGISTERED PROFESSIONAL ENGINEER
Randell D. Hiatt
No. C50200
Exp. 6-30-15
CIVIL
STATE OF CALIFORNIA

THE STATE OF CALIFORNIA OR ITS OFFICERS OR AGENTS SHALL NOT BE RESPONSIBLE FOR THE ACCURACY OR COMPLETENESS OF SCANNED COPIES OF THIS PLAN SHEET.

TO ACCOMPANY PLANS DATED 6-22-15

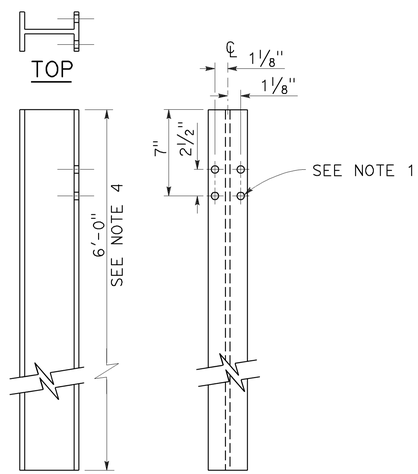

W6 x 9 OR W6 x 8.5
STEEL POST
See Note 4

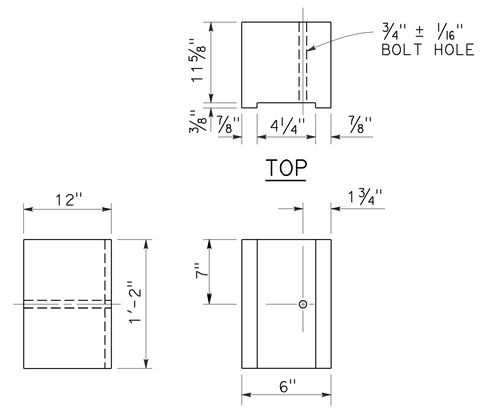

6" x 12"
NOTCHED WOOD BLOCK
See Notes 2 and 3

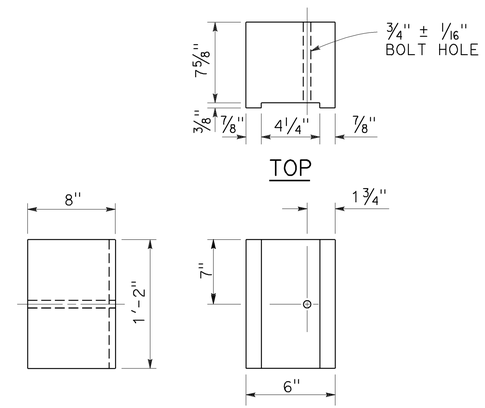

6" x 8"
NOTCHED WOOD BLOCK
Only for use with metal beam guard railing. See Note 5

NOTES:

1. All holes in steel post shall be 13/16" Dia maximum.
2. Dimensions shown for wood block are nominal.
3. Notched face of block faces steel post.
4. 6'-0" length posts to be used for typical roadway installation. See Revised Standard Plan RSP A77N3.
5. See Revised Standard Plan RSP A77L3 for use of 6" x 8" and 8" x 8" notched wood blocks.
6. This post and 8" x 12" block combination to be used for line post sections of MGS on narrow roadways and where strengthened line post sections of MGS are warranted to shield fixed objects.

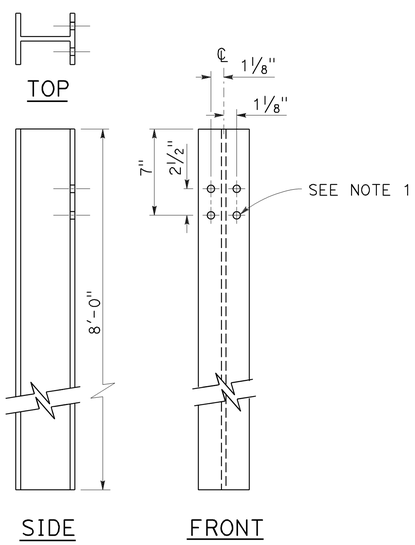

W6 x 15
STEEL POST
See Note 6

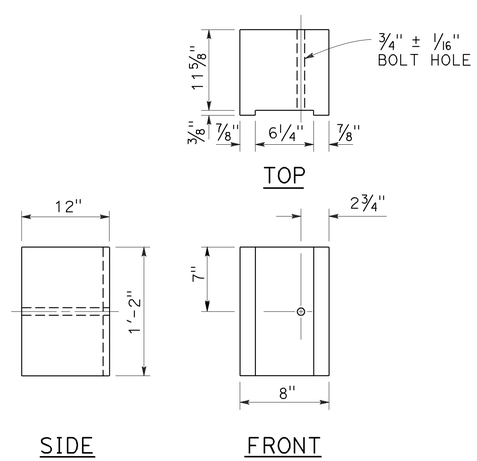

8" x 12"
NOTCHED WOOD BLOCK
See Notes 2 and 3

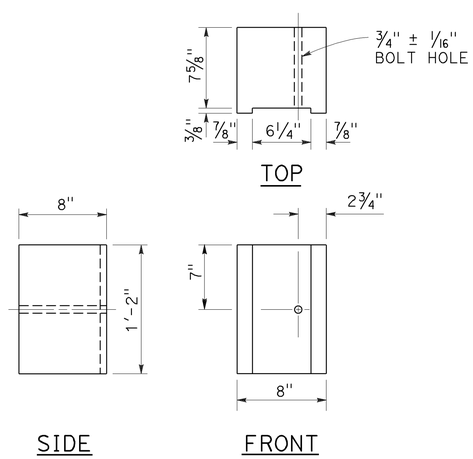

8" x 8"
NOTCHED WOOD BLOCK
Only for use with metal beam guard railing. See Note 5

STATE OF CALIFORNIA
DEPARTMENT OF TRANSPORTATION

MIDWEST GUARDRAIL SYSTEM STEEL POST AND NOTCHED WOOD BLOCK DETAILS

NO SCALE

RSP A77N2 DATED NOVEMBER 15, 2013 SUPERSEDES RSP A77N2
DATED JULY 19, 2013 THAT SUPPLEMENTS THE STANDARD PLANS BOOK DATED 2010.

REVISED STANDARD PLAN RSP A77N2

2010 REVISED STANDARD PLAN RSP A77N2

10-29-13

Dist	COUNTY	ROUTE	POST MILES TOTAL PROJECT	SHEET No.	TOTAL SHEETS
10	Tuo	120	R19.4/R20.0	41	119

Randell D. Hiatt
REGISTERED CIVIL ENGINEER

November 15, 2013
PLANS APPROVAL DATE

REGISTERED PROFESSIONAL ENGINEER
Randell D. Hiatt
No. C50200
Exp. 6-30-15
CIVIL
STATE OF CALIFORNIA

THE STATE OF CALIFORNIA OR ITS OFFICERS OR AGENTS SHALL NOT BE RESPONSIBLE FOR THE ACCURACY OR COMPLETENESS OF SCANNED COPIES OF THIS PLAN SHEET.

TO ACCOMPANY PLANS DATED 6-22-15

2010 REVISED STANDARD PLAN RSP A77N3

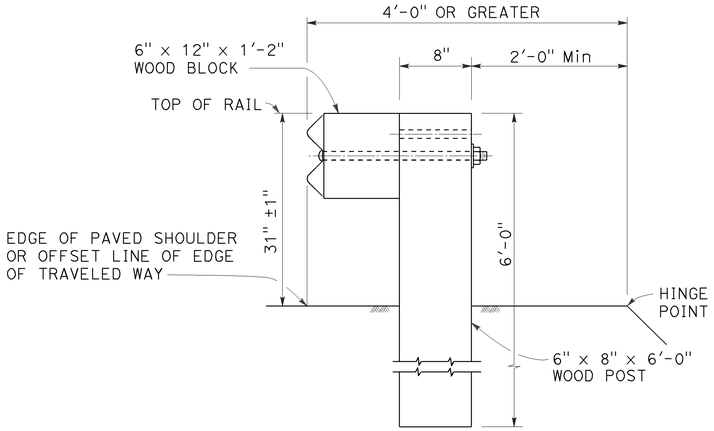

DETAIL A

TYPICAL ROADWAY INSTALLATION

See Note 1

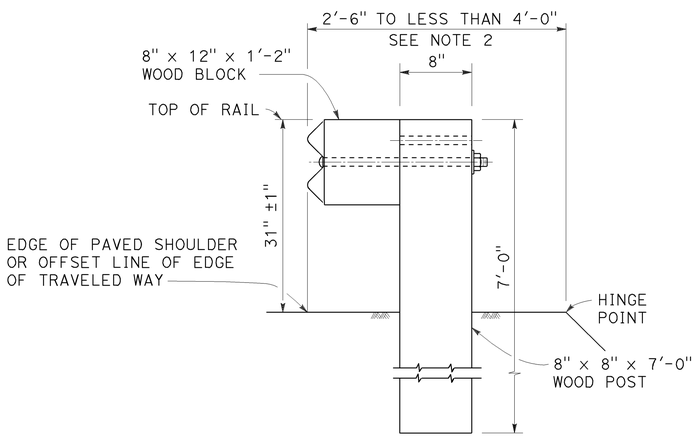

DETAIL B

NARROW ROADWAY INSTALLATION

See Note 1

POST EMBEDMENT

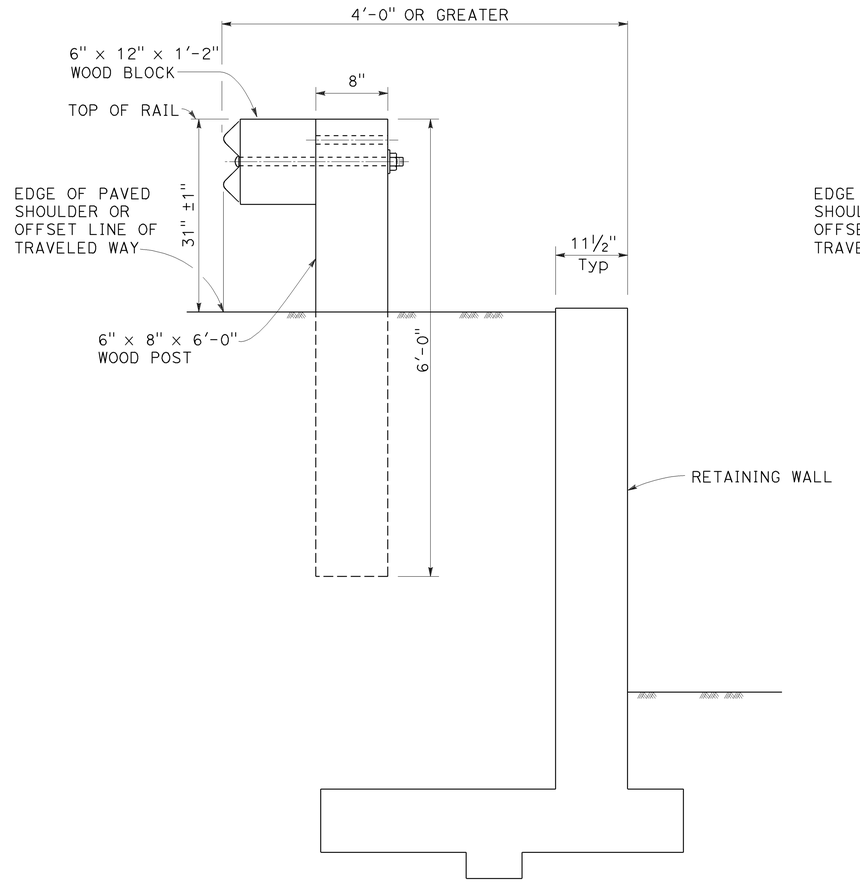

DETAIL C

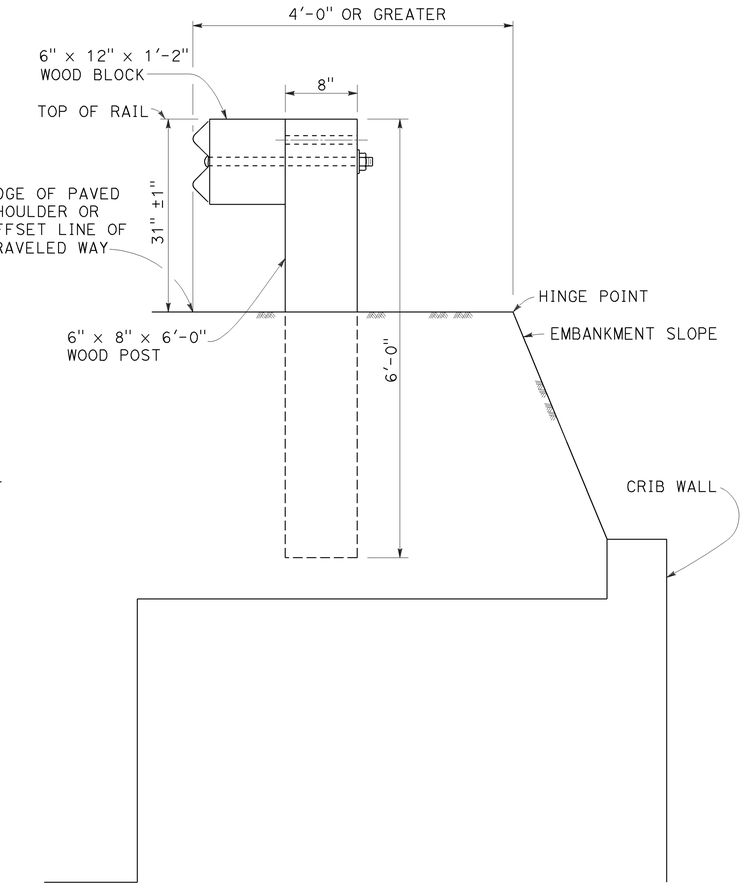

DETAIL D

INSTALLATION AT EARTH RETAINING WALLS

NOTES:

1. These installation details also applicable to steel line post installations. For Detail A, C, and D, where steel line post installations are constructed, W6 x 8.5 or W6 x 9 steel post, 6'-0" in length, with 6" x 12" x 1'-2" notched wood blocks or notched recycled plastic blocks are to be used in place of the size of wood post and wood block shown. For Detail B, where steel line post installations are constructed, W6 x 15 steel post, 8'-0" in length, with 8" x 12" x 1'-2" notched wood blocks or notched recycled plastic blocks are to be used in place of the size of wood post and wood block shown. For additional installation details, see Revised Standard Plan RSP A77L1 and RSP A77L2.
2. Where the distance between the face of the rail and the hinge point is less than 2'-6", see the Project Plans for special details.
3. For dike positioning with MGS installations, see Revised Standard Plan RSP A77N4.

STATE OF CALIFORNIA
DEPARTMENT OF TRANSPORTATION

MIDWEST GUARDRAIL SYSTEM TYPICAL LINE POST EMBEDMENT AND HINGE POINT OFFSET DETAILS

NO SCALE

RSP A77N3 DATED NOVEMBER 15, 2013 SUPERSEDES RSP A77N3 DATED JULY 19, 2013 THAT SUPPLEMENTS THE STANDARD PLANS BOOK DATED 2010.

REVISED STANDARD PLAN RSP A77N3

10-29-13

Dist	COUNTY	ROUTE	POST MILES TOTAL PROJECT	SHEET No.	TOTAL SHEETS
10	Tuo	120	R19.4/R20.0	42	119

Randell D. Hiatt
REGISTERED CIVIL ENGINEER

July 19, 2013
PLANS APPROVAL DATE

REGISTERED PROFESSIONAL ENGINEER
Randell D. Hiatt
No. C50200
Exp. 6-30-15
CIVIL
STATE OF CALIFORNIA

THE STATE OF CALIFORNIA OR ITS OFFICERS OR AGENTS SHALL NOT BE RESPONSIBLE FOR THE ACCURACY OR COMPLETENESS OF SCANNED COPIES OF THIS PLAN SHEET.

TO ACCOMPANY PLANS DATED 6-22-15

NOTES:

1. When necessary to place dike more than 7" in front of face of MGS, only Type C dike may be used. For dike details, see Revised Standard Plan RSP A87B.
2. For standard railing post embedment, see Revised Standard Plan RSP A77N3.
3. MGS delineation to be used where shown on the Project Plans.
4. When dike or curb is placed under MGS, the maximum height of the dike or curb shall be 6". Mountable dike should not be used. For dike and curb details, see Revised Standard Plans RSP A87A and RSP A87B.
5. For details of typical distance between the face of rail and hinge point, see Revised Standard Plan RSP A77N3.
6. For steel line posts, use 1/4 - 20 self-tapping screws in 0.22" diameter holes or 1/4" bolts in 9/32" diameter holes.

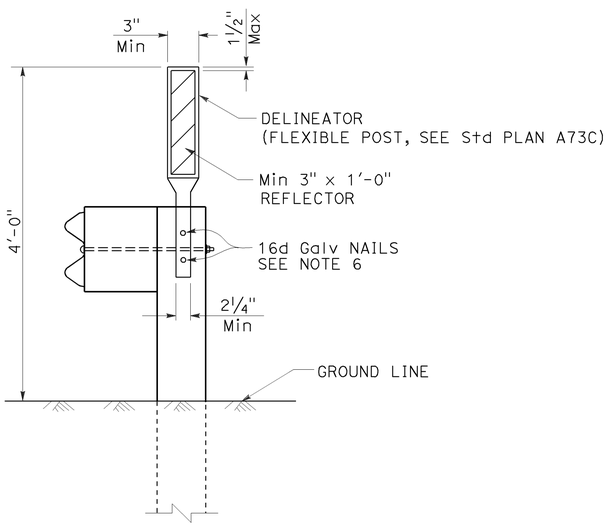

MGS DELINEATION
See Note 3

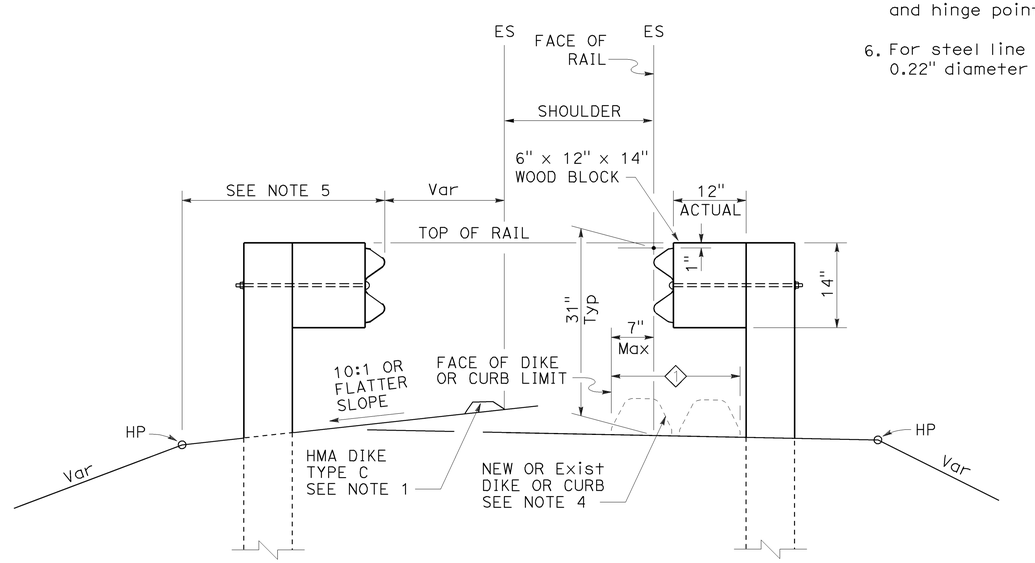

DIKE POSITIONING
See Note 1

1 PERMISSIBLE DIKE OR CURB PLACEMENT AREA

STATE OF CALIFORNIA
DEPARTMENT OF TRANSPORTATION

MIDWEST GUARDRAIL SYSTEM TYPICAL RAILING DELINEATION AND DIKE POSITIONING DETAILS

NO SCALE

RSP A77N4 DATED JULY 19, 2013 SUPPLEMENTS THE STANDARD PLANS BOOK DATED 2010.

REVISED STANDARD PLAN RSP A77N4

2010 REVISED STANDARD PLAN RSP A77N4

7-10-13

Dist	COUNTY	ROUTE	POST MILES TOTAL PROJECT	SHEET No.	TOTAL SHEETS
10	Tuo	120	R19.4/R20.0	43	119

Randell D. Hiatt
REGISTERED CIVIL ENGINEER

July 19, 2013
PLANS APPROVAL DATE

REGISTERED PROFESSIONAL ENGINEER
Randell D. Hiatt
No. C50200
Exp. 6-30-15
CIVIL
STATE OF CALIFORNIA

THE STATE OF CALIFORNIA OR ITS OFFICERS OR AGENTS SHALL NOT BE RESPONSIBLE FOR THE ACCURACY OR COMPLETENESS OF SCANNED COPIES OF THIS PLAN SHEET.

TO ACCOMPANY PLANS DATED 6-22-15

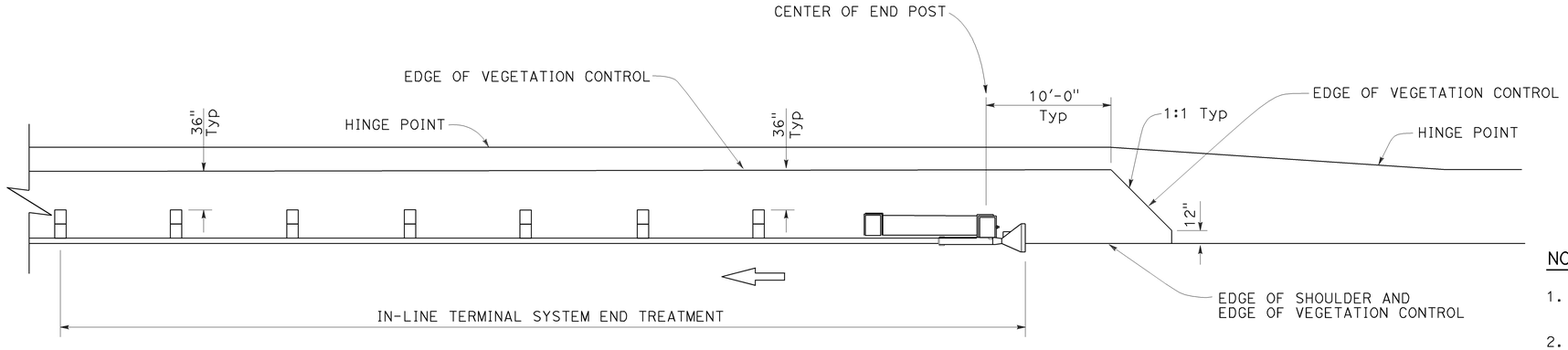

PLAN

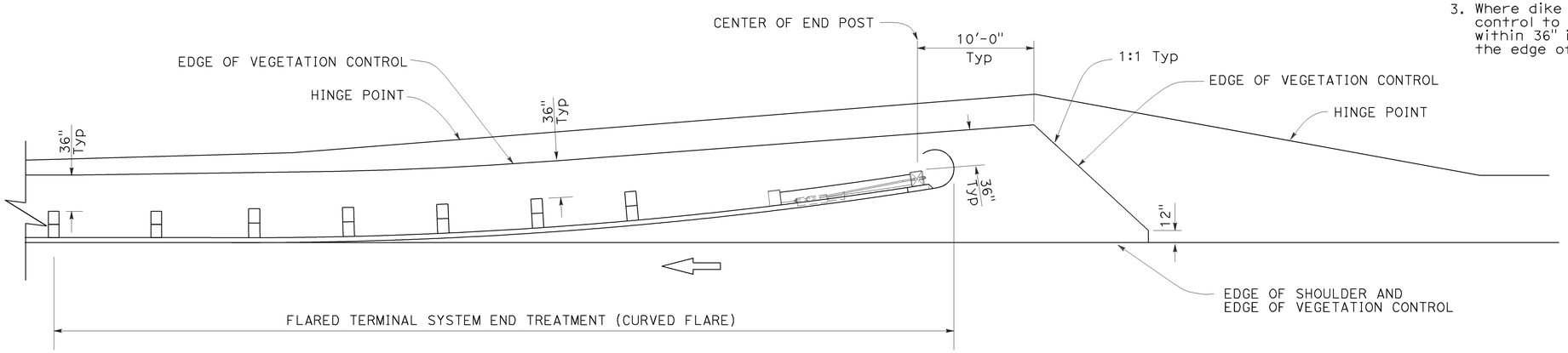

PLAN

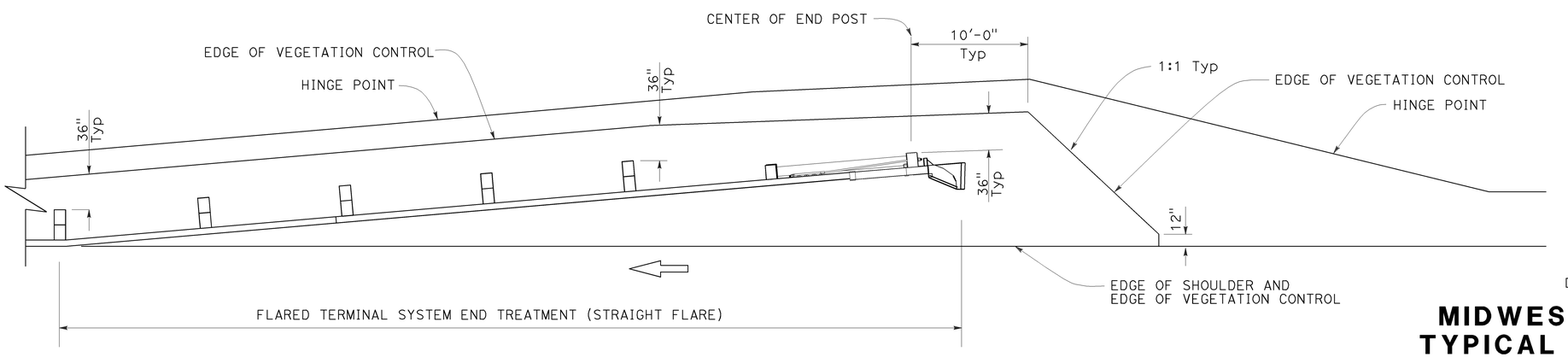

PLAN

NOTES:

1. See Revised Standard Plan RSP A77N5 for additional vegetation control details.
2. Where the distance between back of post and hinge point is less than 42", construct vegetation control to 6" from hinge point while maintaining the 8" block-out at back of post. If the 8" block-out at back of post can not be maintained, construct vegetation control flush with the back edge of post.
3. Where dike is constructed under railing, construct vegetation control to back edge of dike. Where paved shoulder is constructed within 36" in front of the post, construct vegetation control to the edge of paved shoulder.

STATE OF CALIFORNIA
DEPARTMENT OF TRANSPORTATION

MIDWEST GUARDRAIL SYSTEM TYPICAL VEGETATION CONTROL FOR TERMINAL SYSTEM END TREATMENTS

NO SCALE

RSP A77N6 DATED JULY 19, 2013 SUPPLEMENTS THE STANDARD PLANS BOOK DATED 2010.

REVISED STANDARD PLAN RSP A77N6

2010 REVISED STANDARD PLAN RSP A77N6

6-12-13

Dist	COUNTY	ROUTE	POST MILES TOTAL PROJECT	SHEET No.	TOTAL SHEETS
10	Tuo	120	R19.4/R20.0	44	119

Randell D. Hiatt
REGISTERED CIVIL ENGINEER

July 19, 2013
PLANS APPROVAL DATE

REGISTERED PROFESSIONAL ENGINEER
Randell D. Hiatt
No. C50200
Exp. 6-30-15
CIVIL
STATE OF CALIFORNIA

THE STATE OF CALIFORNIA OR ITS OFFICERS OR AGENTS SHALL NOT BE RESPONSIBLE FOR THE ACCURACY OR COMPLETENESS OF SCANNED COPIES OF THIS PLAN SHEET.

TO ACCOMPANY PLANS DATED 6-22-15

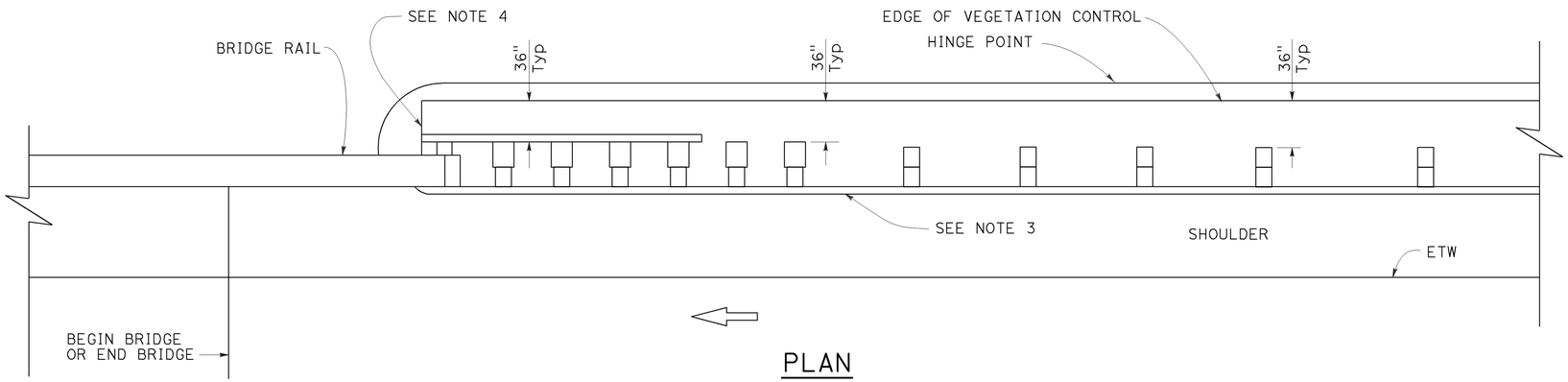

PLAN

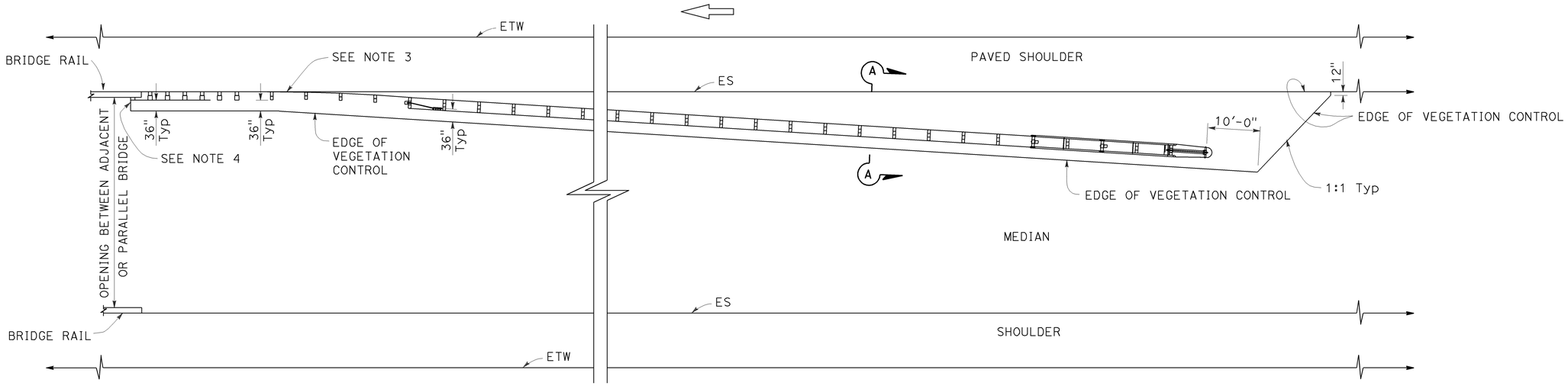

PLAN

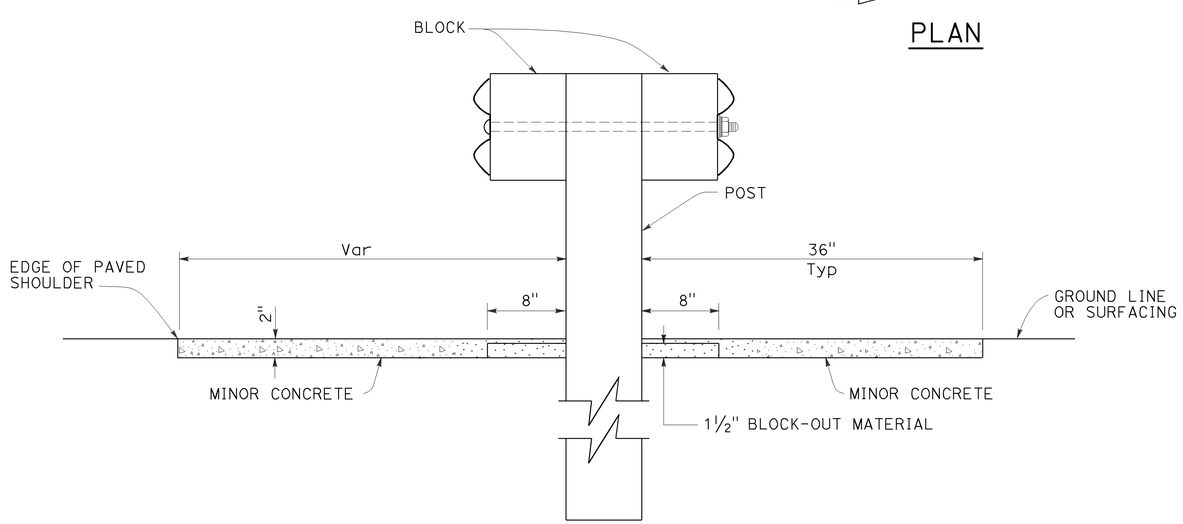

SECTION A-A

NOTES:

1. See Revised Standard Plan RSP A77N5 for additional vegetation control details.
2. Where the distance between back of post and hinge point is less than 42", construct vegetation control to 6" from hinge point while maintaining the 8" block-out at back of post. If the 8" block-out at back of post can not be maintained, construct vegetation control flush with the back edge of post.
3. Where dike is constructed under railing, construct vegetation control to back edge of dike. Where paved shoulder is constructed within 36" in front of the post, construct vegetation control to the edge of paved shoulder.
4. End vegetation control at end of backside rail element.

STATE OF CALIFORNIA
DEPARTMENT OF TRANSPORTATION

MIDWEST GUARDRAIL SYSTEM TYPICAL VEGETATION CONTROL AT STRUCTURE APPROACH

NO SCALE

RSP A77N7 DATED JULY 19, 2013 SUPPLEMENTS THE STANDARD PLANS BOOK DATED 2010.

REVISED STANDARD PLAN RSP A77N7

2010 REVISED STANDARD PLAN RSP A77N7

6-12-13

Dist	COUNTY	ROUTE	POST MILES TOTAL PROJECT	SHEET No.	TOTAL SHEETS
10	Tuo	120	R19.4/R20.0	45	119

Randell D. Hiatt
REGISTERED CIVIL ENGINEER

July 19, 2013
PLANS APPROVAL DATE

REGISTERED PROFESSIONAL ENGINEER
Randell D. Hiatt
No. C50200
Exp. 6-30-15
CIVIL
STATE OF CALIFORNIA

THE STATE OF CALIFORNIA OR ITS OFFICERS OR AGENTS SHALL NOT BE RESPONSIBLE FOR THE ACCURACY OR COMPLETENESS OF SCANNED COPIES OF THIS PLAN SHEET.

TO ACCOMPANY PLANS DATED 6-22-15

2010 REVISED STANDARD PLAN RSP A77Q1

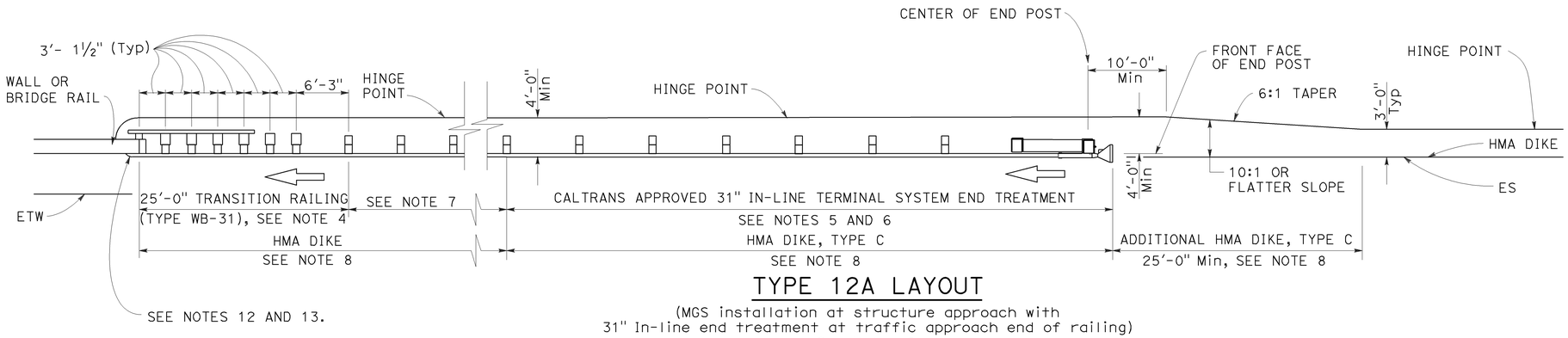

TYPE 12A LAYOUT

(MGS installation at structure approach with
31" In-line end treatment at traffic approach end of railing)
See Notes 9

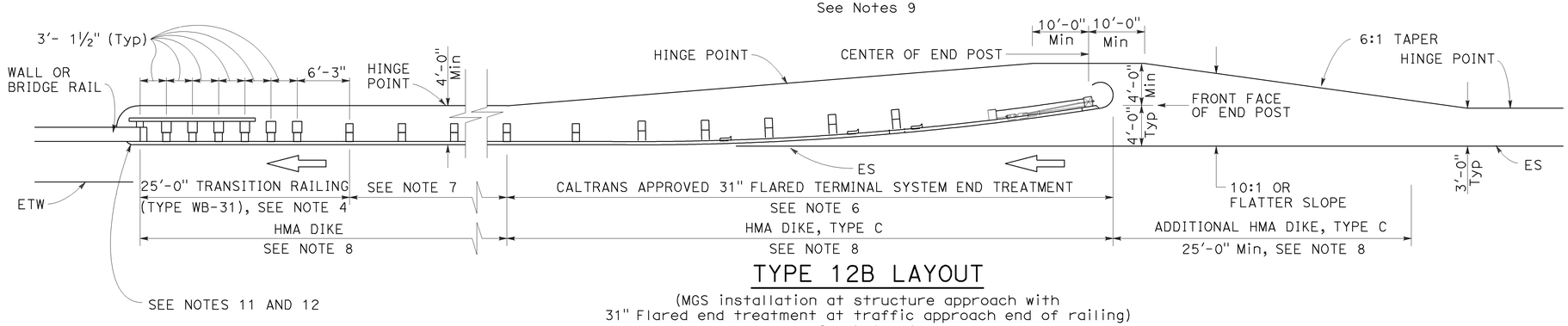

TYPE 12B LAYOUT

(MGS installation at structure approach with
31" Flared end treatment at traffic approach end of railing)
See Notes 9

NOTES:

1. Line post, blocks and hardware to be used are shown on Revised Standard Plans RSP A77L1, RSP A77L2, RSP A77M1, RSP A77N1 and RSP A77N2.
2. MGS post spacing to be 6'-3" center to center, except as otherwise noted.
3. Except as noted, line posts are 6" x 8" x 6'-0" wood with 6" x 12" x 1'-2" wood blocks. W6 x 8.5 or W6 x 9 steel posts, 6'-0" in length, with 6" x 12" x 1'-2" notched wood blocks or plastic blocks may be used for 6" x 8" x 6'-0" wood posts with 6" x 12" x 1'-2" wood blocks where applicable and when specified.
4. For Transition Railing (Type WB-31) details for Types 12A and 12B Layouts, see Revised Standard Plan RSP A77U4.
5. 31" in-line terminal system end treatments are used where site conditions will not accommodate a 31" flared end treatment.
6. The type 31" of terminal system end treatment to be used will be shown on the Project Plans.
7. Dependent on site conditions (embankment height, side slopes, or other fixed objects), it may be advisable to construct additional guard railing (a length equal to multiples of 12'-6" with 6'-3" post spacing) between the transition railing and end treatment. A 12.5 degree angle of departure can be drawn on the Project Plans from the edge of traveled way through the outer most point of the fixed object to determine the additional length of railing needed.
8. Where placement of dike is required with guard railing installations, see Revised Standard Plan RSP A77N4 for dike positioning details.
9. Type 12A or Type 12B Layouts are typically used:
   a. To the right of approaching traffic, at the end of a structure, on two-lane conventional highway where the roadbed width across the structure is less than 40 feet.
   b. To the left of approaching traffic, at the end of a structure, on two-lane conventional highway where the roadbed width across the structure is less than 40 feet.
   c. To the right of approaching traffic at the end of each structure on multilane freeways or expressways with separate adjacent or parallel bridges.
   d. To the right of approaching traffic at the end of the structure on multilane freeways or expressways with decked median on the bridge.
10. See Revised Standard Plan RSP A77Q3 for typical layout used left of approaching traffic at the ends of each structure on multilane freeways or expressways with separate adjacent or parallel bridges.
11. For additional details of typical connections to bridge rail, see Connection Detail AA on Revised Standard Plans RSP A77U1 and RSP A77U2 and Connection Detail FF on Revised Standard Plans RSP A77V1 and RSP A77V2.
12. For additional details of a typical connection to walls or abutments, see Revised Standard Plan RSP A77U3.

STATE OF CALIFORNIA
DEPARTMENT OF TRANSPORTATION

MIDWEST GUARDRAIL SYSTEM TYPICAL LAYOUTS FOR STRUCTURE APPROACH

NO SCALE

RSP A77Q1 DATED JULY 19, 2013 SUPPLEMENTS THE STANDARD PLANS BOOK DATED 2010.

REVISED STANDARD PLAN RSP A77Q1

Dist	COUNTY	ROUTE	POST MILES TOTAL PROJECT	SHEET No.	TOTAL SHEETS
10	Tuo	120	R19.4/R20.0	46	119

Randell D. Hiatt
REGISTERED CIVIL ENGINEER

July 19, 2013
PLANS APPROVAL DATE

REGISTERED PROFESSIONAL ENGINEER
Randell D. Hiatt
No. C50200
Exp. 6-30-15
CIVIL
STATE OF CALIFORNIA

THE STATE OF CALIFORNIA OR ITS OFFICERS OR AGENTS SHALL NOT BE RESPONSIBLE FOR THE ACCURACY OR COMPLETENESS OF SCANNED COPIES OF THIS PLAN SHEET.

TO ACCOMPANY PLANS DATED 6-22-15

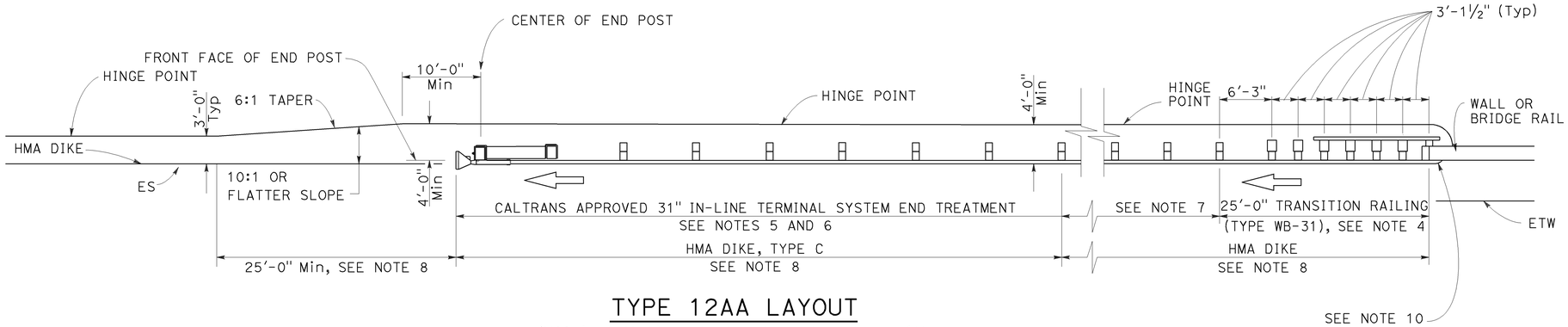

TYPE 12AA LAYOUT

(MGS installation at structure departure with
31" in-line end treatment at trailing end of railing)
See Notes 8 and 9

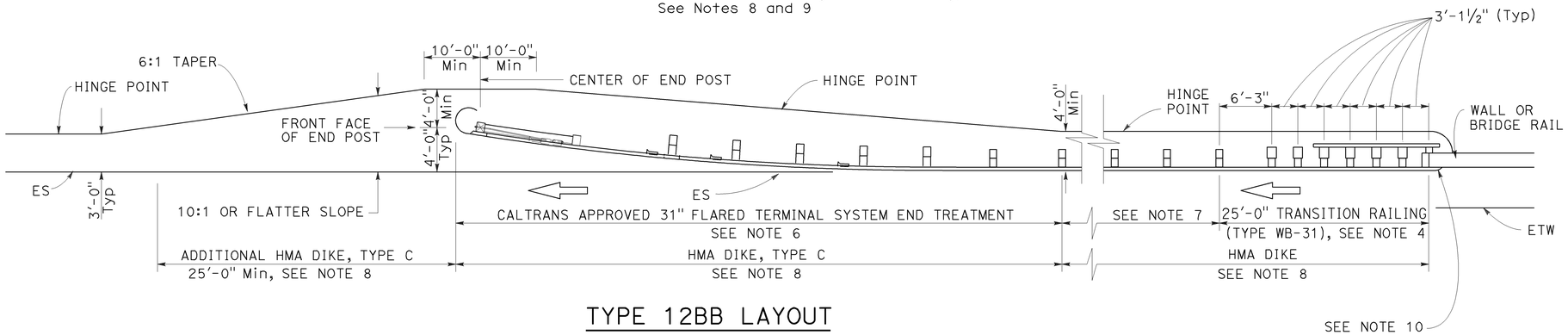

TYPE 12BB LAYOUT

(MGS installation at structure departure with
31" flared end treatment at trailing end of railing)
See Notes 8 and 9

NOTES:

1. Line post, blocks and hardware to be used are shown on Revised Standard Plans RSP A77L1, RSP A77L2, RSP A77M1, RSP A77N1 and RSP A77N2.
2. MGS post spacing to be 6'-3" center to center, except as otherwise noted.
3. Except as noted, line posts are 6" x 8" x 6'-0" wood with 6" x 12" x 1'-2" wood blocks. W6 x 8.5 or W6 x 9 steel posts, 6'-0" in length, with 6" x 12" x 1-2" notched wood blocks or notched recycled plastic blocks may be used for 6" x 8" x 6'-0" wood posts with 6" x 12" x 1'-2" wood blocks where applicable and when specified.
4. For Transition Railing (Type WB-31) details for Types 12AA and 12BB Layouts, see Revised Standard Plan RSP A77U4.
5. 31" in-line terminal system treatments are used where site conditions will not accommodate a 31" flared end treatment.
6. The type of 31" terminal system to be used will be shown on the Project Plans.
7. Dependent on site conditions (embankment height, side slopes, other fixed objects), it may be advisable to construct additional MGS (a length equal to multiples of 12'-6" with 6'-3" post spacing) between the transition railing and 31" end treatments.
8. Where placement of dike is required with MGS installations, see Revised Standard Plan RSP A77N4 for dike positioning details.
9. Type 12AA or Type 12BB Layouts are typically used to the right of traffic departing a structure on two-way conventional highways where the roadbed width across the structure is less than 40 feet.
10. For additional details of typical connections to bridge rail, see Connection Detail CC on Revised Standard Plan RSP A77U2 and Connection Detail HH on Revised Standard Plan RSP A77V2.

STATE OF CALIFORNIA
DEPARTMENT OF TRANSPORTATION

MIDWEST GUARDRAIL SYSTEM TYPICAL LAYOUTS FOR STRUCTURE DEPARTURE

NO SCALE

RSP A77Q4 DATED JULY 19, 2013 SUPPLEMENTS THE STANDARD PLANS BOOK DATED 2010.

REVISED STANDARD PLAN RSP A77Q4

2010 REVISED STANDARD PLAN RSP A77Q4

6-19-13

Dist	COUNTY	ROUTE	POST MILES TOTAL PROJECT	SHEET No.	TOTAL SHEETS
10	Tuo	120	R19.4/R20.0	47	119

Randell D. Hiatt
REGISTERED CIVIL ENGINEER

July 19, 2013
PLANS APPROVAL DATE

REGISTERED PROFESSIONAL ENGINEER
Randell D. Hiatt
No. C50200
Exp. 6-30-15
CIVIL
STATE OF CALIFORNIA

THE STATE OF CALIFORNIA OR ITS OFFICERS OR AGENTS SHALL NOT BE RESPONSIBLE FOR THE ACCURACY OR COMPLETENESS OF SCANNED COPIES OF THIS PLAN SHEET.

TO ACCOMPANY PLANS DATED 6-22-15

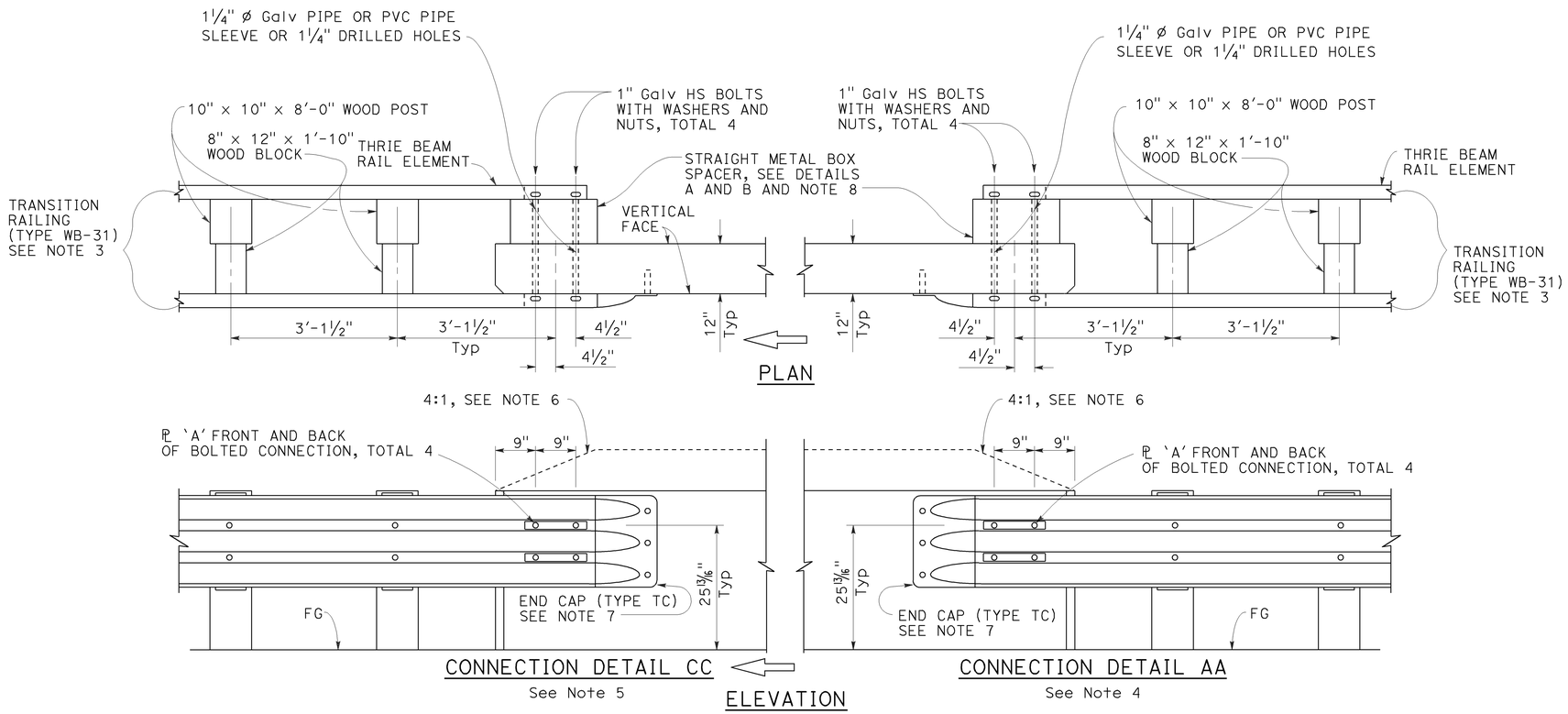

MIDWEST GUARDRAIL SYSTEM CONNECTION TO BRIDGE RAILING WITHOUT SIDEWALK

NOTES:

1. See Revised Standard Plan RSP A77U1 for additional connection details to bridges without sidewalks.
2. Additional details of posts, blocks and hardware are shown on Revised Standard Plans RSP A77M1, RSP A77N1 and RSP A77N2.
3. For additional details of Transition Railing (Type WB-31), see Revised Standard Plan RSP A77U4. Transition Railing (Type WB-31) transitions the 12 gauge MGS railing section to a heavier gage nested thrie beam railing section which is connected to the concrete bridge railing.
4. For typical use of Connection Detail AA, see Layout Types 12A and 12B on Revised Standard Plan RSP A77Q1, Layout Types 12C and 12D on Revised Standard Plan RSP A77Q2, and Layout Type 12E on Revised Standard Plan RSP A77Q3.
5. For typical use of Connection Detail CC, see Layout Types 12AA and 12BB on Revised Standard Plan RSP A77Q4 and Layout Type 12CC on Revised Standard Plan RSP A77Q5.
6. Where the height of the bridge railing exceeds the height of the thrie beam railing by more than 1" at Connection Detail AA and connection Detail CC, taper the top of the end of the bridge railing at 4:1 to match the top elevation of the thrie beam railing.
7. For details of End Cap (Type TC), see Revised Standard Plan RSP A77U4.
8. See Revised Standard Plan RSP A77U4 for additional details regarding depth dimension for straight metal box spacer.

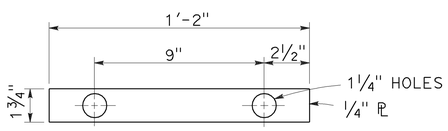

PLATE 'A'

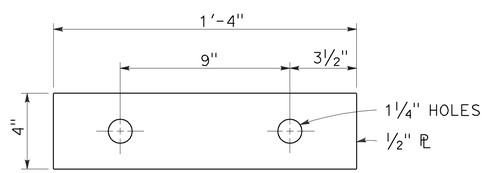

PLATE 'B'
(For backside of connection BB)

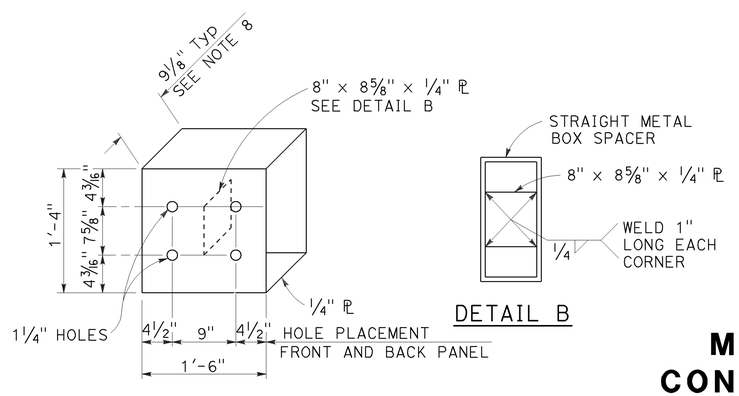

STATE OF CALIFORNIA
DEPARTMENT OF TRANSPORTATION

MIDWEST GUARDRAIL SYSTEM CONNECTIONS TO BRIDGE RAILINGS WITHOUT SIDEWALKS DETAILS No. 2

NO SCALE

RSP A77U2 DATED JULY 19, 2013 SUPPLEMENTS THE STANDARD PLANS BOOK DATED 2010.

REVISED STANDARD PLAN RSP A77U2

2010 REVISED STANDARD PLAN RSP A77U2

6-20-13

Dist	COUNTY	ROUTE	POST MILES TOTAL PROJECT	SHEET No.	TOTAL SHEETS
10	Tuo	120	R19.4/R20.0	48	119

Randell D. Hiatt
REGISTERED CIVIL ENGINEER

January 23, 2015
PLANS APPROVAL DATE

REGISTERED PROFESSIONAL ENGINEER
Randell D. Hiatt
No. C50200
Exp. 6-30-15
CIVIL
STATE OF CALIFORNIA

THE STATE OF CALIFORNIA OR ITS OFFICERS OR AGENTS SHALL NOT BE RESPONSIBLE FOR THE ACCURACY OR COMPLETENESS OF SCANNED COPIES OF THIS PLAN SHEET.

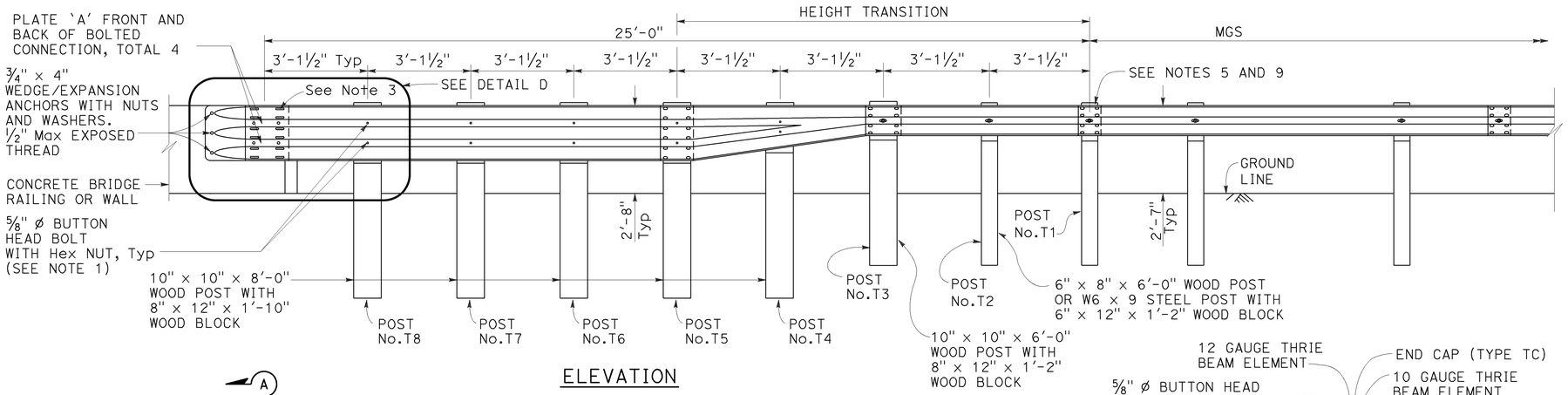

ELEVATION

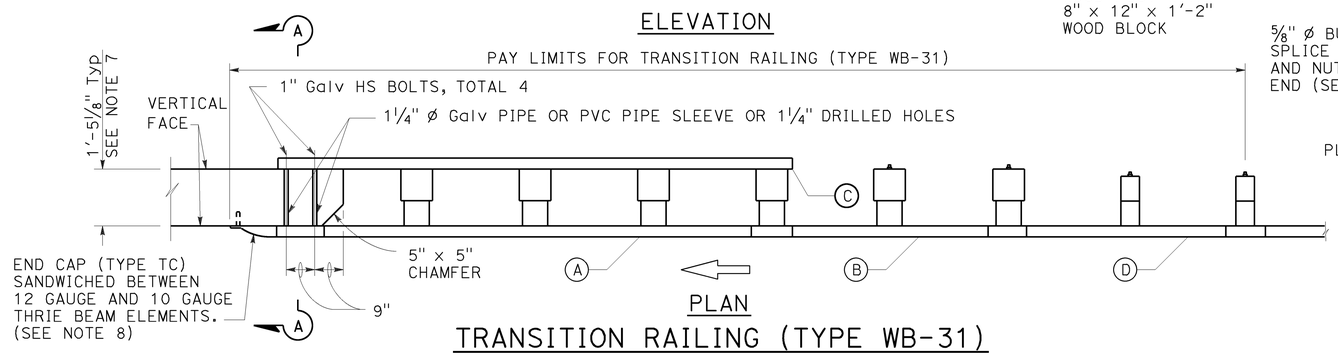

PLAN

TRANSITION RAILING (TYPE WB-31)

(No Blockout Attachment)

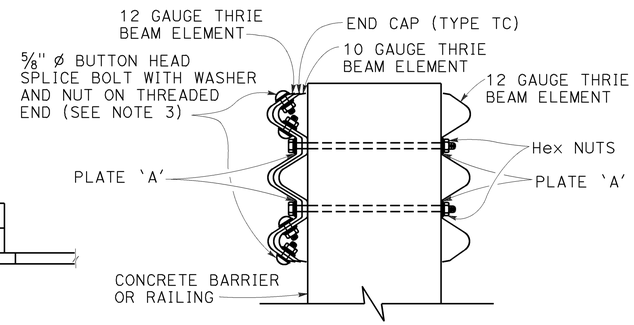

SECTION A-A

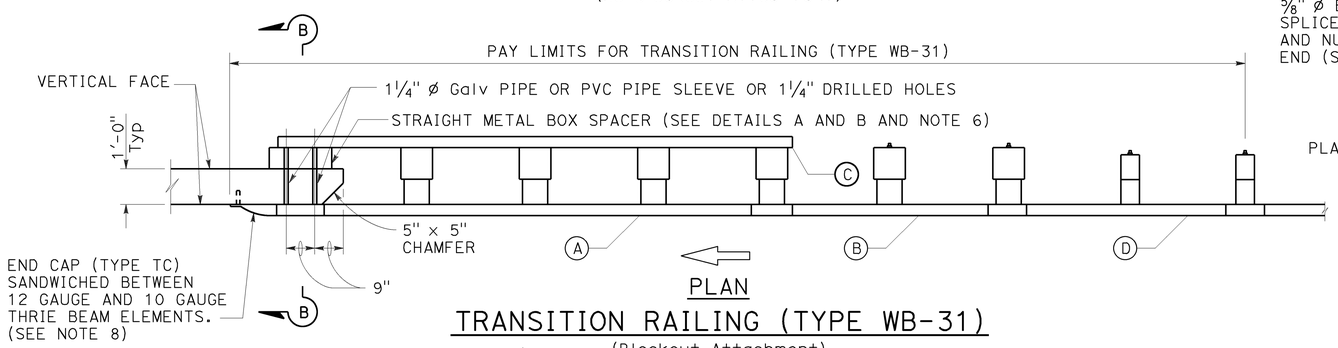

PLAN

TRANSITION RAILING (TYPE WB-31)

(Blockout Attachment)

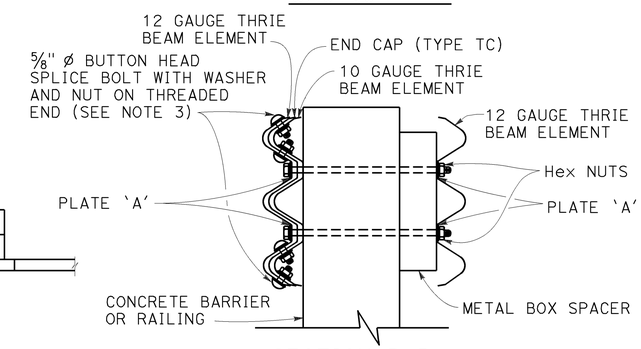

SECTION B-B

LEGEND:

(A) NESTED THRIE BEAM ELEMENTS (ONE 12 GAUGE ELEMENT NESTED OVER ONE 10 GAUGE ELEMENT).

(B) ONE ASYMMETRICAL 10 GAUGE "W" BEAM TO THRIE BEAM ELEMENT.

(C) ONE 12 GAUGE THRIE BEAM ELEMENT.

(D) ONE 10 GAUGE "W" BEAM RAIL ELEMENT (7'-3 1/2"LENGTH)

10 GAUGE = 0.138" THICK
12 GAUGE = 0.108" THICK

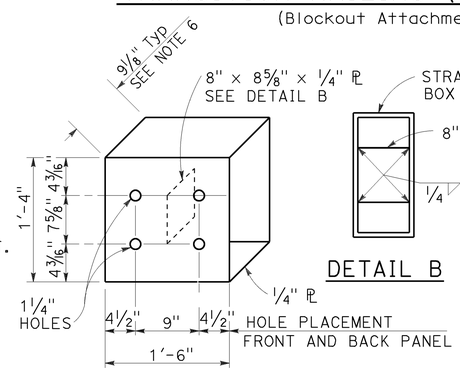

DETAIL A

STRAIGHT METAL BOX SPACER

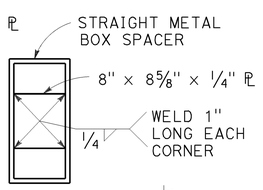

DETAIL B

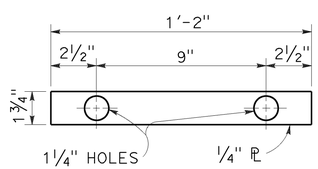

DETAIL C

PLATE 'A'

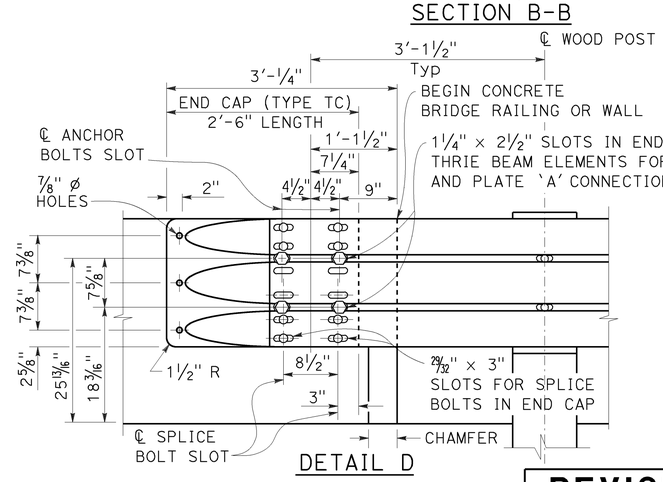

DETAIL D

NOTES:

TO ACCOMPANY PLANS DATED 6-22-15

1. Use 5/8" ø Button head bolts and hex nuts for connections to posts. No washer on rail face for bolted connections to post.

2. The nested rail elements, end cap, and 'W' beam to thrie beam element may be spliced together prior to bolting the elements to the wood post and concrete barrier or railing.

3. Exterior splice bolt holes for rail element splices at Post No. T5 and the connection to the concrete barrier or railing shall be the standard 29/32" x 1 1/8" slot size. Interior splice bolt holes at these locations may be increased up to 1 1/4" ø. Only the top 4 and the bottom 4 splice bolts with washers and nuts are required for rail splices at Post No. T5 and the connection to the concrete barrier or railing.

4. The top elevation of Posts No. T2 through No. T7 shall not project more than 1" above the top elevation of the rail element.

5. Typically, the railing connected to Transition Railing (Type WB-31) will be either standard railing section of MGS with height transition ratio of 150:1 or a Caltrans approved 31" end treatment attached to Post No. T1.

6. The depth of the metal box spacer varies from the 9 1/8" to 1 1/2" and is dependent on the width of the concrete railing or wall. The combined dimension for the depth of the metal box spacer plus the width of railing or wall is typically 21 1/8". Where the space between the backside of the concrete railing or wall and the rear thrie beam element is less than 1 1/2", metal plates similar to Plate 'A' are to be used as spacers.

7. Where the width of the concrete railing or wall is greater than 17 1/8", wood blocks are to be used to fill the space created between the backside of Posts No. T5 through No. T8 and the rear thrie beam element. These wood blocks shall be 8" in width and 1'-2" in length. The dimension between the front thrie beam element and the rear thrie beam element is to match the width of the concrete railing or wall.

8. End cap may be installed over 12 gauge and 10 gauge thrie beam elements where transition railing is installed on the departure end of bridge railing.

9. Conform standard railing section height to 31" at Post No. T1 using height transition ratio of 150:1.

STATE OF CALIFORNIA
DEPARTMENT OF TRANSPORTATION

MIDWEST GUARDRAIL SYSTEM TRANSITION RAILING (TYPE WB-31)

NO SCALE

RSP A77U4 DATED JANUARY 23, 2015 SUPERSEDES RSP A77U4 DATED NOVEMBER 15, 2013 AND RSP A77U4 DATED JULY 19, 2013 THAT SUPPLEMENTS THE STANDARD PLANS BOOK DATED 2010.

REVISED STANDARD PLAN RSP A77U4

2010 REVISED STANDARD PLAN RSP A77U4

1-8-15

Dist	COUNTY	ROUTE	POST MILES TOTAL PROJECT	SHEET No.	TOTAL SHEETS
10	Tuo	120	R19.4/R20.0	49	119

REGISTERED CIVIL ENGINEER

July 18, 2014
PLANS APPROVAL DATE

REGISTERED PROFESSIONAL ENGINEER Glenn DeCou No. C34547 Exp. 9-30-15 CIVIL STATE OF CALIFORNIA

THE STATE OF CALIFORNIA OR ITS OFFICERS OR AGENTS SHALL NOT BE RESPONSIBLE FOR THE ACCURACY OR COMPLETENESS OF SCANNED COPIES OF THIS PLAN SHEET.

TO ACCOMPANY PLANS DATED 6-22-15

2010 REVISED STANDARD PLAN RSP A85

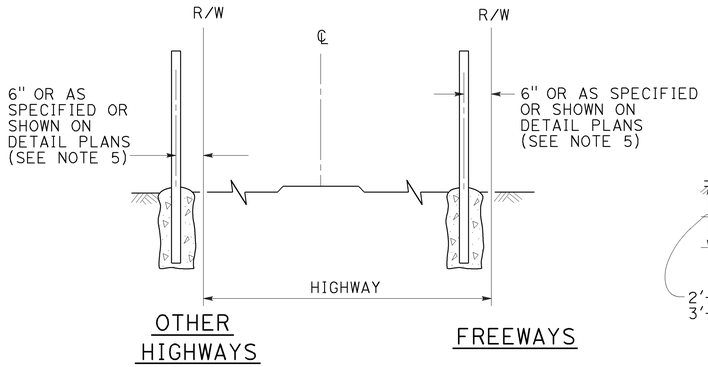

FENCE LOCATION

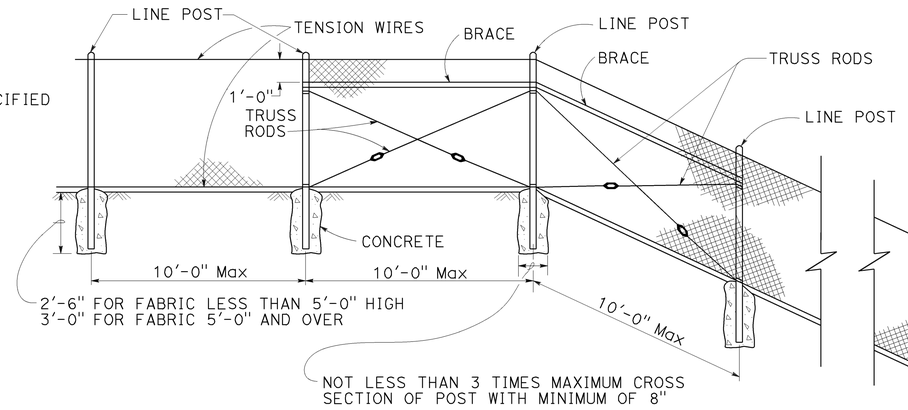

CHAIN LINK FENCE ON SHARP BREAK IN GRADE

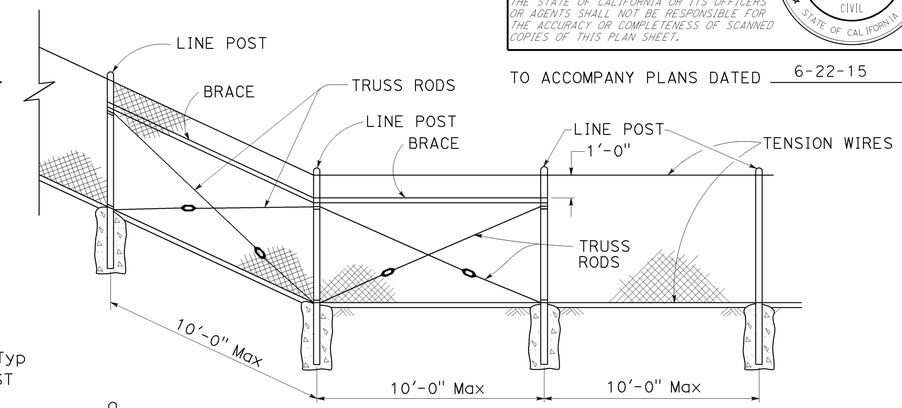

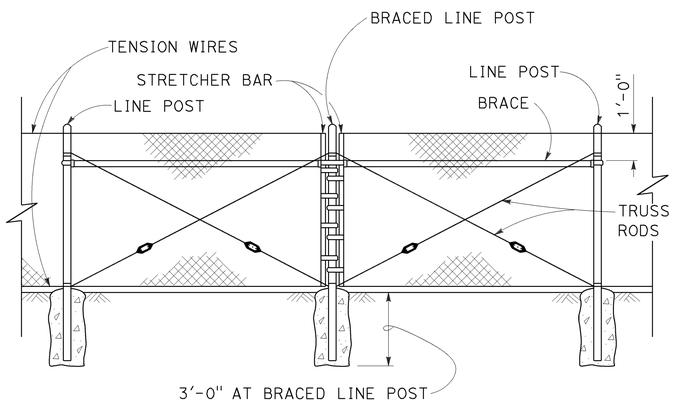

BRACED LINE POST INSTALLATION

Braced line post at intervals not exceeding 1000'

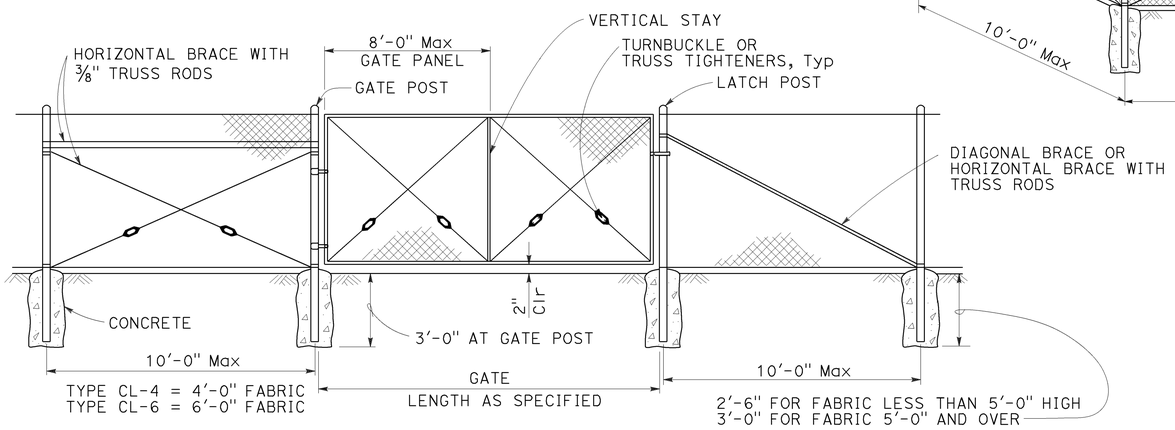

CHAIN LINK GATE INSTALLATION

GATE POST			
FENCE HEIGHT	GATE WIDTHS	ROUND OD PIPE	WEIGHT (lb/ft)
6'-0" AND LESS	UP THRU 6'-0"	2.875"	5.80
	OVER 6'-0" THRU 12'-0"	4.500"	10.80
	OVER 12'-0" THRU 18'-0"	5.563"	14.63
	OVER 18'-0" TO 24'-0" Max	6.625"	18.99
OVER 6'-0" TO 8'-0" Max	UP THRU 6'-0"	3.500"	7.58
	OVER 6'-0" THRU 12'-0"	5.563"	14.63
	OVER 12'-0" THRU 18'-0"	6.625"	18.99
	OVER 18'-0" TO 24'-0" Max	8.625"	28.58

Above post dimensions and weights are minimums. Larger sizes may be used upon approval.

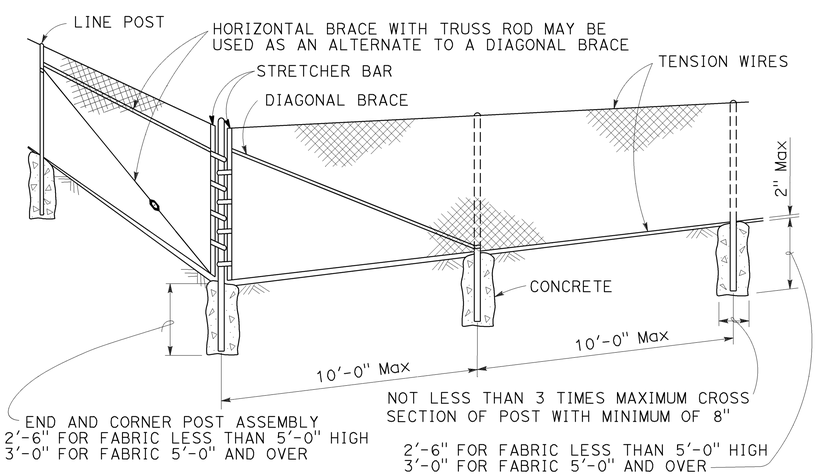

CORNER POST

NOTES:

1. The table below shows minimum sized posts and braces complying with the specifications. Larger or heavier post and brace sizes may be used upon approval.
2. Sections shown in the tables must also comply with the strength requirements and other provisions of the Specifications.
3. Other sections which comply with the strength requirements and other provisions of the Specifications may be used upon approval.
4. Options exercised shall be uniform on any one project.
5. Offset to be 2'-0" at monument locations, measured at right angles to R/W lines. Taper to achieve offset to be at least 20'-0" long.
6. See Revised Standard Plan RSP A85B for Brace, Stretcher Bar, and Truss Tightener Details.

TYPICAL MEMBER DIMENSIONS (See Notes)										
FENCE HEIGHT	LINE POSTS				END, LATCH AND CORNER POSTS		BRACES			
	ROUND OD PIPE	WEIGHT (lb/ft)	ROLL FORMED		ROUND OD PIPE	WEIGHT (lb/ft)	ROUND OD PIPE	WEIGHT (lb/ft)	ROLL FORMED	
			SECTION	WEIGHT (lb/ft)					SECTION	WEIGHT (lb/ft)
6'-0" AND LESS	1.900"	2.72	1.875" x 1.625"	1.85	2.375"	3.65	1.66"	2.27	1.625" x 1.25"	1.35
OVER 6'-0" TO 8'-0" Max	2.375"	3.65	2.25" x 1.70"	2.78	2.875"	5.80	1.66"	2.27	1.625" x 1.25"	1.35

STATE OF CALIFORNIA
DEPARTMENT OF TRANSPORTATION

CHAIN LINK FENCE

NO SCALE

RSP A85 DATED JULY 18, 2014 SUPERSEDES STANDARD PLAN A85 DATED MAY 20, 2011 - PAGE 112 OF THE STANDARD PLANS BOOK DATED 2010.

REVISED STANDARD PLAN RSP A85

7-1-14

Dist	COUNTY	ROUTE	POST MILES TOTAL PROJECT	SHEET No.	TOTAL SHEETS
10	Tuo	120	R19.4/R20.0	50	119

Glenn DeCou
REGISTERED CIVIL ENGINEER

October 19, 2012
PLANS APPROVAL DATE

REGISTERED PROFESSIONAL ENGINEER
Glenn DeCou
No. C34547
Exp. 9-30-13
CIVIL
STATE OF CALIFORNIA

THE STATE OF CALIFORNIA OR ITS OFFICERS OR AGENTS SHALL NOT BE RESPONSIBLE FOR THE ACCURACY OR COMPLETENESS OF SCANNED COPIES OF THIS PLAN SHEET.

TO ACCOMPANY PLANS DATED 6-22-15

2010 REVISED STANDARD PLAN RSP A85B

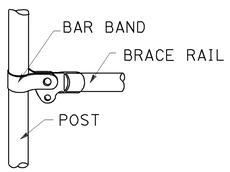

BRACE RAIL

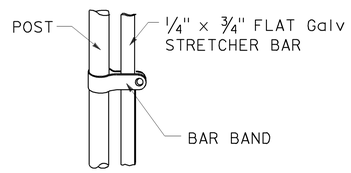

STRETCHER BAR

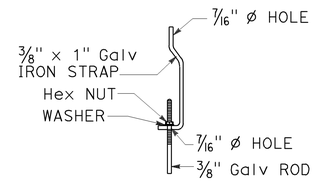

TRUSS TIGHTENER

NOTES:

1. All material for abutment connection to be galvanized.
2. The chain link fabric shall be replaced by barbed wire strands at 12" maximum centers between the double posts.
3. When the width of the culvert makes it necessary to anchor a post to the top of the culvert, a cast iron shoe or other device approved by the Engineer shall be used.
4. Fencing over stream and around headwall may also use Barbed Wire or Wire Mesh fencing with either wood post or steel post installation.
5. See Standard Plan A85 for Chain Link fence dimensions. See Standard Plan A86 for Barbed Wire and Wire Mesh fence dimensions and for wood post and steel post installation.

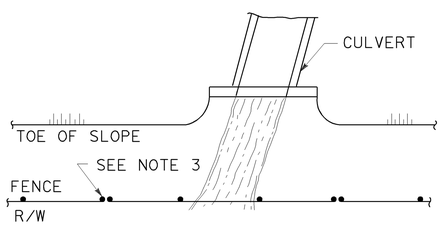

PLAN

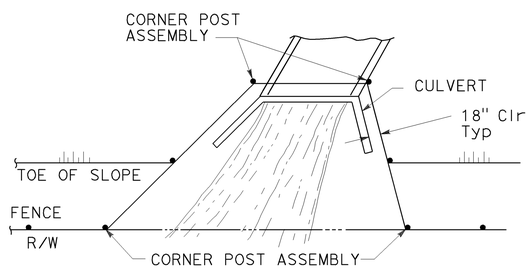

PLAN

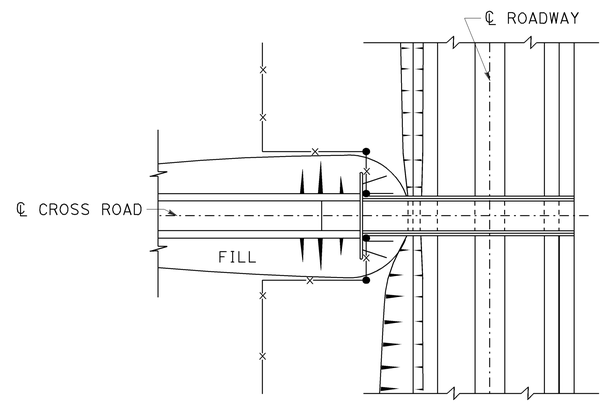

PLAN OF ROADWAY - OVERCROSSING

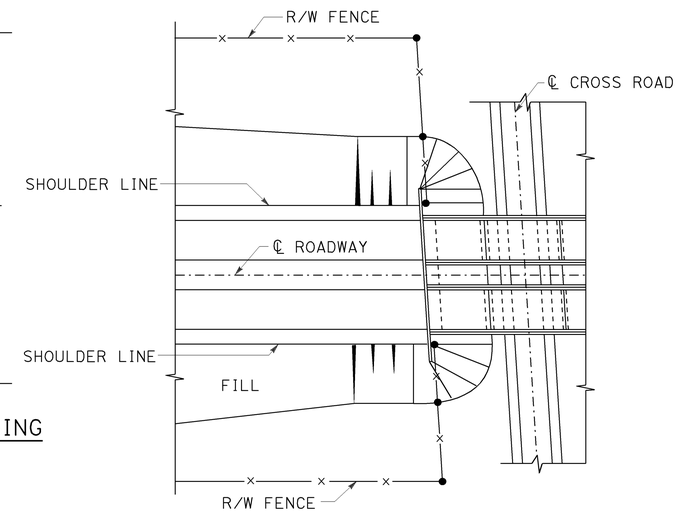

PLAN OF ROADWAY - UNDERCROSSING

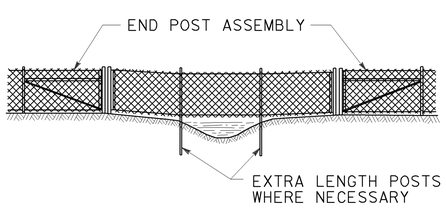

ELEVATION

INSTALLATION OVER STREAM

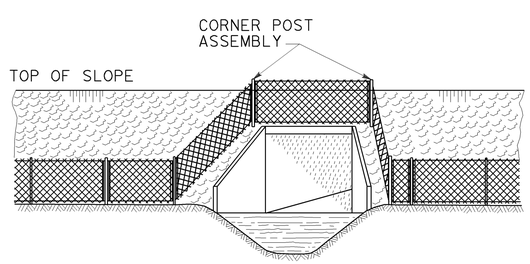

ELEVATION

INSTALLATION AROUND HEADWALL

See Note 4

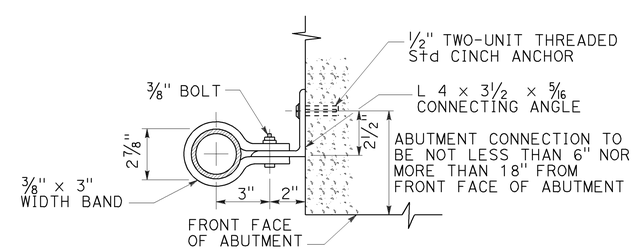

ABUTMENT CONNECTION

TYPICAL INSTALLATION AT BRIDGES

STATE OF CALIFORNIA
DEPARTMENT OF TRANSPORTATION

CHAIN LINK FENCE DETAILS

NO SCALE

RSP A85B DATED OCTOBER 19, 2012 SUPERSEDES STANDARD PLAN A85B
DATED MAY 20, 2011 - PAGE 114 OF THE STANDARD PLANS BOOK DATED 2010.

REVISED STANDARD PLAN RSP A85B

7-19-12

Dist	COUNTY	ROUTE	POST MILES TOTAL PROJECT	SHEET No.	TOTAL SHEETS
10	Tuo	120	R19.4/R20.0	51	119

REGISTERED CIVIL ENGINEER

July 19, 2013
PLANS APPROVAL DATE

REGISTERED PROFESSIONAL ENGINEER
Gurinderpal Bhullar
No. C48815
Exp. 9-30-14
CIVIL
STATE OF CALIFORNIA

THE STATE OF CALIFORNIA OR ITS OFFICERS OR AGENTS SHALL NOT BE RESPONSIBLE FOR THE ACCURACY OR COMPLETENESS OF SCANNED COPIES OF THIS PLAN SHEET.

TO ACCOMPANY PLANS DATED 6-22-15

2010 REVISED STANDARD PLAN RSP T9

TABLE 1

TAPER LENGTH CRITERIA AND CHANNELIZING DEVICE SPACING

SPEED (S)	MINIMUM TAPER LENGTH * FOR WIDTH OF OFFSET 12 FEET (W)				MAXIMUM CHANNELIZING DEVICE SPACING		
					X	Y	Z **
	TANGENT 2L	MERGING L	SHIFTING L/2	SHOULDER L/3	TAPER	TANGENT	CONFLICT
mph	ft	ft	ft	ft	ft	ft	ft
20	160	80	40	27	20	40	10
25	250	125	63	42	25	50	12
30	360	180	90	60	30	60	15
35	490	245	123	82	35	70	17
40	640	320	160	107	40	80	20
45	1080	540	270	180	45	90	22
50	1200	600	300	200	50	100	25
55	1320	660	330	220	55	110	27
60	1440	720	360	240	60	120	30
65	1560	780	390	260	65	130	32
70	1680	840	420	280	70	140	35

* - For other offsets, use the following merging taper length formula for L:
For speed of 40 mph or less, $L = WS^2/60$
For speed of 45 mph or more, $L = WS$

Where: L = Taper length in feet
W = Width of offset in feet
S = Posted speed limit, off-peak 85th-percentile speed prior to work starting, or the anticipated operating speed in mph

** - Use for taper and tangent sections where there are no pavement markings or where there is a conflict between existing pavement markings and channelizers (CA).

TABLE 2

LONGITUDINAL BUFFER SPACE AND FLAGGER STATION SPACING

SPEED *	Min D **	DOWNGRADE Min D ***		
		-3%	-6%	-9%
mph	ft	ft	ft	ft
20	115	116	120	126
25	155	158	165	173
30	200	205	215	227
35	250	257	271	287
40	305	315	333	354
45	360	378	400	427
50	425	446	474	507
55	495	520	553	593
60	570	598	638	686
65	645	682	728	785
70	730	771	825	891

* - Speed is posted speed limit, off-peak 85th-percentile speed prior to work starting, or the anticipated operating speed in mph

** - Longitudinal buffer space or flagger station spacing

*** - Use on sustained downgrade steeper than -3 percent and longer than 1 mile.

TABLE 3

ADVANCE WARNING SIGN SPACING

ROAD TYPE	DISTANCE BETWEEN SIGNS *		
	A	B	C
	ft	ft	ft
URBAN - 25 mph OR LESS	100	100	100
URBAN - MORE THAN 25 mph TO 40 mph	250	250	250
URBAN - MORE THAN 40 mph	350	350	350
RURAL	500	500	500
EXPRESSWAY / FREEWAY	1000	1500	2640

* - The distances are approximate, are intended for guidance purposes only, and should be applied with engineering judgment. These distances should be adjusted by the Engineer for field conditions, if necessary, by increasing or decreasing the recommmended distances.

STATE OF CALIFORNIA
DEPARTMENT OF TRANSPORTATION

TRAFFIC CONTROL SYSTEM TABLES FOR LANE AND RAMP CLOSURES

NO SCALE

RSP T9 DATED JULY 19, 2013 SUPERSEDES RSP T9 DATED APRIL 19, 2013 THAT SUPPLEMENTS THE STANDARD PLANS BOOK DATED 2010.

REVISED STANDARD PLAN RSP T9

Dist	COUNTY	ROUTE	POST MILES TOTAL PROJECT	SHEET No.	TOTAL SHEETS
10	Tuo	120	R19.4/R20.0	52	119

Devinder Singh
REGISTERED CIVIL ENGINEER

October 30, 2015
PLANS APPROVAL DATE

REGISTERED PROFESSIONAL ENGINEER
Devinder Singh
No. C50470
Exp. 6-30-17
CIVIL
STATE OF CALIFORNIA

THE STATE OF CALIFORNIA OR ITS OFFICERS OR AGENTS SHALL NOT BE RESPONSIBLE FOR THE ACCURACY OR COMPLETENESS OF SCANNED COPIES OF THIS PLAN SHEET.

TO ACCOMPANY PLANS DATED 6-22-15

2010 REVISED STANDARD PLAN RSP T13

NOTES:

See Revised Standard Plan RSP T9 for tables.

Use cone spacing X for taper segment, Y for tangent segment or Z for conflict situations, as approriate, per Table 1, unless X, Y, or Z cone spacing is shown on this sheet.

Unless otherwise specified in the special provisions, all temporary warning signs shall have black legend on fluorescent orange background.

California codes are designated by (CA). Otherwise, Federal (MUTCD) codes are shown.

TYPICAL LANE CLOSURE WITH REVERSIBLE CONTROL

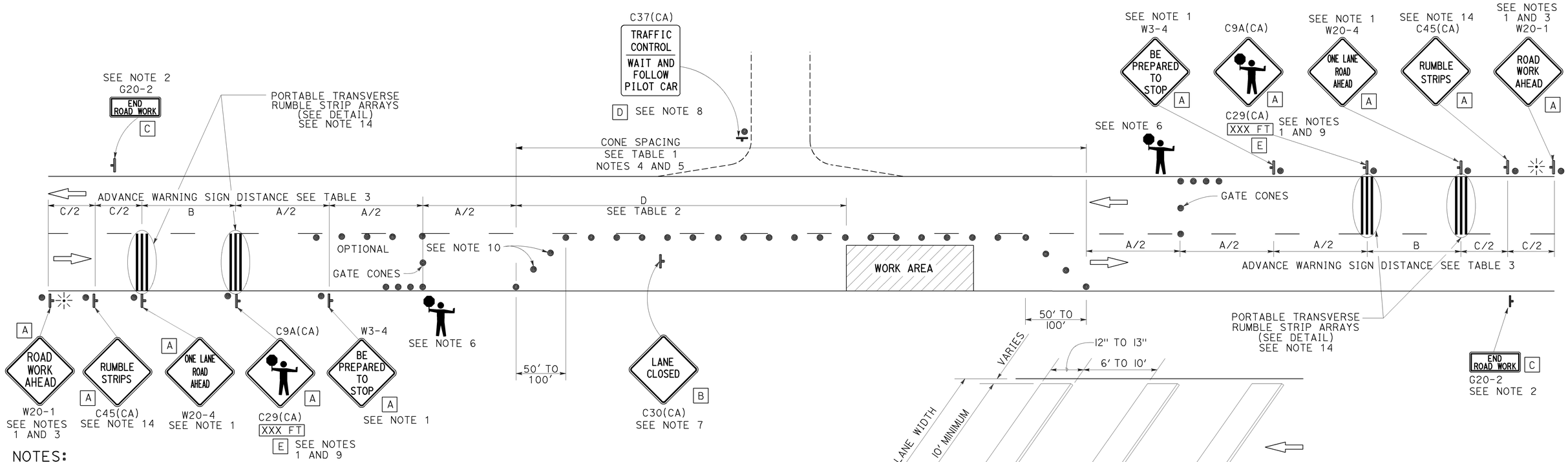

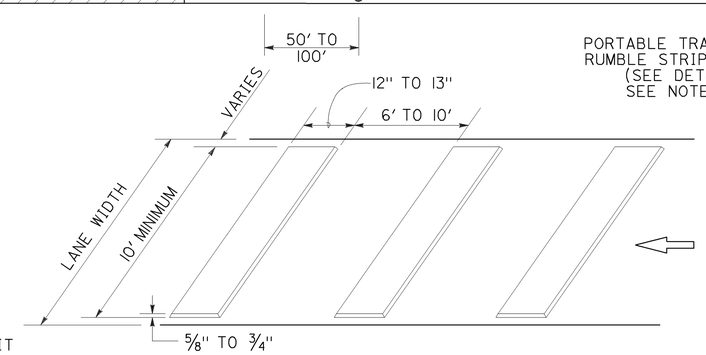

PORTABLE TRANSVERSE RUMBLE STRIP ARRAY DETAIL

NOTES:

1. Each advance warning sign in each direction of travel shall be equipped with at least two flags for daytime closure. Each flag shall be at least 16" x 16" in size and shall be orange or fluorescent red-orange in color. Flashing beacons shall be placed at the locations indicated for lane closure during hours of darkness.
2. A G20-2 "END ROAD WORK" sign, as appropriate, shall be placed at the end of the lane control unless the end of work area is obvious, or ends within a larger project's limits.
3. If the W20-1 sign would follow within 2000' of a stationary W20-1 or G20-1 "ROAD WORK NEXT _____ MILES", use a W20-4 sign for the first advance warning sign.
4. All cones used for lane closures during the hours of darkness shall be fitted with retroreflective bands (or sleeves) as specified in the specifications.
5. Portable delineators, placed at one-half the spacing indicated for traffic cones, may be used instead of cones for daytime closures only.
6. Additional advance flaggers may be required. Flagger should stand in a conspicuous place, be visible to approaching traffic as well as approaching vehicles after the first vehicle has stopped. During the hours of darkness, the flagging-station and flagger shall be illuminated and clearly visible to approaching traffic. The illumination footprint of the lighting on the ground shall be at least 20' in diameter. Place a minimum of four cones at 50' intervals in advance of flagger station as shown.
7. Place C30(CA) "LANE CLOSED" sign at 500' to 1000' intervals throughout extended work areas. They are optional if the work area is visible from the flagger station.
8. When a pilot car is used, place a C37(CA) "TRAFFIC CONTROL-WAIT AND FOLLOW PILOT CAR" sign with black legend on white background at all intersections, driveways and alleys without a flagger within traffic control area. Signs shall be clean and visible at all times. Where traffic can not be effectively self-regulated, at least one flagger shall be used at each intersection within traffic control area.
9. An optional C29(CA) sign may be placed below the C9A(CA) sign.
10. Either traffic cones or barricades shall be placed on the taper. Barricades shall be Type I, II, or III.
11. The color of the portable transverse rumble strips shall be black or orange. Use 2 arrays, each array shall consist of 3 rumble strips.
12. Portable transverse rumble strips shall not be placed on sharp horizontal or vertical curves nor shall they be placed through pedestrian crossings.
13. If the portable transverse rumble strips become out of alignment (skewed) by more than 6 inches, measured from one end to the other, they shall be readjusted to bring the placement back to the original location.
14. Portable transverse rumble strips are not required if any one of the following conditions is satisfied:
    A. Work duration occupies a location for four hours or less
    B. Posted speed limit is below 45 MPH
    C. Work is of emergency nature
    D. Work zone is in snow or icy weather conditions

SIGN PANEL SIZE (Min)

A	48" x 48"
B	30" x 30"
C	36" x 18"
D	36" x 42"
E	20" x 7"

LEGEND

- TRAFFIC CONE
- TEMPORARY TRAFFIC CONTROL SIGN
- PORTABLE FLASHING BEACON
- FLAGGER

STATE OF CALIFORNIA
DEPARTMENT OF TRANSPORTATION

TRAFFIC CONTROL SYSTEM FOR LANE CLOSURE ON TWO LANE CONVENTIONAL HIGHWAYS

NO SCALE

RSP T13 DATED OCTOBER 30, 2015 SUPERSEDES RSP T13 DATED OCTOBER 17, 2014, RSP T13 DATED JULY 18, 2014 AND RSP T13 DATED APRIL 19, 2013 AND STANDARD PLAN T13 DATED MAY 20, 2011 - PAGE 241 OF THE STANDARD PLANS BOOK DATED 2010.

REVISED STANDARD PLAN RSP T13

10-13-15

Dist	COUNTY	ROUTE	POST MILES TOTAL PROJECT	SHEET No.	TOTAL SHEETS
10	Tuo	120	R19.4/R20.0	53	119

REGISTERED CIVIL ENGINEER

April 19, 2013
PLANS APPROVAL DATE

REGISTERED PROFESSIONAL ENGINEER Gurinderpal Bhullar No. C48815 Exp. 9-30-14 CIVIL STATE OF CALIFORNIA

THE STATE OF CALIFORNIA OR ITS OFFICERS OR AGENTS SHALL NOT BE RESPONSIBLE FOR THE ACCURACY OR COMPLETENESS OF SCANNED COPIES OF THIS PLAN SHEET.

TO ACCOMPANY PLANS DATED 6-22-15

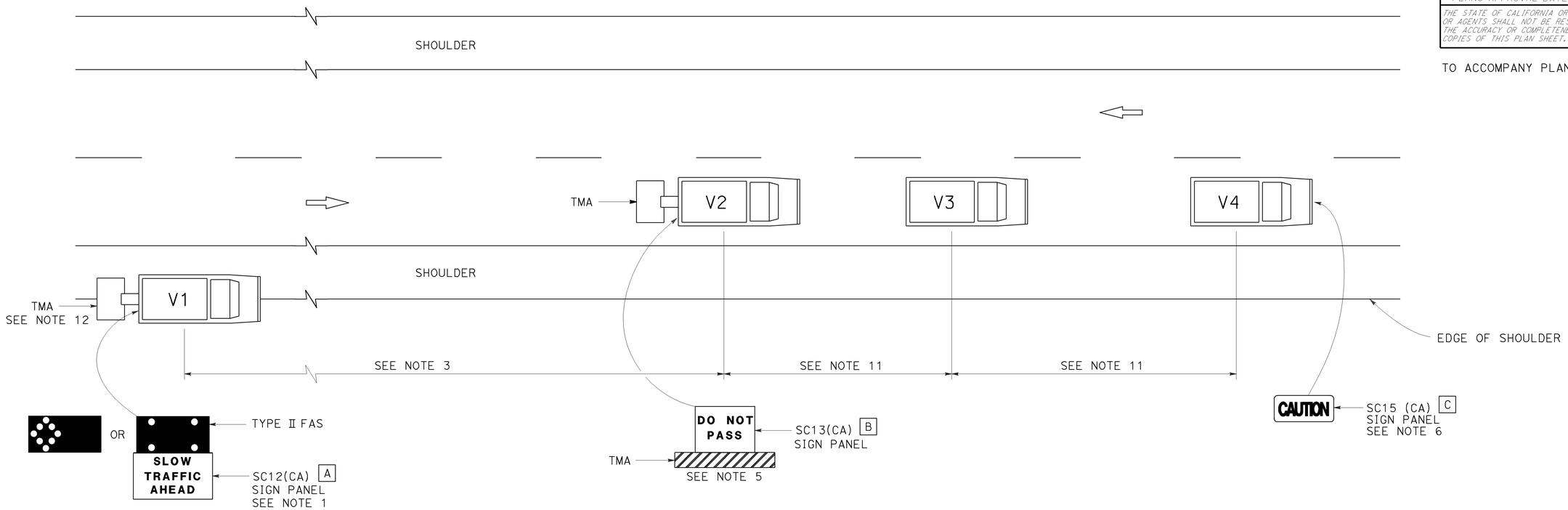

LEGEND

V1	SIGN VEHICLE
V2	SHADOW VEHICLE
V3	WORK/APPLICATION VEHICLE
V4	SIGN VEHICLE
TMA	TRUCK-MOUNTED ATTENUATOR
	FLASHING ARROW SIGN (FAS) IN FLASHING CAUTION MODE
	FLASHING ARROW SIGN (FAS) IN ALTERNATING DIAMOND CAUTION

SIGN PANEL SIZE (Min)

A	72" x 42"
B	54" x 42"
C	54" x 24"

NOTES:

1. Either a changeable message sign or a SC12(CA) "SLOW TRAFFIC AHEAD" sign shall be mounted on the rear of sign vehicle V1. The changeable message sign shall be sequenced to show the "CAUTION" message first, follow by the "SLOW TRAFFIC AHEAD" message. A Type II flashing arrow sign may be used with the SC12(CA) sign panel.
2. Sign vehicle V1 should be positioned where highly visible when shoulders are not available.
3. If traffic queues develop, sign vehicle V1 should be positioned upstream from the end of queue.
4. Vehicle-mounted sign panels shall have Type III or above retroreflective sheeting, black on white, or black on fluorescent orange, with 6" minimum series D letters per Caltrans sign specifications.
5. Shadow vehicle shall be equipped with a truck-mounted attenuator. The sign panel shown shall be mounted on the rear of shadow vehicle V2. The message "LANE CLOSED" may be used in place of the "DO NOT PASS" message.
6. The sign panel shown shall be mounted on the front of sign vehicle V4, facing opposing traffic.
7. All vehicles shall be equipped with flashing or rotating amber lights.
8. Sign vehicle V4 will not be required when the work and vehicles V2 and V3 are 2′ or more from the centerline of the highway during the work or application operations.
9. All vehicles used for lane closures shall be equipped with two-way radios and the vehicle operators shall maintain communication during the work or application operation.
10. This plan shall not be used where workers would be on foot in the work area. Use a stationary type lane closure (Revised Standard Plan T13) for this condition.
11. Minimize spacing between vehicles V2 and V3 and vehicles V3 and V4 to deter road users from driving in between them.
12. If sign vehicle V1 encroaches into the traffic lane due to insufficient shoulder width, sign vehicle V1 shall be equipped with a truck-mounted attenuator. Sign vehicle V1 shall stay as close to the edge of shoulder as practicable.

STATE OF CALIFORNIA
DEPARTMENT OF TRANSPORTATION

TRAFFIC CONTROL SYSTEM FOR MOVING LANE CLOSURE ON TWO LANE HIGHWAYS

NO SCALE

RSP T17 DATED APRIL 19, 2013 SUPERSEDES STANDARD PLAN T17
DATED MAY 20, 2011 - PAGE 245 OF THE STANDARD PLANS BOOK DATED 2010.

REVISED STANDARD PLAN RSP T17

2010 REVISED STANDARD PLAN RSP T17

12-18-12

Dist	COUNTY	ROUTE	POST MILES TOTAL PROJECT	SHEET No.	TOTAL SHEETS
10	Tuo	120	R19.4/R20.0	54	119

REGISTERED CIVIL ENGINEER

October 30, 2015
PLANS APPROVAL DATE

REGISTERED PROFESSIONAL ENGINEER Efthymios Delis No. C51434 Exp. 6-30-17 CIVIL STATE OF CALIFORNIA

THE STATE OF CALIFORNIA OR ITS OFFICERS OR AGENTS SHALL NOT BE RESPONSIBLE FOR THE ACCURACY OR COMPLETENESS OF SCANNED COPIES OF THIS PLAN SHEET.

TO ACCOMPANY PLANS DATED 6-22-15

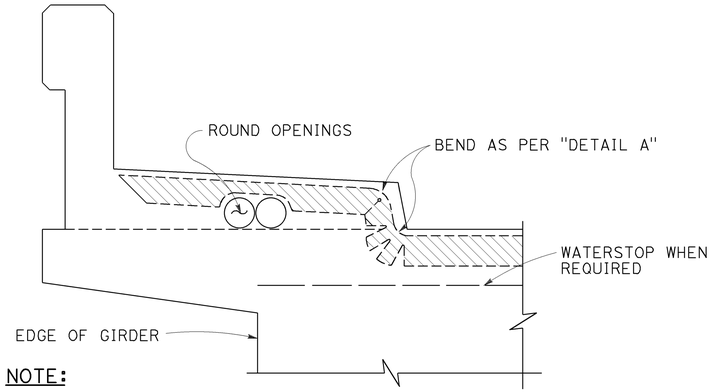

NOTE:
Type "B" seal shown. Type "A" seals to comform to the general path of seal shown, cuts for bending not required. Bend type "A" seals 3" up into curb or barrier rail on only the low end of the seal.

CONCRETE BARRIER AND SIDEWALK

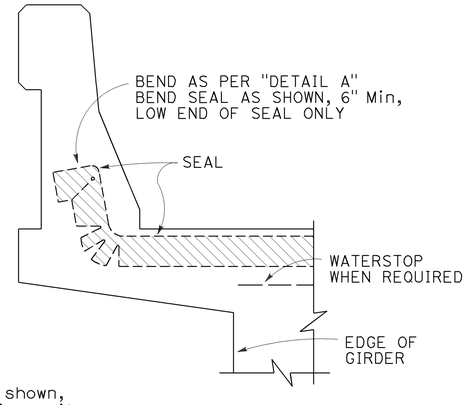

CONCRETE BARRIER

JOINT SEALS DETAILS

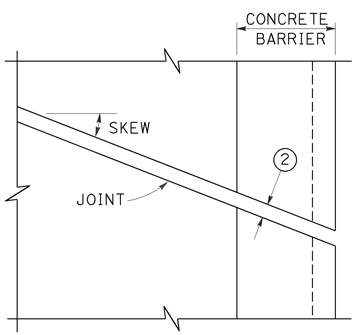

PLAN OF JOINT (SKEW ≤ 20°)

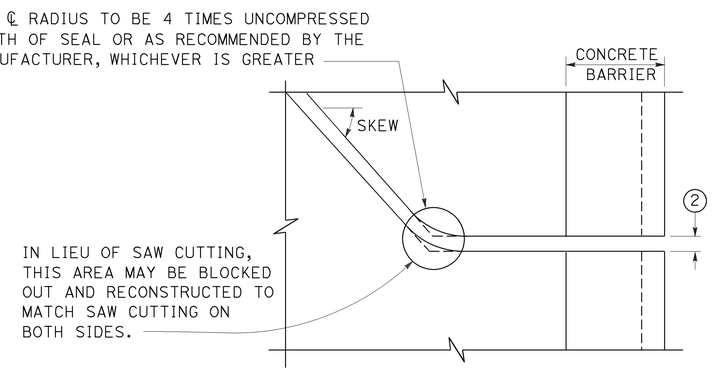

PLAN OF JOINT (SKEW > 20°)

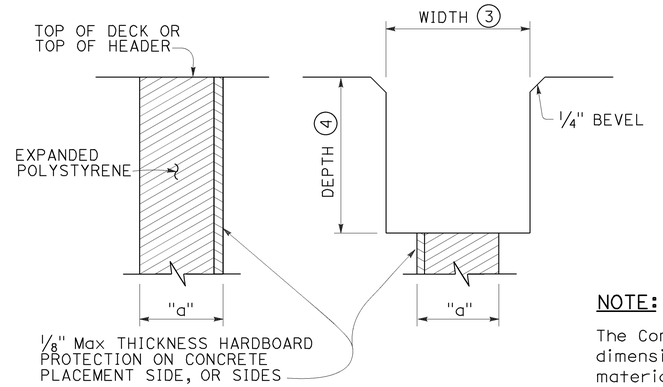

FORMING DETAIL SAWCUT DETAIL

NOTE:
The Contractor shall verify all controlling field dimensions before ordering or fabricatiing any material.

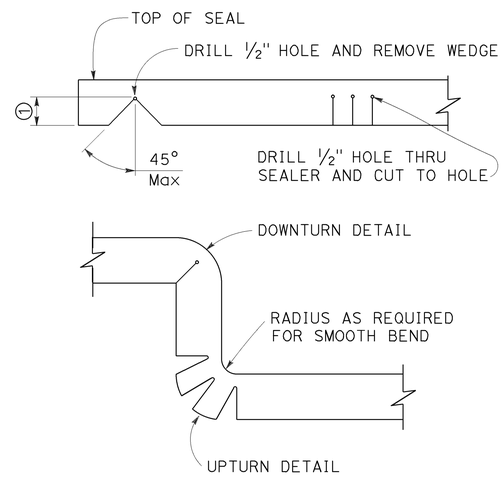

DETAIL A

NOTES:

1. Make smooth cuts from the bottom of seal to 1½" clear of top leaving at least one complete cell between the top of the cut and top of the seal. When necessary cut back of seal to clear conduit and round openings.
2. Opening in barrier to match width of sawn deck joint.
3. Sawcut groove widths shall be as ordered by the Engineer.
4. Depth of sawcut: Type A - Depth to be 2" minimum.
   Type B - Depth to be equal to or greater than the depth of seal measured along the contact surface, when compressed to minimum width position (W_2) plus dimensions shown.
5. MR (movement rating) as shown on other plan sheets.
6. Other depths must be approved by the Engineer.
7. A sidewalk joint shall be covered by an expansion joint armor.

DIMENSIONS "a" OF JOINT REQUIRED

MOVEMENT RATING (MR) 5	BRIDGE TYPE	"a" DIMENSION DECK CONCRETE PLACED		
		WINTER	FALL-SPRING	SUMMER
2"	ALL EXCEPT CIP/PS	1½"	1¼"	¾"
	CIP/PS	1¼"	1"	½"
1½"	ALL EXCEPT CIP/PS	1¼"	1"	½"
	CIP/PS	1"	¾"	½"
1"	ALL EXCEPT CIP/PS	1"	¾"	½"
	CIP/PS	¾"	½"	½"
½"	ALL EXCEPT CIP/PS	¾"	¾"	½"
	CIP/PS	½"	½"	½"

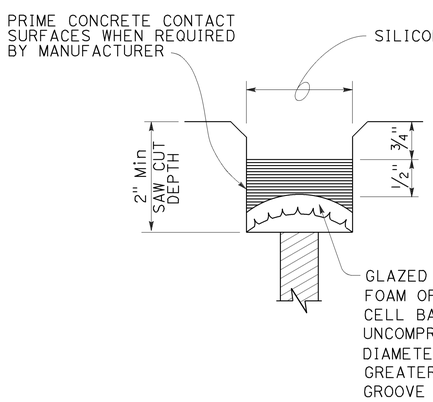

TYPE A SEAL
Movement rating : Silicone = 1" Max

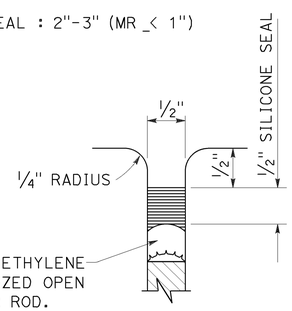

TYPE AL SEAL
Longitudinal joints only

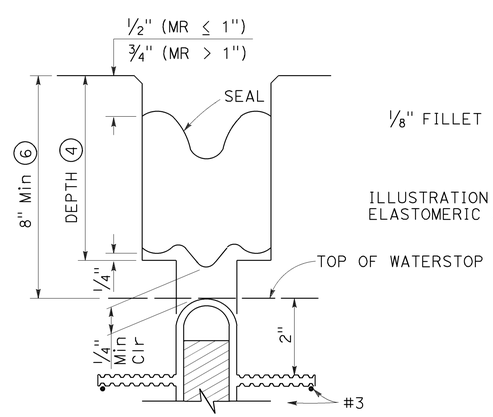

TYPE B JOINT SEAL
IN MINIMUM WIDTH POSITION (W_2)

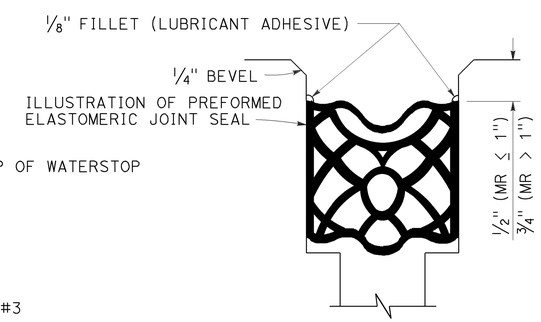

TYPE B SEAL
Movement Rating ≤ 2"

STATE OF CALIFORNIA
DEPARTMENT OF TRANSPORTATION

JOINT SEALS (MAXIMUM MOVEMENT RATING = 2")

NO SCALE

RSP B6-21 DATED OCTOBER 30, 2015 SUPERSEDES STANDARD PLAN B6-21 DATED MAY 20, 2011 - PAGE 283 OF THE STANDARD PLANS BOOK DATED 2010.

REVISED STANDARD PLAN RSP B6-21

2010 REVISED STANDARD PLAN RSP B6-21

8-18-15

Dist	COUNTY	ROUTE	POST MILES TOTAL PROJECT	SHEET No.	TOTAL SHEETS
10	Tuo	120	R19.4/R20.0	55	119

Theresa Gabriel
REGISTERED ELECTRICAL ENGINEER

October 30, 2015
PLANS APPROVAL DATE

REGISTERED PROFESSIONAL ENGINEER
Theresa Aziz Gabriel
No. E15129
Exp. 6-30-16
ELECTRICAL
STATE OF CALIFORNIA

THE STATE OF CALIFORNIA OR ITS OFFICERS OR AGENTS SHALL NOT BE RESPONSIBLE FOR THE ACCURACY OR COMPLETENESS OF SCANNED COPIES OF THIS PLAN SHEET.

TO ACCOMPANY PLANS DATED 6-22-15

LEGEND:

- AB — ABANDON. IF APPLIED TO CONDUIT, REMOVE CONDUCTORS
- BC — INSTALL PULL BOX IN EXISTING CONDUIT RUN
- BP — PEDESTRIAN BARRICADE, TYPE AS INDICATED ON PLAN
- CB — INSTALL CONDUIT INTO EXISTING PULL BOX
- CC — CONNECT NEW AND EXISTING CONDUIT. REMOVE EXISTING CONDUCTORS AND INSTALL CONDUCTORS AS INDICATED
- CF — CONDUIT TO REMAIN FOR FUTURE USE. REMOVE CONDUCTORS. INSTALL PULL TAPE
- DH — DETECTOR HANDHOLE
- FA — FOUNDATION TO BE ABANDONED
- IS — INSTALL SIGN ON SIGNAL MAST ARM
- NS — NO SLIP BASE ON STANDARD
- PEC — PHOTOELECTRIC CONTROL
- PEU — PHOTOELECTRIC UNIT
- RC — EQUIPMENT OR MATERIAL TO BE REMOVED AND BECOME THE PROPERTY OF THE CONTRACTOR
- RE — REMOVE ELECTROLIER, FUSES AND BALLAST. TAPE ENDS OF CONDUCTORS
- RL — RELOCATE EQUIPMENT
- RR — REMOVE AND REUSE EQUIPMENT
- RS — REMOVE AND SALVAGE EQUIPMENT
- SC — SPLICE NEW TO EXISTING CONDUCTORS
- SD — SERVICE DISCONNECT
- TSP — TELEPHONE SERVICE POINT

ABBREVIATIONS

AC+	UNDERGROUNDED CONDUCTOR
APS	ACCESSIBLE PEDESTRIAN SIGNAL
Batt	BATTERY
BBS	BATTERY BACKUP SYSTEM
BC	BOLT CIRCLE
Blk	BLACK
BP	BYPASS
BPB	BICYCLE PUSH BUTTON
C	CONDUIT
CB	CIRCUIT BREAKER
CCTV	CLOSED CIRCUIT TELEVISION
Ckt	CIRCUIT
CMS	CHANGEABLE MESSAGE SIGN
Ctid	CALTRANS IDENTIFICATION
Comm	COMMUNICATION
Cntl	CONTROL
DF	DEPARTMENT-FURNISHED
DLC	LOOP DETECTOR LEAD-IN CABLE
EMS	EXTINGUISHABLE MESSAGE SIGN
EVUC	EMERGENCY VEHICLE UNIT CABLE
EVUD	EMERGENCY VEHICLE UNIT DETECTOR
FB	FLASHING BEACON
FBCA	FLASHING BEACON CONTROL ASSEMBLY
FBS	FLASHING BEACON WITH SLIP BASE
FO	FIBER OPTIC
G	EQUIPMENT GROUNDING CONDUCTOR
GB	GROUND BUS
GFCI	GROUND FAULT CIRCUIT INTERRUPTER
Grn	GREEN
HAR	HIGHWAY ADVISORY RADIO
Hex	HEXAGONAL
HPS	HIGH PRESSURE SODIUM
IISNS	INTERNALLY ILLUMINATED STREET NAME SIGN
ISL	INDUCTION SIGN LIGHTING
LED	LIGHT EMITTING DIODE
LMA	LUMINAIRE MAST ARM
LPS	LOW PRESSURE SODIUM
Ltg	LIGHTING
Lum	LUMINAIRE
M	METERED
MAT	MAST ARM MOUNTING TOP ATTACHMENT
MAS	MAST ARM MOUNTING SIDE ATTACHMENT
MBPS	MANUAL BYPASS SWITCH
M/M	MULTIPLE TO MULTIPLE TRANSFORMER
Mtg	MOUNTING
MV	MERCURY VAPOR LIGHTING FIXTURE
MVDS	MICROWAVE VEHICLE DETECTION SYSTEM
N	NEUTRAL (GROUNDED CONDUCTOR)
NB	NEUTRAL BUS
NC	NORMALLY CLOSE
NO	NORMALLY OPEN
P	CIRCUIT BREAKER'S POLE
PB	PULL BOX
PBA	PUSH BUTTON ASSEMBLY
PEC	PHOTOELECTRIC CONTROL
Ped	PEDESTRIAN
PEU	PHOTOELECTRIC UNIT
PT	CONDUIT WITH PULL TAPE
PTR	POWER TRANSFER RELAY
RE	RELOCATED EQUIPMENT
RM	RAMP METERING
RWIS	ROADSIDE WEATHER INFORMATION SYSTEM
SB	SLIP BASE
SIC	SIGNAL INTERCONNECT CABLE
Sig	SIGNAL
SMA	SIGNAL MAST ARM
SNS	STREET NAME SIGN
SP	SERVICE POINT
TB	TERMINAL BOARD
TDC	TELEPHONE DEMARCATION CABINET
Temp	TEMPERATURE
TMS	TRAFFIC MONITORING STATION
TOS	TRAFFIC OPERATIONS SYSTEM
UPS	UNINTERRUPTABLE POWER SUPPLY
UPSC	UNINTERRUPTABLE POWER SUPPLY CONTROLLER
Veh	VEHICLE
VIVDS	VIDEO IMAGE VEHICLE DETECTION SYSTEM
Wht	WHITE
WIM	WEIGH-IN-MOTION
Xfmr	TRANSFORMER

SOFFIT AND WALL-MOUNTED LUMINAIRES

- PENDANT SOFFIT LUMINAIRE, 70 W HPS UNLESS OTHERWISE SPECIFIED
- FLUSH-MOUNTED SOFFIT LUMINAIRE, 70 W HPS UNLESS OTHERWISE SPECIFIED
- WALL-MOUNTED LUMINAIRE, 70 W HPS UNLESS OTHERWISE SPECIFIED
- EXISTING SOFFIT OR WALL-MOUNTED LUMINAIRE TO REMAIN UNMODIFIED
- EXISTING SOFFIT OR WALL-MOUNTED LUMINAIRE TO BE MODIFIED AS SPECIFIED

NOTE:
Arrow indicates "street side" of luminaire.

COMMONLY USED SYMBOLS FOR UNITED STATES CUSTOMARY UNITS OF MEASUREMENT:

SYMBOL	DEFINITIONS
Ω	OHMS
min	MINUTE
s	SECOND
bps	BITS PER SECOND
Bps	BYTES PER SECOND
A	AMPERE
V	VOLT
V(dc)	VOLT (DIRECT CURRENT)
V(ac)	VOLT (ALTERNATING CURRENT)
FC	FOOT - CANDLE
W	WATTS
VA	VOLT-AMPERE
M	MEGA
k	KILO
m	MILLI
μ	MICRO
P	PICO
Hz	HERTZ

MISCELLANEOUS ELECTROLIERS

NEW	EXISTING	
		LUMINAIRE ON WOOD POLE
		NON-STANDARD ELECTROLIER (SEE PROJECT LEGEND)
		CITY ELECTROLIER
		ELECTROLIER FOUNDATION (FUTURE INSTALLATION)

NOTES:

1. LED luminaires shall be 235 W when installed on Type 21, 21D, 30, 31 and 32 Standards, unless otherwise specified. LED luminaires shall be 165 W when installed on other type standards or poles, unless otherwise specified.
2. Luminaires shall be the cutoff type, ANSI Type III medium cutoff lighting distribution, unless otherwise specified.

STANDARD ELECTROLIER

NEW	EXISTING	STANDARD TYPE
		15
		15D
		15 STRUCTURE
		15D STRUCTURE
		21
		21D
		21 STRUCTURE
		21D STRUCTURE
		30
		31
		32

STATE OF CALIFORNIA
DEPARTMENT OF TRANSPORTATION

ELECTRICAL SYSTEMS (LEGEND AND ABBREVIATIONS)

NO SCALE

RSP ES-1A DATED OCTOBER 30, 2015 SUPERSEDES RSP ES-1A DATED JULY 19, 2013 AND STANDARD PLAN ES-1A DATED MAY 20, 2011 - PAGE 425 OF THE STANDARD PLANS BOOK DATED 2010.

REVISED STANDARD PLAN RSP ES-1A

2010 REVISED STANDARD PLAN RSP ES-1A

9-29-15

Dist	COUNTY	ROUTE	POST MILES TOTAL PROJECT	SHEET No.	TOTAL SHEETS
10	Tuo	120	R19.4/R20.0	56	119

Theresa Gabriel
REGISTERED ELECTRICAL ENGINEER

October 30, 2015
PLANS APPROVAL DATE

REGISTERED PROFESSIONAL ENGINEER
Theresa Aziz Gabriel
No. E15129
Exp. 6-30-16
ELECTRICAL
STATE OF CALIFORNIA

THE STATE OF CALIFORNIA OR ITS OFFICERS OR AGENTS SHALL NOT BE RESPONSIBLE FOR THE ACCURACY OR COMPLETENESS OF SCANNED COPIES OF THIS PLAN SHEET.

TO ACCOMPANY PLANS DATED 6-22-15

CONDUIT

NEW	EXISTING	
		LIGHTING CONDUIT, UNLESS OTHERWISE INDICATED OR NOTED
		TRAFFIC SIGNAL CONDUIT
C	c	COMMUNICATION CONDUIT
T	t	TELEPHONE CONDUIT
F	f	FIRE ALARM CONDUIT
FO	fo	FIBER OPTIC CONDUIT
		CONDUIT TERMINATION
R	r	CONDUIT RISER ATTACHED TO THE STRUCTURE OR SERVICE POLE

SERVICE EQUIPMENT

NEW	EXISTING	
OH	oh	OVERHEAD LINES
U	U	WOOD POLE, "U" INDICATES UTILITY OWNED
		POLE GUY WITH ANCHOR
		UTILITY TRANSFORMER - GROUND MOUNTED
III	III	SERVICE EQUIPMENT ENCLOSURE TYPE. DOOR INDICATES FRONT OF ENCLOSURE
T	t	TELEPHONE DEMARCATION CABINET

POLE-MOUNTED SERVICE DESIGNATION

TYPE H SERVICE, 28'-10" — TYPE OF INSTALLATION AND POLE HEIGHT ABOVE GRADE

FLASHING BEACON

NEW	EXISTING	
R	R	FLASHING BEACON (ONE VEHICLE SIGNAL HEAD WITH BACKPLATE AND VISOR) "R" INDICATES RED INDICATION, "Y" INDICATES YELLOW INDICATION
Y Y	Y Y	FLASHING BEACON WITH TYPE 15-FBS STANDARD AND A SIGN.
R R	R R	FLASHING BEACON WITH TYPES 9, 9A OR 9B SIGN UNLESS OTHERWISE SPECIFIED OR INDICATED

SIGNAL EQUIPMENT

NEW	EXISTING	
		PEDESTRIAN SIGNAL HEAD
		PUSH BUTTON ASSEMBLY POST
		PEDESTRIAN BARRICADE
		VEHICLE SIGNAL HEAD (WITH BACKPLATE AND 3-SECTIONS: RED, YELLOW AND GREEN)
		VEHICLE SIGNAL HEAD WITH ANGLE VISOR
PV	PV	MODIFICATIONS OF BASIC SYMBOL: "L" INDICATES ALL NON-ARROW SECTIONS LOUVERED "LG" INDICATES LOUVERED GREEN SECTION ONLY "PV" INDICATES ALL 12" SECTIONS PROGRAMMED VISIBILITY "8" INDICATES ALL 8" SECTIONS (ONLY WHEN SPECIFIED)
		VEHICLE SIGNAL HEAD CONSISTING OF RED, YELLOW AND GREEN LEFT ARROW SECTIONS
		VEHICLE SIGNAL HEAD CONSISTING OF RED AND YELLOW SECTIONS WITH AN UP GREEN ARROW SECTION
		VEHICLE SIGNAL HEAD (5 SECTION) CONSISTING OF RED, YELLOW AND GREEN SECTIONS WITH YELLOW AND GREEN RIGHT ARROW SECTIONS
		TYPE 15TS STANDARD WITH VEHICLE SIGNAL HEAD AND LUMINAIRE
		TYPE 21TS STANDARD WITH VEHICLE SIGNAL HEAD AND LUMINAIRE
		STANDARD WITH LUMINAIRE AND SIGNAL MAST ARMS AND ATTACHED VEHICLE SIGNAL HEADS
		TYPE 1 STANDARD WITH ATTACHED VEHICLE SIGNAL HEADS
		STANDARD WITH A SIGNAL MAST ARM, ATTACHED VEHICLE SIGNAL HEADS AND INTERNALLY ILLUMINATED STREET NAME SIGN
		CONTROLLER ASSEMBLY. DOOR INDICATES FRONT OF CABINET

SIGNAL EQUIPMENT Cont

NEW	EXISTING	
		GUARD POST
		TYPE 1 STANDARD WITH RAMP METERING SIGN
		OPTICAL DETECTOR FOR THE EMERGENCY VEHICLE DETECTION

NOTES:

1. All signal sections shall be 12" unless shown otherwise.
2. Signal heads shall be provided with backplates unless shown otherwise.

ILLUMINATED OVERHEAD SIGN

NEW	EXISTING	
		SINGLE POST, SINGLE ILLUMINATED SIGN, BALANCED BUTTERFLY
		SINGLE POST, DOUBLE ILLUMINATED SIGN, BALANCED BUTTERFLY
		SINGLE POST, SINGLE ILLUMINATED SIGN, FULL CANTILEVER
		DOUBLE POST, SINGLE ILLUMINATED SIGN
		SINGLE ILLUMINATED SIGN MOUNTED ON STRUCTURE
		DOUBLE POST, SINGLE ILLUMINATED SIGN WITH ELECTROLIER

STATE OF CALIFORNIA
DEPARTMENT OF TRANSPORTATION

ELECTRICAL SYSTEMS (LEGEND AND ABBREVIATIONS)

NO SCALE

RSP ES-1B DATED OCTOBER 30, 2015 SUPERSEDES RSP ES-1B DATED JULY 19, 2013 AND STANDARD PLAN ES-1B DATED MAY 20, 2011 - PAGE 426 OF THE STANDARD PLANS BOOK DATED 2010.

REVISED STANDARD PLAN RSP ES-1B

2010 REVISED STANDARD PLAN RSP ES-1B

8-19-15

Dist	COUNTY	ROUTE	POST MILES TOTAL PROJECT	SHEET No.	TOTAL SHEETS
10	Tuo	120	R19.4/R20.0	57	119

Theresa Gabriel
REGISTERED ELECTRICAL ENGINEER

October 30, 2015
PLANS APPROVAL DATE

REGISTERED PROFESSIONAL ENGINEER
Theresa Aziz Gabriel
No. E15129
Exp. 6-30-16
ELECTRICAL
STATE OF CALIFORNIA

THE STATE OF CALIFORNIA OR ITS OFFICERS OR AGENTS SHALL NOT BE RESPONSIBLE FOR THE ACCURACY OR COMPLETENESS OF SCANNED COPIES OF THIS PLAN SHEET.

TO ACCOMPANY PLANS DATED 6-22-15

2010 REVISED STANDARD PLAN RSP ES-1C

EQUIPMENT IDENTIFICATION

ILLUMINATED SIGN IDENTIFICATION NUMBER:

SIGN No. 12345
10 ISL SCI 1.0

- SIGN NUMBER - PLACE ON POST OR STRUCTURE
- TRANSFORMER RATING (kVA)
- LIGHTING CONTROL TYPE
- NUMBER AND TYPE OF FIXTURES

DO NOT PLACE ON STANDARD OR STRUCTURE

ELECTROLIER OR EQUIPMENT IDENTIFICATION NUMBER:

12345 - 15'-0"

- MAST ARM LENGTH, IF SHOWN. DO NOT PLACE ON STANDARD OR STRUCTURE
- EQUIPMENT NUMBER - PLACE ON STANDARD OR STRUCTURE. EXISTING EQUIPMENT NUMBERS ARE SHOWN IN PARENTHESIS

CONDUIT AND CONDUCTOR IDENTIFICATION:

1½"C, 2#10, 15#14, 2 DLC, 12P#18 (PAIR)

- NUMBER AND SIZE OF CONDUCTORS AND CABLES
- SIZE OF CONDUIT IN INCHES

ø1, ø2, ø2P, etc.	TRAFFIC PHASE IDENTIFICATION FOR SIGNALS, DETECTORS AND PHASE DIAGRAMS
1 2 3	LEGEND NUMBERS
A B C	EQUIPMENT, SIGNAL POLES, INSTALLATION OR ITEMS
1 2 3	CONDUIT RUN NUMBERS

SIGNAL AND LIGHTING STANDARD (TYPICAL DESIGNATION):

19A - 3 - 100

- WIND VELOCITY = 100 mph
- CASE 3 ARM LOADING
- STANDARD TYPE
- STANDARD PLAN SHEET NUMBER
- DETAIL, NUMBER, SECTION, TYPE OR ELEVATION

MISCELLANEOUS EQUIPMENT

NEW	EXISTING	
CMS	cms	CHANGEABLE MESSAGE SIGN
		CLOSED CIRCUIT TELEVISION CAMERA
		HIGHWAY ADVISORY RADIO POLE AND ANTENNA
EMS	ems	LED EXTINGUISHABLE MESSAGE SIGN
M V	m v	DETECTION DEVICE M = MICROWAVE SENSOR V = VIDEO IMAGE SENSOR

WIRING DIAGRAM LEGEND

- EXTERNAL CONDUCTOR
- CONDUCTOR OR BUS
- TIE POINT
- CONTACTOR COIL
- CONTACTOR, NO CONTACT
- TERMINAL BLOCKS
- CONTACTOR, NC CONTACT
- ENCLOSURE BOND
- GROUNDING ELECTRODE
- CIRCUIT BREAKER
- RECEPTACLE

PULL BOXES

NEW	EXISTING	
		PULL BOX, No. 5 UNLESS OTHERWISE INDICATED OR NOTED
3	9A(21)	PULL BOX, ADDITIONAL DESIGNATIONS OR DESCRIPTIONS

3 No. 3½ PULL BOX
5 No. 5 PULL BOX
6 No. 6 PULL BOX
7 No. 7 (CEILING PULL BOX)
8 No. 8 (PENDANT SOFFIT PULL BOX)
9 No. 9 PULL BOX
9A No. 9A PULL BOX

(C) COMMUNICATIONS PULL BOX
(E) PULL BOX WITH EXTENSION
(S) SPRINKLER CONTROL PULL BOX
(21) ANCHOR BOLTS AND CONDUIT FOR FUTURE INSTALLATION OF TYPE 21 STANDARD
(T) TRAFFIC PULL BOX

VEHICLE DETECTORS

5 J 9 U

- VEHICLE DETECTOR DESIGNATION
- U = UPPER
  L = LOWER
- SLOT NUMBER IN INPUT FILE
- INPUT FILE (I OR J)
- PHASE

NEW	EXISTING	
		TYPE A LOOP DETECTOR. OUTLINE OF SAWCUT SHOWN
		TYPE B LOOP DETECTOR. OUTLINE OF SAWCUT SHOWN
		TYPE C LOOP DETECTOR. OUTLINE OF SAWCUT SHOWN
		TYPE D LOOP DETECTOR. OUTLINE OF SAWCUT SHOWN
		TYPE E LOOP DETECTOR. OUTLINE OF SAWCUT SHOWN
		TYPE Q LOOP DETECTOR. OUTLINE OF SAWCUT SHOWN
DH	dh	DETECTOR HANDHOLE
		MICROWAVE OR VIDEO DETECTION ZONE

STATE OF CALIFORNIA
DEPARTMENT OF TRANSPORTATION

ELECTRICAL SYSTEMS (LEGEND AND ABBREVIATIONS)

NO SCALE

RSP ES-1C DATED OCTOBER 30, 2015 SUPERSEDES RSP ES-1C DATED JULY 19, 2013 AND STANDARD PLAN ES-1C DATED MAY 20, 2011 - PAGE 427 OF THE STANDARD PLANS BOOK DATED 2010.

REVISED STANDARD PLAN RSP ES-1C

Dist	COUNTY	ROUTE	POST MILES TOTAL PROJECT	SHEET No.	TOTAL SHEETS
10	Tuo	120	R19.4/R20.0	58	119

Theresa Gabriel
REGISTERED ELECTRICAL ENGINEER

October 30, 2015
PLANS APPROVAL DATE

REGISTERED PROFESSIONAL ENGINEER Theresa Aziz Gabriel No. E15129 Exp. 6-30-16 ELECTRICAL STATE OF CALIFORNIA

THE STATE OF CALIFORNIA OR ITS OFFICERS OR AGENTS SHALL NOT BE RESPONSIBLE FOR THE ACCURACY OR COMPLETENESS OF SCANNED COPIES OF THIS PLAN SHEET.

TO ACCOMPANY PLANS DATED 6-22-15

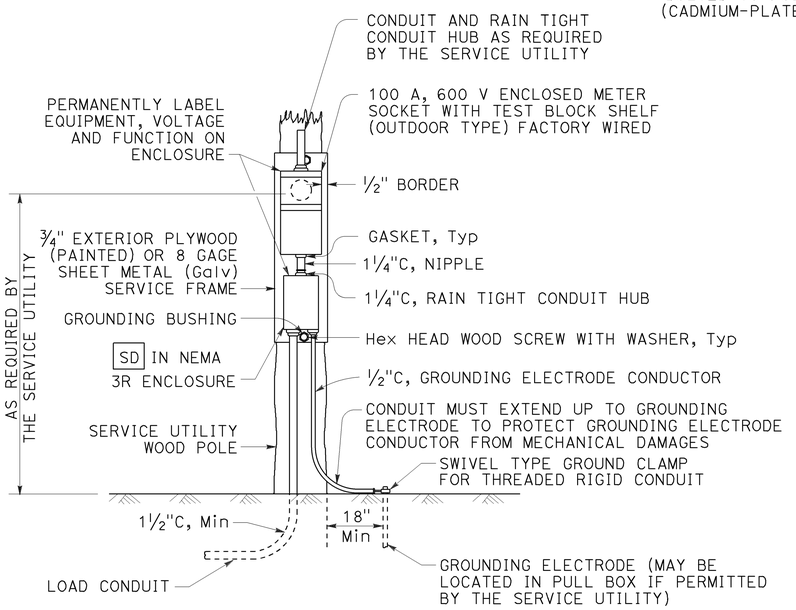

TYPE SCE-1
DETAIL A

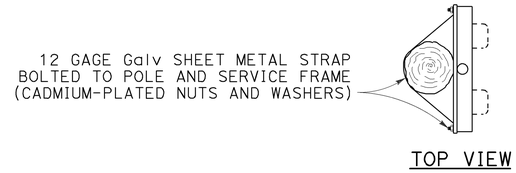

TOP VIEW

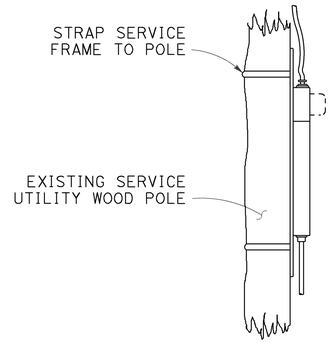

SIDE VIEW

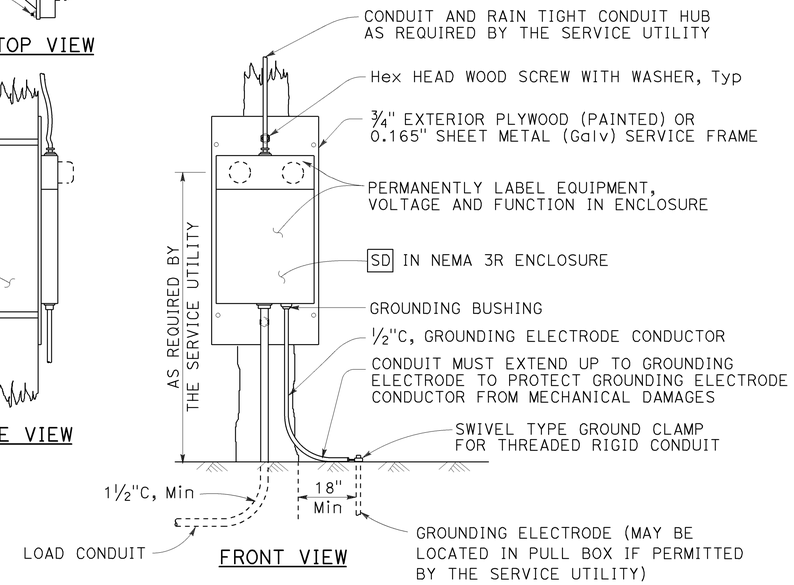

FRONT VIEW

TYPE SCE-2
DETAIL B

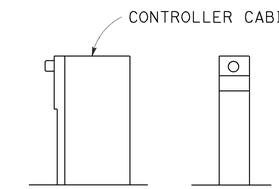

TYPE II TYPE III

TYPE OF SERVICE (TYPICAL)
DETAIL C

See Notes 1 and 2

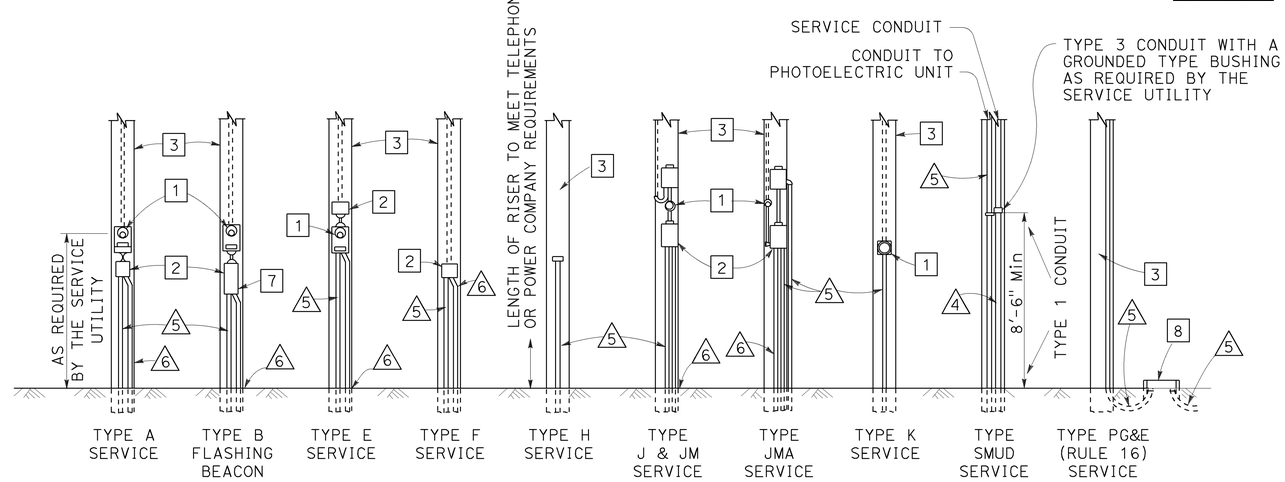

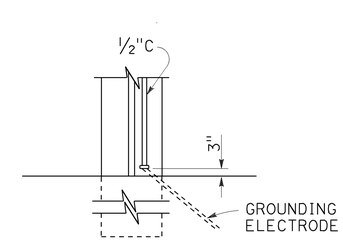

TYPE A
See Note 3

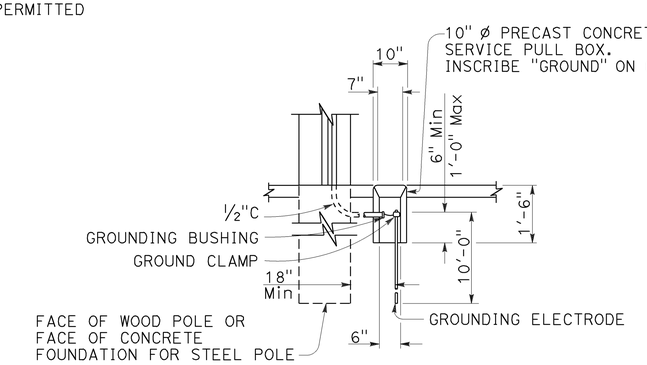

TYPE B
See Note 4

SERVICE GROUNDING
DETAIL E

LEGEND:

1. METER SOCKET.
2. SERVICE ENCLOSURE WITH A MINIMUM 60 A RATED MAIN CIRCUIT BREAKER, UNLESS OTHERWISE SHOWN.
3. A. UTILITY OWNED POLE. THE SERVICE UTILITY WILL FURNISH AND INSTALL REQUIRED SERVICE RISER, PEU WITH CONDUCTORS AND OTHER EQUIPMENT AS NEEDED.
   B. STATE OWNED POLE. THE CONTRACTOR SHALL FURNISH AND INSTALL REQUIRED SERVICE RISER AND EQUIPMENT.
4. 2"C, SERVICE CONDUIT MUST HAVE A GROUNDED TYPE BUSHING INSTALLED AT UPPER END OF THE METALLIC POLE RISER CONDUIT. A GROUNDING CONDUCTOR MUST BE ATTACHED TO THE BUSHING, CARRIED THROUGH THE CONDUIT RUN AND ATTACHED TO THE SERVICE EQUIPMENT ENCLOSURE'S GROUNDING ELECTRODE.
5. CONDUIT, LENGTH AND SIZE AS REQUIRED.
6. ½"C, 1#6. SEE DETAIL E.
7. FLASHING BEACON CONTROL ASSEMBLY.
8. SERVICE PULL BOX, No. 5 UNLESS OTHERWISE NOTED, FURNISHED AND INSTALLED BY THE CONTRACTOR. SERVICE UTILITY SHALL DETERMINE THE EXACT LOCATION.

POLE MOUNTED SERVICE INSTALLATIONS
DETAIL D

NOTES:

1. Type II service equipment enclosure mounted on the side of a controller cabinet.
2. Type III complete free-standing service equipment enclosure.
3. Ground clamp and required fittings must be accessible. Conduit must extend to protect grounding electrode conductor from mechanical damage.
4. Use where service utility requires 18" clearance between grounding electrode and the pole or service equipment enclosure. Installation shown is for sidewalk or paved areas. In unpaved areas, omit special service pull box and locate ground clamp above ground or locate ground clamp in nearest pull box.

STATE OF CALIFORNIA
DEPARTMENT OF TRANSPORTATION

ELECTRICAL SYSTEMS (SERVICE EQUIPMENT)

NO SCALE

RSP ES-2A DATED OCTOBER 30, 2015 SUPERSEDES STANDARD PLAN ES-2A DATED MAY 20, 2011 - PAGE 428 OF THE STANDARD PLANS BOOK DATED 2010.

REVISED STANDARD PLAN RSP ES-2A

2010 REVISED STANDARD PLAN RSP ES-2A

8-20-15

Dist	COUNTY	ROUTE	POST MILES TOTAL PROJECT	SHEET No.	TOTAL SHEETS
10	Tuo	120	R19.4/R20.0	59	119

Theresa Gabriel
REGISTERED ELECTRICAL ENGINEER

October 30, 2015
PLANS APPROVAL DATE

REGISTERED PROFESSIONAL ENGINEER
Theresa Aziz Gabriel
No. E15129
Exp. 6-30-16
ELECTRICAL
STATE OF CALIFORNIA

THE STATE OF CALIFORNIA OR ITS OFFICERS OR AGENTS SHALL NOT BE RESPONSIBLE FOR THE ACCURACY OR COMPLETENESS OF SCANNED COPIES OF THIS PLAN SHEET.

TO ACCOMPANY PLANS DATED 6-22-15

2010 REVISED STANDARD PLAN RSP ES-3C

NOTES:

1. Foundation shall be located to provide 2'-0" minimum clearance between face of curb and any portion of cabinet.
2. Controller units, plug-mounted equipment, shelf-mounted equipment and wall-mounted equipment shall be located to permit safe and easy removal or replacement without removing any other piece of equipment.
3. Cabinet fan may be installed at an alternate location near the top of the cabinet when approved by the Engineer.
4. Where telephone interconnect is required, a minimum of 5" clear vertical space shall be provided inside the cabinet for the equipment.
5. Telephone interconnect conductors shall be enclosed in a ¾"C or larger conduit through the foundation. Type 4 conduit shall be used to separate telephone and power conductors in cabinets.

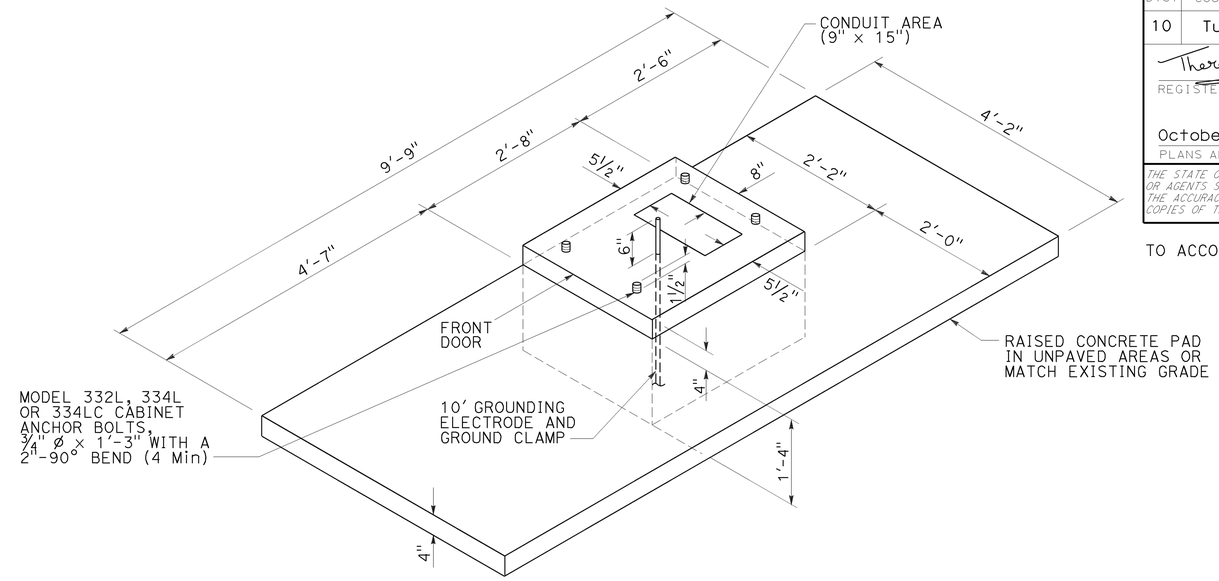

FOUNDATION AND PAD DETAIL

Model 332L, 334L and 334LC

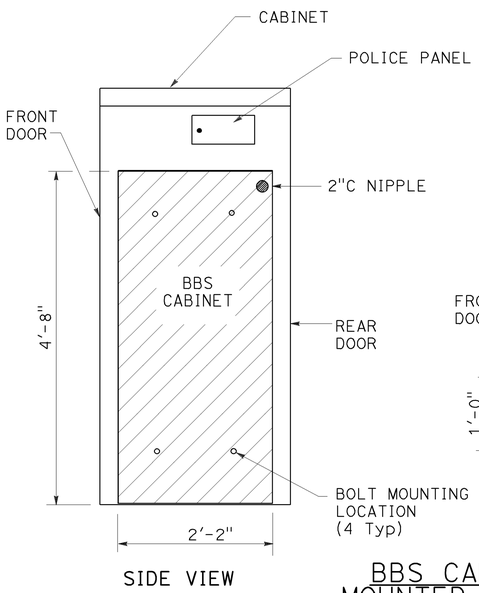

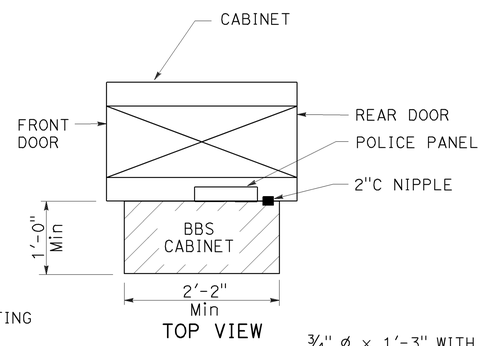

BBS CABINET MOUNTED TO THE MODEL 332L CABINET

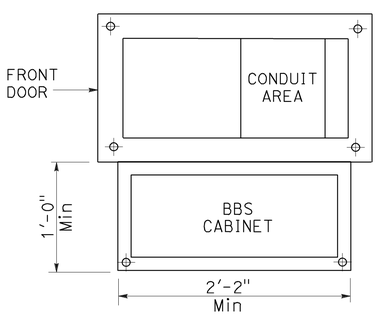

BASE PLAN FOR BBS MOUNTED TO THE MODEL 332L CABINET

(FOR DIMENSIONS AND DETAILS NOT SHOWN, SEE CABINET HOUSING DETAILS OF THE TRANSPORTATION ELECTRICAL EQUIPMENT SPECIFICATION (TEES))

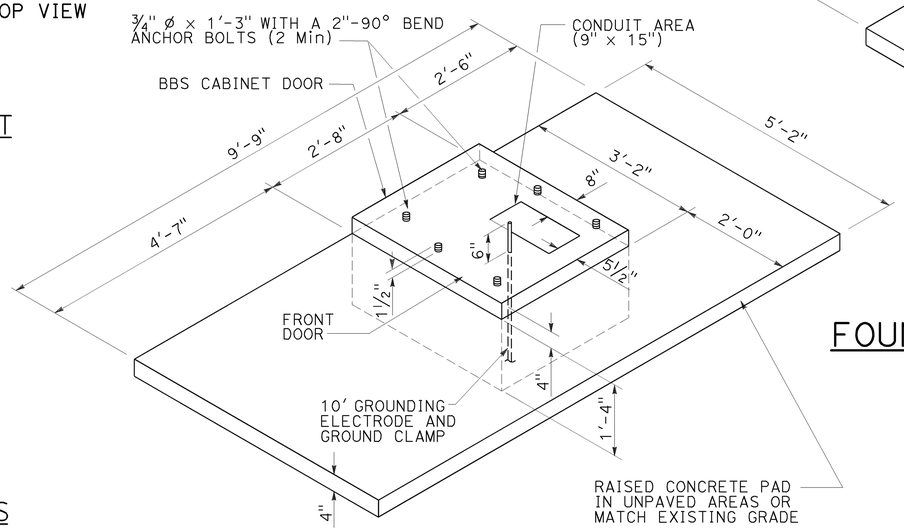

LEFT SIDE INSTALLATION

DETAIL A

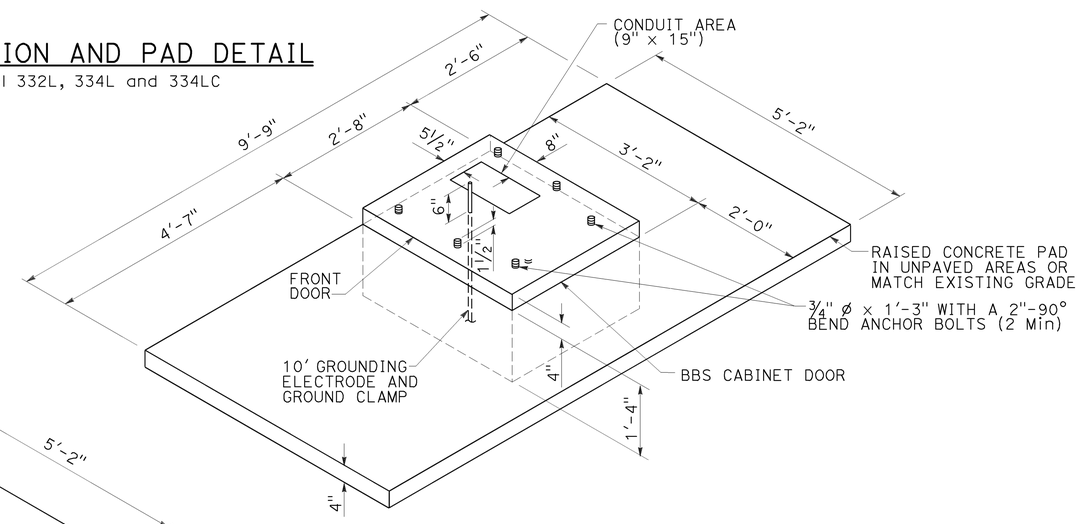

RIGHT SIDE INSTALLATION

DETAIL B

MODIFIED MODEL 332L CABINET FOUNDATION DETAIL FOR BATTERY BACKUP SYSTEM

STATE OF CALIFORNIA
DEPARTMENT OF TRANSPORTATION

ELECTRICAL SYSTEMS (CONTROLLER CABINET FOUNDATION AND PAD DETAILS)

NO SCALE

RSP ES-3C DATED OCTOBER 30, 2015 SUPERSEDES STANDARD PLAN ES-3C DATED MAY 20, 2011 - PAGE 437 OF THE STANDARD PLANS BOOK DATED 2010.

REVISED STANDARD PLAN RSP ES-3C

9-2-15

Dist	COUNTY	ROUTE	POST MILES TOTAL PROJECT	SHEET No.	TOTAL SHEETS
10	Tuo	120	R19.4/R20.0	60	119

Theresa Gabriel
REGISTERED ELECTRICAL ENGINEER

October 30, 2015
PLANS APPROVAL DATE

REGISTERED PROFESSIONAL ENGINEER
Theresa Aziz Gabriel
No. E15129
Exp. 6-30-16
ELECTRICAL
STATE OF CALIFORNIA

THE STATE OF CALIFORNIA OR ITS OFFICERS OR AGENTS SHALL NOT BE RESPONSIBLE FOR THE ACCURACY OR COMPLETENESS OF SCANNED COPIES OF THIS PLAN SHEET.

TO ACCOMPANY PLANS DATED 6-22-15

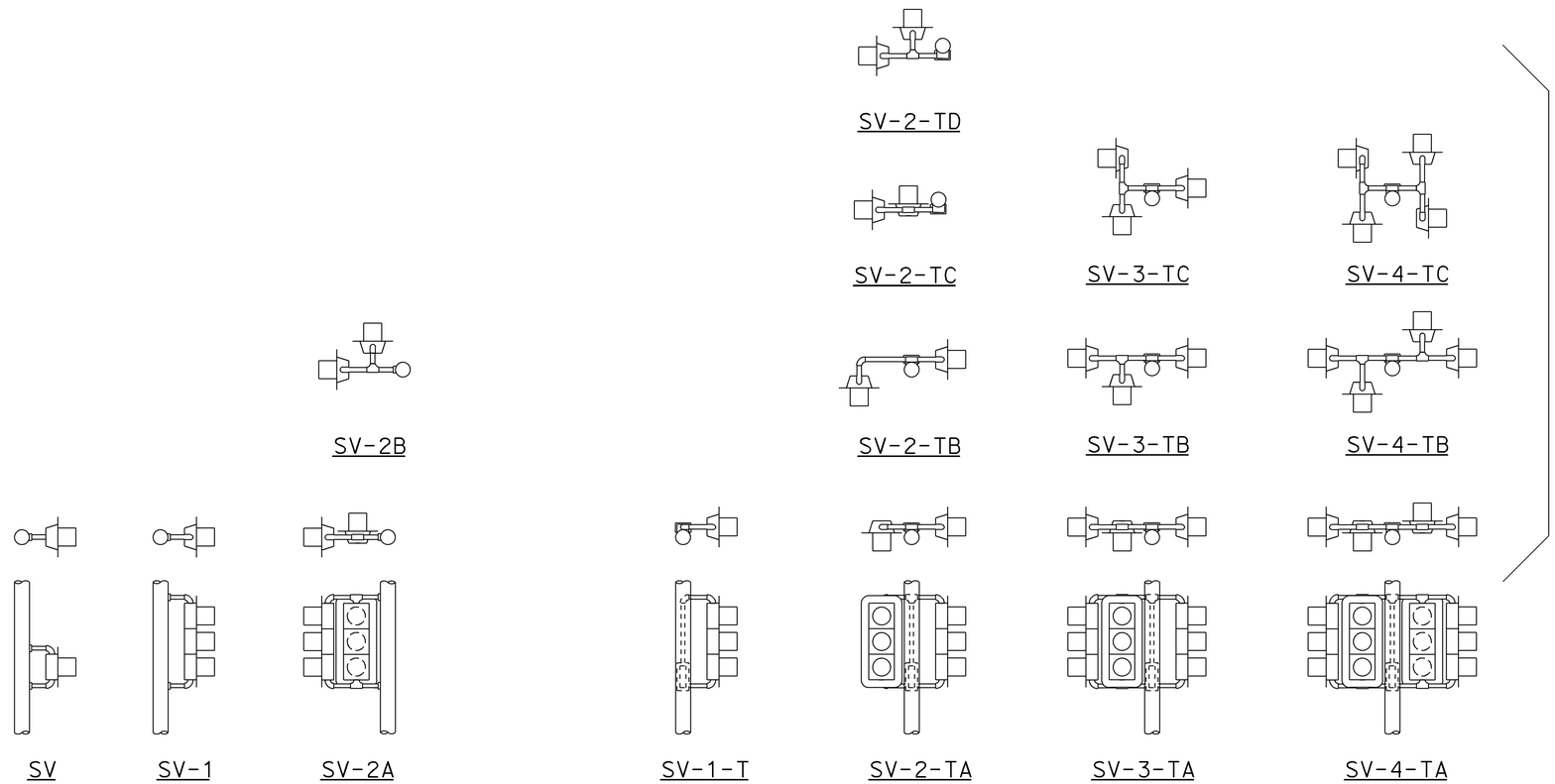

SIDE MOUNTINGS

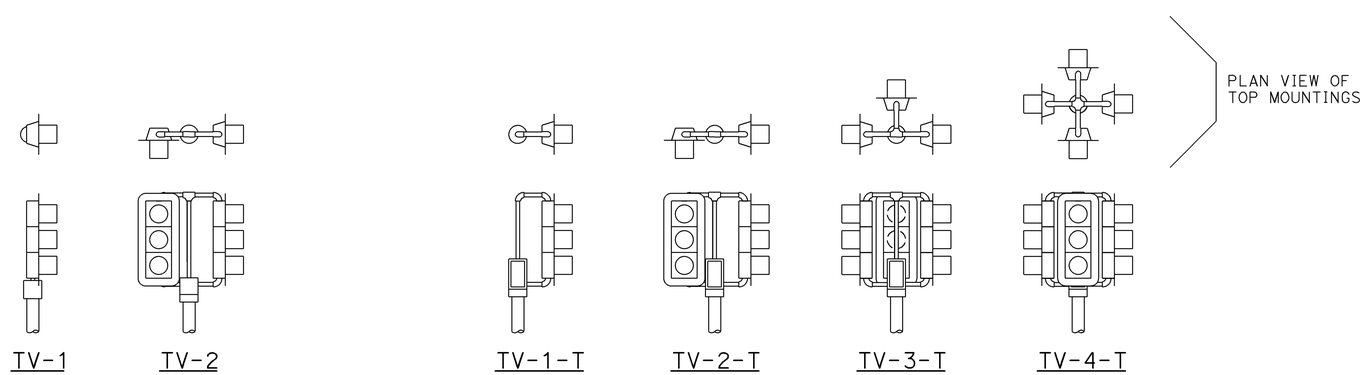

TOP MOUNTINGS

ABBREVIATIONS:

SV	SIDE MOUNTED SIGNAL HEADS
T	TERMINAL COMPARTMENT
TV	TOP MOUNTED SIGNAL HEADS
1, 2, 3, 4	NUMBER OF SIGNAL FACES (3 - SECTION, UNLESS OTHERWISE INDICATED)
A, B, C, D	CONFIGURATION OF SIGNALS

NOTES:

1. Mountings shall be oriented to provide maximum horizontal clearance to adjacent roadway.
2. Bracket arms shall be long enough to permit proper alignment of signals and backplate installation.
3. See Revised Standard Plans RSP ES-4D and RSP ES-4E for attachment fitting details.

STATE OF CALIFORNIA
DEPARTMENT OF TRANSPORTATION

ELECTRICAL SYSTEMS (SIGNAL HEADS AND MOUNTINGS)

NO SCALE

RSP ES-4A DATED OCTOBER 30, 2015 SUPERSEDES RSP ES-4A DATED JULY 19, 2013 AND STANDARD PLAN ES-4A DATED MAY 20, 2011 - PAGE 443 OF THE STANDARD PLANS BOOK DATED 2010.

REVISED STANDARD PLAN RSP ES-4A

2010 REVISED STANDARD PLAN RSP ES-4A

Dist	COUNTY	ROUTE	POST MILES TOTAL PROJECT	SHEET No.	TOTAL SHEETS
10	Tuo	120	R19.4/R20.0	61	119

Theresa Gabriel
REGISTERED ELECTRICAL ENGINEER

October 30, 2015
PLANS APPROVAL DATE

REGISTERED PROFESSIONAL ENGINEER
Theresa Aziz Gabriel
No. E15129
Exp. 6-30-16
ELECTRICAL
STATE OF CALIFORNIA

THE STATE OF CALIFORNIA OR ITS OFFICERS OR AGENTS SHALL NOT BE RESPONSIBLE FOR THE ACCURACY OR COMPLETENESS OF SCANNED COPIES OF THIS PLAN SHEET.

TO ACCOMPANY PLANS DATED 6-22-15

VISORS

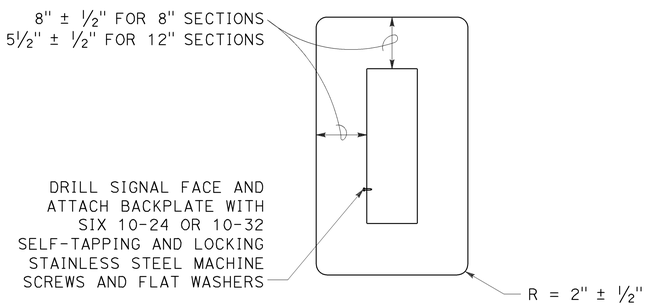

8" AND 12" SECTIONS

BACKPLATE

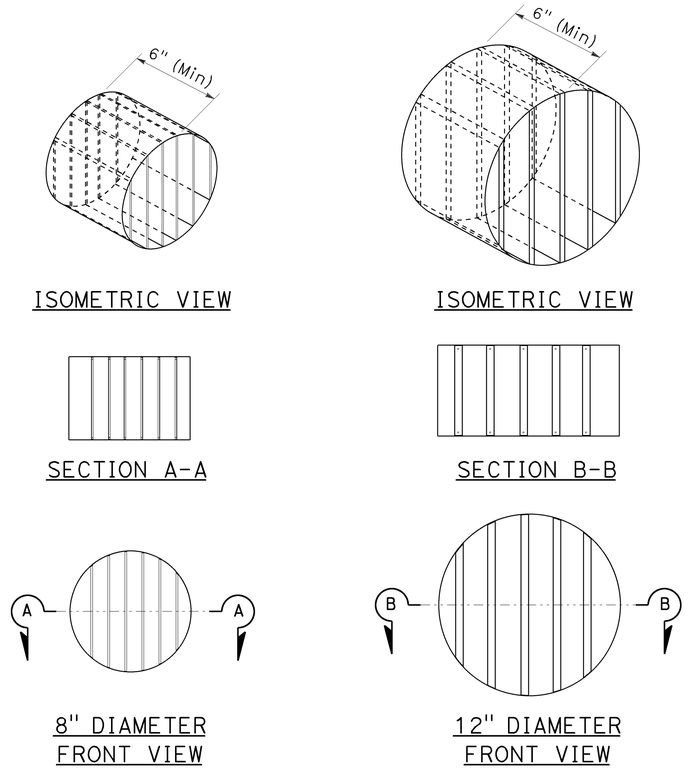

DIRECTIONAL LOUVER

Directional louvers shall be oriented and secured in place with one plated brass machine screw and nut.

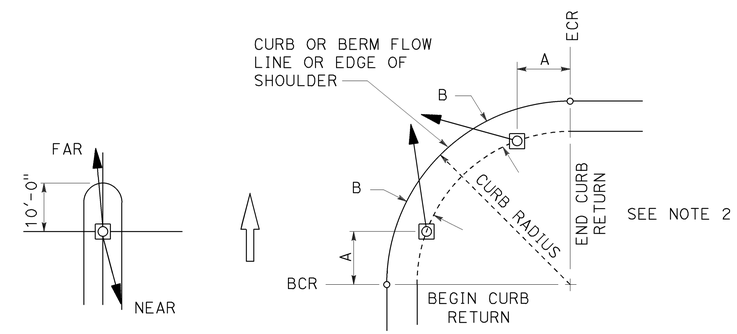

NOTES:

1. Typical signal pole placement unless dimensioned on plans.
2. For A and B dimensions, see Pole Schedule.

SIGNAL STANDARD PLACEMENT DIMENSIONS AND EQUIPMENT LOCATIONS

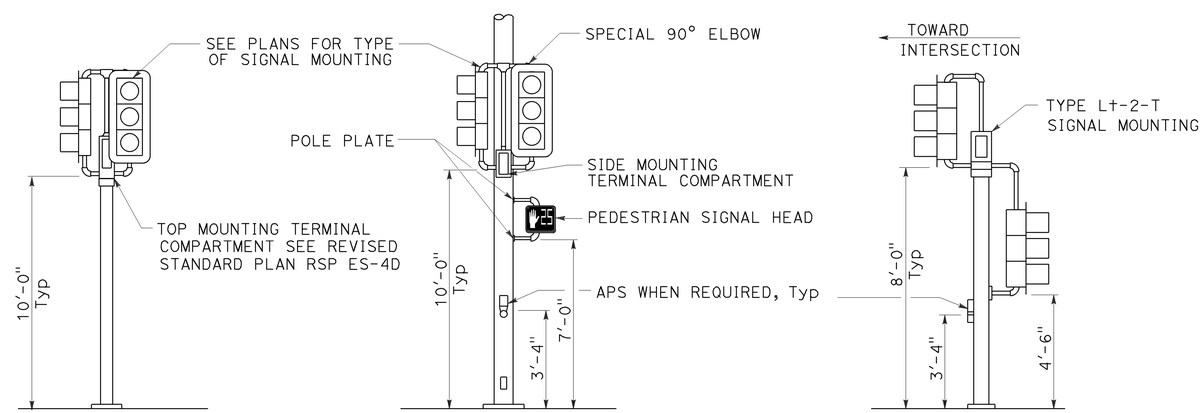

TOP MOUNTED SIGNALS (TV)
Type 1-A, 1-B, 1-C and 1-D standard as indicated on the plans

SIDE MOUNTED SIGNALS (SV AND SP)
Normally used on standards with luminaire or signal mast arm

LEFT TURN LANE SIGNAL
Type 1-A, 1-B, 1-C and 1-D standard as indicated on plans

TYPICAL SIGNAL HEAD INSTALLATIONS

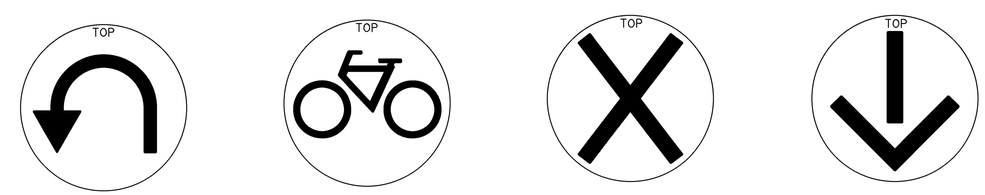

U-TURN | BICYCLE | LANE CONTROL | LANE CONTROL

SIGNAL FACES

STATE OF CALIFORNIA
DEPARTMENT OF TRANSPORTATION

ELECTRICAL SYSTEMS (SIGNAL HEADS AND MOUNTINGS)

NO SCALE

RSP ES-4C DATED OCTOBER 30, 2015 SUPERSEDES RSP ES-4C DATED JULY 19, 2013 AND STANDARD PLAN ES-4C DATED MAY 20, 2011 - PAGE 445 OF THE STANDARD PLANS BOOK DATED 2010.

REVISED STANDARD PLAN RSP ES-4C

2010 REVISED STANDARD PLAN RSP ES-4C

9-28-15

Dist	COUNTY	ROUTE	POST MILES TOTAL PROJECT	SHEET No.	TOTAL SHEETS
10	Tuo	120	R19.4/R20.0	62	119

Theresa Gabriel
REGISTERED ELECTRICAL ENGINEER

October 30, 2015
PLANS APPROVAL DATE

REGISTERED PROFESSIONAL ENGINEER Theresa Aziz Gabriel No. E15129 Exp. 6-30-16 ELECTRICAL STATE OF CALIFORNIA

THE STATE OF CALIFORNIA OR ITS OFFICERS OR AGENTS SHALL NOT BE RESPONSIBLE FOR THE ACCURACY OR COMPLETENESS OF SCANNED COPIES OF THIS PLAN SHEET.

TO ACCOMPANY PLANS DATED 6-22-15

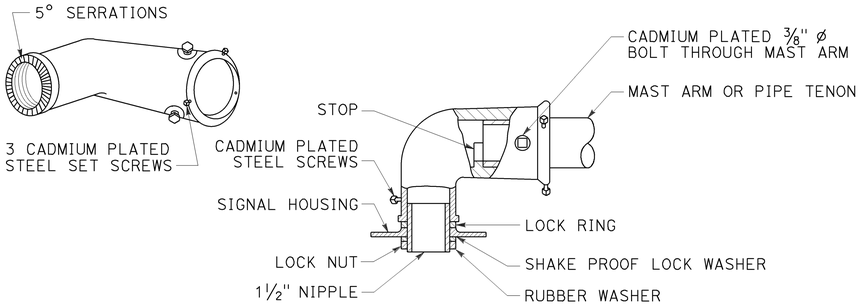

TYPE MAT
MAST ARM MOUNTING
For 2 NPS pipe, see Note 1.

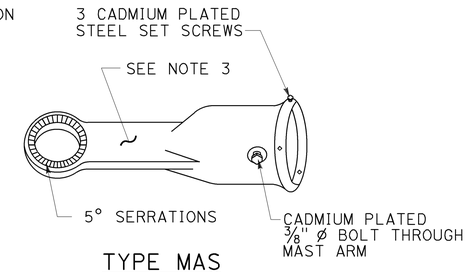

TYPE MAS
MAST ARM MOUNTING
For 2 NPS pipe, see Note 1.

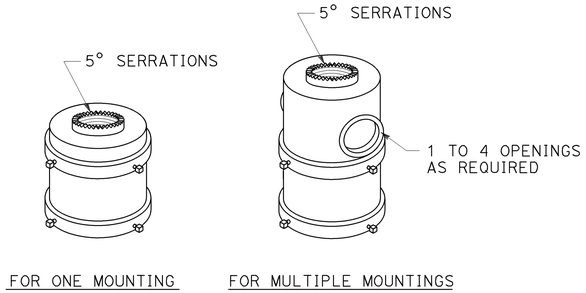

TOP MOUNTINGS
For 4 NPS pipe, see Note 2.

SIGNAL SLIP FITTERS

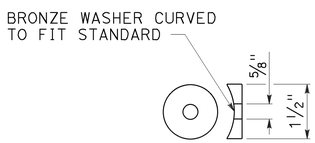

DETAIL C

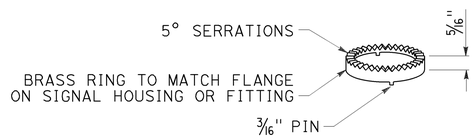

LOCK RING
Use where locking ring is not integral With signal housing or fitting.

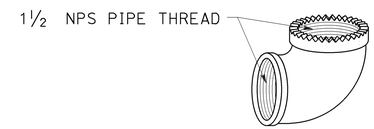

SPECIAL 90° ELBOW
One for each signal head, except those With special slip fitter mounting

MISCELLANEOUS MOUNTING HARDWARE

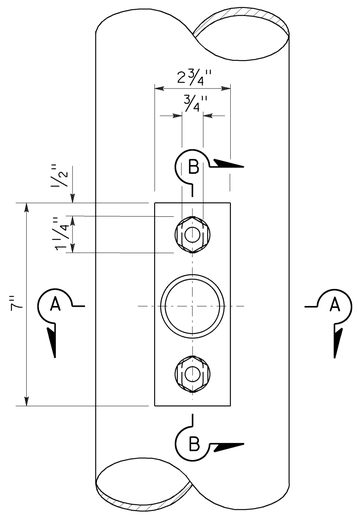

TOP VIEW

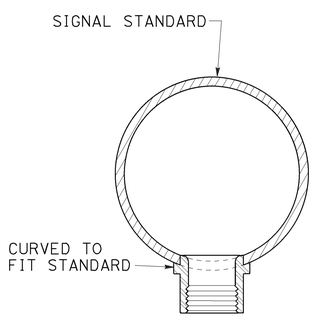

SECTION A-A

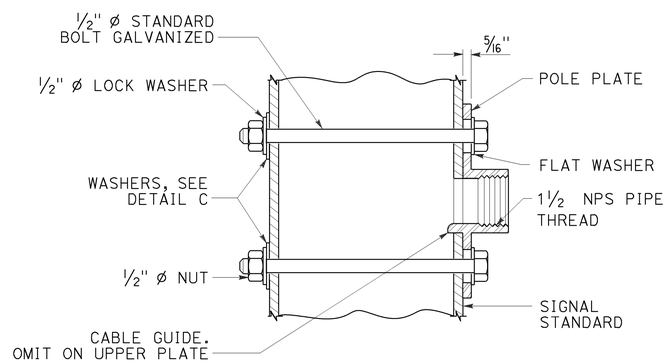

SECTION B-B

POLE PLATE FOR SIDE MOUNTED SIGNAL HEAD
WITHOUT TERMINAL COMPARTMENT

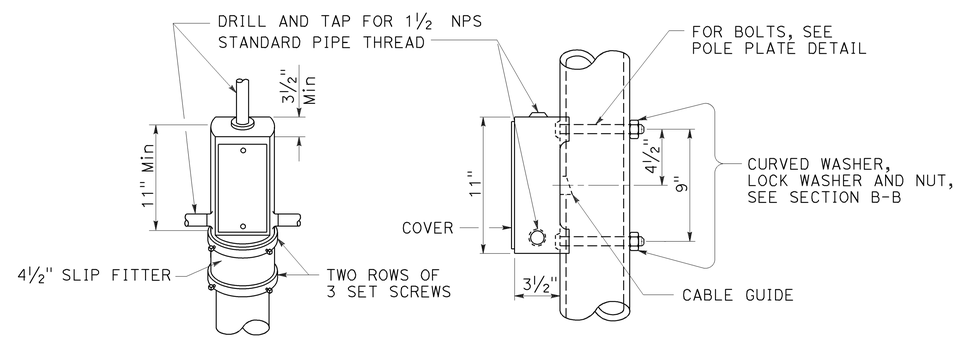

TOP MOUNTING

SIDE MOUNTING

TERMINAL COMPARTMENT

NOTES:

1. After mast arm signal has been plumbed and secured, drill 7/16" hole through mast arm tenon in line with slip fitter hole. Place a cadmium plated 3/8" ø galvanized bolt with washer under bolt head through hole and secure with washer, nut, and locknut. Seal openings between mast arm mountings and mast arm with mastic.
2. (A) Threaded top mounted slip fitter openings shall be 1½ NPS.
   (B) Serrations in fittings shall match those on bottom of signal heads or in lock ring.
   (C) Top opening shall be offset when backplate is used.
3. Wireway shall have a cross section area of 0.95 square inch minimum. Minimum width of ½".

STATE OF CALIFORNIA
DEPARTMENT OF TRANSPORTATION

ELECTRICAL SYSTEMS (SIGNAL HEAD MOUNTING)

NO SCALE

RSP ES-4D DATED OCTOBER 30, 2015 SUPERSEDES STANDARD PLAN ES-4D DATED MAY 20, 2011 - PAGE 446 OF THE STANDARD PLANS BOOK DATED 2010.

REVISED STANDARD PLAN RSP ES-4D

2010 REVISED STANDARD PLAN RSP ES-4D

8-20-15

Dist	COUNTY	ROUTE	POST MILES TOTAL PROJECT	SHEET No.	TOTAL SHEETS
10	Tuo	120	R19.4/R20.0	63	119

Theresa Gabriel
REGISTERED ELECTRICAL ENGINEER

October 30, 2015
PLANS APPROVAL DATE

REGISTERED PROFESSIONAL ENGINEER
Theresa Aziz Gabriel
No. E15129
Exp. 6-30-16
ELECTRICAL
STATE OF CALIFORNIA

THE STATE OF CALIFORNIA OR ITS OFFICERS OR AGENTS SHALL NOT BE RESPONSIBLE FOR THE ACCURACY OR COMPLETENESS OF SCANNED COPIES OF THIS PLAN SHEET.

TO ACCOMPANY PLANS DATED 6-22-15

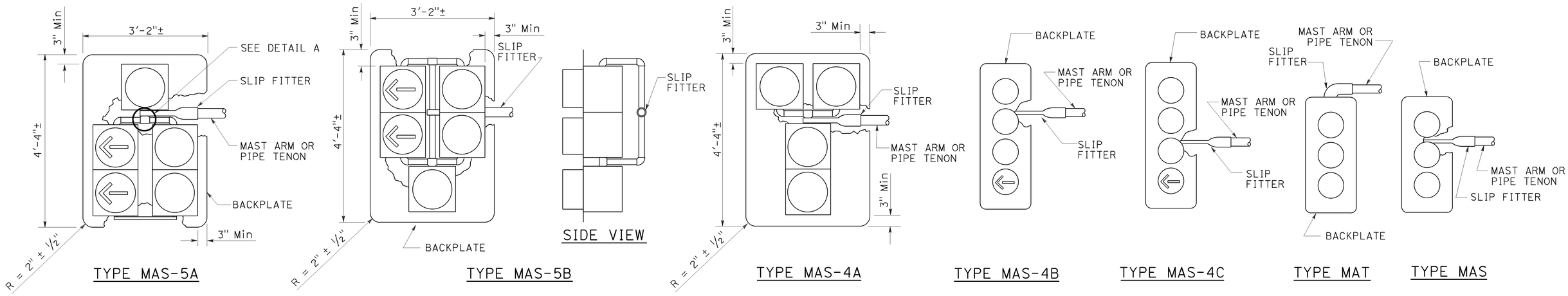

MAST ARM MOUNTINGS

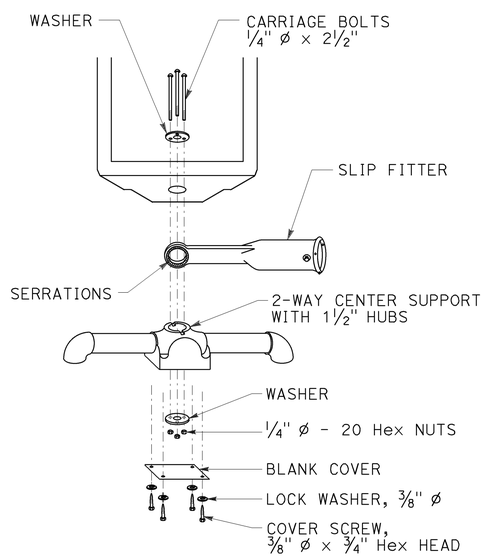

DETAIL A

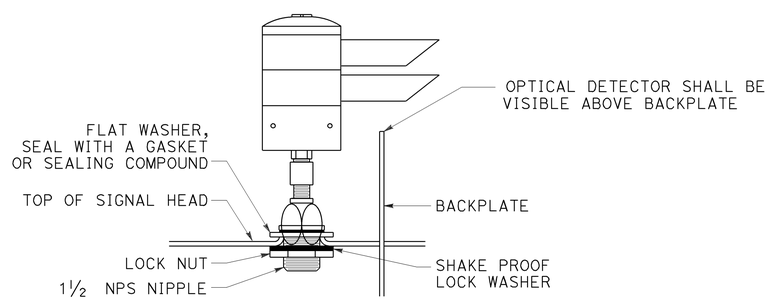

OPTICAL DETECTOR MOUNTING FOR EMERGENCY VEHICLE DETECTION

DETAIL B

STATE OF CALIFORNIA
DEPARTMENT OF TRANSPORTATION

ELECTRICAL SYSTEMS (SIGNAL HEADS AND OPTICAL DETECTOR MOUNTING)

NO SCALE

RSP ES-4E DATED OCTOBER 30, 2015 SUPERSEDES RSP ES-4E DATED JULY 19, 2013 AND STANDARD PLAN ES-4E DATED MAY 20, 2011 - PAGE 447 OF THE STANDARD PLANS BOOK DATED 2010.

REVISED STANDARD PLAN RSP ES-4E

2010 REVISED STANDARD PLAN RSP ES-4E

8-19-15

Dist	COUNTY	ROUTE	POST MILES TOTAL PROJECT	SHEET No.	TOTAL SHEETS
10	Tuo	120	R19.4/R20.0	64	119

Theresa Gabriel
REGISTERED ELECTRICAL ENGINEER

October 30, 2015
PLANS APPROVAL DATE

REGISTERED PROFESSIONAL ENGINEER
Theresa Aziz Gabriel
No. E15129
Exp. 6-30-16
ELECTRICAL
STATE OF CALIFORNIA

THE STATE OF CALIFORNIA OR ITS OFFICERS OR AGENTS SHALL NOT BE RESPONSIBLE FOR THE ACCURACY OR COMPLETENESS OF SCANNED COPIES OF THIS PLAN SHEET.

TO ACCOMPANY PLANS DATED 6-22-15

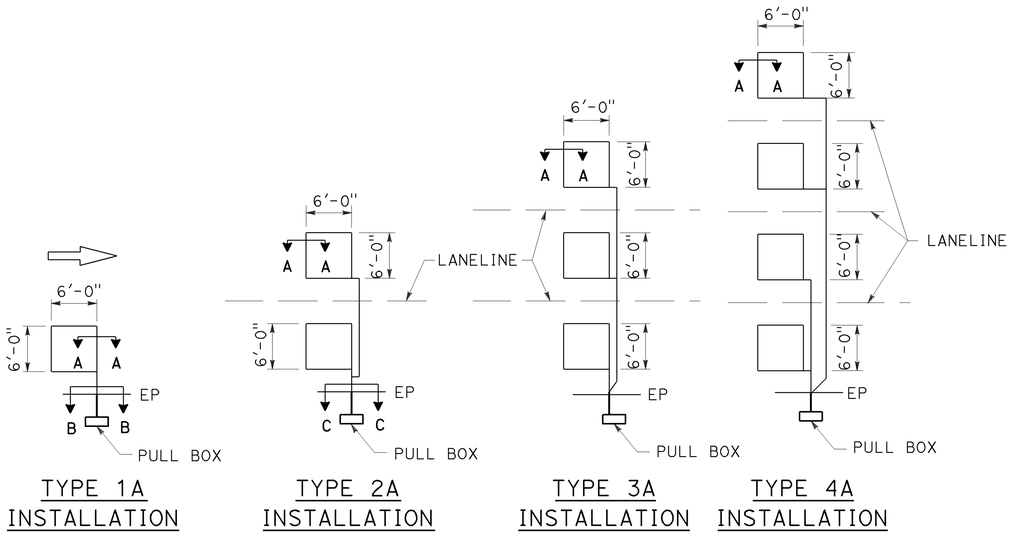

TYPE 1A INSTALLATION | TYPE 2A INSTALLATION | TYPE 3A INSTALLATION | TYPE 4A INSTALLATION

SAWCUT DETAILS

Type A loop detector configurations illustrated

1. 1A thru 4A = 1 Type A loop configuration in each lane.
2. 1B thru 4B = 1 Type B loop configuration in each lane.
3. 1C = 1 Type C loop configuration entering lanes as required.
4. 1D thru 4D = 1 Type D loop configuration in each lane.
5. 1E thru 4E = 1 Type E loop configuration in each lane.
6. 1Q thru 4Q = 1 Type Q loop configuration in each lane.
   Use Type A, B, C, D, E or Q loop detector configurations only when specified or shown on plans.

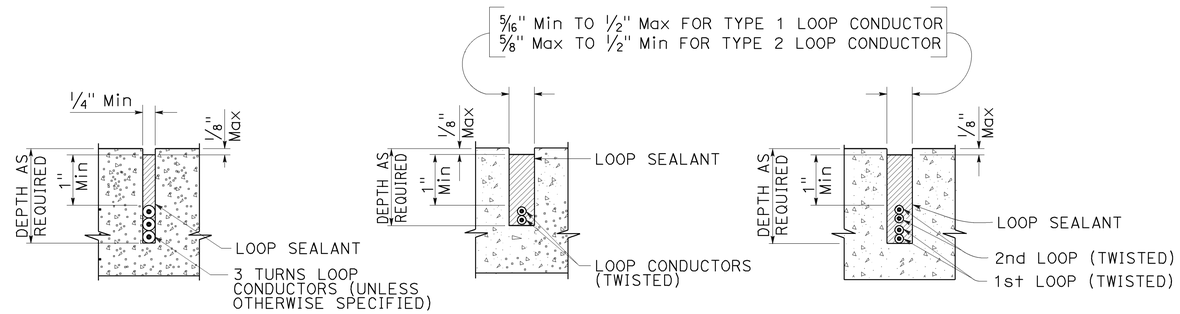

SECTION A-A | SECTION B-B | SECTION C-C

SLOT DETAILS - TYPE 1 AND TYPE 2 LOOP CONDUCTOR

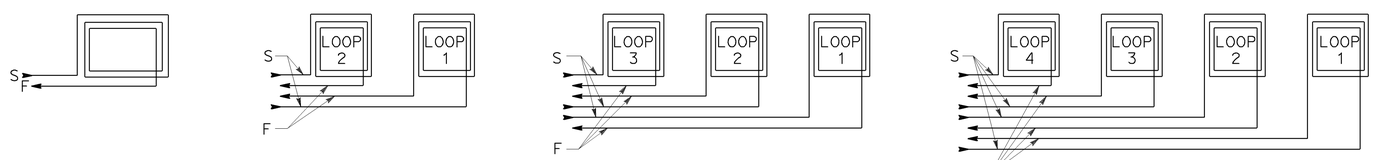

WINDING DETAILS

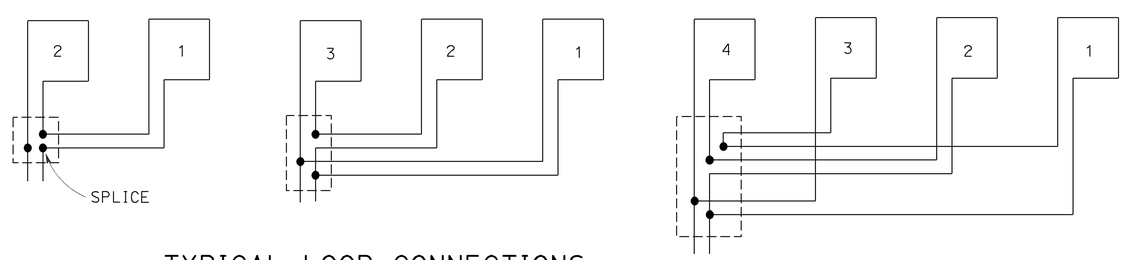

TYPICAL LOOP CONNECTIONS

Dashed lines represent the pull box

ABBREVIATIONS:

S - START
F - FINISH

STATE OF CALIFORNIA
DEPARTMENT OF TRANSPORTATION

ELECTRICAL SYSTEMS (LOOP DETECTORS)

NO SCALE

RSP ES-5A DATED OCTOBER 30, 2015 SUPERSEDES STANDARD PLAN ES-5A DATED MAY 20, 2011 - PAGE 448 OF THE STANDARD PLANS BOOK DATED 2010.

REVISED STANDARD PLAN RSP ES-5A

2010 REVISED STANDARD PLAN RSP ES-5A

8-24-15

Dist	COUNTY	ROUTE	POST MILES TOTAL PROJECT	SHEET No.	TOTAL SHEETS
10	Tuo	120	R19.4/R20.0	65	119

Theresa Gabriel
REGISTERED ELECTRICAL ENGINEER

October 30, 2015
PLANS APPROVAL DATE

REGISTERED PROFESSIONAL ENGINEER
Theresa Aziz Gabriel
No. E15129
Exp. 6-30-16
ELECTRICAL
STATE OF CALIFORNIA

THE STATE OF CALIFORNIA OR ITS OFFICERS OR AGENTS SHALL NOT BE RESPONSIBLE FOR THE ACCURACY OR COMPLETENESS OF SCANNED COPIES OF THIS PLAN SHEET.

TO ACCOMPANY PLANS DATED 6-22-15

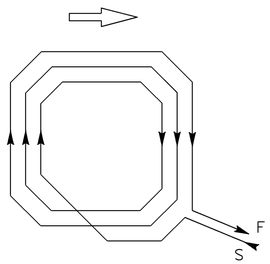

WINDING DETAIL

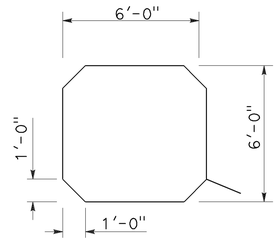

SAWCUT DETAIL

TYPE A LOOP DETECTOR CONFIGURATION

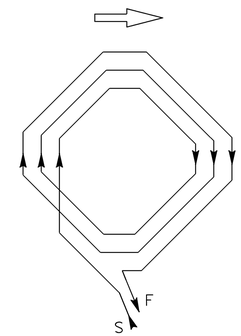

WINDING DETAIL

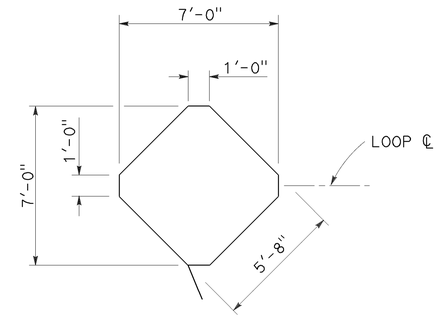

SAWCUT DETAIL

TYPE B LOOP DETECTOR CONFIGURATION

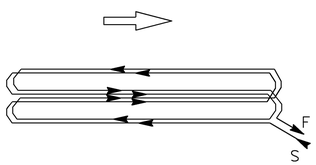

WINDING DETAIL

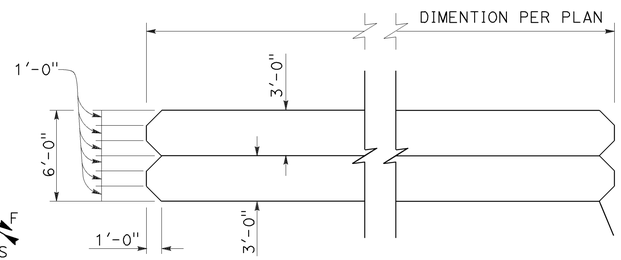

SAWCUT DETAIL

TYPE C LOOP DETECTOR CONFIGURATION

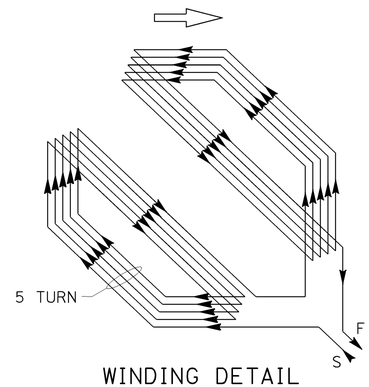

WINDING DETAIL

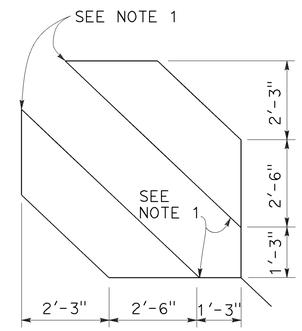

SAWCUT DETAIL

TYPE D LOOP DETECTOR CONFIGURATION

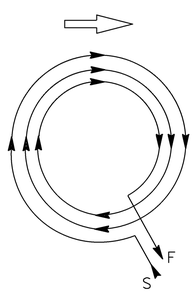

WINDING DETAIL

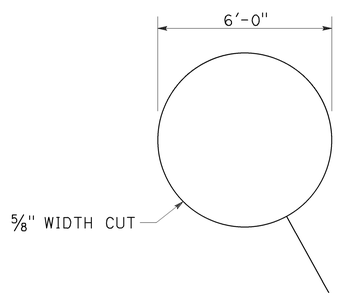

SAWCUT DETAIL

TYPE E LOOP DETECTOR CONFIGURATION

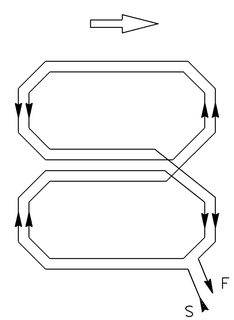

WINDING DETAIL

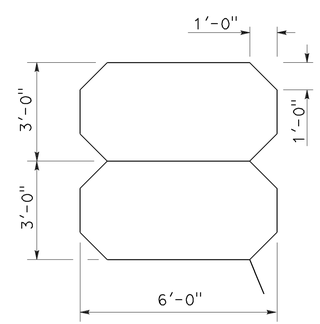

SAWCUT DETAIL

TYPE Q LOOP DETECTOR CONFIGURATION

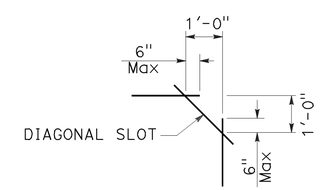

PLAN VIEW OF DIAGONAL SLOT AT CORNERS

NOTES:

1. Round corners of acute angle sawcuts to prevent damage to conductors.
2. Typical distance separating loops from edge to edge is 10' for Type A, B, D and E installation in single lane.
3. Use Type D loops for limit line detector installations in left turn and bicycle lanes.

STATE OF CALIFORNIA
DEPARTMENT OF TRANSPORTATION

ELECTRICAL SYSTEMS (DETECTORS)

NO SCALE

RSP ES-5B DATED OCTOBER 30, 2015 SUPERSEDES RSP ES-5B DATED JULY 19, 2013 AND STANDARD PLAN ES-5B DATED MAY 20, 2011 - PAGE 449 OF THE STANDARD PLANS BOOK DATED 2010.

REVISED STANDARD PLAN RSP ES-5B

2010 REVISED STANDARD PLAN RSP ES-5B

9-25-15

Dist	COUNTY	ROUTE	POST MILES TOTAL PROJECT	SHEET No.	TOTAL SHEETS
10	Tuo	120	R19.4/R20.0	66	119

Theresa Gabriel
REGISTERED ELECTRICAL ENGINEER

October 30, 2015
PLANS APPROVAL DATE

REGISTERED PROFESSIONAL ENGINEER Theresa Aziz Gabriel No. E15129 Exp. 6-30-16 ELECTRICAL STATE OF CALIFORNIA

THE STATE OF CALIFORNIA OR ITS OFFICERS OR AGENTS SHALL NOT BE RESPONSIBLE FOR THE ACCURACY OR COMPLETENESS OF SCANNED COPIES OF THIS PLAN SHEET.

TO ACCOMPANY PLANS DATED 6-22-15

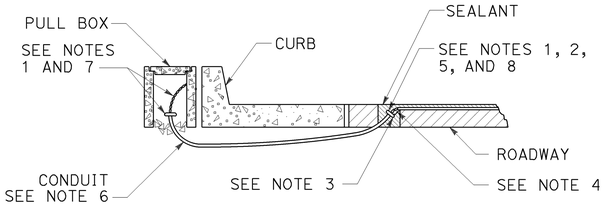

TYPE A
CURB TERMINATION DETAIL

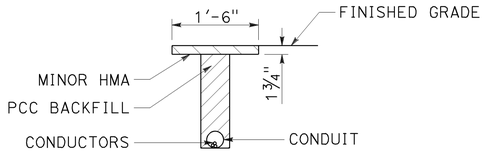

"T" TRENCH
DETAIL T

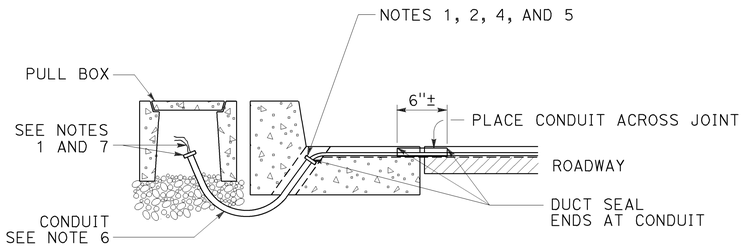

CROSS SECTION

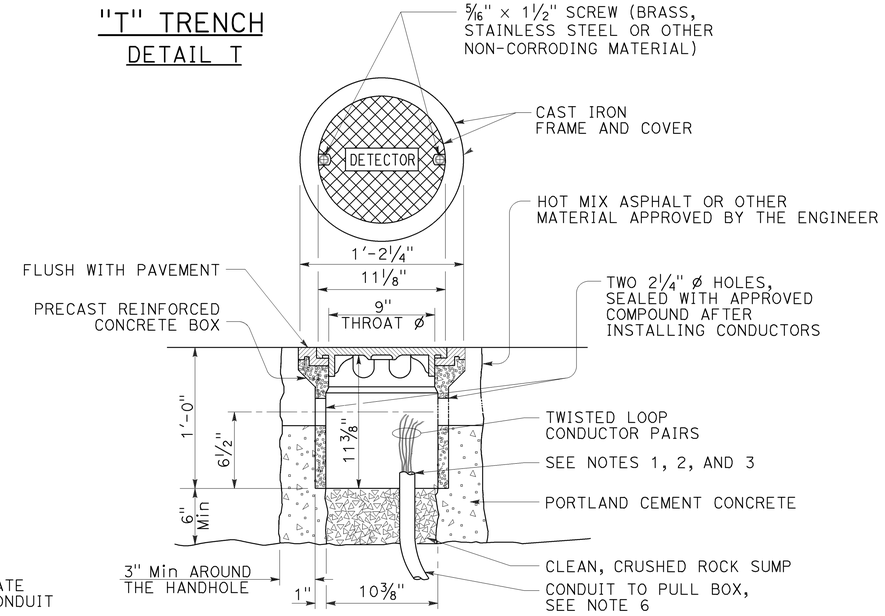

DETECTOR HANDHOLE DETAIL

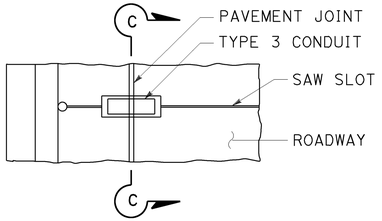

PLAN VIEW

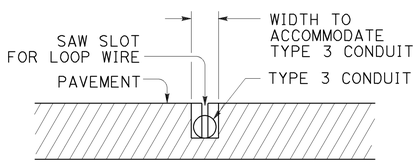

SECTION C-C

TYPE B
CURB TERMINATION DETAIL

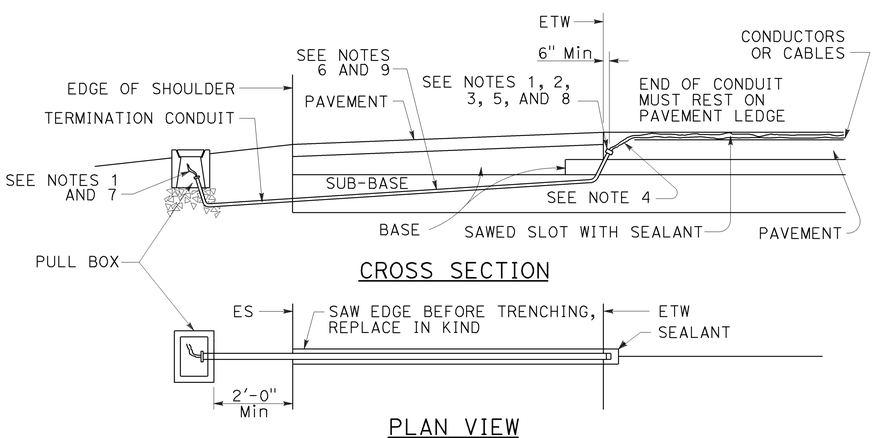

CROSS SECTION

PLAN VIEW

SHOULDER TERMINATION DETAILS

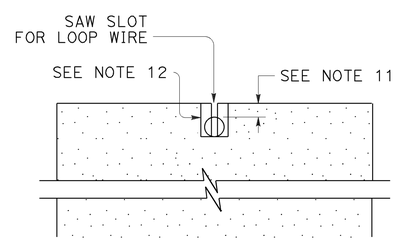

SECTION A-A

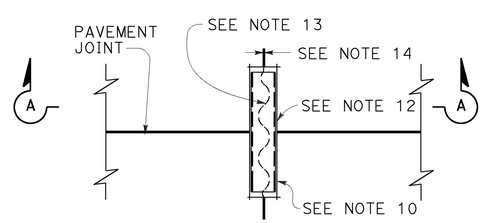

PLAN VIEW

TYPICAL LOOP LEAD-IN DETAIL AT PAVEMENT JOINT

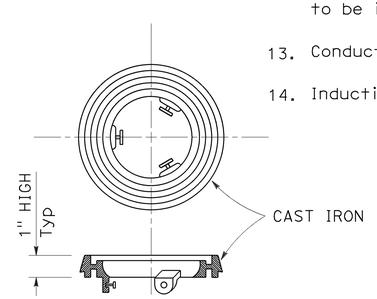

LOCKING GRADE RING

NOTES:

1. Bushing shall be used at end of conduit.
2. Tape detector conductors or cables 3" each side of bushings.
3. Install duct seal compound to each end of termination conduit before installing sealant.
4. Round all sharp edges where detector conductors or cables have to pass.
5. End of conduit shall be 3⅛" below roadway surface.
6.

Conduit size	Loop conductors
1"C minimum	1 to 2 pairs
1½"C minimum	3 to 4 pairs
2"C minimum	5 or more pairs

7. Splice detector conductors or cables to detector lead-in-cable.
8. Location of detector handhole when shown on plans.
9. When the shoulder and traveled way are paved with the same material and there is no joint between them, the conduit shall extend only 2'-0" into the shoulder pavement.
10. ¾"C, Type 3 conduit 6" long minimum, plug both ends with duct compound to keep out sealant.
11. ½" Minimum between top of conduit and pavement surface.
12. Sawcut shall not exceed 1" in width and ⅛" longer than conduit to be installed.
13. Conductors with ½" minimum slack inside conduit.
14. Inductive loop detector saw slot.

STATE OF CALIFORNIA
DEPARTMENT OF TRANSPORTATION

ELECTRICAL SYSTEMS (CURB AND SHOULDER TERMINATION, TRENCH, AND HANDHOLE DETAILS)

NO SCALE

RSP ES-5D DATED OCTOBER 30, 2015 SUPERSEDES RSP ES-5D DATED JULY 19, 2013 AND STANDARD PLAN ES-5D DATED MAY 20, 2011 - PAGE 451 OF THE STANDARD PLANS BOOK DATED 2010.

REVISED STANDARD PLAN RSP ES-5D

2010 REVISED STANDARD PLAN RSP ES-5D

8-19-15

DIST	COUNTY	ROUTE	POST MILES TOTAL PROJECT	SHEET NO.	TOTAL SHEETS
10	Tuo	120	R19.4/R20.0	67	119

Theresa Gabriel
REGISTERED ELECTRICAL ENGINEER

October 30, 2015
PLANS APPROVAL DATE

REGISTERED PROFESSIONAL ENGINEER Theresa Aziz Gabriel No. E15129 Exp. 6-30-16 ELECTRICAL STATE OF CALIFORNIA

THE STATE OF CALIFORNIA OR ITS OFFICERS OR AGENTS SHALL NOT BE RESPONSIBLE FOR THE ACCURACY OR COMPLETENESS OF SCANNED COPIES OF THIS PLAN SHEET.

TO ACCOMPANY PLANS DATED 6-22-15

2010 REVISED STANDARD PLAN RSP ES-8A

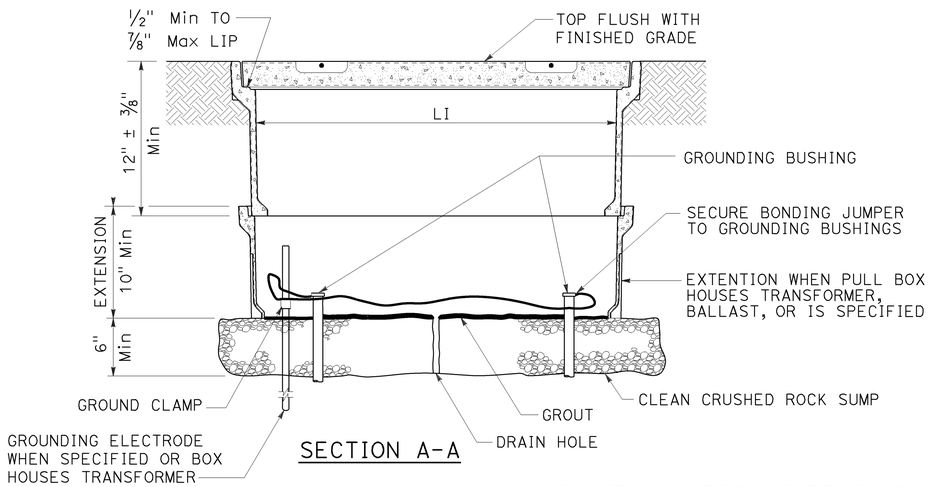

SECTION A-A

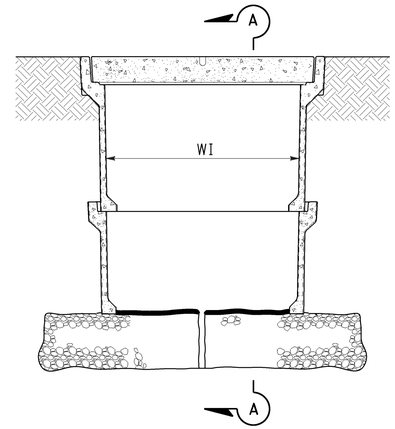

SIDE VIEW

INSTALLATION DETAILS

DETAIL A

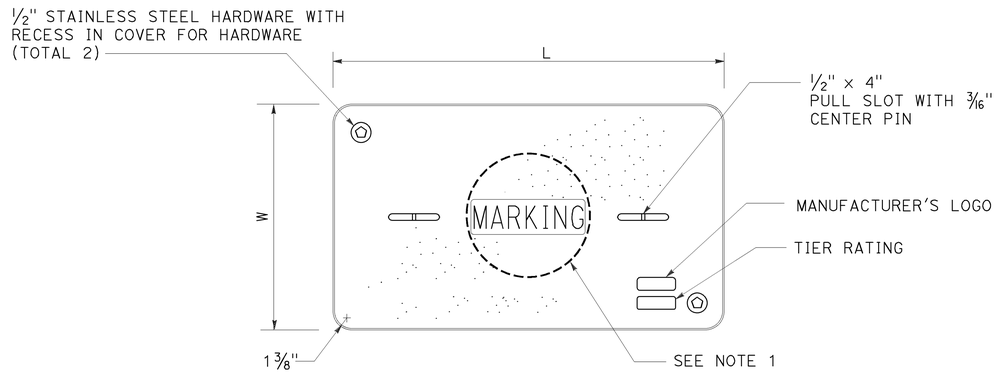

COVER TOP VIEW

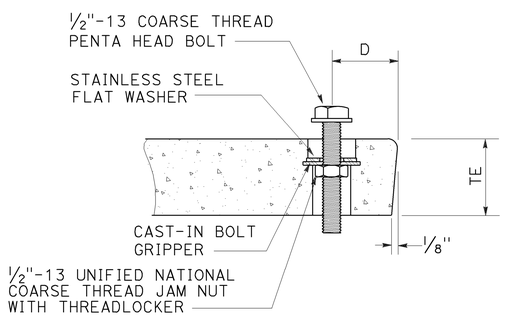

TYPICAL COVER CAPTIVE BOLT

OR SIMILAR

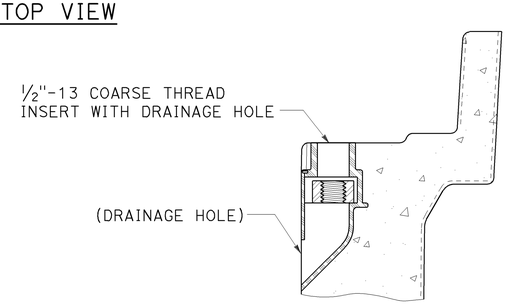

TYPICAL THREADED INSERT

OR SIMILAR

NOTES:

1. Pull box covers shall be marked as follows: "SERVICE" Service circuits between service point and service disconnect; "SPRINKLER-CONTROL" sprinkler control circuits, 50 V or less; "CALTRANS" on all pull boxes, except pull boxes marked "SPRINKLER-CONTROL"; and "TELEPHONE" Telephone service;
   - A) No. 3½ pull box.
     - 1) "SIGNAL" - Traffic signal circuits with or without lighting or sign lighting circuits.
     - 2) "LIGHTING" - Lighting or sign lighting circuits where voltage is under 600 V.
   - B) No. 5, 6, 9 or 9A pull box.
     - 1) "TRAFFIC SIGNAL" - Traffic signal circuits with or without lighting or sign lighting circuits.
     - 2) "LIGHTING" - Lighting or sign lighting circuits where voltage is under 600 V.
     - 3) "LIGHTING-HIGH VOLTAGE" - Lighting or sign lighting circuits where voltage is above 600 V.
     - 4) "IRRIGATION" - Circuits to irrigation controller 120 V or more.
     - 5) "RAMP METER" - Ramp meter circuits.
     - 6) "COUNT STATION" - Count or speed monitor circuits.
     - 7) "COMMUNICATIONS" - Communication circuits.
     - 8) "TOS COMMUNICATIONS" - TOS communication line.
     - 9) "TOS POWER" - TOS power.
     - 10) "TDC POWER" - Telephone demarcation cabinet power.
     - 11) "CCTV" - Closed circuit television circuits.
     - 12) "TMS" - Traffic monitoring station circuits.
     - 13) "CMS" - Changeable message sign circuits.
     - 14) "HAR" - Highway advisory radio circuits.
     - 15) "BOOSTER PUMP" - Booster pump circuit.
2. The nominal dimensions of the opening in which the cover sets shall be the same as the cover dimensions except the length and width dimensions shall be 1/8" greater.
3. Covers and boxes shall be interchangeable with California standard male and female gages. When interchanged with a standard male or female gage, the top surfaces shall be flush within 1/8". Top outside radius of covers and pull boxes shall have a 1/8" radius.
4. Pull box extension may be another pull box as long as the bottom edge of the pull box can fit into the cover opening.
5. Dimensions for the cover for non-traffic pull box are nominal values.

DIMENSION TABLE

PULL BOX	PULL BOX					COVER				
	MINIMUM DEPTH BOX	MINIMUM DEPTH EXTENSION	MINIMUM WEIGHT	LI Min	WI Min	TE	D	L	W	MINIMUM WEIGHT
No. 3½	12"	N/A	40 lb	1' - 3"	9"	1¾"	1¾"	1'-3¼" - 1'-3⅜"	10" - 10⅛"	30 lb
No. 5	12"	10"	55 lb	1' - 8"	11"	2"	1¾"	1'-11¼"	1'-1¾"	60 lb
No. 6	12"	10"	70 lb	2' - 4¼"	1' - 3¼"	2"	2"	2'-6½"	1'-5½"	85 lb

STATE OF CALIFORNIA
DEPARTMENT OF TRANSPORTATION

ELECTRICAL SYSTEMS (NON-TRAFFIC PULL BOX)

NO SCALE

RSP ES-8A DATED OCTOBER 30, 2015 SUPERSEDES RSP ES-8A DATED JULY 19, 2013 AND RSP ES-8A DATED JANUARY 20, 2012 THAT SUPPLEMENTS THE STANDARD PLANS BOOK DATED 2010.

REVISED STANDARD PLAN RSP ES-8A

8-25-15

Dist	COUNTY	ROUTE	POST MILES TOTAL PROJECT	SHEET No.	TOTAL SHEETS
10	Tuo	120	R19.4/R20.0	68	119

Theresa Gabriel
REGISTERED ELECTRICAL ENGINEER

October 30, 2015
PLANS APPROVAL DATE

REGISTERED PROFESSIONAL ENGINEER
Theresa Aziz Gabriel
No. E15129
Exp. 6-30-16
ELECTRICAL
STATE OF CALIFORNIA

THE STATE OF CALIFORNIA OR ITS OFFICERS OR AGENTS SHALL NOT BE RESPONSIBLE FOR THE ACCURACY OR COMPLETENESS OF SCANNED COPIES OF THIS PLAN SHEET.

TO ACCOMPANY PLANS DATED 6-22-15

NOTE:

Curves represent the minimum footcandle (FC).

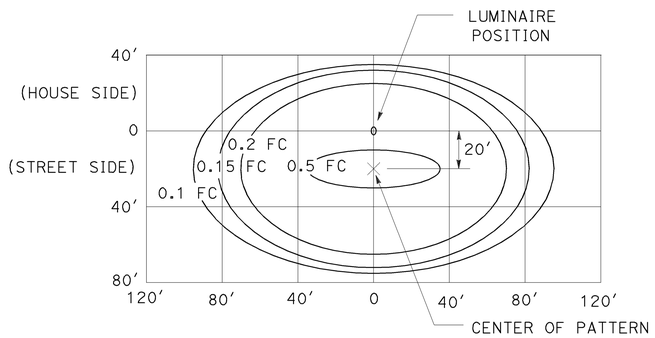

LED LUMINAIRE 165 W

34′ Mounting Height

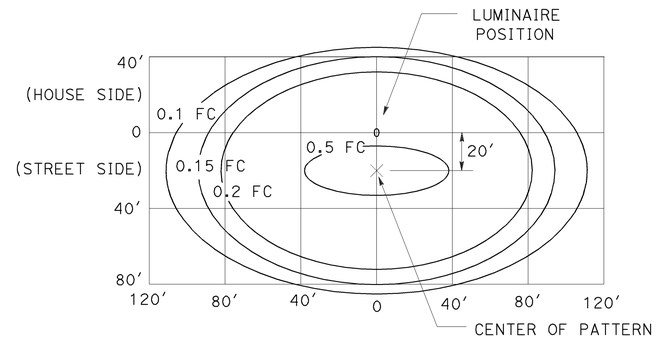

LED LUMINAIRE 235 W

40′ Mounting Height

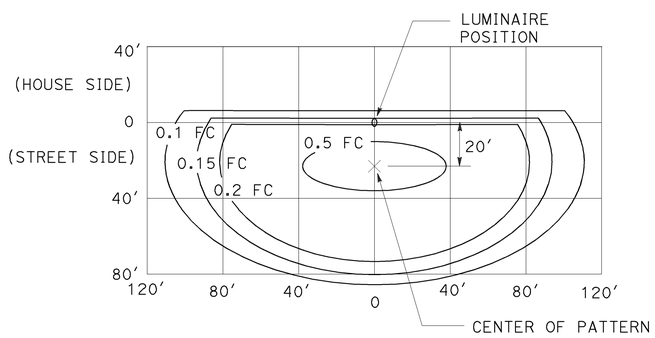

LED LUMINAIRE 235 W

40′ Mounting Height
with back side control

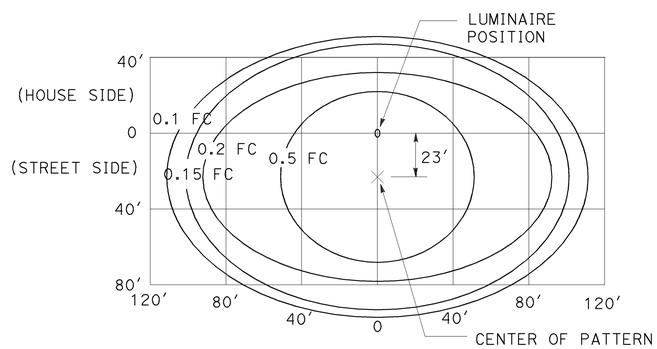

LED LUMINAIRE 300 W

40′ Mounting Height

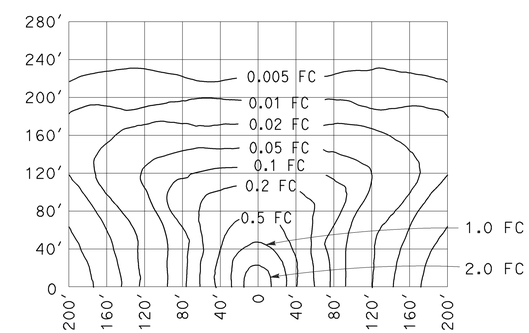

LOW-PRESSURE SODIUM LUMINAIRE 180 W

40′ Mounting Height
Lamp operated at 33,000 lm

STATE OF CALIFORNIA
DEPARTMENT OF TRANSPORTATION

ELECTRICAL SYSTEMS (ISOFOOTCANDLE CURVES)

NO SCALE

RSP ES-10A DATED OCTOBER 30, 2015 SUPERSEDES RSP ES-10A DATED JULY 19, 2013 THAT SUPPLEMENTS THE STANDARD PLANS BOOK DATED 2010.

REVISED STANDARD PLAN RSP ES-10A

2010 REVISED STANDARD PLAN RSP ES-10A

9-29-15

Dist	COUNTY	ROUTE	POST MILES TOTAL PROJECT	SHEET No.	TOTAL SHEETS
10	Tuo	120	R19.4/R20.0	69	119

Theresa Gabriel
REGISTERED ELECTRICAL ENGINEER

October 30, 2015
PLANS APPROVAL DATE

REGISTERED PROFESSIONAL ENGINEER
Theresa Aziz Gabriel
No. E15129
Exp. 6-30-16
ELECTRICAL
STATE OF CALIFORNIA

THE STATE OF CALIFORNIA OR ITS OFFICERS OR AGENTS SHALL NOT BE RESPONSIBLE FOR THE ACCURACY OR COMPLETENESS OF SCANNED COPIES OF THIS PLAN SHEET.

TO ACCOMPANY PLANS DATED 6-22-15

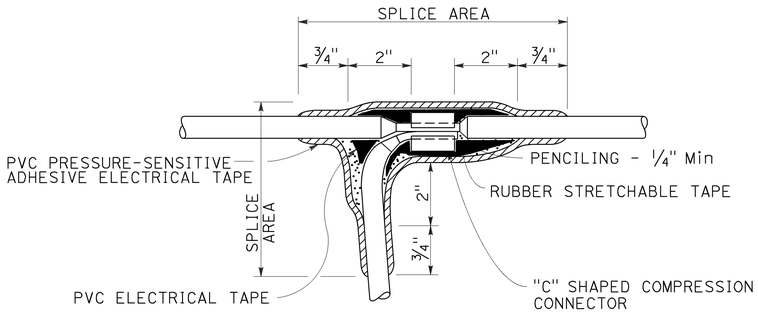

TYPE C SPLICE

See Note 3

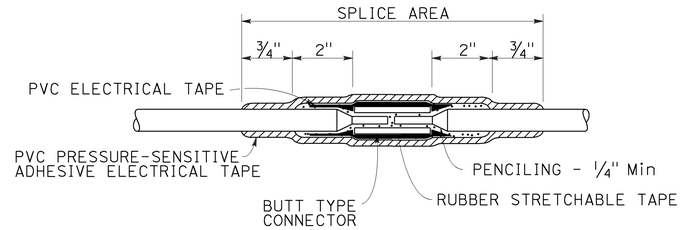

TYPE S SPLICE

See Note 4

NOTES:

1. Dimensions are minimum.
2. Rubber tapes shall be rolled after application.
3. Between 1 free-end and 1 through conductor.
4. Between 2 free-end conductors.
5. Between 3 free-end conductors.

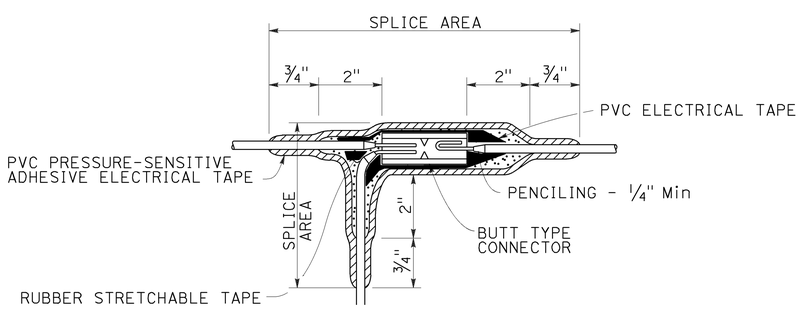

TYPE ST SPLICE

See Note 5

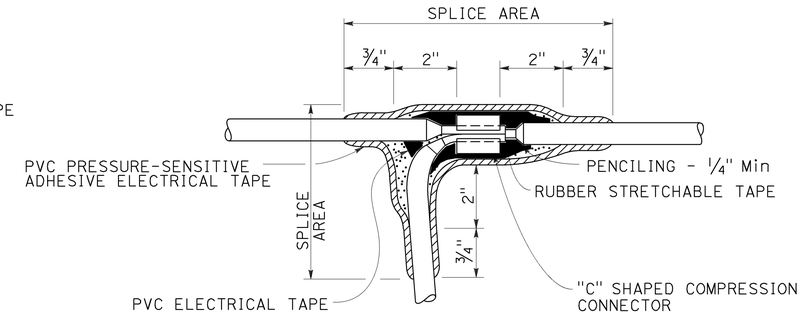

TYPE T SPLICE

See Note 5

STATE OF CALIFORNIA
DEPARTMENT OF TRANSPORTATION

ELECTRICAL SYSTEMS (SPLICING DETAILS)

NO SCALE

RSP ES-13A DATED OCTOBER 30, 2015 SUPERSEDES STANDARD PLAN ES-13A DATED MAY 20, 2011 - PAGE 491 OF THE STANDARD PLANS BOOK DATED 2010.

REVISED STANDARD PLAN RSP ES-13A

2010 REVISED STANDARD PLAN RSP ES-13A

9-28-15

DIST	COUNTY	ROUTE	POST MILES TOTAL PROJECT	SHEET No.	TOTAL SHEETS
10	Tuo	120	R19.4/R20.0	70	119

REGISTERED CIVIL ENGINEER 5/28/15 DATE

6-22-15
PLANS APPROVAL DATE

REGISTERED PROFESSIONAL ENGINEER DON NGUYEN-TAN No. C 57510 Exp. 12-31-15 CIVIL STATE OF CALIFORNIA

The State of California or its officers or agents shall not be responsible for the accuracy or completeness of scanned copies of this plan sheet.

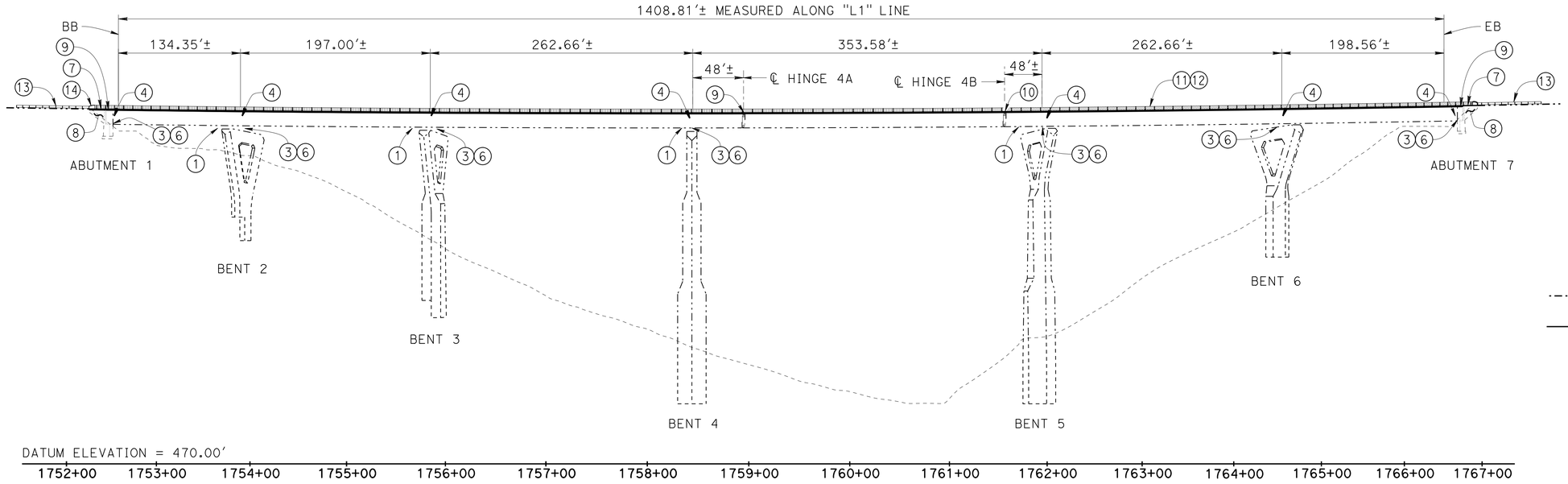

ELEVATION
1" = 60'

LEGEND:

-·-·-·- EXISTING STRUCTURE

——— NEW CONSTRUCTION

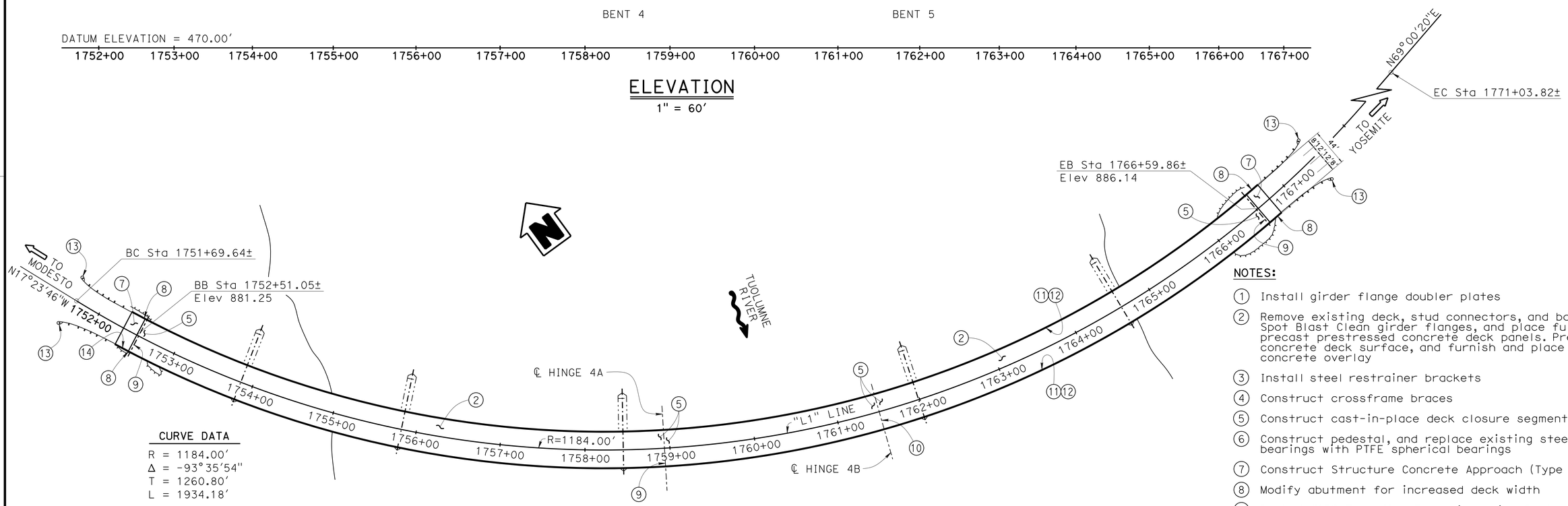

CURVE DATA

R = 1184.00'
Δ = -93°35'54"
T = 1260.80'
L = 1934.18'

PLAN
1" = 60'

NOTES:

1. Install girder flange doubler plates
2. Remove existing deck, stud connectors, and barriers. Spot Blast Clean girder flanges, and place full-depth precast prestressed concrete deck panels. Prepare concrete deck surface, and furnish and place polyester concrete overlay
3. Install steel restrainer brackets
4. Construct crossframe braces
5. Construct cast-in-place deck closure segment
6. Construct pedestal, and replace existing steel bearings with PTFE spherical bearings
7. Construct Structure Concrete Approach (Type R)
8. Modify abutment for increased deck width
9. Install WABO Transflex Expansion Joint System
10. Install Joint Seal (MR=2")
11. Salvage Metal Bridge Railing
12. California ST-20S Bridge Rail
13. Guard Railing, see Roadway Plans
14. Reset Plaque

NOTE:
VERIFY ALL CONTROLLING FIELD DIMENSIONS BEFORE ORDERING OR FABRICATING ANY MATERIAL.

NOTE: FOR QUANTITIES, SEE "DECK CONTOURS No. 1" SHEET.

GARY BLAKESLEY
DESIGN ENGINEER

	BY	CHECKED			
DESIGN	R. MELKO/S. PAHLAVAN	D. NGUYEN-TAN	LOAD & RESISTANCE FACTOR DESIGN	LIVE LOADING: HL93 AND ALTERNATIVE	
DETAILS	G. SOUZA	D. NGUYEN-TAN	LAYOUT	G. SOUZA	D. NGUYEN-TAN
QUANTITIES	S. MORIMOTO	R. MELKO	SPECIFICATIONS	T. CHEN	PLANS AND SPECS COMPARED D. NGUYEN-TAN

ORIGINAL SCALE IN INCHES FOR REDUCED PLANS 0 1 2 3

STATE OF CALIFORNIA
DEPARTMENT OF TRANSPORTATION

DIVISION OF ENGINEERING SERVICES
STRUCTURE DESIGN
DESIGN BRANCH 6

BRIDGE NO. 32-0018
POST MILE 19.6

TUOLUMNE RIVER BRIDGE (REHAB)
GENERAL PLAN NO. 1

UNIT: 3591
PROJECT NUMBER & PHASE: 1012000053-1
CONTRACT NO.: 10-0L9704

DISREGARD PRINTS BEARING EARLIER REVISION DATES

REVISION DATES 07-24-13 05-23-14 01-15-15

SHEET 1 OF 50

STRUCTURES DESIGN GENERAL PLAN SHEET (ENGLISH) (REV.09-01-10)

FILE => 32-0018-a-gp01.dgn

USERNAME => s113541 DATE PLOTTED => 12-NOV-2015 TIME PLOTTED => 11:07

DIST	COUNTY	ROUTE	POST MILES TOTAL PROJECT	SHEET No.	TOTAL SHEETS
10	Tuo	120	R19.4/R20.0	71	119

REGISTERED CIVIL ENGINEER 5/28/15 DATE

6-22-15
PLANS APPROVAL DATE

REGISTERED PROFESSIONAL ENGINEER DON NGUYEN-TAN No. C 57510 Exp. 12-31-15 CIVIL STATE OF CALIFORNIA

The State of California or its officers or agents shall not be responsible for the accuracy or completeness of scanned copies of this plan sheet.

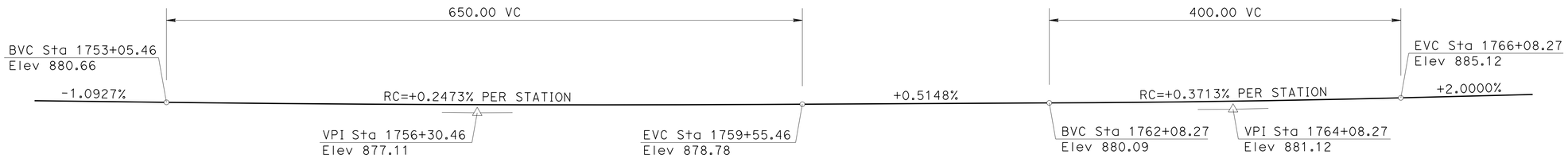

PROFILE GRADE

NO SCALE

LEGEND:

- Bridge Removal (Portion)
- Existing structure
- New construction

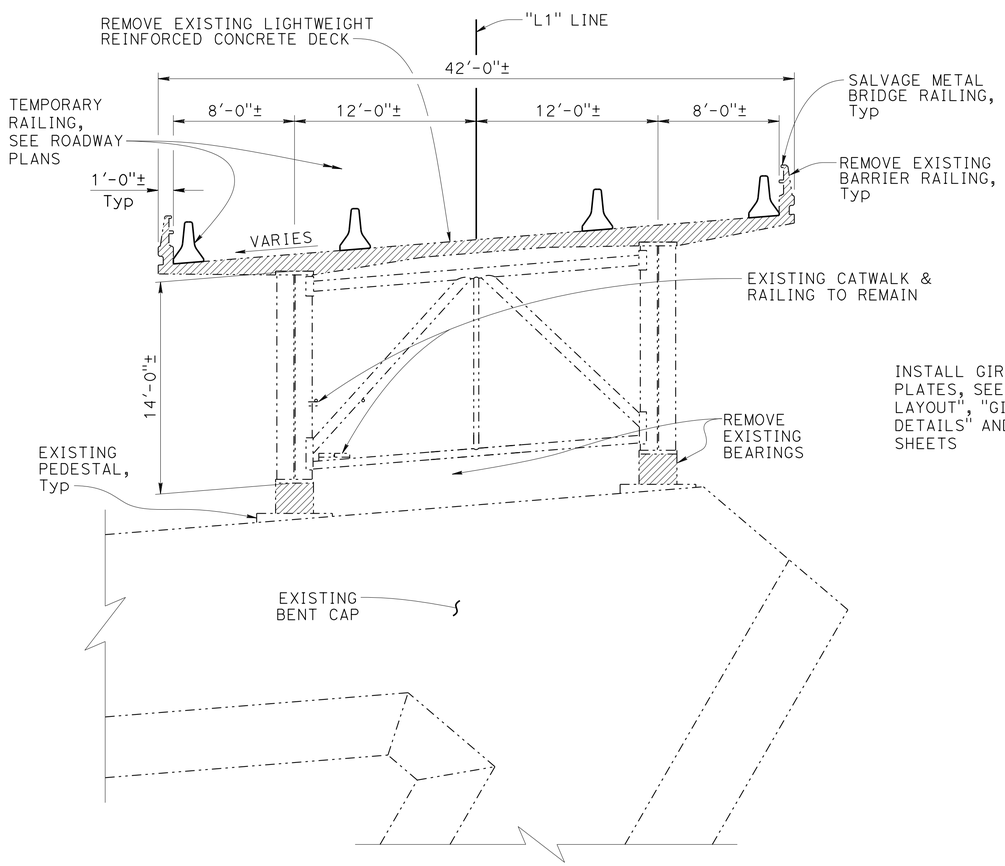

BRIDGE REMOVAL (PORTION)

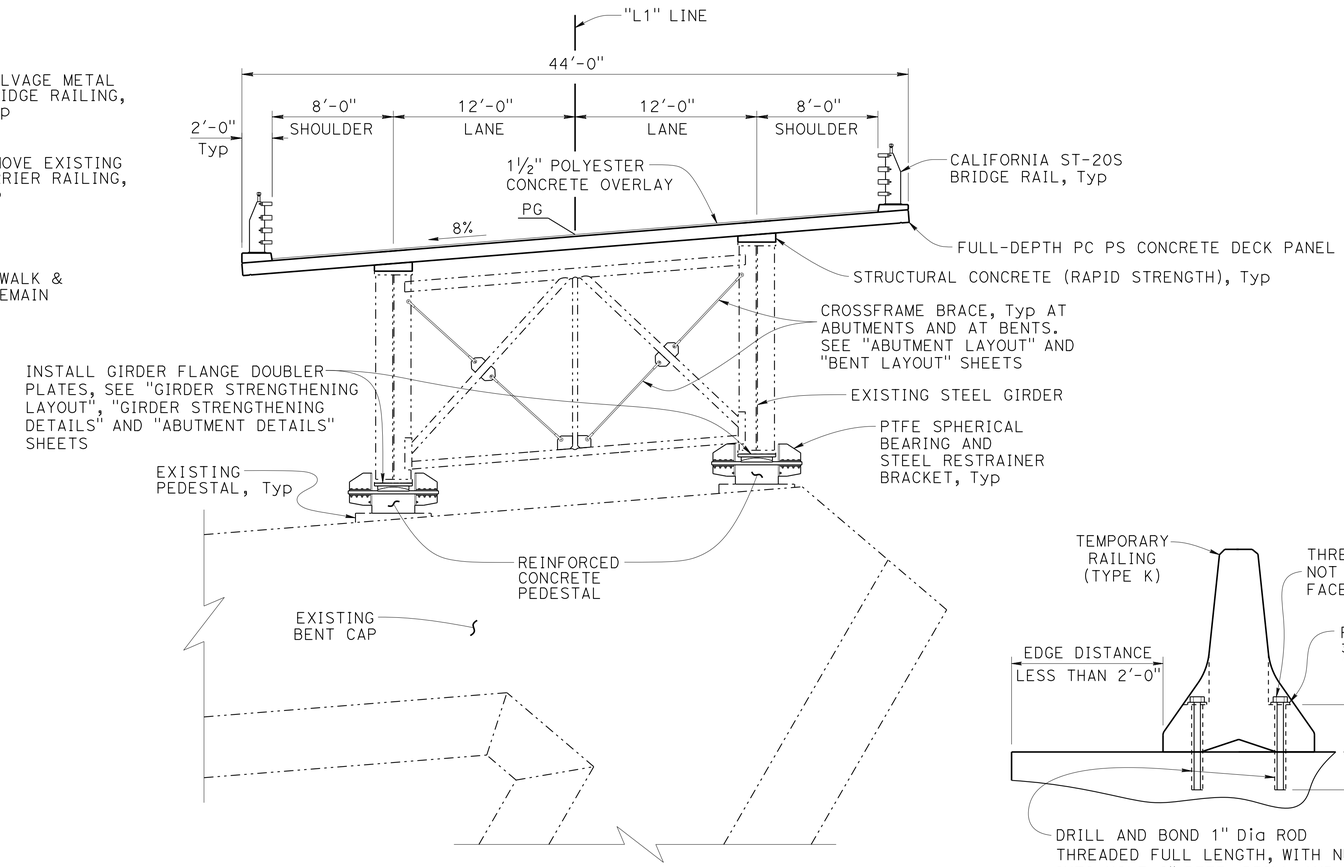

NEW CONSTRUCTION

TYPICAL SECTION AT BENTS

1" = 5'

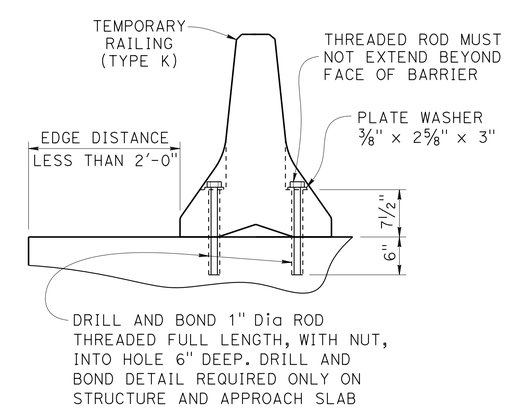

TYPE K RAILING ATTACHMENT DETAILS

1" = 1'-0"

NOTE:
VERIFY ALL CONTROLLING FIELD DIMENSIONS BEFORE ORDERING OR FABRICATING ANY MATERIAL.

	BY	CHECKED
DESIGN	R. MELKO	D. NGUYEN-TAN
DETAILS	P. SILVA	D. NGUYEN-TAN
QUANTITIES	S. MORIMOTO	R. MELKO

STATE OF CALIFORNIA
DEPARTMENT OF TRANSPORTATION

DIVISION OF ENGINEERING SERVICES
STRUCTURE DESIGN
DESIGN BRANCH 6

BRIDGE NO. 32-0018
POST MILE 19.6

TUOLUMNE RIVER BRIDGE (REHAB)
GENERAL PLAN NO. 2

STRUCTURES DESIGN DETAIL SHEET (ENGLISH) (REV. 09-01-10)

ORIGINAL SCALE IN INCHES FOR REDUCED PLANS 0 1 2 3

UNIT: 3591
PROJECT NUMBER & PHASE: 1012000053-1
CONTRACT NO.: 10-0L9704

DISREGARD PRINTS BEARING EARLIER REVISION DATES

REVISION DATES 03-04-13 05-23-14 06-17-14

SHEET 2 OF 50

FILE => 32-0018-a-gp02.dgn

USERNAME => s113541 DATE PLOTTED => 12-NOV-2015 TIME PLOTTED => 11:07

DIST	COUNTY	ROUTE	POST MILES TOTAL PROJECT	SHEET No.	TOTAL SHEETS
10	Tuo	120	R19.4/R20.0	72	119

REGISTERED CIVIL ENGINEER 5/28/15 DATE

6-22-15
PLANS APPROVAL DATE

REGISTERED PROFESSIONAL ENGINEER DON NGUYEN-TAN No. C 57510 Exp. 12-31-15 CIVIL STATE OF CALIFORNIA

The State of California or its officers or agents shall not be responsible for the accuracy or completeness of scanned copies of this plan sheet.

GENERAL NOTES

EVALUATION OF EXISTING STRUCTURE:
AASHTO Standard Specification for Highway Bridges, 9th Edition, 1965, with revisions supplemented by the Bridge Planning and Design Manual.

DEAD LOAD:

Does not include 35 psf for future wearing surface.

LIVE LOADING:

HS20-44 and Alternative.

SEISMIC:

Caltrans Seismic Design Criteria (SDC), Version 1.7 dated April 2013.
Caltrans Memo to Designers Section 20.
USGS Interactive deaggregation procedure with 5% probability of exceedance in 50 years.
PGA=0.22g
M_{max}=6.3
V_{s30}=1509 ft/s
See ACCELERATION RESPONSE SPECTRUM.

REINFORCED CONCRETE:

f_s=24,000 psi
f_s=20,000 psi for existing transverse reinforcement in deck
f_c=1,300 psi
f_c=1,200 psi for existing light-weight deck
n=10

STRUCTURAL STEEL:

A517 Low alloy high strength steel
f_y=100 ksi ±
A36 STRUCTURAL STEEL
f_y=Various
See "CONSTRUCTION DETAILS No. 6", CONSTRUCTION DETAILS NO. 7", and "GIRDER STRENGTHENING LAYOUT" sheets for approximate limits of A517 steel.

DESIGN OF NEW STRUCTURE COMPONENTS:
AASHTO LRFD Bridge Design Specifications, 4th edition, and the California Amendments dated November 2011 and December 2008.

DEAD LOAD:

No provisions for future wearing surface.

LIVE LOADING:

HL-93 Design Vehicle Class.
No provisions for CA Permit Vehicle Class.

STRUCTURAL STEEL:

f_y=50,000 psi (Structural steel plates and rolled shapes)

REINFORCED CONCRETE:

f_y=60,000 psi
For strength, see "CONCRETE STRENGTH AND TYPE LIMITS" detail

PRESTRESSED CONCRETE:

See "GENERAL PRE-TENSIONING NOTES" on "DECK PANEL DETAILS NO. 3" sheet, and "GENERAL POST-TENSIONING NOTES" on "DECK PANEL DETAILS NO. 4" sheet.

2010 STANDARD PLANS

A10A	ABBREVIATIONS (SHEET 1 OF 2)
RSP A10B	ABBREVIATIONS (SHEET 2 OF 2)
A10C	LINES AND SYMBOLS (SHEET 1 OF 3)
A10D	LINES AND SYMBOLS (SHEET 2 OF 3)
A10E	LINES AND SYMBOLS (SHEET 3 OF 3)
A62C	LIMITS OF PAYMENT FOR EXCAVATION AND BACKFILL-BRIDGE
B0-5	BRIDGE DETAILS
B6-21	JOINT SEALS (MAXIMUM MOVEMENT RATING = 2")

STANDARD PLAN SHEET No.
DETAIL No.
RSP DENOTES REVISED STANDARD PLAN

NOTE:
VERIFY ALL CONTROLLING FIELD DIMENSIONS BEFORE ORDERING OR FABRICATING ANY MATERIAL.

INDEX TO PLANS

SHEET NO.	TITLE
1.	GENERAL PLAN NO. 1
2.	GENERAL PLAN NO. 2
3.	INDEX TO PLANS
4.	DECK CONTOURS NO.1
5.	DECK CONTOURS NO.2
6.	DECK CONTOURS NO.3
7.	DECK CONTOURS NO.4
8.	DECK CONTOURS NO.5
9.	DECK CONTOURS NO.6
10.	ABUTMENT LAYOUT
11.	ABUTMENT DETAILS NO. 1
12.	ABUTMENT DETAILS NO. 2
13.	BENT LAYOUT
14.	BENT DETAILS NO. 1
15.	CONSTRUCTION DETAILS NO. 1
16.	CONSTRUCTION DETAILS NO. 2
17.	CONSTRUCTION DETAILS NO. 3
18.	CONSTRUCTION DETAILS NO. 4
19.	CONSTRUCTION DETAILS NO. 5
20.	CONSTRUCTION DETAILS NO. 6
21.	CONSTRUCTION DETAILS NO. 7
22.	GIRDER STRENGTHENING LAYOUT
23.	GIRDER STRENGTHENING DETAILS
24.	CROSSFRAME BRACING DETAILS
25.	DECK PANEL DISTRIBUTION
26.	DECK PANEL DETAILS NO. 1
27.	DECK PANEL DETAILS NO. 2
28.	DECK PANEL DETAILS NO. 3
29.	DECK PANEL DETAILS NO. 4
30.	DECK PANEL DETAILS NO. 5
31.	CLOSURE SEGMENT DETAILS NO. 1
32.	CLOSURE SEGMENT DETAILS NO. 2
33.	CLOSURE SEGMENT DETAILS NO. 3
34.	CONSTRUCTION SEQUENCE DETAILS NO. 1
35.	CONSTRUCTION SEQUENCE DETAILS NO. 2
36.	CONSTRUCTION SEQUENCE DETAILS NO. 3
37.	CONSTRUCTION SEQUENCE DETAILS NO. 4
38.	CONSTRUCTION SEQUENCE DETAILS NO. 5
39.	CONSTRUCTION SEQUENCE DETAILS NO. 6
40.	CONSTRUCTION SEQUENCE DETAILS NO. 7
41.	CONSTRUCTION SEQUENCE DETAILS NO. 8
42.	CONSTRUCTION SEQUENCE DETAILS NO. 9
43.	CONSTRUCTION SEQUENCE DETAILS NO. 10
44.	SPHERICAL BEARING DETAILS NO. 1
45.	SPHERICAL BEARING DETAILS NO. 2
46.	STRUCTURE APPROACH TYPE R(30S)
47.	CA ST-20S RAIL DETAILS NO. 1
48.	CA ST-20S RAIL DETAILS NO. 2
49.	CA ST-20S RAIL DETAILS NO. 3
50.	CA ST-20S RAIL DETAILS NO. 4

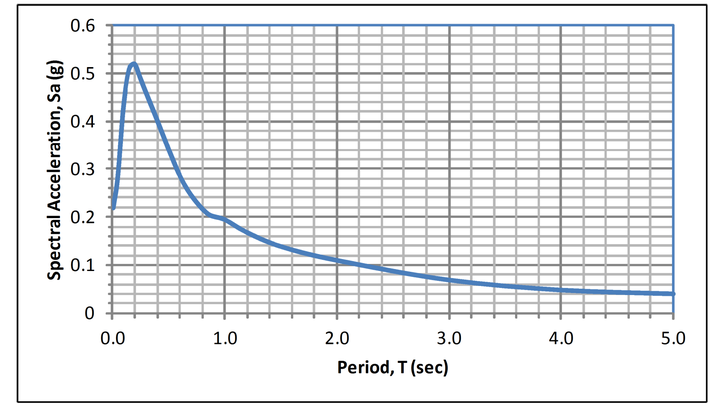

ACCELERATION RESPONSE SPECTRUM

NO SCALE

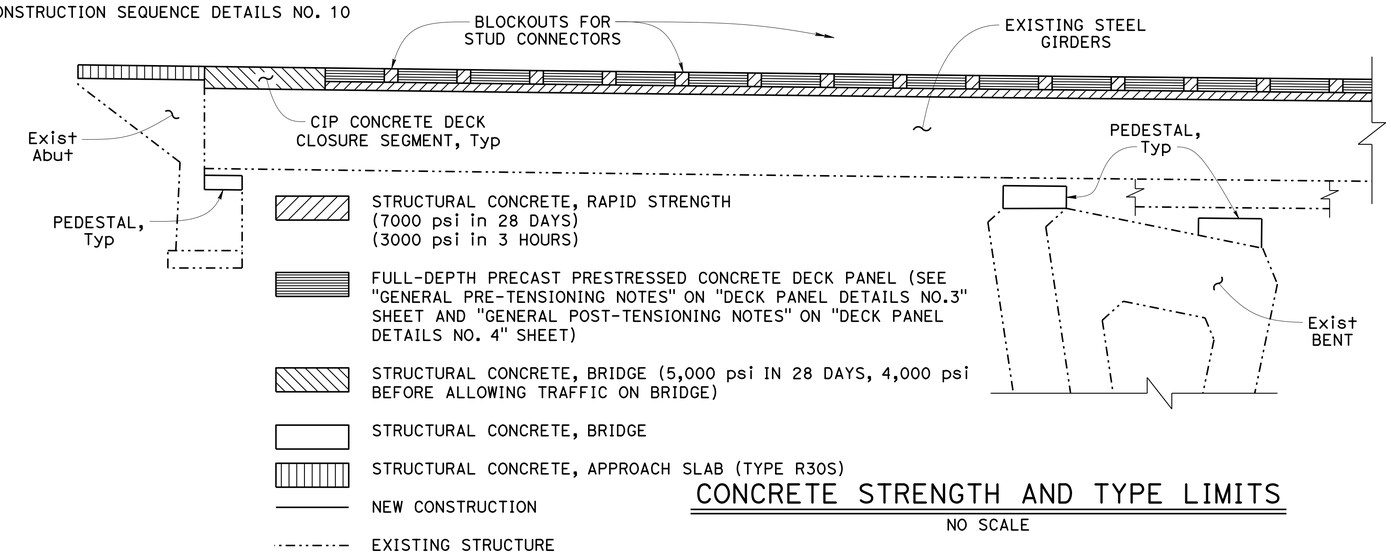

CONCRETE STRENGTH AND TYPE LIMITS

NO SCALE

DESIGN	BY D. NGUYEN-TAN	CHECKED R. MELKO	
DETAILS	BY P. SILVA	CHECKED D. NGUYEN-TAN	
QUANTITIES	BY S. MORIMOTO	CHECKED D. NGUYEN-TAN	

STATE OF CALIFORNIA
DEPARTMENT OF TRANSPORTATION

DIVISION OF ENGINEERING SERVICES
STRUCTURE DESIGN
DESIGN BRANCH 6

BRIDGE NO. 32-0018
POST MILE 19.6

TUOLUMNE RIVER BRIDGE (REHAB)
INDEX TO PLANS

STRUCTURES DESIGN DETAIL SHEET (ENGLISH) (REV. 09-01-10)

ORIGINAL SCALE IN INCHES FOR REDUCED PLANS 0 1 2 3

UNIT: 3591
PROJECT NUMBER & PHASE: 1012000053-1
CONTRACT NO.: 10-0L9704

DISREGARD PRINTS BEARING EARLIER REVISION DATES

REVISION DATES 6-14-14 6-23-15 6-17-15

SHEET 3 OF 50

FILE => 32-0018-a-itp.dgn

USERNAME => s113541 DATE PLOTTED => 12-NOV-2015 TIME PLOTTED => 11:07

DIST	COUNTY	ROUTE	POST MILES TOTAL PROJECT	SHEET No.	TOTAL SHEETS
10	Tuo	120	R19.4/R20.0	73	119

REGISTERED CIVIL ENGINEER 5/28/15 DATE

6-22-15
PLANS APPROVAL DATE

REGISTERED PROFESSIONAL ENGINEER DON NGUYEN-TAN No. C 57510 Exp. 12-31-15 CIVIL STATE OF CALIFORNIA

The State of California or its officers or agents shall not be responsible for the accuracy or completeness of scanned copies of this plan sheet.

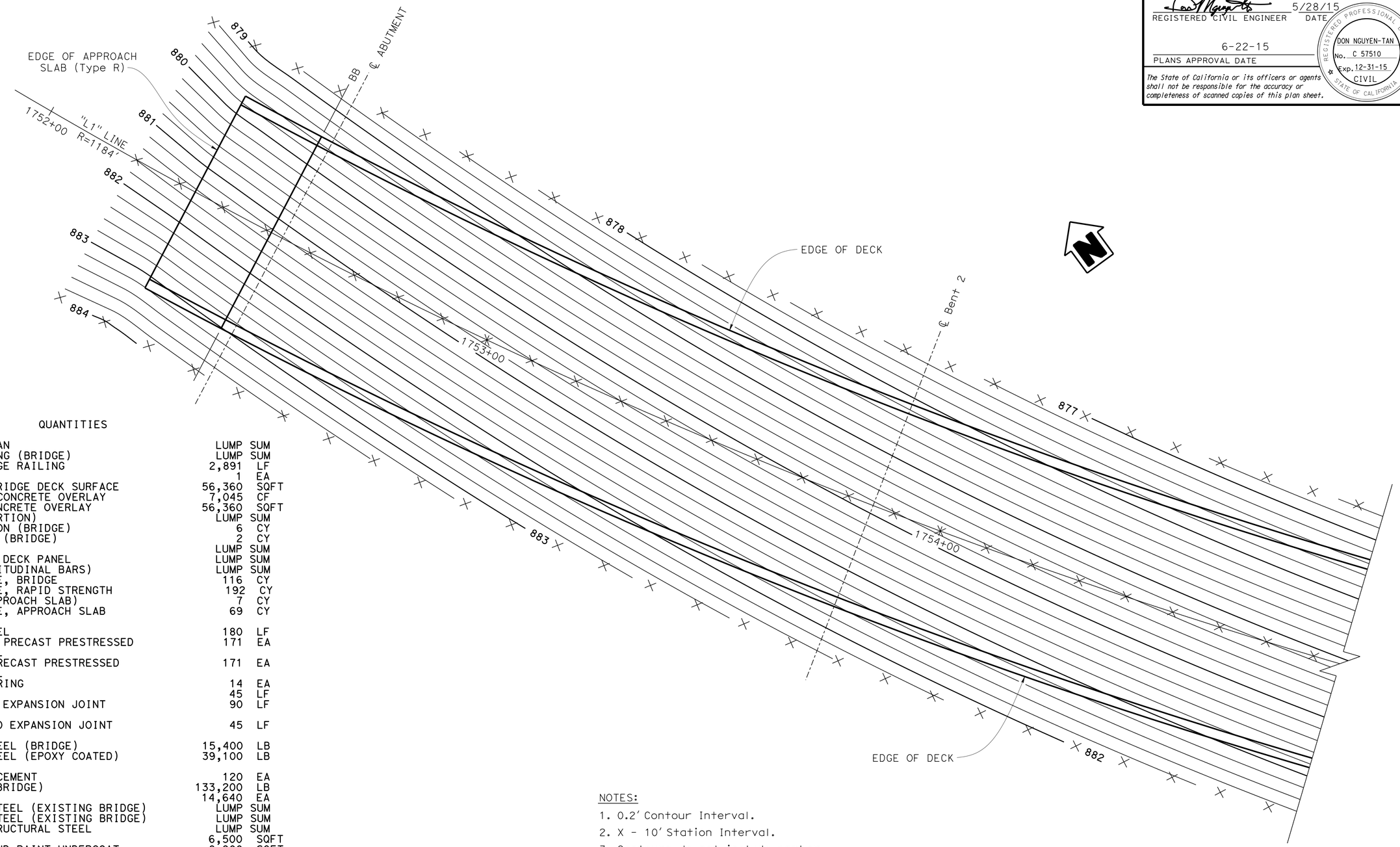

QUANTITIES

LEAD COMPLIANCE PLAN	LUMP	SUM
WORK AREA MONITORING (BRIDGE)	LUMP	SUM
SALVAGE METAL BRIDGE RAILING	2,891	LF
RESET PLAQUE	1	EA
PREPARE CONCRETE BRIDGE DECK SURFACE	56,360	SQFT
FURNISH POLYESTER CONCRETE OVERLAY	7,045	CF
PLACE POLYESTER CONCRETE OVERLAY	56,360	SQFT
BRIDGE REMOVAL (PORTION)	LUMP	SUM
STRUCTURE EXCAVATION (BRIDGE)	6	CY
STRUCTURE BACKFILL (BRIDGE)	2	CY
TEMPORARY SUPPORT	LUMP	SUM
TEMPORARY CONCRETE DECK PANEL	LUMP	SUM
PRESTRESSING (LONGITUDINAL BARS)	LUMP	SUM
STRUCTURAL CONCRETE, BRIDGE	116	CY
STRUCTURAL CONCRETE, RAPID STRENGTH	192	CY
AGGREGATE BASE (APPROACH SLAB)	7	CY
STRUCTURAL CONCRETE, APPROACH SLAB (TYPE R)	69	CY
DRILL AND BOND DOWEL	180	LF
FURNISH FULL-DEPTH PRECAST PRESTRESSED CONCRETE DECK PANEL	171	EA
ERECT FULL-DEPTH PRECAST PRESTRESSED CONCRETE DECK PANEL	171	EA
PTFE SPHERICAL BEARING	14	EA
JOINT SEAL (MR 2")	45	LF
WABO TRANSFLEX 900 EXPANSION JOINT SYSTEM	90	LF
WABO TRANSFLEX 1300 EXPANSION JOINT SYSTEM	45	LF
BAR REINFORCING STEEL (BRIDGE)	15,400	LB
BAR REINFORCING STEEL (EPOXY COATED) (BRIDGE)	39,100	LB
HEADED BAR REINFORCEMENT	120	EA
STRUCTURAL STEEL (BRIDGE)	133,200	LB
STUD CONNECTOR	14,640	EA
CLEAN STRUCTURAL STEEL (EXISTING BRIDGE)	LUMP	SUM
PAINT STRUCTURAL STEEL (EXISTING BRIDGE)	LUMP	SUM
CLEAN AND PAINT STRUCTURAL STEEL	LUMP	SUM
SPOT BLAST CLEAN	6,500	SQFT
SPOT BLAST CLEAN AND PAINT UNDERCOAT	8,900	SQFT
CALIFORNIA ST-20S BRIDGE RAIL	2,891	LF

NOTES:

1. 0.2' Contour Interval.
2. X - 10' Station Interval.
3. Contours do not include camber.

	BY	CHECKED
DESIGN	R. MELKO/S. PAHLAVAN	D. NGUYEN-TAN
DETAILS	P. SILVA	D. NGUYEN-TAN
QUANTITIES	S. MORIMOTO	R. MELKO

STATE OF CALIFORNIA
DEPARTMENT OF TRANSPORTATION

DIVISION OF ENGINEERING SERVICES
STRUCTURE DESIGN
DESIGN BRANCH 6

BRIDGE NO. 32-0018
POST MILE 19.6

TUOLUMNE RIVER BRIDGE (REHAB)
DECK CONTOURS NO. 1

STRUCTURES DESIGN DETAIL SHEET (ENGLISH) (REV. 09-01-10)

ORIGINAL SCALE IN INCHES FOR REDUCED PLANS 0 1 2 3

UNIT: 3591
PROJECT NUMBER & PHASE: 1012000053-1
CONTRACT NO.: 10-0L9704

DISREGARD PRINTS BEARING EARLIER REVISION DATES

REVISION DATES 1-28-15

SHEET 4 OF 50

FILE => 32-0018-d-dc01.dgn

USERNAME => s113541 DATE PLOTTED => 12-NOV-2015 TIME PLOTTED => 11:07

DIST	COUNTY	ROUTE	POST MILES TOTAL PROJECT	SHEET No.	TOTAL SHEETS
10	Tuo	120	R19.4/R20.0	74	119

REGISTERED CIVIL ENGINEER 5/28/15 DATE

6-22-15
PLANS APPROVAL DATE

REGISTERED PROFESSIONAL ENGINEER
DON NGUYEN-TAN
No. C57510
Exp. 12-31-15
CIVIL
STATE OF CALIFORNIA

The State of California or its officers or agents shall not be responsible for the accuracy or completeness of scanned copies of this plan sheet.

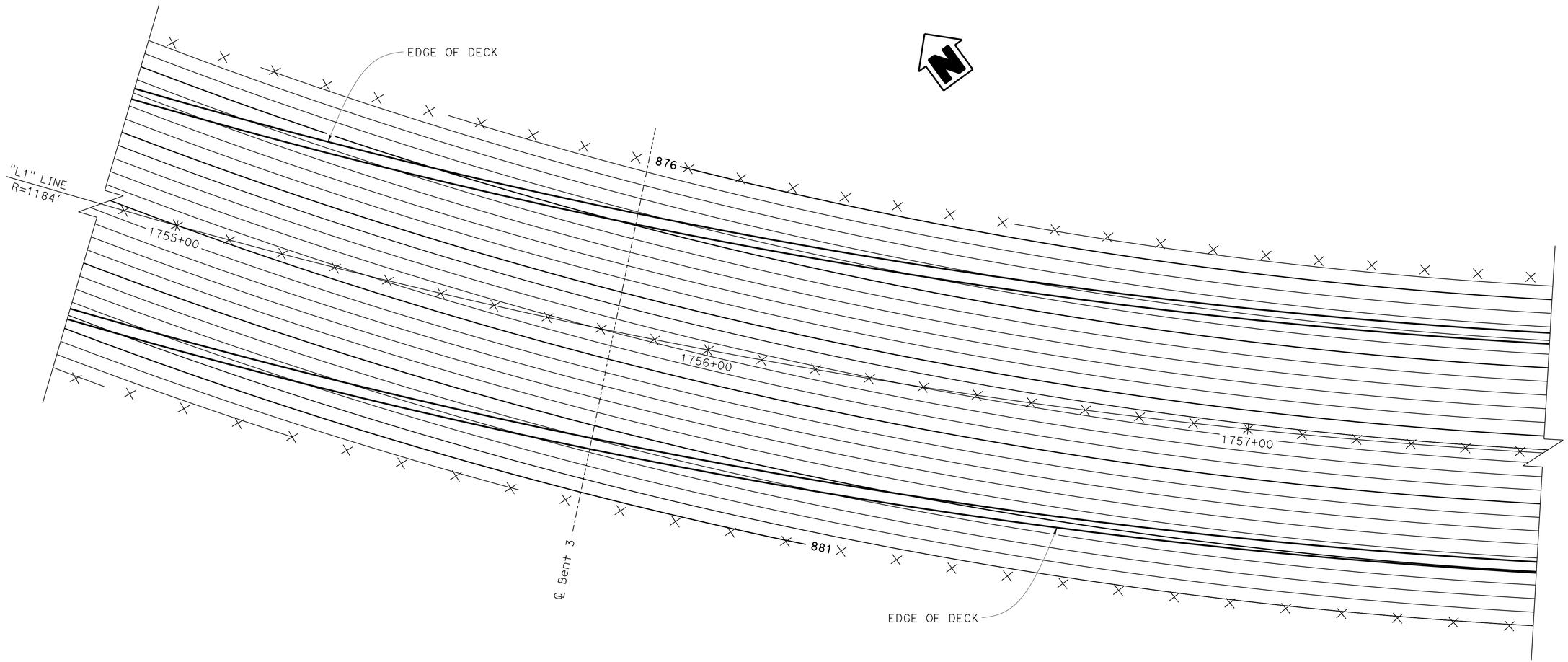

NOTES:

1. 0.2' Contour Interval.
2. X - 10' Station Interval.
3. Contours do not include camber.

DESIGN	BY R. MELKO/S. PAHLAVAN	CHECKED D. NGUYEN-TAN	
DETAILS	BY P. SILVA	CHECKED D. NGUYEN-TAN	
QUANTITIES	BY S. MORIMOTO	CHECKED R. MELKO	

STATE OF CALIFORNIA
DEPARTMENT OF TRANSPORTATION

DIVISION OF ENGINEERING SERVICES
STRUCTURE DESIGN
DESIGN BRANCH 6

BRIDGE NO. 32-0018
POST MILE 19.6

TUOLUMNE RIVER BRIDGE (REHAB)
DECK CONTOURS NO. 2

STRUCTURES DESIGN DETAIL SHEET (ENGLISH) (REV. 09-01-10)

ORIGINAL SCALE IN INCHES FOR REDUCED PLANS 0 1 2 3

UNIT: 3591
PROJECT NUMBER & PHASE: 1012000053-1
CONTRACT NO.: 10-0L9704

DISREGARD PRINTS BEARING EARLIER REVISION DATES

REVISION DATES: 1-28-15

SHEET 5 OF 50

FILE => 32-0018-d-dc02.dgn

USERNAME => s113541 DATE PLOTTED => 12-NOV-2015 TIME PLOTTED => 11:07

DIST	COUNTY	ROUTE	POST MILES TOTAL PROJECT	SHEET No.	TOTAL SHEETS
10	Tuo	120	R19.4/R20.0	75	119

REGISTERED CIVIL ENGINEER 5/28/15 DATE

6-22-15
PLANS APPROVAL DATE

REGISTERED PROFESSIONAL ENGINEER
DON NGUYEN-TAN
No. C 57510
Exp. 12-31-15
CIVIL
STATE OF CALIFORNIA

The State of California or its officers or agents shall not be responsible for the accuracy or completeness of scanned copies of this plan sheet.

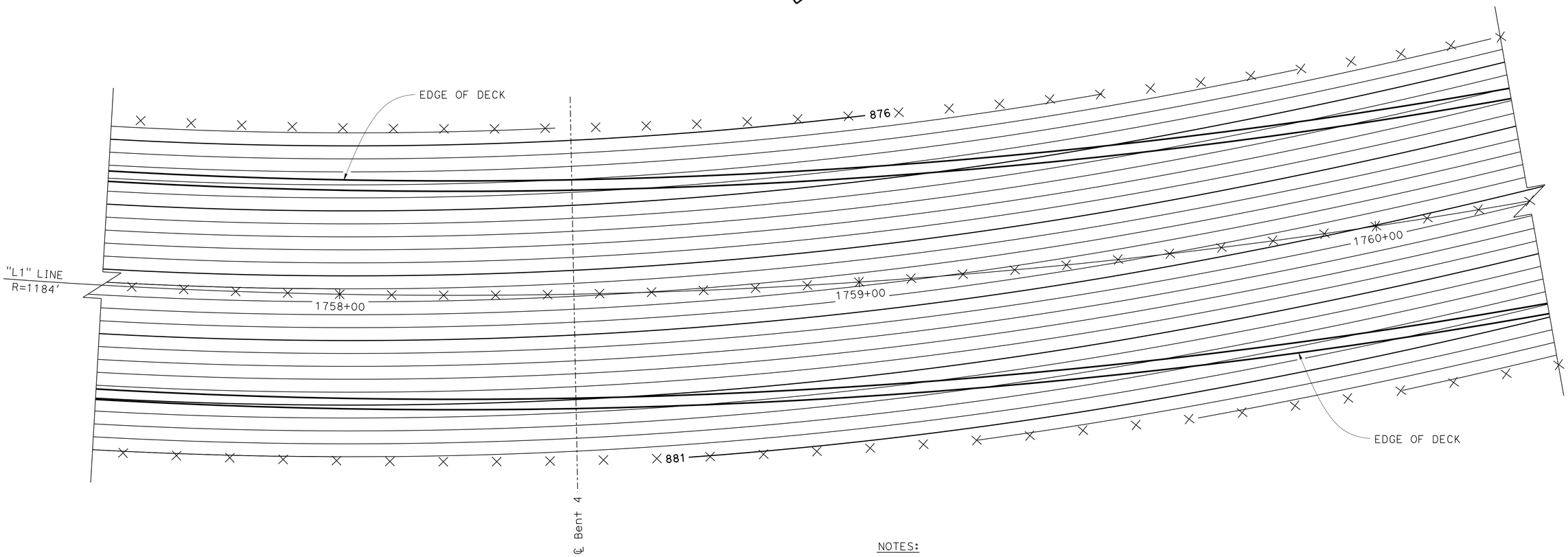

NOTES:

1. 0.2' Contour Interval.
2. X - 10' Station Interval.
3. Contours do not include camber.

DESIGN	BY R. MELKO/S. PAHLAVAN	CHECKED D. NGUYEN-TAN	
DETAILS	BY P. SILVA	CHECKED D. NGUYEN-TAN	
QUANTITIES	BY S. MORIMOTO	CHECKED R. MELKO	

STATE OF CALIFORNIA
DEPARTMENT OF TRANSPORTATION

DIVISION OF ENGINEERING SERVICES
STRUCTURE DESIGN
DESIGN BRANCH 6

BRIDGE NO. 32-0018
POST MILE 19.6

TUOLUMNE RIVER BRIDGE (REHAB)
DECK CONTOURS NO. 3

STRUCTURES DESIGN DETAIL SHEET (ENGLISH) (REV. 09-01-10)

ORIGINAL SCALE IN INCHES FOR REDUCED PLANS 0 1 2 3

UNIT: 3591
PROJECT NUMBER & PHASE: 1012000053-1
CONTRACT NO.: 10-0L9704

DISREGARD PRINTS BEARING EARLIER REVISION DATES

REVISION DATES: 1-28-15

SHEET 6 OF 50

FILE => 32-0018-d-dc03.dgn

USERNAME => s113541 DATE PLOTTED => 12-NOV-2015 TIME PLOTTED => 11:07

DIST	COUNTY	ROUTE	POST MILES TOTAL PROJECT	SHEET No.	TOTAL SHEETS
10	Tuo	120	R19.4/R20.0	76	119

REGISTERED CIVIL ENGINEER 5/28/15 DATE

6-22-15
PLANS APPROVAL DATE

REGISTERED PROFESSIONAL ENGINEER
DON NGUYEN-TAN
No. C 57510
Exp. 12-31-15
CIVIL
STATE OF CALIFORNIA

The State of California or its officers or agents shall not be responsible for the accuracy or completeness of scanned copies of this plan sheet.

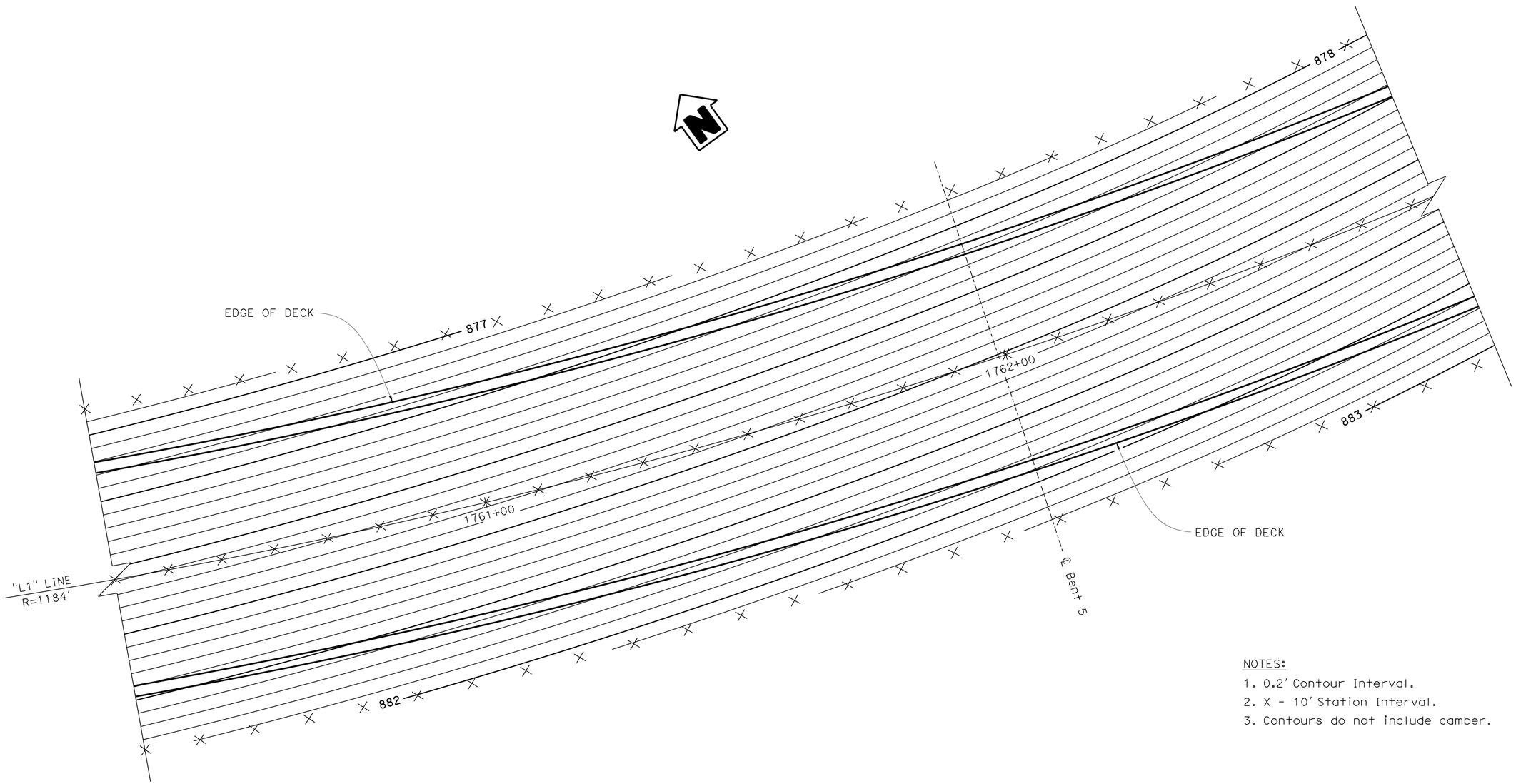

NOTES:

1. 0.2' Contour Interval.
2. X - 10' Station Interval.
3. Contours do not include camber.

	BY	CHECKED
DESIGN	R. MELKO/S. PAHLAVAN	D. NGUYEN-TAN
DETAILS	P. SILVA	D. NGUYEN-TAN
QUANTITIES	S. MORIMOTO	R. MELKO

STATE OF CALIFORNIA
DEPARTMENT OF TRANSPORTATION

DIVISION OF ENGINEERING SERVICES
STRUCTURE DESIGN
DESIGN BRANCH 6

BRIDGE NO. 32-0018
POST MILE 19.6

TUOLUMNE RIVER BRIDGE (REHAB)
DECK CONTOURS NO. 4

STRUCTURES DESIGN DETAIL SHEET (ENGLISH) (REV. 09-01-10)

ORIGINAL SCALE IN INCHES FOR REDUCED PLANS 0 1 2 3

UNIT: 3591
PROJECT NUMBER & PHASE: 1012000053-1
CONTRACT NO.: 10-0L9704

DISREGARD PRINTS BEARING EARLIER REVISION DATES

REVISION DATES: 1-28-15

SHEET 7 OF 50

FILE => 32-0018-d-dc04.dgn

USERNAME => s113541 DATE PLOTTED => 12-NOV-2015 TIME PLOTTED => 11:07

DIST	COUNTY	ROUTE	POST MILES TOTAL PROJECT	SHEET No.	TOTAL SHEETS
10	Tuo	120	R19.4/R20.0	77	119

REGISTERED CIVIL ENGINEER 5/28/15 DATE

6-22-15
PLANS APPROVAL DATE

REGISTERED PROFESSIONAL ENGINEER
DON NGUYEN-TAN
No. C 57510
Exp. 12-31-15
CIVIL
STATE OF CALIFORNIA

The State of California or its officers or agents shall not be responsible for the accuracy or completeness of scanned copies of this plan sheet.

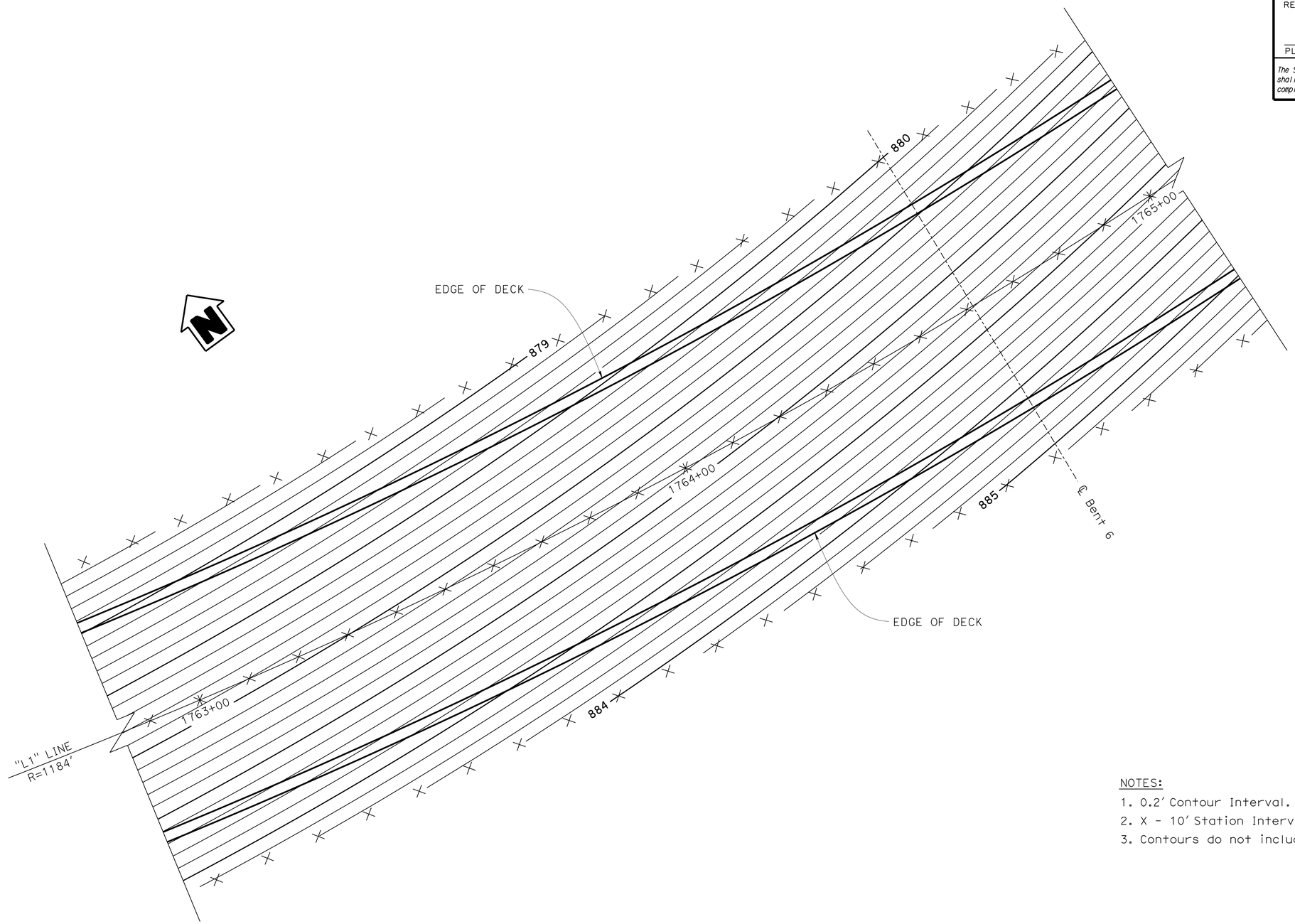

NOTES:

1. 0.2' Contour Interval.
2. X - 10' Station Interval.
3. Contours do not include camber.

DESIGN	BY R. MELKO/S. PAHLAVAN	CHECKED D. NGUYEN-TAN	
DETAILS	BY P. SILVA	CHECKED D. NGUYEN-TAN	
QUANTITIES	BY S. MORIMOTO	CHECKED R. MELKO	

STATE OF CALIFORNIA
DEPARTMENT OF TRANSPORTATION

DIVISION OF ENGINEERING SERVICES
STRUCTURE DESIGN
DESIGN BRANCH 6

BRIDGE NO. 32-0018
POST MILE 19.6

TUOLUMNE RIVER BRIDGE (REHAB)
DECK CONTOURS NO. 5

STRUCTURES DESIGN DETAIL SHEET (ENGLISH) (REV. 09-01-10)

ORIGINAL SCALE IN INCHES FOR REDUCED PLANS 0 1 2 3

UNIT: 3591
PROJECT NUMBER & PHASE: 1012000053-1
CONTRACT NO.: 10-0L9704

DISREGARD PRINTS BEARING EARLIER REVISION DATES

REVISION DATES: 1-28-15

SHEET 8 OF 50

FILE => 32-0018-d-dc05.dgn

USERNAME => s113541 DATE PLOTTED => 12-NOV-2015 TIME PLOTTED => 11:07

DIST	COUNTY	ROUTE	POST MILES TOTAL PROJECT	SHEET No.	TOTAL SHEETS
10	Tuo	120	R19.4/R20.0	78	119

REGISTERED CIVIL ENGINEER 5/28/15 DATE

6-22-15
PLANS APPROVAL DATE

REGISTERED PROFESSIONAL ENGINEER
DON NGUYEN-TAN
No. C 57510
Exp. 12-31-15
CIVIL
STATE OF CALIFORNIA

The State of California or its officers or agents shall not be responsible for the accuracy or completeness of scanned copies of this plan sheet.

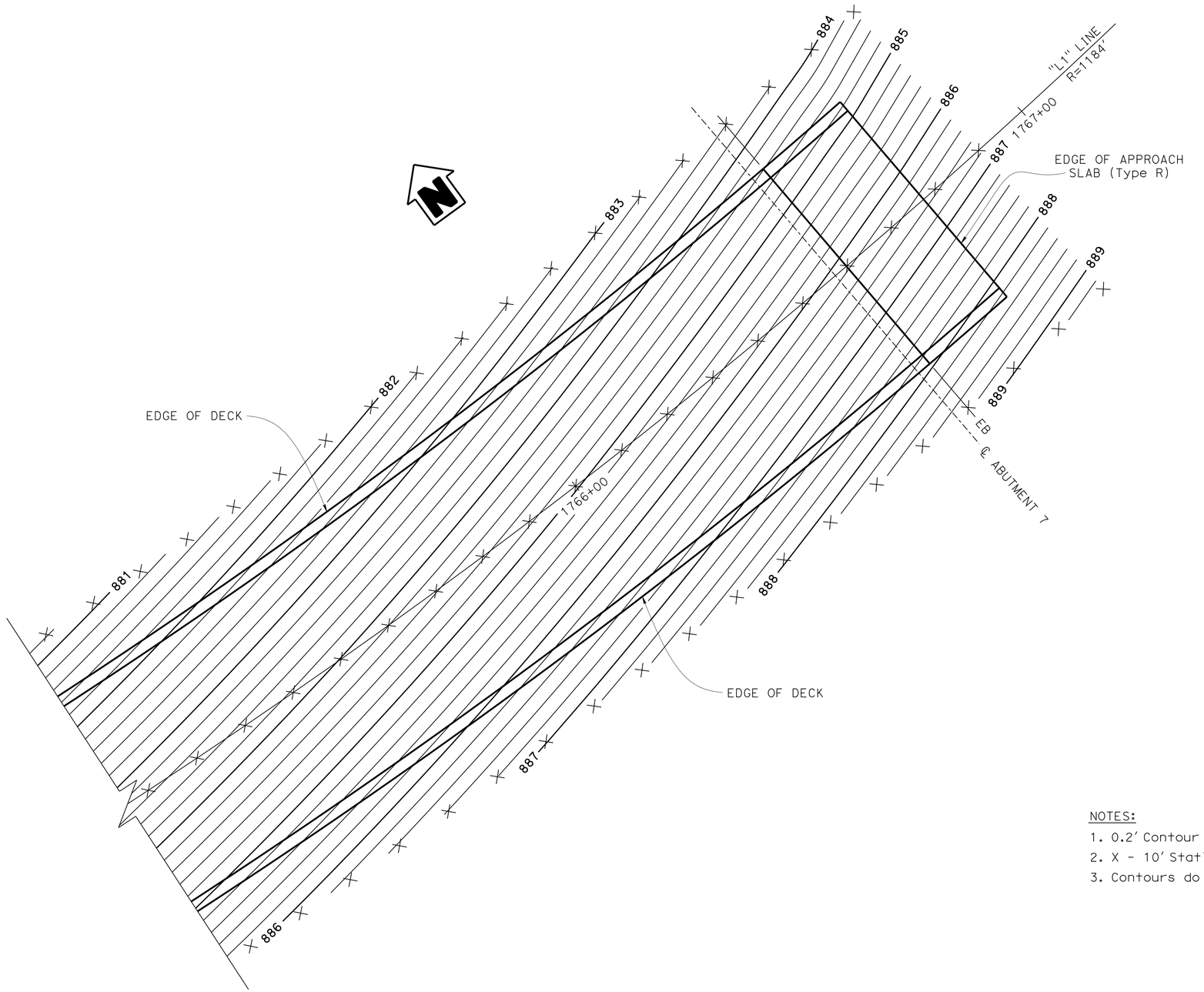

NOTES:

1. 0.2' Contour Interval.
2. X - 10' Station Interval.
3. Contours do not include camber.

DESIGN	BY R. MELKO/S. PAHLAVAN	CHECKED D. NGUYEN-TAN	
DETAILS	BY P. SILVA	CHECKED D. NGUYEN-TAN	
QUANTITIES	BY S. MORIMOTO	CHECKED R. MELKO	

STATE OF CALIFORNIA
DEPARTMENT OF TRANSPORTATION

DIVISION OF ENGINEERING SERVICES
STRUCTURE DESIGN
DESIGN BRANCH 6

BRIDGE NO. 32-0018
POST MILE 19.6

TUOLUMNE RIVER BRIDGE (REHAB)
DECK CONTOURS NO. 6

STRUCTURES DESIGN DETAIL SHEET (ENGLISH) (REV. 09-01-10)

ORIGINAL SCALE IN INCHES FOR REDUCED PLANS 0 1 2 3

UNIT: 3591
PROJECT NUMBER & PHASE: 1012000053-1
CONTRACT NO.: 10-0L9704

DISREGARD PRINTS BEARING EARLIER REVISION DATES

REVISION DATES: 1-28-15

SHEET 9 OF 50

FILE => 32-0018-d-dc06.dgn

USERNAME => s113541 DATE PLOTTED => 12-NOV-2015 TIME PLOTTED => 11:07

DIST	COUNTY	ROUTE	POST MILES TOTAL PROJECT	SHEET No.	TOTAL SHEETS
10	Tuo	120	R19.4/R20.0	79	119

REGISTERED CIVIL ENGINEER 5/28/15 DATE

6-22-15
PLANS APPROVAL DATE

REGISTERED PROFESSIONAL ENGINEER DON NGUYEN-TAN No. C 57510 Exp. 12-31-15 CIVIL STATE OF CALIFORNIA

The State of California or its officers or agents shall not be responsible for the accuracy or completeness of scanned copies of this plan sheet.

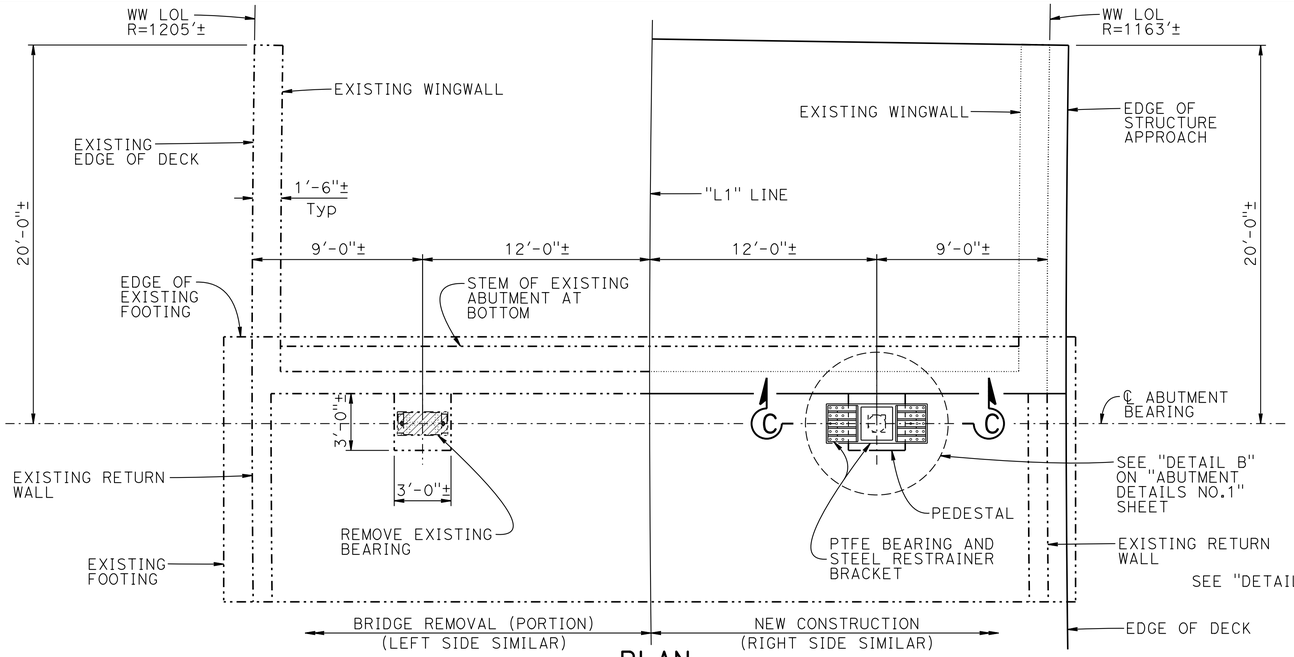

PLAN
1/4"=1'-0"

NOTES:
Abutment 1 shown, Abutment 7 similar.
▨ - Denotes bridge removal (portion).

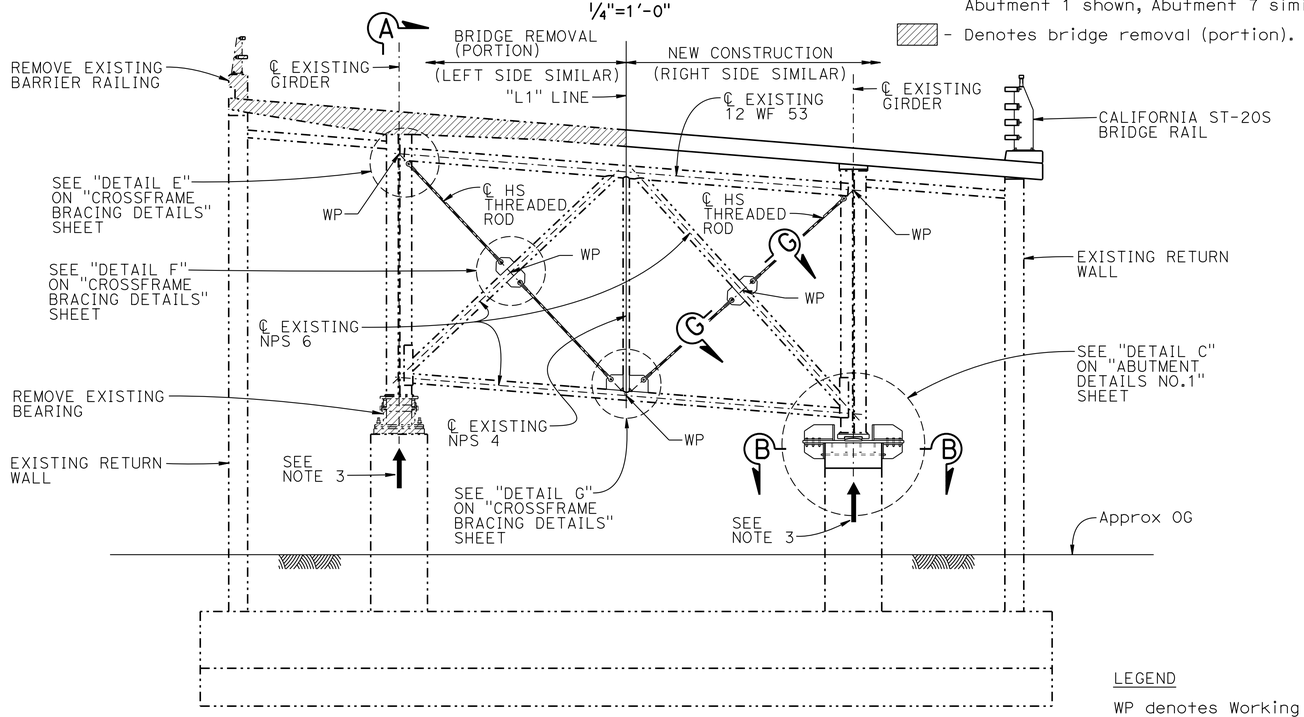

NOTE:
VERIFY ALL CONTROLLING FIELD DIMENSIONS BEFORE ORDERING OR FABRICATING ANY MATERIAL.

A

ELEVATION
1/4"=1'-0"

LEGEND
WP denotes Working Point

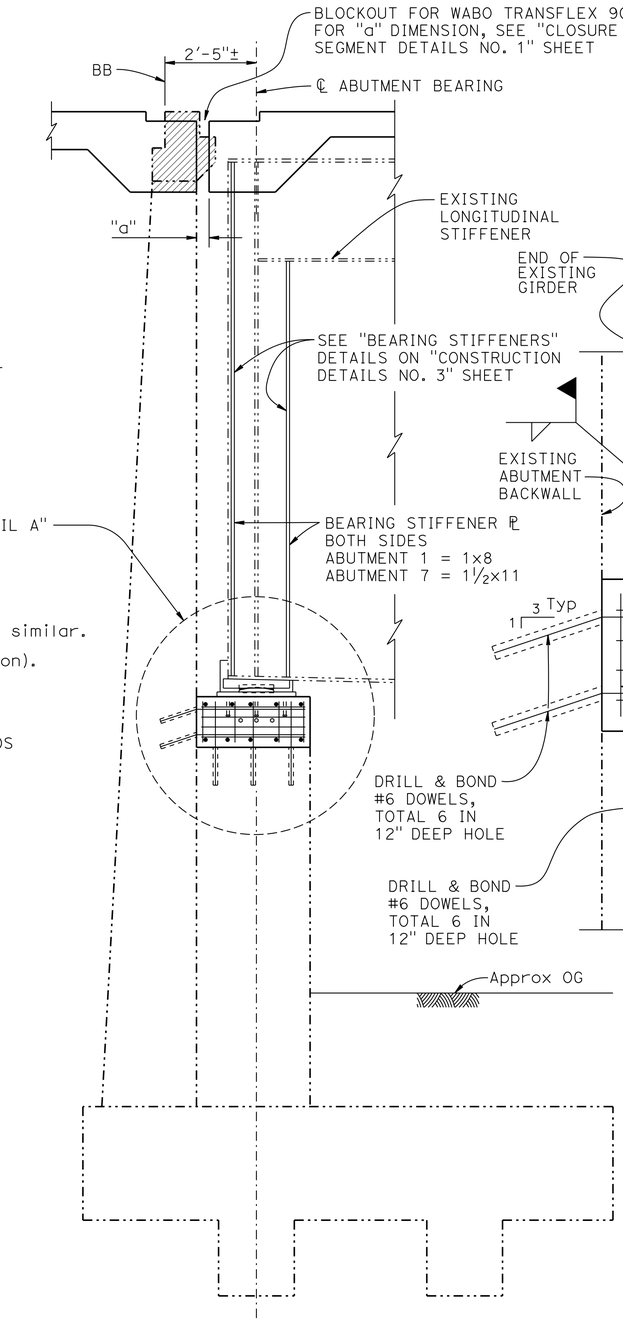

SECTION A-A
1/2"=1'-0"

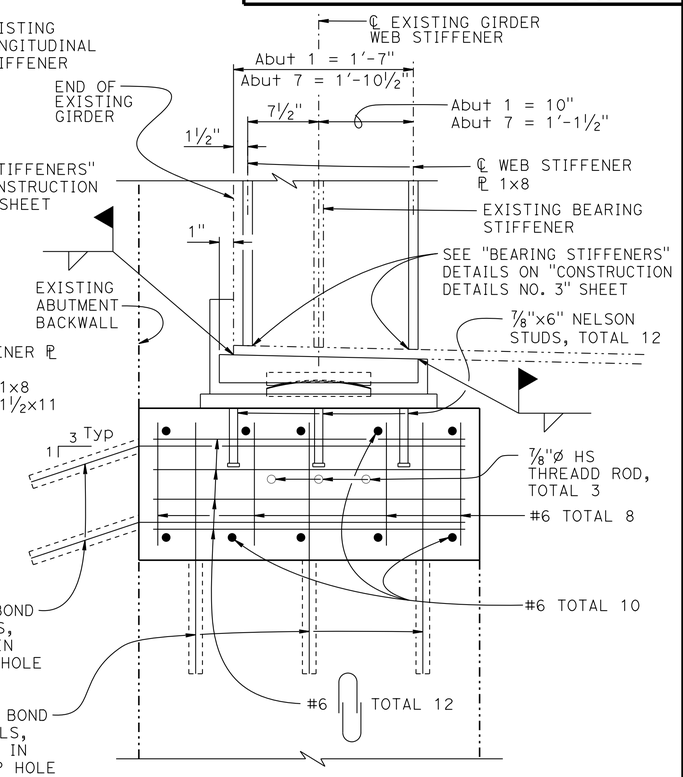

DETAIL A
1½"=1'-0"

NOTES:

1. For "SECTION B-B" and "SECTION C-C", see "ABUTMENT DETAILS NO. 1" sheet.
2. For "SECTION G-G", see "CROSSFRAME BRACING DETAILS" sheet.
3. For Temporary Support Loads, see "BENT LAYOUT" sheet.
4. See "CONSTRUCTION DETAILS NO. 3" sheet for Limits of Spot Blast Clean and Paint Undercoat.
5. Existing metal drainage troughs and pipes not shown; remove at both abutments.

	BY	CHECKED
DESIGN	R. MELKO	S. PAHLAVAN
DETAILS	D. PATO	D. NGUYEN-TAN
QUANTITIES	S. MORIMOTO	R. MELKO

STATE OF CALIFORNIA
DEPARTMENT OF TRANSPORTATION

DIVISION OF ENGINEERING SERVICES
STRUCTURE DESIGN
DESIGN BRANCH 6

BRIDGE NO. 32-0018
POST MILE 19.6

TUOLUMNE RIVER BRIDGE (REHAB)
ABUTMENT LAYOUT

STRUCTURES DESIGN DETAIL SHEET (ENGLISH) (REV. 09-01-10)

ORIGINAL SCALE IN INCHES FOR REDUCED PLANS 0 1 2 3

UNIT: 3591
PROJECT NUMBER & PHASE: 1012000053-1
CONTRACT NO.: 10-0L9704

DISREGARD PRINTS BEARING EARLIER REVISION DATES

REVISION DATES 1-15-14 6-17-15 6-15-14

SHEET 10 OF 50

FILE => 32-0018-f-abut-alay.dgn

USERNAME => s113541 DATE PLOTTED => 12-NOV-2015 TIME PLOTTED => 11:07

DIST	COUNTY	ROUTE	POST MILES TOTAL PROJECT	SHEET No.	TOTAL SHEETS
10	Tuo	120	R19.4/R20.0	80	119

REGISTERED CIVIL ENGINEER 5/28/15 DATE

6-22-15
PLANS APPROVAL DATE

REGISTERED PROFESSIONAL ENGINEER DON NGUYEN-TAN No. C 57510 Exp. 12-31-15 CIVIL STATE OF CALIFORNIA

The State of California or its officers or agents shall not be responsible for the accuracy or completeness of scanned copies of this plan sheet.

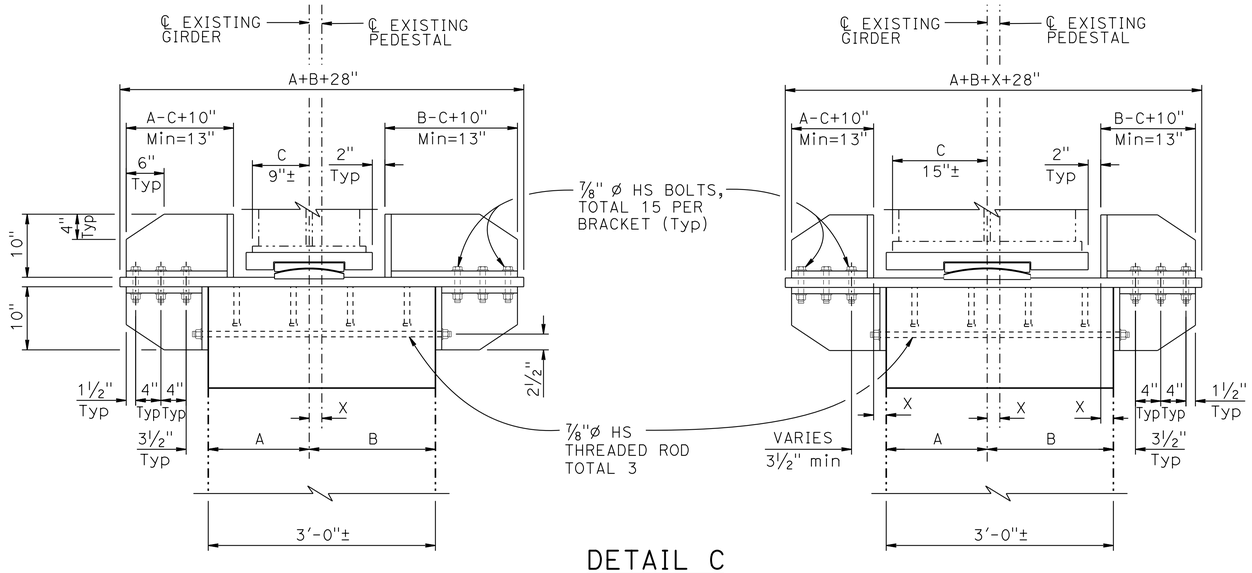

DETAIL C
1" = 1'-0"

NOTE:
Measure "X" Dimension to determine Bumper Bracket dimensions.

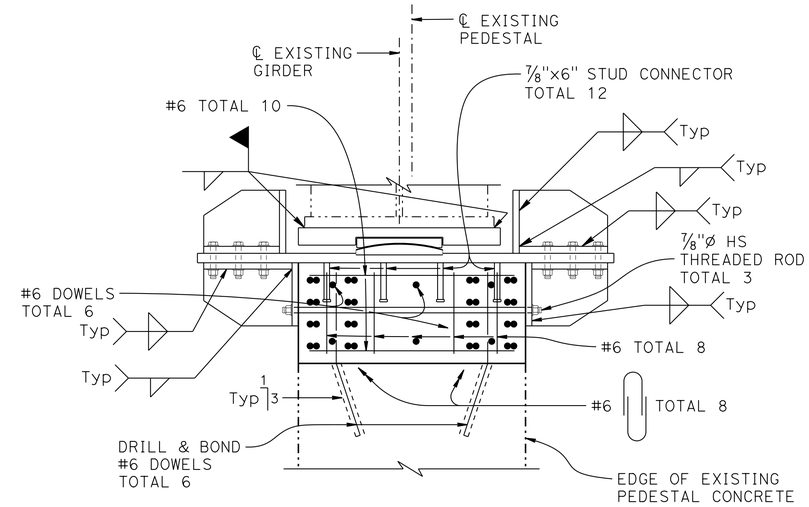

SECTION C-C
1" = 1'-0"

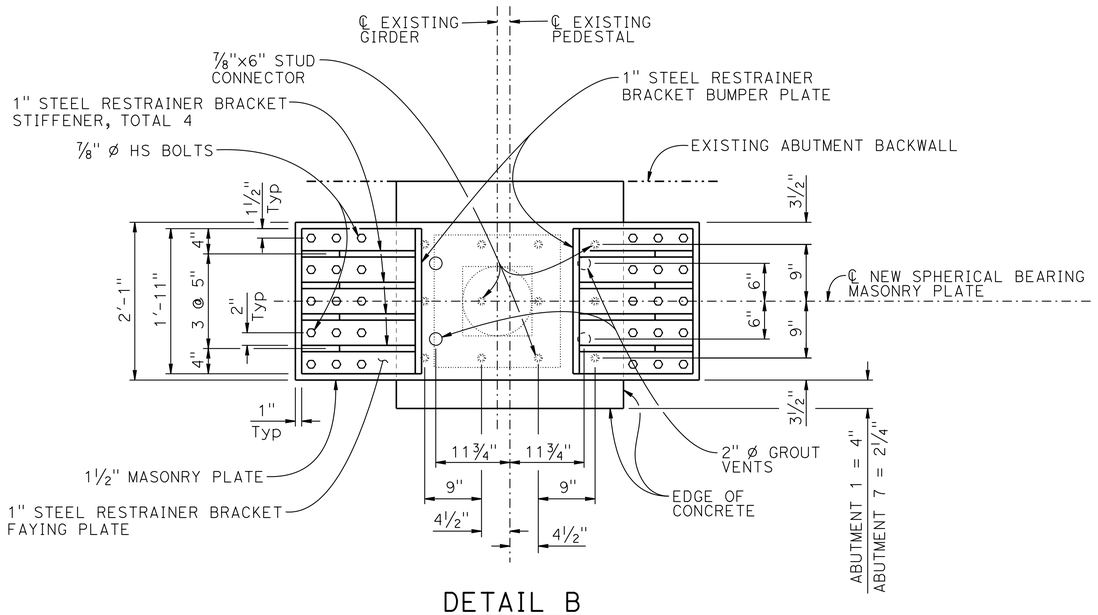

DETAIL B
1" = 1'-0"

NOTE:
VERIFY ALL CONTROLLING FIELD DIMENSIONS BEFORE ORDERING OR FABRICATING ANY MATERIAL.

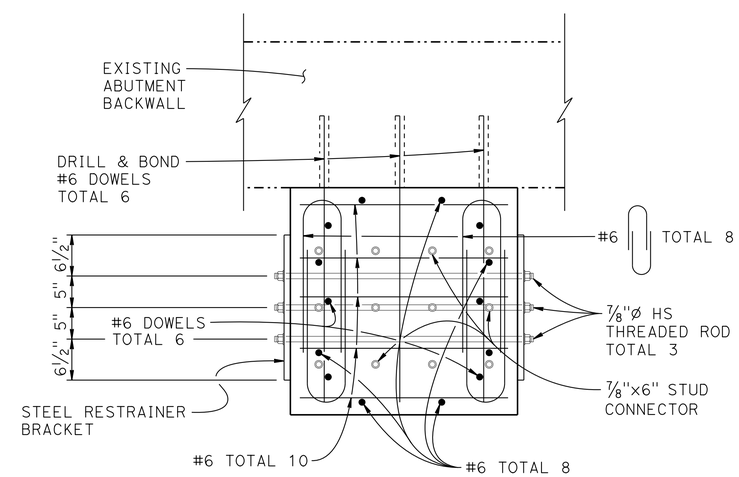

SECTION B-B
1" = 1'-0"

	BY	CHECKED
DESIGN	R. MELKO	H. Perez
DETAILS	D. PATO	R. MELKO
QUANTITIES	S. MORIMOTO	R. MELKO

STATE OF CALIFORNIA
DEPARTMENT OF TRANSPORTATION

DIVISION OF ENGINEERING SERVICES
STRUCTURE DESIGN
DESIGN BRANCH 6

BRIDGE NO. 32-0018
POST MILE 19.6

TUOLUMNE RIVER BRIDGE (REHAB)
ABUTMENT DETAILS NO. 1

STRUCTURES DESIGN DETAIL SHEET (ENGLISH) (REV. 09-01-10)

ORIGINAL SCALE IN INCHES FOR REDUCED PLANS 0 1 2 3

UNIT: 3591
PROJECT NUMBER & PHASE: 1012000053-1
CONTRACT NO.: 10-0L9704

DISREGARD PRINTS BEARING EARLIER REVISION DATES

REVISION DATES 1-22-14 6-18-14 1-15-15 5-14-15

SHEET 11 OF 50

FILE => 32-0018-f-abut-det1.dgn

USERNAME => s113541 DATE PLOTTED => 12-NOV-2015 TIME PLOTTED => 11:07

DIST	COUNTY	ROUTE	POST MILES TOTAL PROJECT	SHEET No	TOTAL SHEETS
10	Tuo	120	R19.4/R20.0	81	119

REGISTERED CIVIL ENGINEER 5/28/15 DATE

6-22-15
PLANS APPROVAL DATE

REGISTERED PROFESSIONAL ENGINEER DON NGUYEN-TAN No. C 57510 Exp. 12-31-15 CIVIL STATE OF CALIFORNIA

The State of California or its officers or agents shall not be responsible for the accuracy or completeness of electronic copies of this plan sheet.

To get to the Caltrans web site, go to: http://www.dot.ca.gov

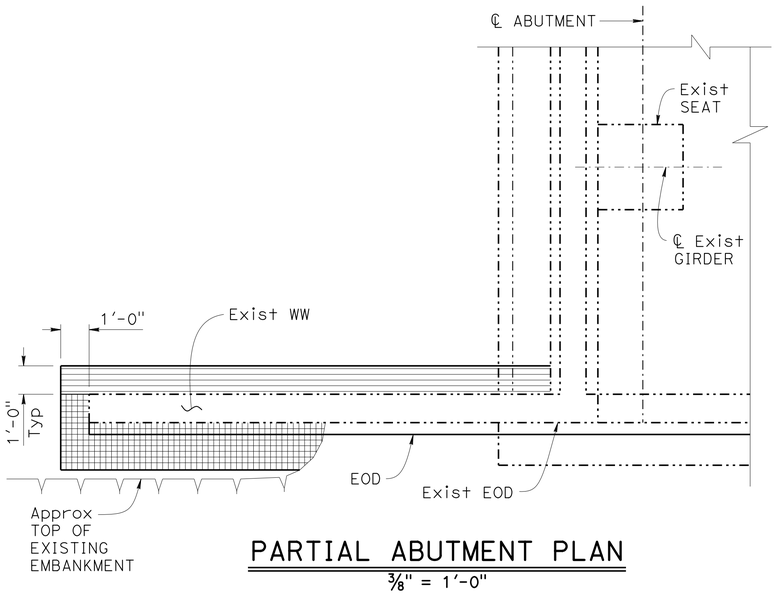

PARTIAL ABUTMENT PLAN

3/8" = 1'-0"

NOTE: Structure Approach & Paving Notch Extension not shown

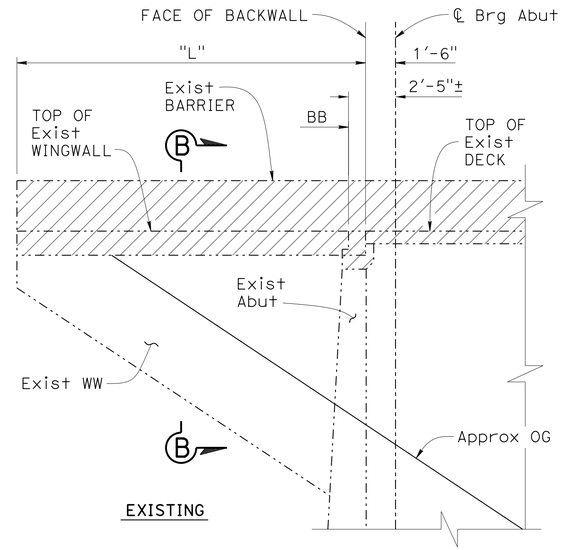

EXISTING

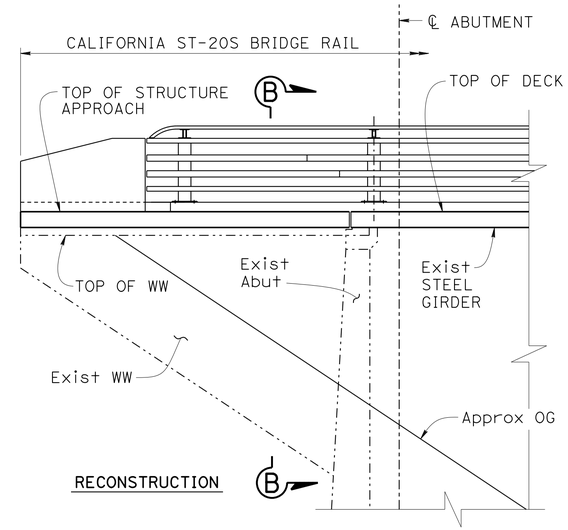

RECONSTRUCTION

Approx LENGTH OF WINGWALL	
LOCATION	"L" (Ft)
ABUTMENT 1	18'-5"±
ABUTMENT 7	18'-5"±

WINGWALL ELEVATION

1/4" = 1'-0"

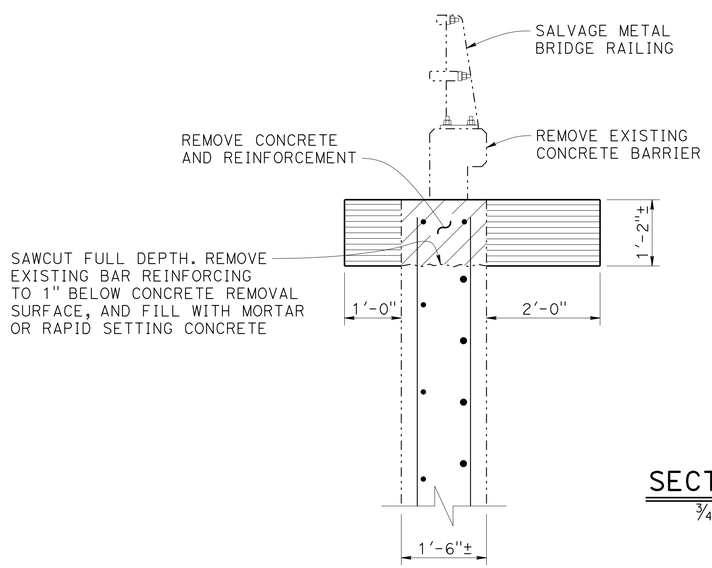

EXISTING

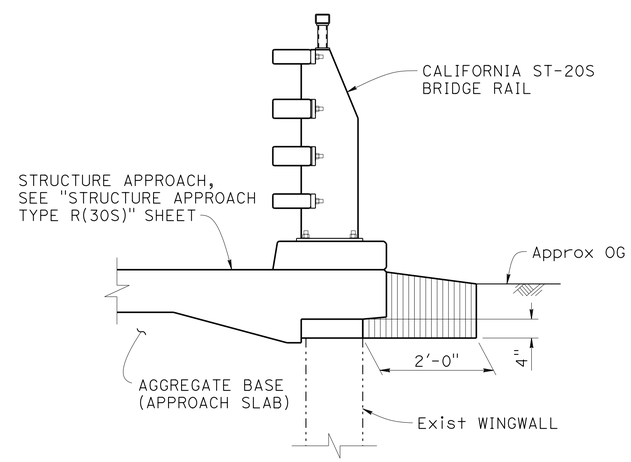

RECONSTRUCTION

SECTION B-B

3/4" = 1'-0"

LEGEND:

- Denotes new construction
- Denotes existing structure
- Denotes Bridge Removal (Portion)
- Denotes limits of payment for Structure Excavation
- Denotes limits of payment for Structure Backfill

NOTE:
VERIFY ALL CONTROLLING FIELD DIMENSIONS BEFORE ORDERING OR FABRICATING ANY MATERIAL.

	BY	CHECKED
DESIGN	R. MELKO	D. NGUYEN-TAN
DETAILS	P. SILVA	D. NGUYEN-TAN
QUANTITIES	G. REYES-GUTIERREZ	D. NGUYEN-TAN

STATE OF CALIFORNIA
DEPARTMENT OF TRANSPORTATION

DIVISION OF ENGINEERING SERVICES
STRUCTURE DESIGN
DESIGN BRANCH 6

BRIDGE NO. 32-0018
POST MILE 19.6

TUOLUMNE RIVER BRIDGE (REHAB)
ABUTMENT DETAILS NO. 2

STRUCTURES DESIGN DETAIL SHEET (ENGLISH) (REV. 10/25/05)

ORIGINAL SCALE IN INCHES FOR REDUCED PLANS 0 1 2 3

UNIT: 3591
PROJECT NUMBER & PHASE: 1012000053-1
CONTRACT NO.: 10-0L9704

DISREGARD PRINTS BEARING EARLIER REVISION DATES

REVISION DATES: 6-18-14 1-15-15

SHEET 12 OF 50

FILE => 32-0018-f-abut-det2.dgn

USERNAME => s113541 DATE PLOTTED => 12-NOV-2015 TIME PLOTTED => 11:07

DIST	COUNTY	ROUTE	POST MILES TOTAL PROJECT	SHEET No.	TOTAL SHEETS
10	Tuo	120	R19.4/R20.0	82	119

REGISTERED CIVIL ENGINEER 5/28/15 DATE

6-22-15
PLANS APPROVAL DATE

REGISTERED PROFESSIONAL ENGINEER DON NGUYEN-TAN No. C 57510 Exp. 12-31-15 CIVIL STATE OF CALIFORNIA

The State of California or its officers or agents shall not be responsible for the accuracy or completeness of scanned copies of this plan sheet.

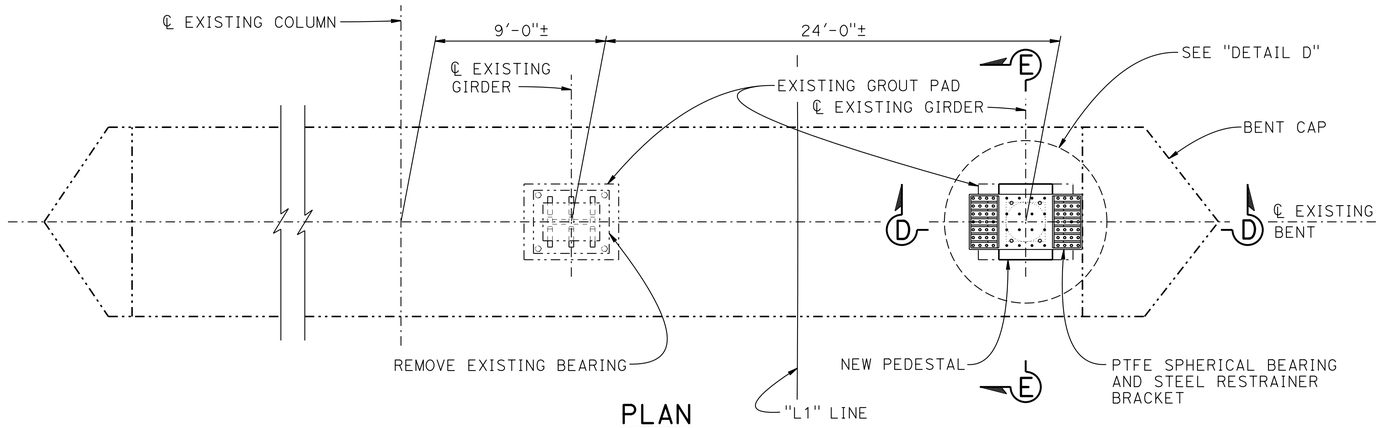

PLAN
1/4"=1'-0"

NOTES AND LEGEND:

1. Bent 4 shown, Bents 2, 3, 5 & 6 similar.

- Indicates Bridge Removal (Portion).
- EXISTING STRUCTURE
- NEW CONSTRUCTION

2. For "SECTION D-D", "SECTION E-E" and "SECTION F-F", see "BENT DETAILS NO.1" sheet.
3. For "SECTION G-G", see "CROSSFRAME BRACING DETAILS" sheet.

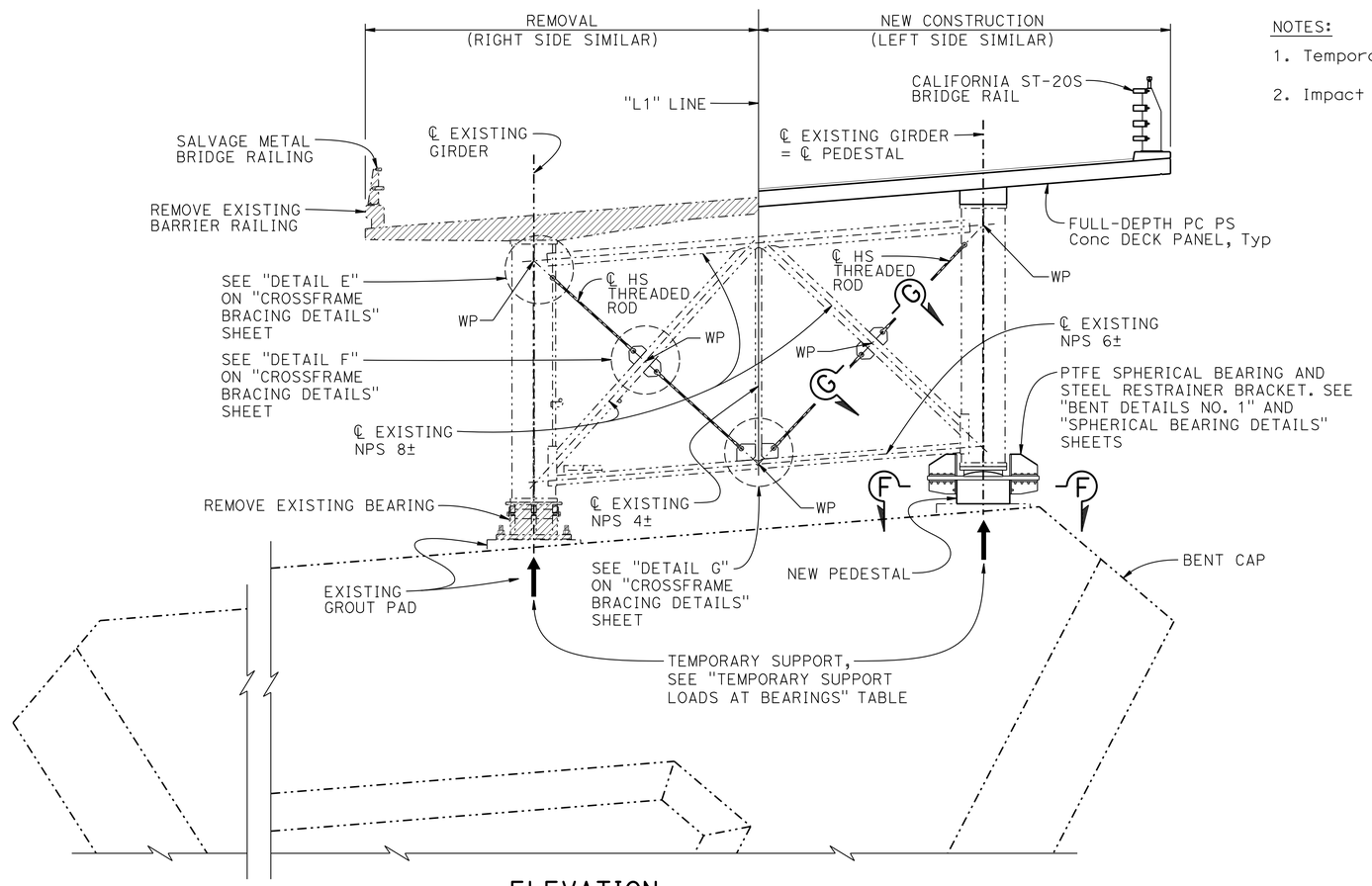

ELEVATION
1/4" = 1'-0"

NOTES:

1. Temporary Support Loads are unfactored.
2. Impact is included in Live Load.

TEMPORARY SUPPORT LOADS AT BEARINGS

LOCATION	LEFT GIRDER		RIGHT GIRDER	
	DEAD LOAD (Kip)	LIVE LOAD (Kip)	DEAD LOAD (Kip)	LIVE LOAD (Kip)
ABUTMENT 1	163	151	165	136
BENT 2	602	343	658	289
BENT 3	924	422	800	333
BENT 4	1060	442	1503	373
BENT 5	1065	438	1330	371
BENT 6	971	413	881	327
ABUTMENT 7	225	166	328	168

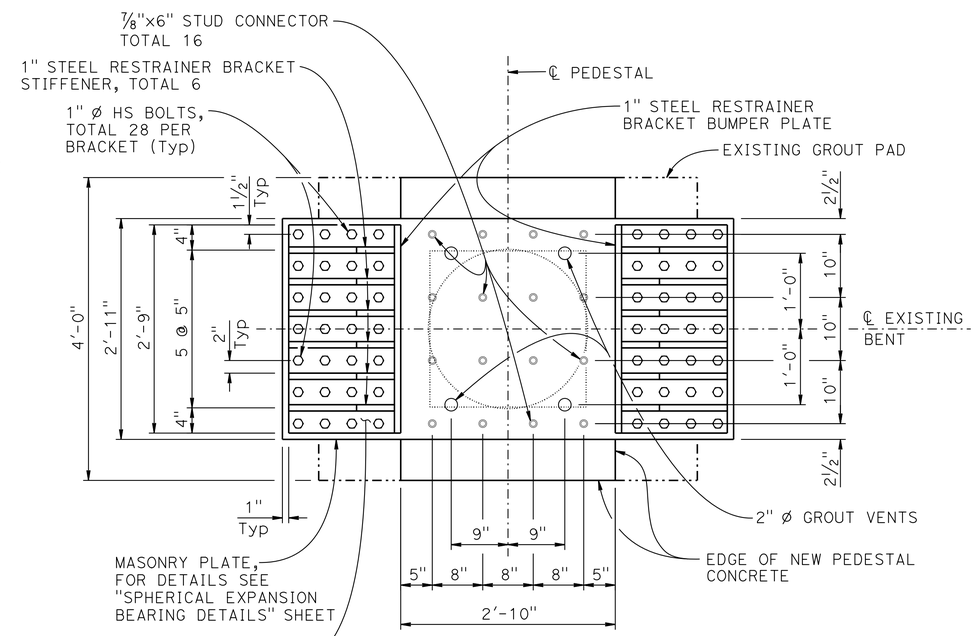

DETAIL D
1" = 1'-0"

NOTE:
VERIFY ALL CONTROLLING FIELD DIMENSIONS BEFORE ORDERING OR FABRICATING ANY MATERIAL.

	BY	CHECKED
DESIGN	R. MELKO	H. PEREZ
DETAILS	D. PATO	R. MELKO
QUANTITIES	S. MORIMOTO	R. MELKO

STATE OF CALIFORNIA
DEPARTMENT OF TRANSPORTATION

DIVISION OF ENGINEERING SERVICES
STRUCTURE DESIGN
DESIGN BRANCH 6

BRIDGE NO. 32-0018
POST MILE 19.6

TUOLUMNE RIVER BRIDGE (REHAB)
BENT LAYOUT

STRUCTURES DESIGN DETAIL SHEET (ENGLISH) (REV. 09-01-10)

ORIGINAL SCALE IN INCHES FOR REDUCED PLANS 0 1 2 3

UNIT: 3591
PROJECT NUMBER & PHASE: 1012000053-1
CONTRACT NO.: 10-0L9704

DISREGARD PRINTS BEARING EARLIER REVISION DATES

REVISION DATES: 3-20-14 1-15-15 6-25-14 6-16-14

SHEET 13 OF 50

FILE => 32-0018-g-bent-alay.dgn

USERNAME => s113541 DATE PLOTTED => 12-NOV-2015 TIME PLOTTED => 11:07

DIST	COUNTY	ROUTE	POST MILES TOTAL PROJECT	SHEET No.	TOTAL SHEETS
10	Tuo	120	R19.4/R20.0	83	119

REGISTERED CIVIL ENGINEER 5/28/15 DATE

6-22-15
PLANS APPROVAL DATE

REGISTERED PROFESSIONAL ENGINEER DON NGUYEN-TAN No. C 57510 Exp. 12-31-15 CIVIL STATE OF CALIFORNIA

The State of California or its officers or agents shall not be responsible for the accuracy or completeness of scanned copies of this plan sheet.

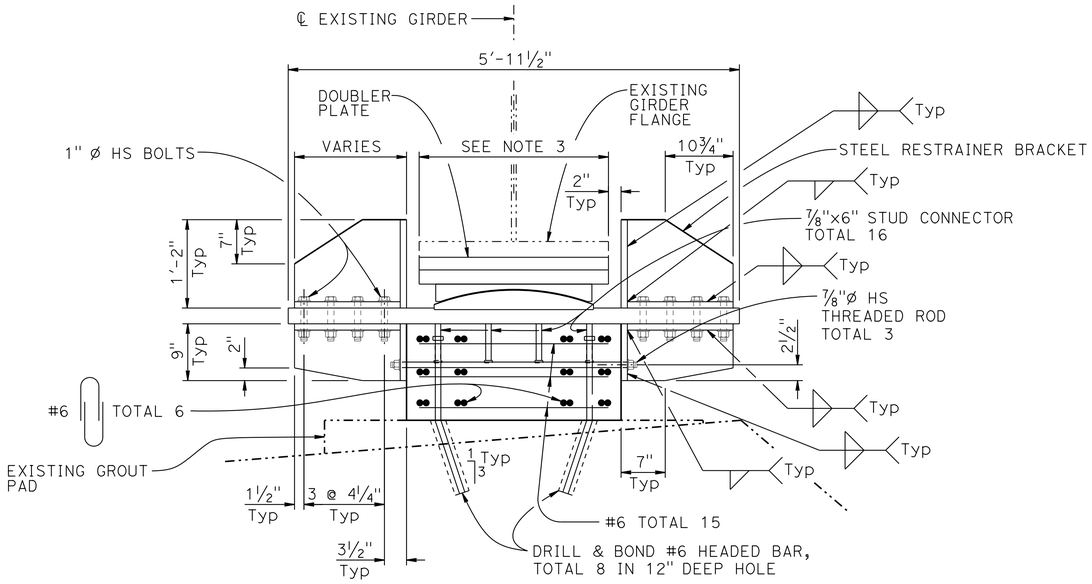

SECTION D-D

1" = 1'-0"

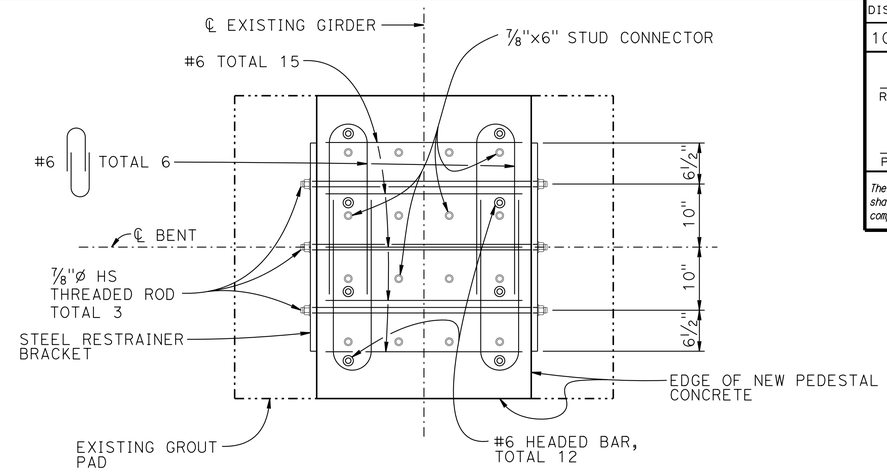

SECTION F-F

1" = 1'-0"

NOTES:

1. For Doubler Plate details and locations, see "GIRDER STRENGTHENING LAYOUT" and "GIRDER STRENGTHENING DETAILS" sheet.
2. Bent 4 shown, other Bents similar.
3. See "DOUBLER PLATE TABLE" on "GIRDER STRENGTHENING DETAILS" sheet for existing flange width.

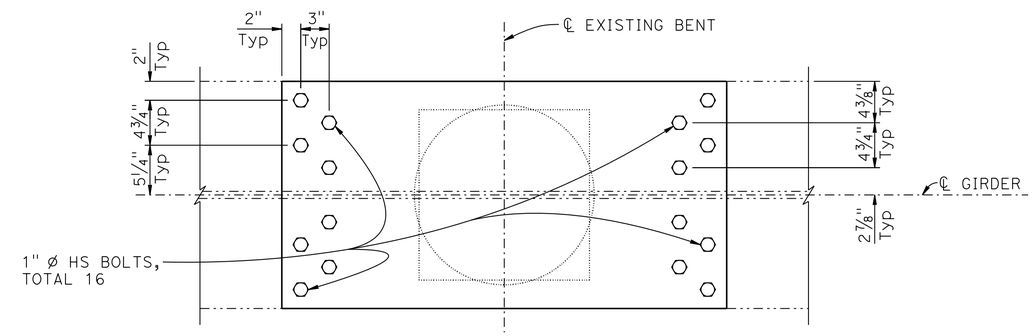

(24" WIDE FLANGE)

SOLE PLATE CONNECTION DETAIL

1½" = 1'-0"

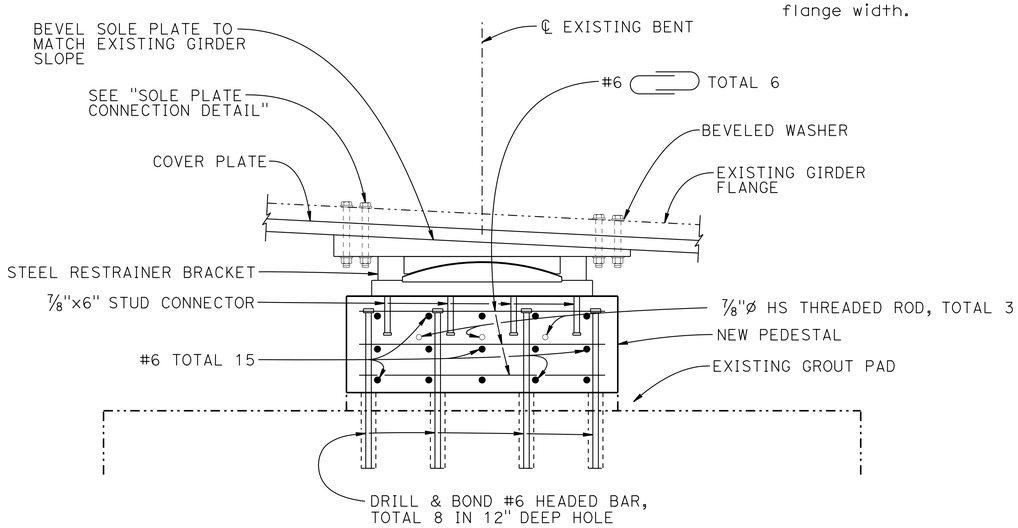

SECTION E-E

1" = 1'-0"

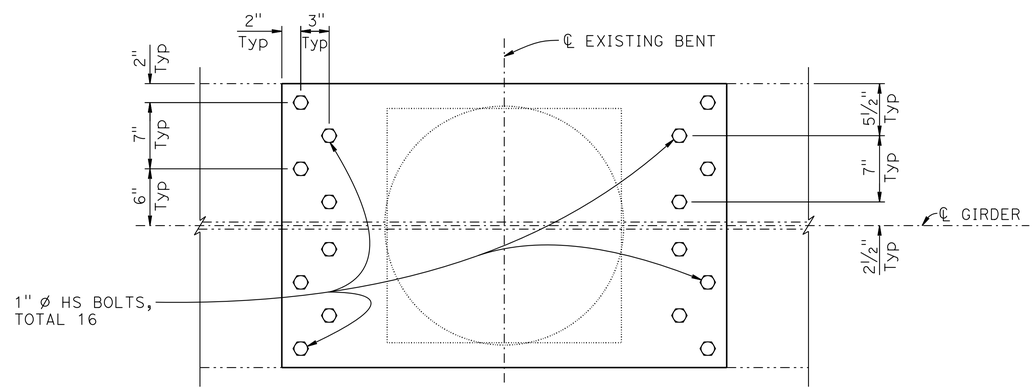

(30" WIDE FLANGE)

SOLE PLATE CONNECTION DETAIL

1½" = 1'-0"

NOTE:
VERIFY ALL CONTROLLING FIELD DIMENSIONS BEFORE ORDERING OR FABRICATING ANY MATERIAL.

	BY	CHECKED
DESIGN	R. MELKO	H. Perez
DETAILS	D. PATO	R. MELKO
QUANTITIES	S. MORIMOTO	R. MELKO

STATE OF CALIFORNIA
DEPARTMENT OF TRANSPORTATION

DIVISION OF ENGINEERING SERVICES
STRUCTURE DESIGN
DESIGN BRANCH 6

BRIDGE NO. 32-0018
POST MILE 19.6

TUOLUMNE RIVER BRIDGE (REHAB)
BENT DETAILS NO. 1

STRUCTURES DESIGN DETAIL SHEET (ENGLISH) (REV. 09-01-10)

ORIGINAL SCALE IN INCHES FOR REDUCED PLANS 0 1 2 3

UNIT: 3591
PROJECT NUMBER & PHASE: 1012000053-1
CONTRACT NO.: 10-0L9704

DISREGARD PRINTS BEARING EARLIER REVISION DATES

REVISION DATES 3-4-14 6-17-15 1-14-15

SHEET 14 OF 50

FILE => 32-0018-g-bent-det1.dgn

USERNAME => s113541 DATE PLOTTED => 12-NOV-2015 TIME PLOTTED => 11:07

DIST	COUNTY	ROUTE	POST MILES TOTAL PROJECT	SHEET No.	TOTAL SHEETS
10	Tuo	120	R19.4/R20.0	84	119

REGISTERED CIVIL ENGINEER 5/28/15 DATE

6-22-15
PLANS APPROVAL DATE

REGISTERED PROFESSIONAL ENGINEER
DON NGUYEN-TAN
No. C 57510
Exp. 12-31-15
CIVIL
STATE OF CALIFORNIA

The State of California or its officers or agents shall not be responsible for the accuracy or completeness of scanned copies of this plan sheet.

NOTES:

1. Loads and member capacities provided herein are for estimating purposes only. Conduct a thorough evaluation of estimated loads and structure capacity for proposed construction methods, equipment and material conveyance.
2. "Girder Capacity" is based on the combined capacity of the right and left girders.
3. "Unfactored Demands on Girders" is based on the combined demand on both right and left girders.
4. "Unfactored girder dead load" includes self weight, cross bracing and lateral bracing.
5. "Unfactored live load" consists of single lane of AASHTO LFD HS-20 vehicle class.
6. The girder section is considered non-composite where:
   a. The existing deck has been sawcut or removed.
   b. Within 25' of either side of the portions where the existing deck is sawcut or removed.
   c. New PC/PS deck panels have been installed and the rapid strength concrete haunches have cured for less than 8 hours.

GIRDER LOADS AND CAPACITY TABLE (1 OF 2)

SPAN	POINT ALONG SPAN	UNFACTORED DEMAND ON GIRDERS									GIRDER CAPACITY				
		DEAD LOAD						LIVE LOAD ENVELOPE (SINGLE LANE)			COMPOSITE		NON-COMPOSITE		SHEAR (KIP)
		GIRDER		NEW DECK		TEMPORARY RAILING (PER ROW)									
		MOMENT (KIP-FT)	SHEAR (KIP)	MOMENT (KIP-FT)	SHEAR (KIP)	MOMENT (KIP-FT)	SHEAR (KIP)	+ MOMENT (KIP-FT)	- MOMENT (KIP-FT)	SHEAR (KIP)	+ MOMENT (KIP-FT)	- MOMENT (KIP-FT)	+ MOMENT (KIP-FT)	- MOMENT (KIP-FT)	
SPAN 1	0	0	40	0	252	0	19	0	0	284	27,399	-21,793	18,614	-18,614	1,516
	0.1	409	27	2,863	180	207	14	3,286	-821	242	27,399	-21,793	18,614	-18,614	1,516
	0.2	661	16	4,774	108	346	8	5,732	-1,642	202	27,399	-21,793	18,614	-18,614	1,516
	0.3	759	2	5,732	36	416	3	7,359	-2,464	165	30,138	-24,343	21,263	-21,263	1,516
	0.4	700	13	5,736	35	419	3	8,174	-3,286	132	30,138	-24,343	21,263	-21,263	1,516
	0.5	473	25	4,786	107	353	8	8,273	-4,110	163	30,138	-24,343	21,263	-21,263	1,516
	0.6	83	37	2,884	180	220	13	7,739	-5,588	193	30,138	-24,343	21,263	-21,263	1,516
	0.7	-464	51	29	252	18	18	6,569	-6,518	223	30,138	-24,343	21,263	-21,263	1,516
	0.8	-1,186	64	-3,779	324	252	24	4,873	-7,452	255	38,353	-31,675	28,944	-28,142	1,516
	0.9	-2,091	81	-8,540	396	590	29	3,986	-8,736	290	38,353	-31,913	28,944	-28,142	1,516
	1	-3,190	97	-14,249	467	1,036	34	4,230	-11,080	338	47,454	-40,294	38,115	-38,115	1,516
SPAN 2	0	-3,190	97	-14,249	467	1,036	35	4,230	-11,080	338	47,454	-40,720	38,115	-38,115	1,516
	0.1	-1,387	85	-5,788	370	382	28	2,865	-6,048	332	41,789	-34,013	31,349	-26,954	1,516
	0.2	-23	63	519	262	78	20	4,782	-3,218	287	34,573	-27,946	24,028	-20,014	1,516
	0.3	955	42	4,664	154	383	12	7,793	-3,205	242	34,573	-27,841	24,028	-20,014	1,516
	0.4	1,557	22	6,654	45	535	4	10,176	-4,512	200	39,928	-31,209	28,031	-20,801	1,516
	0.5	1,764	0	6,485	63	532	5	11,367	-5,798	165	39,928	-32,331	28,031	-20,801	1,516
	0.6	1,574	22	4,157	171	375	12	11,423	-8,688	204	39,928	-32,331	28,031	-20,801	1,516
	0.7	976	44	-329	280	64	20	10,286	-10,773	240	40,122	-35,901	31,030	-31,030	1,516
	0.8	-84	72	-6,974	388	402	28	8,009	-12,904	279	52,840	-45,537	43,473	-43,473	1,516
	0.9	-1,710	105	-15,775	496	1,021	36	6,149	-15,638	323	66,612	-58,789	56,779	-56,779	1,516
	1	-3,998	140	-26,732	604	1,793	44	6,702	-19,824	394	66,612	-59,070	56,779	-56,779	1,516
SPAN 3	0	-3,998	140	-26,732	604	1,793	47	6,702	-19,824	394	66,612	-59,070	56,779	-56,779	1,516
	0.1	-953	101	-10,914	524	676	38	4,762	-10,017	382	52,840	-46,164	43,473	-43,473	1,516
	0.2	1,084	64	1,075	380	70	27	7,205	-5,611	331	43,619	-36,445	33,789	-30,918	1,516
	0.3	2,252	32	9,225	234	738	17	11,813	-5,252	282	52,558	-42,139	40,966	-32,059	1,516
	0.4	2,532	45	13,535	100	1,034	7	15,842	-6,204	239	52,558	-44,511	40,966	-32,059	1,516
	0.5	1,905	52	14,000	71	1,056	5	18,269	-7,954	188	52,558	-44,511	40,966	-32,059	1,516
	0.6	377	76	10,622	199	803	15	18,867	-11,422	185	52,558	-44,511	40,966	-32,059	1,516
	0.7	-2,054	113	3,401	343	277	26	17,492	-14,057	229	52,659	-46,708	41,931	-35,907	1,516
	0.8	-5,445	157	-7,659	494	524	36	13,942	-16,675	289	59,285	-52,689	48,880	-24,452	1,516
	0.9	-10,029	211	-11,556	632	1,597	46	8,120	-19,386	324	79,074	-69,804	65,288	-67,789	1,516
	1	-16,245	278	-41,266	777	2,943	57	471	-23,200	417	88,185	-76,572	74,070	-76,569	1,516

NOTE:
VERIFY ALL CONTROLLING FIELD DIMENSIONS BEFORE ORDERING OR FABRICATING ANY MATERIAL.

	BY	CHECKED
DESIGN	S. PAHLAVAN	D. NGUYEN-TAN
DETAILS	P. SILVA	D. NGUYEN-TAN
QUANTITIES	S. MORIMOTO	R. MELKO

STATE OF CALIFORNIA
DEPARTMENT OF TRANSPORTATION

DIVISION OF ENGINEERING SERVICES
STRUCTURE DESIGN
DESIGN BRANCH 6

BRIDGE NO. 32-0018
POST MILE 19.6

TUOLUMNE RIVER BRIDGE (REHAB)
CONSTRUCTION DETAILS NO. 1

STRUCTURES DESIGN DETAIL SHEET (ENGLISH) (REV. 09-01-10)

ORIGINAL SCALE IN INCHES FOR REDUCED PLANS 0 1 2 3

UNIT: 3591
PROJECT NUMBER & PHASE: 1012000053-1
CONTRACT NO.: 10-0L9704

DISREGARD PRINTS BEARING EARLIER REVISION DATES

REVISION DATES 06-26-14 06-19-14 01-16-15 02-12-15

SHEET 15 OF 50

FILE => 32-0018-h-const-det1.dgn

USERNAME => s113541 DATE PLOTTED => 12-NOV-2015 TIME PLOTTED => 11:07

DIST	COUNTY	ROUTE	POST MILES TOTAL PROJECT	SHEET No.	TOTAL SHEETS
10	Tuo	120	R19.4/R20.0	85	119

REGISTERED CIVIL ENGINEER 5/28/15 DATE

6-22-15
PLANS APPROVAL DATE

REGISTERED PROFESSIONAL ENGINEER DON NGUYEN-TAN No. C 57510 Exp. 12-31-15 CIVIL STATE OF CALIFORNIA

The State of California or its officers or agents shall not be responsible for the accuracy or completeness of scanned copies of this plan sheet.

NOTES:

1. Loads and member capacities provided herein are for estimating purposes only. Conduct a thorough evaluation of estimated loads and structure capacity for proposed construction methods, equipment and material conveyance.
2. "Girder Capacity" is based on the combined capacity of the right and left girders.
3. "Unfactored Demands on Girders" is based on the combined demand on both right and left girders.
4. "Unfactored girder dead load" includes self weight, cross bracing and lateral bracing.
5. "Unfactored live load" consists of single lane of AASHTO LFD HS-20 vehicle class.
6. The girder section is considered non-composite where:
   a. The existing deck has been sawcut or removed.
   b. Within 25' of either side of the portions where the existing deck is sawcut or removed.
   c. New PC/PS deck panels have been installed and the rapid strength concrete haunches have cured for less than 8 hours.

GIRDER LOADS AND CAPACITY TABLE (2 OF 2)

SPAN	POINT ALONG SPAN	UNFACTORED DEMAND ON GIRDERS									GIRDER CAPACITY				
		DEAD LOAD						LIVE LOAD ENVELOPE (SINGLE LANE)			COMPOSITE		NON-COMPOSITE		SHEAR (KIP)
		GIRDER		NEW DECK		TEMPORARY RAILING (PER ROW)									
		MOMENT (KIP-FT)	SHEAR (KIP)	MOMENT (KIP-FT)	SHEAR (KIP)	MOMENT (KIP-FT)	SHEAR (KIP)	+ MOMENT (KIP-FT)	- MOMENT (KIP-FT)	SHEAR (KIP)	+ MOMENT (KIP-FT)	- MOMENT (KIP-FT)	+ MOMENT (KIP-FT)	- MOMENT (KIP-FT)	
SPAN 4	0	-16,245	278	-41,266	777	2,943	69	471	-23,200	417	88,185	-76,632	74,070	-76,569	1,516
	0.1	-3,866	314	-9,894	778	706	57	144	-5,453	415	66,602	-57,396	52,395	-56,860	2,187
	0.2	5,735	246	14,516	583	1,035	43	7,978	-40	335	55,323	-46,076	42,829	-36,942	2,187
	0.3	13,155	177	31,980	389	2,281	29	17,280	-70	264	88,596	-80,361	75,874	-54,268	2,187
	0.4	17,841	93	42,462	194	3,028	15	22,845	-44	199	101,477	-84,245	79,722	-56,671	2,187
	0.5	19,441	8	45,954	21	3,277	1	24,640	-12	143	106,439	-88,419	83,850	-59,136	2,187
	0.6	17,850	89	42,452	195	3,027	15	22,836	-49	186	101,904	-84,245	79,722	-56,671	2,187
	0.7	13,161	178	32,139	388	2,279	29	17,260	-78	246	97,498	-80,361	75,874	-54,268	2,187
	0.8	5,733	244	14,484	584	1,033	43	7,963	-55	312	54,497	-46,076	42,829	-36,942	2,187
	0.9	-3,858	314	-9,966	778	711	57	126	-5,483	393	63,347	-60,712	50,548	-58,353	2,187
	1	-16,205	403	-41,356	972	2,949	71	472	-22,554	468	88,185	-80,150	74,070	-79,843	2,187
SPAN 5	0	-16,205	403	-41,356	972	2,949	58	472	-22,554	468	88,185	-80,049	74,070	-79,843	2,178
	0.1	-10,008	209	-22,812	626	1,618	46	8,104	-19,461	339	79,074	-72,276	65,288	-72,014	2,187
	0.2	-5,441	154	-8,085	481	559	38	13,921	-16,781	282	59,285	-51,427	48,880	-48,880	1,516
	0.3	-2,072	111	2,804	337	228	25	17,460	-14,206	231	50,063	-42,262	39,196	-36,275	1,516
	0.4	316	75	9,857	192	740	15	18,853	-11,615	188	52,651	-45,040	41,934	-35,861	1,516
	0.5	1,768	49	13,067	61	978	4	18,266	-8,979	183	52,651	-45,040	41,934	-35,861	1,516
	0.6	2,285	43	12,435	97	942	7	15,851	-6,507	225	52,651	-45,040	41,934	-35,861	1,516
	0.7	1,875	36	7,959	242	632	18	11,786	-5,862	283	48,177	-41,153	38,280	-35,301	1,516
	0.8	550	73	-356	385	48	28	7,052	-6,192	319	48,177	-41,153	38,280	-35,301	1,516
	0.9	-1,686	111	-12,510	529	810	38	4,362	-10,166	368	50,150	-42,721	40,020	-40,020	1,516
	1	-4,925	153	-28,494	674	1,941	49	6,182	-19,610	438	63,442	-54,731	52,073	-52,073	1,516
SPAN 6	0	-4,925	153	-28,494	674	1,941	49	6,182	-19,610	438	63,442	-54,731	52,073	-52,073	1,516
	0.1	-2,032	137	-15,963	576	1,057	42	6,072	-15,770	349	63,442	-54,731	52,073	-52,073	1,516
	0.2	219	105	-5,578	468	325	34	8,794	-13,583	307	48,264	-41,585	39,039	-39,039	1,516
	0.3	1,925	94	2,656	461	254	26	11,951	-11,896	266	50,468	-42,767	39,419	-32,531	1,516
	0.4	3,128	51	8,727	252	679	18	14,071	-10,213	225	50,377	-42,311	38,567	-29,515	1,516
	0.5	3,842	26	12,667	143	950	10	15,005	-8,523	186	52,665	-44,470	40,788	-31,284	1,516
	0.6	4,056	15	14,442	35	1,067	3	14,761	-5,583	156	52,665	-44,470	40,788	-31,284	1,516
	0.7	3,767	27	14,062	74	1,031	6	13,212	-4,189	191	52,665	-44,470	40,788	-31,284	1,516
	0.8	2,982	55	11,528	181	841	13	10,229	-2,794	229	48,094	-40,133	36,266	-27,744	1,516
	0.9	1,724	78	6,841	290	497	22	5,862	-1,398	271	48,094	-40,133	36,266	-27,744	1,516
	1	0	105	0	397	0	30	0	0	335	48,094	-40,133	36,266	-27,744	1,516

NOTE:
VERIFY ALL CONTROLLING FIELD DIMENSIONS BEFORE ORDERING OR FABRICATING ANY MATERIAL.

	BY	CHECKED
DESIGN	S. PAHLAVAN	D. NGUYEN-TAN
DETAILS	P. SILVA	D. NGUYEN-TAN
QUANTITIES	S. MORIMOTO	R. MELKO

STATE OF CALIFORNIA
DEPARTMENT OF TRANSPORTATION

DIVISION OF ENGINEERING SERVICES
STRUCTURE DESIGN
DESIGN BRANCH 6

BRIDGE NO. 32-0018
POST MILE 19.6

TUOLUMNE RIVER BRIDGE (REHAB)
CONSTRUCTION DETAILS NO. 2

STRUCTURES DESIGN DETAIL SHEET (ENGLISH) (REV. 09-01-10)

ORIGINAL SCALE IN INCHES FOR REDUCED PLANS 0 1 2 3

UNIT: 3591
PROJECT NUMBER & PHASE: 1012000053-1
CONTRACT NO.: 10-0L9704

DISREGARD PRINTS BEARING EARLIER REVISION DATES

REVISION DATES 06-26-14 06-19-14 01-16-15 02-12-15

SHEET 16 OF 50

FILE => 32-0018-h-const-det2.dgn

USERNAME => s113541 DATE PLOTTED => 12-NOV-2015 TIME PLOTTED => 11:08

DIST	COUNTY	ROUTE	POST MILES TOTAL PROJECT	SHEET No.	TOTAL SHEETS
10	Tuo	120	R19.4/R20.0	86	119

REGISTERED CIVIL ENGINEER 5/28/15 DATE

6-22-15
PLANS APPROVAL DATE

REGISTERED PROFESSIONAL ENGINEER DON NGUYEN-TAN No. C 57510 Exp. 12-31-15 CIVIL STATE OF CALIFORNIA

The State of California or its officers or agents shall not be responsible for the accuracy or completeness of scanned copies of this plan sheet.

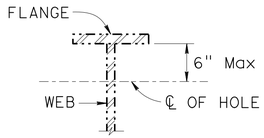

1" Max * HOLE AT 4' Min SPACING ALLOWED FOR FALSEWORK. DESCRIBE LOCATION, SIZE AND SPACING OF HOLES IN WORKING DRAWINGS

ALLOWABLE HOLES FOR FALSEWORK

NO SCALE

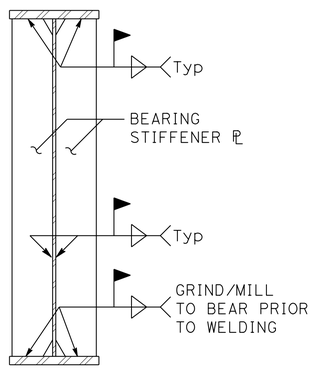

ALTERNATIVE 1

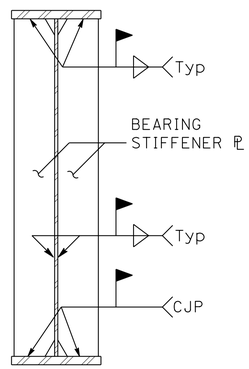

ALTERNATIVE 2

BEARING STIFFENERS

NO SCALE

NOTE:

1. When size of fillet weld is not shown in the weld symbol, weld size must be the minimum size denoted in the Specifications.

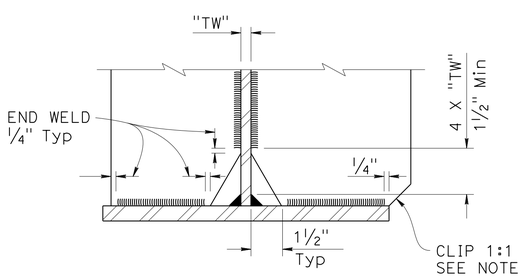

COPE AND WELDING DETAIL

NO SCALE

NOTE:
VERIFY ALL CONTROLLING FIELD DIMENSIONS BEFORE ORDERING OR FABRICATING ANY MATERIAL.

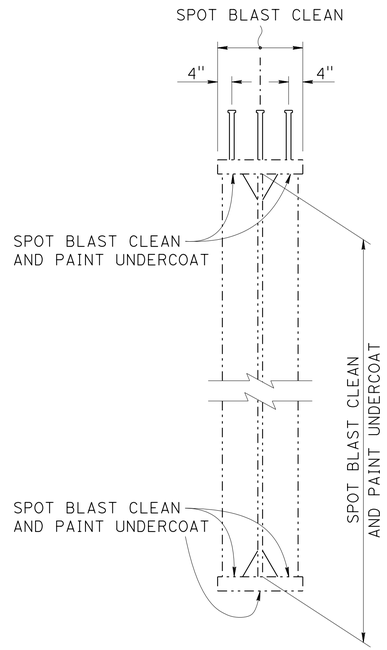

SECTION A-A

NO SCALE

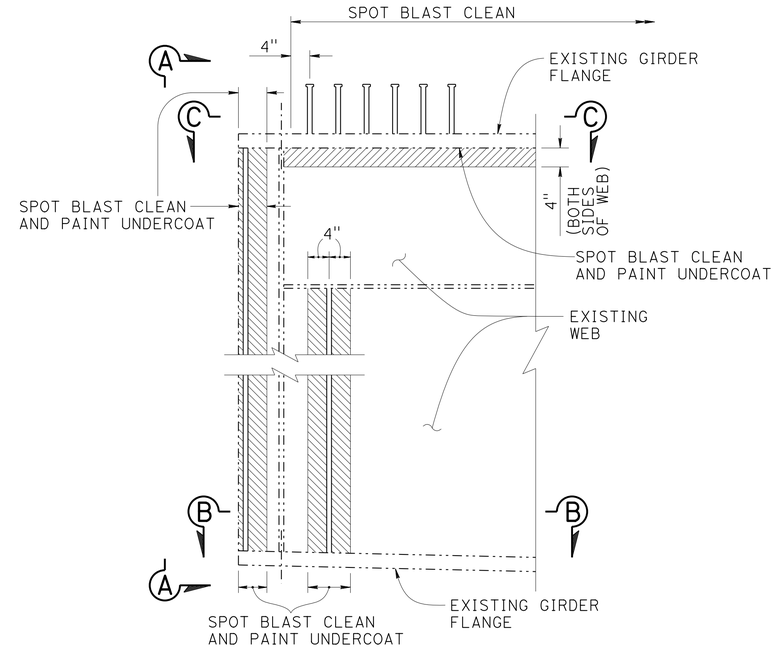

LIMITS OF PAYMENT FOR SPOT BLAST CLEAN AND PAINT UNDERCOAT

NO SCALE

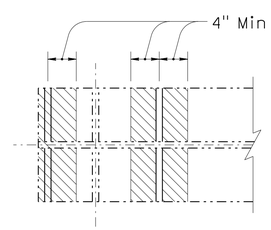

SECTION B-B

NO SCALE

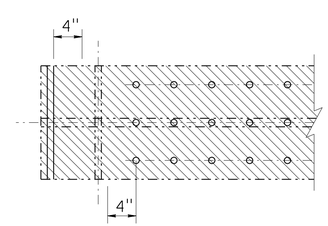

SECTION C-C

NO SCALE

NOTE:

1. Limits of payment for Spot Blast Clean and Paint undercoat also pertain to any portion of existing painted steel components that receive welding of new steel component.
2. For clarity, bearings, restrainer brackets, expansion joint, and new CIP deck closure segment not shown.

LEGEND:

Denotes Spot Blast Clean and Paint Undercoat

Temporary Decking Notes:

1. Temporary decking is not required for gaps less than 1½".
2. Expansion anchors may be used to secure temporary decking to existing concrete deck. In the new full-depth PC PS concrete deck panels and temporary concrete deck panels, provide inserts for attachment of temporary decking.
3. Temporary decking design loading:

   Moment demand and deflection criteria is based on two 16,000 lb wheel load spaced 6'-0" apart plus impact factor of 30%

   Deflection criteria = gap span/300

   Anchor bolt tension = 10,400 lbs

   Anchor bolt shear demand = 16,000 lbs for decking width less than 6'-0"
   = 32,000 lbs for decking width greater or equal than 6'-0"

   Maximum anchorage bolt spacing = 1'-0"

DESIGN	BY D. NGUYEN-TAN	CHECKED S. PAHLAVAN	
DETAILS	BY D. PATO	CHECKED D. NGUYEN-TAN	
QUANTITIES	BY S. MORIMOTO	CHECKED R. MELKO	

STATE OF CALIFORNIA
DEPARTMENT OF TRANSPORTATION

DIVISION OF ENGINEERING SERVICES
STRUCTURE DESIGN
DESIGN BRANCH 6

BRIDGE NO. 32-0018
POST MILE 19.6

TUOLUMNE RIVER BRIDGE (REHAB)
CONSTRUCTION DETAILS NO. 3

STRUCTURES DESIGN DETAIL SHEET (ENGLISH) (REV. 09-01-10)

ORIGINAL SCALE IN INCHES FOR REDUCED PLANS 0 1 2 3

UNIT: 3591
PROJECT NUMBER & PHASE: 1012000053-1
CONTRACT NO.: 10-0L9704

DISREGARD PRINTS BEARING EARLIER REVISION DATES

REVISION DATES 6-13-14 1-22-15 6-17-15

SHEET 17 OF 50

FILE => 32-0018-h-const-det3.dgn

USERNAME => s113541 DATE PLOTTED => 12-NOV-2015 TIME PLOTTED => 11:09

DIST	COUNTY	ROUTE	POST MILES TOTAL PROJECT	SHEET No.	TOTAL SHEETS
10	Tuo	120	R19.4/R20.0	87	119

REGISTERED CIVIL ENGINEER 5/28/15 DATE

6-22-15
PLANS APPROVAL DATE

REGISTERED PROFESSIONAL ENGINEER DON NGUYEN-TAN No. C 57510 Exp. 12-31-15 CIVIL STATE OF CALIFORNIA

The State of California or its officers or agents shall not be responsible for the accuracy or completeness of scanned copies of this plan sheet.

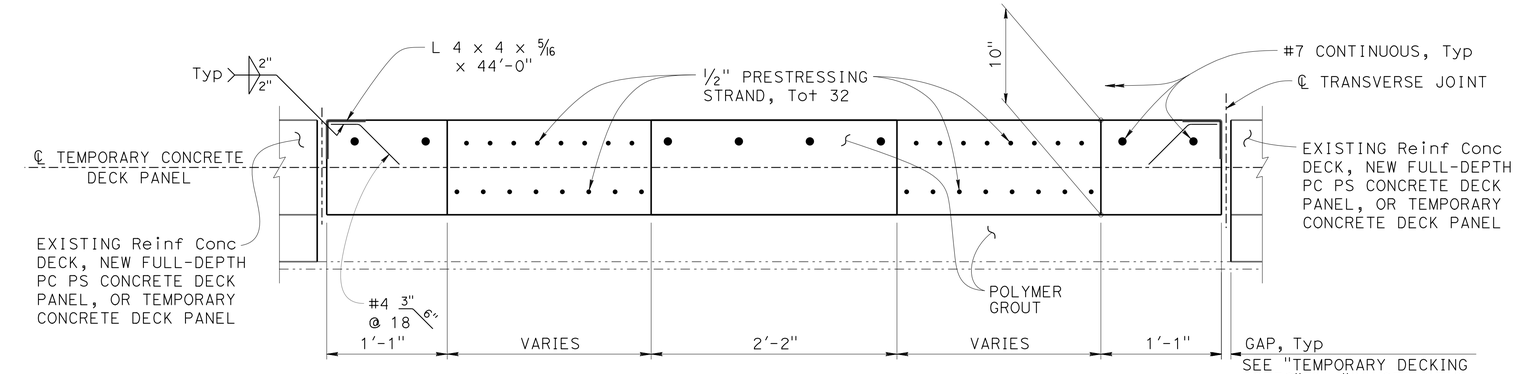

SECTION A-A

1½" = 1'-0"

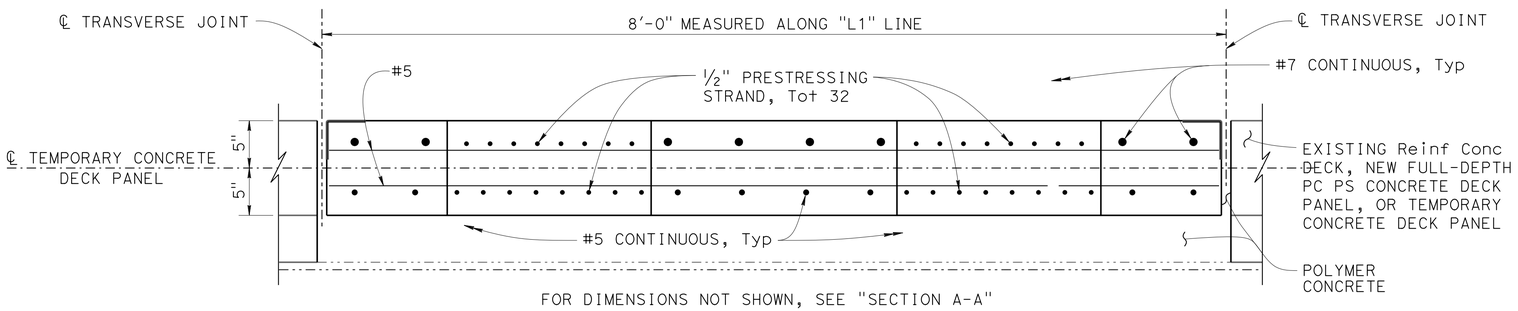

FOR DIMENSIONS NOT SHOWN, SEE "SECTION A-A"

SECTION B-B

1½" = 1'-0"

PRECAST ELEMENT	JACKING FORCE (P) IN kips	CONCRETE STRENGTH (ksi)	
		f'ci	f'c
8'x44' TEMPORARY CONCRETE DECK PANEL	991	6.0	8.0

TEMPORARY CONCRETE DECK PANEL PRE-TENSIONING NOTES

1. The Jacking Force (P) is the total force on strands, for each deck panel, required at the point of control along the span. The jacking force does not include any fabrication specific losses.
2. The maximum tensile stress in the prestressing steel upon release must not exceed 75% of the specified minimum ultimate tensile strength of the prestressing steel.
3. The maximum temporary tensile stress (jacking stress) in the prestressing steel must not exceed 80% of the specified minimum ultmate tensile strength of the prestressing steel.
4. Concrete Strength:
   f'ci is the minimum concrete strength at time of initial stressing.
   f'c is the minimum concrete strength at 28 days.

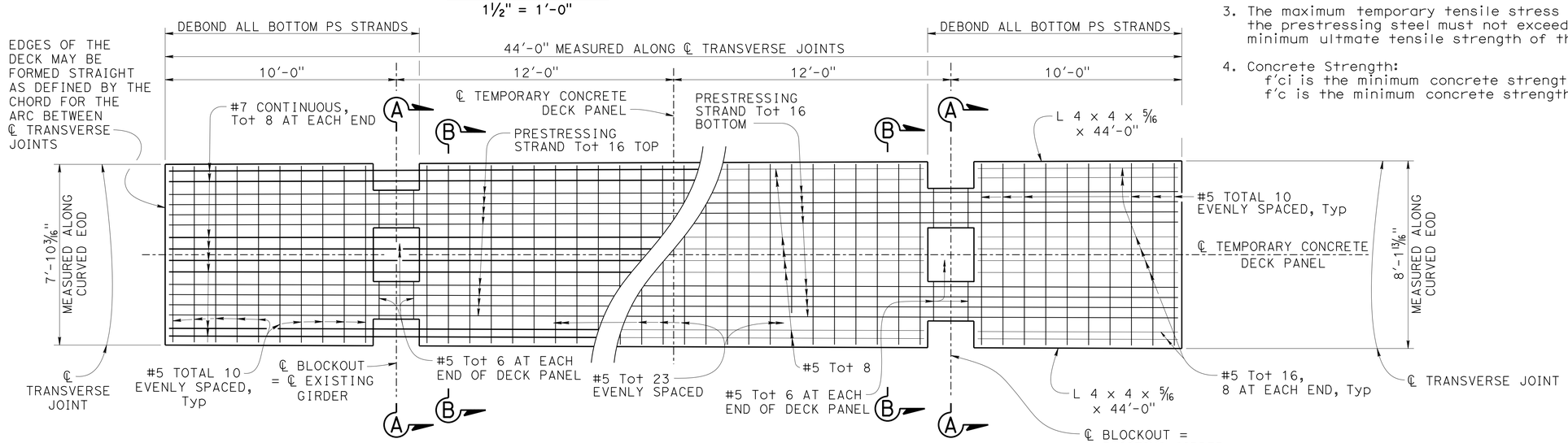

TOP REINFORCING

BOTTOM REINFORCING

PLAN - TEMPORARY CONCRETE DECK PANEL

⅜" = 1'-0"

NOTE:
VERIFY ALL CONTROLLING FIELD DIMENSIONS BEFORE ORDERING OR FABRICATING ANY MATERIAL.

DESIGN	BY D. NGUYEN-TAN	CHECKED S. PAHLAVAN	
DETAILS	BY D. PATO	CHECKED D. NGUYEN-TAN	
QUANTITIES	BY S. MORIMOTO	CHECKED R. MELKO	

STATE OF CALIFORNIA
DEPARTMENT OF TRANSPORTATION

DIVISION OF ENGINEERING SERVICES
STRUCTURE DESIGN
DESIGN BRANCH 6

BRIDGE NO. 32-0018
POST MILE 19.6

TUOLUMNE RIVER BRIDGE (REHAB)
CONSTRUCTION DETAILS NO. 4

STRUCTURES DESIGN DETAIL SHEET (ENGLISH) (REV. 09-01-10)

ORIGINAL SCALE IN INCHES FOR REDUCED PLANS 0 1 2 3

UNIT: 3591
PROJECT NUMBER & PHASE: 1012000053-1
CONTRACT NO.: 10-0L9704

DISREGARD PRINTS BEARING EARLIER REVISION DATES

REVISION DATES: 6-12-14 1-26-15 6-17-15

SHEET 18 OF 50

FILE => 32-0018-h-const-det4.dgn

USERNAME => s113541 DATE PLOTTED => 12-NOV-2015 TIME PLOTTED => 11:09

DIST	COUNTY	ROUTE	POST MILES TOTAL PROJECT	SHEET No.	TOTAL SHEETS
10	Tuo	120	R19.4/R20.0	88	119

REGISTERED CIVIL ENGINEER 5/28/15 DATE

6-22-15
PLANS APPROVAL DATE

REGISTERED PROFESSIONAL ENGINEER
DON NGUYEN-TAN
No. C 57510
Exp. 12-31-15
CIVIL
STATE OF CALIFORNIA

The State of California or its officers or agents shall not be responsible for the accuracy or completeness of scanned copies of this plan sheet.

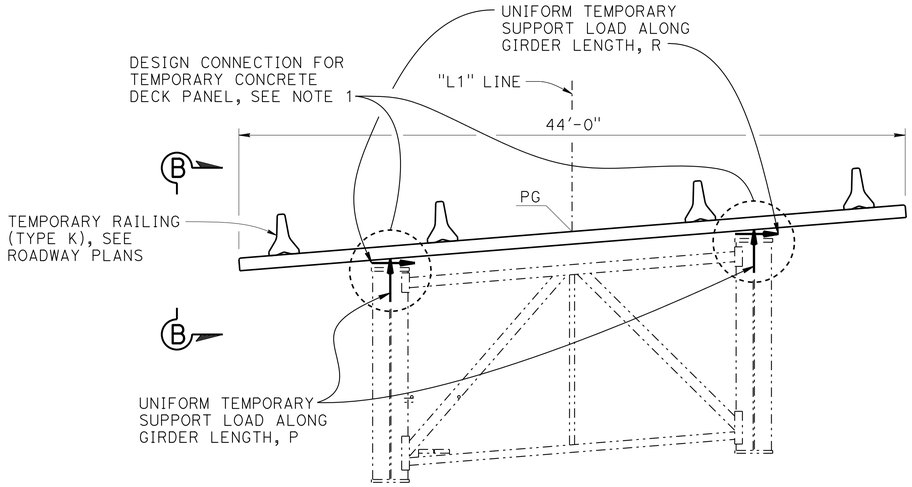

SUPPORT FOR TEMPORARY CONCRETE DECK PANEL

NO SCALE

SUPPORT LOADS FOR TEMPORARY CONCRETE DECK PANEL CONNECTION			
	UNFACTURED DEAD LOAD (LB/LF)	UNFACTURED TRUCK LIVE LOAD (LB/LF)	
		Max	Min
P	4,000	5,200	-440
Q	N/A	5,200	-5,200
R	-160	625	0

NOTES:

1. To estimate approximate range of connection height see "DECK PANEL DETAILS No. 5" sheet. Verify required connection height before submitting shop drawings.
2. "Unfactored Truck Live Load" does not consider loading due to construction equipment or material conveyance or storage.
3. Design connection to include loading due to construction equipment and material conveyance or storage.
4. "Unfactored Dead Load" includes self weight of temporary concrete deck panel and 4 rows of temporary railing.

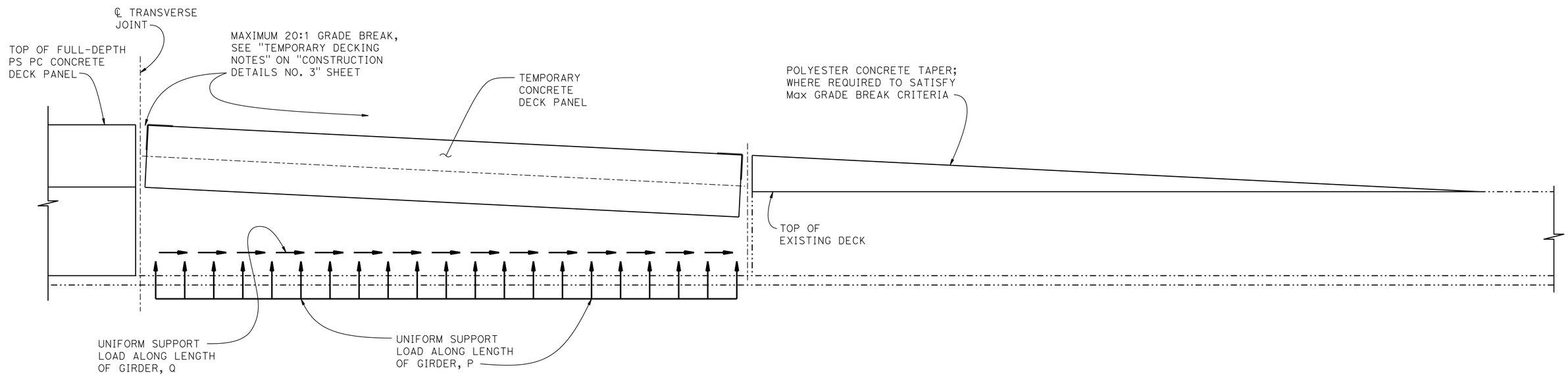

PARTIAL LONGITUDINAL SECTION VIEW B-B

NO SCALE

DESIGN	BY D. NGUYEN-TAN	CHECKED S. PAHLAVAN	
DETAILS	BY P. SILVA	CHECKED S. PAHLAVAN	
QUANTITIES	BY S. MORIMOTO	CHECKED R. MELKO	

STATE OF CALIFORNIA
DEPARTMENT OF TRANSPORTATION

DIVISION OF ENGINEERING SERVICES
STRUCTURE DESIGN
DESIGN BRANCH 6

BRIDGE NO. 32-0018
POST MILE 19.6

TUOLUMNE RIVER BRIDGE (REHAB)
CONSTRUCTION DETAILS NO. 5

STRUCTURES DESIGN DETAIL SHEET (ENGLISH) (REV. 09-01-10)

ORIGINAL SCALE IN INCHES FOR REDUCED PLANS 0 1 2 3

UNIT: 3591
PROJECT NUMBER & PHASE: 1012000053-1
CONTRACT NO.: 10-0L9704

DISREGARD PRINTS BEARING EARLIER REVISION DATES

REVISION DATES: 1-23-15 1-27-15 6-17-15 6-23-15

SHEET 19 OF 50

FILE => 32-0018-h-const-det5.dgn

USERNAME => s113541 DATE PLOTTED => 12-NOV-2015 TIME PLOTTED => 11:03

DIST	COUNTY	ROUTE	POST MILES TOTAL PROJECT	SHEET No.	TOTAL SHEETS
10	Tuo	120	R19.4/R20.0	89	119

REGISTERED CIVIL ENGINEER 5/28/15 DATE

6-22-15
PLANS APPROVAL DATE

REGISTERED PROFESSIONAL ENGINEER
DON NGUYEN-TAN
No. C 57510
Exp. 12-31-15
CIVIL
STATE OF CALIFORNIA

The State of California or its officers or agents shall not be responsible for the accuracy or completeness of scanned copies of this plan sheet.

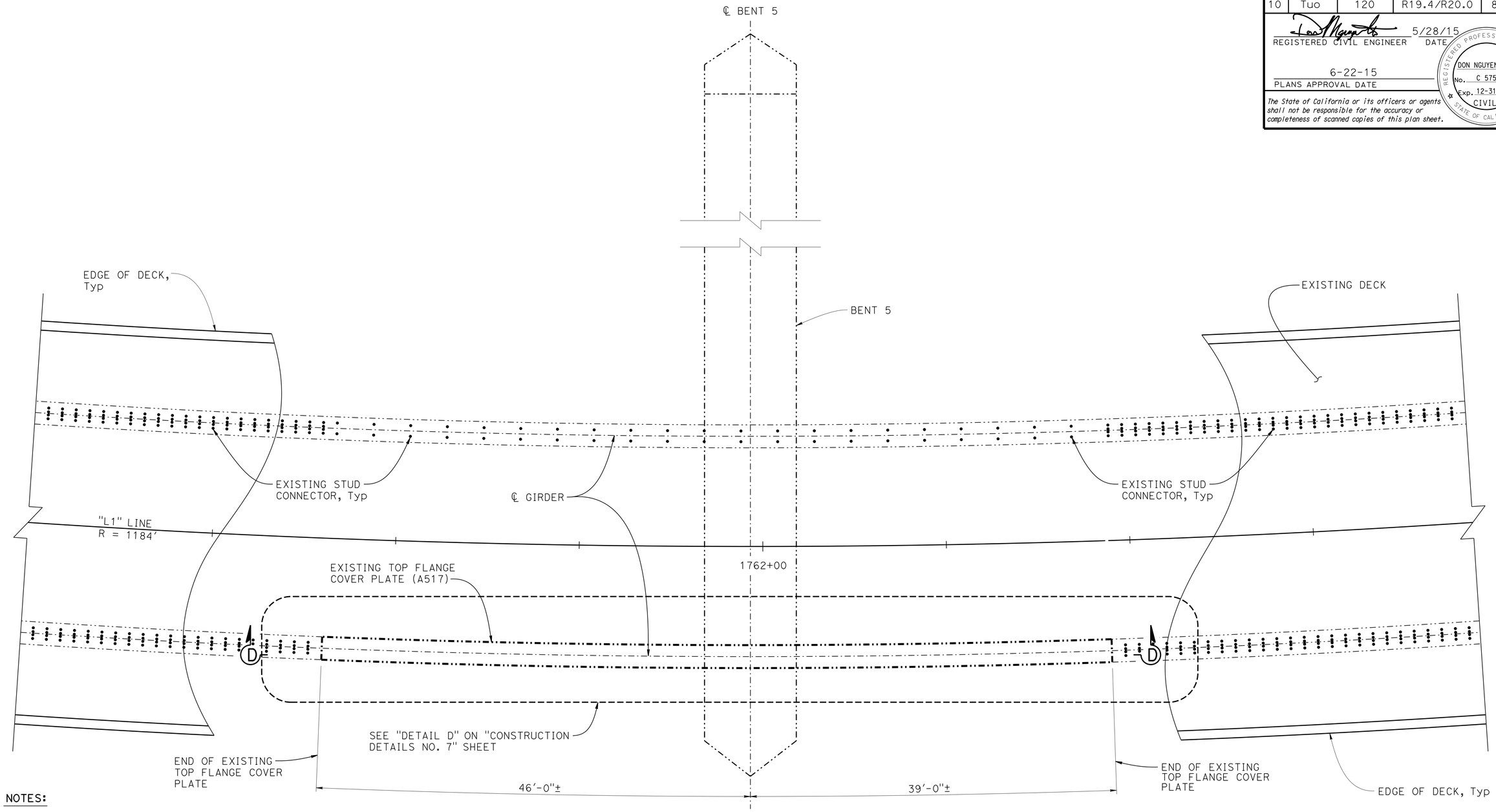

REINFORCING PLATE - TOP FLANGE (BENT 5)

3/16" = 1'-0"

NOTES:

1. Bent 5 shown, Bent 4 similar.
2. Existing flange bolts not shown, see "CONSTRUCTION DETAILS NO. 7" sheet for details.
3. For "SECTION D-D", See "CONSTRUCTION DETAILS NO. 7" sheet.

	BY	CHECKED
DESIGN	S. PAHLAVAN	G. REYES-GUTIERREZ
DETAILS	P. SILVA	D. NGUYEN-TAN
QUANTITIES	S. MORIMOTO	R. MELKO

ORIGINAL SCALE IN INCHES FOR REDUCED PLANS 0 1 2 3

STATE OF CALIFORNIA
DEPARTMENT OF TRANSPORTATION

DIVISION OF ENGINEERING SERVICES
STRUCTURE DESIGN
DESIGN BRANCH 6

BRIDGE NO. 32-0018
POST MILE 19.6

TUOLUMNE RIVER BRIDGE (REHAB)
CONSTRUCTION DETAILS NO. 6

UNIT: 3591
PROJECT NUMBER & PHASE: 1012000053-1
CONTRACT NO.: 10-0L9704

DISREGARD PRINTS BEARING EARLIER REVISION DATES

REVISION DATES: 08-23-13 02-13-15 06-17-15

SHEET 20 OF 50

USERNAME => s113541 DATE PLOTTED => 12-NOV-2015 TIME PLOTTED => 11:09

STRUCTURES DESIGN DETAIL SHEET (ENGLISH) (REV. 10/25/05)

FILE => 32-0018-h-const-det6.dgn

DIST	COUNTY	ROUTE	POST MILES TOTAL PROJECT	SHEET No.	TOTAL SHEETS
10	Tuo	120	R19.4/R20.0	90	119

REGISTERED CIVIL ENGINEER 5/28/15 DATE

6-22-15
PLANS APPROVAL DATE

REGISTERED PROFESSIONAL ENGINEER DON NGUYEN-TAN No. C 57510 Exp. 12-31-15 CIVIL STATE OF CALIFORNIA

The State of California or its officers or agents shall not be responsible for the accuracy or completeness of scanned copies of this plan sheet.

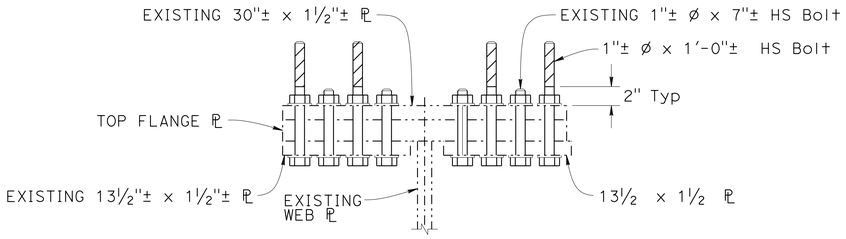

SECTION C-C

1½" = 1'-0"

LEGEND:

DENOTES BRIDGE REMOVAL (PORTION)

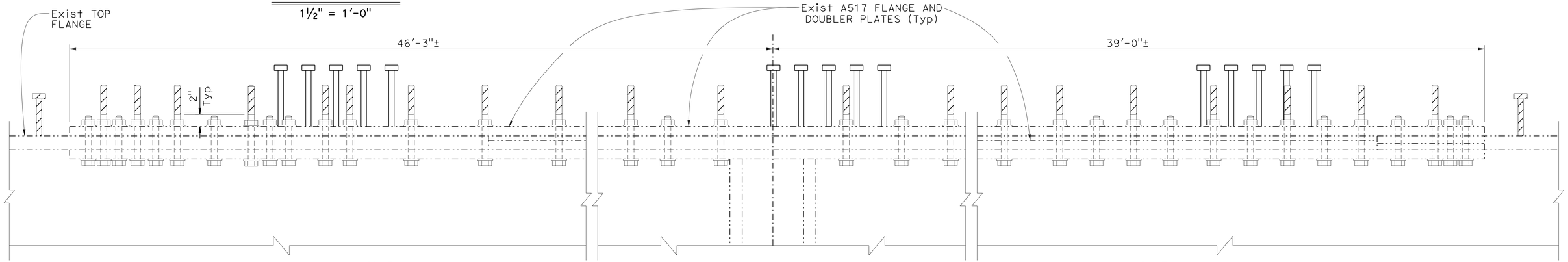

SECTION D-D

1½" = 1'-0"

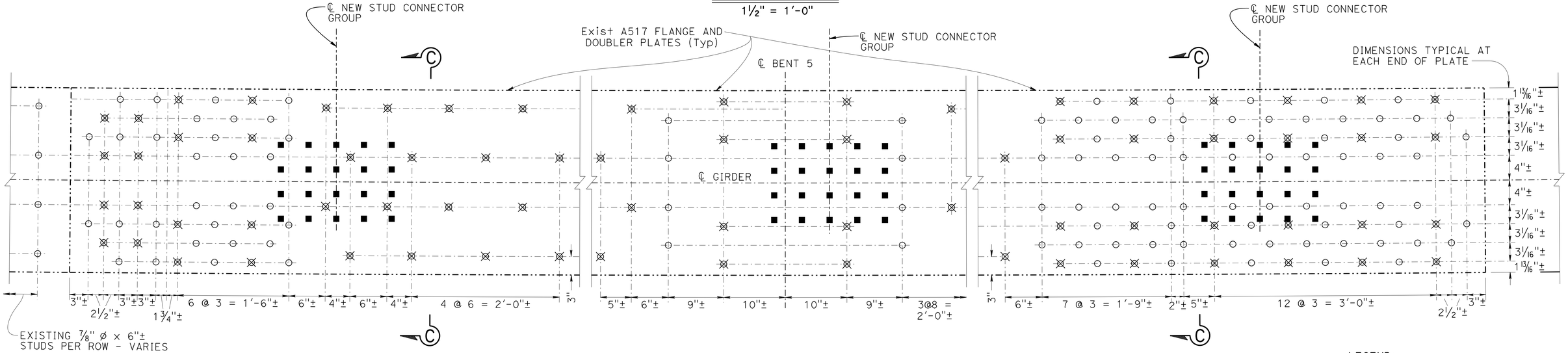

DETAIL D - BENT 5

1½" = 1'-0"

NOTES:

1. Bent 5 shown, Bent 4 similar.
2. New Stud Connectors may be adjusted to clear existing bolts and nuts.

LEGEND:

- ⊗ - Existing 1"ø x 1'-0"± HS Bolt
- ○ - Existing 1"ø x 7"± HS Bolt
- ■ - 1" ø Stud Connector

DESIGN	BY S. PAHLAVAN	CHECKED D. NGUYEN-TAN	
DETAILS	BY P. SILVA	CHECKED D. NGUYEN-TAN	
QUANTITIES	BY S. MORIMOTO	CHECKED R. MELKO	

STATE OF CALIFORNIA
DEPARTMENT OF TRANSPORTATION

DIVISION OF ENGINEERING SERVICES
STRUCTURE DESIGN
DESIGN BRANCH 6

BRIDGE NO. 32-0018
POST MILE 19.6

TUOLUMNE RIVER BRIDGE (REHAB)
CONSTRUCTION DETAILS NO. 7

STRUCTURES DESIGN DETAIL SHEET (ENGLISH) (REV. 09-01-10)

ORIGINAL SCALE IN INCHES FOR REDUCED PLANS 0 1 2 3

UNIT: 3591
PROJECT NUMBER & PHASE: 1012000053-1
CONTRACT NO.: 10-0L9704

DISREGARD PRINTS BEARING EARLIER REVISION DATES

REVISION DATES: 1-23-15 6-17-15

SHEET 21 OF 50

FILE => 32-0018-h-const-det7.dgn

USERNAME => s113541 DATE PLOTTED => 12-NOV-2015 TIME PLOTTED => 11:09

DIST	COUNTY	ROUTE	POST MILES TOTAL PROJECT	SHEET No.	TOTAL SHEETS
10	Tuo	120	R19.4/R20.0	91	119

REGISTERED CIVIL ENGINEER 5/28/15 DATE

6-22-15
PLANS APPROVAL DATE

REGISTERED PROFESSIONAL ENGINEER DON NGUYEN-TAN No. C 57510 Exp. 12-31-15 CIVIL STATE OF CALIFORNIA

The State of California or its officers or agents shall not be responsible for the accuracy or completeness of scanned copies of this plan sheet.

Note:

1. The existing flanges vary in thickness. Measure existing flange thicknesses and locations of flange transitions to determine filler plate dimensions.
2. Spot Blast Clean and Paint Undercoat the mating surfaces of the existing flange.

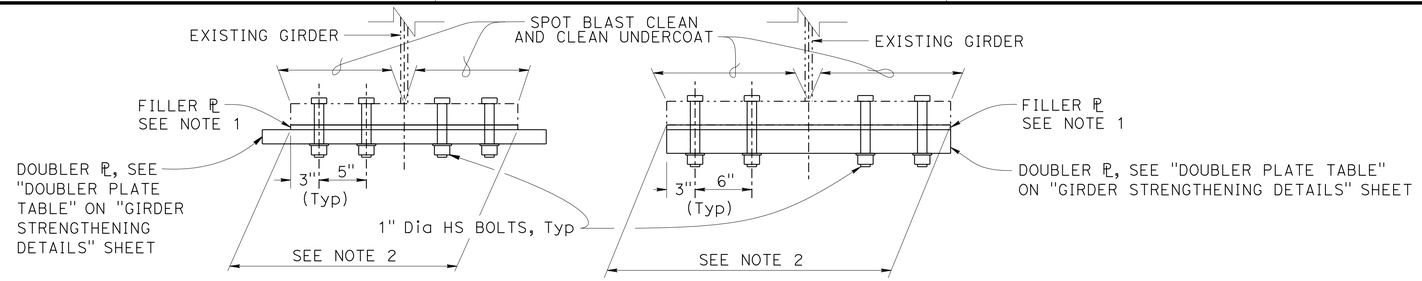

DETAIL R (18" & 24" FLANGE)

NO SCALE

DETAIL S (30" FLANGE)

NO SCALE

NOTE:
VERIFY ALL CONTROLLING FIELD DIMENSIONS BEFORE ORDERING OR FABRICATING ANY MATERIAL.

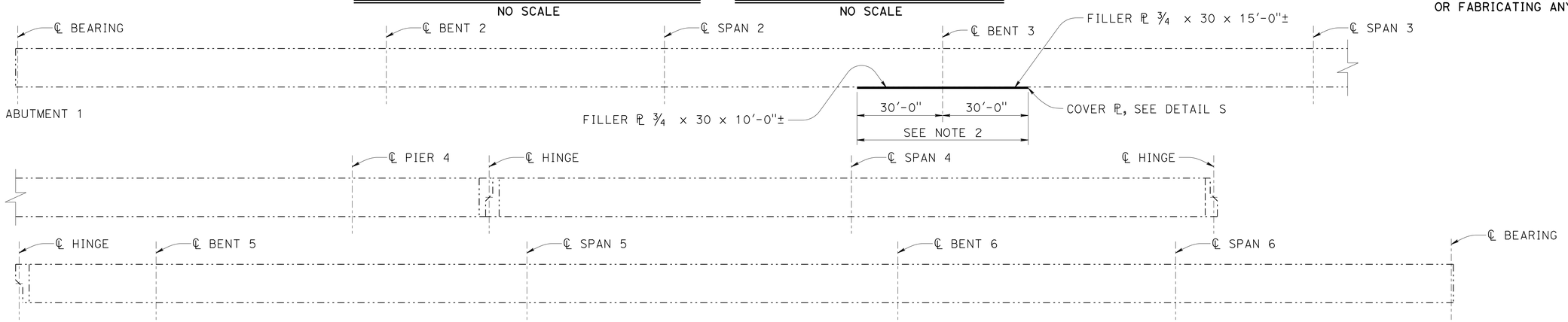

LEFT GIRDER ELEVATION (INSIDE CURVE)

1" = 20'

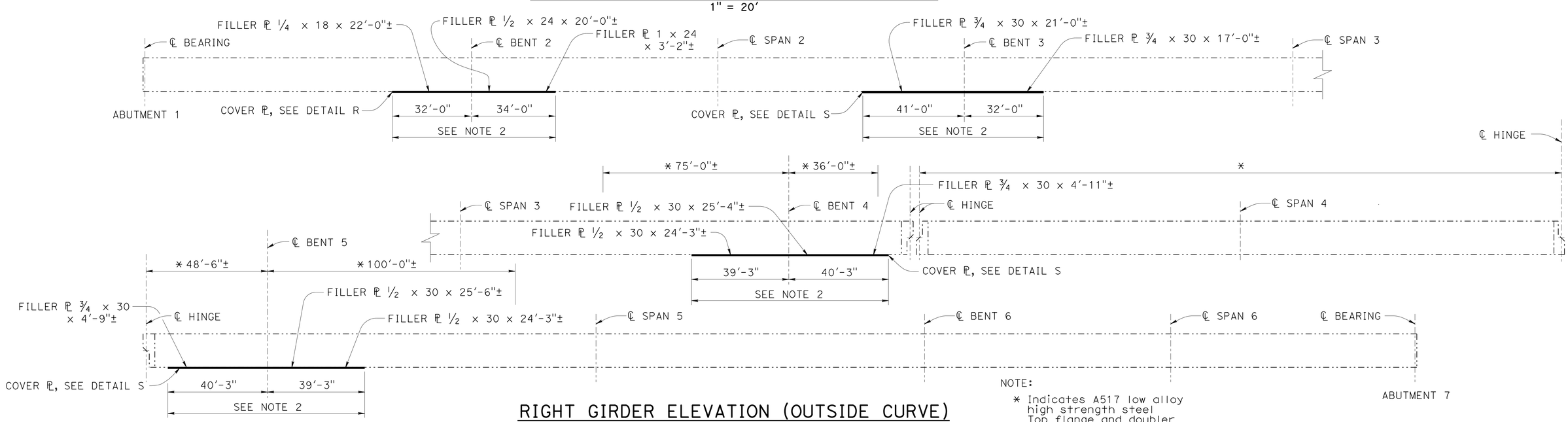

NOTE:
* Indicates A517 low alloy high strength steel Top flange and doubler plate.

RIGHT GIRDER ELEVATION (OUTSIDE CURVE)

1" = 20'

	BY	CHECKED
DESIGN	R. MELKO	S. PAHLAVAN
DETAILS	P. SILVA	S. PAHLAVAN
QUANTITIES	S. MORIMOTO	R. MELKO

STATE OF CALIFORNIA
DEPARTMENT OF TRANSPORTATION

DIVISION OF ENGINEERING SERVICES
STRUCTURE DESIGN
DESIGN BRANCH 6

BRIDGE NO. 32-0018
POST MILE 19.6

TUOLUMNE RIVER BRIDGE (REHAB)
GIRDER STRENGTHENING LAYOUT

STRUCTURES DESIGN DETAIL SHEET (ENGLISH) (REV. 09-01-10)

ORIGINAL SCALE IN INCHES FOR REDUCED PLANS 0 1 2 3

UNIT: 3591
PROJECT NUMBER & PHASE: 1012000053-1
CONTRACT NO.: 10-0L9704

DISREGARD PRINTS BEARING EARLIER REVISION DATES

REVISION DATES 6-11-14 12-08-14 1-13-15 1-27-15

SHEET 22 OF 50

FILE => 32-0018-I-strengthening-alyt.dgn

USERNAME => s113541 DATE PLOTTED => 12-NOV-2015 TIME PLOTTED => 11:09

DIST	COUNTY	ROUTE	POST MILES TOTAL PROJECT	SHEET No.	TOTAL SHEETS
10	Tuo	120	R19.4/R20.0	92	119

REGISTERED CIVIL ENGINEER 5/28/15 DATE

6-22-15
PLANS APPROVAL DATE

REGISTERED PROFESSIONAL ENGINEER DON NGUYEN-TAN No. C 57510 Exp. 12-31-15 STATE OF CALIFORNIA

The State of California or its officers or agents shall not be responsible for the accuracy or completeness of scanned copies of this plan sheet.

DOUBLER PLATE TABLE

SUPPORT LOCATION	LEFT GIRDER				RIGHT GIRDER			
	FLANGE		DOUBLER PLATE		FLANGE		DOUBLER PLATE	
	WIDTH (in)	THICKNESS (in)	WIDTH (in)	THICKNESS (in)	WIDTH (in)	THICKNESS (in)	WIDTH (in)	THICKNESS (in)
ABUTMENT 1	18±	1±			18±	1±		
BENT 2	24±	2±			24±	2¼±	30	1½
BENT 3	30±	2¾±	30	1½	30±	2¾±	30	2½
BENT 4	30±	2½±			30±	2½±	30	2½
BENT 5	30±	2½±			30±	2½±	30	2½
BENT 6	30±	2¼±			30±	2½±		
ABUTMENT 7	30±	1¾±			30±	1¾±		

Notes:

1. Adjust bolt spacing to clear intermediate stiffeners.
2. Determine, by field measurement, location of all intermediate stiffeners.

Denotes Spot Blast Clean and Paint Undercoat

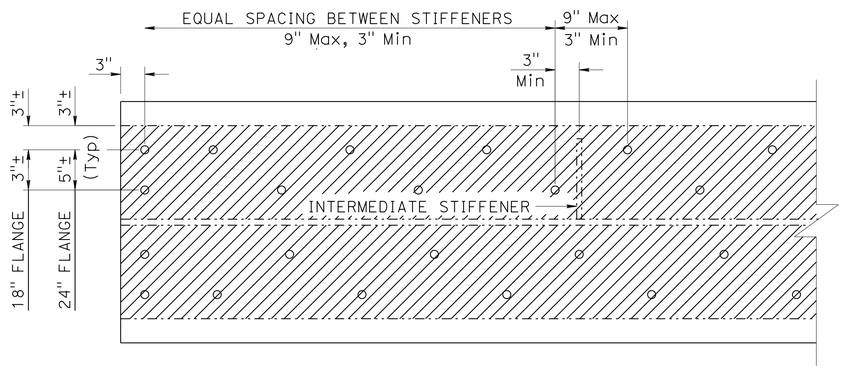

BOLT LAYOUT - 18" & 24" FLANGE

NO SCALE

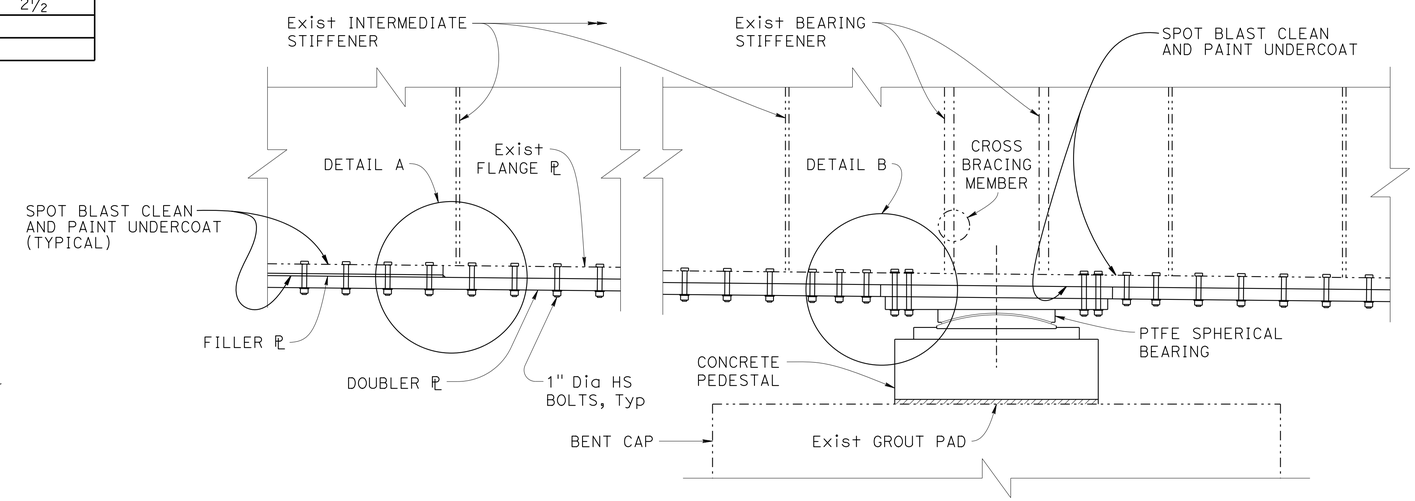

LONGITUDINAL ELEVATION AT SUPPORT
(BENT 4 RIGHT SHOWN, OTHER LOCATIONS SIMILAR)

NO SCALE

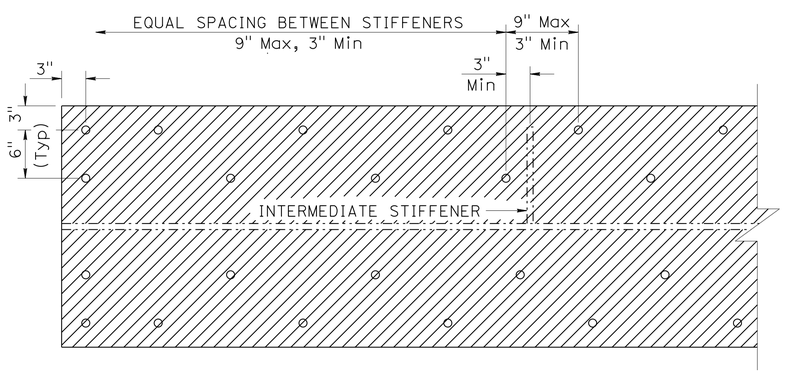

BOLT LAYOUT - 30" FLANGE

NO SCALE

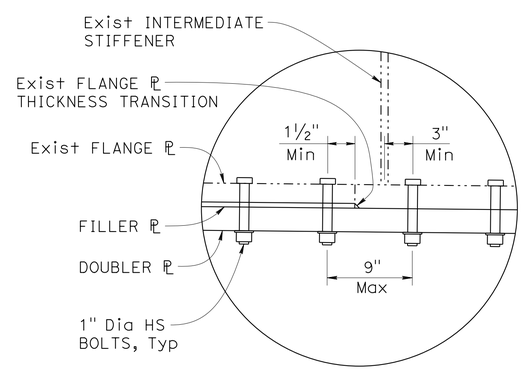

DETAIL A

NO SCALE

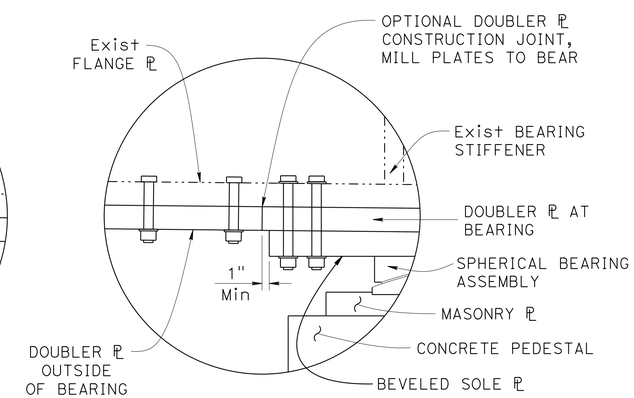

DETAIL B

NO SCALE

NOTE:
VERIFY ALL CONTROLLING FIELD DIMENSIONS BEFORE ORDERING OR FABRICATING ANY MATERIAL.

	BY	CHECKED
DESIGN	R. MELKO	D. NGUYEN-TAN
DETAILS	P. SILVA	D. NGUYEN-TAN
QUANTITIES	S. MORIMOTO	R. MELKO

STATE OF CALIFORNIA
DEPARTMENT OF TRANSPORTATION

DIVISION OF ENGINEERING SERVICES
STRUCTURE DESIGN
DESIGN BRANCH 6

BRIDGE NO. 32-0018
POST MILE 19.6

TUOLUMNE RIVER BRIDGE (REHAB)
GIRDER STRENGTHENING DETAILS

STRUCTURES DESIGN DETAIL SHEET (ENGLISH) (REV. 09-01-10)

ORIGINAL SCALE IN INCHES FOR REDUCED PLANS 0 1 2 3

UNIT: 3591
PROJECT NUMBER & PHASE: 1012000053-1
CONTRACT NO.: 10-0L9704

DISREGARD PRINTS BEARING EARLIER REVISION DATES

REVISION DATES 6-14-14 1-16-15 1-28-15

SHEET 23 OF 50

FILE => 32-0018-I-strengthening-det01.dgn

USERNAME => s113541 DATE PLOTTED => 12-NOV-2015 TIME PLOTTED => 11:09

DIST	COUNTY	ROUTE	POST MILES TOTAL PROJECT	SHEET No.	TOTAL SHEETS
10	Tuo	120	R19.4/R20.0	93	119

REGISTERED CIVIL ENGINEER 5/28/15 DATE

6-22-15
PLANS APPROVAL DATE

REGISTERED PROFESSIONAL ENGINEER DON NGUYEN-TAN No. C 57510 Exp. 12-31-15 CIVIL STATE OF CALIFORNIA

The State of California or its officers or agents shall not be responsible for the accuracy or completeness of scanned copies of this plan sheet.

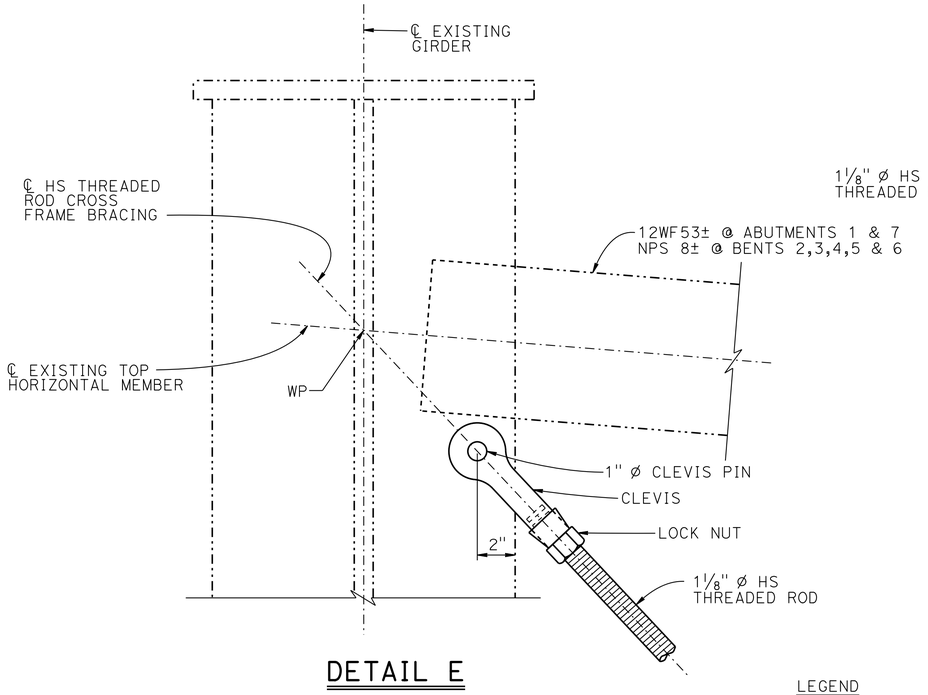

DETAIL E

NO SCALE

NOTE:
Left girder shown, right girder similar.

LEGEND

WP denotes Working Point

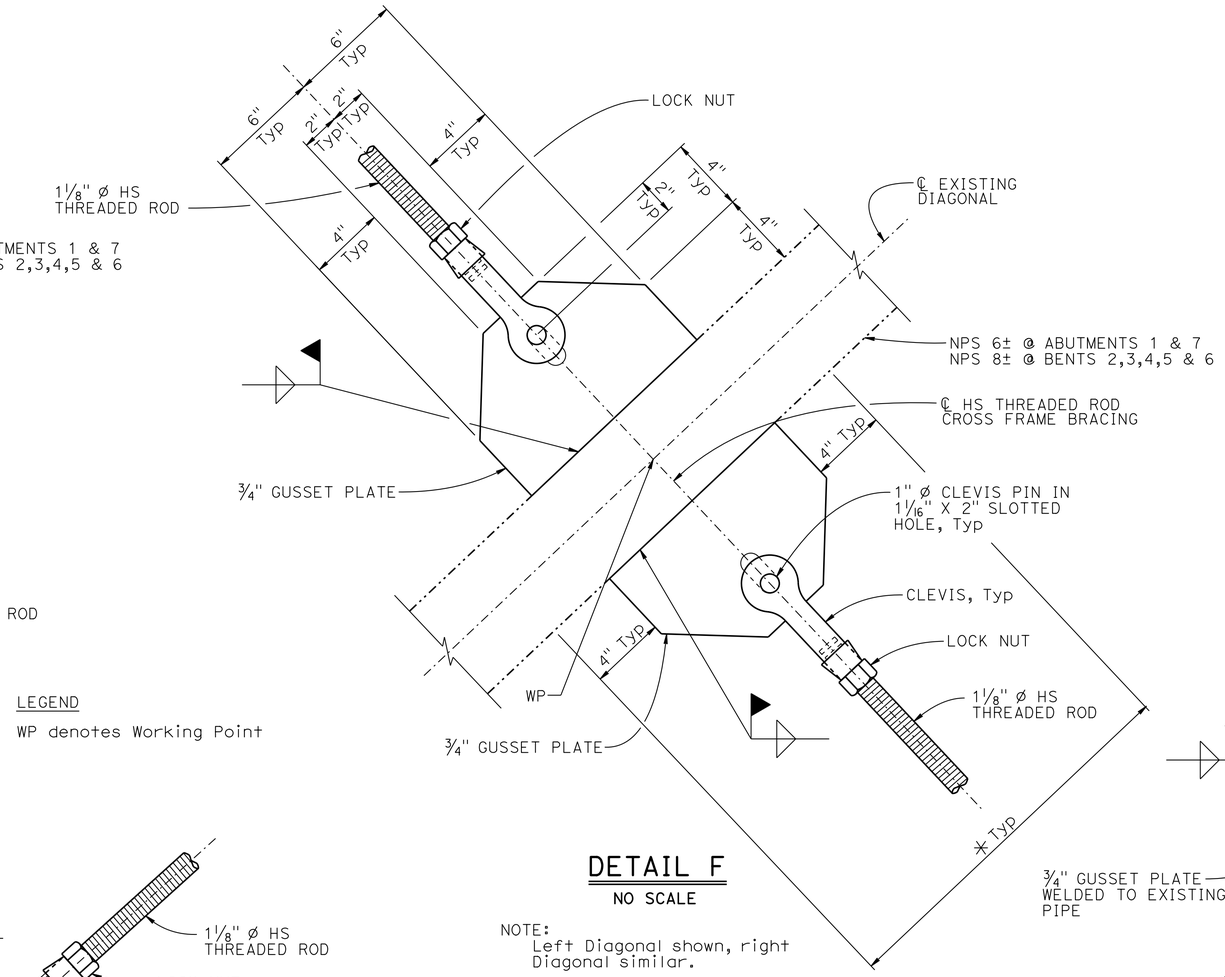

DETAIL F

NO SCALE

NOTE:
Left Diagonal shown, right Diagonal similar.

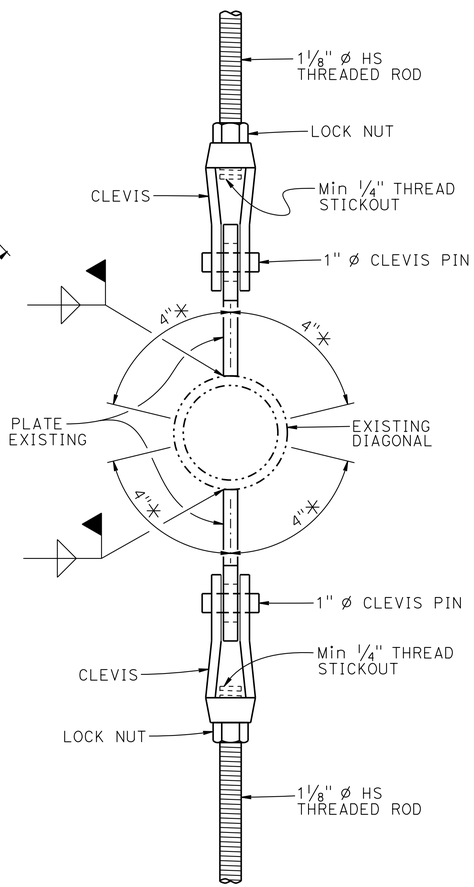

SECTION G-G

NO SCALE

NOTES:
1. Provide a minimum of 12" thread at each end of High Strength Threaded Rod.
2. Provide left hand threads on one end and right hand threads on the other end of High Strength Threaded Rods.
3. Hand tighten High Strength Threaded Rods, then wrench tighten lock nuts.
4. Abutment 1 shown, Bents 2,3,4,5,6 and Abutment 7 similar.

✳ - Denotes Limits of Payment for Spot Blast Clean and Paint Undercoat.

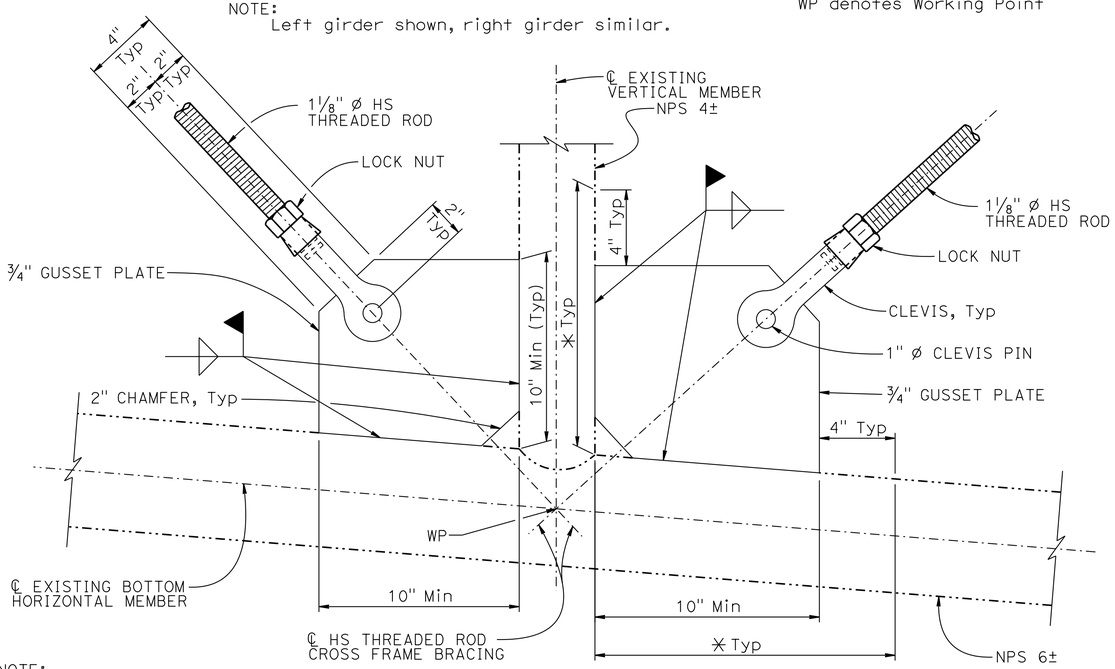

DETAIL G

NO SCALE

NOTE:
VERIFY ALL CONTROLLING FIELD DIMENSIONS BEFORE ORDERING OR FABRICATING ANY MATERIAL.

DESIGN	BY R. MELKO	CHECKED D. NGUYEN-TAN	
DETAILS	BY D. PATO	CHECKED D. NGUYEN-TAN	
QUANTITIES	BY S. MORIMOTO	CHECKED R. MELKO	

STATE OF CALIFORNIA
DEPARTMENT OF TRANSPORTATION

DIVISION OF ENGINEERING SERVICES
STRUCTURE DESIGN
DESIGN BRANCH 6

BRIDGE NO. 32-0018
POST MILE 19.6

TUOLUMNE RIVER BRIDGE (REHAB)
CROSSFRAME BRACING DETAILS

STRUCTURES DESIGN DETAIL SHEET (ENGLISH) (REV. 09-01-10)

ORIGINAL SCALE IN INCHES FOR REDUCED PLANS 0 1 2 3

UNIT: 3591
PROJECT NUMBER & PHASE: 1012000053-1
CONTRACT NO.: 10-0L9704

DISREGARD PRINTS BEARING EARLIER REVISION DATES

REVISION DATES 4-30-14 1-16-15 6-22-15 6-26-15

SHEET 24 OF 50

FILE => 32-0018-j-cross-frame-det.dgn

USERNAME => s113541 DATE PLOTTED => 12-NOV-2015 TIME PLOTTED => 11:09

DIST	COUNTY	ROUTE	POST MILES TOTAL PROJECT	SHEET No.	TOTAL SHEETS
10	Tuo	120	R19.4/R20.0	94	119

REGISTERED CIVIL ENGINEER 5/28/15 DATE

6-22-15
PLANS APPROVAL DATE

REGISTERED PROFESSIONAL ENGINEER DON NGUYEN-TAN No. C 57510 Exp. 12-31-15 CIVIL STATE OF CALIFORNIA

The State of California or its officers or agents shall not be responsible for the accuracy or completeness of scanned copies of this plan sheet.

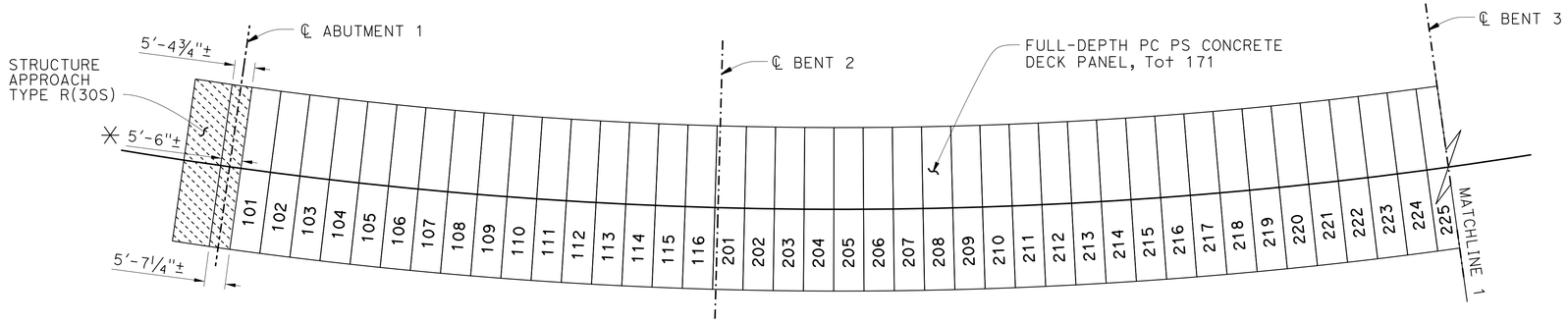

PART PLAN (SPANS 1 & 2)

1" = 20'

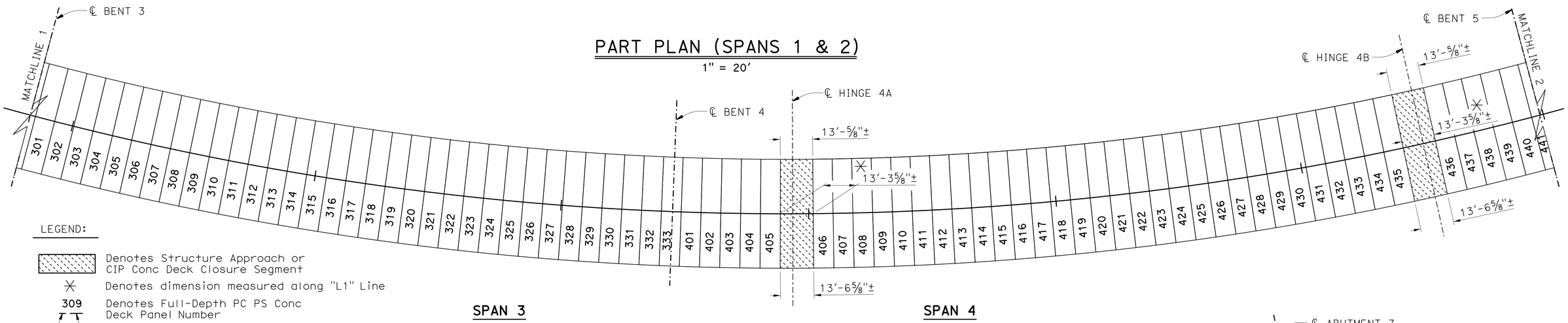

LEGEND:

- Denotes Structure Approach or CIP Conc Deck Closure Segment
- ✳ Denotes dimension measured along "L1" Line
- 309 Denotes Full-Depth PC PS Conc Deck Panel Number (Span Number / Panel Number)

PART PLAN (SPANS 3 & 4)

1" = 20'

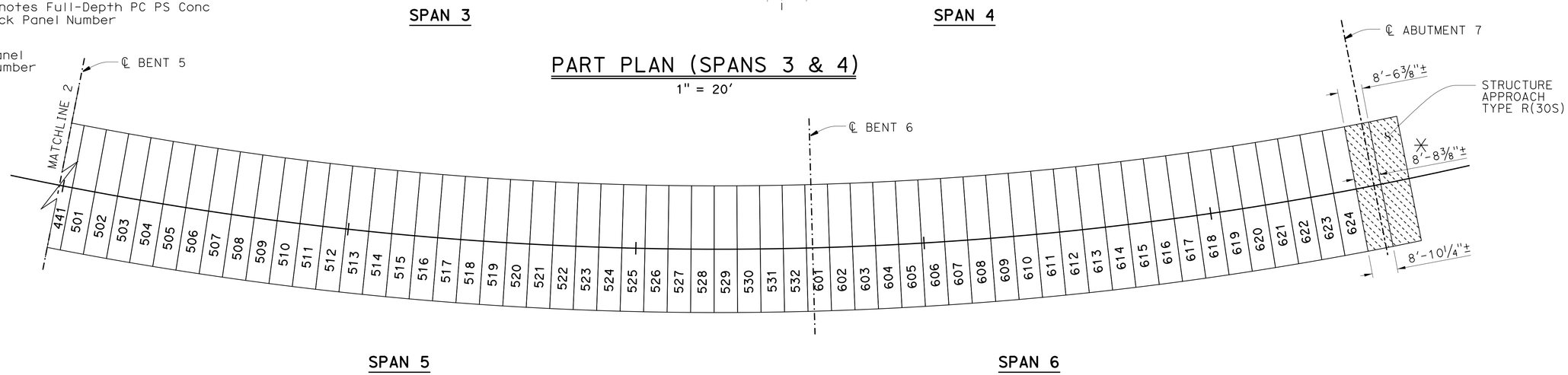

PART PLAN (SPANS 5 & 6)

1" = 20'

NOTE:
VERIFY ALL CONTROLLING FIELD DIMENSIONS BEFORE ORDERING OR FABRICATING ANY MATERIAL.

	BY	CHECKED
DESIGN	R. MELKO/S. PAHLAVAN	D. NGUYEN-TAN
DETAILS	G. SOUZA	D. NGUYEN-TAN
QUANTITIES	S. MORIMOTO	R. MELKO

STATE OF CALIFORNIA
DEPARTMENT OF TRANSPORTATION

DIVISION OF ENGINEERING SERVICES
STRUCTURE DESIGN
DESIGN BRANCH 6

BRIDGE NO. 32-0018
POST MILE 19.6

TUOLUMNE RIVER BRIDGE (REHAB)
DECK PANEL DISTRIBUTION

ORIGINAL SCALE IN INCHES FOR REDUCED PLANS 0 1 2 3

UNIT: 3591
PROJECT NUMBER & PHASE: 1012000053-1
CONTRACT NO.: 10-0L9704

DISREGARD PRINTS BEARING EARLIER REVISION DATES

REVISION DATES: 04-14-15 1-13-15 2-13-15

SHEET 25 OF 50

STRUCTURES DESIGN DETAIL SHEET (ENGLISH) (REV. 10/25/05)

FILE => 32-0018-k-panel-dist.dgn

USERNAME => s113541 DATE PLOTTED => 12-NOV-2015 TIME PLOTTED => 11:09

DIST	COUNTY	ROUTE	POST MILES TOTAL PROJECT	SHEET No.	TOTAL SHEETS
10	Tuo	120	R19.4/R20.0	95	119

REGISTERED CIVIL ENGINEER 5/28/15 DATE

6-22-15
PLANS APPROVAL DATE

REGISTERED PROFESSIONAL ENGINEER DON NGUYEN-TAN No. C 57510 Exp. 12-31-15 CIVIL STATE OF CALIFORNIA

The State of California or its officers or agents shall not be responsible for the accuracy or completeness of scanned copies of this plan sheet.

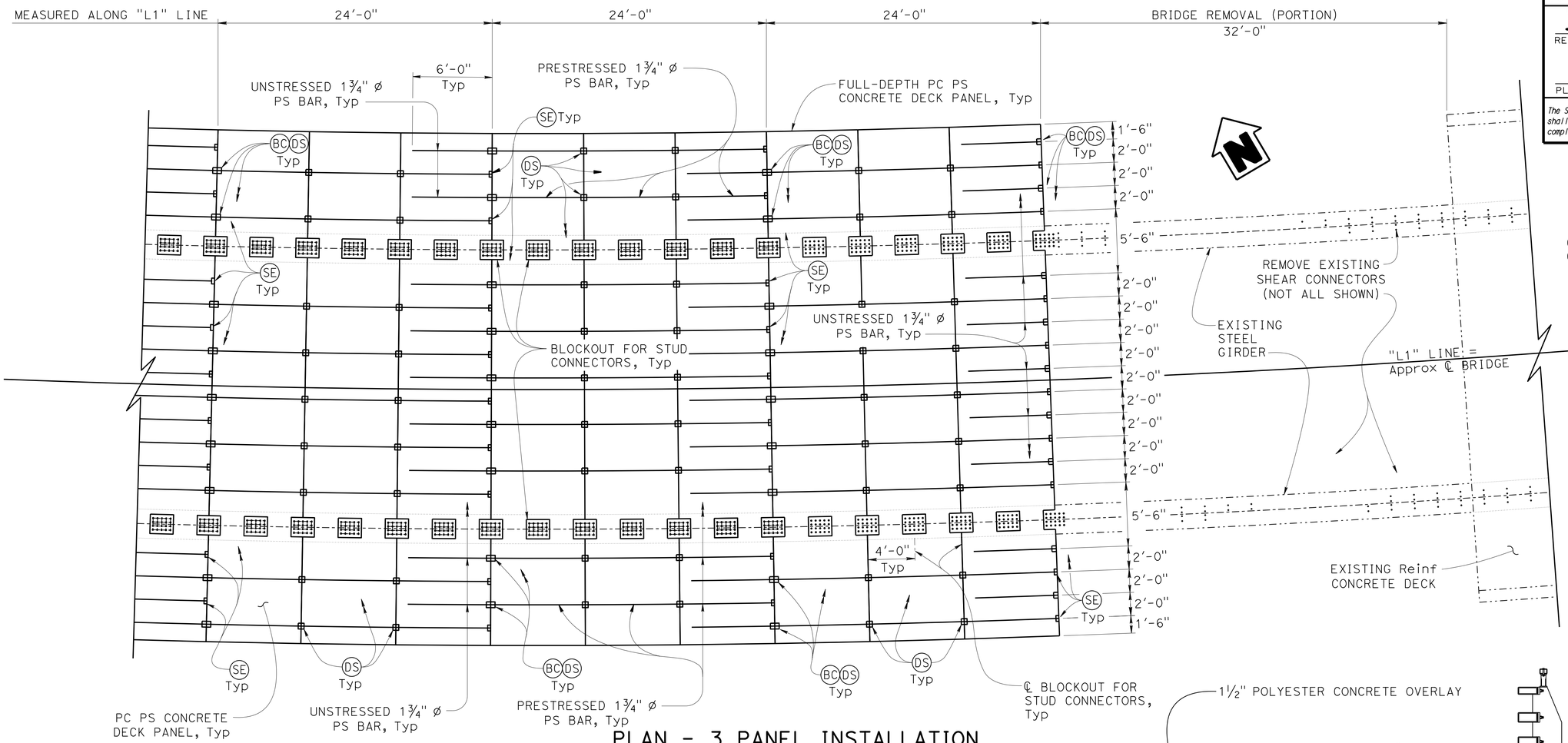

PLAN - 3 PANEL INSTALLATION

1" = 5'

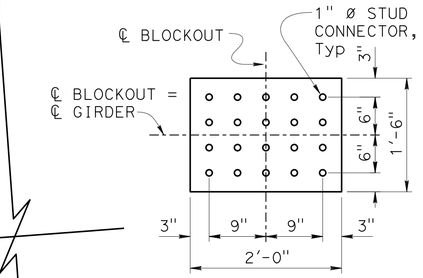

BLOCKOUT FOR STUD CONNECTORS

¾" = 1'-0"

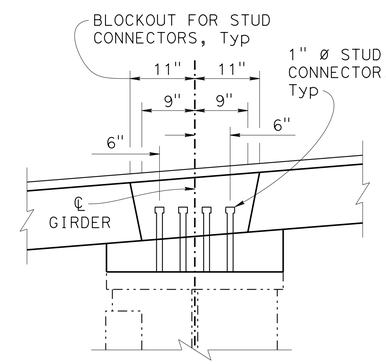

BLOCKOUT DETAILS

NO SCALE

NOTES:

1. For clarity,
   a) Bar reinforcement not shown.
   b) Bridge rail not shown in Plan view.
2. Align PS bars and ducts parallel to the chord of "L1" line defined by the ends.
3. Unstressed PS bars must be cast in deck panels.
4. See "GENERAL FULL-DEPTH PC PS CONCRETE DECK PANEL CONSTRUCTION SEQUENCE" on "DECK PANEL DETAILS NO. 2" sheet.

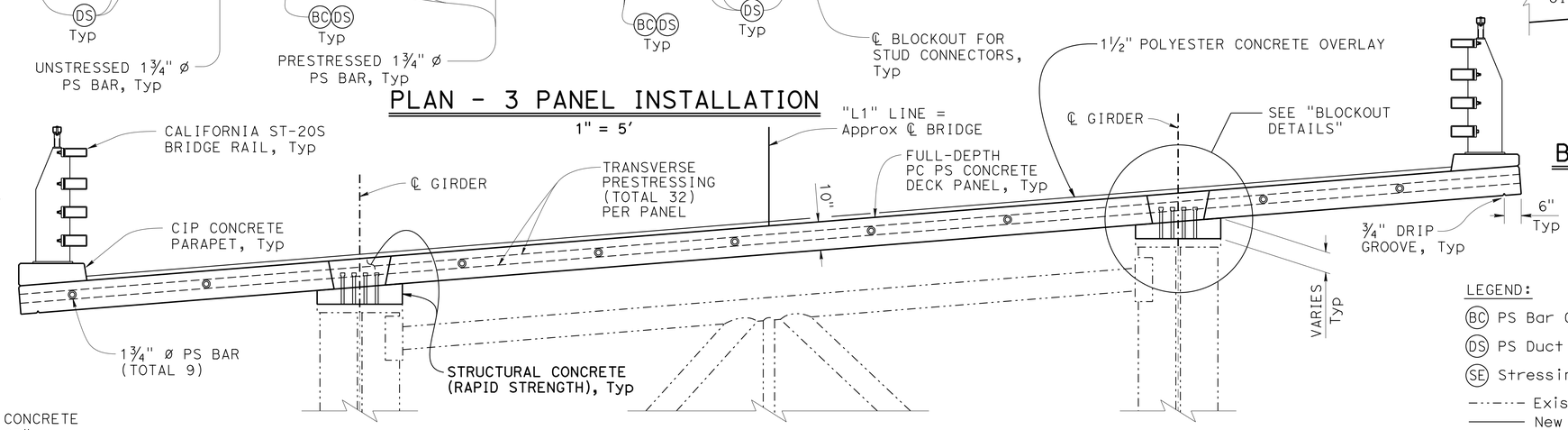

PART TYPICAL SECTION

½" = 1'-0"

LEGEND:

- (BC) PS Bar Coupler
- (DS) PS Duct Splice
- (SE) Stressing End
- -·-·- Existing structure
- ——— New construction

NOTE:
VERIFY ALL CONTROLLING FIELD DIMENSIONS BEFORE ORDERING OR FABRICATING ANY MATERIAL.

	BY	CHECKED
DESIGN	S. PAHLAVAN	D. NGUYEN-TAN
DETAILS	G. SOUZA	D. NGUYEN-TAN
QUANTITIES	S. MORIMOTO	R. MELKO

STATE OF CALIFORNIA
DEPARTMENT OF TRANSPORTATION

DIVISION OF ENGINEERING SERVICES
STRUCTURE DESIGN
DESIGN BRANCH 6

BRIDGE NO. 32-0018
POST MILE 19.6

TUOLUMNE RIVER BRIDGE (REHAB)
DECK PANEL DETAILS NO. 1

STRUCTURES DESIGN DETAIL SHEET (ENGLISH) (REV. 09-01-10)

ORIGINAL SCALE IN INCHES FOR REDUCED PLANS 0 1 2 3

UNIT: 3591
PROJECT NUMBER & PHASE: 1012000053-1
CONTRACT NO.: 10-0L9704

DISREGARD PRINTS BEARING EARLIER REVISION DATES

REVISION DATES 03-04-13 6-17-15 11-16-15

SHEET 26 OF 50

FILE => 32-0018-k-panel-dt01.dgn

USERNAME => s113641 DATE PLOTTED => 12-NOV-2015 TIME PLOTTED => 11:09

DIST	COUNTY	ROUTE	POST MILES TOTAL PROJECT	SHEET No.	TOTAL SHEETS
10	Tuo	120	R19.4/R20.0	96	119

REGISTERED CIVIL ENGINEER 5/28/15 DATE

6-22-15
PLANS APPROVAL DATE

REGISTERED PROFESSIONAL ENGINEER DON NGUYEN-TAN No. C 57510 Exp. 12-31-15 CIVIL STATE OF CALIFORNIA

The State of California or its officers or agents shall not be responsible for the accuracy or completeness of scanned copies of this plan sheet.

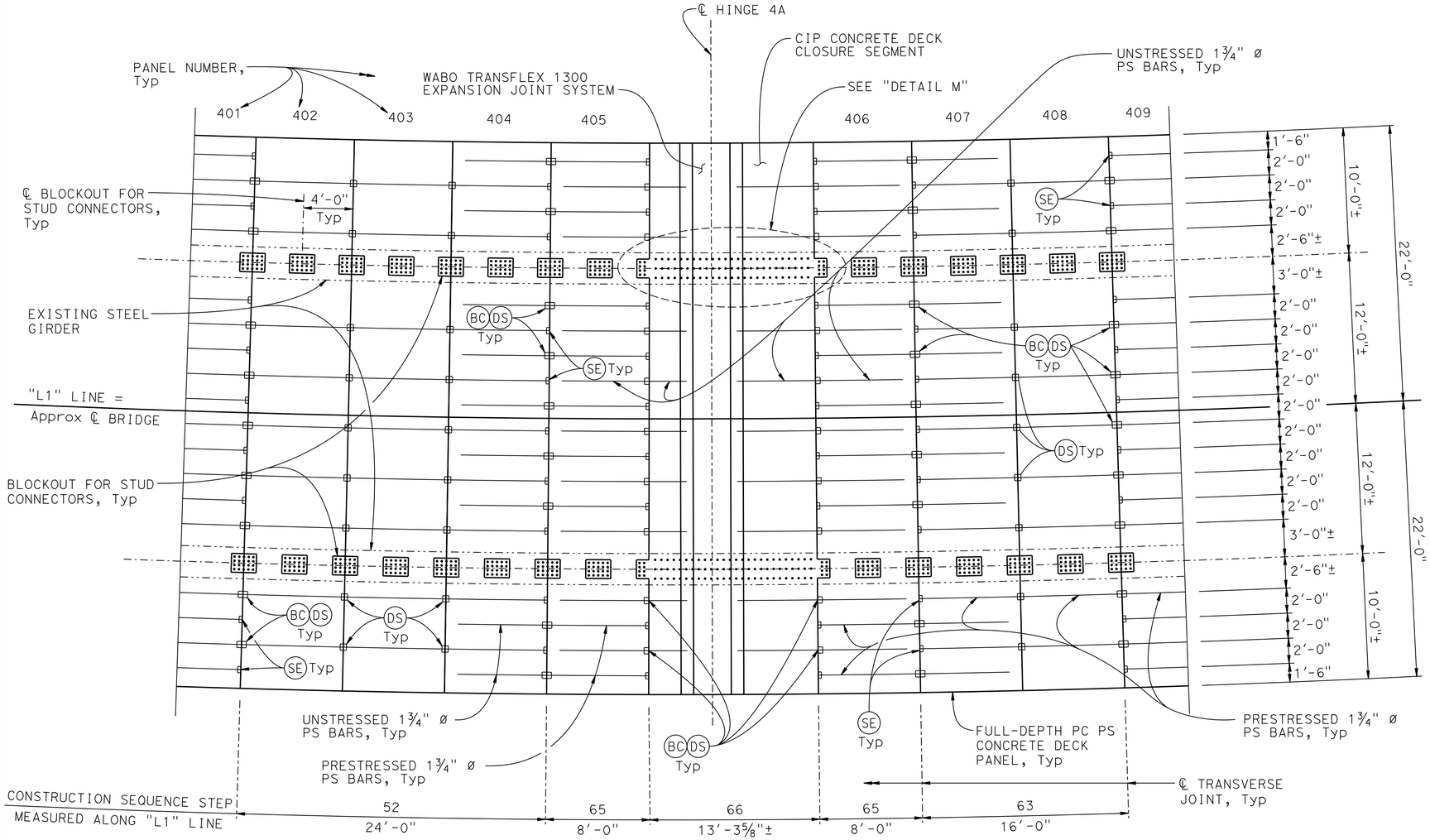

PLAN - 1 & 2 PANEL INSTALLATION

1" = 5'-0"

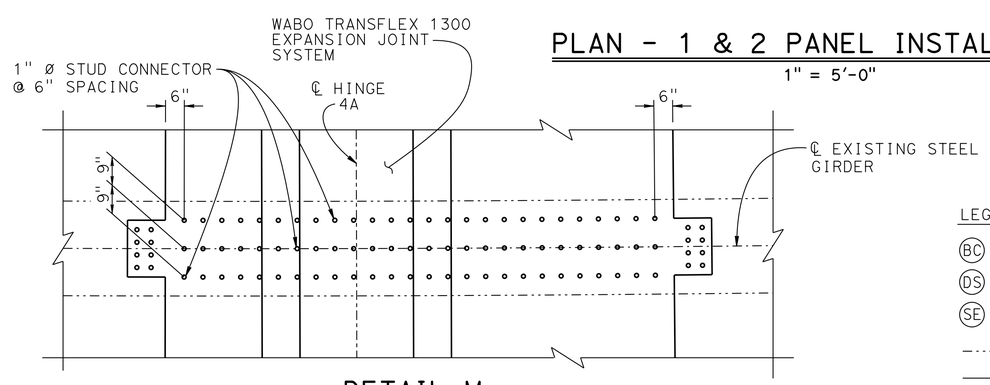

DETAIL M

½" = 1'-0"

NOTE:
VERIFY ALL CONTROLLING FIELD DIMENSIONS BEFORE ORDERING OR FABRICATING ANY MATERIAL.

LEGEND:

- (BC) PS Bar Coupler
- (DS) PS Duct Splice
- (SE) Stressing End
- -·-·-·- Existing structure
- ——— New construction

NOTES:

1. For clarity,
   a) Bar reinforcement not shown.
   b) Bridge rail not shown in Plan view.
2. Align PS bars and ducts parallel to the chord of "L1" line defined by the ends of the respective PS bars
3. Unstressed PS bars must be cast in deck panels.

GENERAL FULL-DEPTH PC PS CONCRETE DECK PANEL CONSTRUCTION SEQUENCE

REMOVAL OF EXISTING DECK

1) Sawcut and remove a portion of the existing reinforced concrete deck and barrier railing. For approximate removal limits, see "CONSTRUCTION SEQUENCE DETAILS" sheets.
2) Remove existing stud connectors.
3) Spot blast, clean, and prepare top flange surface for new stud connectors.
4) Install stud connectors.
5) Install temporary concrete deck panels, and adjust to grade.
6) Provide temporary grade transition; see "CONSTRUCTION DETAILS NO. 5" sheet.
7) Set temporary railings on structure.
8) Open bridge to vehicular traffic.

INSTALLATION OF NEW DECK PANELS

1) Remove temporary concrete deck panels.
2) Place and position full-depth precast prestressed concrete deck panels upon deck panel support and haunch forms.
3) Install and couple PS bars and PS duct splices.
4) Place polymer concrete in transverse joints and blockouts for PS bar couplers and PS duct splices.
5) After polymer concrete in transverse joints reaches 3000 psi, post-tension the PS bars.
6) Grout the longitudinal post-tensioning ducts.
7) Place Structural Concrete (Rapid Strength) in stud connector blockouts and haunches.
   a. This operation must be completed a minimum of 4 hours before opening bridge to vehicular traffic, and
   b. The compressive strength of the Structural Concrete (Rapid Strength) must reach 3000 psi prior to opening bridge to vehicular traffic. Before installing deck panels, determine the time required for the Structural Concrete (Rapid Strength) to reach 3000 psi.
8) Reinstall temporary concrete deck panel, and adjust to grade.
9) Provide temporary grade transition; see "CONSTRUCTION DETAILS NO. 5" sheet.
10) Set temporary railing on structure.
11) Open bridge to vehicular traffic.

	BY	CHECKED
DESIGN	S. PAHLAVAN	D. NGUYEN-TAN
DETAILS	D. PATO	D. NGUYEN-TAN
QUANTITIES	S. MORIMOTO	R. MELKO

STATE OF CALIFORNIA
DEPARTMENT OF TRANSPORTATION

DIVISION OF ENGINEERING SERVICES
STRUCTURE DESIGN
DESIGN BRANCH 6

BRIDGE NO. 32-0018
POST MILE 19.6

TUOLUMNE RIVER BRIDGE (REHAB)
DECK PANEL DETAILS NO. 2

STRUCTURES DESIGN DETAIL SHEET (ENGLISH) (REV. 09-01-10)

ORIGINAL SCALE IN INCHES FOR REDUCED PLANS 0 1 2 3

UNIT: 3591
PROJECT NUMBER & PHASE: 1012000053-1
CONTRACT NO.: 10-0L9704

DISREGARD PRINTS BEARING EARLIER REVISION DATES

REVISION DATES 6-3-14 6-13-14 1-16-15 6-17-15

SHEET 27 OF 50

FILE => 32-0018-k-panel-dt02.dgn

USERNAME => s113541 DATE PLOTTED => 12-NOV-2015 TIME PLOTTED => 11:09

DIST	COUNTY	ROUTE	POST MILES TOTAL PROJECT	SHEET No.	TOTAL SHEETS
10	Tuo	120	R19.4/R20.0	97	119

REGISTERED CIVIL ENGINEER 5/28/15 DATE

6-22-15
PLANS APPROVAL DATE

REGISTERED PROFESSIONAL ENGINEER DON NGUYEN-TAN No. C 57510 Exp. 12-31-15 CIVIL STATE OF CALIFORNIA

The State of California or its officers or agents shall not be responsible for the accuracy or completeness of scanned copies of this plan sheet.

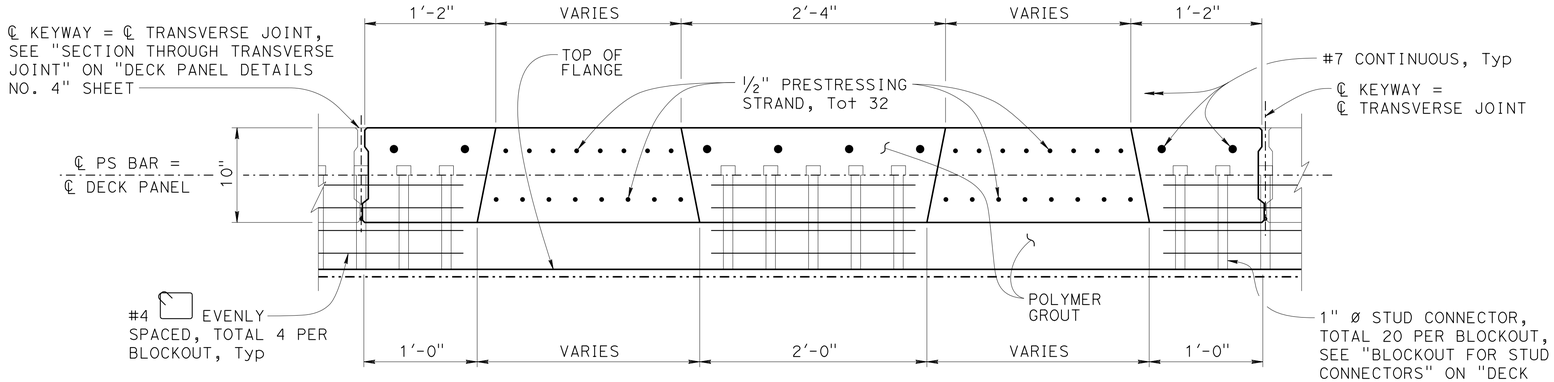

SECTION A-A

1½" = 1'-0"

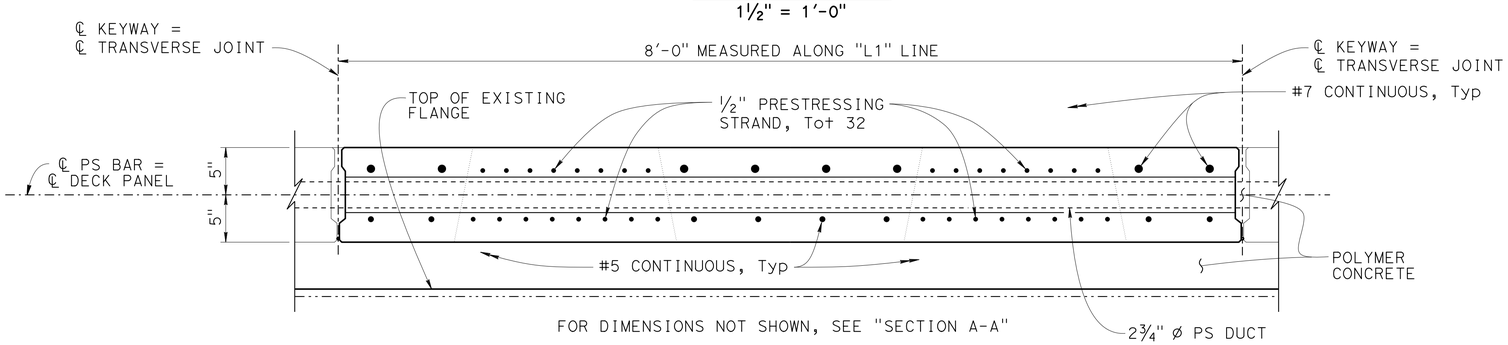

SECTION B-B

1½" = 1'-0"

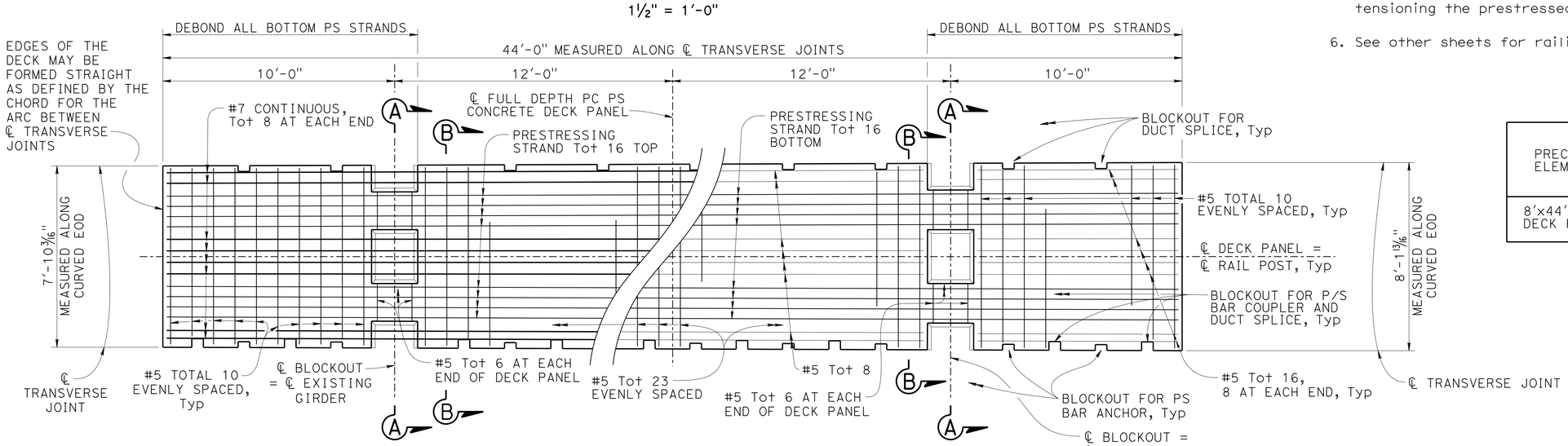

TOP REINFORCING

PLAN - DECK PANEL

⅜" = 1'-0"

BOTTOM REINFORCING

NOTE:
VERIFY ALL CONTROLLING FIELD DIMENSIONS BEFORE ORDERING OR FABRICATING ANY MATERIAL.

NOTE:

1. All bar reinforcing steel in deck panels must be epoxy coated.

GENERAL PRE-TENSIONING NOTES

1. The Jacking Force (P) is the total force on strands, for each deck panel, required at the point of control along the span. The jacking force does not include any fabrication specific losses.
2. The maximum tensile stress in the prestressing steel upon release must not exceed 75% of the specified minimum ultimate tensile strength of the prestressing steel.
3. The maximum temporary tensile stress (jacking stress) in the prestressing steel must not exceed 80% of the specified minimum ultmate tensile strength of the prestressing steel.
4. Concrete Strength:
   f'ci is the minimum concrete strength at time of initial stressing.
   f'c is the minimum concrete strength at 28 days.
5. Fill Keyways with Polymer grout. Polymer grout must reach a minimum concrete strength of 3000 psi prior to post-tensioning the prestressed/precast full depth deck panels.
6. See other sheets for railing reinforcement.

PRECAST ELEMENT	JACKING FORCE (P) IN kips	CONCRETE STRENGTH (ksi)	
		f'ci	f'c
8'x44' DECK PANEL	991	6.0	8.0

DESIGN	BY S. PAHLAVAN	CHECKED D. NGUYEN-TAN	
DETAILS	BY G. SOUZA	CHECKED D. NGUYEN-TAN	
QUANTITIES	BY S. MORIMOTO	CHECKED R. MELKO	

ORIGINAL SCALE IN INCHES FOR REDUCED PLANS 0 1 2 3

STATE OF CALIFORNIA DEPARTMENT OF TRANSPORTATION

DIVISION OF ENGINEERING SERVICES STRUCTURE DESIGN DESIGN BRANCH 6

BRIDGE NO. 32-0018 POST MILE 19.6

TUOLUMNE RIVER BRIDGE (REHAB)
DECK PANEL DETAILS NO. 3

UNIT: 3591
PROJECT NUMBER & PHASE: 1012000053-1 CONTRACT NO.: 10-0L9704

DISREGARD PRINTS BEARING EARLIER REVISION DATES

REVISION DATES 08-23-13 06-27-14 02-04-15 06-22-15 SHEET 28 OF 50

USERNAME => s113541 DATE PLOTTED => 12-NOV-2015 TIME PLOTTED => 11:09

STRUCTURES DESIGN DETAIL SHEET (ENGLISH) (REV. 10/25/05)

FILE => 32-0018-k-panel-dt03.dgn

DIST	COUNTY	ROUTE	POST MILES TOTAL PROJECT	SHEET No.	TOTAL SHEETS
10	Tuo	120	R19.4/R20.0	98	119

REGISTERED CIVIL ENGINEER 5/28/15 DATE

6-22-15
PLANS APPROVAL DATE

REGISTERED PROFESSIONAL ENGINEER DON NGUYEN-TAN No. C 57510 Exp. 12-31-15 CIVIL STATE OF CALIFORNIA

The State of California or its officers or agents shall not be responsible for the accuracy or completeness of scanned copies of this plan sheet.

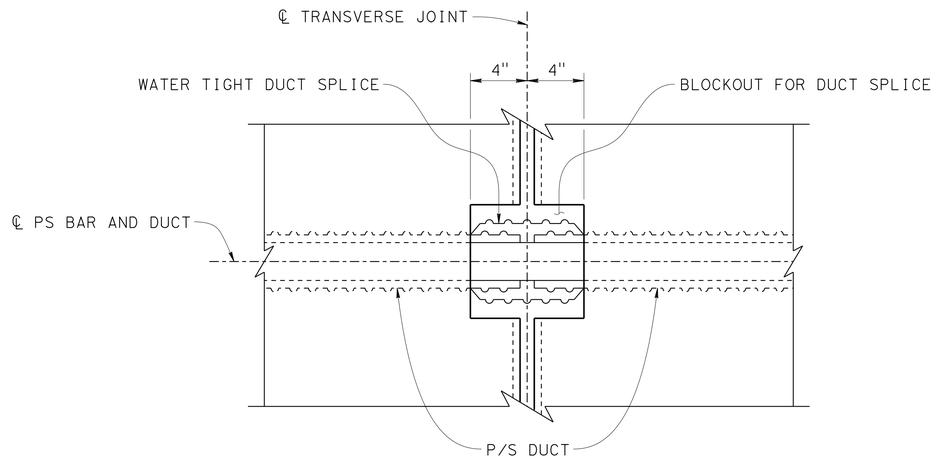

(DS) PLAN-BLOCKOUT FOR DUCT SPLICE

NO SCALE

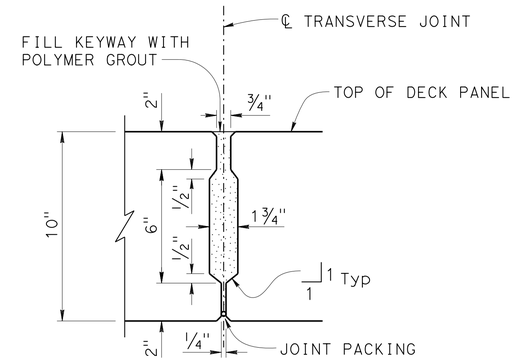

SECTION THROUGH TRANSVERSE JOINT

3" = 1'

GENERAL POST-TENSIONING NOTES

150 Ksi PS bar

$P_{lockoff}$ = 180 Kip per PS bar

Stressing sequence:

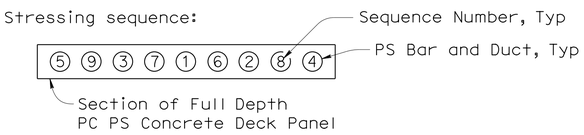

NOT TO SCALE

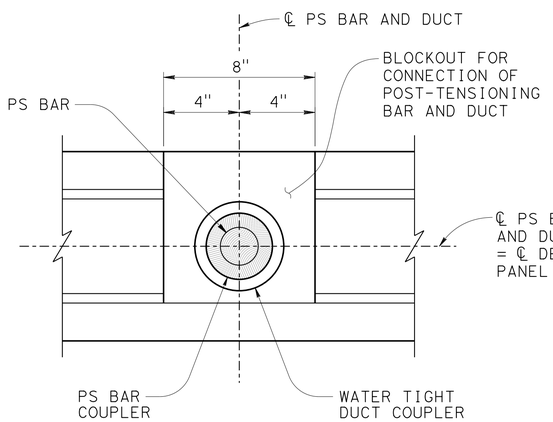

SECTION A-A

3" = 1'

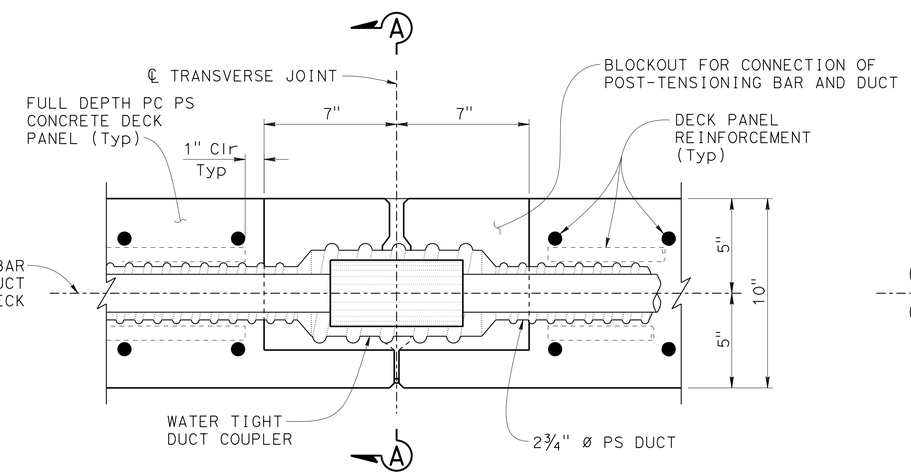

(BC) TYPICAL SECTION-TRANSVERSE DECK JOINT AT POST-TENSIONING SPLICE

3" = 1'

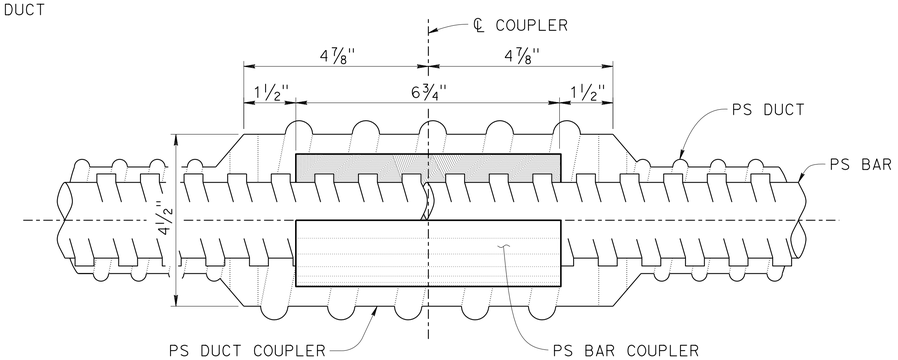

PS BAR SPLICE DETAIL

NOTE:

Place duct coupler centered on P/S bar coupler in its post-tensioned position.

NOTE:
VERIFY ALL CONTROLLING FIELD DIMENSIONS BEFORE ORDERING OR FABRICATING ANY MATERIAL.

	BY	CHECKED
DESIGN	S. PAHLAVAN	D. NGUYEN-TAN
DETAILS	G. SOUZA	D. NGUYEN-TAN
QUANTITIES	S. MORIMOTO	R. MELKO

STATE OF CALIFORNIA
DEPARTMENT OF TRANSPORTATION

DIVISION OF ENGINEERING SERVICES
STRUCTURE DESIGN
DESIGN BRANCH 6

BRIDGE NO. 32-0018
POST MILE 19.6

TUOLUMNE RIVER BRIDGE (REHAB)
DECK PANEL DETAILS NO. 4

STRUCTURES DESIGN DETAIL SHEET (ENGLISH) (REV. 09-01-10)

ORIGINAL SCALE IN INCHES FOR REDUCED PLANS 0 1 2 3

UNIT: 3591
PROJECT NUMBER & PHASE: 1012000053-1
CONTRACT NO.: 10-0L9704

DISREGARD PRINTS BEARING EARLIER REVISION DATES

REVISION DATES 03-04-13 02-04-15 06-12-14 06-24-14

SHEET 29 OF 50

FILE => 32-0018-k-panel-dt04.dgn

USERNAME => s113541 DATE PLOTTED => 12-NOV-2015 TIME PLOTTED => 11:09

DIST	COUNTY	ROUTE	POST MILES TOTAL PROJECT	SHEET No.	TOTAL SHEETS
10	Tuo	120	R19.4/R20.0	99	119

REGISTERED CIVIL ENGINEER 5/28/15 DATE

6-22-15
PLANS APPROVAL DATE

REGISTERED PROFESSIONAL ENGINEER
DON NGUYEN-TAN
No. C 57510
Exp. 12-31-15
CIVIL
STATE OF CALIFORNIA

The State of California or its officers or agents shall not be responsible for the accuracy or completeness of scanned copies of this plan sheet.

APPROXIMATE HAUNCH THICKNESS AND WIDTH

SPAN	POINT ALONG SPAN	HAUNCH WIDTH (IN)		HAUNCH THICKNESS (IN)	
		LEFT GIRDER	RIGHT GIRDER	LEFT GIRDER	RIGHT GIRDER
SPAN 1	0	18	18	4.19	6.06
	0.1	18	18	3.82	5.45
	0.2	18	18	3.45	4.84
	0.3	18	18	3.35	4.40
	0.4	18	18	3.52	4.14
	0.5	18	18	3.71	3.90
	0.6	18	18	3.42	3.56
	0.7	18	18	3.19	3.26
	0.8	18	18	3.19	3.16
	0.9	18	18	3.41	3.25
SPAN 2	0	24	24	4.19	3.40
	0.1	24	24	4.80	4.21
	0.2	18	18	5.39	5.14
	0.3	18	18	5.94	5.79
	0.4	18	18	6.61	6.16
	0.5	18	18	6.02	6.64
	0.6	18	18	5.54	6.58
	0.7	24	24	5.32	6.63
	0.8	30	30	5.34	6.24
	0.9	30	30	5.47	5.42
SPAN 3	0	30	30	6.60	4.70
	0.1	30	30	6.98	5.44
	0.2	30	30	7.07	6.39
	0.3	30	30	7.36	7.13
	0.4	30	30	7.24	7.68
	0.5	30	30	7.33	8.43
	0.6	30	30	7.64	8.56
	0.7	30	30	8.18	8.89
	0.8	30	30	8.93	8.98
	0.9	30	30	8.52	8.81

SPAN	POINT ALONG SPAN	HAUNCH WIDTH (IN)		HAUNCH THICKNESS (IN)	
		LEFT GIRDER	RIGHT GIRDER	LEFT GIRDER	RIGHT GIRDER
SPAN 4	0	30	30	8.93	8.84
	0.1	30	30	8.52	6.88
	0.2	30	30	8.49	5.28
	0.3	30	30	8.47	4.22
	0.4	30	30	8.32	3.56
	0.5	30	30	8.17	2.90
	0.6	30	30	10.26	5.41
	0.7	30	30	12.36	7.92
	0.8	30	30	14.26	10.51
	0.9	30	30	13.62	11.69
SPAN 5	0	30	30	8.75	10.19
	0.1	30	30	7.81	8.71
	0.2	30	30	7.15	7.51
	0.3	30	30	6.36	6.52
	0.4	30	30	5.43	5.74
	0.5	30	30	4.80	5.27
	0.6	30	30	4.49	4.56
	0.7	30	30	4.49	4.15
	0.8	30	30	4.16	3.93
	0.9	30	30	3.51	3.87
SPAN 6	0	30	30	3.16	4.13
	0.1	30	30	3.85	4.18
	0.2	24	24	4.71	4.41
	0.3	24	24	5.32	4.72
	0.4	24	24	5.70	5.12
	0.5	24	24	6.25	5.70
	0.6	24	24	6.36	5.94
	0.7	24	24	6.64	6.36
	0.8	24	24	6.76	6.98
	0.9	24	24	6.60	7.67
	1.0	24	24	6.44	8.35

NOTE:

Haunch thickness and width are provided for estimating purposes only. Determine haunch thickness before fabricating or ordering any material by drilling through deck and measuring existing deck depth or by equivalent means.

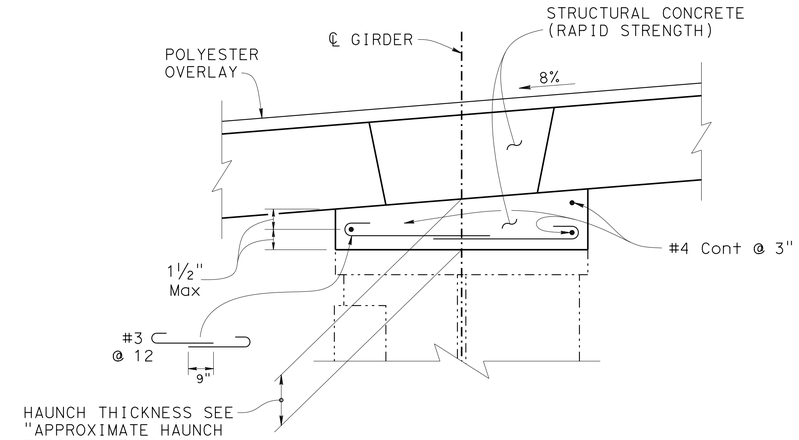

HAUNCH DETAILS

NO SCALE

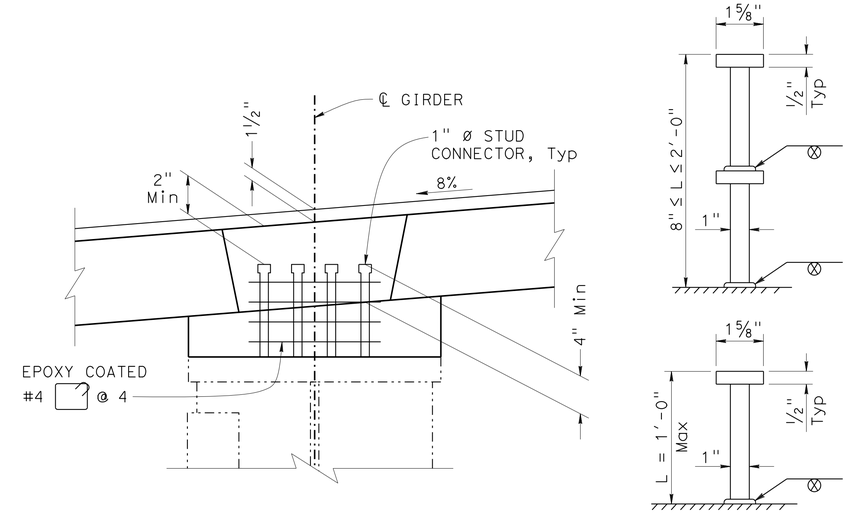

STUD CONNECTOR DETAILS

NO SCALE

NOTE:
VERIFY ALL CONTROLLING FIELD DIMENSIONS BEFORE ORDERING OR FABRICATING ANY MATERIAL.

	BY	CHECKED
DESIGN	R. MELKO	D. NGUYEN-TAN
DETAILS	P. SILVA	D. NGUYEN-TAN
QUANTITIES	S. MORIMOTO	R. MELKO

ORIGINAL SCALE IN INCHES FOR REDUCED PLANS 0 1 2 3

STATE OF CALIFORNIA
DEPARTMENT OF TRANSPORTATION

DIVISION OF ENGINEERING SERVICES
STRUCTURE DESIGN
DESIGN BRANCH 6

BRIDGE NO. 32-0018
POST MILE 19.6

TUOLUMNE RIVER BRIDGE (REHAB)
DECK PANEL DETAILS NO. 5

UNIT: 3591
PROJECT NUMBER & PHASE: 1012000053-1
CONTRACT NO.: 10-0L9704

DISREGARD PRINTS BEARING EARLIER REVISION DATES

REVISION DATES 08-23-13 06-24-14 10-14-13 06-15-16

SHEET 30 OF 50

USERNAME => s113541 DATE PLOTTED => 12-NOV-2015 TIME PLOTTED => 11:09

DIST	COUNTY	ROUTE	POST MILES TOTAL PROJECT	SHEET No.	TOTAL SHEETS
10	Tuo	120	R19.4/R20.0	100	119

REGISTERED CIVIL ENGINEER 5/28/15 DATE

6-22-15
PLANS APPROVAL DATE

REGISTERED PROFESSIONAL ENGINEER DON NGUYEN-TAN No. C 57510 Exp. 12-31-15 CIVIL STATE OF CALIFORNIA

The State of California or its officers or agents shall not be responsible for the accuracy or completeness of scanned copies of this plan sheet.

DIMENSION "a" (INCHES)			
LOCATION	SUMMER	SPRING & FALL	WINTER
ABUTMENT 1	2½	4	5
HINGE 4A	4½	6½	8½
HINGE 4B	¾	1¼	1½
ABUTMENT 7	2½	4	5

NOTES:

1. All bar reinforcing steel in cast-in-place concrete deck closure segment must be epoxy coated.
2. For clarity, bar reinforcement in CIP Deck Closure Segments, Full-Depth PC PS Concrete Deck Panels, and Approach Slab not shown.
3. Existing metal drainage troughs and pipes not entirely shown; remove entire system at both abutments and at both hinges.

LEGEND:

Indicates Bridge Removal (Portion)

Indicates blockout in CIP Concrete Deck, Deck Closure Segments, Full-Depth PC PS Concrete Deck Panels, or Structure Approaches

Indicates Polyester Deck Overlay

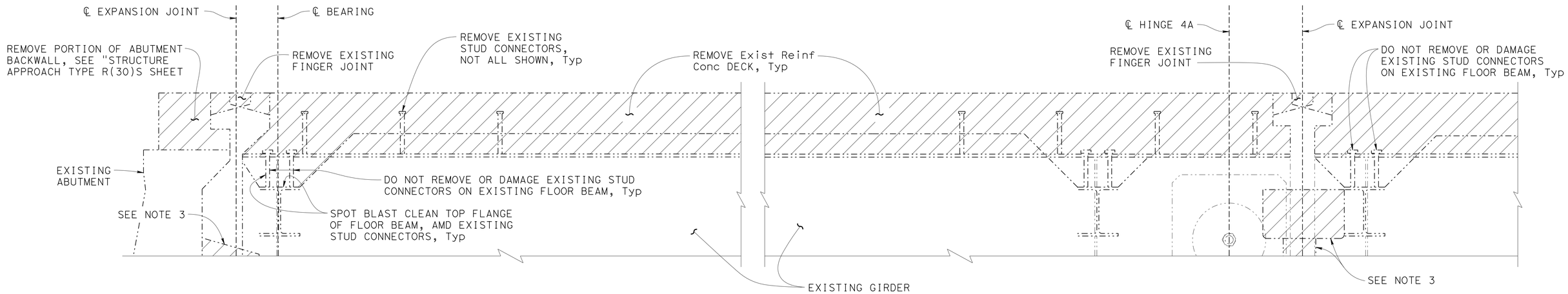

AT ABUTMENT 1 AT HINGE 4A

LONGITUDINAL SECTION (REMOVAL)

1" = 1'

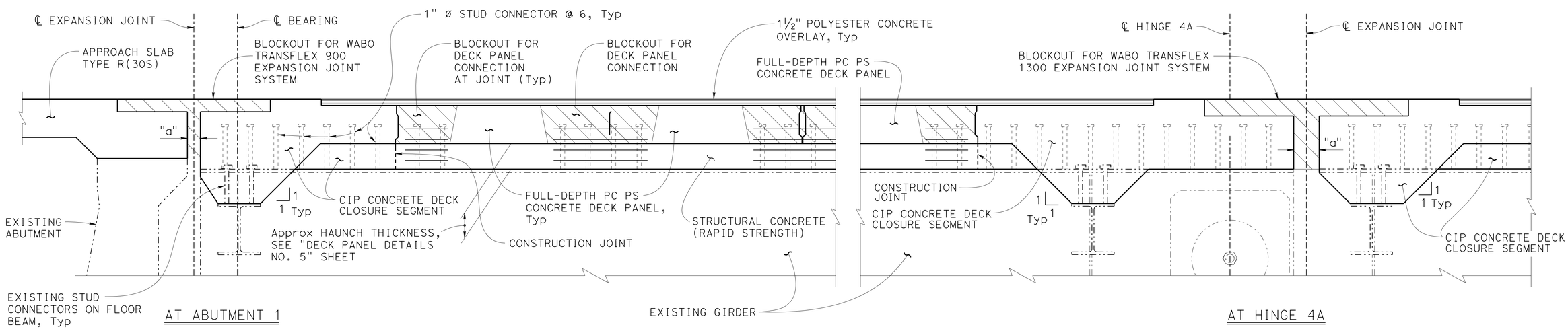

AT ABUTMENT 1 AT HINGE 4A

LONGITUDINAL SECTION (NEW CONSTRUCTION)

1" = 1'

NOTE:
VERIFY ALL CONTROLLING FIELD DIMENSIONS BEFORE ORDERING OR FABRICATING ANY MATERIAL.

	BY	CHECKED
DESIGN	S. PAHLAVAN	D. NGUYEN-TAN
DETAILS	G. SOUZA	D. NGUYEN-TAN
QUANTITIES	S. MORIMOTO	R. MELKO

STATE OF CALIFORNIA
DEPARTMENT OF TRANSPORTATION

DIVISION OF ENGINEERING SERVICES
STRUCTURE DESIGN
DESIGN BRANCH 6

BRIDGE NO. 32-0018
POST MILE 19.6

TUOLUMNE RIVER BRIDGE (REHAB)
CLOSURE SEGMENT DETAILS NO. 1

STRUCTURES DESIGN DETAIL SHEET (ENGLISH) (REV. 09-01-10)

ORIGINAL SCALE IN INCHES FOR REDUCED PLANS 0 1 2 3

UNIT: 3591
PROJECT NUMBER & PHASE: 1012000053-1
CONTRACT NO.: 10-0L9704

DISREGARD PRINTS BEARING EARLIER REVISION DATES

REVISION DATES 03-04-13 1-20-15 06-13-14 06-22-15

SHEET 31 OF 50

FILE => 32-0018-1-closure01.dgn

USERNAME => s113541 DATE PLOTTED => 12-NOV-2015 TIME PLOTTED => 11:09

DIST	COUNTY	ROUTE	POST MILES TOTAL PROJECT	SHEET No.	TOTAL SHEETS
10	Tuo	120	R19.4/R20.0	101	119

REGISTERED CIVIL ENGINEER 5/28/15 DATE

6-22-15
PLANS APPROVAL DATE

REGISTERED PROFESSIONAL ENGINEER DON NGUYEN-TAN No. C 57510 Exp. 12-31-15 CIVIL STATE OF CALIFORNIA

The State of California or its officers or agents shall not be responsible for the accuracy or completeness of scanned copies of this plan sheet.

NOTES:

1. For "a" dimension, see "CLOSURE SEGMENT DETAILS NO.1" sheet.
2. For clarity, bar reinforcement in CIP Deck Closure Segments, Full-Depth PC PS Concrete Deck Panels, and Approach Slab not shown.
3. Existing metal drainage troughs and pipes not entirely shown; remove entire system at both abutments and at both hinges.

LEGEND:

- Indicates Bridge Removal (Portion)
- Indicates blockout in CIP Concrete Deck, Closure Segments, Full-Depth PC PS Concrete Deck Panels, or Structure Approaches
- Indicates Polyester Deck Overlay

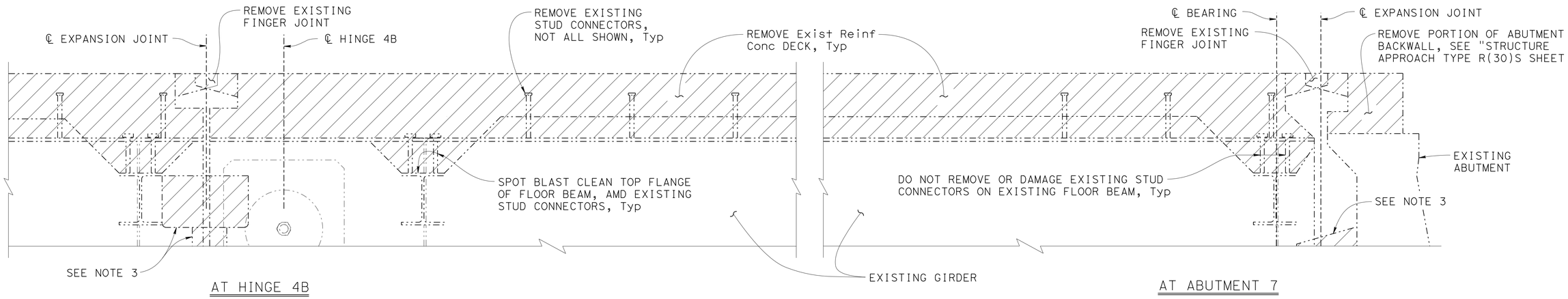

AT HINGE 4B

AT ABUTMENT 7

LONGITUDINAL SECTION (REMOVAL)

1" = 1'

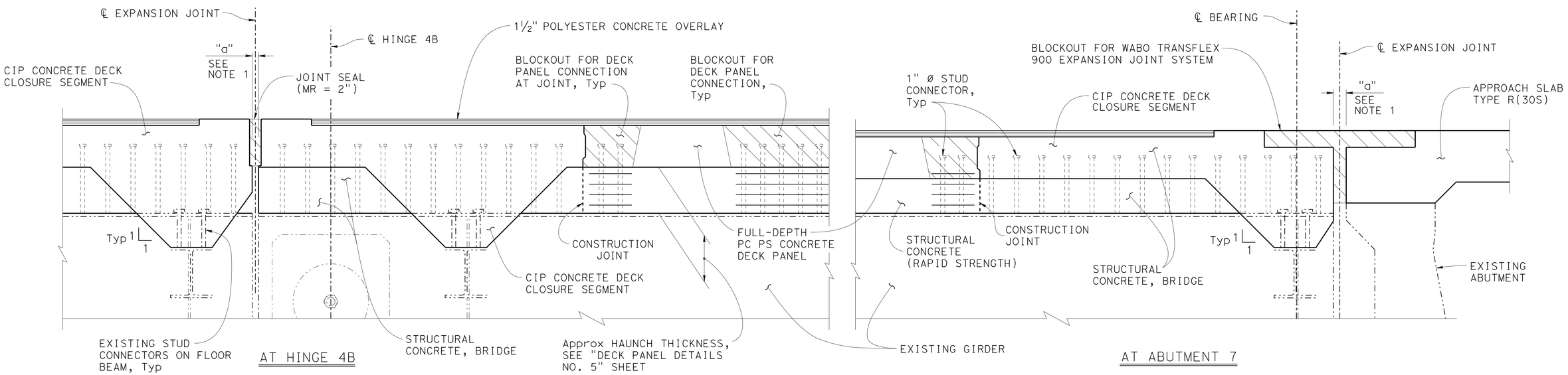

AT HINGE 4B

AT ABUTMENT 7

LONGITUDINAL SECTION (NEW CONSTRUCTION)

1" = 1'

NOTE:
VERIFY ALL CONTROLLING FIELD DIMENSIONS BEFORE ORDERING OR FABRICATING ANY MATERIAL.

	BY	CHECKED
DESIGN	S. PAHLAVAN	D. NGUYEN-TAN
DETAILS	G. SOUZA	D. NGUYEN-TAN
QUANTITIES	S. MORIMOTO	R. MELKO

STATE OF CALIFORNIA
DEPARTMENT OF TRANSPORTATION

DIVISION OF ENGINEERING SERVICES
STRUCTURE DESIGN
DESIGN BRANCH 6

BRIDGE NO. 32-0018
POST MILE 19.6

TUOLUMNE RIVER BRIDGE (REHAB)
CLOSURE SEGMENT DETAILS NO. 2

STRUCTURES DESIGN DETAIL SHEET (ENGLISH) (REV. 09-01-10)

ORIGINAL SCALE IN INCHES FOR REDUCED PLANS 0 1 2 3

UNIT: 3591
PROJECT NUMBER & PHASE: 1012000053-1
CONTRACT NO.: 10-0L9704

DISREGARD PRINTS BEARING EARLIER REVISION DATES

REVISION DATES 03-04-13 1-20-15 06-19-14 06-26-14

SHEET 32 OF 50

FILE => 32-0018-1-closure02.dgn

USERNAME => s113541 DATE PLOTTED => 12-NOV-2015 TIME PLOTTED => 11:09

DIST	COUNTY	ROUTE	POST MILES TOTAL PROJECT	SHEET No.	TOTAL SHEETS
10	Tuo	120	R19.4/R20.0	102	119

REGISTERED CIVIL ENGINEER 5/28/15 DATE

6-22-15
PLANS APPROVAL DATE

REGISTERED PROFESSIONAL ENGINEER DON NGUYEN-TAN No. C 57510 Exp. 12-31-15 CIVIL STATE OF CALIFORNIA

The State of California or its officers or agents shall not be responsible for the accuracy or completeness of scanned copies of this plan sheet.

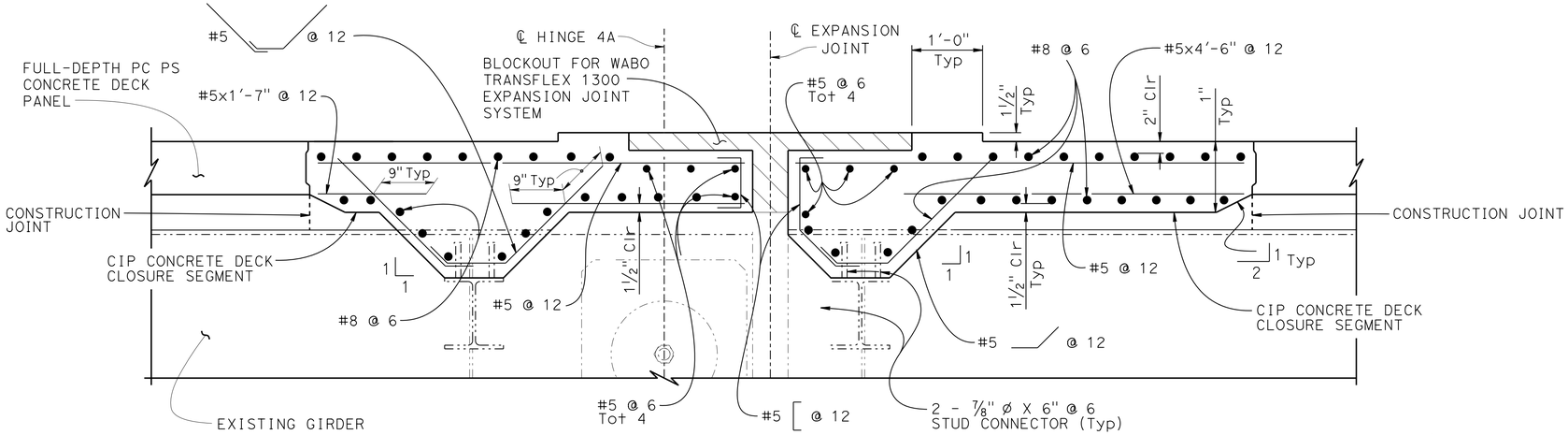

SECTION N-N

1" = 1'

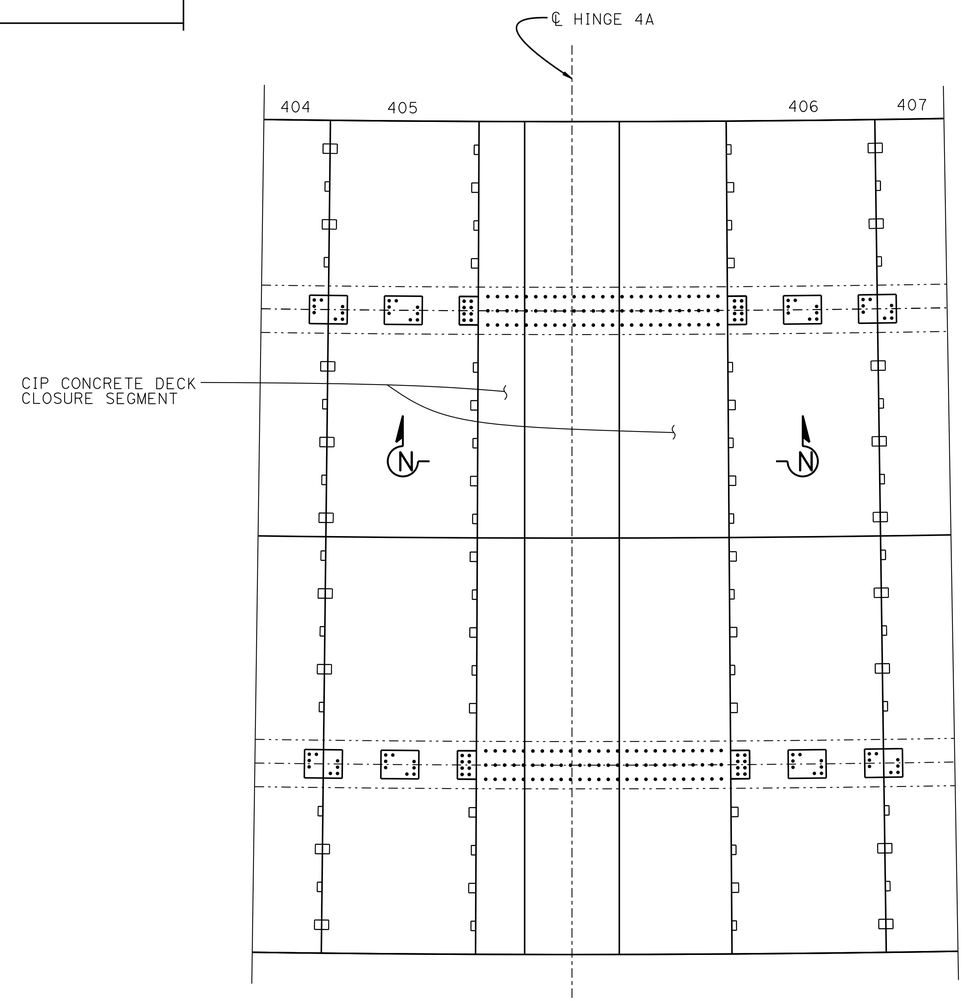

PARTIAL PLAN - CLOSURE SEGMENT

¼" = 1'-0"

NOTES:

1. For clarity, reinforcement for Full-Depth Precast Prestressed Concrete Deck Panels are not shown. See "DECK PANEL DETAILS" sheets.
2. Cast-in-place concrete deck closure segments at Hinge 4A shown, closure segments at Abutment 1, Hinge 4B, and Abutment 7 similar.

NOTE:
VERIFY ALL CONTROLLING FIELD DIMENSIONS BEFORE ORDERING OR FABRICATING ANY MATERIAL.

	BY	CHECKED
DESIGN	S. PAHLAVAN	D. NGUYEN-TAN
DETAILS	D. PATO	D. NGUYEN-TAN
QUANTITIES	S. MORIMOTO	R. MELKO

STATE OF CALIFORNIA
DEPARTMENT OF TRANSPORTATION

DIVISION OF ENGINEERING SERVICES
STRUCTURE DESIGN
DESIGN BRANCH 6

BRIDGE NO. 32-0018
POST MILE 19.6

TUOLUMNE RIVER BRIDGE (REHAB)
CLOSURE SEGMENT DETAILS NO. 3

STRUCTURES DESIGN DETAIL SHEET (ENGLISH) (REV. 09-01-10)

ORIGINAL SCALE IN INCHES FOR REDUCED PLANS 0 1 2 3

UNIT: 3591
PROJECT NUMBER & PHASE: 1012000053-1
CONTRACT NO.: 10-0L9704

DISREGARD PRINTS BEARING EARLIER REVISION DATES

REVISION DATES: 6-20-14, 1-20-15

SHEET 33 OF 50

FILE => 32-0018-1-closure03.dgn

USERNAME => s113541 DATE PLOTTED => 12-NOV-2015 TIME PLOTTED => 11:09

DIST	COUNTY	ROUTE	POST MILES TOTAL PROJECT	SHEET No.	TOTAL SHEETS
10	Tuo	120	R19.4/R20.0	103	119

REGISTERED CIVIL ENGINEER 5/28/15 DATE

6-22-15
PLANS APPROVAL DATE

REGISTERED PROFESSIONAL ENGINEER DON NGUYEN-TAN No. C 57510 Exp. 12-31-15 CIVIL STATE OF CALIFORNIA

The State of California or its officers or agents shall not be responsible for the accuracy or completeness of scanned copies of this plan sheet.

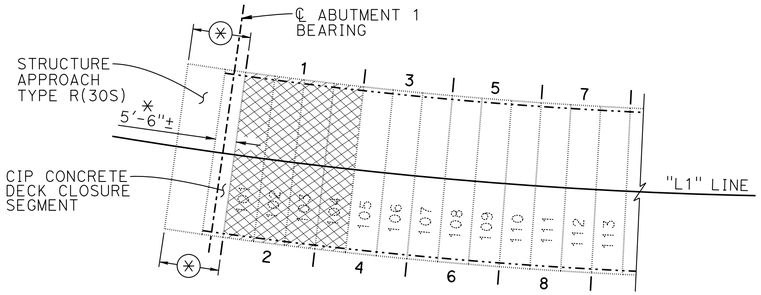

STEP 1 CONSTRUCTION

1" = 20'-0"

NOTES:

1. A construction sequence step involves the partial removal of the existing reinforced concrete deck, or installation of precast prestressed concrete deck panel(s), or both.
2. A construction sequence step denotes construction operations occurring in a single night of lane closure.
3. Request of alternative construction sequencing or number of panels must be submitted for authorization as specified.
4. Temporary Decking may be used in conjunction with Temporary Concrete Deck Panels. See "CONSTRUCTION DETAILS No. 3" sheet for Temporary Decking Details.
5. Do not saw cut or partially remove existing deck outside the Bridge Removal (Portion) limits for each construction step.

LEGEND:

- Indicates Bridge Removal (Portion)
- Indicates Temporary Concrete Deck Panel, see Note 4
- Indicates existing structure
- Indicates new construction (current step)
- Indicates new construction (previous step)
- Indicates future construction step
- ✳ Denotes dimension measured along "L1" Line
- ⊛ Denotes Structure Approach and CIP Concrete Deck Closure Segment construction
- 309 Denotes Full-Depth PC PS Concrete Deck Panel Number (Span Number: 3; Panel Number: 09)

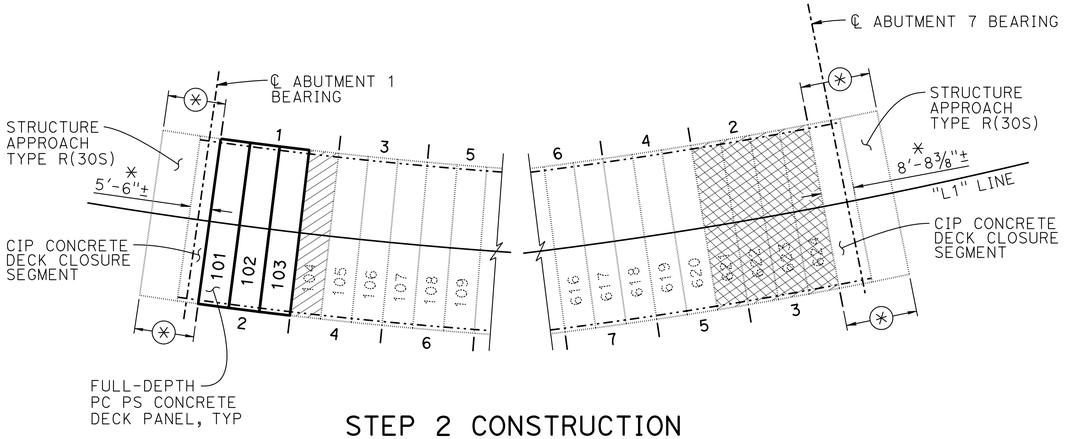

STEP 2 CONSTRUCTION

1" = 20'-0"

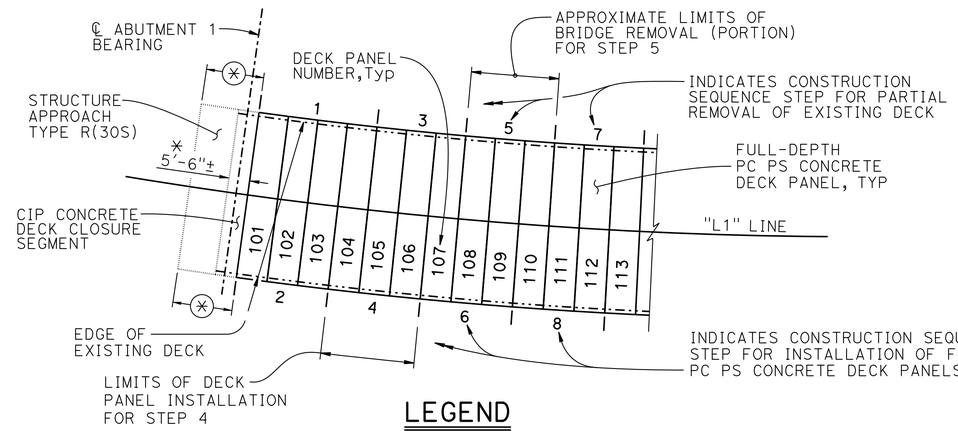

LEGEND

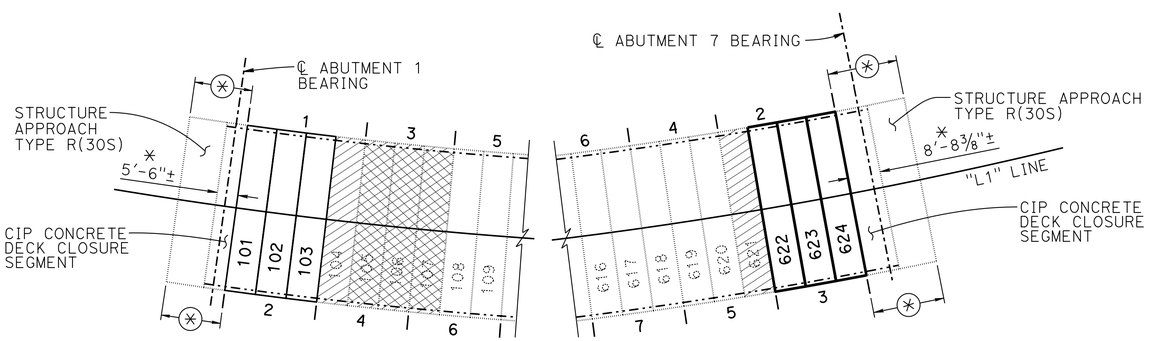

STEP 3 CONSTRUCTION

1" = 20'-0"

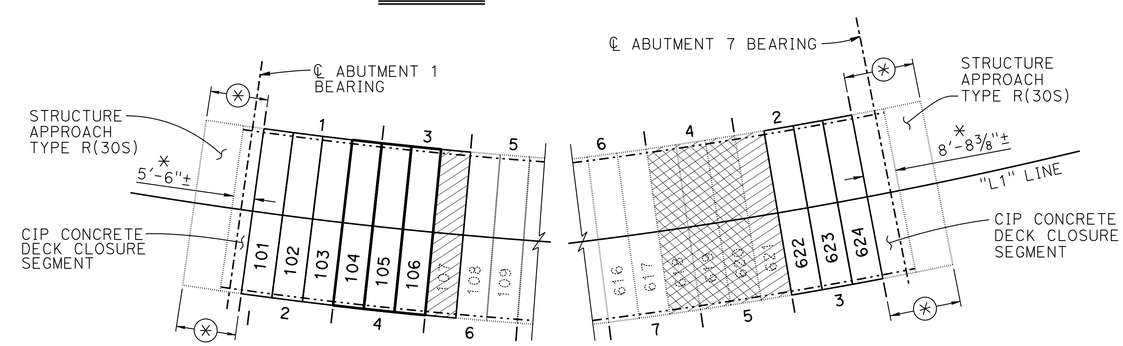

STEP 4 CONSTRUCTION

1" = 20'-0"

NOTE:
VERIFY ALL CONTROLLING FIELD DIMENSIONS BEFORE ORDERING OR FABRICATING ANY MATERIAL.

	BY	CHECKED
DESIGN	R. MELKO/S. PAHLAVAN	D. NGUYEN-TAN
DETAILS	D. PATO	D. NGUYEN-TAN
QUANTITIES	S. MORIMOTO	R. MELKO

STATE OF CALIFORNIA
DEPARTMENT OF TRANSPORTATION

DIVISION OF ENGINEERING SERVICES
STRUCTURE DESIGN
DESIGN BRANCH 6

BRIDGE NO. 32-0018
POST MILE 19.6

TUOLUMNE RIVER BRIDGE (REHAB)
CONST. SEQUENCE DETAILS NO. 1

STRUCTURES DESIGN DETAIL SHEET (ENGLISH) (REV. 09-01-10)

ORIGINAL SCALE IN INCHES FOR REDUCED PLANS 0 1 2 3

UNIT: 3591
PROJECT NUMBER & PHASE: 1012000053-1
CONTRACT NO.: 10-0L9704

DISREGARD PRINTS BEARING EARLIER REVISION DATES

REVISION DATES 1-29-14 6-23-15 6-22-15

SHEET 34 OF 50

FILE => 32-0018-o-const-seq1.dgn

USERNAME => s113541 DATE PLOTTED => 12-NOV-2015 TIME PLOTTED => 11:09

DIST	COUNTY	ROUTE	POST MILES TOTAL PROJECT	SHEET No.	TOTAL SHEETS
10	Tuo	120	R19.4/R20.0	104	119

REGISTERED CIVIL ENGINEER 5/28/15 DATE

6-22-15
PLANS APPROVAL DATE

REGISTERED PROFESSIONAL ENGINEER DON NGUYEN-TAN No. C 57510 Exp. 12-31-15 CIVIL STATE OF CALIFORNIA

The State of California or its officers or agents shall not be responsible for the accuracy or completeness of scanned copies of this plan sheet.

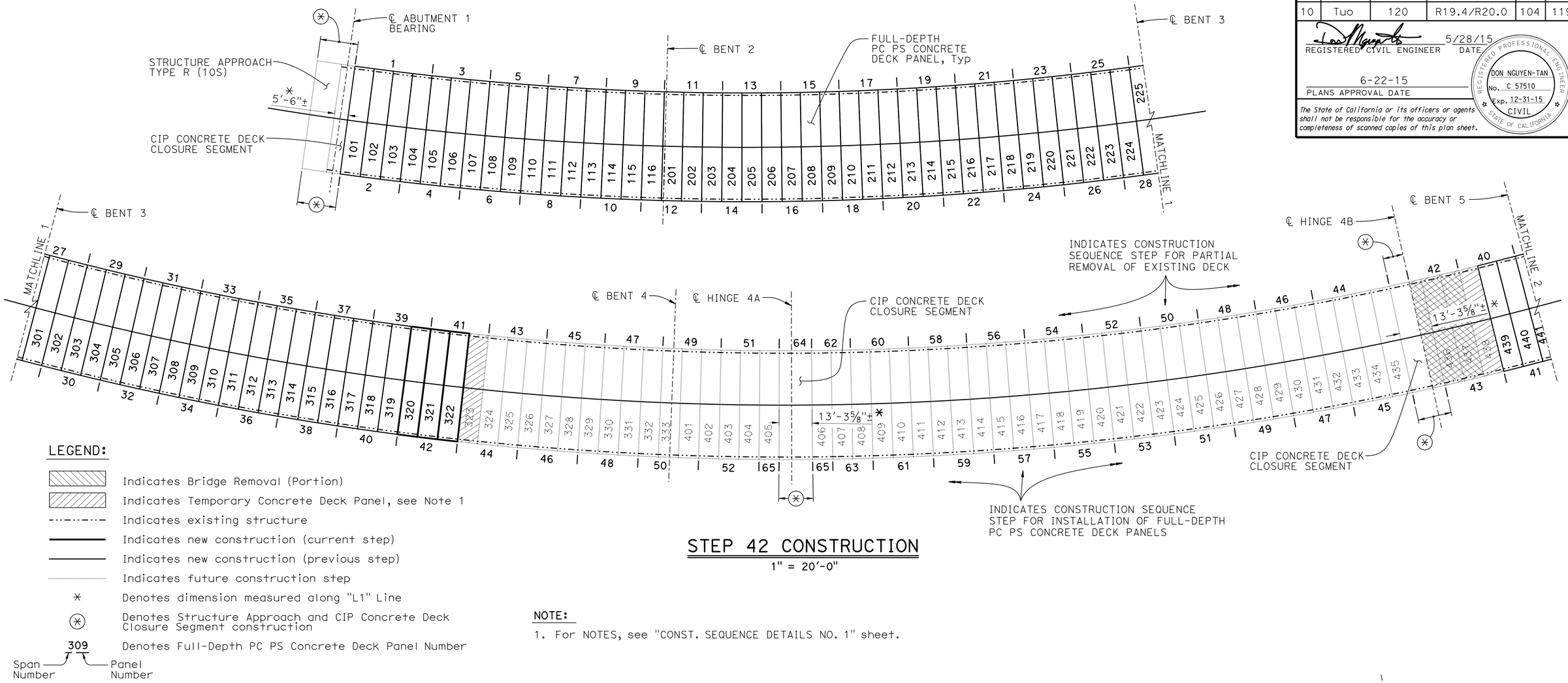

STEP 42 CONSTRUCTION

1" = 20'-0"

LEGEND:

- Indicates Bridge Removal (Portion)
- Indicates Temporary Concrete Deck Panel, see Note 1
- Indicates existing structure
- Indicates new construction (current step)
- Indicates new construction (previous step)
- Indicates future construction step
- ✳ Denotes dimension measured along "L1" Line
- ⊛ Denotes Structure Approach and CIP Concrete Deck Closure Segment construction
- 309 — Span Number — Panel Number: Denotes Full-Depth PC PS Concrete Deck Panel Number

NOTE:

1. For NOTES, see "CONST. SEQUENCE DETAILS NO. 1" sheet.

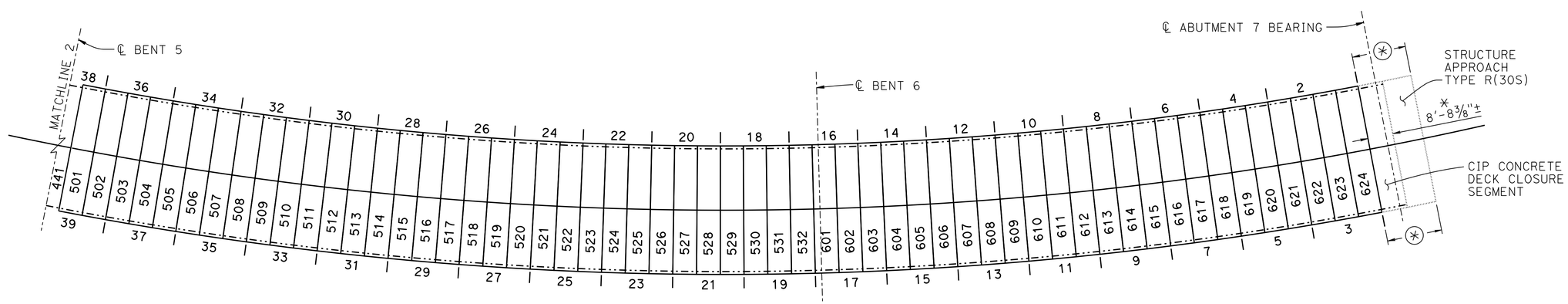

NOTE:
VERIFY ALL CONTROLLING FIELD DIMENSIONS BEFORE ORDERING OR FABRICATING ANY MATERIAL.

DESIGN	BY R. MELKO/S. PAHLAVAN	CHECKED D. NGUYEN-TAN	
DETAILS	BY D. PATO	CHECKED D. NGUYEN-TAN	
QUANTITIES	BY S. MORIMOTO	CHECKED R. MELKO	

STATE OF CALIFORNIA
DEPARTMENT OF TRANSPORTATION

DIVISION OF ENGINEERING SERVICES
STRUCTURE DESIGN
DESIGN BRANCH 6

BRIDGE NO. 32-0018
POST MILE 19.6

TUOLUMNE RIVER BRIDGE (REHAB)
CONST. SEQUENCE DETAILS NO. 2

STRUCTURES DESIGN DETAIL SHEET (ENGLISH) (REV. 09-01-10)

ORIGINAL SCALE IN INCHES FOR REDUCED PLANS 0 1 2 3

UNIT: 3591
PROJECT NUMBER & PHASE: 1012000053-1
CONTRACT NO.: 10-0L9704

DISREGARD PRINTS BEARING EARLIER REVISION DATES

REVISION DATES 1-30-14 2-13-15 6-17-15

SHEET 35 OF 50

FILE => 32-0018-o-const-seq2.dgn

USERNAME => s113541 DATE PLOTTED => 12-NOV-2015 TIME PLOTTED => 11:11:10

DIST	COUNTY	ROUTE	POST MILES TOTAL PROJECT	SHEET No.	TOTAL SHEETS
10	Tuo	120	R19.4/R20.0	105	119

REGISTERED CIVIL ENGINEER 5/28/15 DATE

6-22-15
PLANS APPROVAL DATE

REGISTERED PROFESSIONAL ENGINEER DON NGUYEN-TAN No. C 57510 Exp. 12-31-15 CIVIL STATE OF CALIFORNIA

The State of California or its officers or agents shall not be responsible for the accuracy or completeness of scanned copies of this plan sheet.

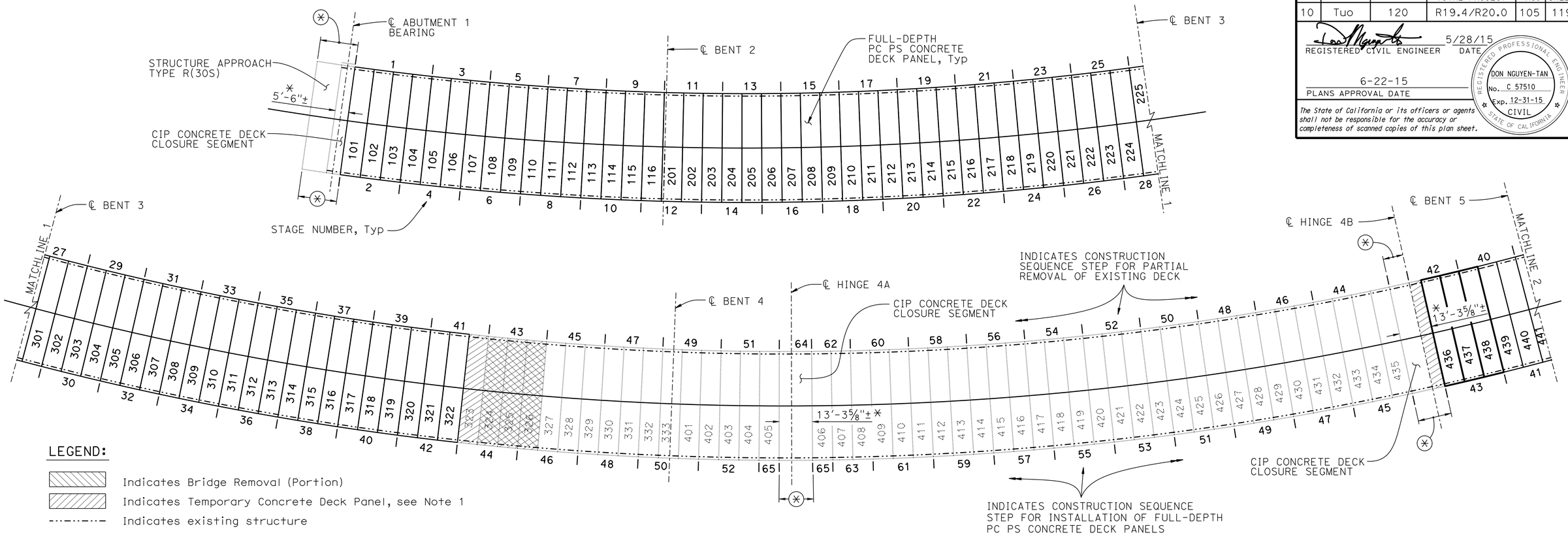

STEP 43 CONSTRUCTION

1" = 20'-0"

LEGEND:

- Indicates Bridge Removal (Portion)
- Indicates Temporary Concrete Deck Panel, see Note 1
- Indicates existing structure
- Indicates new construction (current step)
- Indicates new construction (previous step)
- Indicates future construction step
- ✳ Denotes dimension measured along "L1" Line
- ⊛ Denotes Structure Approach and CIP Concrete Deck Closure Segment construction
- 309 Denotes Full-Depth PC PS Concrete Deck Panel Number (Span Number — Panel Number)

NOTE:

1. For NOTES, see "CONST. SEQUENCE DETAILS NO. 1" sheet.

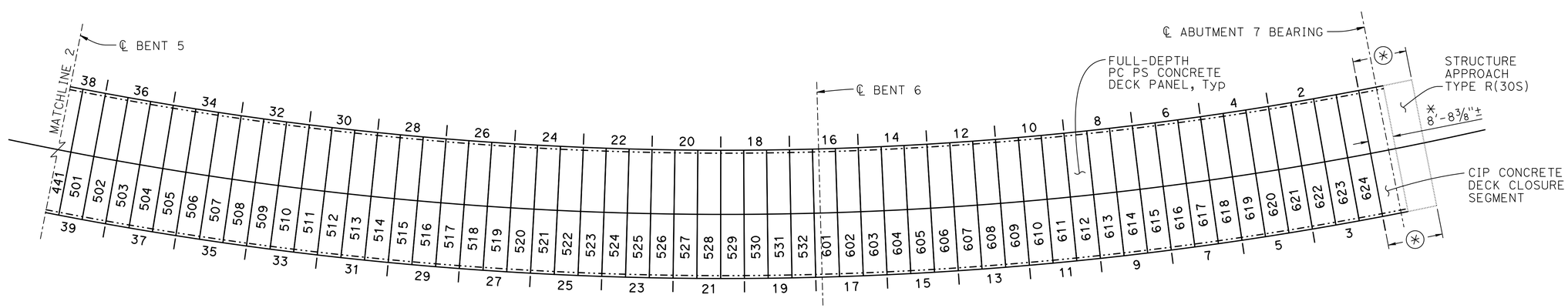

NOTE:
VERIFY ALL CONTROLLING FIELD DIMENSIONS BEFORE ORDERING OR FABRICATING ANY MATERIAL.

DESIGN	BY R. MELKO/S. PAHLAVAN	CHECKED D. NGUYEN-TAN	
DETAILS	BY D. PATO	CHECKED D. NGUYEN-TAN	
QUANTITIES	BY S. MORIMOTO	CHECKED R. MELKO	

STATE OF CALIFORNIA
DEPARTMENT OF TRANSPORTATION

DIVISION OF ENGINEERING SERVICES
STRUCTURE DESIGN
DESIGN BRANCH 6

BRIDGE NO. 32-0018
POST MILE 19.6

TUOLUMNE RIVER BRIDGE (REHAB)
CONST. SEQUENCE DETAILS NO. 3

STRUCTURES DESIGN DETAIL SHEET (ENGLISH) (REV. 09-01-10)

ORIGINAL SCALE IN INCHES FOR REDUCED PLANS 0 1 2 3

UNIT: 3591
PROJECT NUMBER & PHASE: 1012000053-1
CONTRACT NO.: 10-0L9704

DISREGARD PRINTS BEARING EARLIER REVISION DATES

REVISION DATES 1-31-14 2-13-15 1-26-15

SHEET 36 OF 50

FILE => 32-0018-o-const-seq3.dgn

USERNAME => s113541 DATE PLOTTED => 12-NOV-2015 TIME PLOTTED => 11:10

DIST	COUNTY	ROUTE	POST MILES TOTAL PROJECT	SHEET No.	TOTAL SHEETS
10	Tuo	120	R19.4/R20.0	106	119

REGISTERED CIVIL ENGINEER 5/28/15 DATE

6-22-15
PLANS APPROVAL DATE

REGISTERED PROFESSIONAL ENGINEER DON NGUYEN-TAN No. C 57510 Exp. 12-31-15 CIVIL STATE OF CALIFORNIA

The State of California or its officers or agents shall not be responsible for the accuracy or completeness of scanned copies of this plan sheet.

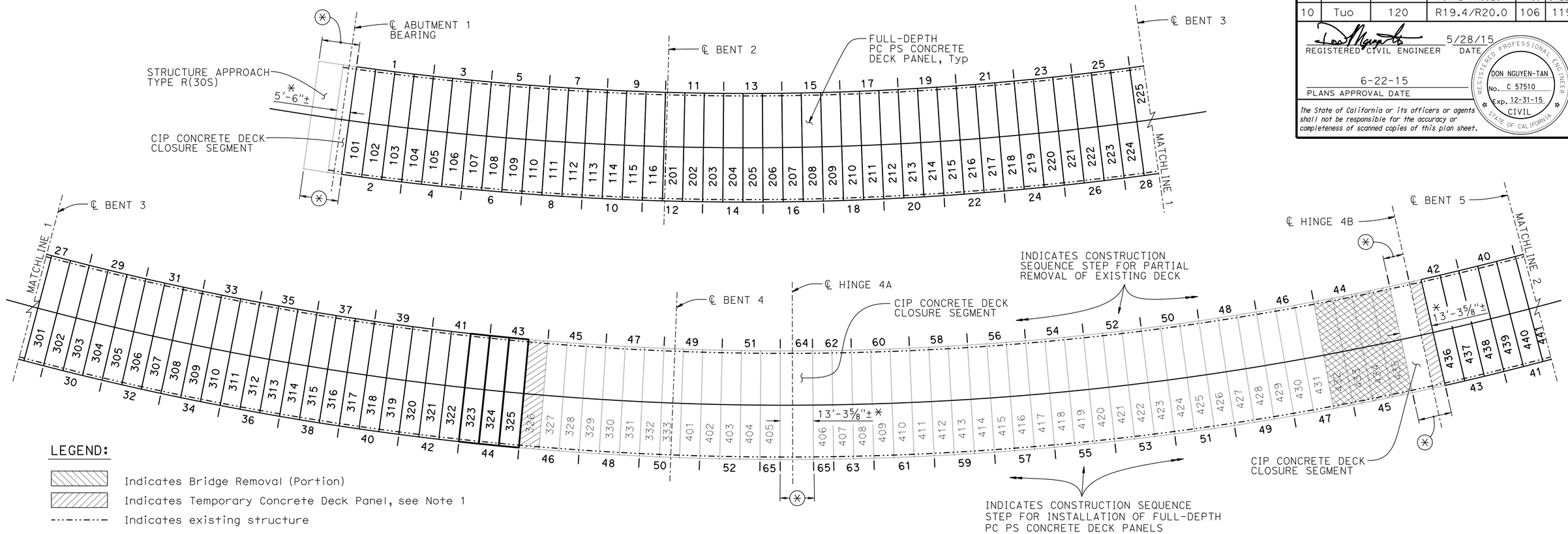

STEP 44 CONSTRUCTION

1" = 20'-0"

LEGEND:

- Indicates Bridge Removal (Portion)
- Indicates Temporary Concrete Deck Panel, see Note 1
- Indicates existing structure
- Indicates new construction (current step)
- Indicates new construction (previous step)
- Indicates future construction step
- ✳ Denotes dimension measured along "L1" Line
- ⊛ Denotes Structure Approach and CIP Concrete Deck Closure Segment construction
- 309 Denotes Full-Depth PC PS Concrete Deck Panel Number (Span Number — Panel Number)

NOTE:

1. For NOTES, see "CONST. SEQUENCE DETAILS NO. 1" sheet.

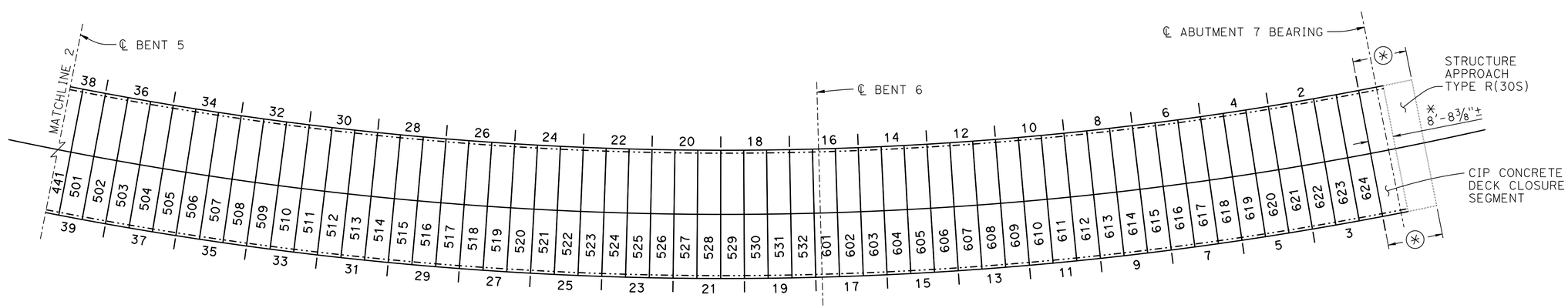

NOTE:
VERIFY ALL CONTROLLING FIELD DIMENSIONS BEFORE ORDERING OR FABRICATING ANY MATERIAL.

DESIGN	BY R. MELKO/S. PAHLAVAN	CHECKED D. NGUYEN-TAN	
DETAILS	BY D. PATO	CHECKED D. NGUYEN-TAN	
QUANTITIES	BY S. MORIMOTO	CHECKED R. MELKO	

STATE OF CALIFORNIA
DEPARTMENT OF TRANSPORTATION

DIVISION OF ENGINEERING SERVICES
STRUCTURE DESIGN
DESIGN BRANCH 6

BRIDGE NO. 32-0018
POST MILE 19.6

TUOLUMNE RIVER BRIDGE (REHAB)
CONST. SEQUENCE DETAILS NO. 4

STRUCTURES DESIGN DETAIL SHEET (ENGLISH) (REV. 09-01-10)

ORIGINAL SCALE IN INCHES FOR REDUCED PLANS 0 1 2 3

UNIT: 3591
PROJECT NUMBER & PHASE: 1012000053-1
CONTRACT NO.: 10-0L9704

DISREGARD PRINTS BEARING EARLIER REVISION DATES

REVISION DATES 1-31-14 2-13-15 1-26-15

SHEET 37 OF 50

FILE => 32-0018-o-const-seq4.dgn

USERNAME => s113541 DATE PLOTTED => 12-NOV-2015 TIME PLOTTED => 11:10

DIST	COUNTY	ROUTE	POST MILES TOTAL PROJECT	SHEET No.	TOTAL SHEETS
10	Tuo	120	R19.4/R20.0	107	119

REGISTERED CIVIL ENGINEER 5/28/15 DATE

6-22-15
PLANS APPROVAL DATE

REGISTERED PROFESSIONAL ENGINEER DON NGUYEN-TAN No. C 57510 Exp. 12-31-15 CIVIL STATE OF CALIFORNIA

The State of California or its officers or agents shall not be responsible for the accuracy or completeness of scanned copies of this plan sheet.

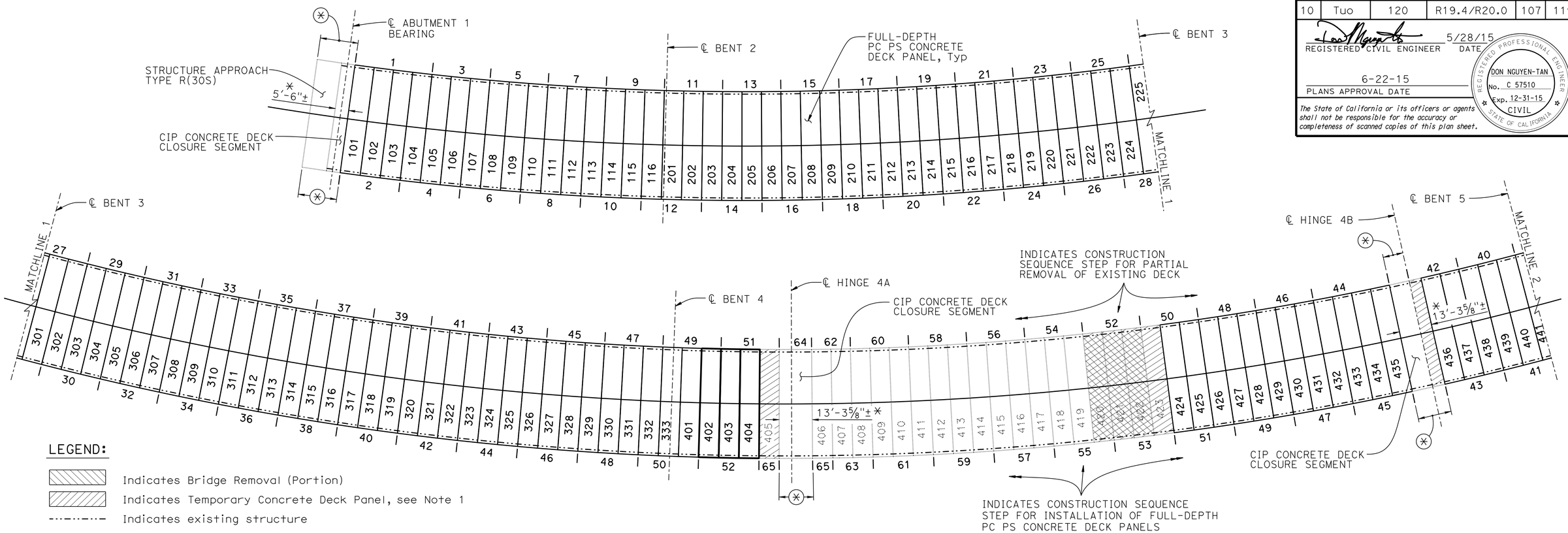

STEP 52 CONSTRUCTION

1" = 20'-0"

LEGEND:

- Indicates Bridge Removal (Portion)
- Indicates Temporary Concrete Deck Panel, see Note 1
- Indicates existing structure
- Indicates new construction (current step)
- Indicates new construction (previous step)
- Indicates future construction step
- ✳ Denotes dimension measured along "L1" Line
- ⊛ Denotes Structure Approach and CIP Concrete Deck Closure Segment construction
- 309 Denotes Full-Depth PC PS Concrete Deck Panel Number (Span Number — Panel Number)

NOTE:

1. For NOTES, see "CONST. SEQUENCE DETAILS NO. 1" sheet.

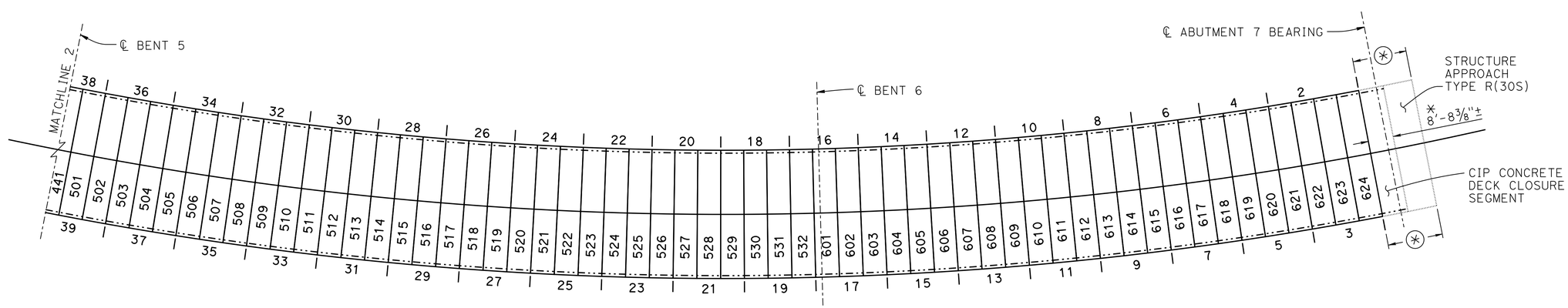

NOTE:
VERIFY ALL CONTROLLING FIELD DIMENSIONS BEFORE ORDERING OR FABRICATING ANY MATERIAL.

DESIGN	BY R. MELKO/S.PAHLAVAN	CHECKED D. NGUYEN-TAN	
DETAILS	BY D. PATO	CHECKED D. NGUYEN-TAN	
QUANTITIES	BY S. MORIMOTO	CHECKED R. MELKO	

STATE OF CALIFORNIA
DEPARTMENT OF TRANSPORTATION

DIVISION OF ENGINEERING SERVICES
STRUCTURE DESIGN
DESIGN BRANCH 6

BRIDGE NO. 32-0018
POST MILE 19.6

TUOLUMNE RIVER BRIDGE (REHAB)
CONST. SEQUENCE DETAILS NO. 5

STRUCTURES DESIGN DETAIL SHEET (ENGLISH) (REV. 09-01-10)

ORIGINAL SCALE IN INCHES FOR REDUCED PLANS 0 1 2 3

UNIT: 3591
PROJECT NUMBER & PHASE: 1012000053-1
CONTRACT NO.: 10-0L9704

DISREGARD PRINTS BEARING EARLIER REVISION DATES

REVISION DATES 1-31-14 2-13-15 1-26-15

SHEET 38 OF 50

FILE => 32-0018-o-const-seq5.dgn

USERNAME => s113541 DATE PLOTTED => 12-NOV-2015 TIME PLOTTED => 11:10

DIST	COUNTY	ROUTE	POST MILES TOTAL PROJECT	SHEET No.	TOTAL SHEETS
10	Tuo	120	R19.4/R20.0	108	119

REGISTERED CIVIL ENGINEER 5/28/15 DATE

6-22-15
PLANS APPROVAL DATE

REGISTERED PROFESSIONAL ENGINEER DON NGUYEN-TAN No. C 57510 Exp. 12-31-15 CIVIL STATE OF CALIFORNIA

The State of California or its officers or agents shall not be responsible for the accuracy or completeness of scanned copies of this plan sheet.

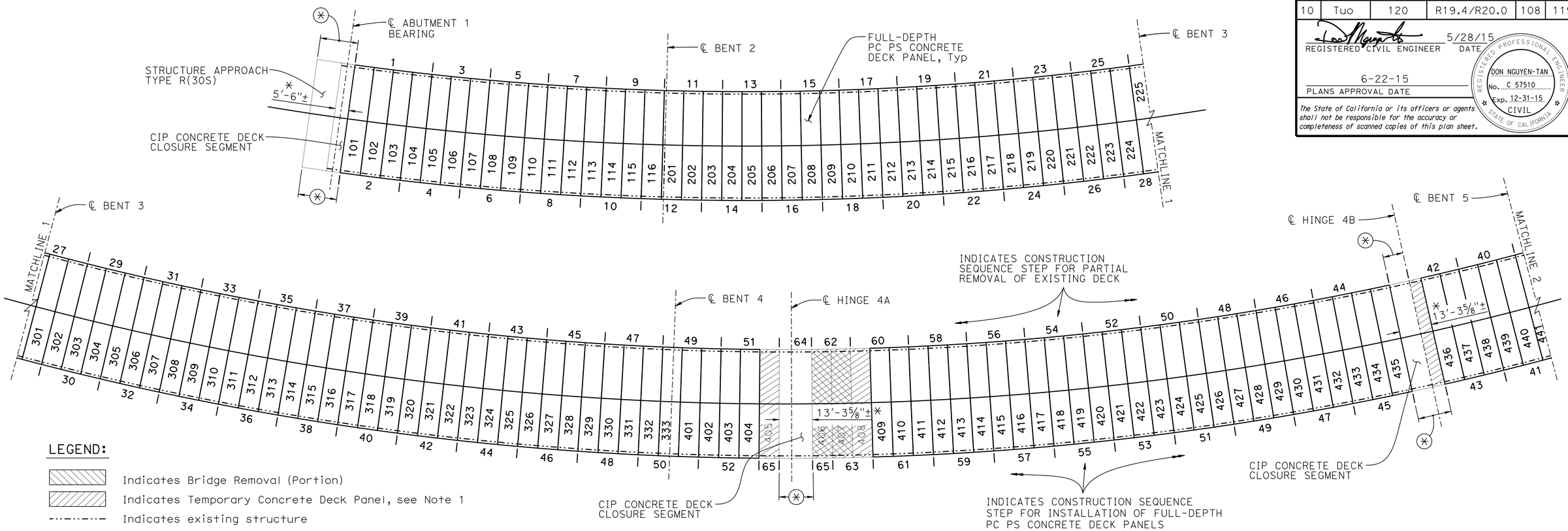

STEP 62 CONSTRUCTION

1" = 20'-0"

LEGEND:

- Indicates Bridge Removal (Portion)
- Indicates Temporary Concrete Deck Panel, see Note 1
- Indicates existing structure
- Indicates new construction (current step)
- Indicates new construction (previous step)
- Indicates future construction step
- ✳ Denotes dimension measured along "L1" Line
- ⊛ Denotes Structure Approach and CIP Concrete Deck Closure Segment construction
- 309 DenoteS Full-Depth PC PS Concrete Deck Panel Number (Span Number — Panel Number)

NOTE:

1. For NOTES, see "CONST. SEQUENCE DETAILS NO. 1" sheet.

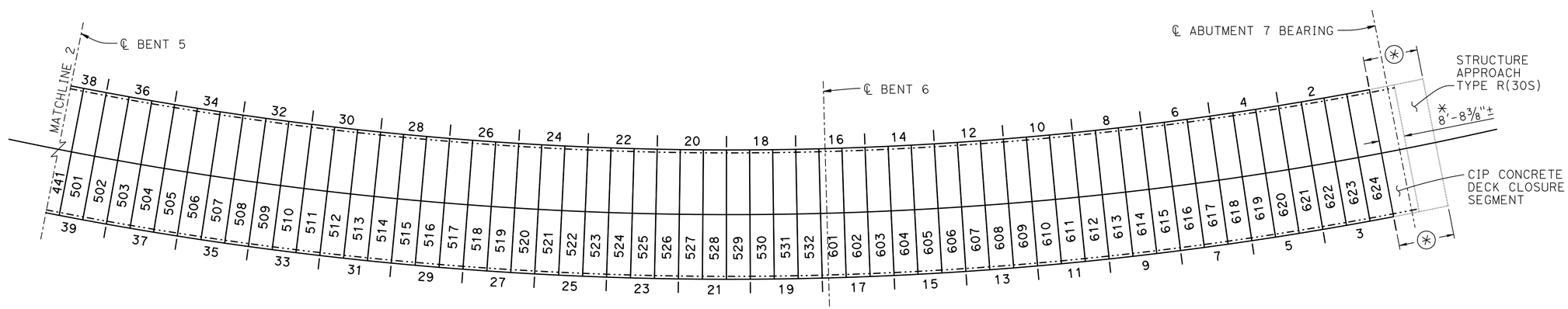

NOTE:
VERIFY ALL CONTROLLING FIELD DIMENSIONS BEFORE ORDERING OR FABRICATING ANY MATERIAL.

DESIGN	BY R. MELKO/S. PAHLAVAN	CHECKED D. NGUYEN-TAN	
DETAILS	BY D. PATO	CHECKED D. NGUYEN-TAN	
QUANTITIES	BY S. MORIMOTO	CHECKED R. MELKO	

STATE OF CALIFORNIA
DEPARTMENT OF TRANSPORTATION

DIVISION OF ENGINEERING SERVICES
STRUCTURE DESIGN
DESIGN BRANCH 6

BRIDGE NO. 32-0018
POST MILE 19.6

TUOLUMNE RIVER BRIDGE (REHAB)
CONST. SEQUENCE DETAILS NO. 6

STRUCTURES DESIGN DETAIL SHEET (ENGLISH) (REV. 09-01-10)

ORIGINAL SCALE IN INCHES FOR REDUCED PLANS 0 1 2 3

UNIT: 3591
PROJECT NUMBER & PHASE: 1012000053-1
CONTRACT NO.: 10-0L9704

DISREGARD PRINTS BEARING EARLIER REVISION DATES

REVISION DATES 2-3-14 2-13-15 1-26-15

SHEET 39 OF 50

FILE => 32-0018-o-const-seq6.dgn

USERNAME => s113541 DATE PLOTTED => 12-NOV-2015 TIME PLOTTED => 11:10

DIST	COUNTY	ROUTE	POST MILES TOTAL PROJECT	SHEET No.	TOTAL SHEETS
10	Tuo	120	R19.4/R20.0	109	119

REGISTERED CIVIL ENGINEER 5/28/15 DATE

6-22-15
PLANS APPROVAL DATE

REGISTERED PROFESSIONAL ENGINEER DON NGUYEN-TAN No. C 57510 Exp. 12-31-15 CIVIL STATE OF CALIFORNIA

The State of California or its officers or agents shall not be responsible for the accuracy or completeness of scanned copies of this plan sheet.

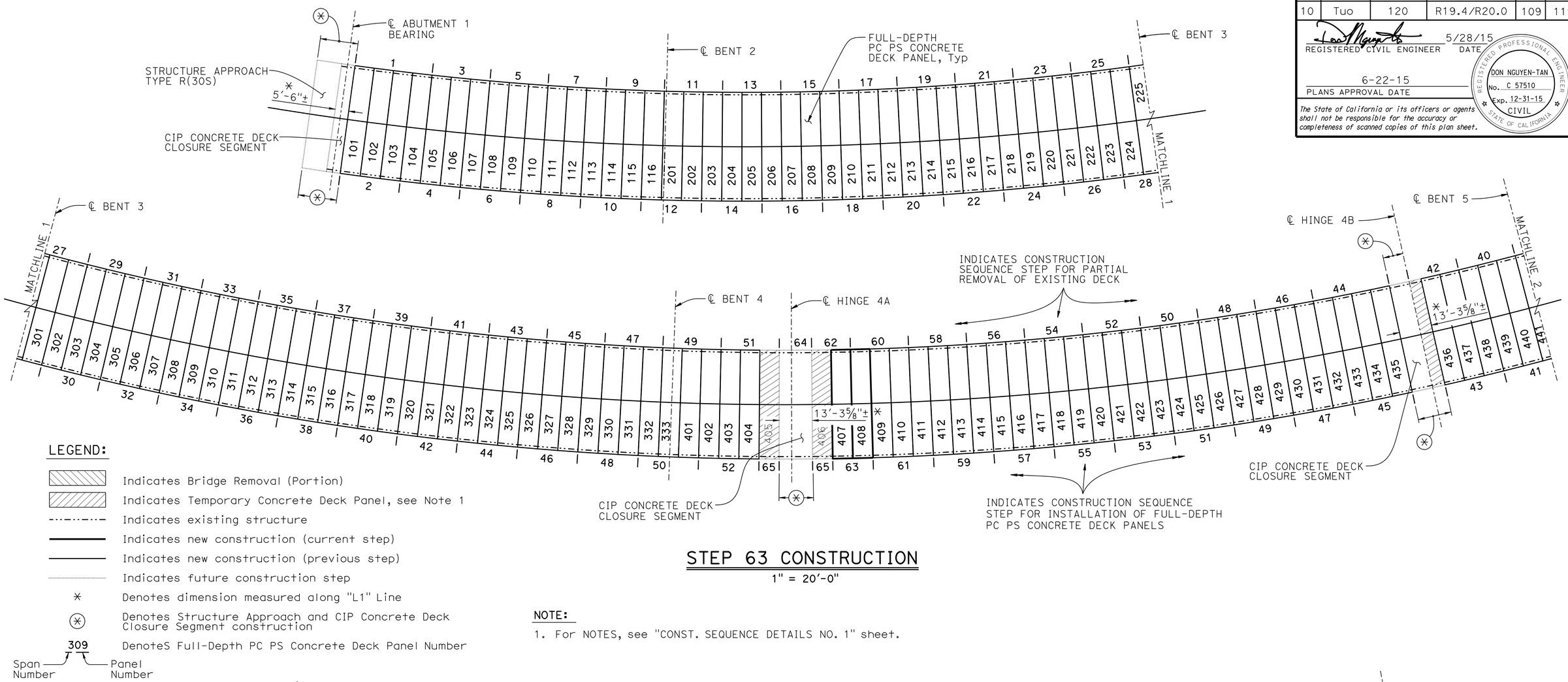

STEP 63 CONSTRUCTION

1" = 20'-0"

LEGEND:

- Indicates Bridge Removal (Portion)
- Indicates Temporary Concrete Deck Panel, see Note 1
- Indicates existing structure
- Indicates new construction (current step)
- Indicates new construction (previous step)
- Indicates future construction step
- ✳ Denotes dimension measured along "L1" Line
- ⊛ Denotes Structure Approach and CIP Concrete Deck Closure Segment construction
- 309 DenoteS Full-Depth PC PS Concrete Deck Panel Number (Span Number — Panel Number)

NOTE:

1. For NOTES, see "CONST. SEQUENCE DETAILS NO. 1" sheet.

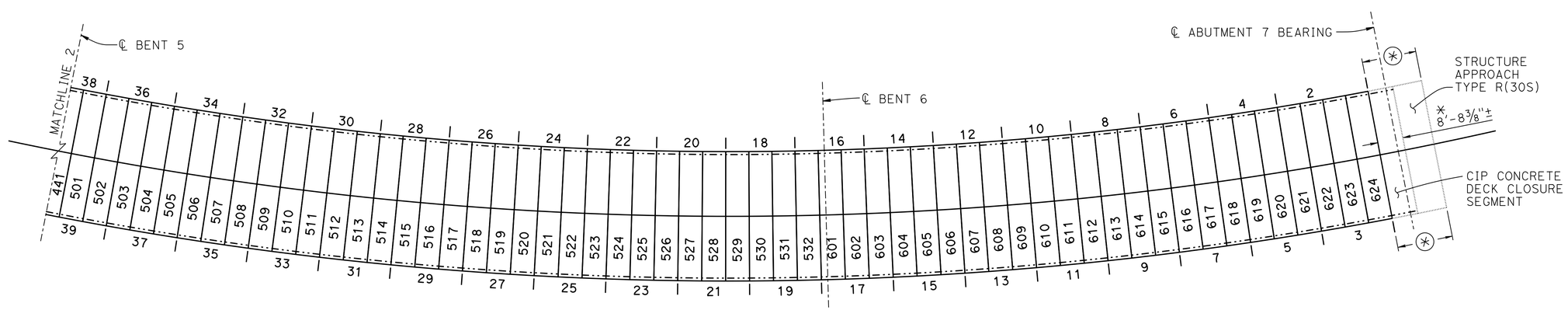

NOTE:
VERIFY ALL CONTROLLING FIELD DIMENSIONS BEFORE ORDERING OR FABRICATING ANY MATERIAL.

	BY	CHECKED
DESIGN	R. MELKO/S. PAHLAVAN	D. NGUYEN-TAN
DETAILS	D. PATO	D. NGUYEN-TAN
QUANTITIES	S. MORIMOTO	R. MELKO

STATE OF CALIFORNIA
DEPARTMENT OF TRANSPORTATION

DIVISION OF ENGINEERING SERVICES
STRUCTURE DESIGN
DESIGN BRANCH 6

BRIDGE NO. 32-0018
POST MILE 19.6

TUOLUMNE RIVER BRIDGE (REHAB)
CONST. SEQUENCE DETAILS NO. 7

STRUCTURES DESIGN DETAIL SHEET (ENGLISH) (REV. 09-01-10)

ORIGINAL SCALE IN INCHES FOR REDUCED PLANS 0 1 2 3

UNIT: 3591
PROJECT NUMBER & PHASE: 1012000053-1
CONTRACT NO.: 10-0L9704

DISREGARD PRINTS BEARING EARLIER REVISION DATES

REVISION DATES: 2-4-14 2-13-15 1-26-15

SHEET 40 OF 50

FILE => 32-0018-o-const-seq7.dgn

USERNAME => s113541 DATE PLOTTED => 12-NOV-2015 TIME PLOTTED => 11:11:10

DIST	COUNTY	ROUTE	POST MILES TOTAL PROJECT	SHEET No.	TOTAL SHEETS
10	Tuo	120	R19.4/R20.0	110	119

REGISTERED CIVIL ENGINEER 5/28/15 DATE

6-22-15
PLANS APPROVAL DATE

REGISTERED PROFESSIONAL ENGINEER DON NGUYEN-TAN No. C 57510 Exp. 12-31-15 CIVIL STATE OF CALIFORNIA

The State of California or its officers or agents shall not be responsible for the accuracy or completeness of scanned copies of this plan sheet.

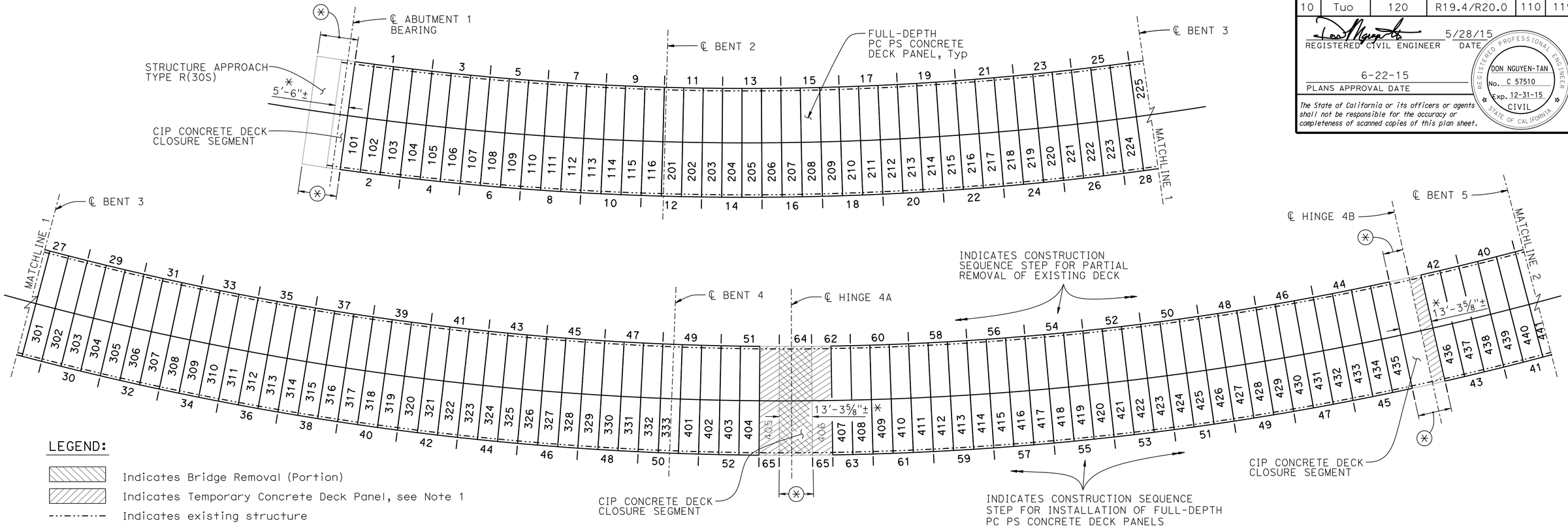

STEP 64 CONSTRUCTION

1" = 20'-0"

LEGEND:

- Indicates Bridge Removal (Portion)
- Indicates Temporary Concrete Deck Panel, see Note 1
- Indicates existing structure
- Indicates new construction (current step)
- Indicates new construction (previous step)
- Indicates future construction step
- ✳ Denotes dimension measured along "L1" Line
- ⊛ Denotes Structure Approach and CIP Concrete Deck Closure Segment construction
- 309 Denote Full-Depth PC PS Concrete Deck Panel Number (Span Number — Panel Number)

NOTE:

1. For NOTES, see "CONST. SEQUENCE DETAILS NO. 1" sheet.

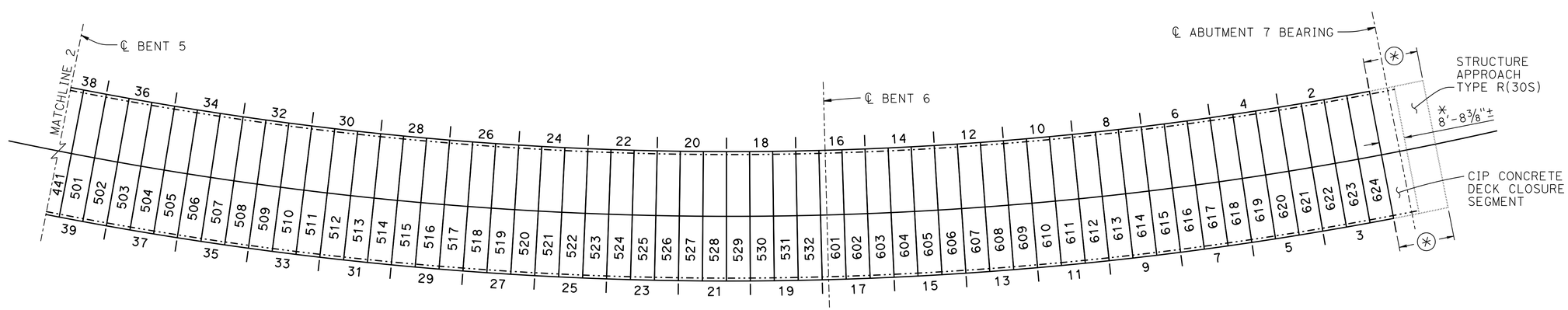

NOTE:
VERIFY ALL CONTROLLING FIELD DIMENSIONS BEFORE ORDERING OR FABRICATING ANY MATERIAL.

DESIGN	BY R. MELKO/S.PAHLAVAN	CHECKED D. NGUYEN-TAN	
DETAILS	BY D. PATO	CHECKED D. NGUYEN-TAN	
QUANTITIES	BY S. MORIMOTO	CHECKED R. MELKO	

STATE OF CALIFORNIA
DEPARTMENT OF TRANSPORTATION

DIVISION OF ENGINEERING SERVICES
STRUCTURE DESIGN
DESIGN BRANCH 6

BRIDGE NO. 32-0018
POST MILE 19.6

TUOLUMNE RIVER BRIDGE (REHAB)
CONST. SEQUENCE DETAILS NO. 8

STRUCTURES DESIGN DETAIL SHEET (ENGLISH) (REV. 09-01-10)

ORIGINAL SCALE IN INCHES FOR REDUCED PLANS 0 1 2 3

UNIT: 3591
PROJECT NUMBER & PHASE: 1012000053-1
CONTRACT NO.: 10-0L9704

DISREGARD PRINTS BEARING EARLIER REVISION DATES

REVISION DATES 2-4-14 2-13-15 1-26-15

SHEET 41 OF 50

FILE => 32-0018-o-const-seq8.dgn

USERNAME => s113541 DATE PLOTTED => 12-NOV-2015 TIME PLOTTED => 11:10

DIST	COUNTY	ROUTE	POST MILES TOTAL PROJECT	SHEET No.	TOTAL SHEETS
10	Tuo	120	R19.4/R20.0	111	119

REGISTERED CIVIL ENGINEER 5/28/15 DATE

6-22-15
PLANS APPROVAL DATE

REGISTERED PROFESSIONAL ENGINEER DON NGUYEN-TAN No. C 57510 Exp. 12-31-15 CIVIL STATE OF CALIFORNIA

The State of California or its officers or agents shall not be responsible for the accuracy or completeness of scanned copies of this plan sheet.

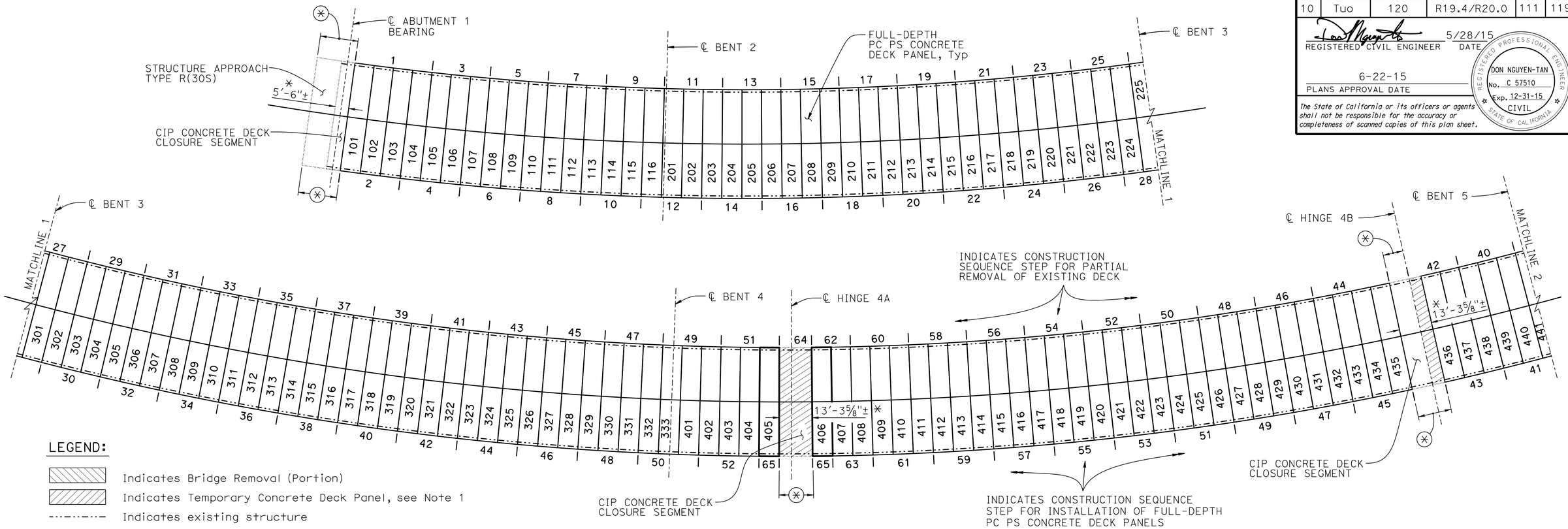

STEP 65 CONSTRUCTION

1" = 20'-0"

LEGEND:

- Indicates Bridge Removal (Portion)
- Indicates Temporary Concrete Deck Panel, see Note 1
- Indicates existing structure
- Indicates new construction (current step)
- Indicates new construction (previous step)
- Indicates future construction step
- ✳ Denotes dimension measured along "L1" Line
- ⊛ Denotes Structure Approach and CIP Concrete Deck Closure Segment construction
- 309 Denotes Full-Depth PC PS Concrete Deck Panel Number (Span Number — Panel Number)

NOTE:

1. For NOTES, see "CONST. SEQUENCE DETAILS NO. 1" sheet.

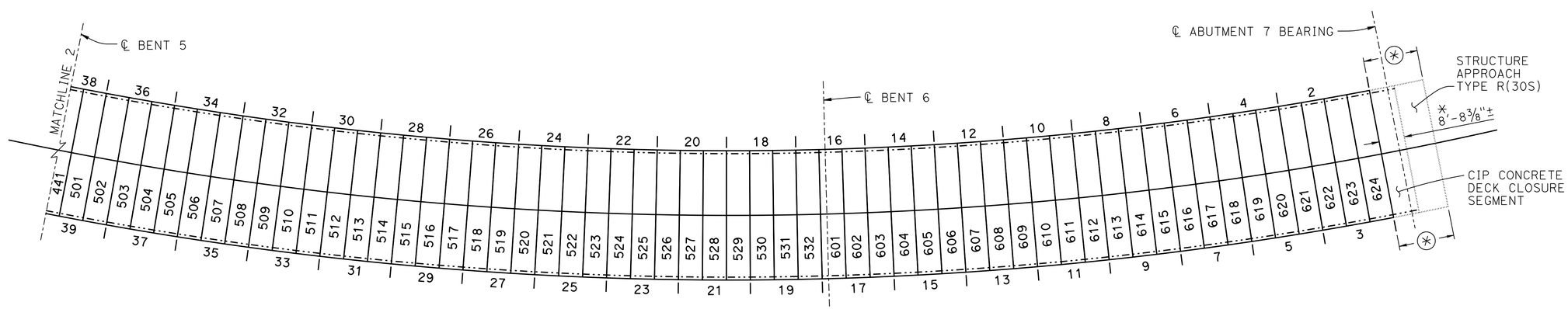

NOTE:
VERIFY ALL CONTROLLING FIELD DIMENSIONS BEFORE ORDERING OR FABRICATING ANY MATERIAL.

DESIGN	BY R. MELKO/S. PAHLAVAN	CHECKED D. NGUYEN-TAN	
DETAILS	BY D. PATO	CHECKED D. NGUYEN-TAN	
QUANTITIES	BY S. MORIMOTO	CHECKED R. MELKO	

STATE OF CALIFORNIA
DEPARTMENT OF TRANSPORTATION

DIVISION OF ENGINEERING SERVICES
STRUCTURE DESIGN
DESIGN BRANCH 6

BRIDGE NO. 32-0018
POST MILE 19.6

TUOLUMNE RIVER BRIDGE (REHAB)
CONST. SEQUENCE DETAILS NO. 9

STRUCTURES DESIGN DETAIL SHEET (ENGLISH) (REV. 09-01-10)

ORIGINAL SCALE IN INCHES FOR REDUCED PLANS 0 1 2 3

UNIT: 3591
PROJECT NUMBER & PHASE: 1012000053-1
CONTRACT NO.: 10-0L9704

DISREGARD PRINTS BEARING EARLIER REVISION DATES

REVISION DATES 2-4-14 2-13-15 1-26-15

SHEET 42 OF 50

FILE => 32-0018-o-const-seq9.dgn

USERNAME => s113541 DATE PLOTTED => 12-NOV-2015 TIME PLOTTED => 11:10

DIST	COUNTY	ROUTE	POST MILES TOTAL PROJECT	SHEET No.	TOTAL SHEETS
10	Tuo	120	R19.4/R20.0	112	119

REGISTERED CIVIL ENGINEER 5/28/15 DATE

6-22-15
PLANS APPROVAL DATE

REGISTERED PROFESSIONAL ENGINEER DON NGUYEN-TAN No. C 57510 Exp. 12-31-15 CIVIL STATE OF CALIFORNIA

The State of California or its officers or agents shall not be responsible for the accuracy or completeness of scanned copies of this plan sheet.

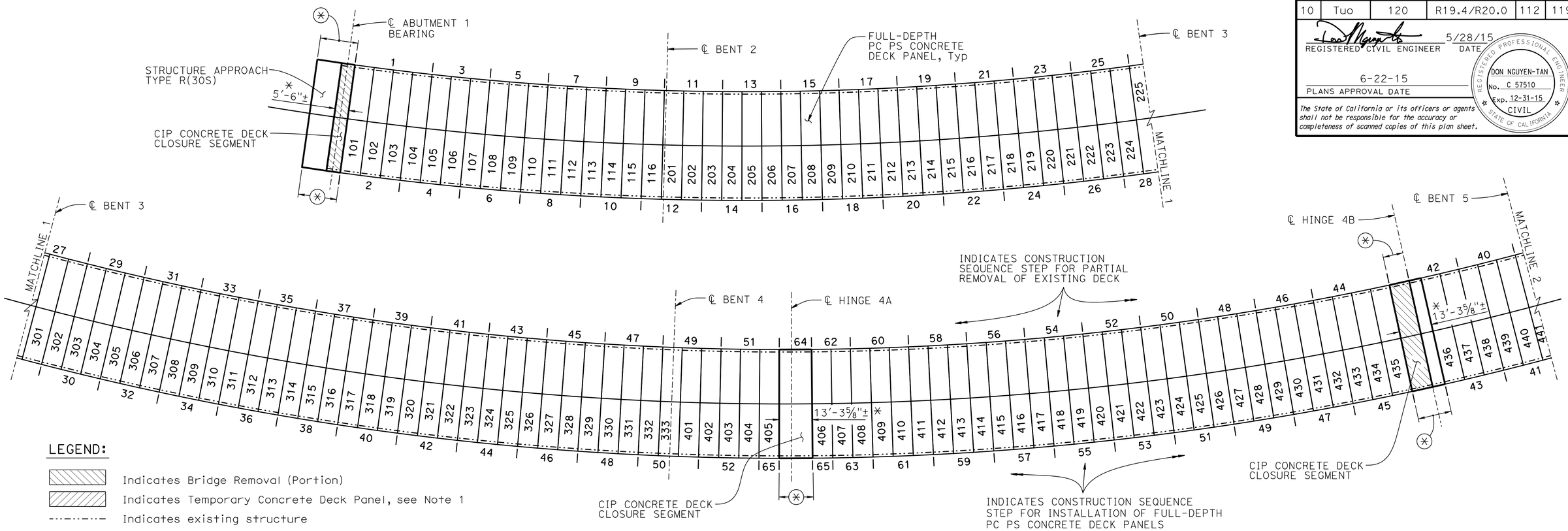

STRUCTURE APPROACH & CIP DECK CLOSURE SEGMENT CONSTRUCTION

1" = 20'-0"

LEGEND:

- Indicates Bridge Removal (Portion)
- Indicates Temporary Concrete Deck Panel, see Note 1
- Indicates existing structure
- Indicates new construction (current step)
- Indicates new construction (previous step)
- Indicates future construction step
- ✳ Denotes dimension measured along "L1" Line
- ⊛ Denotes Structure Approach and CIP Concrete Deck Closure Segment construction
- 309 Denotes Full-Depth PC PS Concrete Deck Panel Number (Span Number — Panel Number)

NOTE:

1. For NOTES, see "CONST. SEQUENCE DETAILS NO. 1" sheet.

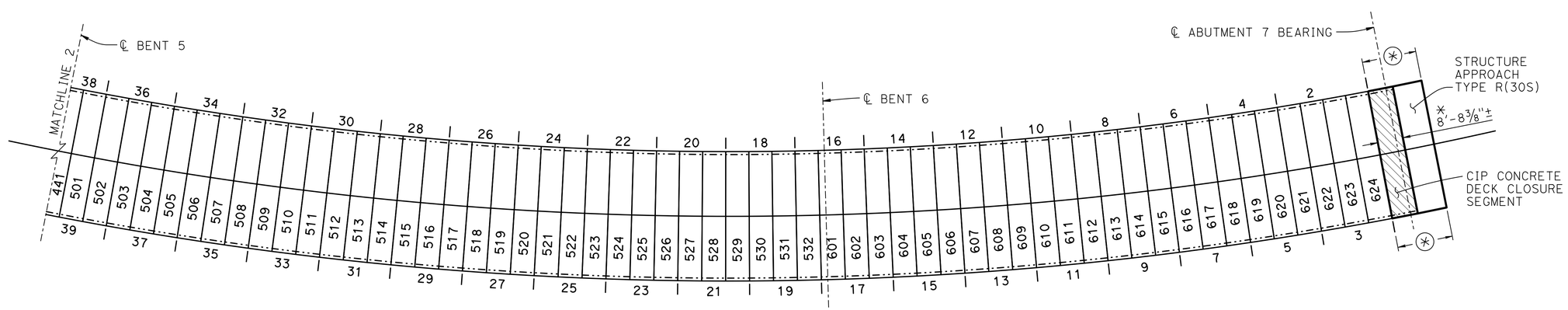

NOTE:
VERIFY ALL CONTROLLING FIELD DIMENSIONS BEFORE ORDERING OR FABRICATING ANY MATERIAL.

DESIGN	BY R. MELKO/S.PAHLAVAN	CHECKED D. NGUYEN-TAN	
DETAILS	BY D. PATO	CHECKED D. NGUYEN-TAN	
QUANTITIES	BY S. MORIMOTO	CHECKED R. MELKO	

STATE OF CALIFORNIA
DEPARTMENT OF TRANSPORTATION

DIVISION OF ENGINEERING SERVICES
STRUCTURE DESIGN
DESIGN BRANCH 6

BRIDGE NO. 32-0018
POST MILE 19.6

TUOLUMNE RIVER BRIDGE (REHAB)
CONST. SEQUENCE DETAILS NO. 10

STRUCTURES DESIGN DETAIL SHEET (ENGLISH) (REV. 09-01-10)

ORIGINAL SCALE IN INCHES FOR REDUCED PLANS 0 1 2 3

UNIT: 3591
PROJECT NUMBER & PHASE: 1012000053-1
CONTRACT NO.: 10-0L9704

DISREGARD PRINTS BEARING EARLIER REVISION DATES

REVISION DATES 2-4-14 2-13-15 1-26-15

SHEET 43 OF 50

FILE => 32-0018-o-const-sequ10.dgn

USERNAME => s113541 DATE PLOTTED => 12-NOV-2015 TIME PLOTTED => 11:10

DIST	COUNTY	ROUTE	POST MILES TOTAL PROJECT	SHEET No.	TOTAL SHEETS
10	Tuo	120	R19.4/R20.0	113	119

REGISTERED CIVIL ENGINEER 5/28/15 DATE

6-22-15
PLANS APPROVAL DATE

REGISTERED PROFESSIONAL ENGINEER DON NGUYEN-TAN No. C 57510 Exp. 12-31-15 CIVIL STATE OF CALIFORNIA

The State of California or its officers or agents shall not be responsible for the accuracy or completeness of scanned copies of this plan sheet.

EXPANSION BEARING TABLE

LOCATION	MAXIMUM VERTICAL LOAD (Kips)	MINIMUM DEAD LOAD (Kips)	DESIGN ROTATION (Radians)	CONCAVE PLATE					CONVEX PLATE		MASONRY PLATE			SOLE PLATE			ASSEMBLY HEIGHT
				WIDTH / LENGTH	FLAT PTFE AREA (in^2)	DIAMETER	SPHERICAL DEGREES	MAXIMUM THICKNESS	DIAMETER	MAXIMUM THICKNESS	WIDTH	LENGTH	THICKNESS	WIDTH	LENGTH	THICKNESS	
				L_{cp}	A_{PTFE}	D_m	R_{act}	T_{cp}	C_m	H_{act}	W_{mp}	L_{mp}	T_{mp}	W_{sp}	L_{sp}	T_{sp}	A_h
ABUTMENT 1	314	163	0.0349	11.000	72.250	9.50	20.50	1.375	11.00	1.625	58± ✳	25.00	1.50	20.00	21.00	1.50	5.440
BENT 2	947	658	0.0349	18.000	217.563	16.50	35.75	1.750	19.00	2.125	71.50	35.00	2.00	24.00	47.00	1.75	6.504
BENT 3	1208	881	0.0349	20.000	272.250	18.50	36.00	2.000	20.75	2.375	71.50	35.00	2.25	30.00	47.00	2.00	7.260
BENT 4	1876	1503	0.0349	24.750	420.250	23.25	36.00	2.750	25.25	3.125	71.50	35.00	2.50	30.00	47.00	2.50	8.790
BENT 5	1876	1503	0.0349	24.750	420.250	23.25	36.00	2.750	25.25	3.125	71.50	35.00	2.50	30.00	47.00	2.50	8.790
BENT 6	1208	881	0.0349	20.000	272.250	18.50	36.00	2.000	20.75	2.375	71.50	35.00	2.25	30.00	47.00	2.00	7.260
ABUTMENT 7	496	328	0.0349	13.500	110.250	12.00	26.00	1.500	13.75	1.750	58± ✳	25.00	1.50	32.00	24.50	1.75	5.796

✳ - SEE "ABUTMENT DETAILS NO.1" SHEET TO DETERMINE ACCURATE Wmp DIMENSION.

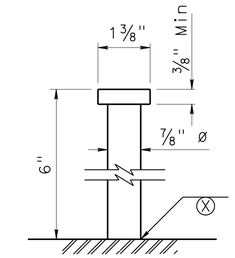

STUD CONNECTOR
1' = 6"

NOTES:

1. Abutment 1 shown, Abutment 7 similar.
2. Existing girder, concrete pedestal, rebar and studs not shown for clarity.
3. All units in inches unless otherwise noted.
4. All dimensions shown are steel only unless otherwise noted.
5. H_{act} includes stainless steel.
6. A_h includes PTFE, substratum and stainless steel, (Varies).
7. R_{act} is to steel concave surface.
8. See "ABUTMENT LAYOUT", "ABUTMENT DETAILS", "BENT DETAILS No.1", and "GIRDER STRENGTHENING DETAILS" sheets for connection of Sole Plate to existing girder.

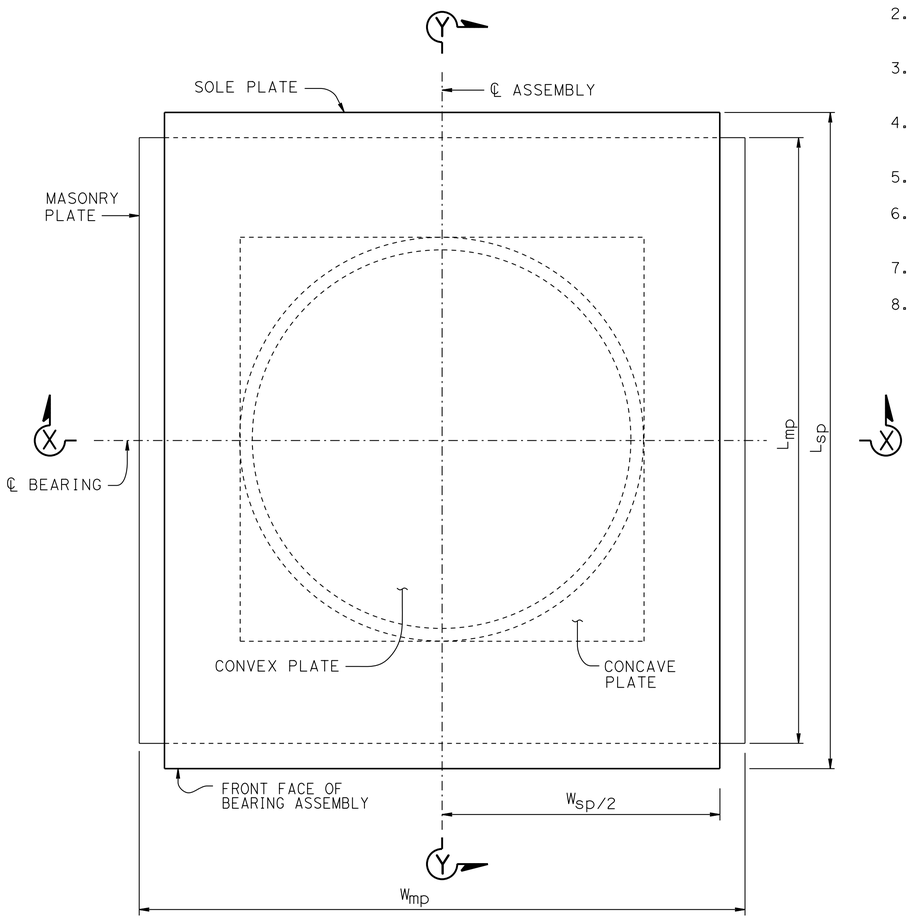

PLAN - ABUTMENT
NO SCALE

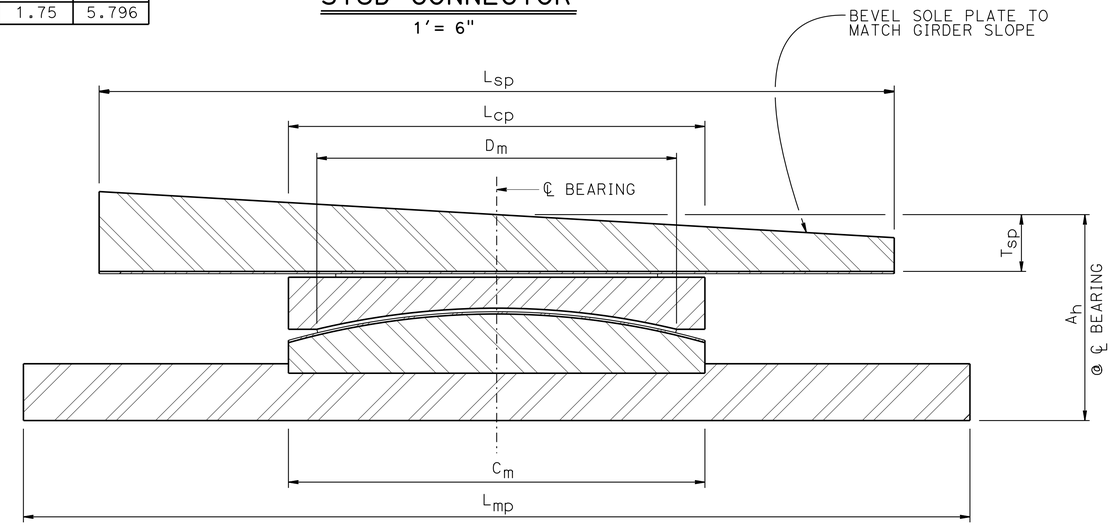

SECTION Y-Y
NO SCALE

NOTE:
For dimensions not shown, see "SECTION X-X".

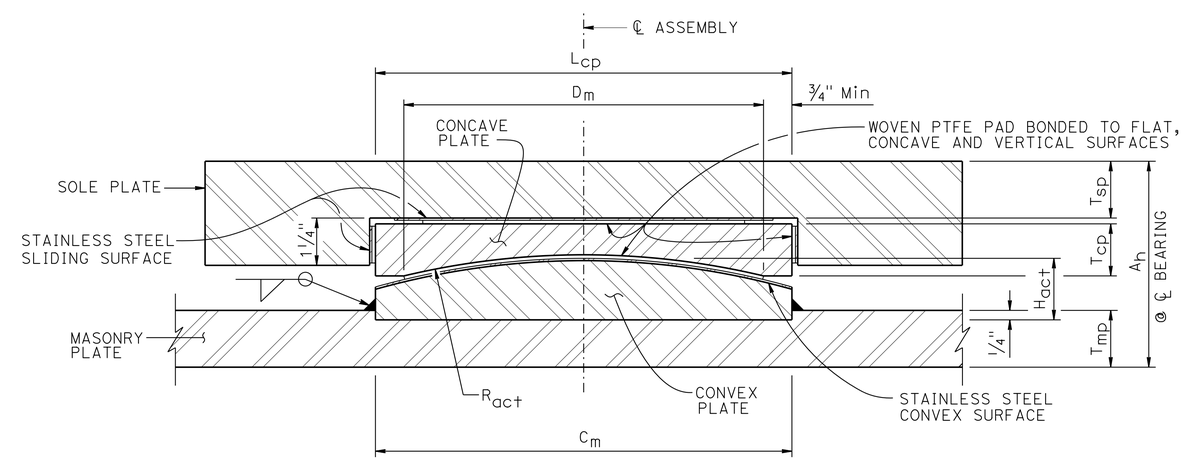

SECTION X-X
NO SCALE

NOTE:
VERIFY ALL CONTROLLING FIELD DIMENSIONS BEFORE ORDERING OR FABRICATING ANY MATERIAL.

	BY	CHECKED
DESIGN	R. MELKO	S. PAHLAVAN
DETAILS	D. PATO	D. NGUYEN-TAN
QUANTITIES	S. MORIMOTO	R. MELKO

ORIGINAL SCALE IN INCHES FOR REDUCED PLANS 0 1 2 3

STATE OF CALIFORNIA
DEPARTMENT OF TRANSPORTATION

DIVISION OF ENGINEERING SERVICES
STRUCTURE DESIGN
DESIGN BRANCH 6

BRIDGE NO. 32-0018
POST MILE 19.6

TUOLUMNE RIVER BRIDGE (REHAB)
SPHERICAL BEARING DETAILS NO. 1

UNIT: 3591
PROJECT NUMBER & PHASE: 1012000053-1
CONTRACT NO.: 10-0L9704

DISREGARD PRINTS BEARING EARLIER REVISION DATES

REVISION DATES: 06-11-13 06-17-15 1-20-15

SHEET 44 OF 50

FILE => 32-0018-q-ptfe-bearing-dt1.dgn

USERNAME => s113541 DATE PLOTTED => 12-NOV-2015 TIME PLOTTED => 11:10

DIST	COUNTY	ROUTE	POST MILES TOTAL PROJECT	SHEET No.	TOTAL SHEETS
10	Tuo	120	R19.4/R20.0	114	119

REGISTERED CIVIL ENGINEER 5/28/15 DATE

6-22-15
PLANS APPROVAL DATE

REGISTERED PROFESSIONAL ENGINEER DON NGUYEN-TAN No. C 57510 Exp. 12-31-15 CIVIL STATE OF CALIFORNIA

The State of California or its officers or agents shall not be responsible for the accuracy or completeness of scanned copies of this plan sheet.

NOTES:

1. Bent 4 shown, Bents 2,3,5 & 6 similar.
2. Existing girder, concrete pedestal, rebar, and studs not shown for clarity.
3. All units in inches unless otherwise noted.
4. All dimensions shown are steel only unless otherwise noted.
5. H_{act} includes stainless steel.
6. A_h includes PTFE, substratum, and stainless steel (Varies).
7. R_{act} is to steel concave surface.
8. See "BENT DETAILS NO.1" sheet for connection of Sole Plate to existing girder.

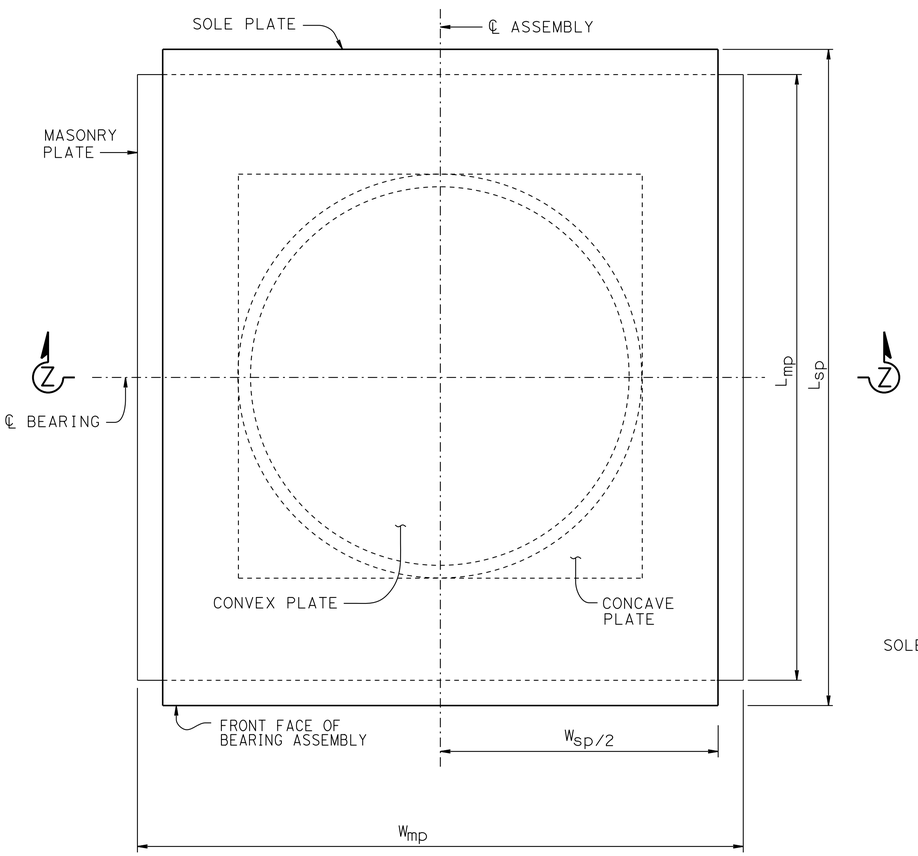

PLAN - BENT

NO SCALE

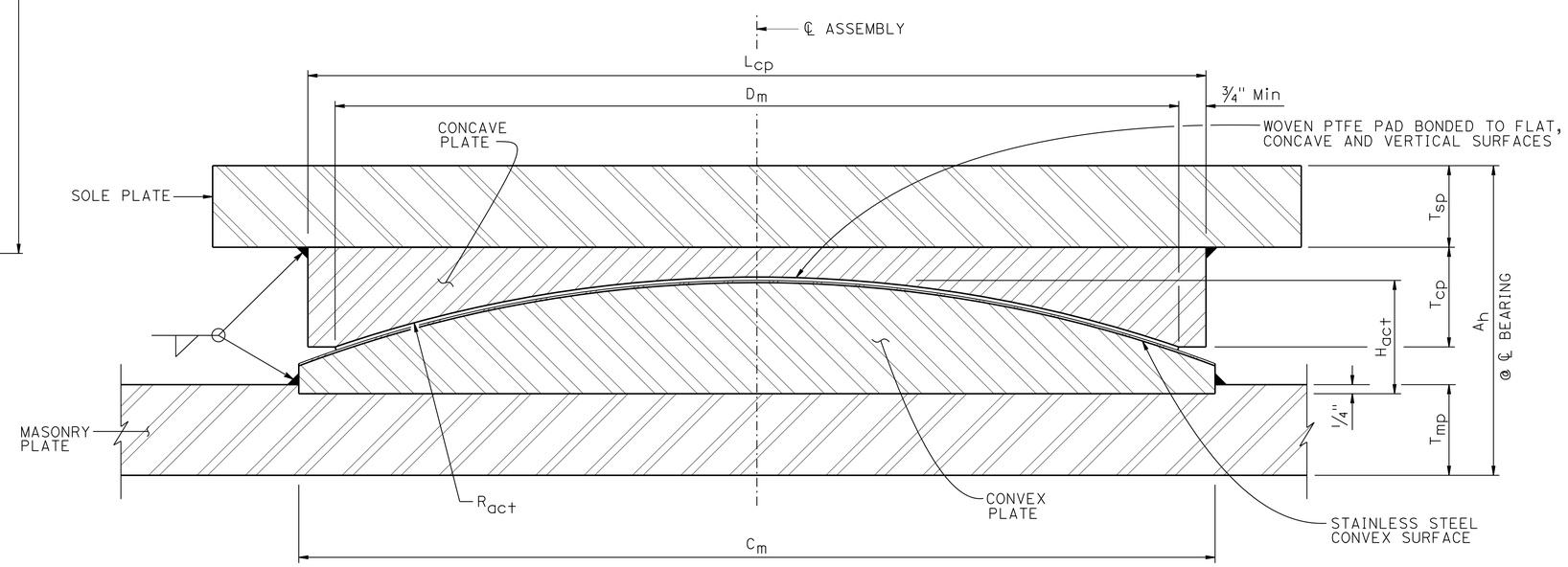

SECTION Z-Z

NO SCALE

NOTE:
VERIFY ALL CONTROLLING FIELD DIMENSIONS BEFORE ORDERING OR FABRICATING ANY MATERIAL.

NOTE:
For Expansion Bearing information, see "EXPANSION BEARING TABLE" on "SPHERICAL BEARING DETAILS NO. 1" sheet.

	BY	CHECKED
DESIGN	R. MELKO	S. PAHLAVAN
DETAILS	D. PATO	D. NGUYEN-TAN
QUANTITIES	S. MORIMOTO	R. MELKO

STATE OF CALIFORNIA
DEPARTMENT OF TRANSPORTATION

DIVISION OF ENGINEERING SERVICES
STRUCTURE DESIGN
DESIGN BRANCH 6

BRIDGE NO. 32-0018
POST MILE 19.6

TUOLUMNE RIVER BRIDGE (REHAB)
SPHERICAL BEARING DETAILS NO. 2

STRUCTURES DESIGN DETAIL SHEET (ENGLISH) (REV. 09-01-10)

ORIGINAL SCALE IN INCHES FOR REDUCED PLANS 0 1 2 3

UNIT: 3591
PROJECT NUMBER & PHASE: 1012000053-1
CONTRACT NO.: 10-0L9704

DISREGARD PRINTS BEARING EARLIER REVISION DATES

REVISION DATES: 3-24-14 06-17-14 6-23-15

SHEET 45 OF 50

FILE => 32-0018-q-ptfe-bearing-dt2.dgn

USERNAME => s113541 DATE PLOTTED => 12-NOV-2015 TIME PLOTTED => 11:10

DIST	COUNTY	ROUTE	POST MILES TOTAL PROJECT	SHEET No.	TOTAL SHEETS
10	Tuo	120	R19.4/R20.0	115	119

REGISTERED CIVIL ENGINEER 5/28/15 DATE

6-22-15
PLANS APPROVAL DATE

REGISTERED PROFESSIONAL ENGINEER DON NGUYEN-TAN No. C 57510 Exp. 12-31-15 CIVIL STATE OF CALIFORNIA

The State of California or its officers or agents shall not be responsible for the accuracy or completeness of scanned copies of this plan sheet.

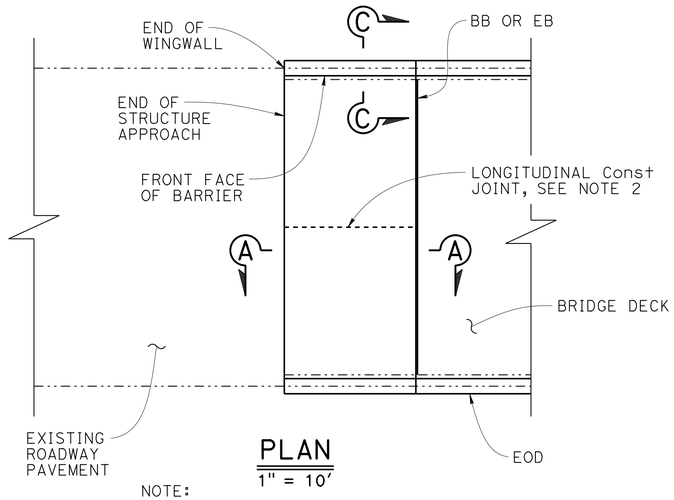

PLAN
1" = 10'

NOTE:
Abutment 1 shown, Abutment 7 similar

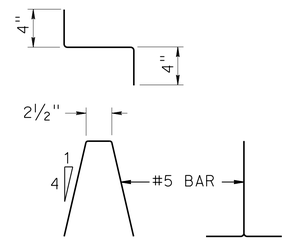

BAR CHAIR DETAIL
1½" = 1'-0"

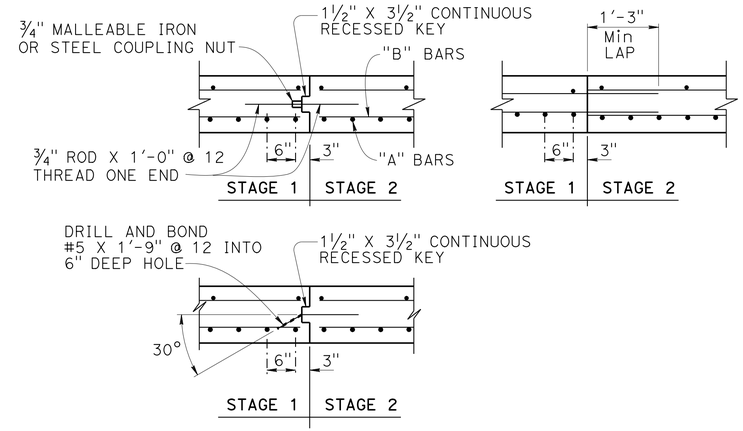

LONGITUDINAL CONSTRUCTION JOINT ALTERNATIVES
¾" = 1'-0"

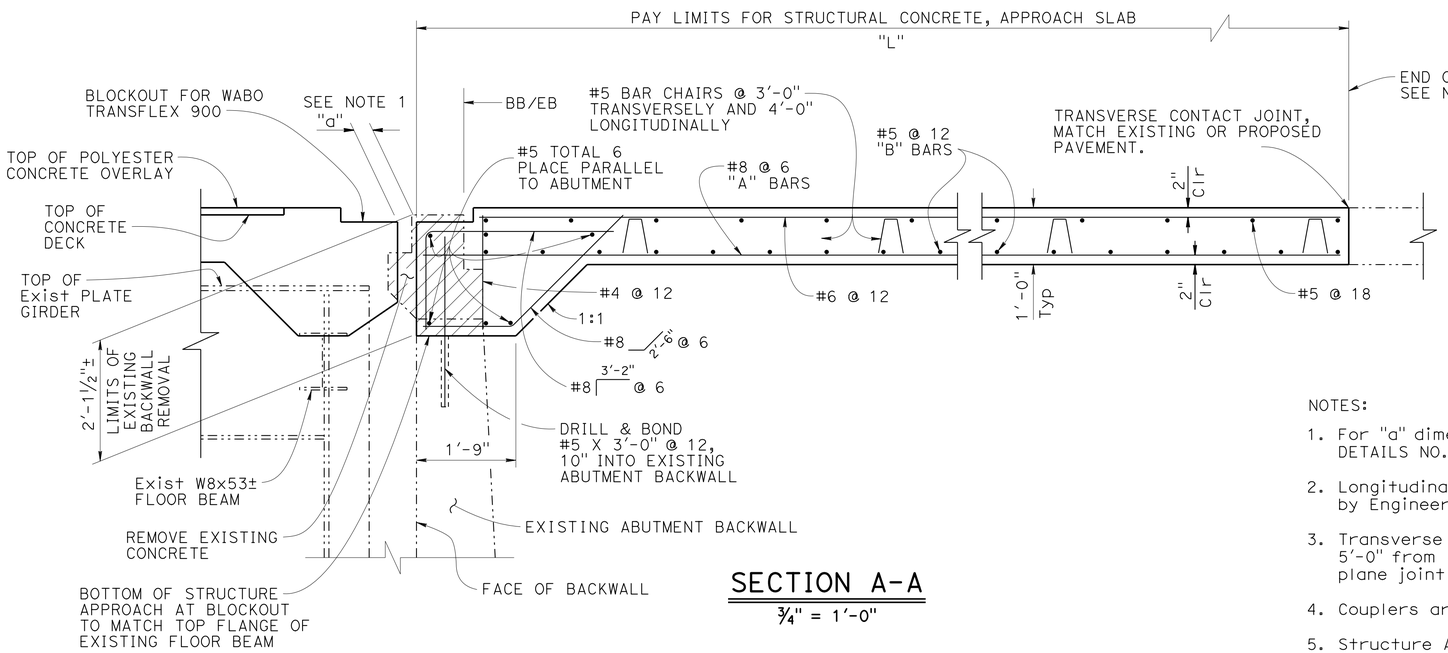

SECTION A-A
¾" = 1'-0"

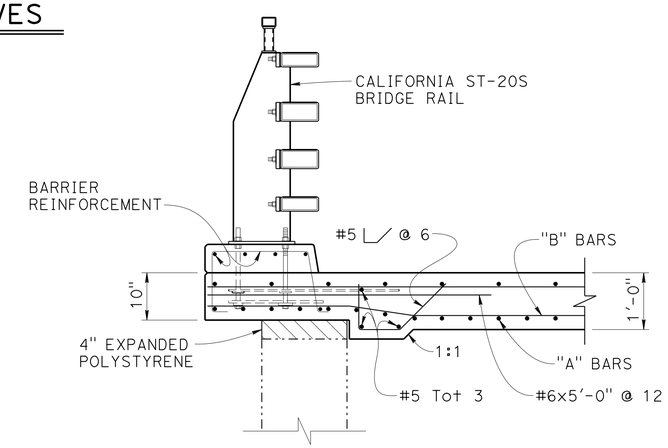

SECTION C-C
¾" = 1'-0"

NOTES:

1. For "a" dimension, see "CLOSURE SEGMENT DETAILS NO. 1" sheet.
2. Longitudinal construction joints, when permitted by Engineer, must be located on lane lines.
3. Transverse contact joint must be a minimum of 5'-0" from an existing or constructed weakened plane joint.
4. Couplers are required for stage construction.
5. Structure Approach Limits may be extended beyond the end of wingwall to maintain constant slab width.
6. For dimension "L" and existing Approach Slab & Wingwall removal limits, see "ABUTMENT DETAILS NO.2" sheet.
7. WABO TRANSFLEX Joint Seal System to conform to and seal ST-20S Bridge Rail curb.

NOTE:
VERIFY ALL CONTROLLING FIELD DIMENSIONS BEFORE ORDERING OR FABRICATING ANY MATERIAL.

	BY	CHECKED
DESIGN	R. MELKO	D. NGUYEN-TAN
DETAILS	D. PATO	D. NGUYEN-TAN
QUANTITIES	S. MORIMOTO	R. MELKO

STATE OF CALIFORNIA
DEPARTMENT OF TRANSPORTATION

DIVISION OF ENGINEERING SERVICES
STRUCTURE DESIGN
DESIGN BRANCH 6

BRIDGE NO. 32-0018
POST MILE 19.6

TUOLUMNE RIVER BRIDGE (REHAB)
STRUCTURE APPROACH TYPE R(30S)

STRUCTURES DESIGN DETAIL SHEET (ENGLISH) (REV. 09-01-10)

ORIGINAL SCALE IN INCHES FOR REDUCED PLANS 0 1 2 3

UNIT: 3591
PROJECT NUMBER & PHASE: 1012000053-1
CONTRACT NO.: 10-0L9704

DISREGARD PRINTS BEARING EARLIER REVISION DATES 12-16-13 5-27-14 1-30-15 2-13-15

SHEET 46 OF 50

FILE => 32-0018-r-sa-r30s.dgn

USERNAME => s113541 DATE PLOTTED => 12-NOV-2015 TIME PLOTTED => 11:10

DIST	COUNTY	ROUTE	POST MILES TOTAL PROJECT	SHEET No.	TOTAL SHEETS
10	Tuo	120	R19.4/R20.0	116	119

REGISTERED CIVIL ENGINEER 5/28/15 DATE

6-22-15
PLANS APPROVAL DATE

REGISTERED PROFESSIONAL ENGINEER DON NGUYEN-TAN No. C 57510 Exp. 12-31-15 CIVIL STATE OF CALIFORNIA

The State of California or its officers or agents shall not be responsible for the accuracy or completeness of scanned copies of this plan sheet.

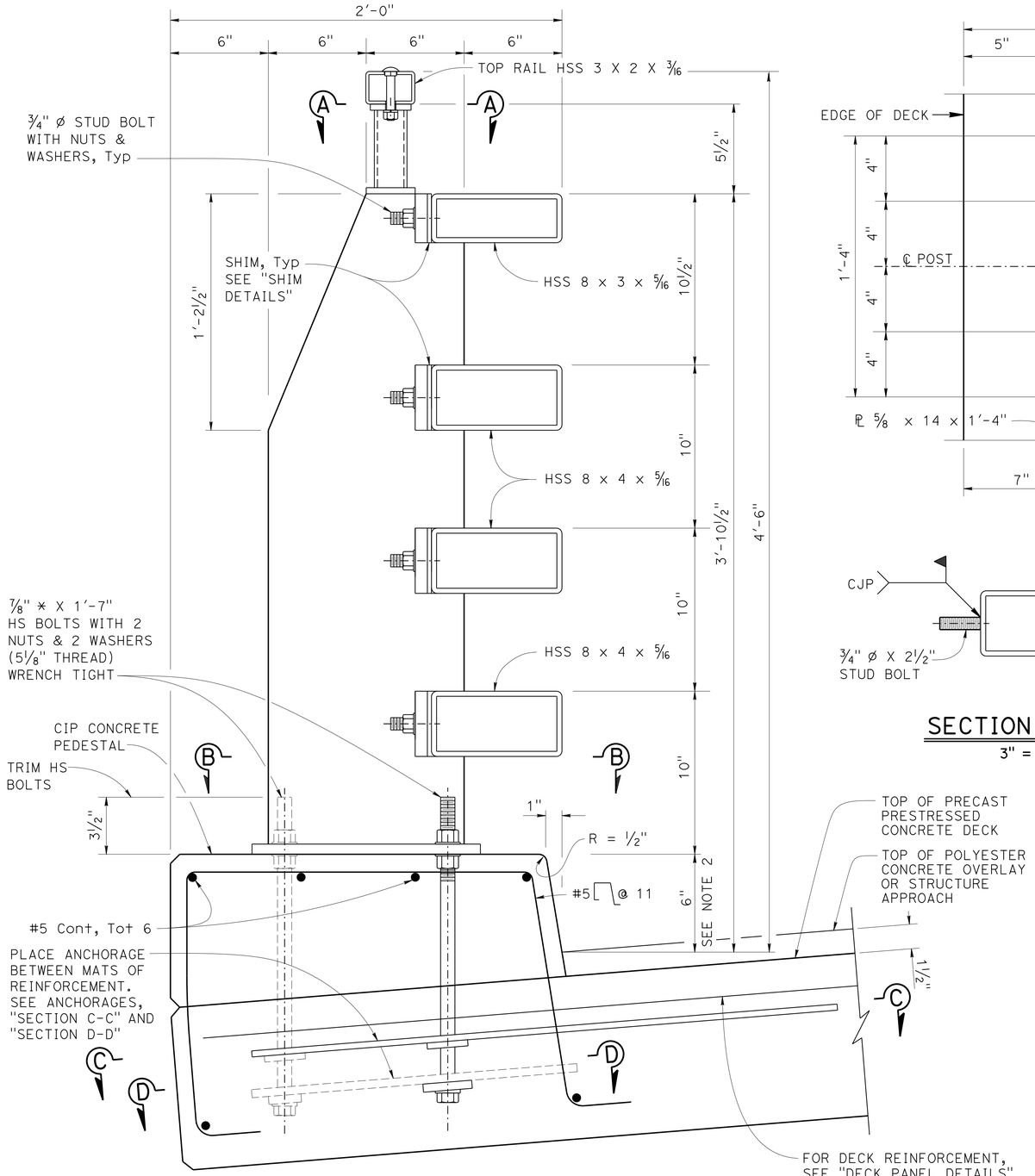

NOTE:
VERIFY ALL CONTROLLING FIELD DIMENSIONS BEFORE ORDERING OR FABRICATING ANY MATERIAL.

TYPICAL SECTION OF BRIDGE RAIL
3" = 1'-0"

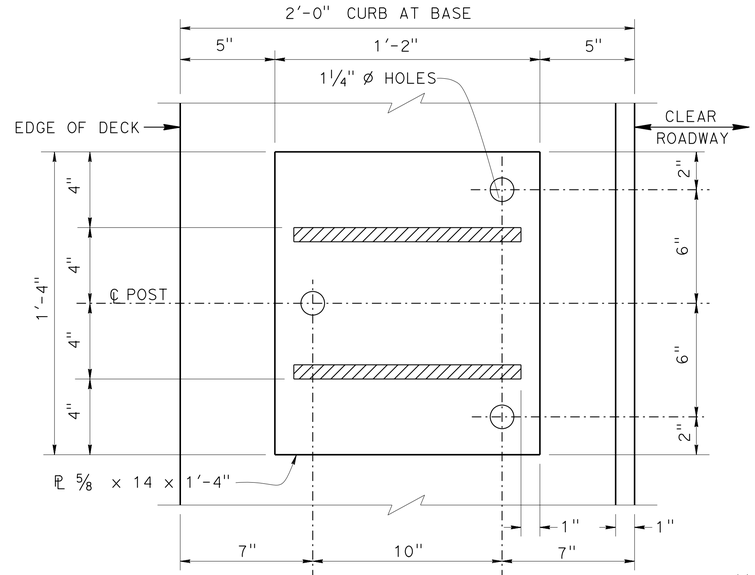

SECTION B-B
3" = 1'-0"

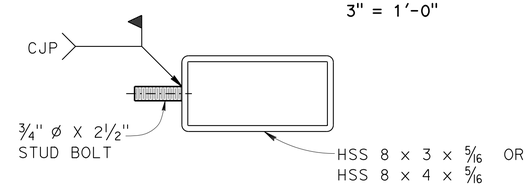

SECTION AT POST
3" = 1'-0"

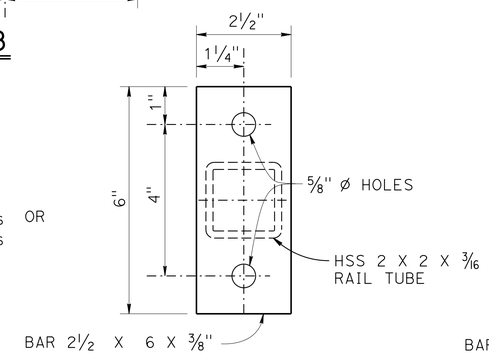

SECTION A-A
6" = 1'-0"

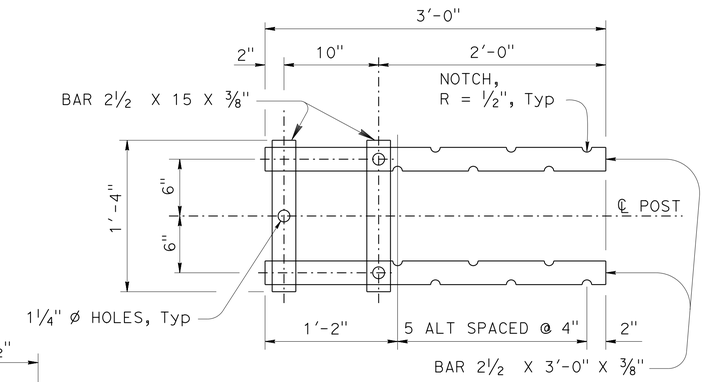

TOP ANCHORAGE
SECTION C-C
1 1/2" = 1'-0"

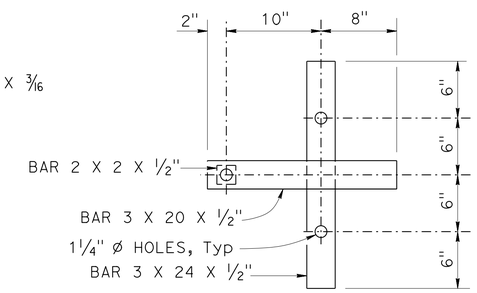

LOWER ANCHORAGE
SECTION D-D
1 1/2" = 1'-0"

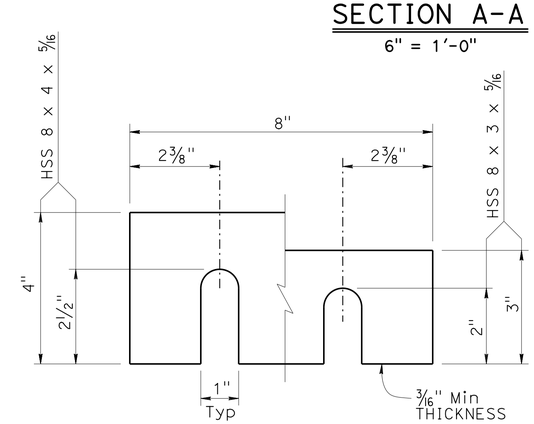

SHIM DETAILS
6" = 1'-0"

NOTES:
1. Bridge rail posts must be vertical.
2. Prior to forming curb, determine polyester overlay thickness needed to meet deck profile and grade.
3. All bar reinforcement in curb must be epoxy coated

	BY	CHECKED
DESIGN	R. MELKO	D. NGUYEN-TAN
DETAILS	D. PATO	D. NGUYEN-TAN
QUANTITIES	S. MORIMOTO	D. NGUYEN-TAN

STATE OF CALIFORNIA
DEPARTMENT OF TRANSPORTATION

DIVISION OF ENGINEERING SERVICES
STRUCTURE DESIGN
DESIGN BRANCH 6

BRIDGE NO. 32-0018
POST MILE 19.6

TUOLUMNE RIVER BRIDGE (REHAB)
CA ST-20S RAIL DETAILS NO. 1

STRUCTURES DESIGN DETAIL SHEET (ENGLISH) (REV. 09-01-10)

ORIGINAL SCALE IN INCHES FOR REDUCED PLANS 0 1 2 3

UNIT: 3591
PROJECT NUMBER & PHASE: 1012000053-1
CONTRACT NO.: 10-0L9704

DISREGARD PRINTS BEARING EARLIER REVISION DATES

REVISION DATES 3-04-13 6-17-15 10-14-14

SHEET 47 OF 50

FILE => 32-0018-t-cal-st-20s-rail01.dgn

USERNAME => s113541 DATE PLOTTED => 12-NOV-2015 TIME PLOTTED => 11:10

DIST	COUNTY	ROUTE	POST MILES TOTAL PROJECT	SHEET No.	TOTAL SHEETS
10	Tuo	120	R19.4/R20.0	117	119

REGISTERED CIVIL ENGINEER 5/28/15 DATE

6-22-15
PLANS APPROVAL DATE

REGISTERED PROFESSIONAL ENGINEER DON NGUYEN-TAN No. C 57510 Exp. 12-31-15 CIVIL STATE OF CALIFORNIA

The State of California or its officers or agents shall not be responsible for the accuracy or completeness of scanned copies of this plan sheet.

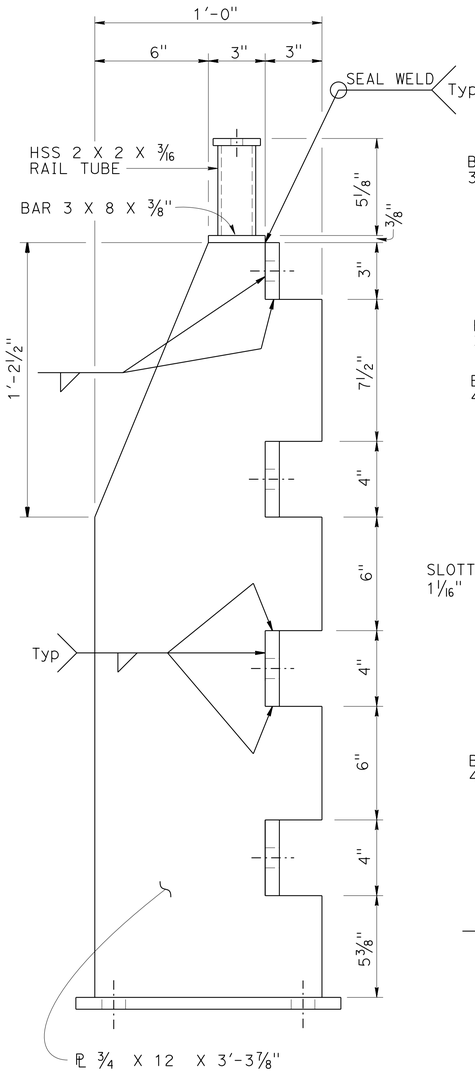

SECTION E-E

3" = 1'-0"

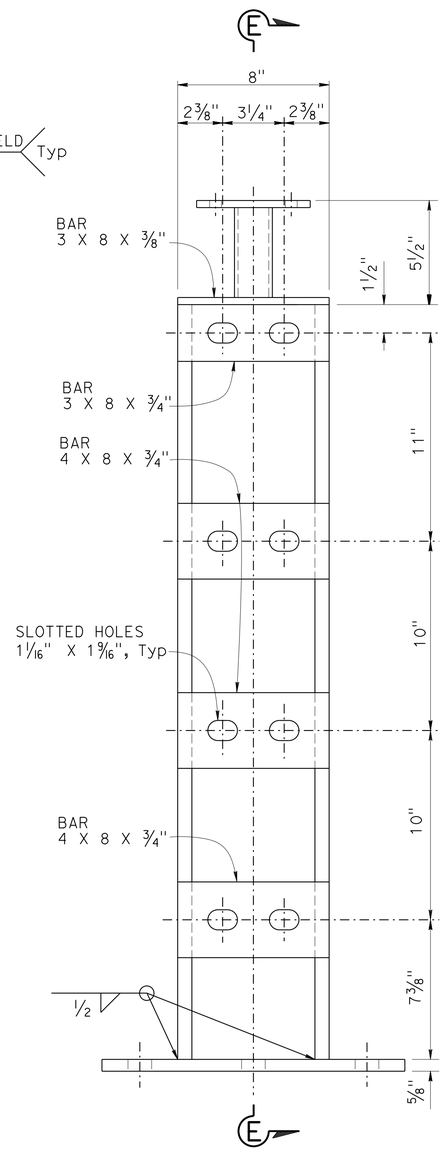

ELEVATION

3" = 1'-0"

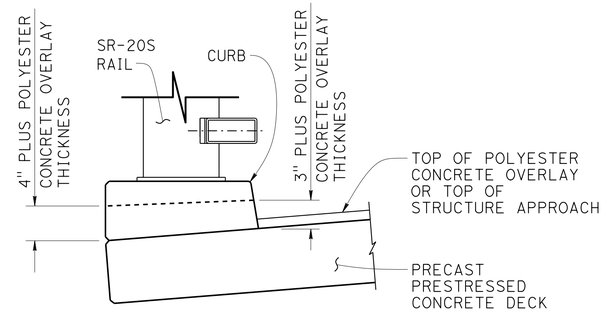

SECTION I-I

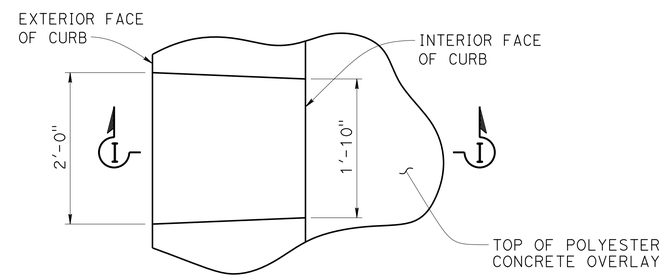

PLAN

SCUPPER DETAILS

1" = 1'-0"

* LOOKING UPSTATION

SCUPPER LOCATIONS	
STATION	SIDE *
1752+42	LEFT
1752+47	LEFT
1755+40	LEFT
1755+80	LEFT
1756+20	LEFT
1756+60	LEFT
1757+00	LEFT
1757+35	LEFT
1757+40	LEFT
1757+45	LEFT
1757+50	LEFT
1757+55	LEFT
1757+90	LEFT
1758+30	LEFT
1758+60	LEFT
1759+00	LEFT
1759+40	LEFT
1759+80	LEFT
1760+20	LEFT
1760+60	LEFT
1761+00	LEFT
1761+40	LEFT
1761+80	LEFT
1762+20	LEFT
1762+60	LEFT
1763+00	LEFT
1763+40	LEFT
1763+80	LEFT
1764+20	LEFT
1764+60	LEFT
1766+63	LEFT
1766+68	LEFT

NOTE:
Scupper locations may be adjusted to clear rail post anchorage assembly.

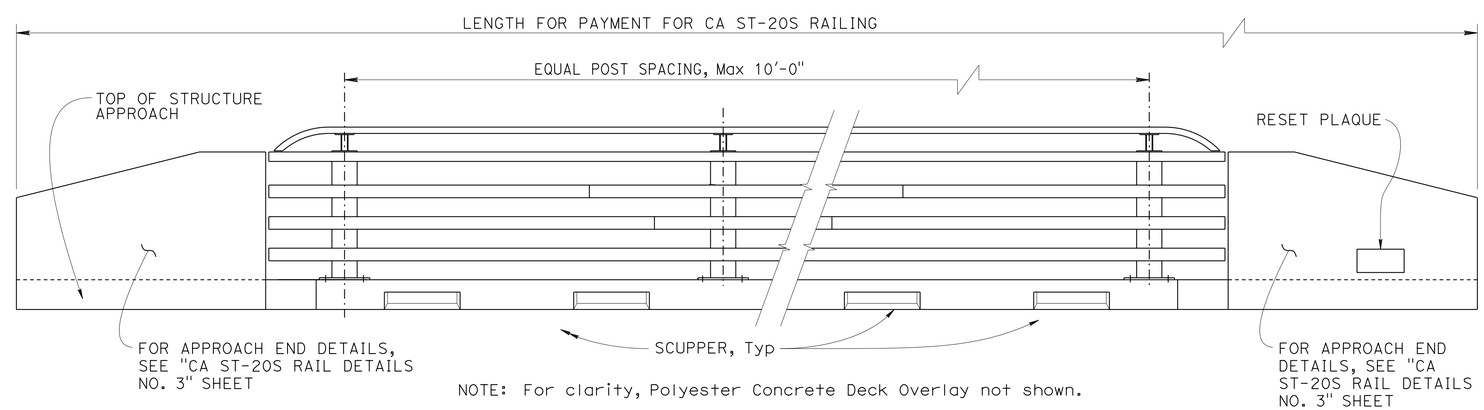

NOTE: For clarity, Polyester Concrete Deck Overlay not shown.

RAIL POST LAYOUT FOR TWO-WAY TRAFFIC ON BRIDGE & STRUCTURE APPROACH

1/2" = 1'-0"

NOTE:
VERIFY ALL CONTROLLING FIELD DIMENSIONS BEFORE ORDERING OR FABRICATING ANY MATERIAL.

	BY	CHECKED
DESIGN	R. MELKO	D. NGUYEN-TAN
DETAILS	D. PATO	D. NGUYEN-TAN
QUANTITIES	S. MORIMOTO	D. NGUYEN-TAN

STATE OF CALIFORNIA
DEPARTMENT OF TRANSPORTATION

DIVISION OF ENGINEERING SERVICES
STRUCTURE DESIGN
DESIGN BRANCH 6

BRIDGE NO. 32-0018
POST MILE 19.6

TUOLUMNE RIVER BRIDGE (REHAB)
CA ST-20S RAIL DETAILS NO. 2

STRUCTURES DESIGN DETAIL SHEET (ENGLISH) (REV. 09-01-10)

ORIGINAL SCALE IN INCHES FOR REDUCED PLANS 0 1 2 3

UNIT: 3591
PROJECT NUMBER & PHASE: 1012000053-1
CONTRACT NO.: 10-0L9704

DISREGARD PRINTS BEARING EARLIER REVISION DATES

REVISION DATES 3-04-13 1-20-15 10-14-14 12-14-14

SHEET 48 OF 50

FILE => 32-0018-t-cal-st-20s-rail02.dgn

USERNAME => s113541 DATE PLOTTED => 12-NOV-2015 TIME PLOTTED => 11:10

DIST	COUNTY	ROUTE	POST MILES TOTAL PROJECT	SHEET No.	TOTAL SHEETS
10	Tuo	120	R19.4/R20.0	118	119

REGISTERED CIVIL ENGINEER 5/28/15 DATE

6-22-15
PLANS APPROVAL DATE

REGISTERED PROFESSIONAL ENGINEER DON NGUYEN-TAN No. C 57510 Exp. 12-31-15 CIVIL STATE OF CALIFORNIA

The State of California or its officers or agents shall not be responsible for the accuracy or completeness of scanned copies of this plan sheet.

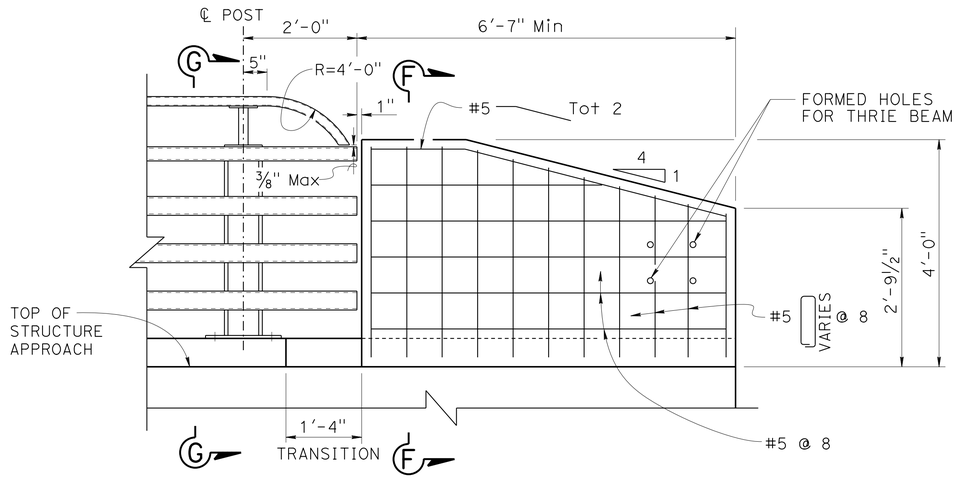

ELEVATION - APPROACH END

3/4" = 1'-0"

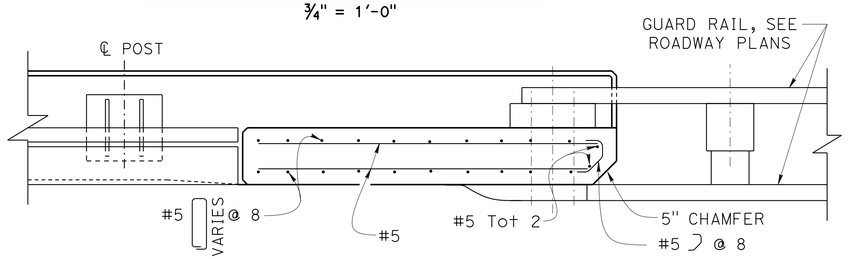

PLAN - APPROACH END

3/4" = 1'-0"

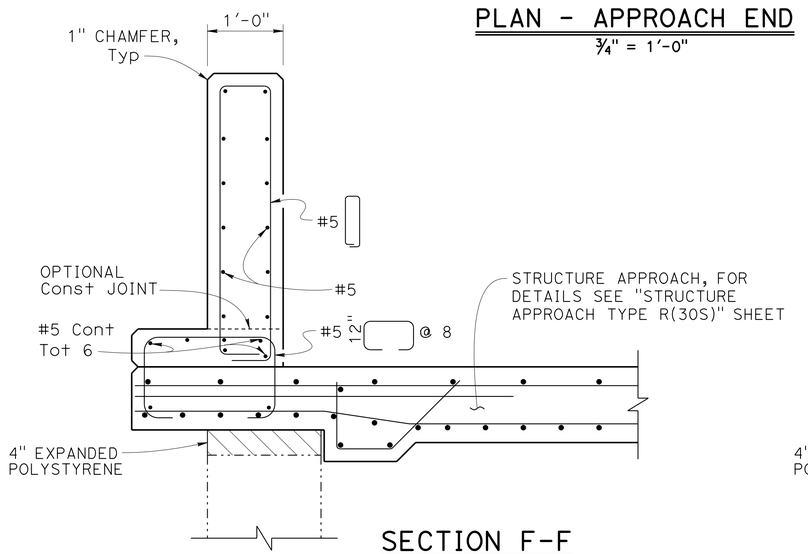

SECTION F-F

1" = 1'-0"

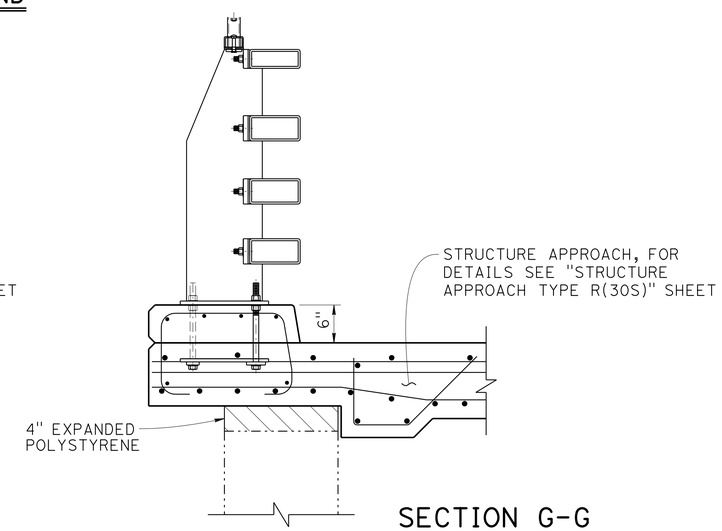

SECTION G-G

1" = 1'-0"

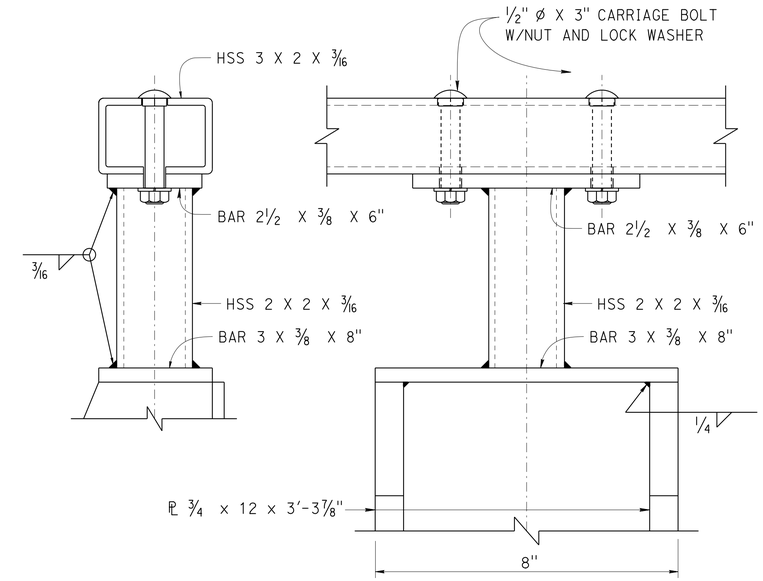

TOP RAIL CONNECTION DETAILS

6"= 1'-0"

NOTES:

1. Anchor bolts may be tack welded (shop or field) to anchorage.
2. Tubing must be bent or fabricated to fit horizontal curve when curve is less than 900'-0" in radius.
3. Each rail length must be continuous over a minimum of two posts.
4. Except for expansion splices, not more than one splice is permitted per same side of post.
5. All bar reinforcement in concrete rail end treatment, curb, and structure approach must be epoxy coated.

NOTE:
VERIFY ALL CONTROLLING FIELD DIMENSIONS BEFORE ORDERING OR FABRICATING ANY MATERIAL.

	BY	CHECKED
DESIGN	R. MELKO	D. NGUYEN-TAN
DETAILS	D. PATO	D. NGUYEN-TAN
QUANTITIES	S. MORIMOTO	D. NGUYEN-TAN

STATE OF CALIFORNIA
DEPARTMENT OF TRANSPORTATION

DIVISION OF ENGINEERING SERVICES
STRUCTURE DESIGN
DESIGN BRANCH 6

BRIDGE NO. 32-0018
POST MILE 19.6

TUOLUMNE RIVER BRIDGE (REHAB)
CA ST-20S RAIL DETAILS NO. 3

STRUCTURES DESIGN DETAIL SHEET (ENGLISH) (REV. 09-01-10)

ORIGINAL SCALE IN INCHES FOR REDUCED PLANS 0 1 2 3

UNIT: 3591
PROJECT NUMBER & PHASE: 1012000053-1
CONTRACT NO.: 10-0L9704

DISREGARD PRINTS BEARING EARLIER REVISION DATES

REVISION DATES: 3-04-13 | 6-17-15 | 1-26-15

SHEET 49 OF 50

FILE => 32-0018-t-cal-st-20s-rail03.dgn

USERNAME => s113541 DATE PLOTTED => 12-NOV-2015 TIME PLOTTED => 11:10

DIST	COUNTY	ROUTE	POST MILES TOTAL PROJECT	SHEET No.	TOTAL SHEETS
10	Tuo	120	R19.4/R20.0	119	119

REGISTERED CIVIL ENGINEER 5/28/15 DATE

6-22-15
PLANS APPROVAL DATE

REGISTERED PROFESSIONAL ENGINEER DON NGUYEN-TAN No. C 57510 Exp. 12-31-15 CIVIL STATE OF CALIFORNIA

The State of California or its officers or agents shall not be responsible for the accuracy or completeness of scanned copies of this plan sheet.

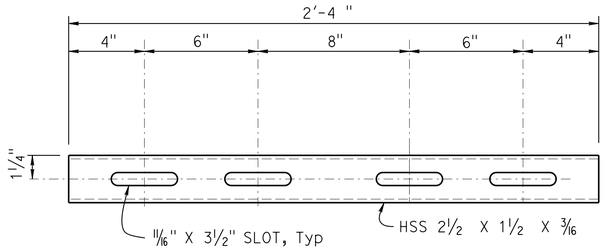

STANDARD SLEEVE DETAIL
3" = 1'-0"
(FOR HSS 3 X 2 X 3/16 RAIL)

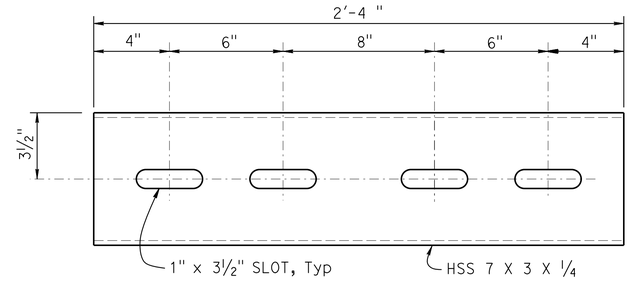

STANDARD SLEEVE DETAIL
3" = 1'-0"
(FOR HSS 8 X 4 X 5/16 RAIL)

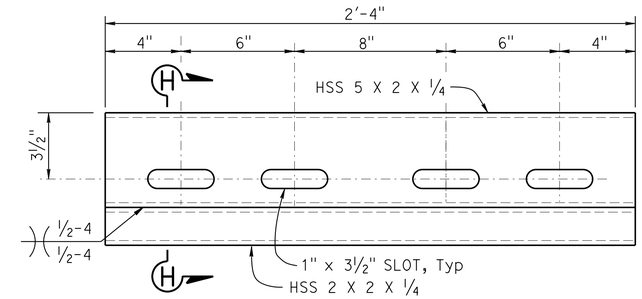

STANDARD SLEEVE DETAIL
3" = 1'-0"
(FOR HSS 8 X 3 X 5/16 RAIL)

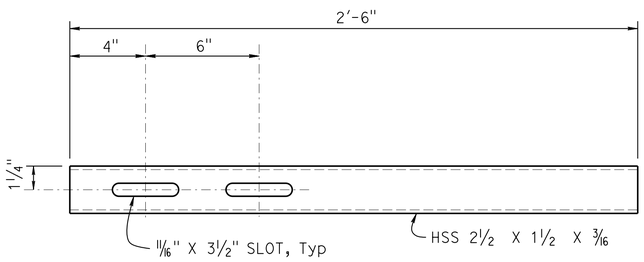

EXPANSION SLEEVE DETAIL
3" = 1'-0"
(FOR HSS 3 X 2 X 3/16 RAIL)

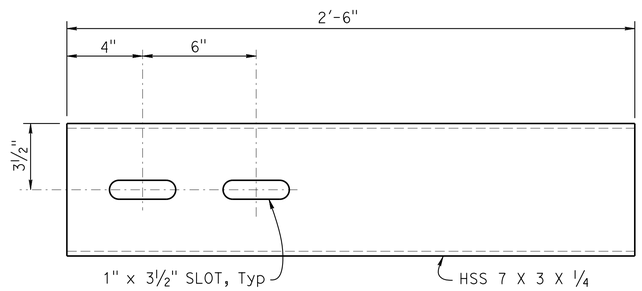

EXPANSION SLEEVE DETAIL
3" = 1'-0"
(FOR HSS 8 X 4 X 5/16 RAIL)

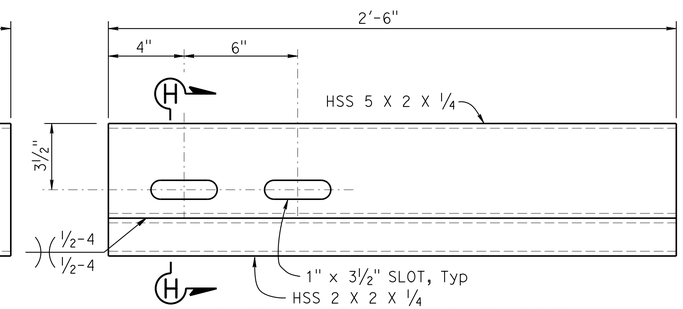

EXPANSION SLEEVE DETAIL
3" = 1'-0"
(FOR HSS 8 X 3 X 5/16 RAIL)

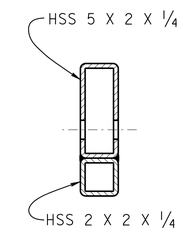

SECTION H-H
3" = 1'-0"

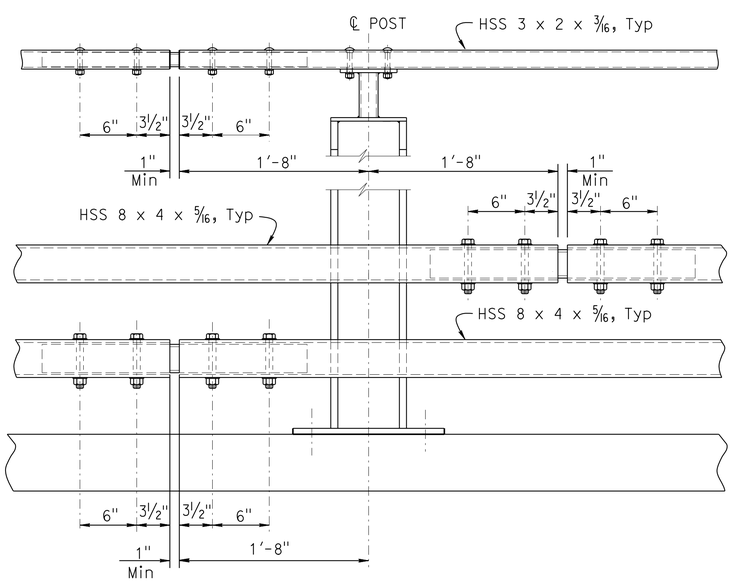

NOTE:
VERIFY ALL CONTROLLING FIELD DIMENSIONS BEFORE ORDERING OR FABRICATING ANY MATERIAL.

STANDARD SPLICE
1½"= 1'-0"

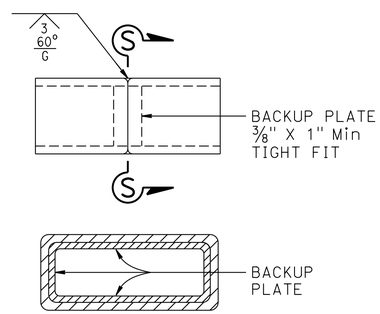

SECTION S-S

ALTERNATE TUBE WELDED SPLICE
3" = 1'-0"

NOTES:
HS bolts with washers, snug tightened
Use ½" ø X 3¼ (HSS 3 X 2 X 3/16)
Use ¾" ø X 5¼ (HSS 8 X 4 X 5/16)
Use ¾" ø X 4¼ (HSS 8 X 3 X 5/16)

2 rails are not shown for clarity

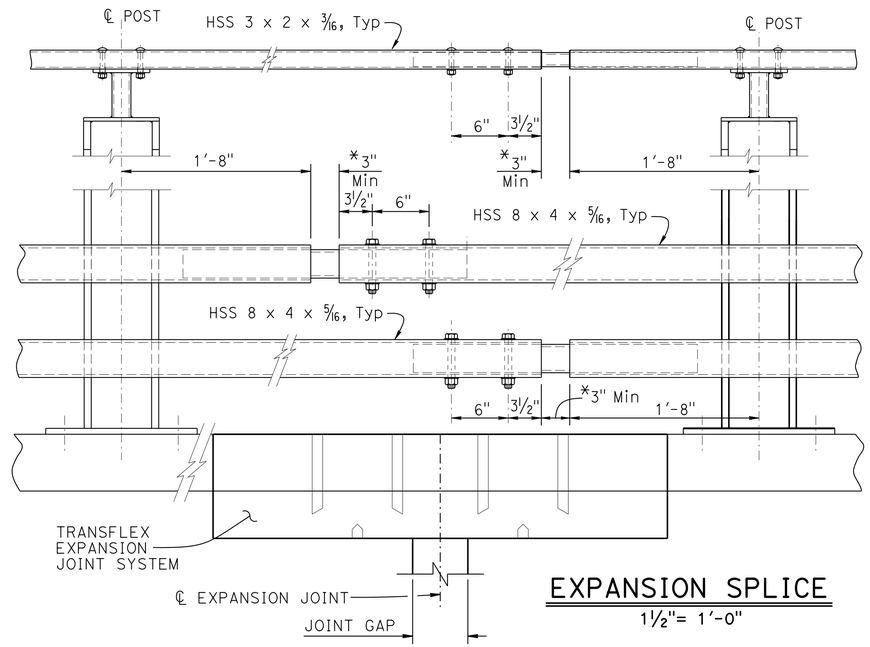

NOTE:
* - Match Expansion Joint Gap.

EXPANSION SPLICE
1½"= 1'-0"

	BY	CHECKED
DESIGN	R. MELKO	D. NGUYEN-TAN
DETAILS	D. PATO	D. NGUYEN-TAN
QUANTITIES	S. MORIMOTO	D. NGUYEN-TAN

STATE OF CALIFORNIA
DEPARTMENT OF TRANSPORTATION

DIVISION OF ENGINEERING SERVICES
STRUCTURE DESIGN
DESIGN BRANCH 6

BRIDGE NO. 32-0018
POST MILE 19.6

TUOLUMNE RIVER BRIDGE (REHAB)
CA ST-20S RAIL DETAILS NO. 4

STRUCTURES DESIGN DETAIL SHEET (ENGLISH) (REV. 09-01-10)

ORIGINAL SCALE IN INCHES FOR REDUCED PLANS 0 1 2 3

UNIT: 3591
PROJECT NUMBER & PHASE: 1012000053-1
CONTRACT NO.: 10-0L9704

DISREGARD PRINTS BEARING EARLIER REVISION DATES

REVISION DATES 5-21-14 10-17-14 1-20-15

SHEET 50 OF 50

FILE => 32-0018-t-cal-st-20s-rail04.dgn

USERNAME => s113541 DATE PLOTTED => 12-NOV-2015 TIME PLOTTED => 11:11:10