Dist	COUNTY	ROUTE	POST MILES TOTAL PROJECT	SHEET No.	TOTAL SHEETS
09	Iny,Mno	6,108,136,158 168,182,395	Var	1	59

STATE OF CALIFORNIA

DEPARTMENT OF TRANSPORTATION

ACHSSTPG-000C(416)E

PROJECT PLANS FOR CONSTRUCTION ON

STATE HIGHWAY

IN INYO AND MONO COUNTIES AT VARIOUS LOCATIONS

INDEX OF PLANS

Sheet No.	Description
1	TITLE AND LOCATION MAP
2-22	CONSTRUCTION DETAILS
23	TEMPORARY WATER POLLUTION CONTROL PLAN
24-32	TRAFFIC HANDLING PLAN
33	TRAFFIC HANDLING DETAILS
34-35	TRAFFIC HANDLING QUANTITIES
36-37	SUMMARY OF QUANTITIES
38-59	REVISED STANDARD PLANS

THE STANDARD PLANS LIST APPLICABLE TO THIS CONTRACT IS INCLUDED IN THE NOTICE TO CONTRACTORS AND SPECIAL PROVISIONS BOOK.

TO BE SUPPLEMENTED BY STANDARD PLANS DATED 2010

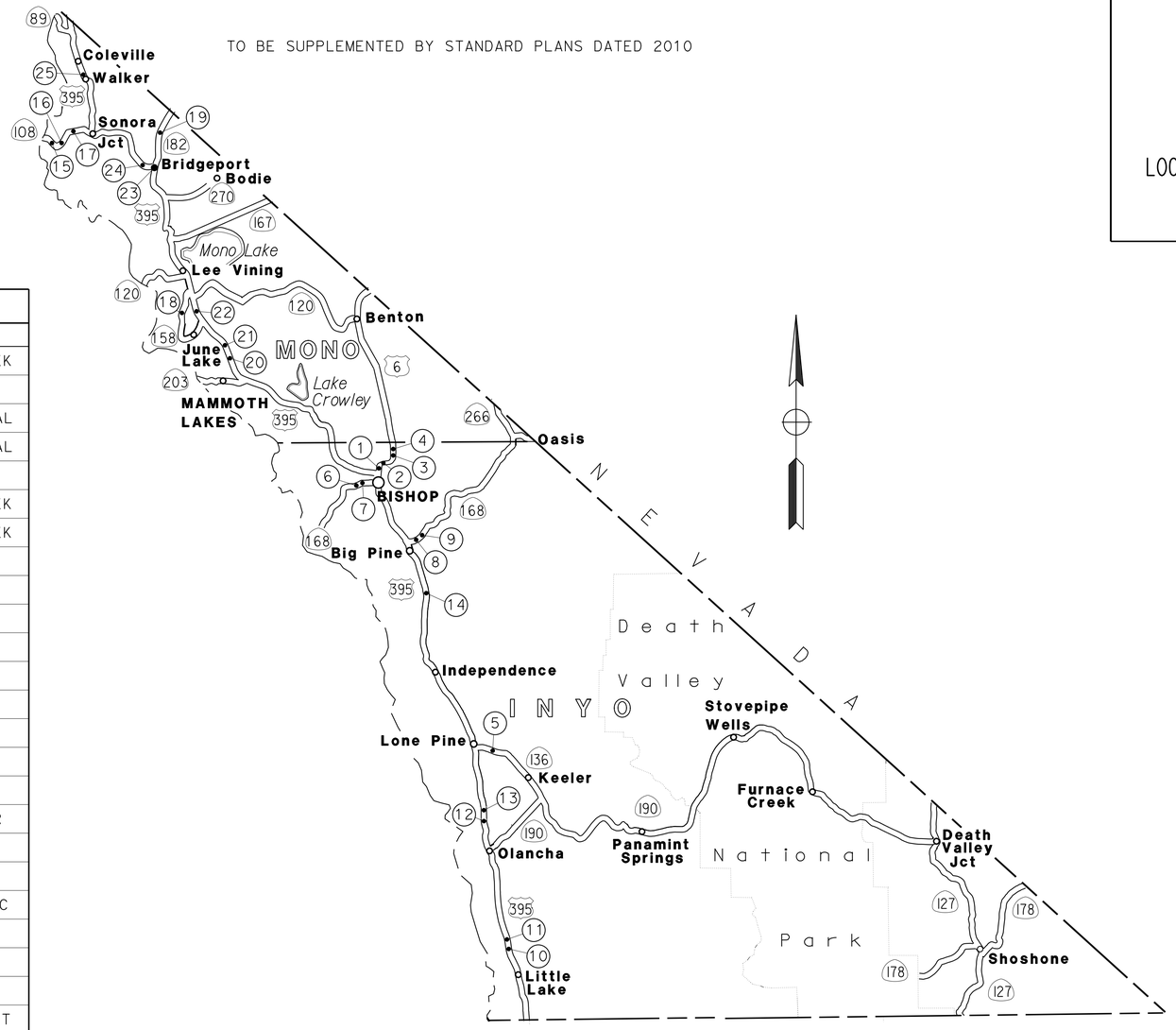

NO SCALE

LOCATION MAP

LOCATIONS OF CONSTRUCTION

No.	COUNTY	ROUTE	BRIDGE No.	PM	DESCRIPTION
1	Iny	6	48-0023	0.5	N FORK BISHOP CREEK
2	Iny	6	48-0024	3.7	OWENS RIVER
3	Iny	6	48-0038	6.5	LOWER McNALLY CANAL
4	Iny	6	N/A	7.4	UPPER McNALLY CANAL
5	Iny	136	48-0002	2.7	OWENS RIVER
6	Iny	168	48-0025	15.4	N FORK BISHOP CREEK
7	Iny	168	48-0028	15.8	S FORK BISHOP CREEK
8	Iny	168	N/A	18.5	BIG PINE CANAL
9	Iny	168	48-0061	19.8	OWENS RIVER
10	Iny	395	48-0015 R†	21.3	LA AQUEDUCT
11	Iny	395	48-0064 R†	22.1	LA AQUEDUCT
12	Iny	395	48-0011 L† & R†	42.0	ASH CREEK
13	Iny	395	48-0012 L† & R†	44.0	COTTONWOOD CREEK
14	Iny	395	N/A	93.0	TINNEMAHA CREEK
15	Mno	108	47-0061	3.1	SARDINE CREEK
16	Mno	108	47-0016	9.5	WOLF CREEK
17	Mno	108	47-0020	12.9	WEST WALKER RIVER
18	Mno	158	47-0041	7.0	ALGER CREEK
19	Mno	182	47-0058	6.2	E WALKER RIVER
20	Mno	395	N/A R†	30.1	SMOKEY BEAR OHV UC
21	Mno	395	N/A L†	40.9	SANDHOUSE OHV UC
22	Mno	395	47-0057 R†	44.2	LA AQUEDUCT
23	Mno	395	47-0013	76.3	E WALKER RIVER
24	Mno	395	47-0047	76.9	RICKEY DITCH OUTLET
25	Mno	395	47-0046	107.1	MILL CREEK

THE CONTRACTOR SHALL POSSESS THE CLASS (OR CLASSES) OF LICENSE AS SPECIFIED IN THE "NOTICE TO BIDDERS."

PROJECT MANAGER CEDRIK ZEMITIS

DESIGN ENGINEER BRIAN WESLING

PROJECT ENGINEER REGISTERED CIVIL ENGINEER — DATE 6-26-15

June 29, 2015
PLANS APPROVAL DATE

REGISTERED PROFESSIONAL ENGINEER ANTON SYMANOVICH No. 78419 Exp. 9-30-15 CIVIL STATE OF CALIFORNIA

THE STATE OF CALIFORNIA OR ITS OFFICERS OR AGENTS SHALL NOT BE RESPONSIBLE FOR THE ACCURACY OR COMPLETENESS OF SCANNED COPIES OF THIS PLAN SHEET.

CONTRACT No.	09-356904
PROJECT ID	0912000064

LAST REVISION 07-21-14 DATE PLOTTED => 23-JUL-2015 TIME PLOTTED => 10:43

Dist	COUNTY	ROUTE	POST MILES TOTAL PROJECT	SHEET No.	TOTAL SHEETS
09	Iny, Mno	6,108,136,158 168,182,395	Var	2	59

REGISTERED CIVIL ENGINEER 6-26-15 DATE

6-29-15
PLANS APPROVAL DATE

REGISTERED PROFESSIONAL ENGINEER ANTON SYMANOVICH No. 78419 Exp. 9-30-15 CIVIL STATE OF CALIFORNIA

THE STATE OF CALIFORNIA OR ITS OFFICERS OR AGENTS SHALL NOT BE RESPONSIBLE FOR THE ACCURACY OR COMPLETENESS OF SCANNED COPIES OF THIS PLAN SHEET.

NOTES:

1. FOR DETAILS NOT SHOWN, SEE STANDARD PLANS.
2. DEPENDENT DIMENSIONS WILL BE VERIFIED IN THE FIELD BEFORE FABRICATING ANY END CONNECTION TO CONFORM WITH EXISTING PAVED CONDITIONS.
3. ALL PLATES AND BOLTS ARE GALVANIZED.
4. CUT AND REMOVE PORTION OF EXISTING CONCRETE BARRIER AS REQUIRED.
5. TAPER THE TOP OF THE END OF THE CONCRETE BARRIER AT 4:1 TO MATCH THE TOP ELEVATION OF THE TRANSITION RAILING (TYPE WB-31). FOR BARRIERS SHORTER THAN 32", TAPER UP AT 4:1 TO MATCH THE END OF THE TRANSITION RAILING.
6. REFERENCE FOR L+ AND R+ SIDES IS FACING UP POSTMILE.

LEGEND:

- REMOVE CONCRETE
- STANDARD PLAN SHEET No.
- DETAIL No.

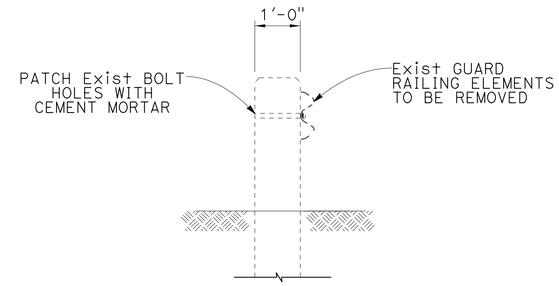

TYPICAL SECTION

(EXISTING CONCRETE BARRIER)

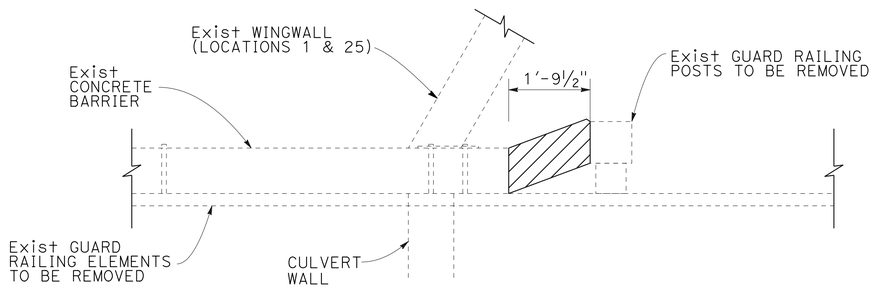

PLAN

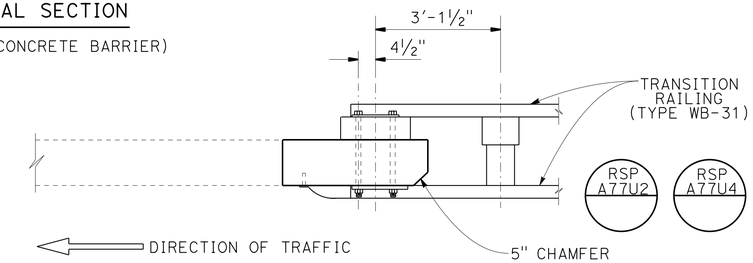

PLAN

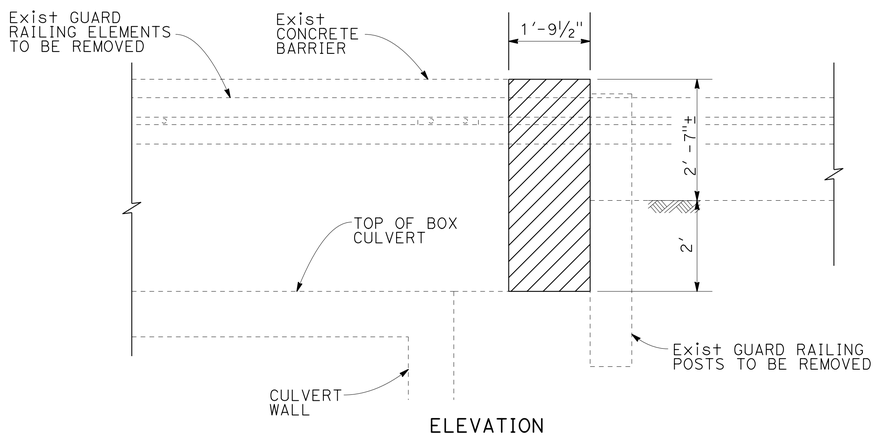

ELEVATION

CONCRETE REMOVAL

(TYPICAL ALL CORNERS)

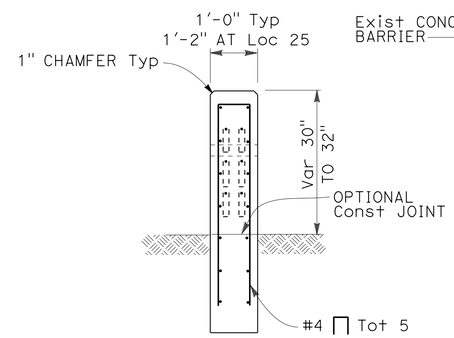

SECTION A-A

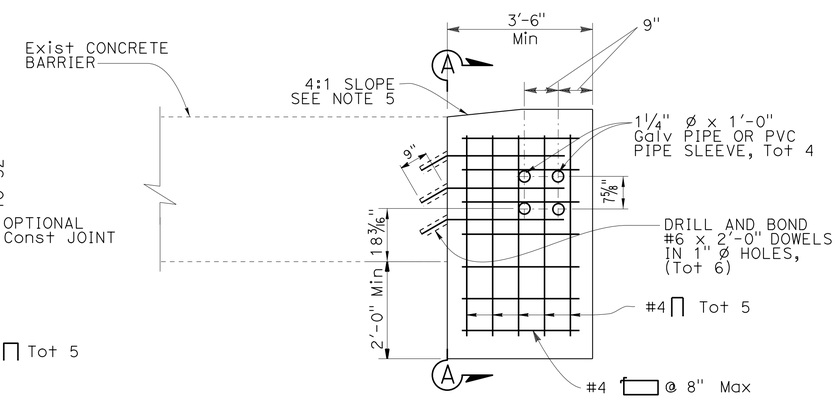

ELEVATION

CONCRETE BARRIER (TRANSITION)

(TYPICAL ALL CORNERS)

Loc	COUNTY	ROUTE	BRIDGE No.	PM	BRIDGE NAME	NB	SB	EB	WB	TRANSITION RAILING (TYPE WB-31)		ALTERNATIVE FLARED TERMINAL SYSTEM		MIDWEST GUARDRAIL SYSTEM (STEEL POST)								MGS LAYOUT TYPE		REMOVE CONCRETE BARRIER							
										APPROACH END	DEPARTURE END	APPROACH END	DEPARTURE END	APPROACH END (LF)				DEPARTURE END(LF)				APPROACH END	DEPARTURE END	APPROACH END (LF)				DEPARTURE END(LF)			
														EB	WB	NB	SB	EB	WB	NB	SB			EB	WB	NB	SB	EB	WB	NB	SB
1	Iny	6	48-0023	0.45	N FORK BISHOP CREEK	X	X	-	-	2	2	2	2	-	-	-	25	-	-	-	-	TYPE 12B	TYPE 12BB	-	-	2	2	-	-	2	2
3	Iny	6	48-0038	6.46	LOWER McNALLY CANAL	X	X	-	-	2	2	2	2	-	-		-	-	-	-	-	TYPE 12B	TYPE 12BB	-	-	2	2	-	-	2	2
25	Mno	395	47-0046	107.11	MILL CREEK	X	X	-	-	2	2	2	2	-	-	12.5	12.5	-	-	-	-	TYPE 12B	TYPE 12BB	-	-	2	2	-	-	2	2

CONSTRUCTION DETAILS

NO SCALE

C-1

STATE OF CALIFORNIA - DEPARTMENT OF TRANSPORTATION

DESIGN

FUNCTIONAL SUPERVISOR: BRIAN WESLING

CALCULATED-DESIGNED BY: ENRICO DE JESUS

CHECKED BY: TONY SYMANOVICH

REVISED BY / DATE REVISED

LAST REVISION 07-10-14

DATE PLOTTED => 23-JUL-2015
TIME PLOTTED => 10:43

Dist	COUNTY	ROUTE	POST MILES TOTAL PROJECT	SHEET No.	TOTAL SHEETS
09	Iny, Mno	6,108,136,158 168,182,395	Var	3	59

REGISTERED CIVIL ENGINEER 6-26-15 DATE

6-29-15
PLANS APPROVAL DATE

REGISTERED PROFESSIONAL ENGINEER ANTON SYMANOVICH No. 78419 Exp. 9-30-15 CIVIL STATE OF CALIFORNIA

THE STATE OF CALIFORNIA OR ITS OFFICERS OR AGENTS SHALL NOT BE RESPONSIBLE FOR THE ACCURACY OR COMPLETENESS OF SCANNED COPIES OF THIS PLAN SHEET.

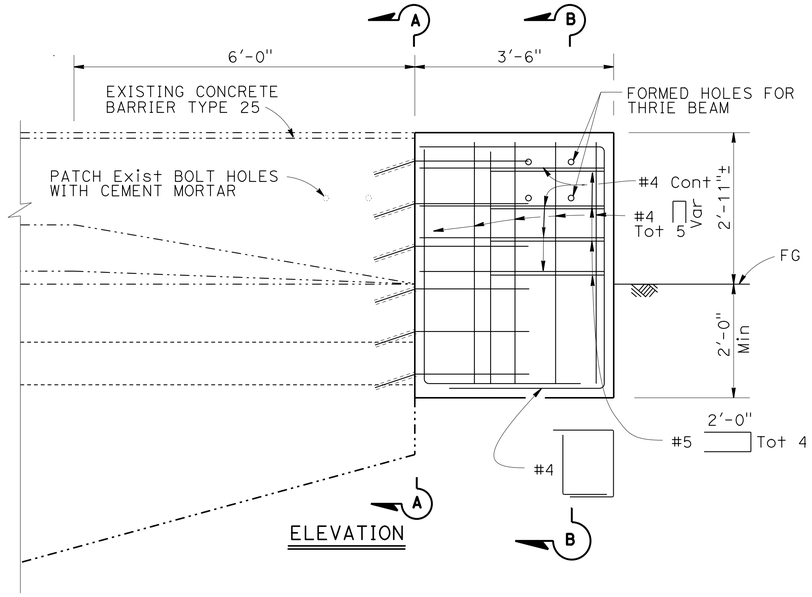

ELEVATION

LEGEND:

INDICATES EXISTING STRUCTURE

INDICATES NEW CONSTRUCTION

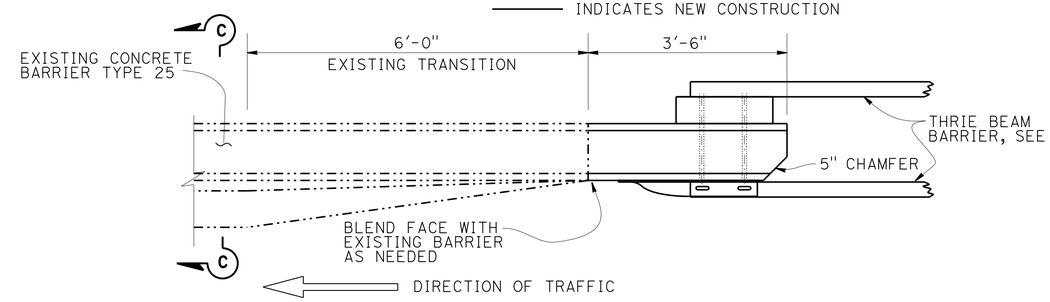

PLAN

NOTES:

1. CUT AND REMOVE THE PORTION OF CONCRETE BARRIER TYPE 25 AS REQUIRED.
2. WINGWALL REINFORCEMENT TO REMAIN.
3. WHERE EXISTING BIKE RAILING INTERFERES WITH CONCRETE REMOVAL SEE CONSTRUCTION DETAIL C-18. APPLICABLE TO LOCATION No. 6 & 7 ONLY.
4. THE CONTRACTOR SHALL VERIFY ALL CONTROLLING FIELD DIMENSIONS BEFORE ORDERING OR FABRICATING ANY MATERIAL.
5. TAPER THE TOP OF THE END OF THE BRIDGE AT 4:1 TO MATCH THE TOP ELEVATION OF THE THRIE BEAM RAIL ELEMENT.

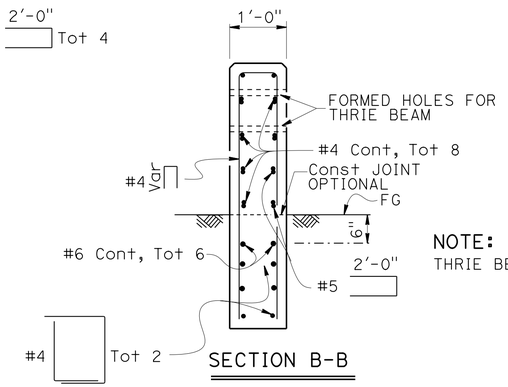

SECTION B-B

NOTE:
THRIE BEAM NOT SHOWN

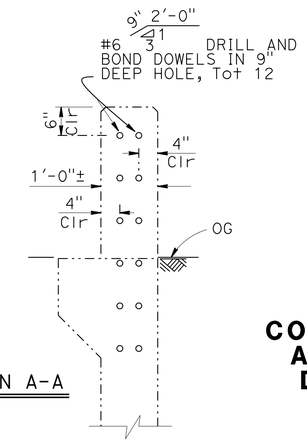

SECTION A-A

CONCRETE BARRIER (TRANSITION) AND THRIE BEAM CONNECTION DETAILS AT APPROACH ENDS

NOTE:
FOR ADDITIONAL CONCRETE BARRIER TRANSITION DETAILS AT DEPARTURE ENDS SEE CONSTRUCTION DETAILS SHEET C-11.

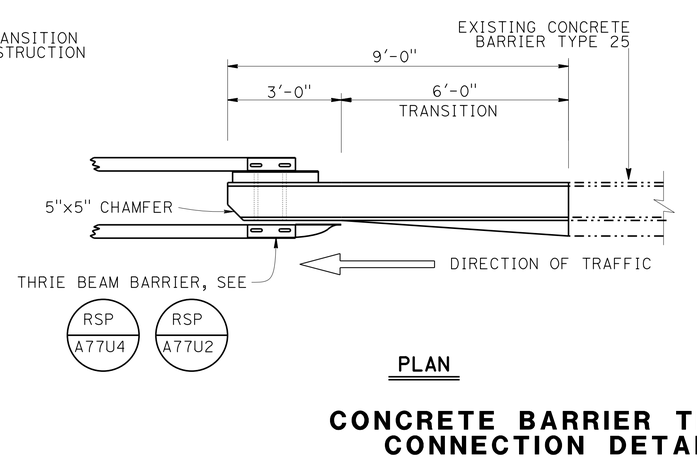

PLAN

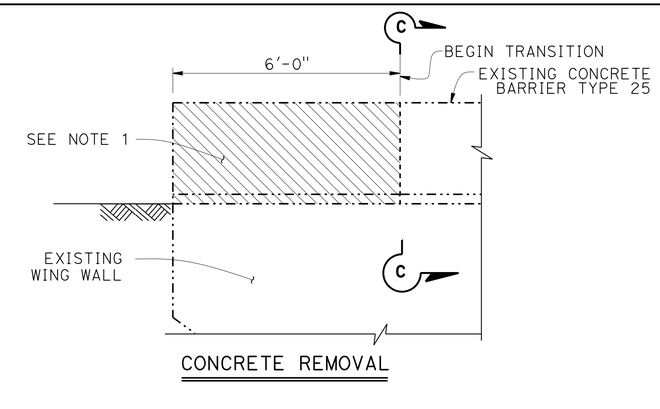

CONCRETE REMOVAL

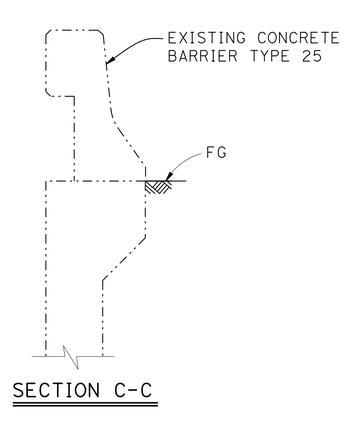

SECTION C-C

CONCRETE BARRIER TRANSITION AND THRIE BEAM CONNECTION DETAILS AT DEPARTURE ENDS

Loc	COUNTY	ROUTE	BRIDGE No.	PM	BRIDGE NAME	NB	SB	EB	WB	TRANSITION RAILING (TYPE WB-31)		ALTERNATIVE FLARED TERMINAL SYSTEM		MIDWEST GUARDRAIL SYSTEM (STEEL POST)								END ANCHOR ASSEMBLY (TYPE SFT)	MGS LAYOUT TYPE		REMOVE CONCRETE BARRIER							
										APPROACH END	DEPARTURE END	APPROACH END	DEPARTURE END	APPROACH END (LF)				DEPARTURE END (LF)				EA	APPROACH END	DEPARTURE END	APPROACH END (LF)				DEPARTURE END(LF)			
														EB	WB	NB	SB	EB	WB	NB	SB				EB	WB	NB	SB	EB	WB	NB	SB
6	Iny	168	48-0025 EB	15.40	N FORK BISHOP CREEK	-	-	X	-	1	1	1	1	-	-	-	-	-	-	-	-	-	TYPE 12B	TYPE 12BB	-	-	-	-	6	-	-	-
6	Iny	168	48-0025 WB	15.40	N FORK BISHOP CREEK	-	-	-	X	1	1	1	-	-	-	-	-	-	12.5	-	-	1 AT DEPARTURE	TYPE 12B	SEE DETAIL	-	-	-	-	-	6	-	-
7	Iny	168	48-0028 EB	15.79	S FORK BISHOP CREEK	-	-	X	-	1	1	1	1	-	-	-	-	-	-	-	-	-	TYPE 12B	TYPE 12BB	-	-	-	-	6	-	-	-
7	Iny	168	48-0028 WB	15.79	S FORK BISHOP CREEK	-	-	-	X	1	-	1	-	-	-	-	-	-	-	-	-	-	TYPE 12B	-	-	-	-	-	-	-	-	-
16	Mno	108	47-0016	9.45	WOLF CREEK	-	-	X	X	2	2	2	2	12.5	12.5	-	-	-	-	-	-	-	TYPE 12B	TYPE 12BB	-	-	-	-	6	6	-	-

CONSTRUCTION DETAILS C-2

NO SCALE

STATE OF CALIFORNIA - DEPARTMENT OF TRANSPORTATION
Caltrans DESIGN

FUNCTIONAL SUPERVISOR: BRIAN WESLING
CALCULATED-DESIGNED BY: ENRICO DE JESUS
CHECKED BY: TONY SYMANOVICH
REVISED BY / DATE REVISED

LAST REVISION 07-10-14 | DATE PLOTTED => 23-JUL-2015 | TIME PLOTTED => 10:43

Dist	COUNTY	ROUTE	POST MILES TOTAL PROJECT	SHEET No.	TOTAL SHEETS
09	Iny, Mno	6,108,136,158 168,182,395	Var	4	59

REGISTERED CIVIL ENGINEER 6-26-15 DATE

6-29-15
PLANS APPROVAL DATE

REGISTERED PROFESSIONAL ENGINEER ANTON SYMANOVICH No. 78419 Exp. 9-30-15 CIVIL STATE OF CALIFORNIA

THE STATE OF CALIFORNIA OR ITS OFFICERS OR AGENTS SHALL NOT BE RESPONSIBLE FOR THE ACCURACY OR COMPLETENESS OF SCANNED COPIES OF THIS PLAN SHEET.

LEGEND:

-·-·-·- INDICATES EXISTING STRUCTURE

——— INDICATES NEW CONSTRUCTION

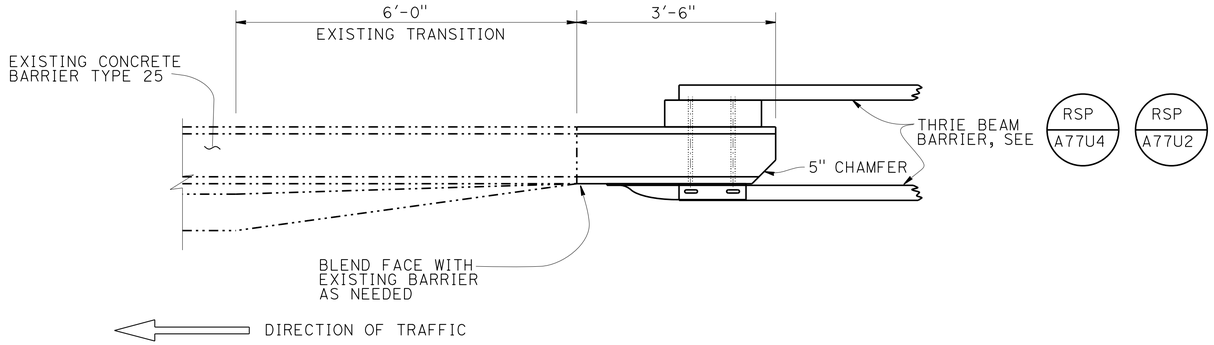

PLAN

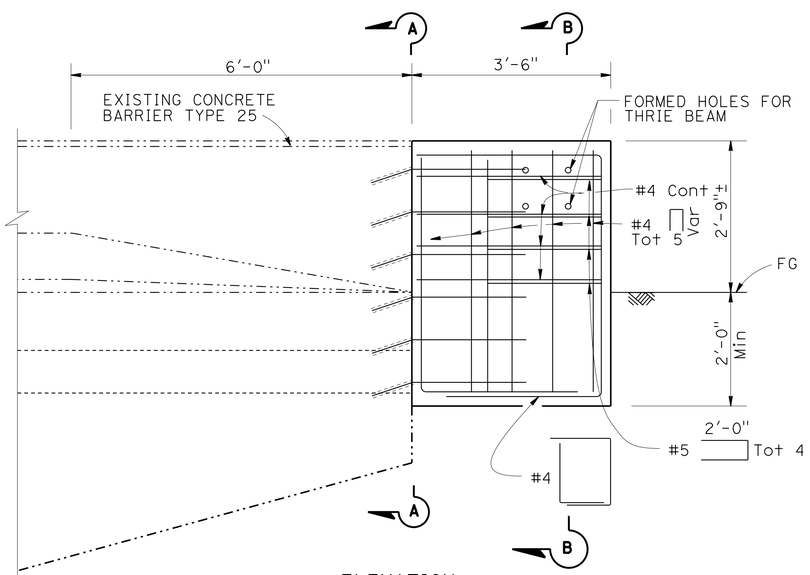

ELEVATION

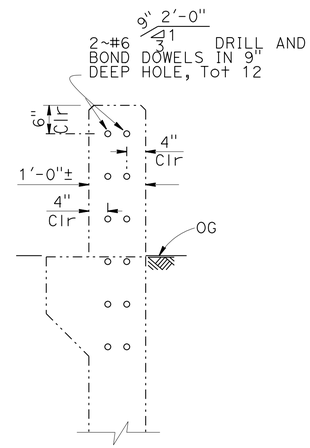

SECTION A-A

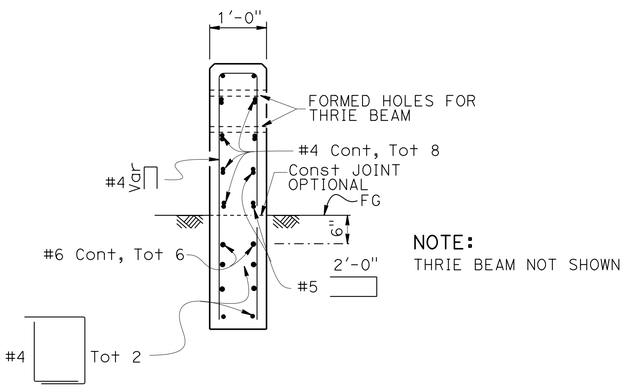

SECTION B-B

NOTE:
THRIE BEAM NOT SHOWN

CONCRETE BARRIER (TRANSITION) AND THRIE BEAM CONNECTION DETAILS

APPROACH END SHOWN. DEPARTURE SIMILAR.

Loc	COUNTY	ROUTE	BRIDGE No.	PM	BRIDGE NAME	NB	SB	EB	WB	TRANSITION RAILING (TYPE WB-31)		ALTERNATIVE FLARED TERMINAL SYSTEM		MIDWEST GUARDRAIL SYSTEM (STEEL POST)								MGS LAYOUT TYPE	
										APPROACH END	DEPARTURE END	APPROACH END	DEPARTURE END	APPROACH END (LF)				DEPARTURE END (LF)				APPROACH END	DEPARTURE END
														EB	WB	NB	SB	EB	WB	NB	SB		
5	Iny	136	48-0002	2.67	OWENS RIVER	-	-	X	X	2	2	2	2	-	-	-	-	-	-	-	-	TYPE 12B	TYPE 12BB
10	Iny	395	48-0015 NB, R†	21.31	LA AQUEDUCT	X	-	-	-	1	-	1	-	-	-	12.5	-	-	-	-	-	TYPE 12B	-
10	Iny	395	48-0015 NB, L†	21.31	LA AQUEDUCT	X	-	-	-	1	-	1	-	-	-	12.5	-	-	-	-	-	TYPE 12B	-
11	Iny	395	48-0064 NB, R†	22.09	LA AQUEDUCT	X	-	-	-	1	-	1	-	-	-	412.5	-	-	-	-	-	TYPE 12B	-
11	Iny	395	48-0064 NB, L†	22.09	LA AQUEDUCT	X	-	-	-	1	-	1	-	-	-	337.5	-	-	-	-	-	TYPE 12B	-

CONSTRUCTION DETAILS

NO SCALE

C-3

STATE OF CALIFORNIA - DEPARTMENT OF TRANSPORTATION
DESIGN
Caltrans

FUNCTIONAL SUPERVISOR: BRIAN WESLING
CALCULATED-DESIGNED BY: ENRICO DE JESUS
CHECKED BY: TONY SYMANOVICH
REVISED BY
DATE REVISED

LAST REVISION 07-11-14
DATE PLOTTED => 23-JUL-2015
TIME PLOTTED => 10:43

Dist	COUNTY	ROUTE	POST MILES TOTAL PROJECT	SHEET No.	TOTAL SHEETS
09	Iny, Mno	6,108,136,158 168,182,395	Var	5	59

REGISTERED CIVIL ENGINEER 6-26-15 DATE

6-29-15
PLANS APPROVAL DATE

REGISTERED PROFESSIONAL ENGINEER ANTON SYMANOVICH No. 78419 Exp. 9-30-15 CIVIL STATE OF CALIFORNIA

THE STATE OF CALIFORNIA OR ITS OFFICERS OR AGENTS SHALL NOT BE RESPONSIBLE FOR THE ACCURACY OR COMPLETENESS OF SCANNED COPIES OF THIS PLAN SHEET.

LEGEND:
- INDICATES EXISTING STRUCTURE
- INDICATES NEW STRUCTURE

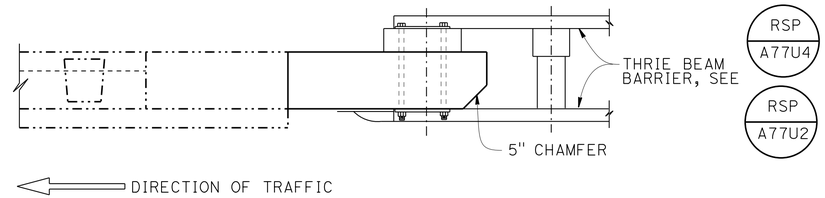

PLAN

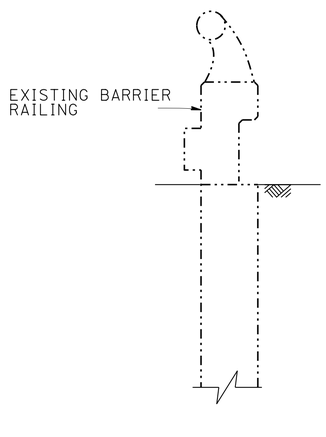

SECTION A-A

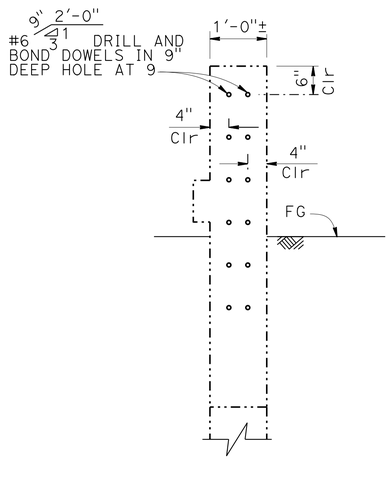

SECTION B-B

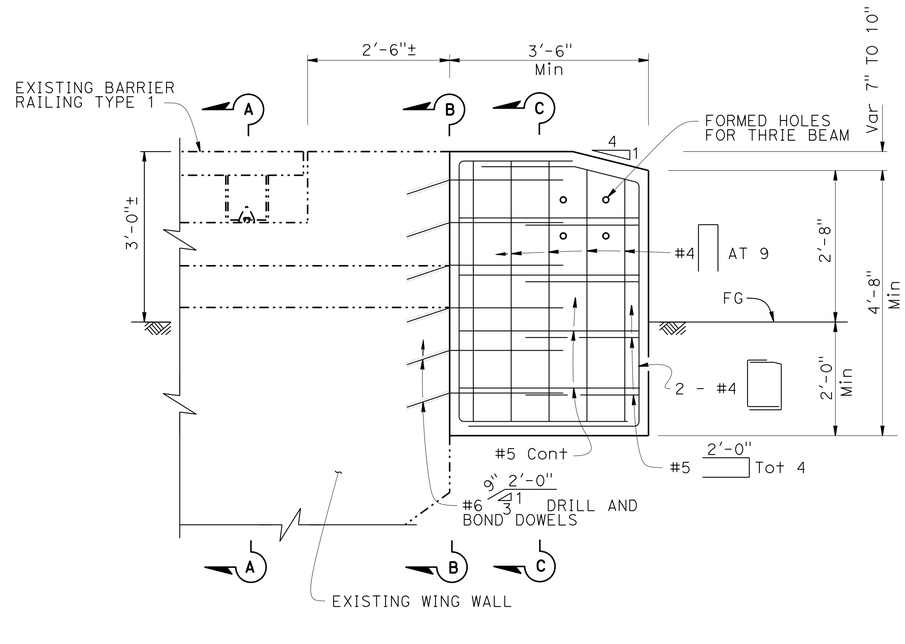

ELEVATION

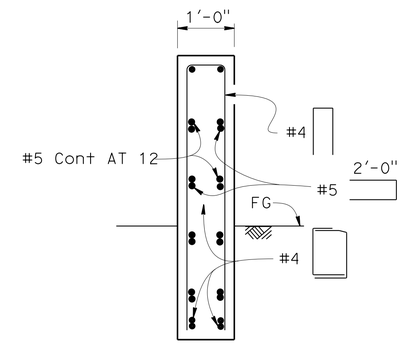

NOTE:
DRILL AND BOND DOWELS NOT SHOWN

SECTION C-C

CONCRETE BARRIER (TRANSITION) AND THRIE BEAM CONNECTION DETAILS

APPROACH END SHOWN. DEPARTURE SIMILAR.

Loc	COUNTY	ROUTE	BRIDGE No.	PM	BRIDGE NAME	NB	SB	EB	WB	TRANSITION RAILING (TYPE WB-31)		ALTERNATIVE FLARED TERMINAL SYSTEM		MIDWEST GUARDRAIL SYSTEM (STEEL POST)								MGS LAYOUT TYPE	
										APPROACH END	DEPARTURE END	APPROACH END	DEPARTURE END	APPROACH END(LF)				DEPARTURE END(LF)				APPROACH END	DEPARTURE END
														EB	WB	NB	SB	EB	WB	NB	SB		
23	Mno	395	47-0013	76.31	EAST WALKER RIVER	X	X	-	-	2	2	2	2	-	-	37.5	12.5	-	-	175	-	TYPE 12B	TYPE 12BB

CONSTRUCTION DETAILS
NO SCALE
C-4

STATE OF CALIFORNIA - DEPARTMENT OF TRANSPORTATION
DESIGN
Caltrans

FUNCTIONAL SUPERVISOR: BRIAN WESLING
CALCULATED-DESIGNED BY: ENRICO DE JESUS
CHECKED BY: TONY SYMANOVICH
REVISED BY
DATE REVISED

LAST REVISION 07-11-14
DATE PLOTTED => 23-JUL-2015
TIME PLOTTED => 10:43

Dist	COUNTY	ROUTE	POST MILES TOTAL PROJECT	SHEET No.	TOTAL SHEETS
09	Iny, Mno	6,108,136,158 168,182,395	Var	6	59

REGISTERED CIVIL ENGINEER 6-26-15 DATE

6-29-15
PLANS APPROVAL DATE

REGISTERED PROFESSIONAL ENGINEER ANTON SYMANOVICH No. 78419 Exp. 9-30-15 CIVIL STATE OF CALIFORNIA

THE STATE OF CALIFORNIA OR ITS OFFICERS OR AGENTS SHALL NOT BE RESPONSIBLE FOR THE ACCURACY OR COMPLETENESS OF SCANNED COPIES OF THIS PLAN SHEET.

NOTES:

1. FOR ADDITIONAL DETAILS NOT SHOWN ON THIS PLAN, REFER TO RSP A77L1 AND RSP A77L2.
2. CRT POSTS TO BE WOOD ONLY.

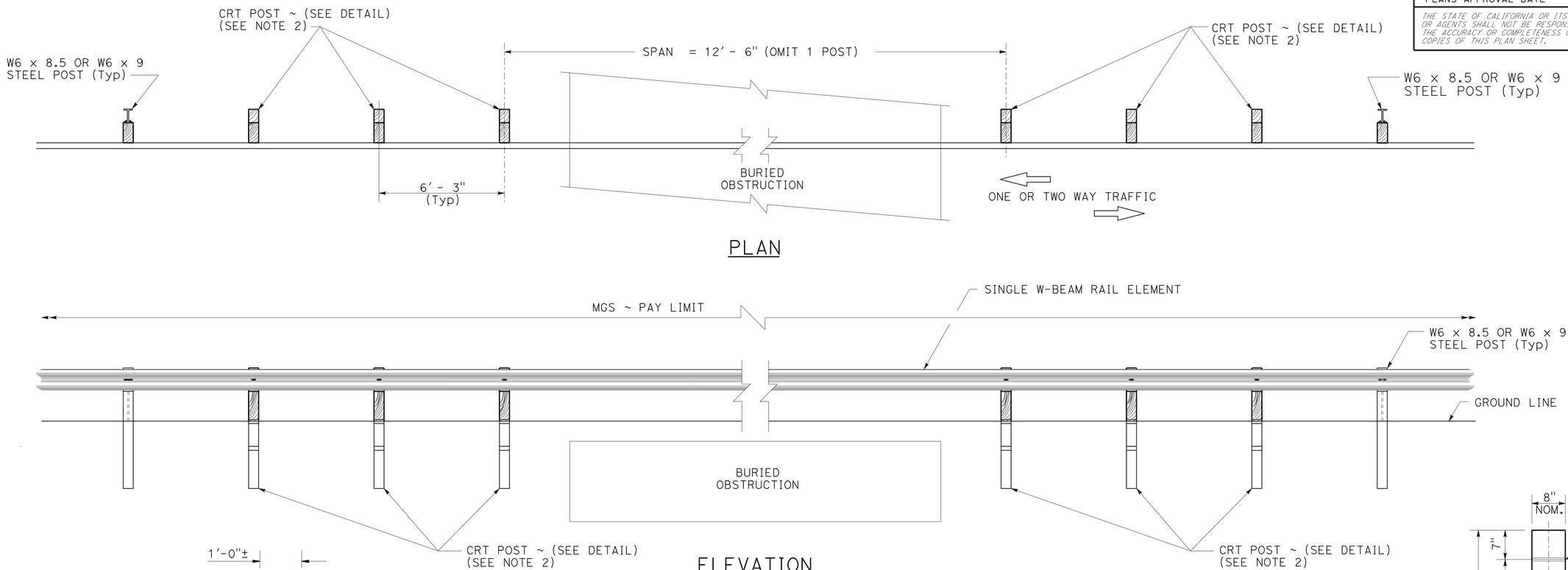

MIDWEST GUARDRAIL SYSTEM AT BURIED OBSTRUCTION

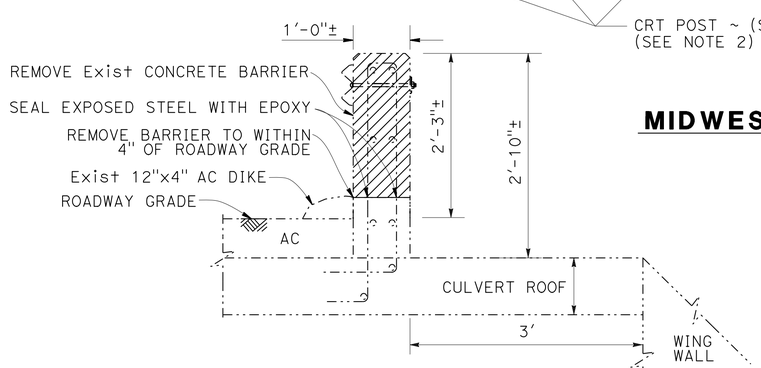

REMOVE CONCRETE BARRIER

LOCATION 20 LEFT AND RIGHT
RIGHT SIDE SHOWN. LEFT SIDE IS SIMILAR.

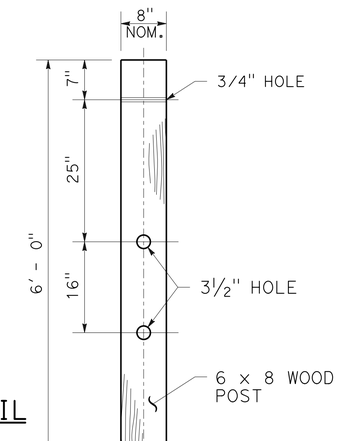

CONTROLLED RELEASING TERMINAL (CRT) POST DETAIL

Loc	COUNTY	ROUTE	BRIDGE No.	PM	BRIDGE NAME	NB	SB	EB	WB	TRANSITION RAILING (TYPE WB-31)		ALTERNATIVE FLARED TERMINAL SYSTEM		MIDWEST GUARDRAIL SYSTEM (STEEL POST)								END ANCHOR ASSEMBLY (TYPE SFT)	REMOVE CONCRETE BARRIER	MGS LAYOUT TYPE
										APPROACH END	DEPARTURE END	APPROACH END	DEPARTURE END	APPROACH END (LF)				DEPARTURE END (LF)				EA	LF	
														EB	WB	NB	SB	EB	WB	NB	SB			
20	Mno	395	N/A NB, L†	30.10	SMOKEY BEAR OHV UC	X	-	-	-	-	-	1	-	-	-	137.5	-	-	-	87.5*	-	1 AT DEPARTURE END,L†	12.5	TYPE 11B
20	Mno	395	N/A NB, R†	30.10	SMOKEY BEAR OHV UC	X	-	-	-	-	-	1	-	-	-	37.5	-	-	-	87.5*	-	1 AT DEPARTURE END,R†	12.5	TYPE 11B

* 12.5 LF OF DEPARTURE END TO COVER REMOVED BARRIER LENGTH. BEGINNING AND END OF MGS TO BE IN SAME LOCATION AS EXISTING GUARDRAIL.

CONSTRUCTION DETAILS
NO SCALE

C-5

STATE OF CALIFORNIA - DEPARTMENT OF TRANSPORTATION
Caltrans DESIGN

FUNCTIONAL SUPERVISOR: BRIAN WESLING
CALCULATED-DESIGNED BY: TONY SYMANOVICH
CHECKED BY
REVISED BY
DATE REVISED

LAST REVISION 07-11-14
DATE PLOTTED => 23-JUL-2015
TIME PLOTTED => 10:43

Dist	COUNTY	ROUTE	POST MILES TOTAL PROJECT	SHEET No.	TOTAL SHEETS
09	Iny, Mno	6,108,136,158 168,182,395	Var	7	59

REGISTERED CIVIL ENGINEER 6-26-15 DATE

6-29-15
PLANS APPROVAL DATE

REGISTERED PROFESSIONAL ENGINEER ANTON SYMANOVICH No. 78419 Exp. 9-30-15 CIVIL STATE OF CALIFORNIA

THE STATE OF CALIFORNIA OR ITS OFFICERS OR AGENTS SHALL NOT BE RESPONSIBLE FOR THE ACCURACY OR COMPLETENESS OF SCANNED COPIES OF THIS PLAN SHEET.

NOTES:

1. CUT AND REMOVE THE PORTION OF CONCRETE BARRIER TYPE 27 AS REQUIRED. EXISTING REINFORCEMENT TO REMAIN.
2. WINGWALL REINFORCEMENT TO REMAIN.
3. THE CONTRACTOR SHALL VERIFY ALL CONTROLLING FIELD DIMENSIONS BEFORE ORDERING OR FABRICATING ANY MATERIAL.

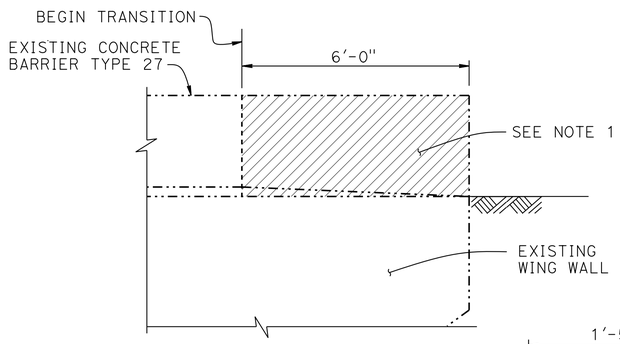

CONCRETE REMOVAL

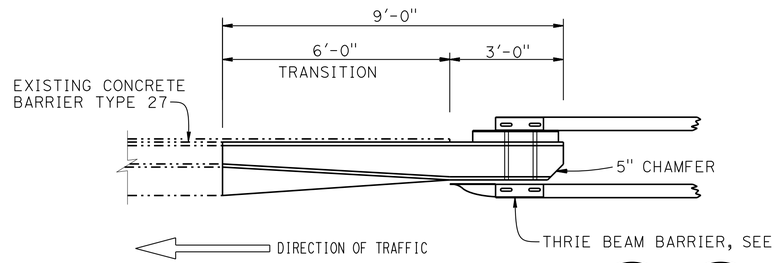

PLAN

RSP A77U2 | RSP A77U4

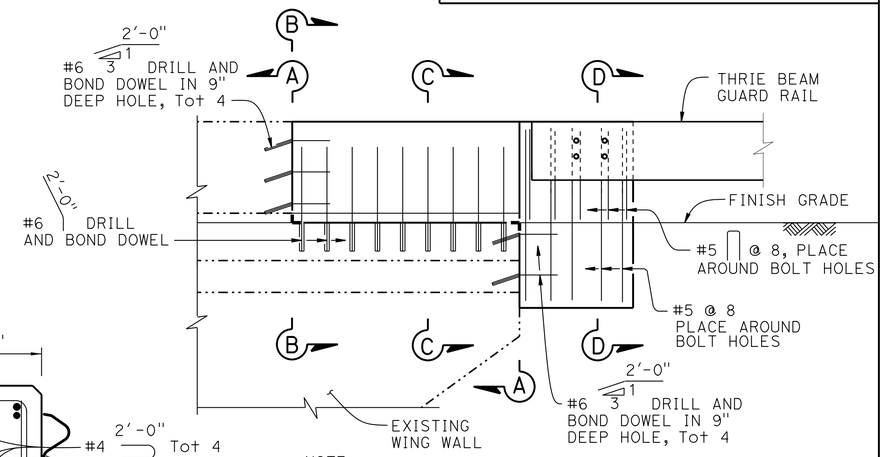

NOTE:
All Reinf not shown

ELEVATION

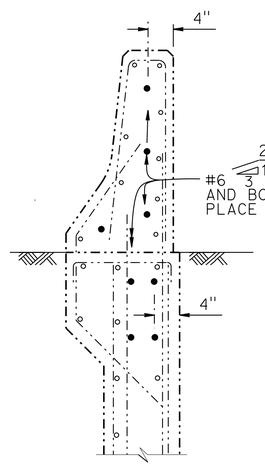

SECTION A-A

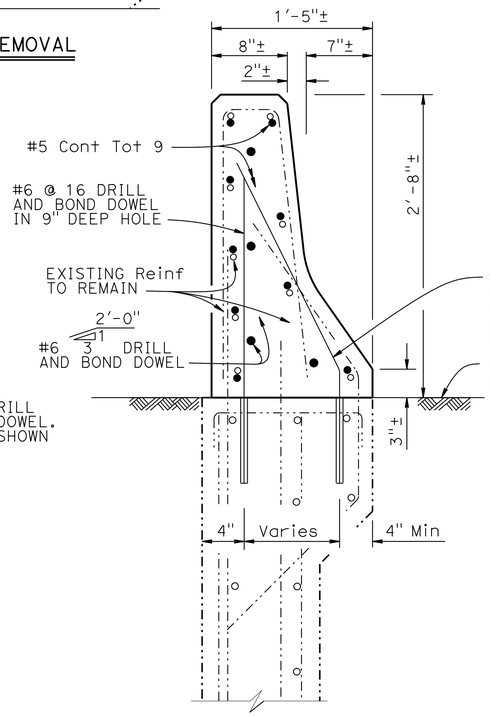

SECTION B-B

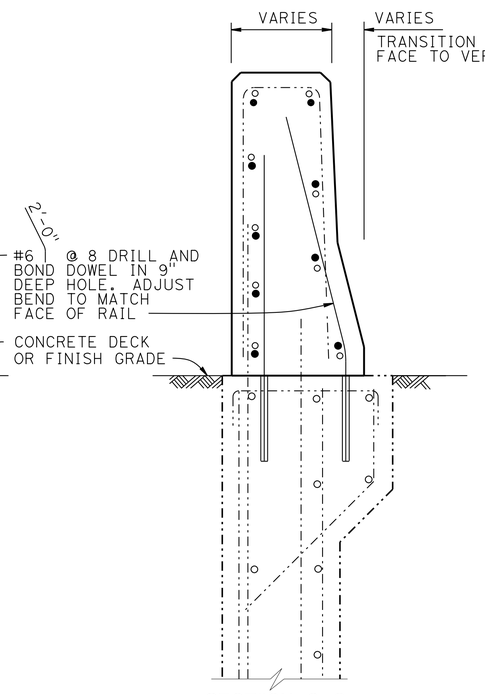

SECTION C-C

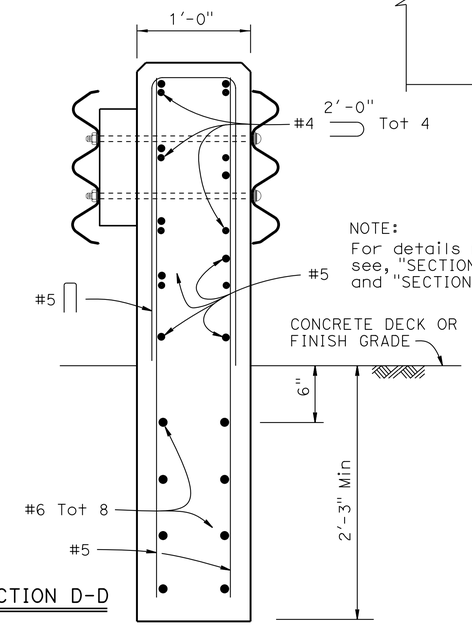

NOTE:
For details not shown see, "SECTION B-B" and "SECTION C-C"

SECTION D-D

REMOVE CONCRETE BARRIER

Loc	APPROACH END (LF)				DEPARTURE END(LF)			
	EB	WB	NB	SB	EB	WB	NB	SB
2	–	–	6	–	–	–	6	–
18	6	6	–	–	6	6	–	–
21	–	–	–	12*	–	–	–	–
24	–	–	6	6	–	–	6	6

* REMOVE 6 LF FROM BOTH Lt AND Rt

CONCRETE BARRIER (TRANSITION) AND THRIE BEAM CONNECTION DETAILS

APPROACH SIDE SHOWN. DEPARTURE IS SIMILAR.

Loc	COUNTY	ROUTE	BRIDGE No.	PM	BRIDGE NAME	NB	SB	EB	WB	TRANSITION RAILING (TYPE WB-31)		ALTERNATIVE FLARED TERMINAL SYSTEM		MIDWEST GUARDRAIL SYSTEM (STEEL POST)								MGS LAYOUT TYPE	
										APPROACH END	DEPARTURE END	APPROACH END	DEPARTURE END	APPROACH END (LF)				DEPARTURE END (LF)				APPROACH END	DEPARTURE END
														EB	WB	NB	SB	EB	WB	NB	SB		
2*	Iny	6	48-0024	3.73	OWENS RIVER	X	–	–	–	1	1	1	1	–	–	–	–	–	–	–	–	TYPE 12B	TYPE 12BB
18	Mno	158	47-0041	6.99	ALGER CREEK	X	X	–	–	2	2	2	2	–	–	–	–	–	–	–	–	TYPE 12B	TYPE 12BB
21	Mno	395	N/A Lt	40.90	SANDHOUSE OHV UC, SB Rt	–	X	–	–	1	–	1	–	–	–	–	–	–	–	–	–	TYPE 12B	–
21	Mno	395	N/A Lt	40.90	SANDHOUSE OHV UC, SB Lt	–	X	–	–	1	–	1	–	–	–	–	–	–	–	–	–	TYPE 12B	–
24	Mno	395	47-0047	76.89	RICKEY DITCH OUTLET	X	X	–	–	2	2	2	2	–	–	12.5	25	–	–	–	–	TYPE 12B	TYPE 12BB

* SEE SHEET C-7 FOR LOCATION 2 SB

CONSTRUCTION DETAILS

NO SCALE

C-6

STATE OF CALIFORNIA - DEPARTMENT OF TRANSPORTATION
Caltrans DESIGN

FUNCTIONAL SUPERVISOR: BRIAN WESLING
CALCULATED-DESIGNED BY: TONY SYMANOVICH
CHECKED BY
REVISED BY
DATE REVISED

LAST REVISION 10-27-14
DATE PLOTTED => 23-JUL-2015
TIME PLOTTED => 10:43

Dist	COUNTY	ROUTE	POST MILES TOTAL PROJECT	SHEET No.	TOTAL SHEETS
09	Iny, Mno	6,108,136,158 168,182,395	Var	8	59

REGISTERED CIVIL ENGINEER 6-26-15 DATE

6-29-15
PLANS APPROVAL DATE

REGISTERED PROFESSIONAL ENGINEER ANTON SYMANOVICH No. 78419 Exp. 9-30-15 CIVIL STATE OF CALIFORNIA

THE STATE OF CALIFORNIA OR ITS OFFICERS OR AGENTS SHALL NOT BE RESPONSIBLE FOR THE ACCURACY OR COMPLETENESS OF SCANNED COPIES OF THIS PLAN SHEET.

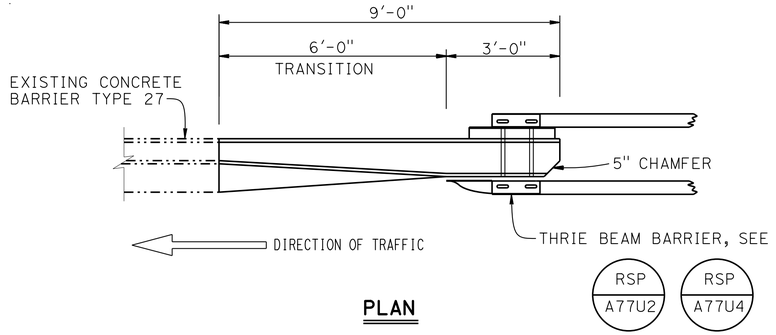

PLAN

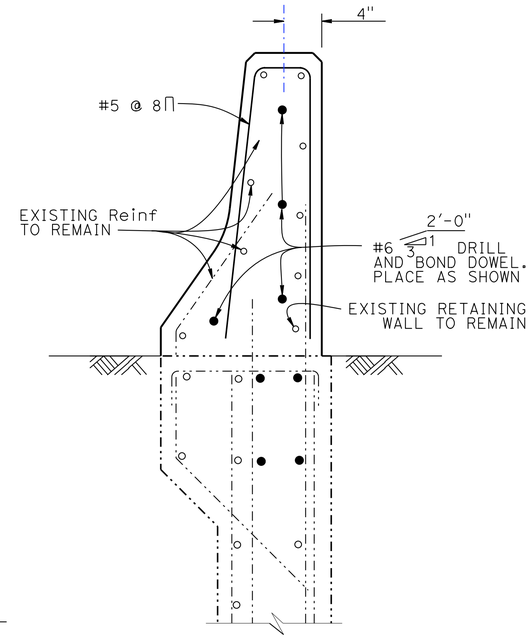

SECTION A-A

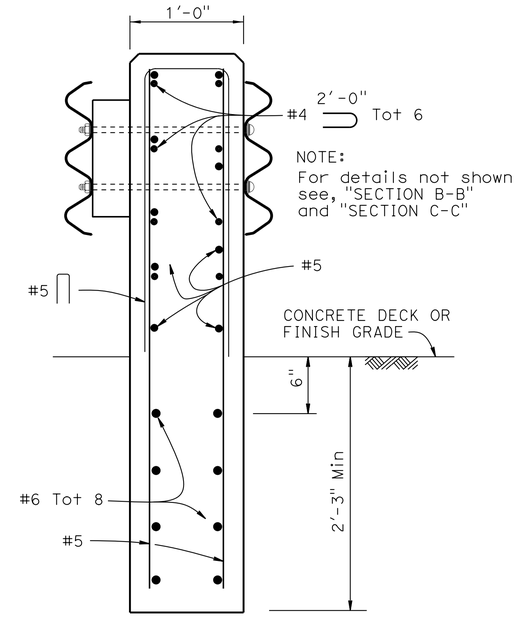

SECTION D-D

LEGEND:

- Indicates existing structure
- Indicates new construction
- Concrete removal
- Indicates Existing Reinforcement

NOTES:

1. Cut and remove the portion of Concrete Barrier Type 27. Existing reinforcement to remain as designated. Existing expansion joint to remain.
2. Wingwall reinforcement to remain.

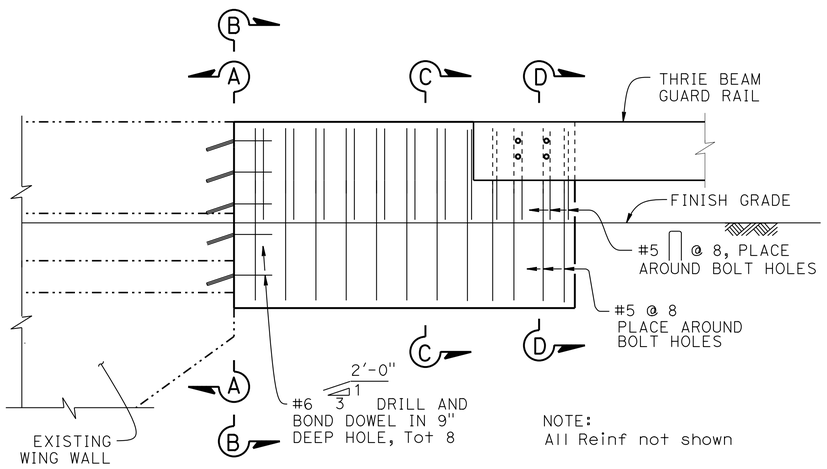

ELEVATION

NOTE:
All Reinf not shown

NOTE:
THE CONTRACTOR SHALL VERIFY ALL CONTROLLING FIELD DIMENSIONS BEFORE ORDERING OR FABRICATING ANY MATERIAL.

MGS LAYOUT TYPE	
APPROACH END	DEPARTURE END
TYPE 12B	TYPE 12BB

Loc	COUNTY	ROUTE	BRIDGE No.	PM	BRIDGE NAME	NB	SB	EB	WB	TRANSITION RAILING (TYPE WB-31)		ALTERNATIVE FLARED TERMINAL SYSTEM		MIDWEST GUARDRAIL SYSTEM (STEEL POST)							
										APPROACH END	DEPARTURE END	APPROACH END	DEPARTURE END	APPROACH END (LF)				DEPARTURE END (LF)			
														EB	WB	NB	SB	EB	WB	NB	SB
2*	Iny	6	48-0024	3.73	OWENS RIVER	-	X	-	-	1	1	1	1	-	-	-	-	-	-	-	-

* SEE SHEET C-6 FOR LOCATION 2 NB

CONCRETE BARRIER (TRANSITION) AND THRIE BEAM CONNECTION DETAILS

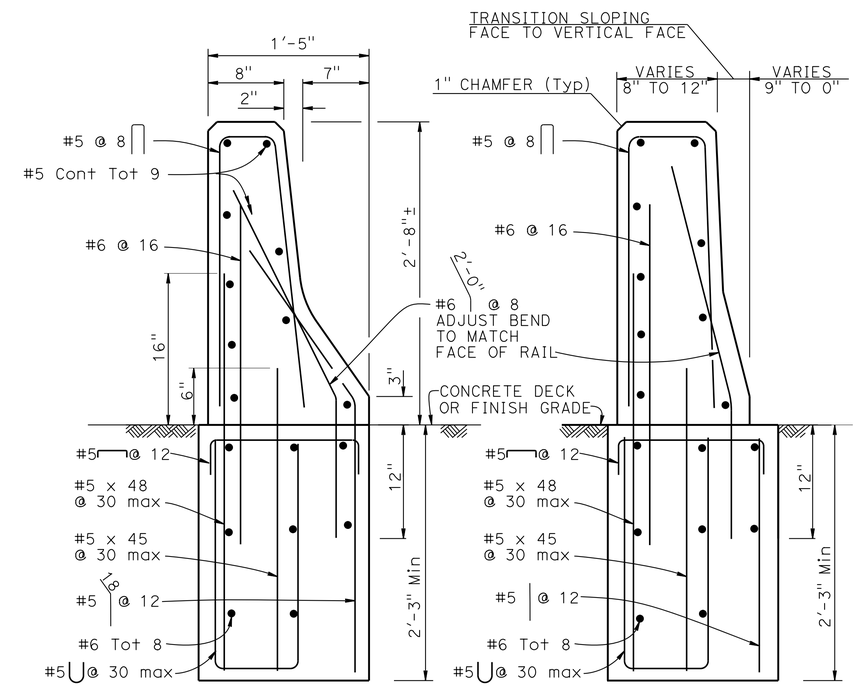

SECTION B-B

SECTION C-C

CONSTRUCTION DETAILS

NO SCALE

C-7

STATE OF CALIFORNIA - DEPARTMENT OF TRANSPORTATION
Caltrans DESIGN

FUNCTIONAL SUPERVISOR: BRIAN WESLING
CALCULATED-DESIGNED BY: TONY SYMANOVICH
CHECKED BY
REVISED BY
DATE REVISED

DATE PLOTTED => 23-JUL-2015
TIME PLOTTED => 10:43
LAST REVISION

Dist	COUNTY	ROUTE	POST MILES TOTAL PROJECT	SHEET No.	TOTAL SHEETS
09	Iny, Mno	6,108,136,158 168,182,395	Var	9	59

REGISTERED CIVIL ENGINEER 6-26-15 DATE

6-29-15
PLANS APPROVAL DATE

REGISTERED PROFESSIONAL ENGINEER ANTON SYMANOVICH No. 78419 Exp. 9-30-15 CIVIL STATE OF CALIFORNIA

THE STATE OF CALIFORNIA OR ITS OFFICERS OR AGENTS SHALL NOT BE RESPONSIBLE FOR THE ACCURACY OR COMPLETENESS OF SCANNED COPIES OF THIS PLAN SHEET.

LEGEND:

-·-·-·- INDICATES EXISTING STRUCTURE

——— INDICATES NEW CONSTRUCTION

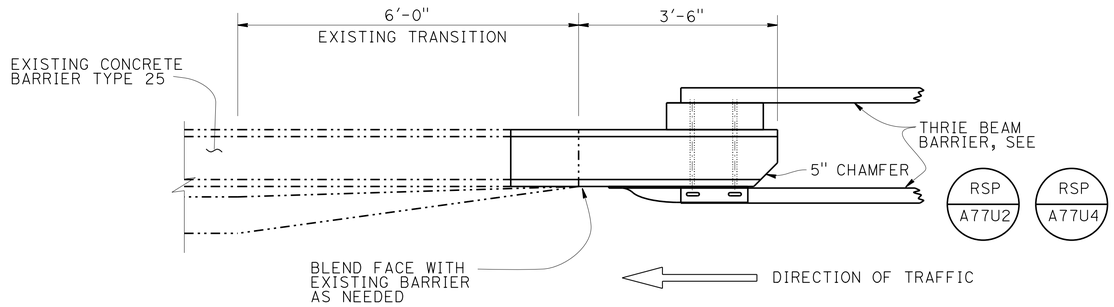

PLAN

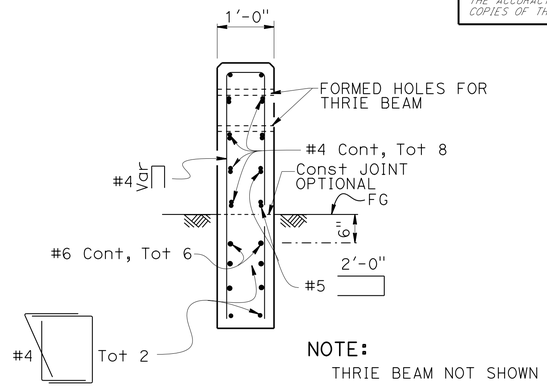

NOTE:
THRIE BEAM NOT SHOWN

SECTION B-B

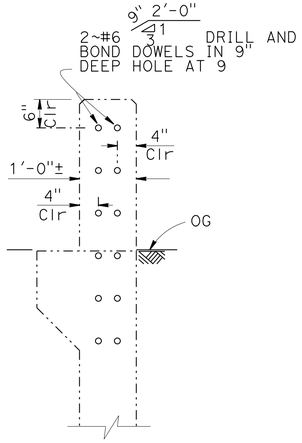

SECTION A-A

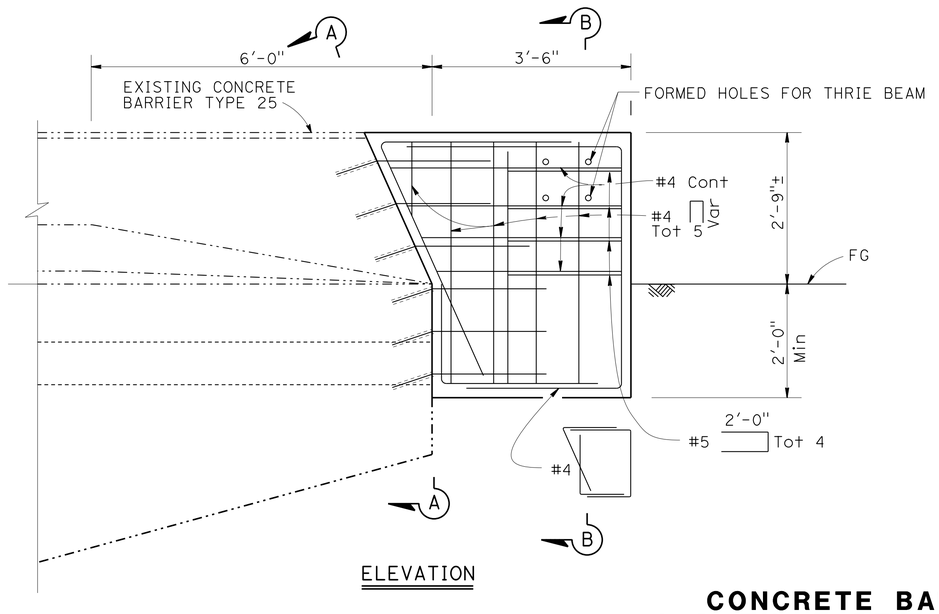

ELEVATION

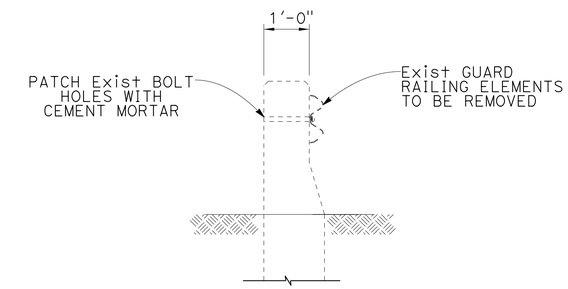

BARRIER DEPARTURE DETAIL

(LOCATION 22 Lt & Rt)

CONCRETE BARRIER (TRANSITION) AND THRIE BEAM CONNECTION DETAILS

Loc	COUNTY	ROUTE	BRIDGE No.	PM	BRIDGE NAME	NB	SB	EB	WB	TRANSITION RAILING (TYPE WB-31)		ALTERNATIVE FLARED TERMINAL SYSTEM		MIDWEST GUARDRAIL SYSTEM (STEEL POST)								MGS LAYOUT TYPE	
										APPROACH END	DEPARTURE END	APPROACH END	DEPARTURE END	APPROACH END (LF)				DEPARTURE END (LF)				APPROACH END	DEPARTURE END
														EB	WB	NB	SB	EB	WB	NB	SB		
12	Iny	395	48-0011 NB, Rt	42.02	ASH CREEK	X	-	-	-	1	-	1	-	-	-	-	-	-	-	-	-	TYPE 12B	-
12	Iny	395	48-0011 NB, Lt	42.02	ASH CREEK	X	-	-	-	1	-	1	-	-	-	-	-	-	-	-	-	TYPE 12B	-
12	Iny	395	48-0011 SB, Lt	42.02	ASH CREEK	-	X	-	-	1	-	1	-	-	-	-	-	-	-	-	-	TYPE 12B	-
12	Iny	395	48-0011 SB, Rt	42.02	ASH CREEK	-	X	-	-	1	-	1	-	-	-	-	-	-	-	-	-	TYPE 12B	-
13	Iny	395	48-0012 NB, Rt	44.0	COTTONWOOD CREEK	X	-	-	-	1	-	1	-	-	-	-	-	-	-	-	-	TYPE 12B	-
13	Iny	395	48-0012 NB, Lt	44.0	COTTONWOOD CREEK	X	-	-	-	1	-	1	-	-	-	-	-	-	-	-	-	TYPE 12B	-
13	Iny	395	48-0012 SB, Lt	44.0	COTTONWOOD CREEK	-	X	-	-	1	-	1	-	-	-	-	-	-	-	-	-	TYPE 12B	-
13	Iny	395	48-0012 SB, Rt	44.0	COTTONWOOD CREEK	-	X	-	-	1	-	1	-	-	-	-	-	-	-	-	-	TYPE 12B	-
22*	Mno	395	47-0057 NB, Lt	44.21	LADWP AQUEDUCT	X	-	-	-	1	-	1	-	-	-	-	-	-	-	-	-	TYPE 12B	-

* SEE SHEET C-9 FOR LOCATION 22 Rt

CONSTRUCTION DETAILS

NO SCALE

C-8

STATE OF CALIFORNIA - DEPARTMENT OF TRANSPORTATION
Caltrans DESIGN

FUNCTIONAL SUPERVISOR: BRIAN WESLING
CALCULATED-DESIGNED BY: ENRICO DE JESUS
CHECKED BY: TONY SYMANOVICH
REVISED BY
DATE REVISED

LAST REVISION 07-14-14
DATE PLOTTED => 23-JUL-2015
TIME PLOTTED => 10:43

Dist	COUNTY	ROUTE	POST MILES TOTAL PROJECT	SHEET No.	TOTAL SHEETS
09	Iny, Mno	6,108,136,158 168,182,395	Var	10	59

REGISTERED CIVIL ENGINEER 6-26-15 DATE

6-29-15
PLANS APPROVAL DATE

REGISTERED PROFESSIONAL ENGINEER ANTON SYMANOVICH No. 78419 Exp. 9-30-15 CIVIL STATE OF CALIFORNIA

THE STATE OF CALIFORNIA OR ITS OFFICERS OR AGENTS SHALL NOT BE RESPONSIBLE FOR THE ACCURACY OR COMPLETENESS OF SCANNED COPIES OF THIS PLAN SHEET.

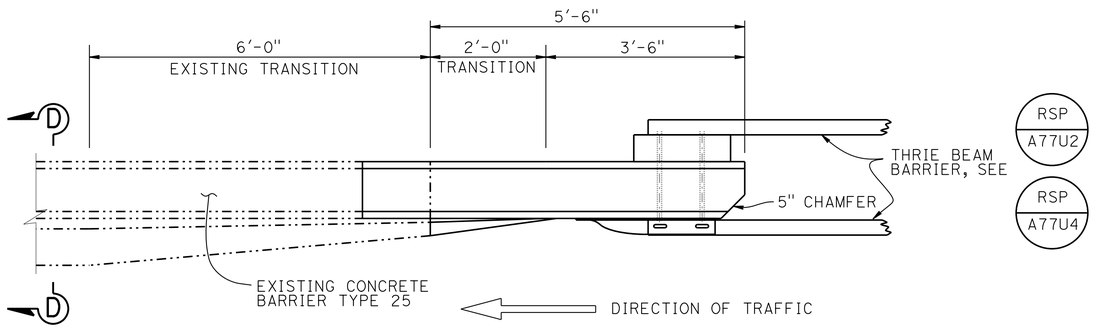

PLAN

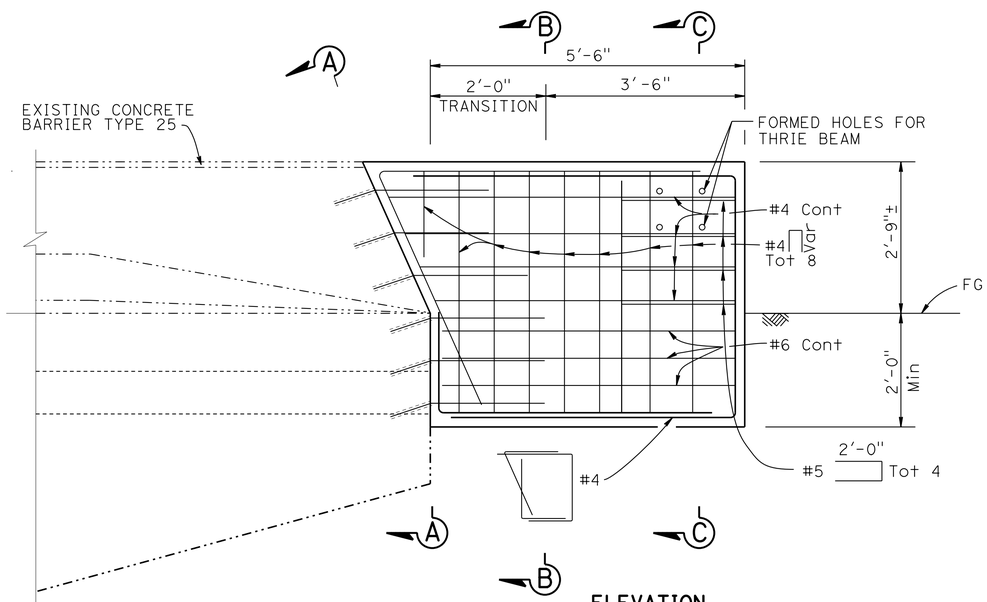

ELEVATION

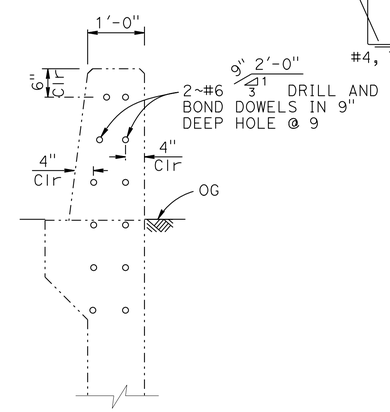

SECTION A-A

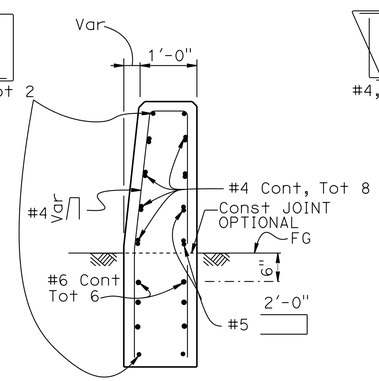

SECTION B-B

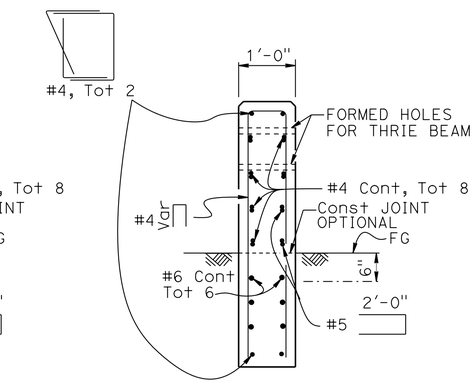

NOTE:
Thrie Beam not shown

SECTION C-C

NOTE:
The Contractor shall verify all controlling field dimensions before ordering or fabricating any material.

CONCRETE BARRIER (TRANSITION) AND THRIE BEAM CONNECTION DETAILS

Loc	COUNTY	ROUTE	BRIDGE No.	PM	BRIDGE NAME	NB	SB	EB	WB	TRANSITION RAILING (TYPE WB-31)		ALTERNATIVE FLARED TERMINAL SYSTEM		MIDWEST GUARDRAIL SYSTEM (STEEL POST)								MGS LAYOUT TYPE	
										APPROACH END	DEPARTURE END	APPROACH END	DEPARTURE END	APPROACH END (LF)				DEPARTURE END (LF)				APPROACH END	DEPARTURE END
														EB	WB	NB	SB	EB	WB	NB	SB		
22*	Mno	395	47-0057 NB, Rt	44.21	LADWP AQUEDUCT	X	-	-	-	1	-	1	-	-	-	-	-	-	-	-	-	TYPE 12B	-

* SEE SHEET C-8 FOR LOCATION 22 Lt

CONSTRUCTION DETAILS
NO SCALE

C-9

STATE OF CALIFORNIA - DEPARTMENT OF TRANSPORTATION
Caltrans
DESIGN

FUNCTIONAL SUPERVISOR: BRIAN WESLING
CALCULATED-DESIGNED BY
CHECKED BY
REVISED BY
DATE REVISED

LAST REVISION
DATE PLOTTED => 23-JUL-2015
TIME PLOTTED => 10:43

Dist	COUNTY	ROUTE	POST MILES TOTAL PROJECT	SHEET No.	TOTAL SHEETS
09	Iny, Mno	6,108,136,158 168,182,395	Var	11	59

REGISTERED CIVIL ENGINEER 6-26-15 DATE

6-29-15
PLANS APPROVAL DATE

REGISTERED PROFESSIONAL ENGINEER ANTON SYMANOVICH No. 78419 Exp. 9-30-15 CIVIL STATE OF CALIFORNIA

THE STATE OF CALIFORNIA OR ITS OFFICERS OR AGENTS SHALL NOT BE RESPONSIBLE FOR THE ACCURACY OR COMPLETENESS OF SCANNED COPIES OF THIS PLAN SHEET.

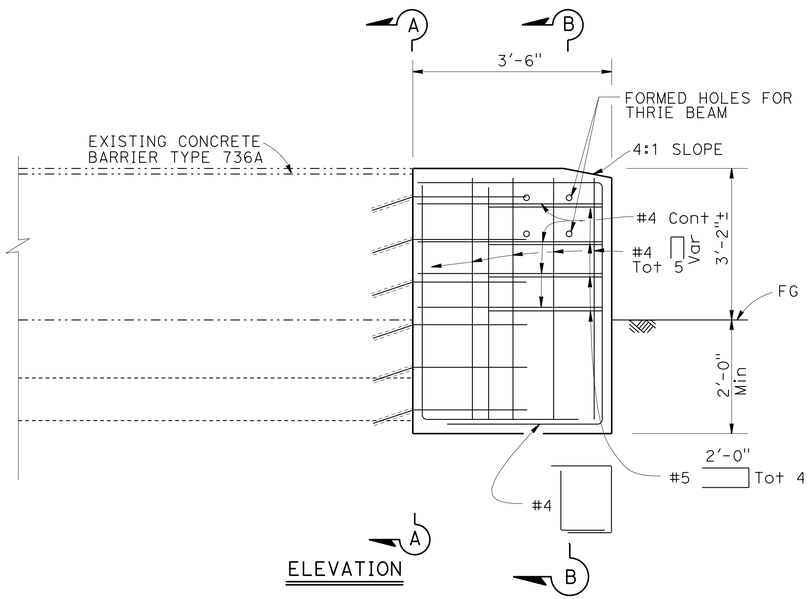

ELEVATION

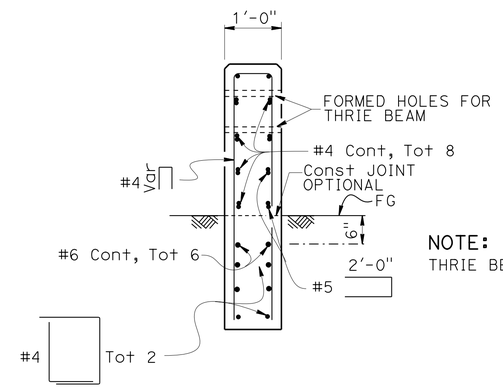

NOTE:
THRIE BEAM NOT SHOWN

SECTION B-B

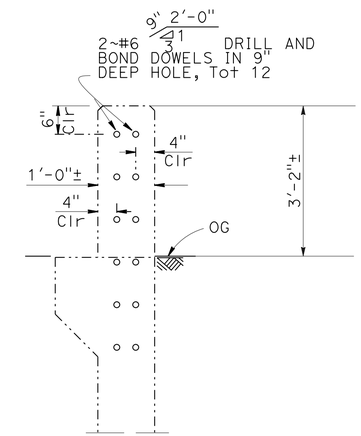

SECTION A-A

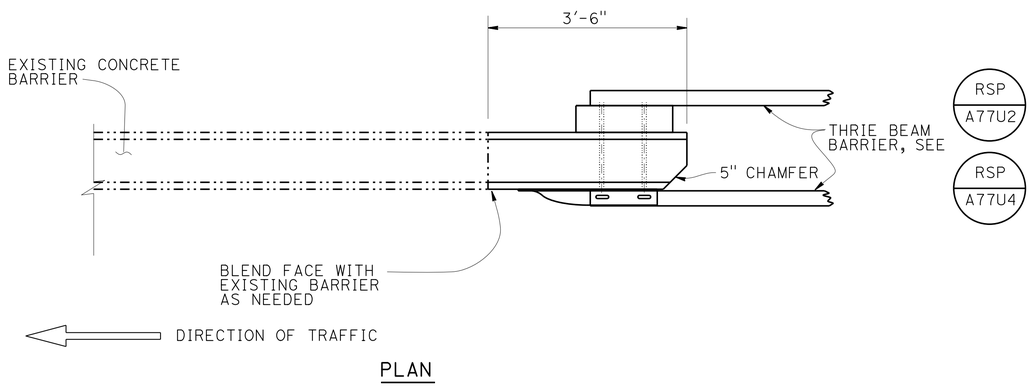

PLAN

CONCRETE BARRIER (TRANSITION) AND THRIE BEAM CONNECTION DETAILS

Loc	COUNTY	ROUTE	BRIDGE No.	PM	BRIDGE NAME	NB	SB	EB	WB	TRANSITION RAILING (TYPE WB-31)		ALTERNATIVE FLARED TERMINAL SYSTEM		MIDWEST GUARDRAIL SYSTEM (STEEL POST)								MGS LAYOUT TYPE	
										APPROACH END	DEPARTURE END	APPROACH END	DEPARTURE END	APPROACH END (LF)				DEPARTURE END (LF)				APPROACH END	DEPARTURE END
														EB	WB	NB	SB	EB	WB	NB	SB		
14	Iny	395	N/A, NB Rt	93.00	TINNEMAHA CREEK	X	-	-	-	1	-	1	-	-	-	-	-	-	-	-	-	TYPE 12B	-
14	Iny	395	N/A, SB Rt	93.00	TINNEMAHA CREEK	-	X	-	-	1	-	1	-	-	-	-	-	-	-	-	-	TYPE 12B	-

CONSTRUCTION DETAILS
NO SCALE **C-10**

STATE OF CALIFORNIA - DEPARTMENT OF TRANSPORTATION
Caltrans® DESIGN

FUNCTIONAL SUPERVISOR: BRIAN WESLING
CALCULATED-DESIGNED BY: ENRICO DE JESUS
CHECKED BY: TONY SYMANOVICH
REVISED BY / DATE REVISED

LAST REVISION 07-14-14 | DATE PLOTTED => 23-JUL-2015 | TIME PLOTTED => 10:43

Dist	COUNTY	ROUTE	POST MILES TOTAL PROJECT	SHEET No.	TOTAL SHEETS
09	Iny, Mno	6,108,136,158 168,182,395	Var	12	59

REGISTERED CIVIL ENGINEER 6-26-15 DATE

6-29-15
PLANS APPROVAL DATE

REGISTERED PROFESSIONAL ENGINEER ANTON SYMANOVICH No. 78419 Exp. 9-30-15 CIVIL STATE OF CALIFORNIA

THE STATE OF CALIFORNIA OR ITS OFFICERS OR AGENTS SHALL NOT BE RESPONSIBLE FOR THE ACCURACY OR COMPLETENESS OF SCANNED COPIES OF THIS PLAN SHEET.

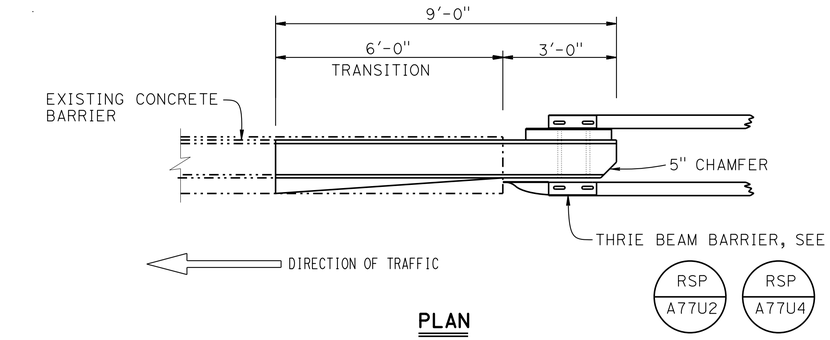

PLAN

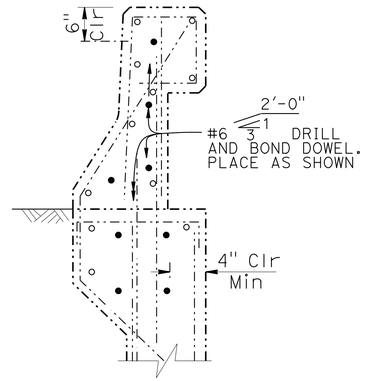

SECTION A-A

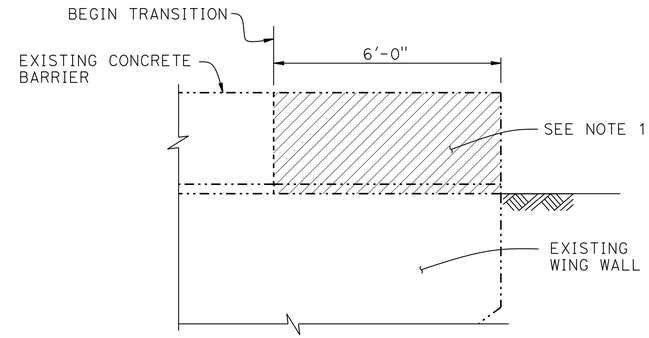

CONCRETE REMOVAL

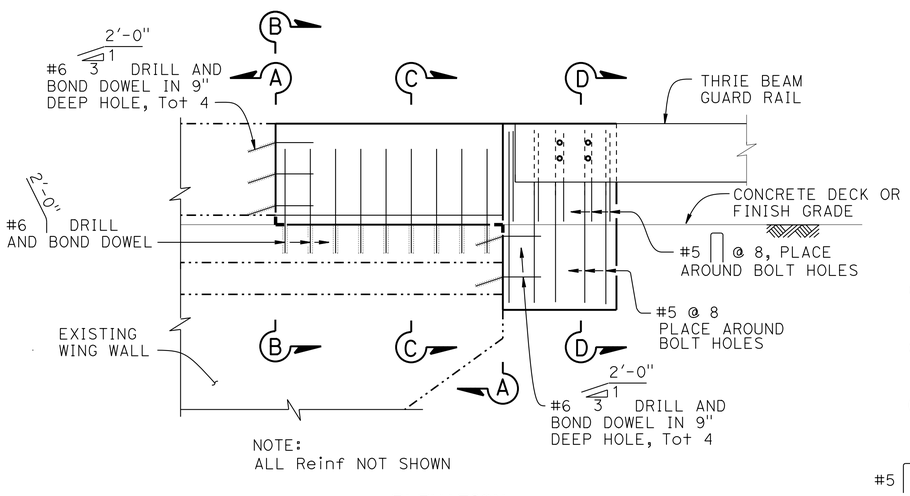

ELEVATION

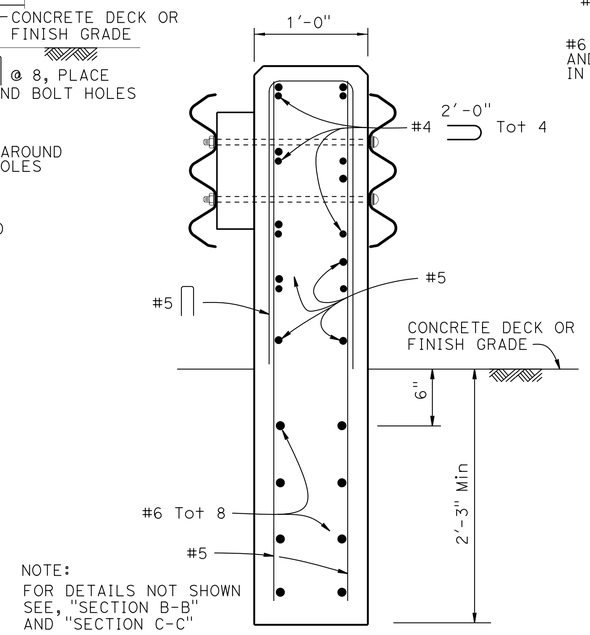

SECTION D-D

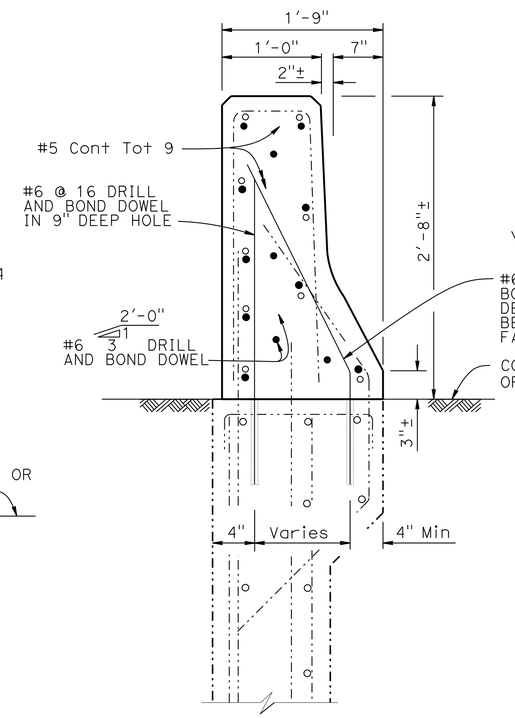

SECTION B-B

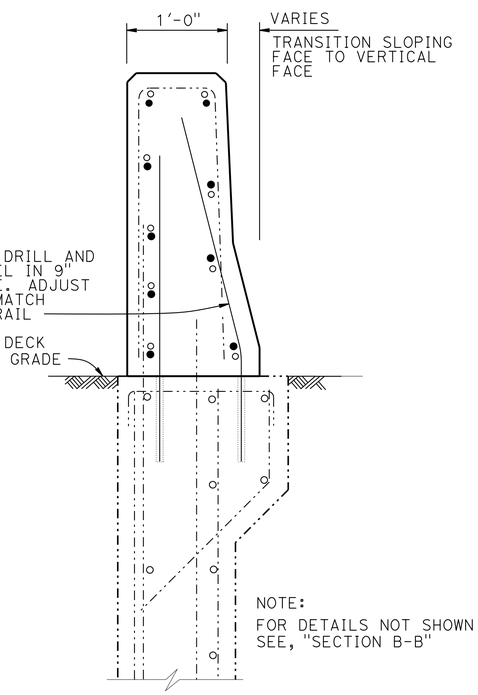

SECTION C-C

CONCRETE BARRIER (TRANSITION) AND THRIE BEAM CONNECTION DETAILS

Loc	COUNTY	ROUTE	BRIDGE No.	PM	BRIDGE NAME	NB	SB	EB	WB	TRANSITION RAILING (TYPE WB-31)		ALTERNATIVE FLARED TERMINAL SYSTEM		MIDWEST GUARDRAIL SYSTEM (STEEL POST)								MGS LAYOUT TYPE		REMOVE CONCRETE BARRIER							
										APPROACH END	DEPARTURE END	APPROACH END	DEPARTURE END	APPROACH END (LF)				DEPARTURE END (LF)				APPROACH END	DEPARTURE END	APPROACH END (LF)				DEPARTURE END(LF)			
														EB	WB	NB	SB	EB	WB	NB	SB			EB	WB	NB	SB	EB	WB	NB	SB
9	Iny	168	48-0061	19.79	OWENS RIVER	-	-	X	X	2	2	2	2	-	-	-	-	-	-	-	-	TYPE 12B	TYPE 12BB	6	6	-	-	6	6	-	-

CONSTRUCTION DETAILS

NO SCALE

C-11

STATE OF CALIFORNIA - DEPARTMENT OF TRANSPORTATION
Caltrans® DESIGN

FUNCTIONAL SUPERVISOR: BRIAN WESLING
CALCULATED-DESIGNED BY: TONY SYMANOVICH
CHECKED BY
REVISED BY
DATE REVISED

LAST REVISION
DATE PLOTTED => 23-JUL-2015
TIME PLOTTED => 10:43

Dist	COUNTY	ROUTE	POST MILES TOTAL PROJECT	SHEET No.	TOTAL SHEETS
09	Iny, Mno	6,108,136,158 168,182,395	Var	13	59

REGISTERED CIVIL ENGINEER 6-26-15 DATE

6-29-15
PLANS APPROVAL DATE

REGISTERED PROFESSIONAL ENGINEER ANTON SYMANOVICH No. 78419 Exp. 9-30-15 CIVIL STATE OF CALIFORNIA

THE STATE OF CALIFORNIA OR ITS OFFICERS OR AGENTS SHALL NOT BE RESPONSIBLE FOR THE ACCURACY OR COMPLETENESS OF SCANNED COPIES OF THIS PLAN SHEET.

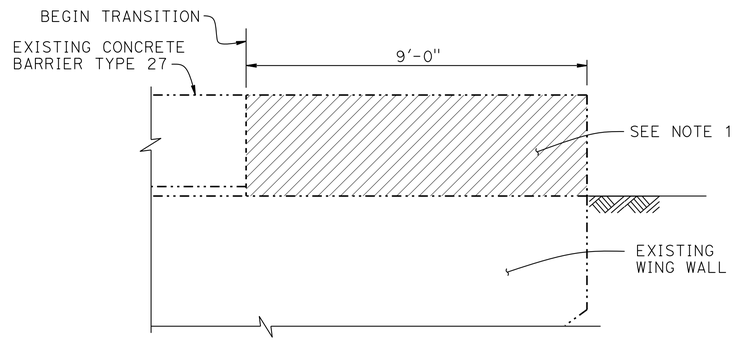

CONCRETE REMOVAL

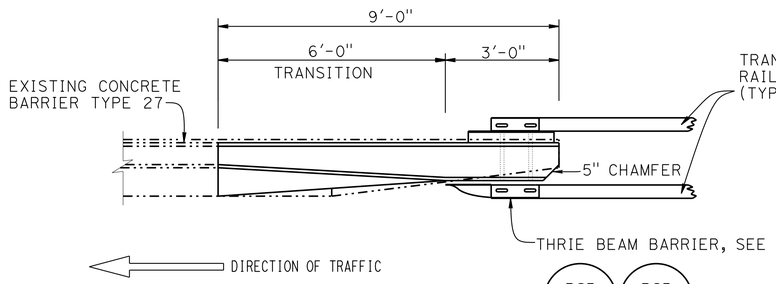

PLAN

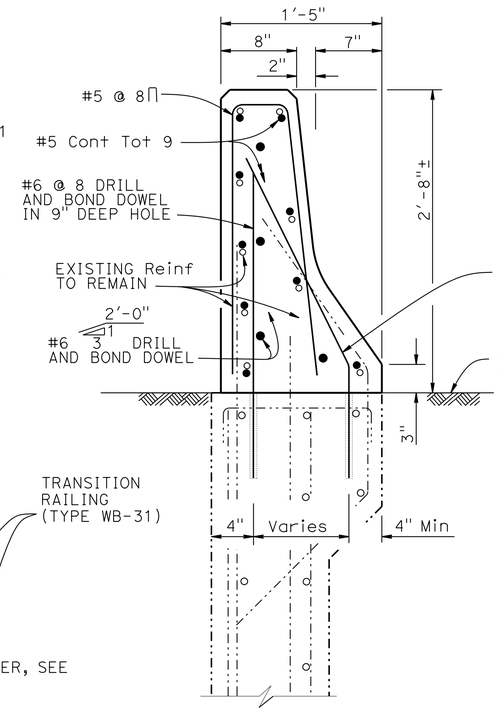

SECTION B-B

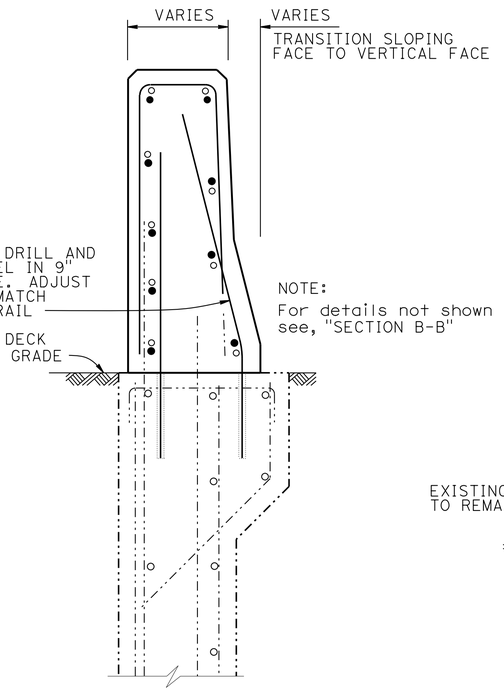

SECTION C-C

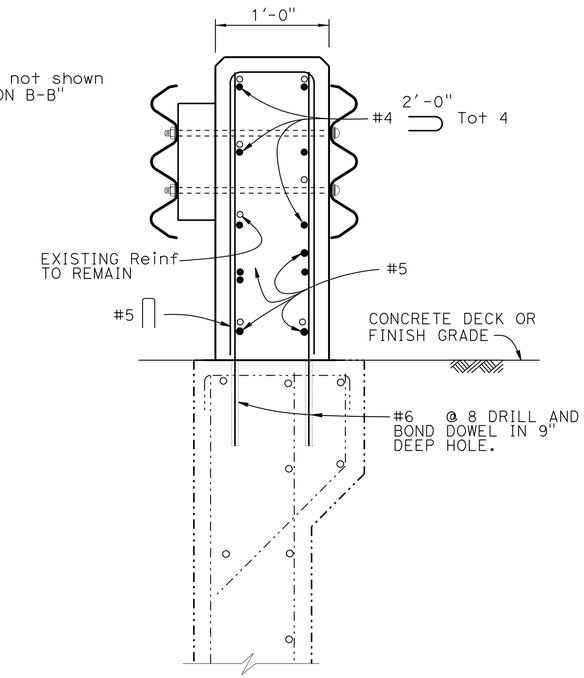

SECTION D-D

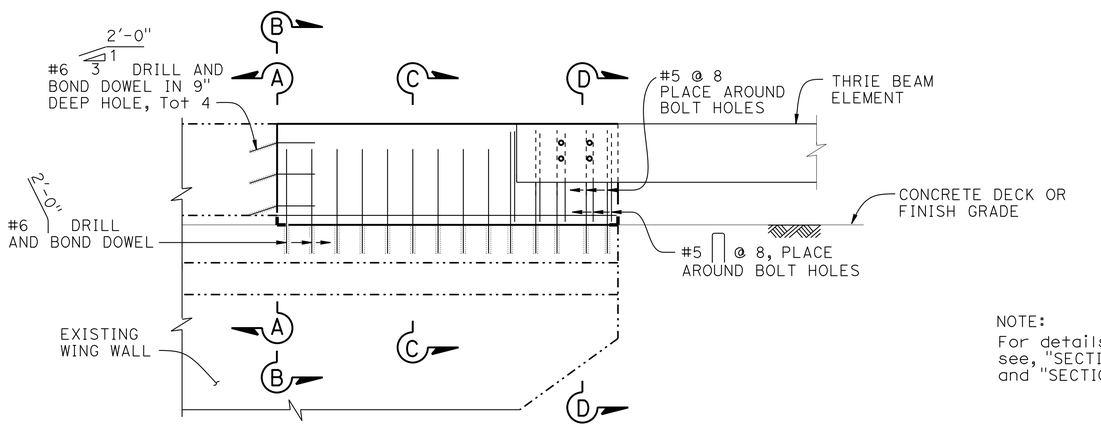

NOTE:
All Reinf not shown

ELEVATION

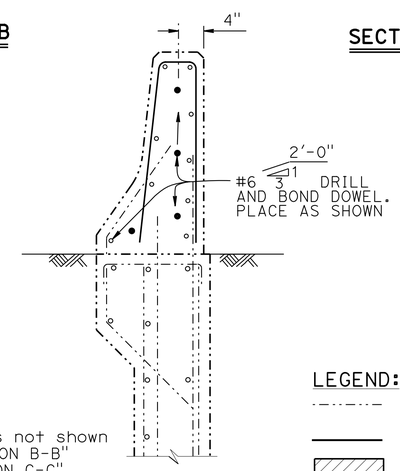

NOTE:
For details not shown see, "SECTION B-B" and "SECTION C-C"

SECTION A-A

LEGEND:

- Indicates existing structure
- Indicates new construction
- Concrete removal
- Indicates Existing Reinforcement

NOTES:

1. Cut and remove the portion of Concrete Barrier Type 27 as required. Existing reinforcement to remain.
2. Wingwall reinforcement to remain.

NOTE:
The Contractor shall verify all controlling field dimensions before ordering or fabricating bny material.

CONCRETE BARRIER (TRANSITION) AND THRIE BEAM CONNECTION DETAILS

Loc	COUNTY	ROUTE	BRIDGE No.	PM	BRIDGE NAME	NB	SB	EB	WB	TRANSITION RAILING (TYPE WB-31)		ALTERNATIVE FLARED TERMINAL SYSTEM		MIDWEST GUARDRAIL SYSTEM (STEEL POST)								BURIED POST END ANCHOR	MGS LAYOUT TYPE		REMOVE CONCRETE	
														APPROACH END (LF)				DEPARTURE END (LF)								
										APPROACH END	DEPARTURE END	APPROACH END	DEPARTURE END	EB	WB	NB	SB	EB	WB	NB	SB	EA (N)	APPROACH END	DEPARTURE END	APPROACH END (LF)	DEPARTURE END (LF)
19	Mno	182	47-0058	6.20	E WALKER RIVER, NB	X	-	-	-	1	1	1	1	-	-	112.5		-	-	37.5	-	-	TYPE 12B	TYPE 12BB	9	9
19	Mno	182	47-0058	6.20	E WALKER RIVER, SB	-	X	-	-	1	1	-	1	-	-	-	100	-	-	-	37.5	1 AT APPROACH	TYPE 12C	TYPE 12BB	9	9

(N) - NOT A PAY ITEM. FOR INFORMATION ONLY.

CONSTRUCTION DETAILS C-12

STATE OF CALIFORNIA - DEPARTMENT OF TRANSPORTATION
Caltrans® DESIGN

FUNCTIONAL SUPERVISOR: BRIAN WESLING
CALCULATED-DESIGNED BY: ENRICO DE JESUS
CHECKED BY: TONY SYMANOVICH
REVISED BY / DATE REVISED

LAST REVISION / DATE PLOTTED => 23-JUL-2015 / TIME PLOTTED => 10:43

Dist	COUNTY	ROUTE	POST MILES TOTAL PROJECT	SHEET No.	TOTAL SHEETS
09	Iny, Mno	6,108,136,158 168,182,395	Var	14	59

REGISTERED CIVIL ENGINEER 6-26-15 DATE

6-29-15
PLANS APPROVAL DATE

REGISTERED PROFESSIONAL ENGINEER ANTON SYMANOVICH No. 78419 Exp. 9-30-15 CIVIL STATE OF CALIFORNIA

THE STATE OF CALIFORNIA OR ITS OFFICERS OR AGENTS SHALL NOT BE RESPONSIBLE FOR THE ACCURACY OR COMPLETENESS OF SCANNED COPIES OF THIS PLAN SHEET.

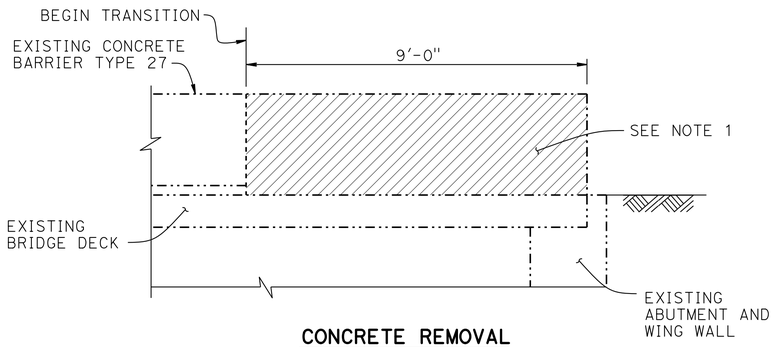

CONCRETE REMOVAL

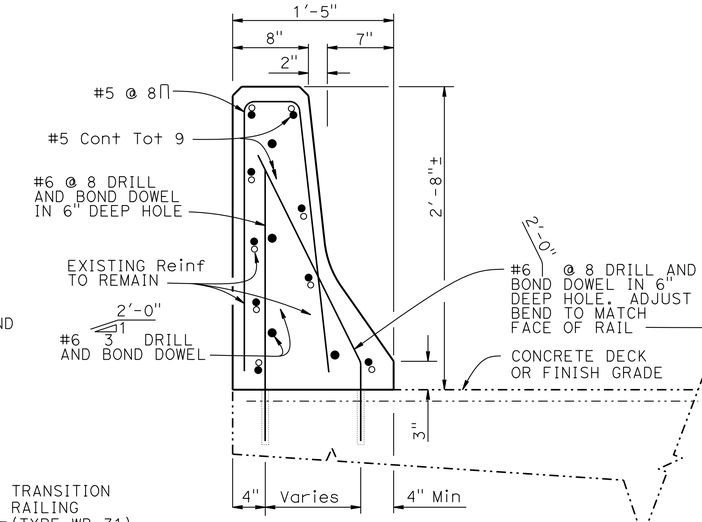

SECTION B-B

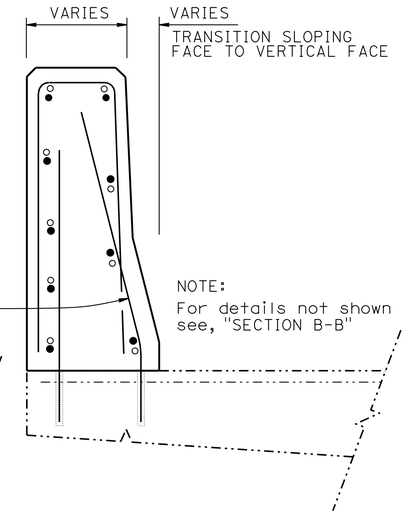

SECTION C-C

LEGEND:

- Indicates existing structure
- Indicates new construction
- Concrete removal
- Indicates Existing Reinforcement

NOTE:
The Contractor shall verify all controlling field dimensions before ordering or fabricating bny material.

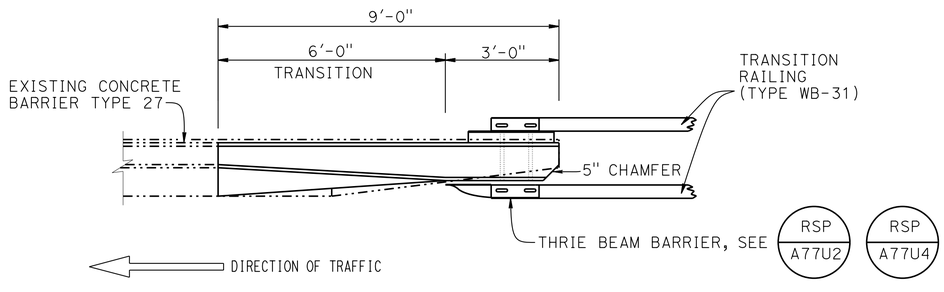

PLAN

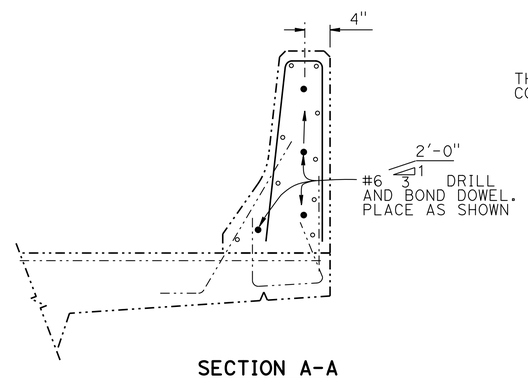

SECTION A-A

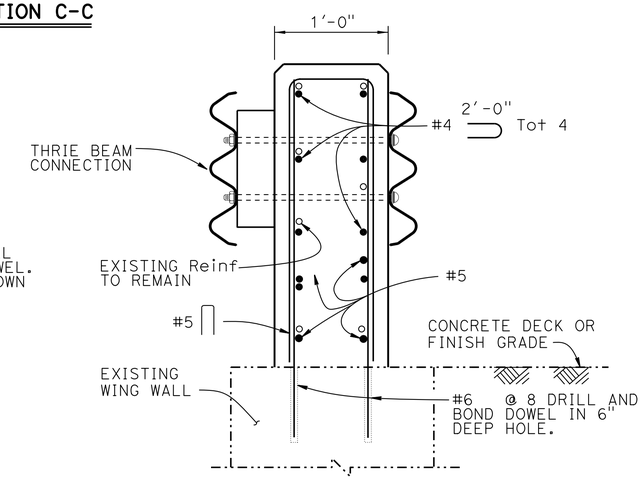

SECTION D-D

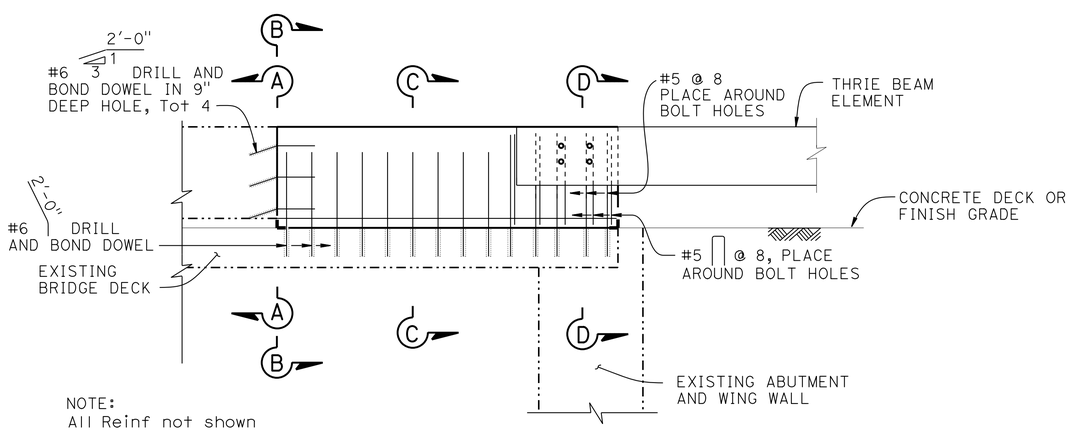

ELEVATION

REMOVE CONCRETE BARRIER

Loc	APPROACH END (LF)				DEPARTURE END(LF)			
	EB	WB	NB	SB	EB	WB	NB	SB
15	9	9	-	-	9	9	-	-

NOTES:

1. Cut and remove the portion of Concrete Barrier Type 27 as required. Existing reinforcement to remain.
2. Wingwall reinforcement to remain.
3. Avoid existing reinforcement when drilling.
4. Clearance to reinforcing steel in barrier to be 1", except as noted.
5. Roughen existing bridge deck surface before casting new concrete against existing concrete.
6. Taper the top of the end of the bridge railing at 4:1 to match the top elevation of the thrie beam rail element.

CONCRETE BARRIER (TRANSITION) AND THRIE BEAM CONNECTION DETAILS

Loc	COUNTY/ ROUTE	BRIDGE No.	PM	BRIDGE NAME	NB	SB	EB	WB	TRANSITION RAILING (TYPE WB-31)		ALTERNATIVE FLARED TERMINAL SYSTEM		MIDWEST GUARDRAIL SYSTEM (STEEL POST)								BURIED POST END ANCHOR	MGS LAYOUT TYPE	
									APPROACH END	DEPARTURE END	APPROACH END	DEPARTURE END	APPROACH END (LF)				DEPARTURE END (LF)				EA (N)	APPROACH END	DEPARTURE END
													EB	WB	NB	SB	EB	WB	NB	SB			
15	Mno/108	47-0061	3.05	SARDINE CREEK	-	-	X	X	2	2	2	2	25	12.5	-	-	-	-	-	-	-	TYPE 12B	TYPE 12BB

CONSTRUCTION DETAILS

NO SCALE

C-13

STATE OF CALIFORNIA - DEPARTMENT OF TRANSPORTATION
DESIGN
Caltrans
FUNCTIONAL SUPERVISOR: BRIAN WESLING
CALCULATED-DESIGNED BY: TONY SYMANOVICH
CHECKED BY
REVISED BY
DATE REVISED

LAST REVISION
DATE PLOTTED => 23-JUL-2015
TIME PLOTTED => 10:43

Dist	COUNTY	ROUTE	POST MILES TOTAL PROJECT	SHEET No.	TOTAL SHEETS
09	Iny, Mno	6,108,136,158 168,182,395	Var	15	59

REGISTERED CIVIL ENGINEER 6-26-15 DATE

6-29-15
PLANS APPROVAL DATE

REGISTERED PROFESSIONAL ENGINEER ANTON SYMANOVICH No. 78419 Exp. 9-30-15 CIVIL STATE OF CALIFORNIA

THE STATE OF CALIFORNIA OR ITS OFFICERS OR AGENTS SHALL NOT BE RESPONSIBLE FOR THE ACCURACY OR COMPLETENESS OF SCANNED COPIES OF THIS PLAN SHEET.

NOTE:
The Contractor shall verify all controlling field dimensions before ordering or fabricating bny material.

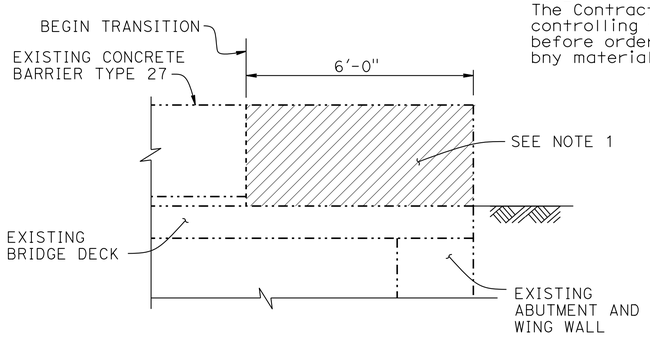

CONCRETE REMOVAL

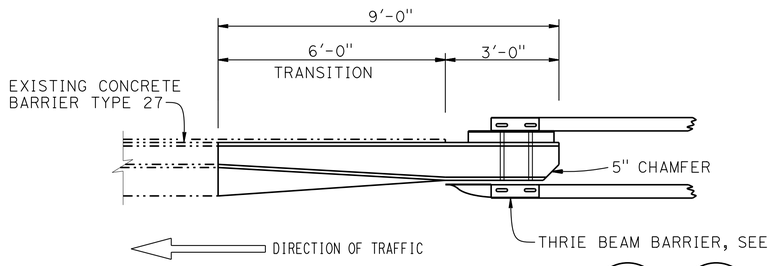

PLAN

1/2" = 1'-0"

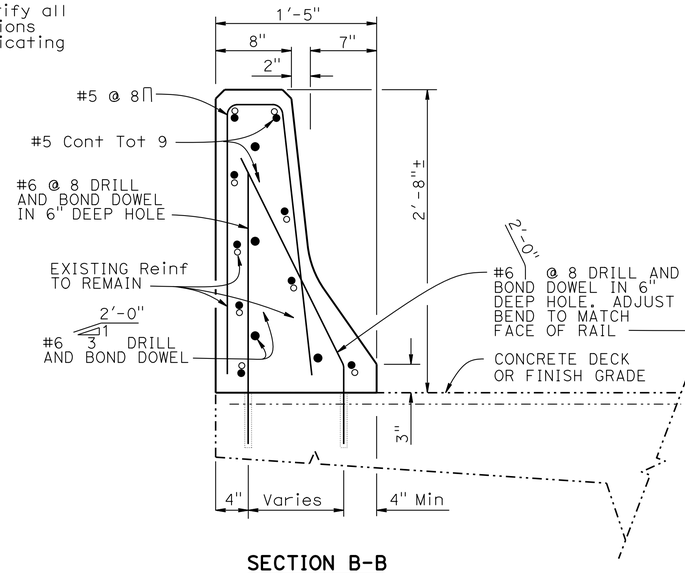

SECTION B-B

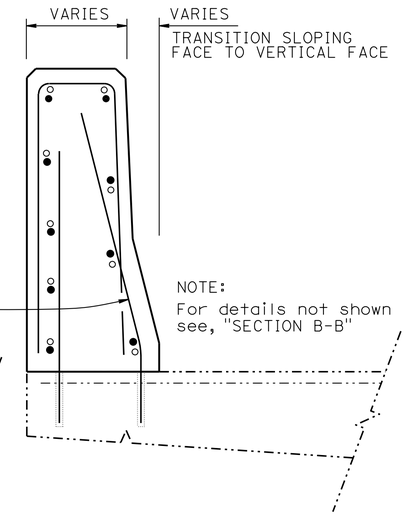

SECTION C-C

LEGEND:

- Indicates existing structure
- Indicates new construction
- Concrete removal
- Indicates Existing Reinforcement

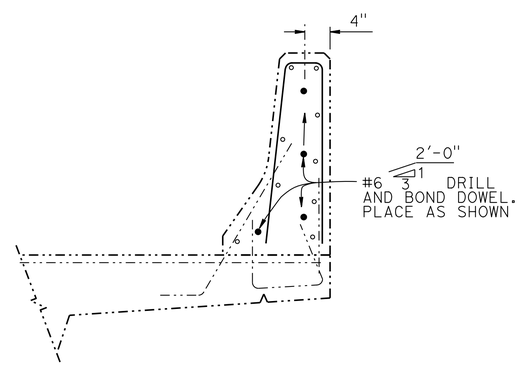

SECTION A-A

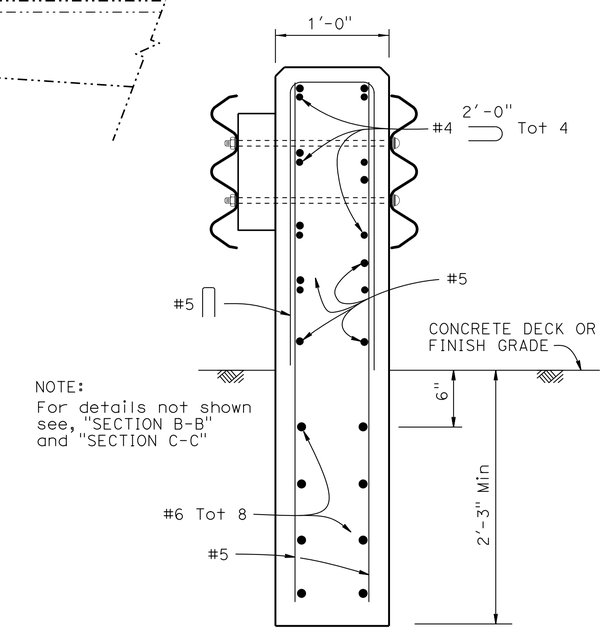

NOTE:
For details not shown see, "SECTION B-B" and "SECTION C-C"

SECTION D-D

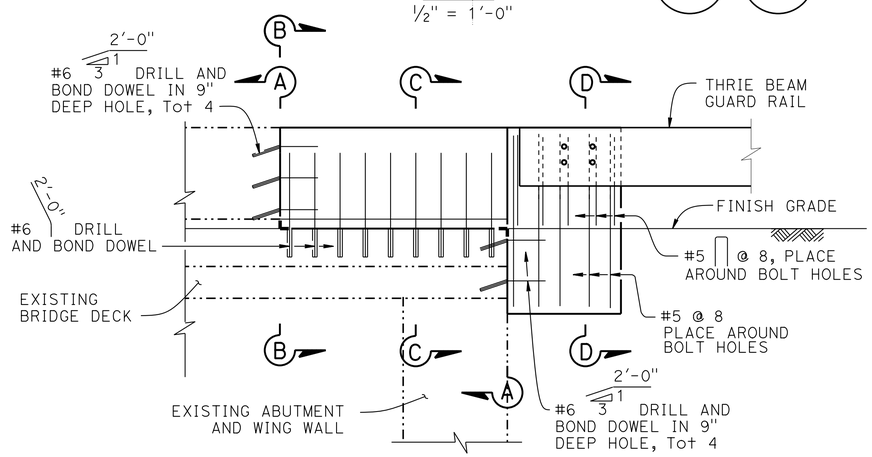

NOTE:
All Reinf not shown

ELEVATION

REMOVE CONCRETE BARRIER

Loc	APPROACH END (LF)				DEPARTURE END(LF)			
	EB	WB	NB	SB	EB	WB	NB	SB
17	6	6	-	-	6	6	-	-

NOTES:

1. Cut and remove the portion of Concrete Barrier Type 27 as required. Existing reinforcement to remain.
2. Wingwall reinforcement to remain.
3. Avoid existing reinforcement when drilling.
4. Clearance to reinforcing steel in barrier to be 1", except as noted.
5. Roughen existing bridge deck surface before casting new concrete against existing concrete.
6. Taper the top of the end of the bridge railing at 4:1 to match the top elevation of the thrie beam rail element.

CONCRETE BARRIER (TRANSITION) AND THRIE BEAM CONNECTION DETAILS

Loc	COUNTY/ ROUTE	BRIDGE No.	PM	BRIDGE NAME	NB	SB	EB	WB	TRANSITION RAILING (TYPE WB-31)		ALTERNATIVE FLARED TERMINAL SYSTEM		MIDWEST GUARDRAIL SYSTEM (STEEL POST)								BURIED POST END ANCHOR	MGS LAYOUT TYPE	
									APPROACH END	DEPARTURE END	APPROACH END	DEPARTURE END	APPROACH END (LF)				DEPARTURE END (LF)				EA (N)	APPROACH END	DEPARTURE END
													EB	WB	NB	SB	EB	WB	NB	SB			
17	Mno/108	47-0020	12.93	W WALKER RIVER, EB	-	-	X	-	1	1	1	1	12.5	-	-	-	-	-	-	-	-	TYPE 12A	TYPE 12BB
17	Mno/108	47-0020	12.93	W WALKER RIVER, WB	-	-	-	X	1	1	1	-	-	12.5	-	-	-	75	-	-	1 AT DEPARTURE	TYPE 12B	TYPE 12CC

CONSTRUCTION DETAILS

NO SCALE

C-14

STATE OF CALIFORNIA - DEPARTMENT OF TRANSPORTATION
Caltrans
DESIGN

FUNCTIONAL SUPERVISOR: BRIAN WESLING
CALCULATED-DESIGNED BY: TONY SYMANOVICH
CHECKED BY
REVISED BY
DATE REVISED

LAST REVISION
DATE PLOTTED => 23-JUL-2015
TIME PLOTTED => 10:43

Dist	COUNTY	ROUTE	POST MILES TOTAL PROJECT	SHEET No.	TOTAL SHEETS
09	Iny, Mno	6,108,136,158 168,182,395	Var	16	59

REGISTERED CIVIL ENGINEER 6-26-15 DATE

6-29-15
PLANS APPROVAL DATE

REGISTERED PROFESSIONAL ENGINEER ANTON SYMANOVICH No. 78419 Exp. 9-30-15 CIVIL STATE OF CALIFORNIA

THE STATE OF CALIFORNIA OR ITS OFFICERS OR AGENTS SHALL NOT BE RESPONSIBLE FOR THE ACCURACY OR COMPLETENESS OF SCANNED COPIES OF THIS PLAN SHEET.

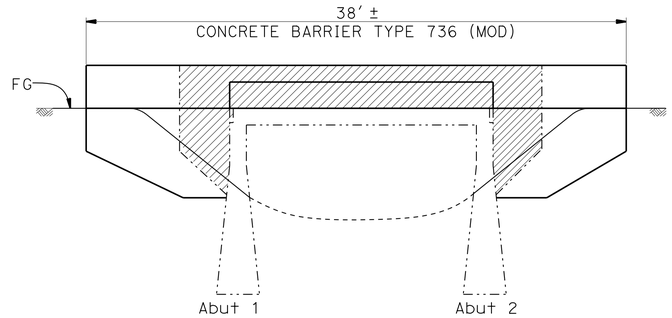

ELEVATION
NO SCALE

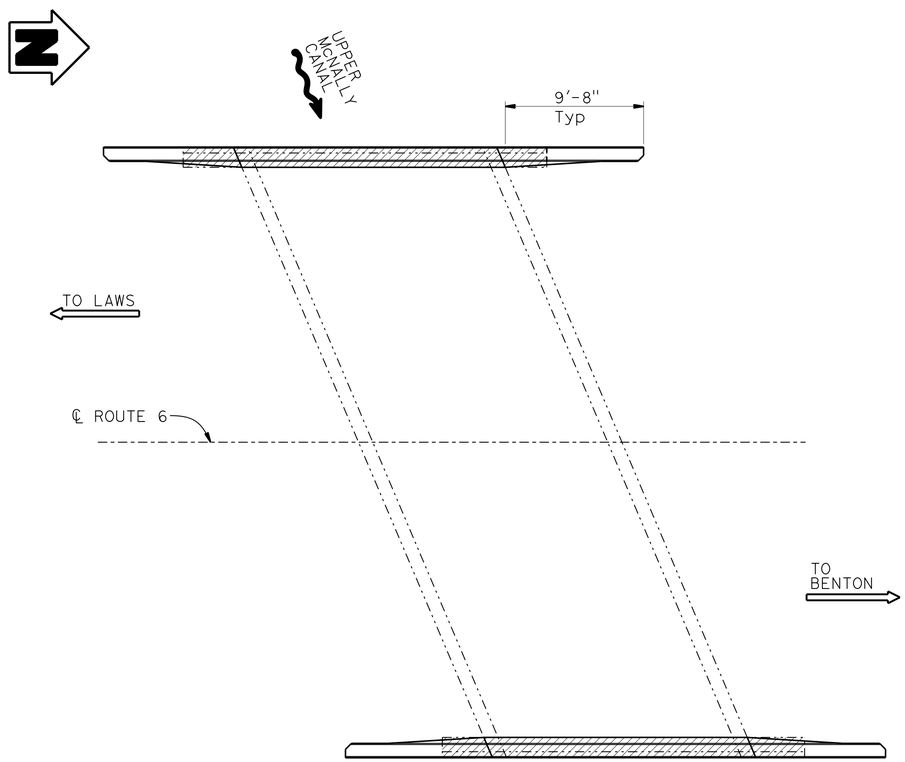

PLAN
NO SCALE

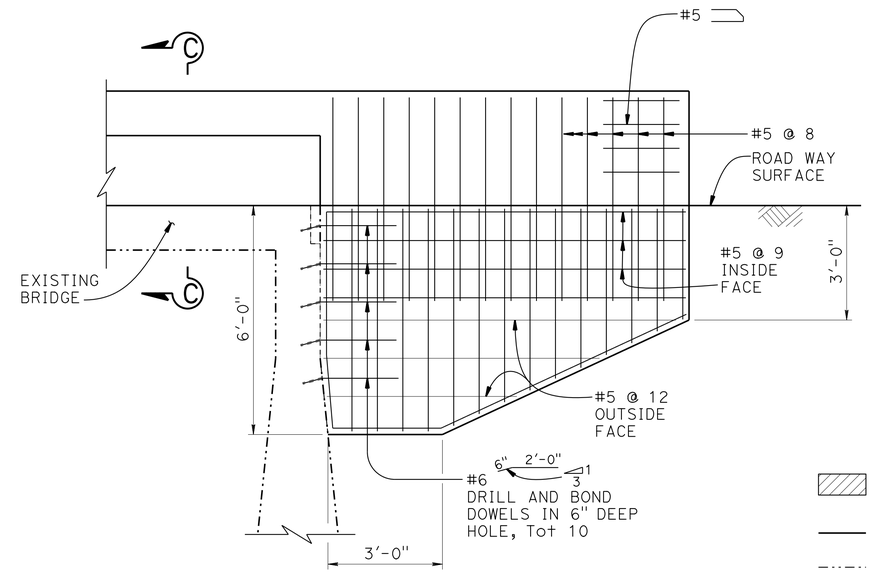

PART ELEVATION
NO SCALE

NOTES:

Indicates limits of existing wingwall and Type 1 rail removal.

Indicates new structure.

Indicates existing structure.

1. For "SECTION A-A, SECTION B-B and SECTION C-C", see sheet C-17.

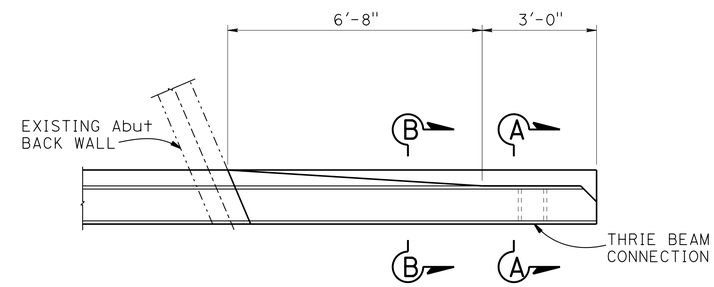

PART PLAN
NO SCALE

CONCRETE BARRIER DETAILS

LOCATION 4 - UPPER McNALLY CANAL
INY, ROUTE 6, PM 7.47

Loc	COUNTY & ROUTE	BRIDGE No.	PM	BRIDGE NAME	NB	SB	EB	WB	TRANSITION RAILING (TYPE WB-31)		ALTERNATIVE FLARED TERMINAL SYSTEM		MIDWEST GUARDRAIL SYSTEM (STEEL POST)								MGS LAYOUT TYPE		REMOVE CONCRETE BARRIER	CONCRETE BARRIER TYPE 736 (MOD)
									APPROACH END	DEPARTURE END	APPROACH END	DEPARTURE END	APPROACH END(LF)				DEPARTURE END(LF)				APPROACH END	DEPARTURE END	LF	LF
													EB	WB	NB	SB	EB	WB	NB	SB				
4	Iny-6	48-0039	7.47	UPPER MCNALLY	X	X	-	-	2	2	2	2	-	-	-	-	-	-	-	-	TYPE 12B	TYPE 12BB	50	76

CONSTRUCTION DETAILS
NO SCALE
C-15

STATE OF CALIFORNIA - DEPARTMENT OF TRANSPORTATION
Caltrans DESIGN

FUNCTIONAL SUPERVISOR: BRIAN WESLING
CALCULATED-DESIGNED BY: TONY SYMANOVICH
CHECKED BY:
REVISED BY:
DATE REVISED:
AE TERN

LAST REVISION
DATE PLOTTED => 23-JUL-2015
TIME PLOTTED => 10:43

Dist	COUNTY	ROUTE	POST MILES TOTAL PROJECT	SHEET No.	TOTAL SHEETS
09	Iny, Mno	6,108,136,158 168,182,395	Var	17	59

REGISTERED CIVIL ENGINEER 6-26-15 DATE

6-29-15
PLANS APPROVAL DATE

REGISTERED PROFESSIONAL ENGINEER ANTON SYMANOVICH No. 78419 Exp. 9-30-15 CIVIL STATE OF CALIFORNIA

THE STATE OF CALIFORNIA OR ITS OFFICERS OR AGENTS SHALL NOT BE RESPONSIBLE FOR THE ACCURACY OR COMPLETENESS OF SCANNED COPIES OF THIS PLAN SHEET.

NOTES:

—— Indicates new structure

-·-·- Indicates existing structure

① Indicates limits of existing barrier rail removal, see sheet C-17 for detail.

② Concrete Barrier Type 736B

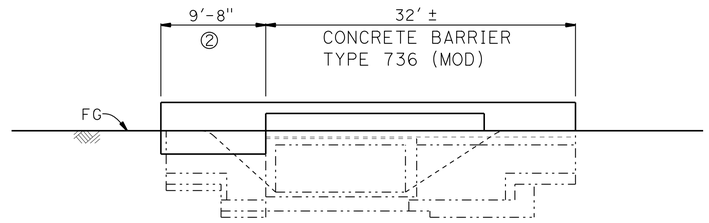

ELEVATION
NO SCALE

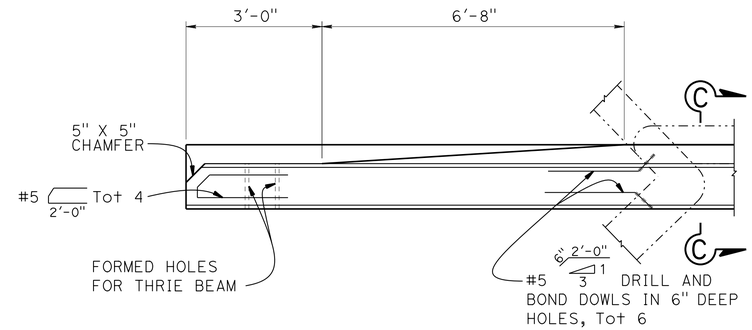

DETAIL "A"
NO SCALE
For "SECTION C-C," see Sheet C-17.

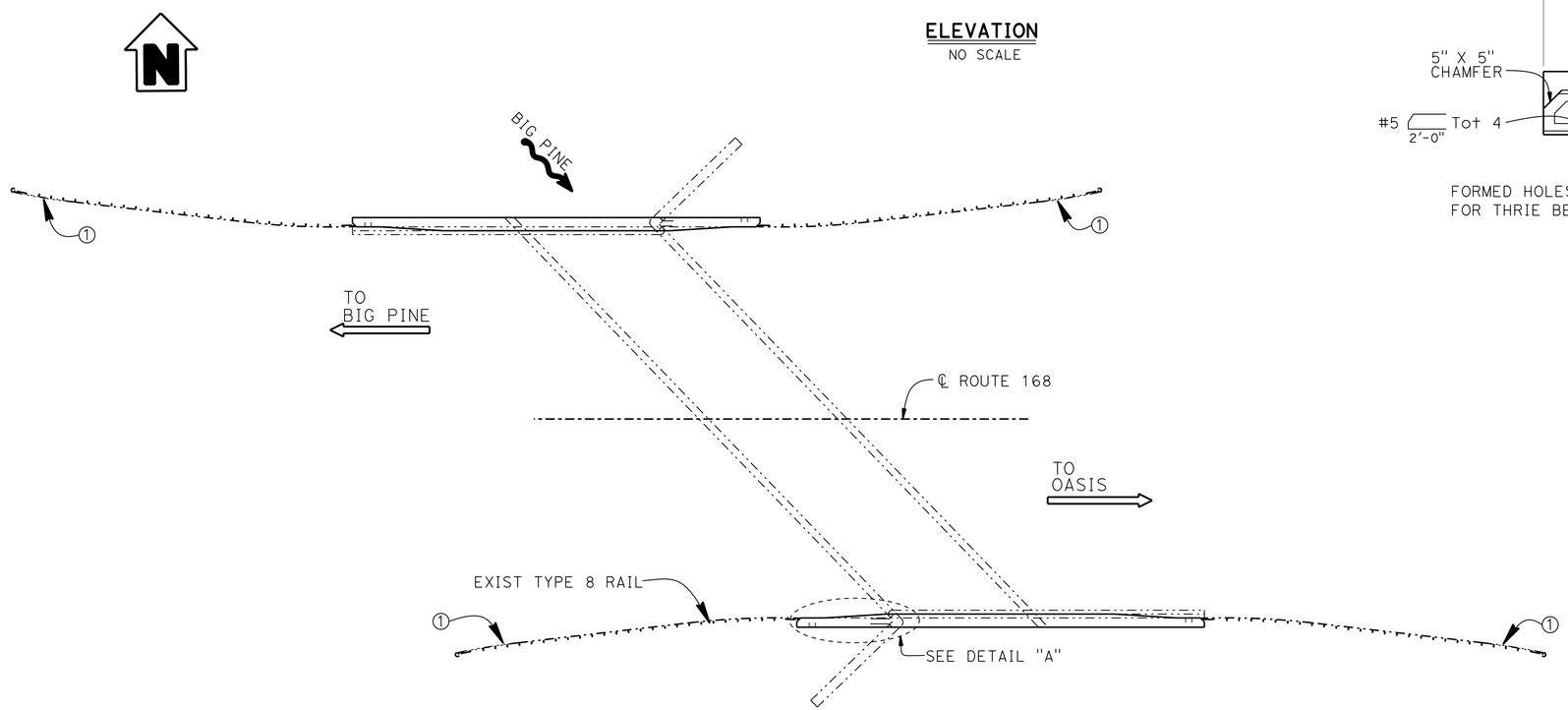

PLAN
NO SCALE

CONCRETE BARRIER DETAILS

LOCATION 8 - BIG PINE CANAL
10' x 5' - A x 58' R.C.B, Iny,
Rte 168, PM 18.3

Loc	COUNTY & ROUTE	BRIDGE No.	PM	BRIDGE NAME	NB	SB	EB	WB	TRANSITION RAILING (TYPE WB-31)		ALTERNATIVE FLARED TERMINAL SYSTEM		MIDWEST GUARDRAIL SYSTEM (STEEL POST)								MGS LAYOUT TYPE		REMOVE CONCRETE BARRIER	CONCRETE BARRIER	
									APPROACH END	DEPARTURE END	APPROACH END	DEPARTURE END	APPROACH END(LF)				DEPARTURE END(LF)				APPROACH END	DEPARTURE END	LF	TYPE 736 (MOD) LF	TYPE 736B LF
													EB	WB	NB	SB	EB	WB	NB	SB					
8	Iny-168	N/A	18.5	BIG PINE CANAL	-	-	X	X	2	2	2	2	-	-	-	-	-	-	-	-	TYPE 12B	TYPE 12BB	-	64	20

CONSTRUCTION DETAILS
NO SCALE
C-16

STATE OF CALIFORNIA - DEPARTMENT OF TRANSPORTATION
DESIGN
Caltrans

FUNCTIONAL SUPERVISOR: BRIAN WESLING
CALCULATED-DESIGNED BY / CHECKED BY: TONY SYMANOVICH
AE TERN
REVISED BY / DATE REVISED

LAST REVISION / DATE PLOTTED => 23-JUL-2015 / TIME PLOTTED => 10:43

Dist	COUNTY	ROUTE	POST MILES TOTAL PROJECT	SHEET No.	TOTAL SHEETS
09	Iny, Mno	6,108,136,158 168,182,395	Var	18	59

REGISTERED CIVIL ENGINEER 6-26-15 DATE

6-29-15
PLANS APPROVAL DATE

REGISTERED PROFESSIONAL ENGINEER ANTON SYMANOVICH No. 78419 Exp. 9-30-15 CIVIL STATE OF CALIFORNIA

THE STATE OF CALIFORNIA OR ITS OFFICERS OR AGENTS SHALL NOT BE RESPONSIBLE FOR THE ACCURACY OR COMPLETENESS OF SCANNED COPIES OF THIS PLAN SHEET.

NOTES:

1. Avoid existing reinforcement when drilling.
2. Dimensions may vary with roadway cross slope and with certain thickness of surfacing. See Project Plans.
3. Clearance to reinforcing steel in barrier to be 1", except as noted. Longitudinal reinforcement to stop at all expansion joints.
4. For typical metal railing connection details not shown, see Revised Standard Plans RSP A77U2 and RSP A77U4.
5. Roughen existing bridge deck surface before casting new concrete against existing concrete.
6. Taper the top of the end of the bridge railing at 4:1 to match the top elevation of the thrie beam rail element.

DESIGN NOTES:

DESIGN: AASHTO LRFD Bridge Design Specifications, 4th Edition with California Amendments

CT: 54 kip maximum traffic impact loading evenly distributed over 10 feet at top of the barrier and 1:1 distribution down and outward

Reinforced Concrete:

New	Existing
f'c = 3.6 Ksi	f'c = 3.6 Ksi
fy = 60 Ksi	fy = 60 Ksi

LEGEND:

Indicates new structure

Indicates existing structure

Indicates limits of existing barrier rail removal

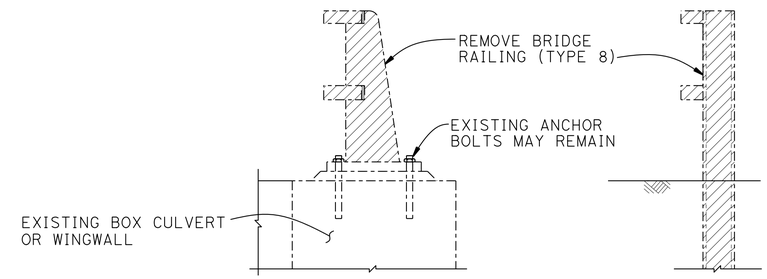

REMOVE BRIDGE RAILING
NO SCALE
LOCATION 8 - BIG PINE CANAL

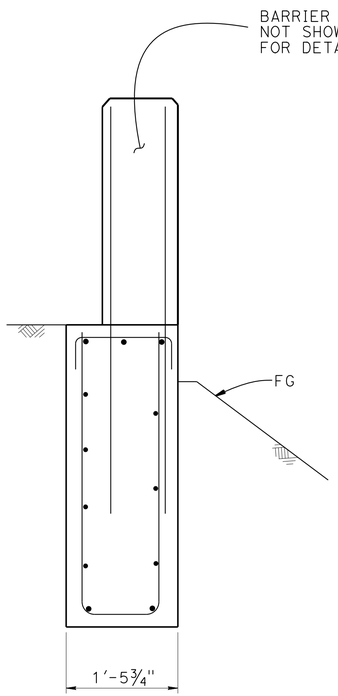

SECTION A-A
NO SCALE

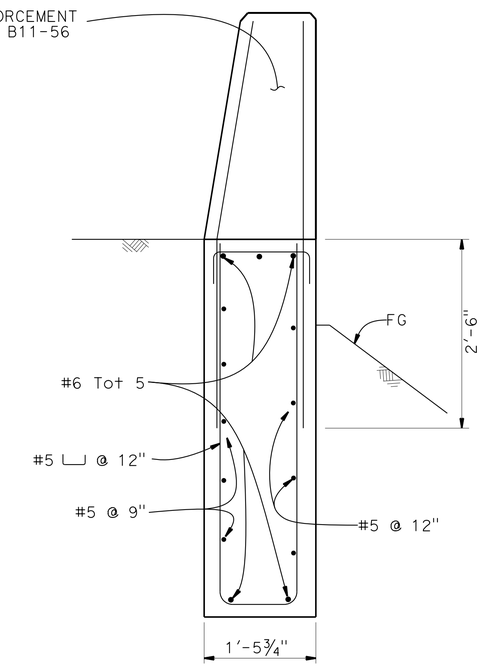

SECTION B-B
NO SCALE

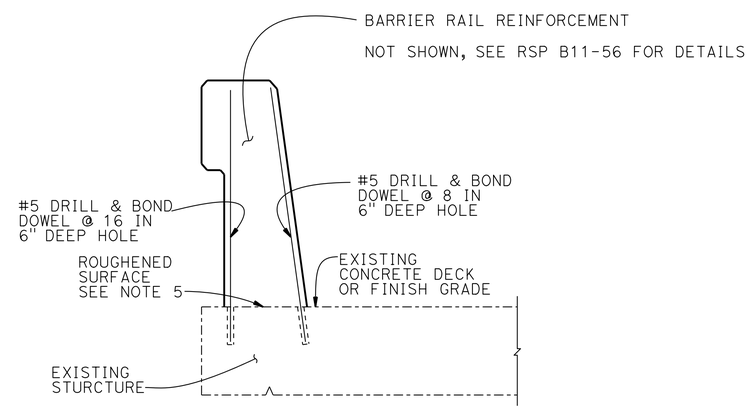

SECTION C-C
NO SCALE

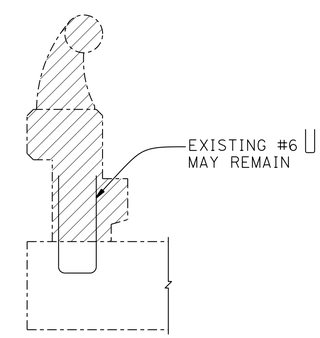

REMOVE CONCRETE BARRIER
NO SCALE
LOCATION 4 - UPPER McNALLY CANAL

CONCRETE BARRIER DETAILS

LOCATION 4 - UPPER McNALLY CANAL
LOCATION 8 - BIG PINE CANAL

CONSTRUCTION DETAILS

NO SCALE

C-17

STATE OF CALIFORNIA - DEPARTMENT OF TRANSPORTATION
Caltrans® DESIGN

FUNCTIONAL SUPERVISOR: BRIAN WESLING
CALCULATED-DESIGNED BY: AE TERN
CHECKED BY: TONY SYMANOVICH
REVISED BY / DATE REVISED

LAST REVISION / DATE PLOTTED => 23-JUL-2015 / TIME PLOTTED => 10:43

Dist	COUNTY	ROUTE	POST MILES TOTAL PROJECT	SHEET No.	TOTAL SHEETS
09	Iny, Mno	6,108,136,158 168,182,395	Var	19	59

REGISTERED CIVIL ENGINEER 6-26-15 DATE

6-29-15
PLANS APPROVAL DATE

REGISTERED PROFESSIONAL ENGINEER ANTON SYMANOVICH No. 78419 Exp. 9-30-15 CIVIL STATE OF CALIFORNIA

THE STATE OF CALIFORNIA OR ITS OFFICERS OR AGENTS SHALL NOT BE RESPONSIBLE FOR THE ACCURACY OR COMPLETENESS OF SCANNED COPIES OF THIS PLAN SHEET.

NOTES:

1. GALVANIZE RAIL ASSEMBLY AFTER FABRICATION.
2. FOR ADDITIONAL DETAILS SEE STANDARD PLAN B11-51.

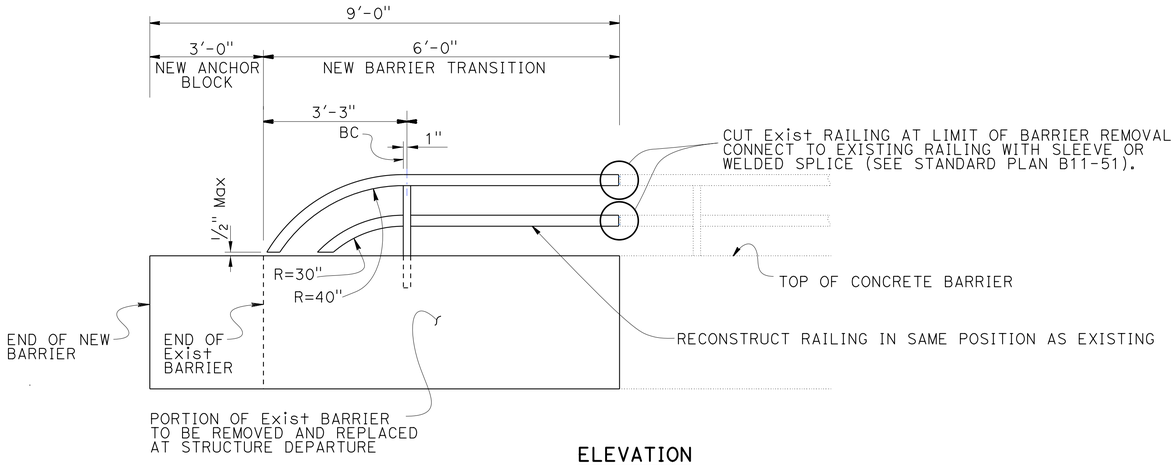

ELEVATION
NO SCALE

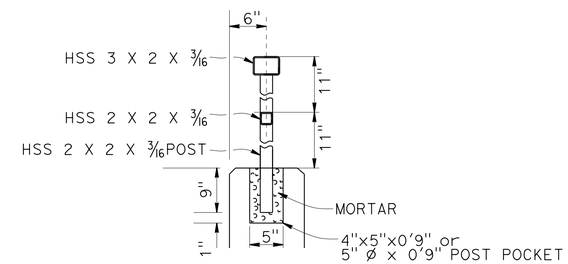

POST ANCHORAGE DETAIL
NO SCALE

RECONSTRUCT TUBULAR HAND RAILING

Loc	COUNTY	ROUTE	BRIDGE No.	PM	BRIDGE NAME	NB	SB	EB	WB	RECONSTRUCT TUBULAR HAND RAILING	
										APPROACH END (LF)	DEPARTURE END (LF)
6	Iny	168	48-0025 EB	15.40	N FORK BISHOP CREEK	-	-	X	-	-	6
6	Iny	168	48-0025 WB	15.40	N FORK BISHOP CREEK	-	-	-	X	-	6
7	Iny	168	48-0028 EB	15.79	S FORK BISHOP CREEK	-	-	X	-	-	6

CONSTRUCTION DETAILS
NO SCALE

C-18

REVISED BY | DATE REVISED
TONY SYMANOVICH
CALCULATED-DESIGNED BY | CHECKED BY
FUNCTIONAL SUPERVISOR
BRIAN WESLING
STATE OF CALIFORNIA - DEPARTMENT OF TRANSPORTATION
DESIGN

LAST REVISION | DATE PLOTTED => 23-JUL-2015 | TIME PLOTTED => 10:43

Dist	COUNTY	ROUTE	POST MILES TOTAL PROJECT	SHEET No.	TOTAL SHEETS
09	Iny, Mno	6,108,136,158 168,182,395	Var	20	59

REGISTERED CIVIL ENGINEER 6-26-15 DATE

6-29-15
PLANS APPROVAL DATE

REGISTERED PROFESSIONAL ENGINEER ANTON SYMANOVICH No. 78419 Exp. 9-30-15 CIVIL STATE OF CALIFORNIA

THE STATE OF CALIFORNIA OR ITS OFFICERS OR AGENTS SHALL NOT BE RESPONSIBLE FOR THE ACCURACY OR COMPLETENESS OF SCANNED COPIES OF THIS PLAN SHEET.

NOTES:

1. FOR DETAILS NOT SHOWN SEE STANDARD PLANS.
2. FOR DETAILS OF END ANCHOR ASSEMBLY (TYPE SFT), SEE REVISED STANDARD PLAN RSP A77S1.

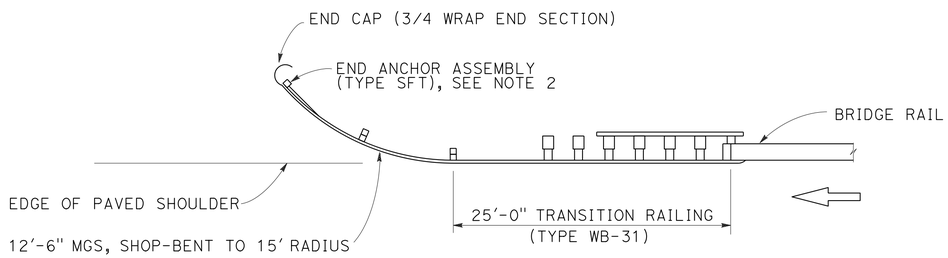

MIDWEST GUARDRAIL DEPARTURE END DETAIL

LOCATION 6 - WESTBOUND DEPARTURE

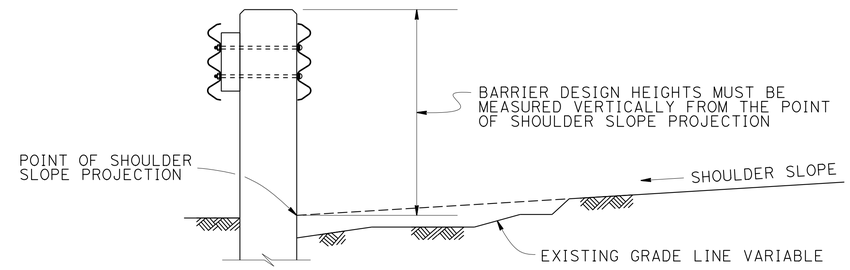

BARRIER HEIGHT DETAIL

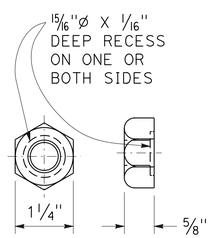

5/8" RECESS NUT

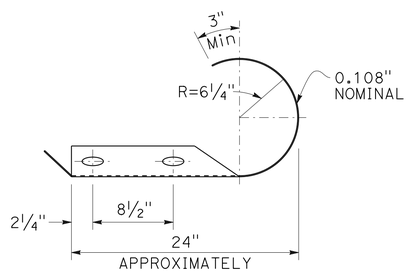

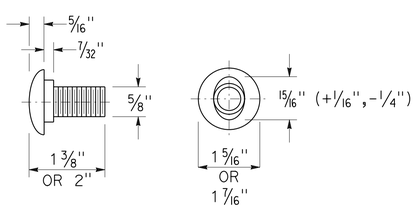

5/8"ø BUTTON HEAD BOLT

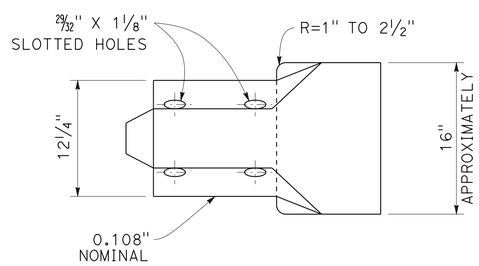

END CAP (3/4 WRAP END SECTION) DETAILS

CONSTRUCTION DETAILS

NO SCALE

C-19

STATE OF CALIFORNIA - DEPARTMENT OF TRANSPORTATION
Caltrans® DESIGN

FUNCTIONAL SUPERVISOR: BRIAN WESLING
CALCULATED-DESIGNED BY: TONY SYMANOVICH
CHECKED BY
REVISED BY
DATE REVISED

LAST REVISION
DATE PLOTTED => 23-JUL-2015
TIME PLOTTED => 10:43

Dist	COUNTY	ROUTE	POST MILES TOTAL PROJECT	SHEET No.	TOTAL SHEETS
09	Iny, Mno	6,108,136,158 168,182,395	Var	21	59

REGISTERED CIVIL ENGINEER 6-26-15 DATE

6-29-15
PLANS APPROVAL DATE

REGISTERED PROFESSIONAL ENGINEER ANTON SYMANOVICH No. 78419 Exp. 9-30-15 CIVIL STATE OF CALIFORNIA

THE STATE OF CALIFORNIA OR ITS OFFICERS OR AGENTS SHALL NOT BE RESPONSIBLE FOR THE ACCURACY OR COMPLETENESS OF SCANNED COPIES OF THIS PLAN SHEET.

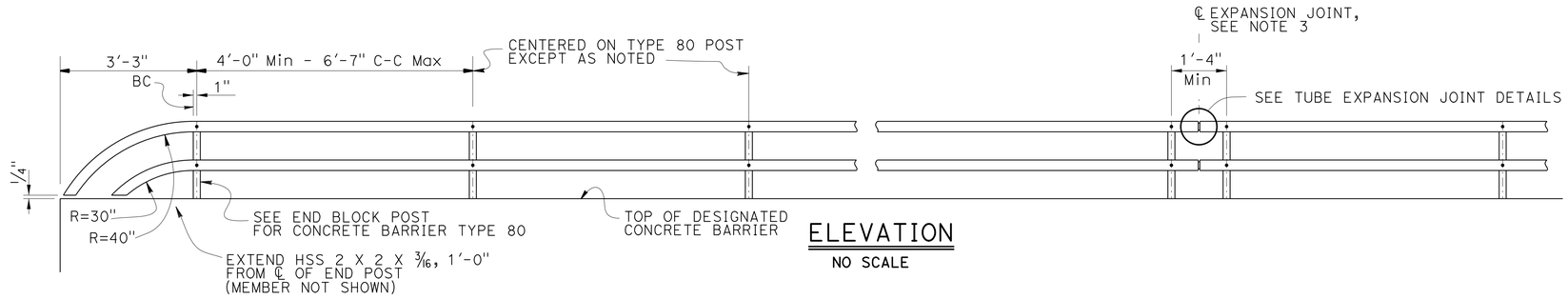

ELEVATION
NO SCALE

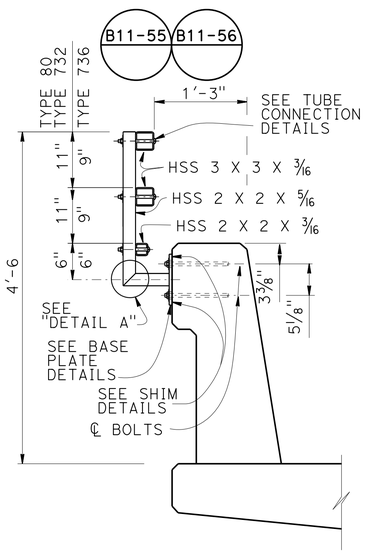

TYPE 732 OR 736
1" = 1'-0"

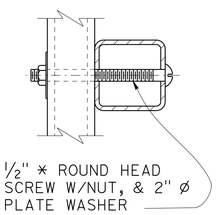

TUBE CONNECTION DETAIL
NO SCALE

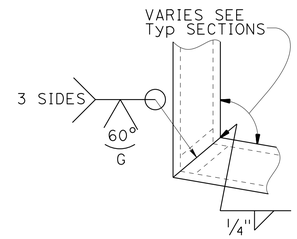

DETAIL A
NO SCALE

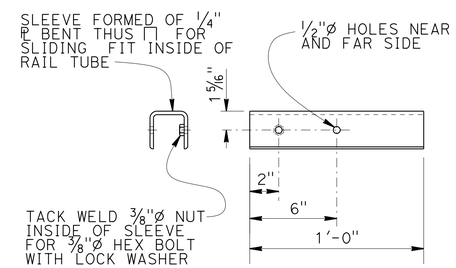

SLEEVE DETAIL
NO SCALE

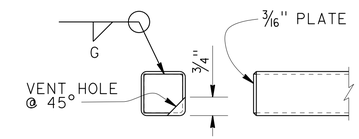

RAIL CAP DETAIL
NO SCALE

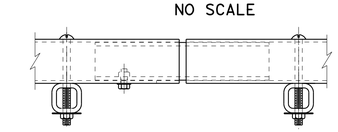

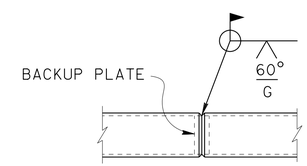

WELDED SPLICE DETAIL
NO SCALE

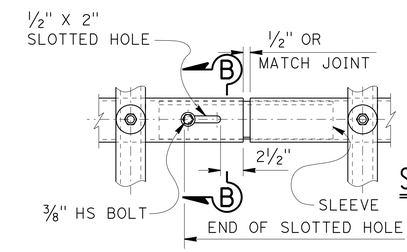

TUBE EXPANSION JOINT DETAILS
NO SCALE

SECTION B-B
NO SCALE

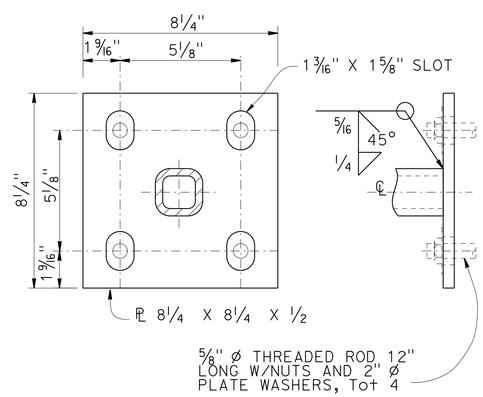

BASE PLATE DETAIL
NO SCALE

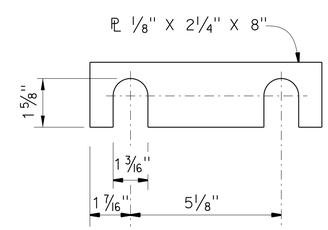

SHIM DETAILS
NO SCALE

NOTES:

1. Post must be normal to railing.
2. Rail tubes must be shop bent or fabricated to fit horizontal curve when radius is less than 950'.
3. Tube expansion joints must be located in the tubes spanning deck or wall joints. Increase joint width in tubes to match expansion joint width and increase sleeve length correspondingly.
4. Top rail tube must be continuous over not less than two posts except a short post spacing is permitted near deck or wall joints, electroliers, or other rail discontinuities as noted.
5. See Project Plans for limits of tubular bicycle railing.

TUBULAR BICYCLE RAILING DETAILS
LOCATION 4 AND LOCATION 8

CONSTRUCTION DETAILS
NO SCALE **C-20**

REVISED BY | DATE REVISED
TONY SYMANOVICH
CALCULATED-DESIGNED BY | CHECKED BY
FUNCTIONAL SUPERVISOR
BRIAN WESLING
STATE OF CALIFORNIA - DEPARTMENT OF TRANSPORTATION
Caltrans
DESIGN

LAST REVISION | DATE PLOTTED => 23-JUL-2015 | TIME PLOTTED => 10:43

Dist	COUNTY	ROUTE	POST MILES TOTAL PROJECT	SHEET No.	TOTAL SHEETS
09	Iny, Mno	6,108,136,158 168,182,395	Var	22	59

REGISTERED CIVIL ENGINEER 6-26-15 DATE

6-29-15
PLANS APPROVAL DATE

REGISTERED PROFESSIONAL ENGINEER ANTON SYMANOVICH No. 78419 Exp. 9-30-15 CIVIL STATE OF CALIFORNIA

THE STATE OF CALIFORNIA OR ITS OFFICERS OR AGENTS SHALL NOT BE RESPONSIBLE FOR THE ACCURACY OR COMPLETENESS OF SCANNED COPIES OF THIS PLAN SHEET.

NOTES:

1. USE SPECIAL CONNECTION DETAIL WHEN PIPE COVER OR GROUND CONDITIONS PREVENT OBTAINING 2' MINIMUM POST DEPTH.
2. FOR ALL DETAILS AND DIMENSIONS NOT SHOWN SEE REVISED STANDARD PLAN RSP B11-47.

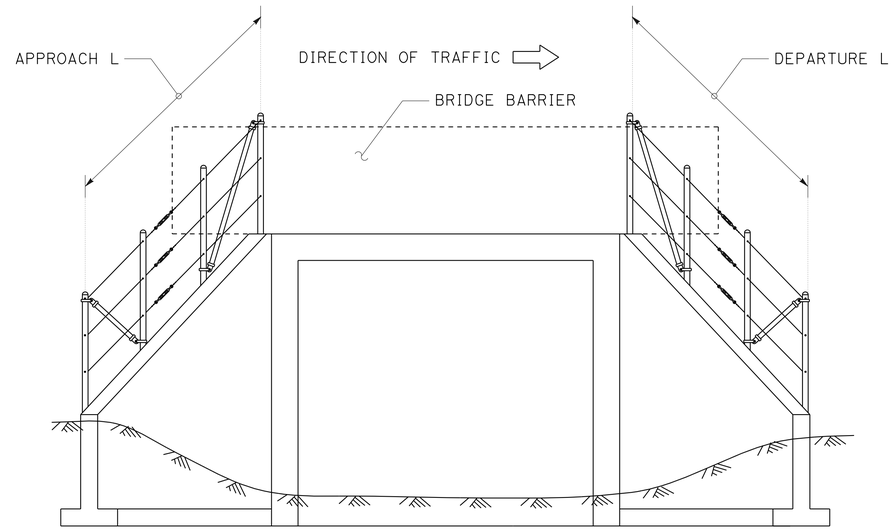

CABLE RAILING

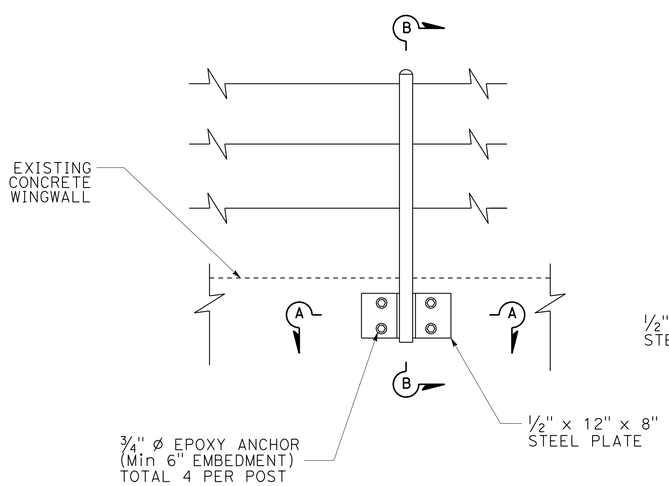

ELEVATION

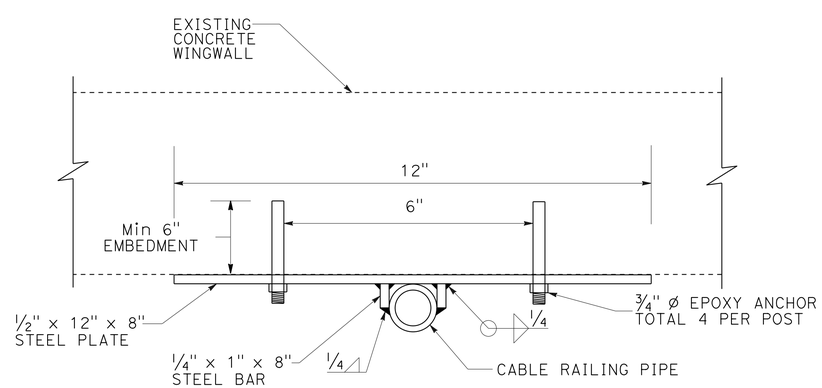

SECTION A-A

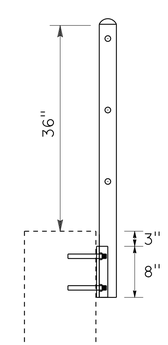

SECTION B-B

SPECIAL CONNECTION DETAIL

STATE OF CALIFORNIA - DEPARTMENT OF TRANSPORTATION
Caltrans® DESIGN

FUNCTIONAL SUPERVISOR: BRIAN WESLING
CALCULATED-DESIGNED BY: TONY SYMANOVICH
CHECKED BY
REVISED BY
DATE REVISED

CONSTRUCTION DETAILS
NO SCALE
C-21

LAST REVISION
DATE PLOTTED => 23-JUL-2015
TIME PLOTTED => 10:43

Dist	COUNTY	ROUTE	POST MILES TOTAL PROJECT	SHEET No.	TOTAL SHEETS
09	Iny, Mno	6,108,136,158 168,182,395	Var	23	59

REGISTERED CIVIL ENGINEER 6-26-15 DATE

6-29-15
PLANS APPROVAL DATE

REGISTERED PROFESSIONAL ENGINEER ANTON SYMANOVICH No. 78419 Exp. 9-30-15 CIVIL STATE OF CALIFORNIA

THE STATE OF CALIFORNIA OR ITS OFFICERS OR AGENTS SHALL NOT BE RESPONSIBLE FOR THE ACCURACY OR COMPLETENESS OF SCANNED COPIES OF THIS PLAN SHEET.

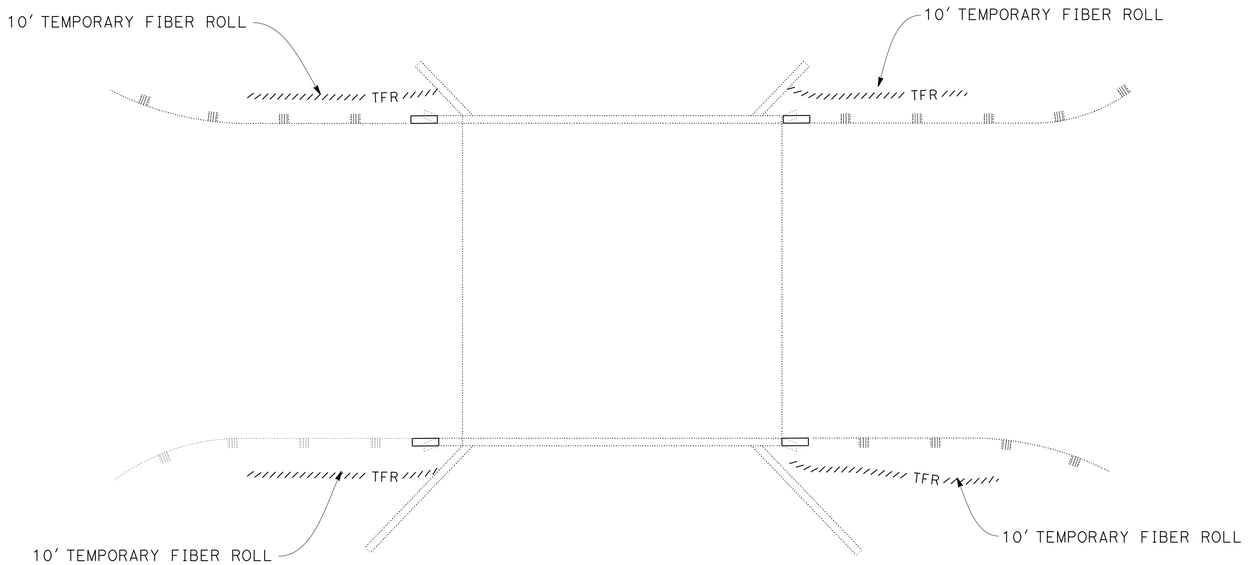

TYPICAL FIBER ROLL PLACEMENT

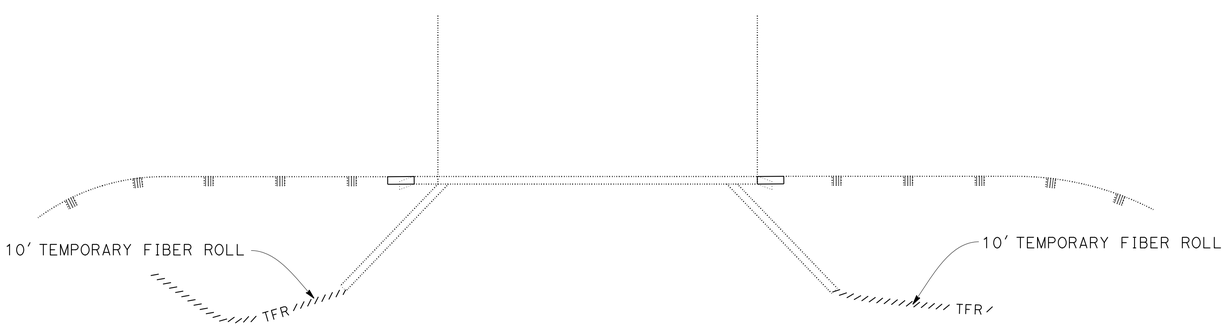

FIBER ROLL PLACEMENT AT LIVE STREAM LOCATIONS WITH CABLE RAILING WORK

TEMPORARY FIBER ROLL

LOCATION	ROUTE/PM	BRIDGE NO.	DESCRIPTION	LF
1	6/0.5	48-0023	N FORK BISHOP CREEK	40
2	6/3.7	48-0024	OWENS RIVER	40
3	6/6.5	48-0038	LOWER McNALLY CANAL	40
4	6/7.4	N/A	UPPER McNALLY CANAL	40
5	136/2.7	48-0002	OWENS RIVER	40
6	168/15.4	48-0025	N FORK BISHOP CREEK	40
7	168/15.8	48-0028	S FORK BISHOP CREEK	30
8	168/18.5	N/A	BIG PINE CANAL	40
9	168/19.8	48-0061	OWENS RIVER	40
10	395/21.3	48-0015 R†	LA AQUEDUCT	20
11	395/22.1	48-0064 R†	LA AQUEDUCT	20
12	395/42	48-0011 L† & R†	ASH CREEK	40
13	395/44	48-0012 L† & R†	COTTONWOOD CREEK	40
14	395/93	N/A	TINNEMAHA CREEK	20
15	108/3.1	47-0061	SARDINE CREEK	40
16	108/9.5	47-0016	WOLF CREEK	40
17	108/12.9	47-0020	WALKER RIVER	40
18	158/7	47-0041	ALGER CREEK	40
19	182/6.2	47-0058	E WALKER RIVER	40
20	395/30.1	N/A R†	SMOKEY BEAR OHV UC	40
21	395/40.9	N/A L†	SANDHOUSE OHV UC	20
22	395/44.2	47-0057 R†	LA AQUEDUCT	40
23	395/76.3	47-0013	E WALKER RIVER	40
24	395/76.9	47-0047	RICKEY DITCH OUTLET	40
25	395/107.1	47-0046	MILL CREEK	40
			TOTAL	910

APPROVED FOR TEMPORARY WATER POLLUTION CONTROL WORK ONLY

TEMPORARY WATER POLLUTION CONTROL PLAN

NO SCALE **WPC-1**

STATE OF CALIFORNIA - DEPARTMENT OF TRANSPORTATION
Caltrans® DESIGN

FUNCTIONAL SUPERVISOR: BRIAN WESLING
CALCULATED-DESIGNED BY: TONY SYMANOVICH
CHECKED BY
REVISED BY
DATE REVISED

LAST REVISION
DATE PLOTTED => 23-JUL-2015
TIME PLOTTED => 10:43

Dist	COUNTY	ROUTE	POST MILES TOTAL PROJECT	SHEET No.	TOTAL SHEETS
09	Iny, Mno	6,108,136,158 168,182,395	Var	24	59

REGISTERED CIVIL ENGINEER 6-26-15 DATE

6-29-15
PLANS APPROVAL DATE

REGISTERED PROFESSIONAL ENGINEER ANTON SYMANOVICH No. 78419 Exp. 9-30-15 CIVIL STATE OF CALIFORNIA

THE STATE OF CALIFORNIA OR ITS OFFICERS OR AGENTS SHALL NOT BE RESPONSIBLE FOR THE ACCURACY OR COMPLETENESS OF SCANNED COPIES OF THIS PLAN SHEET.

NOTES:

1. FOR CLOSURE AND SIGN REQUIREMENTS SEE REVISED STANDARD PLAN RSP T10, T11, AND T13.
2. WORK ON LEFT AND RIGHT SIDES MAY OCCUR CONCURRENTLY WHILE UNDER CONTINUOUS (24-HOUR) FLAGGING CONTROL.
3. CONTINUOUS FLAGGING CONTROL MUST REMAIN IN PLACE UNTIL BARRIER TRANSITION AND MGS WORK IS COMPLETE.

LEGEND:

- CHANNELIZER
  SPACING: 20 FEET Max
- TEMPORARY RAILING (TYPE K)
- CONSTRUCTION AREA SIGN
- FLASHING BEACON (PORTABLE)
- STATIONARY MOUNTED CONSTRUCTION AREA SIGN
- TRAFFIC FLOW DIRECTION

No.	COUNTY	ROUTE	BRIDGE No.	PM	DESCRIPTION	NOTES
15	Mno	108	47-0061	3.1	SARDINE CREEK	CONCURRENT CLOSURES MUST NOT OCCUR AT LOCATIONS 16 AND 17
16	Mno	108	47-0016	9.5	WOLF CREEK	
17	Mno	108	47-0020	12.9	WALKER RIVER	

LOCATIONS WITH CONTINUOUS (24-HOUR) FLAGGING CONTROL

APPROVED FOR TRAFFIC HANDLING WORK ONLY

TRAFFIC HANDLING PLAN
NO SCALE
TH-1

REVISED BY | DATE REVISED
TONY SYMANOVICH
CALCULATED-DESIGNED BY | CHECKED BY
FUNCTIONAL SUPERVISOR
BRIAN WESLING
STATE OF CALIFORNIA - DEPARTMENT OF TRANSPORTATION
Caltrans
DESIGN

LAST REVISION | DATE PLOTTED => 23-JUL-2015 | TIME PLOTTED => 10:44

Dist	COUNTY	ROUTE	POST MILES TOTAL PROJECT	SHEET No.	TOTAL SHEETS
09	Iny, Mno	6,108,136,158 168,182,395	Var	25	59

REGISTERED CIVIL ENGINEER 6-26-15 DATE

6-29-15
PLANS APPROVAL DATE

REGISTERED PROFESSIONAL ENGINEER ANTON SYMANOVICH No. 78419 Exp. 9-30-15 CIVIL STATE OF CALIFORNIA

THE STATE OF CALIFORNIA OR ITS OFFICERS OR AGENTS SHALL NOT BE RESPONSIBLE FOR THE ACCURACY OR COMPLETENESS OF SCANNED COPIES OF THIS PLAN SHEET.

NOTES:

1. SHOULDERS MUST BE CLOSED AS PER REVISED STANDARD PLAN RSP T10 "SHOULDER CLOSURE".
2. SEE SHEET THQ-1 FOR TRAFFIC HANDLING SIGN SUMMARY.
3. EXACT LOCATION OF TEMPORARY RAILING (TYPE K), TEMPORARY CRASH CUSHION MODULE, CHANNELIZERS, AND SIGNS TO BE DETERMINED BY THE ENGINEER.

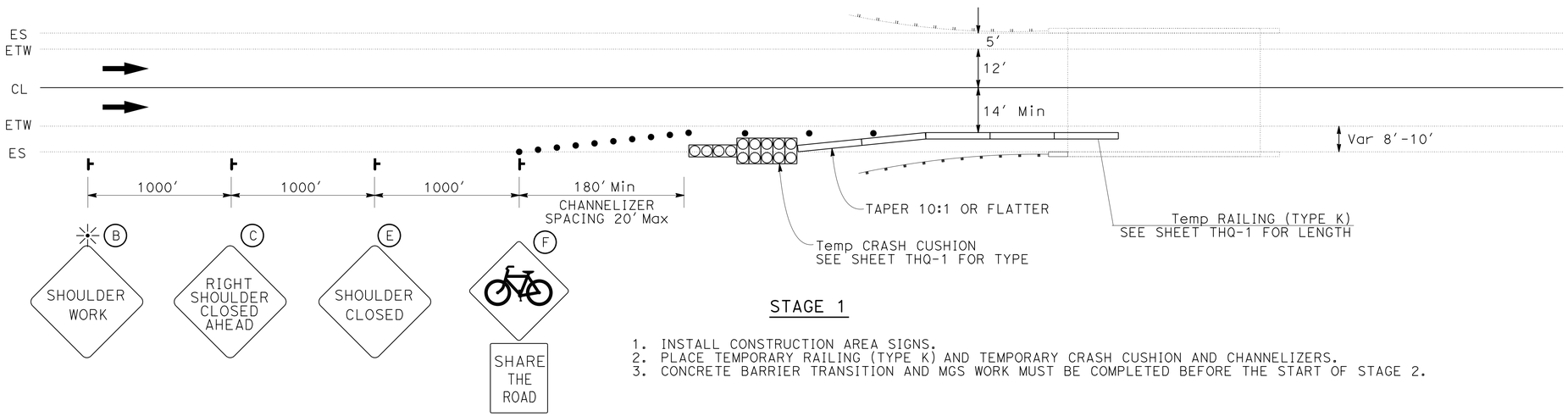

STAGE 1

1. INSTALL CONSTRUCTION AREA SIGNS.
2. PLACE TEMPORARY RAILING (TYPE K) AND TEMPORARY CRASH CUSHION AND CHANNELIZERS.
3. CONCRETE BARRIER TRANSITION AND MGS WORK MUST BE COMPLETED BEFORE THE START OF STAGE 2.

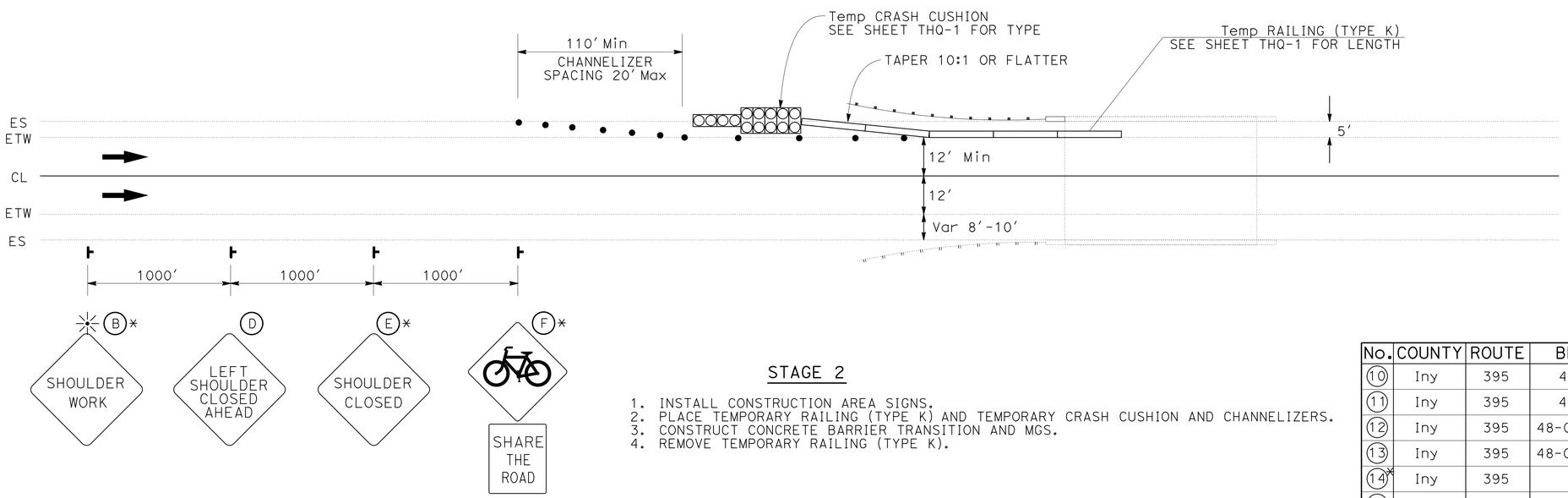

STAGE 2

1. INSTALL CONSTRUCTION AREA SIGNS.
2. PLACE TEMPORARY RAILING (TYPE K) AND TEMPORARY CRASH CUSHION AND CHANNELIZERS.
3. CONSTRUCT CONCRETE BARRIER TRANSITION AND MGS.
4. REMOVE TEMPORARY RAILING (TYPE K).

* STAGE 1 SIGNS B,E, AND F TO REMAIN IN PLACE DURING STAGE 2.

No.	COUNTY	ROUTE	BRIDGE No.	PM	DESCRIPTION
10	Iny	395	48-0015 R+	21.3	LA AQUEDUCT
11	Iny	395	48-0064 R+	22.1	LA AQUEDUCT
12	Iny	395	48-0068 L+ & R+	42.0	ASH CREEK
13	Iny	395	48-0069 L+ & R+	44.0	COTTONWOOD CREEK
14*	Iny	395	N/A	93.1	TINNEMAHA CREEK
21	Mno	395	N/A L+	40.9	SANDHOUSE OHV UC
22	Mno	395	47-0057 R+	44.2	LA AQUEDUCT

* LOCATION 14 NB AND SB DOES NOT INCLUDE STAGE 2 WORK.

TYPICAL FOR DIVIDED HIGHWAY LOCATIONS

APPROVED FOR TRAFFIC HANDLING WORK ONLY

TRAFFIC HANDLING PLAN
NO SCALE

TH-2

STATE OF CALIFORNIA - DEPARTMENT OF TRANSPORTATION
Caltrans® DESIGN

FUNCTIONAL SUPERVISOR: BRIAN WESLING
CALCULATED-DESIGNED BY: TONY SYMANOVICH
CHECKED BY
REVISED BY
DATE REVISED

LAST REVISION
DATE PLOTTED => 23-JUL-2015
TIME PLOTTED => 10:44

Dist	COUNTY	ROUTE	POST MILES TOTAL PROJECT	SHEET No.	TOTAL SHEETS
09	Iny, Mno	6,108,136,158 168,182,395	Var	26	59

REGISTERED CIVIL ENGINEER 6-26-15 DATE

6-29-15
PLANS APPROVAL DATE

REGISTERED PROFESSIONAL ENGINEER ANTON SYMANOVICH No. 78419 Exp. 9-30-15 CIVIL STATE OF CALIFORNIA

THE STATE OF CALIFORNIA OR ITS OFFICERS OR AGENTS SHALL NOT BE RESPONSIBLE FOR THE ACCURACY OR COMPLETENESS OF SCANNED COPIES OF THIS PLAN SHEET.

NOTES:

1. TRAFFIC CONTROL PLAN MUST FOLLOW CLOSURE REQUIREMENTS AS SHOWN IN STANDARD PLANS.
2. SEE SHEET TH-4 FOR CONSTRUCTION AREA SIGNS.
3. EXACT LOCATION OF TEMPORARY RAILING (TYPE K), TEMPORARY CRASH CUSHION MODULE, CHANNELIZERS, AND SIGNS TO BE DETERMINED BY THE ENGINEER.

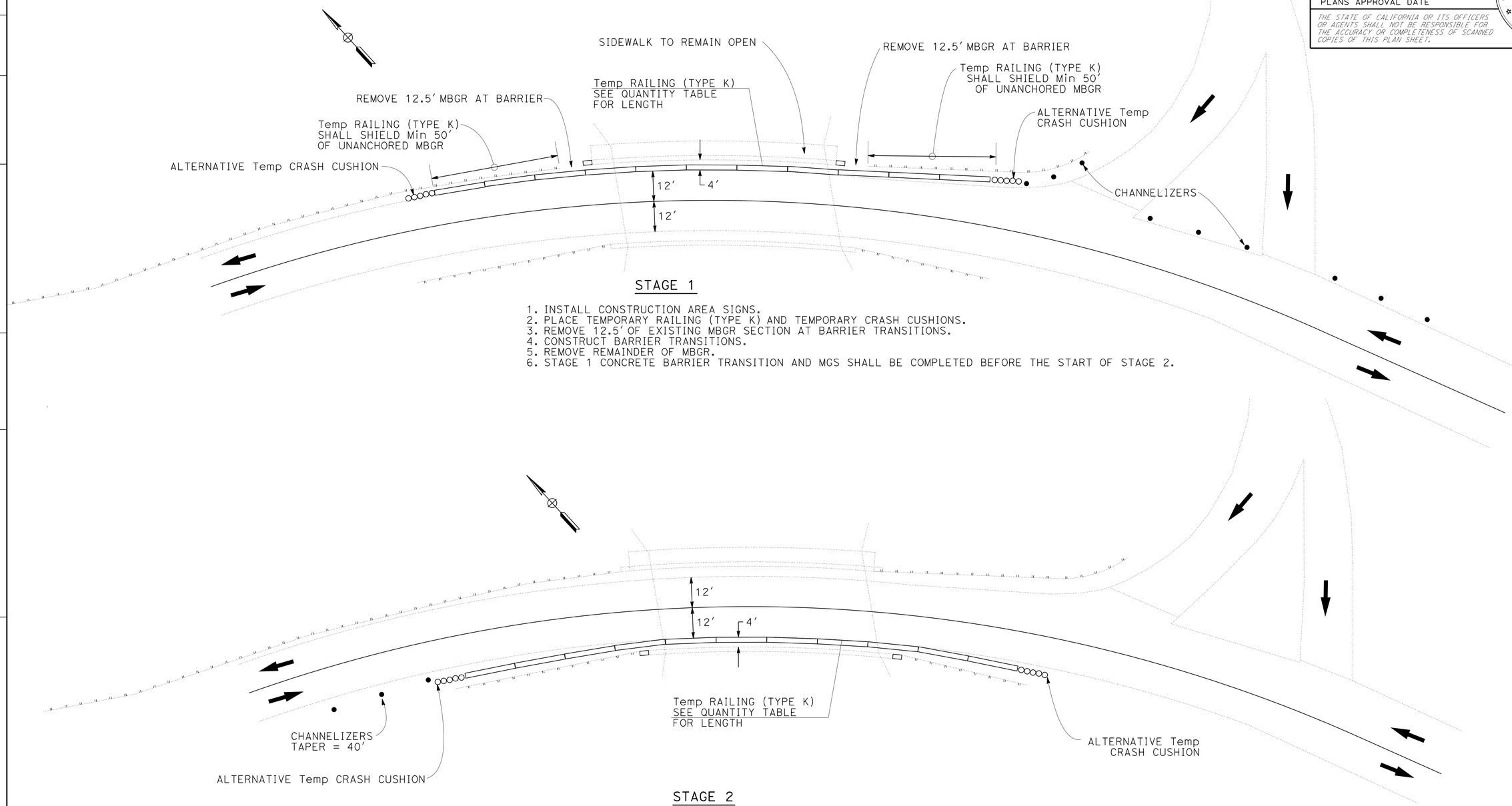

STAGE 1

1. INSTALL CONSTRUCTION AREA SIGNS.
2. PLACE TEMPORARY RAILING (TYPE K) AND TEMPORARY CRASH CUSHIONS.
3. REMOVE 12.5′ OF EXISTING MBGR SECTION AT BARRIER TRANSITIONS.
4. CONSTRUCT BARRIER TRANSITIONS.
5. REMOVE REMAINDER OF MBGR.
6. STAGE 1 CONCRETE BARRIER TRANSITION AND MGS SHALL BE COMPLETED BEFORE THE START OF STAGE 2.

STAGE 2

1. INSTALL CONSTRUCTION AREA SIGNS.
2. PLACE TEMPORARY RAILING (TYPE K) AND TEMPORARY CRASH CUSHION.
3. REMOVE EXISTING MBGR.
4. CONSTRUCT CONCRETE BARRIER TRANSITIONS AND MGS.
5. REMOVE TEMPORARY RAILING (TYPE K).

No.	COUNTY	ROUTE	BRIDGE No.	PM	DESCRIPTION
23	Mno	395	47-0013	76.3	E WALKER RIVER

APPROVED FOR TRAFFIC HANDLING WORK ONLY

TRAFFIC HANDLING PLAN
SCALE 1"=20′
TH-3

STATE OF CALIFORNIA - DEPARTMENT OF TRANSPORTATION
Caltrans® DESIGN
FUNCTIONAL SUPERVISOR: BRIAN WESLING
CALCULATED-DESIGNED BY: TONY SYMANOVICH
CHECKED BY
REVISED BY
DATE REVISED

LAST REVISION
DATE PLOTTED => 23-JUL-2015
TIME PLOTTED => 10:44

Dist	COUNTY	ROUTE	POST MILES TOTAL PROJECT	SHEET No.	TOTAL SHEETS
09	Iny, Mno	6,108,136,158 168,182,395	Var	27	59

REGISTERED CIVIL ENGINEER 6-26-15 DATE

6-29-15
PLANS APPROVAL DATE

REGISTERED PROFESSIONAL ENGINEER ANTON SYMANOVICH No. 78419 Exp. 9-30-15 CIVIL STATE OF CALIFORNIA

THE STATE OF CALIFORNIA OR ITS OFFICERS OR AGENTS SHALL NOT BE RESPONSIBLE FOR THE ACCURACY OR COMPLETENESS OF SCANNED COPIES OF THIS PLAN SHEET.

NOTES:

1. SEE SHEET THQ-1 FOR TRAFFIC HANDLING SIGN SUMMARY.
2. EXACT LOCATION AND POSITION OF CONSTRUCTION AREA SIGNS TO BE DETERMINED BY THE ENGINEER.
3. SIGNS MAY BE PLACED ON BARRICADES WHERE INDICATED.

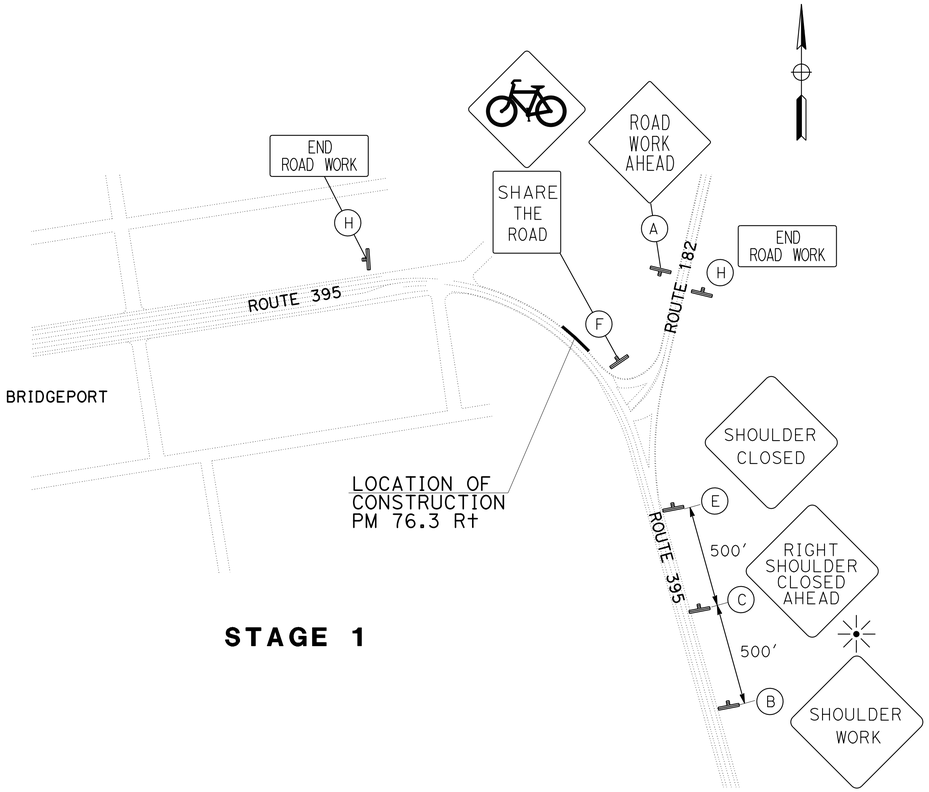

STAGE 1

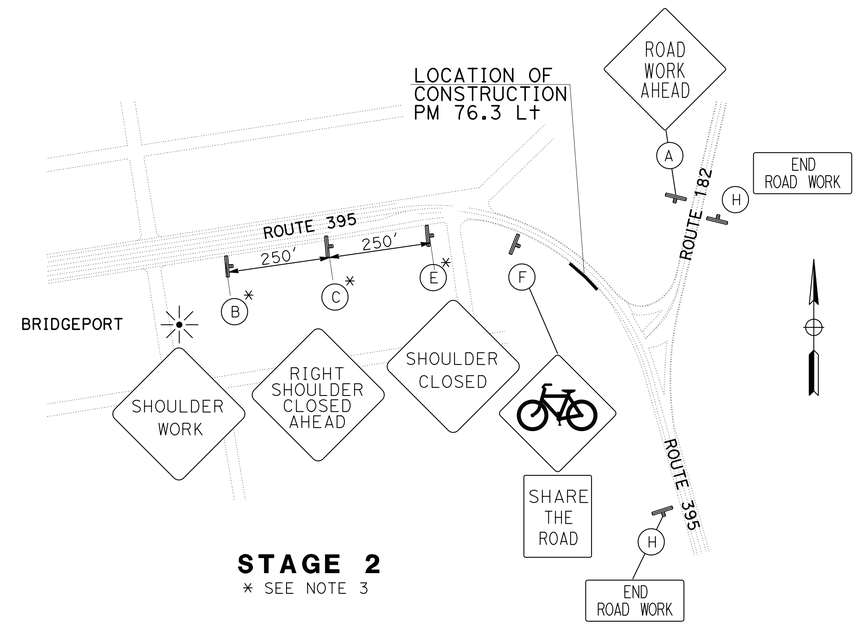

STAGE 2

* SEE NOTE 3

CONSTRUCTION AREA SIGN LAYOUT

No.	COUNTY	ROUTE	BRIDGE No.	PM	DESCRIPTION
23	Mno	395	47-0013	76.3	E WALKER RIVER

APPROVED FOR TRAFFIC HANDLING WORK ONLY

TRAFFIC HANDLING PLAN
NO SCALE

TH-4

STATE OF CALIFORNIA - DEPARTMENT OF TRANSPORTATION
Caltrans® DESIGN

FUNCTIONAL SUPERVISOR: BRIAN WESLING
CALCULATED-DESIGNED BY: TONY SYMANOVICH
CHECKED BY
REVISED BY
DATE REVISED

LAST REVISION DATE PLOTTED => 23-JUL-2015
TIME PLOTTED => 10:44

Dist	COUNTY	ROUTE	POST MILES TOTAL PROJECT	SHEET No.	TOTAL SHEETS
09	Iny, Mno	6,108,136,158 168,182,395	Var	28	59

REGISTERED CIVIL ENGINEER 6-26-15 DATE

6-29-15
PLANS APPROVAL DATE

REGISTERED PROFESSIONAL ENGINEER ANTON SYMANOVICH No. 78419 Exp. 9-30-15 CIVIL STATE OF CALIFORNIA

THE STATE OF CALIFORNIA OR ITS OFFICERS OR AGENTS SHALL NOT BE RESPONSIBLE FOR THE ACCURACY OR COMPLETENESS OF SCANNED COPIES OF THIS PLAN SHEET.

NOTES:

1. TRAFFIC CONTROL SYSTEM MUST FOLLOW CLOSURE REQUIREMENTS AS SHOWN IN RSP T10 "SHOULDER CLOSURE".
2. SEE SHEET THQ-1 FOR TRAFFIC HANDLING SIGN SUMMARY.
3. EXACT LOCATION OF TEMPORARY RAILING (TYPE K), TEMPORARY CRASH CUSHION MODULE, CHANNELIZERS, AND SIGNS TO BE DETERMINED BY THE ENGINEER.
4. SIGN SPACING SHALL BE 350′ AT LOCATION 24 NORTHBOUND.

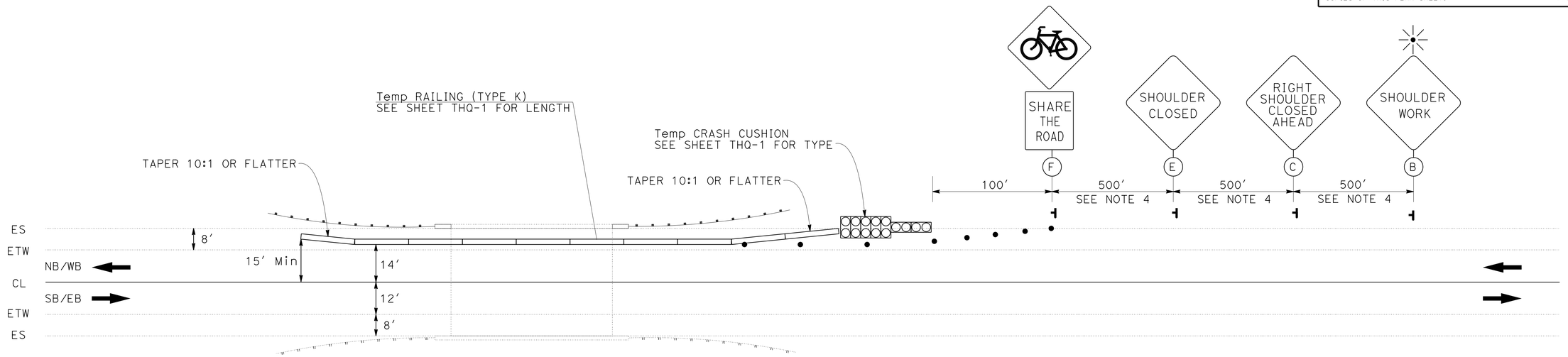

STAGE 1

1. INSTALL CONSTRUCTION AREA SIGNS.
2. PLACE TEMPORARY RAILING (TYPE K) AND TEMPORARY CRASH CUSHION.
3. REMOVE EXISTING MBGR.
4. CONCRETE BARRIER TRANSITION AND MGS MUST BE COMPLETED BEFORE THE START OF STAGE 2.

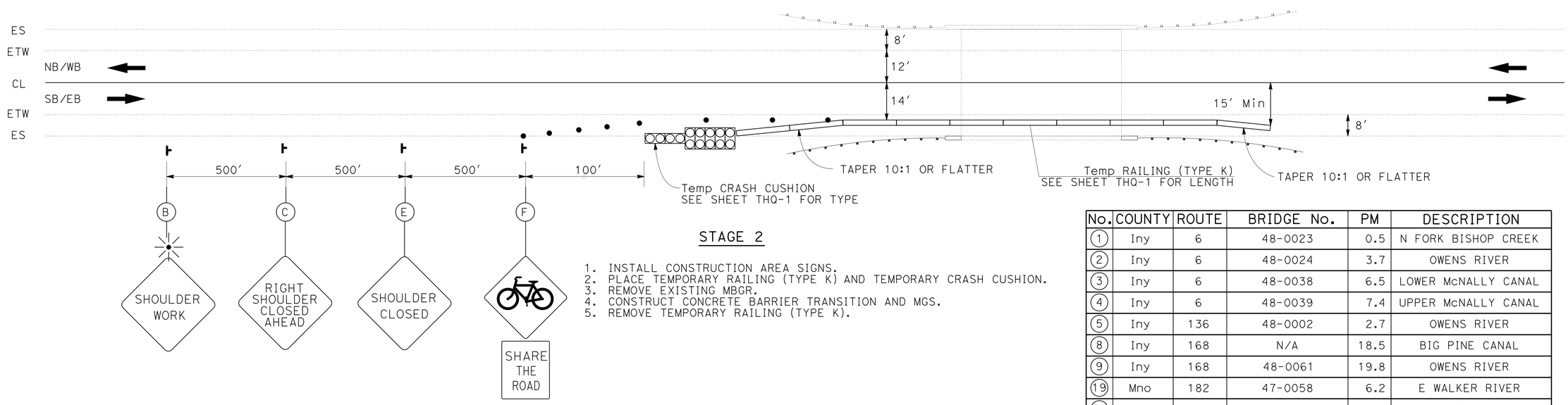

STAGE 2

1. INSTALL CONSTRUCTION AREA SIGNS.
2. PLACE TEMPORARY RAILING (TYPE K) AND TEMPORARY CRASH CUSHION.
3. REMOVE EXISTING MBGR.
4. CONSTRUCT CONCRETE BARRIER TRANSITION AND MGS.
5. REMOVE TEMPORARY RAILING (TYPE K).

No.	COUNTY	ROUTE	BRIDGE No.	PM	DESCRIPTION
1	Iny	6	48-0023	0.5	N FORK BISHOP CREEK
2	Iny	6	48-0024	3.7	OWENS RIVER
3	Iny	6	48-0038	6.5	LOWER McNALLY CANAL
4	Iny	6	48-0039	7.4	UPPER McNALLY CANAL
5	Iny	136	48-0002	2.7	OWENS RIVER
8	Iny	168	N/A	18.5	BIG PINE CANAL
9	Iny	168	48-0061	19.8	OWENS RIVER
19	Mno	182	47-0058	6.2	E WALKER RIVER
24	Mno	395	47-0047	76.9	RICKEY DITCH

APPROVED FOR TRAFFIC HANDLING WORK ONLY

TRAFFIC HANDLING PLAN
NO SCALE
TH-5

STATE OF CALIFORNIA - DEPARTMENT OF TRANSPORTATION
Caltrans® DESIGN

FUNCTIONAL SUPERVISOR: BRIAN WESLING
CALCULATED-DESIGNED BY: TONY SYMANOVICH
CHECKED BY
REVISED BY
DATE REVISED

LAST REVISION
DATE PLOTTED => 23-JUL-2015
TIME PLOTTED => 10:44

Dist	COUNTY	ROUTE	POST MILES TOTAL PROJECT	SHEET No.	TOTAL SHEETS
09	Iny, Mno	6,108,136,158 168,182,395	Var	29	59

REGISTERED CIVIL ENGINEER 6-26-15 DATE

6-29-15
PLANS APPROVAL DATE

REGISTERED PROFESSIONAL ENGINEER ANTON SYMANOVICH No. 78419 Exp. 9-30-15 CIVIL STATE OF CALIFORNIA

THE STATE OF CALIFORNIA OR ITS OFFICERS OR AGENTS SHALL NOT BE RESPONSIBLE FOR THE ACCURACY OR COMPLETENESS OF SCANNED COPIES OF THIS PLAN SHEET.

NOTES:

1. TRAFFIC CONTROL SYSTEM SHALL FOLLOW CLOSURE REQUIREMENTS AS SHOWN IN RSP T10 "SHOULDER CLOSURE".
2. SEE SHEET THQ-1 FOR TRAFFIC HANDLING SIGN SUMMARY.
3. EXACT LOCATION AND POSITION OF CONSTRUCTION AREA SIGNS TO BE DETERMINED BY THE ENGINEER.

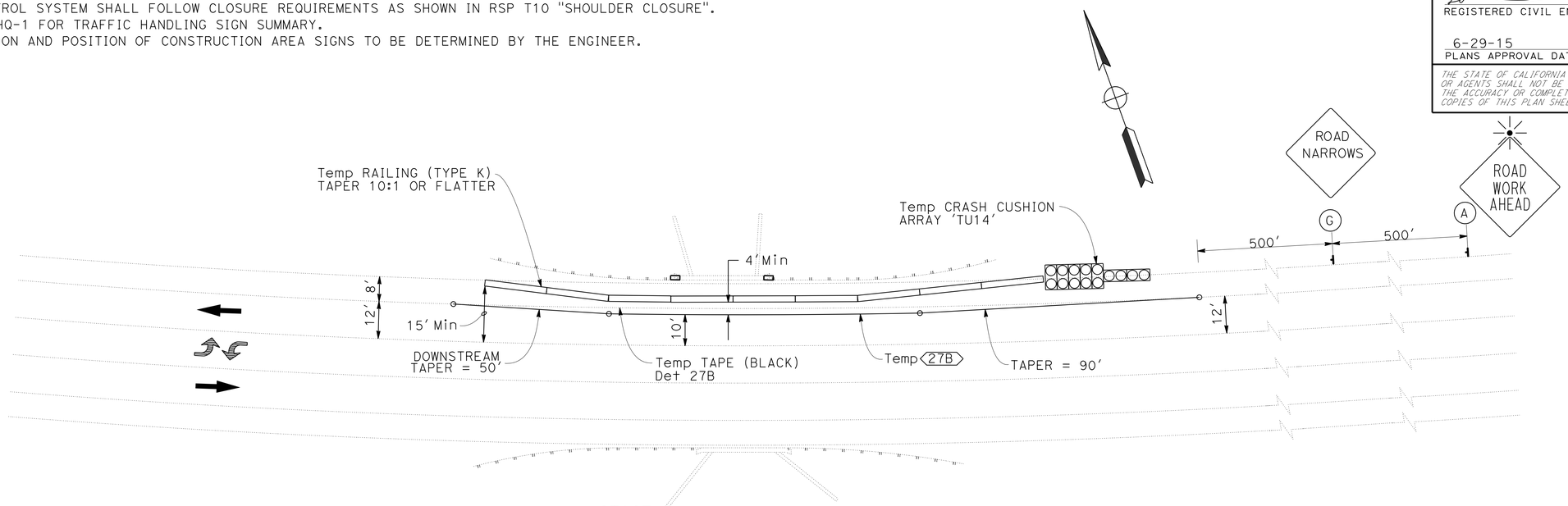

STAGE 1

1. PLACE STAGE 1 CONSTRUCTION AREA SIGNS.
2. PLACE TEMPORARY TRAFFIC STRIPE (TAPE).
3. PLACE TEMPORARY RAILING (TYPE K) AND TEMPORARY CRASH CUSHION.
4. REMOVE EXISTING RIGHT MBGR.
5. CONSTRUCT CONCRETE BARRIER TRANSITION AND MGS.
6. REMOVE TEMPORARY TRAFFIC STRIPE (TAPE) AND CONSTRUCTION AREA SIGNS.

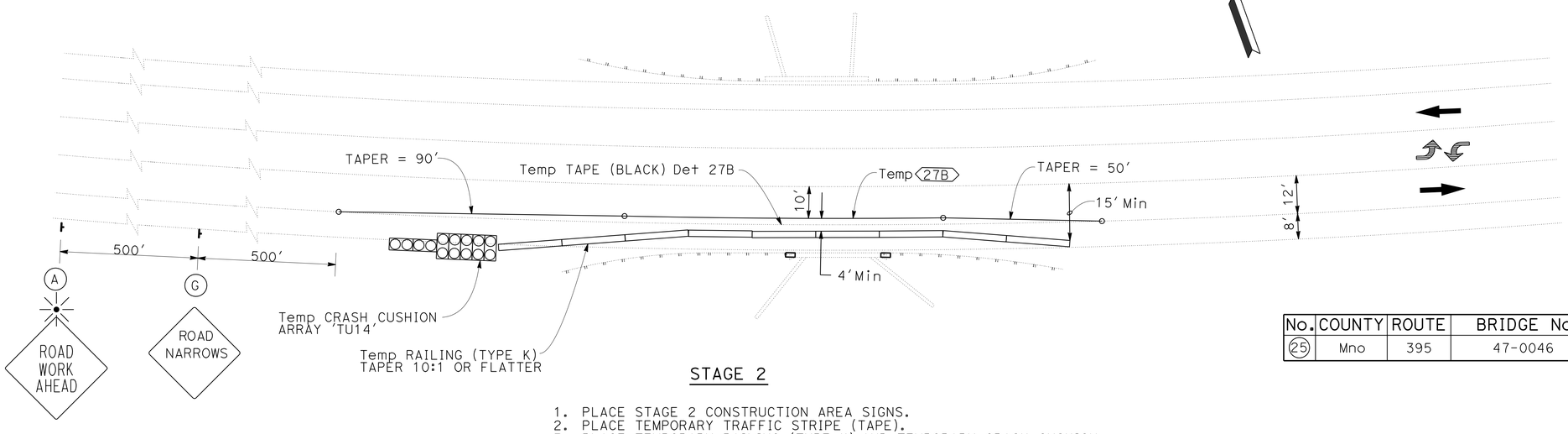

STAGE 2

1. PLACE STAGE 2 CONSTRUCTION AREA SIGNS.
2. PLACE TEMPORARY TRAFFIC STRIPE (TAPE).
3. PLACE TEMPORARY RAILING (TYPE K) AND TEMPORARY CRASH CUSHION.
4. REMOVE EXISTING LEFT MBGR.
5. CONSTRUCT CONCRETE BARRIER TRANSITION AND MGS.
6. REMOVE TEMPORARY TRAFFIC STRIPE (TAPE) AND TEMPORARY RAILING (TYPE K).

No.	COUNTY	ROUTE	BRIDGE No.	PM	DESCRIPTION
25	Mno	395	47-0046	107.1	MILL CREEK

APPROVED FOR TRAFFIC HANDLING WORK ONLY

TRAFFIC HANDLING PLAN
NO SCALE
TH-6

STATE OF CALIFORNIA - DEPARTMENT OF TRANSPORTATION
Caltrans®
DESIGN

FUNCTIONAL SUPERVISOR: BRIAN WESLING
CALCULATED-DESIGNED BY: TONY SYMANOVICH
CHECKED BY
REVISED BY
DATE REVISED

LAST REVISION
DATE PLOTTED => 23-JUL-2015
TIME PLOTTED => 10:44

Dist	COUNTY	ROUTE	POST MILES TOTAL PROJECT	SHEET No.	TOTAL SHEETS
09	Iny, Mno	6,108,136,158 168,182,395	Var	30	59

REGISTERED CIVIL ENGINEER 6-26-15 DATE

6-29-15
PLANS APPROVAL DATE

REGISTERED PROFESSIONAL ENGINEER ANTON SYMANOVICH No. 78419 Exp. 9-30-15 CIVIL STATE OF CALIFORNIA

THE STATE OF CALIFORNIA OR ITS OFFICERS OR AGENTS SHALL NOT BE RESPONSIBLE FOR THE ACCURACY OR COMPLETENESS OF SCANNED COPIES OF THIS PLAN SHEET.

NOTES:

1. TRAFFIC CONTROL SYSTEM MUST FOLLOW CLOSURE REQUIREMENTS AS SHOWN IN RSP T10 "SHOULDER CLOSURE".
2. SEE SHEET THQ-1 FOR TRAFFIC HANDLING SIGN SUMMARY.
3. EXACT LOCATION AND POSITION OF CONSTRUCTION AREA SIGNS TO BE DETERMINED BY THE ENGINEER.

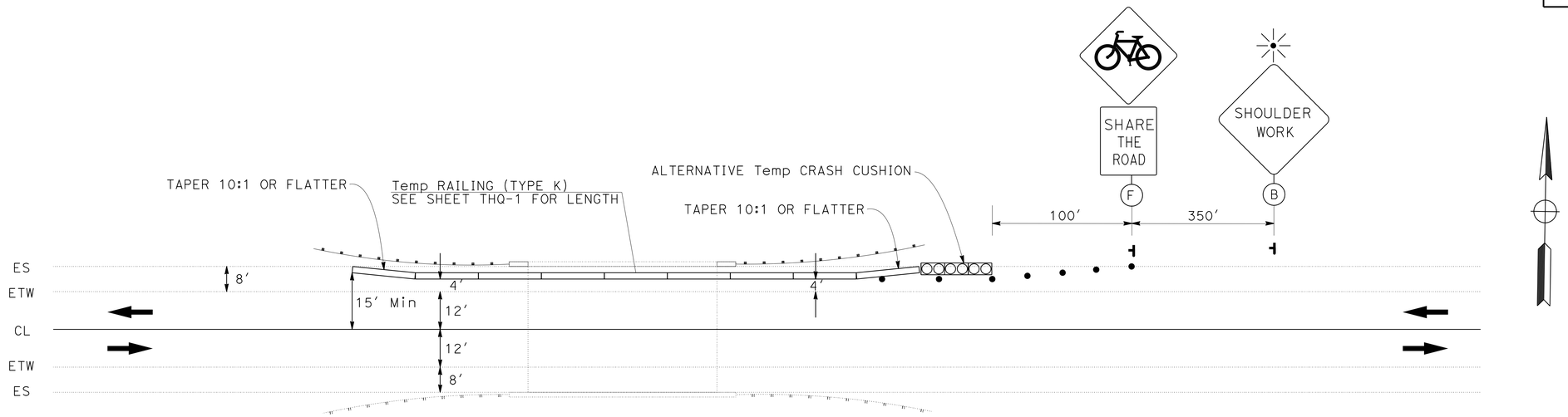

STAGE 1

1. INSTALL CONSTRUCTION AREA SIGNS.
2. PLACE TEMPORARY RAILING (TYPE K) AND TEMPORARY CRASH CUSHION.
3. REMOVE EXISTING MBGR.
4. CONCRETE BARRIER TRANSITION AND MGS MUST BE COMPLETED BEFORE THE START OF STAGE 2.

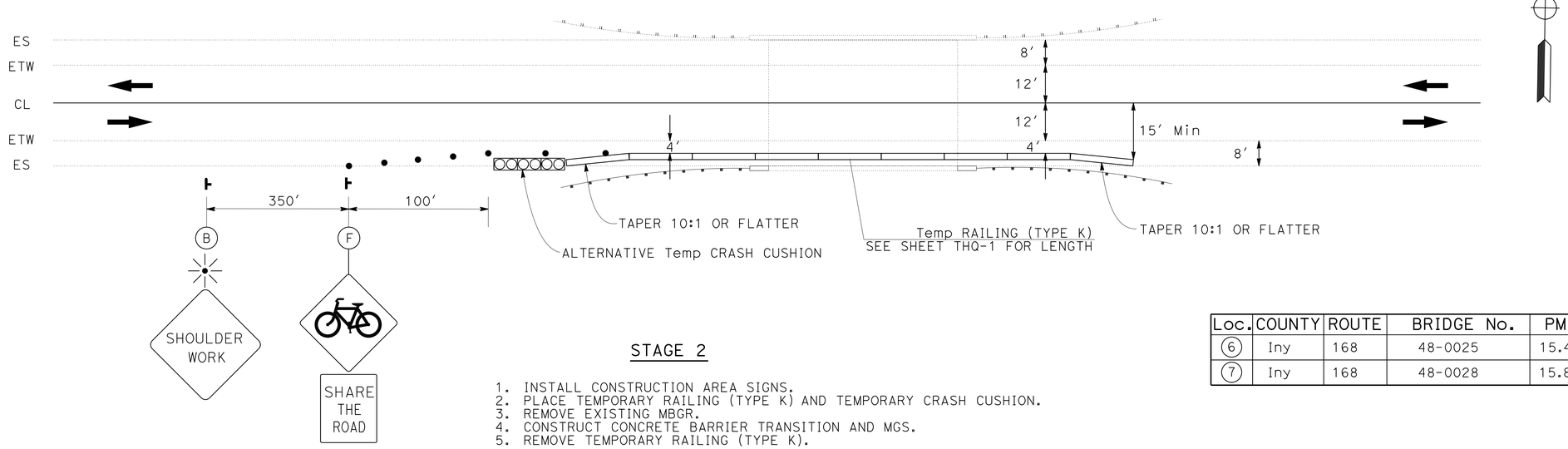

STAGE 2

1. INSTALL CONSTRUCTION AREA SIGNS.
2. PLACE TEMPORARY RAILING (TYPE K) AND TEMPORARY CRASH CUSHION.
3. REMOVE EXISTING MBGR.
4. CONSTRUCT CONCRETE BARRIER TRANSITION AND MGS.
5. REMOVE TEMPORARY RAILING (TYPE K).

Loc.	COUNTY	ROUTE	BRIDGE No.	PM	DESCRIPTION
6	Iny	168	48-0025	15.4	N FORK BISHOP CREEK
7	Iny	168	48-0028	15.8	S FORK BISHOP CREEK

APPROVED FOR TRAFFIC HANDLING WORK ONLY

TRAFFIC HANDLING PLAN
NO SCALE

TH-7

REVISED BY | DATE REVISED
TONY SYMANOVICH
CALCULATED-DESIGNED BY | CHECKED BY
FUNCTIONAL SUPERVISOR
BRIAN WESLING

STATE OF CALIFORNIA - DEPARTMENT OF TRANSPORTATION
Caltrans
DESIGN

LAST REVISION | DATE PLOTTED => 23-JUL-2015 | TIME PLOTTED => 10:44

Dist	COUNTY	ROUTE	POST MILES TOTAL PROJECT	SHEET No.	TOTAL SHEETS
09	Iny, Mno	6,108,136,158 168,182,395	Var	31	59

REGISTERED CIVIL ENGINEER 6-26-15 DATE

6-29-15
PLANS APPROVAL DATE

REGISTERED PROFESSIONAL ENGINEER ANTON SYMANOVICH No. 78419 Exp. 9-30-15 CIVIL STATE OF CALIFORNIA

THE STATE OF CALIFORNIA OR ITS OFFICERS OR AGENTS SHALL NOT BE RESPONSIBLE FOR THE ACCURACY OR COMPLETENESS OF SCANNED COPIES OF THIS PLAN SHEET.

NOTES:

1. TRAFFIC CONTROL PLAN MUST FOLLOW CLOSURE REQUIREMENTS AS SHOWN IN STANDARD PLANS.
2. EXACT LOCATION AND POSITION OF CONSTRUCTION AREA SIGNS TO BE DETERMINED BY THE ENGINEER.

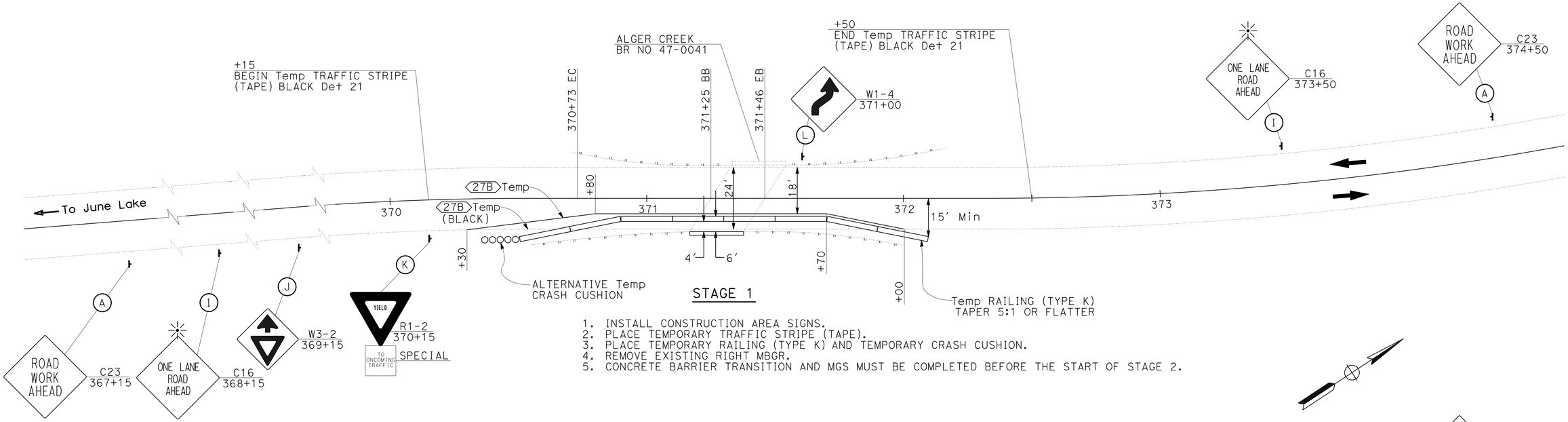

STAGE 1

1. INSTALL CONSTRUCTION AREA SIGNS.
2. PLACE TEMPORARY TRAFFIC STRIPE (TAPE).
3. PLACE TEMPORARY RAILING (TYPE K) AND TEMPORARY CRASH CUSHION.
4. REMOVE EXISTING RIGHT MBGR.
5. CONCRETE BARRIER TRANSITION AND MGS MUST BE COMPLETED BEFORE THE START OF STAGE 2.

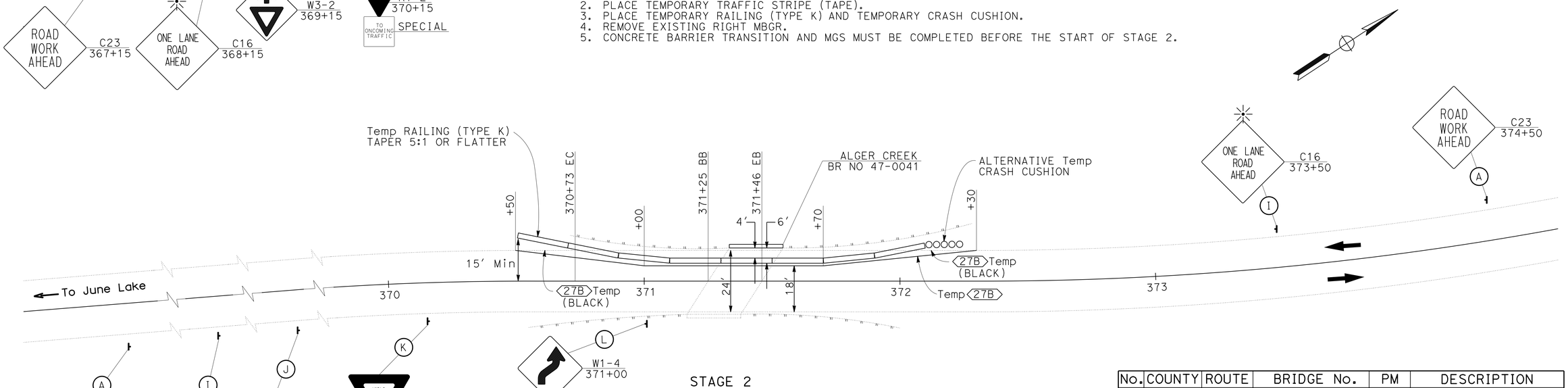

STAGE 2

1. REMOVE TEMPORARY TRAFFIC STRIPE (TAPE) Det 27B FROM STAGE 1.
2. PLACE TEMPORARY TRAFFIC STRIPE (TAPE).
3. REPOSITION TEMPORARY RAILING (TYPE K) AND TEMPORARY CRASH CUSHION.
4. REMOVE EXISTING LEFT MBGR.
5. CONSTRUCT CONCRETE BARRIER TRANSITION AND MGS.
6. REMOVE TEMPORARY RAILING (TYPE K).
7. REMOVE TEMPORARY TRAFFIC STRIPE (TAPE).

No.	COUNTY	ROUTE	BRIDGE No.	PM	DESCRIPTION
18	Mno	158	47-0041	7.0	ALGER CREEK

APPROVED FOR TRAFFIC HANDLING WORK ONLY

TRAFFIC HANDLING PLAN
SCALE 1:20

TH-8

STATE OF CALIFORNIA - DEPARTMENT OF TRANSPORTATION
Caltrans
DESIGN
FUNCTIONAL SUPERVISOR BRIAN WESLING
CALCULATED-DESIGNED BY TONY SYMANOVICH
CHECKED BY
REVISED BY
DATE REVISED

LAST REVISION DATE PLOTTED => 23-JUL-2015
TIME PLOTTED => 10:44

Dist	COUNTY	ROUTE	POST MILES TOTAL PROJECT	SHEET No.	TOTAL SHEETS
09	Iny, Mno	6,108,136,158 168,182,395	Var	32	59

REGISTERED CIVIL ENGINEER 6-26-15 DATE

6-29-15
PLANS APPROVAL DATE

REGISTERED PROFESSIONAL ENGINEER ANTON SYMANOVICH No. 78419 Exp. 9-30-15 CIVIL STATE OF CALIFORNIA

THE STATE OF CALIFORNIA OR ITS OFFICERS OR AGENTS SHALL NOT BE RESPONSIBLE FOR THE ACCURACY OR COMPLETENESS OF SCANNED COPIES OF THIS PLAN SHEET.

NOTES:

1. SHOULDERS MUST BE CLOSED AS PER REVISED STANDARD PLAN RSP T10 "SHOULDER CLOSURE".
2. SEE SHEET THQ-1 FOR TRAFFIC HANDLING SIGN SUMMARY.
3. EXACT LOCATION OF TEMPORARY RAILING (TYPE K), TEMPORARY CRASH CUSHION MODULE, CHANNELIZERS, AND SIGNS TO BE DETERMINED BY THE ENGINEER.

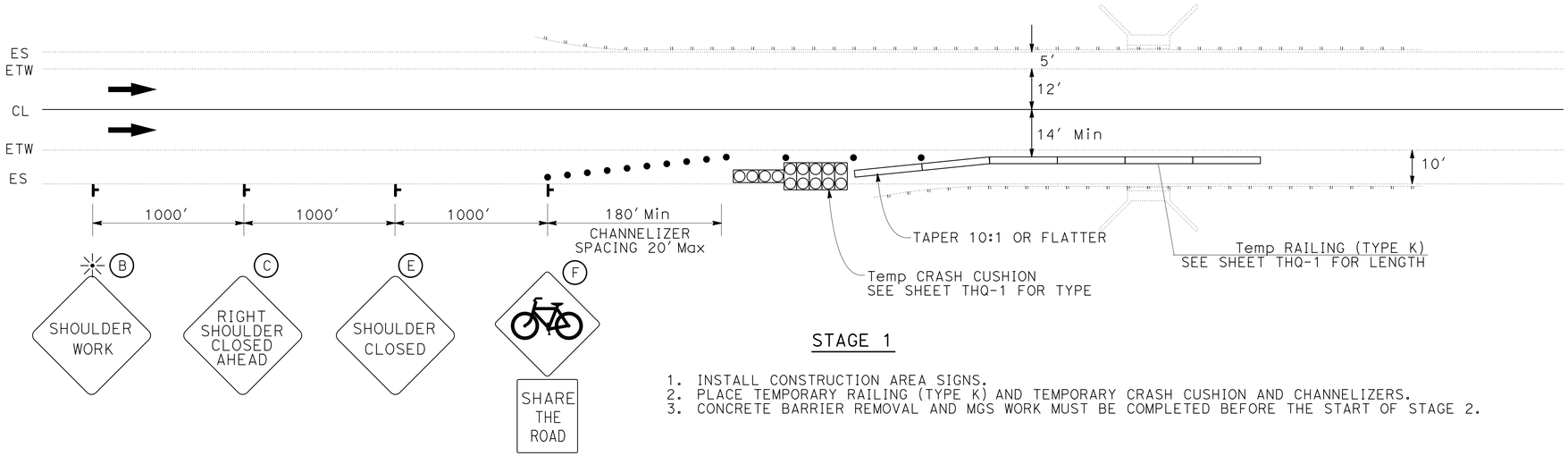

STAGE 1

1. INSTALL CONSTRUCTION AREA SIGNS.
2. PLACE TEMPORARY RAILING (TYPE K) AND TEMPORARY CRASH CUSHION AND CHANNELIZERS.
3. CONCRETE BARRIER REMOVAL AND MGS WORK MUST BE COMPLETED BEFORE THE START OF STAGE 2.

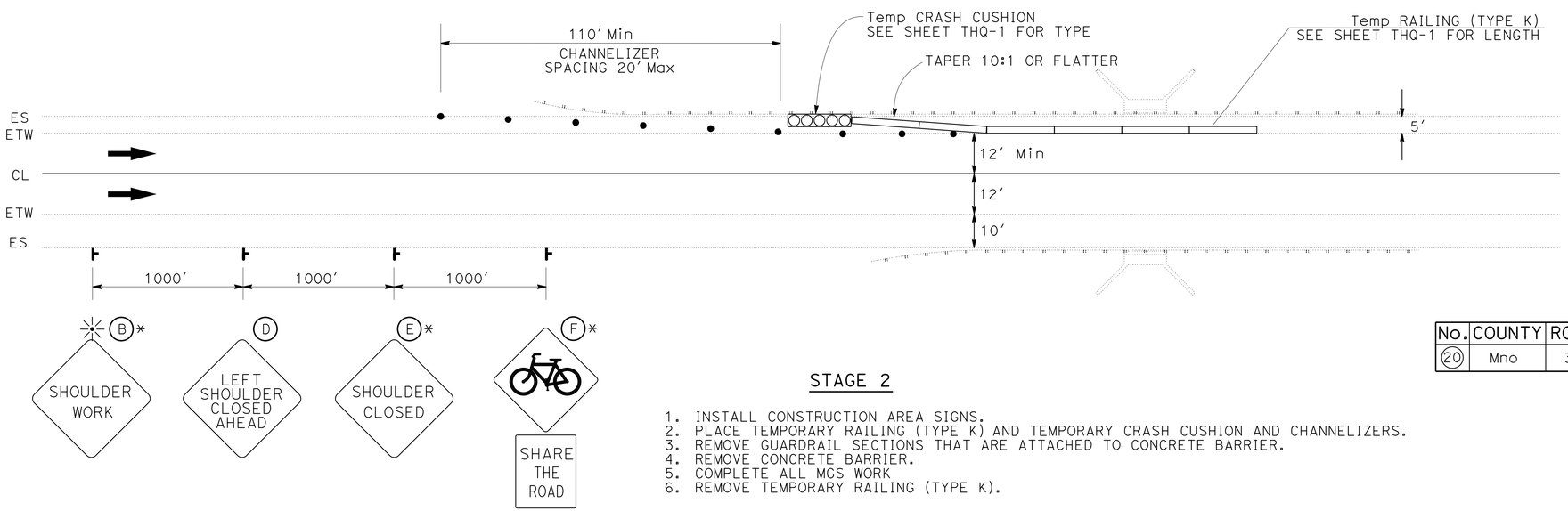

STAGE 2

1. INSTALL CONSTRUCTION AREA SIGNS.
2. PLACE TEMPORARY RAILING (TYPE K) AND TEMPORARY CRASH CUSHION AND CHANNELIZERS.
3. REMOVE GUARDRAIL SECTIONS THAT ARE ATTACHED TO CONCRETE BARRIER.
4. REMOVE CONCRETE BARRIER.
5. COMPLETE ALL MGS WORK
6. REMOVE TEMPORARY RAILING (TYPE K).

No.	COUNTY	ROUTE	BRIDGE No.	PM	DESCRIPTION
20	Mno	395	N/A Rt	30.1	SMOKEY BEAR OHV UC

* STAGE 1 SIGNS B,E, AND F TO REMAIN IN PLACE DURING STAGE 2.

TYPICAL FOR DIVIDED HIGHWAY LOCATIONS

APPROVED FOR TRAFFIC HANDLING WORK ONLY

TRAFFIC HANDLING PLAN
NO SCALE
TH-9

REVISED BY | DATE REVISED
TONY SYMANOVICH
CALCULATED-DESIGNED BY | CHECKED BY
FUNCTIONAL SUPERVISOR
BRIAN WESLING

STATE OF CALIFORNIA - DEPARTMENT OF TRANSPORTATION
Caltrans
DESIGN

LAST REVISION | DATE PLOTTED => 23-JUL-2015 | TIME PLOTTED => 10:44

Dist	COUNTY	ROUTE	POST MILES TOTAL PROJECT	SHEET No.	TOTAL SHEETS
09	Iny, Mno	6,108,136,158 168,182,395	Var	33	59

REGISTERED CIVIL ENGINEER 6-26-15 DATE

6-29-15
PLANS APPROVAL DATE

REGISTERED PROFESSIONAL ENGINEER ANTON SYMANOVICH No. 78419 Exp. 9-30-15 CIVIL STATE OF CALIFORNIA

THE STATE OF CALIFORNIA OR ITS OFFICERS OR AGENTS SHALL NOT BE RESPONSIBLE FOR THE ACCURACY OR COMPLETENESS OF SCANNED COPIES OF THIS PLAN SHEET.

NOTES:

1. FOR ADDIDIONAL DETAILS NOT SHOWN SEE STANDARD PLANS.

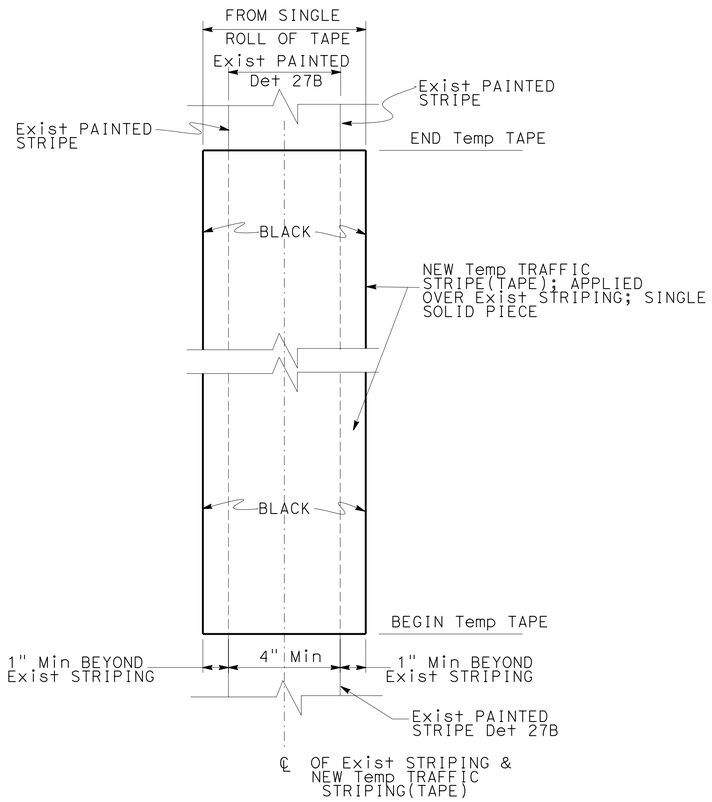

BLACK-OUT Exist DETAIL 27B
WITH Temp TRAFFIC STRIPE(TAPE) BLACK

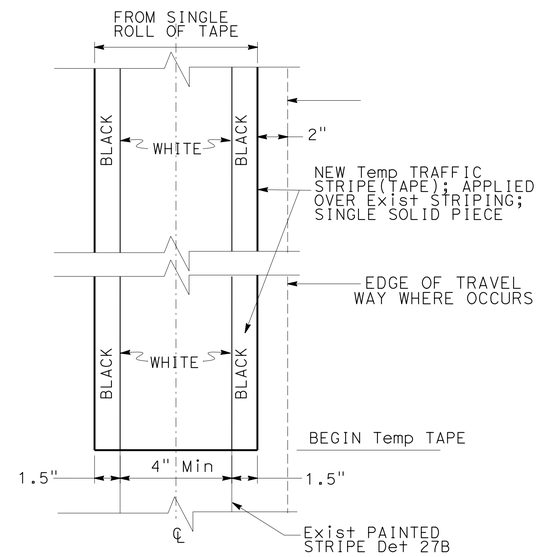

Temp TRAFFIC STRIPE(TAPE)
DETAIL 27B

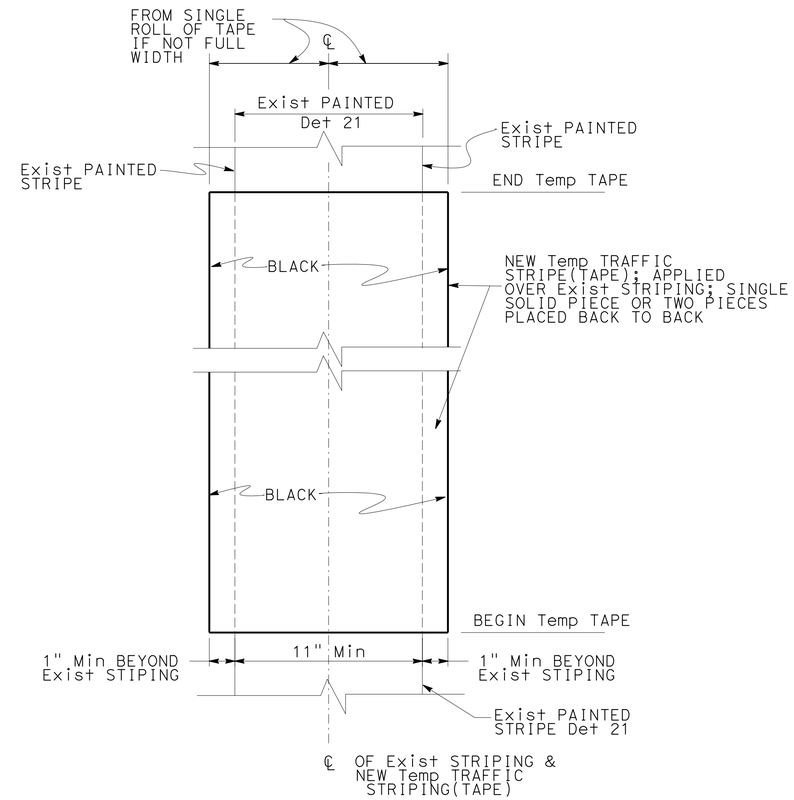

BLACK-OUT Exist DETAIL 21
WITH Temp TRAFFIC STRIPE(TAPE) BLACK

APPROVED FOR TRAFFIC HANDLING WORK ONLY

TRAFFIC HANDLING DETAILS
NO SCALE
THD-1

STATE OF CALIFORNIA - DEPARTMENT OF TRANSPORTATION
Caltrans
DESIGN
FUNCTIONAL SUPERVISOR: BRIAN WESLING
CALCULATED-DESIGNED BY: TONY SYMANOVICH
CHECKED BY
REVISED BY
DATE REVISED

LAST REVISION
DATE PLOTTED => 23-JUL-2015
TIME PLOTTED => 10:44

Dist	COUNTY	ROUTE	POST MILES TOTAL PROJECT	SHEET No.	TOTAL SHEETS
09	Iny, Mno	6,108,136,158 168,182,395	Var	34	59

REGISTERED CIVIL ENGINEER 6-26-15 DATE

6-29-15
PLANS APPROVAL DATE

REGISTERED PROFESSIONAL ENGINEER ANTON SYMANOVICH No. 78419 Exp. 9-30-15 CIVIL STATE OF CALIFORNIA

THE STATE OF CALIFORNIA OR ITS OFFICERS OR AGENTS SHALL NOT BE RESPONSIBLE FOR THE ACCURACY OR COMPLETENESS OF SCANNED COPIES OF THIS PLAN SHEET.

TRAFFIC HANDLING QUANTITIES

LOCATION	ROUTE/PM	BRIDGE NO.	DESCRIPTION	STAGE	TEMPORARY RAILING (TYPE K)	CHANNELIZER (SURFACE MOUNTED)	TEMPORARY CRASH CUSHION	TEMPORARY CRASH CUSHION MODULE	ALTERNATIVE TEMPORARY CRASH CUSHION	TEMPORARY TRAFFIC STRIPE (TAPE)		
										Det 27B	Det 27B (BLACK)	Det 21 (BLACK)
					LF	EA	TYPE (N)	EA	EA	LF	LF	LF
1	6/0.5	48-0023	N FORK BISHOP CREEK	1	140	8	ARRAY TU14	14	-	-	-	-
				2	140	8	ARRAY TU14	14	-	-	-	-
2	6/3.7	48-0024	OWENS RIVER	1	220	8	ARRAY TU14	14	-	-	-	-
				2	220	8	ARRAY TU14	14	-	-	-	-
3	6/6.5	48-0038	LOWER McNALLY CANAL	1	140	8	ARRAY TU14	14	-	-	-	-
				2	140	8	ARRAY TU14	14	-	-	-	-
4	6/7.4	48-0039	UPPER McNALLY CANAL	1	140	8	ARRAY TU14	14	-	-	-	-
				2	140	8	ARRAY TU14	14	-	-	-	-
5	136/2.7	48-0002	OWENS RIVER	1	200	8	ARRAY TU14	14	-	-	-	-
				2	200	8	ARRAY TU14	14	-	-	-	-
6	168/15.4	48-0025	N FORK BISHOP CREEK	1	120	7	ALTERNATIVE	-	1	-	-	-
				2	140	7	ALTERNATIVE	-	1	-	-	-
7	168/15.8	48-0028	S FORK BISHOP CREEK	1	80	7	ALTERNATIVE	-	1	-	-	-
				2	180	7	ALTERNATIVE	-	1	-	-	-
8	168/18.5	N/A	BIG PINE CANAL	1	140	8	ARRAY TU14	14	-	-	-	-
				2	140	8	ARRAY TU14	14	-	-	-	-
9	168/19.8	48-0061	OWENS RIVER	1	220	8	ARRAY TU14	14	-	-	-	-
				2	220	8	ARRAY TU14	14	-	-	-	-
10	395/21.3	48-0015 R†	LA AQUEDUCT	1	100	13	ARRAY TU14	14	-	-	-	-
				2	100	11	ARRAY TU14	14	-	-	-	-
11	395/22.1	48-0064 R†	LA AQUEDUCT	1	80	13	ALTERNATIVE	-	1	-	-	-
				2	80	11	ALTERNATIVE	-	1	-	-	-
12	395/42	48-0011 L† & R†	ASH CREEK	1	200*	26	ARRAY TU14 (2)	28	-	-	-	-
				2	200*	22	ARRAY TU14 (2)	28	-	-	-	-
13	395/44	48-0012 L† & R†	COTTONWOOD CREEK	1	200*	26	ARRAY TU14 (2)	28	-	-	-	-
				2	200*	22	ARRAY TU14 (2)	28	-	-	-	-
14	395/93	N/A	TINNEMAHA CREEK	**	200*	26	ARRAY TU14 (2)	28	-	-	-	-
18	158/7	47-0041	ALGER CREEK	1	160	-	ALTERNATIVE	-	1	170	35	235
				2	160	-	ALTERNATIVE	-	1	180	50	-
19	182/6.2	47-0058	E WALKER RIVER	1	240	8	ALTERNATIVE	-	1	-	-	-
				2	240	8	ALTERNATIVE	-	1	-	-	-
20	395/30.1	N/A R†	SMOKEY BEAR OHV UC	1	120	13	ARRAY TU14	14	-	-	-	-
				2	120	9	ALTERNATIVE	-	1	-	-	-
21	395/40.9	N/A L†	SANDHOUSE OHV UC	1	80	13	ARRAY TU14	14	-	-	-	-
				2	80	11	ARRAY TU14	14	-	-	-	-
22	395/44.2	47-0057 R†	LA AQUEDUCT	1	100	13	ARRAY TU14	14	-	-	-	-
				2	100	11	ARRAY TU14	14	-	-	-	-
23	395/76.3	47-0013	E WALKER RIVER	1	220	9	ALTERNATIVE (2)	-	2	-	-	-
				2	220	3	ALTERNATIVE (2)	-	2	-	-	-
24	395/76.9	47-0047	RICKEY DITCH OUTLET	1	160	8	ARRAY TU14	14	-	-	-	-
				2	160	8	ARRAY TU14	14	-	-	-	-
25	395/107.1	47-0046	MILL CREEK	1	180	-	ARRAY TU14	14	-	240	240	-
				2	180	-	ARRAY TU14	14	-	240	240	-
SUBTOTAL										830	565	235
TOTAL					6800	424		490	15	1630		

(N) NOT A SEPARATE PAY ITEM. FOR INFORMATION ONLY.
* HALF OF QTY TO BE FOR SB STAGE AND HALF OF QTY TO BE FOR NB STAGE.
** NB AND SB MAY BE CONSTRUCTED CONCURRENTLY.

APPROVED FOR TRAFFIC HANDLING WORK ONLY

TRAFFIC HANDLING QUANTITIES
NO SCALE **THQ-1**

STATE OF CALIFORNIA - DEPARTMENT OF TRANSPORTATION
Caltrans® **DESIGN**
FUNCTIONAL SUPERVISOR: BRIAN WESLING
CALCULATED-DESIGNED BY: TONY SYMANOVICH
CHECKED BY
REVISED BY
DATE REVISED

LAST REVISION 07-14-14 | DATE PLOTTED => 23-JUL-2015 | TIME PLOTTED => 10:44

Dist	COUNTY	ROUTE	POST MILES TOTAL PROJECT	SHEET No.	TOTAL SHEETS
09	Iny, Mno	6,108,136,158 168,182,395	Var	35	59

REGISTERED CIVIL ENGINEER 6-26-15 DATE

6-29-15
PLANS APPROVAL DATE

REGISTERED PROFESSIONAL ENGINEER ANTON SYMANOVICH No. 78419 Exp. 9-30-15 CIVIL STATE OF CALIFORNIA

THE STATE OF CALIFORNIA OR ITS OFFICERS OR AGENTS SHALL NOT BE RESPONSIBLE FOR THE ACCURACY OR COMPLETENESS OF SCANNED COPIES OF THIS PLAN SHEET.

STATIONARY MOUNTED CONSTRUCTION AREA SIGNS

SHEET No.	SIGN	SIGN CODE (FEDERAL)	PANEL SIZE	SIGN MESSAGE	NUMBER OF POSTS AND SIZE	No. OF SIGNS
TH-4,6,8	A	W20-1	36" x 36"	ROAD WORK AHEAD	1 - 4"X6"	3
TH-2 TH-4 TH-5 TH-9	B	W21-5	48" x 48"	SHOULDER WORK	1 - 4"X6"	35
	C	W21-5bR	48" x 48"	RIGHT SHOULDER CLOSED AHEAD	1 - 4"X6"	31
	D	W21-5bL	48" x 48"	LEFT SHOULDER CLOSED AHEAD	1 - 4"X6"	9
	E	C30A	48" x 48"	SHOULDER CLOSED	1 - 4"X6"	31
	F	W11-1	48" x 48"	BICYCLE SYMBOL	1 - 4"X6"	35
		W16-1	24" x 30"	SHARE THE ROAD		
TH-6	G	W5-1	36" x 36"	ROAD NARROWS	1 - 4"X6"	2
TH-4	H	G20-2	48" x 24"	END ROAD WORK	1 - 4"X4"	3
TH-8	I	W20-4	36" x 36"	ONE LANE ROAD AHEAD	1 - 4"X6"	2
TH-8	J	W3-2	36" x 36"	YIELD AHEAD SYMBOL	1 - 4"X6"	1
TH-8	K	R1-2	36"x36"x36"	YIELD	1 - 4"X6"	1
		R1-2aP	36" x 30"	TO ONCOMING TRAFFIC		
TH-8	L	W1-4	36" x 36"	LANE SHIFT SYMBOL	1 - 4"X6"	2

MAINTAIN EXISTING TMS ELEMENTS DURING CONSTRUCTION

LOCATION	No.	REMARKS
25	1	COUNT STATION AT SB DEPARTURE

PORTABLE CHANGEABLE MESSAGE SIGNS

QUANTITY	REMARKS
LUMP SUM	1 IN ADVANCE OF EACH WORK AREA

FLASHING BEACON (PORTABLE)

LOCATION	EA
1	2
2	2
3	2
4	2
5	2
6	2
7	2
8	2
9	2
10	1
11	1
12	2
13	2
14	2
18	2
19	2
20	1
21	1
22	1
23	2
24	2
25	2
TOTAL	39

PORTABLE CHANGEABLE MESSAGE SIGNS

MESSAGE DURING SHOULDER CLOSURES	
SHOULDER CLOSED AHEAD	REDUCE SPEED
MESSAGE DURING DAILY LANE CLOSURES	
ROAD WORK AHEAD	REDUCE SPEED
MESSAGE DURING FLAGGING OPERATIONS	
PREPARE TO STOP	EXPECT 20 MIN DELAYS

1. PORTABLE CHANGEABLE MESSAGE SIGN LOCATIONS TO BE CONFIRMED BY THE ENGINEER BEFORE THE ACTUAL CLOSURE.
2. ALTERNATE MESSAGES MUST BE APPROVED BY THE ENGINEER.
3. MESSAGE MAY BE ALTERED BY THE ENGINEER.
4. PORTABLE CHANGEABLE MESSAGE SIGNS SHALL BE DISPLAYED DURING CLOSURES UNLESS ORDERED OTHERWISE BY THE ENGINEER.

TRAFFIC HANDLING QUANTITIES

NO SCALE **THQ-2**

REVISED BY | DATE REVISED
TONY SYMANOVICH
CALCULATED-DESIGNED BY | CHECKED BY
FUNCTIONAL SUPERVISOR
BRIAN WESLING
STATE OF CALIFORNIA - DEPARTMENT OF TRANSPORTATION
Caltrans DESIGN

LAST REVISION | DATE PLOTTED => 23-JUL-2015 | TIME PLOTTED => 10:44

Dist	COUNTY	ROUTE	POST MILES TOTAL PROJECT	SHEET No.	TOTAL SHEETS
09	Iny, Mno	6,108,136,158 168,182,395	Var	36	59

REGISTERED CIVIL ENGINEER 6-26-15 DATE

6-29-15
PLANS APPROVAL DATE

REGISTERED PROFESSIONAL ENGINEER ANTON SYMANOVICH No. 78419 Exp. 9-30-15 CIVIL STATE OF CALIFORNIA

THE STATE OF CALIFORNIA OR ITS OFFICERS OR AGENTS SHALL NOT BE RESPONSIBLE FOR THE ACCURACY OR COMPLETENESS OF SCANNED COPIES OF THIS PLAN SHEET.

METAL BEAM GUARD RAILING AND CONCRETE BARRIER QUANTITIES

LOCATION	ROUTE/ PM	BRIDGE NO.	DESCRIPTION	REMOVE GUARDRAIL	TREATED WOOD WASTE	MIDWEST GUARDRAIL SYSTEM (STEEL POST)	ALTERNATIVE FLARED TERMINAL SYSTEM	TRANSITION RAILING (TYPE WB-31)	REMOVE CONCRETE BARRIER	CONCRETE BARRIER (TRANSITION)	CONCRETE BARRIER (TYPE 736 MOD)	CONCRETE BARRIER (TYPE 736B)	END ANCHOR ASSEMBLY (TYPE SFT)	BURIED POST END ANCHOR	END CAP
				LF	LB	LF	EA	EA	LF	LF	LF	LF	EA	EA (N)	EA
1	6/0.5	48-0023	N FORK BISHOP CREEK	425	1360	25	4	4	8	14	-	-	-	-	-
2	6/3.7	48-0024	OWENS RIVER	250	800	-	4	4	12	36	-	-	-	-	-
3	6/6.5	48-0038	LOWER McNALLY CANAL	325	1040	-	4	4	8	14	-	-	-	-	-
4	6/7.4	48-0039	UPPER McNALLY CANAL	250	800	-	4	4	50	-	76	-	-	-	-
5	136/2.7	48-0002	OWENS RIVER	250	800	-	4	4	-	14	-	-	-	-	-
6	168/15.4	48-0025	N FORK BISHOP CREEK	225	720	12.5	3	4	12	25	-	-	1	-	1
7	168/15.8	48-0028	S FORK BISHOP CREEK	187.5	600	-	3	3	6	16	-	-	-	-	-
8	168/18.5	48-0020	BIG PINE CANAL	-	-	-	4	4	-	-	64	20	-	-	-
9	168/19.8	48-0061	OWENS RIVER	200	640	-	4	4	24	36	-	-	-	-	-
10	395/21.3	48-0015 R†	LA AQUEDUCT	150	480	25	2	2	-	7	-	-	-	-	-
11	395/22.1	48-0064 R†	LA AQUEDUCT	875	2800	750	2	2	-	7	-	-	-	-	-
12	395/42	48-0011 L† & R†	ASH CREEK	250	800	-	4	4	-	14	-	-	-	-	-
13	395/44	48-0012 L† & R†	COTTONWOOD CREEK	250	800	-	4	4	-	14	-	-	-	-	-
14	395/93	N/A	TINNEMAHA CREEK	125	400	-	2	2	-	7	-	-	-	-	-
15	108/3.1	47-0061	SARDINE CREEK	275	880	37.5	4	4	36	36	-	-	-	-	-
16	108/9.5	47-0016	WOLF CREEK	250	800	25	4	4	12	25	-	-	-	-	-
17	108/12.9	47-0020	WEST WALKER RIVER	312.5	1000	100	3	4	24	36	-	-	-	1	-
18	158/7	47-0041	ALGER CREEK	250	800	-	4	4	24	36	-	-	-	-	-
19	182/6.2	47-0058	E WALKER RIVER	500	1600	287.5	3	4	36	36	-	-	-	1	-
20	395/30.1	N/A R†	SMOKEY BEAR OHV UC	425	1360	350	2	-	25	-	-	-	2	-	-
21	395/40.9	N/A L†	SANDHOUSE OHV UC	125	400	-	2	2	12	18	-	-	-	-	-
22	395/44.2	47-0057 R†	LA AQUEDUCT	250	800	-	2	2	-	9	-	-	-	-	-
23	395/76.3	47-0013	E WALKER RIVER	475	1520	225	4	4	-	14	-	-	-	-	-
24	395/76.9	47-0047	RICKEY DITCH OUTLET	275	880	37.5	4	4	24	36	-	-	-	-	-
25	395/107.1	47-0046	MILL CREEK	325	1040	25	4	4	8	14	-	-	-	-	-
			TOTAL	7225	23120	1900	84	85	321	464	140	20	3		1

(N) - NOT A PAY ITEM. SHOWN FOR INFORMATION ONLY.

CABLE RAILING

LOCATION	ROUTE/PM	DESCRIPTION	APPROACH L (LF)				DEPARTURE L (LF)			
			EB	WB	NB	SB	EB	WB	NB	SB
1	6/0.5	N FORK BISHOP CREEK	9	10	-	-	9	10	-	-
2	6/3.7	OWENS RIVER	12	14	-	-	12	14	-	-
8	168/18.5	BIG PINE CANAL	12	12	-	-	-	-	-	-
16	108/9.5	WOLF CREEK	-	8	-	-	-	-	-	-
20	395/30.1	SMOKEY BEAR OHV UC NB, L†	-	-	14	-	-	-	14	-
20	395/30.1	SMOKEY BEAR OHV UC NB, R†	-	-	14	-	-	-	14	-
21	395/40.9	SANDHOUSE OHV UC SB, L†	-	-	-	13	-	-	-	13
21	395/40.9	SANDHOUSE OHV UC SB, R†	-	-	-	13	-	-	-	13
23	395/76.3	E WALKER RIVER	-	-	10	15	-	-	12	12
24	395/76.9	RICKEY DITCH OUTLET	-	-	18	11	-	-	-	11
25	395/107.1	MILL CREEK	-	-	20	23	-	-	20	23
		TOTAL	405							

RECONSTRUCT TUBULAR HAND RAILING

LOCATION	QUANTITY LF	NOTE
6	12	SEE SHEET C-18
7	6	SEE SHEET C-18
TOTAL	18	

TUBULAR BICYCLE RAILING

LOCATION	QUANTITY LF	NOTE
4	76	SEE SHEET C-20
8	84	SEE SHEET C-20
TOTAL	160	

REMOVE BRIDGE RAILING

LOCATION	QUANTITY LF	NOTE
8	270	REMOVE EXISTING TYPE 8 METAL RAILING

SUMMARY OF QUANTITIES
Q-1

REVISED BY | DATE REVISED
TONY SYMANOVICH
CALCULATED-DESIGNED BY | CHECKED BY
FUNCTIONAL SUPERVISOR
BRIAN WESLING
STATE OF CALIFORNIA - DEPARTMENT OF TRANSPORTATION
DESIGN
Caltrans

LAST REVISION 07-14-14 | DATE PLOTTED => 23-JUL-2015 TIME PLOTTED => 10:44

Dist	COUNTY	ROUTE	POST MILES TOTAL PROJECT	SHEET No.	TOTAL SHEETS
09	Iny, Mno	6,108,136,158 168,182,395	Var	37	59

REGISTERED CIVIL ENGINEER 6-26-15 DATE

6-29-15
PLANS APPROVAL DATE

REGISTERED PROFESSIONAL ENGINEER ANTON SYMANOVICH No. 78419 Exp. 9-30-15 CIVIL STATE OF CALIFORNIA

THE STATE OF CALIFORNIA OR ITS OFFICERS OR AGENTS SHALL NOT BE RESPONSIBLE FOR THE ACCURACY OR COMPLETENESS OF SCANNED COPIES OF THIS PLAN SHEET.

OBJECT MARKER

LOCATION	OBJECT MARKER (TYPE L-1)*	REMOVE MARKER
	EA	EA
1	2	2
2	2	2
3	2	2
4	2	2
5	2	2
6	2	4
7	2	4
8	2	-
9	2	1
10	2	2
11	2	2
12	4	4
13	4	4
14	2	2
15	2	-
16	2	-
17	2	4
18	2	4
19	2	-
20	2	2
21	2	-
22	2	-
23	2	4
24	2	-
25	2	2
TOTAL	54	49

*TYPE L-1 OBJECT MARKERS (PER CA MUTCD) TO BE INSTALLED AT THE END OF EACH APPROACH TERMINAL SYSTEM.

DIKE REPAIR (N)

LOCATION	QUANTITY LF	NOTE*
10	2	AT NB BARRIER APPROACH, R†
11	2	AT NB BARRIER APPROACH, R†
12	2	AT NB BARRIER APPROACH, R†
13	2	AT NB BARRIER APPROACH, R†
15	8	AT ALL 4 BARRIER CORNERS
19	8	AT ALL 4 BARRIER CORNERS
20	4	L† AND R†
21	4	AT BARRIER APPROACH L† AND R†
22	2	AT NB BARRIER APPROACH, R†

(N) - NOT A PAY ITEM. FOR INFORMATION ONLY.
*REPAIR EXISTING DIKES AT ALL LOCATIONS TO FLOW

RESET ROADSIDE SIGN

LOCATION	QUANTITY EA	DESCRIPTION
6	2	BRIDGE No. SIGNS AT APPROACHES
7	1	BRIDGE No. SIGN, WB APPROACH
11	1	PM SIGN AT R† APPROACH
12	1	PM SIGN, NB R†
15	2	BRIDGE No. SIGNS AT APPROACHES
23	1	HWY 182 SIGN, SB DEPARTURE
24	2	PM SIGNS, NB AND SB
25	2	BRIDGE No. SIGNS AT APPROACHES
TOTAL	12	

SUMMARY OF QUANTITIES
Q-2

STATE OF CALIFORNIA - DEPARTMENT OF TRANSPORTATION
Caltrans® DESIGN
FUNCTIONAL SUPERVISOR: BRIAN WESLING
CALCULATED-DESIGNED BY: TONY SYMANOVICH
CHECKED BY
REVISED BY
DATE REVISED

LAST REVISION DATE PLOTTED => 23-JUL-2015
TIME PLOTTED => 10:44

M

Maint	MAINTENANCE
Max	MAXIMUM
MB	METAL BEAM
MBB	METAL BEAM BARRIER
MBGR	METAL BEAM GUARD RAILING
Med	MEDIAN
MGS	MIDWEST GUARDRAIL SYSTEM
MH	MANHOLE
Min	MINIMUM
Misc	MISCELLANEOUS
Misc I & S	MISCELLANEOUS IRON AND STEEL
Mkr	MARKER
Mod	MODIFIED,
	MODIFY
Mon	MONUMENT
MP	METAL PLATE
MPGR	METAL PLATE GUARD RAILING
MR	MOVEMENT RATING
MSE	MECHANICALLY STABILIZED EMBANKMENT
Mt	MOUNTAIN, MOUNT
Mtl	MATERIAL
MVP	MAINTENANCE VEHICLE PULLOUT

N

N	NORTH
NB	NORTHBOUND
No.	NUMBER (MUST HAVE PERIOD)
Nos.	NUMBERS (MUST HAVE PERIOD)
NPS	NOMINAL PIPE SIZE
NS	NEAR SIDE
NSP	NEW STANDARD PLAN
NTS	NOT TO SCALE

O

Oblr	OBLITERATE
OC	OVERCROSSING
OD	OUTSIDE DIAMETER
OF	OUTSIDE FACE
OG	ORIGINAL GROUND
OGAC	OPEN GRADED ASPHALT CONCRETE
OGFC	OPEN GRADED FRICTION COURSE
OH	OVERHEAD
OHWM	ORDINARY HIGH WATER MARK
O-O	OUT TO OUT
Opp	OPPOSITE
OSD	OVERSIDE DRAIN

P

P	PAGE
PAP	PERFORATED ALUMINUM PIPE
PB	PULL BOX
PC	POINT OF CURVATURE,
	PRECAST
PCC	POINT OF COMPOUND CURVE,
	PORTLAND CEMENT CONCRETE
PCMS	PORTABLE CHANGEABLE MESSAGE SIGN
PCP	PERFORATED CONCRETE PIPE,
	PRESTRESSED CONCRETE PIPE
PCVC	POINT OF COMPOUND VERTICAL CURVE
PEC	PERMIT TO ENTER AND CONSTRUCT
Ped	PEDESTRIAN
Ped OC	PEDESTRIAN OVERCROSSING
Ped UC	PEDESTRIAN UNDERCROSSING
Perm Mtl	PERMEABLE MATERIAL

P continued

PG	PROFILE GRADE
PI	POINT OF INTERSECTION
PJP	PARTIAL JOINT PENETRATION
Pkwy	PARKWAY
ℙL,PL	PLATE
P/L	PROPERTY LINE
PM	POST MILE,
	TIME FROM NOON TO MIDNIGHT
PN	PAVING NOTCH
POC	POINT OF HORIZONTAL CURVE
POT	POINT OF TANGENT
POVC	POINT OF VERTICAL CURVE
PP	PIPE PILE,
	PLASTIC PIPE,
	POWER POLE
PPL	PREFORMED PERMEABLE LINER
PPP	PERFORATED PLASTIC PIPE
PRC	POINT OF REVERSE CURVE
PRF	PAVEMENT REINFORCING FABRIC
PRVC	POINT OF REVERSE VERTICAL CURVE
PS&E	PLANS, SPECIFICATIONS AND ESTIMATES
PS, P/S	PRESTRESSED
PSP	PERFORATED STEEL PIPE
PT	POINT OF TANGENCY
PVC	POLYVINYL CHLORIDE
Pvmt	PAVEMENT

Q

Qty	QUANTITY

R

R	RADIUS
R & D	REMOVE AND DISPOSE
R & S	REMOVE AND SALVAGE
R/C	RATE OF CHANGE
RCA	REINFORCED CONCRETE ARCH
RCB	REINFORCED CONCRETE BOX
RCP	REINFORCED CONCRETE PIPE
RCPA	REINFORCED CONCRETE PIPE ARCH
Rd	ROAD
Reinf	REINFORCED,
	REINFORCEMENT,
	REINFORCING
Rel	RELOCATE
Repl	REPLACEMENT
Ret	RETAINING
Rev	REVISED, REVISION
Rdwy	ROADWAY
RHMA	RUBBERIZED HOT MIX ASPHALT
Riv	RIVER
RM	ROAD-MIXED
RP	RADIUS POINT,
	REFERENCE POINT
RR	RAILROAD
RSP	ROCK SLOPE PROTECTION,
	REVISED STANDARD PLAN
Rt	RIGHT
Rte	ROUTE
RW	REDWOOD,
	RETAINING WALL
R/W	RIGHT OF WAY
Rwy	RAILWAY

S

S	SOUTH,
	SUPPLEMENT
SAE	STRUCTURE APPROACH EMBANKMENT
Salv	SALVAGE
SAPP	STRUCTURAL ALUMINUM PLATE PIPE
SB	SOUTHBOUND
SC	SAND CUSHION
SCSP	SLOTTED CORRUGATED STEEL PIPE
SD	STORM DRAIN
Sec	SECOND,
	SECTION
Sep	SEPARATION
SG	SUBGRADE
Shld	SHOULDER
Sht	SHEET
Sim	SIMILAR
℄	STATION LINE
SM	SELECTED MATERIAL
Spec	SPECIAL,
	SPECIFICATIONS
SPP	SLOTTED PLASTIC PIPE
SS	SLOPE STAKE
SSBM	STRAP AND SADDLE BRACKET METHOD
SSD	STRUCTURAL SECTION DRAIN
SSPA	STRUCTURAL STEEL PLATE ARCH
SSPP	STRUCTURAL STEEL PLATE PIPE
SSPPA	STRUCTURAL STEEL PLATE PIPE ARCH
SSRP	STEEL SPIRAL RIB PIPE
St	STREET
Sta	STATION
STBB	SINGLE THRIE BEAM BARRIER
Std	STANDARD
Str	STRUCTURE
Surf	SURFACING
SW	SIDEWALK,
	SOUND WALL
Swr	SEWER
Sym	SYMMETRICAL
S4S	SURFACE 4 SIDES

T

T	SEMI-TANGENT
Tan	TANGENT
TBB	THRIE BEAM BARRIER
Tbr	TIMBER
TC	TOP OF CURB
TCB	TRAFFIC CONTROL BOX
TCE	TEMPORARY CONSTRUCTION EASEMENT
Tel	TELEPHONE
Temp	TEMPORARY
TG	TOP OF GRADE
Tot	TOTAL
TP	TELEPHONE POLE
TPB	TREATED PERMEABLE BASE
TPM	TREATED PERMEABLE MATERIAL
Trans	TRANSITION

T continued

TS	TRANSVERSE,
	TRAFFIC SIGNAL,
	TUBULAR STEEL
Typ	TYPICAL

U

UC	UNDERCROSSING
UD	UNDERDRAIN
UG	UNDERGROUND
UON	UNLESS OTHERWISE NOTED
UP	UNDERPASS

V

V	VALVE,
	DESIGN SPEED
Var	VARIABLE,
	VARIES
VC	VERTICAL CURVE
VCP	VITRIFIED CLAY PIPE
Vert	VERTICAL
Via	VIADUCT
Vol	VOLUME

W

W	WEST,
	WIDTH
WB	WESTBOUND
WH	WEEP HOLE
WM	WIRE MESH
WS	WATER SURFACE
WSP	WELDED STEEL PIPE
Wt	WEIGHT
WV	WATER VALVE
WW	WINGWALL
WWLOL	WINGWALL LAYOUT LINE

X

X Sec	CROSS SECTION
Xing	CROSSING

Y

Yr	YEAR
Yrs	YEARS

Dist	COUNTY	ROUTE	POST MILES TOTAL PROJECT	SHEET No.	TOTAL SHEETS
09	Iny, Mno	6,108,136,158 168,182,395	Var	38	59

Grace M. Tsushima
REGISTERED CIVIL ENGINEER

July 19, 2013
PLANS APPROVAL DATE

REGISTERED PROFESSIONAL ENGINEER Grace M. Tsushima No. C49814 Exp. 9-30-14 CIVIL STATE OF CALIFORNIA

THE STATE OF CALIFORNIA OR ITS OFFICERS OR AGENTS SHALL NOT BE RESPONSIBLE FOR THE ACCURACY OR COMPLETENESS OF SCANNED COPIES OF THIS PLAN SHEET.

TO ACCOMPANY PLANS DATED 6-29-15

UNIT OF MEASUREMENT SYMBOLS:

Some of the symbols used in the project plan quantity tables and in the Bid Item List are:

TABLE A

SYMBOL USED	DEFINITIONS
ACRE	ACRE
CF	CUBIC FOOT
CY	CUBIC YARD
EA	EACH
GAL	GALLON
LB	POUND
LF	LINEAR FOOT
SQFT	SQUARE FOOT
SQYD	SQUARE YARD
STA	100 FEET
TAB	TABLET
TON	2,000 POUNDS

Some of the symbols used in the plans other than in the project plan quantity tables are:

TABLE B

SYMBOL USED	DEFINITIONS
ksi	KIPS PER SQUARE INCH
ksf	KIPS PER SQUARE FOOT
psi	POUNDS PER SQUARE INCH
psf	POUNDS PER SQUARE FOOT
lb/ft^3, pcf	POUNDS PER CUBIC FOOT
tsf	TONS PER SQUARE FOOT
mph, MPH *	MILES PER HOUR
ø	NOMINAL DIAMETER
oz	OUNCE
lb	POUND
kip	1,000 POUNDS
cal	CALORIE
ft	FOOT OR FEET
gal	GALLON

* For use on a sign panel only

STATE OF CALIFORNIA
DEPARTMENT OF TRANSPORTATION

ABBREVIATIONS (SHEET 2 OF 2)

NO SCALE

RSP A10B DATED JULY 19, 2013 SUPERSEDES STANDARD PLAN A10B DATED MAY 20, 2011 - PAGE 2 OF THE STANDARD PLANS BOOK DATED 2010.

REVISED STANDARD PLAN RSP A10B

2010 REVISED STANDARD PLAN RSP A10B

6-7-13

Dist	COUNTY	ROUTE	POST MILES TOTAL PROJECT	SHEET No.	TOTAL SHEETS
09	Iny, Mno	6,108,136,158 168,182,395	Var	39	59

Randell D. Hiatt
REGISTERED CIVIL ENGINEER

July 19, 2013
PLANS APPROVAL DATE

REGISTERED PROFESSIONAL ENGINEER Randell D. Hiatt No. C50200 Exp. 6-30-15 CIVIL STATE OF CALIFORNIA

THE STATE OF CALIFORNIA OR ITS OFFICERS OR AGENTS SHALL NOT BE RESPONSIBLE FOR THE ACCURACY OR COMPLETENESS OF SCANNED COPIES OF THIS PLAN SHEET.

TO ACCOMPANY PLANS DATED 6-29-15

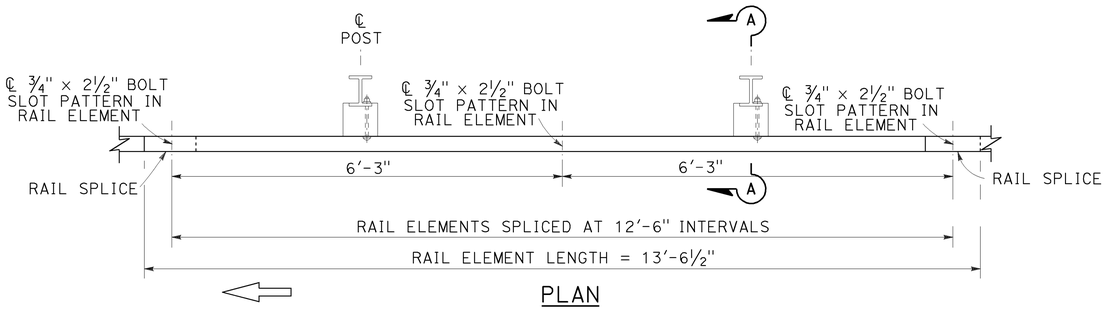

PLAN

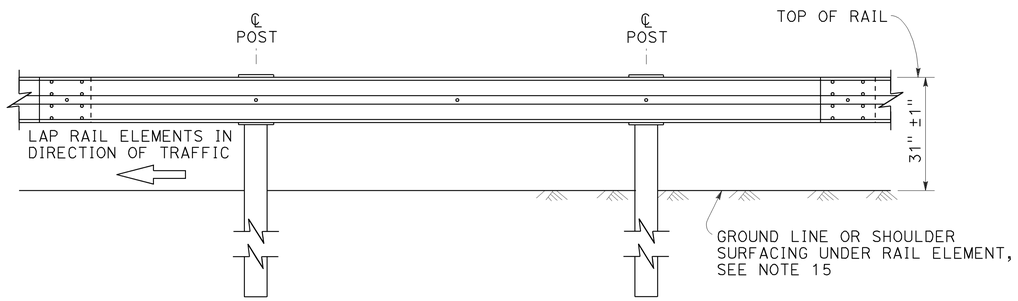

ELEVATION

MIDWEST GUARDRAIL SYSTEM WITH STEEL POSTS AND NOTCHED WOOD OR NOTCHED RECYCLED PLASTIC BLOCKS

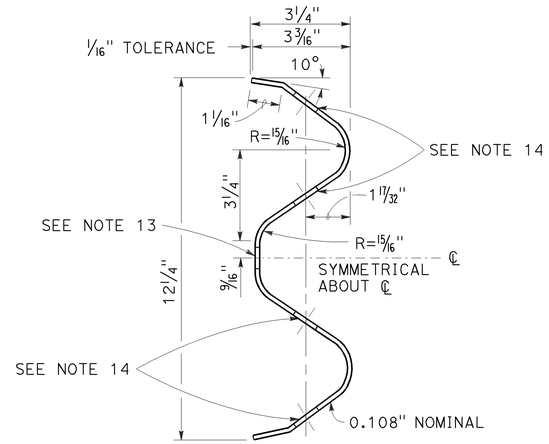

SECTION THRU RAIL ELEMENT

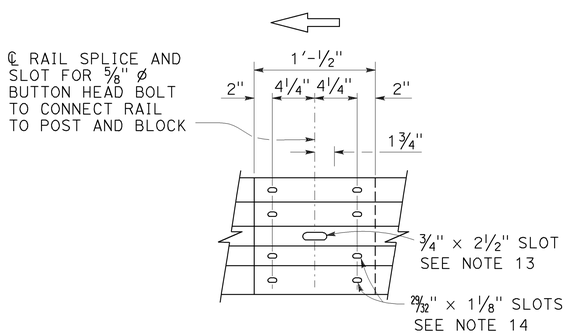

ELEVATION

RAIL ELEMENT SPLICE DETAIL

a) Connect the over lapped end of the rail elements with ⅝" ø × 1⅜" button head oval shoulder splice bolts inserted into the 29⁄₃₂" × 1⅛" slots and bolted together with ⅝" ø recessed hex nuts. Recess of hex nut points toward rail element. A total of 8 bolts and nuts are to be used at each rail splice connection.

b) The ends of the rail elements are to be overlapped in the direction of traffic (see details).

c) Where end cap is to be attached to the end of a rail element, a total of 4 of the above described splice bolts and nuts are to be used.

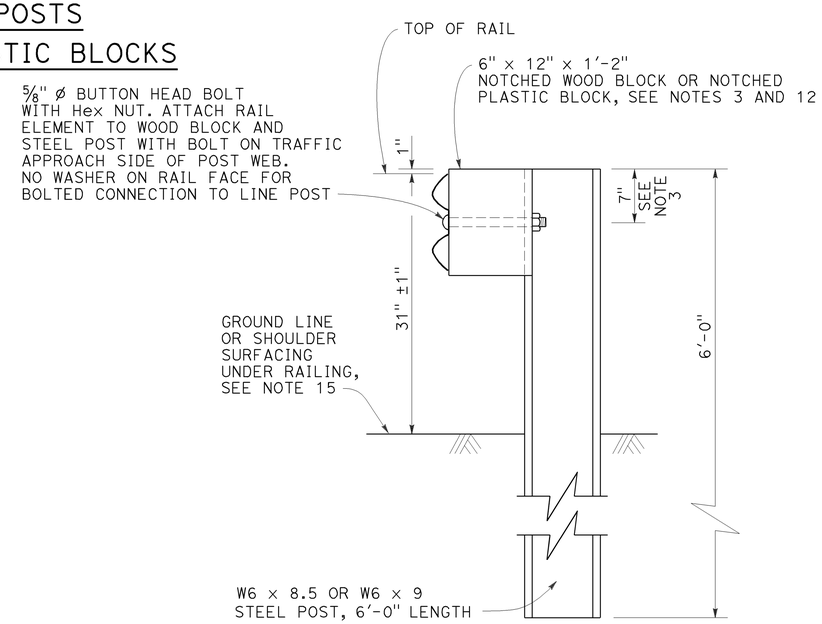

SECTION A-A

TYPICAL STEEL LINE POST INSTALLATION

See Note 4

NOTES:

1. For details of wood post installations, see Revised Standard Plan RSP A77L1.
2. For details of standard hardware used to construct MGS, see Revised Standard Plan RSP A77M1.
3. For details of steel posts and notched wood blocks used to construct MGS, see Revised Standard Plan RSP A77N2.
4. For additional installation details, see Revised Standard Plan RSP A77N3.
5. MGS post spacing to be 6'-3" center to center, except as otherwise noted.
6. For MGS typical layouts, see the A77P, A77Q and A77R Series of Standard Plans.
7. If railing is connected to terminal system end treatment, use 31" height terminal system end treatment.
8. For MGS end anchor details, see Revised Standard Plans RSP A77S1 and RSP A77T2.
9. For details of MGS transition to bridge railing, see Revised Standard Plan RSP A77U4.
10. For additional details of MGS connection to bridge railings, see Revised Standard Plans RSP A77U1, RSP A77U2 and RSP A77V1.
11. For dike positioning and MGS delineation details, see Revised Standard Plan RSP A77N4.
12. Notched face of block faces steel post.
13. Slotted hole for bolted connection of rail element to block and post. See "Section Thru Rail Element".
14. Slotted holes for splice bolts to overlap ends of rail element. See "Section Thru Rail Element".
15. Install posts in soil.

STATE OF CALIFORNIA
DEPARTMENT OF TRANSPORTATION

MIDWEST GUARDRAIL SYSTEM STANDARD RAILING SECTION (STEEL POST WITH NOTCHED WOOD OR NOTCHED RECYCLED PLASTIC BLOCK)

NO SCALE

RSP A77L2 DATED JULY 19, 2013 SUPPLEMENTS THE STANDARD PLANS BOOK DATED 2010.

REVISED STANDARD PLAN RSP A77L2

2010 REVISED STANDARD PLAN RSP A77L2

7-3-13

Dist	COUNTY	ROUTE	POST MILES TOTAL PROJECT	SHEET No.	TOTAL SHEETS
09	Iny, Mno	6,108,136,158 168,182,395	Var	40	59

Randell D. Hiatt
REGISTERED CIVIL ENGINEER

July 19, 2013
PLANS APPROVAL DATE

REGISTERED PROFESSIONAL ENGINEER
Randell D. Hiatt
No. C50200
Exp. 6-30-15
CIVIL
STATE OF CALIFORNIA

THE STATE OF CALIFORNIA OR ITS OFFICERS OR AGENTS SHALL NOT BE RESPONSIBLE FOR THE ACCURACY OR COMPLETENESS OF SCANNED COPIES OF THIS PLAN SHEET.

TO ACCOMPANY PLANS DATED 6-29-15

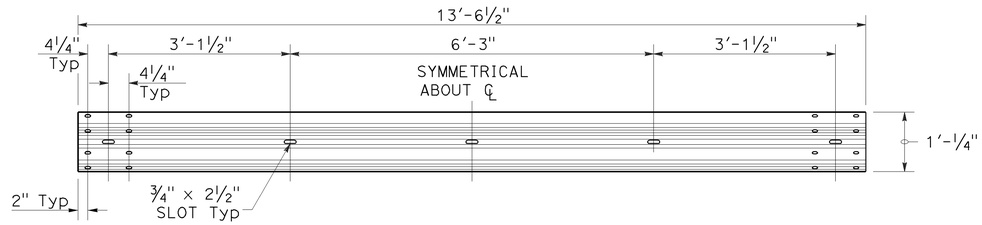

TYPICAL RAIL ELEMENT

NOTE:

1. Slotted holes for splice bolts to overlap ends of rail element.

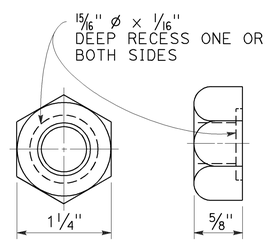

⅝" ø RECESS NUT

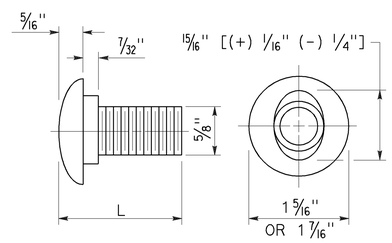

⅝" ø BUTTON HEAD BOLT

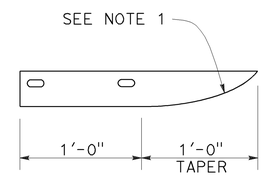

PLAN

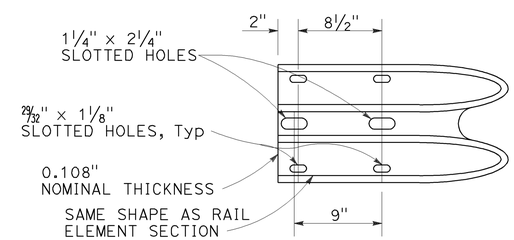

ELEVATION

END CAP
(TYPE A)

BUTTON HEAD BOLT

L	THREAD LENGTH
1⅜"	FULL THREAD LENGTH
2"	FULL THREAD LENGTH
10"	4" Min THREAD LENGTH
18"	4" Min THREAD LENGTH
20"	4" Min THREAD LENGTH
22"	4" Min THREAD LENGTH
26"	4" Min THREAD LENGTH
36"	4" Min THREAD LENGTH
** 2¾"	2" Min THREAD LENGTH
** 19"	4" Min THREAD LENGTH

** For nested rail applications.

STATE OF CALIFORNIA
DEPARTMENT OF TRANSPORTATION

MIDWEST GUARDRAIL SYSTEM STANDARD HARDWARE

NO SCALE

RSP A77M1 DATED JULY 19, 2013 SUPPLEMENTS THE STANDARD PLANS BOOK DATED 2010.

REVISED STANDARD PLAN RSP A77M1

2010 REVISED STANDARD PLAN RSP A77M1

7-3-13

Dist	COUNTY	ROUTE	POST MILES TOTAL PROJECT	SHEET No.	TOTAL SHEETS
09	Iny, Mno	6,108,136,158 168,182,395	Var	41	59

Randell D. Hiatt
REGISTERED CIVIL ENGINEER

November 15, 2013
PLANS APPROVAL DATE

REGISTERED PROFESSIONAL ENGINEER
Randell D. Hiatt
No. C50200
Exp. 6-30-15
CIVIL
STATE OF CALIFORNIA

THE STATE OF CALIFORNIA OR ITS OFFICERS OR AGENTS SHALL NOT BE RESPONSIBLE FOR THE ACCURACY OR COMPLETENESS OF SCANNED COPIES OF THIS PLAN SHEET.

TO ACCOMPANY PLANS DATED 6-29-15

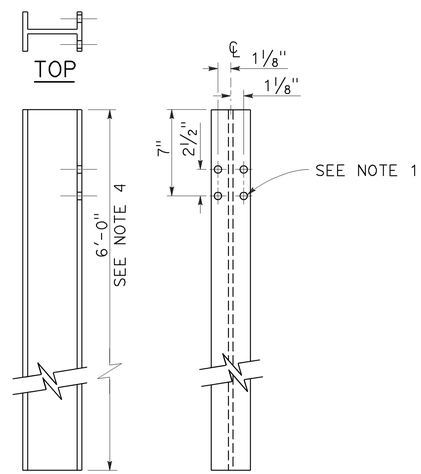

W6 x 9 OR W6 x 8.5
STEEL POST
See Note 4

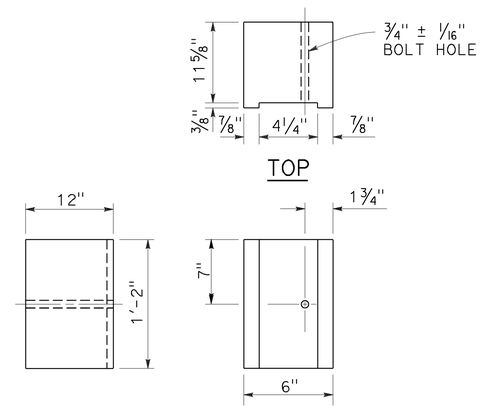

6" x 12"
NOTCHED WOOD BLOCK
See Notes 2 and 3

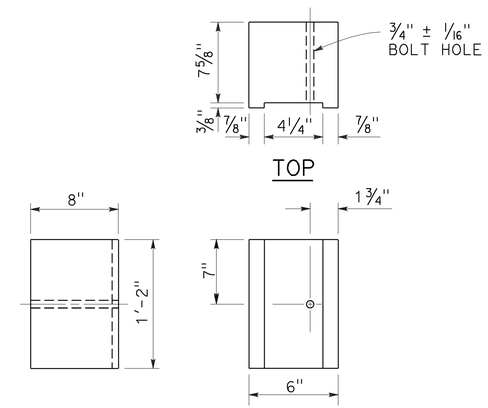

6" x 8"
NOTCHED WOOD BLOCK
Only for use with metal beam guard railing. See Note 5

NOTES:

1. All holes in steel post shall be 13/16" Dia maximum.
2. Dimensions shown for wood block are nominal.
3. Notched face of block faces steel post.
4. 6'-0" length posts to be used for typical roadway installation. See Revised Standard Plan RSP A77N3.
5. See Revised Standard Plan RSP A77L3 for use of 6" x 8" and 8" x 8" notched wood blocks.
6. This post and 8" x 12" block combination to be used for line post sections of MGS on narrow roadways and where strengthened line post sections of MGS are warranted to shield fixed objects.

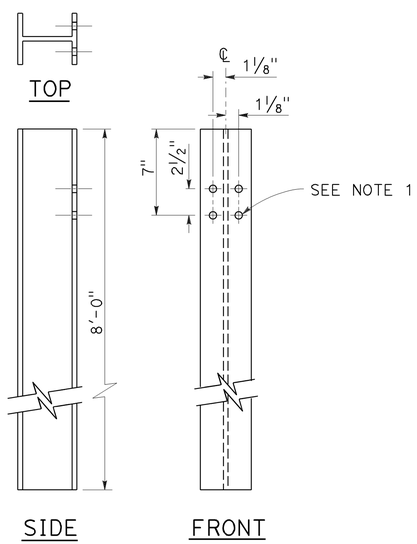

W6 x 15
STEEL POST
See Note 6

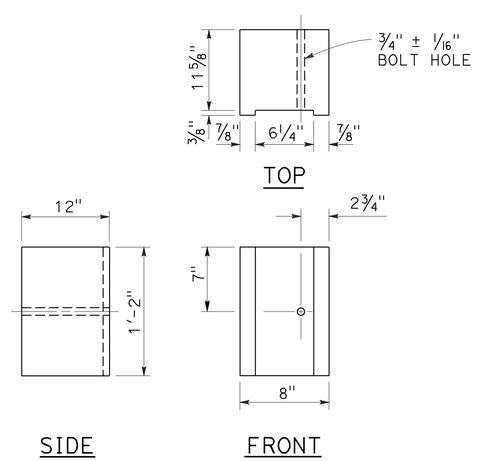

8" x 12"
NOTCHED WOOD BLOCK
See Notes 2 and 3

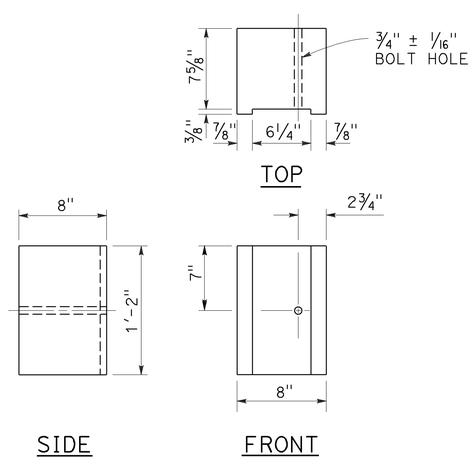

8" x 8"
NOTCHED WOOD BLOCK
Only for use with metal beam guard railing. See Note 5

STATE OF CALIFORNIA
DEPARTMENT OF TRANSPORTATION

MIDWEST GUARDRAIL SYSTEM STEEL POST AND NOTCHED WOOD BLOCK DETAILS

NO SCALE

RSP A77N2 DATED NOVEMBER 15, 2013 SUPERSEDES RSP A77N2
DATED JULY 19, 2013 THAT SUPPLEMENTS THE STANDARD PLANS BOOK DATED 2010.

REVISED STANDARD PLAN RSP A77N2

2010 REVISED STANDARD PLAN RSP A77N2

10-29-13

Dist	COUNTY	ROUTE	POST MILES TOTAL PROJECT	SHEET No.	TOTAL SHEETS
09	Iny, Mno	6,108,136,158 168,182,395	Var	42	59

Randell D. Hiatt
REGISTERED CIVIL ENGINEER

November 15, 2013
PLANS APPROVAL DATE

REGISTERED PROFESSIONAL ENGINEER
Randell D. Hiatt
No. C50200
Exp. 6-30-15
CIVIL
STATE OF CALIFORNIA

THE STATE OF CALIFORNIA OR ITS OFFICERS OR AGENTS SHALL NOT BE RESPONSIBLE FOR THE ACCURACY OR COMPLETENESS OF SCANNED COPIES OF THIS PLAN SHEET.

TO ACCOMPANY PLANS DATED 6-29-15

2010 REVISED STANDARD PLAN RSP A77N3

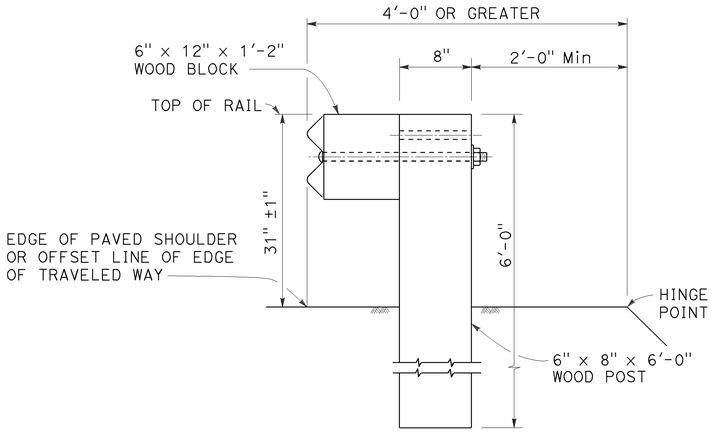

DETAIL A

TYPICAL ROADWAY INSTALLATION

See Note 1

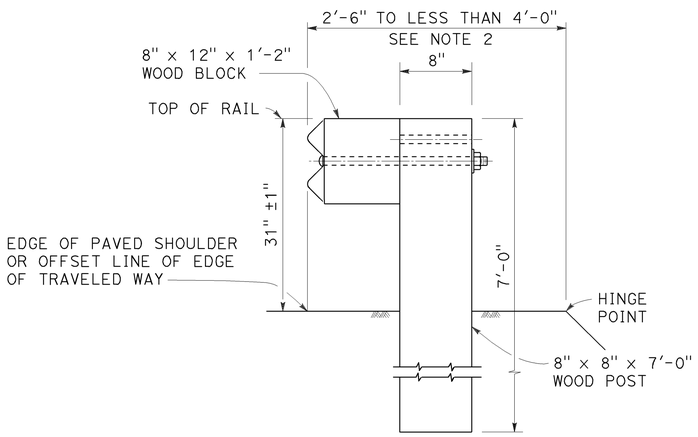

DETAIL B

NARROW ROADWAY INSTALLATION

See Note 1

POST EMBEDMENT

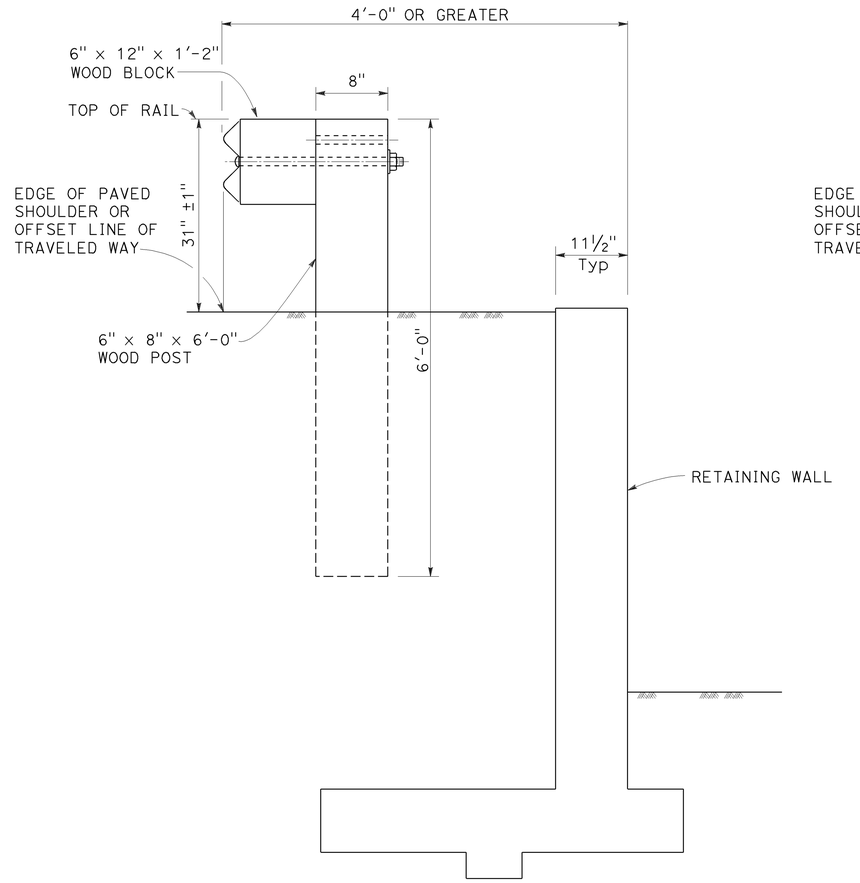

DETAIL C

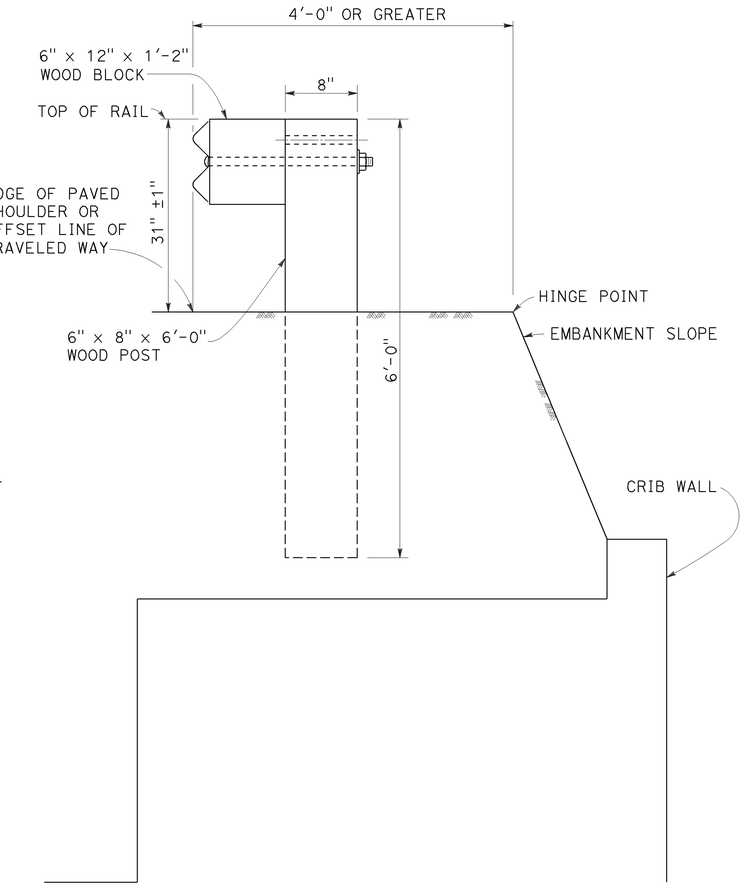

DETAIL D

INSTALLATION AT EARTH RETAINING WALLS

NOTES:

1. These installation details also applicable to steel line post installations. For Detail A, C, and D, where steel line post installations are constructed, W6 x 8.5 or W6 x 9 steel post, 6'-0" in length, with 6" x 12" x 1'-2" notched wood blocks or notched recycled plastic blocks are to be used in place of the size of wood post and wood block shown. For Detail B, where steel line post installations are constructed, W6 x 15 steel post, 8'-0" in length, with 8" x 12" x 1'-2" notched wood blocks or notched recycled plastic blocks are to be used in place of the size of wood post and wood block shown. For additional installation details, see Revised Standard Plan RSP A77L1 and RSP A77L2.
2. Where the distance between the face of the rail and the hinge point is less than 2'-6", see the Project Plans for special details.
3. For dike positioning with MGS installations, see Revised Standard Plan RSP A77N4.

STATE OF CALIFORNIA
DEPARTMENT OF TRANSPORTATION

MIDWEST GUARDRAIL SYSTEM TYPICAL LINE POST EMBEDMENT AND HINGE POINT OFFSET DETAILS

NO SCALE

RSP A77N3 DATED NOVEMBER 15, 2013 SUPERSEDES RSP A77N3
DATED JULY 19, 2013 THAT SUPPLEMENTS THE STANDARD PLANS BOOK DATED 2010.

REVISED STANDARD PLAN RSP A77N3

10-29-13

Dist	COUNTY	ROUTE	POST MILES TOTAL PROJECT	SHEET No.	TOTAL SHEETS
09	Iny, Mno	6,108,136,158 168,182,395	Var	43	59

Randell D. Hiatt
REGISTERED CIVIL ENGINEER

July 19, 2013
PLANS APPROVAL DATE

REGISTERED PROFESSIONAL ENGINEER
Randell D. Hiatt
No. C50200
Exp. 6-30-15
CIVIL
STATE OF CALIFORNIA

THE STATE OF CALIFORNIA OR ITS OFFICERS OR AGENTS SHALL NOT BE RESPONSIBLE FOR THE ACCURACY OR COMPLETENESS OF SCANNED COPIES OF THIS PLAN SHEET.

TO ACCOMPANY PLANS DATED 6-29-15

NOTES:

1. When necessary to place dike more than 7" in front of face of MGS, only Type C dike may be used. For dike details, see Revised Standard Plan RSP A87B.
2. For standard railing post embedment, see Revised Standard Plan RSP A77N3.
3. MGS delineation to be used where shown on the Project Plans.
4. When dike or curb is placed under MGS, the maximum height of the dike or curb shall be 6". Mountable dike should not be used. For dike and curb details, see Revised Standard Plans RSP A87A and RSP A87B.
5. For details of typical distance between the face of rail and hinge point, see Revised Standard Plan RSP A77N3.
6. For steel line posts, use 1/4 - 20 self-tapping screws in 0.22" diameter holes or 1/4" bolts in 9/32" diameter holes.

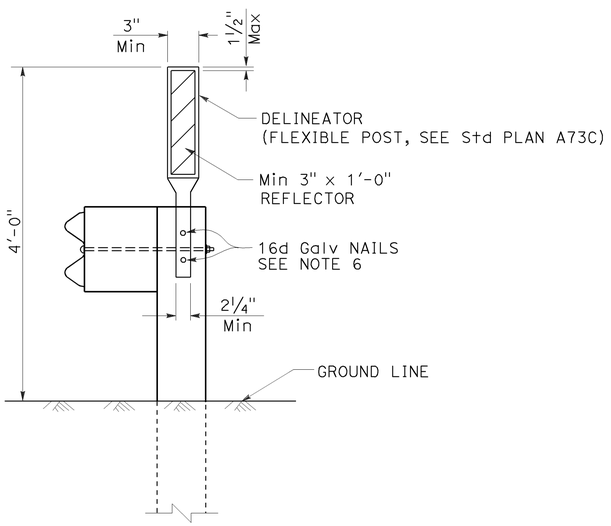

MGS DELINEATION

See Note 3

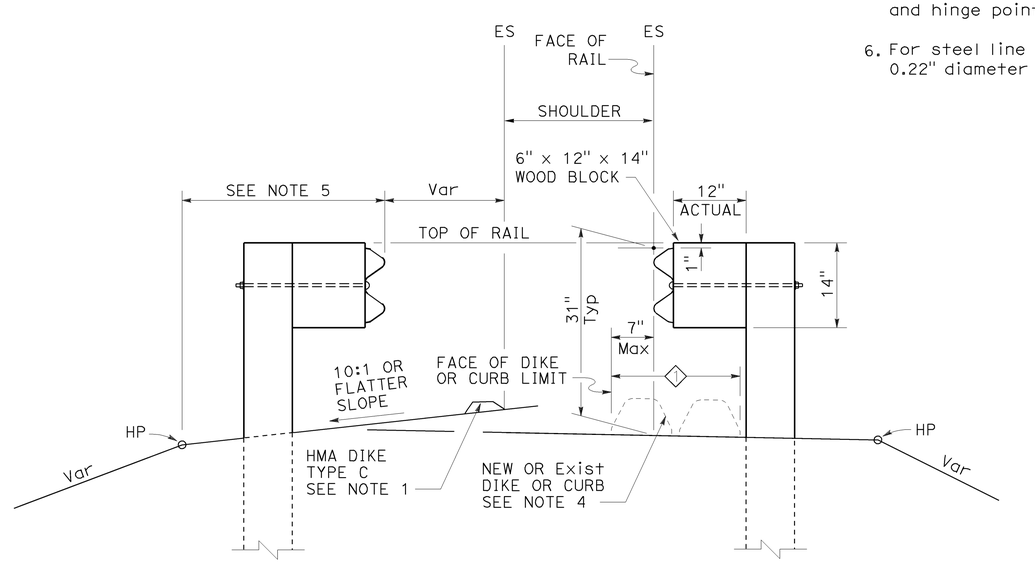

DIKE POSITIONING

See Note 1

1 PERMISSIBLE DIKE OR CURB PLACEMENT AREA

STATE OF CALIFORNIA
DEPARTMENT OF TRANSPORTATION

MIDWEST GUARDRAIL SYSTEM TYPICAL RAILING DELINEATION AND DIKE POSITIONING DETAILS

NO SCALE

RSP A77N4 DATED JULY 19, 2013 SUPPLEMENTS THE STANDARD PLANS BOOK DATED 2010.

REVISED STANDARD PLAN RSP A77N4

2010 REVISED STANDARD PLAN RSP A77N4

7-10-13

Dist	COUNTY	ROUTE	POST MILES TOTAL PROJECT	SHEET No.	TOTAL SHEETS
09	Iny, Mno	6,108,136,158 168,182,395	Var	44	59

Randell D. Hiatt
REGISTERED CIVIL ENGINEER

November 15, 2013
PLANS APPROVAL DATE

REGISTERED PROFESSIONAL ENGINEER
Randell D. Hiatt
No. C50200
Exp. 6-30-15
CIVIL
STATE OF CALIFORNIA

THE STATE OF CALIFORNIA OR ITS OFFICERS OR AGENTS SHALL NOT BE RESPONSIBLE FOR THE ACCURACY OR COMPLETENESS OF SCANNED COPIES OF THIS PLAN SHEET.

TO ACCOMPANY PLANS DATED 6-29-15

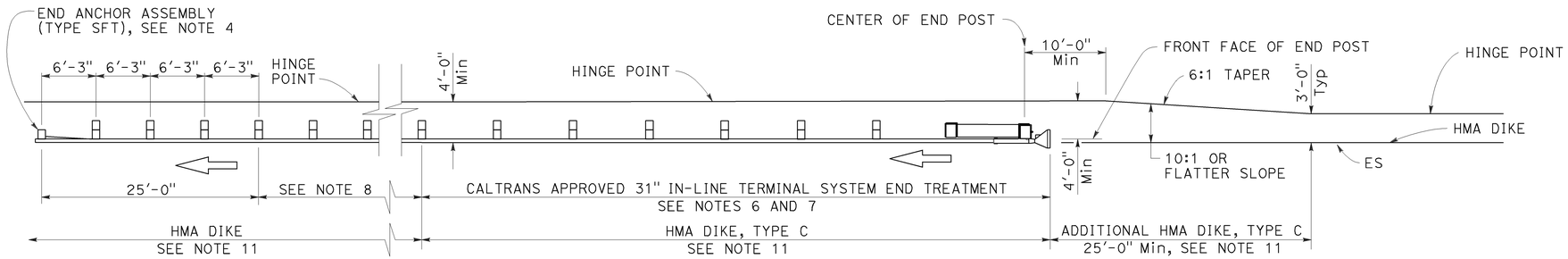

TYPE 11A LAYOUT

(Embankment MGS installation with 31" in-line end treatment at traffic approach end of railing) see Note 5

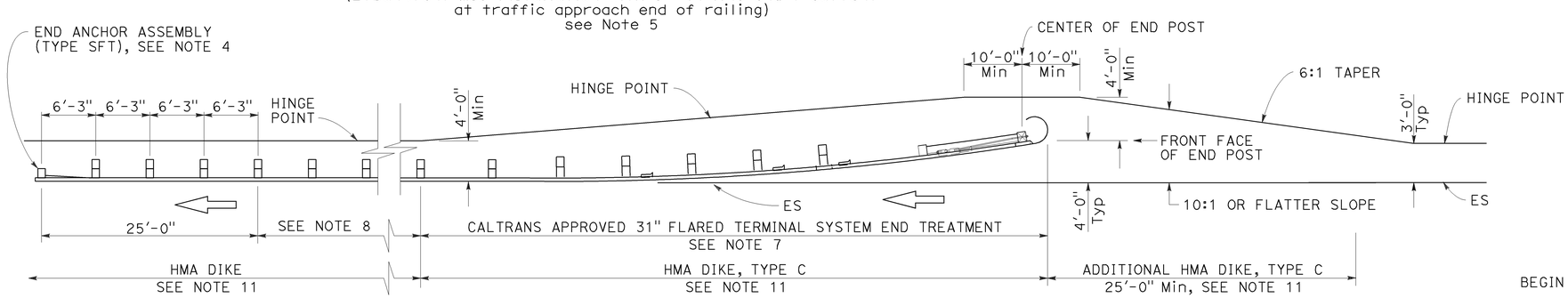

TYPE 11B LAYOUT

(Embankment MGS installation with 31" flared end treatment at traffic approach end of railing) see Note 5

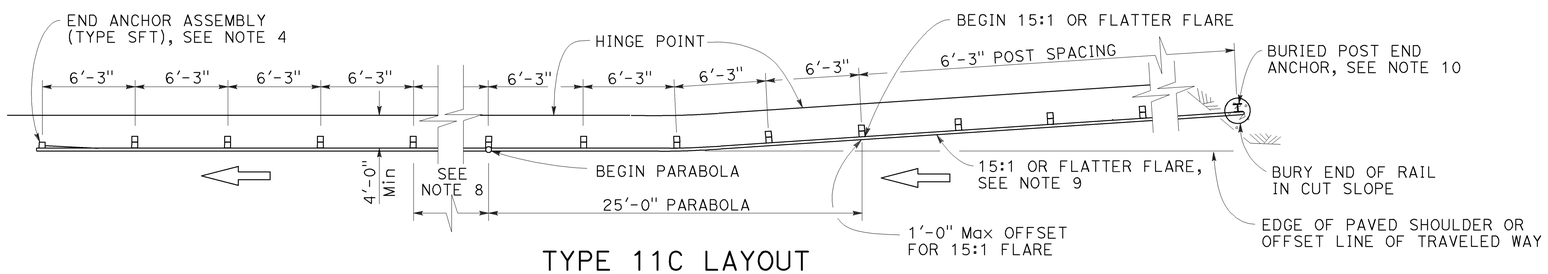

TYPE 11C LAYOUT

(Embankment MGS installation with buried end anchor treatment at traffic approach end of railing) see Notes 5 and 11

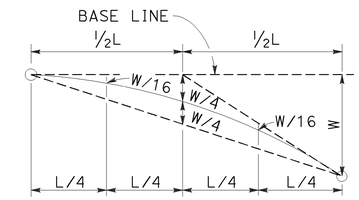

TYPICAL PARABOLIC LAYOUT

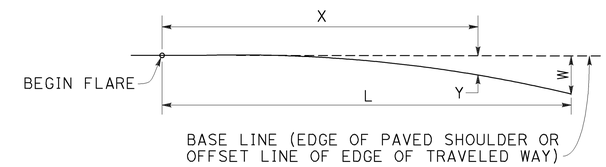

$$Y = \frac{WX^2}{L^2}$$

Y = OFFSET FROM BASE LINE
W = MAXIMUM OFFSET
X = DISTANCE ALONG BASE LINE
L = LENGTH OF FLARE

PARABOLIC FLARE OFFSETS

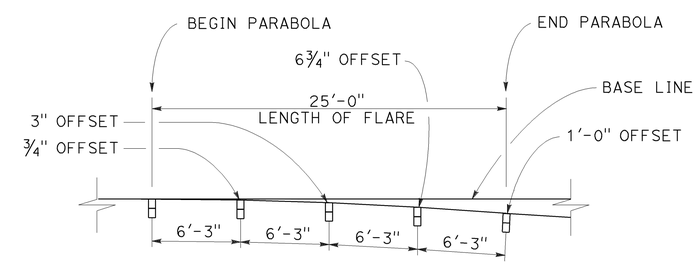

TYPICAL FLARE OFFSETS FOR 1 FOOT Max END OFFSET

NOTES:

1. Line post, blocks and hardware to be used are shown on Revised Standard Plans RSP A77L1, RSP A77L2, RSP A77M1, RSP A77N1 and RSP A77N2.
2. MGS post spacing to be 6'-3" center to center, except as otherwise noted.
3. Except as noted, line posts are 6" x 8" x 6'-0" wood with 6" x 12" x 1'-2" wood blocks. W6 x 8.5 or W6 x 9 steel posts, 6'-0" in length, with 6" x 12" x 1'-2" notched wood blocks or recycled plastic blocks may be used for 6" x 8" x 6'-0" wood post with 6" x 12" x 1'-2" wood blocks where applicable and when specified.
4. For End Anchor Assembly (Type SFT) details, see Revised Standard Plan RSP A77S1.
5. Layout Types 11A, 11B or 11C are typically used where MGS is recommended to shield embankment slopes and a crashworthy end treatment is required for only one direction of traffic.
6. 31" in-line terminal system end treatments are used where site conditions will not accommodate a flared end treatment.
7. The type of 31" terminal system end treatment to be used will be shown on the Project Plans.
8. Dependent on site conditions (embankment height and side slope), construction of additional MGS (length equal to multiples of 12'-6" with 6'-3" post spacing) may be advisable.
9. The 15:1 or flatter flare used with buried end anchors is based on the edge of the paved shoulder or offset line of edge of the traveled way. The length of MGS within the 15:1 or flatter flare is based on site conditions and should be a length equal to multiples of 12'-6".
10. For details of the buried post end anchor used with Type 11C Layout, see Revised Standard Plan RSP A77T2.
11. Where placement of dike is required with MGS installations, see Revised Standard Plan RSP A77N4 for dike positioning details.

STATE OF CALIFORNIA
DEPARTMENT OF TRANSPORTATION

MIDWEST GUARDRAIL SYSTEM TYPICAL LAYOUTS FOR EMBANKMENTS

NO SCALE

RSP A77P1 DATED NOVEMBER 15, 2013 SUPERSEDES RSP A77P1 DATED JULY 19, 2013 THAT SUPPLEMENTS THE STANDARD PLANS BOOK DATED 2010.

REVISED STANDARD PLAN RSP A77P1

2010 REVISED STANDARD PLAN RSP A77P1

10-4-13

Dist	COUNTY	ROUTE	POST MILES TOTAL PROJECT	SHEET No.	TOTAL SHEETS
09	Iny, Mno	6,108,136,158 168,182,395	Var	45	59

Randell D. Hiatt
REGISTERED CIVIL ENGINEER

July 19, 2013
PLANS APPROVAL DATE

REGISTERED PROFESSIONAL ENGINEER
Randell D. Hiatt
No. C50200
Exp. 6-30-15
CIVIL
STATE OF CALIFORNIA

THE STATE OF CALIFORNIA OR ITS OFFICERS OR AGENTS SHALL NOT BE RESPONSIBLE FOR THE ACCURACY OR COMPLETENESS OF SCANNED COPIES OF THIS PLAN SHEET.

TO ACCOMPANY PLANS DATED 6-29-15

2010 REVISED STANDARD PLAN RSP A77Q1

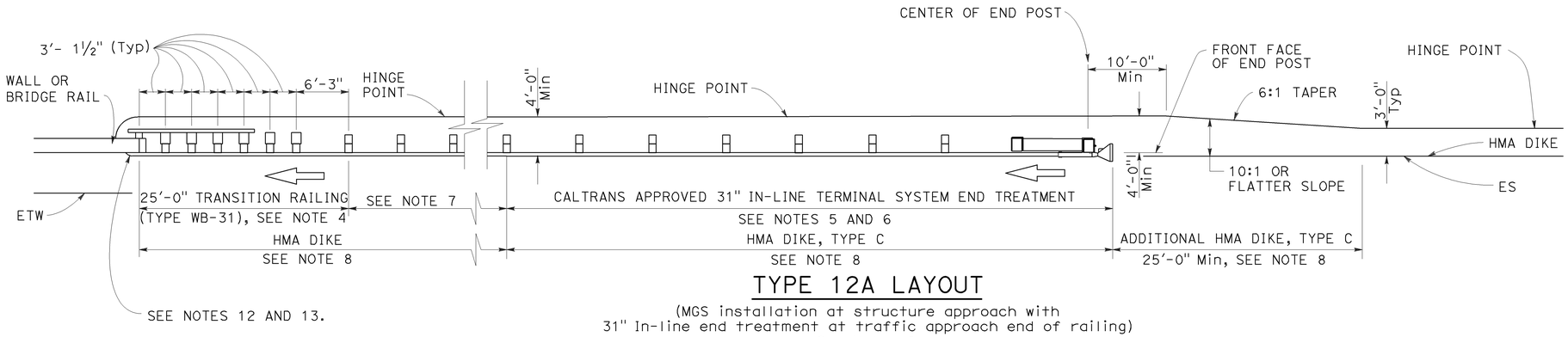

TYPE 12A LAYOUT

(MGS installation at structure approach with
31" In-line end treatment at traffic approach end of railing)
See Notes 9

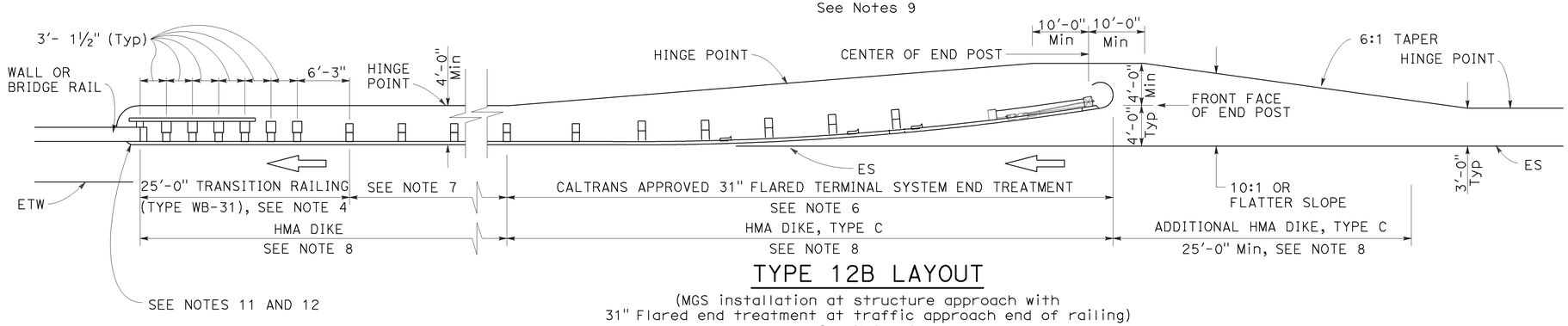

TYPE 12B LAYOUT

(MGS installation at structure approach with
31" Flared end treatment at traffic approach end of railing)
See Notes 9

NOTES:

1. Line post, blocks and hardware to be used are shown on Revised Standard Plans RSP A77L1, RSP A77L2, RSP A77M1, RSP A77N1 and RSP A77N2.
2. MGS post spacing to be 6'-3" center to center, except as otherwise noted.
3. Except as noted, line posts are 6" x 8" x 6'-0" wood with 6" x 12" x 1'-2" wood blocks. W6 x 8.5 or W6 x 9 steel posts, 6'-0" in length, with 6" x 12" x 1'-2" notched wood blocks or plastic blocks may be used for 6" x 8" x 6'-0" wood posts with 6" x 12" x 1'-2" wood blocks where applicable and when specified.
4. For Transition Railing (Type WB-31) details for Types 12A and 12B Layouts, see Revised Standard Plan RSP A77U4.
5. 31" in-line terminal system end treatments are used where site conditions will not accommodate a 31" flared end treatment.
6. The type 31" of terminal system end treatment to be used will be shown on the Project Plans.
7. Dependent on site conditions (embankment height, side slopes, or other fixed objects), it may be advisable to construct additional guard railing (a length equal to multiples of 12'-6" with 6'-3" post spacing) between the transition railing and end treatment. A 12.5 degree angle of departure can be drawn on the Project Plans from the edge of traveled way through the outer most point of the fixed object to determine the additional length of railing needed.
8. Where placement of dike is required with guard railing installations, see Revised Standard Plan RSP A77N4 for dike positioning details.
9. Type 12A or Type 12B Layouts are typically used:
   a. To the right of approaching traffic, at the end of a structure, on two-lane conventional highway where the roadbed width across the structure is less than 40 feet.
   b. To the left of approaching traffic, at the end of a structure, on two-lane conventional highway where the roadbed width across the structure is less than 40 feet.
   c. To the right of approaching traffic at the end of each structure on multilane freeways or expressways with separate adjacent or parallel bridges.
   d. To the right of approaching traffic at the end of the structure on multilane freeways or expressways with decked median on the bridge.
10. See Revised Standard Plan RSP A77Q3 for typical layout used left of approaching traffic at the ends of each structure on multilane freeways or expressways with separate adjacent or parallel bridges.
11. For additional details of typical connections to bridge rail, see Connection Detail AA on Revised Standard Plans RSP A77U1 and RSP A77U2 and Connection Detail FF on Revised Standard Plans RSP A77V1 and RSP A77V2.
12. For additional details of a typical connection to walls or abutments, see Revised Standard Plan RSP A77U3.

STATE OF CALIFORNIA
DEPARTMENT OF TRANSPORTATION

MIDWEST GUARDRAIL SYSTEM TYPICAL LAYOUTS FOR STRUCTURE APPROACH

NO SCALE

RSP A77Q1 DATED JULY 19, 2013 SUPPLEMENTS THE STANDARD PLANS BOOK DATED 2010.

REVISED STANDARD PLAN RSP A77Q1

Dist	COUNTY	ROUTE	POST MILES TOTAL PROJECT	SHEET No.	TOTAL SHEETS
09	Iny, Mno	6,108,136,158 168,182,395	Var	46	59

Randell D. Hiatt
REGISTERED CIVIL ENGINEER

July 19, 2013
PLANS APPROVAL DATE

REGISTERED PROFESSIONAL ENGINEER
Randell D. Hiatt
No. C50200
Exp. 6-30-15
CIVIL
STATE OF CALIFORNIA

THE STATE OF CALIFORNIA OR ITS OFFICERS OR AGENTS SHALL NOT BE RESPONSIBLE FOR THE ACCURACY OR COMPLETENESS OF SCANNED COPIES OF THIS PLAN SHEET.

TO ACCOMPANY PLANS DATED 6-29-15

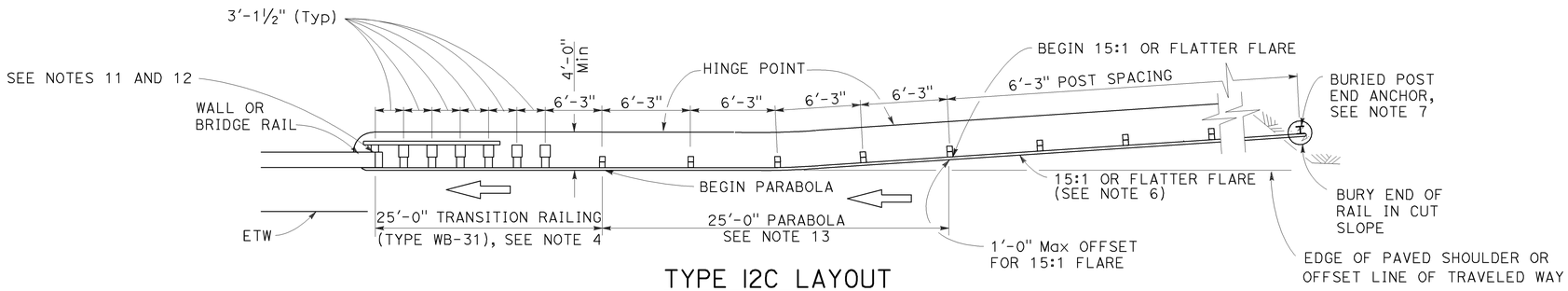

TYPE 12C LAYOUT

(MGS installation at structure approach with a Buried end anchor treatment at traffic approach end of railing)
See Notes 8 and 9

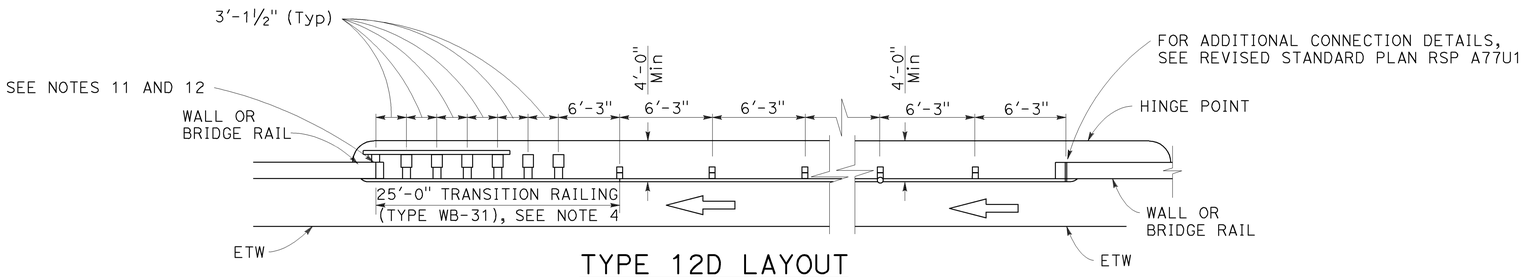

TYPE 12D LAYOUT

(Continuous MGS installation between structures)
See Notes 5 and 9

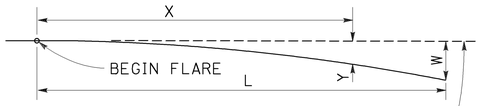

BASE LINE (EDGE OF PAVED SHOULDER OR OFFSET LINE OF EDGE OF TRAVELED WAY)

$$Y = \frac{WX^2}{L^2}$$

Y = OFFSET FROM BASE LINE
W = MAXIMUM OFFSET
X = DISTANCE ALONG BASE LINE
L = LENGTH OF FLARE

PARABOLIC FLARE OFFSETS

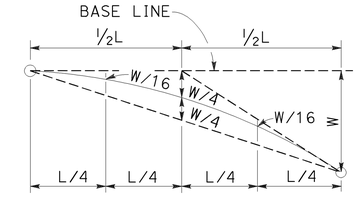

TYPICAL PARABOLIC LAYOUT

NOTES:

1. Line post, blocks and hardware to be used are shown on Revised Standard Plans RSP A77L1, RSP A77L2, RSP A77M1, RSP A77N1 and RSP A77N2.
2. MGS post spacing to be 6'-3" center to center, except as otherwise noted.
3. Except as noted, line posts are 6" x 8" x 6'-0" m wood with 6" x 12" x 1'-2" wood blocks. W6 x 8.5 or W6 x 9 steel posts, 6'-0" in length, with 6" x 12" x 1'-2" notched wood blocks or plastic blocks may be used for 6" x 8" x 6'-0" wood posts with 6" x 12" x 1'-2" wood blocks where applicable and when specified.
4. For Transition Railing (Type WB-31) details for Types 12C and 12D Layouts, see Revised Standard Plan RSP A77U4.
5. Type 12D layout is typically used where continous MGS is recommended between structures.
6. The 15:1 or flatter flare for Type 12C Layout is based on the edge of the paved shoulder or offset line of edge of the traveled way. The length of MGS with the 15:1 or flatter flare is based on site conditions and should be a length equal to multiples of 12'-6".
7. For details of the buried post end anchor used with Type 12C Layout, see Revised Standard Plan RSP A77T2.
8. Where placement of dike is required with MGS installations, see Revised Standard Plan RSP A77N4 for dike positioning details.
9. Type 12C Layout is typically used:
   a. To the right of approaching traffic, at the end of the structure, on two-lane conventional highway where the roadbed width across the structure is less than 40 feet.
   b. To the left of approaching traffic, at each of a structure, on two-lane conventional highway where the roadbed width across the structure is less than 40 feet.
   c. To the right of approaching traffic at the end of each structure on multilane freeways or expressways with separate adjacent or parallel bridges.
   d. To the right of approaching traffic at the end of the structure on multilane freeways or expressways with decked median on the bridge.
10. See Revised Standard Plan RSP A77Q3 for typical layout used left of approaching traffic at the ends of each structure on multilane freeways or expressways with separate adjacent or parallel bridges.
11. For additional details of typical connections to bridge rail, see Connection Detail AA on Revised Standard Plans RSP A77U1 and RSP A77U2 and Connection Detail FF on Revised Standard Plans RSP A77V1 and RSP A77V2.
12. For additional details of a typical connection to walls or abutments, see Revised Standard Plan RSP A77U3.
13. For typical flare offsets for 25'-0" length parabola with maximum offset of 1'-0", see Revised Standard Plan RSP A77P1.

STATE OF CALIFORNIA
DEPARTMENT OF TRANSPORTATION

MIDWEST GUARDRAIL SYSTEM TYPICAL LAYOUTS FOR STRUCTURE APPROACH AND BETWEEN STRUCTURES

NO SCALE

RSP A77Q2 DATED JULY 19, 2013 SUPPLEMENTS THE STANDARD PLANS BOOK DATED 2010.

REVISED STANDARD PLAN RSP A77Q2

2010 REVISED STANDARD PLAN RSP A77Q2

7-8-13

Dist	COUNTY	ROUTE	POST MILES TOTAL PROJECT	SHEET No.	TOTAL SHEETS
09	Iny, Mno	6,108,136,158 168,182,395	Var	47	59

Randell D. Hiatt
REGISTERED CIVIL ENGINEER

July 19, 2013
PLANS APPROVAL DATE

REGISTERED PROFESSIONAL ENGINEER
Randell D. Hiatt
No. C50200
Exp. 6-30-15
CIVIL
STATE OF CALIFORNIA

THE STATE OF CALIFORNIA OR ITS OFFICERS OR AGENTS SHALL NOT BE RESPONSIBLE FOR THE ACCURACY OR COMPLETENESS OF SCANNED COPIES OF THIS PLAN SHEET.

TO ACCOMPANY PLANS DATED 6-29-15

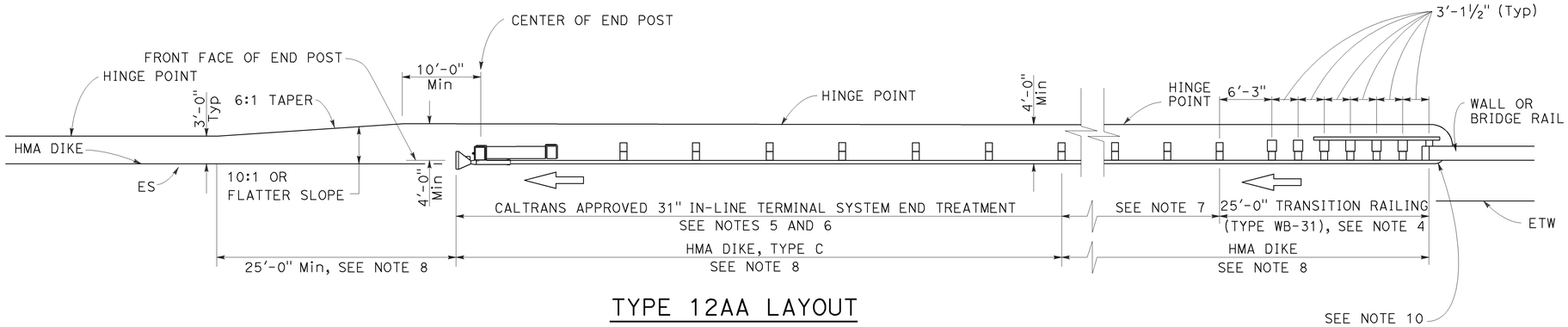

TYPE 12AA LAYOUT

(MGS installation at structure departure with
31" in-line end treatment at trailing end of railing)
See Notes 8 and 9

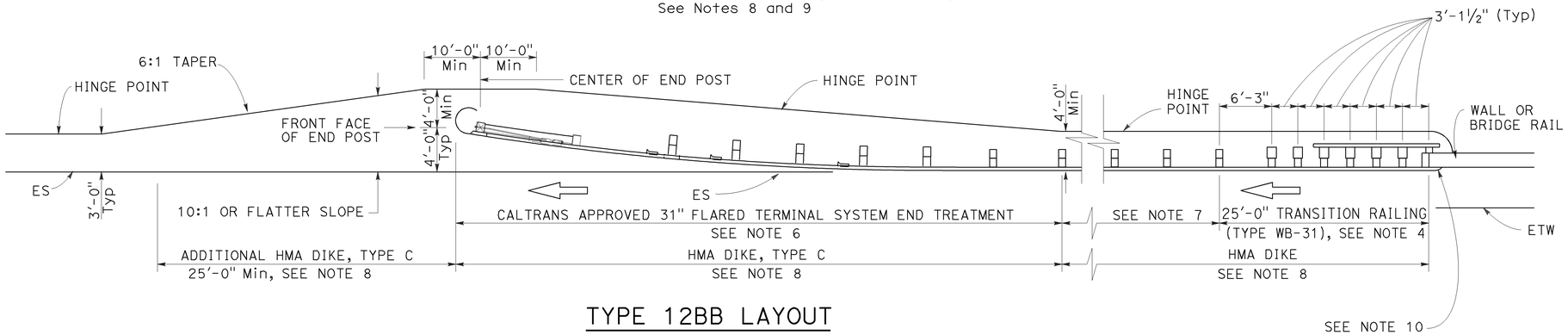

TYPE 12BB LAYOUT

(MGS installation at structure departure with
31" flared end treatment at trailing end of railing)
See Notes 8 and 9

NOTES:

1. Line post, blocks and hardware to be used are shown on Revised Standard Plans RSP A77L1, RSP A77L2, RSP A77M1, RSP A77N1 and RSP A77N2.
2. MGS post spacing to be 6'-3" center to center, except as otherwise noted.
3. Except as noted, line posts are 6" x 8" x 6'-0" wood with 6" x 12" x 1'-2" wood blocks. W6 x 8.5 or W6 x 9 steel posts, 6'-0" in length, with 6" x 12" x 1-2" notched wood blocks or notched recycled plastic blocks may be used for 6" x 8" x 6'-0" wood posts with 6" x 12" x 1'-2" wood blocks where applicable and when specified.
4. For Transition Railing (Type WB-31) details for Types 12AA and 12BB Layouts, see Revised Standard Plan RSP A77U4.
5. 31" in-line terminal system treatments are used where site conditions will not accommodate a 31" flared end treatment.
6. The type of 31" terminal system to be used will be shown on the Project Plans.
7. Dependent on site conditions (embankment height, side slopes, other fixed objects), it may be advisable to construct additional MGS (a length equal to multiples of 12'-6" with 6'-3" post spacing) between the transition railing and 31" end treatments.
8. Where placement of dike is required with MGS installations, see Revised Standard Plan RSP A77N4 for dike positioning details.
9. Type 12AA or Type 12BB Layouts are typically used to the right of traffic departing a structure on two-way conventional highways where the roadbed width across the structure is less than 40 feet.
10. For additional details of typical connections to bridge rail, see Connection Detail CC on Revised Standard Plan RSP A77U2 and Connection Detail HH on Revised Standard Plan RSP A77V2.

STATE OF CALIFORNIA
DEPARTMENT OF TRANSPORTATION

MIDWEST GUARDRAIL SYSTEM TYPICAL LAYOUTS FOR STRUCTURE DEPARTURE

NO SCALE

RSP A77Q4 DATED JULY 19, 2013 SUPPLEMENTS THE STANDARD PLANS BOOK DATED 2010.

REVISED STANDARD PLAN RSP A77Q4

2010 REVISED STANDARD PLAN RSP A77Q4

6-19-13

Dist	COUNTY	ROUTE	POST MILES TOTAL PROJECT	SHEET No.	TOTAL SHEETS
09	Iny, Mno	6,108,136,158 168,182,395	Var	48	59

Randell D. Hiatt
REGISTERED CIVIL ENGINEER

July 19, 2013
PLANS APPROVAL DATE

REGISTERED PROFESSIONAL ENGINEER
Randell D. Hiatt
No. C50200
Exp. 6-30-15
CIVIL
STATE OF CALIFORNIA

THE STATE OF CALIFORNIA OR ITS OFFICERS OR AGENTS SHALL NOT BE RESPONSIBLE FOR THE ACCURACY OR COMPLETENESS OF SCANNED COPIES OF THIS PLAN SHEET.

TO ACCOMPANY PLANS DATED 6-29-15

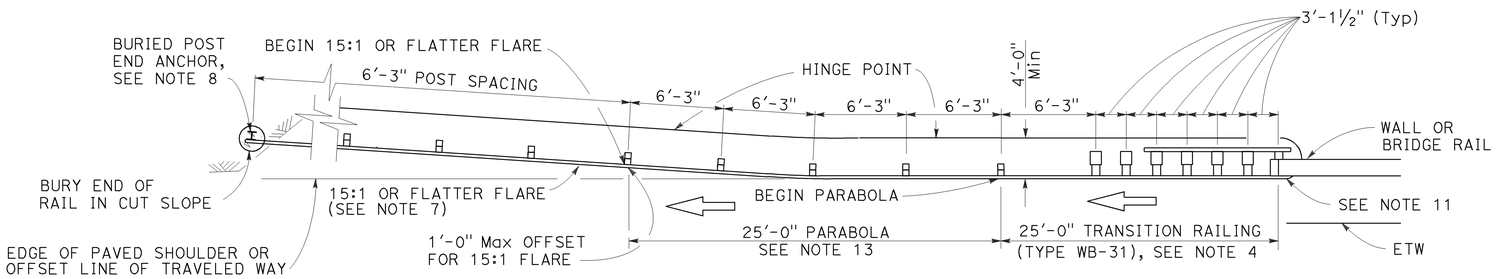

TYPE 12CC LAYOUT

(MGS installation at structure departure with a Buried end anchor treatment at trailing end of railing)
See Notes 9 and 10

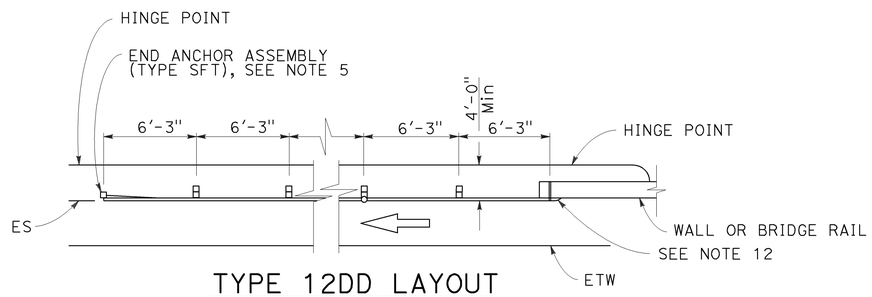

TYPE 12DD LAYOUT

(MGS installation at structure departure With end anchor assembly at trailing end of railing)
See Notes 6 and 9

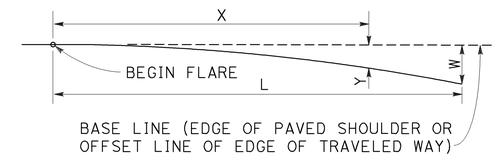

$$Y = \frac{WX^2}{L^2}$$

Y = OFFSET FROM BASE LINE
W = MAXIMUM OFFSET
X = DISTANCE ALONG BASE LINE
L = LENGTH OF FLARE

PARABOLIC FLARE OFFSETS

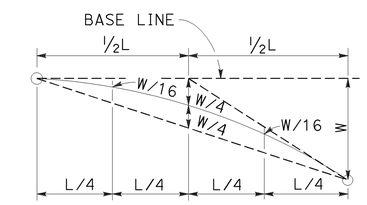

TYPICAL PARABOLIC LAYOUT

NOTES:

1. Line post, blocks and hardware to be used are shown on Revised Standard Plans RSP A77L1, RSP A77L2, RSP A77M1, RSP A77N1 and RSP A77N2.
2. MSG post spacing to be 6'-3" center to center, except as otherwise noted.
3. Except as noted, line posts are 6" x 8" x 6'-0" wood with 6" x 12" x 1'-2" wood blocks. W6 x 8.5 or W6 x 9 steel posts, 6'-0" in length, with 6" x 12" x 1'-2" notched wood blocks or notched recycled plastic blocks may be used for 6" x 8" x 6'-0" wood line posts with 6" x 12" x 1'-2" wood blocks where applicable and when specified.
4. For Transition Railing (Type WB-31) details for Type 12CC Layout, see Revised Standard Plan RSP A77U4.
5. For details of End Anchor Assembly (Type SFT) used with Type 12DD Layout, see Revised Standard Plan RSP A77S1.
6. Type 12DD layout is typically used to the right of traffic departing a structure on two-way conventional highways where the roadbed width across the structure is equal to or greater than 40 feet and MGS is recommended (embankment height, side slopes, other fixed objects). Length of railing to be equal to multiples of 12'-6". For MGS connection details to bridge rail, see Revised Standard Plans RSP A77U1 and RSP A77V1. For MGS connection details to wall, see Revised Standard Plan RSP A77U3.
7. The 15:1 or flatter flare for Type 12CC Layout is based on the edge of the paved shoulder or offset line of edge of the traveled way. The length of MGS within the 15:1 or flatter flare is based on site conditions and should be a length equal to multiples of 12'-6".
8. For details of the buried post end anchor used with Type 12CC Layout, see Revised Standard Plan RSP A77T2.
9. Where placement of dike is required with MGS installations, see Revised Standard Plan RSP A77N4 for dike positioning details.
10. Type 12CC Layout is typically used to the right of traffic departing a structure on two-way conventional highways where the roadbed width across the structure is less than 40 feet.
11. For additional details of a typical connection to bridge rail for Layout Type 12CC, see Connection Detail CC on Revised Standard Plan RSP A77U2 and Connection Detail HH on Revised Standard Plan RSP A77V2.
12. For additional details of a typical connection to bridge rail for Layout Type 12DD, see Connection Detail BB on Revised Standard Plan RSP A77U1 and Connection Detail GG on Revised Standard Plan RSP A77V1.
13. For typical flare offsets for 25'-0" length parabola with maximum offset of 1'-0", see Revised Standard Plan RSP A77P1.

STATE OF CALIFORNIA
DEPARTMENT OF TRANSPORTATION

MIDWEST GUARDRAIL SYSTEM TYPICAL LAYOUTS FOR STRUCTURE DEPARTURE

NO SCALE

RSP A77Q5 DATED JULY 19, 2013 SUPPLEMENTS THE STANDARD PLANS BOOK DATED 2010.

REVISED STANDARD PLAN RSP A77Q5

2010 REVISED STANDARD PLAN RSP A77Q5

6-20-13

Dist	COUNTY	ROUTE	POST MILES TOTAL PROJECT	SHEET No.	TOTAL SHEETS
09	Iny, Mno	6,108,136,158 168,182,395	Var	49	59

Randell D. Hiatt
REGISTERED CIVIL ENGINEER

November 15, 2013
PLANS APPROVAL DATE

REGISTERED PROFESSIONAL ENGINEER
Randell D. Hiatt
No. C50200
Exp. 6-30-15
CIVIL
STATE OF CALIFORNIA

THE STATE OF CALIFORNIA OR ITS OFFICERS OR AGENTS SHALL NOT BE RESPONSIBLE FOR THE ACCURACY OR COMPLETENESS OF SCANNED COPIES OF THIS PLAN SHEET.

TO ACCOMPANY PLANS DATED 6-29-15

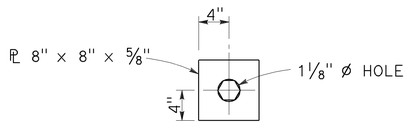

DETAIL "A"
CABLE CONNECTION
END PLATE

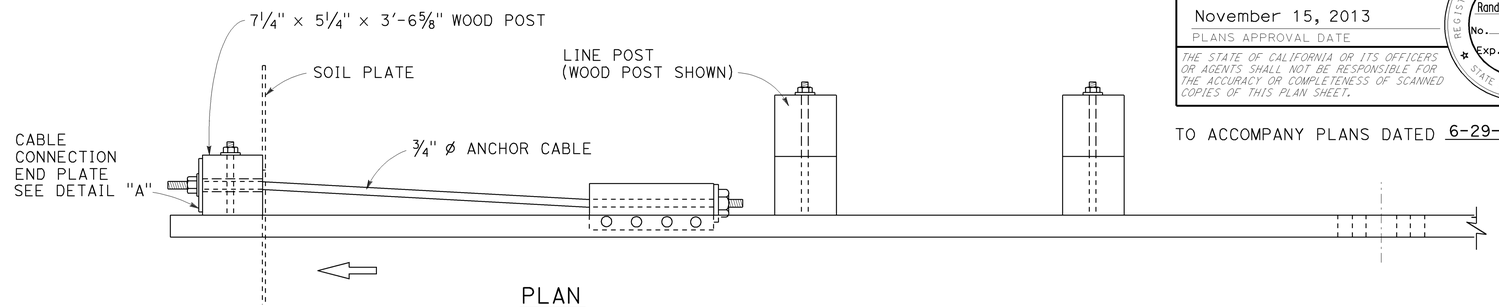

PLAN

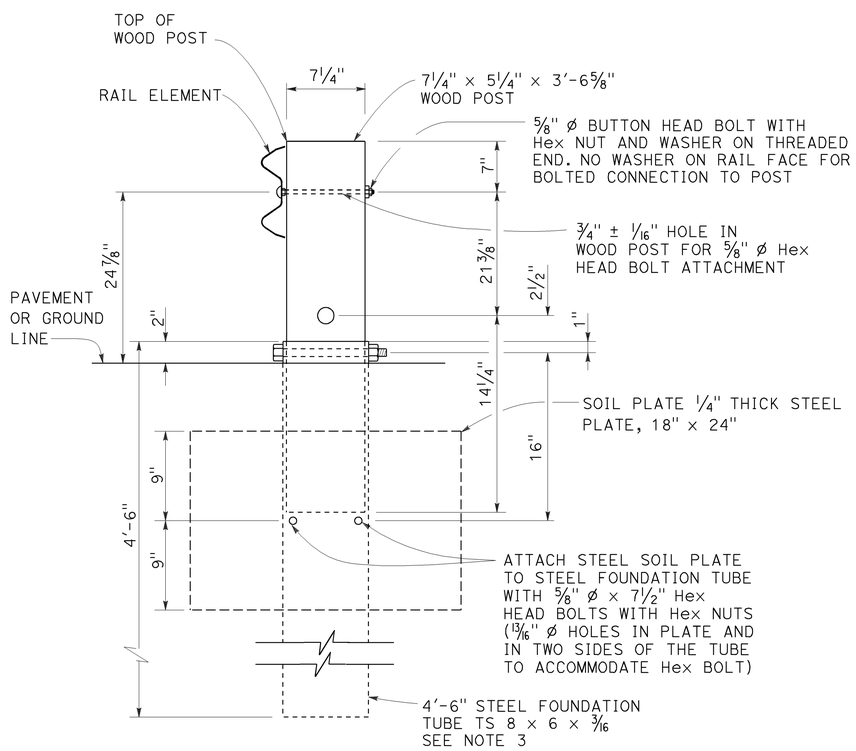

SECTION A-A

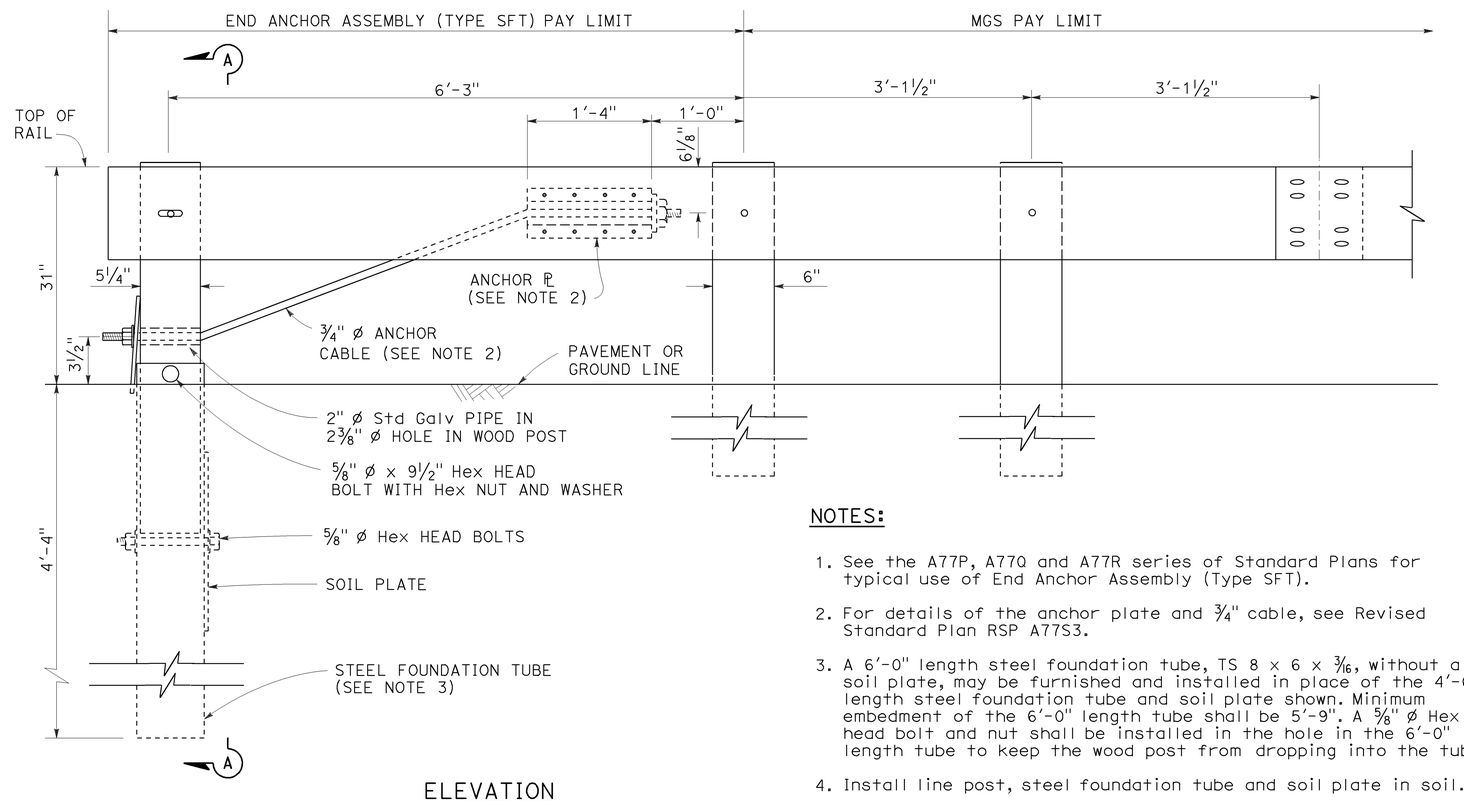

ELEVATION

END ANCHOR
ASSEMBLY (TYPE SFT)
See Note 1

NOTES:

1. See the A77P, A77Q and A77R series of Standard Plans for typical use of End Anchor Assembly (Type SFT).
2. For details of the anchor plate and 3/4" cable, see Revised Standard Plan RSP A77S3.
3. A 6'-0" length steel foundation tube, TS 8 x 6 x 3/16, without a soil plate, may be furnished and installed in place of the 4'-6" length steel foundation tube and soil plate shown. Minimum embedment of the 6'-0" length tube shall be 5'-9". A 5/8" ø Hex head bolt and nut shall be installed in the hole in the 6'-0" length tube to keep the wood post from dropping into the tube.
4. Install line post, steel foundation tube and soil plate in soil.

STATE OF CALIFORNIA
DEPARTMENT OF TRANSPORTATION

MIDWEST GUARDRAIL SYSTEM END ANCHOR ASSEMBLY (TYPE SFT)

NO SCALE

RSP A77S1 DATED NOVEMBER 15, 2013 SUPERSEDES RSP A77S1
DATED JULY 19, 2013 THAT SUPPLEMENTS THE STANDARD PLANS BOOK DATED 2010.

REVISED STANDARD PLAN RSP A77S1

2010 REVISED STANDARD PLAN RSP A77S1

10-4-13

Dist	COUNTY	ROUTE	POST MILES TOTAL PROJECT	SHEET No.	TOTAL SHEETS
09	Iny, Mno	6,108,136,158 168,182,395	Var	50	59

Randell D. Hiatt
REGISTERED CIVIL ENGINEER

November 15, 2013
PLANS APPROVAL DATE

REGISTERED PROFESSIONAL ENGINEER
Randell D. Hiatt
No. C50200
Exp. 6-30-15
CIVIL
STATE OF CALIFORNIA

THE STATE OF CALIFORNIA OR ITS OFFICERS OR AGENTS SHALL NOT BE RESPONSIBLE FOR THE ACCURACY OR COMPLETENESS OF SCANNED COPIES OF THIS PLAN SHEET.

TO ACCOMPANY PLANS DATED 6-29-15

NOTE:

See Revised Standard Plans RSP A77S1, RSP A77S2 and RSP A77T1 for typical use of anchor cable and anchor plate.

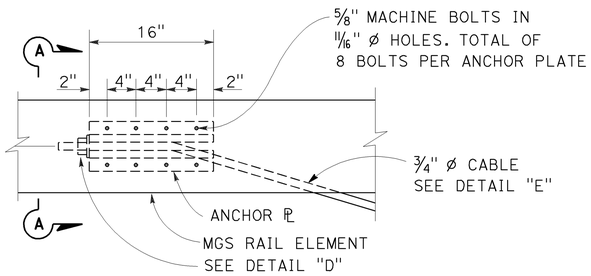

ANCHOR PLATE DETAIL

(MGS shown, TBB similar)

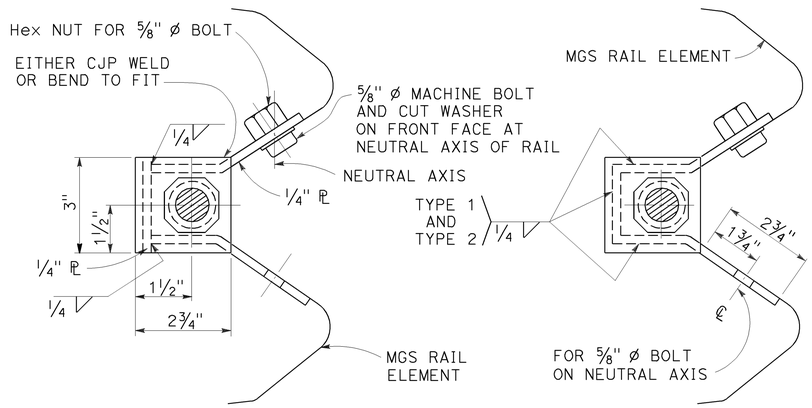

NOTE:

Dimensioning applies to both types.

SECTION A-A
(ALTERNATIVE TYPE 1)

SECTION A-A
(ALTERNATIVE TYPE 2)

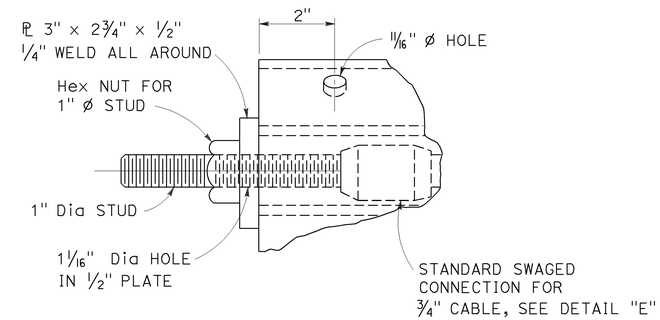

DETAIL "D"

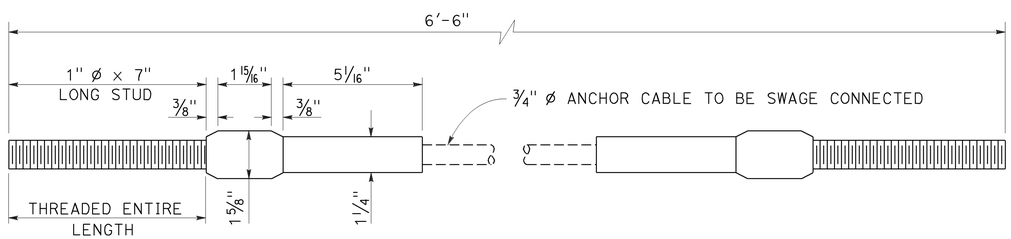

ANCHOR CABLE WITH SWAGED FITTING AND STUD

DETAIL "E"

STATE OF CALIFORNIA
DEPARTMENT OF TRANSPORTATION

METAL RAILING ANCHOR CABLE AND ANCHOR PLATE DETAILS

NO SCALE

RSP A77S3 DATED NOVEMBER 15, 2013 SUPERSEDES RSP A77S3 DATED JULY 19, 2013 THAT SUPPLEMENTS THE STANDARD PLANS BOOK DATED 2010.

REVISED STANDARD PLAN RSP A77S3

2010 REVISED STANDARD PLAN RSP A77S3

10-4-13

Dist	COUNTY	ROUTE	POST MILES TOTAL PROJECT	SHEET No.	TOTAL SHEETS
09	Iny, Mno	6,108,136,158 168,182,395	Var	51	59

Randell D. Hiatt
REGISTERED CIVIL ENGINEER

November 15, 2013
PLANS APPROVAL DATE

REGISTERED PROFESSIONAL ENGINEER
Randell D. Hiatt
No. C50200
Exp. 6-30-15
CIVIL
STATE OF CALIFORNIA

THE STATE OF CALIFORNIA OR ITS OFFICERS OR AGENTS SHALL NOT BE RESPONSIBLE FOR THE ACCURACY OR COMPLETENESS OF SCANNED COPIES OF THIS PLAN SHEET.

TO ACCOMPANY PLANS DATED 6-29-15

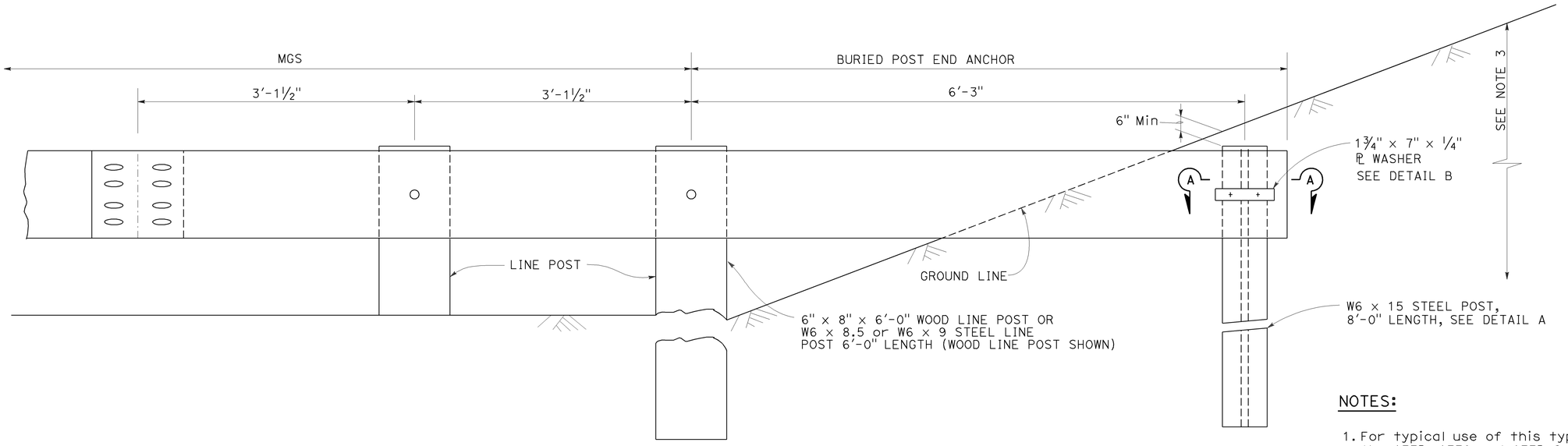

BURIED POST END ANCHOR

See Note 3

NOTES:

1. For typical use of this type of end anchor with MGS see the A77P, A77Q and A77R Series of the Standard Plans.
2. Holes excavation in the slope to construct the buried post end anchor shall be backfilled with selected earth, placed in layers approximately 1'-0" thick. Each layer shall be moistened and thoroughly compacted.
3. The buried post end anchor shall only be constructed at those locations where the slope perpendicular to the roadway is non-traversable.

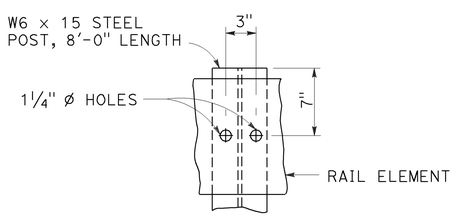

DETAIL A

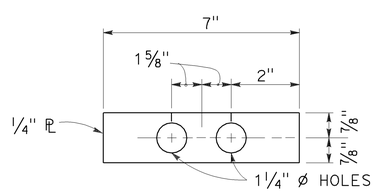

DETAIL B

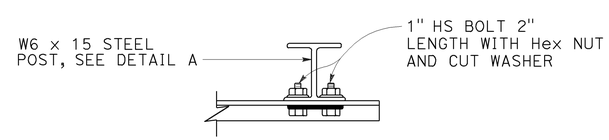

SECTION A-A

STATE OF CALIFORNIA
DEPARTMENT OF TRANSPORTATION

MIDWEST GUARDRAIL SYSTEM BURIED POST END ANCHOR

NO SCALE

RSP A77T2 DATED NOVEMBER 15, 2013 SUPERSEDES RSP A77T2
DATED JULY 19, 2013 THAT SUPPLEMENTS THE STANDARD PLANS BOOK DATED 2010.

REVISED STANDARD PLAN RSP A77T2

2010 REVISED STANDARD PLAN RSP A77T2

10-4-13

Dist	COUNTY	ROUTE	POST MILES TOTAL PROJECT	SHEET No.	TOTAL SHEETS
09	Iny, Mno	6,108,136,158 168,182,395	Var	52	59

Randell D. Hiatt
REGISTERED CIVIL ENGINEER

July 19, 2013
PLANS APPROVAL DATE

REGISTERED PROFESSIONAL ENGINEER Randell D. Hiatt No. C50200 Exp. 6-30-15 CIVIL STATE OF CALIFORNIA

THE STATE OF CALIFORNIA OR ITS OFFICERS OR AGENTS SHALL NOT BE RESPONSIBLE FOR THE ACCURACY OR COMPLETENESS OF SCANNED COPIES OF THIS PLAN SHEET.

TO ACCOMPANY PLANS DATED 6-29-15

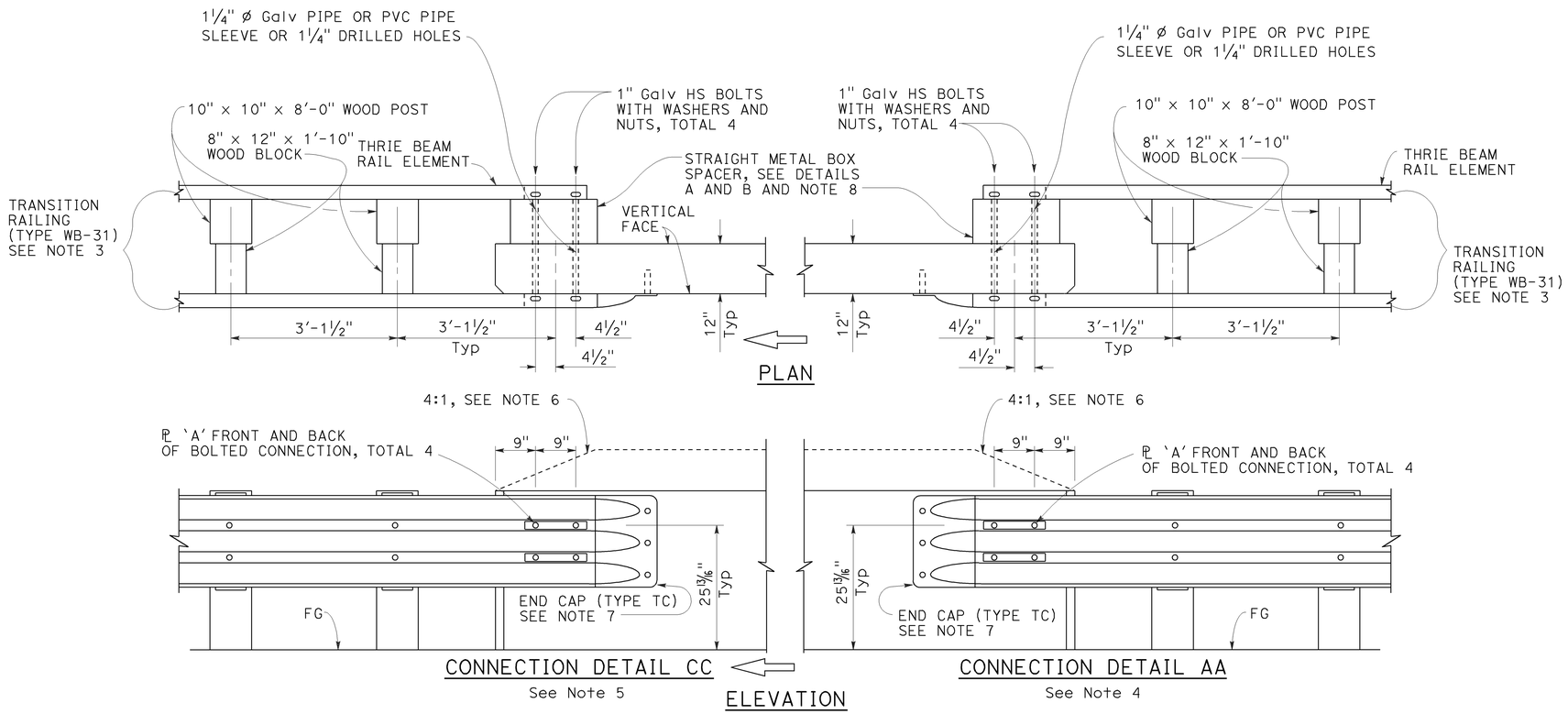

MIDWEST GUARDRAIL SYSTEM CONNECTION TO BRIDGE RAILING WITHOUT SIDEWALK

NOTES:

1. See Revised Standard Plan RSP A77U1 for additional connection details to bridges without sidewalks.
2. Additional details of posts, blocks and hardware are shown on Revised Standard Plans RSP A77M1, RSP A77N1 and RSP A77N2.
3. For additional details of Transition Railing (Type WB-31), see Revised Standard Plan RSP A77U4. Transition Railing (Type WB-31) transitions the 12 gauge MGS railing section to a heavier gage nested thrie beam railing section which is connected to the concrete bridge railing.
4. For typical use of Connection Detail AA, see Layout Types 12A and 12B on Revised Standard Plan RSP A77Q1, Layout Types 12C and 12D on Revised Standard Plan RSP A77Q2, and Layout Type 12E on Revised Standard Plan RSP A77Q3.
5. For typical use of Connection Detail CC, see Layout Types 12AA and 12BB on Revised Standard Plan RSP A77Q4 and Layout Type 12CC on Revised Standard Plan RSP A77Q5.
6. Where the height of the bridge railing exceeds the height of the thrie beam railing by more than 1" at Connection Detail AA and connection Detail CC, taper the top of the end of the bridge railing at 4:1 to match the top elevation of the thrie beam railing.
7. For details of End Cap (Type TC), see Revised Standard Plan RSP A77U4.
8. See Revised Standard Plan RSP A77U4 for additional details regarding depth dimension for straight metal box spacer.

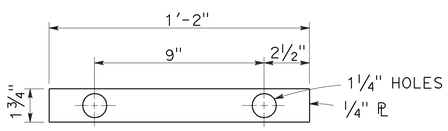

PLATE 'A'

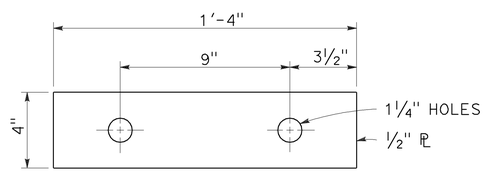

PLATE 'B'
(For backside of connection BB)

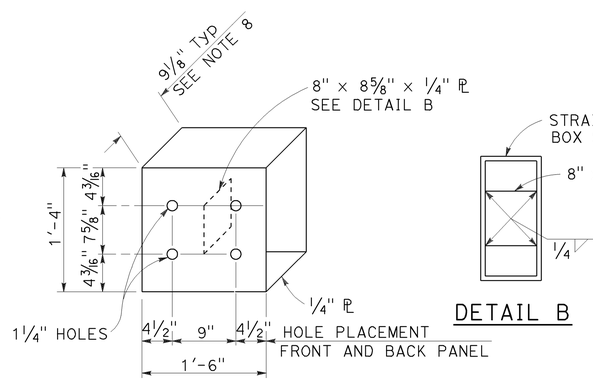

DETAIL A

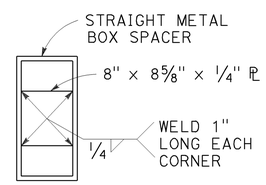

DETAIL B

STRAIGHT METAL BOX SPACER

STATE OF CALIFORNIA
DEPARTMENT OF TRANSPORTATION

MIDWEST GUARDRAIL SYSTEM CONNECTIONS TO BRIDGE RAILINGS WITHOUT SIDEWALKS DETAILS No. 2

NO SCALE

RSP A77U2 DATED JULY 19, 2013 SUPPLEMENTS THE STANDARD PLANS BOOK DATED 2010.

REVISED STANDARD PLAN RSP A77U2

2010 REVISED STANDARD PLAN RSP A77U2

6-20-13

Dist	COUNTY	ROUTE	POST MILES TOTAL PROJECT	SHEET No.	TOTAL SHEETS
09	Iny, Mno	6,108,136,158 168,182,395	Var	53	59

Randell D. Hiatt
REGISTERED CIVIL ENGINEER

January 23, 2015
PLANS APPROVAL DATE

REGISTERED PROFESSIONAL ENGINEER Randell D. Hiatt No. C50200 Exp. 6-30-15 CIVIL STATE OF CALIFORNIA

THE STATE OF CALIFORNIA OR ITS OFFICERS OR AGENTS SHALL NOT BE RESPONSIBLE FOR THE ACCURACY OR COMPLETENESS OF SCANNED COPIES OF THIS PLAN SHEET.

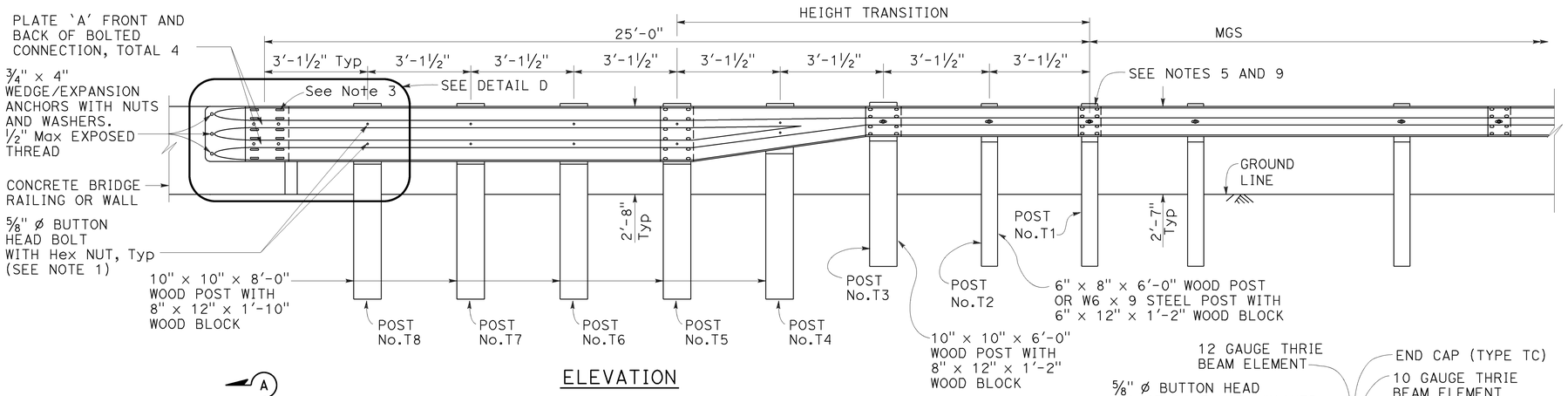

ELEVATION

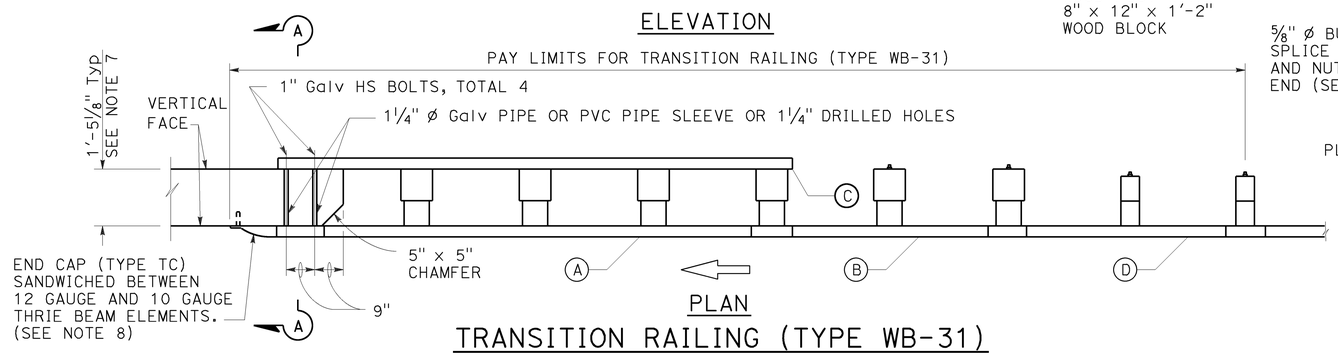

PLAN

TRANSITION RAILING (TYPE WB-31)

(No Blockout Attachment)

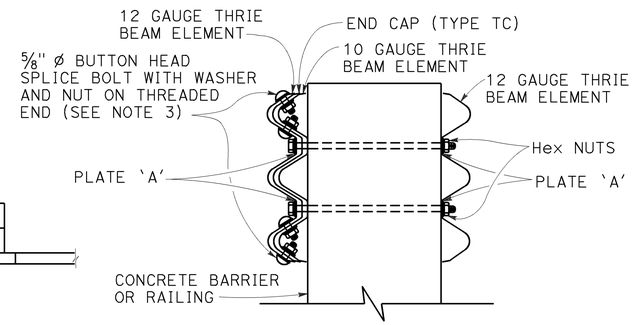

SECTION A-A

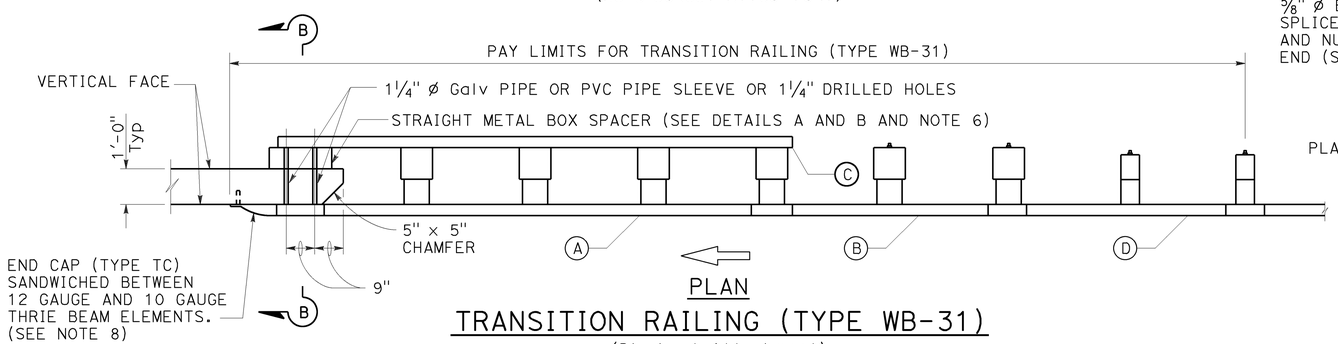

PLAN

TRANSITION RAILING (TYPE WB-31)

(Blockout Attachment)

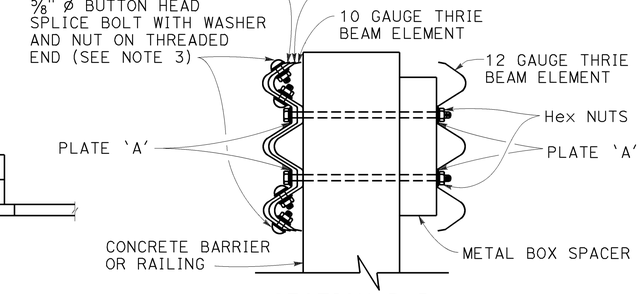

SECTION B-B

NOTES:

TO ACCOMPANY PLANS DATED 6-29-15

1. Use 5/8" ø Button head bolts and hex nuts for connections to posts. No washer on rail face for bolted connections to post.
2. The nested rail elements, end cap, and 'W' beam to thrie beam element may be spliced together prior to bolting the elements to the wood post and concrete barrier or railing.
3. Exterior splice bolt holes for rail element splices at Post No. T5 and the connection to the concrete barrier or railing shall be the standard 29/32" x 1 1/8" slot size. Interior splice bolt holes at these locations may be increased up to 1 1/4" ø. Only the top 4 and the bottom 4 splice bolts with washers and nuts are required for rail splices at Post No. T5 and the connection to the concrete barrier or railing.
4. The top elevation of Posts No. T2 through No. T7 shall not project more than 1" above the top elevation of the rail element.
5. Typically, the railing connected to Transition Railing (Type WB-31) will be either standard railing section of MGS with height transition ratio of 150:1 or a Caltrans approved 31" end treatment attached to Post No. T1.
6. The depth of the metal box spacer varies from the 9 1/8" to 1 1/2" and is dependent on the width of the concrete railing or wall. The combined dimension for the depth of the metal box spacer plus the width of railing or wall is typically 21 1/8". Where the space between the backside of the concrete railing or wall and the rear thrie beam element is less than 1 1/2", metal plates similar to Plate 'A' are to be used as spacers.
7. Where the width of the concrete railing or wall is greater than 17 1/8", wood blocks are to be used to fill the space created between the backside of Posts No. T5 through No. T8 and the rear thrie beam element. These wood blocks shall be 8" in width and 1'-2" in length. The dimension between the front thrie beam element and the rear thrie beam element is to match the width of the concrete railing or wall.
8. End cap may be installed over 12 gauge and 10 gauge thrie beam elements where transition railing is installed on the departure end of bridge railing.
9. Conform standard railing section height to 31" at Post No. T1 using height transition ratio of 150:1.

LEGEND:

(A) NESTED THRIE BEAM ELEMENTS (ONE 12 GAUGE ELEMENT NESTED OVER ONE 10 GAUGE ELEMENT).

(B) ONE ASYMMETRICAL 10 GAUGE "W" BEAM TO THRIE BEAM ELEMENT.

(C) ONE 12 GAUGE THRIE BEAM ELEMENT.

(D) ONE 10 GAUGE "W" BEAM RAIL ELEMENT (7'-3 1/2"LENGTH)

10 GAUGE = 0.138" THICK
12 GAUGE = 0.108" THICK

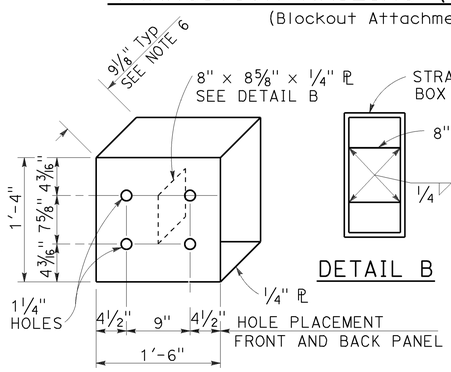

DETAIL A

STRAIGHT METAL BOX SPACER

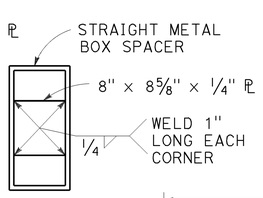

DETAIL B

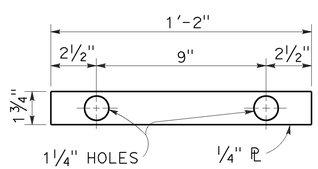

DETAIL C

PLATE 'A'

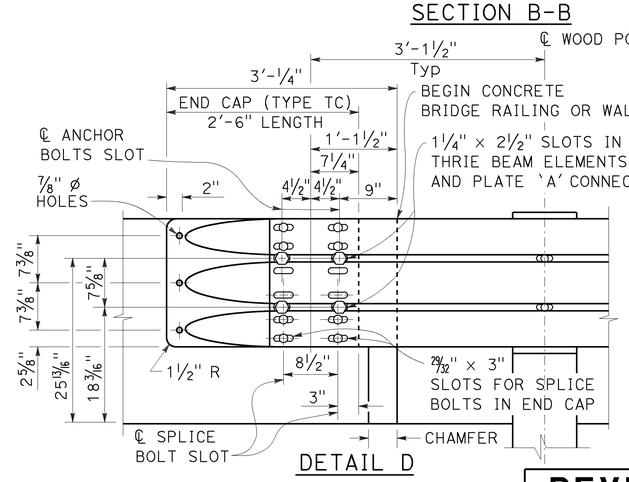

DETAIL D

STATE OF CALIFORNIA
DEPARTMENT OF TRANSPORTATION

MIDWEST GUARDRAIL SYSTEM TRANSITION RAILING (TYPE WB-31)

NO SCALE

RSP A77U4 DATED JANUARY 23, 2015 SUPERSEDES RSP A77U4 DATED NOVEMBER 15, 2013 AND RSP A77U4 DATED JULY 19, 2013 THAT SUPPLEMENTS THE STANDARD PLANS BOOK DATED 2010.

REVISED STANDARD PLAN RSP A77U4

2010 REVISED STANDARD PLAN RSP A77U4

1-8-15

Dist	COUNTY	ROUTE	POST MILES TOTAL PROJECT	SHEET No.	TOTAL SHEETS
09	Iny, Mno	6,108,136,158 168,182,395	Var	54	59

REGISTERED CIVIL ENGINEER

October 21, 2011
PLANS APPROVAL DATE

REGISTERED PROFESSIONAL ENGINEER Tillat Satter No. C42892 Exp. 3-31-12 CIVIL STATE OF CALIFORNIA

THE STATE OF CALIFORNIA OR ITS OFFICERS OR AGENTS SHALL NOT BE RESPONSIBLE FOR THE ACCURACY OR COMPLETENESS OF SCANNED COPIES OF THIS PLAN SHEET.

TO ACCOMPANY PLANS DATED 6-29-15

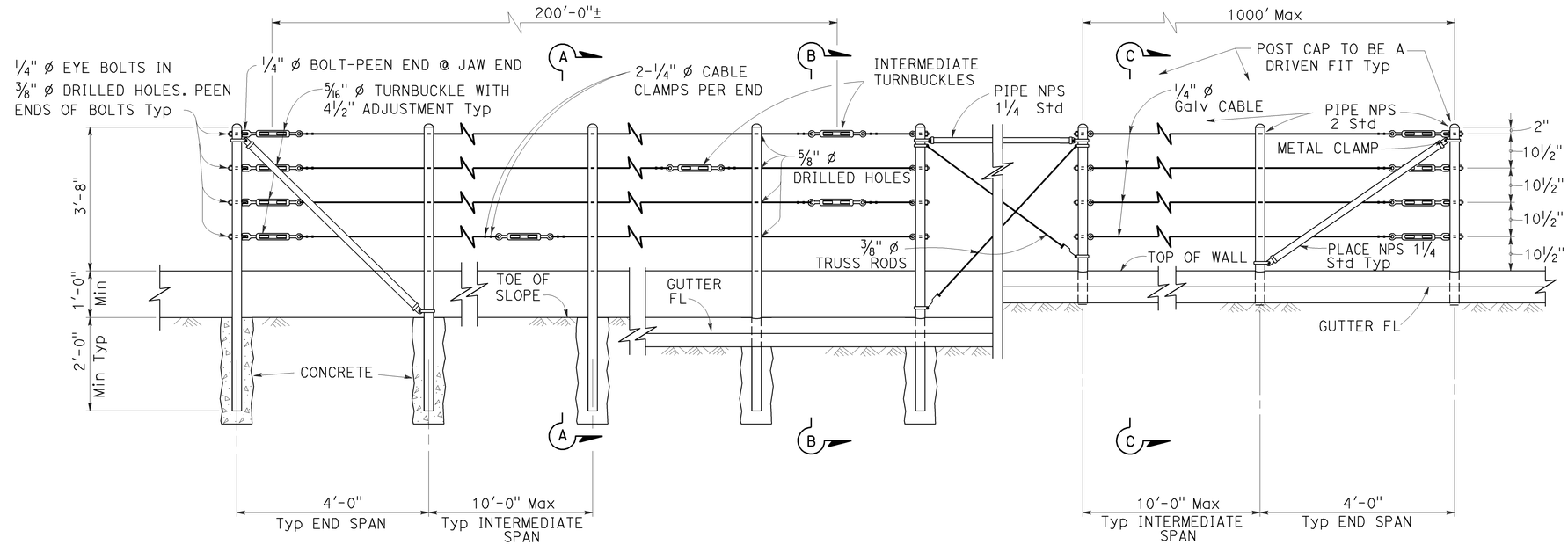

EXISTING WALL (WITHOUT GUTTER)
Existing

RETAINING WALL (WITH GUTTER)
Existing

RETAINING WALL (WITH GUTTER)
New construction

ELEVATION

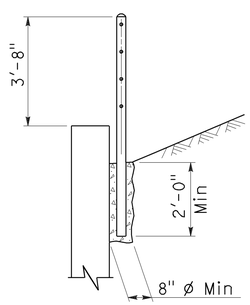

SECTION A-A
Existing

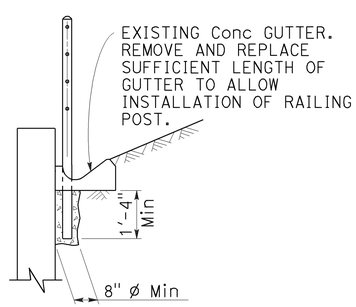

SECTION B-B
Existing

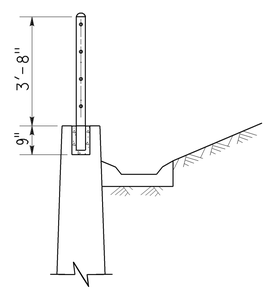

SECTION C-C
New construction

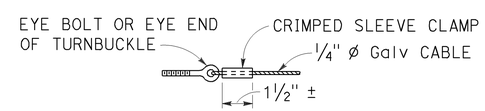

ALTERNATIVE CABLE CONNECTION

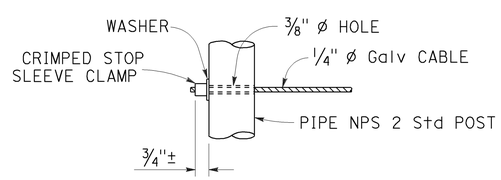

ALTERNATIVE DEAD END ANCHORAGE

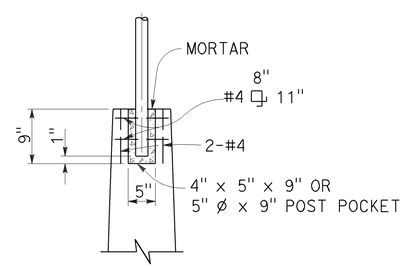

POST POCKET

NOTES:

1. Maximum distance between turnbuckles shall be 200'-0"±.
2. Intermediate turnbuckles to be placed in adjacent spans.
3. Cable shall not be spliced between intermediate turnbuckles and end posts.
4. Posts to be vertical.
5. Alignment of holes in posts may vary to conform to slope of top of retaining wall.
6. The Contractor shall verify all dependent dimensions in the field before ordering or fabricating any material.
7. Line posts shall be braced horizontally and trussed diagonally in both directions at intervals not to exceed 1000'.
8. Post pockets to be centered in top of wall.
9. Typical end spans, braced in both directions, shall be constructed at changes in line where the angle of deflection is 15° or more.
10. Provide thimbles at all cable loops.

STATE OF CALIFORNIA
DEPARTMENT OF TRANSPORTATION

CABLE RAILING

NO SCALE

RSP B11-47 DATED OCTOBER 21, 2011 SUPERSEDES STANDARD PLAN B11-47 DATED MAY 20, 2011 - PAGE 293 OF THE STANDARD PLANS BOOK DATED 2010.

REVISED STANDARD PLAN RSP B11-47

2010 REVISED STANDARD PLAN RSP B11-47

9-14-11

Dist	COUNTY	ROUTE	POST MILES TOTAL PROJECT	SHEET No.	TOTAL SHEETS
09	Iny, Mno	6,108,136,158 168,182,395	Var	55	59

REGISTERED CIVIL ENGINEER

November 15, 2013
PLANS APPROVAL DATE

REGISTERED PROFESSIONAL ENGINEER — Tillat Satter — No. C42892 — Exp. 3-31-14 — CIVIL — STATE OF CALIFORNIA

THE STATE OF CALIFORNIA OR ITS OFFICERS OR AGENTS SHALL NOT BE RESPONSIBLE FOR THE ACCURACY OR COMPLETENESS OF SCANNED COPIES OF THIS PLAN SHEET.

TO ACCOMPANY PLANS DATED 6-29-15

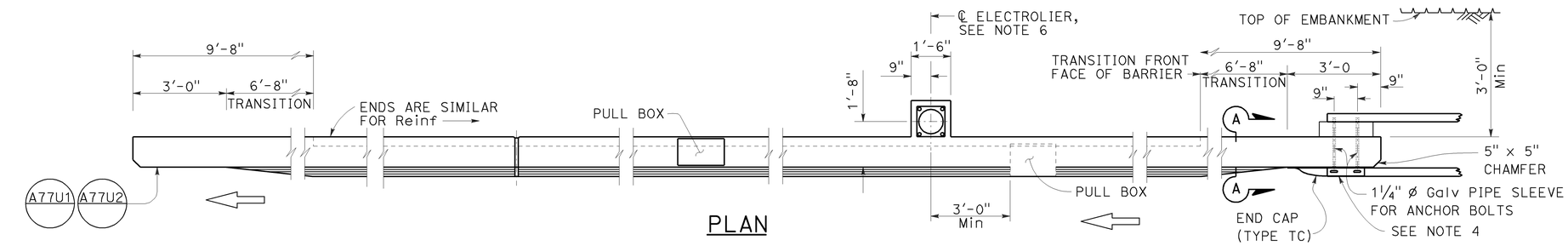

PLAN

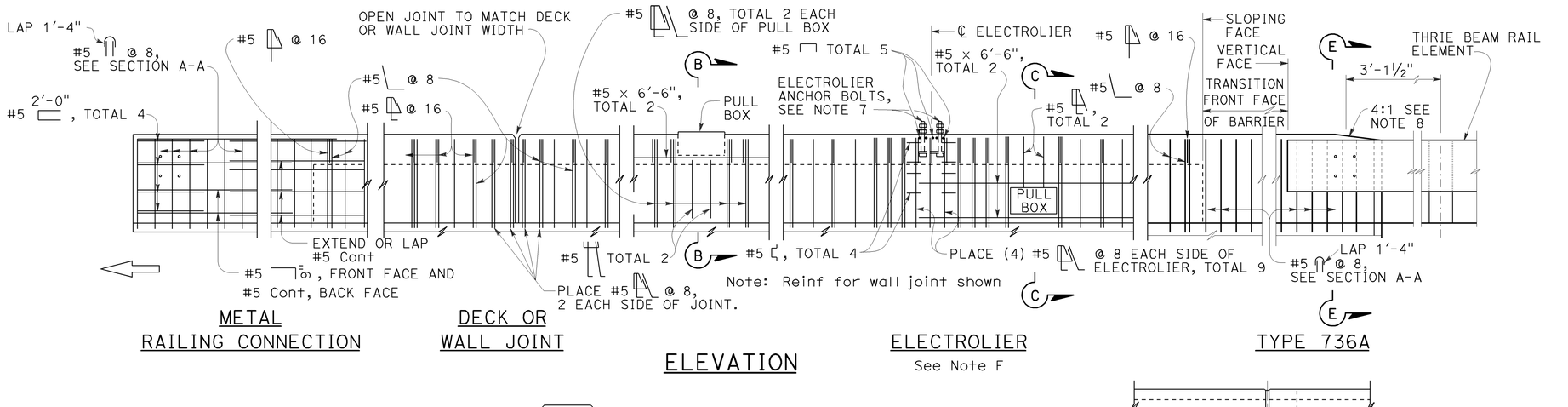

METAL RAILING CONNECTION

DECK OR WALL JOINT

ELEVATION

ELECTROLIER

See Note F

TYPE 736A

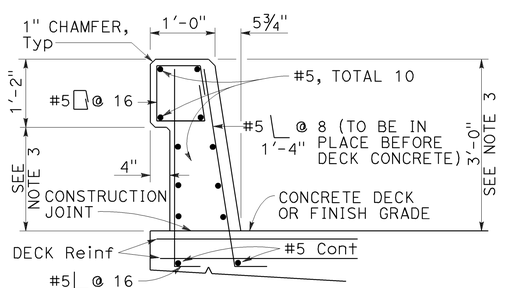

TYPE 736

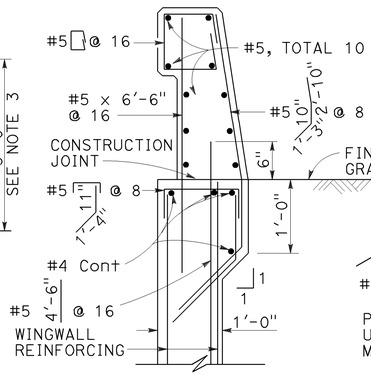

TYPE 736A

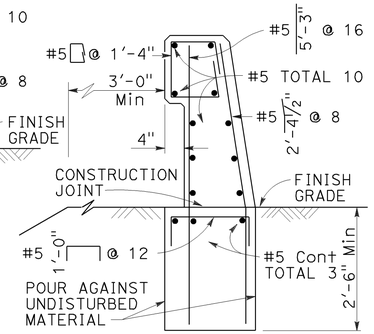

TYPE 736B

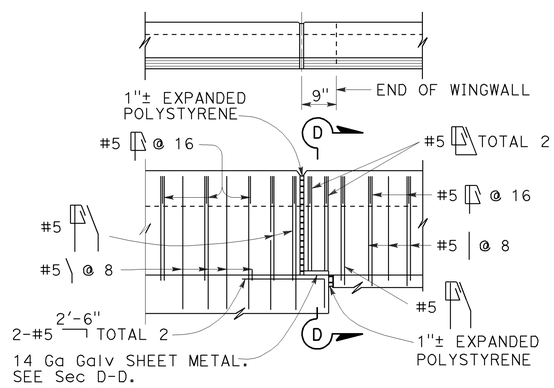

TYPE 736A TYPE 736B

Note: Types 736A & 736B are similar to Type 736 except as noted

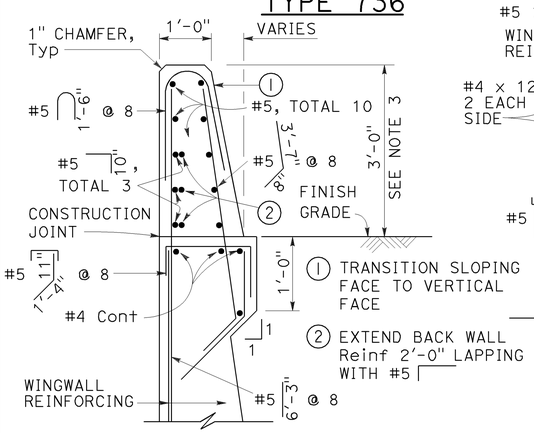

SECTION A-A

Details shown for barrier anchorage to Type 736A. Anchorgae for barrier Types 736 and 736B are similar to their respective details.

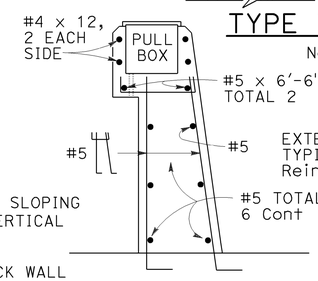

SECTION B-B

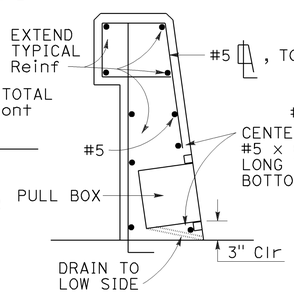

SECTION C-C

See Notes

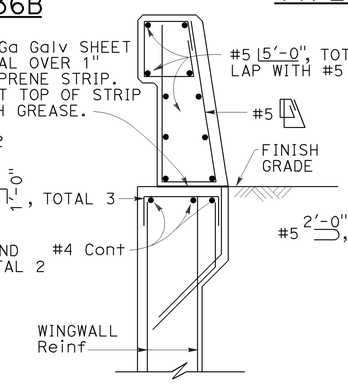

SECTION D-D

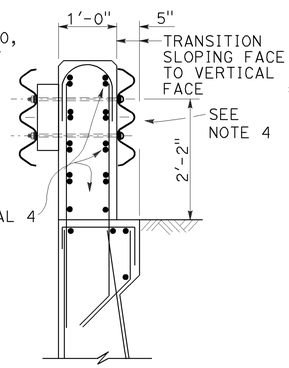

SECTION E-E

See Notes

NOTES:

1. Walls are to be backfilled before barrier is placed.
2. Clearance to reinforcing steel in barrier to be 1", except as noted. Longitudinal reinforcement to stop at all expansion joints.
3. Dimensions may vary with roadway cross slope and with certain thickness of surfacing. See Project Plans.
4. For typical metal railing connection details not shown, see Revised Standard Plans RSP A77U1 and RSP A77U2.
5. See Standard Plans ES-9A, ES-9B, ES-9C, ES-9D and ES-9E for electrical details. The maximum number of conduits in the barrier is limited to two 2" conduits along with one 3" conduit. When a 3" conduit is used, it is restricted to the base of the barrier.
6. For electrolier mounting details, See Standard Plans ES-6A and ES-6B.
7. Minimum concrete edge distance, to the reinforcing shown, shall be maintained. Edge distance may be adjusted to accommodate increase in concrete cover for architectual treatment.
8. Taper the top of the end of the bridge railing at 4:1 to match the top elevation of the thrie beam rail element.

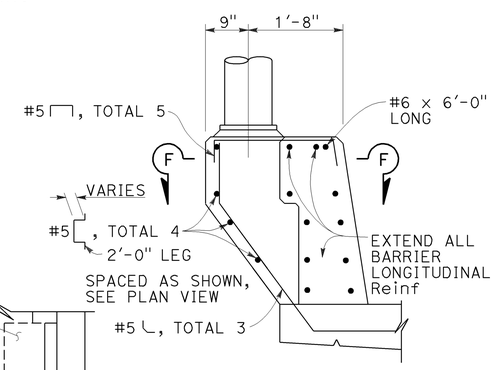

PEDESTAL ELEVATION

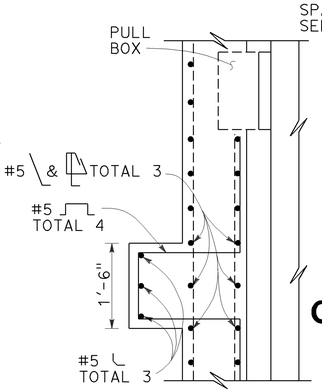

SECTION F-F

STATE OF CALIFORNIA
DEPARTMENT OF TRANSPORTATION

CONCRETE BARRIER TYPE 736

NO SCALE

RSP B11-56 DATED NOVEMBER 15, 2013 SUPERSEDES RSP B11-56 DATED JULY 19, 2013 AND STANDARD PLAN B11-56 DATED MAY 20, 2011 - PAGE 298 OF THE STANDARD PLANS BOOK DATED 2010.

REVISED STANDARD PLAN RSP B11-56

2010 REVISED STANDARD PLAN RSP B11-56

10-4-13

Dist	COUNTY	ROUTE	POST MILES TOTAL PROJECT	SHEET No.	TOTAL SHEETS
09	Iny, Mno	6,108,136,158 168,182,395	Var	56	59

REGISTERED CIVIL ENGINEER

July 19, 2013
PLANS APPROVAL DATE

REGISTERED PROFESSIONAL ENGINEER Gurinderpal Bhullar No. C48815 Exp. 9-30-14 CIVIL STATE OF CALIFORNIA

THE STATE OF CALIFORNIA OR ITS OFFICERS OR AGENTS SHALL NOT BE RESPONSIBLE FOR THE ACCURACY OR COMPLETENESS OF SCANNED COPIES OF THIS PLAN SHEET.

TO ACCOMPANY PLANS DATED 6-29-15

2010 REVISED STANDARD PLAN RSP T9

TABLE 1

TAPER LENGTH CRITERIA AND CHANNELIZING DEVICE SPACING

SPEED (S)	MINIMUM TAPER LENGTH * FOR WIDTH OF OFFSET 12 FEET (W)				MAXIMUM CHANNELIZING DEVICE SPACING		
					X	Y	Z **
	TANGENT 2L	MERGING L	SHIFTING L/2	SHOULDER L/3	TAPER	TANGENT	CONFLICT
mph	ft	ft	ft	ft	ft	ft	ft
20	160	80	40	27	20	40	10
25	250	125	63	42	25	50	12
30	360	180	90	60	30	60	15
35	490	245	123	82	35	70	17
40	640	320	160	107	40	80	20
45	1080	540	270	180	45	90	22
50	1200	600	300	200	50	100	25
55	1320	660	330	220	55	110	27
60	1440	720	360	240	60	120	30
65	1560	780	390	260	65	130	32
70	1680	840	420	280	70	140	35

* - For other offsets, use the following merging taper length formula for L:
For speed of 40 mph or less, $L = WS^2/60$
For speed of 45 mph or more, $L = WS$

Where: L = Taper length in feet
W = Width of offset in feet
S = Posted speed limit, off-peak 85th-percentile speed prior to work starting, or the anticipated operating speed in mph

** - Use for taper and tangent sections where there are no pavement markings or where there is a conflict between existing pavement markings and channelizers (CA).

TABLE 2

LONGITUDINAL BUFFER SPACE AND FLAGGER STATION SPACING

SPEED *	Min D **	DOWNGRADE Min D ***		
		-3%	-6%	-9%
mph	ft	ft	ft	ft
20	115	116	120	126
25	155	158	165	173
30	200	205	215	227
35	250	257	271	287
40	305	315	333	354
45	360	378	400	427
50	425	446	474	507
55	495	520	553	593
60	570	598	638	686
65	645	682	728	785
70	730	771	825	891

* - Speed is posted speed limit, off-peak 85th-percentile speed prior to work starting, or the anticipated operating speed in mph

** - Longitudinal buffer space or flagger station spacing

*** - Use on sustained downgrade steeper than -3 percent and longer than 1 mile.

TABLE 3

ADVANCE WARNING SIGN SPACING

ROAD TYPE	DISTANCE BETWEEN SIGNS *		
	A	B	C
	ft	ft	ft
URBAN - 25 mph OR LESS	100	100	100
URBAN - MORE THAN 25 mph TO 40 mph	250	250	250
URBAN - MORE THAN 40 mph	350	350	350
RURAL	500	500	500
EXPRESSWAY / FREEWAY	1000	1500	2640

* - The distances are approximate, are intended for guidance purposes only, and should be applied with engineering judgment. These distances should be adjusted by the Engineer for field conditions, if necessary, by increasing or decreasing the recommmended distances.

STATE OF CALIFORNIA
DEPARTMENT OF TRANSPORTATION

TRAFFIC CONTROL SYSTEM TABLES FOR LANE AND RAMP CLOSURES

NO SCALE

RSP T9 DATED JULY 19, 2013 SUPERSEDES RSP T9 DATED APRIL 19, 2013 THAT SUPPLEMENTS THE STANDARD PLANS BOOK DATED 2010.

REVISED STANDARD PLAN RSP T9

4-30-13

Dist	COUNTY	ROUTE	POST MILES TOTAL PROJECT	SHEET No.	TOTAL SHEETS
09	Iny, Mno	6,108,136,158 168,182,395	Var	57	59

REGISTERED CIVIL ENGINEER

April 19, 2013
PLANS APPROVAL DATE

REGISTERED PROFESSIONAL ENGINEER Gurinderpal Bhullar No. C48815 Exp. 9-30-14 CIVIL STATE OF CALIFORNIA

THE STATE OF CALIFORNIA OR ITS OFFICERS OR AGENTS SHALL NOT BE RESPONSIBLE FOR THE ACCURACY OR COMPLETENESS OF SCANNED COPIES OF THIS PLAN SHEET.

TO ACCOMPANY PLANS DATED 6-29-15

NOTES:

See Revised Standard Plan RSP T9 for tables.

Use cone spacing X for taper segment, Y for tangent segment or Z for conflict situations, as approriate, per Table 1, unless X, Y, or Z cone spacing is shown on this sheet.

Unless otherwise specified in the special provisions, all temporary warning signs shall have black legend on fluorescent orange background.

California codes are designated by (CA). Otherwise, Federal (MUTCD) codes are shown.

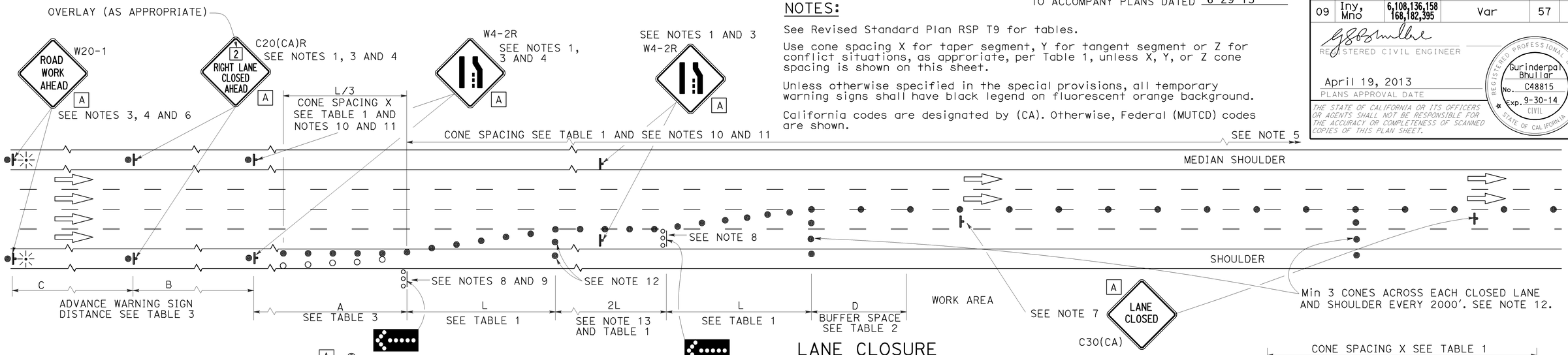

LANE CLOSURE

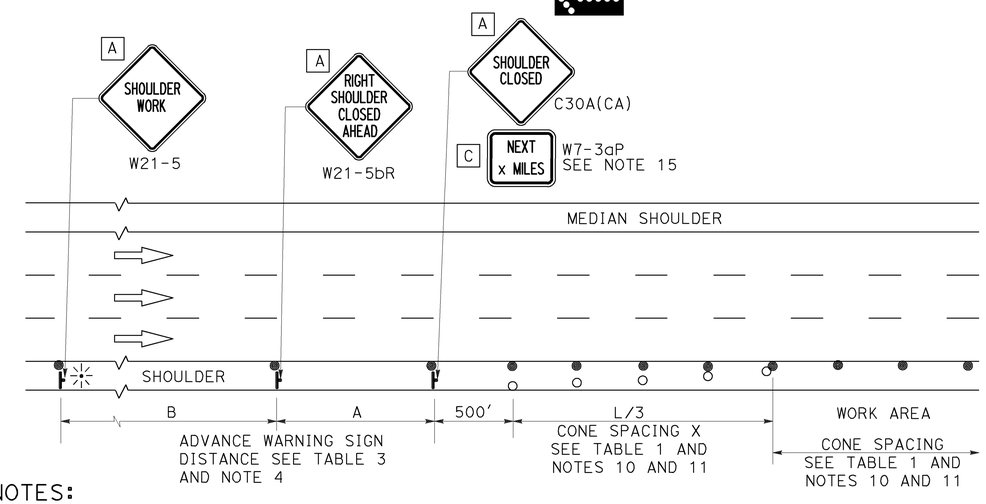

SHOULDER CLOSURE

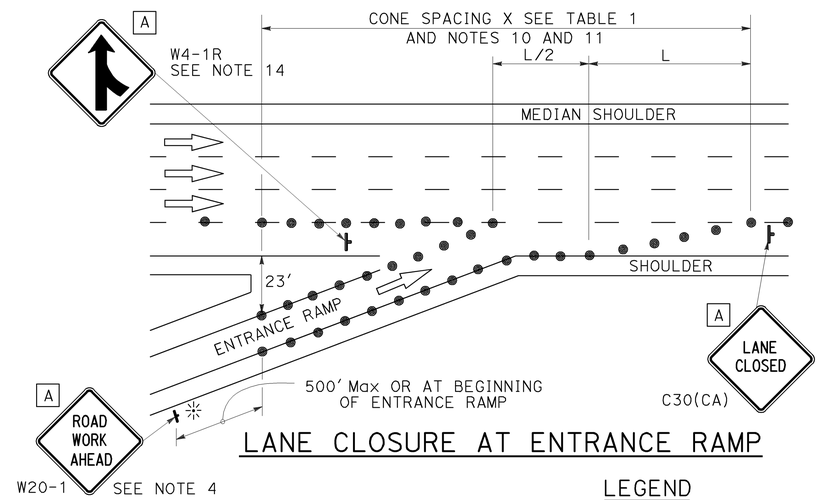

LANE CLOSURE AT ENTRANCE RAMP

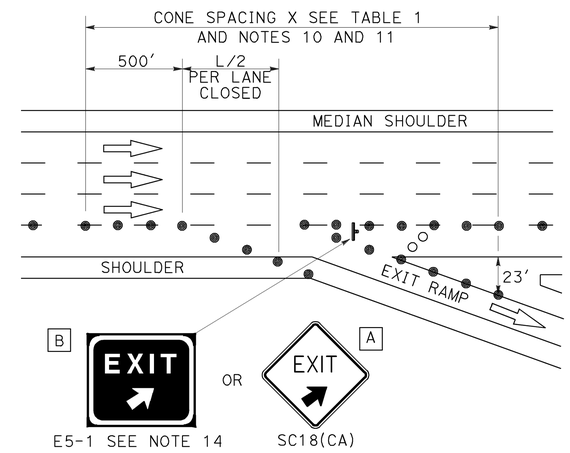

LANE CLOSURE AT EXIT RAMP

NOTES:

1. Median lane closures shall conform to the details as shown except that C20(CA)L and W4-2L signs shall be used.
2. At least one person shall be assigned to provide full time maintenance of traffic control devices for lane closures.
3. Duplicate sign installations are not required:
   a) On opposite shoulder if at least one-half of the available lanes remain open to traffic.
   b) In the median if the width of the median shoulder is less than 8' and the outside lanes are to be closed.
4. Each advance warning sign on each side of the roadway shall be equipped with at least two flags for daytime closure. Each flag shall be at least 16" x 16" in size and shall be orange or fluorescent red-orange in color. Flashing beacons shall be placed at the locations indicated for lane closure during hours of darkness.
5. A G20-2 "END ROAD WORK" sign, with minimum size of 48" x 24" as appropriate, shall be placed at the end of the lane closure unless the end of work area is obvious or ends within a larger project's limits.
6. If the W20-1 sign would follow within 2000' of a stationary W20-1 or G20-1 "ROAD WORK NEXT _____ MILES", use a C20(CA) sign for the first advance warning sign.
7. Place a C30(CA) sign every 2000' throughout length of lane closure.
8. One flashing arrow sign for each lane closed. The flashing arrow signs shall be Type I.
9. A minimum 1500' of sight distance shall be provided where possible for vehicles approaching the first flashing arrow sign. Lane closures shall not begin at top of crest vertical curve or on a horizontal curve.
10. All cones used for lane closures during the hours of darkness shall be fitted with retroreflective bands (or sleeves) as specified in the specifications.
11. Portable delineators, placed at one-half the spacing indicated for traffic cones may be used instead of cones for daytime closures only.
12. Unless otherwise specified in the special provisions, a minimum of 3 cones shall be placed transversely across each closed lane and shoulder at each location where a taper across a traffic lane ends and every 2000' as shown on the "Lane Closure" detail. Two Type II barricades may be used instead of the 3 cones. The transverse alignment of the cones or barricades on the closed shoulder may be shifted from the transverse alignment to provide access to the work.
13. Unless otherwise specified in the special provisions, the 2L tangent shown along lane lines shall be used between the L tapers required for each closed traffic lane.
14. Unless otherwise specified in the special provisions, the E5-1 or SC18(CA) and W4-1 signs shall be used as shown.
15. A W7-3aP "NEXT____ MILES" plaque must be used if theshoulder closure extends beyond the distance that can be perceived by road users.

LEGEND

- TRAFFIC CONE
- TRAFFIC CONE (OPTIONAL TAPER)
- TEMPORARY TRAFFIC CONTROL SIGN
- FLASHING ARROW SIGN (FAS)
- FAS SUPPORT OR TRAILER
- PORTABLE FLASHING BEACON

SIGN PANEL SIZE (Min)

A	48" x 48"
B	72" x 60"
C	36" x 30"

STATE OF CALIFORNIA
DEPARTMENT OF TRANSPORTATION

TRAFFIC CONTROL SYSTEM FOR LANE CLOSURE ON FREEWAYS AND EXPRESSWAYS

NO SCALE

RSP T10 DATED APRIL 19, 2013 SUPERSEDES STANDARD PLAN T10 DATED MAY 20, 2011 - PAGE 237 OF THE STANDARD PLANS BOOK DATED 2010.

REVISED STANDARD PLAN RSP T10

2010 REVISED STANDARD PLAN RSP T10

12-18-12

Dist	COUNTY	ROUTE	POST MILES TOTAL PROJECT	SHEET No.	TOTAL SHEETS
09	Iny, Mno	6,108,136,158 168,182,395	Var	58	59

REGISTERED CIVIL ENGINEER

April 19, 2013
PLANS APPROVAL DATE

REGISTERED PROFESSIONAL ENGINEER Gurinderpal Bhullar No. C48815 Exp. 9-30-14 CIVIL STATE OF CALIFORNIA

THE STATE OF CALIFORNIA OR ITS OFFICERS OR AGENTS SHALL NOT BE RESPONSIBLE FOR THE ACCURACY OR COMPLETENESS OF SCANNED COPIES OF THIS PLAN SHEET.

TO ACCOMPANY PLANS DATED 6-29-15

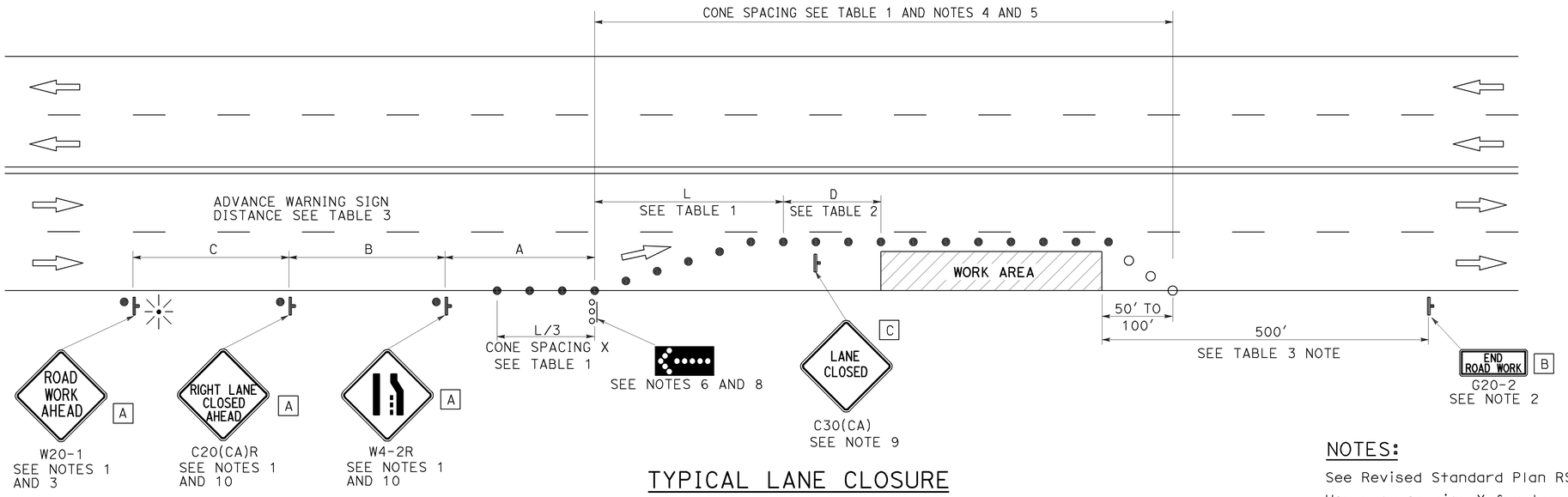

TYPICAL LANE CLOSURE

NOTES:

See Revised Standard Plan RSP T9 for tables.

Use cone spacing X for taper segment, Y for tangent segment or Z for conflict situations, as approriate, per Table 1, unless X, Y, or Z cone spacing is shown on this sheet.

Unless otherwise specified in the special provisions, all temporary warning signs shall have black legend on fluorescent orange background.

California codes are designated by (CA). Otherwise, Federal (MUTCD) codes are shown.

LEGEND

- ● TRAFFIC CONE
- ○ TRAFFIC CONE (OPTIONAL TAPER)
- TEMPORARY TRAFFIC CONTROL SIGN
- FLASHING ARROW SIGN (FAS)
- FAS SUPPORT OR TRAILER
- PORTABLE FLASHING BEACON

SIGN PANEL SIZE (Min)

A	48" x 48"
B	36" x 18"
C	30" x 30"

NOTES:

1. Each advance warning sign shall be equipped with at least two flags for daytime closure. Each flag shall be at least 16" x 16" in size and shall be orange or fluorescent red-orange in color. Flashing beacons shall be placed at the locations indicated for lane closure during hours of darkness.
2. A G20-2 "END ROAD WORK" sign, as appropriate, shall be placed at the end of the lane closure unless the end of work area is obvious, or ends within a larger project's limits.
3. If the W20-1 sign would follow within 2000' of a stationary W20-1 or G20-1 "ROAD WORK NEXT _____ MILES", use a C20(CA) sign for the first advance warning sign.
4. All cones used for lane closures during the hours of darkness shall be fitted with retroreflective bands (or sleeves) as specified in the specifications.
5. Portable delineators, placed at one-half the spacing indicated for traffic cones, may be used instead of cones for daytime closures only.
6. Flashing arrow sign shall be either Type I or Type II.
7. For approach speeds over 50 mph, use the "Traffic Control System for Lane Closure On Freeways And Expressways" plan for lane closure details and requirements.
8. A minimum 1500' of sight distance shall be provided where possible for vehicles approaching the first flashing arrow sign. Lane closures shall not begin at the top of crest vertical curve or on a horizontal curve.
9. Place a C30(CA) sign every 2000' throughout length of lane closure.
10. Median lane closures shall conform to the details as shown except that C20(CA)L and W4-2L signs shall be used.
11. At least one person shall be assigned to provide full time maintenance of traffic control devices for lane closure unless, otherwise directed by the Engineer.

STATE OF CALIFORNIA
DEPARTMENT OF TRANSPORTATION

TRAFFIC CONTROL SYSTEM FOR LANE CLOSURE ON MULTILANE CONVENTIONAL HIGHWAYS

NO SCALE

RSP T11 DATED APRIL 19, 2013 SUPERSEDES STANDARD PLAN T11 DATED MAY 20, 2011 - PAGE 239 OF THE STANDARD PLANS BOOK DATED 2010.

REVISED STANDARD PLAN RSP T11

2010 REVISED STANDARD PLAN RSP T11

4-2-13

Dist	COUNTY	ROUTE	POST MILES TOTAL PROJECT	SHEET No.	TOTAL SHEETS
09	Iny, Mno	6,108,136,158 168,182,395	Var	59	59

Devinder Singh
REGISTERED CIVIL ENGINEER

October 17, 2014
PLANS APPROVAL DATE

REGISTERED PROFESSIONAL ENGINEER
Devinder Singh
No. C50470
Exp. 6-30-15
CIVIL
STATE OF CALIFORNIA

THE STATE OF CALIFORNIA OR ITS OFFICERS OR AGENTS SHALL NOT BE RESPONSIBLE FOR THE ACCURACY OR COMPLETENESS OF SCANNED COPIES OF THIS PLAN SHEET.

TO ACCOMPANY PLANS DATED 6-29-15

2010 REVISED STANDARD PLAN RSP T13

NOTES:

See Revised Standard Plan RSP T9 for tables.

Use cone spacing X for taper segment, Y for tangent segment or Z for conflict situations, as approriate, per Table 1, unless X, Y, or Z cone spacing is shown on this sheet.

Unless otherwise specified in the special provisions, all temporary warning signs shall have black legend on fluorescent orange background.

California codes are designated by (CA). Otherwise, Federal (MUTCD) codes are shown.

TYPICAL LANE CLOSURE WITH REVERSIBLE CONTROL

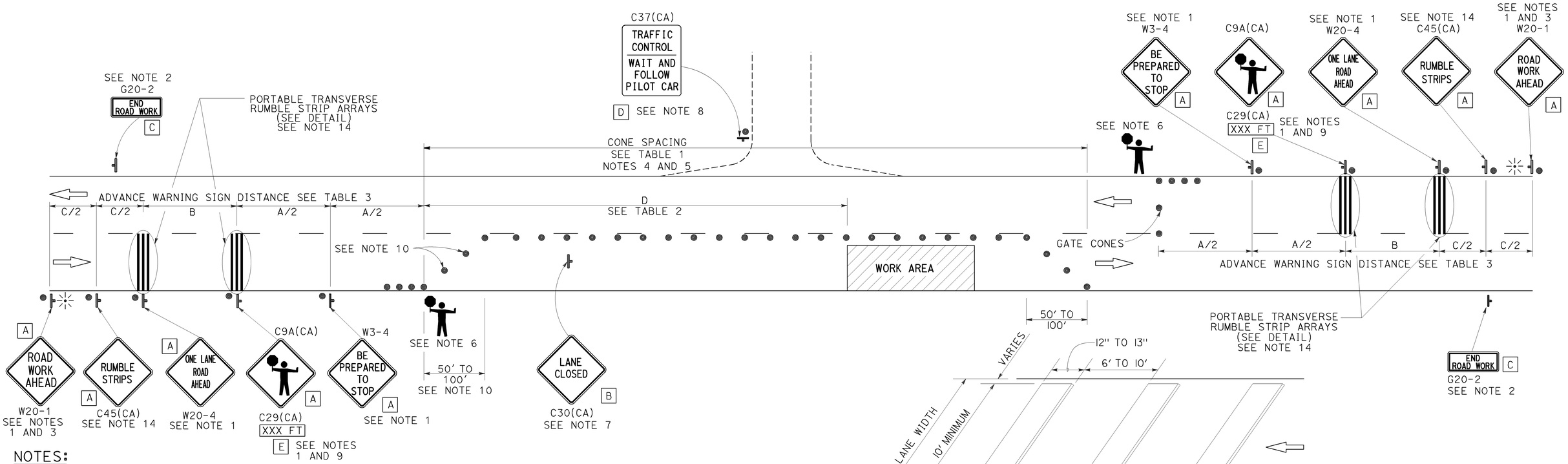

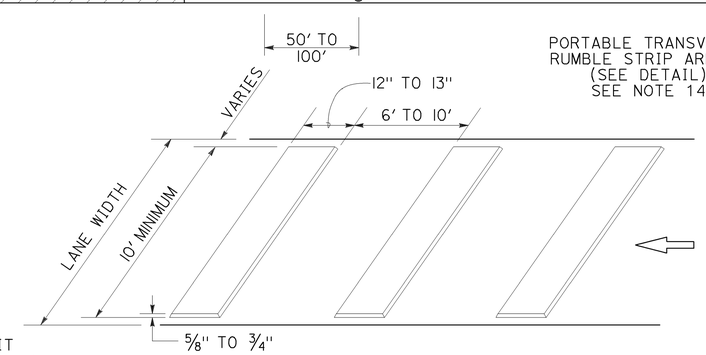

PORTABLE TRANSVERSE RUMBLE STRIP ARRAY DETAIL

NOTES:

1. Each advance warning sign in each direction of travel shall be equipped with at least two flags for daytime closure. Each flag shall be at least 16" x 16" in size and shall be orange or fluorescent red-orange in color. Flashing beacons shall be placed at the locations indicated for lane closure during hours of darkness.
2. A G20-2 "END ROAD WORK" sign, as appropriate, shall be placed at the end of the lane control unless the end of work area is obvious, or ends within a larger project's limits.
3. If the W20-1 sign would follow within 2000' of a stationary W20-1 or G20-1 "ROAD WORK NEXT _____ MILES", use a W20-4 sign for the first advance warning sign.
4. All cones used for lane closures during the hours of darkness shall be fitted with retroreflective bands (or sleeves) as specified in the specifications.
5. Portable delineators, placed at one-half the spacing indicated for traffic cones, may be used instead of cones for daytime closures only.
6. Additional advance flaggers may be required. Flagger should stand in a conspicuous place, be visible to approaching traffic as well as approaching vehicles after the first vehicle has stopped. During the hours of darkness, the flagging-station and flagger shall be illuminated and clearly visible to approaching traffic. The illumination footprint of the lighting on the ground shall be at least 20' in diameter. Place a minimum of four cones at 50' intervals in advance of flagger station as shown.
7. Place C30(CA) "LANE CLOSED" sign at 500' to 1000' intervals throughout extended work areas. They are optional if the work area is visible from the flagger station.
8. When a pilot car is used, place a C37(CA) "TRAFFIC CONTROL-WAIT AND FOLLOW PILOT CAR" sign with black legend on white background at all intersections, driveways and alleys without a flagger within traffic control area. Signs shall be clean and visible at all times. Where traffic can not be effectively self-regulated, at least one flagger shall be used at each intersection within traffic control area.
9. An optional C29(CA) sign may be placed below the C9A(CA) sign.
10. Either traffic cones or barricades shall be placed on the taper. Barricades shall be Type I, II, or III.
11. The color of the portable transverse rumble strips shall be black or orange. Use 2 arrays, each array shall consist of 3 rumble strips.
12. Portable transverse rumble strips shall not be placed on sharp horizontal or vertical curves nor shall they be placed through pedestrian crossings.
13. If the portable transverse rumble strips become out of alignment (skewed) by more than 6 inches, measured from one end to the other, they shall be readjusted to bring the placement back to the original location.
14. Portable transverse rumble strips are not required if any one of the following conditions is satisfied:
    A. Work duration occupies a location for four hours or less
    B. Posted speed limit is below 45 MPH
    C. Work is of emergency nature
    D. Work zone is in snow or icy weather conditions

LEGEND

- TRAFFIC CONE
- TEMPORARY TRAFFIC CONTROL SIGN
- PORTABLE FLASHING BEACON
- FLAGGER

SIGN PANEL SIZE (Min)

A	48" x 48"
B	30" x 30"
C	36" x 18"
D	36" x 42"
E	20" x 7"

STATE OF CALIFORNIA
DEPARTMENT OF TRANSPORTATION

TRAFFIC CONTROL SYSTEM FOR LANE CLOSURE ON TWO LANE CONVENTIONAL HIGHWAYS

NO SCALE

RSP T13 DATED OCTOBER 17, 2014 SUPERSEDES RSP T13 DATED JULY 18, 2014 AND RSP T13 DATED APRIL 19, 2013 AND STANDARD PLAN T13 DATED MAY 20, 2011 - PAGE 241 OF THE STANDARD PLANS BOOK DATED 2010.

REVISED STANDARD PLAN RSP T13

9-26-14