Dist	COUNTY	ROUTE	POST MILES TOTAL PROJECT	SHEET No.	TOTAL SHEETS
08	Riv	10	9.3/20.2	1	37

STATE OF CALIFORNIA **ACHSIMG-010-3(105)E**

DEPARTMENT OF TRANSPORTATION

PROJECT PLANS FOR CONSTRUCTION ON

STATE HIGHWAY

IN RIVERSIDE COUNTY
IN BANNING AND CABAZON
FROM HIGHLAND SPRINGS AVENUE UNDERCROSSING
TO MILLARD CANYON WASH BRIDGE

TO BE SUPPLEMENTED BY STANDARD PLANS DATED MAY 2006

INDEX OF PLANS

SHEET No.	DESCRIPTION
1	TITLE AND LOCATION MAP
2-3	LOCATIONS OF CONSTRUCTION
4-5	CONSTRUCTION DETAILS
6-8	CONSTRUCTION AREA SIGNS
9-10	PAVEMENT DELINEATION PLANS
11-13	SUMMARY OF QUANTITIES
14-33	NEW AND REVISED STANDARD PLANS

STRUCTURE PLANS

34-37	BARRIER TRANSITION ANCHOR BLOCKS

THE STANDARD PLANS LIST APPLICABLE TO THIS CONTRACT IS INCLUDED IN THE NOTICE TO BIDDERS AND SPECIAL PROVISIONS BOOK

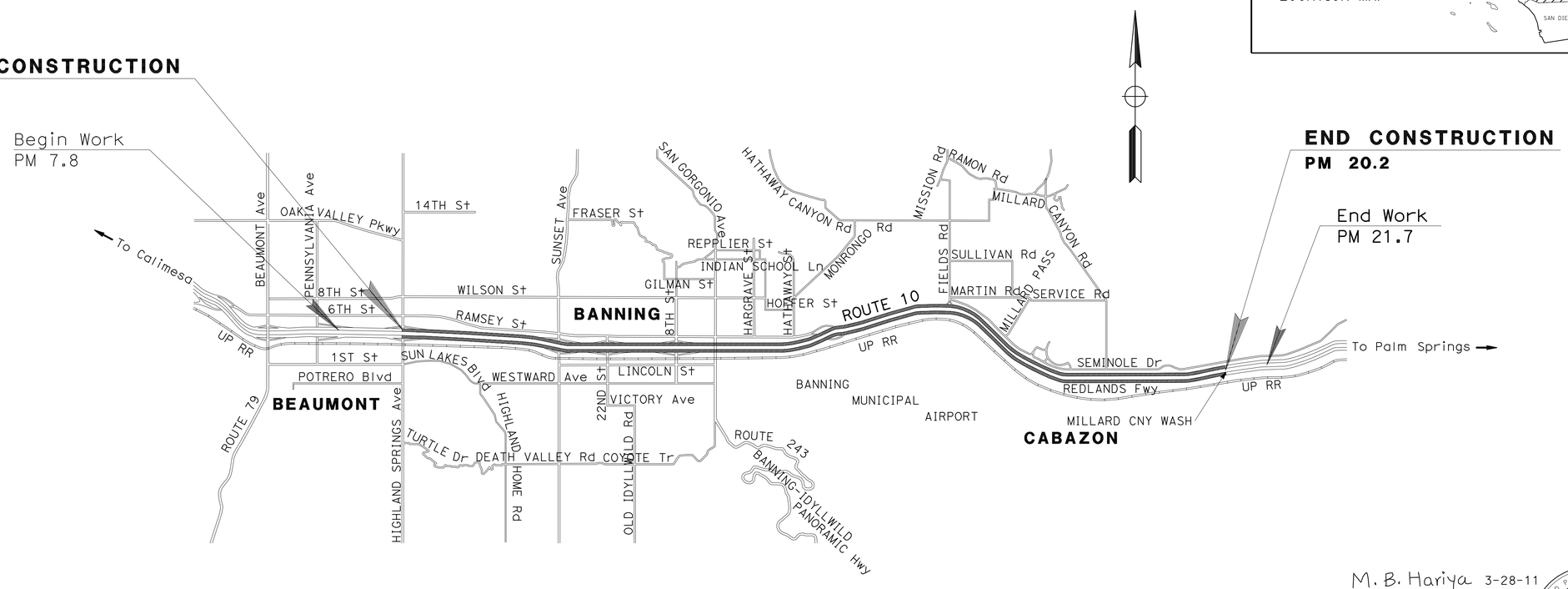

NO SCALE

M. B. Hariya 3-28-11
PROJECT ENGINEER DATE
REGISTERED CIVIL ENGINEER

March 28, 2011
PLANS APPROVAL DATE

REGISTERED PROFESSIONAL ENGINEER
MANOJ B. HARIYA
No. 74429
Exp. 9/30/11
CIVIL
STATE OF CALIFORNIA

THE STATE OF CALIFORNIA OR ITS OFFICERS OR AGENTS SHALL NOT BE RESPONSIBLE FOR THE ACCURACY OR COMPLETENESS OF SCANNED COPIES OF THIS PLAN SHEET.

PROJECT MANAGER MUSTAPHA IAALI

DESIGN ENGINEER MANOJ HARIYA

THE CONTRACTOR SHALL POSSESS THE CLASS (OR CLASSES) OF LICENSE AS SPECIFIED IN THE "NOTICE TO BIDDERS."

CONTRACT No.	08-477814
PROJECT ID	08-00000759

LAST REVISION 03-28-11 DATE PLOTTED => 29-MAR-2011 TIME PLOTTED => 13:31

Dist	COUNTY	ROUTE	POST MILES TOTAL PROJECT	SHEET No.	TOTAL SHEETS
08	Riv	10	9.3/20.2	2	37

M. B. Hariya 3-28-11
REGISTERED CIVIL ENGINEER DATE

03-28-11
PLANS APPROVAL DATE

REGISTERED PROFESSIONAL ENGINEER
MANOJ B. HARIYA
No. 74429
Exp. 9/30/11
CIVIL
STATE OF CALIFORNIA

THE STATE OF CALIFORNIA OR ITS OFFICERS OR AGENTS SHALL NOT BE RESPONSIBLE FOR THE ACCURACY OR COMPLETENESS OF SCANNED COPIES OF THIS PLAN SHEET.

NOTES:

1. THE LOCATIONS ARE FOR IDENTIFICATION ONLY. SEE SUMMARY OF QUANTITIES SHEETS FOR END TREATMENT TYPE AND EXACT LOCATION.
2. THE CONTRACTOR SHALL VERIFY ALL CONTROLLING FIELD DIMENSIONS BEFORE ORDERING OR FABRICATING ANY MATERIAL.
3. EXISTING UTILITY FACILITIES HAVE NOT BEEN POSITIVELY IDENTIFIED.
4. METAL BEAM GUARD RAIL LENGTH AND LOCATIONS MAY BE VERIFIED BY THE ENGINEER TO SUIT CONDITIONS ENCOUNTERED IN THE FIELD.

LEGEND

(X) CONSTRUCTION LOCATIONS

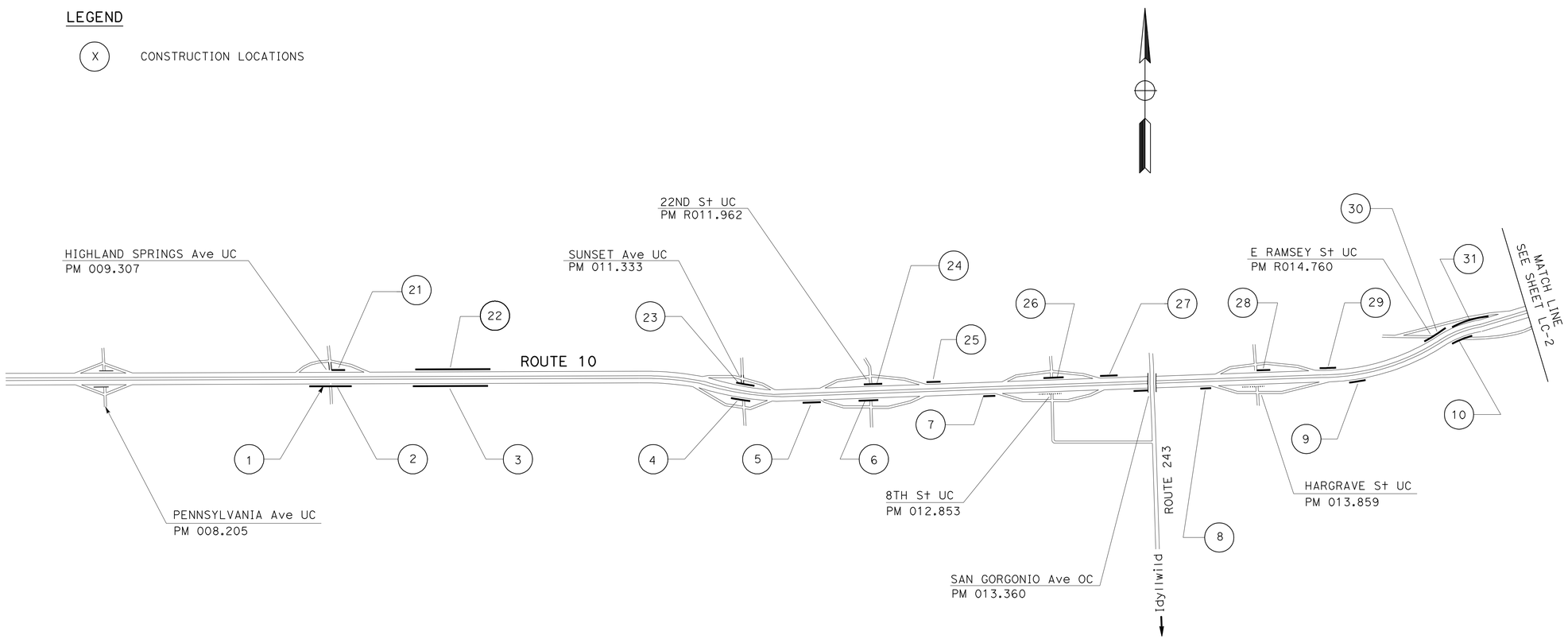

LOCATIONS OF CONSTRUCTION

NO SCALE

LC-1

STATE OF CALIFORNIA - DEPARTMENT OF TRANSPORTATION
Caltrans DESIGN

FUNCTIONAL SUPERVISOR: DU LU
CALCULATED-DESIGNED BY: MANOJ HARIYA
CHECKED BY: DU LU
REVISED BY
DATE REVISED

LAST REVISION 03-28-11
DATE PLOTTED => 29-MAR-2011
TIME PLOTTED => 13:31

Dist	COUNTY	ROUTE	POST MILES TOTAL PROJECT	SHEET No.	TOTAL SHEETS
08	Riv	10	9.3/20.2	3	37

M. B. Hariya 3-28-11
REGISTERED CIVIL ENGINEER DATE

03-28-11
PLANS APPROVAL DATE

REGISTERED PROFESSIONAL ENGINEER
MANOJ B. HARIYA
No. 74429
Exp. 9/30/11
CIVIL
STATE OF CALIFORNIA

THE STATE OF CALIFORNIA OR ITS OFFICERS OR AGENTS SHALL NOT BE RESPONSIBLE FOR THE ACCURACY OR COMPLETENESS OF SCANNED COPIES OF THIS PLAN SHEET.

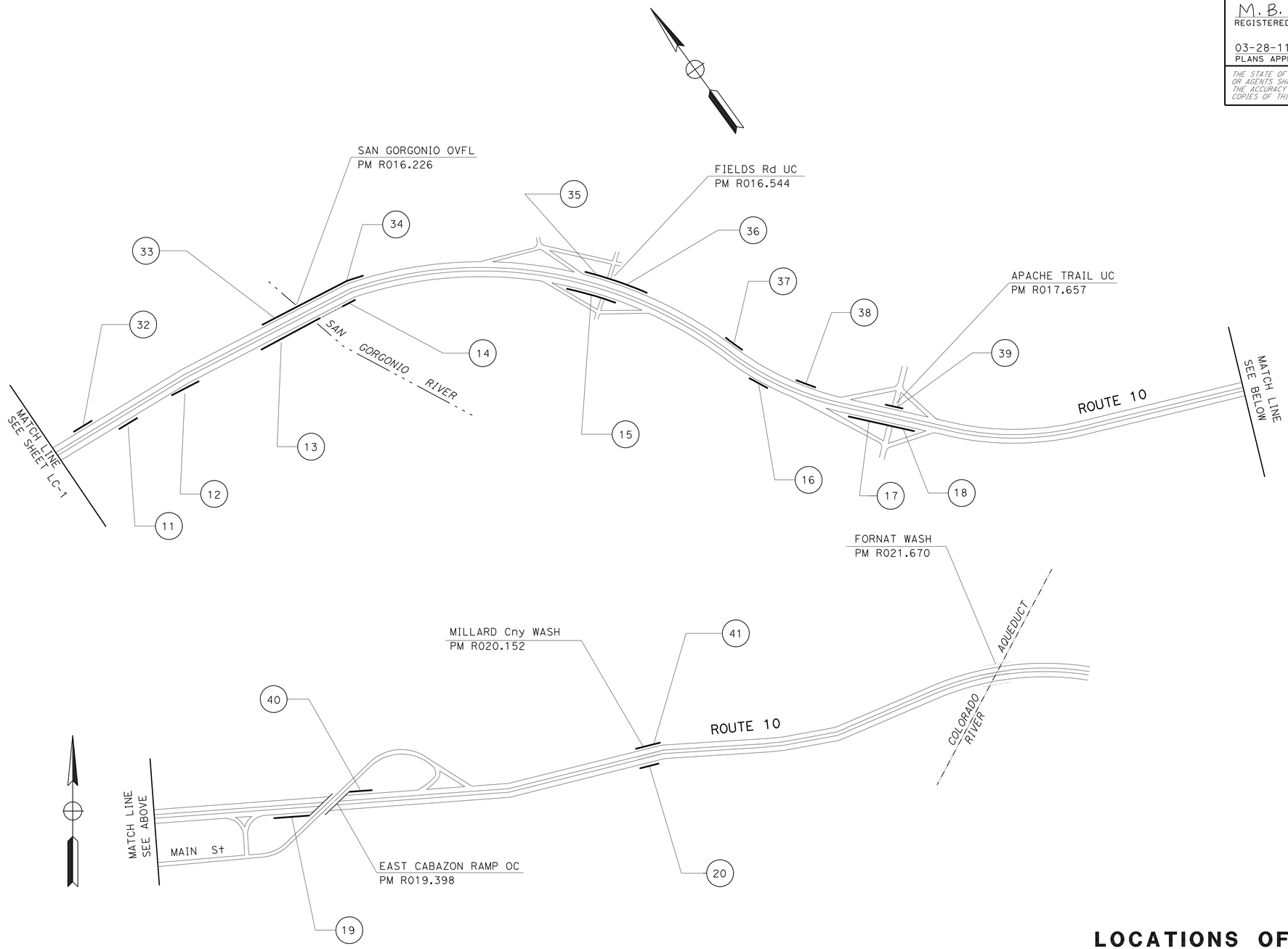

LOCATIONS OF CONSTRUCTION

NO SCALE

LC-2

STATE OF CALIFORNIA - DEPARTMENT OF TRANSPORTATION
Caltrans®
DESIGN

FUNCTIONAL SUPERVISOR: DU LU
CALCULATED-DESIGNED BY: MANOJ HARIYA
CHECKED BY: DU LU
REVISED BY
DATE REVISED

LAST REVISION 03-28-11
DATE PLOTTED => 29-MAR-2011
TIME PLOTTED => 13:31

Dist	COUNTY	ROUTE	POST MILES TOTAL PROJECT	SHEET No.	TOTAL SHEETS
08	Riv	10	9.3/20.2	4	37

M. B. Hariya 3-28-11
REGISTERED CIVIL ENGINEER DATE

03-28-11
PLANS APPROVAL DATE

REGISTERED PROFESSIONAL ENGINEER
MANOJ B. HARIYA
No. 74429
Exp. 9/30/11
CIVIL
STATE OF CALIFORNIA

THE STATE OF CALIFORNIA OR ITS OFFICERS OR AGENTS SHALL NOT BE RESPONSIBLE FOR THE ACCURACY OR COMPLETENESS OF SCANNED COPIES OF THIS PLAN SHEET.

NOTES:

1. EXACT LOCATIONS FOR BEGINNING AND ENDING CONSTRUCTION AT EACH LOCATION TO BE DETERMINED BY THE ENGINEER.
2. MBGR SHOWN ONLY AT ONE SIDE OF THE BRIDGE FOR CLARITY.
3. FOR PCC ANCHOR BLOCK AND TRANSITION RAILING (TYPE WB) DETAILS SEE SHEET C-2 AND C-3.
4. FOR LOCATIONS OF CONSTRUCTION SEE SHEET Q-1.

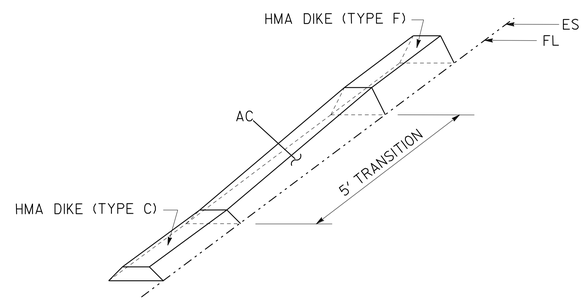

AC DIKE TRANSITION

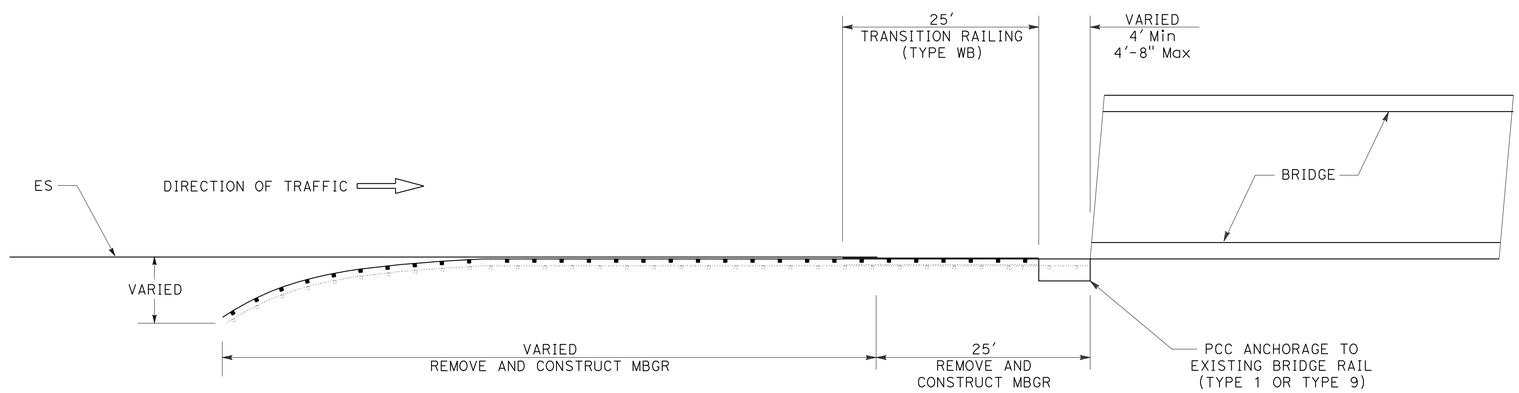

TYPICAL MBGR-BRIDGE CONNECTION
ROUTE 10

CONSTRUCTION DETAILS

NO SCALE

C-1

STATE OF CALIFORNIA - DEPARTMENT OF TRANSPORTATION
Caltrans
DESIGN

FUNCTIONAL SUPERVISOR: DU LU
CALCULATED-DESIGNED BY: MANOJ HARIYA
CHECKED BY: DU LU
REVISED BY
DATE REVISED

LAST REVISION 03-28-11
DATE PLOTTED => 29-MAR-2011
TIME PLOTTED => 13:31

Dist	COUNTY	ROUTE	POST MILES TOTAL PROJECT	SHEET No.	TOTAL SHEETS
08	Riv	10	9.3/20.2	5	37

M. B. Hariya 3-28-11
REGISTERED CIVIL ENGINEER DATE

03-28-11
PLANS APPROVAL DATE

REGISTERED PROFESSIONAL ENGINEER MANOJ B. HARIYA No. 74429 Exp. 9/30/11 CIVIL STATE OF CALIFORNIA

THE STATE OF CALIFORNIA OR ITS OFFICERS OR AGENTS SHALL NOT BE RESPONSIBLE FOR THE ACCURACY OR COMPLETENESS OF SCANNED COPIES OF THIS PLAN SHEET.

NOTES:

1. USE CASE 1 OR CASE 2 WHEN ONE POST IS OMITTED
2. USE CASE 3 WHEN TWO POSTS ARE OMITTED
3. FOR OTHER DETAILS, SEE STANDARD PLANS.

LEGEND

DIRECTION OF TRAFFIC ←

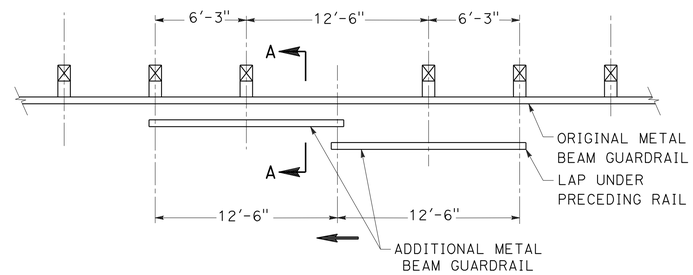

CASE 1
ONE POST OMITTED

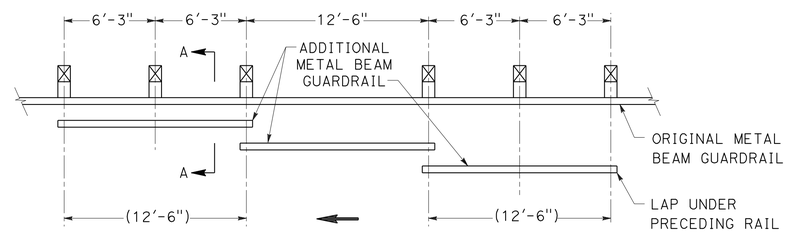

CASE 2
ONE POST OMITTED (SPLICE AT POSTS)

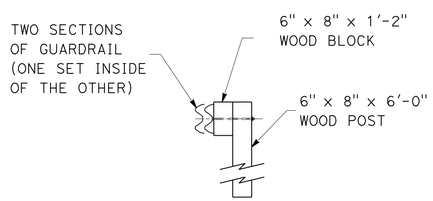

SECTION A-A

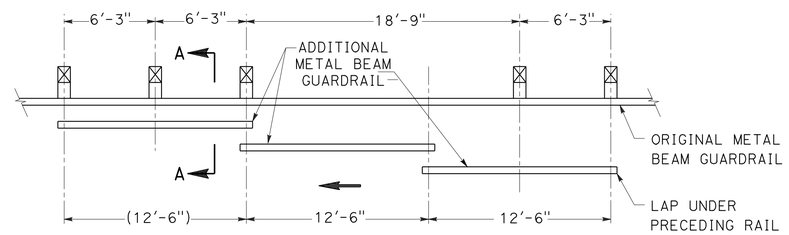

CASE 3
TWO POSTS OMITTED

LONG SPAN NESTED GUARDRAIL

CONSTRUCTION DETAILS

NO SCALE

C-2

STATE OF CALIFORNIA - DEPARTMENT OF TRANSPORTATION
Caltrans DESIGN

FUNCTIONAL SUPERVISOR: DU LU
CALCULATED-DESIGNED BY: MANOJ HARIYA
CHECKED BY: DU LU
REVISED BY / DATE REVISED

LAST REVISION 03-28-11
DATE PLOTTED => 29-MAR-2011
TIME PLOTTED => 13:32

Dist	COUNTY	ROUTE	POST MILES TOTAL PROJECT	SHEET No.	TOTAL SHEETS
08	Riv	10	9.3/20.2	6	37

REGISTERED CIVIL ENGINEER 3-28-11 DATE

03-28-11
PLANS APPROVAL DATE

REGISTERED PROFESSIONAL ENGINEER TRAN HOANG No. 54996 Exp. 6/30/12 CIVIL STATE OF CALIFORNIA

THE STATE OF CALIFORNIA OR ITS OFFICERS OR AGENTS SHALL NOT BE RESPONSIBLE FOR THE ACCURACY OR COMPLETENESS OF SCANNED COPIES OF THIS PLAN SHEET.

LEGEND

- CONSTRUCTION AREA
- CONSTRUCTION AREA SIGN (ONE POST)
- CONSTRUCTION AREA SIGN (TWO POST)
- (X) CONSTRUCTION AREA SIGN
- PORTABLE CHANGEABLE MESSAGE SIGN(PCMS)
- (X) LOCATIONS OF CONSTRUCTION

NOTES:

1. LOCATIONS OF CONSTRUCTION AREA SIGNS AND PCMS ARE APPROXIMATE. EXACT LOCATIONS TO BE DETERMINED BY THE ENGINEER.
2. CONTRACTOR SHALL MAINTAIN AND PROVIDE TRAFFIC ACCESS TO LOCAL BUSINESSES DURING OPERATION.

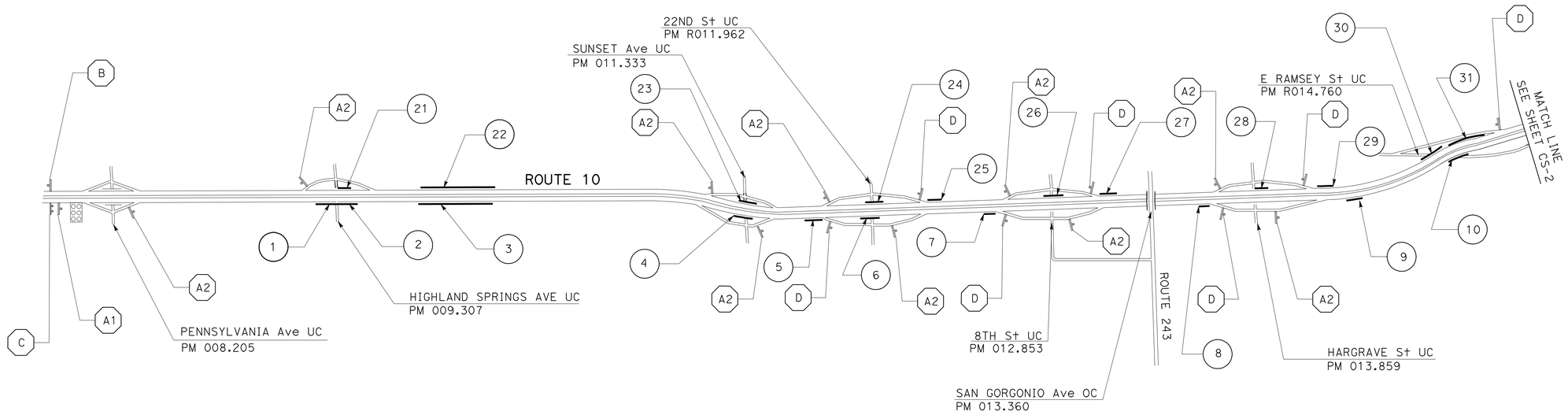

PORTABLE CHANGEABLE MESSAGE SIGN (PCMS)

(EA)
2

STATIONARY MOUNTED CONSTRUCTION AREA SIGNS

SIGN No.	SIGN CODE FED	SIGN CODE CA	PANEL SIZE	SIGN MESSAGE	No. OF POST(S) AND SIZE	No. OF SIGNS (EA)
A1	G20-1		48" X 48"	ROAD WORK NEXT 15 MILES	1 - 6" X 6"	2
A2 *	W20-1		48" X 48"	ROAD WORK AHEAD	1 - 6" X 6"	16
B	G20-2		36" X 18"	END ROAD WORK	1 - 4" X 4"	2
C		C40	108" X 42"	TRAFFIC FINES DOUBLED IN CONSTRUCTION ZONES	2 - 6" X 6"	2
D		SC6-4	48" X 60"	RAMP CLOSED DATE AND TIME	1 - 6" X 6"	6

* PORTABLE CONSTRUCTION AREA SIGNS

THIS PLAN ACCURATE FOR CONSTRUCTION AREA SIGN WORK ONLY

CONSTRUCTION AREA SIGNS

NO SCALE

CS-1

STATE OF CALIFORNIA - DEPARTMENT OF TRANSPORTATION
Caltrans TRAFFIC DESIGN B

FUNCTIONAL SUPERVISOR: LARRY SARTORI
CALCULATED-DESIGNED BY: DARYUSH NAMI
CHECKED BY: PATTI BARTOLI
REVISED BY / DATE REVISED

LAST REVISION 03-28-11
DATE PLOTTED => 29-MAR-2011
TIME PLOTTED => 13:32

Dist	COUNTY	ROUTE	POST MILES TOTAL PROJECT	SHEET No.	TOTAL SHEETS
08	Riv	10	9.3/20.2	7	37

REGISTERED CIVIL ENGINEER 3-28-11 DATE

03-28-11
PLANS APPROVAL DATE

REGISTERED PROFESSIONAL ENGINEER TRAN HOANG No. 54996 Exp. 6/30/12 CIVIL STATE OF CALIFORNIA

THE STATE OF CALIFORNIA OR ITS OFFICERS OR AGENTS SHALL NOT BE RESPONSIBLE FOR THE ACCURACY OR COMPLETENESS OF SCANNED COPIES OF THIS PLAN SHEET.

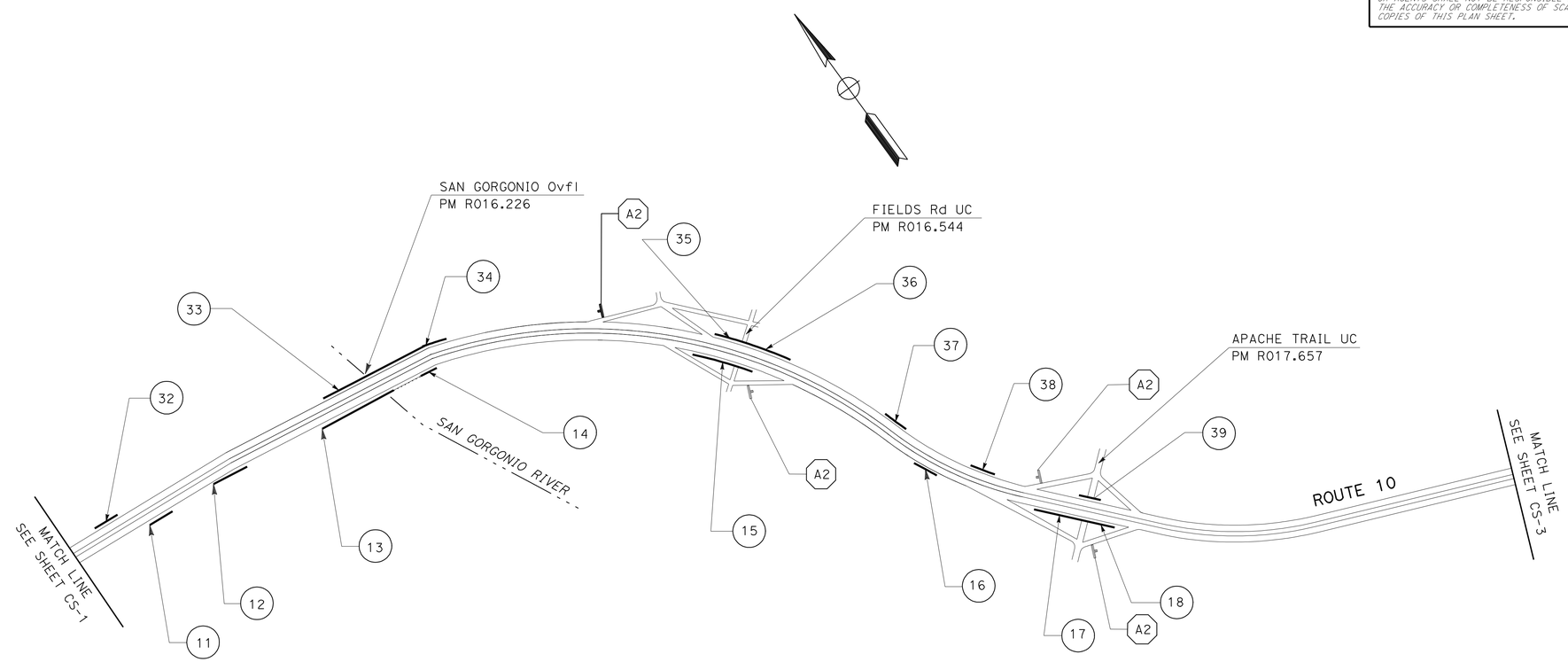

CONSTRUCTION AREA SIGNS

NO SCALE

THIS PLAN ACCURATE FOR CONSTRUCTION AREA SIGN WORK ONLY

CS-2

STATE OF CALIFORNIA - DEPARTMENT OF TRANSPORTATION
Caltrans TRAFFIC DESIGN B

FUNCTIONAL SUPERVISOR: LARRY SARTORI
CALCULATED-DESIGNED BY: DARYUSH NAMI
CHECKED BY: PATTI BARTOLI
REVISED BY
DATE REVISED

LAST REVISION 03-28-11
DATE PLOTTED => 29-MAR-2011
TIME PLOTTED => 13:32

BORDER LAST REVISED 7/2/2010
USERNAME => trlenard
DGN FILE => 847781la002.dgn
RELATIVE BORDER SCALE IS IN INCHES 0 1 2 3
UNIT 2285
PROJECT NUMBER & PHASE 08000007591

Dist	COUNTY	ROUTE	POST MILES TOTAL PROJECT	SHEET No.	TOTAL SHEETS
08	Riv	10	9.3/20.2	8	37

REGISTERED CIVIL ENGINEER 3-28-11 DATE

03-28-11
PLANS APPROVAL DATE

REGISTERED PROFESSIONAL ENGINEER TRAN HOANG No. 54996 Exp. 6/30/12 CIVIL STATE OF CALIFORNIA

THE STATE OF CALIFORNIA OR ITS OFFICERS OR AGENTS SHALL NOT BE RESPONSIBLE FOR THE ACCURACY OR COMPLETENESS OF SCANNED COPIES OF THIS PLAN SHEET.

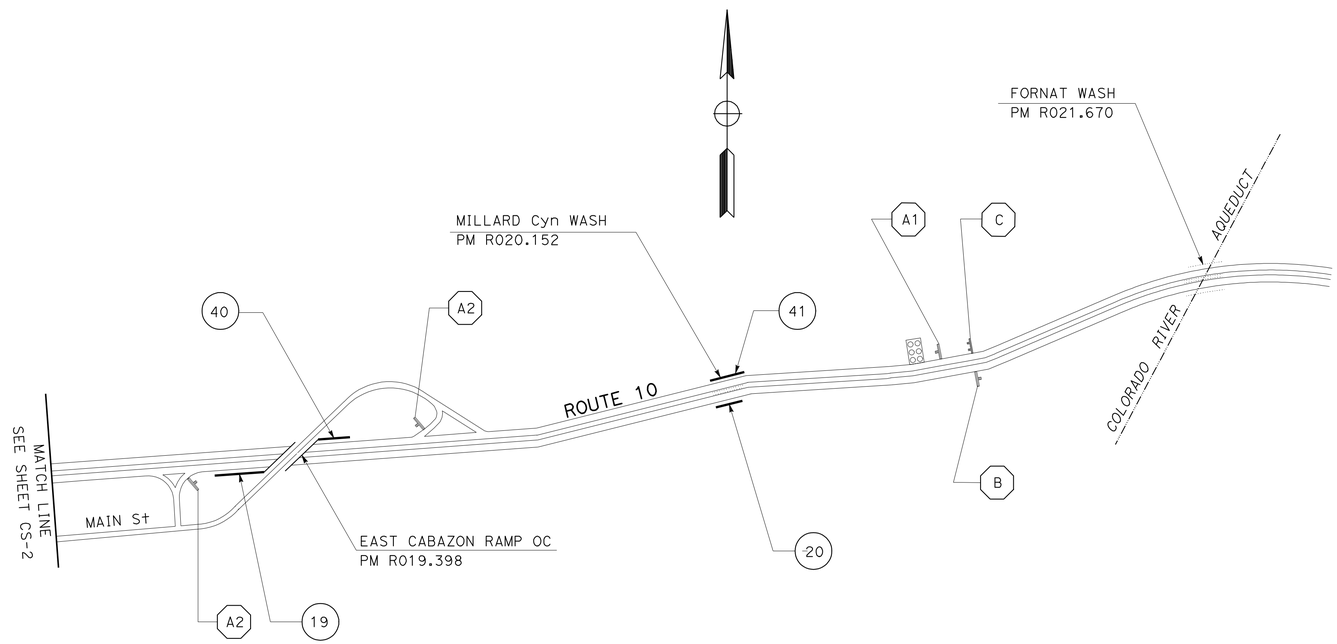

THIS PLAN ACCURATE FOR CONSTRUCTION AREA SIGN WORK ONLY

CONSTRUCTION AREA SIGNS

NO SCALE

CS-3

STATE OF CALIFORNIA - DEPARTMENT OF TRANSPORTATION
Caltrans TRAFFIC DESIGN B

FUNCTIONAL SUPERVISOR: LARRY SARTORI
CALCULATED-DESIGNED BY: DARYUSH NAMI
CHECKED BY: PATTI BARTOLI
REVISED BY
DATE REVISED

LAST REVISION 03-28-11
DATE PLOTTED => 29-MAR-2011
TIME PLOTTED => 13:32

Dist	COUNTY	ROUTE	POST MILES TOTAL PROJECT	SHEET No.	TOTAL SHEETS
08	Riv	10	9.3/20.2	9	37

REGISTERED CIVIL ENGINEER — DATE 3-28-11

03-28-11
PLANS APPROVAL DATE

REGISTERED PROFESSIONAL ENGINEER — TRAN HOANG No. 54996 Exp. 6/30/12 CIVIL — STATE OF CALIFORNIA

THE STATE OF CALIFORNIA OR ITS OFFICERS OR AGENTS SHALL NOT BE RESPONSIBLE FOR THE ACCURACY OR COMPLETENESS OF SCANNED COPIES OF THIS PLAN SHEET.

LEGEND

DELINEATOR

DIRECTION OF TRAVEL

S = DELINEATOR SPACING IN FEET

X = INSTALL DELINEATORS PERPENDICULAR TO THE ONCOMING TRAFFIC.

R = CENTERLINE CURVE REDIUS IN FEET

NOTES:

1. THE MAXIMUM SPACING BETWEEN DELINEATORS ON A CURVE IS 150 FEET.
2. PRORATE DISTANCE "X" AMONG ALL SPACING SO THE LAST DELINEATOR FALLS AT THE END OF THE CURVE.
3. INSTALL DELINEATORS PERPENDICULAR TO THE ONCOMING TRAFFIC.

DELINEATOR SPACING ON CURVES

R IN FEET	S IN FEET
50	20
75	26
100	30
150	36
200	40
300	50
400	60
500	65
600	72.5
700	75
800	82.2
900	85
1000	92.5
1200	100
1400	110
1600	115
1800	120
2000	130
2500	145
3000	150

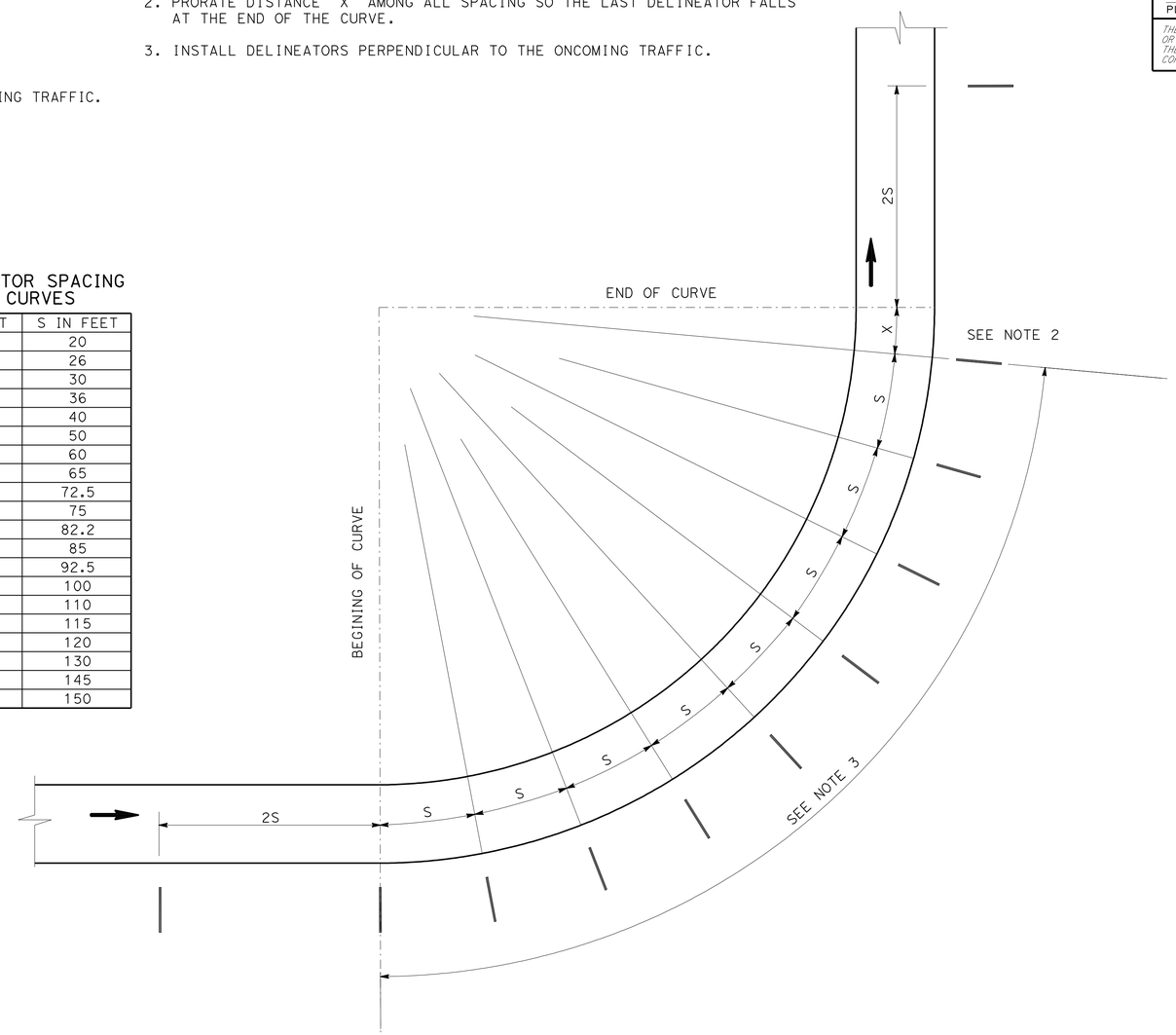

DELINEATOR SPACING ON CURVES

PAVEMENT DELINEATION PLAN

NO SCALE

THIS PLAN ACCURATE FOR PAVEMENT DELINEATION WORK ONLY

PD-1

STATE OF CALIFORNIA - DEPARTMENT OF TRANSPORTATION
Caltrans TRAFFIC DESIGN B

FUNCTIONAL SUPERVISOR: LARRY SARTORI
CALCULATED-DESIGNED BY: DARYUSH NAMI
CHECKED BY: PATTI BARTOLI
REVISED BY
DATE REVISED

LAST REVISION 03-28-11
DATE PLOTTED => 29-MAR-2011
TIME PLOTTED => 13:32

Dist	COUNTY	ROUTE	POST MILES TOTAL PROJECT	SHEET No.	TOTAL SHEETS
08	Riv	10	9.3/20.2	10	37

REGISTERED CIVIL ENGINEER 3-28-11 DATE

03-28-11
PLANS APPROVAL DATE

REGISTERED PROFESSIONAL ENGINEER TRAN HOANG No. 54996 Exp. 6/30/12 CIVIL STATE OF CALIFORNIA

THE STATE OF CALIFORNIA OR ITS OFFICERS OR AGENTS SHALL NOT BE RESPONSIBLE FOR THE ACCURACY OR COMPLETENESS OF SCANNED COPIES OF THIS PLAN SHEET.

LEGEND

DIRECTION OF ADJACENT TRAFFIC →

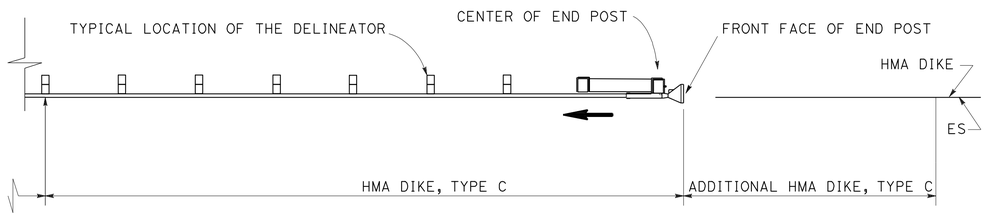

TYPE 11A LAYOUT
NO SCALE

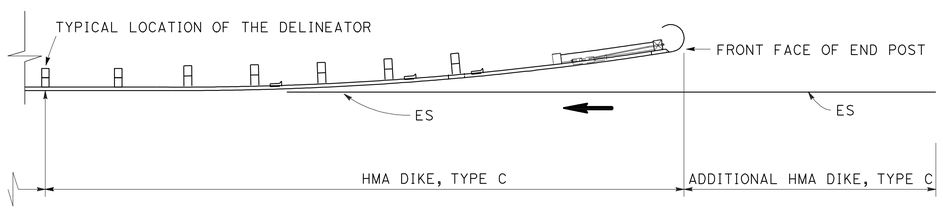

TYPE 11B LAYOUT
NO SCALE

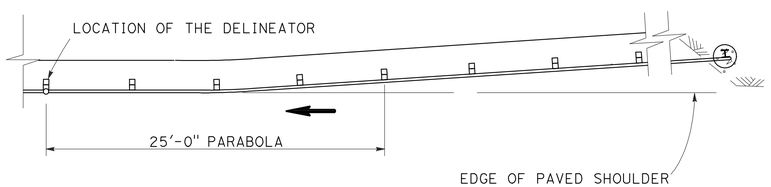

TYPE 11C LAYOUT
NO SCALE

PLACEMENT OF DELINEATOR ON GUARD RAIL

QUANTITIES

LOCATION AND POSTMILE		RESET MILEPOST MARKER	RESET ROADSIDE SIGN (ONE POST)	DELINEATOR (TYPE F) CLASS I	GUARD RAILING DELINEATOR	NOTES
	PM	EA	EA	EA	EA	
1	R9.31	0	2	6	0	Highland Springs UC (Before Br. # 56-432)
2	R9.31	0	0	6	0	Highland Springs UC (After Br. # 56-432)
3	10.00	0	0	3	3	0.75 Mile East of Bridge # 56-435
4	R11.33	0	1	0	1	Sunset Ave UC Br. # 56-431
5	11.80	0	1	0	1	22nd St. OFF Ramp Sign Post
6	R11.97	0	1	1	0	22nd St. UC
7	12.65	0	0	0	3	8th St. Idylwild OFF Ramp
8	13.60	0	1	1	0	Hargrove St. Off Ramp Sign
9	14.00	0	1	2	0	Scale Sensor Sign
10	14.76	0	1	0	0	East Ramsey St. UC Br. # 56-328
11	15.30	0	0	0	0	Scale Close Sign
12	15.50	1	0	9	1	Exit to Scale
13	16.10	1	2	0	0	San Gorgonio Wash Br. # 56-003
14	16.23	0	1	4	2	San Gorgonio Ovfl Br. # 56-351
15	16.54	0	1	0	0	Fields Road UC Br. # 56-454
16	17.05	0	0	0	0	Cabazon Exit Sign
17	17.66	0	1	9	0	Apache Trail UC Br. # 56-455 (Before Bridge)
18	17.66	0	0	4	0	Apache Trail UC Br. # 56-455 (After Bridge)
19	19.40	0	1	1	0	East Cabazon Ramp OC Br. # 56-456
20	20.15	0	1	1	0	Millard Canyon Wash Br. # 56-529
21	R9.31	0	2	1	0	Highland Springs UC Br. # 56-432
22	10.03	2	0	9	1	Highland Springs UC (.7 miles east)
23	R11.35	0	1	0	1	Sunset Ave UC Br. # 56-431
24	11.96	0	1	1	1	22nd St. UC Br. # 56-430
25	R11.97	0	0	0	0	22nd St. OFF Ramp Sign Post
26	12.85	0	1	1	1	8th St. UC Br. # 56-323
27	13.00	2	0	0	1	8th St. Idylwild OFF Ramp Sign
28	13.87	0	1	0	1	Hargrove St. UC Before Br. # 56-324
29	14.00	0	0	1	0	Hargrove St. Off Ramp Sign
30	14.77	1	1	2	0	East Ramsey St. UC Br. # 56-328
31	15.65	0	0	0	0	Ramsey St. Off Ramp
32	15.80	2	0	15	1	Itta Wash
33	16.14	0	0	1	0	San Gorgonio Wash After Br. # 56-003
34	16.23	0	1	2	0	San Gorgonio Ovfl Br. # 56-351
35	16.50	1	1	5	1	Fields Road UC After Br. # 56-454
36	16.56	0	3	15	2	Fields Road UC Before Br. # 56-454
37	17.00	0	0	3	0	Before Truck Scales Off Ramp
38	17.40	0	0	5	1	Before Field Road Exit 1 Mile
39	17.69	1	1	0	2	Apache Trail UC Br. # 56-455
40	19.40	0	1	0	1	East Cabazon Ramp OC Br. # 56-456
41	20.15	0	1	0	0	Millard Canyon Wash Br. # 56-529
TOTAL		11	30	108	25	

PAVEMENT DELINEATION QUANTITIES

THIS PLAN ACCURATE FOR PAVEMENT DELINEATION WORK ONLY

PDQ-1

STATE OF CALIFORNIA - DEPARTMENT OF TRANSPORTATION
Caltrans TRAFFIC DESIGN B

FUNCTIONAL SUPERVISOR: LARRY SARTORI
CALCULATED-DESIGNED BY: DARYUSH NAMI
CHECKED BY: PATTI BARTOLI
REVISED BY / DATE REVISED

DATE PLOTTED => 29-MAR-2011
TIME PLOTTED => 13:32
LAST REVISION 03-28-11

Dist	COUNTY	ROUTE	POST MILES TOTAL PROJECT	SHEET No.	TOTAL SHEETS
08	Riv	10	9.3/20.2	11	37

M. B. Hariya 3-28-11
REGISTERED CIVIL ENGINEER DATE

03-28-11
PLANS APPROVAL DATE

REGISTERED PROFESSIONAL ENGINEER MANOJ B. HARIYA No. 74429 Exp. 9/30/11 CIVIL STATE OF CALIFORNIA

THE STATE OF CALIFORNIA OR ITS OFFICERS OR AGENTS SHALL NOT BE RESPONSIBLE FOR THE ACCURACY OR COMPLETENESS OF SCANNED COPIES OF THIS PLAN SHEET.

NOTE:

1. STATIONS ARE APPROXIMATE FOR LIMITS OF HMA DIKE, EXACT LOCATIONS SHALL BE DETERMINED BY THE RESIDENT ENGINEER.
2. SEE STRUCTURE PLANS FOR DETAILS.

ABBREVIATIONS:

O = OUTER EDGE OF TRAVEL
R = RAMP
* : 4.67 FEET WIDE AND 3 INCHES THICK

METAL BEAM GUARD RAILING

EASTBOUND DIRECTION			LOCATION OF WORK	REMOVE MBGR	CONSTRUCT MBGR (WOOD POST)	TRANSITION RAILING (TYPE WB)	ALTERNATIVE FLARED TERMINAL SYSTEM	ALTERNATIVE INLINE TERMINAL SYSTEM	TERMINAL ANCHOR ASSEMBLY (TYPE SFT)	END CAP (TYPE TC)	END CAP (TYPE A)	EXISTING BRIDGE RAIL TYPE		ANCHOR BLOCK TYPE		REMOVE ASPHALT CONCRETE DIKE	PLACE HMA DIKE (TYPE F)	PLACE HMA DIKE (TYPE C)	MINOR HMA (DIKE)	VEGETATION CONTROL (MINOR CONCRETE) *	REMARKS
												1	9	1	9						
LOC. No.	POST MILE	BRIDGE NAME	O, R	LF	LF	EA	EA	EA	EA	EA	EA	EA (N)	EA (N)	EA (N)	EA (N)	LF	LF	LF	TON	SQYD	
1	R9.31	HIGHLAND SPRINGS UC BR# 56-432 (BEFORE)	O	461	400	1	1	0	0	1	0	1	0	1	0	461	425	62.5	6.16	245.18	SEE RSP A77F1
2	R9.31	HIGHLAND SPRINGS UC BR# 56-432 (AFTER)	O	581	587.5	0	0	0	1	0	1	1	0	1	0	581	587.5	0	7.85	291.88	SEE RSP A77J1
3	10.00	0.75 MILE EAST OF BR# 56-435	O	848	812.5	0	1	0	1	0	0	0	0	0	0	848	812.5	62.5	11.34	446.24	SEE RSP A77F1
4	R11.33	SUNSET AVE UC BR# 56-431(BEFORE)	O	66	12.5	1	1	0	0	1	0	1	0	1	0	66	37.5	62.5	0.98	44.11	SEE RSP A77F1
5	11.80	22 ND ST. OFF RAMP SIGN POST	R	92	50	0	0	1	1	0	0	0	0	0	0	92	50	75	1.25	57.08	SEE RSP A77E1
6	R11.97	22 ND ST. UC BR# 56-430	O	78	37.5	1	0	1	0	1	0	0	1	0	1	78	37.5	75	1.08	63.56	SEE RSP A77E1
7	12.65	8 TH ST. IDYLWILD OFF RAMP	R	102	75	0	1	0	1	0	0	0	0	0	0	102	75	62.5	1.48	63.56	SEE RSP A77E1
8	13.6	HARGROVE ST.OFF RAMP SIGN POST	R	90	62.5	0	1	0	1	0	0	0	0	0	0	90	62.5	62.5	1.32	32.43	SEE RSP A77E1
9	14.00	SCALE SENSOR SIGN POST	O	90	50	0	0	1	1	0	0	0	0	0	0	0	0	0	0	57.08	SEE RSP A77G3
10	14.76	EAST RAMSEY ST. UC BR# 56-328	O	80	50	1	1	0	0	1	0	1	0	1	0	80	50	62.5	1.15	63.56	SEE RSP A77F1
11	15.3	SCALE CLOSE SIGN	O	77	50	0	1	0	1	0	0	0	0	0	0	77	50	62.5	1.15	50.59	SEE RSP A77G3
12	15.5	EXIT TO SCALE	O	620	575	0	0	1	1	0	0	0	0	0	0	620	575	75	8.26	329.49	SEE RSP A77G3
13	16.1	SAN GORGONIO WASH BR# 56-003	O	66	12.5	1	1	0	0	1	0	1	0	1	0	66	37.5	62.5	0.98	44.11	SEE RSP A77F1
14	16.23	SAN GORGONIO OVFL BR# 56-351	O	200	225	1	0	0	0	1	1	1	0	2	0	200	200	0	2.67	116.75	SEE RSP A77J1
15	16.54	FIELDS ROAD UC BR# 56-454	O	364	337.5	1	1	0	0	1	0	1	0	1	0	364	337.5	62.5	4.99	212.74	SEE RSP A77F1
16	17.05	CABAZON EXIT SIGN	O	90	62.5	0	1	0	1	0	0	0	0	0	0	0	62.5	62.5	1.32	57.08	SEE RSP A77G3
17	17.66	APACHE TRAIL UC BR# 56-455 (BEFORE)	O	712	650	1	1	0	0	1	0	1	0	1	0	0	0	0	0	374.90	SEE RSP A77F1
18	17.66	APACHE TRAIL UC BR# 56-455 (AFTER)	O	350	350	0	1	0	1	0	1	1	0	1	0	350	325	62.5	4.82	193.29	SEE RSP A77J1
19	19.4	EAST CABAZON RAMP OC BR# 56-456	O	106	75	1	1	0	0	1	0	EXISTING IN FILL WALL				106	75	62.5	1.48	76.54	
20	20.15	MILLARD CANYON WASH BR# 56-529	O	104	75	1	1	0	0	1	0	1	0	1	0	104	75	62.5	1.48	76.54	SEE RSP A77F1
SUBTOTAL				5177	4550	10	14	4	10	10	3					4285	3875	1037.5	59.76	2896.71	

SUMMARY OF QUANTITIES

Q-1

STATE OF CALIFORNIA - DEPARTMENT OF TRANSPORTATION
Caltrans DESIGN

FUNCTIONAL SUPERVISOR: DU LU
CALCULATED-DESIGNED BY: MANOJ HARIYA
CHECKED BY: DU LU
REVISED BY
DATE REVISED

LAST REVISION 03-28-11
DATE PLOTTED => 29-MAR-2011
TIME PLOTTED => 13:32

Dist	COUNTY	ROUTE	POST MILES TOTAL PROJECT	SHEET No.	TOTAL SHEETS
08	Riv	10	9.3/20.2	12	37

M. B. Hariya 3-28-11
REGISTERED CIVIL ENGINEER DATE

03-28-11
PLANS APPROVAL DATE

REGISTERED PROFESSIONAL ENGINEER MANOJ B. HARIYA No. 74429 Exp. 9/30/11 CIVIL STATE OF CALIFORNIA

THE STATE OF CALIFORNIA OR ITS OFFICERS OR AGENTS SHALL NOT BE RESPONSIBLE FOR THE ACCURACY OR COMPLETENESS OF SCANNED COPIES OF THIS PLAN SHEET.

METAL BEAM GUARD RAILING

WESTBOUND DIRECTION			LOCATION OF WORK	REMOVE MBGR	CONSTRUCT MBGR (WOOD POST)	TRANSITION RAILING (TYPE WB)	ALTERNATIVE FLARED TERMINAL SYSTEM	ALTERNATIVE INLINE TERMINAL SYSTEM	TERMINAL ANCHOR ASSEMBLY (TYPE SFT)	END CAP (TYPE TC)	END CAP (TYPE A)	EXISTING BRIDGE RAIL TYPE		ANCHOR BLOCK TYPE		REMOVE ASPHALT CONCRETE DIKE	PLACE HMA DIKE (TYPE F)	PLACE HMA DIKE (TYPE C)	MINOR HMA (DIKE)	VEGETATION CONTROL (MINOR CONCRETE) *	REMARKS
												1	9	1	9						
LOC. No.	POST MILE	BRIDGE NAME	O, R	LF	LF	EA	EA	EA	EA	EA	EA	EA (N)	EA (N)	EA (N)	EA (N)	LF	LF	LF	TON	SQYD	
21	R9.31	HIGHLAND SPRINGS UC BR# 56-432	O	64	12.5	1	1	0	0	1	0	1	0	1	0	64	37.5	62.5	0.98	44.11	SEE RSP A77F1
22	10.03	HIGHLAND SPRINGS UC (ABOUT 0.7 MILES EAST)	O	727	700	0	1	0	1	0	0	0	0	0	0	0	700	62.5	9.84	387.87	SEE RSP A77F1
23	R11.35	SUNSET AVE UC BR# 56-431	O	77	12.5	1	0	1	0	1	0	1	0	1	0	77	37.5	75	1.08	50.59	SEE RSP A77F1
24	11.96	22 ND ST UC BR#56-430	O	79	12.5	1	0	1	0	1	0	0	1	0	1	79	37.5	75	1.08	50.59	SEE RSP A77F1
25	R11.97	22 ND ST. OFF RAMP SIGN POST	R	79	50	0	1	0	1	0	0	0	0	0	0	0	50	62.5	1.15	50.59	SEE RSP A77E1
26	12.85	8 TH ST UC BR# 56-323	O	78	12.5	1	0	1	0	1	0	0	1	0	1	78	37.5	75	1.08	50.59	SEE RSP A77F1
27	13.00	8 TH ST. IDYLWILD OFF RAMP SIGN	R	91	50	0	0	1	1	0	0	0	0	0	0	91	50	75	1.25	57.08	SEE RSP A77E1
28	13.87	HARGROVE ST. UC BR# 56-324 (BEFORE)	O	78	12.5	1	0	1	0	1	0	0	1	0	1	78	37.5	75	1.08	50.59	SEE RSP A77F1
29	14.00	HARGROVE ST. OFF RAMP SIGN	R	79	50	0	1	0	1	0	0	0	0	0	0	0	50	62.5	1.15	50.59	SEE RSP A77E1
30	14.77	EAST RAMSEY ST. UC BR# 56-328	O	204	175	1	1	0	0	1	0	1	0	1	0	0	175	62.5	2.82	115.45	SEE RSP A77F1
31	15.65	RAMSEY ST. OFF RAMP	O	1597	1562.5	0	1	0	1	0	0	0	0	0	0	1597	1562.5	62.5	21.36	835.41	SEE RSP A77E1
32	15.80	ITTA WASH BR# 56-255	R	118	87.5	0	1	0	1	0	0	0	0	0	0	0	0	0	0	70.05	SEE RSP A77E1
33	16.14	SAN GORGONIO WASH BR# 56-003 (AFTER)	O	129	162.5	0	1	0	1	0	1	1	0	1	0	0	0	0	0	83.02	SEE RSP A77J1
34	16.23	SAN GORGONIO OVFL BR# 56-351	O	362	300	1	1	0	0	1	0	1	0	1	0	0	325	62.5	4.82	193.29	SEE RSP A77F1
35	16.50	FIELDS ROAD UC BR# 56-454 (AFTER)	O	651	650	0	0	0	1	0	1	1	0	1	0	651	651	0	8.70	324.31	SEE RSP A77J1
36	16.56	FIELDS ROAD UC BR# 56-454 (BEFORE)	O	1390	1337.5	1	1	0	0	1	0	1	0	1	0	0	0	0	0	731.63	SEE RSP A77F1
37	17.00	BEFORE TRACK SCALES OFF RAMP	O	66	37.5	0	1	0	1	0	0	0	0	0	0	0	37.5	62.5	0.98	44.11	SEE RSP A77E1
38	17.40	BEFORE FIELD ROAD EXIT 1 MILE	O	289	262.5	0	1	0	1	0	0	0	0	0	0	0	262.5	62.5	3.99	160.86	SEE RSP A77E1
39	17.69	APACHE TRAIL UC BR# 56-455	O	66	12.5	1	1	0	0	1	0	1	0	1	0	66	37.5	62.5	0.98	44.11	SEE RSP A77F1
40	19.40	EAST CABAZON RAMP OC BR# 56-456	O	167	137.5	0	1	0	1	0	0	EXISTING IN FILL WALL				167	137.5	62.5	2.32	95.99	
41	20.15	MILLARD CANYON WASH BR# 56-529	O	129	75	1	1	0	0	1	0	1	0	1	0	0	0	0	0	76.54	SEE RSP A77F1
SUBTOTAL				6520	5687.5	10	15	5	11	10	2	9	3	10	3	2948	4226	1062.5	64.66	3567.37	
TOTAL EASTBOUND AND WESTBOUND DIRECTION				11697	10237.5	20	29	9	21	20	5	19	4	20	4	7233	8101	2100.0	124.42	6464.08	

SUMMARY OF QUANTITIES

Q-2

STATE OF CALIFORNIA - DEPARTMENT OF TRANSPORTATION
Caltrans® DESIGN

CALCULATED-DESIGNED BY: MANOJ HARIYA
CHECKED BY: DU LU
FUNCTIONAL SUPERVISOR: DU LU
REVISED BY / DATE REVISED

LAST REVISION 03-28-11
DATE PLOTTED => 29-MAR-2011
TIME PLOTTED => 13:32

Dist	COUNTY	ROUTE	POST MILES TOTAL PROJECT	SHEET No.	TOTAL SHEETS
08	Riv	10	9.3/20.2	13	37

M. B. Hariya 3-28-11
REGISTERED CIVIL ENGINEER DATE

03-28-11
PLANS APPROVAL DATE

REGISTERED PROFESSIONAL ENGINEER MANOJ B. HARIYA No. 74429 Exp. 9/30/11 CIVIL STATE OF CALIFORNIA

THE STATE OF CALIFORNIA OR ITS OFFICERS OR AGENTS SHALL NOT BE RESPONSIBLE FOR THE ACCURACY OR COMPLETENESS OF SCANNED COPIES OF THIS PLAN SHEET.

NOTE:

1. THE QUANTITY OF CONSTRUCTION SITE BMPs SHOWN ARE INTENDED TO BE USED AS GUIDE LINES ONLY. FIELD CONDITION MAY NECESSITATE MODIFICATION OR RELOCATION OF BMPs. AND ITS QUANTITIES AS PER INSTRUCTION OF ENGINEER.

TEMPORARY
WATER POLLUTION CONTROL QUANTITIES

TEMPORARY CONSTRUCTION SITE BMPs	UNITS	QUANTITIES
TEMPORARY FIBER ROLL	LF	900
TEMPORARY GRAVEL BAG BERM	LF	800
TEMPORARY COVER	SQYD	240
TEMPORARY DRAINAGE INLET PROTECTION	EACH	6

REVISED BY | DATE REVISED
MANOJ HARIYA | DU LU
CALCULATED-DESIGNED BY | CHECKED BY
FUNCTIONAL SUPERVISOR
DU LU

STATE OF CALIFORNIA - DEPARTMENT OF TRANSPORTATION
Caltrans®
DESIGN

SUMMARY OF QUANTITIES
Q-3

LAST REVISION 03-28-11 | DATE PLOTTED => 29-MAR-2011 | TIME PLOTTED => 13:32

DIST	COUNTY	ROUTE	POST MILES TOTAL PROJECT	SHEET NO.	TOTAL SHEETS
08	Riv	10	9.3/20.2	14	37

Randell D. Hiatt
REGISTERED CIVIL ENGINEER

October 20, 2006
PLANS APPROVAL DATE

REGISTERED PROFESSIONAL ENGINEER
Randell D. Hiatt
No. C50200
Exp. 6-30-07
CIVIL
STATE OF CALIFORNIA

The State of California or its officers or agents shall not be responsible for the accuracy or completeness of electronic copies of this plan sheet.

To accompany plans dated March 28, 2011

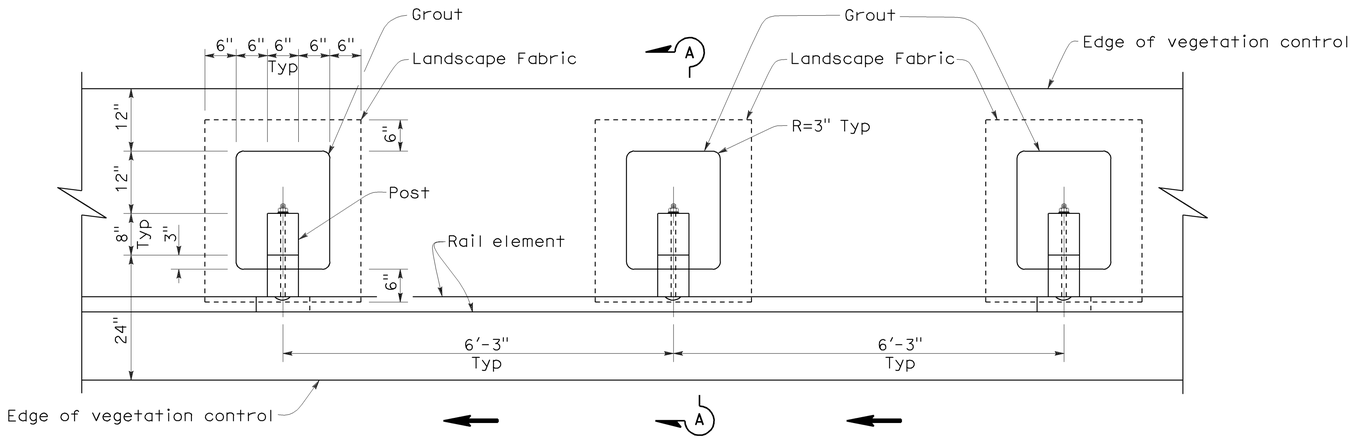

PLAN

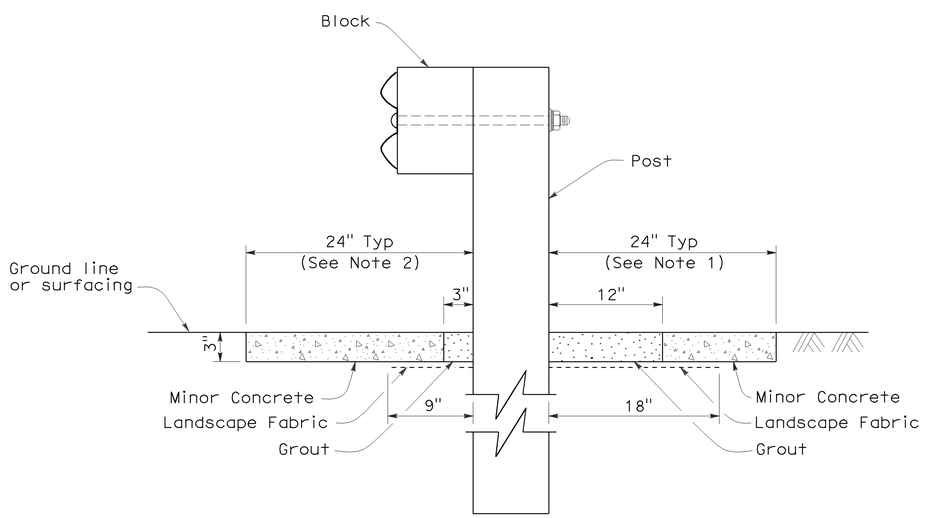

SECTION A-A

NOTES:

1. Where the distance between back of post and hinge point is less than 24", vegetation control to be constructed flush with the back edge of the post.
2. Where dike is constructed under railing, construct vegetation control to back edge of dike. Where paved shoulder is constructed within 24" in front of the post, construct vegetation control to the edge of paved shoulder.
3. Direction of adjacent traffic indicated by ←.

STATE OF CALIFORNIA
DEPARTMENT OF TRANSPORTATION

METAL BEAM GUARD RAILING TYPICAL VEGETATION CONTROL STANDARD RAILING SECTION

NO SCALE

NSP A77C5 DATED OCTOBER 20, 2006 SUPPLEMENTS THE STANDARD PLANS BOOK DATED MAY 2006.

NEW STANDARD PLAN NSP A77C5

2006 NEW STANDARD PLAN NSP A77C5

7-17-06

DIST	COUNTY	ROUTE	POST MILES TOTAL PROJECT	SHEET NO.	TOTAL SHEETS
08	Riv	10	9.3/20.2	15	37

Randell D. Hiatt
REGISTERED CIVIL ENGINEER

October 20, 2006
PLANS APPROVAL DATE

REGISTERED PROFESSIONAL ENGINEER
Randell D. Hiatt
No. C50200
Exp. 6-30-07
CIVIL
STATE OF CALIFORNIA

The State of California or its officers or agents shall not be responsible for the accuracy or completeness of electronic copies of this plan sheet.

To accompany plans dated March 28, 2011

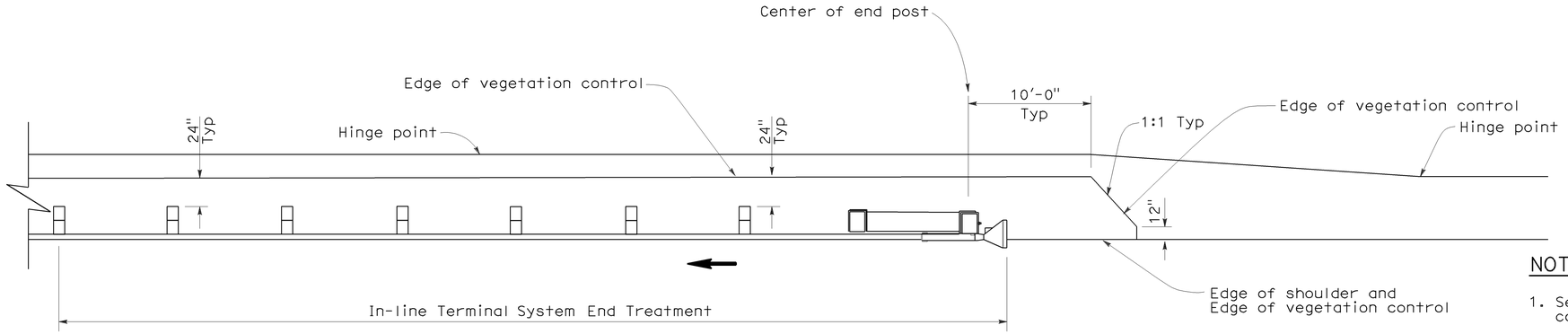

PLAN

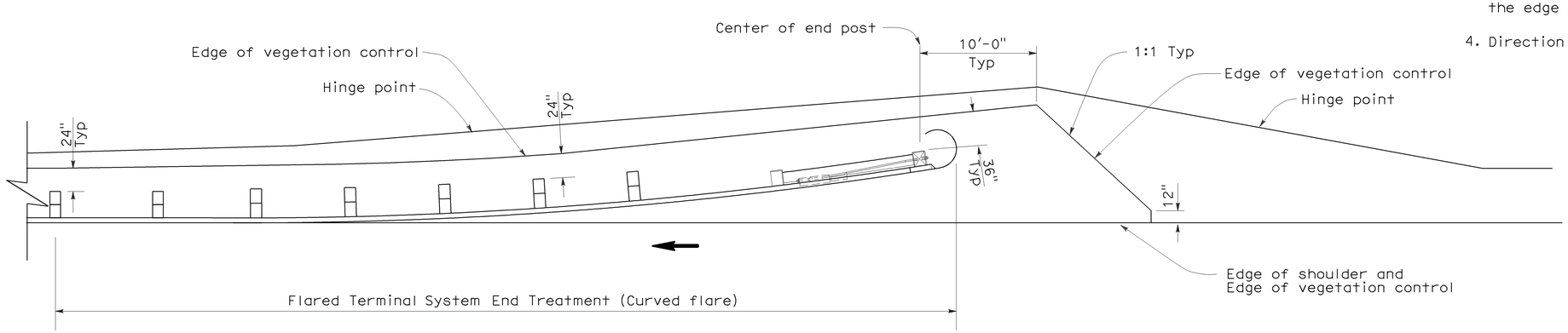

PLAN

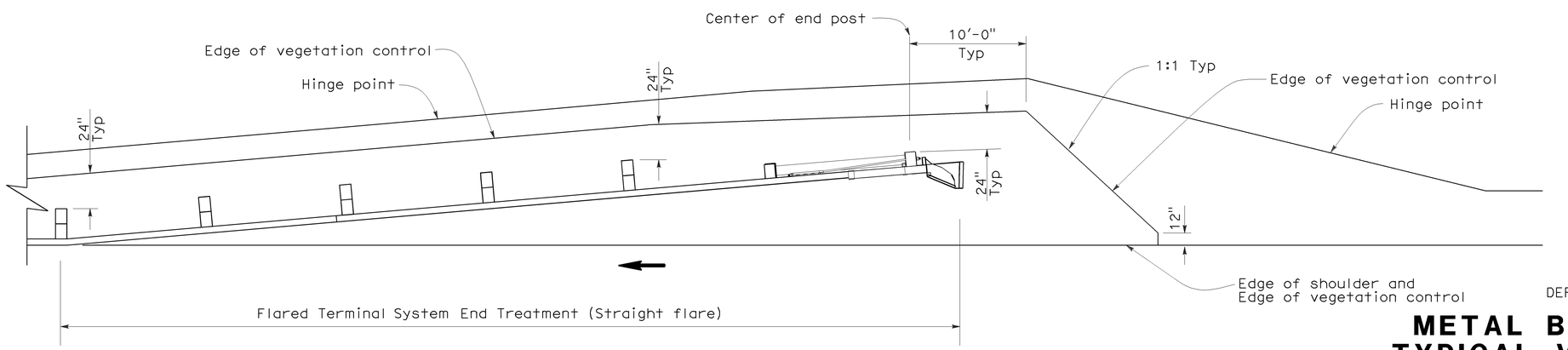

PLAN

NOTES:

1. See New Standard Plan NSP A77C5 for additional vegetation control details.
2. Where the distance between back of post and hinge point is less than 24", vegetation control to be constructed flush with the back edge of the post.
3. Where dike is constructed under railing, construct vegetation control to back edge of dike. Where paved shoulder is constructed within 24" in front of the post, construct vegetation control to the edge of paved shoulder.
4. Direction of adjacent traffic indicated by ←.

STATE OF CALIFORNIA
DEPARTMENT OF TRANSPORTATION

METAL BEAM GUARD RAILING TYPICAL VEGETATION CONTROL FOR TERMINAL SYSTEM END TREATMENTS

NO SCALE

NSP A77C6 DATED OCTOBER 20, 2006 SUPPLEMENTS THE STANDARD PLANS BOOK DATED MAY 2006.

NEW STANDARD PLAN NSP A77C6

2006 NEW STANDARD PLAN NSP A77C6

7-17-06

DIST	COUNTY	ROUTE	POST MILES TOTAL PROJECT	SHEET NO.	TOTAL SHEETS
08	Riv	10	9.3/20.2	16	37

Randell D. Hiatt
REGISTERED CIVIL ENGINEER

October 20, 2006
PLANS APPROVAL DATE

REGISTERED PROFESSIONAL ENGINEER
Randell D. Hiatt
No. C50200
Exp. 6-30-07
CIVIL
STATE OF CALIFORNIA

The State of California or its officers or agents shall not be responsible for the accuracy or completeness of electronic copies of this plan sheet.

To accompany plans dated March 28, 2011

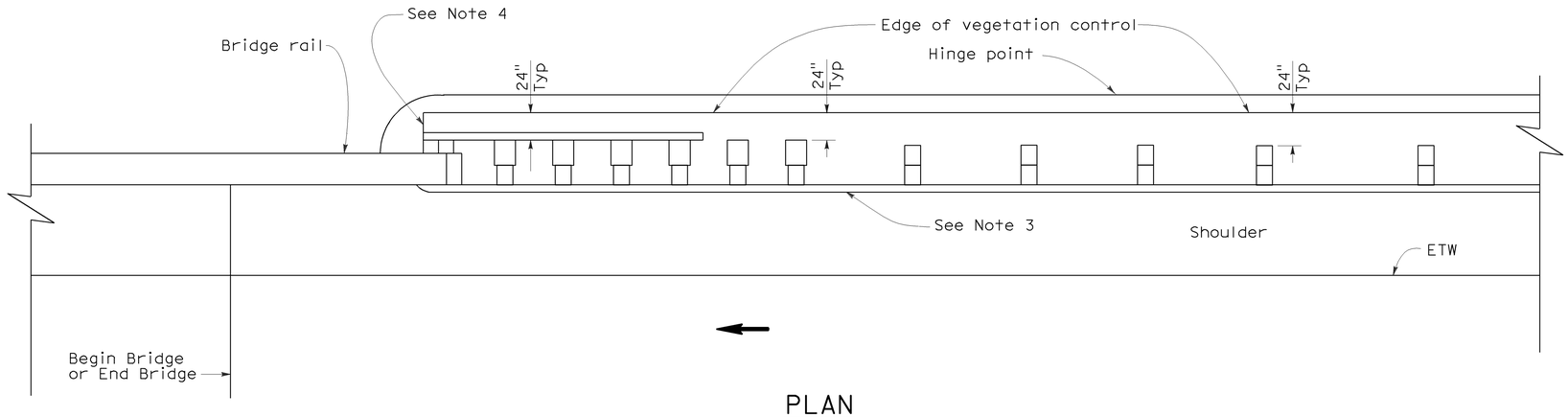

PLAN

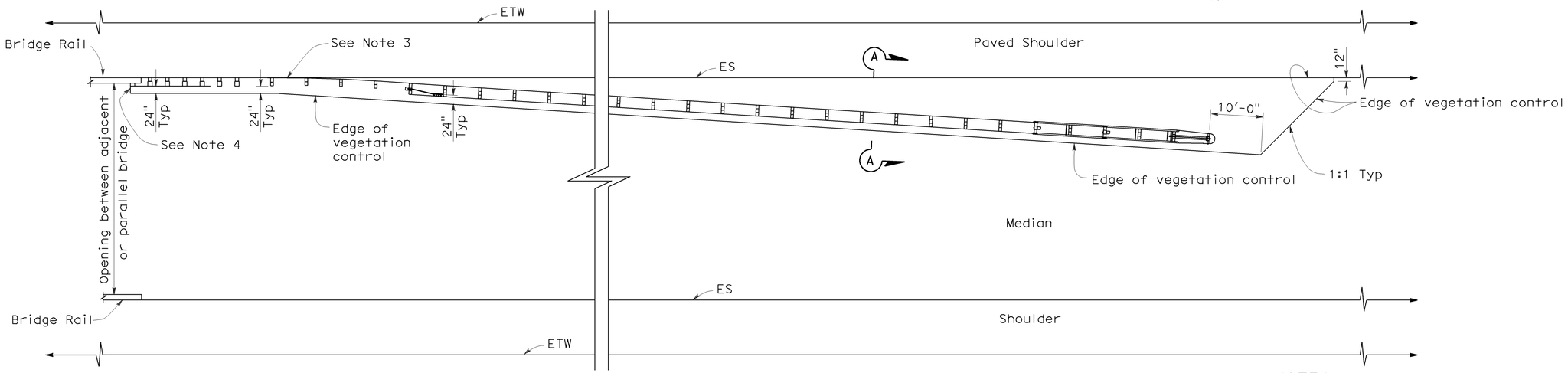

PLAN

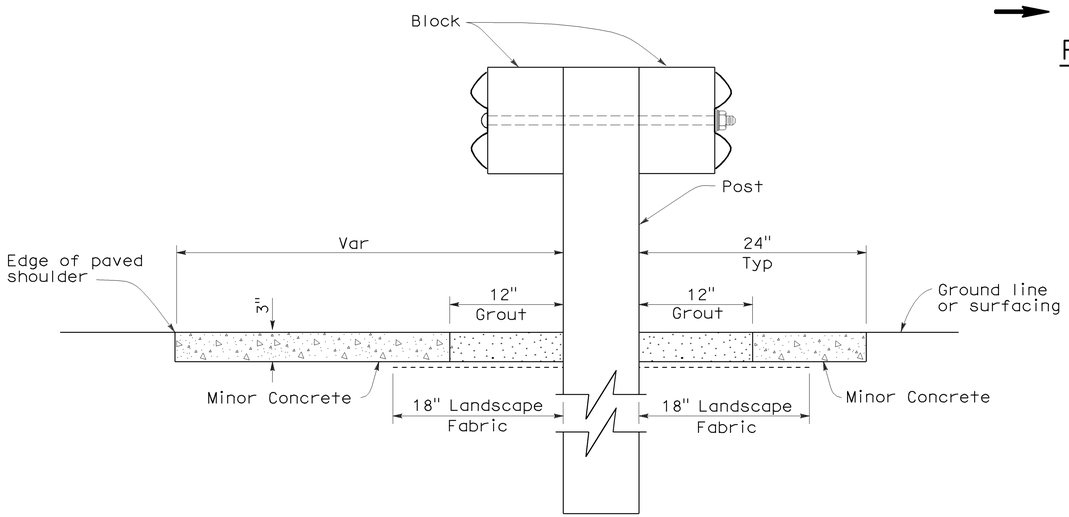

SECTION A-A

NOTES:

1. See New Standard Plan NSP A77C5 for additional vegetation control details.
2. Where the distance between back of post and hinge point is less than 24", vegetation control to be constructed flush with the back edge of the post.
3. Where dike is constructed under railing, construct vegetation control to back edge of dike. Where paved shoulder is constructed within 24" in front of the post, construct vegetation control to the edge of paved shoulder.
4. End vegetation control at end of backside rail element.
5. Direction of adjacent traffic indicated by ←.

STATE OF CALIFORNIA
DEPARTMENT OF TRANSPORTATION

METAL BEAM GUARD RAILING TYPICAL VEGETATION CONTROL AT STRUCTURE APPROACH AND DEPARTURE

NO SCALE

NSP A77C7 DATED OCTOBER 20, 2006 SUPPLEMENTS THE STANDARD PLANS BOOK DATED MAY 2006.

NEW STANDARD PLAN NSP A77C7

2006 NEW STANDARD PLAN NSP A77C7

7-17-06

DIST	COUNTY	ROUTE	POST MILES TOTAL PROJECT	SHEET NO.	TOTAL SHEETS
08	Riv	10	9.3/20.2	17	37

Randell D. Hiatt
REGISTERED CIVIL ENGINEER

October 20, 2006
PLANS APPROVAL DATE

REGISTERED PROFESSIONAL ENGINEER
Randell D. Hiatt
No. C50200
Exp. 6-30-07
CIVIL
STATE OF CALIFORNIA

The State of California or its officers or agents shall not be responsible for the accuracy or completeness of electronic copies of this plan sheet.

To accompany plans dated March 28, 2011

NOTES:

1. See New Standard Plan NSP A77C5 for additional vegetation control details.
2. Where the distance between back of post and hinge point is less than 24", vegetation control to be constructed flush with the back edge of the post.
3. Where dike is constructed under railing, construct vegetation control to back edge of dike. Where paved shoulder is constructed within 24" in front of the post, construct vegetation control to the edge of paved shoulder.
4. Direction of adjacent traffic indicated by ←.

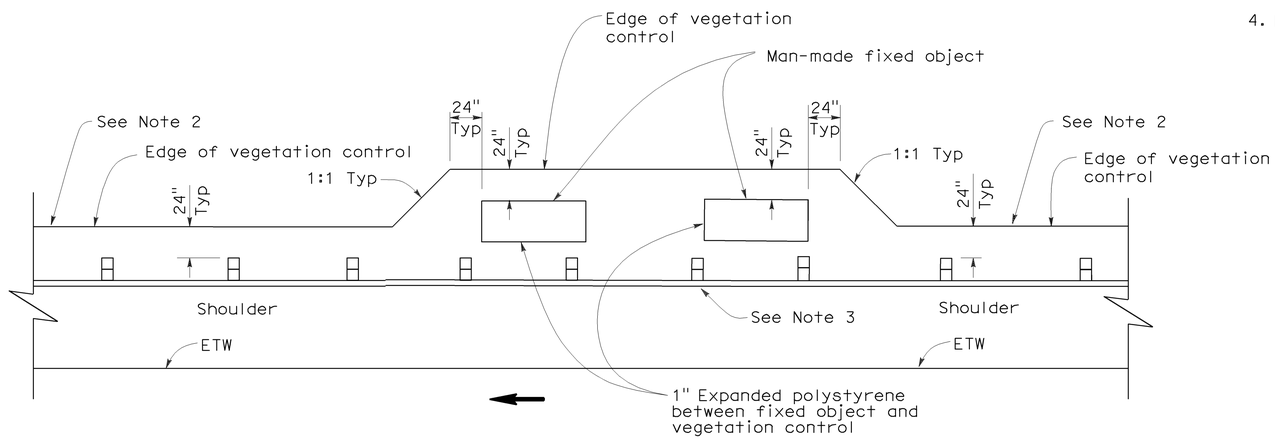

PLAN

FIXED OBJECT(S) ON SHOULDER

STATE OF CALIFORNIA
DEPARTMENT OF TRANSPORTATION

METAL BEAM GUARD RAILING TYPICAL VEGETATION CONTROL AT FIXED OBJECT

NO SCALE

NSP A77C8 DATED OCTOBER 20, 2006 SUPPLEMENTS THE STANDARD PLANS BOOK DATED MAY 2006.

NEW STANDARD PLAN NSP A77C8

2006 NEW STANDARD PLAN NSP A77C8

7-17-06

DIST	COUNTY	ROUTE	POST MILES TOTAL PROJECT	SHEET NO.	TOTAL SHEETS
08	Riv	10	9.3/20.2	18	37

Randell D. Hiatt
REGISTERED CIVIL ENGINEER

October 20, 2006
PLANS APPROVAL DATE

REGISTERED PROFESSIONAL ENGINEER
Randell D. Hiatt
No. C50200
Exp. 6-30-07
CIVIL
STATE OF CALIFORNIA

The State of California or its officers or agents shall not be responsible for the accuracy or completeness of electronic copies of this plan sheet.

To accompany plans dated March 28, 2011

NOTES:

1. See New Standard Plan NSP A77C5 for additional vegetation control details.
2. Where dike is constructed under railing, construct vegetation control to back edge of dike. Where paved shoulder is constructed within 24" in front of the post, construct vegetation control to the edge of paved shoulder.
3. Direction of adjacent traffic indicated by ←.

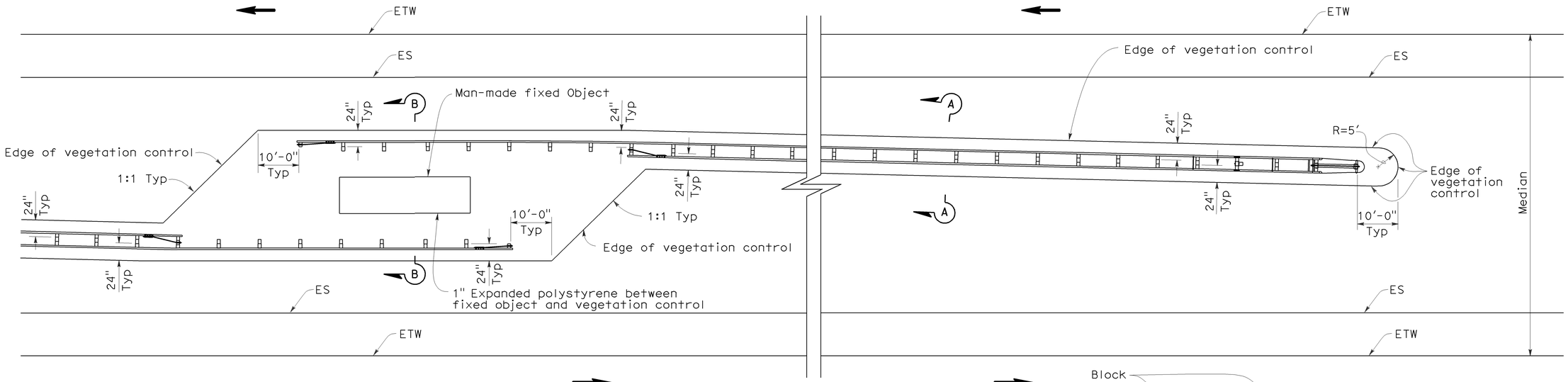

PLAN

FIXED OBJECT(S) IN MEDIAN

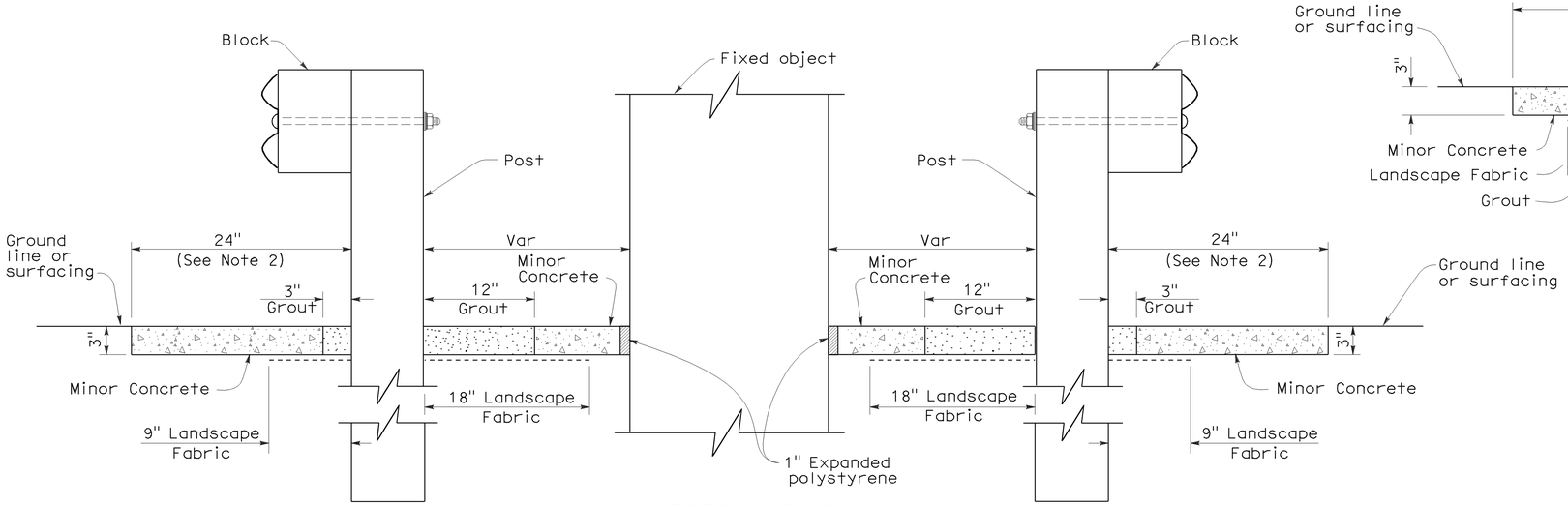

SECTION B-B

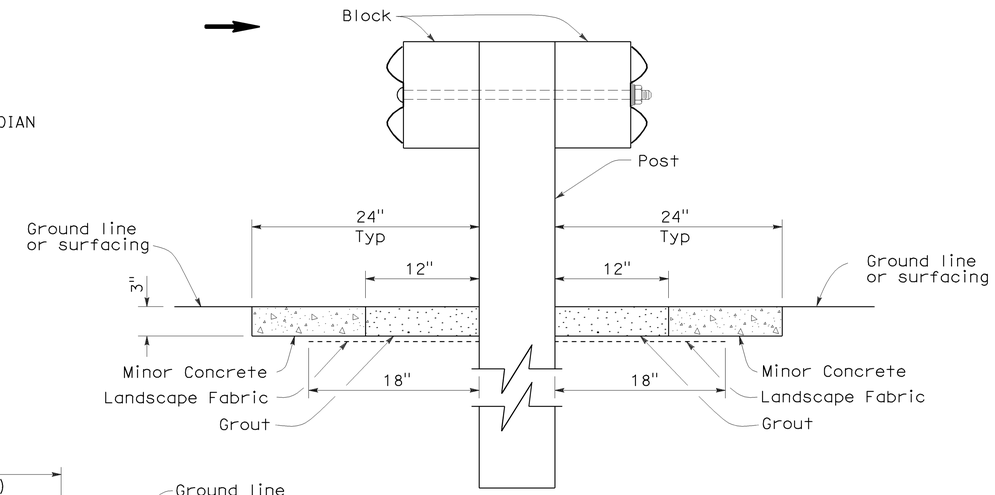

SECTION A-A

STATE OF CALIFORNIA
DEPARTMENT OF TRANSPORTATION

METAL BEAM GUARD RAILING TYPICAL VEGETATION CONTROL AT FIXED OBJECT

NO SCALE

NSP A77C9 DATED OCTOBER 20, 2006 SUPPLEMENTS THE STANDARD PLANS BOOK DATED MAY 2006.

NEW STANDARD PLAN NSP A77C9

2006 NEW STANDARD PLAN NSP A77C9

7-17-06

DIST	COUNTY	ROUTE	POST MILES TOTAL PROJECT	SHEET NO.	TOTAL SHEETS
08	Riv	10	9.3/20.2	19	37

Randell D. Hiatt
REGISTERED CIVIL ENGINEER

October 20, 2006
PLANS APPROVAL DATE

REGISTERED PROFESSIONAL ENGINEER
Randell D. Hiatt
No. C50200
Exp. 6-30-07
CIVIL
STATE OF CALIFORNIA

The State of California or its officers or agents shall not be responsible for the accuracy or completeness of electronic copies of this plan sheet.

To accompany plans dated March 28, 2011

NOTES:

1. See New Standard Plan NSP A77C5 for additional vegetation control details.
2. Where dike is constructed under railing, construct vegetation control to back edge of dike. Where paved shoulder is constructed within 24" in front of the post, construct vegetation control to the edge of paved shoulder.
3. Direction of adjacent traffic indicated by ←.

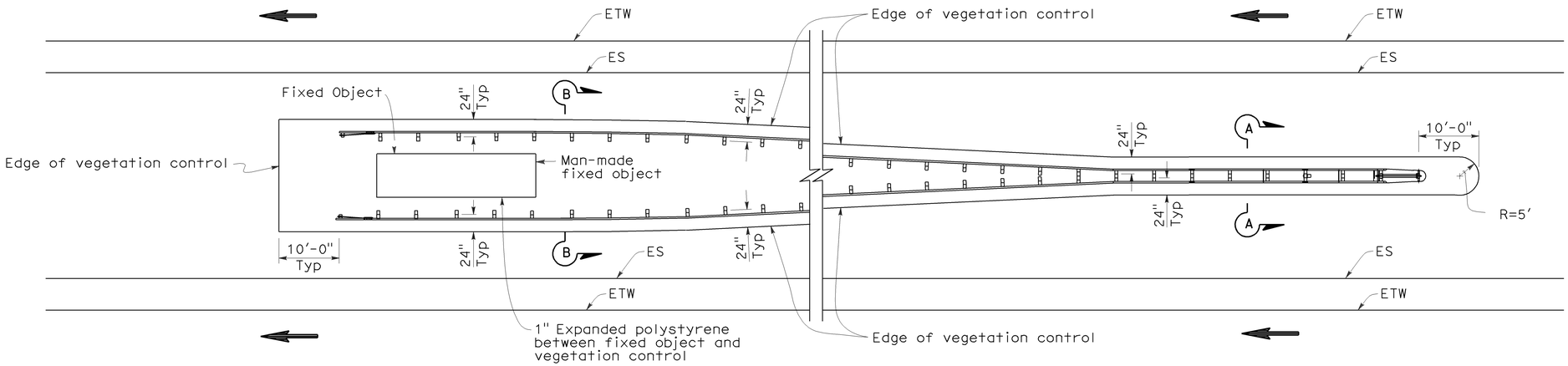

PLAN

FIXED OBJECT(S) BETWEEN SEPARATE ROADBEDS
(ONE-WAY TRAFFIC)

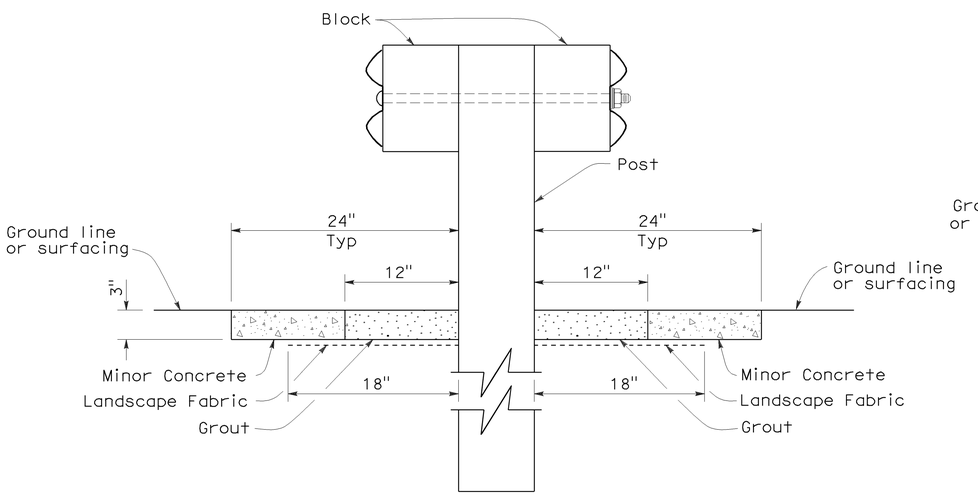

SECTION A-A

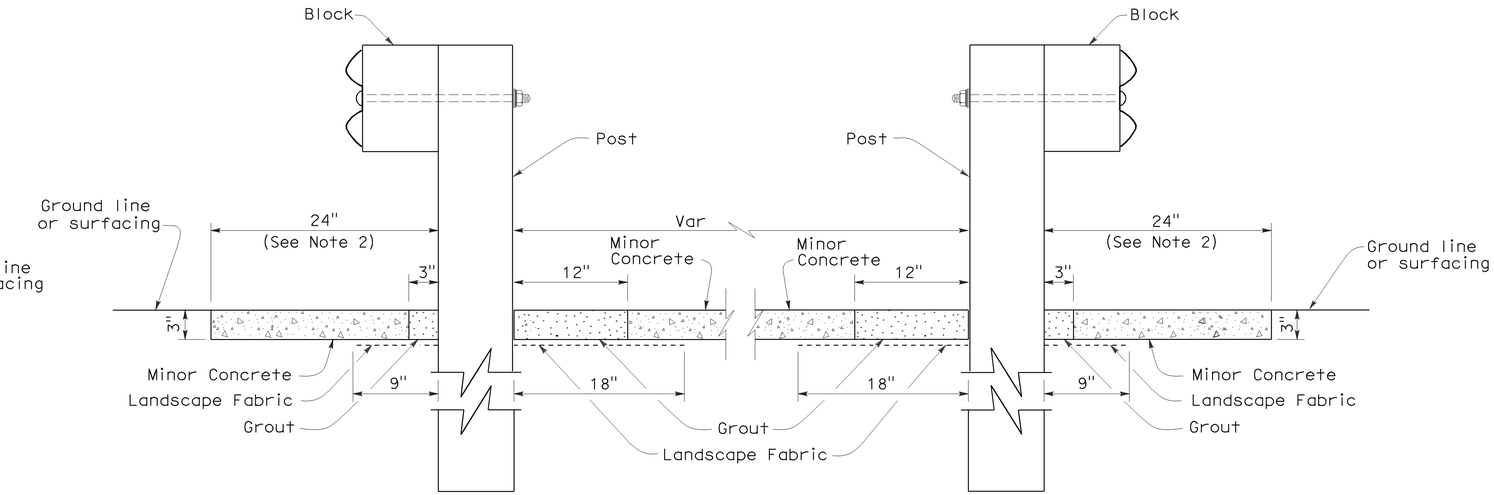

SECTION B-B

STATE OF CALIFORNIA
DEPARTMENT OF TRANSPORTATION

METAL BEAM GUARD RAILING TYPICAL VEGETATION CONTROL AT FIXED OBJECT

NO SCALE

NSP A77C10 DATED OCTOBER 20, 2006 SUPPLEMENTS THE STANDARD PLANS BOOK DATED MAY 2006.

NEW STANDARD PLAN NSP A77C10

2006 NEW STANDARD PLAN NSP A77C10

7-17-06

DIST	COUNTY	ROUTE	POST MILES TOTAL PROJECT	SHEET NO.	TOTAL SHEETS
08	Riv	10	9.3/20.2	20	37

LICENSED LANDSCAPE ARCHITECT

August 15, 2008
PLANS Approval DATE

LICENSED LANDSCAPE ARCHITECT
Robert B. Schott 3825
Signature
11-04-08
Renewal Date
08-11-08
Date
STATE OF CALIFORNIA

The State of California or its officers or agents shall not be responsible for the accuracy or completeness of electronic copies of this plan sheet.

To accompany plans dated March 28, 2011

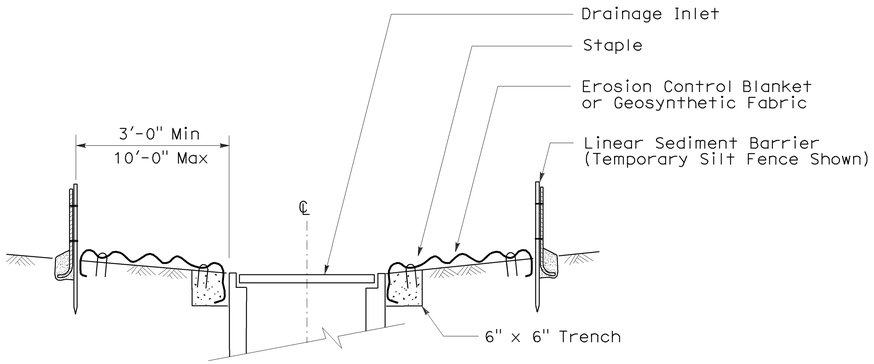

SECTION A-A

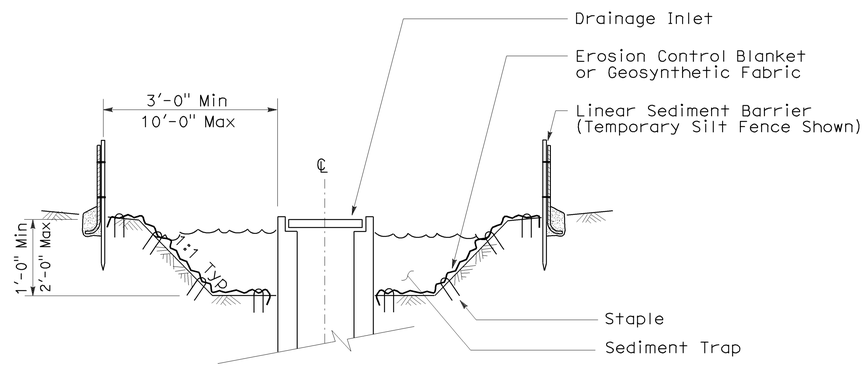

SECTION B-B

NOTES:

1. See Standard Plan T51 for Temporary Silt Fence.
2. Dimensions may vary to fit field conditions.

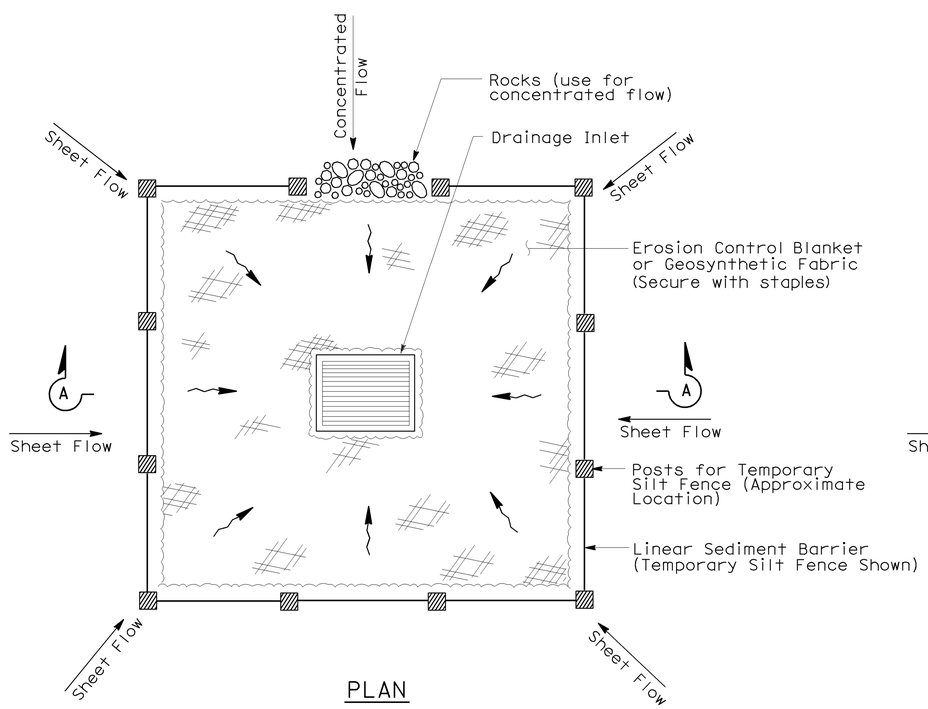

PLAN

TEMPORARY DRAINAGE INLET PROTECTION (TYPE 1)

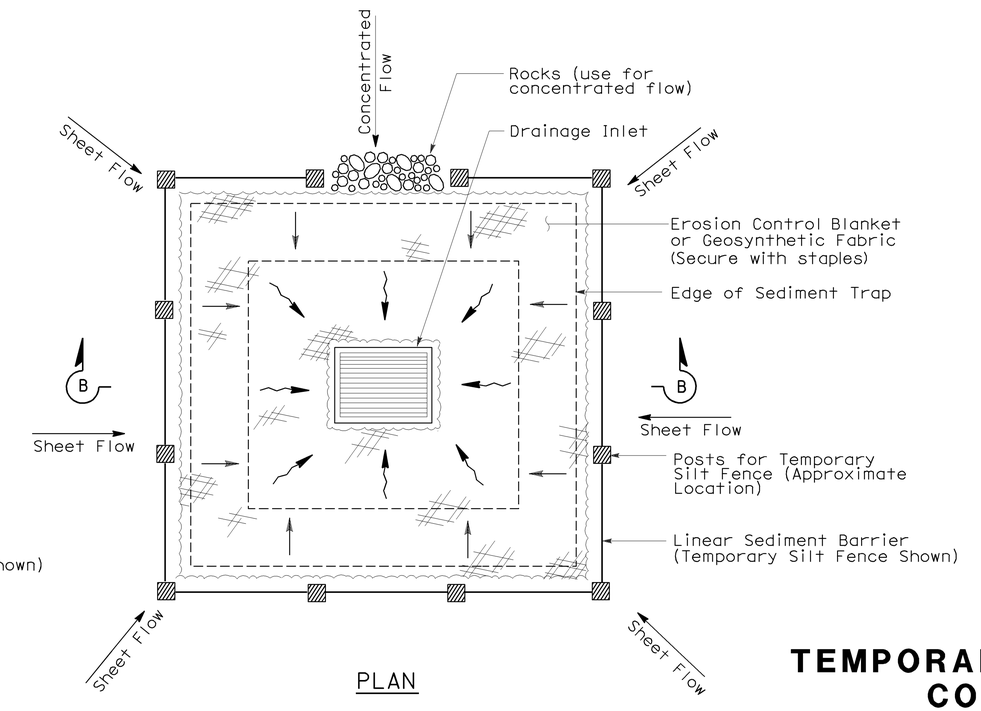

PLAN

TEMPORARY DRAINAGE INLET PROTECTION (TYPE 2) (EXCAVATED SEDIMENT TRAP)

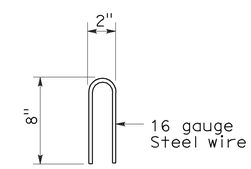

STAPLE DETAIL

STATE OF CALIFORNIA
DEPARTMENT OF TRANSPORTATION

TEMPORARY WATER POLLUTION CONTROL DETAILS (TEMPORARY DRAINAGE INLET PROTECTION)

NO SCALE

Nsp t61 dated august 15, 2008 supplements the standard plans book dated may 2006.

NEW STANDARD PLAN NSP T61

2006 NEW STANDARD PLAN NSP T61

7-11-08

DIST	COUNTY	ROUTE	POST MILES TOTAL PROJECT	SHEET NO.	TOTAL SHEETS
08	Riv	10	9.3/20.2	21	37

LICENSED LANDSCAPE ARCHITECT

August 15, 2008
PLANS APPROVAL DATE

The State of California or its officers or agents shall not be responsible for the accuracy or completeness of electronic copies of this plan sheet.

LICENSED LANDSCAPE ARCHITECT — Robert B. Schott 3825 — Registration Date 11-04-08 — Renewal Date 08-11-08 — Date — STATE OF CALIFORNIA

To accompany plans dated March 28, 2011

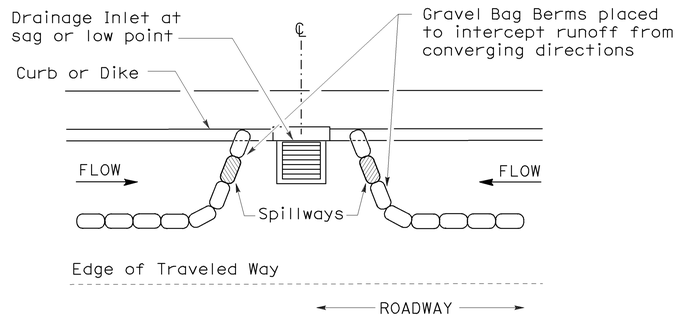

PLAN

CONFIGURATION FOR SAG POINT INLET (GRAVEL BAG BERM)

GRAVEL BAG BERM (TYPE 3A) SPACING TABLE

SLOPE OF ROADWAY (PERCENT)	1 to 3.9	4 to 5.9	6 to 7.9	8 to 10	10+
INTERVAL BETWEEN BERM	100′	75′	50′	25′	12′

For slope of less than 1%, install barriers only if erosion/sediment is prevalent

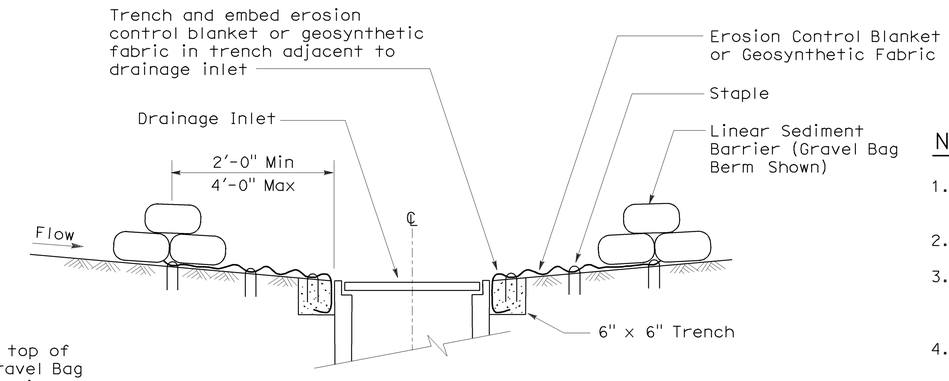

SECTION A-A

NOTES:

1. Place safety cones adjacent to drainage inlet protection.
2. Dimensions may vary to fit field conditions.
3. Install a minimum of 3 gravel bag berms upstream of each drainage inlet to be protected.
4. Position erosion control blanket or geosynthetic fabric at edge of concrete apron and secure in trench.
5. Erosion control blanket or geosynthetic fabric is not required if the area adjacent to the drainage inlet is vegetated or paved.

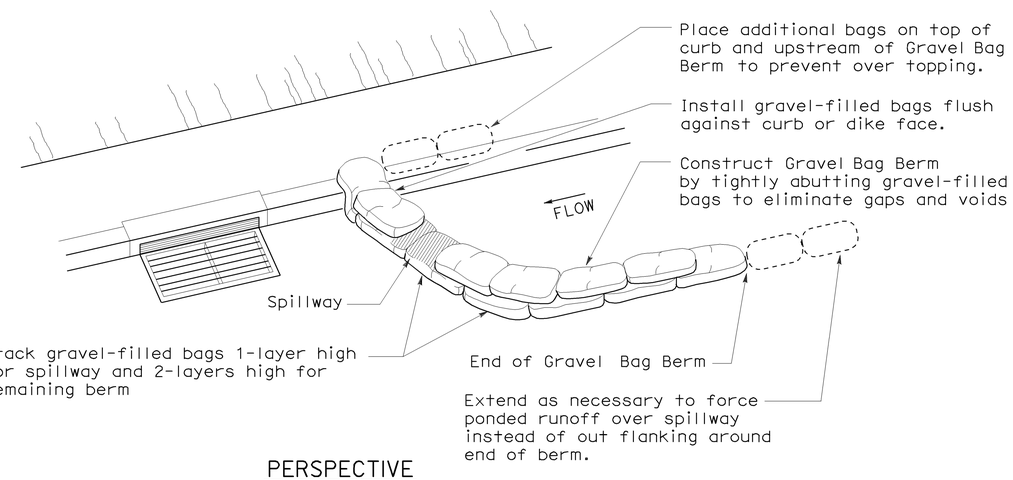

PERSPECTIVE

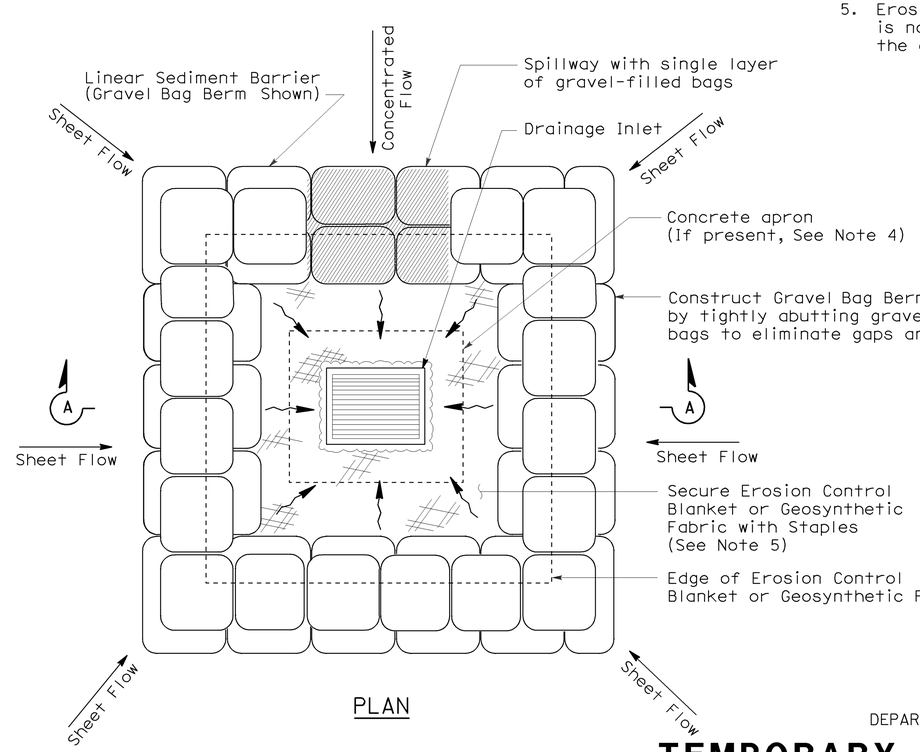

PLAN

TEMPORARY DRAINAGE INLET PROTECTION (TYPE 3B)

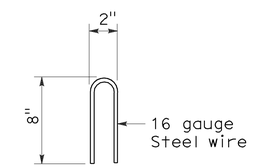

STAPLE DETAIL

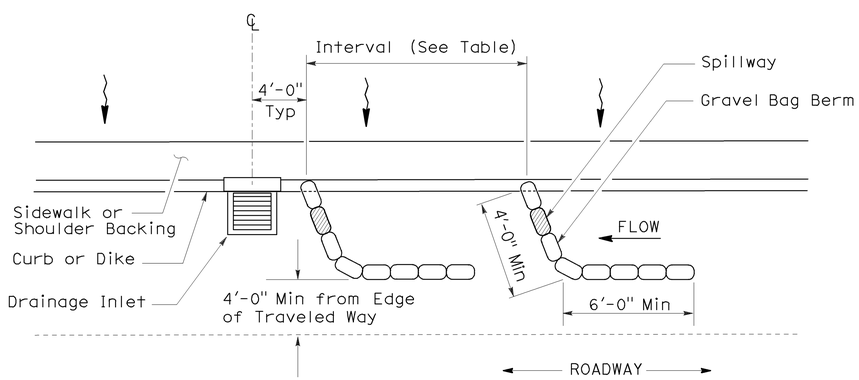

PLAN

TEMPORARY DRAINAGE INLET PROTECTION (TYPE 3A) (GRAVEL BAG BERM)

STATE OF CALIFORNIA
DEPARTMENT OF TRANSPORTATION

TEMPORARY WATER POLLUTION CONTROL DETAILS (TEMPORARY DRAINAGE INLET PROTECTION)

NO SCALE

NSP T62 DATED AUGUST 15, 2008 SUPPLEMENTS THE STANDARD PLANS BOOK DATED MAY 2006.

NEW STANDARD PLAN NSP T62

2006 NEW STANDARD PLAN NSP T62

7-11-08

DIST	COUNTY	ROUTE	POST MILES TOTAL PROJECT	SHEET NO.	TOTAL SHEETS
08	Riv	10	9.3/20.2	22	37

LICENSED LANDSCAPE ARCHITECT

August 15, 2008
PLANS APPROVAL DATE

The State of California or its officers or agents shall not be responsible for the accuracy or completeness of electronic copies of this plan sheet.

LICENSED LANDSCAPE ARCHITECT — Robert B. Schott — 3825 — Signature — 11-04-08 Renewal Date — 08-11-08 Date — STATE OF CALIFORNIA

To accompany plans dated March 28, 2011

FLEXIBLE SEDIMENT BARRIER SPACING TABLE

SLOPE OF ROADWAY (PERCENT)	0 to 0.9	1 to 1.9	2 to 2.9	3 to 4	5+
INTERVAL BETWEEN BARRIERS	50′	35′	30′	25′	20′
ANGLE FROM FACE OF CURB	70°	70°	70°	45°	45°
SUGGESTED BARRIER LENGTH	6′	6′	6′	6′	6′

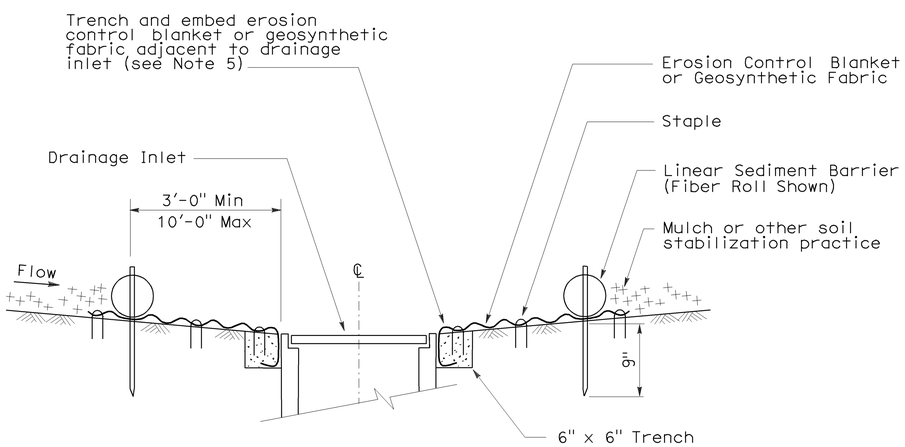

SECTION A-A

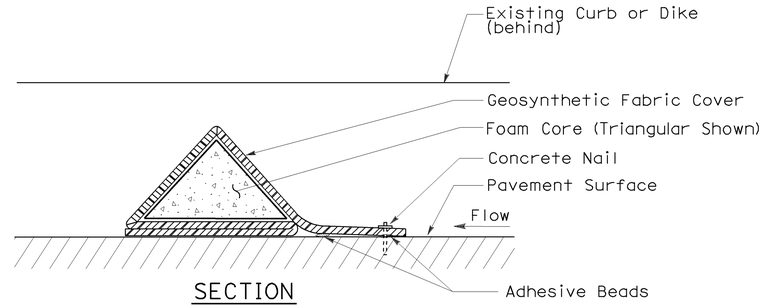

SECTION

FLEXIBLE SEDIMENT BARRIER DETAIL (FOAM BARRIER SHOWN)

NOTES:

1. See Standard Plan T51 for Temporary Silt Fence.
2. Dimensions may vary to fit field conditions.
3. Install a minimum of 3 flexible sediment barriers upstream of each drainage inlet to be protected.
4. Position erosion control blanket or geosynthetic fabric at edge of concrete apron and secure in trench.
5. Erosion control blanket or geosynthetic fabric is not required if the area adjacent to the drainage inlet is vegetated.

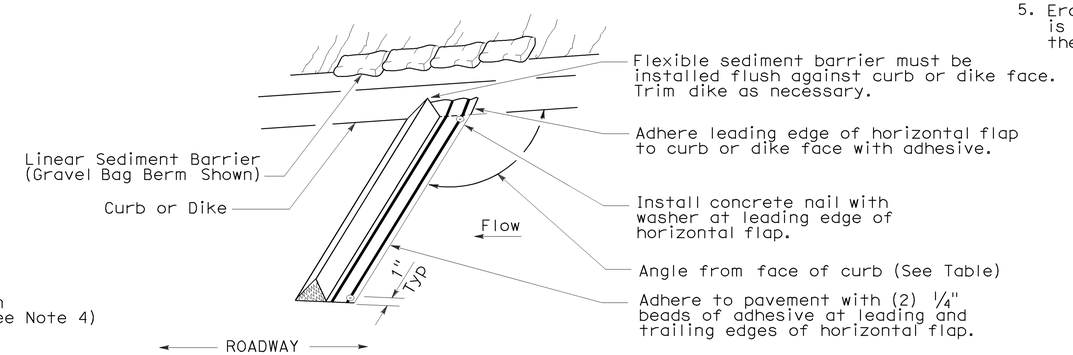

PERSPECTIVE

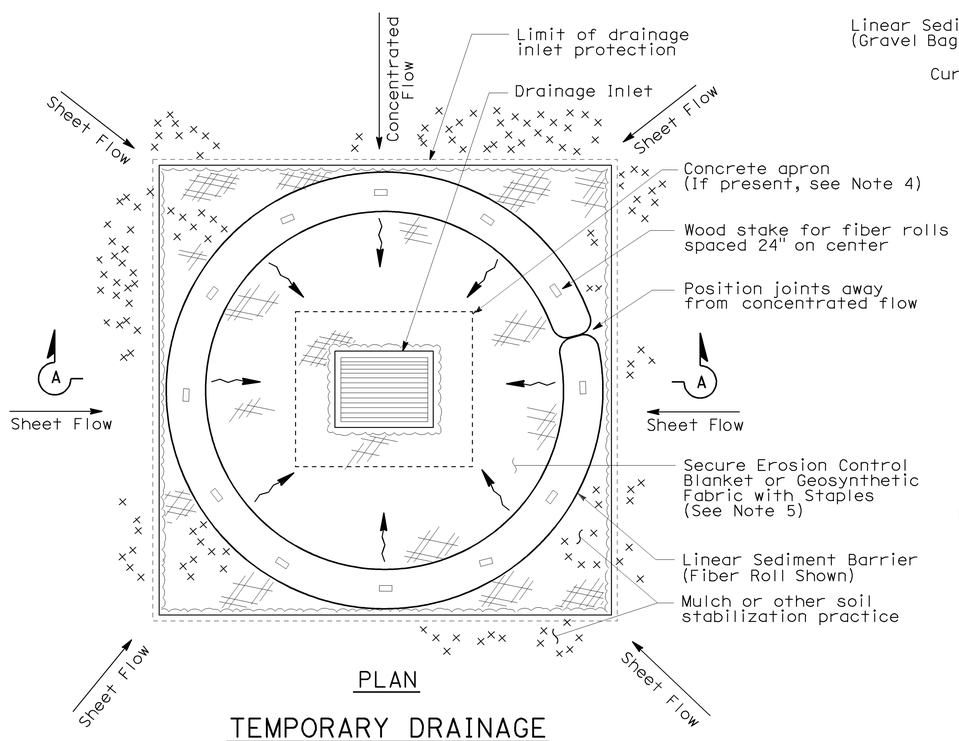

PLAN

TEMPORARY DRAINAGE INLET PROTECTION (TYPE 4A)

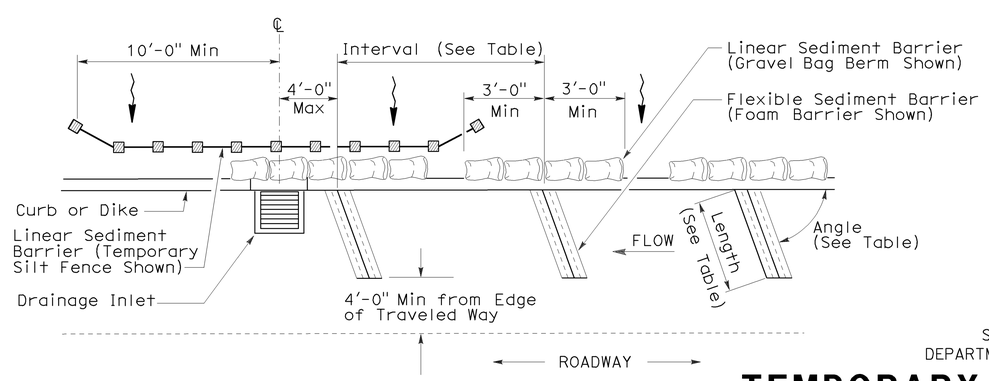

PLAN

TEMPORARY DRAINAGE INLET PROTECTION (TYPE 4B) FLEXIBLE SEDIMENT BARRIER

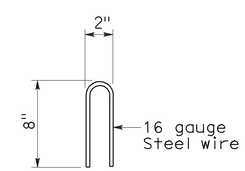

STAPLE DETAIL

STATE OF CALIFORNIA
DEPARTMENT OF TRANSPORTATION

TEMPORARY WATER POLLUTION CONTROL DETAILS (TEMPORARY DRAINAGE INLET PROTECTION)

NO SCALE

NSP T63 DATED AUGUST 15, 2008 SUPPLEMENTS THE STANDARD PLANS BOOK DATED MAY 2006.

NEW STANDARD PLAN NSP T63

2006 NEW STANDARD PLAN NSP T63

7-11-08

DIST	COUNTY	ROUTE	POST MILES TOTAL PROJECT	SHEET NO.	TOTAL SHEETS
08	Riv	10	9.3/20.2	23	37

LICENSED LANDSCAPE ARCHITECT

August 15, 2008
PLANS APPROVAL DATE

LICENSED LANDSCAPE ARCHITECT
Robert B. Schott 3825
Signature
11-04-08
Renewal Date
08-11-08
Date
STATE OF CALIFORNIA

The State of California or its officers or agents shall not be responsible for the accuracy or completeness of electronic copies of this plan sheet.

To accompany plans dated March 28, 2011

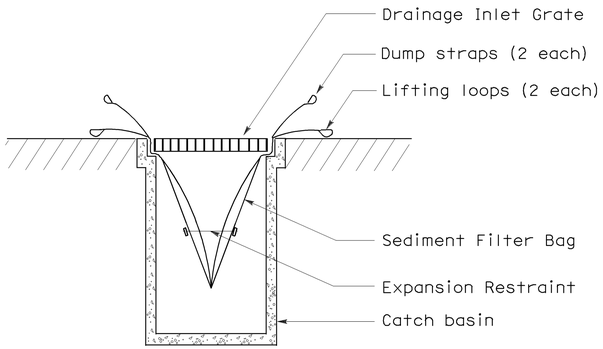

SECTION B-B

SEDIMENT FILTER BAG DETAIL

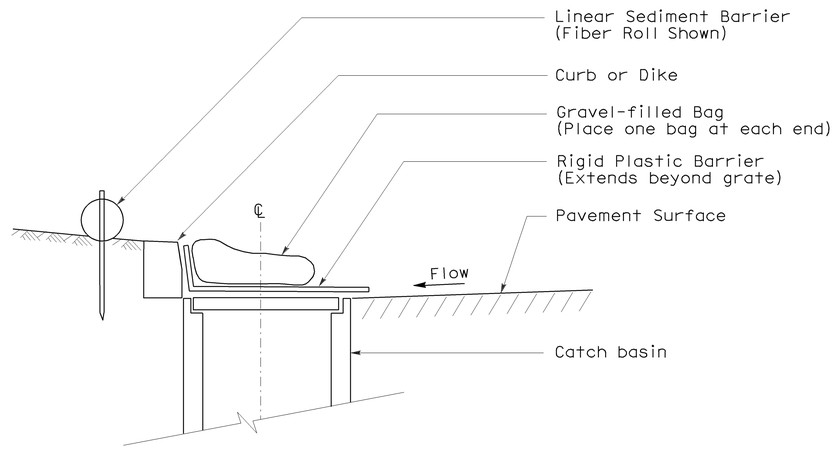

SECTION

TEMPORARY DRAINAGE INLET PROTECTION (TYPE 6A) (CATCH BASIN WITH GRATE)

NOTES:

1. See Standard Plan T51 for Temporary Silt Fence.
2. Dimensions may vary to fit field conditions.

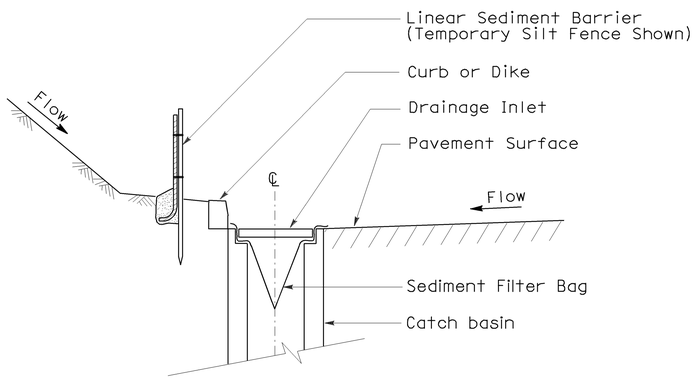

SECTION A-A

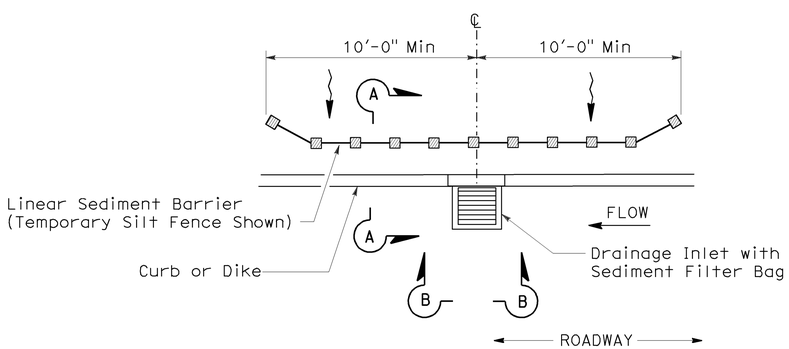

PLAN

TEMPORARY DRAINAGE INLET PROTECTION (TYPE 5) (SEDIMENT FILTER BAG)

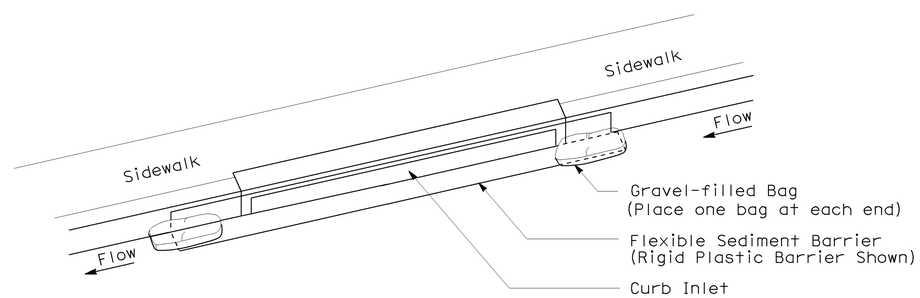

PERSPECTIVE

TEMPORARY DRAINAGE INLET PROTECTION (TYPE 6B) (CURB INLET WITHOUT GRATE)

STATE OF CALIFORNIA
DEPARTMENT OF TRANSPORTATION

TEMPORARY WATER POLLUTION CONTROL DETAILS (TEMPORARY DRAINAGE INLET PROTECTION)

NO SCALE

NSP T64 DATED AUGUST 15, 2008 SUPPLEMENTS
THE STANDARD PLANS BOOK DATED MAY 2006.

NEW STANDARD PLAN NSP T64

2006 NEW STANDARD PLAN NSP T64

7-11-08

DIST	COUNTY	ROUTE	POST MILES TOTAL PROJECT	SHEET NO.	TOTAL SHEETS
08	Riv	10	9.3/20.2	24	37

Randell D. Hiatt
REGISTERED CIVIL ENGINEER

June 6, 2008
PLANS APPROVAL DATE

REGISTERED PROFESSIONAL ENGINEER
Randell D. Hiatt
No. C50200
Exp. 6-30-09
CIVIL
STATE OF CALIFORNIA

The State of California or its officers or agents shall not be responsible for the accuracy or completeness of electronic copies of this plan sheet.

To accompany plans dated March 28, 2011

NOTES:

1. When necessary to place dike in front of face of guard railing, only Type C dike may be used. For dike details, see Standard Plan A87B.
2. For standard railing post embedment, see Standard Plans A77C3.
3. Guard railing delineation to be used where shown on the Project Plans.
4. When dike or curb is placed under guard railing, the maximum height of the dike or curb shall be 4". Mountable dike should not be used. For dike and curb details, see Revised Standard Plans RSP A87A and Standard Plan A87B.
5. For details of typical distance between the face of rail and hinge point, see Standard Plan A77C3.

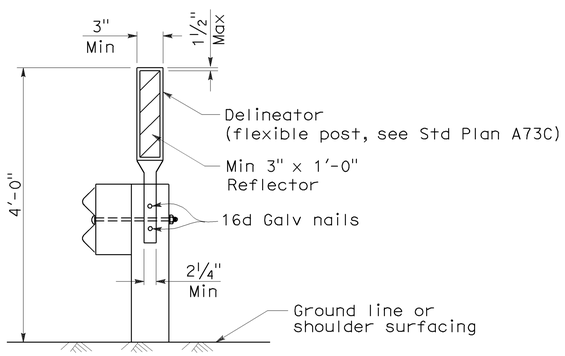

GUARD RAILING DELINEATION

See Note 3

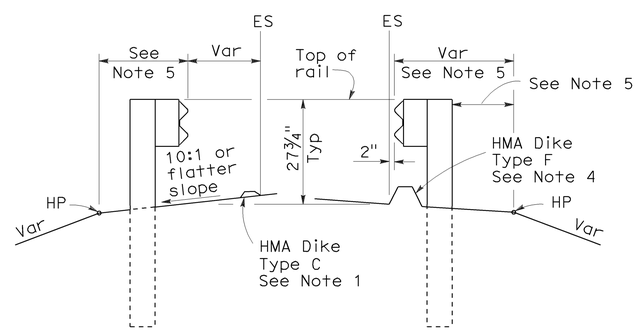

DIKE POSITIONING

See Note 1

STATE OF CALIFORNIA
DEPARTMENT OF TRANSPORTATION

METAL BEAM GUARD RAILING TYPICAL RAILING DELINEATION AND DIKE POSITIONING DETAILS

NO SCALE

RSP A77C4 DATED JUNE 6, 2008 SUPERSEDES STANDARD PLAN A77C4
DATED MAY 1, 2006 - PAGE 47 OF THE STANDARD PLANS BOOK DATED MAY 2006.

REVISED STANDARD PLAN RSP A77C4

2006 REVISED STANDARD PLAN RSP A77C4

12-10-07

DIST	COUNTY	ROUTE	POST MILES TOTAL PROJECT	SHEET NO.	TOTAL SHEETS
08	Riv	10	9.3/20.2	25	37

Randell D. Hiatt
REGISTERED CIVIL ENGINEER

June 6, 2008
PLANS APPROVAL DATE

REGISTERED PROFESSIONAL ENGINEER
Randell D. Hiatt
No. C50200
Exp. 6-30-09
CIVIL
STATE OF CALIFORNIA

The State of California or its officers or agents shall not be responsible for the accuracy or completeness of electronic copies of this plan sheet.

To accompany plans dated March 28, 2011

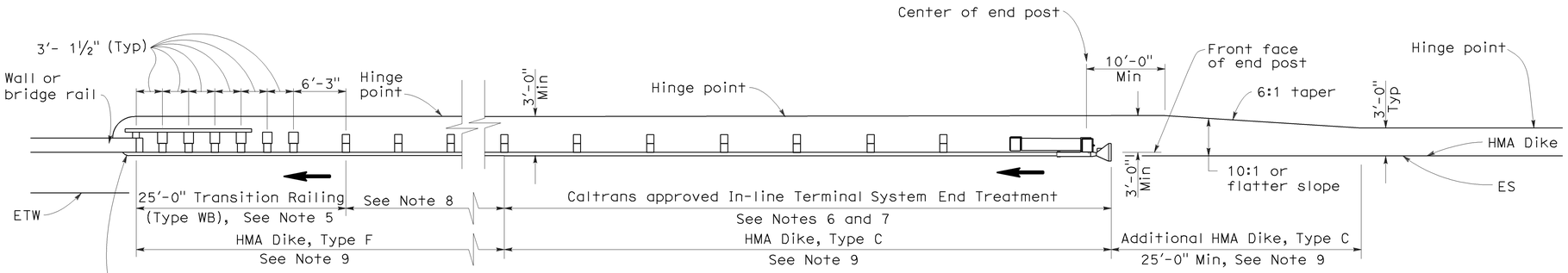

TYPE 12A LAYOUT

(GUARD RAILING INSTALLATION AT STRUCTURE APPROACH WITH AN IN-LINE END TREATMENT AT TRAFFIC APPROACH END OF RAILING)
See Notes 10

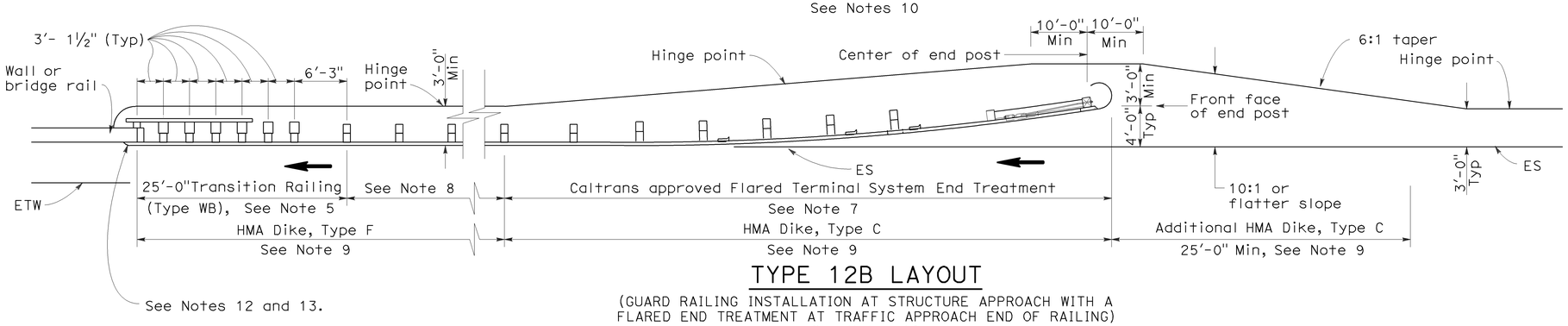

TYPE 12B LAYOUT

(GUARD RAILING INSTALLATION AT STRUCTURE APPROACH WITH A FLARED END TREATMENT AT TRAFFIC APPROACH END OF RAILING)
See Notes 10

NOTES:

1. Line post, blocks and hardware to be used are shown on Standard Plans A77A1, A77A2, A77B1, A77C1 and A77C2.
2. Guard rail post spacing to be 6'-3" center to center, except as otherwise noted.
3. Except as noted, line posts are 6" x 8" x 6'-0" wood with 6" x 8" x 1'-2" wood blocks. W6 x 9 steel posts, 6'-0" in length, with 6" x 8" x 1'-2" notched wood blocks or plastic blocks may be used for 6" x 8" x 6'-0" wood posts with 6" x 8" x 1'-2" wood blocks where applicable and when specified.
4. Direction of adjacent traffic indicated by ➡.
5. For Transition Railing (Type WB) details for Types 12A and 12B Layouts, see Standard Plan A77J4.
6. In-line Terminal System End Treatments are used where site conditions will not accommodate a flared end treatment.
7. The type of terminal system end treatment to be used will be shown on the Project Plans.
8. Dependent on site conditions (embankment height, side slopes, or other fixed objects), it may be advisable to construct additional guard railing (a length equal to multiples of 12'-6" with 6'-3" post spacing) between the transition railing and end treatment.
9. Where placement of dike is required with guard railing installations, see Revised Standard Plan RSP A77C4 for dike positioning details.
10. Type 12A or Type 12B Layouts are typically used:
    a. To the right of approaching traffic, at the end of a structure, on two-lane conventional highway where the roadbed width across the structure is less than 40 feet.
    b. To the left of approaching traffic, at the end of a structure, on two-lane conventional highway where the roadbed width across the structure is less than 40 feet.
    c. To the right of approaching traffic at the end of each structure on multilane freeways or expressways with separate adjacent or parallel bridges.
    d. To the right of approaching traffic at the end of the structure on multilane freeways or expressways with decked median on the bridge.
11. See Revised Standard Plan RSP A77F3 for typical layout used left of approaching traffic at the ends of each structure on multilane freeways or expressways with separate adjacent or parallel bridges.
12. For additional details of typical connections to bridge rail, see Connection Detail AA on Revised Standard Plans RSP A77J1 and RSP A77J2 and Connection Detail FF on Standard Plans A77K1 and A77K2.
13. For additional details of a typical connection to walls or abutments, see Standard Plan A77J3.

STATE OF CALIFORNIA
DEPARTMENT OF TRANSPORTATION

METAL BEAM GUARD RAILING TYPICAL LAYOUTS FOR STRUCTURE APPROACH

NO SCALE

RSP A77F1 DATED JUNE 6, 2008 SUPERSEDES STANDARD PLAN A77F1
DATED MAY 1, 2006 - PAGE 54 OF THE STANDARD PLANS BOOK DATED MAY 2006.

REVISED STANDARD PLAN RSP A77F1

2006 REVISED STANDARD PLAN RSP A77F1

12-10-07

DIST	COUNTY	ROUTE	POST MILES TOTAL PROJECT	SHEET NO.	TOTAL SHEETS
08	Riv	10	9.3/20.2	26	37

Randell D. Hiatt
REGISTERED CIVIL ENGINEER

June 6, 2008
PLANS APPROVAL DATE

REGISTERED PROFESSIONAL ENGINEER
Randell D. Hiatt
No. C50200
Exp. 6-30-09
CIVIL
STATE OF CALIFORNIA

The State of California or its officers or agents shall not be responsible for the accuracy or completeness of electronic copies of this plan sheet.

To accompany plans dated March 28, 2011

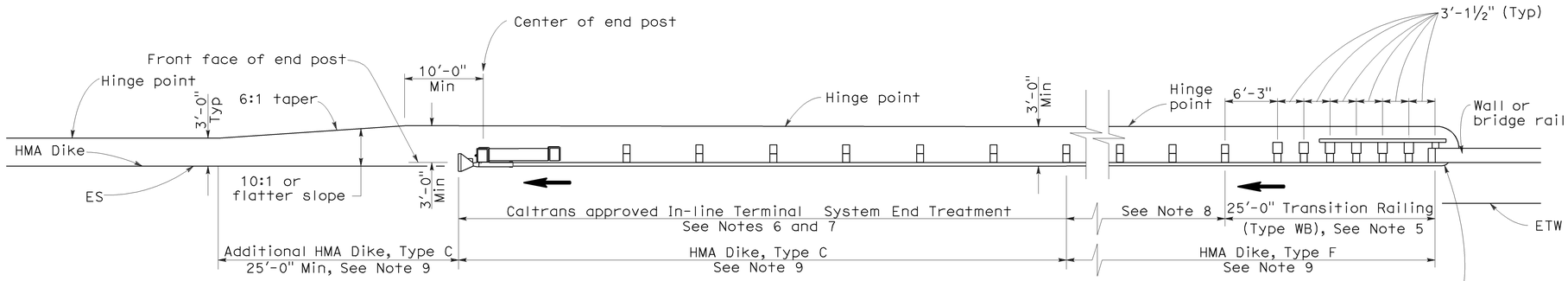

TYPE 12AA LAYOUT

(GUARD RAILING INSTALLATION AT STRUCTURE DEPARTURE WITH AN IN-LINE END TREATMENT AT TRAILING END OF RAILING)
See Notes 9 and 10

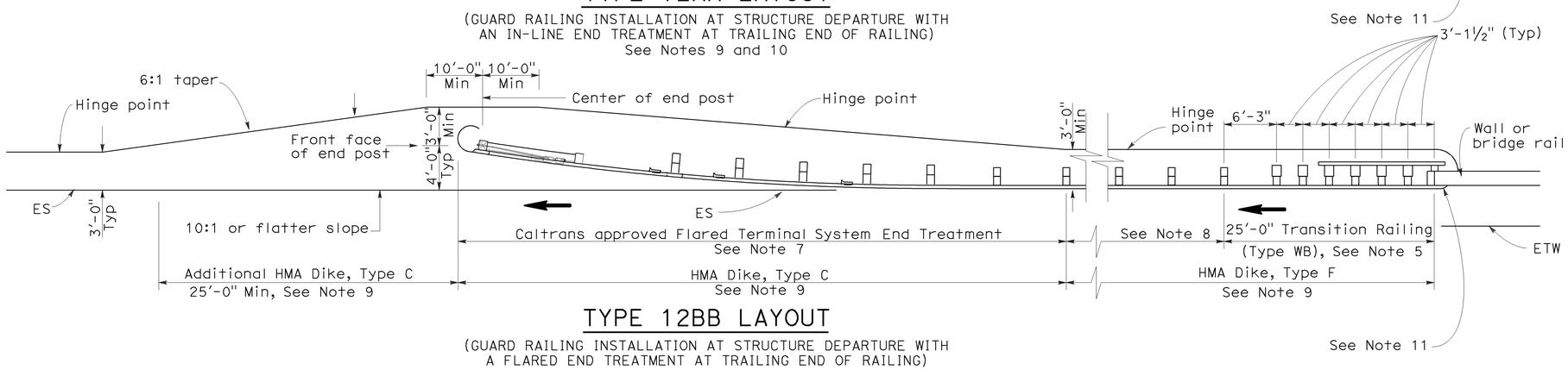

TYPE 12BB LAYOUT

(GUARD RAILING INSTALLATION AT STRUCTURE DEPARTURE WITH A FLARED END TREATMENT AT TRAILING END OF RAILING)
See Notes 9 and 10

NOTES:

1. Line post, blocks and hardware to be used are shown on Standard Plans A77A1, A77A2, A77B1, A77C1 and A77C2.
2. Guard rail post spacing to be 6'-3" center to center, except as otherwise noted.
3. Except as noted, line posts are 6" x 8" x 6'-0" wood with 6" x 8" x 1'-2" wood blocks. W6 x 9 steel posts, 6'-0" in length, with 6" x 8" x 1-2" notched wood blocks or notched recycled plastic blocks may be used for 6" x 8" x 6'-0" wood posts with 6" x 8" x 1'-2" wood blocks where applicable and when specified.
4. Direction of adjacent traffic indicated by ➡.
5. For Transition Railing (Type WB) details for Types 12AA and 12BB Layouts, see Standard Plan A77J4.
6. In-line Terminal System Treatments are used where site conditions will not accommodate a flared end treatment.
7. The type of terminal system to be used will be shown on the Project Plans.
8. Dependent on site conditions (embankment height, side slopes, other fixed objects), it may be advisable to construct additional guard railing (a length equal to multiples of 12'-6" with 6'-3" post spacing) between the transition railing and end treatments.
9. Where placement of dike is required with guard railing installations, see Revised Standard Plan RSP A77C4 for dike positioning details.
10. Type 12AA or Type 12BB Layouts are typically used to the right of traffic departing a structure on two-way conventional highways where the roadbed width across the structure is less than 40 feet.
11. For additional details of typical connections to bridge rail, see Connection Detail CC on Revised Standard Plan RSP A77J2 and Connection Detail HH on Standard Plans A77k2.

STATE OF CALIFORNIA
DEPARTMENT OF TRANSPORTATION

METAL BEAM GUARD RAILING TYPICAL LAYOUTS FOR STRUCTURE DEPARTURE

NO SCALE

RSP A77F4 DATED JUNE 6, 2008 SUPERSEDES STANDARD PLAN A77F4
DATED MAY 1, 2006 - PAGE 57 OF THE STANDARD PLANS BOOK DATED MAY 2006.

REVISED STANDARD PLAN RSP A77F4

2006 REVISED STANDARD PLAN RSP A77F4

12-10-07

DIST	COUNTY	ROUTE	POST MILES TOTAL PROJECT	SHEET NO.	TOTAL SHEETS
08	Riv	10	9.3/20.2	27	37

Randell D. Hiatt
REGISTERED CIVIL ENGINEER

June 6, 2008
PLANS APPROVAL DATE

REGISTERED PROFESSIONAL ENGINEER
Randell D. Hiatt
No. C50200
Exp. 6-30-09
CIVIL
STATE OF CALIFORNIA

The State of California or its officers or agents shall not be responsible for the accuracy or completeness of electronic copies of this plan sheet.

To accompany plans dated March 28, 2011

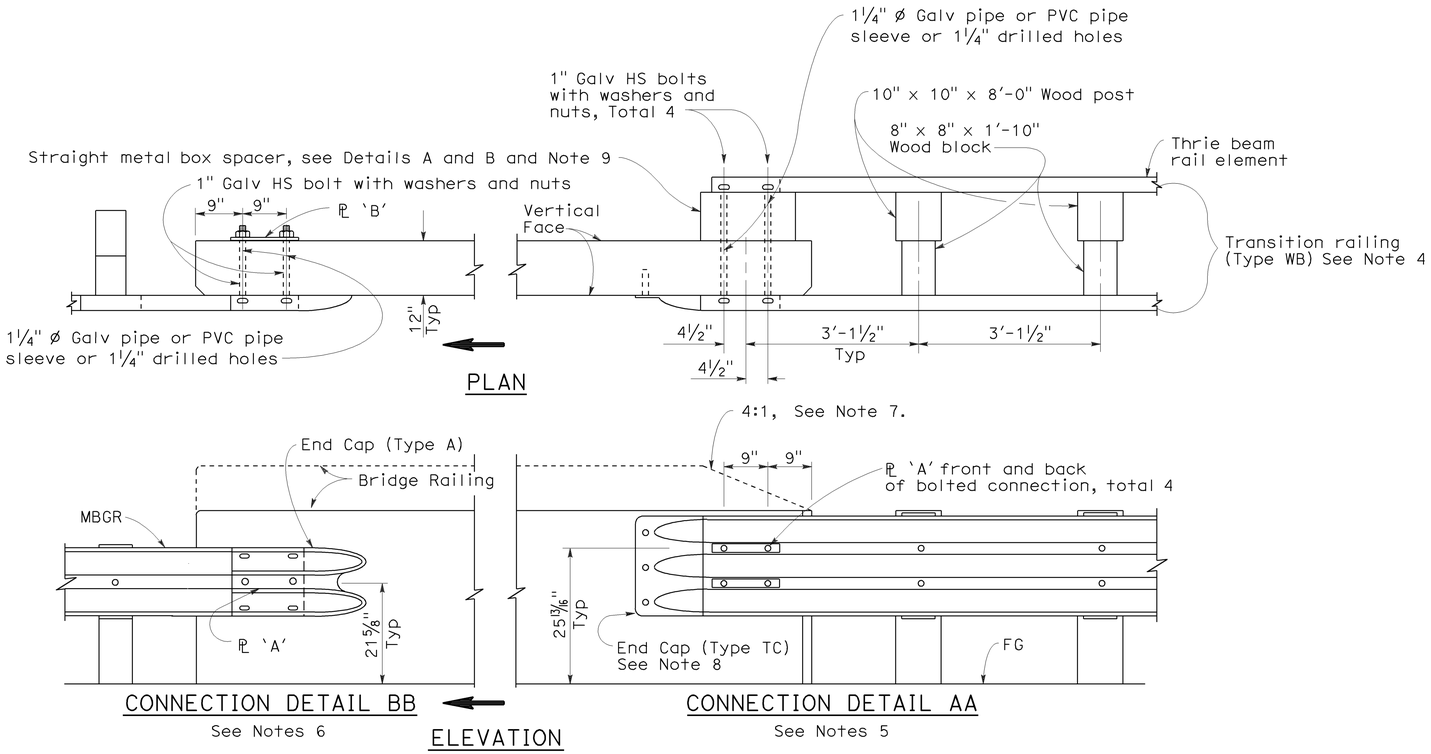

GUARD RAILING CONNECTION TO BRIDGE RAILING WITHOUT SIDEWALK

NOTES:

1. See Revised Standard Plan RSP A77J2 for additional connection details to bridges without sidewalks.
2. Additional details of posts, blocks and hardware are shown on Standard Plan A77B1, A77C1 and A77C2.
3. Direction of adjacent traffic indicated by ➡.
4. For additional details of Transition Railing (Type WB), see Standard Plan A77J4. Transition Railing (Type WB) transitions the 12 gage w-beam standard railing section of guard railing to a heavier gage nested thrie beam railing section which is connected to the concrete bridge railing.
5. For typical use of Connection Detail AA, see Layout Types 12A and 12B on Revised Standard Plan RSP A77F1, Layout Types 12C and 12D on Standard Plan A77F2, and Layout Type 12E on Revised Standard Plan RSP A77F3.
6. For typical use of Connection Detail BB, see Layout Type 12D (structure departure railing connection) on Standard Plan A77F2 and Layout Type 12DD on Standard Plan A77F5.
7. Where the height of the bridge railing exceeds the height of the thrie beam railing by more than 1" at Connection Detail AA, taper the top of the end of the bridge railing at 4:1 to match the top elevation of the thrie beam rail.
8. For details of End Cap (Type TC), see Standard Plan A77J4.
9. See Standard Plan A77J4 for additional details regarding depth dimension for straight metal box spacer.

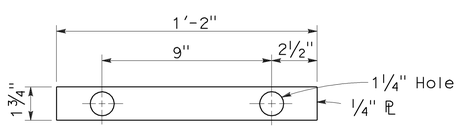

PLATE 'A'

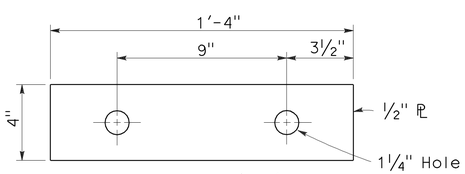

PLATE 'B'
(For backside of connection BB)

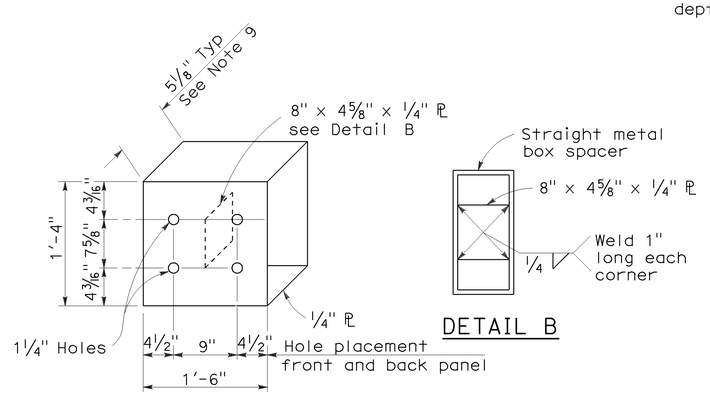

DETAIL B

DETAIL A

STRAIGHT METAL BOX SPACER

STATE OF CALIFORNIA
DEPARTMENT OF TRANSPORTATION

METAL BEAM GUARD RAILING CONNECTIONS TO BRIDGE RAILINGS WITHOUT SIDEWALKS DETAILS No.1

NO SCALE

RSP A77J1 DATED JUNE 6, 2008 SUPERSEDES STANDARD PLAN A77J1
DATED MAY 1, 2006 - PAGE 72 OF THE STANDARD PLANS BOOK DATED MAY 2006.

REVISED STANDARD PLAN RSP A77J1

2006 REVISED STANDARD PLAN RSP A77J1

12-10-07

DIST	COUNTY	ROUTE	POST MILES TOTAL PROJECT	SHEET NO.	TOTAL SHEETS
08	Riv	10	9.3/20.2	28	37

Randell D. Hiatt
REGISTERED CIVIL ENGINEER

June 6, 2008
PLANS APPROVAL DATE

REGISTERED PROFESSIONAL ENGINEER Randell D. Hiatt No. C50200 Exp. 6-30-09 CIVIL STATE OF CALIFORNIA

The State of California or its officers or agents shall not be responsible for the accuracy or completeness of electronic copies of this plan sheet.

To accompany plans dated March 28, 2011

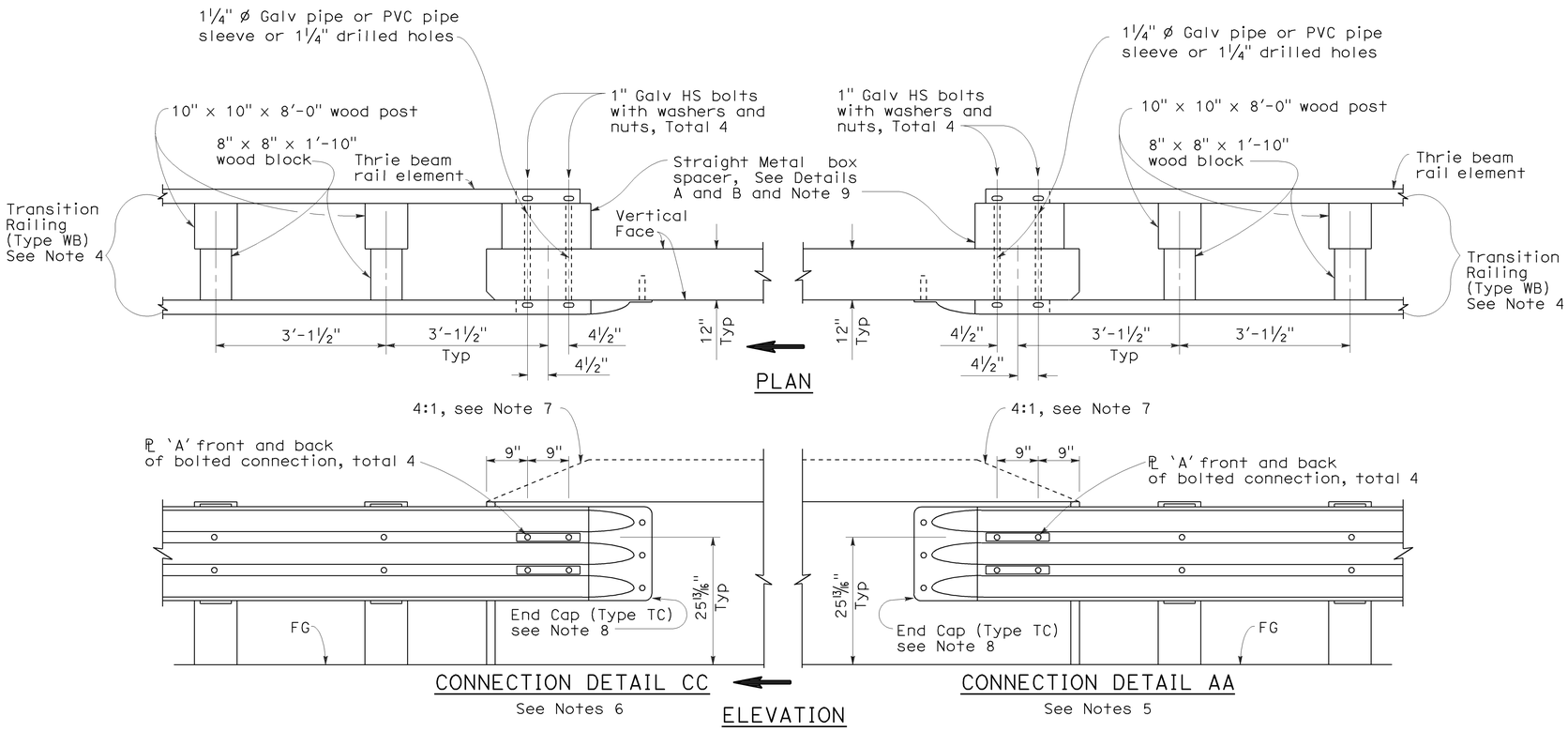

GUARD RAILING CONNECTION TO BRIDGE RAILING WITHOUT SIDEWALK

NOTES:

1. See Revised Standard Plan RSP A77J1 for additional connection details to bridges without sidewalks.
2. Additional details of posts, blocks and hardware are shown on Standard Plan A77B1, A77C1 and A77C2.
3. Direction of adjacent traffic indicated by ⟹.
4. For additional details of Transition Railing (Type WB), see Standard Plan A77J4. Transition Railing (Type WB) transitions the 12 gage w-beam standard railing section of guard railing to a heavier gage nested thrie beam railing section which is connected to the concrete bridge railing.
5. For typical use of Connection Detail AA, see Layout Types 12A and 12B on Revised Standard Plan RSP A77F1, Layout Types 12C and 12D on Standard Plan A77F2, and Layout Type 12E on Revised Standard Plan RSP A77F3.
6. For typical use of Connection Detail CC, see Layout Types 12AA and 12BB on Standard Plan A77F4 and Layout Type 12CC on Standard Plan A77F5.
7. Where the height of the bridge railing exceeds the height of the thrie beam railing by more than 1" at Connection Detail AA and connection Detail CC, taper the top of the end of the bridge railing at 4:1 to match the top elevation of the thrie beam railing.
8. For details of End Cap (Type TC), see Standard Plans A77J4.
9. See Standard Plans A77J4 for additional details regarding depth dimension for straight metal box spacer.

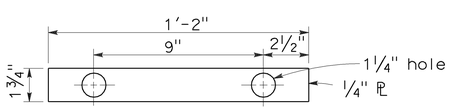

PLATE 'A'

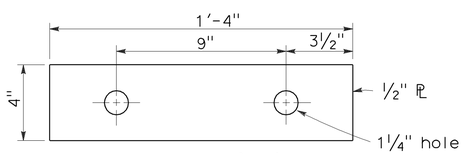

PLATE 'B'
(For backside of connection BB)

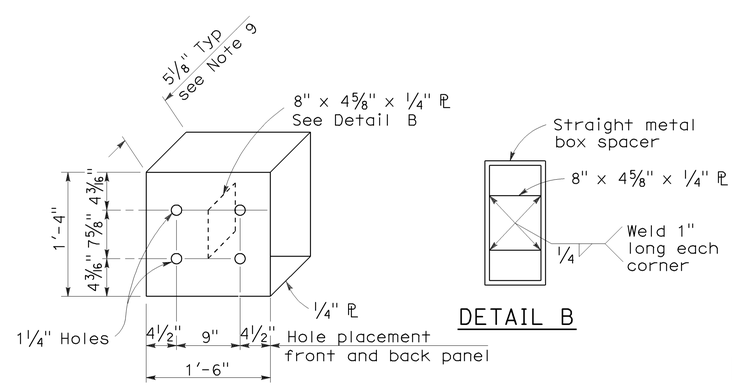

DETAIL A

DETAIL B

STRAIGHT METAL BOX SPACER

STATE OF CALIFORNIA
DEPARTMENT OF TRANSPORTATION

METAL BEAM GUARD RAILING CONNECTIONS TO BRIDGE RAILINGS WITHOUT SIDEWALKS DETAILS No.2

NO SCALE

RSP A77J2 DATED JUNE 6, 2008 SUPERSEDES STANDARD PLAN A77J2 DATED MAY 1, 2006 - PAGE 73 OF THE STANDARD PLANS BOOK DATED MAY 2006.

REVISED STANDARD PLAN RSP A77J2

2006 REVISED STANDARD PLAN RSP A77J2

12-10-07

DIST	COUNTY	ROUTE	POST MILES TOTAL PROJECT	SHEET NO.	TOTAL SHEETS
08	Riv	10	9.3/20.2	29	37

Randell D. Hiatt
REGISTERED CIVIL ENGINEER

June 5, 2009
PLANS APPROVAL DATE

REGISTERED PROFESSIONAL ENGINEER Randell D. Hiatt No. C50200 Exp. 6-30-09 CIVIL STATE OF CALIFORNIA

The State of California or its officers or agents shall not be responsible for the accuracy or completeness of electronic copies of this plan sheet.

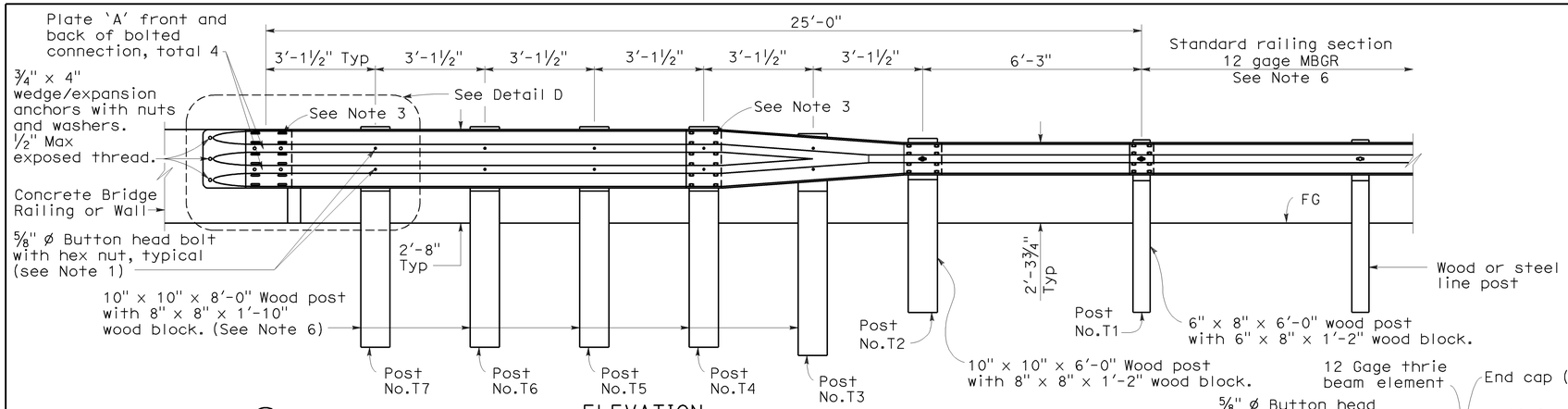

ELEVATION

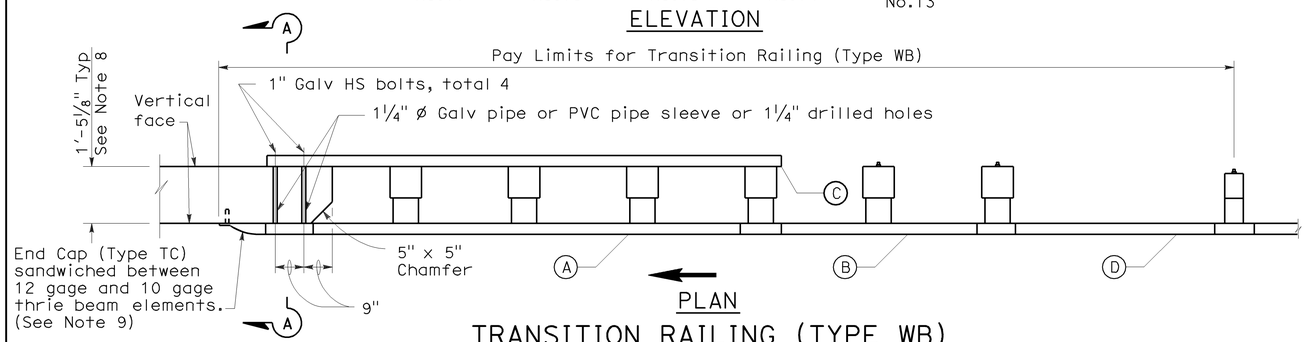

PLAN

TRANSITION RAILING (TYPE WB)

(No Blockout Attachment)

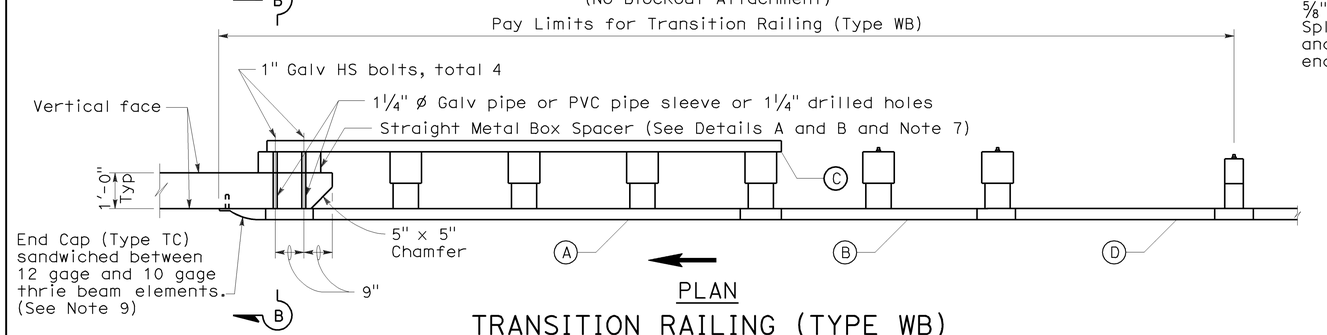

PLAN

TRANSITION RAILING (TYPE WB)

(Blockout Attachment)

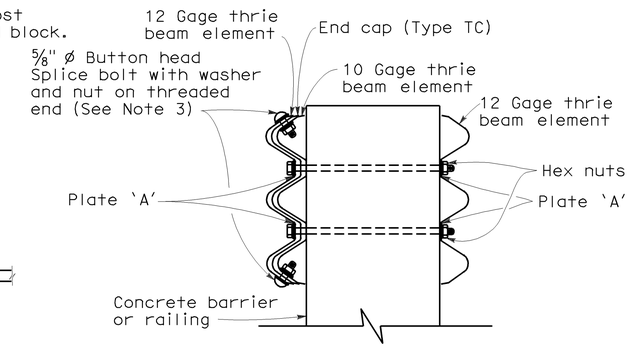

SECTION A-A

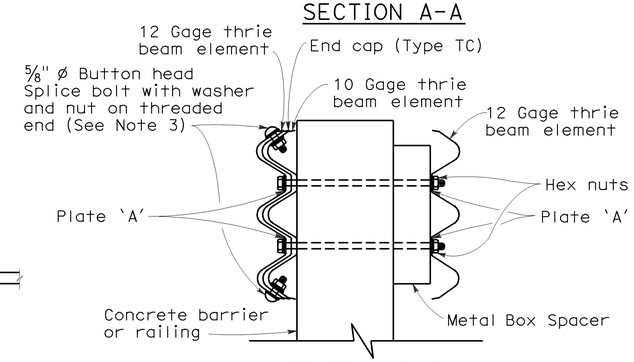

SECTION B-B

NOTES:

To accompany plans dated March 28, 2011

1. Use 5/8 " ø Button head bolts and hex nuts for connections to posts. No washer on rail face for bolted connections to post.
2. The nested rail elements, end cap, and 'W' beam to thrie beam element may be spliced together prior to bolting the elements to the wood post and concrete barrier or railing.
3. Exterior splice bolt holes for rail element splices at Post No.T4 and the connection to the concrete barrier or railing shall be the standard 29/32 " x 1 1/8 " slot size. Interior splice bolt holes at these locations may be increased up to 1 1/4 " ø. Only the top 2 and the bottom 2 splice bolts with washers and nuts are required for rail splices at Post No.T4 and the connection to the concrete barrier or railing.
4. Direction of adjacent traffic indicated by →.
5. The top elevation of Post Nos.T2 through T7 shall not project more than 1" above the top elevation of the rail element.
6. Typically, the railing connected to Transition Railing (Type WB) will be either standard railing section of metal beam guard railing or an approved Caltrans end treatment attached to Post No.T1.
7. The depth of the metal box spacer varies from the 5 1/8 " to 1 1/2 " and is dependent on the width of the concrete railing or wall. The combined dimension for the depth of the metal box spacer plus the width of railing or wall is typically 17 1/8 ". Where the space between the backside of the concrete railing or wall and the rear thrie beam element is less than 1 1/2 ", metal plates similar to Plate 'A' are to be used as spacers.
8. Where the width of the concrete railing or wall is greater than 17 1/8 ", wood blocks are to be used to fill the space created between the backside of Posts No.4 through No.7 and the rear thrie beam element. These wood blocks shall be 8" in width and 1'-2" in length. The dimension between the front thrie beam element and the rear thrie beam element is to match the width of the concrete railing or wall.
9. End cap may be installed over 12 gage and 10 gage thrie beam elements where transition railing is installed on the departure end of bridge railing.

LEGEND

(A) Nested thrie beam elements (one 12 gage element nested over one 10 gage element).

(B) One 10 gage "W" beam to thrie beam element.

(C) One 12 gage thrie beam element.

(D) One 10 gage "W" beam rail element (7'-3½" length)

10 gage = 0.135" thick

12 gage = 0.108" thick

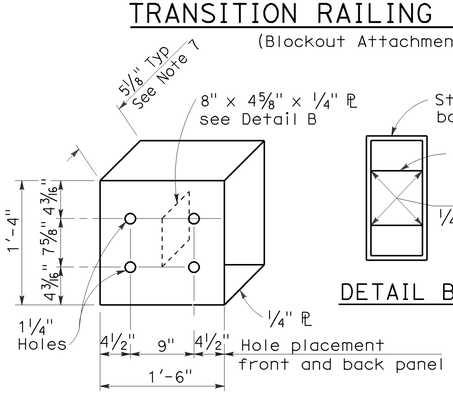

DETAIL A

STRAIGHT METAL BOX SPACER

DETAIL B

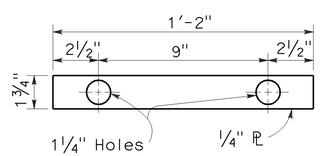

DETAIL C

PLATE 'A'

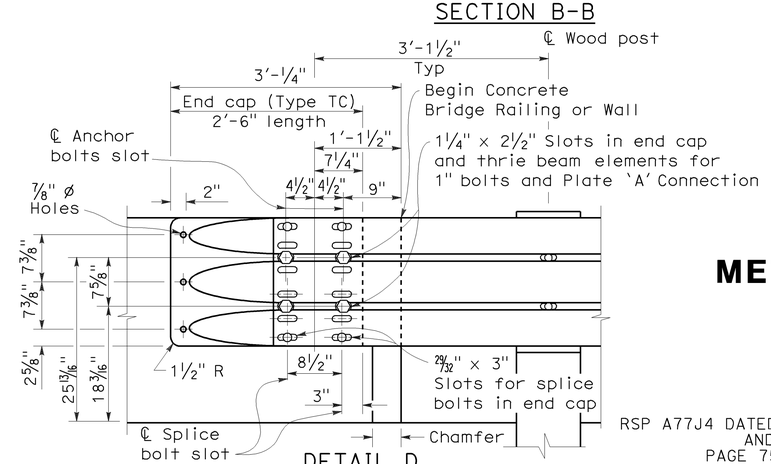

DETAIL D

STATE OF CALIFORNIA
DEPARTMENT OF TRANSPORTATION

METAL BEAM GUARD RAILING TRANSITION RAILING (TYPE WB)

NO SCALE

RSP A77J4 DATED JUNE 5, 2009 SUPERSEDES RSP A77J4 DATED JUNE 6, 2008 AND STANDARD PLAN A77J4 DATED MAY 1, 2006 - PAGE 75 OF THE STANDARD PLANS BOOK DATED MAY 2006.

REVISED STANDARD PLAN RSP A77J4

2006 REVISED STANDARD PLAN RSP A77J4

5-14-09

DIST	COUNTY	ROUTE	POST MILES TOTAL PROJECT	SHEET NO.	TOTAL SHEETS
08	Riv	10	9.3/20.2	30	37

Randell D. Hiatt
REGISTERED CIVIL ENGINEER

June 6, 2008
PLANS APPROVAL DATE

REGISTERED PROFESSIONAL ENGINEER
Randell D. Hiatt
No. C50200
Exp. 6-30-09
CIVIL
STATE OF CALIFORNIA

The State of California or its officers or agents shall not be responsible for the accuracy or completeness of electronic copies of this plan sheet.

To accompany plans dated March 28, 2011

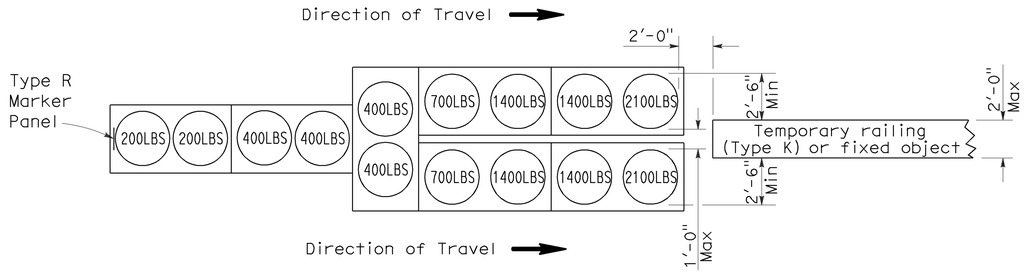

ARRAY 'TU14'

Approach speed 45 mph or more

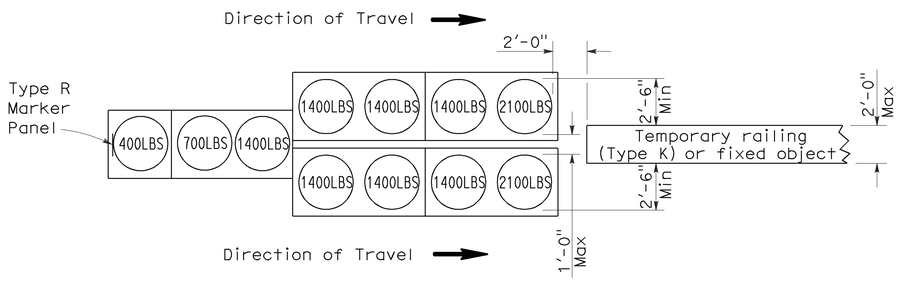

ARRAY 'TU11'

Approach speed less than 45 mph

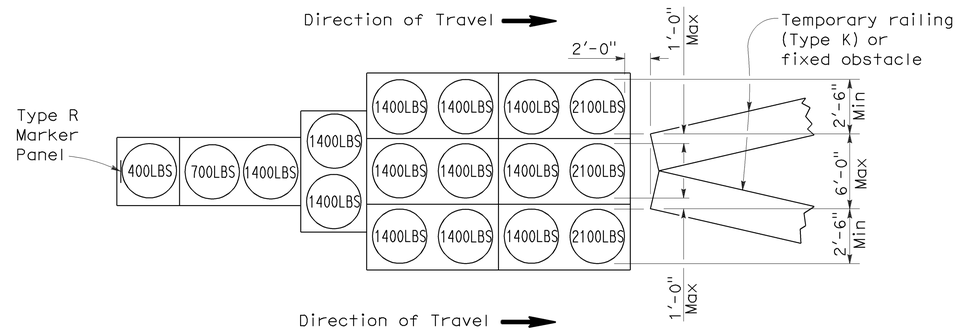

ARRAY 'TU17'

Approach speed less than 45 mph

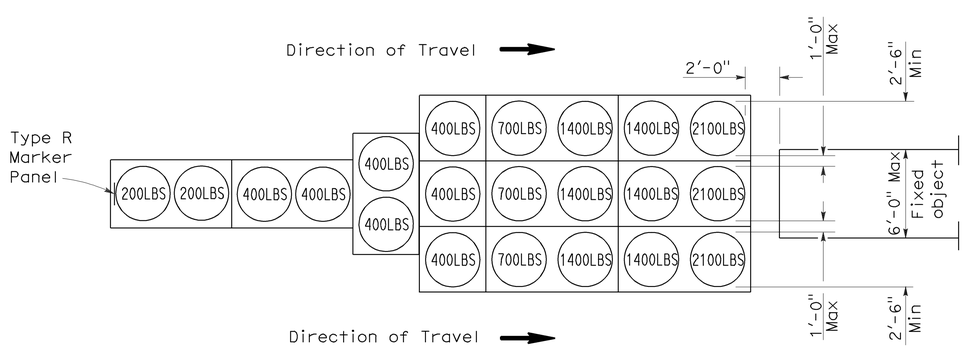

ARRAY 'TU21'

Approach speed 45 mph or more

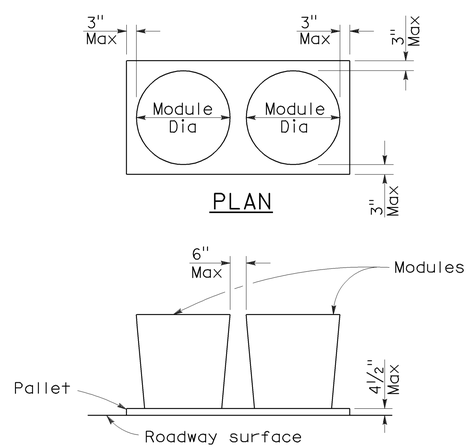

ELEVATION

CRASH CUSHION PALLET DETAIL

See Note 7

NOTES:

1. (XXX) Indicates sand filled module location and weight of sand in pounds for each module. Module spacing is based on the greater diameter of the module.
2. All sand weights are nominal.
3. Temporary crash cushion arrays shall not encroach on the traveled way.
4. Place the top of Type R marker panel 1" below the module lid.
5. Refer to Standard Plan A73B for marker details.
6. Approach speeds indicated conform to NCHRP 350 Report criteria.
7. Use of pallets is optional.

STATE OF CALIFORNIA
DEPARTMENT OF TRANSPORTATION

TEMPORARY CRASH CUSHION, SAND FILLED (UNIDIRECTIONAL)

NO SCALE

RSP T1A DATED JUNE 6, 2008 SUPERSEDES STANDARD PLAN T1A
DATED MAY 1, 2006 - PAGE 211 OF THE STANDARD PLANS BOOK DATED MAY 2006.

REVISED STANDARD PLAN RSP T1A

2006 REVISED STANDARD PLAN RSP T1A

DIST	COUNTY	ROUTE	POST MILES TOTAL PROJECT	SHEET NO.	TOTAL SHEETS
08	Riv	10	9.3/20.2	31	37

Randell D. Hiatt
REGISTERED CIVIL ENGINEER

June 6, 2008
PLANS APPROVAL DATE

REGISTERED PROFESSIONAL ENGINEER
Randell D. Hiatt
No. C50200
Exp. 6-30-09
CIVIL
STATE OF CALIFORNIA

The State of California or its officers or agents shall not be responsible for the accuracy or completeness of electronic copies of this plan sheet.

To accompany plans dated March 28, 2011

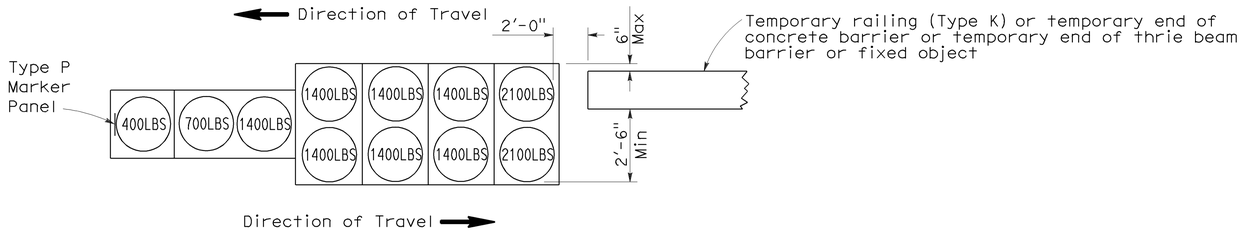

ARRAY 'TB11'

Approach speed less than 45 mph

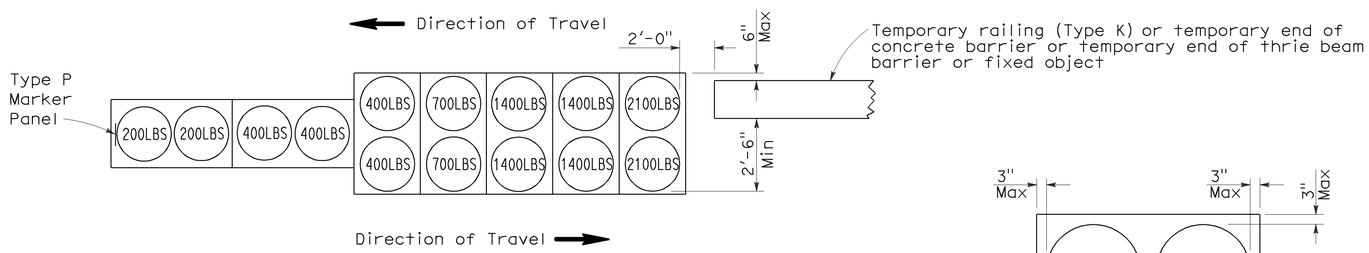

ARRAY 'TB14'

Approach speed 45 mph or more

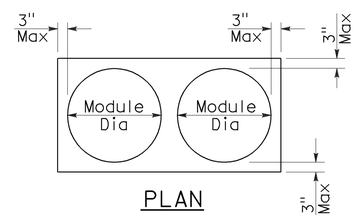

PLAN

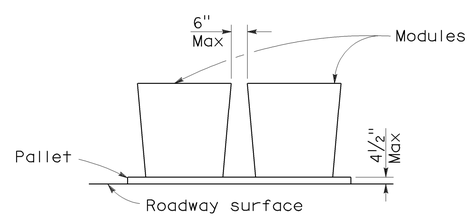

ELEVATION

CRASH CUSHION PALLET DETAIL

See Note 7

NOTES:

1. (XXX) Indicates sand filled module location and weight of sand in pounds for each module. Module spacing is based on the greater diameter of the module.
2. All sand weights are nominal.
3. Temporary crash cushion arrays shall not encroach on the traveled way.
4. Place the Type P marker panel so that the bottom of the panel rests upon the pallet.
5. Refer to Standard Plan A73B for marker details.
6. Approach speeds indicated conform to NCHRP 350 Report criteria.
7. Use of pallets is optional.

STATE OF CALIFORNIA
DEPARTMENT OF TRANSPORTATION

TEMPORARY CRASH CUSHION, SAND FILLED (BIDIRECTIONAL)

NO SCALE

RSP T1B DATED JUNE 6, 2008 SUPERSEDES STANDARD PLAN T1B
DATED MAY 1, 2006 - PAGE 212 OF THE STANDARD PLANS BOOK DATED MAY 2006.

REVISED STANDARD PLAN RSP T1B

2006 REVISED STANDARD PLAN RSP T1B

5-15-08

DIST	COUNTY	ROUTE	POST MILES TOTAL PROJECT	SHEET NO.	TOTAL SHEETS
08	Riv	10	9.3/20.2	32	37

Randell D. Hiatt
REGISTERED CIVIL ENGINEER

June 6, 2008
PLANS APPROVAL DATE

REGISTERED PROFESSIONAL ENGINEER
Randell D. Hiatt
No. C50200
Exp. 6-30-09
CIVIL
STATE OF CALIFORNIA

The State of California or its officers or agents shall not be responsible for the accuracy or completeness of electronic copies of this plan sheet.

To accompany plans dated March 28, 2011

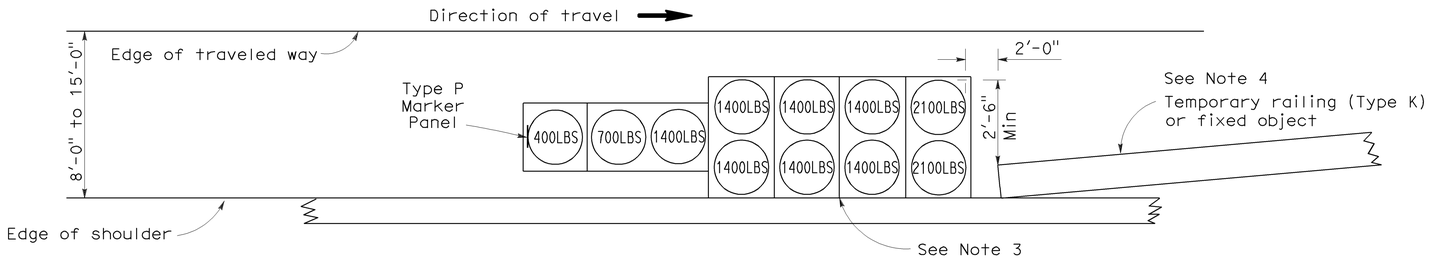

ARRAY 'TS11'

Approach speed less than 45 mph
See Note 9

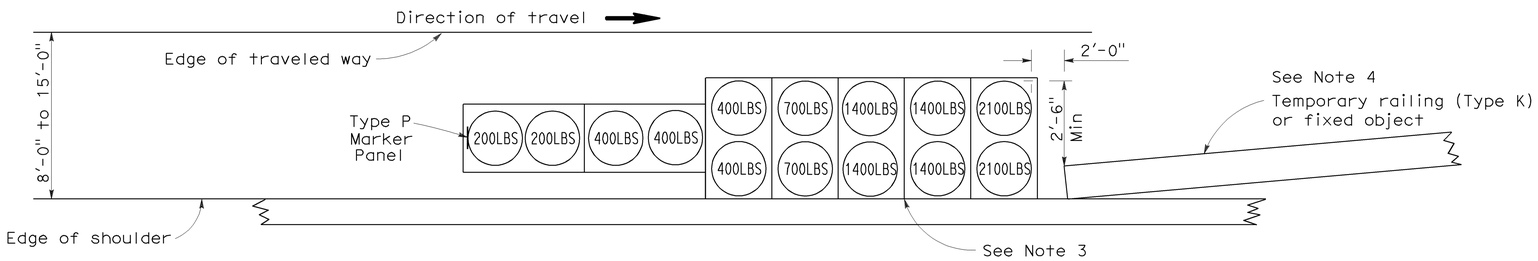

ARRAY 'TS14'

Approach speed 45 mph or more
See Note 9

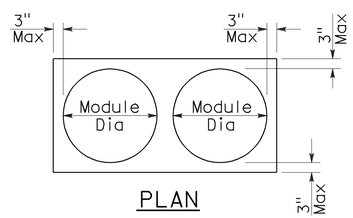

PLAN

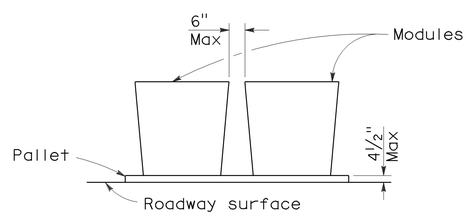

ELEVATION

CRASH CUSHION PALLET DETAIL

See Note 11

NOTES:

1. (XXX) Indicates sand filled module location and weight of sand in pounds for each module. Module spacing is based on the greater diameter of the module.
2. All sand weights are nominal.
3. The temporary crash cushion arrays shown on this plan shall be used only in locations where there will be traffic on one side of the temporary crash cushion array.
4. If the fixed object or approach end of the temporary railing is less than 15'-0" from the edge of traveled way, a temporary crash cushion is required in a construction or work zone.
5. Temporary crash cushion arrays shall not encroach on the traveled way.
6. Arrays for median shoulders shall conform to details shown on this plan for outside shoulders.
7. Place the Type P marker panel so that the bottom of the panel rests upon the pallet and faces traffic.
8. Refer to Standard Plan A73B for marker details.
9. For shoulder widths less than 8'-0", appropriate approved crash cushion protection, other than sand filled modules, shall be provided at fixed objects and at approach ends of temporary railing. The specific type of crash cushion shall be as shown on the project plans or as specified in the Special Provisions, or if not shown on the project plans or specified in the Special Provisions, shall be as approved by the Engineer.
10. Approach speeds indicated conform to NCHRP 350 Report criteria.
11. Use of pallets is optional.

STATE OF CALIFORNIA
DEPARTMENT OF TRANSPORTATION

TEMPORARY CRASH CUSHION, SAND FILLED (SHOULDER INSTALLATIONS)

NO SCALE

RSP T2 DATED JUNE 6, 2008 SUPERSEDES STANDARD PLAN T2
DATED MAY 1, 2006 - PAGE 213 OF THE STANDARD PLANS BOOK DATED MAY 2006.

REVISED STANDARD PLAN RSP T2

2006 REVISED STANDARD PLAN RSP T2

5-15-08

DIST	COUNTY	ROUTE	POST MILES TOTAL PROJECT	SHEET NO.	TOTAL SHEETS
08	Riv	10	9.3/20.2	33	37

Robert B Schott
LICENSED LANDSCAPE ARCHITECT

April 3, 2009
PLANS APPROVAL DATE

LICENSED LANDSCAPE ARCHITECT
Robert B. Schott 3685
Robert B Schott
11-30-10
Renewal Date
2-25-09
Date
STATE OF CALIFORNIA

The State of California or its officers or agents shall not be responsible for the accuracy or completeness of electronic copies of this plan sheet.

To accompany plans dated March 28, 2011

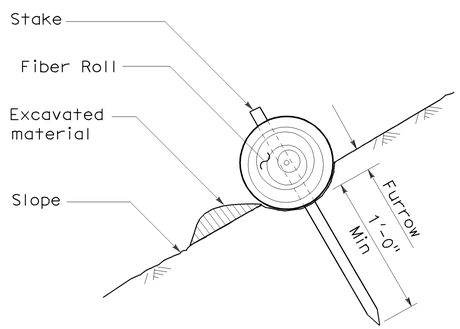

SECTION

TEMPORARY FIBER ROLL (TYPE 1)

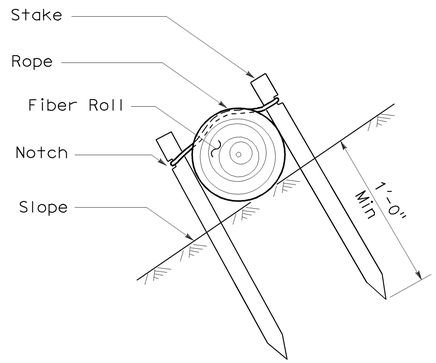

SECTION

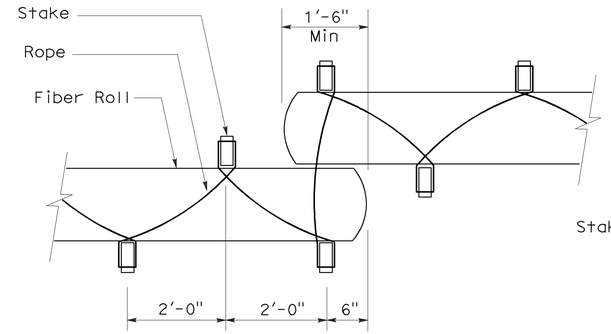

PLAN

TEMPORARY FIBER ROLL (TYPE 2)

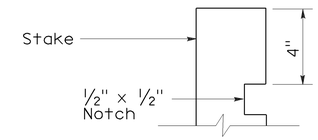

ELEVATION

STAKE NOTCH DETAIL

NOTES:

1. Temporary fiber roll spacing varies depending upon slope inclination.
2. Installations shown in the perspectives are for slope inclination of 10:1 and steeper.

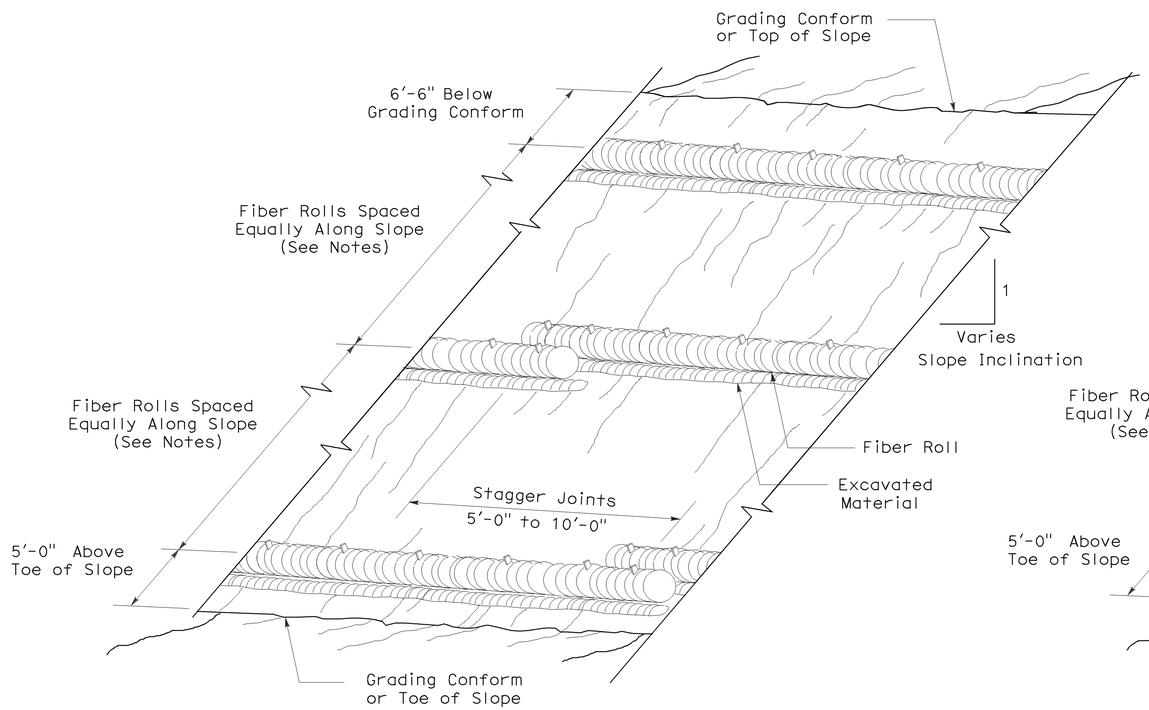

PERSPECTIVE

TEMPORARY FIBER ROLL (TYPE 1)

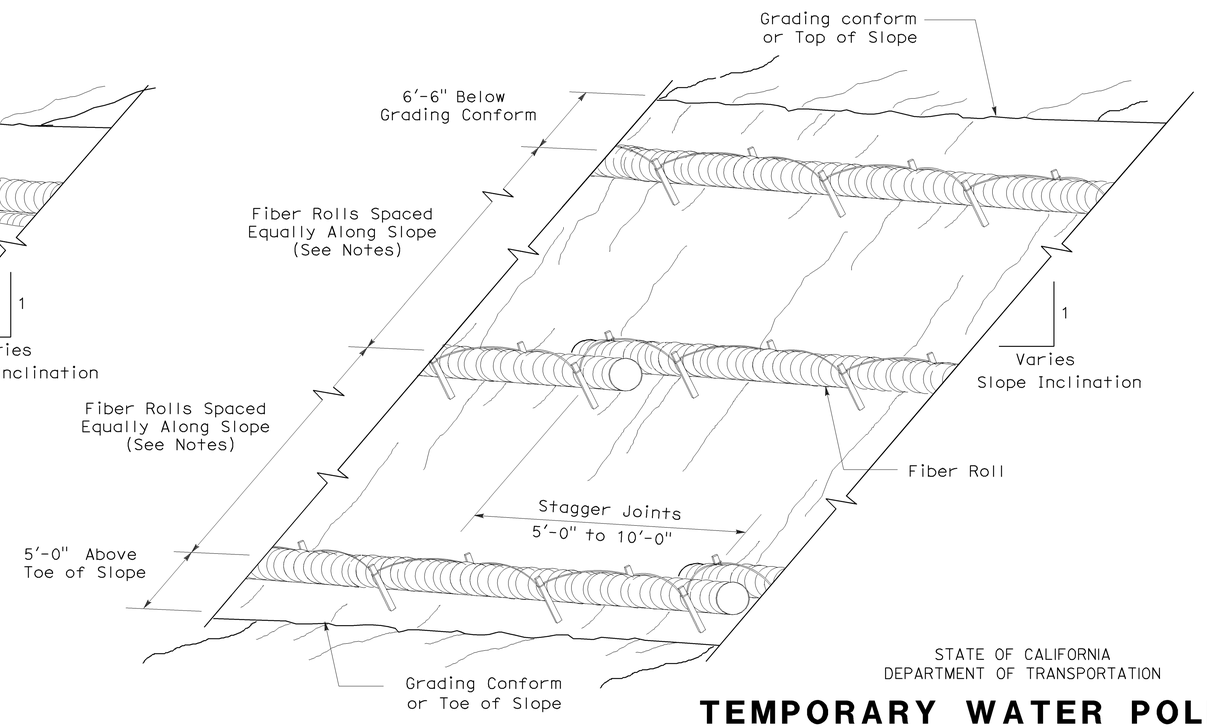

PERSPECTIVE

TEMPORARY FIBER ROLL (TYPE 2)

STATE OF CALIFORNIA
DEPARTMENT OF TRANSPORTATION

TEMPORARY WATER POLLUTION CONTROL DETAILS (TEMPORARY FIBER ROLL)

NO SCALE

RSP T56 DATED APRIL 3, 2009 SUPERSEDES STANDARD PLAN T56
DATED MAY 1, 2006 - PAGE 232 OF THE STANDARD PLANS BOOK DATED MAY 2006.

REVISED STANDARD PLAN RSP T56

2006 REVISED STANDARD PLAN RSP T56

2-23-09

DIST	COUNTY	ROUTE	POST MILES TOTAL PROJECT	SHEET No.	TOTAL SHEETS
08	Riv	10	9.3/20.2	34	37

Genaro M. Doria 11-10-10
REGISTERED CIVIL ENGINEER DATE

March 28, 2011
PLANS APPROVAL DATE

REGISTERED PROFESSIONAL ENGINEER GENARO M. DORIA No. C63583 Exp. 9/30/12 CIVIL STATE OF CALIFORNIA

The State of California or its officers or agents shall not be responsible for the accuracy or completeness of electronic copies of this plan sheet.

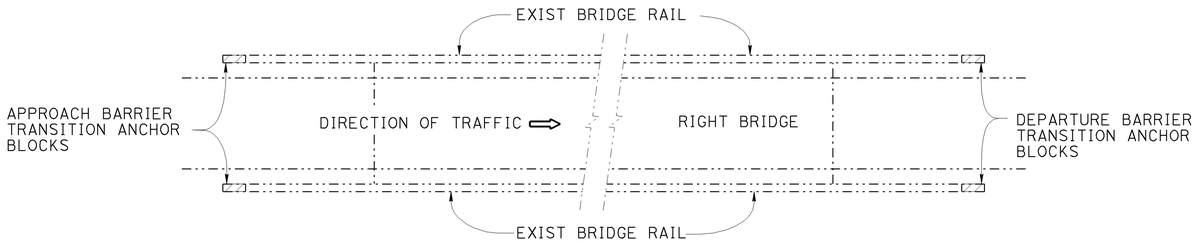

ONE WAY BRIDGES (PLAN A)

NO SCALE

NOTE:
FOR MBGR SEE ROADWAY PLANS

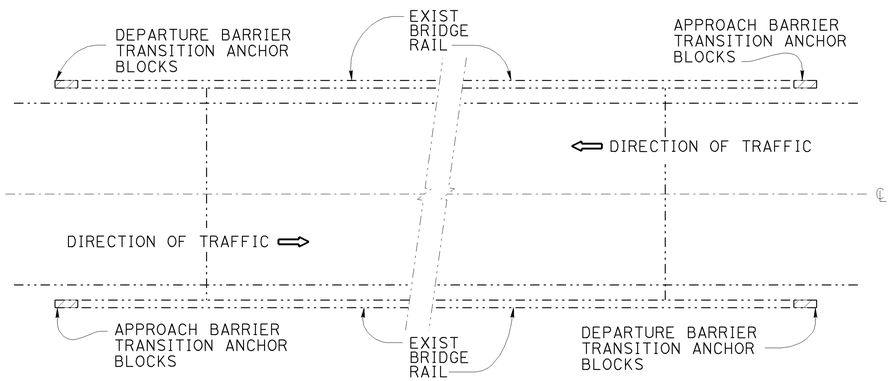

TWO WAY BRIDGES (PLAN B)

NO SCALE

INDEX TO PLANS

SHEET No.	TITLE
1	GENERAL PLAN - INDEX TO PLANS
2	TYPE 1 BARRIER TRANSITION ANCHOR BLOCKS
3	TYPE 9 BARRIER TRANSITION ANCHOR BLOCKS
4	CONCRETE BARRIER (BLOCK TYPE)

Notes:

1. See "ROADWAY PLANS" for site locations
2. See "STANDARD PLANS, MAY 2006", A62C, A77J1, RSP A77J2, A77J3, RSP A77J4, RSP A78F2

QUANTITIES

BRIDGE REMOVAL (PORTION)	LUMP	SUM
STRUCTURE EXCAVATION (BRIDGE)	35	CY
STRUCTURE BACKFILL (BRIDGE)	25	CY
STRUCTURAL CONCRETE (BARRIER TRANSITION BLOCK)	30	CY
DRILL AND BOND DOWEL	201	LF
BAR REINFORCING STEEL (EPOXY COATED) (BRIDGE)	4800	LB

JAMES SAGAR
DESIGN ENGINEER

	BY	CHECKED
DESIGN	G DORIA	J MAGANA
DETAILS	P C WELLS	G DORIA
QUANTITIES	G DORIA	J MAGANA

LOAD & RESISTANCE FACTOR DESIGN — LIVE LOADING: HL93 W/"LOW-BOY"; PERMIT DESIGN VEHICLE

	BY	CHECKED
LAYOUT	MANOJ HARIYA	DU LU
SPECIFICATIONS	TERESA NEDWICK	PLANS AND SPECS COMPARED X

ORIGINAL SCALE IN INCHES FOR REDUCED PLANS 0 1 2 3

STATE OF CALIFORNIA
DEPARTMENT OF TRANSPORTATION

DIVISION OF ENGINEERING SERVICES
STRUCTURE DESIGN
SPECIAL DESIGNS BRANCH

BRIDGE NO. VARIES
POST MILE 8.2/20.2

BARRIER TRANSITION ANCHOR BLOCKS
GENERAL PLAN, INDEX

UNIT: 3625
PROJECT NUMBER & PHASE: 0800000759
CONTRACT NO.: X

DISREGARD PRINTS BEARING EARLIER REVISION DATES
REVISION DATES 1/11/2011

SHEET 1 OF 4

STRUCTURES DESIGN GENERAL PLAN SHEET (ENGLISH) (REV.09-01-10)

FILE => 08477811-a-gp01.dgn

USERNAME => pwells DATE PLOTTED => 29-MAR-2011 TIME PLOTTED => 11:24

DIST	COUNTY	ROUTE	POST MILES TOTAL PROJECT	SHEET No.	TOTAL SHEETS
08	Riv	10	9.3/20.2	35	37

REGISTERED CIVIL ENGINEER — 11-10-10 DATE

March 28, 2011
PLANS APPROVAL DATE

REGISTERED PROFESSIONAL ENGINEER — GENARO M. DORIA — No. C63583 — Exp. 9/30/12 — CIVIL — STATE OF CALIFORNIA

The State of California or its officers or agents shall not be responsible for the accuracy or completeness of electronic copies of this plan sheet.

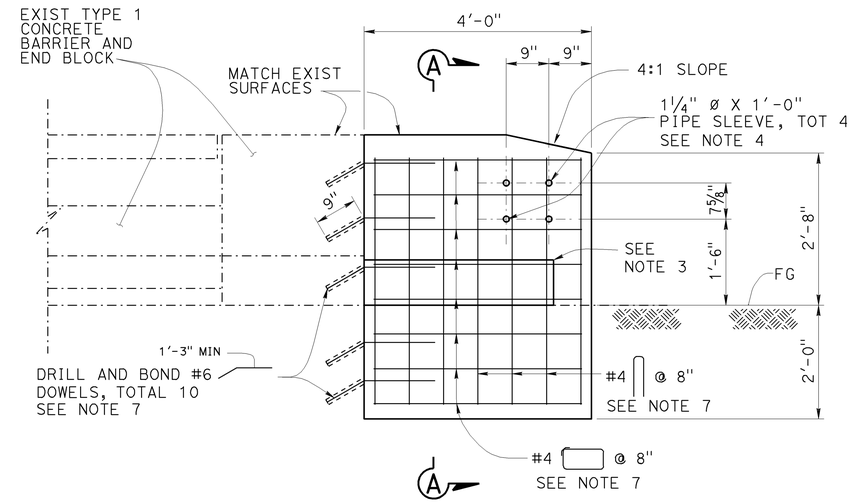

ELEVATION

¾" = 1'

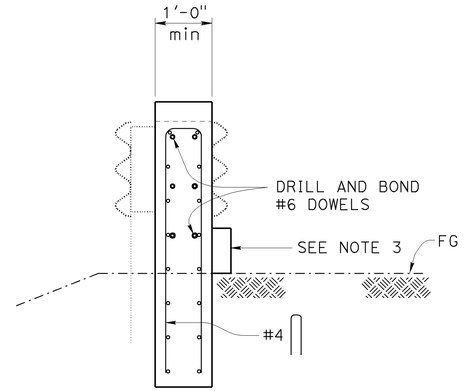

SECTION A-A

¾" = 1'

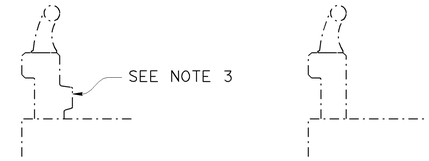

CASE 1 CASE 2

TYPICAL SECTION EXISTING TYPE 1 BARRIER RAIL

½" = 1'

LEGEND

INDICATES EXISTING STRUCTURE

INDICATES NEW CONSTRUCTION

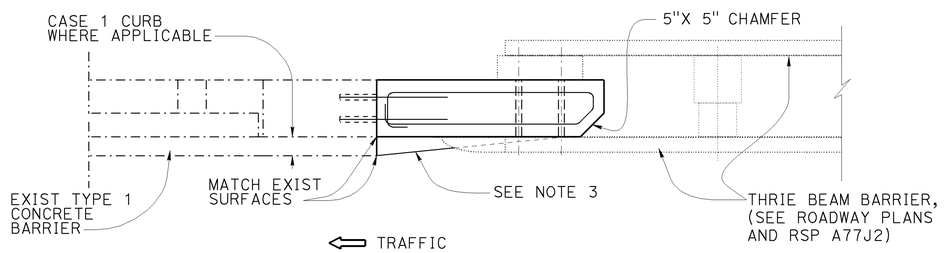

PLAN

¾" = 1'

NOTES:

1. For limits of excavation and backfill, see 2006 Standard Plans A62C, SECTION E-E.
2. Minimum 1" cover, (typical).
3. When rail is similar to Case 1, transition curb 10:1 until flush with vert face of transition block.
4. Epoxy fill drilled holes for bolts used to fasten MBGR to existing end block, unless holes were cast using pipe sleeves.
5. See "ROADWAY PLANS" for site locations.
6. For Plan A or Plan B see GENERAL PLAN sheet.
7. SEE RSP A77J1 FOR DEPARTURE CONNECTION TYPE

LOCATION TABLE FOR TYPE 1 BARRIER TRANSITION BLOCK APPLICATIONS

Location No.	Bridge No.	Bridge Name	Route	Post Mile	Direction	No. of "WB"connections @ Approach End	No. of "WB"connections @ Departure End	GP TYPE (see note 6)
1,2,21	56-0432	Highlands Springs UC	10	R9.31	EB	1	1-(see note 7)	B
					WB	1*		
23	56-0431	Sunset Ave UC	10	R11.33	EB	1		B
					WB	1*		
10,30	56-0328	East Ramsey St. UC	10	14.76	EB	1		B
					WB	1		
13,33	56-0003	San Gorgonio Wash	10	16.1	EB	1		B
					WB		1-(see note 7)	
14,34	56-0351	San Gorgonio ovfl	10	16.23	EB	1*	1-(see note 7)	B
					WB	1*		
15,35,36	56-0454	Fields Road UC	10	16.54	EB	1		B
					WB	1	1-(see note 7)	
17,18,39	56-0455	Apache Trail UC	10	17.66	EB	1	1-(see note 7)	B
					WB	1*		
20,41	56-0529	Millard Canyon Wash	10	20.15	EB	1		A
					WB	1		

* Existing Barrier Case 1 (see TYPICAL SECTION)

THE CONTRACTOR SHALL VERIFY ALL CONTROLLING FIELD DIMENSIONS BEFORE ORDERING OR FABRICATING ANY MATERIAL.

	BY	CHECKED
DESIGN	G DORIA	J MAGANA
DETAILS	P C WELLS	G DORIA
QUANTITIES	G DORIA	J MAGANA

STATE OF CALIFORNIA
DEPARTMENT OF TRANSPORTATION

DIVISION OF ENGINEERING SERVICES
STRUCTURE DESIGN
SPECIAL DESIGN BRANCH

BRIDGE NO. VARIES
POST MILE 8.2/20.2

TYPE 1 BARRIER TRANSITION ANCHOR BLOCK LOCATION, DEMOLITION & MISC DETAILS

STRUCTURES DESIGN SPECIAL DESIGN SHEET (ENGLISH) (REV. 09-01-10)

ORIGINAL SCALE IN INCHES FOR REDUCED PLANS 0 1 2 3

UNIT: 3625
PROJECT NUMBER & PHASE: 080000759
CONTRACT NO.: X

DISREGARD PRINTS BEARING EARLIER REVISION DATES

REVISION DATES

SHEET 2 OF 4

FILE => 08477811-u-brdt01.dgn

USERNAME => pwells DATE PLOTTED => 29-MAR-2011 TIME PLOTTED => 11:25

DIST	COUNTY	ROUTE	POST MILES TOTAL PROJECT	SHEET No.	TOTAL SHEETS
08	Riv	10	9.3/20.2	36	37

REGISTERED CIVIL ENGINEER — DATE 11-10-10

March 28, 2011
PLANS APPROVAL DATE

The State of California or its officers or agents shall not be responsible for the accuracy or completeness of electronic copies of this plan sheet.

REGISTERED PROFESSIONAL ENGINEER — GENARO M. DORIA — No. C63583 — Exp. 9/30/12 — CIVIL — STATE OF CALIFORNIA

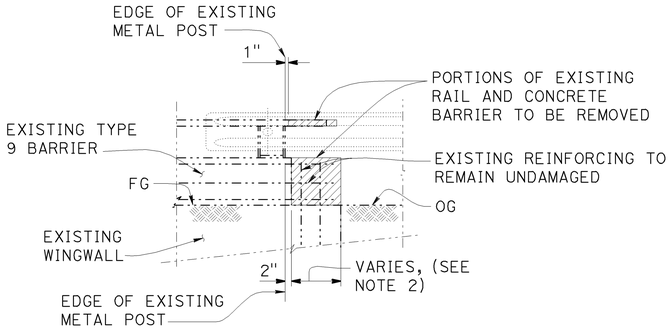

ELEVATION

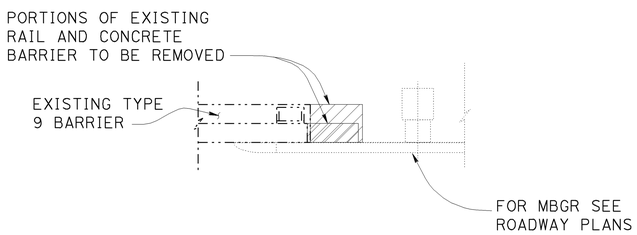

PLAN

DEMOLITION
NO SCALE

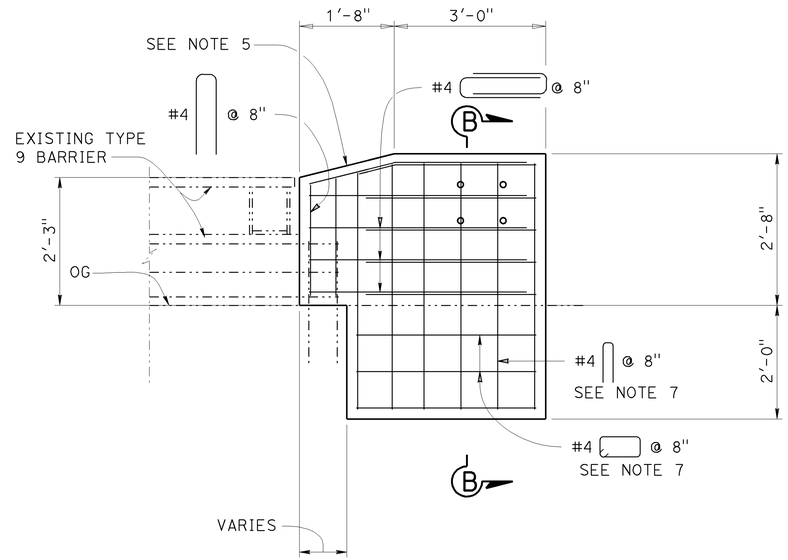

ELEVATION
NO SCALE

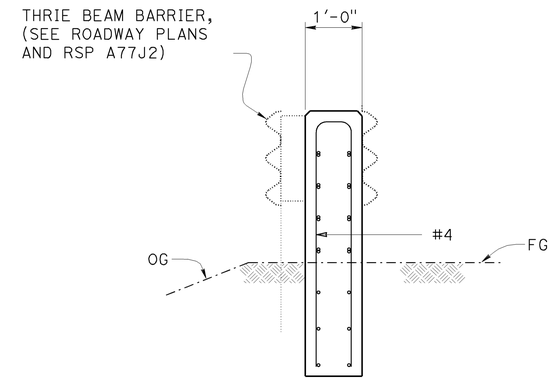

SECTION B-B
NO SCALE

LEGEND

- Indicates existing structure
- Indicates new construction
- Indicates removal

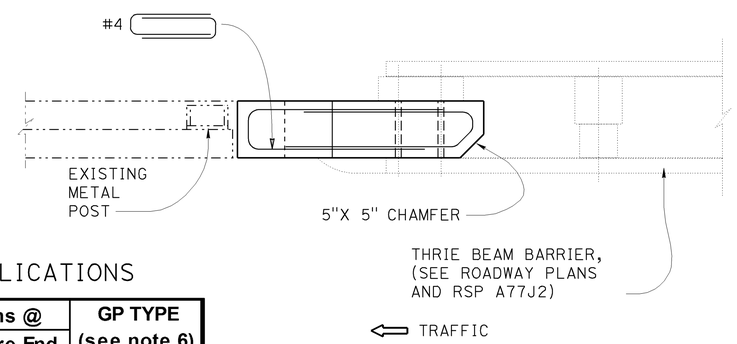

PLAN
NO SCALE

NOTES:

1. For limits of excavation and backfill see Roadway Plans and Standard Plans May 2006 A62C, Section E-E.
2. Some location may have existing anchor blocks, therefore demolition the existing rail and concrete barrier or anchor block as shown.
3. Minimum 1" cover, (typical).
4. See ROADWAY PLANS for site locations.
5. Taper the top of the end of the concrete transition railing at 4:1 to match the top elevation of the Transition Railing (Type WB).
6. For Plan A or Plan B see GENERAL PLAN sheet.

LOCATION TABLE FOR TYPE 9 BARRIER TRANSITION BLOCK APPLICATIONS

Location No.	Bridge No.	Bridge Name	Route	Post Mile	Direction	No. of "WB"connections @ Approach End	No. of "WB"connections @ Departure End	GP TYPE (see note 6)
6,24	56-0430	22nd St. UC	10	R11.97	EB	1		B
					WB	1		
26	56-0323	8th St. UC	10	12.8	EB	1		B
					WB	1		
28	56-0324	Hargrave St. UC	10	13.86	EB	1		B
					WB	1		

THE CONTRACTOR SHALL VERIFY ALL CONTROLLING FIELD DIMENSIONS BEFORE ORDERING OR FABRICATING ANY MATERIAL.

	BY	CHECKED
DESIGN	G DORIA	J MAGANA
DETAILS	P C WELLS	G DORIA
QUANTITIES	G DORIA	J MAGANA

STATE OF CALIFORNIA
DEPARTMENT OF TRANSPORTATION

DIVISION OF ENGINEERING SERVICES
STRUCTURE DESIGN
SPECIAL DESIGN BRANCH

BRIDGE NO. VARIES
POST MILE 8.2/20.2

TYPE 9 BARRIER TRANSITION ANCHOR BLOCK LOCATION, DEMOLITION & MISC DETAILS

STRUCTURES DESIGN SPECIAL DESIGN SHEET (ENGLISH) (REV. 09-01-10)

ORIGINAL SCALE IN INCHES FOR REDUCED PLANS 0 1 2 3

UNIT: 3625
PROJECT NUMBER & PHASE: 080000759
CONTRACT NO.: X

DISREGARD PRINTS BEARING EARLIER REVISION DATES

REVISION DATES

SHEET 3 OF 4

FILE => 08477811-u-brdt02.dgn

USERNAME => pwells DATE PLOTTED => 29-MAR-2011 TIME PLOTTED => 11:26

DIST	COUNTY	ROUTE	POST MILES TOTAL PROJECT	SHEET No.	TOTAL SHEETS
08	Riv	10	9.3/20.2	37	37

REGISTERED CIVIL ENGINEER DATE

March 28, 2011
PLANS APPROVAL DATE

REGISTERED PROFESSIONAL ENGINEER GENARO M. DORIA No. C63583 Exp. 9/30/12 CIVIL STATE OF CALIFORNIA

The State of California or its officers or agents shall not be responsible for the accuracy or completeness of electronic copies of this plan sheet.

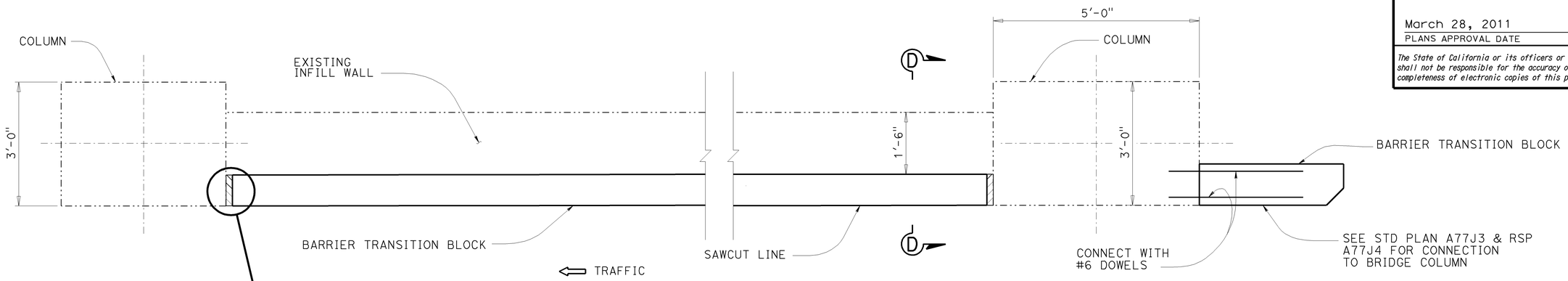

PLAN
¾" = 1'-0"

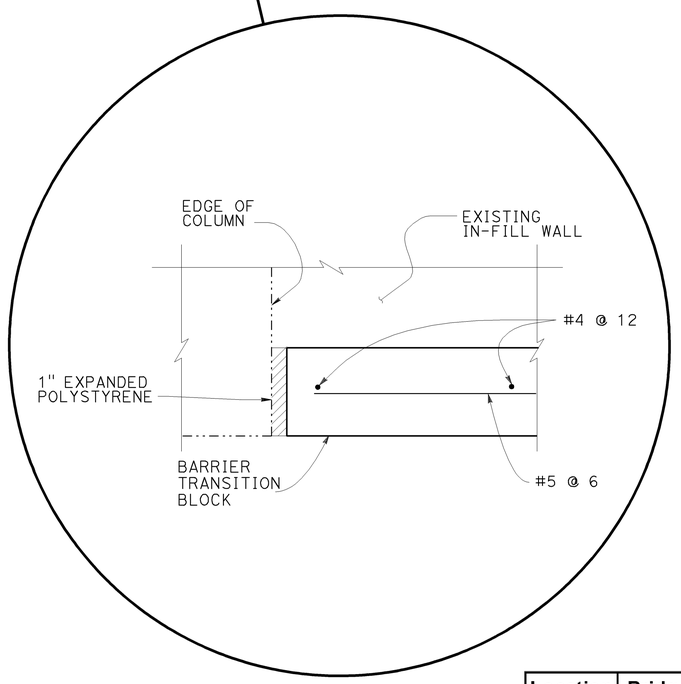

NOTES:

1. For limits of excavation and backfill, see 2006 Standard Plans A62C, SECTION E-E.
2. Minimum 2" cover, (typical).
3. See Roadway Plans for existing MBGR removal.
4. See "ROADWAY PLANS" for site locations.
5. For Plan A or Plan B see GENERAL PLAN sheet.
6. See STD PLAN A77J3 and RSP A77J4.

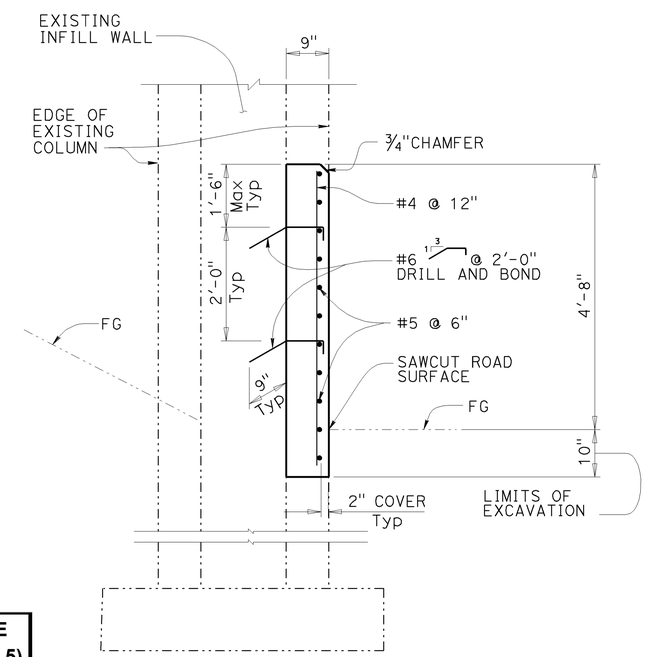

SECTION D-D
¾" = 1'-0"

LOCATION TABLE FOR CONNECTION TO BRIDGE COLUMN

Location No.	Bridge No.	Bridge Name	Route	Post Mile	Direction	No. of "WB"connections @		GP TYPE (see note 5)
						Approach End	Departure End	
19,40	56-0456	East Cabazon ramp OC	10	R19.4	EB	1		B
					WB	1		

THE CONTRACTOR SHALL VERIFY ALL CONTROLLING FIELD DIMENSIONS BEFORE ORDERING OR FABRICATING ANY MATERIAL.

	BY	CHECKED
DESIGN	G DORIA	J MAGANA
DETAILS	P C WELLS	G DORIA
QUANTITIES	G DORIA	J MAGANA

STATE OF CALIFORNIA
DEPARTMENT OF TRANSPORTATION

DIVISION OF ENGINEERING SERVICES
STRUCTURE DESIGN
SPECIAL DESIGNS BRANCH B

BRIDGE NO. 56-0456
POST MILE 8.2/20.2

BARRIER TRANSITION BLOCK & CONCRETE BARRIER
MISCELLANEOUS DETAILS

STRUCTURES DESIGN DETAIL SHEET (ENGLISH) (REV. 09-01-10)

ORIGINAL SCALE IN INCHES FOR REDUCED PLANS 0 1 2 3

UNIT: 3625
PROJECT NUMBER & PHASE: 0800000759
CONTRACT NO.: 08-477811

DISREGARD PRINTS BEARING EARLIER REVISION DATES

REVISION DATES

SHEET 4 OF 4

FILE => 08477811-u-brdt03.dgn

USERNAME => pwells DATE PLOTTED => 29-MAR-2011 TIME PLOTTED => 11:26