Dist	COUNTY	ROUTE	POST MILES TOTAL PROJECT	SHEET No.	TOTAL SHEETS
08	Riv	91	R0.6/R1.2	1	37

ACSTPE-P091(131)E

STATE OF CALIFORNIA

DEPARTMENT OF TRANSPORTATION

PROJECT PLANS FOR CONSTRUCTION ON

STATE HIGHWAY

IN RIVERSIDE COUNTY
IN CORONA
FROM 0.4 MILE SOUTH TO 0.2 MILE NORTH OF GREEN RIVER ROAD OC

TO BE SUPPLEMENTED BY STANDARD PLANS DATED MAY 2006

INDEX OF PLANS

SHEET No.	DESCRIPTION
1	TITLE AND LOCATION MAP
2	TEMPORARY WATER POLLUTION CONTROL QUANTITIES
3	PLANT LIST
4-13	PLANTING PLANS
14-18	IRRIGATION PLANS
19	LANDSCAPE DETAILS
20-21	IRRIGATION QUANTITIES
22	CONSTRUCTION AREA SIGNS
23-24	ELECTRICAL PLANS
25-37	NEW AND REVISED STANDARD PLANS

THE STANDARD PLANS LIST APPLICABLE TO THIS CONTRACT IS INCLUDED IN THE NOTICE TO BIDDERS AND SPECIAL PROVISIONS BOOK.

LOCATION MAP

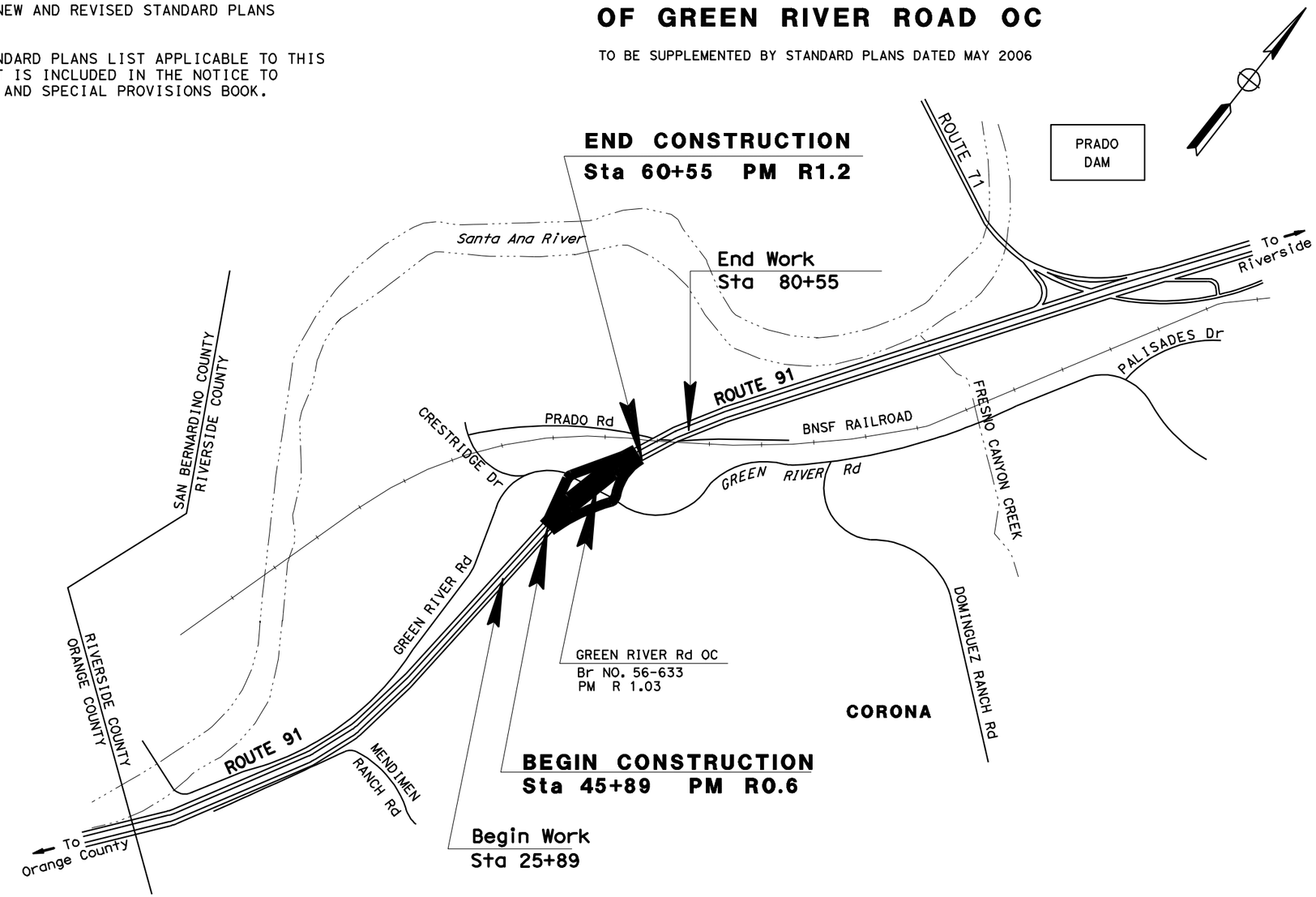

NO SCALE

THE CONTRACTOR SHALL POSSESS THE CLASS (OR CLASSES) OF LICENSE AS SPECIFIED IN THE "NOTICE TO BIDDERS."

PROJECT MANAGER: JANE TIEN

SENIOR LANDSCAPE ARCHITECT: BYRON STROUT

12-01-10
LICENSED LANDSCAPE ARCHITECT

April 04, 2011
PLANS APPROVAL DATE

LICENSED LANDSCAPE ARCHITECT — Signature — 10/31/2011 Renewal Date — 12/01/2010 Date — STATE OF CALIFORNIA

THE STATE OF CALIFORNIA OR ITS OFFICERS OR AGENTS SHALL NOT BE RESPONSIBLE FOR THE ACCURACY OR COMPLETENESS OF SCANNED COPIES OF THIS PLAN SHEET.

CONTRACT No.	08-456624
PROJECT ID	0800000730

DATE PLOTTED => 07-APR-2011
TIME PLOTTED => 09:30
LAST REVISION 12-01-10

Dist	COUNTY	ROUTE	POST MILES TOTAL PROJECT	SHEET No.	TOTAL SHEETS
08	Riv	91	R0.6/R1.2	2	37

12-01-10
LICENSED LANDSCAPE ARCHITECT

04-04-11
PLANS APPROVAL DATE

LICENSED LANDSCAPE ARCHITECT
State & License No.
Signature
10/31/2011
Renewal Date
12/01/2010
Date
STATE OF CALIFORNIA

THE STATE OF CALIFORNIA OR ITS OFFICERS OR AGENTS SHALL NOT BE RESPONSIBLE FOR THE ACCURACY OR COMPLETENESS OF SCANNED COPIES OF THIS PLAN SHEET.

TEMPORARY CONSTRUCTION BMP'S QUANTITIES

TEMPORARY CONSTRUCTION SITE BMP's	UNITS	QUANTITIES
TEMPORARY FIBER ROLL	LF	2,085
TEMPORARY COVER	SQYD	120
TEMPORARY DRAINAGE INLET PROTECTION	EA	3

TEMPORARY WATER POLLUTION CONTROL QUANTITIES

WPCQ-1

LAST REVISION 12-01-10
DATE PLOTTED => 07-APR-2011
TIME PLOTTED => 09:30

STATE OF CALIFORNIA - DEPARTMENT OF TRANSPORTATION
LANDSCAPE ARCHITECTURE

SENIOR LANDSCAPE ARCHITECT: BYRON STROUT
CALCULATED-DESIGNED BY: LORENA SALVADOR
CHECKED BY: MATTHEW HALL
REVISED BY
DATE REVISED

Dist	COUNTY	ROUTE	POST MILES TOTAL PROJECT	SHEET No.	TOTAL SHEETS
08	Riv	91	R0.6/R1.2	3	37

12-01-10
LICENSED LANDSCAPE ARCHITECT

04-04-11
PLANS APPROVAL DATE

LICENSED LANDSCAPE ARCHITECT
Name & License No.
Signature
10/31/2011
Renewal Date
12/01/2010
Date
STATE OF CALIFORNIA

THE STATE OF CALIFORNIA OR ITS OFFICERS OR AGENTS SHALL NOT BE RESPONSIBLE FOR THE ACCURACY OR COMPLETENESS OF SCANNED COPIES OF THIS PLAN SHEET.

ABBREVIATIONS

AMEND — amendment
B & B — balled and burlapped
DIA — diameter
EA — each
g — gram
kg — kilogram
m — meter
m^2 — square meter
m^3 — cubic meter
MAX — maximum
MIN — minimum
mm — millimeter
No — number
Pkt — packet
PLT ESTB - plant establishment
PVMT — pavement
R/W — right of way
SF — state furnished
TRVD — traveled

NOTE:
Underlined portions of botanical name indicate abbreviations used on Planting Plans.

PLANT LIST AND PLANTING SPECIFICATIONS

PLANT GROUP	PLANT No.	SYMBOL	BOTANICAL NAME	COMMON NAME	SIZE	QUANTITY EACH	HOLE SIZE (INCH) DIA	HOLE SIZE (INCH) DEPTH	BASIN TYPE	IRON SULFATE ①	SOIL AMEND ①	COMMERCIAL FERTILIZER ① PLANTING	COMMERCIAL FERTILIZER ① PLT ESTB	BASIN MULCH	STAKING	PLANTING LIMITS MINIMUM DISTANCE (Ft) FROM TRVD WAY	PVMT	FENCE	WALL	PAVED DITCH	EARTH DITCH	ON CENTER (Ft)	REMARKS
A	1		BACCHARIS VIMINEA	MULEFAT	No. 1	3345	②		1	—	—	—	—	—	—	—	2.5	1.5	—	—	—	1.5	SHRUB SAME AREA AS PLANT 2 ⑥
W	2		SALIX LASIOLEPIS	ARROYO WILLOW	WILLOW CUTTING	840	⑦		1	—	—	—	—	—	—	—	4.5	3	4.5	—	—	3	TREE SAME AREA AS PLANT 1 ⑥
B	3		ARCTOSTAPHYLOS DENSIFLORA	HOWARD MCMINN MANZANITA	No.5	43	②		I	—	1 CF	—	—	1 CF	—	—	6	6	6	—	—	—	SHRUB
	4		SALVIA MELLIFERA	BLACK SAGE	No.5	79	②		I	—	1 CF	—	—	1 CF	—	—	4	4	4	4	4	6	SHRUB
	5		BOUGAINVILLEA SPECTABILIS	BOUGAINVILLEA 'SAN DIEGO RED'	No.5	293	②		I	—	1 CF	—	—	1 CF	—	—	10	8	8	8	10	④	SHRUB
	6		ERIOGONUM FASCICULATUM POLIFOLIUM	INTERIOR CALIFORNIA BUCKWHEAT 'MARGARITA FOG'	No.5	30	②		I	—	1 CF	—	—	1 CF	—	—	8	6	6	6	6	④	SHRUB
	7		FREMONTODENDRON CALIFORNICUM DECUMBENS	DWARF FLANNEL BUSH	No.5	137	②		I	—	1 CF	—	—	1 CF	—	—	10	8	8	8	10	④	SHRUB
	8		CEANOTHUS GREGGII VESTITUS	MOUNTAIN BUCKBRUSH	No.5	1,084	②		I	—	1 CF	—	—	1 CF	—	—	8	6	6	6	8	④	SHRUB
	9		CEANOTHUS 'BLUE JEANS'	CALIFORNIA LILAC	No.5	299	②		I	—	1 CF	—	—	1 CF	—	—	8	8	8	6	8	④	SHRUB
K	10		POPULUS FREMONTII	FREMONT COTTONWOOD 'ZAPATA'	24" BOX	29	②		II	—	2 CF	—	—	2 CF	⑥	30	—	20	20	20	22	④	TREE
	11		QUERCUS AGRIFOLIA	COAST LIVE OAK	24" BOX	49	②		II	—	2 CF	—	—	2 CF	⑥	30	—	20	15	15	17	④	TREE
	12		PLATANUS RACEMOSA	CALIFORNIA SYCAMORE	24" BOX	46	②		II	—	2 CF	—	—	2 CF	⑥	30	—	20	20	10	12	④	TREE
	13		PINUS JEFFREYI	JEFFREY PINE	24" BOX	55	②		II	—	2 CF	—	—	2 CF	⑥	30	—	15	15	10	12	④	TREE

APPLICABLE WHEN CIRCLED:

① - Quantities shown are "per plant" unless shown as f^2 application rates.
② - 2 x Diameter, 1 x Depth of root ball
3 - Does not apply to mulch areas.
④ - As shown on plans.
5 - Unless otherwise shown on plans.
⑥ - See detail.
⑦ - See Special Provisions.
8 - 16 lbs./1000 ft^2

LEGEND:

EROSION CONTROL (TYPE 1) AND WEED GERMINATION

EXISTING EUCALYPTUS TREES

PLANT LIST

PL-1

STATE OF CALIFORNIA - DEPARTMENT OF TRANSPORTATION
Caltrans LANDSCAPE ARCHITECTURE
SENIOR LANDSCAPE ARCHITECT: BYRON STROUT
CALCULATED-DESIGNED BY: LORENA SALVADOR
CHECKED BY: MATTHEW HALL
REVISED BY / DATE REVISED

LAST REVISION 12-01-10 | DATE PLOTTED => 07-APR-2011 | TIME PLOTTED => 09:30

Dist	COUNTY	ROUTE	POST MILES TOTAL PROJECT	SHEET No.	TOTAL SHEETS
08	Riv	91	R0.6/R1.2	4	37

12-01-10
LICENSED LANDSCAPE ARCHITECT

04-04-11
PLANS APPROVAL DATE

LICENSED LANDSCAPE ARCHITECT
Name & License No.
Expiration Date
10/31/2011
Renewal Date
12/01/2010
Date
STATE OF CALIFORNIA

THE STATE OF CALIFORNIA OR ITS OFFICERS OR AGENTS SHALL NOT BE RESPONSIBLE FOR THE ACCURACY OR COMPLETENESS OF SCANNED COPIES OF THIS PLAN SHEET.

NOTE:

FOR COMPLETE RIGHT OF WAY AND ACCURATE ACCESS DATA, SEE RIGHT OF WAY RECORD MAPS AT DISTRICT OFFICE

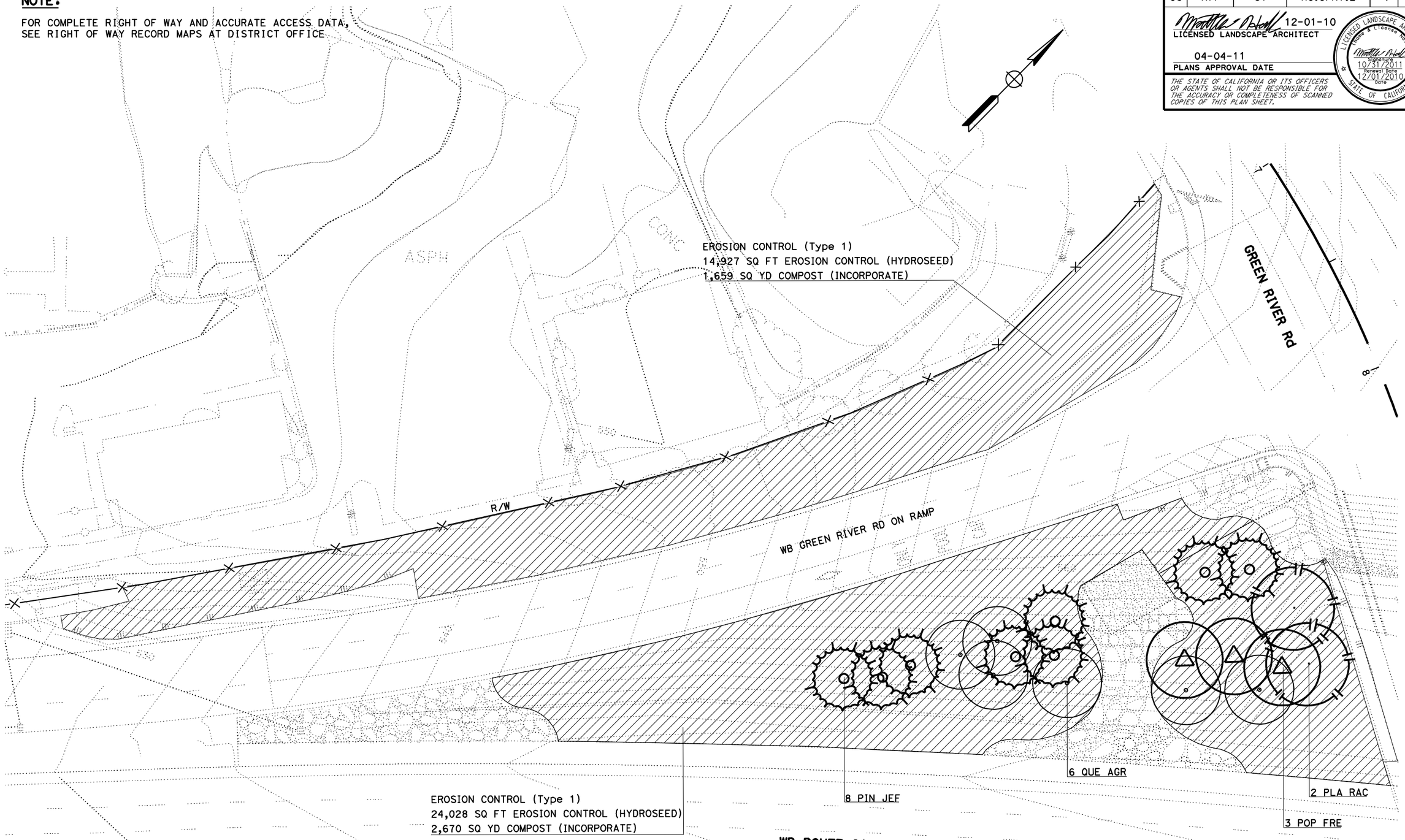

PLANTING PLAN
(TREES & GROUNDCOVER)
SCALE: 1" = 20'

THIS PLAN ACCURATE FOR LANDSCAPE WORK ONLY.

PP-1

REVISED BY	DATE REVISED

CALCULATED-DESIGNED BY	CHECKED BY
LORENA SALVADOR	MATTHEW HALL

SENIOR LANDSCAPE ARCHITECT: BYRON STROUT

STATE OF CALIFORNIA - DEPARTMENT OF TRANSPORTATION
Caltrans® LANDSCAPE ARCHITECTURE

LAST REVISION 12-01-10 | DATE PLOTTED => 07-APR-2011 | TIME PLOTTED => 09:31

Dist	COUNTY	ROUTE	POST MILES TOTAL PROJECT	SHEET No.	TOTAL SHEETS
08	Riv	91	R0.6/R1.2	5	37

12-01-10
LICENSED LANDSCAPE ARCHITECT

04-04-11
PLANS APPROVAL DATE

LICENSED LANDSCAPE ARCHITECT
Name & License No.
Expiration Date
10/31/2011
Renewal Date
12/01/2010
Date
STATE OF CALIFORNIA

THE STATE OF CALIFORNIA OR ITS OFFICERS OR AGENTS SHALL NOT BE RESPONSIBLE FOR THE ACCURACY OR COMPLETENESS OF SCANNED COPIES OF THIS PLAN SHEET.

NOTE:

FOR COMPLETE RIGHT OF WAY AND ACCURATE ACCESS DATA, SEE RIGHT OF WAY RECORD MAPS AT DISTRICT OFFICE

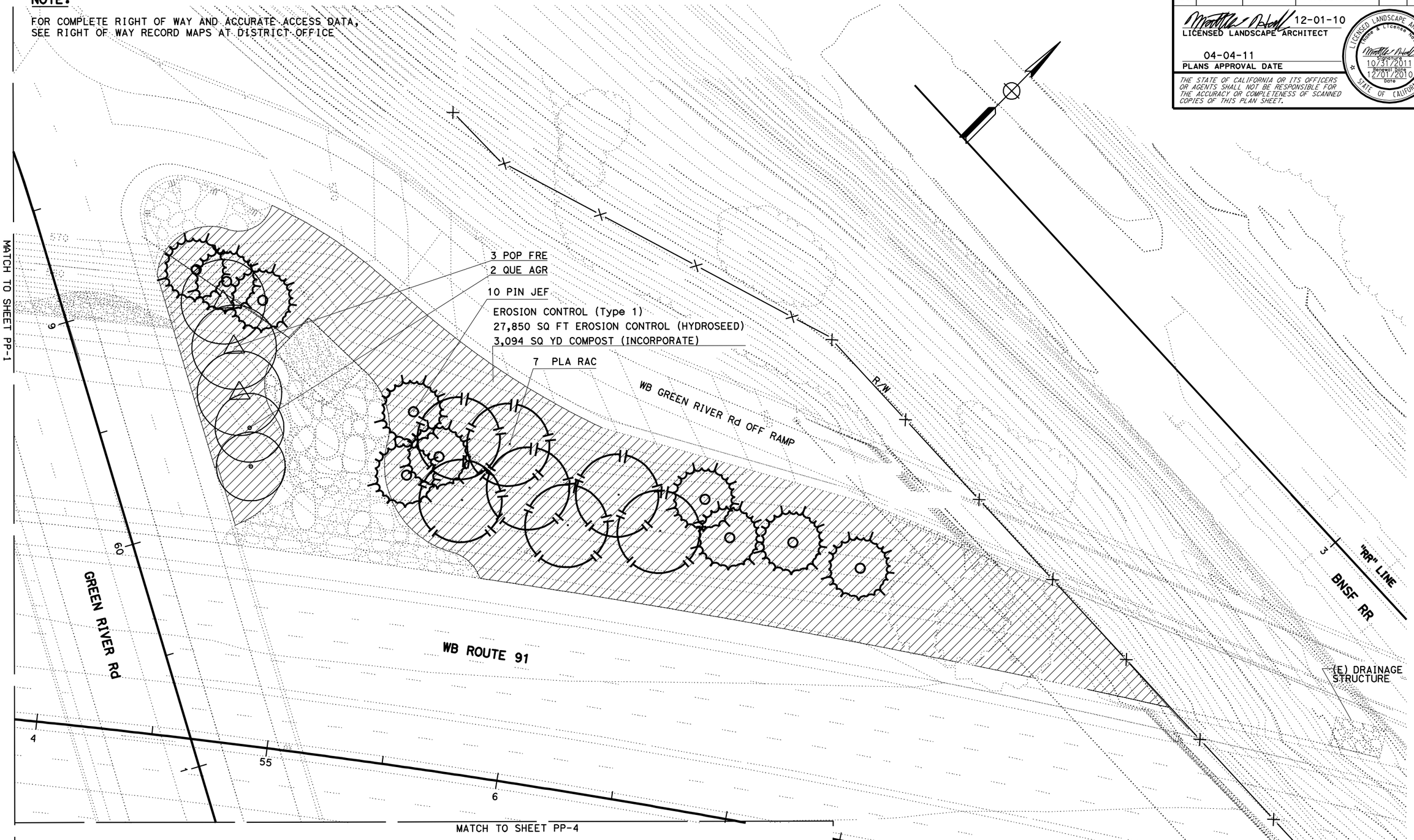

PLANTING PLAN
(TREES & GROUNDCOVER)
SCALE: 1" = 20'

THIS PLAN ACCURATE FOR LANDSCAPE WORK ONLY.

PP-2

STATE OF CALIFORNIA - DEPARTMENT OF TRANSPORTATION
Caltrans® LANDSCAPE ARCHITECTURE

SENIOR LANDSCAPE ARCHITECT: BYRON STROUT
CALCULATED-DESIGNED BY: LORENA SALVADOR
CHECKED BY: MATTHEW HALL
REVISED BY
DATE REVISED

LAST REVISION 12-01-10
DATE PLOTTED => 07-APR-2011
TIME PLOTTED => 09:31

Dist	COUNTY	ROUTE	POST MILES TOTAL PROJECT	SHEET No.	TOTAL SHEETS
08	Riv	91	R0.6/R1.2	6	37

12-01-10
LICENSED LANDSCAPE ARCHITECT

04-04-11
PLANS APPROVAL DATE

LICENSED LANDSCAPE ARCHITECT
Name & License No.
Signature
10/31/2011
Renewal Date
12/01/2010
Date
STATE OF CALIFORNIA

THE STATE OF CALIFORNIA OR ITS OFFICERS OR AGENTS SHALL NOT BE RESPONSIBLE FOR THE ACCURACY OR COMPLETENESS OF SCANNED COPIES OF THIS PLAN SHEET.

NOTE:

FOR COMPLETE RIGHT OF WAY AND ACCURATE ACCESS DATA, SEE RIGHT OF WAY RECORD MAPS AT DISTRICT OFFICE

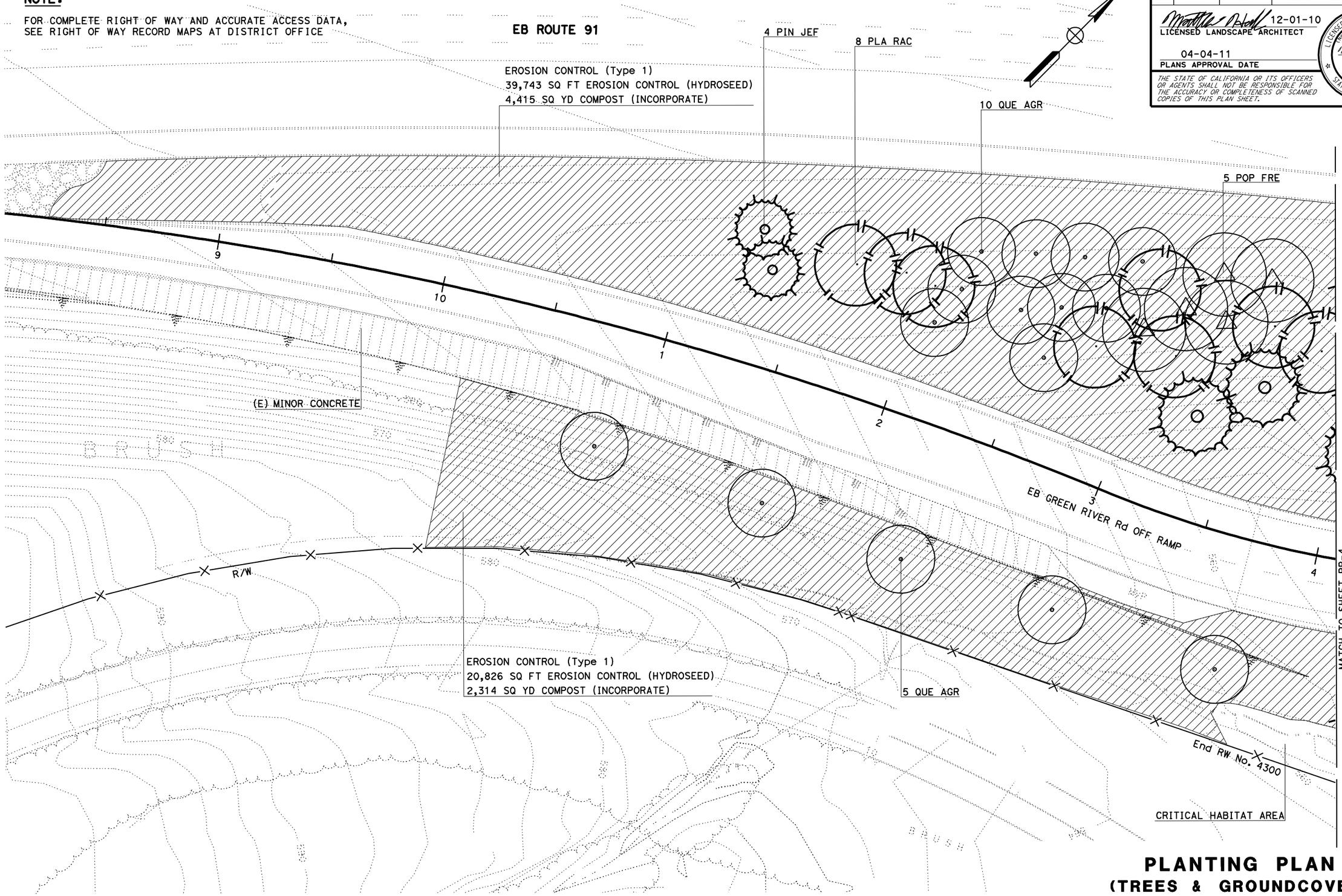

PLANTING PLAN
(TREES & GROUNDCOVER)
SCALE: 1" = 20'

THIS PLAN ACCURATE FOR LANDSCAPE WORK ONLY.

PP-3

REVISED BY	DATE REVISED

LORENA SALVADOR — CALCULATED-DESIGNED BY
MATTHEW HALL — CHECKED BY
SENIOR LANDSCAPE ARCHITECT
BYRON STROUT

STATE OF CALIFORNIA - DEPARTMENT OF TRANSPORTATION
Caltrans LANDSCAPE ARCHITECTURE

LAST REVISION 12-01-10
DATE PLOTTED => 07-APR-2011
TIME PLOTTED => 09:31

Dist	COUNTY	ROUTE	POST MILES TOTAL PROJECT	SHEET No.	TOTAL SHEETS
08	Riv	91	R0.6/R1.2	7	37

12-01-10
LICENSED LANDSCAPE ARCHITECT

04-04-11
PLANS APPROVAL DATE

LICENSED LANDSCAPE ARCHITECT
License No.
Signature
10/31/2011
Renewal Date
12/01/2010
Date
STATE OF CALIFORNIA

THE STATE OF CALIFORNIA OR ITS OFFICERS OR AGENTS SHALL NOT BE RESPONSIBLE FOR THE ACCURACY OR COMPLETENESS OF SCANNED COPIES OF THIS PLAN SHEET.

NOTE:

FOR COMPLETE RIGHT OF WAY AND ACCURATE ACCESS DATA, SEE RIGHT OF WAY RECORD MAPS AT DISTRICT OFFICE

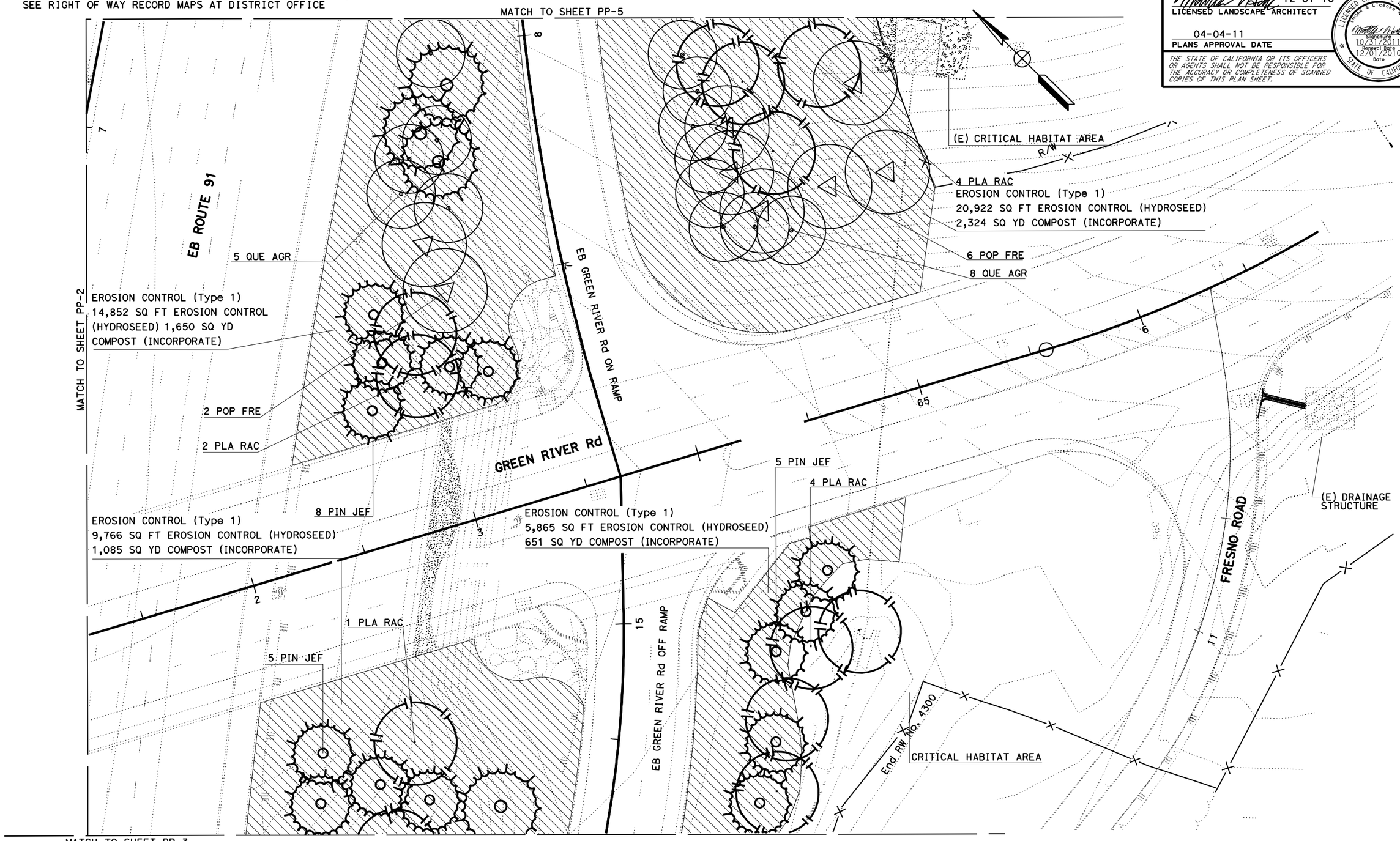

PLANTING PLAN
(TREES & GROUNDCOVER)
SCALE: 1" = 20'

PP-4

THIS PLAN ACCURATE FOR LANDSCAPE WORK ONLY.

STATE OF CALIFORNIA - DEPARTMENT OF TRANSPORTATION
Caltrans LANDSCAPE ARCHITECTURE

SENIOR LANDSCAPE ARCHITECT: BYRON STROUT
CALCULATED-DESIGNED BY: LORENA SALVADOR
CHECKED BY: MATTHEW HALL
REVISED BY
DATE REVISED

LAST REVISION 12-01-10
DATE PLOTTED => 07-APR-2011
TIME PLOTTED => 09:31

Dist	COUNTY	ROUTE	POST MILES TOTAL PROJECT	SHEET No.	TOTAL SHEETS
08	Riv	91	R0.6/R1.2	8	37

12-01-10
LICENSED LANDSCAPE ARCHITECT

04-04-11
PLANS APPROVAL DATE

LICENSED LANDSCAPE ARCHITECT
Name & License No.
Signature
10/31/2011
Renewal Date
12/01/2010
Date
STATE OF CALIFORNIA

THE STATE OF CALIFORNIA OR ITS OFFICERS OR AGENTS SHALL NOT BE RESPONSIBLE FOR THE ACCURACY OR COMPLETENESS OF SCANNED COPIES OF THIS PLAN SHEET.

NOTE:

FOR COMPLETE RIGHT OF WAY AND ACCURATE ACCESS DATA, SEE RIGHT OF WAY RECORD MAPS AT DISTRICT OFFICE

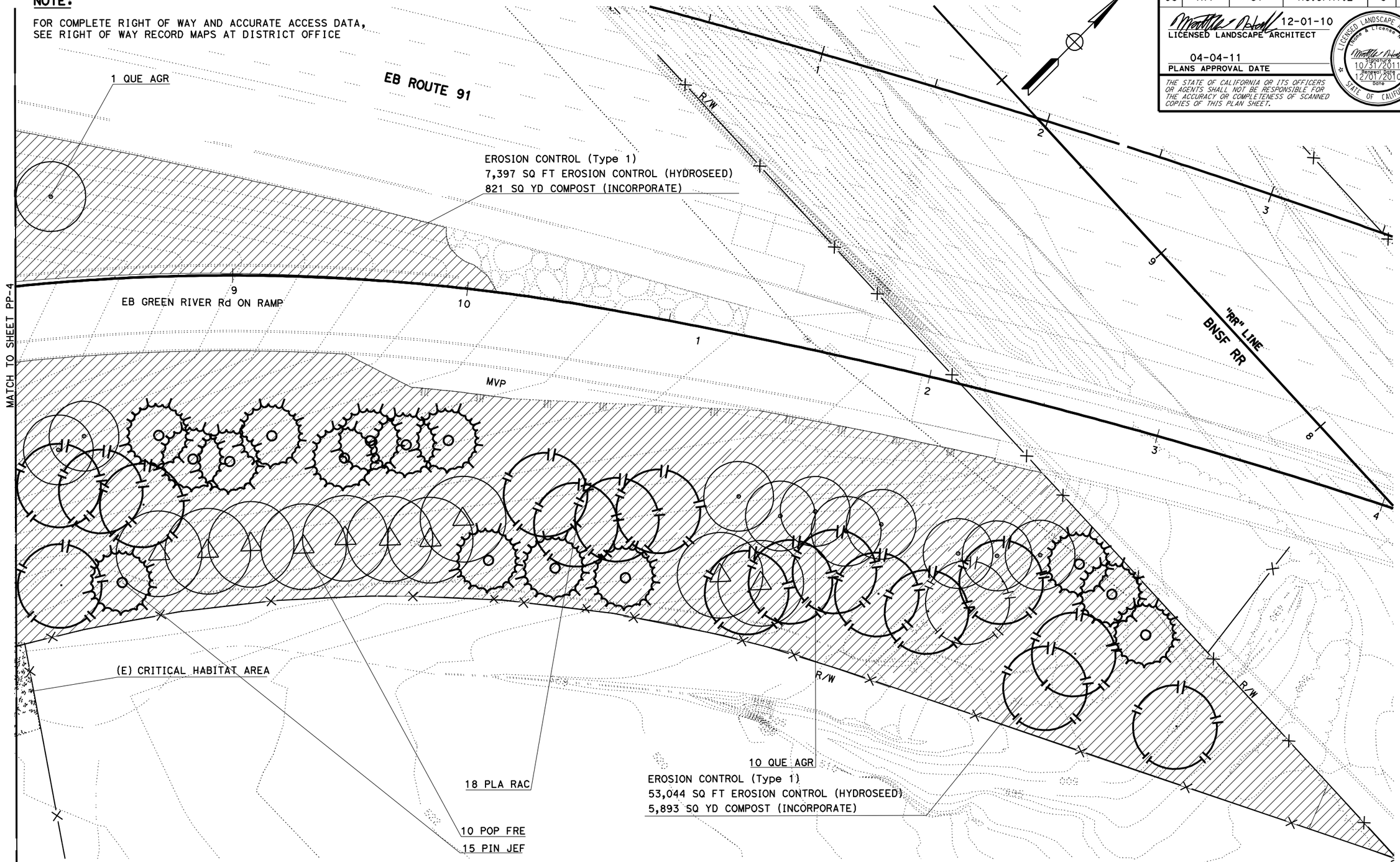

PLANTING PLAN
(TREES & GROUNDCOVER)
SCALE: 1" = 20'

THIS PLAN ACCURATE FOR LANDSCAPE WORK ONLY.

PP-5

STATE OF CALIFORNIA - DEPARTMENT OF TRANSPORTATION
Caltrans LANDSCAPE ARCHITECTURE

SENIOR LANDSCAPE ARCHITECT: BYRON STROUT
CALCULATED-DESIGNED BY: LORENA SALVADOR
CHECKED BY: MATTHEW HALL
REVISED BY
DATE REVISED

LAST REVISION 12-01-10
DATE PLOTTED => 07-APR-2011
TIME PLOTTED => 09:31

Dist	COUNTY	ROUTE	POST MILES TOTAL PROJECT	SHEET No.	TOTAL SHEETS
08	Riv	91	R0.6/R1.2	9	37

12-01-10
LICENSED LANDSCAPE ARCHITECT

04-04-11
PLANS APPROVAL DATE

LICENSED LANDSCAPE ARCHITECT
Name & License No.
Signature
10/31/2011
Renewal Date
12/01/2010
Date
STATE OF CALIFORNIA

THE STATE OF CALIFORNIA OR ITS OFFICERS OR AGENTS SHALL NOT BE RESPONSIBLE FOR THE ACCURACY OR COMPLETENESS OF SCANNED COPIES OF THIS PLAN SHEET.

NOTE:

FOR COMPLETE RIGHT OF WAY AND ACCURATE ACCESS DATA, SEE RIGHT OF WAY RECORD MAPS AT DISTRICT OFFICE

PLANTING PLAN
(SHRIBS)
SCALE: 1" = 20'

THIS PLAN ACCURATE FOR LANDSCAPE WORK ONLY.

PP-6

REVISED BY	LORENA SALVADOR
DATE REVISED	MATTHEW HALL
CALCULATED-DESIGNED BY	SENIOR LANDSCAPE ARCHITECT
CHECKED BY	BYRON STROUT

STATE OF CALIFORNIA - DEPARTMENT OF TRANSPORTATION
Caltrans LANDSCAPE ARCHITECTURE

LAST REVISION 12-01-10
DATE PLOTTED => 07-APR-2011
TIME PLOTTED => 09:31

Dist	COUNTY	ROUTE	POST MILES TOTAL PROJECT	SHEET No.	TOTAL SHEETS
08	Riv	91	R0.6/R1.2	10	37

12-01-10
LICENSED LANDSCAPE ARCHITECT

04-04-11
PLANS APPROVAL DATE

LICENSED LANDSCAPE ARCHITECT
Name & License No.
Signature
10/31/2011
Renewal Date
12/01/2010
Date
STATE OF CALIFORNIA

THE STATE OF CALIFORNIA OR ITS OFFICERS OR AGENTS SHALL NOT BE RESPONSIBLE FOR THE ACCURACY OR COMPLETENESS OF SCANNED COPIES OF THIS PLAN SHEET.

NOTE:

FOR COMPLETE RIGHT OF WAY AND ACCURATE ACCESS DATA, SEE RIGHT OF WAY RECORD MAPS AT DISTRICT OFFICE

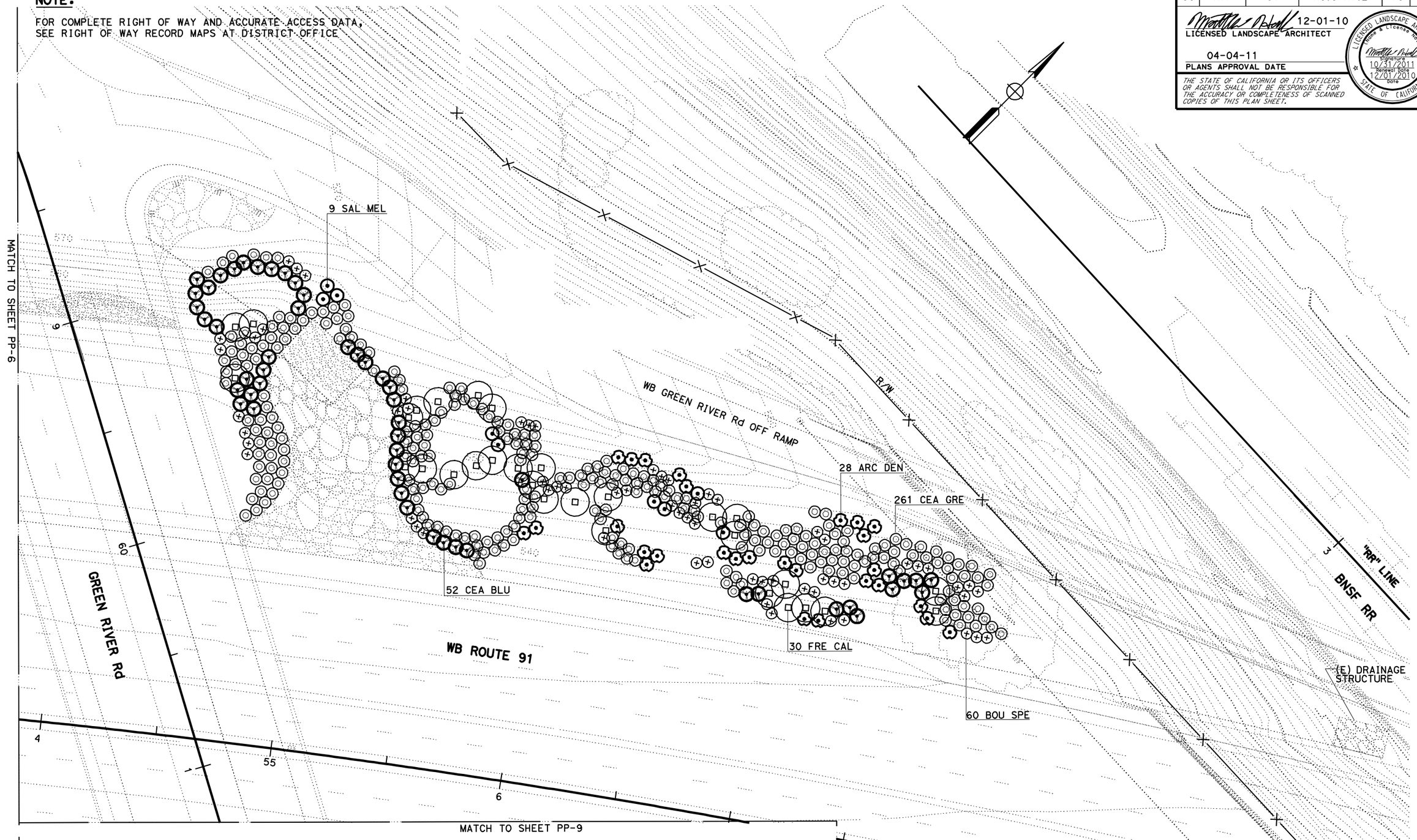

PLANTING PLAN
(SHRUBS)
SCALE: 1" = 20'

THIS PLAN ACCURATE FOR LANDSCAPE WORK ONLY.

PP-7

STATE OF CALIFORNIA - DEPARTMENT OF TRANSPORTATION
Caltrans LANDSCAPE ARCHITECTURE

SENIOR LANDSCAPE ARCHITECT: BYRON STROUT

CALCULATED-DESIGNED BY: LORENA SALVADOR
CHECKED BY: MATTHEW HALL

REVISED BY
DATE REVISED

LAST REVISION 12-01-10
DATE PLOTTED => 07-APR-2011
TIME PLOTTED => 09:32

Dist	COUNTY	ROUTE	POST MILES TOTAL PROJECT	SHEET No.	TOTAL SHEETS
08	Riv	91	R0.6/R1.2	11	37

12-01-10
LICENSED LANDSCAPE ARCHITECT

04-04-11
PLANS APPROVAL DATE

LICENSED LANDSCAPE ARCHITECT
Name & License No.
Signature
10/31/2011
Renewal Date
12/01/2010
Date
STATE OF CALIFORNIA

THE STATE OF CALIFORNIA OR ITS OFFICERS OR AGENTS SHALL NOT BE RESPONSIBLE FOR THE ACCURACY OR COMPLETENESS OF SCANNED COPIES OF THIS PLAN SHEET.

NOTE:

FOR COMPLETE RIGHT OF WAY AND ACCURATE ACCESS DATA, SEE RIGHT OF WAY RECORD MAPS AT DISTRICT OFFICE

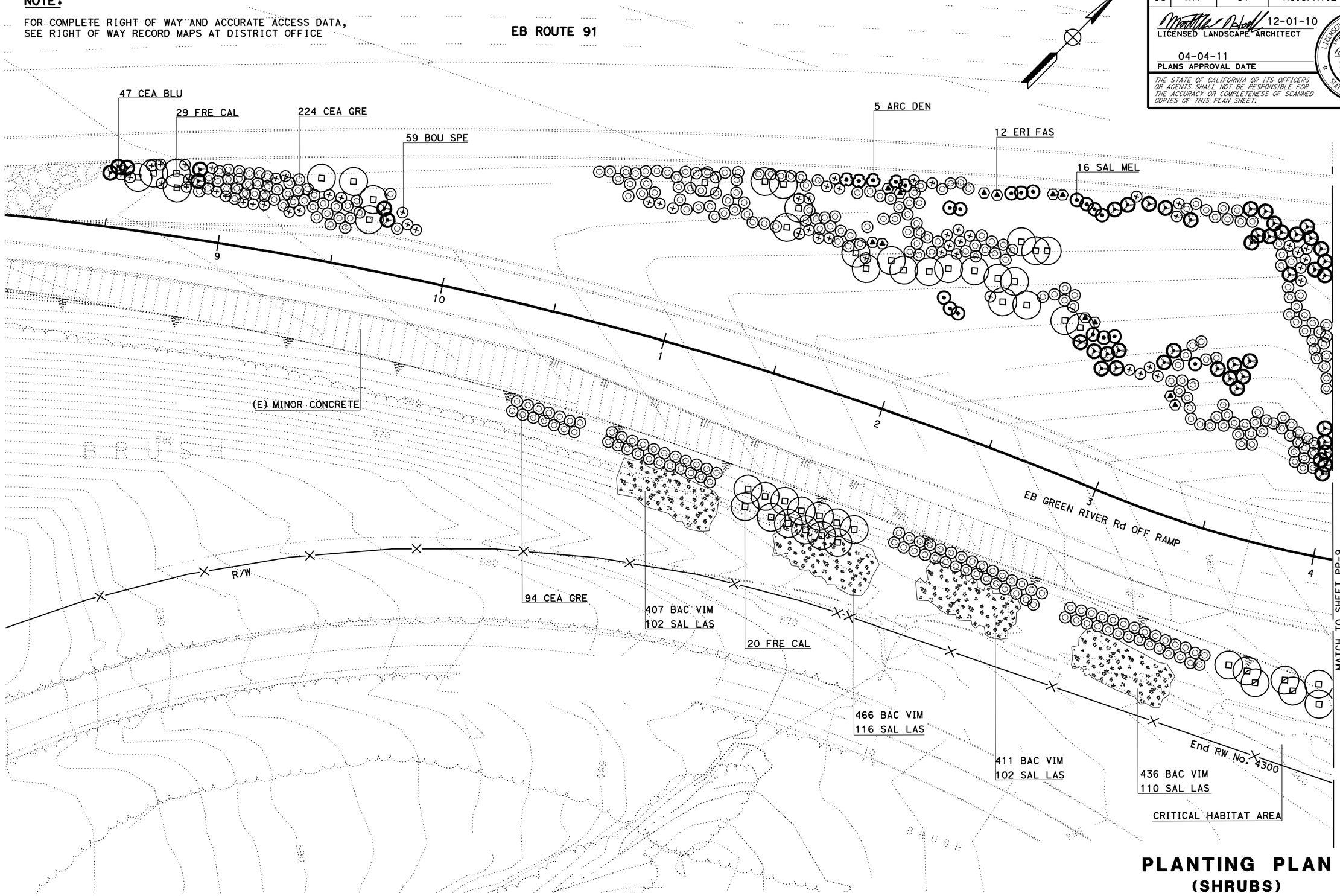

PLANTING PLAN
(SHRUBS)
SCALE: 1" = 20'

THIS PLAN ACCURATE FOR LANDSCAPE WORK ONLY.

PP-8

REVISED BY	DATE REVISED

LORENA SALVADOR — MATTHEW HALL
CALCULATED-DESIGNED BY — CHECKED BY
SENIOR LANDSCAPE ARCHITECT — BYRON STROUT

STATE OF CALIFORNIA - DEPARTMENT OF TRANSPORTATION
Caltrans LANDSCAPE ARCHITECTURE

LAST REVISION 12-01-10
DATE PLOTTED => 07-APR-2011
TIME PLOTTED => 09:32

Dist	COUNTY	ROUTE	POST MILES TOTAL PROJECT	SHEET No.	TOTAL SHEETS
08	Riv	91	R0.6/R1.2	12	37

12-01-10
LICENSED LANDSCAPE ARCHITECT

04-04-11
PLANS APPROVAL DATE

LICENSED LANDSCAPE ARCHITECT
State & License No.
Signature
10/31/2011
Renewal Date
12/01/2010
Date
STATE OF CALIFORNIA

THE STATE OF CALIFORNIA OR ITS OFFICERS OR AGENTS SHALL NOT BE RESPONSIBLE FOR THE ACCURACY OR COMPLETENESS OF SCANNED COPIES OF THIS PLAN SHEET.

NOTE:

FOR COMPLETE RIGHT OF WAY AND ACCURATE ACCESS DATA, SEE RIGHT OF WAY RECORD MAPS AT DISTRICT OFFICE

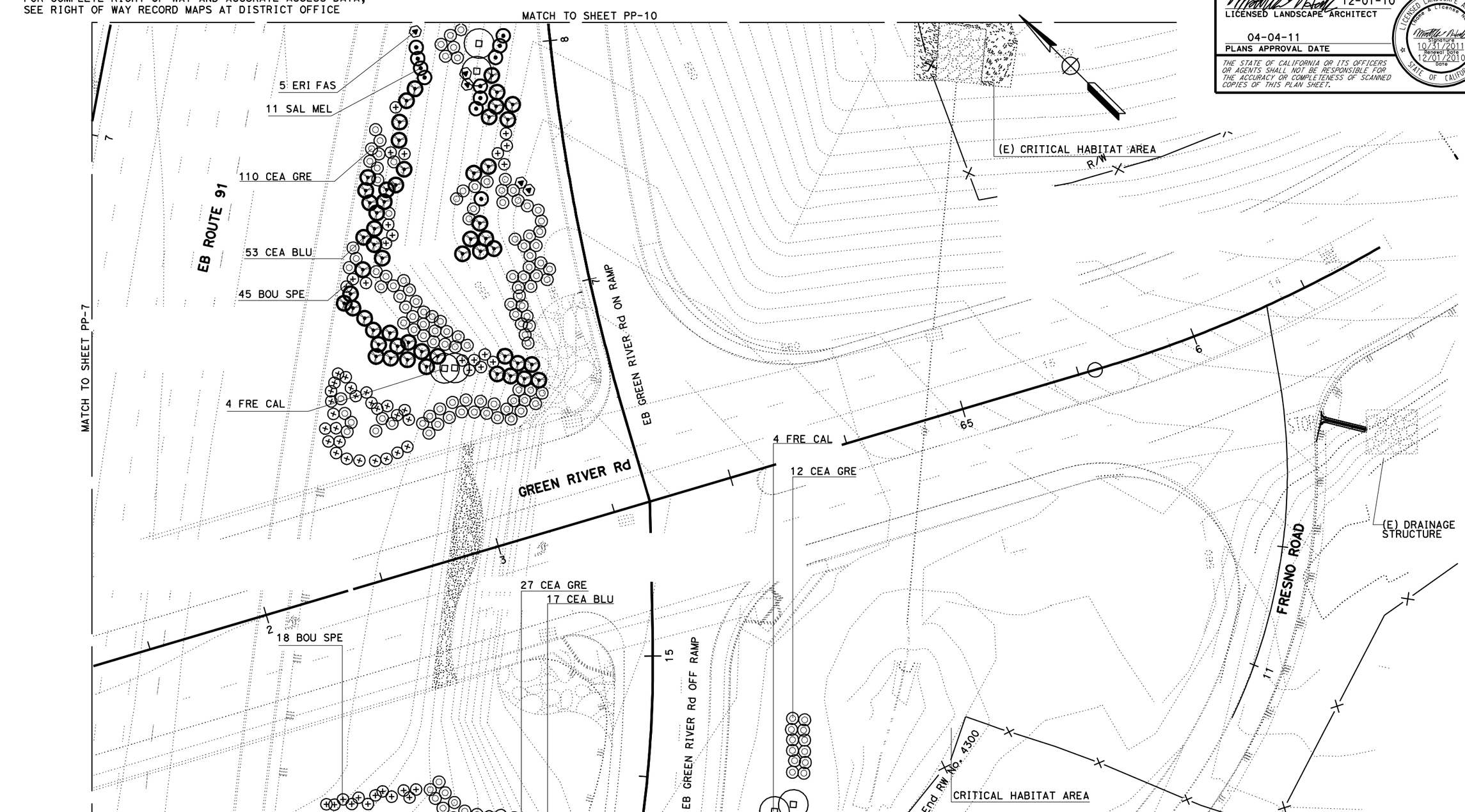

PLANTING PLAN
(SHRUBS)
SCALE: 1" = 20'

THIS PLAN ACCURATE FOR LANDSCAPE WORK ONLY.

PP-9

STATE OF CALIFORNIA - DEPARTMENT OF TRANSPORTATION
Caltrans LANDSCAPE ARCHITECTURE

SENIOR LANDSCAPE ARCHITECT: BYRON STROUT
CALCULATED-DESIGNED BY: LORENA SALVADOR
CHECKED BY: MATTHEW HALL
REVISED BY
DATE REVISED

LAST REVISION 12-01-10
DATE PLOTTED => 07-APR-2011
TIME PLOTTED => 09:32

Dist	COUNTY	ROUTE	POST MILES TOTAL PROJECT	SHEET No.	TOTAL SHEETS
08	Riv	91	R0.6/R1.2	13	37

12-01-10
LICENSED LANDSCAPE ARCHITECT

04-04-11
PLANS APPROVAL DATE

LICENSED LANDSCAPE ARCHITECT
Name & License No.
Signature
10/31/2011
Renewal Date
12/01/2010
Date
STATE OF CALIFORNIA

THE STATE OF CALIFORNIA OR ITS OFFICERS OR AGENTS SHALL NOT BE RESPONSIBLE FOR THE ACCURACY OR COMPLETENESS OF SCANNED COPIES OF THIS PLAN SHEET.

NOTE:

FOR COMPLETE RIGHT OF WAY AND ACCURATE ACCESS DATA, SEE RIGHT OF WAY RECORD MAPS AT DISTRICT OFFICE

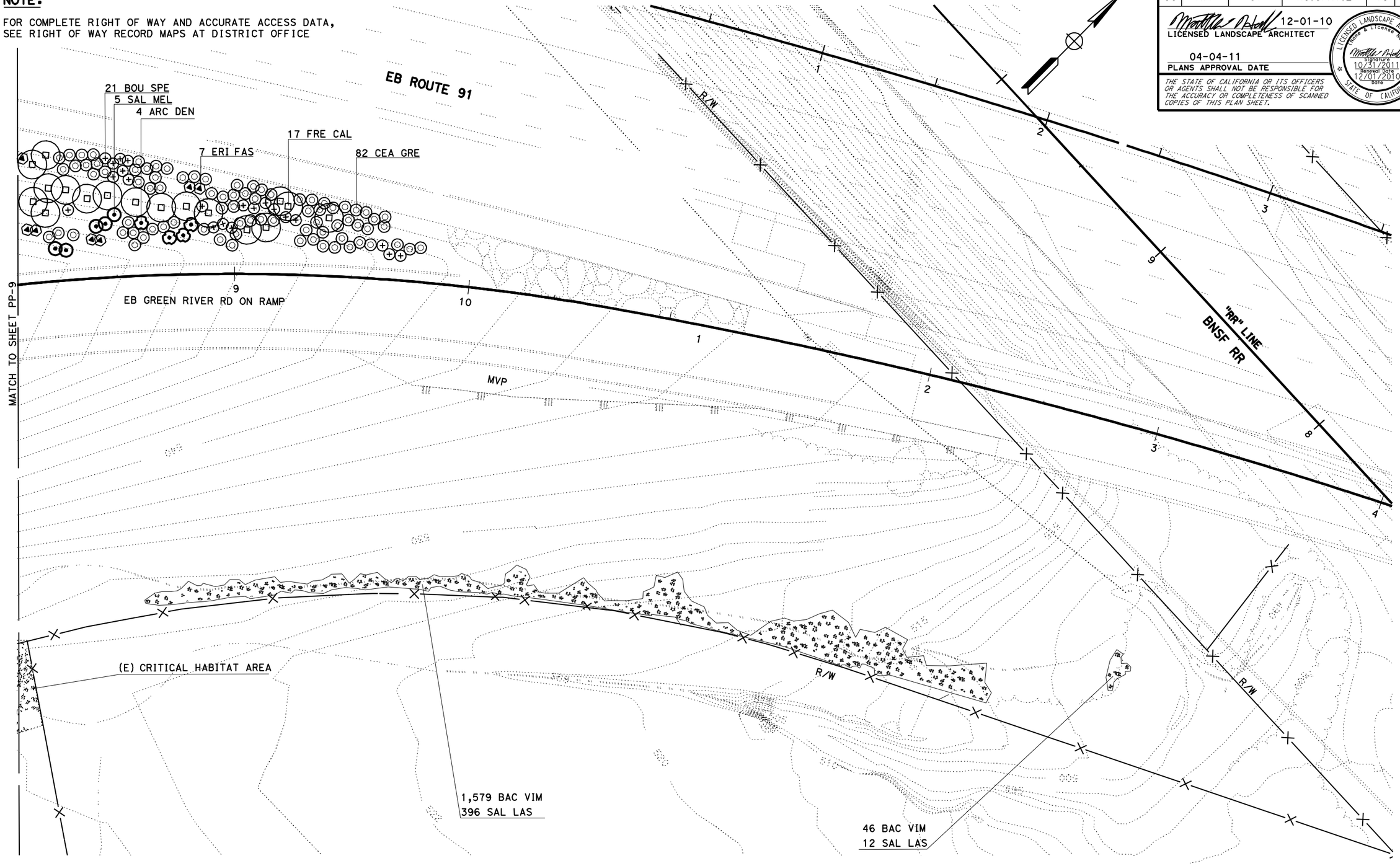

PLANTING PLAN
(SHRUBS)
SCALE: 1" = 20'

THIS PLAN ACCURATE FOR LANDSCAPE WORK ONLY.

PP-10

REVISED BY	
DATE REVISED	
CALCULATED-DESIGNED BY	LORENA SALVADOR
CHECKED BY	MATTHEW HALL
SENIOR LANDSCAPE ARCHITECT	BYRON STROUT

STATE OF CALIFORNIA - DEPARTMENT OF TRANSPORTATION
Caltrans LANDSCAPE ARCHITECTURE

LAST REVISION 12-01-10
DATE PLOTTED => 07-APR-2011
TIME PLOTTED => 09:32

Dist	COUNTY	ROUTE	POST MILES TOTAL PROJECT	SHEET No.	TOTAL SHEETS
08	Riv	91	R0.6/R1.2	14	37

12-01-10
LICENSED LANDSCAPE ARCHITECT

04-04-11
PLANS APPROVAL DATE

LICENSED LANDSCAPE ARCHITECT
Name & License No.
Signature
10/31/2011
Renewal Date
12/01/2010
Date
STATE OF CALIFORNIA

THE STATE OF CALIFORNIA OR ITS OFFICERS OR AGENTS SHALL NOT BE RESPONSIBLE FOR THE ACCURACY OR COMPLETENESS OF SCANNED COPIES OF THIS PLAN SHEET.

NOTE:

FOR COMPLETE RIGHT OF WAY AND ACCURATE ACCESS DATA, SEE RIGHT OF WAY RECORD MAPS AT DISTRICT OFFICE

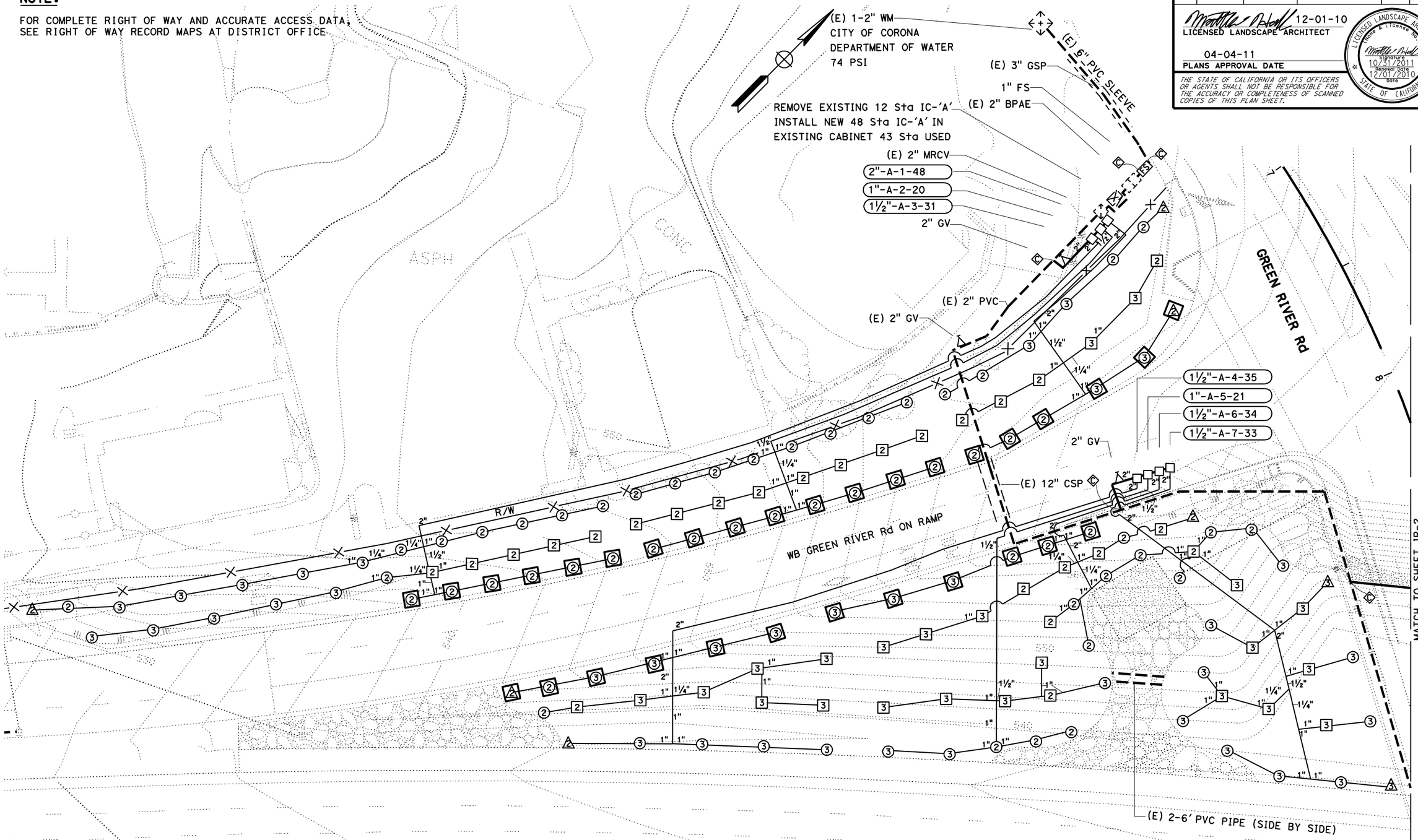

IRRIGATION PLAN

SCALE: 1" = 20'

THIS PLAN ACCURATE FOR IRRIGATION WORK ONLY.

IP-1

REVISED BY	DATE REVISED
LORENA SALVADOR	
MATTHEW HALL	
CALCULATED-DESIGNED BY	
CHECKED BY	
SENIOR LANDSCAPE ARCHITECT	
BYRON STROUT	

STATE OF CALIFORNIA - DEPARTMENT OF TRANSPORTATION
Caltrans LANDSCAPE ARCHITECTURE

LAST REVISION 12-01-10
DATE PLOTTED => 07-APR-2011
TIME PLOTTED => 09:32

Dist	COUNTY	ROUTE	POST MILES TOTAL PROJECT	SHEET No.	TOTAL SHEETS
08	Riv	91	R0.6/R1.2	15	37

12-01-10
LICENSED LANDSCAPE ARCHITECT

04-04-11
PLANS APPROVAL DATE

LICENSED LANDSCAPE ARCHITECT
Name & License No.
Signature
10/31/2011
Renewal Date
12/01/2010
Date
STATE OF CALIFORNIA

THE STATE OF CALIFORNIA OR ITS OFFICERS OR AGENTS SHALL NOT BE RESPONSIBLE FOR THE ACCURACY OR COMPLETENESS OF SCANNED COPIES OF THIS PLAN SHEET.

NOTE:

FOR COMPLETE RIGHT OF WAY AND ACCURATE ACCESS DATA, SEE RIGHT OF WAY RECORD MAPS AT DISTRICT OFFICE

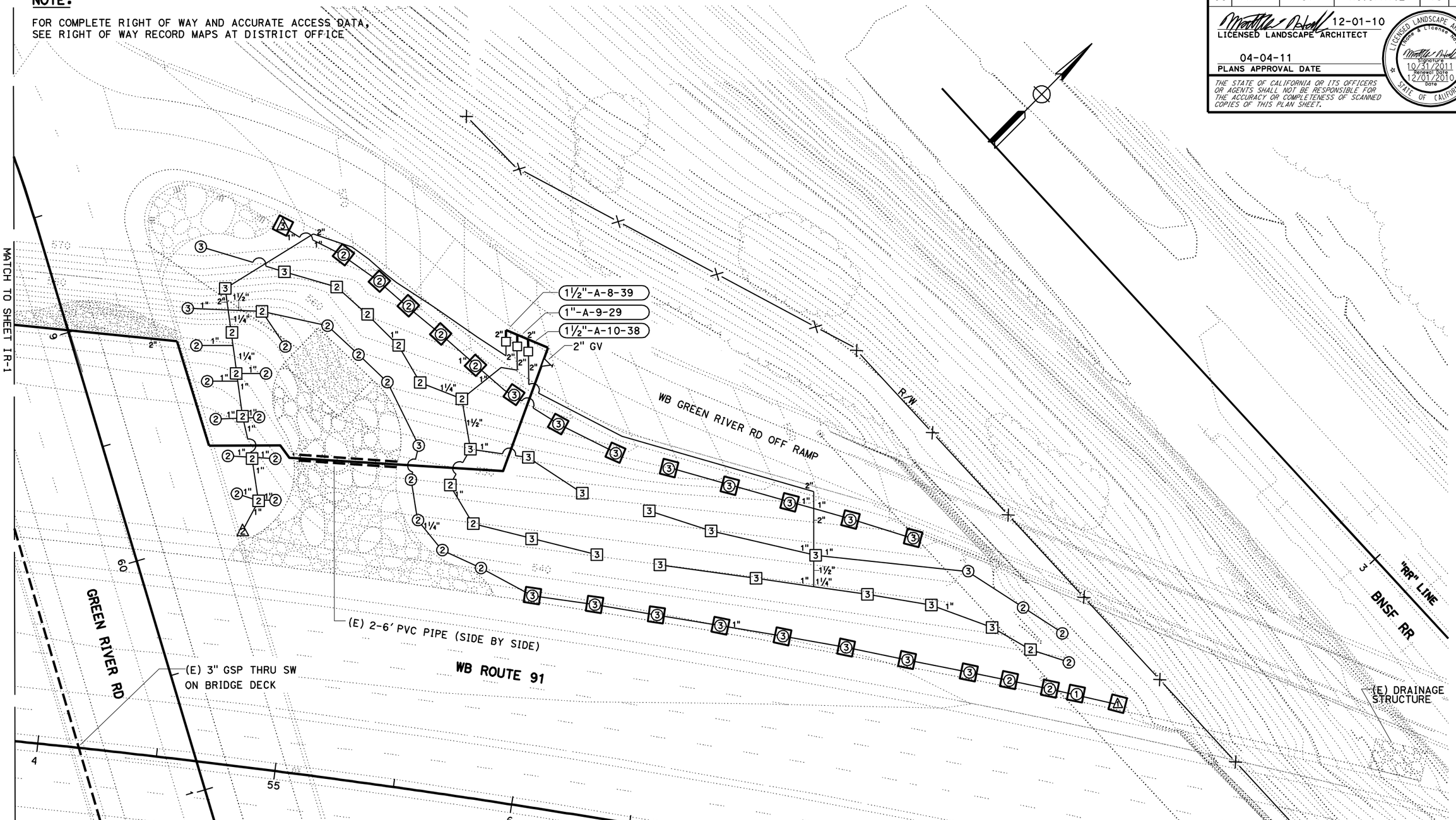

IRRIGATION PLAN

SCALE: 1" = 20'

THIS PLAN ACCURATE FOR IRRIGATION WORK ONLY.

IP-2

STATE OF CALIFORNIA - DEPARTMENT OF TRANSPORTATION
LANDSCAPE ARCHITECTURE

SENIOR LANDSCAPE ARCHITECT: BYRON STROUT
CALCULATED-DESIGNED BY: LORENA SALVADOR
CHECKED BY: MATTHEW HALL
REVISED BY
DATE REVISED

LAST REVISION 12-01-10
DATE PLOTTED => 07-APR-2011
TIME PLOTTED => 09:32

Dist	COUNTY	ROUTE	POST MILES TOTAL PROJECT	SHEET No.	TOTAL SHEETS
08	Riv	91	R0.6/R1.2	16	37

12-01-10
LICENSED LANDSCAPE ARCHITECT

04-04-11
PLANS APPROVAL DATE

LICENSED LANDSCAPE ARCHITECT
Name & License No.
Signature
10/31/2011
Renewal Date
12/01/2010
Date
STATE OF CALIFORNIA

THE STATE OF CALIFORNIA OR ITS OFFICERS OR AGENTS SHALL NOT BE RESPONSIBLE FOR THE ACCURACY OR COMPLETENESS OF SCANNED COPIES OF THIS PLAN SHEET.

NOTE:

FOR COMPLETE RIGHT OF WAY AND ACCURATE ACCESS DATA, SEE RIGHT OF WAY RECORD MAPS AT DISTRICT OFFICE

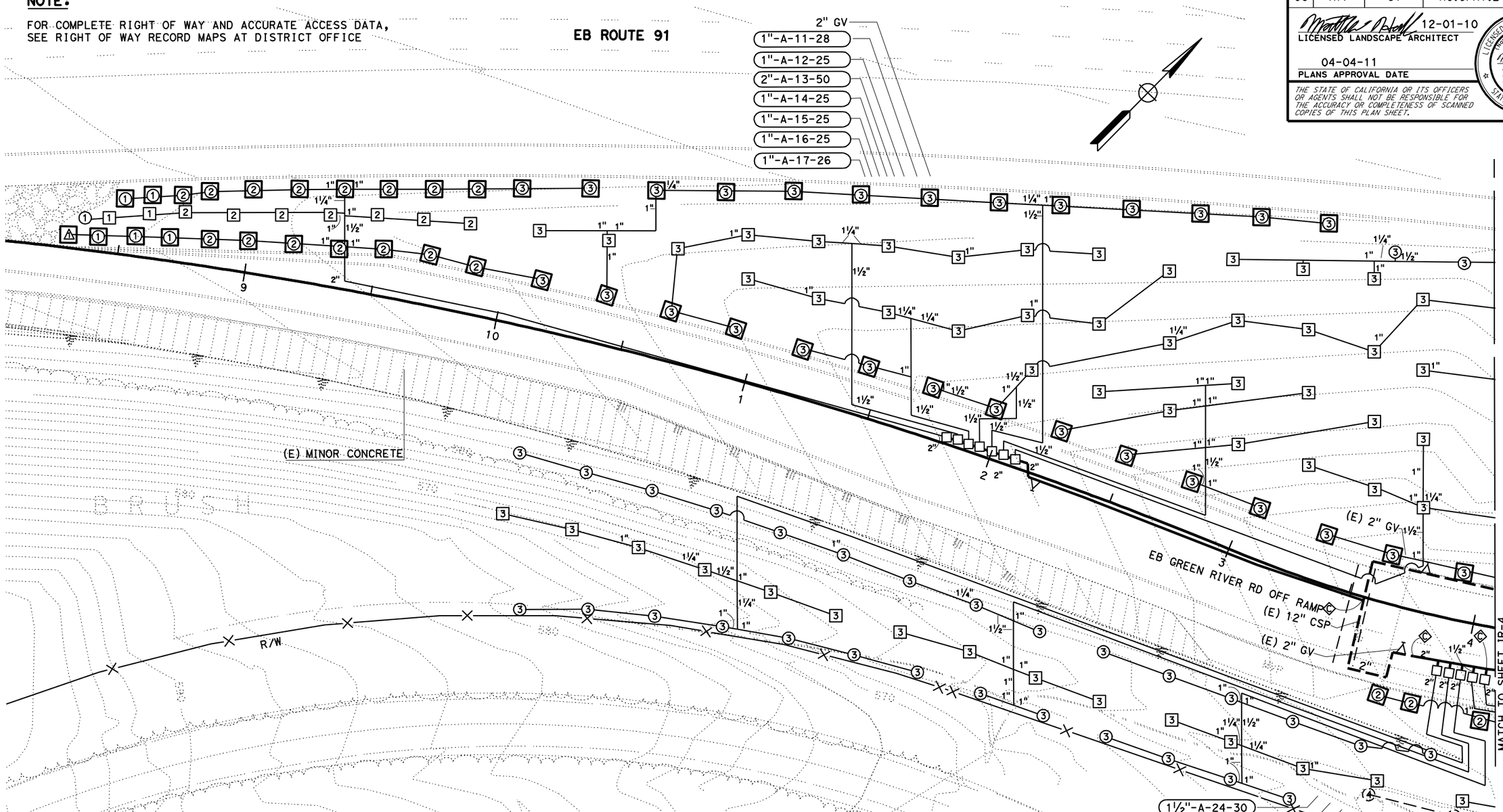

IRRIGATION PLAN

SCALE: 1" = 20'

THIS PLAN ACCURATE FOR IRRIGATION WORK ONLY.

IP-3

STATE OF CALIFORNIA - DEPARTMENT OF TRANSPORTATION
Caltrans LANDSCAPE ARCHITECTURE

SENIOR LANDSCAPE ARCHITECT: BYRON STROUT
CALCULATED-DESIGNED BY: LORENA SALVADOR
CHECKED BY: MATTHEW HALL
REVISED BY / DATE REVISED

LAST REVISION 12-01-10
DATE PLOTTED => 07-APR-2011
TIME PLOTTED => 09:33

Dist	COUNTY	ROUTE	POST MILES TOTAL PROJECT	SHEET No.	TOTAL SHEETS
08	Riv	91	R0.6/R1.2	17	37

12-01-10
LICENSED LANDSCAPE ARCHITECT

04-04-11
PLANS APPROVAL DATE

LICENSED LANDSCAPE ARCHITECT
State & License No.
Signature
10/31/2011
Renewal Date
12/01/2010
Date
STATE OF CALIFORNIA

THE STATE OF CALIFORNIA OR ITS OFFICERS OR AGENTS SHALL NOT BE RESPONSIBLE FOR THE ACCURACY OR COMPLETENESS OF SCANNED COPIES OF THIS PLAN SHEET.

NOTE:

FOR COMPLETE RIGHT OF WAY AND ACCURATE ACCESS DATA, SEE RIGHT OF WAY RECORD MAPS AT DISTRICT OFFICE

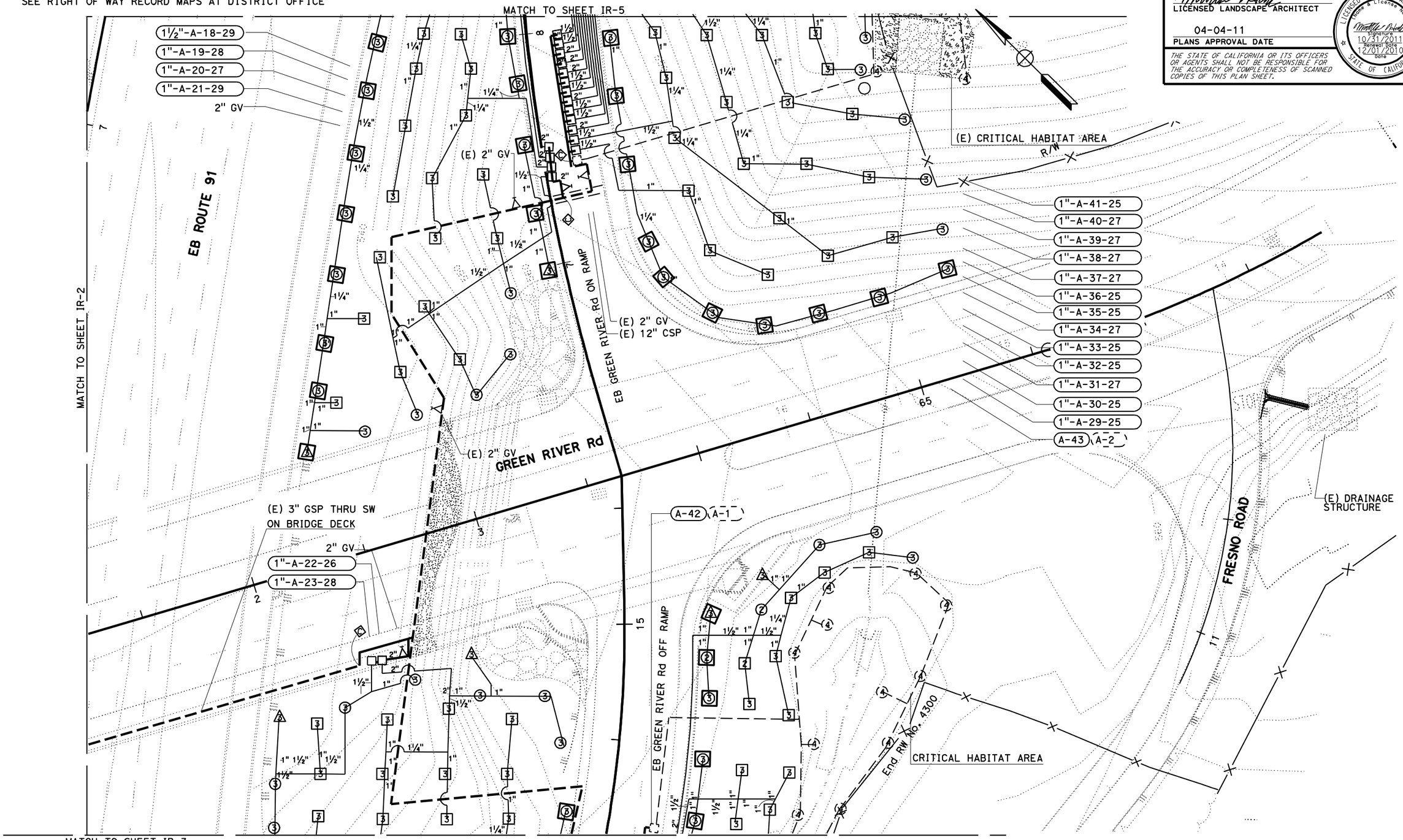

IRRIGATION PLAN

SCALE: 1" = 20'

THIS PLAN ACCURATE FOR IRRIGATION WORK ONLY.

IP-4

STATE OF CALIFORNIA - DEPARTMENT OF TRANSPORTATION
Caltrans LANDSCAPE ARCHITECTURE

SENIOR LANDSCAPE ARCHITECT: BYRON STROUT
CALCULATED-DESIGNED BY: LORENA SALVADOR
CHECKED BY: MATTHEW HALL
REVISED BY / DATE REVISED

LAST REVISION 12-01-10
DATE PLOTTED => 07-APR-2011
TIME PLOTTED => 09:33

Dist	COUNTY	ROUTE	POST MILES TOTAL PROJECT	SHEET No.	TOTAL SHEETS
08	Riv	91	R0.6/R1.2	18	37

12-01-10
LICENSED LANDSCAPE ARCHITECT

04-04-11
PLANS APPROVAL DATE

LICENSED LANDSCAPE ARCHITECT
Name & License No.
Signature
10/31/2011
Renewal Date
12/01/2010
Date
STATE OF CALIFORNIA

THE STATE OF CALIFORNIA OR ITS OFFICERS OR AGENTS SHALL NOT BE RESPONSIBLE FOR THE ACCURACY OR COMPLETENESS OF SCANNED COPIES OF THIS PLAN SHEET.

NOTE:

FOR COMPLETE RIGHT OF WAY AND ACCURATE ACCESS DATA, SEE RIGHT OF WAY RECORD MAPS AT DISTRICT OFFICE

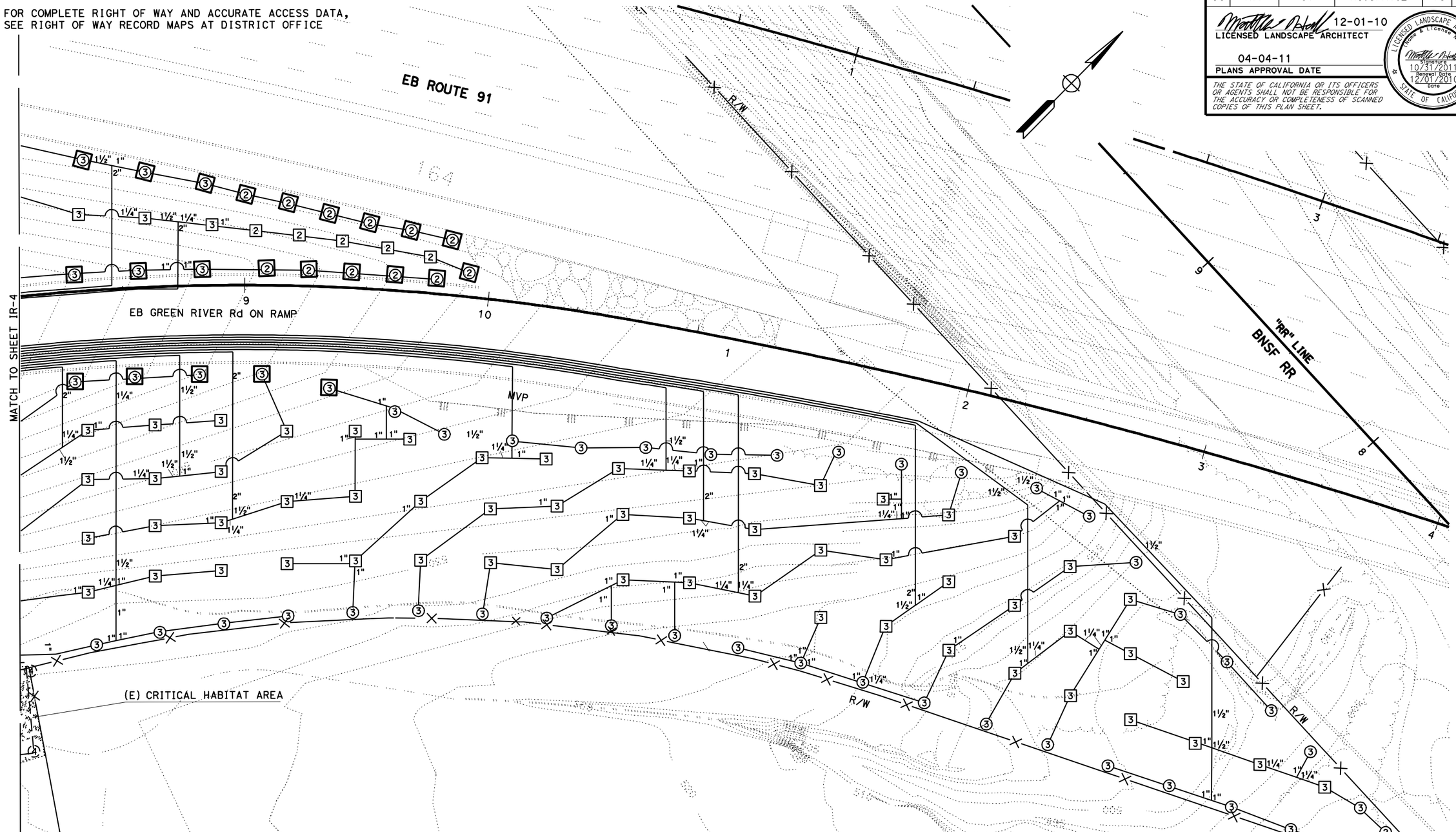

IRRIGATION PLAN

SCALE: 1" = 20'

THIS PLAN ACCURATE FOR IRRIGATION WORK ONLY.

IP-5

STATE OF CALIFORNIA - DEPARTMENT OF TRANSPORTATION
Caltrans LANDSCAPE ARCHITECTURE

SENIOR LANDSCAPE ARCHITECT: BYRON STROUT
CALCULATED-DESIGNED BY: MATTHEW HALL
CHECKED BY: LORENA SALVADOR
REVISED BY / DATE REVISED

LAST REVISION 12-01-10
DATE PLOTTED => 07-APR-2011
TIME PLOTTED => 09:33

Dist	COUNTY	ROUTE	POST MILES TOTAL PROJECT	SHEET No.	TOTAL SHEETS
08	Riv	91	R0.6/R1.2	19	37

12-01-10
LICENSED LANDSCAPE ARCHITECT

04-04-11
PLANS APPROVAL DATE

LICENSED LANDSCAPE ARCHITECT
Name & License No.
Signature
10/31/2011
Renewal Date
12/01/2010
Date
STATE OF CALIFORNIA

THE STATE OF CALIFORNIA OR ITS OFFICERS OR AGENTS SHALL NOT BE RESPONSIBLE FOR THE ACCURACY OR COMPLETENESS OF SCANNED COPIES OF THIS PLAN SHEET.

SPRINKLER SCHEDULE

SYMBOL	TYPE	DESCRIPTION	SPRAY PATTERN	OPERATING PRESSURE (PSI)	PRESSURE COMPENSATING	PLUS/MINUS 5% ② DISCHARGE GALLONS PER MINUTE (GPM)	DISCHARGE GALLONS PER HOUR (GPH)	RADIUS (Ft)	WIDTH x LENGTH (Ft)	MATERIAL	INLET CONNECTION (NPT INCH)	POSITIVE-LOCKING ADJ ARC STOP	BACKSPLASH PREVENTER	DIFFUSER PIN	DISTANCE CONTROL FLAP	ADJ DISCHARGE	RISER TYPE	RISER MATERIAL PLASTIC	RISER MATERIAL GALVANIZED	RISER SIZE (IPS INCH)	RISER HEIGHT (INCH)	RISER FLOW SHUTOFF DEVICE	⑤ SWING JOINT (TYPE)	RISER SUPPORT	SPRINKLER PROTECTOR (TYPE)	REMARKS
△1	A-1	GEAR DRIVEN	Q	30	—	0.16	—	12	—	PL	½"	—	—	—	—	—	VI	X	—	—	18"	X	VI	X	I	⑦⑧
①	A-1	GEAR DRIVEN	H	30	—	0.32	—	12	—	PL	½"	—	—	—	—	—	VI	X	—	—	18"	X	VI	X	I	⑦⑧
[1]	A-1	GEAR DRIVEN	F	30	—	0.65	—	12	—	PL	½"	—	—	—	—	—	VI	X	—	—	18"	X	VI	X	I	⑦⑧
△2	A-2	GEAR DRIVEN	Q	30	—	0.33	—	18	—	PL	½"	—	—	—	—	—	VI	X	—	—	18"	X	VI	X	I	⑦⑧
②	A-2	GEAR DRIVEN	H	30	—	0.63	—	17	—	PL	½"	—	—	—	—	—	VI	X	—	—	18"	X	VI	X	I	⑦⑧
[2]	A-2	GEAR DRIVEN	F	30	—	1.27	—	17	—	PL	½"	—	—	—	—	—	VI	X	—	—	18"	X	VI	X	I	⑦⑧
△3	A-3	GEAR DRIVEN	Q	30	—	0.74	—	27	—	PL	½"	—	—	—	—	—	VI	X	—	—	18"	X	VI	X	I	⑦⑧
③	A-3	GEAR DRIVEN	H	30	—	1.58	—	27	—	PL	½"	—	—	—	—	—	VI	X	—	—	18"	X	VI	X	I	⑦⑧
[3]	A-3	GEAR DRIVEN	F	30	—	3.15	—	27	—	PL	½"	—	—	—	—	—	VI	X	—	—	18"	X	VI	X	I	⑦⑧

X IN BOX DENOTES REQUIREMENT

APPLICABLE WHEN CIRCLED BELOW:

1 - See Special Provisions.
② - If a pressure compensating device is specified, the discharge and radii shown reflect its use.
3 - Arc Stop shall be fitted with a nut and bolt.
4 - Vinyl-coated cast iron housing.
5 - Sprikler Protectors and Swing Joints required adjacent to shoulders, curbs, sidewalks, and dikes.
⑥ - Unless otherwise shown on plans.
⑦ - 12" pop-up type sprinkler head required adjacent to edge of pavement. Riser support not required for pop-up type sprinkler along edge of pavement.
8 - Sprinkler protector required adjacent to traveled way except for sprinklers located behind guard rail and top of retaining wall locations.

ABBREVIATIONS

F — full circle
P — part circle
F/P — full/part circle
Q — quarter circle
T — third circle
H — half circle
TT — two third circle
TQ — three quarter circle
CST — center strip
SST — side strip
EST — end strip
Ft — feet/foot
GPM — gallons per minute
GPH — gallons per hour
Adj — adjustable
PL — plastic
B/B — brass/bronze
B/PL — brass/plastic
B/B/PL — brass/bronze/plastic
NPT — national pipe thread
IPS — iron pipe size
PSI — pounds per square inch

LANDSCAPE DETAILS
SPRINKLER SCHEDULE

LD-1

LAST REVISION 12-01-10
DATE PLOTTED => 07-APR-2011
TIME PLOTTED => 09:33

STATE OF CALIFORNIA - DEPARTMENT OF TRANSPORTATION
Caltrans LANDSCAPE ARCHITECTURE

SENIOR LANDSCAPE ARCHITECT: BYRON STROUT
CALCULATED-DESIGNED BY: LORENA SALVADOR
CHECKED BY: MATTHEW HALL
REVISED BY
DATE REVISED

Dist	COUNTY	ROUTE	POST MILES TOTAL PROJECT	SHEET No.	TOTAL SHEETS
08	Riv	91	R0.6/R1.2	20	37

12-01-10
LICENSED LANDSCAPE ARCHITECT

04-04-11
PLANS APPROVAL DATE

LICENSED LANDSCAPE ARCHITECT
Name & License No.
Signature
10/31/2011
Renewal Date
12/01/2010
Date
STATE OF CALIFORNIA

THE STATE OF CALIFORNIA OR ITS OFFICERS OR AGENTS SHALL NOT BE RESPONSIBLE FOR THE ACCURACY OR COMPLETENESS OF SCANNED COPIES OF THIS PLAN SHEET.

ABBREVIATIONS

EA — each
DIP — ductile iron pipe
GSP — galvanized steel pipe
Ft — foot/feet
PR — pressure rated

SUBTOTALS PER VALVE ON LATERAL SUPPLY SIDE OF CONTROL VALVE

VALVE OR ASSEMBLY NUMBER

DESCRIPTION			UNIT	A-1	A-2	A-3	A-4	A-5	A-6	A-7	A-8	A-9	A-10	A-11	A-12	A-13	A-14	A-15	A-16	A-17	A-18	A-19	A-20	A-21	A-22	A-23	A-24	A-25	A-26	A-27	A-28	A-29	A-30	A-31	A-32	A-33	A-34	A-35	A-36	A-37	A-38	A-39	SUBTOTALS	UNIT	DESCRIPTION		
PLASTIC PIPE SUPPLY LINE	SCH 40	1"	LF	337	387	519	376	189	399	273	379	395	417	197	278	197	95	131	136	519	164	250	272	262	127	183	116	295	163	267	207	242	257	194	139	263	159	153	219	161	160	209	9,656	LF	1"	SCH 40	PLASTIC PIPE SUPPLY LINE
		1¼"	LF	31	14	46	38	16	63	30	168	54	50	35	16	151	83	87	83	10	93	77	51	-	8	36	40	42	15	18	53	55	64	83	71	233	76	56	43	59	118	87	2,352	LF	1¼"		
		1½"	LF	16	185	12	-	145	-	6	138	21	13	21	114	120	105	64	106	12	14	93	-	90	161	24	81	174	293	361	538	531	245	248	31	-	178	24	74	122	-	-	4,359	LF	1½"		
		2"	LF	68	-	333	238	-	70	140	193	83	126	174	-	-	-	-	-	254	150	151	42	-	-	46	-	-	-	-	-	-	-	-	191	-	-	169	-	-	155	192	2,776	LF	2"		
	PR 315																																													PR 315	PLASTIC PIPE SUPPLY LINE
GSP																																														GSP	
SPRINKLER TYPE		△1 A-1 GEAR DRIVEN	EA	-	-	-	-	-	-	-	1	-	-	-	-	-	-	-	-	1	-	-	-	-	-	-	-	-	-	-	-	-	-	-	-	-	-	-	-	-	-	-	2	EA	△1 A-1 GEAR DRIVEN	SPRINKLER TYPE	
		① A-1 GEAR DRIVEN	EA	-	-	-	-	-	-	-	1	-	-	-	-	-	-	-	-	6	6	-	-	-	-	-	-	-	-	-	-	-	-	-	-	-	-	-	-	-	-	-	13	EA	① A-1 GEAR DRIVEN		
		1 A-1 GEAR DRIVEN	EA	-	-	-	-	-	-	-	-	-	-	-	-	-	-	-	-	2	2	-	-	-	-	-	-	-	-	-	-	-	-	-	-	-	-	-	-	-	-	-	4	EA	1 A-1 GEAR DRIVEN		
		△2 A-2 GEAR DRIVEN	EA	2	2	1	2	-	1	-	1	-	-	-	-	-	-	-	-	-	1	-	-	-	-	-	-	-	-	-	-	-	-	-	-	-	-	-	-	-	-	-	10	EA	△2 A-2 GEAR DRIVEN		
		② A-2 GEAR DRIVEN	EA	7	23	14	2	3	11	-	19	5	3	-	-	-	-	-	-	15	16	6	5	-	-	-	-	8	-	-	-	-	-	-	-	-	-	-	-	-	-	-	137	EA	② A-2 GEAR DRIVEN		
		2 A-2 GEAR DRIVEN	EA	4	12	5	1	1	6	-	6	7	1	-	-	-	-	-	-	7	12	-	-	-	-	-	-	1	-	-	-	-	-	-	-	-	-	-	-	-	-	-	63	EA	2 A-2 GEAR DRIVEN		
		△3 A-3 GEAR DRIVEN	EA	-	-	-	-	-	-	2	2	1	-	-	-	-	-	-	-	-	-	1	-	1	1	1	-	2	-	-	-	-	-	-	-	-	-	-	-	-	-	-	11	EA	△3 A-3 GEAR DRIVEN		
		③ A-3 GEAR DRIVEN	EA	4	4	10	8	3	4	8	10	4	6	4	4	12	2	2	2	3	3	11	5	6	6	3	3	3	7	10	6	8	10	4	1	6	2	3	4	2	3	5	201	EA	③ A-3 GEAR DRIVEN		
		3 A-3 GEAR DRIVEN	EA	2	2	-	6	4	4	6	1	6	8	7	6	2	7	7	7	-	7	2	5	6	5	7	4	4	5	3	5	4	3	6	8	5	7	7	5	7	7	6	193	EA	3 A-3 GEAR DRIVEN		

VALVE OR ASSEMBLY NUMBER

DESCRIPTION			UNIT	A-40	A-41	A-42	SUBTOTALS	UNIT	DESCRIPTION		
PLASTIC PIPE SUPPLY LINE	SCH 40	1"	LF	181	210	229	620	LF	1"	SCH 40	PLASTIC PIPE SUPPLY LINE
		1¼"	LF	52	36	42	129	LF	1¼"		
		1½"	LF	40	305	380	725	LF	1½"		
		2"	LF	253	-	-	253	LF	2"		
	PR 315									PR 315	PLASTIC PIPE SUPPLY LINE
GSP										GSP	
SPRINKLER TYPE		△1 A-1 GEAR DRIVEN	EA	-	-	-	0	EA	△1 A-1 GEAR DRIVEN	SPRINKLER TYPE	
		① A-1 GEAR DRIVEN	EA	-	-	-	0	EA	① A-1 GEAR DRIVEN		
		1 A-1 GEAR DRIVEN	EA	-	-	-	0	EA	1 A-1 GEAR DRIVEN		
		△2 A-2 GEAR DRIVEN	EA	-	-	1	1	EA	△2 A-2 GEAR DRIVEN		
		② A-2 GEAR DRIVEN	EA	-	-	2	2	EA	② A-2 GEAR DRIVEN		
		2 A-2 GEAR DRIVEN	EA	-	-	-	0	EA	2 A-2 GEAR DRIVEN		
		△3 A-3 GEAR DRIVEN	EA	-	-	-	0	EA	△3 A-3 GEAR DRIVEN		
		③ A-3 GEAR DRIVEN	EA	5	5	7	17	EA	③ A-3 GEAR DRIVEN		
		3 A-3 GEAR DRIVEN	EA	6	6	4	16	EA	3 A-3 GEAR DRIVEN		

IRRIGATION QUANTITIES

IQ-1

STATE OF CALIFORNIA - DEPARTMENT OF TRANSPORTATION
LANDSCAPE ARCHITECTURE

SENIOR LANDSCAPE ARCHITECT: BYRON STROUT
CALCULATED-DESIGNED BY: LORENA SALVADOR
CHECKED BY: MATTHEW HALL
REVISED BY / DATE REVISED

LAST REVISION 12-01-10
DATE PLOTTED => 07-APR-2011
TIME PLOTTED => 09:33

Dist	COUNTY	ROUTE	POST MILES TOTAL PROJECT	SHEET No.	TOTAL SHEETS
08	Riv	91	R0.6/R1.2	21	37

12-01-10
LICENSED LANDSCAPE ARCHITECT

04-04-11
PLANS APPROVAL DATE

LICENSED LANDSCAPE ARCHITECT
Name & License No.
Signature
10/31/2011
Renewal Date
12/01/2010
Date
STATE OF CALIFORNIA

THE STATE OF CALIFORNIA OR ITS OFFICERS OR AGENTS SHALL NOT BE RESPONSIBLE FOR THE ACCURACY OR COMPLETENESS OF SCANNED COPIES OF THIS PLAN SHEET.

SUBTOTALS PER PLAN SHEET ON MAIN SUPPLY SIDE OF CONTROL VALVE

DESCRIPTION			UNIT	SHEET NUMBER IP-1	IP-2	IP-3	IP-4	IP-5	SUBTOTALS
BPA		ENCLOSURE							
BPA		BOOSTER PUMP							
IRRIGATION CONTROLLER		48 STATION	EA	1	-	-	-	-	1
IRRIGATION CONTROLLER		STATION							
IRRIGATION CONTROLLER		STATION							
IRRIGATION CONTROLLER	CEC	SINGLE							
IRRIGATION CONTROLLER	CEC	DOUBLE							
VALVES AND ASSEMBLIES	RCVM	2"	EA	1	-	-	-	-	1
VALVES AND ASSEMBLIES	RCV	1"	EA	3	-	7	10	13	33
VALVES AND ASSEMBLIES	RCV	1½"	EA	4	3	-	2	-	9
VALVES AND ASSEMBLIES	GV	2"	EA	2	1	1	3	1	8
VALVES AND ASSEMBLIES	FS	1"	EA	1	-	-	-	-	1
CONDUIT	CSP								
CONDUIT	WSP								
PLASTIC PIPE SUPPLY LINE	SCH 40	1"	LF	-	-	-	-	-	0
PLASTIC PIPE SUPPLY LINE	SCH 40	1¼"	LF	13	-	-	-	2	15
PLASTIC PIPE SUPPLY LINE	SCH 40	1½"	LF	-	2	13	177	8	200
PLASTIC PIPE SUPPLY LINE	SCH 40	2"	LF	-	295	13	115	227	650
GSP									
DIP									

TOTAL QUANTITIES

TOTALS	UNIT	DESCRIPTION	
			BPA
1	EA	48 STATION	IRRIGATION CONTROLLER
			CEC
1	EA	2"	RCVM
33	EA	1"	RCV
9	EA	1½"	RCV
8	EA	2"	GV
1	EA	1"	FS
			FAU
			WSP CSP
10,276	LF	1"	SCH 40
2,496	LF	1¼"	SCH 40
5,309	LF	1½"	SCH 40
3,679	LF	2"	SCH 40
			GSP
			DIP
2	EA	A-1 GEAR DRIVEN	SPRINKLER TYPE
13	EA	A-1 GEAR DRIVEN	SPRINKLER TYPE
4	EA	A-1 GEAR DRIVEN	SPRINKLER TYPE
11	EA	A-2 GEAR DRIVEN	SPRINKLER TYPE
139	EA	A-2 GEAR DRIVEN	SPRINKLER TYPE
63	EA	A-2 GEAR DRIVEN	SPRINKLER TYPE
11	EA	A-3 GEAR DRIVEN	SPRINKLER TYPE
218	EA	A-3 GEAR DRIVEN	SPRINKLER TYPE
209	EA	A-3 GEAR DRIVEN	SPRINKLER TYPE

ABBREVIATIONS

BPA — backflow preventer assembly
BV — ball valve
CV — check valve
CEC — controller enclosure cabinet
CSP — corrugated steel pipe
DIP — ductile iron pipe
EA — each
FAU — filter assembly unit
FCV — flow control valve
FS — flow sensor
FV — flush valve
GSP — galvanized steel pipe
GV — gate valve
MCV — manual control valve
Ft — foot/feet
PR — pressure rated
PRV — pressure reducing valve
PRLV — pressure relief valve
QCV — quick coupling valve
RCV — remote control valve
RCVM — remote control valve (master)
VAU — valve assembly unit
WSP — welded steel pipe
WS — wye strainer

IRRIGATION QUANTITIES

IQ-2

LAST REVISION 12-01-10
DATE PLOTTED => 07-APR-2011
TIME PLOTTED => 09:33

STATE OF CALIFORNIA - DEPARTMENT OF TRANSPORTATION
Caltrans LANDSCAPE ARCHITECTURE
SENIOR LANDSCAPE ARCHITECT: BYRON STROUT
CALCULATED-DESIGNED BY: LORENA SALVADOR
CHECKED BY: MATTHEW HALL
REVISED BY
DATE REVISED

Dist	COUNTY	ROUTE	POST MILES TOTAL PROJECT	SHEET No.	TOTAL SHEETS
08	Riv	91	R0.6/R1.2	22	37

REGISTERED CIVIL ENGINEER 12-01-10 DATE

04-04-11
PLANS APPROVAL DATE

REGISTERED PROFESSIONAL ENGINEER TRAN HOANG No. C54996 Exp. 6/30/12 CIVIL STATE OF CALIFORNIA

THE STATE OF CALIFORNIA OR ITS OFFICERS OR AGENTS SHALL NOT BE RESPONSIBLE FOR THE ACCURACY OR COMPLETENESS OF SCANNED COPIES OF THIS PLAN SHEET.

NOTES:

1. CONSTRUCTION AREA SIGN LOCATIONS SHOWN ARE APPROXIMATE. EXACT LOCATIONS WILL BE DETERMINED BY THE ENGINEER.
2. FOR TRAFFIC CONTROL REQUIREMENTS, REFER TO STANDARD PLAN T10 FOR FREEWAY LANE CLOSURES AND T11 FOR RAMP CLOSURES.

LEGEND:

- ONE POST SIGN
- TWO POST SIGN
- WORK AREA
- (X-X) CONSTRUCTION AREA SIGN CODE

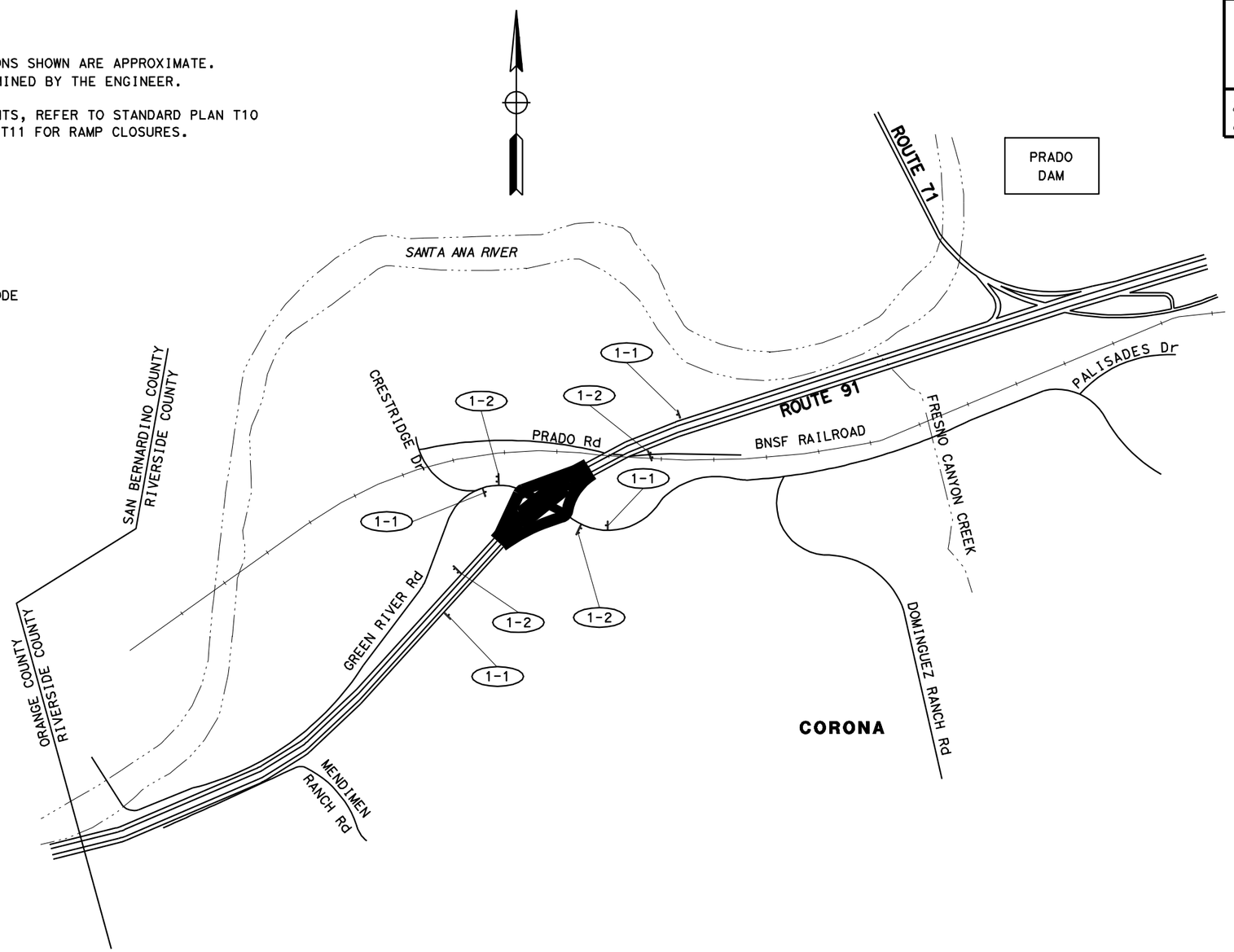

STATIONARY MOUNTED CONSTRUCTION AREA SIGNS

SIGN No. (X)	SIGN CODE	PANEL SIZE	SIGN MESSAGE	No. OF POST(S) AND SIZE	No. OF SIGNS (EA)
1-1	W20-1	48" X 48"	LANDSCAPING AHEAD	1 - 6" X 6"	4
1-2	G20-2	36" X 18"	END LANDSCAPING	2 - 4" X 4"	4
TOTAL					4

THIS PLAN ACCURATE FOR CONSTRUCTION AREA SIGN WORK ONLY

CONSTRUCTION AREA SIGNS

NO SCALE

CS-1

REVISED BY	DATE REVISED

CALCULATED-DESIGNED BY	CHECKED BY
V. TRAN	T. HOANG

FUNCTIONAL SUPERVISOR: LARRY SARTORI

STATE OF CALIFORNIA - DEPARTMENT OF TRANSPORTATION
Caltrans® TRAFFIC DESIGN B

LAST REVISION 12-01-10 | DATE PLOTTED => 07-APR-2011 | TIME PLOTTED => 09:34

Dist	COUNTY	ROUTE	POST MILES TOTAL PROJECT	SHEET No.	TOTAL SHEETS
08	Riv	91	R0.6/R1.2	23	37

REGISTERED CIVIL ENGINEER 12-01-10 DATE

04-04-11
PLANS APPROVAL DATE

REGISTERED PROFESSIONAL ENGINEER MICHAEL APANTE No. E 17164 Exp. 9-30-11 CIVIL STATE OF CALIFORNIA

THE STATE OF CALIFORNIA OR ITS OFFICERS OR AGENTS SHALL NOT BE RESPONSIBLE FOR THE ACCURACY OR COMPLETENESS OF SCANNED COPIES OF THIS PLAN SHEET.

NOTE:

FOR ACCURATE RIGHT OF WAY AND ACCESS DATA, CONTACT RIGHT OF WAY ENGINEERING AT THE DISTRICT OFFICE.

PROJECT NOTES:

1. EXISTING 120/240 V, III-BF SERVICE EQUIPMENT ENCLOSURE
2. EXISTING IRRIGATION CONTROLLER CABINET. CONTRACTOR SHALL PERFORM FIBER OPTIC COMMUNICATION LINKS TESTS AND INSTALL THE ITU AND FIBER ETHERNET SWITCH AS PER THE DETAILS ON E-2.

LEGEND

—— fo —— EXISTING FIBER OPTIC CONDUIT WITH TWO OR MORE FIBER OPTIC CABLES AND FOUR ¾" INNERDUCTS.

EXISTING SPLICE VAULT

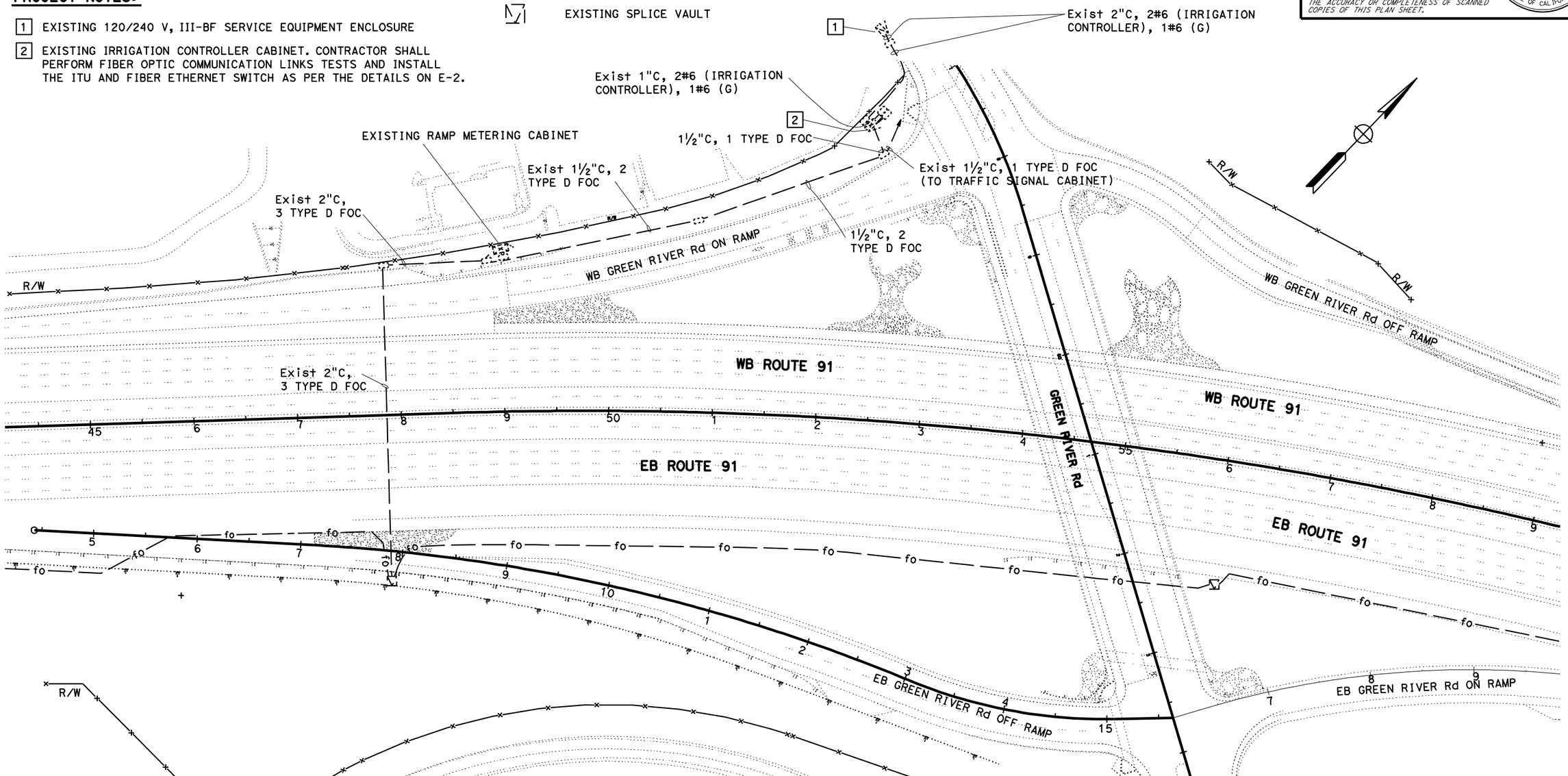

THIS PLAN IS ACCURATE FOR ELECTRICAL WORK ONLY

MODIFY FIBER OPTIC SYSTEM (IRRIGATION)

E-1

STATE OF CALIFORNIA - DEPARTMENT OF TRANSPORTATION
Caltrans® ELECTRICAL DESIGN A

FUNCTIONAL SUPERVISOR: DAVID GONZALEZ
CALCULATED-DESIGNED BY: FRANCISCO MARTINEZ
CHECKED BY: MICHAEL APANTE
REVISED BY
DATE REVISED

LAST REVISION 12-01-10
DATE PLOTTED => 07-APR-2011
TIME PLOTTED => 09:34

Dist	COUNTY	ROUTE	POST MILES TOTAL PROJECT	SHEET No.	TOTAL SHEETS
08	Riv	91	R0.6/R1.2	24	37

REGISTERED CIVIL ENGINEER 12-01-10 DATE

04-04-11
PLANS APPROVAL DATE

REGISTERED PROFESSIONAL ENGINEER MICHAEL APANTE No. E 17164 Exp. 9-30-11 CIVIL STATE OF CALIFORNIA

THE STATE OF CALIFORNIA OR ITS OFFICERS OR AGENTS SHALL NOT BE RESPONSIBLE FOR THE ACCURACY OR COMPLETENESS OF SCANNED COPIES OF THIS PLAN SHEET.

PROJECT NOTE:

1. ALL FIBER OPTIC COMMUNICATION LINKS SHALL BE TESTED USING:
   A. OPTICAL DOMAIN TIME REFLECTOMETER (OTDR)
   B. POWER METER AND LIGHT SOURCE

LEGEND

XX FIBER NUMBER

Ⓧ FIBER OPTIC COMMUNICATION LINK

——XX——► OUTGOING FIBER

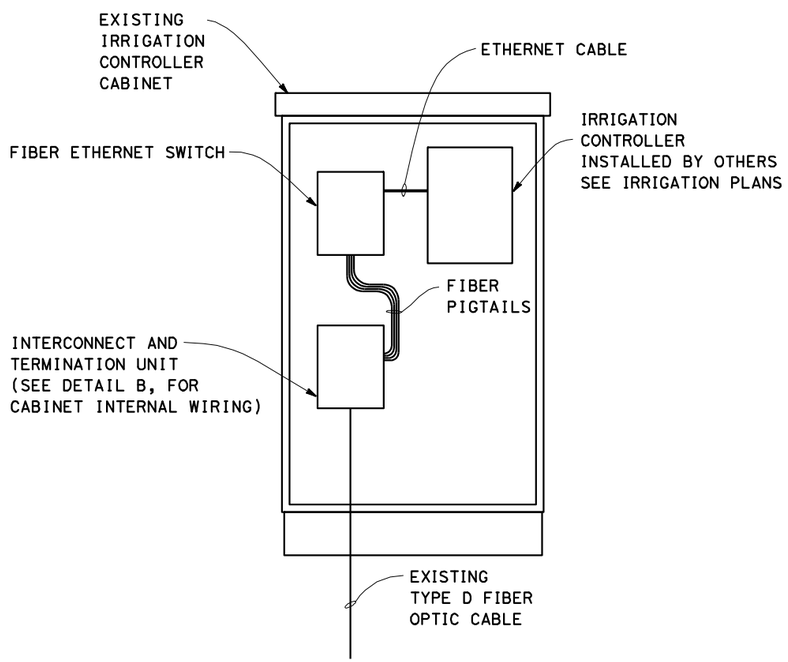

DETAIL A
IRRIGATION CONTROLLER INTERFACE

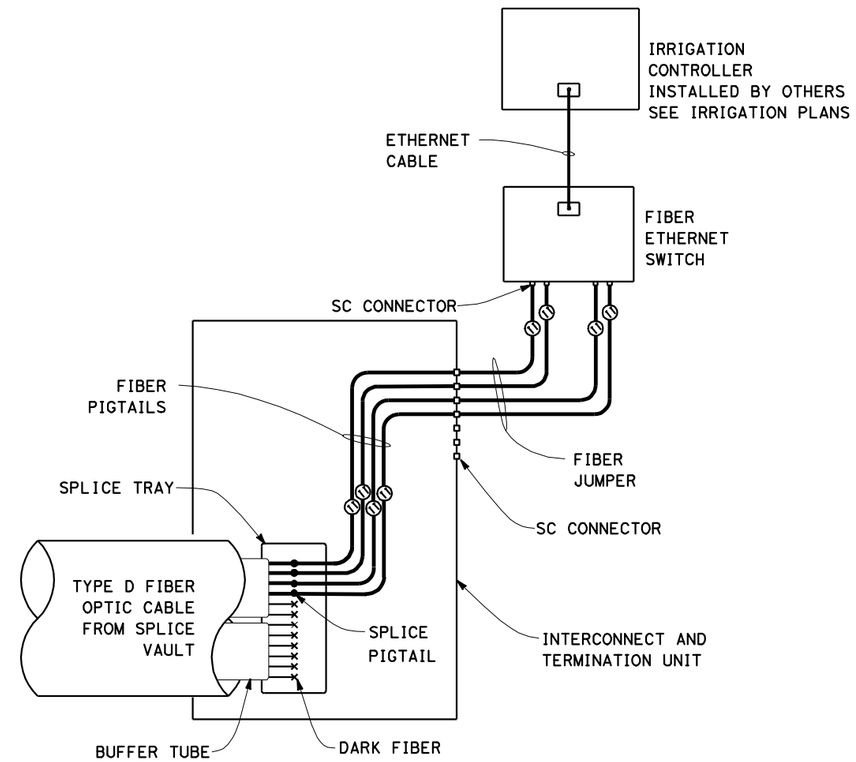

DETAIL B
CABINET INTERNAL WIRING (FIBER TO ETHERNET)

EXISTING FIBER OPTIC COMMUNICATION SCHEMATIC

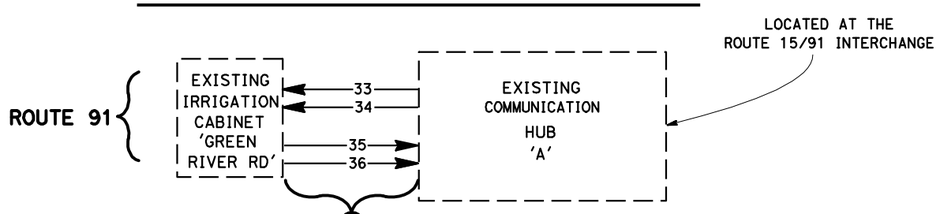

FIBER OPTIC COMMUNICATION LINK

LINK	COMMUNICATION LINK	FIBERS TO BE TESTED	QUANTITY OF FIBERS TO BE TESTED
Ⓐ	ICC AT GREEN RIVER ROAD TO HUB 'A'	#33, 34, 35, 36	4
		TOTAL	4

MODIFY FIBER OPTIC SYSTEM (IRRIGATION)

NO SCALE

THIS PLAN IS ACCURATE FOR ELECTRICAL WORK ONLY

E-2

STATE OF CALIFORNIA - DEPARTMENT OF TRANSPORTATION
Caltrans ELECTRICAL DESIGN A

FUNCTIONAL SUPERVISOR: DAVID GONZALEZ
CALCULATED-DESIGNED BY: FRANCISCO MARTINEZ
CHECKED BY: MICHAEL APANTE
REVISED BY
DATE REVISED

LAST REVISION 12-01-10
DATE PLOTTED => 07-APR-2011
TIME PLOTTED => 09:34

DIST	COUNTY	ROUTE	POST MILES TOTAL PROJECT	SHEET NO.	TOTAL SHEETS
08	Riv	91	R0.6/R1.2	25	37

LICENSED LANDSCAPE ARCHITECT

August 15, 2008
PLANS Approval DATE

LICENSED LANDSCAPE ARCHITECT
Robert B. Schott 3625
Signature
11-04-08
Renewal Date
08-11-08
Date
STATE OF CALIFORNIA

The State of California or its officers or agents shall not be responsible for the accuracy or completeness of electronic copies of this plan sheet.

To accompany plans dated April 4, 2011

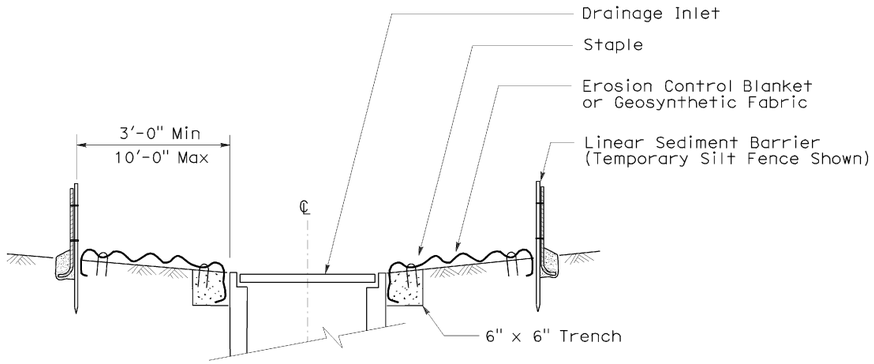

SECTION A-A

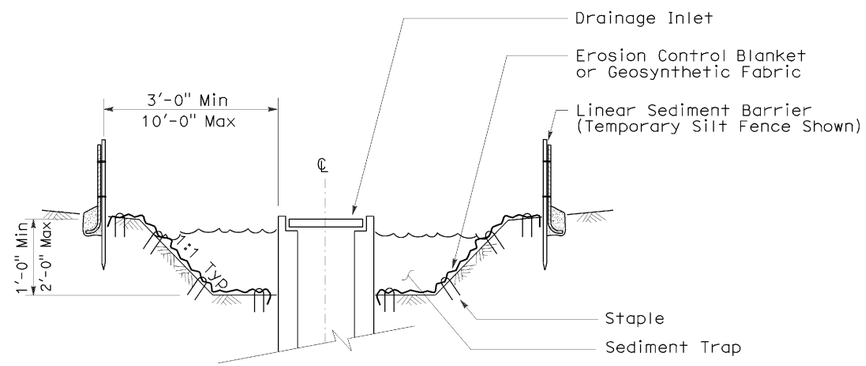

SECTION B-B

NOTES:

1. See Standard Plan T51 for Temporary Silt Fence.
2. Dimensions may vary to fit field conditions.

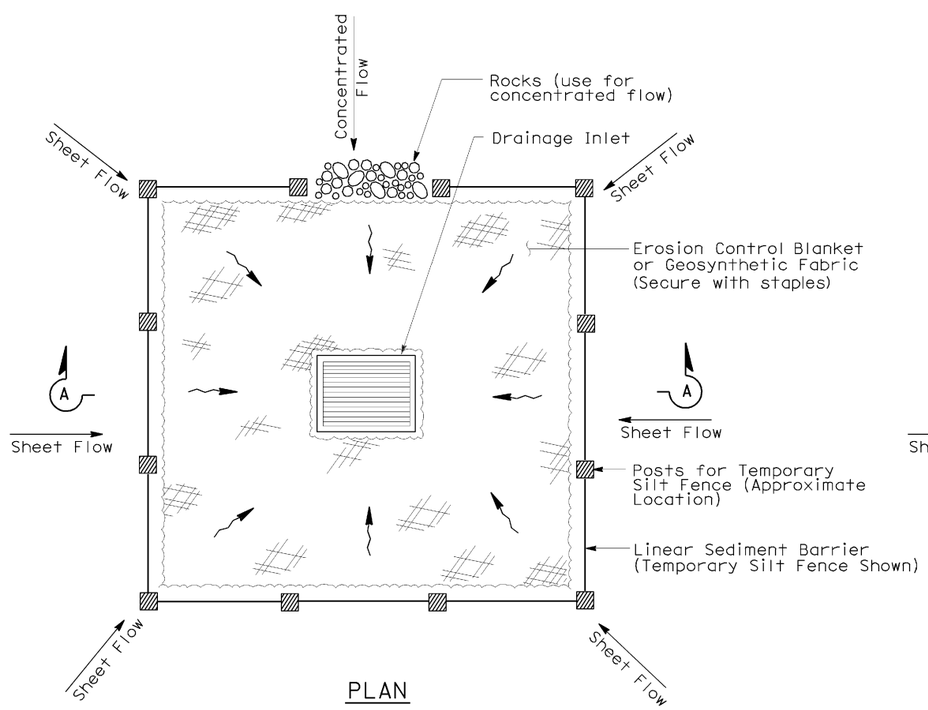

PLAN

TEMPORARY DRAINAGE INLET PROTECTION (TYPE 1)

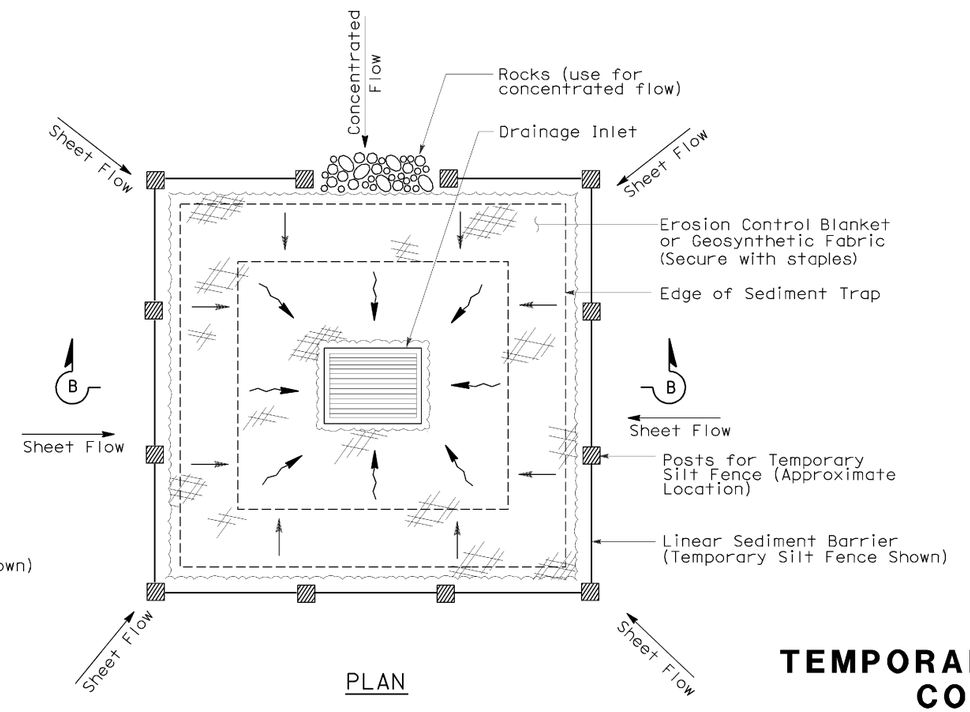

PLAN

TEMPORARY DRAINAGE INLET PROTECTION (TYPE 2) (EXCAVATED SEDIMENT TRAP)

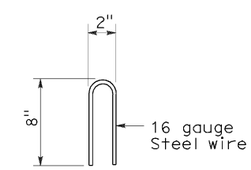

STAPLE DETAIL

STATE OF CALIFORNIA
DEPARTMENT OF TRANSPORTATION

TEMPORARY WATER POLLUTION CONTROL DETAILS (TEMPORARY DRAINAGE INLET PROTECTION)

NO SCALE

Nsp t61 dated august 15, 2008 supplements the standard plans book dated may 2006.

NEW STANDARD PLAN NSP T61

2006 NEW STANDARD PLAN NSP T61

7-11-08

DIST	COUNTY	ROUTE	POST MILES TOTAL PROJECT	SHEET NO.	TOTAL SHEETS
08	Riv	91	R0.6/R1.2	26	37

Robert B Schott
LICENSED LANDSCAPE ARCHITECT

August 15, 2008
PLANS APPROVAL DATE

LICENSED LANDSCAPE ARCHITECT
Robert B. Schott 3695
Signature
11-04-08
Renewal Date
08-11-08
Date
STATE OF CALIFORNIA

The State of California or its officers or agents shall not be responsible for the accuracy or completeness of electronic copies of this plan sheet.

To accompany plans dated April 4, 2011

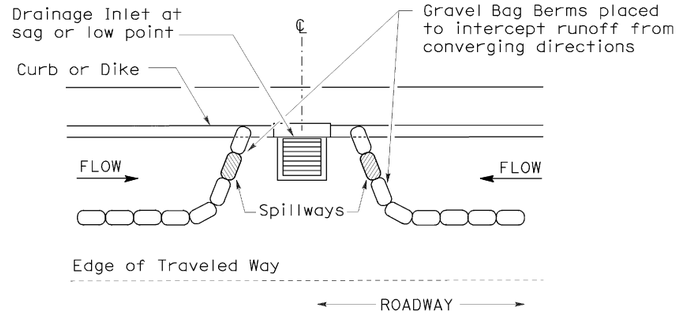

PLAN

CONFIGURATION FOR SAG POINT INLET (GRAVEL BAG BERM)

GRAVEL BAG BERM (TYPE 3A) SPACING TABLE

SLOPE OF ROADWAY (PERCENT)	1 to 3.9	4 to 5.9	6 to 7.9	8 to 10	10+
INTERVAL BETWEEN BERM	100′	75′	50′	25′	12′

For slope of less than 1%, install barriers only if erosion/sediment is prevalent

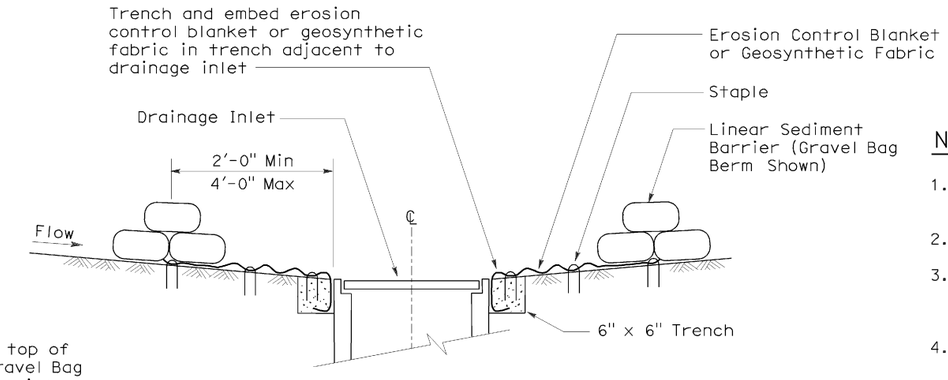

SECTION A-A

NOTES:

1. Place safety cones adjacent to drainage inlet protection.
2. Dimensions may vary to fit field conditions.
3. Install a minimum of 3 gravel bag berms upstream of each drainage inlet to be protected.
4. Position erosion control blanket or geosynthetic fabric at edge of concrete apron and secure in trench.
5. Erosion control blanket or geosynthetic fabric is not required if the area adjacent to the drainage inlet is vegetated or paved.

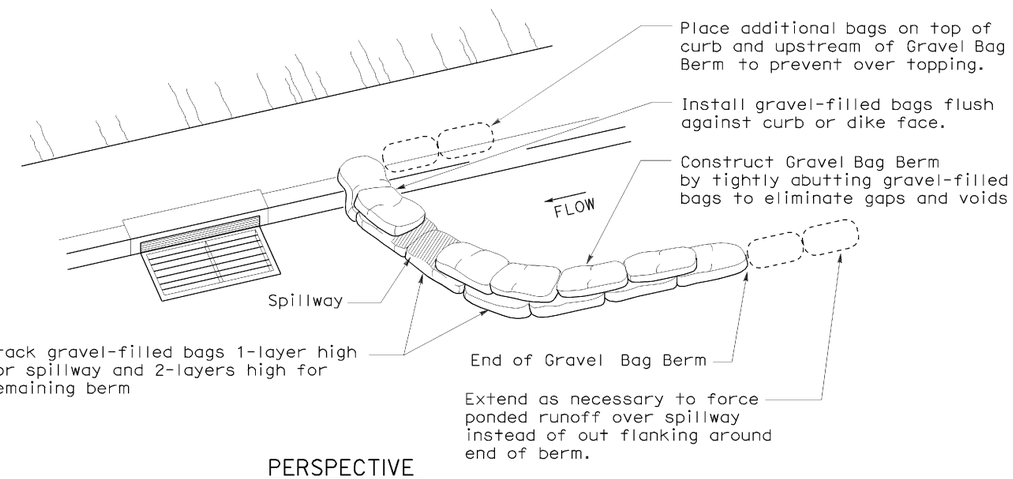

PERSPECTIVE

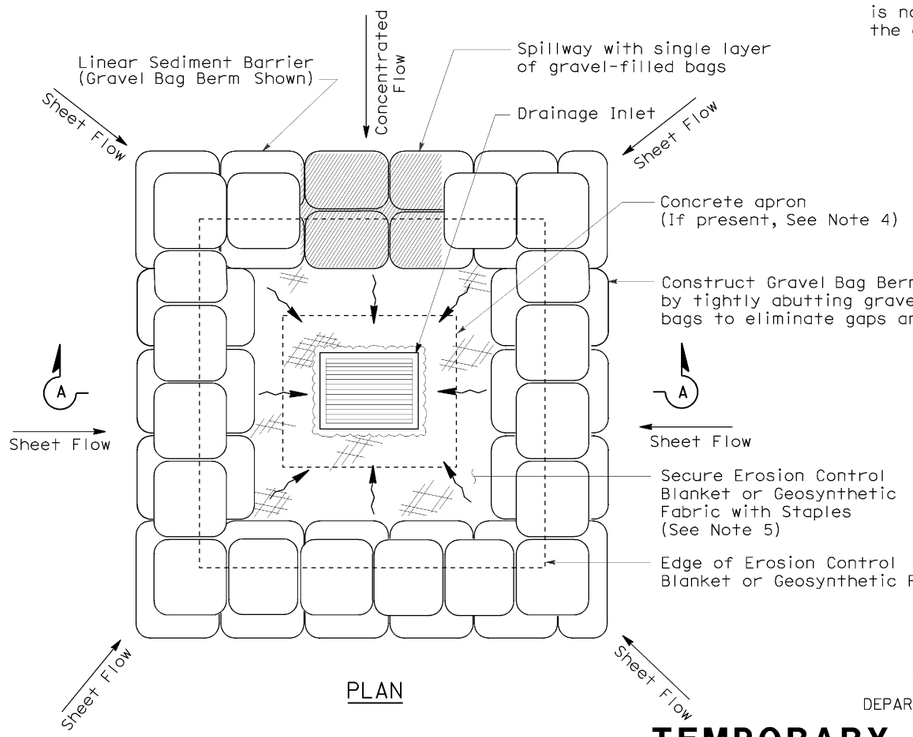

PLAN

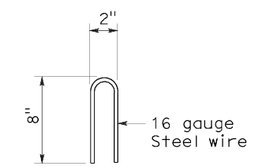

STAPLE DETAIL

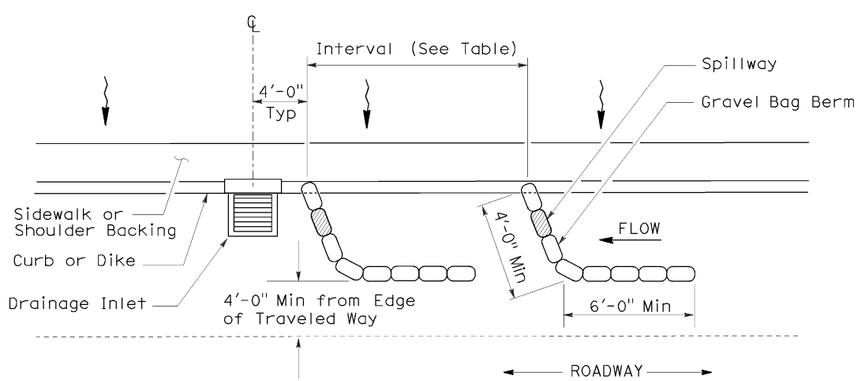

PLAN

TEMPORARY DRAINAGE INLET PROTECTION (TYPE 3A) (GRAVEL BAG BERM)

TEMPORARY DRAINAGE INLET PROTECTION (TYPE 3B)

STATE OF CALIFORNIA
DEPARTMENT OF TRANSPORTATION

TEMPORARY WATER POLLUTION CONTROL DETAILS (TEMPORARY DRAINAGE INLET PROTECTION)

NO SCALE

NSP T62 DATED AUGUST 15, 2008 SUPPLEMENTS THE STANDARD PLANS BOOK DATED MAY 2006.

NEW STANDARD PLAN NSP T62

2006 NEW STANDARD PLAN NSP T62

7-11-08

DIST	COUNTY	ROUTE	POST MILES TOTAL PROJECT	SHEET NO.	TOTAL SHEETS
08	Riv	91	R0.6/R1.2	27	37

Robert B Schott
LICENSED LANDSCAPE ARCHITECT

August 15, 2008
PLANS APPROVAL DATE

LICENSED LANDSCAPE ARCHITECT
Robert B. Schott 3695
Signature
11-04-08
Renewal Date
08-11-08
Date
STATE OF CALIFORNIA

The State of California or its officers or agents shall not be responsible for the accuracy or completeness of electronic copies of this plan sheet.

To accompany plans dated April 4, 2011

FLEXIBLE SEDIMENT BARRIER SPACING TABLE

SLOPE OF ROADWAY (PERCENT)	0 to 0.9	1 to 1.9	2 to 2.9	3 to 4	5+
INTERVAL BETWEEN BARRIERS	50′	35′	30′	25′	20′
ANGLE FROM FACE OF CURB	70°	70°	70°	45°	45°
SUGGESTED BARRIER LENGTH	6′	6′	6′	6′	6′

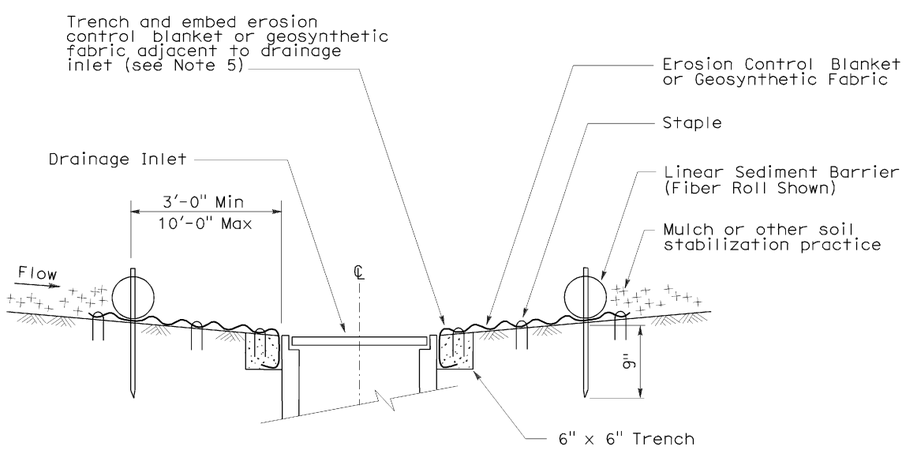

SECTION A-A

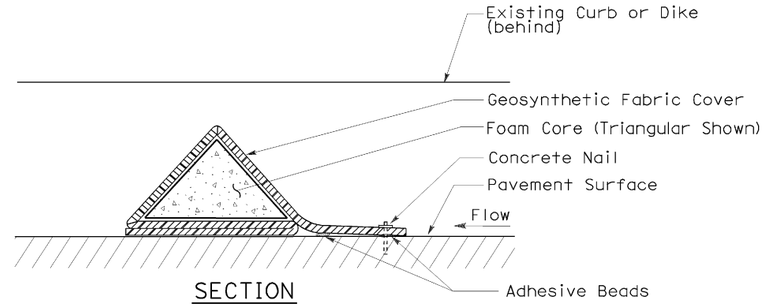

SECTION

FLEXIBLE SEDIMENT BARRIER DETAIL
(FOAM BARRIER SHOWN)

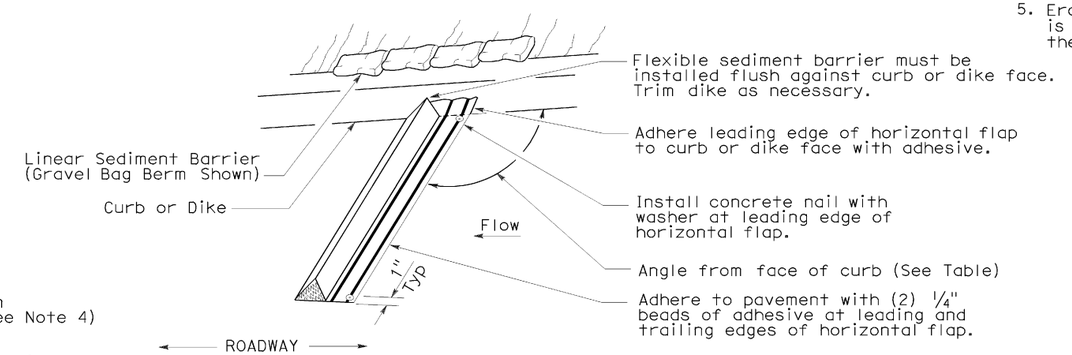

PERSPECTIVE

NOTES:

1. See Standard Plan T51 for Temporary Silt Fence.
2. Dimensions may vary to fit field conditions.
3. Install a minimum of 3 flexible sediment barriers upstream of each drainage inlet to be protected.
4. Position erosion control blanket or geosynthetic fabric at edge of concrete apron and secure in trench.
5. Erosion control blanket or geosynthetic fabric is not required if the area adjacent to the drainage inlet is vegetated.

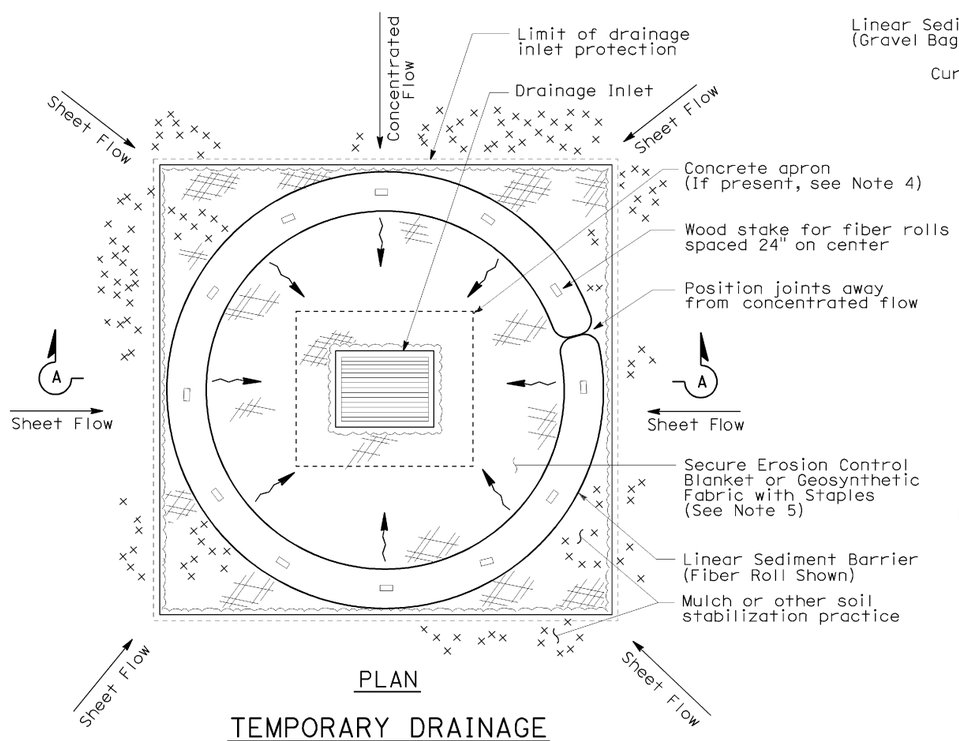

PLAN

TEMPORARY DRAINAGE
INLET PROTECTION (TYPE 4A)

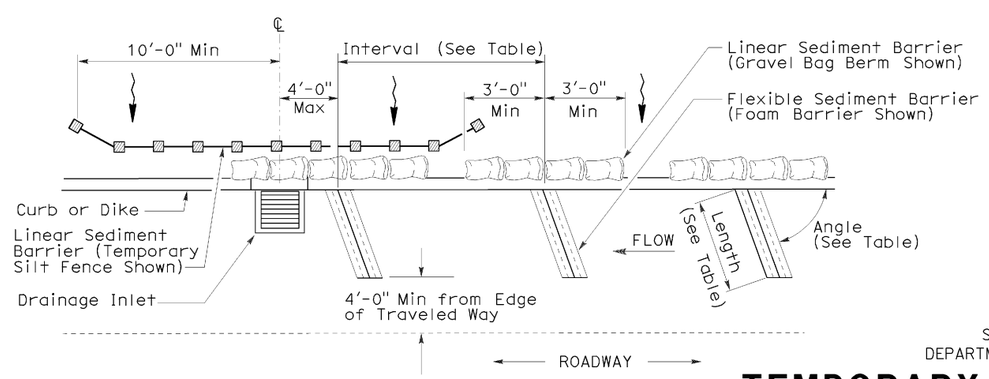

PLAN

TEMPORARY DRAINAGE
INLET PROTECTION (TYPE 4B)
FLEXIBLE SEDIMENT BARRIER

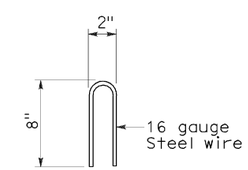

STAPLE DETAIL

STATE OF CALIFORNIA
DEPARTMENT OF TRANSPORTATION

TEMPORARY WATER POLLUTION CONTROL DETAILS (TEMPORARY DRAINAGE INLET PROTECTION)

NO SCALE

NSP T63 DATED AUGUST 15, 2008 SUPPLEMENTS
THE STANDARD PLANS BOOK DATED MAY 2006.

NEW STANDARD PLAN NSP T63

2006 NEW STANDARD PLAN NSP T63

7-11-08

DIST	COUNTY	ROUTE	POST MILES TOTAL PROJECT	SHEET NO.	TOTAL SHEETS
08	Riv	91	R0.6/R1.2	28	37

Robert B Schott
LICENSED LANDSCAPE ARCHITECT

August 15, 2008
PLANS APPROVAL DATE

LICENSED LANDSCAPE ARCHITECT Robert B. Schott 3625 Signature 11-04-08 Renewal Date 08-11-08 Date STATE OF CALIFORNIA

The State of California or its officers or agents shall not be responsible for the accuracy or completeness of electronic copies of this plan sheet.

To accompany plans dated April 4, 2011

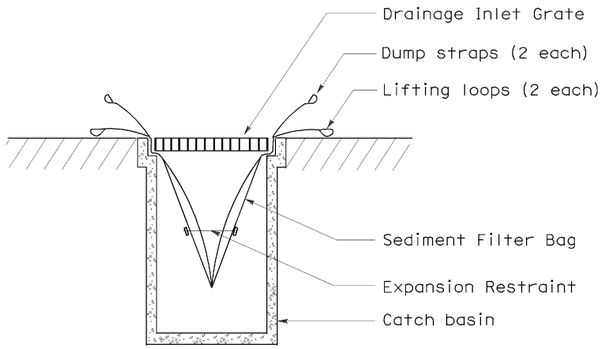

SECTION B-B

SEDIMENT FILTER BAG DETAIL

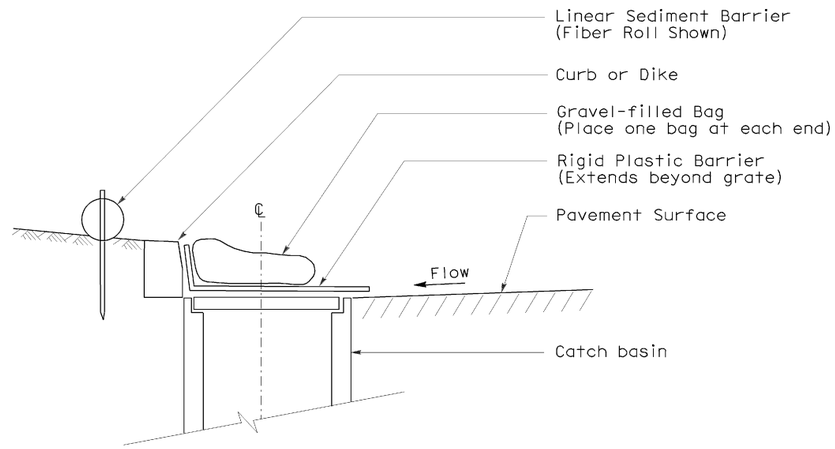

SECTION

TEMPORARY DRAINAGE INLET PROTECTION (TYPE 6A) (CATCH BASIN WITH GRATE)

NOTES:

1. See Standard Plan T51 for Temporary Silt Fence.
2. Dimensions may vary to fit field conditions.

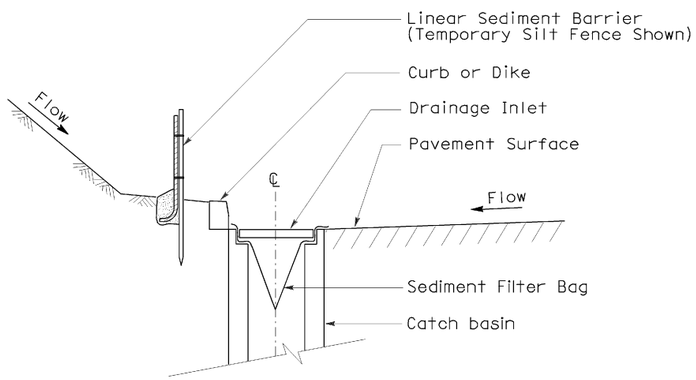

SECTION A-A

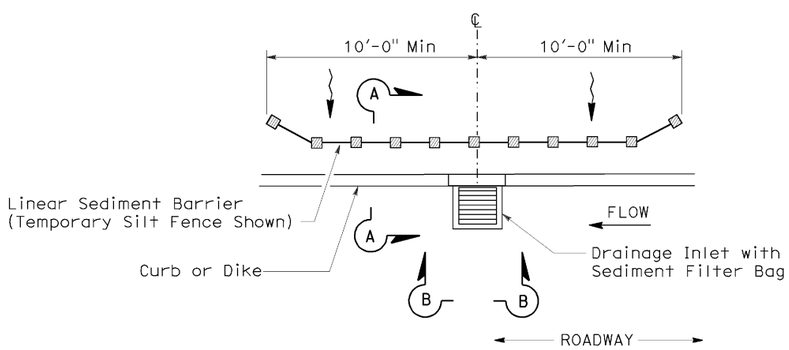

PLAN

TEMPORARY DRAINAGE INLET PROTECTION (TYPE 5) (SEDIMENT FILTER BAG)

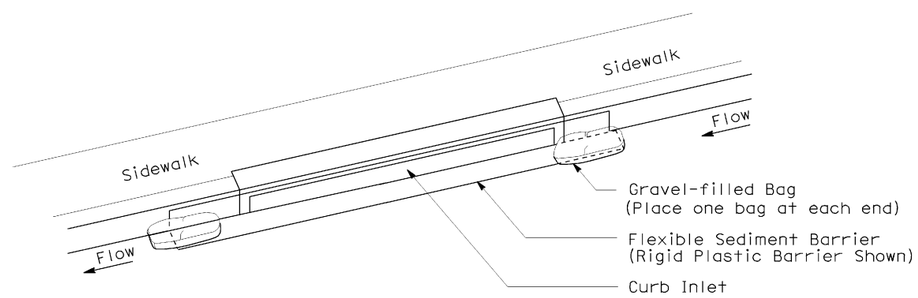

PERSPECTIVE

TEMPORARY DRAINAGE INLET PROTECTION (TYPE 6B) (CURB INLET WITHOUT GRATE)

STATE OF CALIFORNIA
DEPARTMENT OF TRANSPORTATION

TEMPORARY WATER POLLUTION CONTROL DETAILS (TEMPORARY DRAINAGE INLET PROTECTION)

NO SCALE

NSP T64 DATED AUGUST 15, 2008 SUPPLEMENTS
THE STANDARD PLANS BOOK DATED MAY 2006.

NEW STANDARD PLAN NSP T64

2006 NEW STANDARD PLAN NSP T64

7-11-08

DIST	COUNTY	ROUTE	POST MILES TOTAL PROJECT	SHEET NO.	TOTAL SHEETS
08	Riv	91	R0.6/R1.2	29	37

LICENSED LANDSCAPE ARCHITECT

April 3, 2009
PLANS APPROVAL DATE

The State of California or its officers or agents shall not be responsible for the accuracy or completeness of electronic copies of this plan sheet.

LICENSED LANDSCAPE ARCHITECT — Gregory A. Balzer — 02-28-11 Renewal Date — 03-04-09 Date — STATE OF CALIFORNIA

To accompany plans dated April 4, 2011

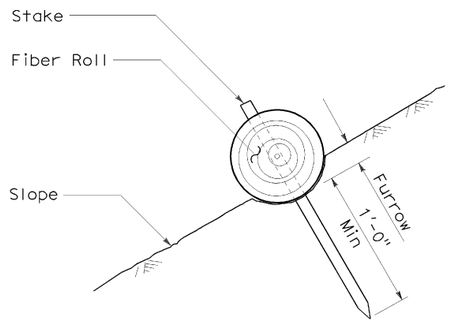

SECTION

FIBER ROLL (TYPE 1)

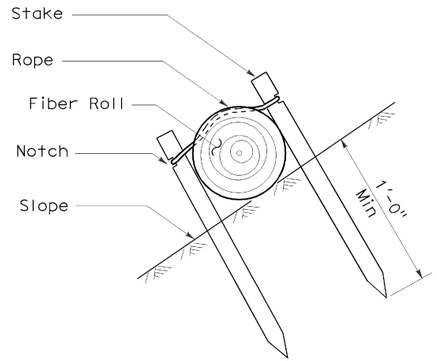

SECTION

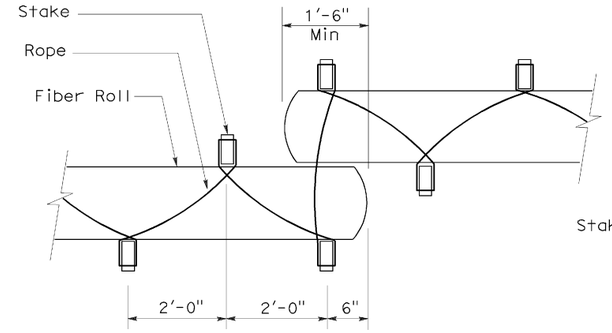

PLAN

FIBER ROLL (TYPE 2)

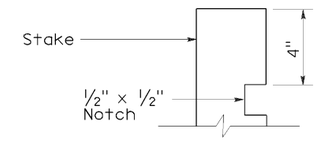

ELEVATION

STAKE NOTCH DETAIL

NOTES:

1. Fiber roll spacing varies depending upon slope inclination.
2. Installations shown in the perspectives are for slope inclination of 10:1 and steeper.

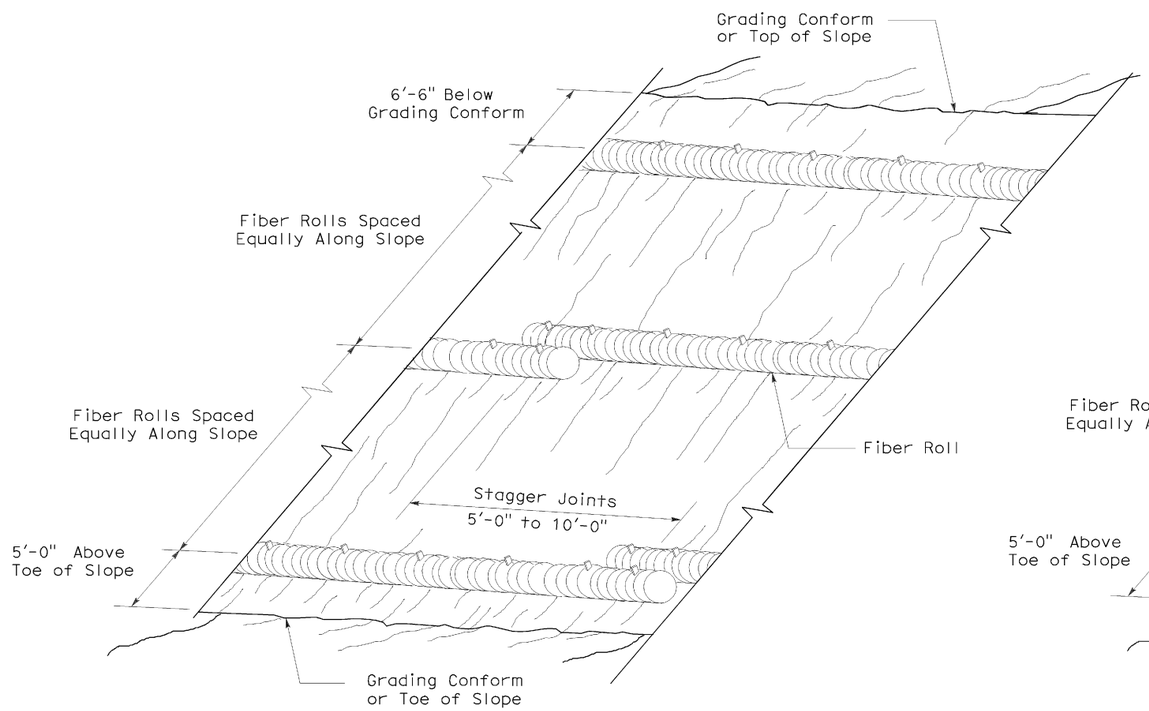

PERSPECTIVE

FIBER ROLL (TYPE 1)

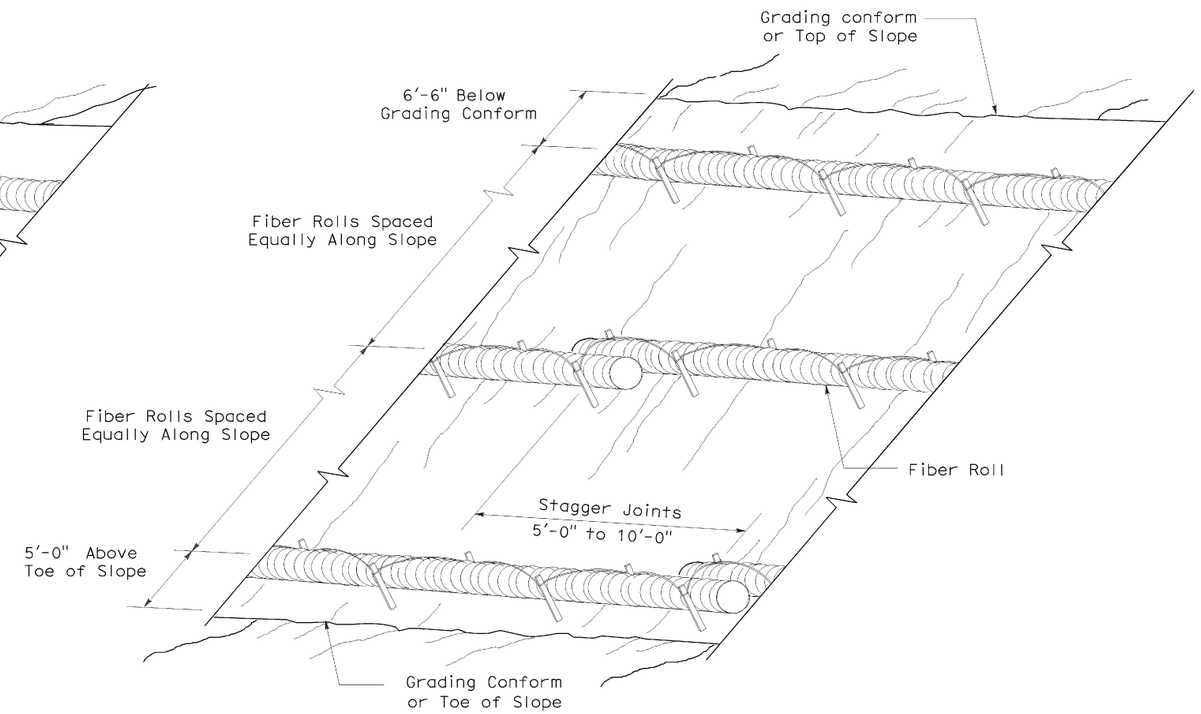

PERSPECTIVE

FIBER ROLL (TYPE 2)

STATE OF CALIFORNIA
DEPARTMENT OF TRANSPORTATION

EROSION CONTROL DETAILS (FIBER ROLL)

NO SCALE

RNSP H51 DATED APRIL 3, 2009 SUPERSEDES NSP H51 DATED DECEMBER 1, 2006 THAT SUPPLEMENTS THE STANDARD PLANS BOOK DATED MAY 2006.

REVISED NEW STANDARD PLAN RNSP H51

2006 REVISED NEW STANDARD PLAN RNSP H51

3-4-09

DIST	COUNTY	ROUTE	POST MILES TOTAL PROJECT	SHEET NO.	TOTAL SHEETS
08	Riv	91	R0.6/R1.2	30	37

LICENSED LANDSCAPE ARCHITECT

June 5, 2009
PLANS APPROVAL DATE

LICENSED LANDSCAPE ARCHITECT
Gregory A. Balzer
08 District
2-28-11
Renewal Date
5-14-09
Date
STATE OF CALIFORNIA

The State of California or its officers or agents shall not be responsible for the accuracy or completeness of electronic copies of this plan sheet.

To accompany plans dated April 4, 2011

A

AB	aggregate base
ABS	acrylonitrile-butadiene-styrene
AC	asphalt concrete
Adj	adjacent/adjustable
AIC	auxiliary irrigation controller
Alt	alternative
AMEND	amendment
ARV	air release valve
AUTO	automatic
AUX	auxiliary
AVB	atmospheric vacuum breaker

B

B&B	balled and burlapped
B/B	brass/bronze
B/B/PL	brass/bronze/plastic
B/PL	brass/plastic
BFM	bonded fiber matrix
Bit Ctd	bituminous coated
BP	booster pump
BPA	backflow preventer assembly
BPAE	backflow preventer assembly in enclosure
BPE	backflow preventer enclosure
BV	ball valve

C

CAP	corrugated aluminum pipe
CARV	combination air release valve
CCA	cam coupler assembly
CEC	controller enclosure cabinet
CHDPE	corrugated high density polyethylene
CL	chain link
CNC	control and neutral conductors
Conc	concrete
Cond	conduit
CSP	corrugated steel pipe
CST	center strip
CV	check valve

D

Dia	diameter
DIP	ductile iron pipe
DN	diameter nominal

E

EA	each
Elect	electric/electrical
Elev	elevation
ENCL	enclosure
EP	edge of pavement
ES	edge of shoulder
EST	end strip
ESTB	establishment
ETW	edge of traveled way

F

F	full circle
F/P	full/part circle
FAU	filter assembly unit
FCV	flow control valve
FERT	fertilizer
FG	finished grade
FIPT	female iron pipe thread
FIS	fertilizer injector system
FL	flow line
FM	flow monitor
FS	flow sensor
Ft	foot/feet
FV	flush valve

G

GAL	Gallon(s)
Galv	galvanized
GARV	garden valve
GPH	gallons per hour
GPM	gallons per minute
GSP	galvanized steel pipe
GV	gate valve

H

H	half circle
HB	hose bib
HDPE	high density polyethylene
HP	horsepower/hinge point
HPL	high pressure line
Hwy	highway

I

IC	irrigation controller
ICC	irrigation controller(s) in controller enclosure cabinet
ID	inside diameter
In	inches
IFS	irrigation filtration system
IPS	iron pipe size
IPT	iron pipe thread
Irr	irrigation

L

L	length
LF	linear foot

M

Max	maximum
MBGR	metal beam guard railing
MCV	manual control valve
MIC	master irrigation controller
Min	minimum
MIPT	male iron pipe thread
Misc	miscellaneous
Mtl	material
MVP	maintenance vehicle pullout

N

NCN	no common name
NL	nozzle line
No.	number
NPT	national pipe thread

O

O/C	on center
OD	outside diameter
Oz	ounce

P

P	part circle
PB	pull box
PCC	portland cement concrete
PE	polyethylene
Pkt	packet
PL	plastic
PLT	plant/planting
PLT ESTB	plant establishment
PM	post mile
PR	pressure rated
PRLV	pressure relief valve
PSFM	polymer stabilized fiber matrix
PSI	pounds per square inch
PRV	pressure reducing valve
PVC	polyvinyl chloride
Pvmt	pavement

Q

Q	quarter circle
QCV	quick coupling valve

R

R	radius
RCP	reinforced concrete pipe
RCV	remote control valve
RCVM	remote control valve (master)
RCVMF	remote control valve (master) w/ flow meter
RCW	recycled/reclaimed water
RECP	rolled erosion control product
REQ	required
R/W	right of way

S

S	slip
SCC	sprinkler control conduit
SCH	schedule
SF	state-furnished
Shld	shoulder
SQFT	square foot/feet
SQYD	square yard(s)
SST	side strip
Sta	station
Std	standard
SW	sidewalk/sound wall

T

T	third circle/thread
TLS	truck loading standpipe
TQ	three quarter circle
TRM	turf reinforcement mat
TRVD	traveled
TT	two third circle
Typ	typical

U

UG	underground

V

VAU	valve assembly unit

W

W	width
W/	with
WM	water meter
WS	wye strainer
WSP	welded steel pipe
WWM	welded wire mesh

NOTE:

FOR ADDITIONAL ABBREVIATIONS, SEE STANDARD PLANS A10A AND A10B.

STATE OF CALIFORNIA
DEPARTMENT OF TRANSPORTATION

PLANTING AND IRRIGATION ABBREVIATIONS

NO SCALE

RSP H1 DATED JUNE 5, 2009 SUPERSEDES STANDARD PLAN H1
DATED MAY 1, 2006 - PAGE 201 OF THE STANDARD PLANS BOOK DATED MAY 2006.

REVISED STANDARD PLAN RSP H1

2006 REVISED STANDARD PLAN RSP H1

5-28-09

DIST	COUNTY	ROUTE	POST MILES TOTAL PROJECT	SHEET NO.	TOTAL SHEETS
08	Riv	91	R0.6/R1.2	31	37

Gregory A. Balzer
LICENSED LANDSCAPE ARCHITECT

June 5, 2009
PLANS APPROVAL DATE

LICENSED LANDSCAPE ARCHITECT
Gregory A. Balzer 2576
Signature
2-28-11
Renewal Date
5-14-09
Date
STATE OF CALIFORNIA

The State of California or its officers or agents shall not be responsible for the accuracy or completeness of electronic copies of this plan sheet.

To accompany plans dated April 4, 2011

EXISTING	PROPOSED	ITEM DESCRIPTION
		WATER METER (WM)
		BACKFLOW PREVENTER ASSEMBLY (BPA)
		BACKFLOW PREVENTER ASSEMBLY IN ENCLOSURE (BPAE)
		BACKFLOW PREVENTER ENCLOSURE (BPE)
		BOOSTER PUMP (BP)
		TRUCK LOADING STANDPIPE (TLS)
	FS	FLOW SENSOR (FS)
		MASTER IRRIGATION CONTROLLER (MIC)
		AUXILIARY IRRIGATION CONTROLLER (AIC)
		IRRIGATION CONTROLLER (IC)/ IRRIGATION CONTROLLER (IC) (BATTERY) IRRIGATION CONTROLLER (IC) (SOLAR)
		IRRIGATION CONTROLLER(S) IN CONTROLLER ENCLOSURE CABINET (ICC)
		CONTROL AND NEUTRAL CONDUCTORS (CNC)
SCC	SCC	SPRINKLER CONTROL CONDUIT (SCC)
		IRRIGATION CROSSOVER
		EXTEND IRRIGATION CROSSOVER
		IRRIGATION SLEEVE
dip	DIP	DUCTILE IRON PIPE (SUPPLY LINE) (MAIN) (DIP)
		GALVANIZED STEEL PIPE (SUPPLY LINE) (MAIN) (GSP)
		GALVANIZED STEEL PIPE (SUPPLY LINE) (LATERAL) (GSP)
		PLASTIC PIPE (PR 200) (SUPPLY LINE) (MAIN)
		PLASTIC PIPE (PR 200) (SUPPLY LINE) (LATERAL)
		PLASTIC PIPE (IRRIGATION LINE)
		REMOTE CONTROL VALVE (RCV) REMOTE CONTROL VALVE (MASTER) (RCVM) REMOTE CONTROL VALVE (MASTER) W/FLOW METER (RCVMF)
		MANUAL CONTROL VALVE (MCV)
		VALVE ASSEMBLY UNIT (VAU)
		WYE STRAINER (WS)
		FILTER ASSEMBLY UNIT (FAU)
		GATE VALVE (GV)
		BALL VALVE (BV)

EXISTING	PROPOSED	ITEM DESCRIPTION
		QUICK COUPLING VALVE (QCV)
		CAM COUPLER ASSEMBLY (CCA)
		PRESSURE REDUCING VALVE (PRV)
		PRESSURE RELIEF VALVE (PRLV)
		FLOW CONTROL VALVE (FCV)
		COMBINATION AIR RELEASE VALVE (CARV)
		CHECK VALVE (CV)
		FLUSH VALVE (FV)
		NOZZLE LINE W/TURNING UNION
		IRRIGATION SYSTEM
		IRRIGATION SYSTEM TO BE REMOVED
		CHAIN LINK GATE
		QUICK COUPLING VALVE W/SPRINKLER PROTECTOR
3	3	SPRINKLER W/SPRINKLER PROTECTOR
		CONNECT TO EXISTING SYSTEM
		CAP
		CAP EXISTING

VALVE CODE

RCV SIZE
IRRIGATION CONTROLLER
CONTROLLER STATION
VALVE IN PARALLEL (IF APPLICABLE)
GPM
QUANTITY OF SPRINKLERS (WHEN SHOWN)

* 2½"-A-2b-40 -60

MCV SIZE
VALVE NUMBER
GPM
QUANTITY OF TYPE SPRINKLERS (WHEN SHOWN)

* 2"-3-30 -50

* VALVE CODES FOR EXISTING VALVES ARE SHOWN IN A DASHED ENCLOSURE.

STATE OF CALIFORNIA
DEPARTMENT OF TRANSPORTATION

PLANTING AND IRRIGATION SYMBOLS

NO SCALE

RSP H2 DATED JUNE 5, 2009 SUPERSEDES RSP H2 DATED MARCH 7, 2008 AND STANDARD PLAN H2 DATED MAY 1, 2006 - PAGE 202 OF THE STANDARD PLANS BOOK DATED MAY 2006.

REVISED STANDARD PLAN RSP H2

2006 REVISED STANDARD PLAN RSP H2

5-11-09

DIST	COUNTY	ROUTE	POST MILES TOTAL PROJECT	SHEET NO.	TOTAL SHEETS
08	Riv	91	R0.6/R1.2	32	37

Gregory A Balzer
LICENSED LANDSCAPE ARCHITECT

June 5, 2009
PLANS APPROVAL DATE

LICENSED LANDSCAPE ARCHITECT
Gregory A. Balzer 2576
Signature
2-28-11
Renewal Date
5-14-09
Date
STATE OF CALIFORNIA

The State of California or its officers or agents shall not be responsible for the accuracy or completeness of electronic copies of this plan sheet.

To accompany plans dated April 4, 2011

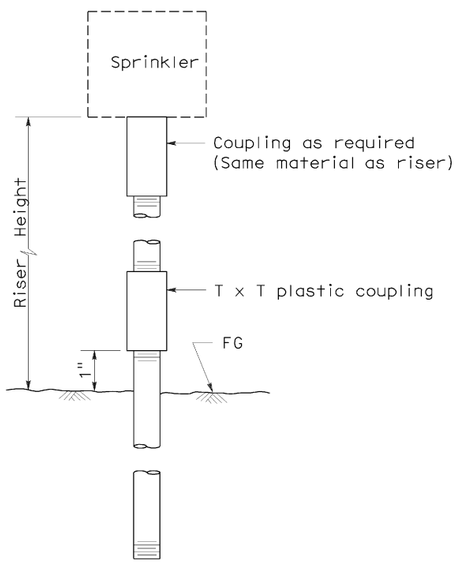

ELEVATION
RISER TYPE I

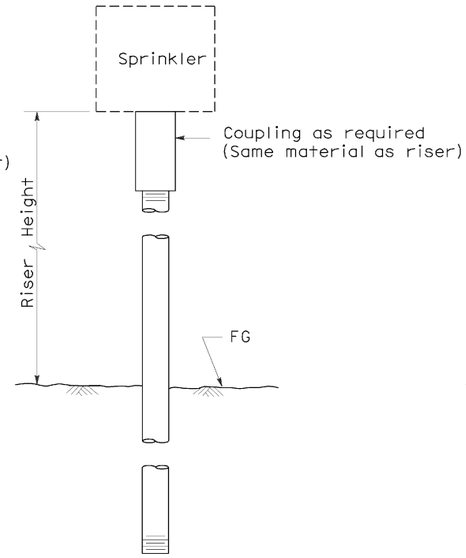

ELEVATION
RISER TYPE II

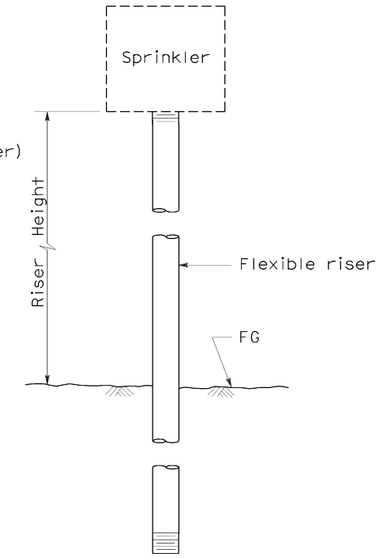

ELEVATION
RISER TYPE III

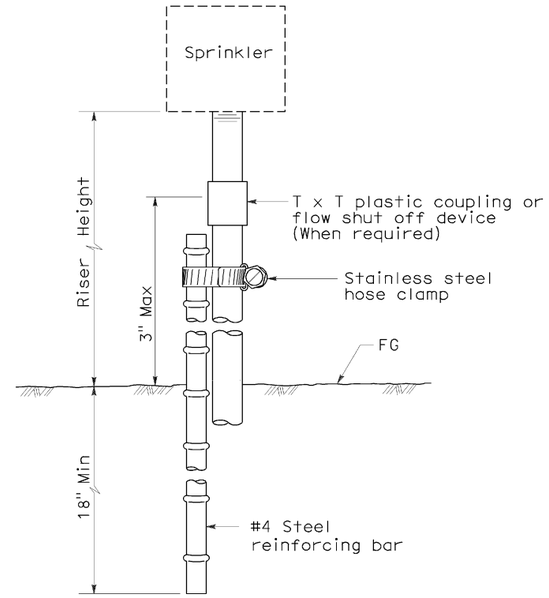

ELEVATION
RISER TYPE IV

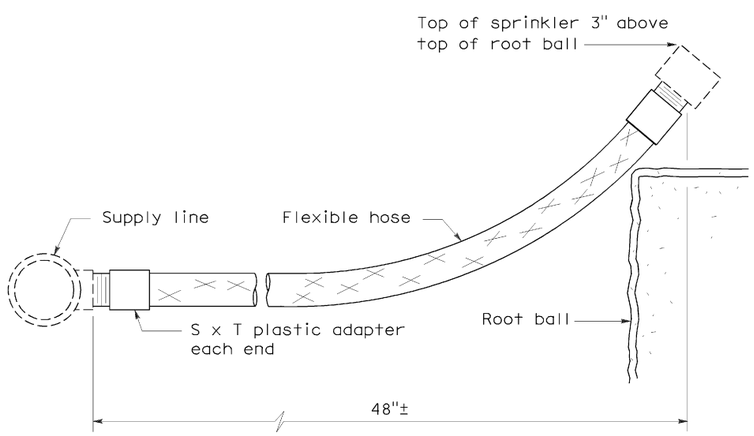

ELEVATION
RISER TYPE V

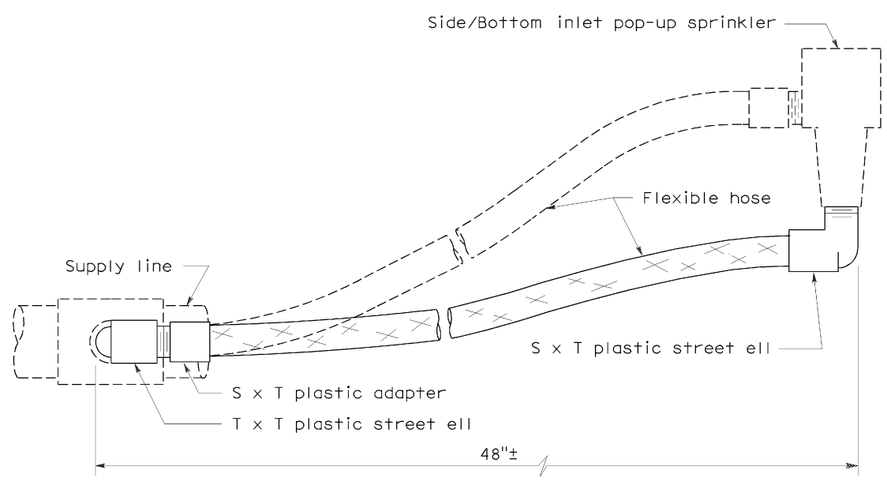

ELEVATION
RISER TYPE VI

STATE OF CALIFORNIA
DEPARTMENT OF TRANSPORTATION

PLANTING AND IRRIGATION DETAILS

NO SCALE

RSP H5 DATED JUNE 5, 2009 SUPERSEDES STANDARD PLAN H5
DATED MAY 1, 2006 - PAGE 205 OF THE STANDARD PLANS BOOK DATED MAY 2006.

REVISED STANDARD PLAN RSP H5

2006 REVISED STANDARD PLAN RSP H5

5-28-09

DIST	COUNTY	ROUTE	POST MILES TOTAL PROJECT	SHEET NO.	TOTAL SHEETS
08	Riv	91	R0.6/R1.2	33	37

Gregory A. Balzer
LICENSED LANDSCAPE ARCHITECT

June 5, 2009
PLANS APPROVAL DATE

The State of California or its officers or agents shall not be responsible for the accuracy or completeness of electronic copies of this plan sheet.

LICENSED LANDSCAPE ARCHITECT Gregory A. Balzer 2576 08 District 2-28-11 Renewal Date 5-14-09 Date STATE OF CALIFORNIA

To accompany plans dated April 4, 2011

2006 REVISED STANDARD PLAN RSP H7

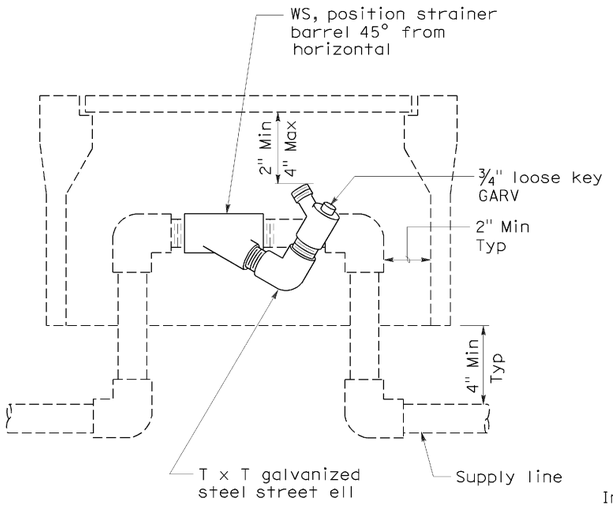

ELEVATION
WYE STRAINER

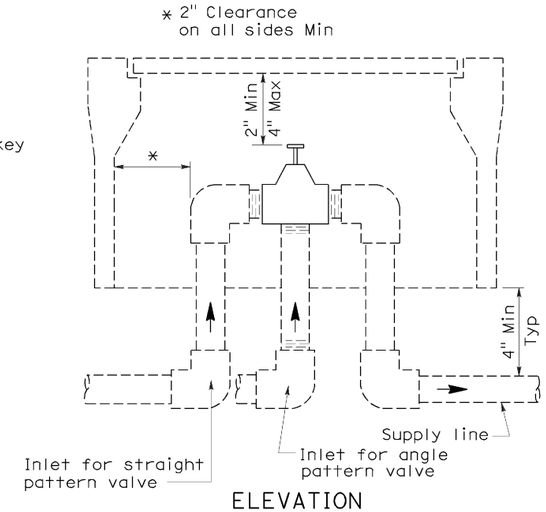

ELEVATION
VALVE

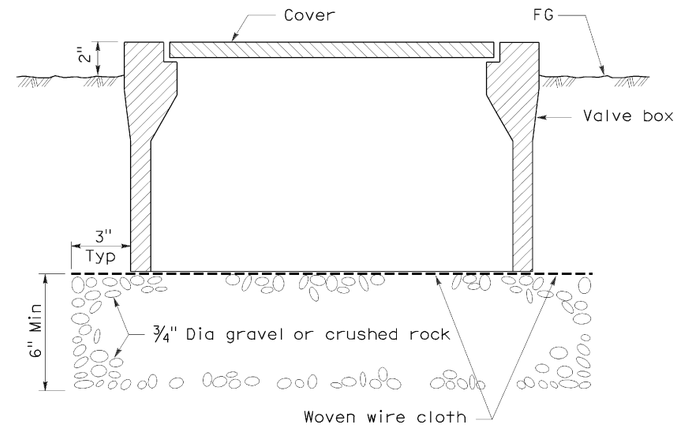

SECTION
VALVE BOX

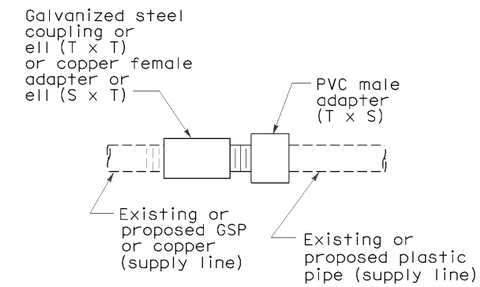

PLAN
GALVANIZED OR COPPER PIPE CONNECTION TO PLASTIC PIPE

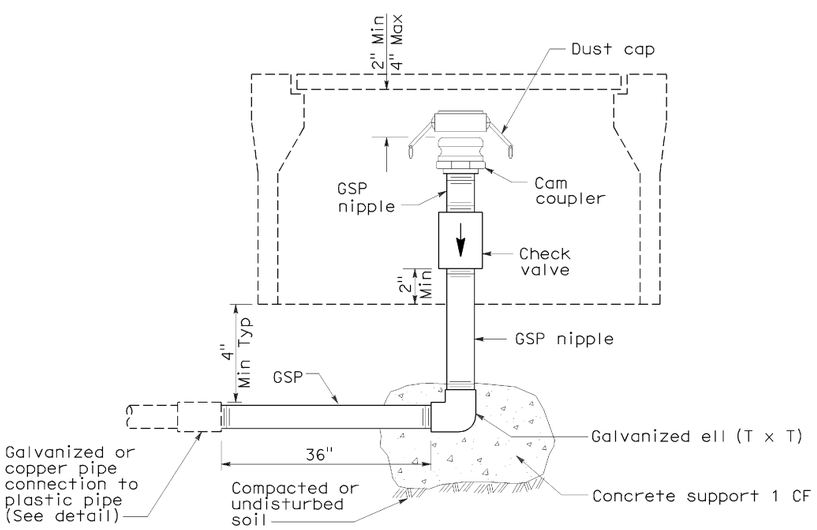

ELEVATION
CAM COUPLER ASSEMBLY

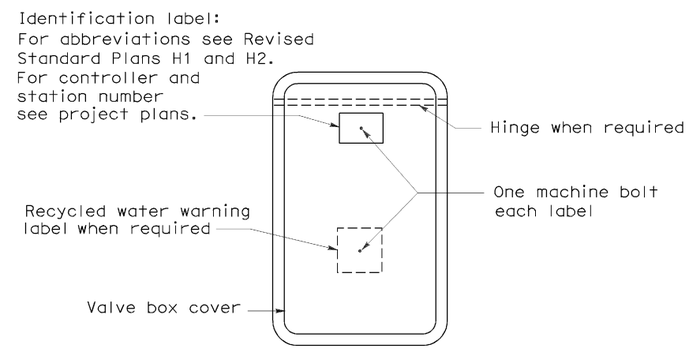

PLAN

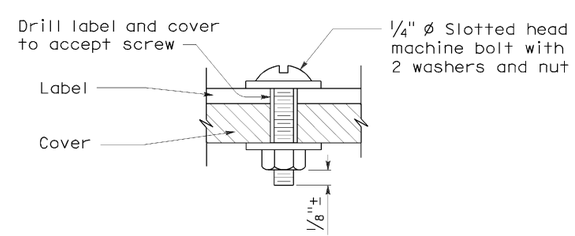

SECTION
VALVE BOX IDENTIFICATION

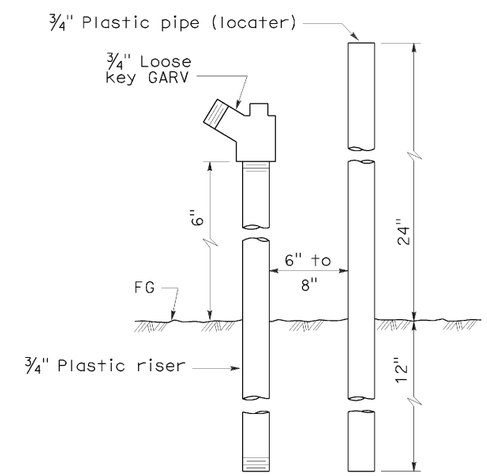

ELEVATION
FLUSH VALVE

STATE OF CALIFORNIA
DEPARTMENT OF TRANSPORTATION

PLANTING AND IRRIGATION DETAILS

NO SCALE

RSP H7 DATED JUNE 5, 2009 SUPERSEDES STANDARD PLAN H7
DATED MAY 1, 2006 - PAGE 207 OF THE STANDARD PLANS BOOK DATED MAY 2006.

REVISED STANDARD PLAN RSP H7

5-28-09

DIST	COUNTY	ROUTE	POST MILES TOTAL PROJECT	SHEET NO.	TOTAL SHEETS
08	Riv	91	R0.6/R1.2	34	37

Randell D. Hiatt
REGISTERED CIVIL ENGINEER

June 6, 2008
PLANS APPROVAL DATE

REGISTERED PROFESSIONAL ENGINEER
Randell D. Hiatt
No. C50200
Exp. 6-30-09
CIVIL
STATE OF CALIFORNIA

The State of California or its officers or agents shall not be responsible for the accuracy or completeness of electronic copies of this plan sheet.

To accompany plans dated April 4, 2011

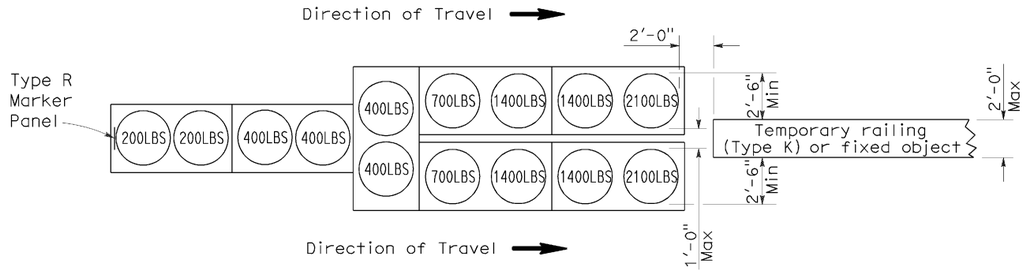

ARRAY 'TU14'

Approach speed 45 mph or more

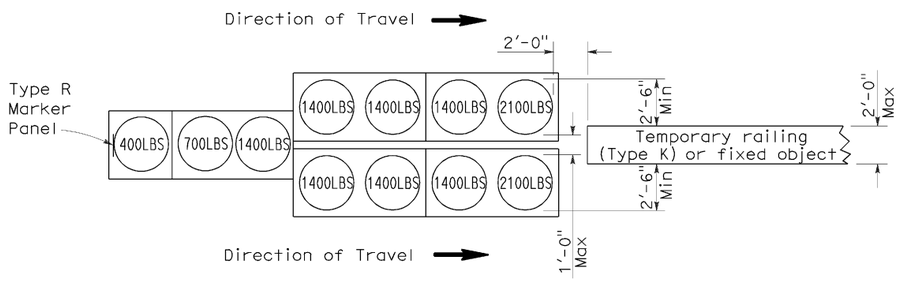

ARRAY 'TU11'

Approach speed less than 45 mph

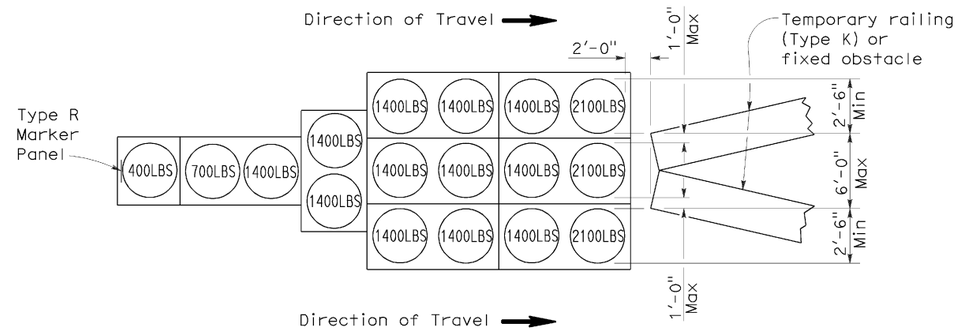

ARRAY 'TU17'

Approach speed less than 45 mph

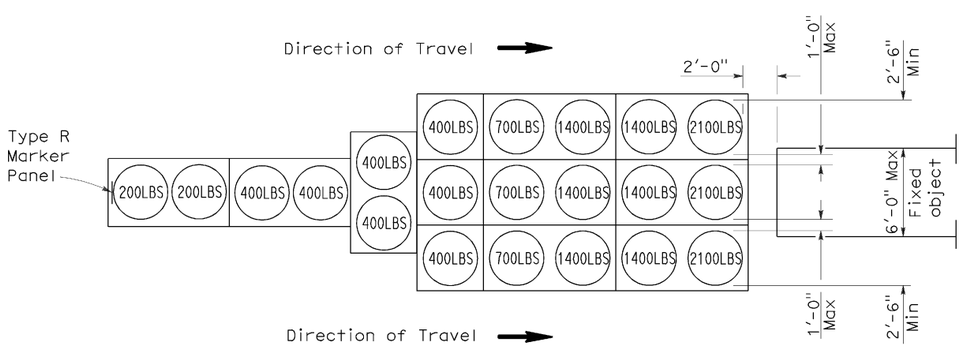

ARRAY 'TU21'

Approach speed 45 mph or more

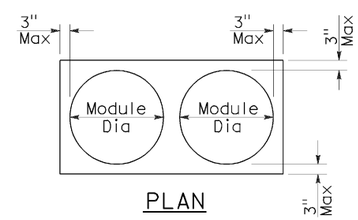

PLAN

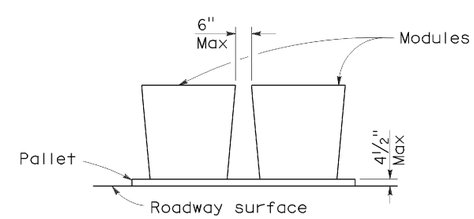

ELEVATION

CRASH CUSHION PALLET DETAIL

See Note 7

NOTES:

1. (XXX) Indicates sand filled module location and weight of sand in pounds for each module. Module spacing is based on the greater diameter of the module.
2. All sand weights are nominal.
3. Temporary crash cushion arrays shall not encroach on the traveled way.
4. Place the top of Type R marker panel 1" below the module lid.
5. Refer to Standard Plan A73B for marker details.
6. Approach speeds indicated conform to NCHRP 350 Report criteria.
7. Use of pallets is optional.

STATE OF CALIFORNIA
DEPARTMENT OF TRANSPORTATION

TEMPORARY CRASH CUSHION, SAND FILLED (UNIDIRECTIONAL)

NO SCALE

RSP T1A DATED JUNE 6, 2008 SUPERSEDES STANDARD PLAN T1A
DATED MAY 1, 2006 - PAGE 211 OF THE STANDARD PLANS BOOK DATED MAY 2006.

REVISED STANDARD PLAN RSP T1A

2006 REVISED STANDARD PLAN RSP T1A

5-15-08

DIST	COUNTY	ROUTE	POST MILES TOTAL PROJECT	SHEET NO.	TOTAL SHEETS
08	Riv	91	R0.6/R1.2	35	37

Randell D. Hiatt
REGISTERED CIVIL ENGINEER

June 6, 2008
PLANS APPROVAL DATE

REGISTERED PROFESSIONAL ENGINEER
Randell D. Hiatt
No. C50200
Exp. 6-30-09
CIVIL
STATE OF CALIFORNIA

The State of California or its officers or agents shall not be responsible for the accuracy or completeness of electronic copies of this plan sheet.

To accompany plans dated April 4, 2011

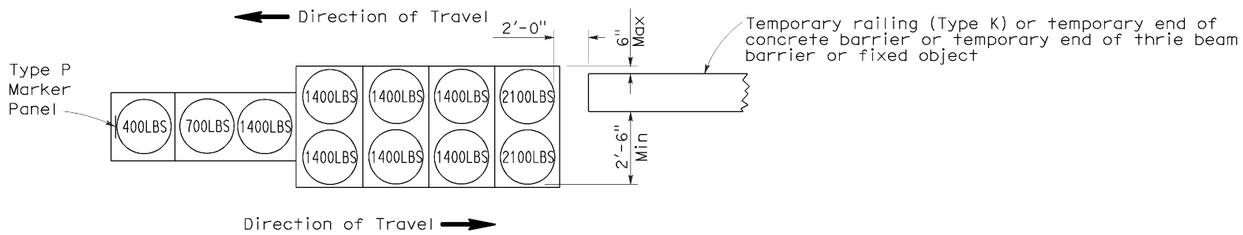

ARRAY 'TB11'

Approach speed less than 45 mph

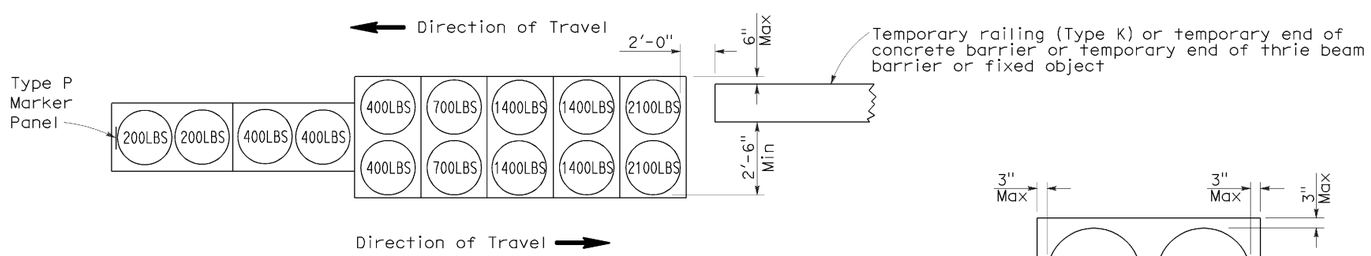

ARRAY 'TB14'

Approach speed 45 mph or more

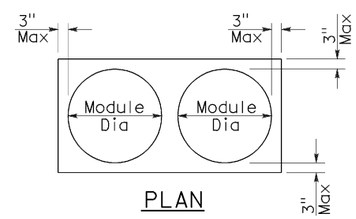

PLAN

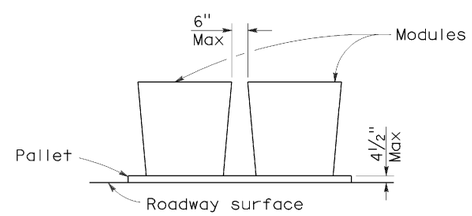

ELEVATION

CRASH CUSHION PALLET DETAIL

See Note 7

NOTES:

1. (XXX) Indicates sand filled module location and weight of sand in pounds for each module. Module spacing is based on the greater diameter of the module.
2. All sand weights are nominal.
3. Temporary crash cushion arrays shall not encroach on the traveled way.
4. Place the Type P marker panel so that the bottom of the panel rests upon the pallet.
5. Refer to Standard Plan A73B for marker details.
6. Approach speeds indicated conform to NCHRP 350 Report criteria.
7. Use of pallets is optional.

STATE OF CALIFORNIA
DEPARTMENT OF TRANSPORTATION

TEMPORARY CRASH CUSHION, SAND FILLED (BIDIRECTIONAL)

NO SCALE

RSP T1B DATED JUNE 6, 2008 SUPERSEDES STANDARD PLAN T1B
DATED MAY 1, 2006 - PAGE 212 OF THE STANDARD PLANS BOOK DATED MAY 2006.

REVISED STANDARD PLAN RSP T1B

2006 REVISED STANDARD PLAN RSP T1B

DIST	COUNTY	ROUTE	POST MILES TOTAL PROJECT	SHEET NO.	TOTAL SHEETS
08	Riv	91	R0.6/R1.2	36	37

Randell D. Hiatt
REGISTERED CIVIL ENGINEER

June 6, 2008
PLANS APPROVAL DATE

REGISTERED PROFESSIONAL ENGINEER
Randell D. Hiatt
No. C50200
Exp. 6-30-09
CIVIL
STATE OF CALIFORNIA

The State of California or its officers or agents shall not be responsible for the accuracy or completeness of electronic copies of this plan sheet.

To accompany plans dated April 4, 2011

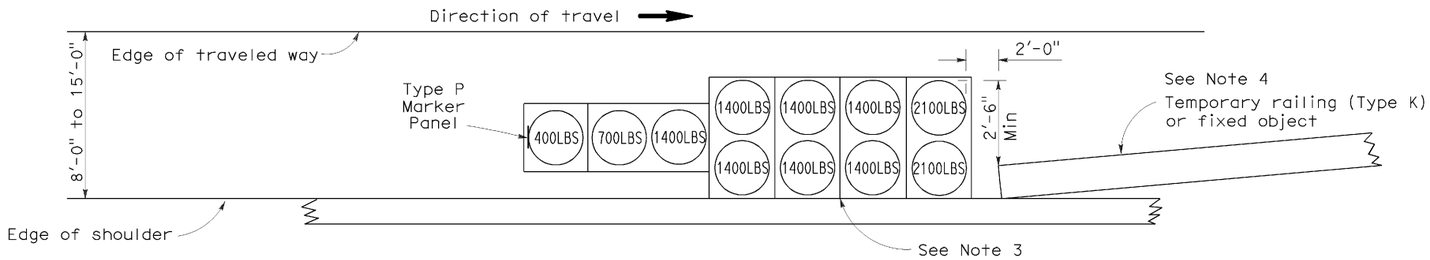

ARRAY 'TS11'

Approach speed less than 45 mph
See Note 9

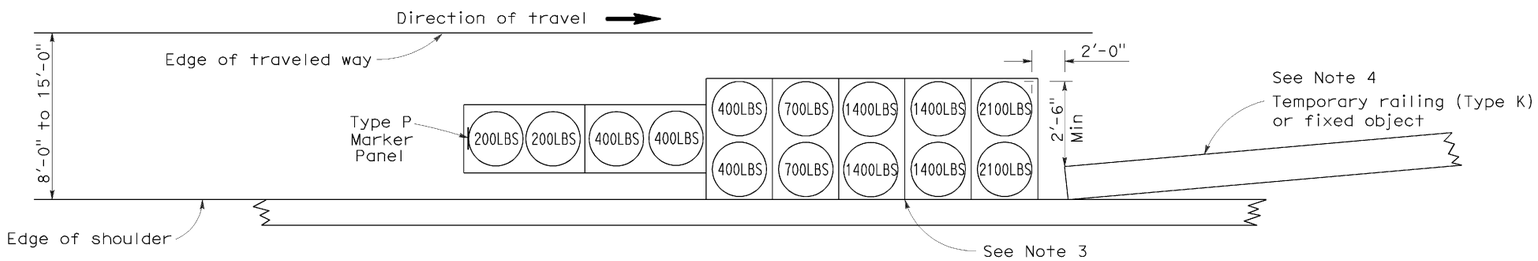

ARRAY 'TS14'

Approach speed 45 mph or more
See Note 9

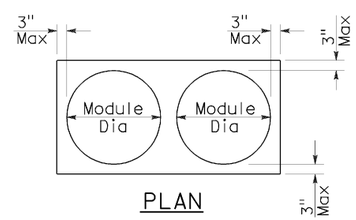

PLAN

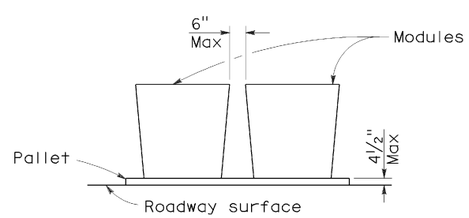

ELEVATION

CRASH CUSHION PALLET DETAIL

See Note 11

NOTES:

1. (XXX) Indicates sand filled module location and weight of sand in pounds for each module. Module spacing is based on the greater diameter of the module.
2. All sand weights are nominal.
3. The temporary crash cushion arrays shown on this plan shall be used only in locations where there will be traffic on one side of the temporary crash cushion array.
4. If the fixed object or approach end of the temporary railing is less than 15'-0" from the edge of traveled way, a temporary crash cushion is required in a construction or work zone.
5. Temporary crash cushion arrays shall not encroach on the traveled way.
6. Arrays for median shoulders shall conform to details shown on this plan for outside shoulders.
7. Place the Type P marker panel so that the bottom of the panel rests upon the pallet and faces traffic.
8. Refer to Standard Plan A73B for marker details.
9. For shoulder widths less than 8'-0", appropriate approved crash cushion protection, other than sand filled modules, shall be provided at fixed objects and at approach ends of temporary railing. The specific type of crash cushion shall be as shown on the project plans or as specified in the Special Provisions, or if not shown on the project plans or specified in the Special Provisions, shall be as approved by the Engineer.
10. Approach speeds indicated conform to NCHRP 350 Report criteria.
11. Use of pallets is optional.

STATE OF CALIFORNIA
DEPARTMENT OF TRANSPORTATION

TEMPORARY CRASH CUSHION, SAND FILLED (SHOULDER INSTALLATIONS)

NO SCALE

RSP T2 DATED JUNE 6, 2008 SUPERSEDES STANDARD PLAN T2
DATED MAY 1, 2006 - PAGE 213 OF THE STANDARD PLANS BOOK DATED MAY 2006.

REVISED STANDARD PLAN RSP T2

2006 REVISED STANDARD PLAN RSP T2

5-15-08

DIST	COUNTY	ROUTE	POST MILES TOTAL PROJECT	SHEET NO.	TOTAL SHEETS
08	Riv	91	R0.6/R1.2	37	37

Robert B Schott
LICENSED LANDSCAPE ARCHITECT

April 3, 2009
PLANS APPROVAL DATE

The State of California or its officers or agents shall not be responsible for the accuracy or completeness of electronic copies of this plan sheet.

LICENSED LANDSCAPE ARCHITECT
Robert B. Schott 3695
Signature
11-30-10
Renewal Date
2-25-09
Date
STATE OF CALIFORNIA

To accompany plans dated April 4, 2011

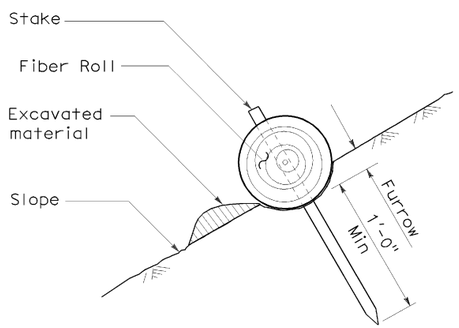

SECTION

TEMPORARY FIBER ROLL (TYPE 1)

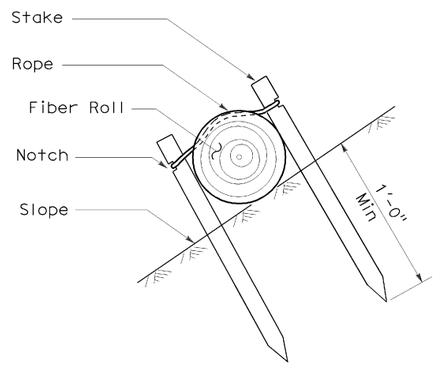

SECTION

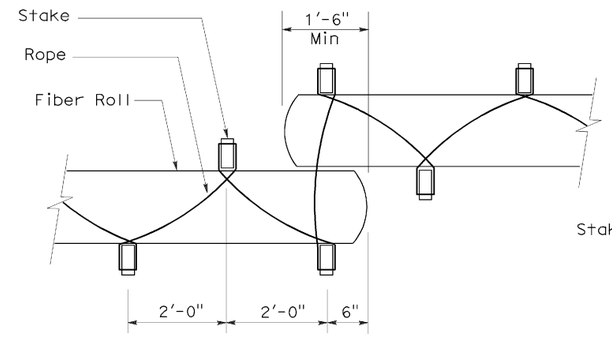

PLAN

TEMPORARY FIBER ROLL (TYPE 2)

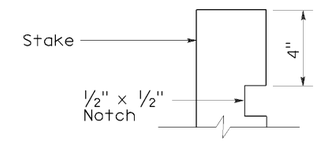

ELEVATION

STAKE NOTCH DETAIL

NOTES:

1. Temporary fiber roll spacing varies depending upon slope inclination.
2. Installations shown in the perspectives are for slope inclination of 10:1 and steeper.

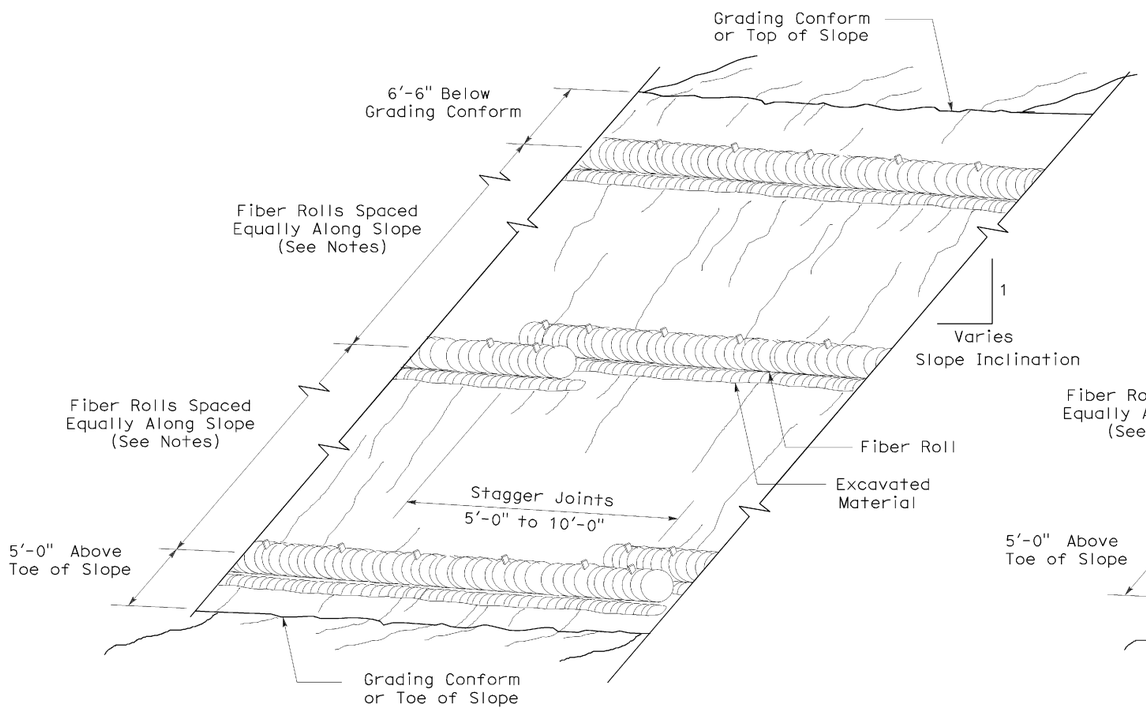

PERSPECTIVE

TEMPORARY FIBER ROLL (TYPE 1)

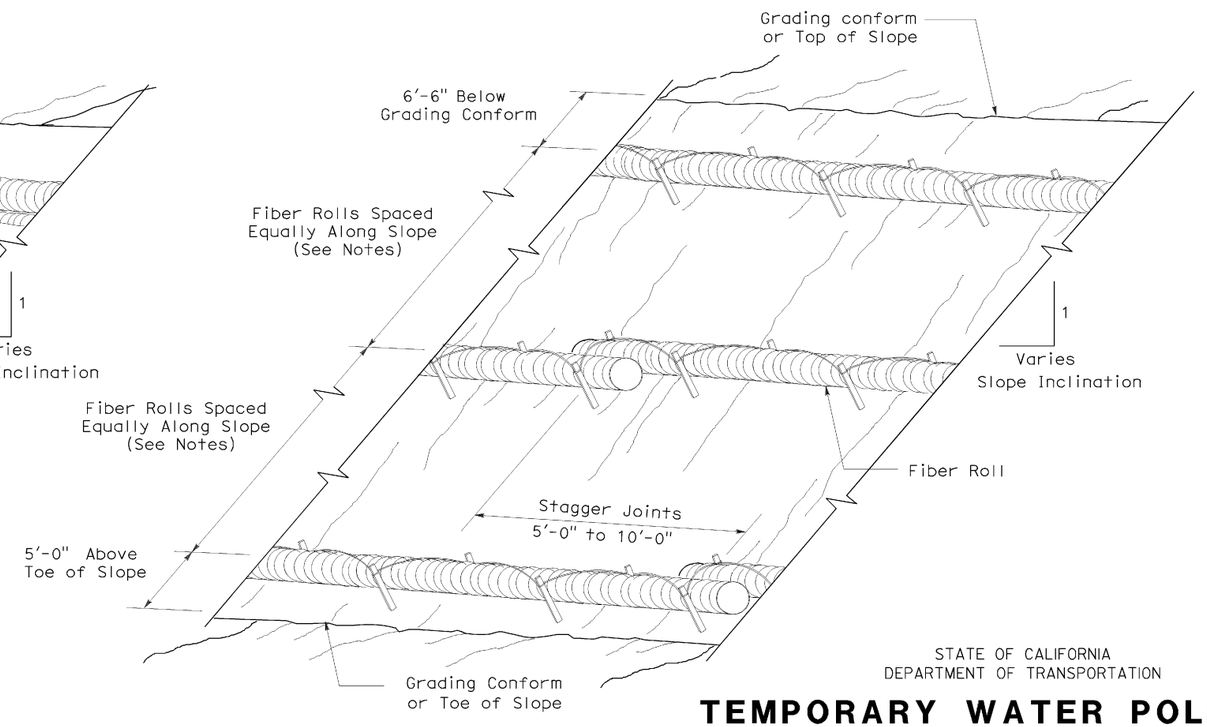

PERSPECTIVE

TEMPORARY FIBER ROLL (TYPE 2)

STATE OF CALIFORNIA
DEPARTMENT OF TRANSPORTATION

TEMPORARY WATER POLLUTION CONTROL DETAILS (TEMPORARY FIBER ROLL)

NO SCALE

RSP T56 DATED APRIL 3, 2009 SUPERSEDES STANDARD PLAN T56 DATED MAY 1, 2006 - PAGE 232 OF THE STANDARD PLANS BOOK DATED MAY 2006.

REVISED STANDARD PLAN RSP T56

2006 REVISED STANDARD PLAN RSP T56

2-23-09