Dist	COUNTY	ROUTE	POST MILES TOTAL PROJECT	SHEET No.	TOTAL SHEETS
08	Riv	79	R33.9	1	101

STATE OF CALIFORNIA

DEPARTMENT OF TRANSPORTATION

ACHSSTBG-P079(040)E

PROJECT PLANS FOR CONSTRUCTION ON

STATE HIGHWAY

IN RIVERSIDE COUNTY
NEAR SAN JACINTO
AT GILMAN SPRINGS ROAD

TO BE SUPPLEMENTED BY STANDARD PLANS DATED MAY 2010

INDEX OF PLANS

SHEET No.	DESCRIPTION
1	TITLE AND LOCATION MAP
2	TYPICAL CROSS SECTIONS
3-4	LAY OUT
5	SUPER ELEVATION DIAGRAM
6-7	CONSTRUCTION DETAILS
8-9	DRAINAGE PROFILES
10-12	DRAINAGE DETAILS
13	DRAINAGE QUANTITIES
14-15	UTILITY PLANS
16	CONSTRUCTION AREA SIGNS
17-20	STAGE COSTRUCTION
21-24	TRAFFIC HANDLING PLANS
25	TRAFFIC HANDLING QUANTITIES
26-27	PAVEMENT DELINEATION & SIGN PLANS
28	PAVEMENT DELINEATION & SIGN QUANTITIES
29	SUMMARY OF QUANTITIES
30-31	EROSION CONTROL
32	EROSION CONTROL QUANTITIES
33-40	ELECTRICAL PLANS & QUANTITIES
41-101	REVISED STANDARD PLANS

THE STANDARD PLANS LIST APPLICABLE TO THIS CONTRACT IS INCLUDED IN THE NOTICE TO BIDDERS AND SPECIAL PROVISIONS BOOK.

LOCATION MAP

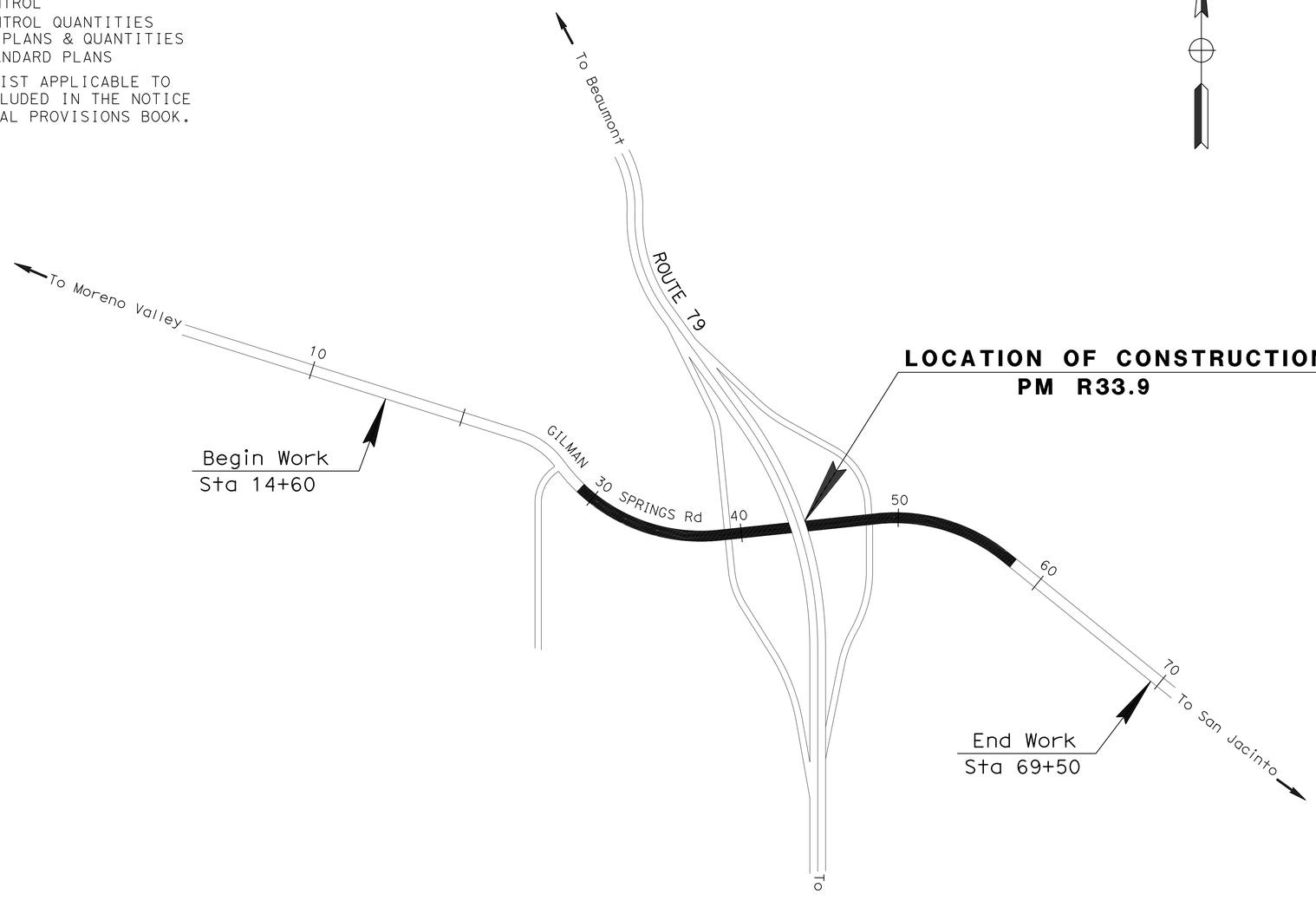

LOCATION OF CONSTRUCTION
PM R33.9

Begin Work
Sta 14+60

End Work
Sta 69+50

NO SCALE

PROJECT MANAGER: XIAO ZHANG

DESIGN MANAGER: SERGIO AVILA

THE CONTRACTOR SHALL POSSESS THE CLASS (OR CLASSES) OF LICENSE AS SPECIFIED IN THE "NOTICE TO BIDDERS."

03-15-16
PROJECT ENGINEER — DATE
REGISTERED CIVIL ENGINEER

March 15, 2016
PLANS APPROVAL DATE

REGISTERED PROFESSIONAL ENGINEER — MICHAEL JACOB — No. 75503 — Exp. 6-30-16 — CIVIL — STATE OF CALIFORNIA

THE STATE OF CALIFORNIA OR ITS OFFICERS OR AGENTS SHALL NOT BE RESPONSIBLE FOR THE ACCURACY OR COMPLETENESS OF SCANNED COPIES OF THIS PLAN SHEET.

CONTRACT No.	08-1E1004
PROJECT ID	0813000152

LAST REVISION 03-15-16

DATE PLOTTED => 26-MAY-2016
TIME PLOTTED => 08:01

Dist	COUNTY	STATE ROUTE	POST MILES TOTAL PROJECT	SHEET No.	TOTAL SHEETS
8	Riv	79	R33.9	2	101

REGISTERED CIVIL ENGINEER DATE 03-15-16

03-15-16
PLANS APPROVAL DATE

REGISTERED PROFESSIONAL ENGINEER MICHAEL JACOB No. 75503 Exp. 6-30-16 CIVIL STATE OF CALIFORNIA

THE STATE OF CALIFORNIA OR ITS OFFICERS OR AGENTS SHALL NOT BE RESPONSIBLE FOR THE ACCURACY OR COMPLETENESS OF SCANNED COPIES OF THIS PLAN SHEET.

NOTES:

1. DIMENSIONS OF THE PAVEMENT STRUCTURES (STRUCTURAL SECTIONS) ARE SUBJECT TO TOLERANCES SPECIFIED IN THE STANDARD SPECIFICATIONS.
2. SUPERELEVATIONS ARE SHOWN ON THE SUPERELEVATION DIAGRAMS.
3. FOR MIDWEST GUARDRAIL SYSTEM, SEE LAYOUTS
4. SEE LAYOUTS FOR TYPE AND LOCATION OF DIKE, CURB AND SAFETY EDGE TREATMENT
5. SEE LAYOUTS FOR SAWCUT POINTS AND LIMITS OF COLD PLANING. FINAL 0.20′ HMA LIFT TO BRIDGE NEW SECTION AND Exist PAVEMENT.

TYPICAL PAVEMENT STRUCTURE SECTIONS

1 — 0.40′ HMA (TYPE A)
0.87′ CLASS 2 AB

2 — 0.20′ HMA (TYPE A)
COLD PLANE 0.20

3 — Exist
0.32′ HMA
0.95′ AB

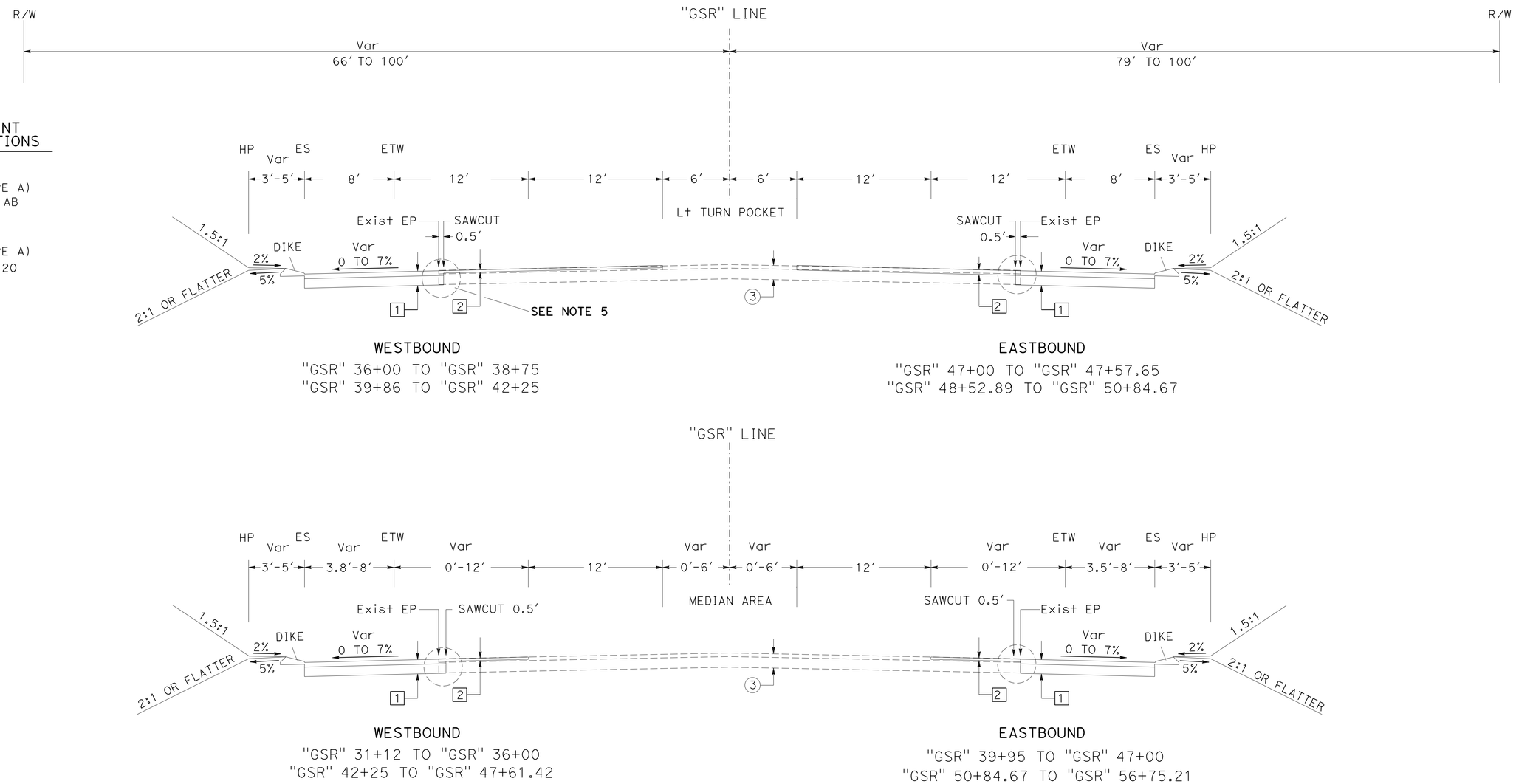

GILMAN SPRINGS ROAD

TYPICAL CROSS SECTIONS

X-1

STATE OF CALIFORNIA - DEPARTMENT OF TRANSPORTATION
Caltrans® DESIGN
FUNCTIONAL SUPERVISOR: SERGIO AVILA
CALCULATED-DESIGNED BY: MICHAEL JACOB
CHECKED BY: REZA TOOTOONCHI
REVISED BY
DATE REVISED

LAST REVISION 03-15-16
DATE PLOTTED => 26-MAY-2016
TIME PLOTTED => 08:01

Dist	COUNTY	STATE ROUTE	POST MILES TOTAL PROJECT	SHEET No.	TOTAL SHEETS
8	Riv	79	R33.9	3	101

REGISTERED CIVIL ENGINEER 03-15-16 DATE

03-15-16
PLANS APPROVAL DATE

REGISTERED PROFESSIONAL ENGINEER MICHAEL JACOB No. 75503 Exp. 6-30-16 CIVIL STATE OF CALIFORNIA

THE STATE OF CALIFORNIA OR ITS OFFICERS OR AGENTS SHALL NOT BE RESPONSIBLE FOR THE ACCURACY OR COMPLETENESS OF SCANNED COPIES OF THIS PLAN SHEET.

NOTES:

1. FOR ACCURATE RIGHT OF WAY DATA, CONTACT RIGHT OF WAY ENGINEERING AT THE DISTRICT OFFICE.
2. ALL STATIONS ARE REFERENCED TO "GSR" LINE UNLESS OTHERWISE NOTED.

LEGEND:

COLD PLANE AND HMA OVERLAY

FULL STRUCTURAL SECTION HMA AND AB

(X) DRAINAGE SYSTEM NUMBER

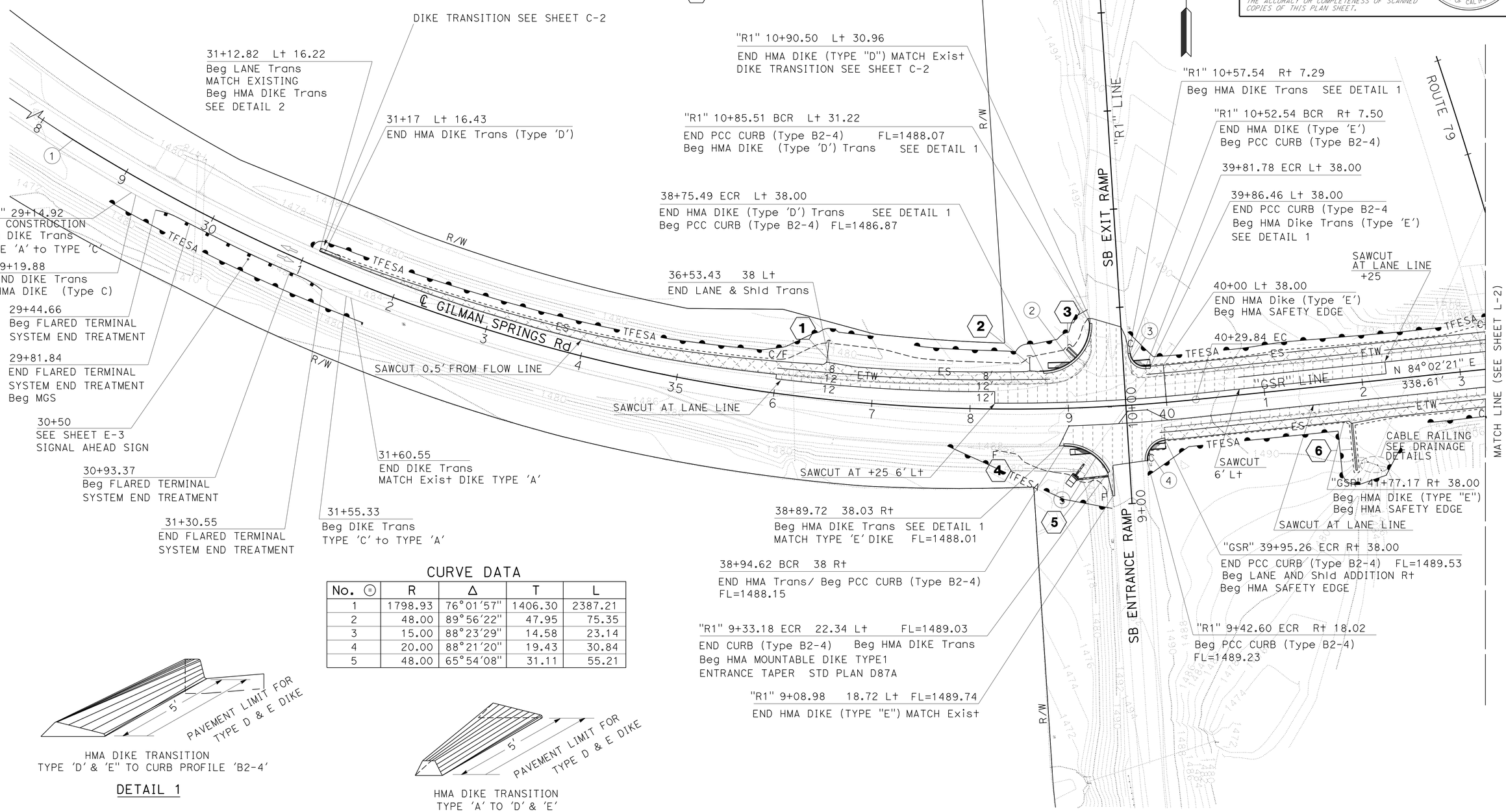

CURVE DATA

No.	R	Δ	T	L
1	1798.93	76°01'57"	1406.30	2387.21
2	48.00	89°56'22"	47.95	75.35
3	15.00	88°23'29"	14.58	23.14
4	20.00	88°21'20"	19.43	30.84
5	48.00	65°54'08"	31.11	55.21

HMA DIKE TRANSITION
TYPE 'D' & 'E' TO CURB PROFILE 'B2-4'

DETAIL 1

HMA DIKE TRANSITION
TYPE 'A' TO 'D' & 'E'

DETAIL 2

LAYOUT

SCALE: 1"=50' **L-1**

REVISED BY	DATE REVISED

CALCULATED-DESIGNED BY: MICHAEL JACOB
CHECKED BY: REZA TOOTOONCHI
FUNCTIONAL SUPERVISOR: SERGIO AVILA

STATE OF CALIFORNIA - DEPARTMENT OF TRANSPORTATION
Caltrans
DESIGN

LAST REVISION 03-15-16 | DATE PLOTTED => 26-MAY-2016 | TIME PLOTTED => 08:01

Dist	COUNTY	STATE ROUTE	POST MILES TOTAL PROJECT	SHEET No.	TOTAL SHEETS
08	Riv	79	R33.9	4	101

REGISTERED CIVIL ENGINEER 03-10-16 DATE

03-15-16
PLANS APPROVAL DATE

REGISTERED PROFESSIONAL ENGINEER MICHAEL JACOB No. 75503 Exp 6-30-16 CIVIL STATE OF CALIFORNIA

THE STATE OF CALIFORNIA OR ITS OFFICERS OR AGENTS SHALL NOT BE RESPONSIBLE FOR THE ACCURACY OR COMPLETENESS OF SCANNED COPIES OF THIS PLAN SHEET.

NOTE:

FOR ACCURATE RIGHT OF WAY DATA, CONTACT RIGHT OF WAY ENGINEERING AT THE DISTRICT OFFICE.

LEGEND:

COLD PLANE AND HMA OVERLAY

FULL STRUCTURAL SECTION HMA AND AB

(X) DRAINAGE SYSTEM NUMBER

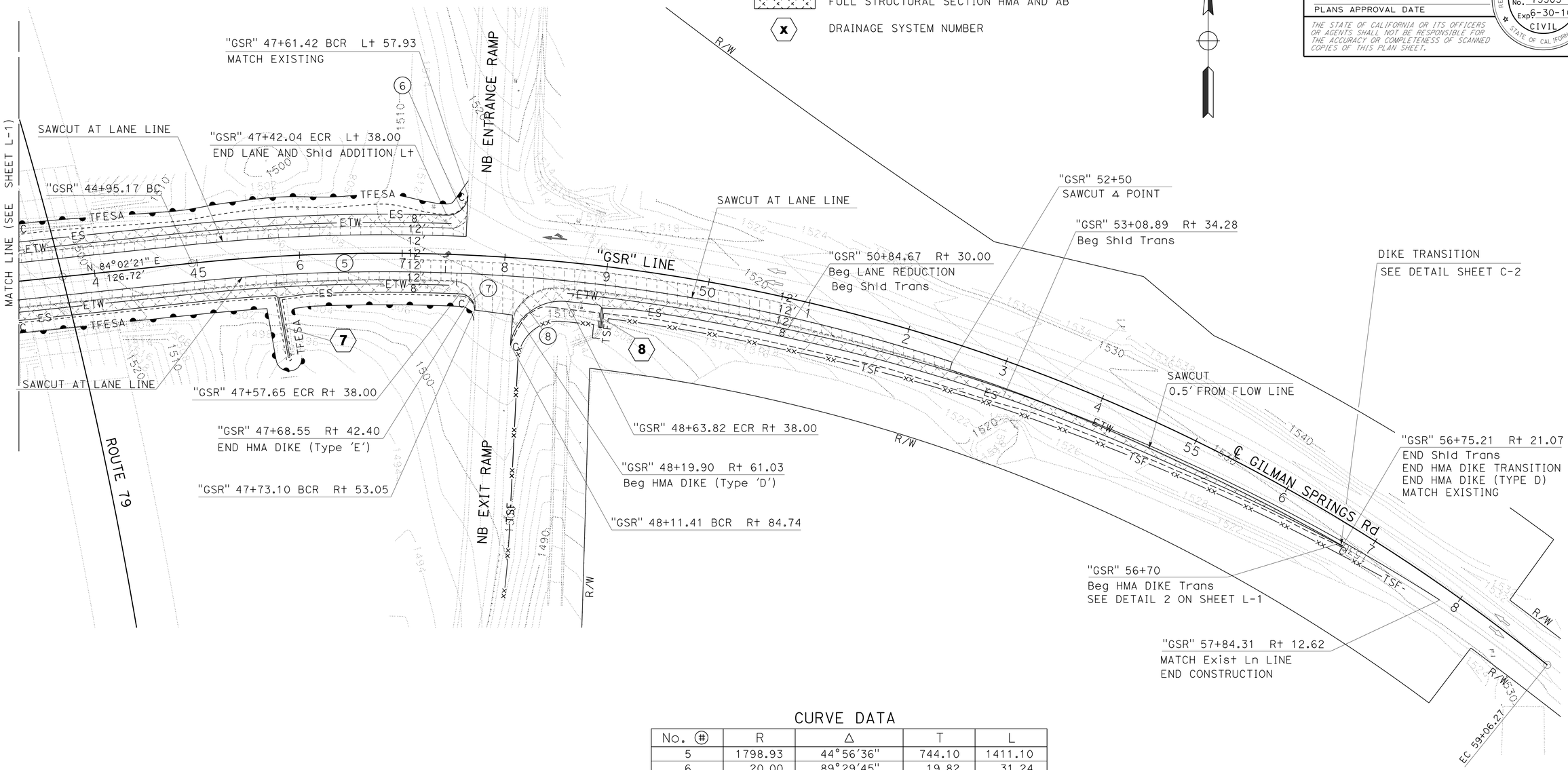

CURVE DATA

No. (#)	R	Δ	T	L
5	1798.93	44°56'36"	744.10	1411.10
6	20.00	89°29'45"	19.82	31.24
7	15.00	90°27'08"	15.12	23.68
8	40.00	83°34'10"	35.75	58.34

LAYOUT

SCALE: 1"=50' **L-2**

STATE OF CALIFORNIA - DEPARTMENT OF TRANSPORTATION

Caltrans

DESIGN

FUNCTIONAL SUPERVISOR: SERGIO AVILA

CALCULATED-DESIGNED BY: MICHAEL JACOB

CHECKED BY: REZA TOOTOONCHI

REVISED BY

DATE REVISED

LAST REVISION 03-10-16

DATE PLOTTED => 26-MAY-2016
TIME PLOTTED => 08:01

Dist	COUNTY	LOCATION CODE	POST MILES TOTAL PROJECT	SHEET No.	TOTAL SHEETS
08	Riv	79	R33.9	5	101

REGISTERED CIVIL ENGINEER 03-10-16 DATE

03-15-16
PLANS APPROVAL DATE

REGISTERED PROFESSIONAL ENGINEER
MICHAEL JACOB
No. 75503
Exp. 6-30-16
CIVIL
STATE OF CALIFORNIA

THE STATE OF CALIFORNIA OR ITS OFFICERS OR AGENTS SHALL NOT BE RESPONSIBLE FOR THE ACCURACY OR COMPLETENESS OF SCANNED COPIES OF THIS PLAN SHEET.

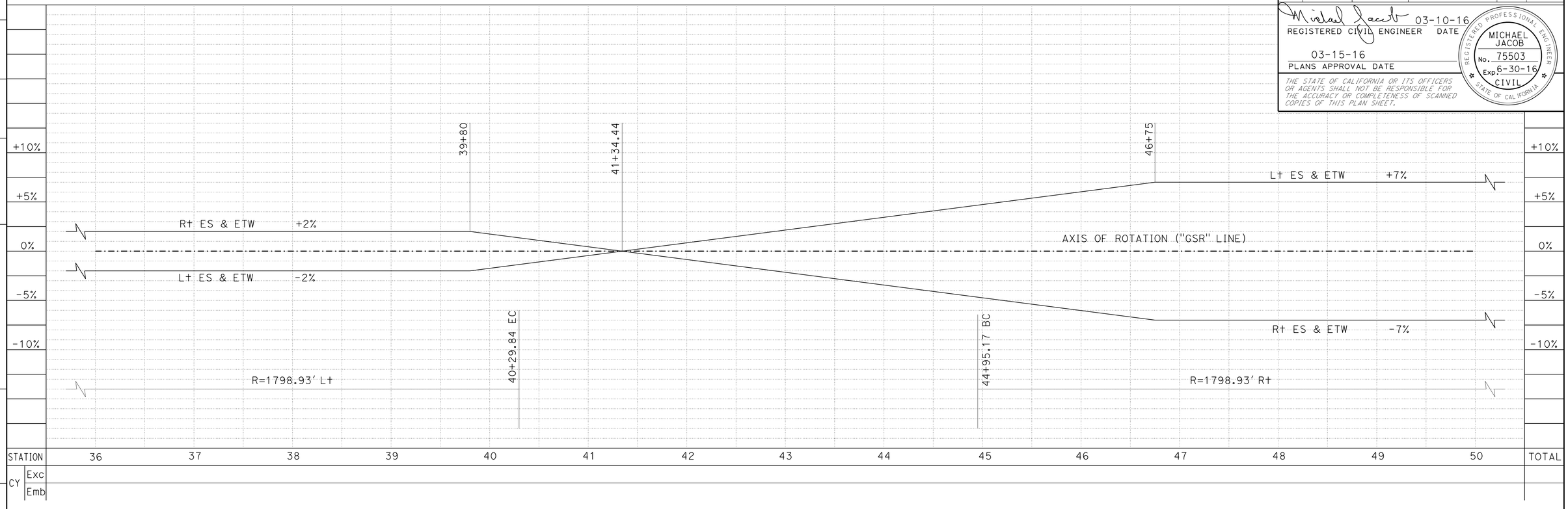

SUPERELEVATION DIAGRAM

SE-1

STATE OF CALIFORNIA - DEPARTMENT OF TRANSPORTATION
Caltrans
DESIGN

FUNCTIONAL SUPERVISOR: SERGIO AVILA

CALCULATED-DESIGNED BY: MICHAEL JACOB
CHECKED BY: REZA TOOTOONCHI

REVISED BY
DATE REVISED

LAST REVISION 03-10-16
DATE PLOTTED => 26-MAY-2016
TIME PLOTTED => 08:01

Dist	COUNTY	STATE ROUTE	POST MILES TOTAL PROJECT	SHEET No.	TOTAL SHEETS
08	Riv	79	R33.9	6	101

REGISTERED CIVIL ENGINEER DATE 03-15-16

03-15-16
PLANS APPROVAL DATE

REGISTERED PROFESSIONAL ENGINEER MICHAEL JACOB No. 75503 Exp. 6-30-16 CIVIL STATE OF CALIFORNIA

THE STATE OF CALIFORNIA OR ITS OFFICERS OR AGENTS SHALL NOT BE RESPONSIBLE FOR THE ACCURACY OR COMPLETENESS OF SCANNED COPIES OF THIS PLAN SHEET.

NOTE:

ALL STATIONS ARE REFERENCED TO "GSR" LINE UNLESS OTHERWISE NOTED.

SPOT ELEVATIONS ARE FINISH SURFACE

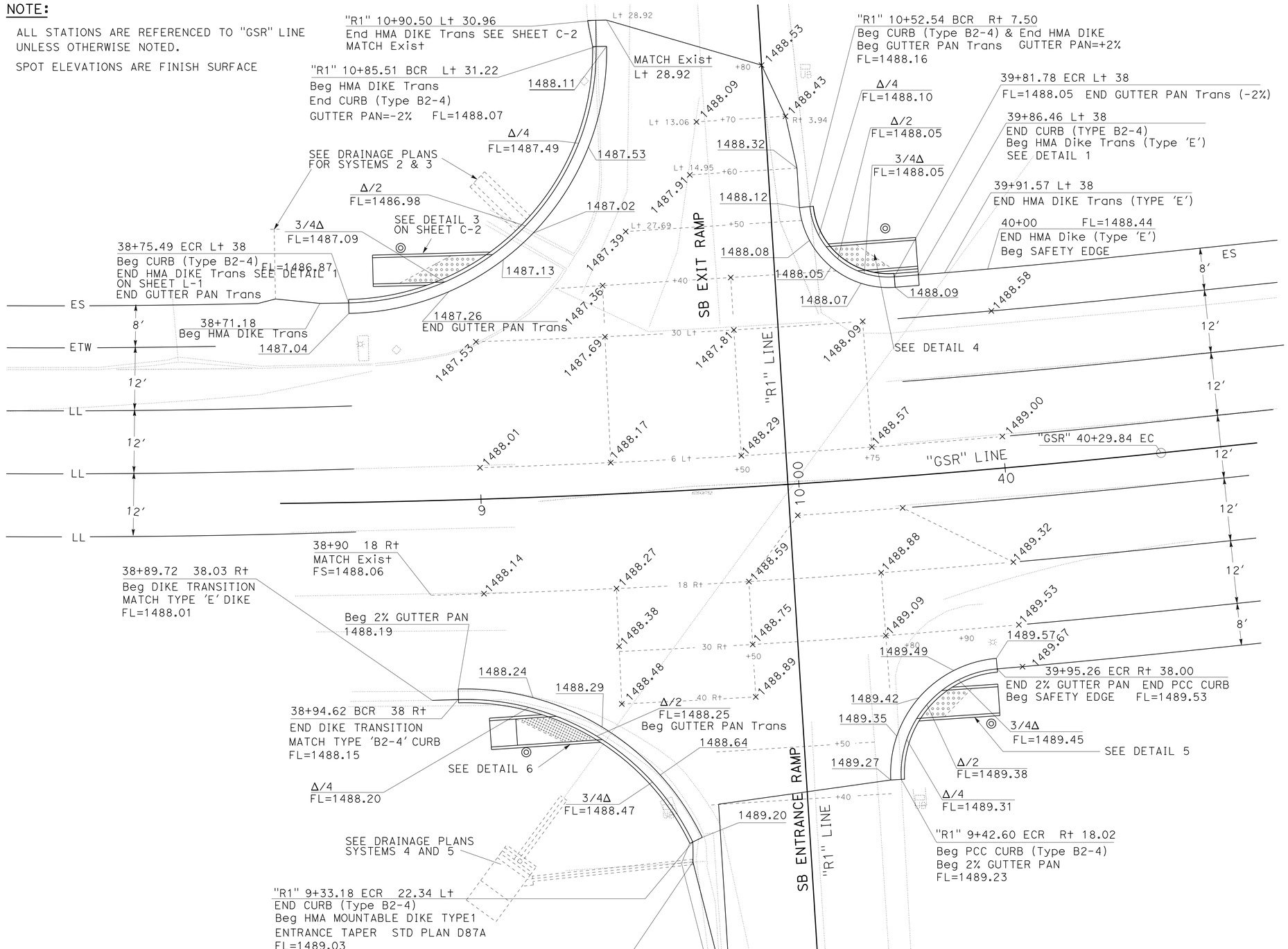

CONSTRUCTION DETAILS

SCALE: 1"=10'

C-1

STATE OF CALIFORNIA - DEPARTMENT OF TRANSPORTATION
Caltrans
DESIGN

FUNCTIONAL SUPERVISOR: SERGIO AVILA
CALCULATED-DESIGNED BY: MICHAEL JACOB
CHECKED BY: REZA TOOTOONCHI
REVISED BY
DATE REVISED

LAST REVISION 03-15-16
DATE PLOTTED => 26-MAY-2016
TIME PLOTTED => 08:01

Dist	COUNTY	STATE ROUTE	POST MILES TOTAL PROJECT	SHEET No.	TOTAL SHEETS
08	Riv	79	R33.9	7	101

REGISTERED CIVIL ENGINEER 03-15-16 DATE

03-15-16
PLANS APPROVAL DATE

REGISTERED PROFESSIONAL ENGINEER MICHAEL JACOB No. 75503 Exp. 6-30-16 CIVIL STATE OF CALIFORNIA

THE STATE OF CALIFORNIA OR ITS OFFICERS OR AGENTS SHALL NOT BE RESPONSIBLE FOR THE ACCURACY OR COMPLETENESS OF SCANNED COPIES OF THIS PLAN SHEET.

NOTE:

ALL STATIONS ARE REFERENCED TO "GSR" LINE UNLESS OTHERWISE NOTED.

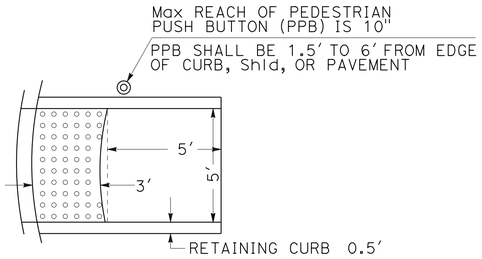

PEDESTRIAN REFUGE AREA

TRANSVERSE & LONGITUDINAL SLOPES LESS THAN OR EQUAL TO 1.5%

RETAINING CURB: 4" ABOVE GRADE, 8" BELOW GRADE

DETAIL 1

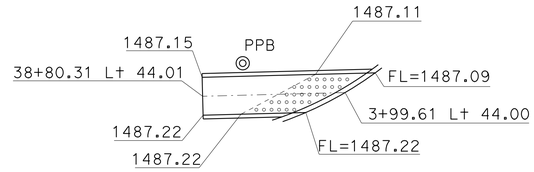

DETAIL 3

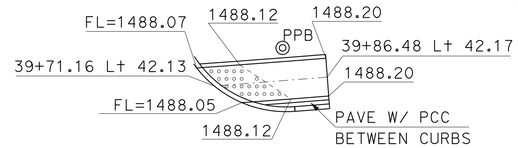

DETAIL 4

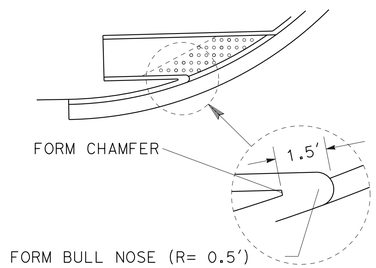

DETAIL 2

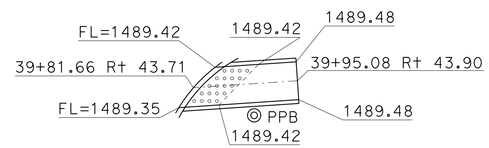

DETAIL 5

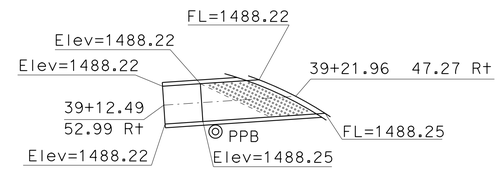

DETAIL 6

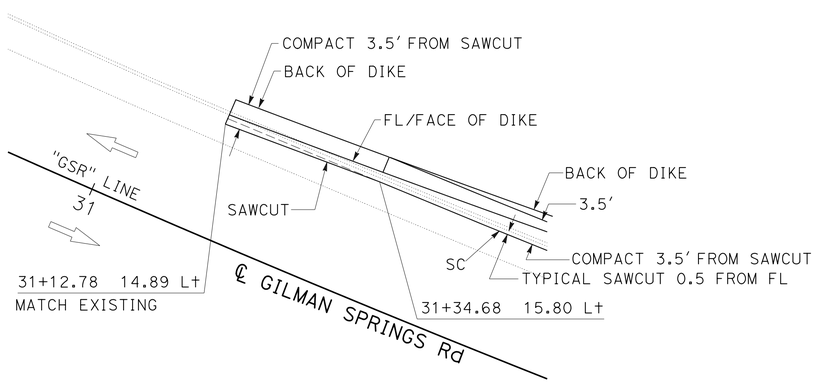

DETAIL 7

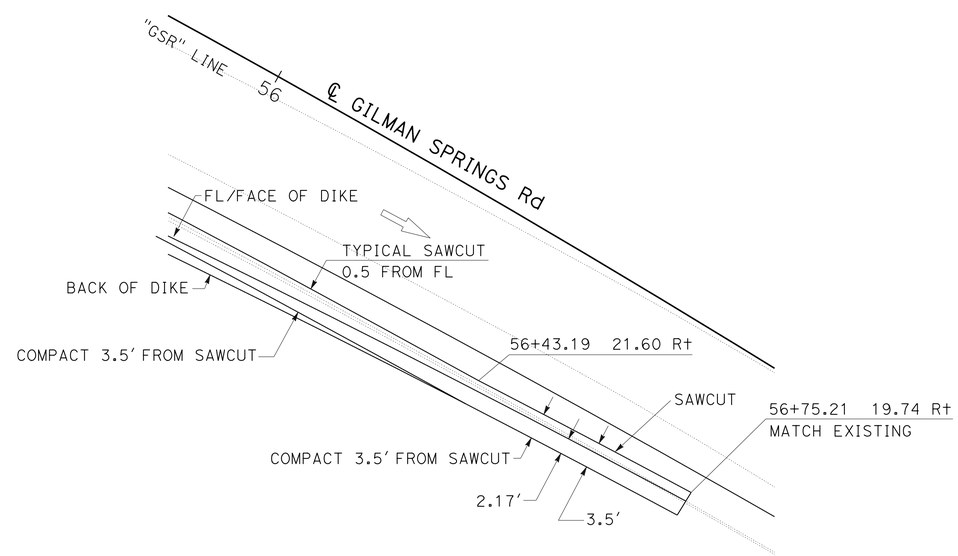

DETAIL 8

CONSTRUCTION DETAILS

NO SCALE

C-2

STATE OF CALIFORNIA - DEPARTMENT OF TRANSPORTATION
Caltrans
DESIGN

FUNCTIONAL SUPERVISOR: SERGIO AVILA
CALCULATED-DESIGNED BY: MICHAEL JACOB
CHECKED BY: REZA TOOTOONCHI
REVISED BY
DATE REVISED

LAST REVISION 03-15-16
DATE PLOTTED => 26-MAY-2016
TIME PLOTTED => 08:01

Dist	COUNTY	STATE ROUTE	POST MILES TOTAL PROJECT	SHEET No.	TOTAL SHEETS
08	Riv	79	R33.9	8	101

Michael Jacob 03-15-16
REGISTERED CIVIL ENGINEER DATE

03-15-16
PLANS APPROVAL DATE

REGISTERED PROFESSIONAL ENGINEER
MICHAEL JACOB
No. 75503
Exp. 6-30-16
CIVIL
STATE OF CALIFORNIA

THE STATE OF CALIFORNIA OR ITS OFFICERS OR AGENTS SHALL NOT BE RESPONSIBLE FOR THE ACCURACY OR COMPLETENESS OF SCANNED COPIES OF THIS PLAN SHEET.

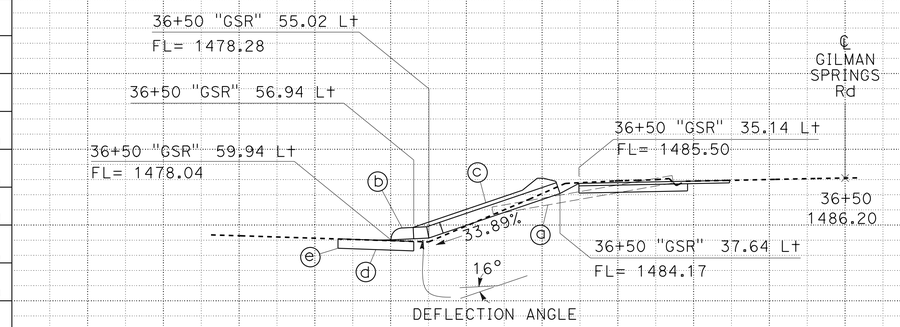

DRAINAGE SYSTEM 1

ⓐ 12" x 24.1' CMP, REMOVE
ⓑ 18" STEEL FES
ⓒ 18" 20.28' CMP (.064" THICK)
ⓓ 7' x 10' x 1.25' No. 2 RSP
ⓔ RSP FABRIC CLASS 8
Std PLAN D87A & D87B

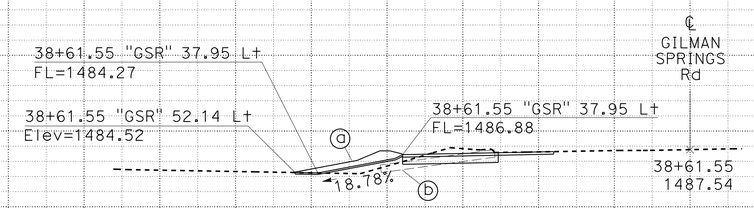

DRAINAGE SYSTEM 2

ⓐ HMA OVERSIDE REVISED Std PLAN D87D
ⓑ 12" x 14' CMP, REMOVE (AT 38+41.5)

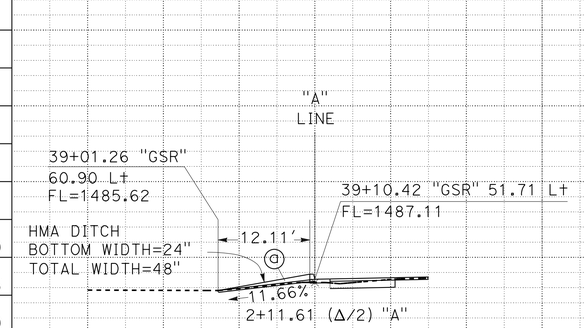

DRAINAGE SYSTEM 3

ⓐ HMA OVERSIDE REVISED Std PLAN D87D

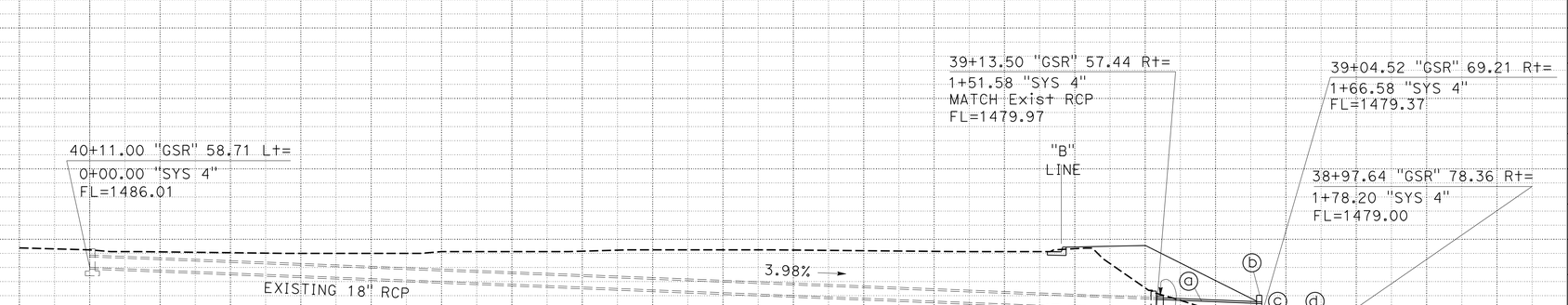

DRAINAGE SYSTEM 4

ⓐ 18" x 15' RCP
ⓑ HEADWALL, SINGLE Std PLAN D89
ⓒ 7' x 1.62' x 0.33' APRON
ⓓ 7' x 10' x 1.25' No. 2 RSP
ⓔ RSP FABRIC CLASS 8
ⓕ CONCRETE COLLAR, SEE SHEET DD-2

DRAINAGE PROFILES

SCALE: 1"=10'

DP-1

STATION		-100	-90	-80	-70	-60	-50	-40	-30	-20	-10	0	-100	-90	-80	-70	-60	-50	-40	-30	-20	-10	0	TOTAL
CY	Exc																							
	Emb																							

STATION		-20	-10	0	10	-10	0	10	20	30	40	50	60	70	80	90	100	110	120	130	140	150	160	170	180	TOTAL
CY	Exc																									
	Emb																									

STATE OF CALIFORNIA - DEPARTMENT OF TRANSPORTATION
Caltrans
DESIGN
FUNCTIONAL SUPERVISOR: SERGIO AVILA
CALCULATED-DESIGNED BY: MICHAEL JACOB
CHECKED BY: REZA TOOTOONCHI
REVISED BY
DATE REVISED

LAST REVISION 03-15-16
DATE PLOTTED => 26-MAY-2016
TIME PLOTTED => 08:01

Dist	COUNTY	STATE ROUTE	POST MILES TOTAL PROJECT	SHEET No.	TOTAL SHEETS
08	Riv	79	R33.9	9	101

REGISTERED CIVIL ENGINEER 03-15-16 DATE

03-15-16
PLANS APPROVAL DATE

REGISTERED PROFESSIONAL ENGINEER MICHAEL JACOB No. 75503 Exp. 6-30-16 CIVIL STATE OF CALIFORNIA

THE STATE OF CALIFORNIA OR ITS OFFICERS OR AGENTS SHALL NOT BE RESPONSIBLE FOR THE ACCURACY OR COMPLETENESS OF SCANNED COPIES OF THIS PLAN SHEET.

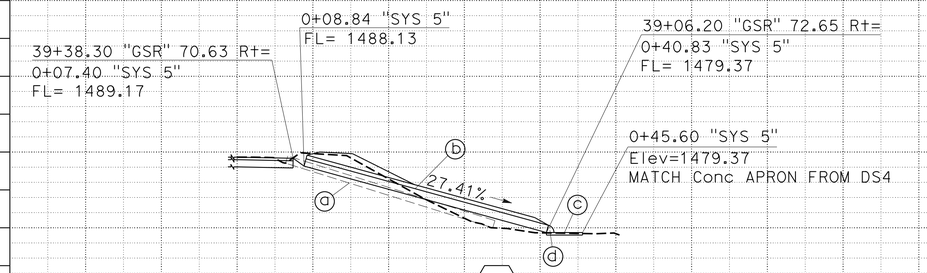

DRAINAGE SYSTEM 5

ⓐ 12" x 28.0' CMP, REMOVE
ⓑ 12" 33.17' CMP (.064" THICK)
ⓒ 2.18' x 2.14' x 3.24' x 0.33' MINOR Conc APRON
ⓓ RE-USE EXISTING FLARED END SECTION
Std PLAN D87A & D87B

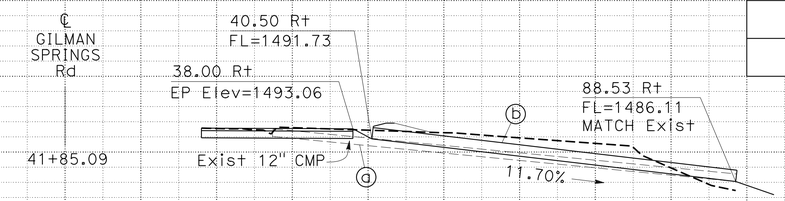

DRAINAGE SYSTEM 6

ⓐ 12" x 61.46' CMP, REMOVE
ⓑ 18" x 48.36' CMP (.064" THICK)
Std PLAN D87A & D87B

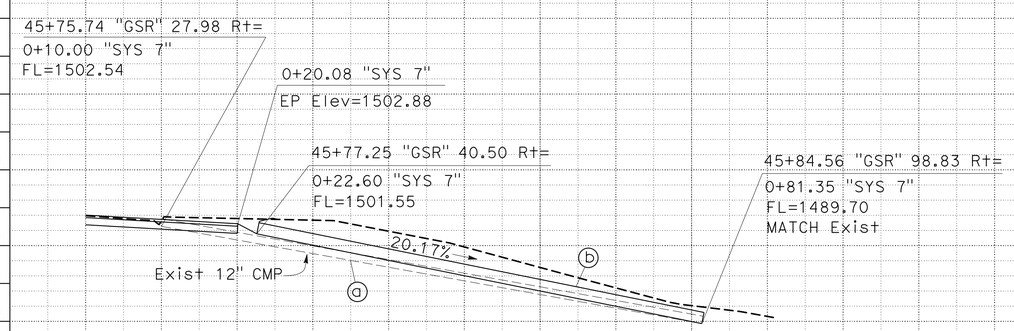

DRAINAGE SYSTEM 7

ⓐ 12" x 72.50' CMP, REMOVE
ⓑ 18" x 59.93' CMP (.064" THICK)
Std PLAN D87A & D87B

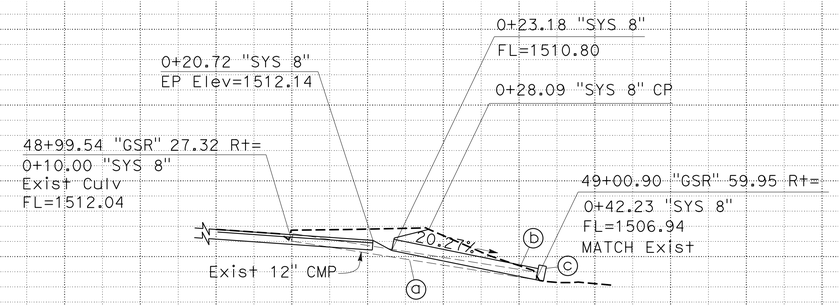

DRAINAGE SYSTEM 8

ⓐ 12" x 32.63' CMP, REMOVE
ⓑ 18" x 19.43' CMP (.064" THICK)
ⓒ CONCRETE COLLAR, SEE DD-2
Std PLAN D87A & D87B

DRAINAGE PROFILES

SCALE: 1"=10'

DP-2

STATION		0	10	20	30	40	50	60	70	80	90	100	TOTAL
CY	Exc												
	Emb												

STATE OF CALIFORNIA - DEPARTMENT OF TRANSPORTATION
Caltrans
DESIGN
FUNCTIONAL SUPERVISOR: SERGIO AVILA
CALCULATED-DESIGNED BY: MICHAEL JACOB
CHECKED BY: REZA TOOTOONCHI
REVISED BY
DATE REVISED

LAST REVISION 03-15-16
DATE PLOTTED => 26-MAY-2016
TIME PLOTTED => 08:02

Dist	COUNTY	STATE ROUTE	POST MILES TOTAL PROJECT	SHEET No.	TOTAL SHEETS
08	Riv	79	R33.9	10	101

REGISTERED CIVIL ENGINEER DATE 03-15-16

PLANS APPROVAL DATE 03-15-16

REGISTERED PROFESSIONAL ENGINEER MICHAEL JACOB No. 75503 Exp. 6-30-16 CIVIL STATE OF CALIFORNIA

THE STATE OF CALIFORNIA OR ITS OFFICERS OR AGENTS SHALL NOT BE RESPONSIBLE FOR THE ACCURACY OR COMPLETENESS OF SCANNED COPIES OF THIS PLAN SHEET.

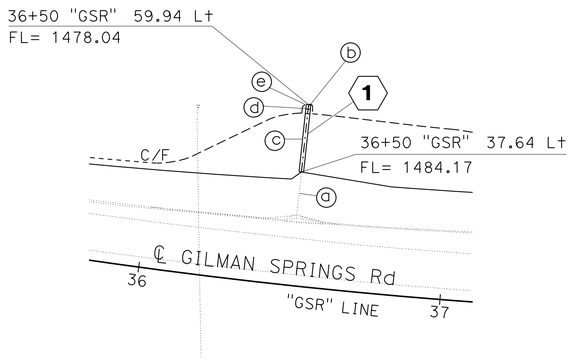

DRAINAGE SYSTEM (1)

- (a) 12" x 24.1′ CMP, REMOVE
- (b) 18" STEEL FES
- (c) 18" 20.28′ CMP
- (d) 7′ x 10′ x 1.25′ No. 2 RSP
- (e) RSP FABRIC CLASS 8

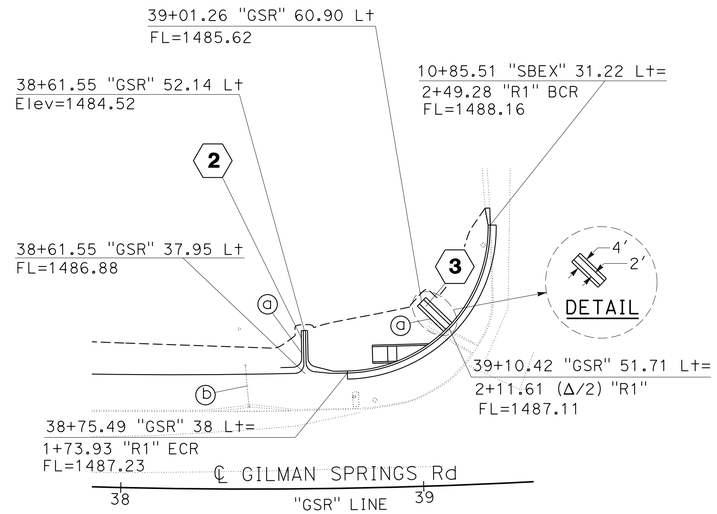

DRAINAGE SYSTEMS (2) (3)

- (a) HMA OVERSIDE REVISED Std PLAN D87D
- (b) 12" x 14′ CMP, REMOVE (AT 38+41.5)

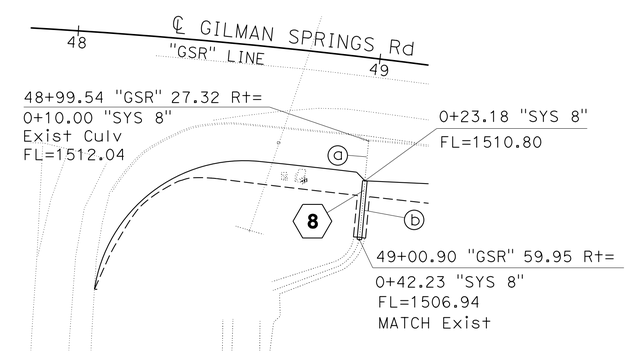

DRAINAGE SYSTEM (8)

- (a) 12" x 32.63′ CMP, REMOVE
- (b) 18" x 19.43′ CMP
- (c) CONCRETE COLLAR, SEE DD-3

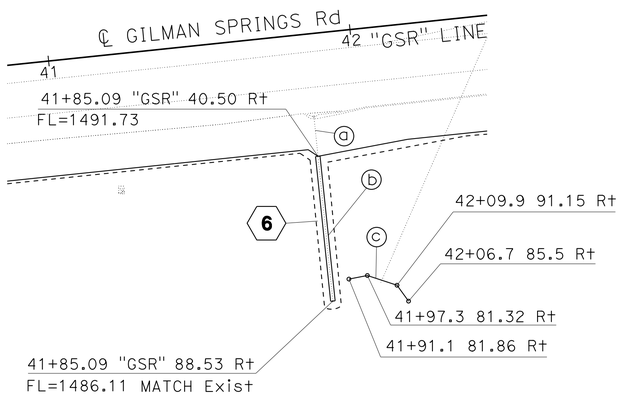

DRAINAGE SYSTEM (6)

- (a) 12" x 61.46′ CMP, REMOVE
- (b) 18" x 48.36′ CMP
- (c) CABLE RAILING

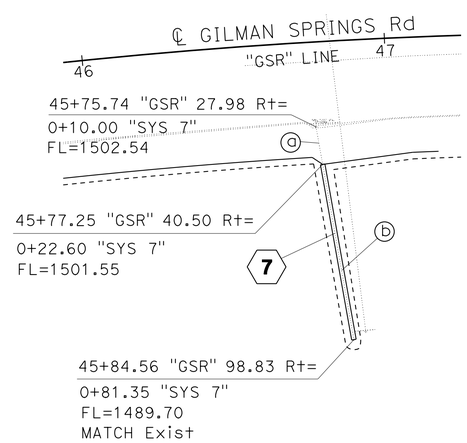

DRAINAGE SYSTEM (7)

- (a) 12" x 72.50′ CMP, REMOVE
- (b) 18" x 59.93′ CMP

APPROVED FOR DRAINAGE WORK ONLY

DRAINAGE DETAILS

NO SCALE **DD-1**

STATE OF CALIFORNIA - DEPARTMENT OF TRANSPORTATION

Caltrans

DESIGN

FUNCTIONAL SUPERVISOR: SERGIO AVILA

CALCULATED-DESIGNED BY: MICHAEL JACOB

CHECKED BY: REZA TOOTOONCHI

REVISED BY | DATE REVISED

LAST REVISION 03-15-16 | DATE PLOTTED => 26-MAY-2016 | TIME PLOTTED => 08:02

Dist	COUNTY	STATE ROUTE	POST MILES TOTAL PROJECT	SHEET No.	TOTAL SHEETS
08	Riv	79	R33.9	11	101

REGISTERED CIVIL ENGINEER 03-10-16 DATE

03-15-16
PLANS APPROVAL DATE

REGISTERED PROFESSIONAL ENGINEER MICHAEL JACOB No. 75503 Exp 6-30-16 CIVIL STATE OF CALIFORNIA

THE STATE OF CALIFORNIA OR ITS OFFICERS OR AGENTS SHALL NOT BE RESPONSIBLE FOR THE ACCURACY OR COMPLETENESS OF SCANNED COPIES OF THIS PLAN SHEET.

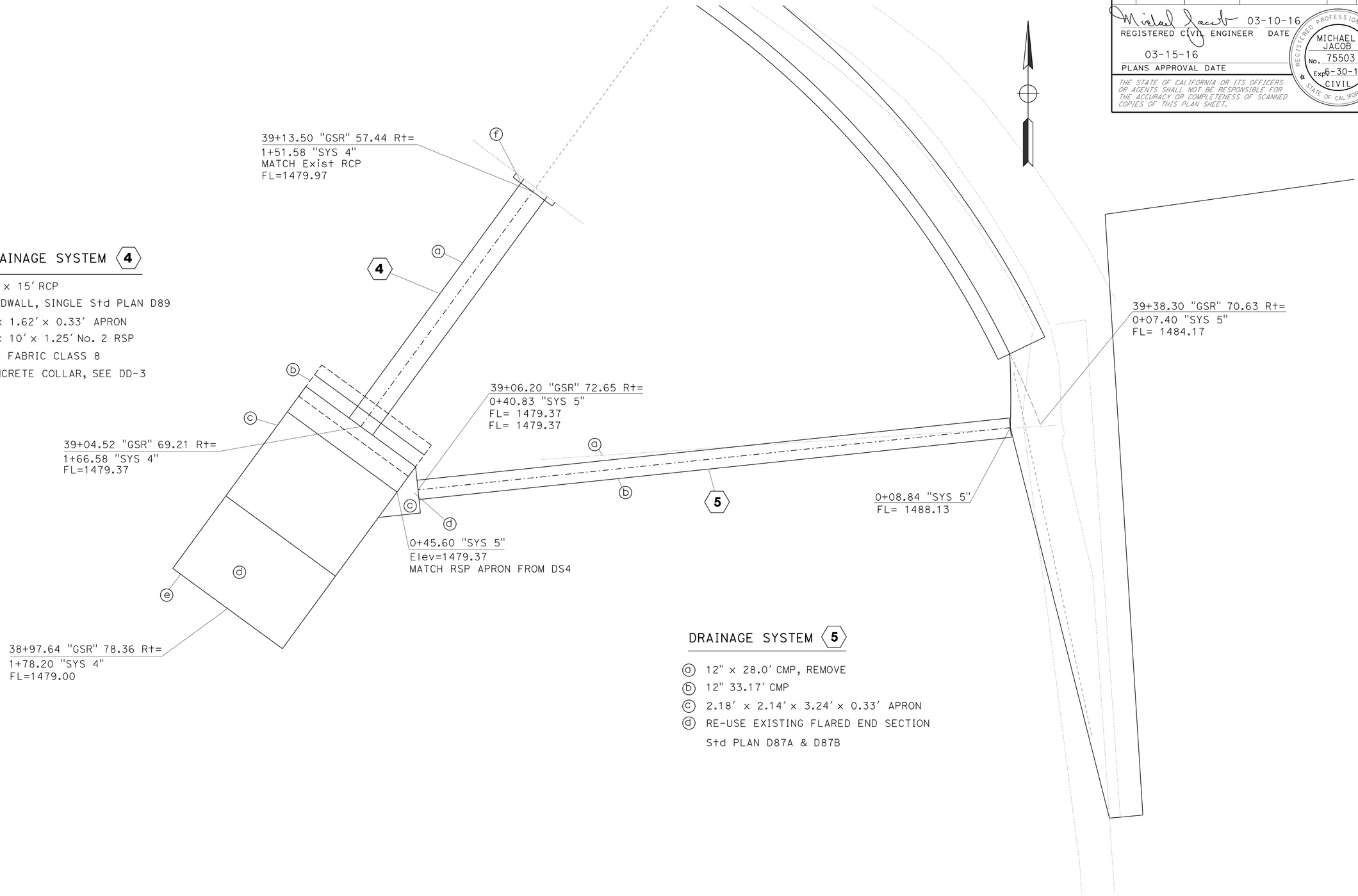

DRAINAGE SYSTEM 4

- (a) 18" x 15' RCP
- (b) HEADWALL, SINGLE Std PLAN D89
- (c) 7' x 1.62' x 0.33' APRON
- (d) 7' x 10' x 1.25' No. 2 RSP
- (e) RSP FABRIC CLASS 8
- (f) CONCRETE COLLAR, SEE DD-3

DRAINAGE SYSTEM 5

- (a) 12" x 28.0' CMP, REMOVE
- (b) 12" 33.17' CMP
- (c) 2.18' x 2.14' x 3.24' x 0.33' APRON
- (d) RE-USE EXISTING FLARED END SECTION Std PLAN D87A & D87B

APPROVED FOR DRAINAGE WORK ONLY

DRAINAGE DETAILS

NO SCALE

DD-2

REVISED BY	DATE REVISED

CALCULATED-DESIGNED BY	CHECKED BY
MICHAEL JACOB	REZA TOOTOONCHI

FUNCTIONAL SUPERVISOR: SERGIO AVILA

STATE OF CALIFORNIA - DEPARTMENT OF TRANSPORTATION

Caltrans® DESIGN

LAST REVISION 03-10-16 | DATE PLOTTED => 26-MAY-2016 | TIME PLOTTED => 08:02

Dist	COUNTY	STATE ROUTE	POST MILES TOTAL PROJECT	SHEET No.	TOTAL SHEETS
08	Riv	79	R33.9	12	101

REGISTERED CIVIL ENGINEER 03-15-16 DATE

03-15-16
PLANS APPROVAL DATE

REGISTERED PROFESSIONAL ENGINEER MICHAEL JACOB No. 75503 Exp 6-30-16 CIVIL STATE OF CALIFORNIA

THE STATE OF CALIFORNIA OR ITS OFFICERS OR AGENTS SHALL NOT BE RESPONSIBLE FOR THE ACCURACY OR COMPLETENESS OF SCANNED COPIES OF THIS PLAN SHEET.

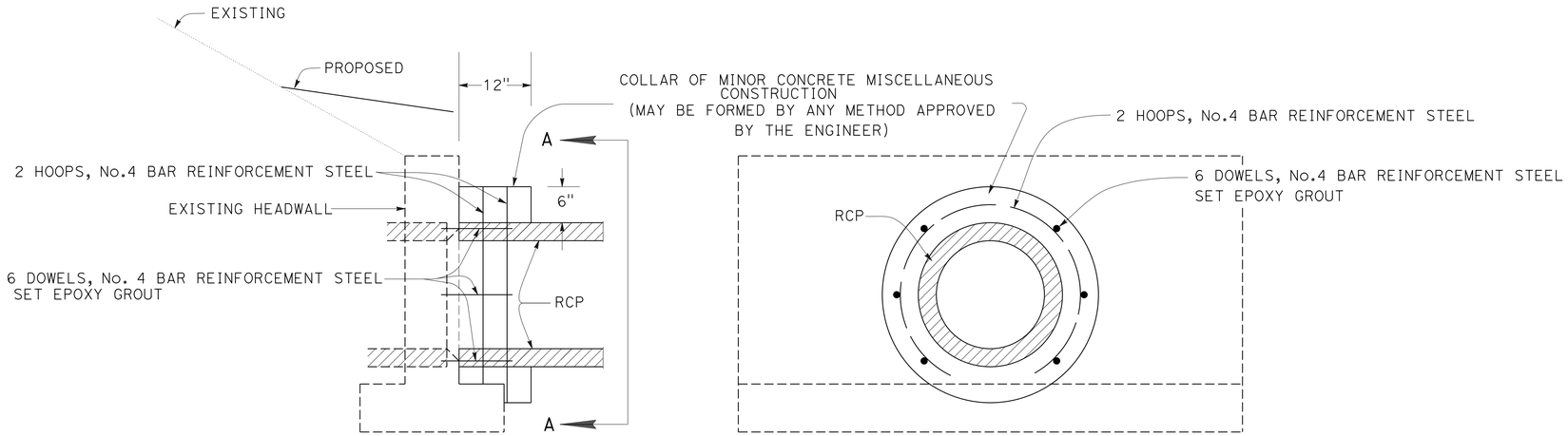

LONGITUDINAL SECTION

SECTION AA

NOTE: COST FOR REMOVAL AND DISPOSAL OF PORTIONS OF TOP AND OF EXISTING HEADWALL AND COST OF CONCRETE, REINFORCEMENT STEEL AND CONSTRUCTION OF COLLAR TO BE INCLUDED IN THE CONTRACT UNIT PRICE FOR PIPE CULVERT.

CONCRETE COLLAR FOR EXTENSION OF EXISTING RCP CULVERT AT DS #4

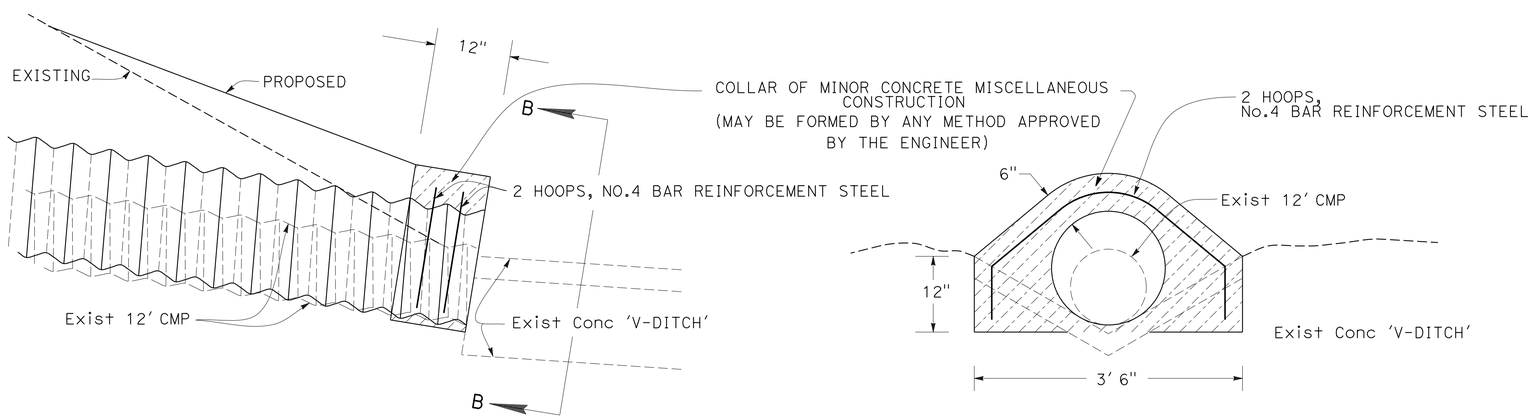

LONGITUDINAL SECTION

SECTION BB

NOTE: COST FOR REMOVAL AND DISPOSAL OF PORTIONS OF TOP AND OF EXISTING HEADWALL AND COST OF CONCRETE, REINFORCEMENT STEEL AND CONSTRUCTION OF COLLAR TO BE INCLUDED IN THE CONTRACT UNIT PRICE FOR PIPE CULVERT.

CONCRETE COLLAR/ABUTMENT FOR TRANSITION OF CMP TO Exist V-DITCH AT DS #8

DRAINAGE DETAILS

APPROVED FOR DRAINAGE WORK ONLY

NO SCALE **DD-3**

STATE OF CALIFORNIA - DEPARTMENT OF TRANSPORTATION
Caltrans® DESIGN

FUNCTIONAL SUPERVISOR: SERGIO AVILA
CALCULATED-DESIGNED BY: MICHAEL JACOB
CHECKED BY: REZA TOOTOONCHI
REVISED BY / DATE REVISED

LAST REVISION 03-15-16
DATE PLOTTED => 26-MAY-2016
TIME PLOTTED => 08:02

Dist	COUNTY	STATE ROUTE	POST MILES TOTAL PROJECT	SHEET No.	TOTAL SHEETS
08	Riv	79	R33.9	13	101

REGISTERED CIVIL ENGINEER 03-15-16 DATE

03-15-16
PLANS APPROVAL DATE

REGISTERED PROFESSIONAL ENGINEER MICHAEL JACOB No. 75503 Exp. 6-30-16 CIVIL STATE OF CALIFORNIA

THE STATE OF CALIFORNIA OR ITS OFFICERS OR AGENTS SHALL NOT BE RESPONSIBLE FOR THE ACCURACY OR COMPLETENESS OF SCANNED COPIES OF THIS PLAN SHEET.

DRAINAGE SYSTEM No. ⬡	DRAINAGE UNIT ○	PLACE HOT MIX ASPHALT (MISCELLANEOUS AREA)	HOT MIX ASPHALT (TYPE A)	ROCK SLOPE PROTECTION (RSP) RSP (No. 2 METHOD B)	ROCK SLOPE PROTECTION (RSP) RSP FABRIC (CLASS 8)	REMOVE PIPE	18" STEEL FLARED END SECTION	18" CORRUGATED STEEL PIPE (.064" THICK)	12" CORRUGATED STEEL PIPE (.064" THICK)	18" REINFORCED CONCRETE PIPE	MINOR CONCRETE (MINOR STRUCTURE)	MINOR CONCRETE (Misc CONSTRUCTION)	CONCRETE COLLAR (N)	BAR REINFORCEMENT STEEL	CABLE RAILING	DESCRIPTION	STATION
		SQFT	TON	CY	SQYD	LF	EA	LF	LF	LF	CY	CY	EA	LB	LF		
1	a					24.1										12" x 24.1' CMP, REMOVE	
	b						1									18" STEEL FES	
	c							20.3								18" 20.28' CMP	36+50 "GSR" 35.14 Lt
	d			3.24												7' x 10' x 1.25' No. 2 RSP	
	e				13.2											RSP FABRIC CLASS 8	
2	a	28.4	1.0													HMA OVERSIDE REVISED Std PLAN D87D	38+61.55 "GSR" 37.95 Lt
	b					14.0										12" x 14' CMP, REMOVE (AT 38+41.5)	
3	a	12.1	1.2													HMA OVERSIDE REVISED Std PLAN D87D	39+10.42 "GSR" 51.71 Lt
4	a									15						18" x 15' RCP	40+11.00 "GSR" 58.71 Rt
	b										0.91			50		HEADWALL, SINGLE Std PLAN D89	
	c											0.14				7' x 1.62' x 0.33' APRON	
	d			3.24												7' x 10' x 1.25' No. 2 RSP	
	e				13.2											RSP FABRIC CLASS 8	
	f												1			CONCRETE COLLAR (N)	
5	a					28.0										12" x 28.0' CMP, REMOVE	
	b								33.2							12" 33.17' CMP	39+33.30 "GSR" 70.63 Rt
	c											0.03				2.18' x 2.14' x 3.24' x 0.33' APRON	
6	a					61.5										12" x 61.46' CMP, REMOVE	
	b							48.4								18" x 48.36' CMP	41+85.09 "GSR" 40.50 Rt
	c														23	CABLE RAILING ADJACENT TO SYSTEM 6	42+02 "GSR" 83.4 Rt
7	a					72.5										12" x 72.50' CMP, REMOVE	
	b							59.9								18" x 59.93' CMP	45+77.25 "GSR" 40.50 Rt
8	a					32.6										12" x 32.63' CMP, REMOVE	
	b							19.4								18" x 19.43' CMP	48+99.90 "GSR" 40.50 Rt
	c												1			CONCRETE COLLAR (N)	
TOTAL		40.5	* 2.2	6.48	26.4	232.7	1	148.0	33.2	15	0.91	*0.17		50	23		

* NOTE: HMA TOTALS CARRIED OVER TO SHEET Q-1.
(N) NOT A SEPARATE PAY ITEM, FOR INFORMATION ONLY

DRAINAGE QUANTITIES

DQ-1

REVISED BY | DATE REVISED
MICHAEL JACOB | REZA TOOTOONCHI
CALCULATED-DESIGNED BY | CHECKED BY
FUNCTIONAL SUPERVISOR: SERGIO AVILA
STATE OF CALIFORNIA - DEPARTMENT OF TRANSPORTATION
Caltrans® DESIGN

LAST REVISION 03-15-16 | DATE PLOTTED => 26-MAY-2016 | TIME PLOTTED => 08:02

Dist	COUNTY	STATE ROUTE	POST MILES TOTAL PROJECT	SHEET No.	TOTAL SHEETS
08	Riv	79	R33.9	14	101

REGISTERED CIVIL ENGINEER 03-15-16 DATE

03-15-16
PLANS APPROVAL DATE

REGISTERED PROFESSIONAL ENGINEER MICHAEL JACOB No. 75503 Exp. 6-30-16 CIVIL STATE OF CALIFORNIA

THE STATE OF CALIFORNIA OR ITS OFFICERS OR AGENTS SHALL NOT BE RESPONSIBLE FOR THE ACCURACY OR COMPLETENESS OF SCANNED COPIES OF THIS PLAN SHEET.

NOTES:

1. FOR ACCURATE RIGHT OF WAY DATA, CONTACT RIGHT OF WAY ENGINEERING AT THE DISTRICT OFFICE.
2. ELEVATIONS SHOWN REFER TO THE TOP OF PIPE OR CONDUIT, UNLESS OTHERWISE STATED.
3. UTILITY OWNERSHIP:

   GAS - SOUTHERN CALIFORNIA GAS

   ELECTRICAL - SOUTHERN CALIFORNIA EDISON

   FIBER OPTIC/TELEPHONE - VERIZON COMMUNICATIONS

LEGEND:

——-G——-—— GAS PIPELINE UNDERGROUND

——fo—— —— —— FIBER OPTIC OR TELEPHONE BURIED CABLE

——-e—— —— ELECTRICAL

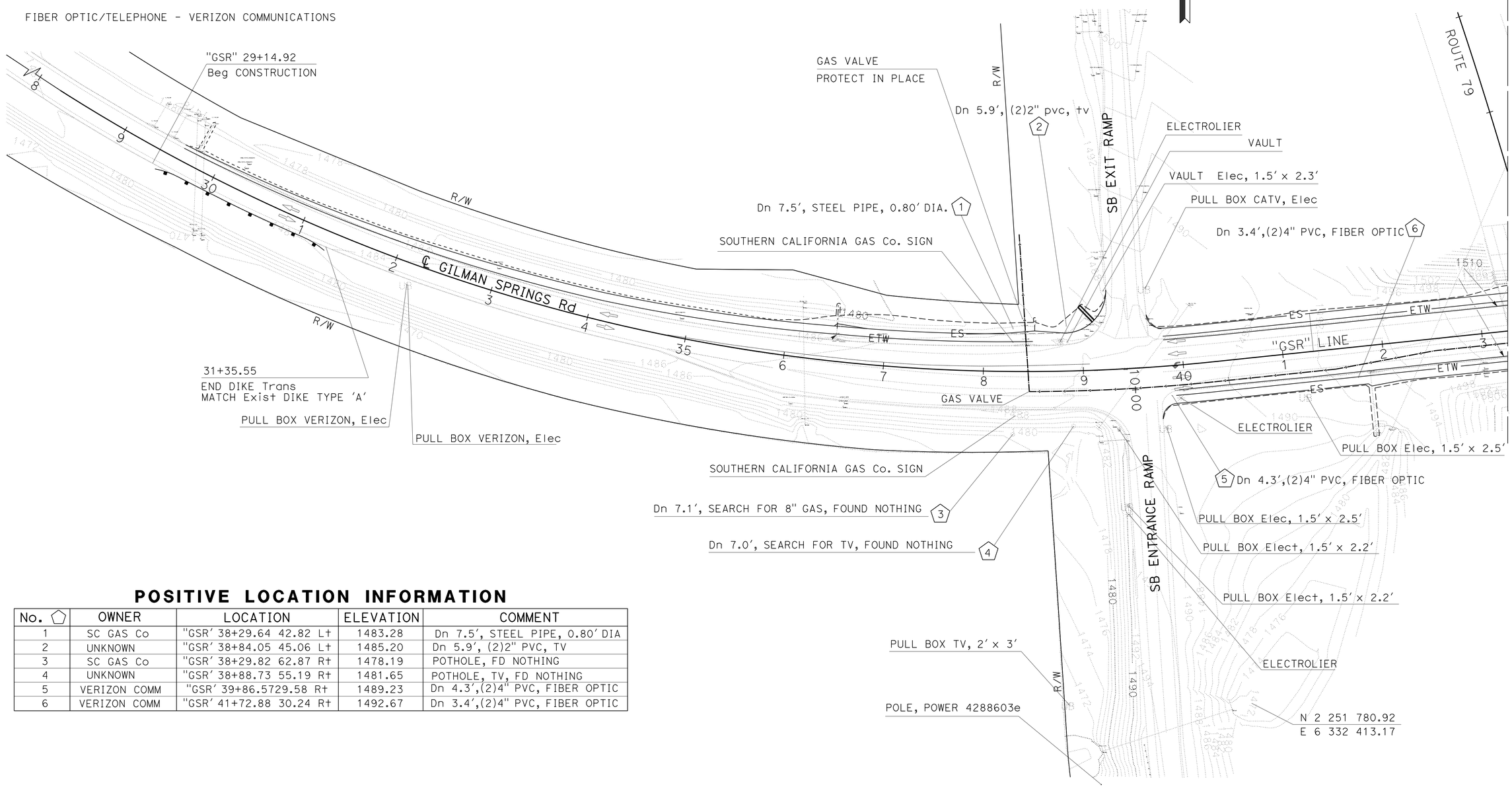

POSITIVE LOCATION INFORMATION

No. ⬠	OWNER	LOCATION	ELEVATION	COMMENT
1	SC GAS Co	"GSR' 38+29.64 42.82 Lt	1483.28	Dn 7.5', STEEL PIPE, 0.80' DIA
2	UNKNOWN	"GSR' 38+84.05 45.06 Lt	1485.20	Dn 5.9', (2)2" PVC, TV
3	SC GAS Co	"GSR' 38+29.82 62.87 Rt	1478.19	POTHOLE, FD NOTHING
4	UNKNOWN	"GSR' 38+88.73 55.19 Rt	1481.65	POTHOLE, TV, FD NOTHING
5	VERIZON COMM	"GSR' 39+86.5729.58 Rt	1489.23	Dn 4.3',(2)4" PVC, FIBER OPTIC
6	VERIZON COMM	"GSR' 41+72.88 30.24 Rt	1492.67	Dn 3.4',(2)4" PVC, FIBER OPTIC

APPROVED FOR UTILITY INFORMATION ONLY

UTILITY PLAN

SCALE: 1"=50' **U-1**

STATE OF CALIFORNIA - DEPARTMENT OF TRANSPORTATION **DESIGN**

FUNCTIONAL SUPERVISOR: SERGIO AVILA

CALCULATED-DESIGNED BY: MICHAEL JACOB

CHECKED BY: REZA TOOTOONCHI

REVISED BY / DATE REVISED

LAST REVISION 03-15-16 | DATE PLOTTED => 26-MAY-2016 | TIME PLOTTED => 08:02

Dist	COUNTY	STATE ROUTE	POST MILES TOTAL PROJECT	SHEET No.	TOTAL SHEETS
08	Riv	79	R33.9	15	101

REGISTERED CIVIL ENGINEER 03-15-16 DATE

03-15-16
PLANS APPROVAL DATE

REGISTERED PROFESSIONAL ENGINEER MICHAEL JACOB No. 75503 Exp. 6-30-16 CIVIL STATE OF CALIFORNIA

THE STATE OF CALIFORNIA OR ITS OFFICERS OR AGENTS SHALL NOT BE RESPONSIBLE FOR THE ACCURACY OR COMPLETENESS OF SCANNED COPIES OF THIS PLAN SHEET.

NOTES:

1. FOR ACCURATE RIGHT OF WAY DATA, CONTACT RIGHT OF WAY ENGINEERING AT THE DISTRICT OFFICE.
2. ELEVATIONS SHOWN REFER TO THE TOP OF PIPE OR CONDUIT, UNLESS OTHERWISE STATED.
3. UTILITY OWNERSHIP:
   GAS - SOUTHERN CALIFORNIA GAS (SC GAS)
   ELECTRICAL - SOUTHERN CALIFORNIA EDISON (SC ED)
   FIBER OPTIC/TELEPHONE - VERIZON COMMUNICATIONS

LEGEND:

—G— - — GAS PIPELINE UNDERGROUND
—fo— — — FIBER OPTIC OR TELEPHONE BURIED CABLE
—e— — ELECTRICAL

POSITIVE LOCATION INFORMATION

No. ⬠	OWNER	LOCATION	ELEVATION	COMMENT
7	VERIZON COMM	"GSR' 46+92.89 27.75 R†	1507.12	Dn 3.6',(2)4" PVC, FIBER OPTIC
8	VERIZON COMM	"GSR' 47+32.00 33.96 R†	1507.90	Dn 3.0',(2)4" PVC, FIBER OPTIC
9	VERIZON COMM	"GSR' 47+59.86 47.54 R†	1507.69	Dn 2.5',4" PVC, FIBER OPTIC
10	VERIZON COMM	"GSR' 48+16.46 77.21 R†	1507.17	Dn 3.2',(2) 4" PVC, TELEPHONE
11	VERIZON COMM	"GSR' 48+55.60 39.56 R†	1512.76	Dn 4.6',(2) 4" PVC, TELEPHONE
12	VERIZON COMM	"GSR' 48+88.74 32.03 R†	1513.52	Dn 4.3',(2) 4" PVC, TELEPHONE
13	VERIZON COMM	"GSR' 53+00.37 32.04 R†	1524.96	Dn 4.6', (3) 4" PVC, TELEPHONE

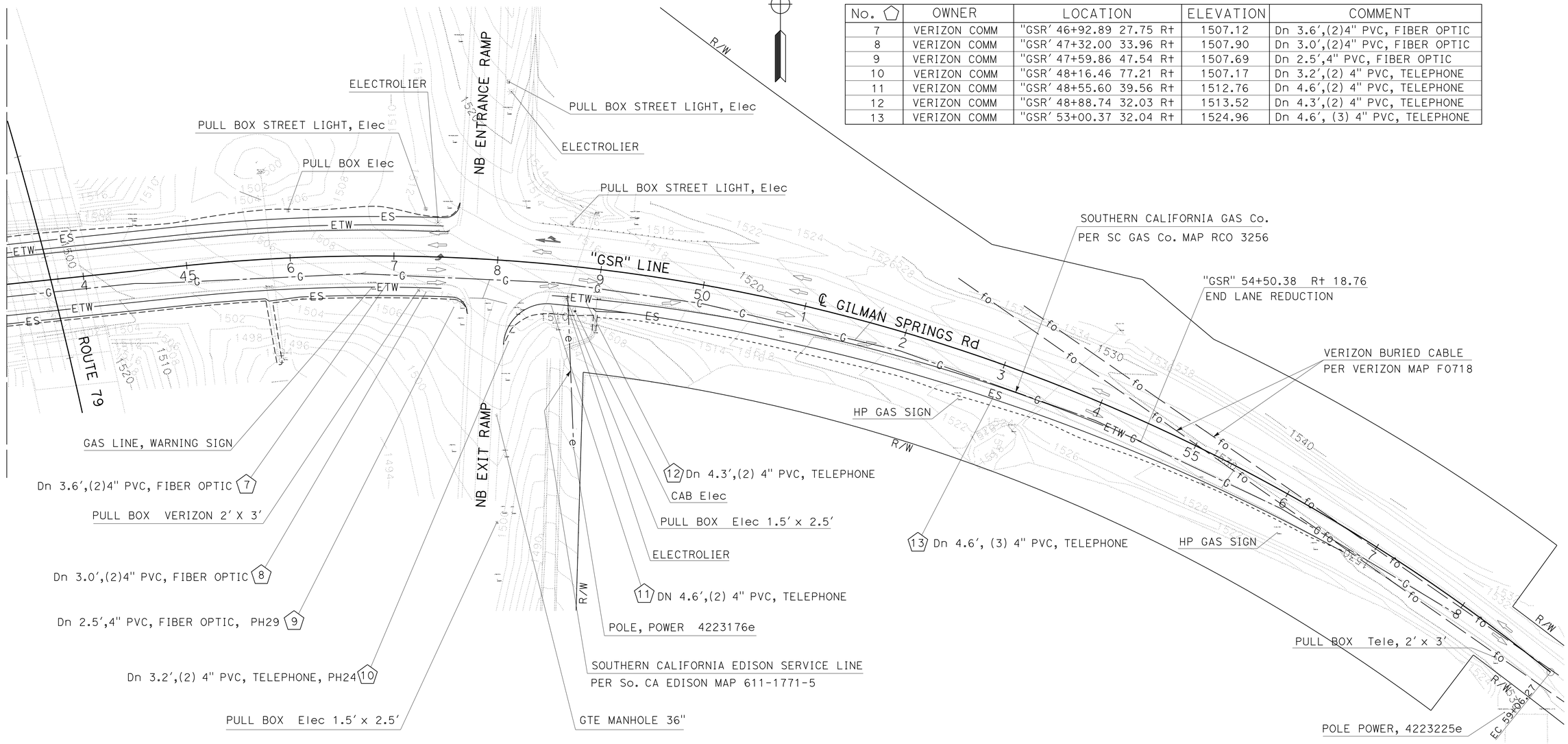

UTILITY PLAN

APPROVED FOR UTILITY INFORMATION ONLY

SCALE: 1"=50' **U-2**

STATE OF CALIFORNIA - DEPARTMENT OF TRANSPORTATION
Caltrans® DESIGN

FUNCTIONAL SUPERVISOR: SERGIO AVILA
CALCULATED-DESIGNED BY: MICHAEL JACOB
CHECKED BY: REZA TOOTOONCHI
REVISED BY / DATE REVISED

LAST REVISION 03-15-16
DATE PLOTTED => 26-MAY-2016
TIME PLOTTED => 08:02

Dist	COUNTY	ROUTE	POST MILES TOTAL PROJECT	SHEET No.	TOTAL SHEETS
08	Riv	79	R33.9	16	101

M.M. Kamgar 03-11-16
REGISTERED CIVIL ENGINEER DATE

03-15-16
PLANS APPROVAL DATE

REGISTERED PROFESSIONAL ENGINEER
M.M.Kamgar
No. 58039
Exp. 6-30-16
CIVIL
STATE OF CALIFORNIA

THE STATE OF CALIFORNIA OR ITS OFFICERS OR AGENTS SHALL NOT BE RESPONSIBLE FOR THE ACCURACY OR COMPLETENESS OF SCANNED COPIES OF THIS PLAN SHEET.

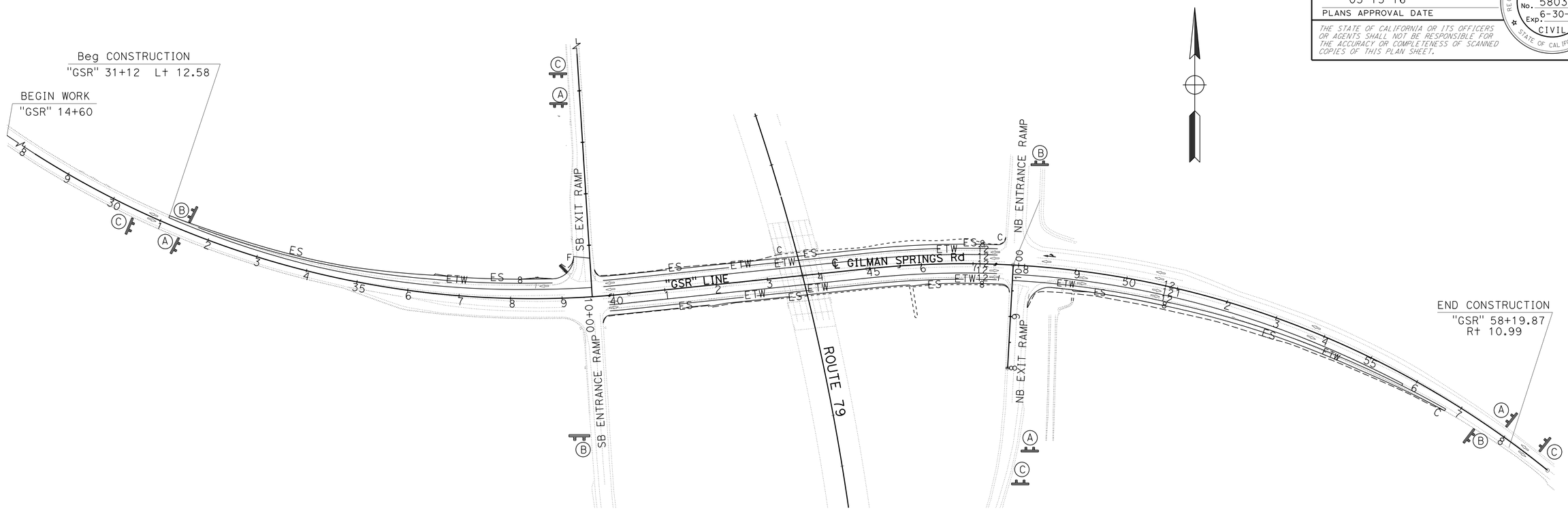

STATIONARY MOUNTED CONSTRUCTION AREA SIGNS

SIGN No. (X)	SIGN CODE		PANEL SIZE	SIGN MESSAGE	NUMBER OF POSTS AND SIZE	NUMBER OF SIGNS
	FEDERAL	CALIFORNIA				
(A)	W20-1		48" x 48"	ROAD WORK AHEAD	2 - 4" X 6"	4
(B)	G20-2		48" x 24"	END ROAD WORK	2 - 4" X 6"	4
(C)		C40	72" x 36"	TRAFFIC FINE DOUBLED IN CONSTRUCTION ZONES	2 - 4" X 6"	4

EXACT LOCATION OF THE SIGNS WILL BE DETERMINED BY THE ENGINEER.

PORTABLE CHANGEABLE MESSAGE SIGN (PMCS)

EA
4

APPROVED FOR CONSTRUCTION AREA SIGN WORK ONLY

NO SCALE

CONSTRUCTION AREA SIGNS

CS-1

REVISED BY | DATE REVISED
MEHDI KAMGAR | MARIO AMANCIO
CALCULATED-DESIGNED BY | CHECKED BY
FUNCTIONAL SUPERVISOR: MARIO AMANCIO
STATE OF CALIFORNIA - DEPARTMENT OF TRANSPORTATION
Caltrans
DESIGN

LAST REVISION 03-11-16
DATE PLOTTED => 26-MAY-2016
TIME PLOTTED => 08:02

Dist	COUNTY	STATE ROUTE	POST MILES TOTAL PROJECT	SHEET No.	TOTAL SHEETS
08	Riv	79	R33.9	17	101

M.M. Kamgar Hayhigh 03-15-16
REGISTERED CIVIL ENGINEER DATE

03-15-16
PLANS APPROVAL DATE

REGISTERED PROFESSIONAL ENGINEER
M.M.Kamgar
No. 75503
Exp. 6-30-16
CIVIL
STATE OF CALIFORNIA

THE STATE OF CALIFORNIA OR ITS OFFICERS OR AGENTS SHALL NOT BE RESPONSIBLE FOR THE ACCURACY OR COMPLETENESS OF SCANNED COPIES OF THIS PLAN SHEET.

NOTE:

FOR ACCURATE RIGHT OF WAY DATA, CONTACT RIGHT OF WAY ENGINEERING AT THE DISTRICT OFFICE.

LEGEND:

- STAGE 1 CONSTRUCTION
- STAGE 1A CONSTRUCTION
- STAGE 1B CONSTRUCTION

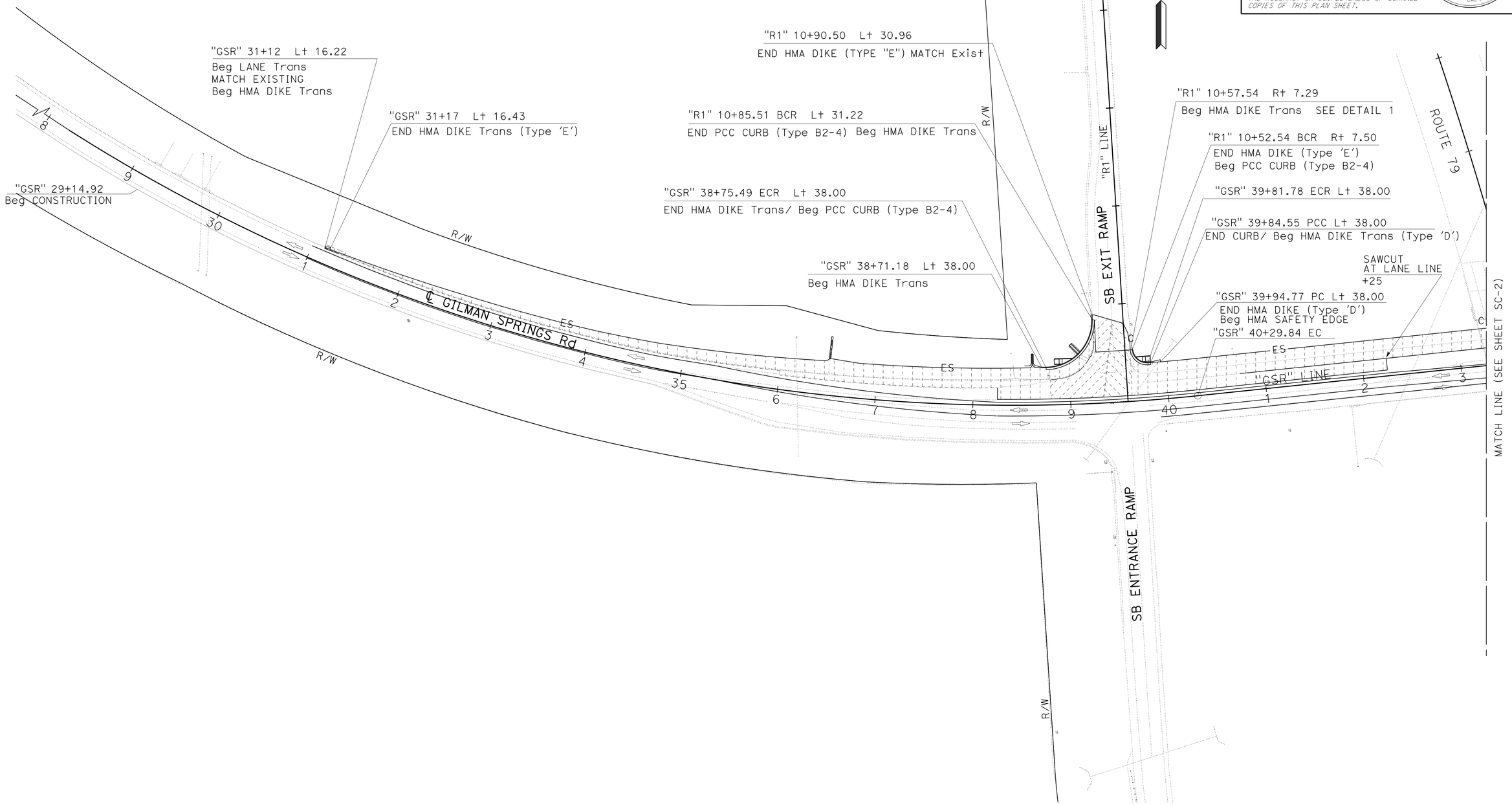

APPROVED FOR STAGE CONSTRUCTION WORK ONLY

STAGE CONSTRUCTION PLAN
STAGE 1

SCALE: 1"=50'

SC-1

STATE OF CALIFORNIA - DEPARTMENT OF TRANSPORTATION
Caltrans®
DESIGN

FUNCTIONAL SUPERVISOR: SERGIO AVILA
CALCULATED-DESIGNED BY: MICHAEL JACOB
CHECKED BY: REZA TOOTOONCHI
REVISED BY
DATE REVISED

LAST REVISION 03-15-16
DATE PLOTTED => 26-MAY-2016
TIME PLOTTED => 08:02

Dist	COUNTY	STATE ROUTE	POST MILES TOTAL PROJECT	SHEET No.	TOTAL SHEETS
08	Riv	79	R33.9	18	101

Michael Jacob 03-15-16
REGISTERED CIVIL ENGINEER DATE

03-15-16
PLANS APPROVAL DATE

REGISTERED PROFESSIONAL ENGINEER
MICHAEL JACOB
No. 75503
Exp. 6-30-16
CIVIL
STATE OF CALIFORNIA

THE STATE OF CALIFORNIA OR ITS OFFICERS OR AGENTS SHALL NOT BE RESPONSIBLE FOR THE ACCURACY OR COMPLETENESS OF SCANNED COPIES OF THIS PLAN SHEET.

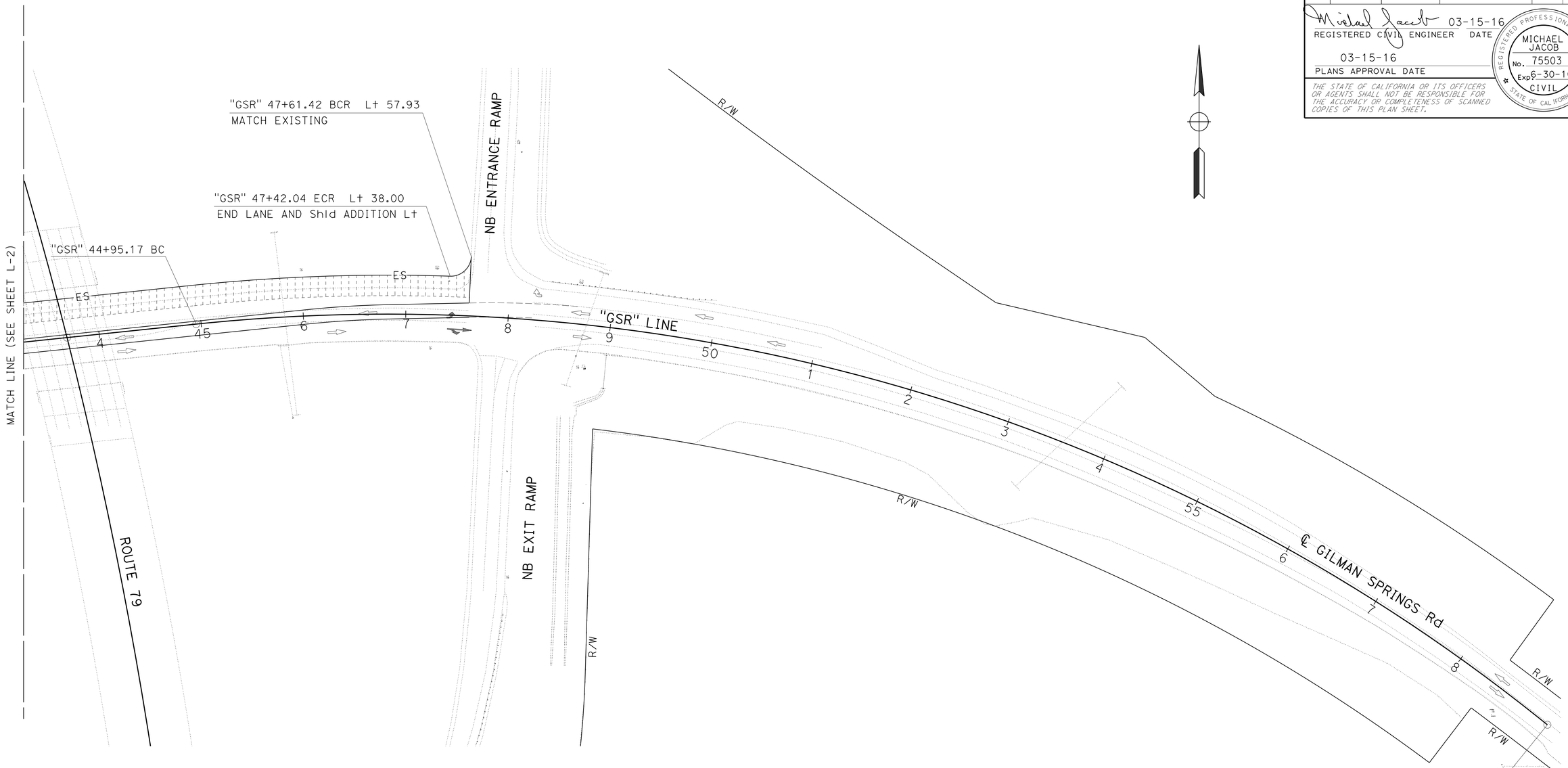

STAGE CONSTRUCTION PLAN

STAGE 1
SCALE: 1"=50'

SC-2

APPROVED FOR STAGE CONSTRUCTION WORK ONLY

STATE OF CALIFORNIA - DEPARTMENT OF TRANSPORTATION
Caltrans®
DESIGN

FUNCTIONAL SUPERVISOR: SERGIO AVILA
CALCULATED-DESIGNED BY: MICHAEL JACOB
CHECKED BY: REZA TOOTOONCHI
REVISED BY
DATE REVISED

LAST REVISION 03-15-16
DATE PLOTTED => 26-MAY-2016
TIME PLOTTED => 08:02

Dist	COUNTY	STATE ROUTE	POST MILES TOTAL PROJECT	SHEET No.	TOTAL SHEETS
08	Riv	79	R33.9	19	101

REGISTERED CIVIL ENGINEER 03-15-16 DATE

03-15-16
PLANS APPROVAL DATE

REGISTERED PROFESSIONAL ENGINEER MICHAEL JACOB No. 75503 Exp 6-30-16 CIVIL STATE OF CALIFORNIA

THE STATE OF CALIFORNIA OR ITS OFFICERS OR AGENTS SHALL NOT BE RESPONSIBLE FOR THE ACCURACY OR COMPLETENESS OF SCANNED COPIES OF THIS PLAN SHEET.

LEGEND:

- STAGE 2 CONSTRUCTION
- STAGE 2A CONSTRUCTION
- STAGE 2B CONSTRUCTION

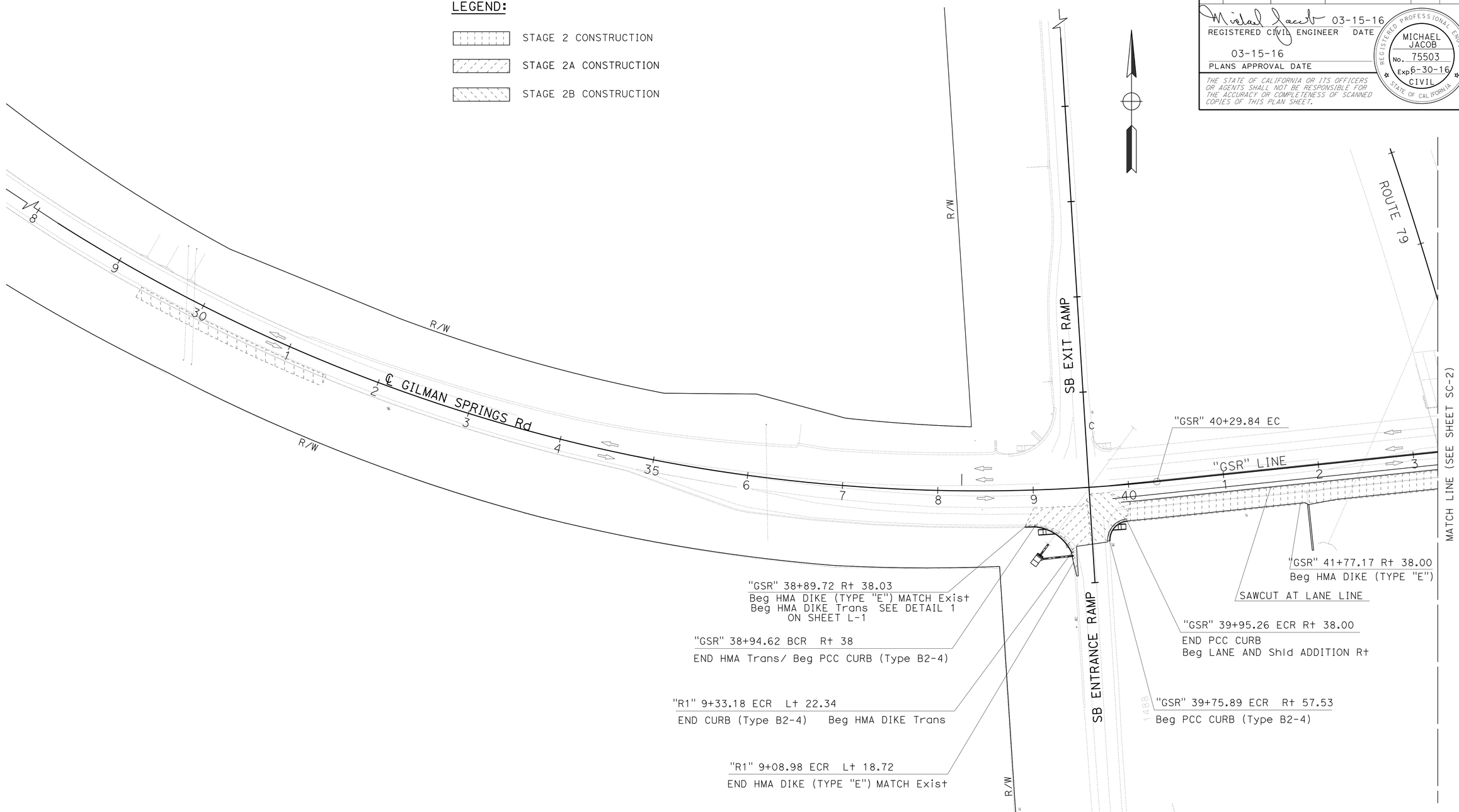

APPROVED FOR STAGE CONSTRUCTION WORK ONLY

STAGE CONSTRUCTION PLAN
STAGE 2
SCALE: 1"=50'

SC-3

STATE OF CALIFORNIA - DEPARTMENT OF TRANSPORTATION
Caltrans®
DESIGN

FUNCTIONAL SUPERVISOR: SERGIO AVILA
CALCULATED-DESIGNED BY: MICHAEL JACOB
CHECKED BY: REZA TOOTOONCHI
REVISED BY
DATE REVISED

LAST REVISION 03-15-16
DATE PLOTTED => 26-MAY-2016
TIME PLOTTED => 08:02

Dist	COUNTY	STATE ROUTE	POST MILES TOTAL PROJECT	SHEET No.	TOTAL SHEETS
08	Riv	79	R33.9	20	101

REGISTERED CIVIL ENGINEER DATE 03-15-16

PLANS APPROVAL DATE 03-15-16

REGISTERED PROFESSIONAL ENGINEER MICHAEL JACOB No. 75503 Exp. 6-30-16 CIVIL STATE OF CALIFORNIA

THE STATE OF CALIFORNIA OR ITS OFFICERS OR AGENTS SHALL NOT BE RESPONSIBLE FOR THE ACCURACY OR COMPLETENESS OF SCANNED COPIES OF THIS PLAN SHEET.

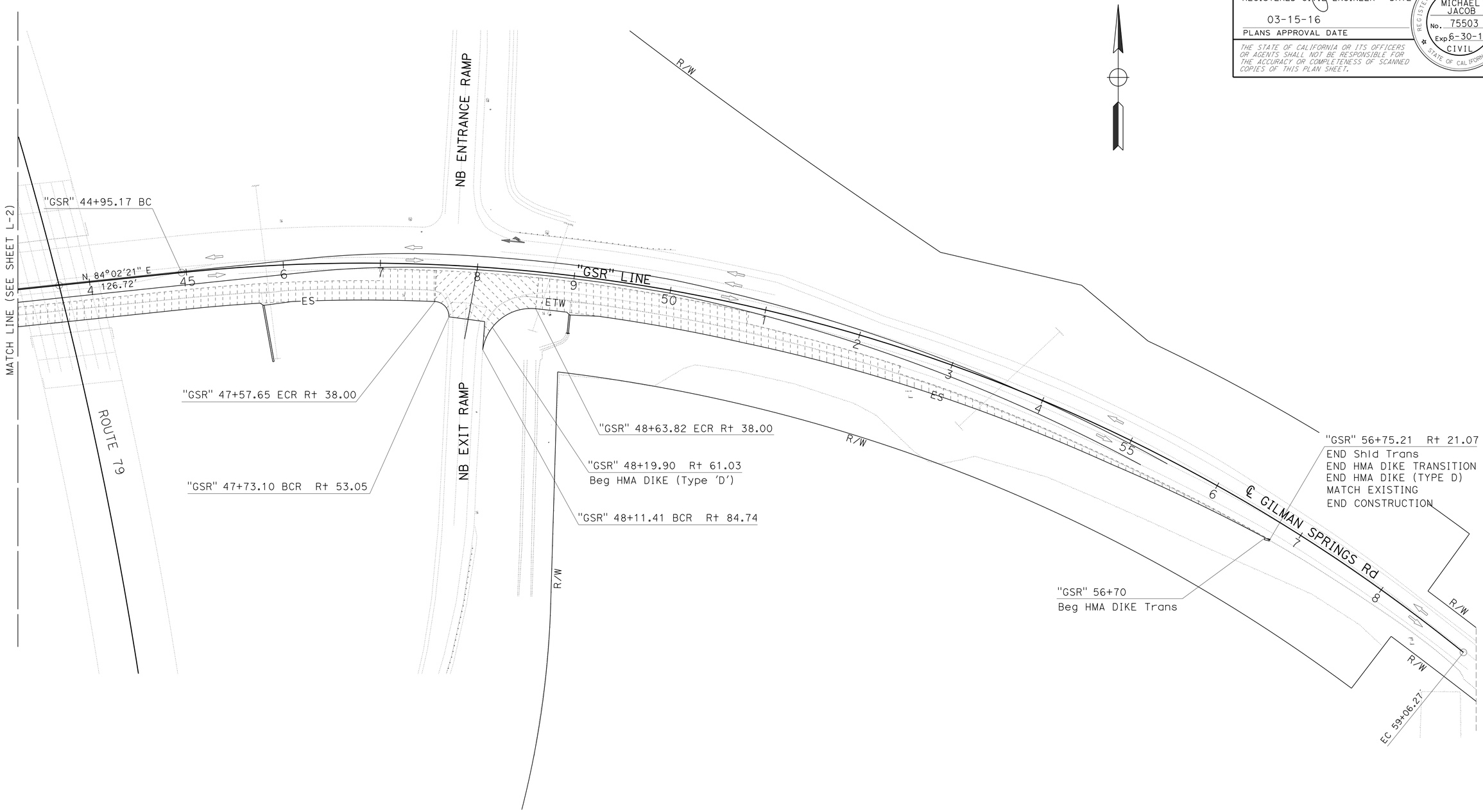

STAGE CONSTRUCTION PLAN

STAGE 2

SCALE: 1"=50'

SC-4

APPROVED FOR STAGE CONSTRUCTION WORK ONLY

STATE OF CALIFORNIA - DEPARTMENT OF TRANSPORTATION

Caltrans

DESIGN

FUNCTIONAL SUPERVISOR: SERGIO AVILA

CALCULATED-DESIGNED BY: MICHAEL JACOB

CHECKED BY: REZA TOOTOONCHI

REVISED BY

DATE REVISED

LAST REVISION 03-15-16

DATE PLOTTED => 26-MAY-2016

TIME PLOTTED => 08:02

Dist	COUNTY	ROUTE	POST MILES TOTAL PROJECT	SHEET No.	TOTAL SHEETS
08	Riv	79	R33.9	21	101

M.M. Kamgar Haghighi 03-15-16
REGISTERED CIVIL ENGINEER DATE

03-15-16
PLANS APPROVAL DATE

REGISTERED PROFESSIONAL ENGINEER
M.M.KAMGAR
No. C58039
Exp. 6-30-16
CIVIL
STATE OF CALIFORNIA

THE STATE OF CALIFORNIA OR ITS OFFICERS OR AGENTS SHALL NOT BE RESPONSIBLE FOR THE ACCURACY OR COMPLETENESS OF SCANNED COPIES OF THIS PLAN SHEET.

LEGEND:

- TEMPORARY STRIPING DETAIL
- TYPE IV ARROW
- TEMPORARY CRASH CUSHION
- TEMPORARY RAILING TYPE K

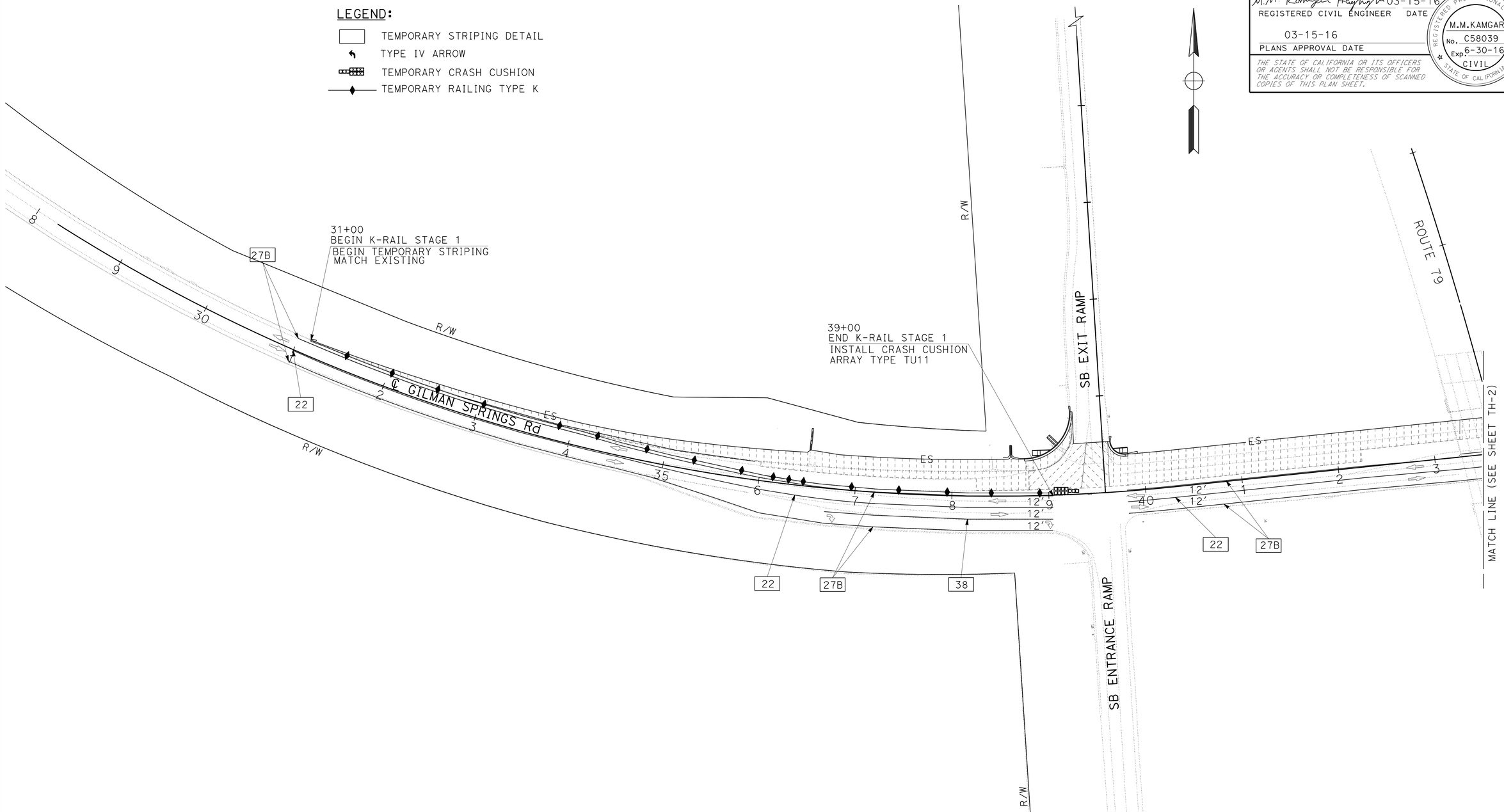

TRAFFIC HANDLING PLAN
STAGE 1
SCALE: 1"=50'

TH-1

APPROVED FOR TRAFFIC HANDLING WORK ONLY

STATE OF CALIFORNIA - DEPARTMENT OF TRANSPORTATION
Caltrans
DESIGN

FUNCTIONAL SUPERVISOR: MARIO AMANCIO
CALCULATED-DESIGNED BY: MEHDI KAMGAR
CHECKED BY: MARIO AMANCIO
REVISED BY
DATE REVISED

LAST REVISION 03-15-16
DATE PLOTTED => 26-MAY-2016
TIME PLOTTED => 08:02

Dist	COUNTY	ROUTE	POST MILES TOTAL PROJECT	SHEET No.	TOTAL SHEETS
08	Riv	79	R33.9	22	101

M.M. Kamgar 03-15-16
REGISTERED CIVIL ENGINEER DATE

03-15-16
PLANS APPROVAL DATE

REGISTERED PROFESSIONAL ENGINEER
M.M.KAMGAR
No. C58039
Exp. 6-30-16
CIVIL
STATE OF CALIFORNIA

THE STATE OF CALIFORNIA OR ITS OFFICERS OR AGENTS SHALL NOT BE RESPONSIBLE FOR THE ACCURACY OR COMPLETENESS OF SCANNED COPIES OF THIS PLAN SHEET.

TRAFFIC HANDLING PLAN
STAGE 1
SCALE: 1"=50'

TH-2

APPROVED FOR TRAFFIC HANDLING WORK ONLY

STATE OF CALIFORNIA - DEPARTMENT OF TRANSPORTATION
Caltrans
DESIGN

FUNCTIONAL SUPERVISOR: MARIO AMANCIO
CALCULATED-DESIGNED BY: MEHDI KAMGAR
CHECKED BY: MARIO AMANCIO
REVISED BY
DATE REVISED

LAST REVISION 03-15-16
DATE PLOTTED => 26-MAY-2016
TIME PLOTTED => 08:02

Dist	COUNTY	ROUTE	POST MILES TOTAL PROJECT	SHEET No.	TOTAL SHEETS
08	Riv	79	R33.9	23	101

M.M. Kamgar Haghighi 03-15-16
REGISTERED CIVIL ENGINEER DATE

03-15-16
PLANS APPROVAL DATE

REGISTERED PROFESSIONAL ENGINEER
M.M.KAMGAR
No. C58039
Exp. 6-30-16
CIVIL
STATE OF CALIFORNIA

THE STATE OF CALIFORNIA OR ITS OFFICERS OR AGENTS SHALL NOT BE RESPONSIBLE FOR THE ACCURACY OR COMPLETENESS OF SCANNED COPIES OF THIS PLAN SHEET.

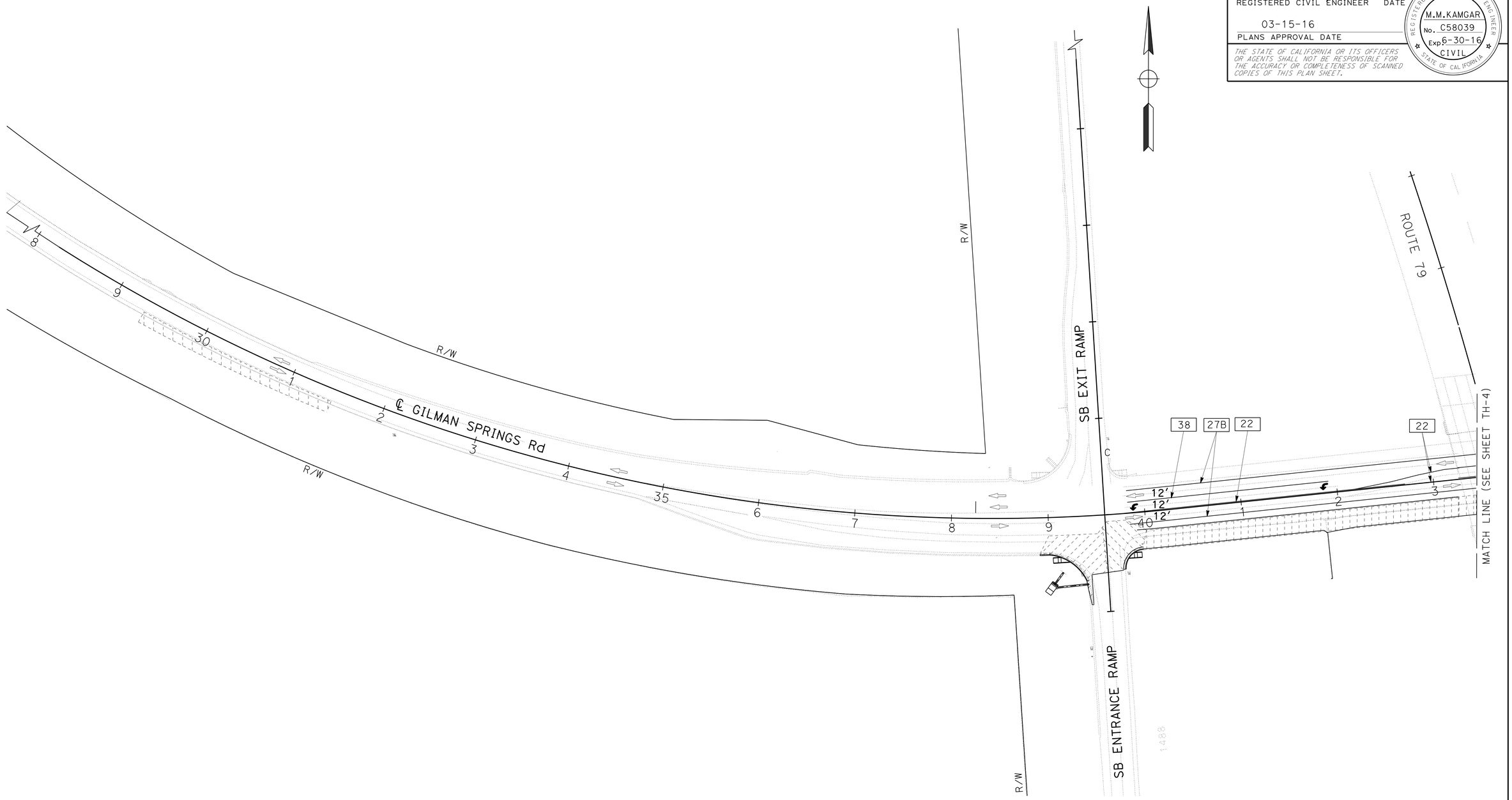

APPROVED FOR TRAFFIC HANDLING WORK ONLY

TRAFFIC HANDLING PLAN
STAGE 2
SCALE 1"=50

TH-3

STATE OF CALIFORNIA - DEPARTMENT OF TRANSPORTATION
Caltrans
DESIGN

FUNCTIONAL SUPERVISOR: MARIO AMANCIO

CALCULATED-DESIGNED BY: MEHDI KAMGAR
CHECKED BY: MARIO AMANCIO

REVISED BY
DATE REVISED

LAST REVISION 03-15-16 | DATE PLOTTED => 26-MAY-2016 | TIME PLOTTED => 08:02

Dist	COUNTY	ROUTE	POST MILES TOTAL PROJECT	SHEET No.	TOTAL SHEETS
08	Riv	79	R33.9	24	101

M.M. Kamgar Haghighi 03-15-16
REGISTERED CIVIL ENGINEER DATE

03-15-16
PLANS APPROVAL DATE

REGISTERED PROFESSIONAL ENGINEER
M.M.KAMGAR
No. C58039
Exp. 6-30-16
CIVIL
STATE OF CALIFORNIA

THE STATE OF CALIFORNIA OR ITS OFFICERS OR AGENTS SHALL NOT BE RESPONSIBLE FOR THE ACCURACY OR COMPLETENESS OF SCANNED COPIES OF THIS PLAN SHEET.

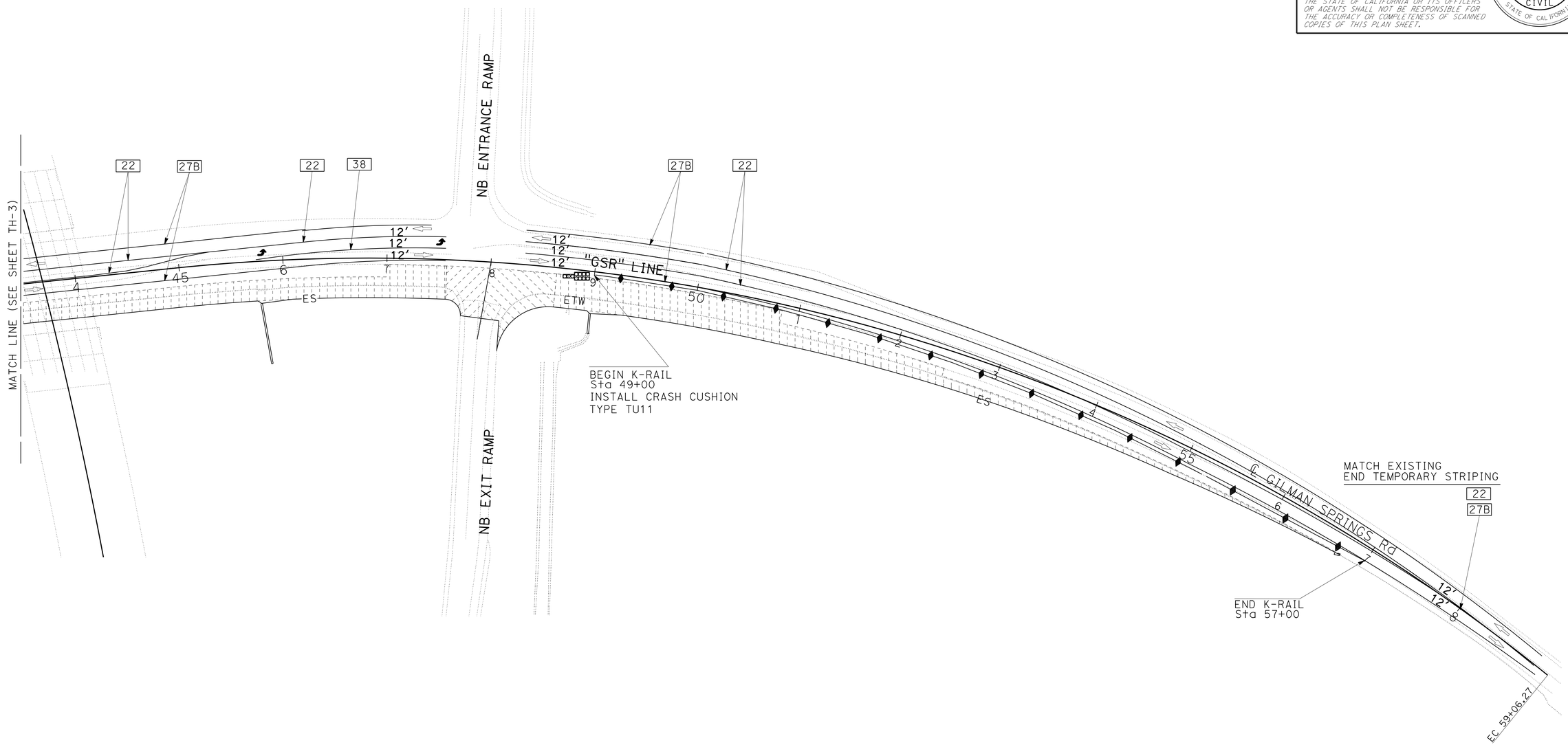

TRAFFIC HANDLING PLAN

STAGE 2

SCALE 1"=50

TH-4

APPROVED FOR TRAFFIC HANDLING WORK ONLY

STATE OF CALIFORNIA - DEPARTMENT OF TRANSPORTATION

Caltrans®

DESIGN

FUNCTIONAL SUPERVISOR: MARIO AMANCIO

CALCULATED-DESIGNED BY: MEHDI KAMGAR

CHECKED BY: MARIO AMANCIO

REVISED BY

DATE REVISED

LAST REVISION 03-15-16 | DATE PLOTTED => 26-MAY-2016 | TIME PLOTTED => 08:02

Dist	COUNTY	ROUTE	POST MILES TOTAL PROJECT	SHEET No.	TOTAL SHEETS
08	Riv	79	R33.9	25	101

M.M. Kamgar Hayhigh 03-15-16
REGISTERED CIVIL ENGINEER DATE

03-15-16
PLANS APPROVAL DATE

REGISTERED PROFESSIONAL ENGINEER
M.M.KAMGAR
No. C58039
Exp. 6-30-16
CIVIL
STATE OF CALIFORNIA

THE STATE OF CALIFORNIA OR ITS OFFICERS OR AGENTS SHALL NOT BE RESPONSIBLE FOR THE ACCURACY OR COMPLETENESS OF SCANNED COPIES OF THIS PLAN SHEET.

NOTE:

1-QUANTITY FOR REMOVING TRAFFIC STRIPE IS FOR REMOVING ALL CONFLICTING TRAFFIC STRIPES WITHIN THE PROJECT LIMIT.

REMOVE PAVEMENT DELINEATION QUANTITIES

DETAIL No.	REMOVE PAVEMENT MARKERS				REMOVE PAINTED TRAFFIC STRIPE		REMOVE THERMOPLASTIC TRAFFIC STRIPE HAZARDOUS WASTE
	TYPE C	TYPE G	TYPE D	TYPE H	WHITE	8" WHITE	4" YELLOW
	EA				LF		LF
12		64			2948		
22			34				408
25A				120			2862
27B					6040		
38		36				1350	
SUB-TOTAL		100	34	120	8988	1350X2=2700	3270
TOTAL		254			11688		3270

TEMPORARY PAVEMENT DELINEATION QUANTITIES

DETAIL No.	TEMPORARY PAVEMENT MARKERS			TEMPORARY TRAFFIC STRIPE (PAINT)		
	TYPE G	TYPE D	TYPE H	4" YELLOW	4" WHITE	8" WHITE
	EA			LF		
22		400		4652		
27B					6680	
38	30					631
SUB-TOTAL	30	400		4652	6680	631x2=1262
TOTAL	430			12594		

TEMPORARY RAILING TYPE K

LF
1720

TEMPORARY CRASH CUSHION MODULE

EA
22

REMOVE THERMOPLASTIC PAVEMENT MARKING

DESCRIPTION	SQFT
TYPE V ARROW	132
TYPE IV ARROW	150
TOTAL	* 282

* QUANTITY INCLUDED IN PDQ-1

TEMPORARY PAVEMENT MARKING (PAINT)

DESCRIPTION	SQFT
TYPE IV ARROW	90
TOTAL	90

TRAFFIC HANDLING QUANTITIES

NO SCALE

THQ-1

STATE OF CALIFORNIA - DEPARTMENT OF TRANSPORTATION
Caltrans
DESIGN

FUNCTIONAL SUPERVISOR: MARIO AMANCIO
CALCULATED-DESIGNED BY: MEHDI KAMGAR
CHECKED BY: MARIO AMANCIO
REVISED BY
DATE REVISED

LAST REVISION 03-15-16
DATE PLOTTED => 26-MAY-2016
TIME PLOTTED => 08:02

Dist	COUNTY	STATE ROUTE	POST MILES TOTAL PROJECT	SHEET No.	TOTAL SHEETS
08	Riv	79	R33.9	26	101

M.M. Kamgar Hayhigh 03-14-16
REGISTERED CIVIL ENGINEER DATE

03-15-16
PLANS APPROVAL DATE

REGISTERED PROFESSIONAL ENGINEER M.M.KAMGAR No. C58039 Exp. 6-30-16 CIVIL STATE OF CALIFORNIA

THE STATE OF CALIFORNIA OR ITS OFFICERS OR AGENTS SHALL NOT BE RESPONSIBLE FOR THE ACCURACY OR COMPLETENESS OF SCANNED COPIES OF THIS PLAN SHEET.

NOTE:

1- REMOVE ALL CONFLICTING TRAFFIC STRIPE AND THE COST IS INCLUDED IN THE ITEM REMOVE TRAFFIC STRIPE.

LEGEND:

S SIGNAL
A AHEAD
TYPE VII
TYPE I(24FT)
TYPE IV
TYPE II
TYPE V

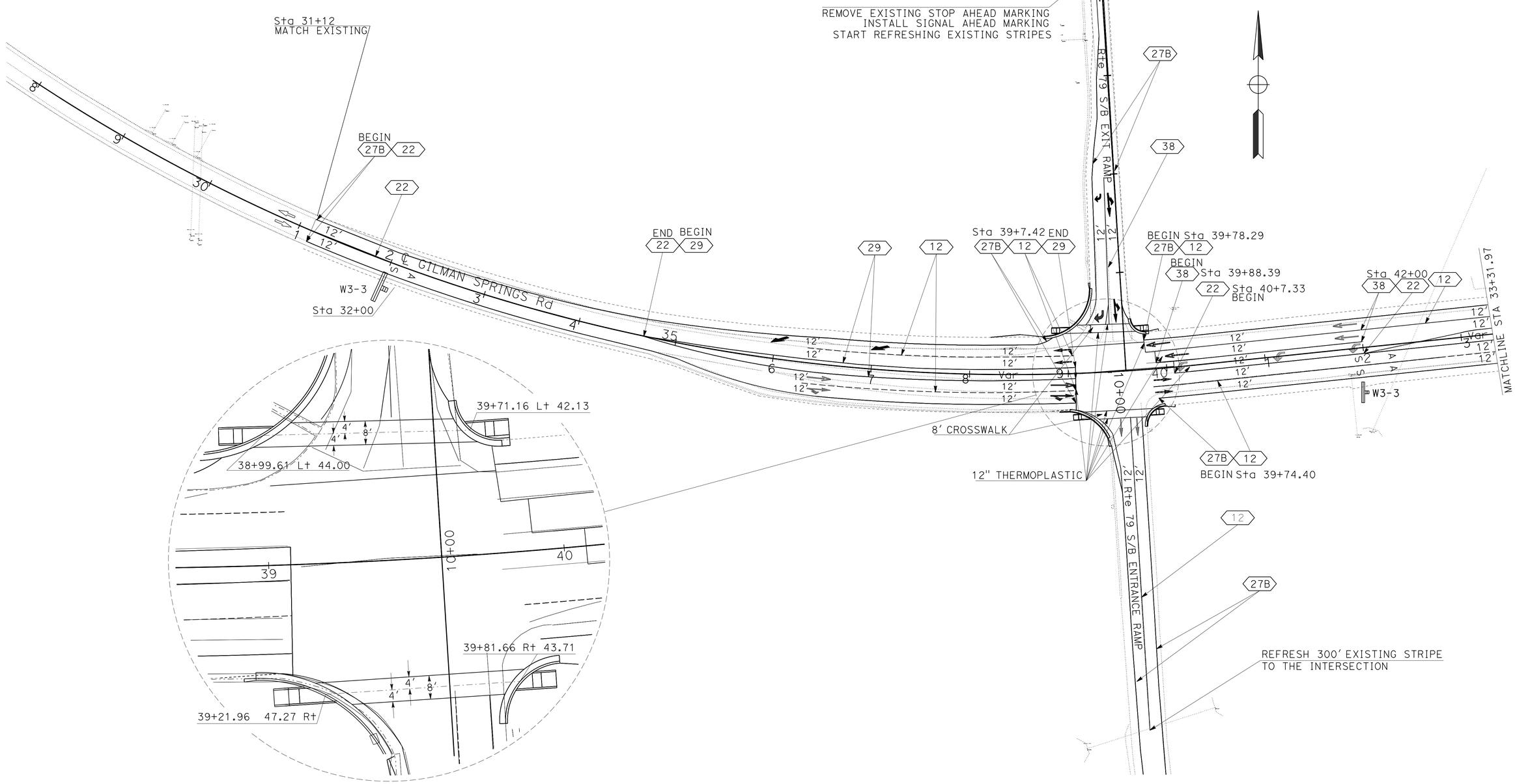

DETAIL
NO SCALE

PAVEMENT DELINEATION & SIGN PLANS

APPROVED FOR PAVEMENT DELINEATION AND SIGN WORK ONLY

SCALE 1"=50

PD-1

STATE OF CALIFORNIA - DEPARTMENT OF TRANSPORTATION
Caltrans®
DESIGN

FUNCTIONAL SUPERVISOR: MARIO AMANCIO
CALCULATED-DESIGNED BY: MEHDI KAMGAR
CHECKED BY: MARIO AMANCIO
REVISED BY
DATE REVISED

LAST REVISION 03-14-16
DATE PLOTTED => 26-MAY-2016
TIME PLOTTED => 08:02

Dist	COUNTY	STATE ROUTE	POST MILES TOTAL PROJECT	SHEET No.	TOTAL SHEETS
08	Riv	79	R33.9	27	101

M.M. Kamgar Hayhigh 03-11-16
REGISTERED CIVIL ENGINEER DATE

03-15-16
PLANS APPROVAL DATE

REGISTERED PROFESSIONAL ENGINEER
M.M.KAMGAR
No. C58039
Exp. 6-30-16
CIVIL
STATE OF CALIFORNIA

THE STATE OF CALIFORNIA OR ITS OFFICERS OR AGENTS SHALL NOT BE RESPONSIBLE FOR THE ACCURACY OR COMPLETENESS OF SCANNED COPIES OF THIS PLAN SHEET.

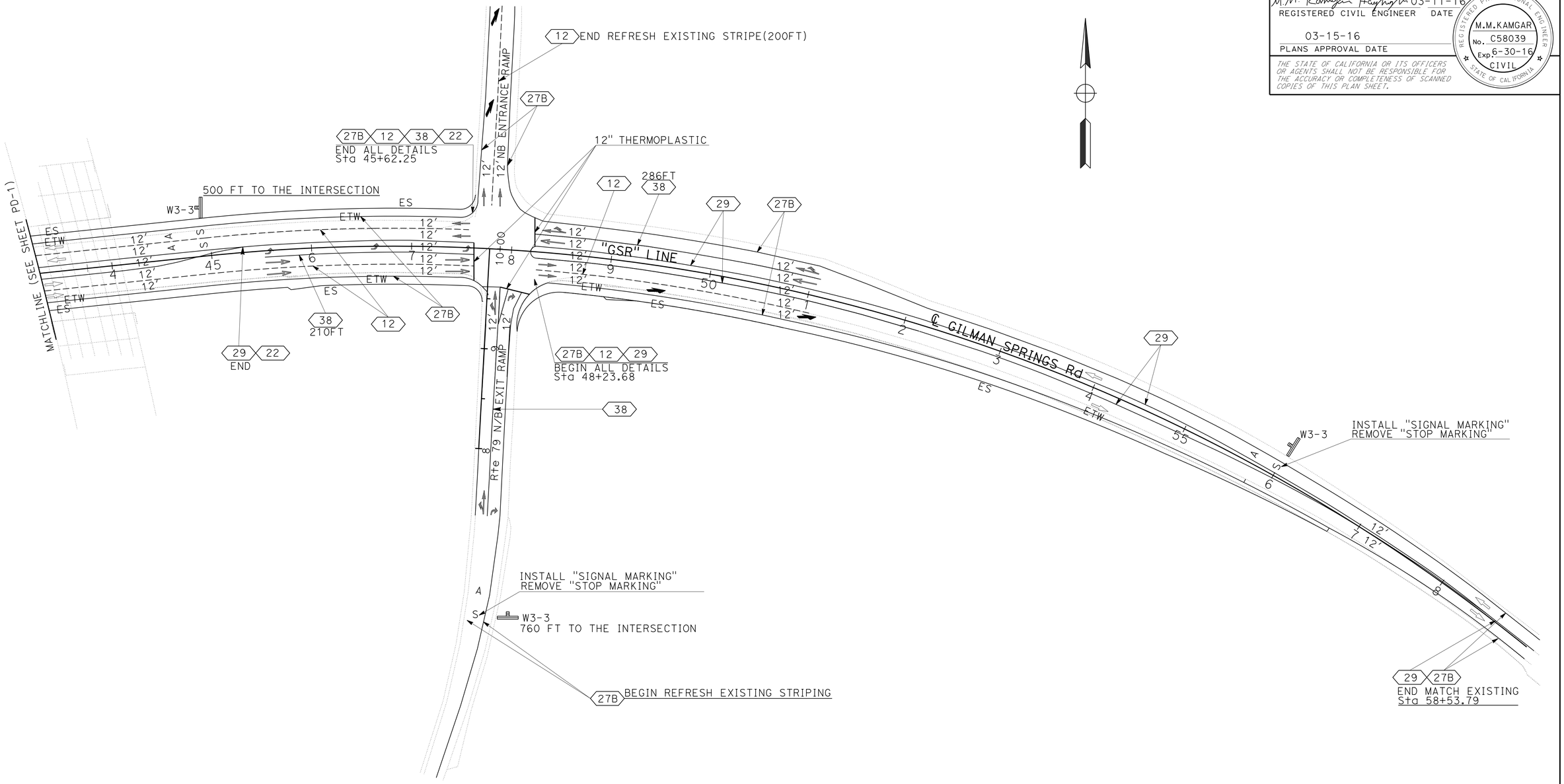

PAVEMENT DELINEATION & SIGN PLAN

APPROVED FOR PAVEMENT DELINEATION AND SIGN WORK ONLY

SCALE: 1"=50'

PD-2

STATE OF CALIFORNIA - DEPARTMENT OF TRANSPORTATION
Caltrans®
DESIGN

FUNCTIONAL SUPERVISOR: MARIO AMANCIO
CALCULATED-DESIGNED BY: MEHDI KAMGAR
CHECKED BY: MARIO AMANCIO
REVISED BY
DATE REVISED

LAST REVISION 03-11-16 | DATE PLOTTED => 26-MAY-2016 | TIME PLOTTED => 08:02

Dist	COUNTY	ROUTE	POST MILES TOTAL PROJECT	SHEET No.	TOTAL SHEETS
08	Riv	79	R33.9	28	101

M.M. Kamgar Hagigh 03-15-16
REGISTERED CIVIL ENGINEER DATE

03-15-16
PLANS APPROVAL DATE

REGISTERED PROFESSIONAL ENGINEER M.M.KAMGAR No. C58039 Exp. 6-30-16 CIVIL STATE OF CALIFORNIA

THE STATE OF CALIFORNIA OR ITS OFFICERS OR AGENTS SHALL NOT BE RESPONSIBLE FOR THE ACCURACY OR COMPLETENESS OF SCANNED COPIES OF THIS PLAN SHEET.

NOTES:

1-THE STRIPING & MARKER QUANTITY IS FOR REFRESHING EXISTING TRAFFIC STRIPES FOR THE LIMIT SHOWN ON THE PLAN.

2-QUANTITY FOR REMOVING TRAFFIC STRIPE IS FOR REMOVING ALL CONFLICTING TRAFFIC STRIPES WITHIN THE PROJECT LIMIT.

TREATED WOOD WASTE

LB
150

PAVEMENT DELINEATION QUANTITIES

DETAIL No.	PAVEMENT MARKERS RETROREFLECTIVE TYPE G	TYPE D	TYPE H	THERMOPLASTIC TRAFFIC STRIPE (SPRAYABLE) 4" WHITE	4" YELLOW	THERMOPLASTIC TRAFFIC STRIPE 8" WHITE
	EA			LF		LF
12	64			2948		
22		34			408	
25A			120		2862	
27B				6040		
38	36					1350
SUB-TOTAL	100	34	120	8988	3270	1350
TOTAL	254			12258		1350

REMOVE ROADSIDE SIGN

DESCRIPTION	EA
R1-1	6
W3-1	2
TOTAL	8

ROADSIDE SIGN ONE POST

EA
5

THERMOPLASTIC PAVEMENT MARKING

DESCRIPTION	SQFT
TYPE I(LT) ARROW	360
TYPE I(18FT)ARROW	372
TYPE V ARROW	330
TYPE IV ARROW	150
TYPE VI ARROW	252
12" THERMOPLASTIC LIMIT LINE	266
SIGNAL	256
AHEAD	248
TOTAL	2234

REMOVE THERMOPLASTIC PAVEMENT MARKING

DESCRIPTION	SQFT
STOP	88
AHEAD	31
12" THERMOPLASTIC	92
THQ-1	282
TOTAL	493

CONTRACTOR FURNISHED SIGN QUANTITIES

SIGN CODE	SIGN SIZE L X D	SINGLE FACE	DOUBLE FACED	BACKGROUND SHEETING COLOR	RETROREFLECTIVE ASTM TYPE	LEGEND SHEETING COLOR	RETROREFLECTIVE ASTM TYPE	GRAFFITI FILM PREMIUM	FURNISH SINGLE-SHEET UNFRAMED ALUMINIUM 0.08"	0.063"	(N) INSTALL SIGN MAST ARM HANGER ASSEMBLY	ROADSIDE SIGN LENGTH/ POST SIZE	DESCRIPTION/REMARKS	
									SQFT	SQFT		14' (6" x 6")		
W3-3	36" x 36"	5		YELLOW	IX	BLACK	IX	X		45		4	SIGNAL AHEAD SYMBOL	SEE PD-1,PD-2
W3-3	48" x 48"	1		YELLOW	IX	BLACK	IX	X		16			SIGNAL AHEAD SYMBOL	SEE E-4
R3-4	36" x 36"	4		WHITE	IX	BLACK	IX	X		36	X		NO U TURN	SEE E-4
R9-3	18" X 18"		6	WHITE	IX	BLACK	IX	X	30		X		NO PEDESTRIAN SYMBOL	SEE E-4
SP1	72" x 18"	1		GREEN	IX	WHITE	IX	X	9		X		SR 79 N/B →	SEE E-4
SP2	72" x 18"	1		GREEN	IX	WHITE	IX	X	9		X		← SR 79 N/B	SEE E-4
SP3	72" x 18"	1		GREEN	IX	WHITE	IX	X	9		X		SR 79 S/B →	SEE E-4
SP4	72" x 18"	1		GREEN	IX	WHITE	IX	X	9		X		← SR 79 S/B	SEE E-4
SP5	72" x 18"		4	GREEN	IX	WHITE	IX	X	36		X		Gilman Springs Rd	SEE E-4
TOTAL									102	97				

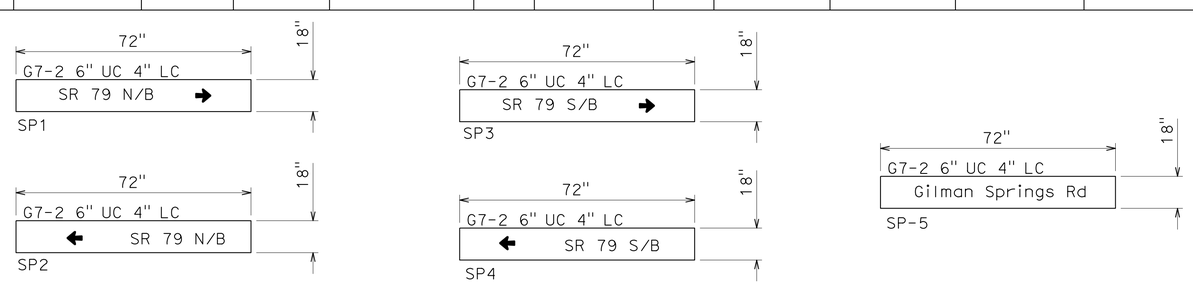

(N)- NOT A SEPARATE PAY ITEM, FOR INFORMATION ONLY.

PAVEMENT DELINEATION AND SIGN QUANTITIES

NO SCALE **PDQ-1**

REVISED BY | DATE REVISED
MEHDI KAMGAR | MARIO AMANCIO
CALCULATED-DESIGNED BY | CHECKED BY
FUNCTIONAL SUPERVISOR: MARIO AMANCIO
STATE OF CALIFORNIA - DEPARTMENT OF TRANSPORTATION
Caltrans® DESIGN

LAST REVISION 03-15-16 | DATE PLOTTED => 26-MAY-2016 | TIME PLOTTED => 08:02

Dist	COUNTY	ROUTE	POST MILES TOTAL PROJECT	SHEET No.	TOTAL SHEETS
08	Riv	79	R33.9	29	101

REGISTERED CIVIL ENGINEER 03-15-16 DATE

03-15-16
PLANS APPROVAL DATE

REGISTERED PROFESSIONAL ENGINEER MICHAEL JACOB No. 75503 Exp. 6-30-16 CIVIL STATE OF CALIFORNIA

THE STATE OF CALIFORNIA OR ITS OFFICERS OR AGENTS SHALL NOT BE RESPONSIBLE FOR THE ACCURACY OR COMPLETENESS OF SCANNED COPIES OF THIS PLAN SHEET.

ROADWAY QUANTITY

SHEET No.	STATION "GSR"	HOT MIX ASPHALT (TYPE A)	(CLASS 2) AGGREGATE BASE	TACK COAT	PRIME COAT	ROADWAY EXCAVATION	ROADWAY EMBANKMENT (N)	COLD PLANE ASPHALT CONCRETE PAVEMENT	MINOR CONCRETE (MISCELLANEOUS CONSTRUCTION) CURB & GUTTER	PEDESTRIAN REFUGE AREA	RETAINING CURB
		TON	CY	TON	TON	CY	CY	SQYD	CY		
L-1 & L-2	FROM 31+12.00 TO 56+75.21	1342.2	1,115	0.8	5.6	2,150	350	3,958	10.4	3.26	2.15
FROM HMA DIKE		186.0									
FROM SAFETY EDGE		9.6									
FROM DQ-1		2.2							0.17		
TOTAL		1726	1,115	0.8	5.6	2,150	350	3,958	15.98		

(N) NOT A SEPARATE PAY ITEM, FOR INFORMATION ONLY

TEMPORARY CONSTRUCTION BMPs

DESCRIPTION	UNIT	QUANTITY
TEMPORARY SOIL BINDER	SQYD	10,164
TEMPORARY FIBER ROLL	LF	480
STORM WATER ANNUAL REPORT	EA	1

SAFETY EDGE

LOCATION				(N) SAFETY EDGE	HMA (TYPE A)
SHEET	STATION	LT	RT	LF	TON
L-1	40+00 TO 43+30	X		330	3.2
L-1	43+30 TO 47+61	X		473	4.6
L-2	39+95 TO 41+77		X	182	1.8
			TOTAL		9.6 **

(N) NOT A SEPARATE PAY ITEM, FOR INFORMATION ONLY
** INCLUDED IN ROADWAY QUANTITY

HMA DIKE

SHEET No.	LOCATION	Beg STATION	END STATION	PLACE HMA DIKE (Type C)	PLACE HMA DIKE (Type D)	PLACE HMA DIKE (Type E)	HMA (Type A)
				LF	LF	LF	TON*
L-1	R+	29+14.92	31+60.55	247.78	---	---	3.9
L-1	L+	31+12.82	38+75.49	---	764.31	---	67.9
L-1	R+	38+89.72	38+94.62	---	---	5.00	0.2
L-1	L+	"R1" 9+08.98	"R1" 9+33.18	---	---	24.56	1.1
L-1	L+	"R1" 10+85.51	"R1" 10+90.50	---	5.00	---	0.5
L-1	L+	39+86.46	40+00.00	---	---	13.54	0.6
L-1,-2	R+	41+77.17	47+68.55	---	---	597.45	26.8
L-1	R+	48+25.50	56+75.21	---	956.46	---	84.9
TOTAL				247.78	1725.77	640.55	186 **

* INCLUDES 0.20' HMA UNDER DIKE
** INCLUDED IN ROADWAY QUANTITY

TEMPORARY FENCING

SHEET No.	"GSR" STATION BEGIN	"GSR" STATION END	TYPE ESA (LF)	SILT FENCE (LF)
L-1	29+00 L+	43+25 L+	1212	
L-1	31+00 R+	43+25 R+	901	
L-2	43+25 L+	47+60 L+	452	
L-2	43+25 R+	47+60 R+	565	
L-2	48+05 R+	57+50 R+		1200
		TOTAL	3130	1200

MIDWEST GUARDRAIL SYSTEM

SHEET No.	LOCATION	STATION BEGIN	STATION END	MGS	AFTS	VEGETATION CONTROL (MINOR CONCRETE)
				LF	EA	SQYD
L-1 "GSR"	RIGHT	29+44.66	31+30.55	111.5	2	72

SUMMARY OF QUANTITIES

Q-1

REVISED BY | DATE REVISED
REZA TOOTOONCHI | MICHAEL JACOB
CALCULATED-DESIGNED BY | CHECKED BY
FUNCTIONAL SUPERVISOR: SERGIO E AVILA
STATE OF CALIFORNIA - DEPARTMENT OF TRANSPORTATION
Caltrans DESIGN

LAST REVISION 03-15-16 | DATE PLOTTED => 26-MAY-2016 | TIME PLOTTED => 08:02

Dist	COUNTY	ROUTE	POST MILES TOTAL PROJECT	SHEET No.	TOTAL SHEETS
08	Riv	79	R33.9	30	101

LICENSED LANDSCAPE ARCHITECT

03-13-16
PLANS APPROVAL DATE

THE STATE OF CALIFORNIA OR ITS OFFICERS OR AGENTS SHALL NOT BE RESPONSIBLE FOR THE ACCURACY OR COMPLETENESS OF SCANNED COPIES OF THIS PLAN SHEET.

LICENSED LANDSCAPE ARCHITECT
MICHAEL STIVERS No. 2657
Signature
Renewal Date 08-31-17
03-15-16
Date
STATE OF CALIFORNIA

NOTE:

FOR ACCURATE RIGHT OF WAY DATA, CONTACT RIGHT OF WAY ENGINEERING AT THE DISTRICT OFFICE.

LEGEND:

EROSION CONTROL (HYDROSEED) (SQFT) Type 1

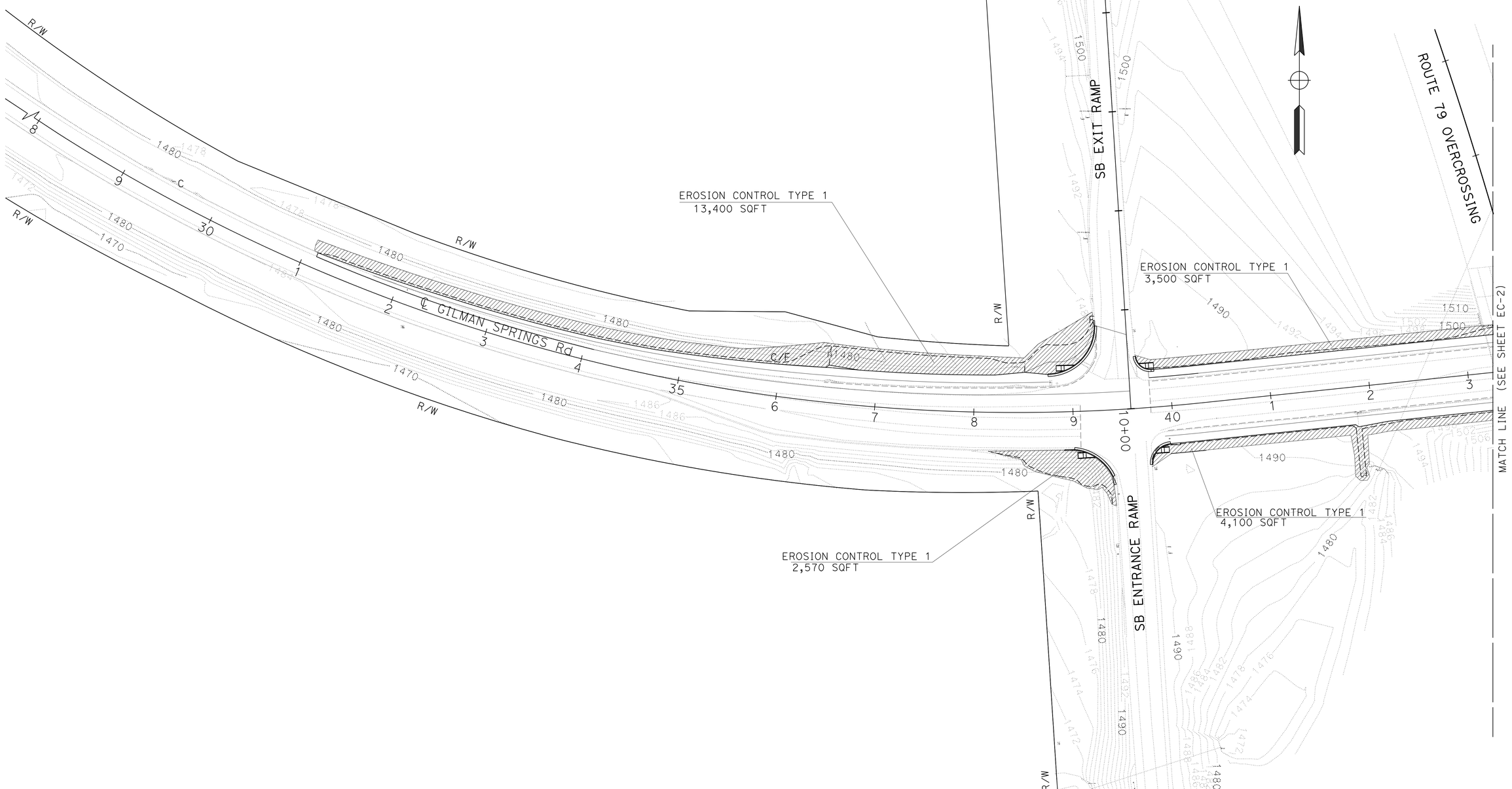

APPROVED FOR EROSION CONTROL WORK ONLY

EROSION CONTROL PLAN

SCALE: 1"=50'

EC-1

STATE OF CALIFORNIA - DEPARTMENT OF TRANSPORTATION
Caltrans® LANDSCAPE ARCHITECTURE

SENIOR LANDSCAPE ARCHITECT: JOHN STANTON
CALCULATED-DESIGNED BY: MIKE STIVERS
CHECKED BY: MIKE BABICH
REVISED BY
DATE REVISED

LAST REVISION 03-15-16
DATE PLOTTED => 26-MAY-2016
TIME PLOTTED => 08:02

Dist	COUNTY	ROUTE	POST MILES TOTAL PROJECT	SHEET No.	TOTAL SHEETS
08	RIV	79	R33.9	31	101

LICENSED LANDSCAPE ARCHITECT

03-15-16

PLANS APPROVAL DATE

LICENSED LANDSCAPE ARCHITECT MICHAEL STIVERS No. 2657 Signature 08-31-17 Renewal Date 03-15-16 Date STATE OF CALIFORNIA

THE STATE OF CALIFORNIA OR ITS OFFICERS OR AGENTS SHALL NOT BE RESPONSIBLE FOR THE ACCURACY OR COMPLETENESS OF SCANNED COPIES OF THIS PLAN SHEET.

NOTE:

FOR ACCURATE RIGHT OF WAY DATA, CONTACT RIGHT OF WAY ENGINEERING AT THE DISTRICT OFFICE.

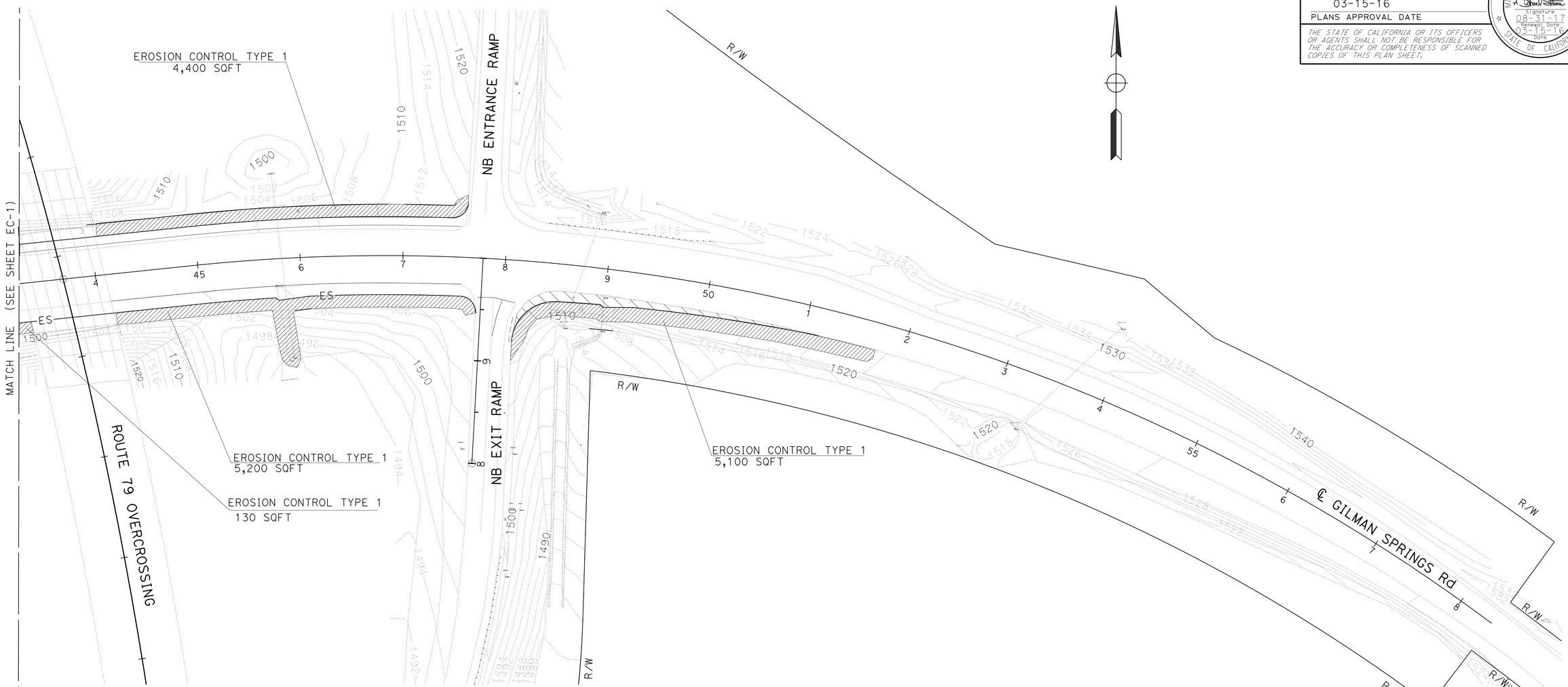

EROSION CONTROL PLAN

APPROVED FOR EROSION CONTROL WORK ONLY

SCALE: 1"=50'

EC-2

STATE OF CALIFORNIA - DEPARTMENT OF TRANSPORTATION

Caltrans® LANDSCAPE ARCHITECTURE

SENIOR LANDSCAPE ARCHITECT: JOHN STANTON

CALCULATED-DESIGNED BY: MIKE STIVERS

CHECKED BY: MIKE BABICH

REVISED BY

DATE REVISED

LAST REVISION 03-15-16

DATE PLOTTED => 26-MAY-2016

TIME PLOTTED => 08:02

Dist	COUNTY	ROUTE	POST MILES TOTAL PROJECT	SHEET No.	TOTAL SHEETS
08	Riv	79	R33.9	32	101

LICENSED LANDSCAPE ARCHITECT

03-15-16

PLANS APPROVAL DATE

LICENSED LANDSCAPE ARCHITECT MICHAEL STIVERS No. 2657 Signature 08-31-17 Renewal Date 03-14-16 Date STATE OF CALIFORNIA

THE STATE OF CALIFORNIA OR ITS OFFICERS OR AGENTS SHALL NOT BE RESPONSIBLE FOR THE ACCURACY OR COMPLETENESS OF SCANNED COPIES OF THIS PLAN SHEET.

EROSION CONTROL QUANTITIES TABLE

SHEET	HYDROSEED SQFT
EC-1	23,570
EC-2	14,830
TOTAL	38,400

MOVE IN/MOVE OUT QUANTITY TABLE

ITEM	QUANTITY EA
MOVE IN/MOVE OUT	1
TOTAL	1

SEED MIX 1

BOTANICAL NAME (COMMON NAME)	PERCENT GERMINATION (MINIMUM)	POUNDS PURE LIVE SEED PER ACRE (SLOPE MEASUREMENT)
ABRONIA VILLOSA (SAND VERBENA)	40	8.0
BROMUS CARINATUS (CALIFORNIA BROME)	70	15.0
BAILEYA MULTIRADIATA (DESERT MARIGOLD)	40	2.0
ERIOGONUM FASCICULATUM (CALIFORNIA BUCKWHEAT)	10	8.0
ESCHSCHOLZIA CALIFORNICA (CALIFORNIA POPPY)	60	4.0
PHACELIA CAMPANULARIA (CALIFORNIA BLUEBELLS)	45	3.0
	TOTAL	40.0

EROSION CONTROL TYPE 1

SEQUENCE	ITEM	MATERIAL DESCRIPTION	MATERIAL TYPE	APPLICATION RATE	REMARKS
STEP 1	HYDROSEED	SEED	MIX 1	29.5 LB/ACRE	
		FIBER	PER SPECIFICATIONS	2500 LB/ACRE FOR SLOPES ≤ 4 : 1 (HORIZ:VERT) 3000 LB/ACRE FOR SLOPES > 4 : 1 AND ≤ 3:1 (HORIZ : VERT) 3500 LB/ACRE FOR SLOPES > 3 : 1 AND ≤ 2:1 (HORIZ : VERT) 4000 LB/ACRE FOR SLOPES > 2 : 1 AND ≤ 1:1 (HORIZ : VERT) 4500 LB/ACRE FOR SLOPES > 1 : 1 (HORIZ:VERT)	APPLICATION RATE FOR FIBER AND TACKIFIER COMBINED
		TACKIFIER	PER SPECIFICATIONS		

EROSION CONTROL QUANTITIES

NO SCALE **ECQ-1**

STATE OF CALIFORNIA - DEPARTMENT OF TRANSPORTATION

Caltrans® LANDSCAPE ARCHITECTURE

SENIOR LANDSCAPE ARCHITECT: JOHN STANTON

CALCULATED-DESIGNED BY: MIKE STIVERS

CHECKED BY: MIKE BABICH

REVISED BY / DATE REVISED

LAST REVISION 03-11-16 | DATE PLOTTED => 26-MAY-2016 | TIME PLOTTED => 08:02

Dist	COUNTY	ROUTE	POST MILES TOTAL PROJECT	SHEET No.	TOTAL SHEETS
08	Riv	79	R33.9	33	101

REGISTERED ELECTRICAL ENGINEER 03-15-16 DATE

03-15-16
PLANS APPROVAL DATE

REGISTERED PROFESSIONAL ENGINEER JAIME ESTRADA No. E 18351 Exp. 6-30-16 ELECTRICAL STATE OF CALIFORNIA

THE STATE OF CALIFORNIA OR ITS OFFICERS OR AGENTS SHALL NOT BE RESPONSIBLE FOR THE ACCURACY OR COMPLETENESS OF SCANNED COPIES OF THIS PLAN SHEET.

LEGEND: (THIS SHEET ONLY)

1. INSTALL (2) DEPARTMENT-FURNISHED MODEL 2070L CONTROLLERS INSIDE TYPE 332L ASSEMBLY CABINET AND BATTERY BACK-UP SYSTEM ON A MODIFIED FOUNDATION AS PER SHEETS E-5, & E-6.
2. INSTALL GPS MODEM WITH EXTERNAL ANTENNA, SEE DETAIL-A ON SHEET E-4. INSTALL LTE MODEM WITH INTERNAL ANTENNAS.
3. INSTALL EMERGENCY PRE-EMPTION CABLES ONLY, WITHOUT THE HARDWARE OR SOFTWARE.
4. INSTALL UNMETERED 120-240 V TYPE III BF SERVICE AND FOUNDATION WITH TYPE V PEC AS PER RSP ES-2E AND RSP ES-2C.
   SIGNAL: 50 A, 120 V, 1P, CB.
   FLASHING BEACON EB: 15A, 120V, 1P, CB.

NOTES: (THIS SHEET ONLY)

1. TYPE 1-A FOUNDATIONS MUST BE THE ANCHOR BOLTS WITH SLEEVE NUTS, AS PER RSP ES-7B DETAIL C.
2. VIDEO DETECTION ZONES WILL BE ESTABLISHED AS SHOWN.
3. INSTALL VIVDS CAMERAS AS PER DETAILS ON SHEET RSP ES-7R.
4. FOR ACCURATE RIGHT OF WAY DATA, CONTACT RIGHT OF WAY ENGINEERING AT THE DISTRICT OFFICE.
5. USE BACK SIDE CONTROL ON NEW AND EXISTING LUMINAIRES AS PER DETAILS ON SHEET RSP ES-10A.

ABBREVIATIONS:

VDC: VIDEO DETECTION CAMERA
LTE: LONG TERM EVOLUTION
SCE: SOUTHERN CALIFORNIA EDISON
SIC: SIGNAL INTERCONNECT CABLE

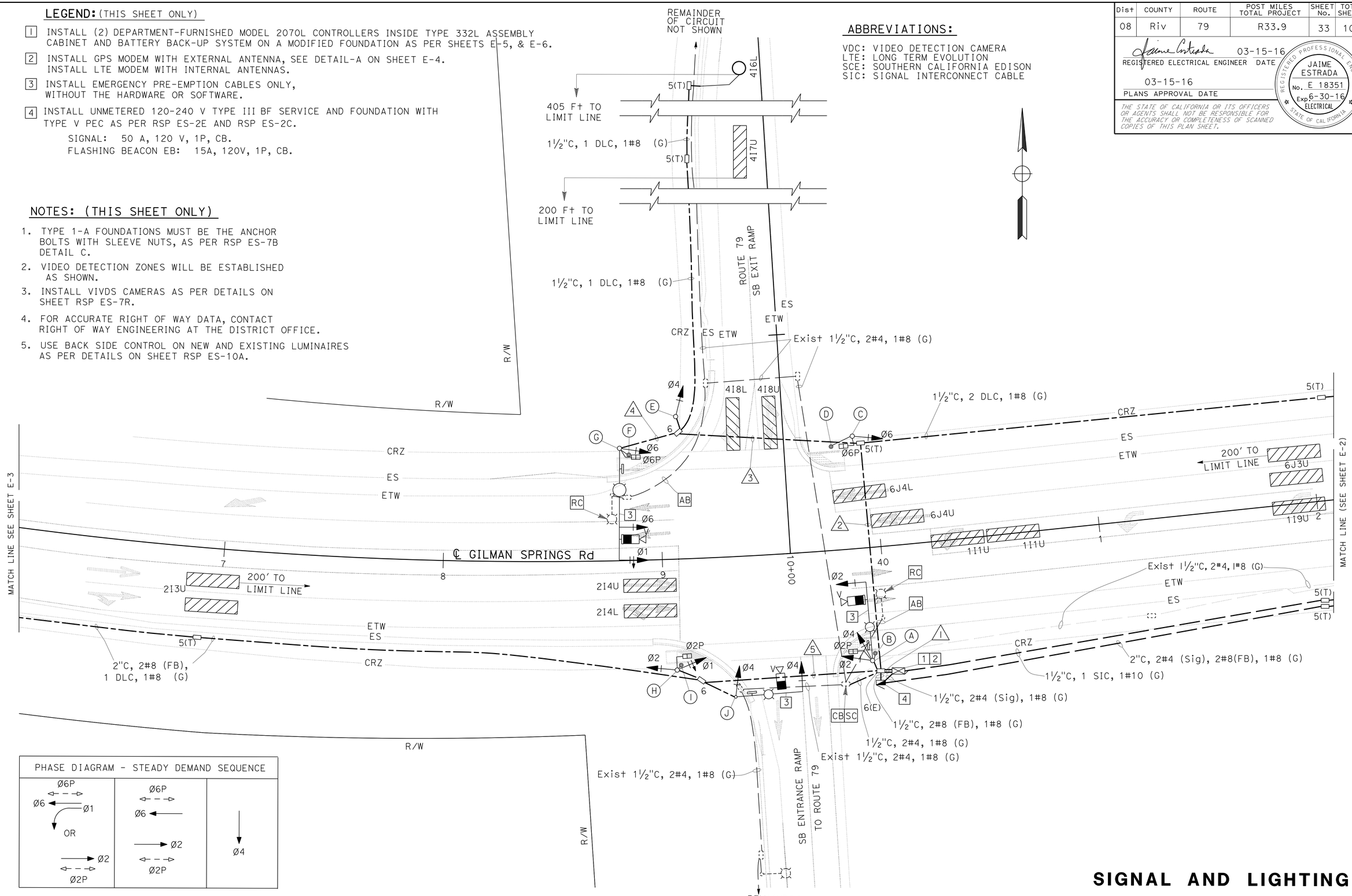

PHASE DIAGRAM - STEADY DEMAND SEQUENCE		
Ø6P, Ø6, Ø1, OR, Ø2, Ø2P	Ø6P, Ø6, Ø2, Ø2P	Ø4

APPROVED FOR ELECTRICAL WORK ONLY

SIGNAL AND LIGHTING

SCALE: 1" = 20'

E-1

STATE OF CALIFORNIA - DEPARTMENT OF TRANSPORTATION
Caltrans® **ELECTRICAL DESIGN**

FUNCTIONAL SUPERVISOR: DAVID A. GONZALEZ
CALCULATED-DESIGNED BY: JAIME ESTRADA
CHECKED BY: DAVID A. GONZALEZ
REVISED BY
DATE REVISED

LAST REVISION 03-15-16
DATE PLOTTED => 26-MAY-2016
TIME PLOTTED => 08:02

Dist	COUNTY	ROUTE	POST MILES TOTAL PROJECT	SHEET No.	TOTAL SHEETS
08	Riv	79	R33.9	34	101

REGISTERED ELECTRICAL ENGINEER — DATE: 03-15-16

PLANS APPROVAL DATE: 03-15-16

REGISTERED PROFESSIONAL ENGINEER — JAIME ESTRADA — No. E 18351 — Exp. 6-30-16 — ELECTRICAL — STATE OF CALIFORNIA

THE STATE OF CALIFORNIA OR ITS OFFICERS OR AGENTS SHALL NOT BE RESPONSIBLE FOR THE ACCURACY OR COMPLETENESS OF SCANNED COPIES OF THIS PLAN SHEET.

LEGEND: (THIS SHEET ONLY)

1 RELOCATE 120-240 V, TYPE III-CF SERVICE EQUIPMENT ENCLOSURE FROM STA 48+50 TO STA 47+00 AS PER RSP ES-2C AND RSP ES-2F
NEW METER A: (TC-1)
100 A CB, 240 V, 2P (MAIN BREAKER)
50 A CB, 120 V, 1P (TRAFFIC SIGNAL)
15 A CB, 120 V, 1P (FBW - FLASHING BEACON WEST)
CTID: 08-56-079-0-030.821
ADDRESS: 19231 1/2 GILMAN SPRINGS Rd

Existing METER B: (LS-3) METER # 222013-939167
100 A CB, 240 V, 2P (MAIN BREAKER)
30 A CB, 240 V, 2P (LIGHTING)
15 A CB, 120 V, 1P (CONTROL)
CTID: 08-56-079-0-030.820
ADDRESS: 19231 GILMAN SPRINGS Rd

2 3"C, PT. CONDUCTORS TO BE FURNISHED AND INSTALLED BY THE UTILITY COMPANY.

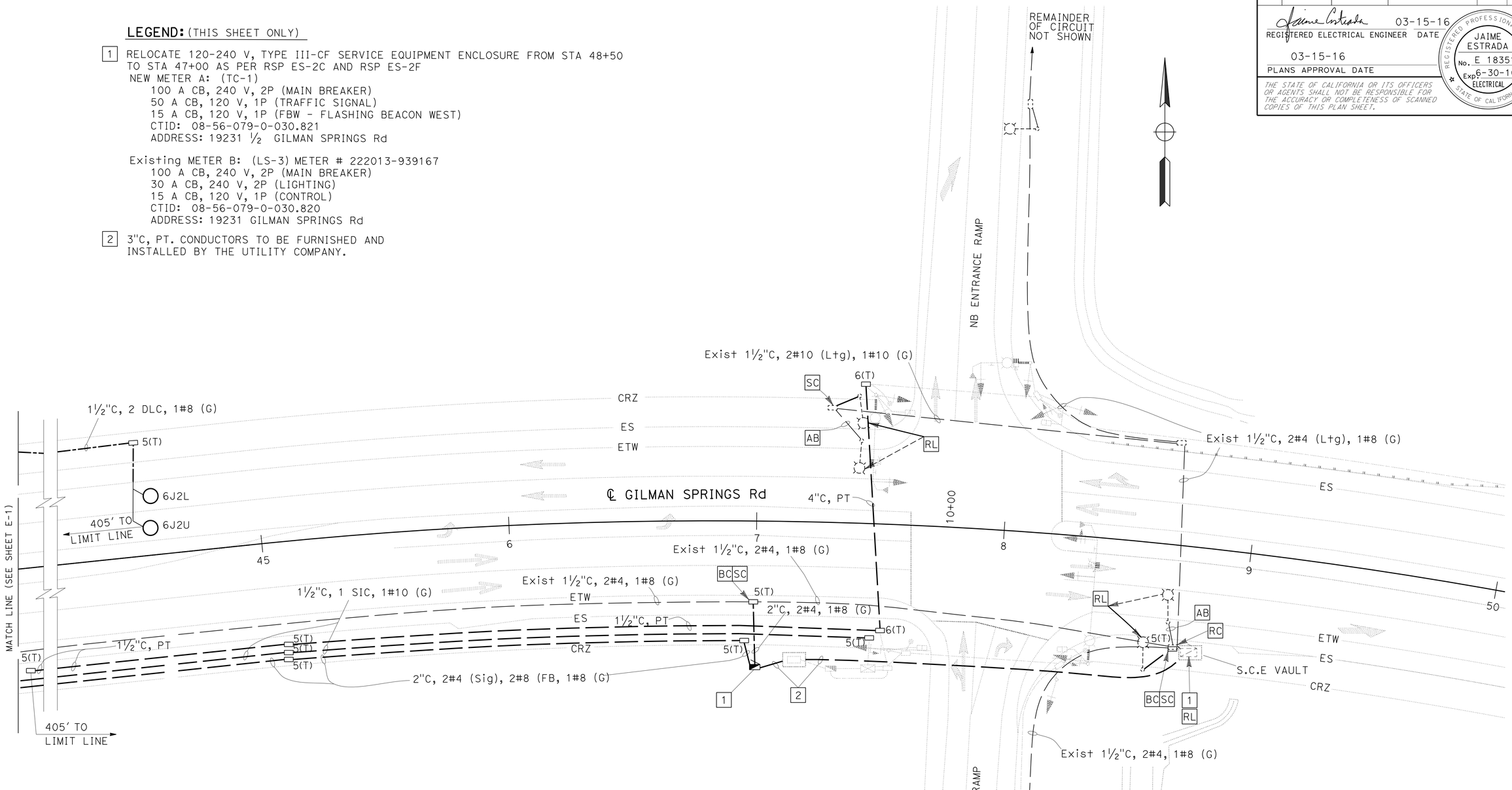

SIGNAL AND LIGHTING

APPROVED FOR ELECTRICAL WORK ONLY

SCALE: 1" = 20'

E-2

STATE OF CALIFORNIA - DEPARTMENT OF TRANSPORTATION
Caltrans®
ELECTRICAL DESIGN

FUNCTIONAL SUPERVISOR: DAVID A. GONZALEZ

CALCULATED-DESIGNED BY: JAIME ESTRADA
CHECKED BY: DAVID A. GONZALEZ
REVISED BY
DATE REVISED

LAST REVISION 03-15-16
DATE PLOTTED => 26-MAY-2016
TIME PLOTTED => 08:03

Dist	COUNTY	ROUTE	POST MILES TOTAL PROJECT	SHEET No.	TOTAL SHEETS
08	Riv	79	R33.9	35	101

REGISTERED ELECTRICAL ENGINEER 03-15-16 DATE

03-15-16
PLANS APPROVAL DATE

REGISTERED PROFESSIONAL ENGINEER
JAIME ESTRADA
No. E 18351
Exp. 6-30-16
ELECTRICAL
STATE OF CALIFORNIA

THE STATE OF CALIFORNIA OR ITS OFFICERS OR AGENTS SHALL NOT BE RESPONSIBLE FOR THE ACCURACY OR COMPLETENESS OF SCANNED COPIES OF THIS PLAN SHEET.

LEGEND: (THIS SHEET ONLY)

[I] INSTALL TYPE 9B FLASHING BEACON AS PER STANDARD PLAN RSP ES-7K AND RSP ES-7L.

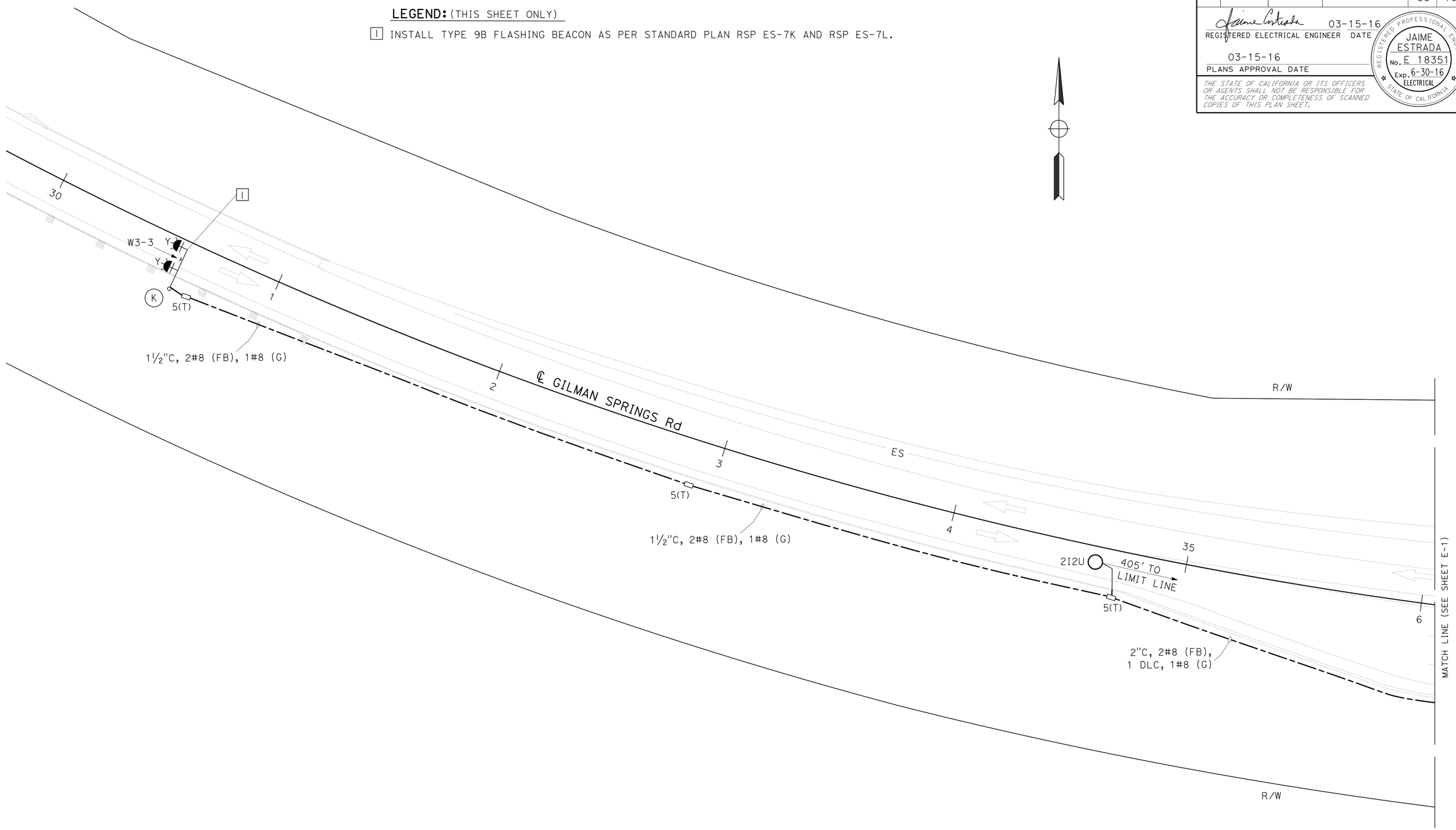

APPROVED FOR ELECTRICAL WORK ONLY

SIGNAL AND LIGHTING

SCALE: 1" = 20'

E-3

STATE OF CALIFORNIA - DEPARTMENT OF TRANSPORTATION
Caltrans®
ELECTRICAL DESIGN

FUNCTIONAL SUPERVISOR: DAVID A. GONZALEZ

CALCULATED-DESIGNED BY: JAIME ESTRADA
CHECKED BY: DAVID A. GONZALEZ

REVISED BY
DATE REVISED

LAST REVISION 03-15-16
DATE PLOTTED => 26-MAY-2016
TIME PLOTTED => 08:03

Dist	COUNTY	ROUTE	POST MILES TOTAL PROJECT	SHEET No.	TOTAL SHEETS
08	Riv	79	R33.9	36	101

REGISTERED ELECTRICAL ENGINEER 03-14-16 DATE

03-15-16
PLANS APPROVAL DATE

REGISTERED PROFESSIONAL ENGINEER JAIME ESTRADA No. E 18351 Exp. 6-30-16 ELECTRICAL STATE OF CALIFORNIA

THE STATE OF CALIFORNIA OR ITS OFFICERS OR AGENTS SHALL NOT BE RESPONSIBLE FOR THE ACCURACY OR COMPLETENESS OF SCANNED COPIES OF THIS PLAN SHEET.

NOTES: (THIS SHEET ONLY)

1. EXACT LOCATION OF EQUIPMENTS WILL BE VERIFIED BY THE ENGINEER.
2. FOR ALL SIGNS TO BE INSTALLED ON SIGNAL POLES, SEE SHEET PDQ-1.

CONDUIT AND CONDUCTOR SCHEDULE

CABLE, AWG, AND DLC SCHEDULE			CONDUIT RUN NUMBER				
CABLE TYPE	POLE	PHASE	1	2	3	4	5
VEH-PED 12CSC	Ⓐ	2,2P,4	1				
	Ⓑ	2PBA	1				
	Ⓒ	6,6P	1	1			
	Ⓓ	6PBA	1	1			
	Ⓔ	4	1	1	1		
	Ⓕ	6PBA	1	1	1	1	
	Ⓖ	1,6,6P	1	1	1	1	
	Ⓗ	1,2,2P	1				1
	Ⓘ	2PBA	1				1
PBA 3CSC	Ⓙ	4	1				1
		TOTAL	6 / 4	3 / 2	2 / 1	1 / 1	1 / 1
AWG		CIRCUIT					
#6		SIGNAL	-	-	-	-	-
#10		LIGHTING	-	2	2	2	2
#8		FLASHING BEACON	2	-	-	-	2
#8		EQUIPMENT GROUND	2	1	1	1	1
LOOP DETECTOR							
TYPE B DLC		Ø2	1	-	-	-	1
		Ø4	1	1	1	-	-
		Ø6	2	2	-	-	-
		Ø8	-	-	-	-	-
		TOTAL DLC	4	3	1	-	1
CABLE		EMERGENCY VEHICLE	3	1	1	1	-
CABLE		VIDEO CAMERA COAXIAL	3	1	1	1	-
CABLE		VIDEO CAMERA POWER	3	-	-	-	1
		CONDUIT SIZE	2-4"	3"	3"	2"	3"

POLE AND EQUIPMENT SCHEDULE

STANDARD				VEHICLE SIGNAL MOUNTING		PEDESTRIAN SIGNAL MOUNTING	PBA		LED LUMINAIRE (W)	RETROREFLECTIVE SHEETING SIGNS
POLE	TYPE	SIGNAL MAST ARM	LUMINAIRE MAST ARM	MAST ARM	POLE		Ø	ARROW		
Ⓐ	24-4-100	35′	15′	1-MAS	SV-2-T	SP-1-T			235	SP3, R3-4, R9-3
Ⓑ	PPB POST						2	←		
Ⓒ	1-A				TV-1-T	SP-1-T				R9-3
Ⓓ	PPB POST						6	←		
Ⓔ	1-A				TV-1-T					
Ⓕ	PPB POST						6	→		
Ⓖ	29-5-100	50′	15′	2-MAS	SV-1-T	SP-1-T			235	SP4, R3-4, R9-3
Ⓗ	1-A				TV-2-T					R9-3
Ⓘ	PPB POST						2	→		
Ⓙ	19-4-100	30′	15′	1-MAS	SV-1-T				235	SP5
Ⓚ	9B									W3-3

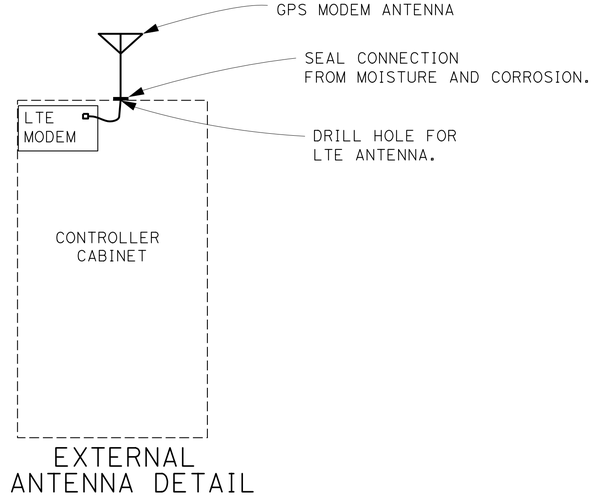

EXTERNAL ANTENNA DETAIL

DETAIL-A

APPROVED FOR ELECTRICAL WORK ONLY

SIGNAL AND LIGHTING

E-4

STATE OF CALIFORNIA - DEPARTMENT OF TRANSPORTATION
Caltrans® ELECTRICAL DESIGN

FUNCTIONAL SUPERVISOR: DAVID A. GONZALEZ
CALCULATED-DESIGNED BY: JAIME ESTRADA
CHECKED BY: DAVID A. GONZALEZ
REVISED BY
DATE REVISED

LAST REVISION 03-14-16
DATE PLOTTED => 26-MAY-2016
TIME PLOTTED => 08:03

Dist	COUNTY	ROUTE	POST MILES TOTAL PROJECT	SHEET No.	TOTAL SHEETS
08	Riv	79	R33.9	37	101

Theresa Gabriel 03-14-16
REGISTERED CIVIL ENGINEER DATE

03-15-16
PLANS APPROVAL DATE

REGISTERED PROFESSIONAL ENGINEER THERESA A. GABRIEL No. E15129 Exp. 6-30-16 ELECT STATE OF CALIFORNIA

THE STATE OF CALIFORNIA OR ITS OFFICERS OR AGENTS SHALL NOT BE RESPONSIBLE FOR THE ACCURACY OR COMPLETENESS OF SCANNED COPIES OF THIS PLAN SHEET.

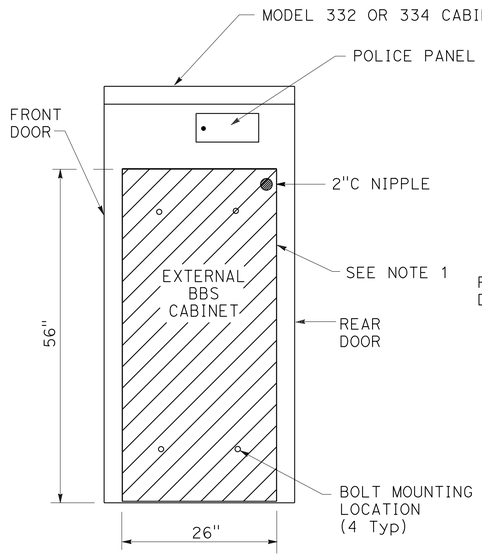

SIDE VIEW

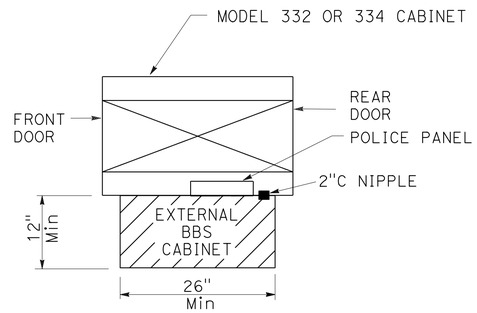

TOP VIEW

EXTERNAL BBS CABINET MOUNTED TO THE MODEL 332 OR 334 CABINET

NOTES: (THIS SHEET ONLY)

1. THE EXTERNAL BBS CABINET SHALL BE MOUNTED TO THE MODEL 332 OR 334 CABINET WITH FOUR 18-8 STAINLESS STEEL HEX HEAD, FULLY-THREADED, 3/8"-16 X 1" BOLTS; TWO WASHERS PER BOLT, DESIGNED FOR 3/8" BOLTS AND ARE 18-8 STAINLESS STEEL, 1" OUTSIDE DIAMETER, ROUND, AND FLAT; AND ONE K-LOCK NUT PER BOLT THAT IS 18-8 STAINLESS STEEL AND A HEX-NUT. THE ENGINEER WILL HAVE TO APPROVE THE BOLT MOUNTING LOCATION PRIOR TO INSTALLATION.
2. THE ANCHOR BOLTS SHALL BE 3/4" Dia X 15" WITH A 2"-90° BEND. THE CABINET MANUFACTURER'S SPECIFICATION SHALL DETERMINE THE LOCATION OF THE ANCHOR BOLTS IN THE FOUNDATION. THE ENGINEER WILL HAVE TO APPROVE THE ANCHOR BOLTS AND ITS LOCATION IN THE FOUNDATION PRIOR TO CONSTRUCTION.
3. THE CONTRACTOR SHALL VERIFY THE DIMENSIONS OF THE BBS CABINET PRIOR TO CONSTRUCTING THE FOUNDATION OF THE MODIFIED PORTION OF THE Std MODEL 332 AND 334 CABINET FOUNDATION. THE ENGINEER WILL HAVE TO APPROVE ANY NECESSARY DEVIATIONS PRIOR TO CONSTRUCTION.
4. ALL DIMENSIONS ARE NOMINAL.

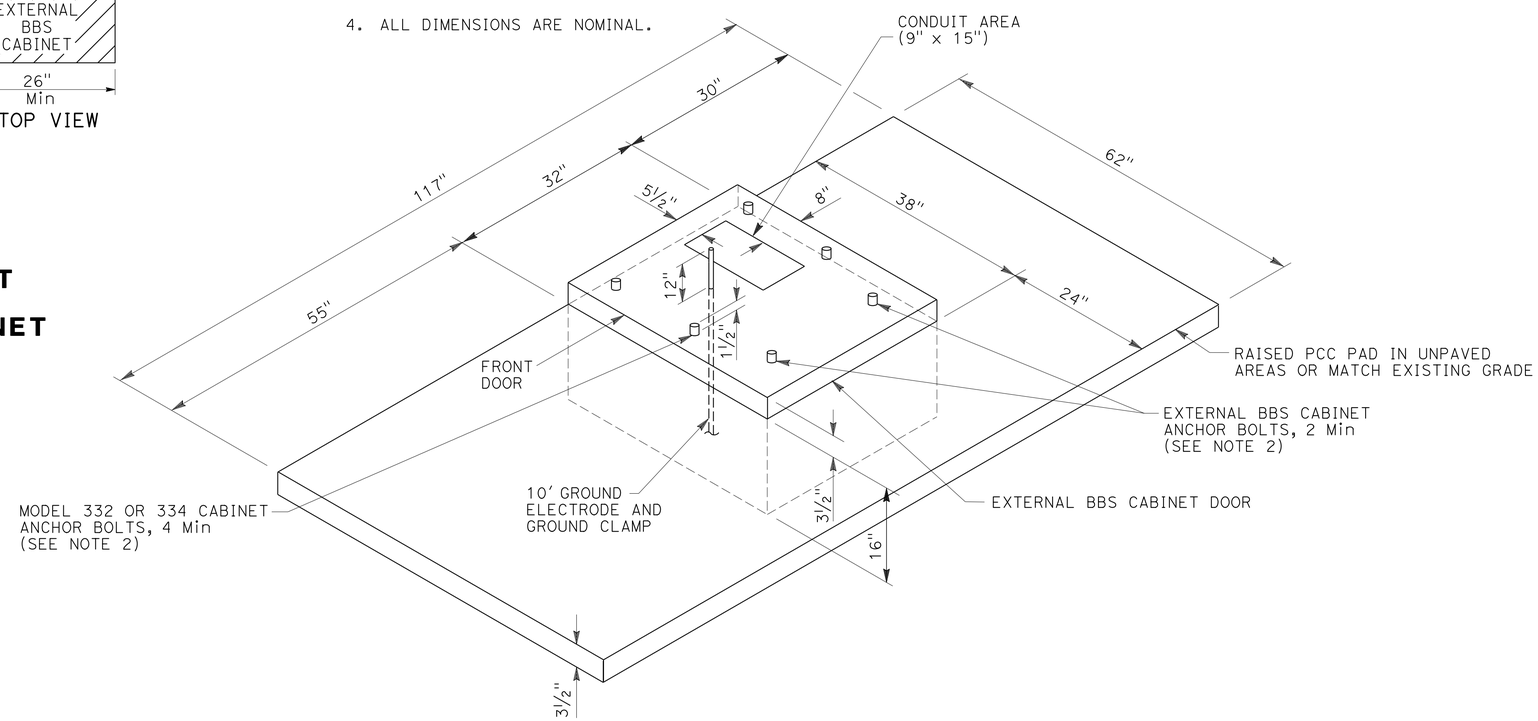

MODIFIED MODEL 332 AND 334 CABINET FOUNDATION DETAIL FOR BATTERY BACKUP SYSTEM (BBS)

(FOR DIMENSIONS AND DETAILS NOT SHOWN AND ADDITIONAL NOTES, SEE SHEET ES-3C OF THE STANDARD PLANS FOR MODEL 332 AND 334 CABINETS)

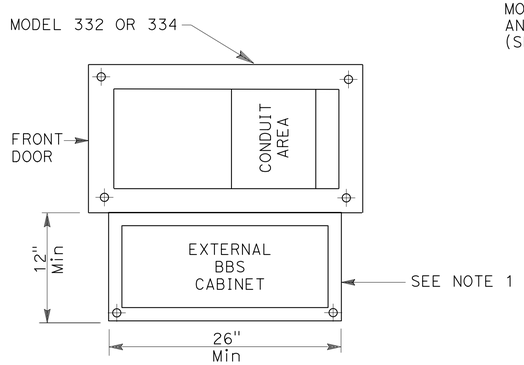

BASE PLAN FOR BBS MOUNTED TO THE MODEL 332 OR 334 CABINET

(FOR DIMENSIONS AND DETAILS NOT SHOWN, SEE SHEET A6-1 TO A6-4, CABINET HOUSING DETAILS OF THE TRANSPORTATION ELECTRICAL EQUIPMENT SPECIFICATION (TEES))

APPROVED FOR ELECTRICAL WORK ONLY

ELECTRICAL DETAILS
SIGNAL AND LIGHTING
(BBS FOUNDATION DETAILS)

NO SCALE

E-5

STATE OF CALIFORNIA - DEPARTMENT OF TRANSPORTATION
Caltrans® ELECTRICAL DESIGN

FUNCTIONAL SUPERVISOR: DAVID A GONZALEZ
CALCULATED-DESIGNED BY: THERESA A. GABRIEL
CHECKED BY: JAIME ESTRADA
REVISED BY
DATE REVISED

LAST REVISION 03-14-16 | DATE PLOTTED => 26-MAY-2016 | TIME PLOTTED => 08:03

Dist	COUNTY	ROUTE	POST MILES TOTAL PROJECT	SHEET No.	TOTAL SHEETS
08	Riv	79	R33.9	38	101

Theresa Gabriel 03-14-16
REGISTERED CIVIL ENGINEER DATE

03-15-16
PLANS APPROVAL DATE

REGISTERED PROFESSIONAL ENGINEER THERESA A. GABRIEL No. E15129 Exp. 6-30-16 ELECT STATE OF CALIFORNIA

THE STATE OF CALIFORNIA OR ITS OFFICERS OR AGENTS SHALL NOT BE RESPONSIBLE FOR THE ACCURACY OR COMPLETENESS OF SCANNED COPIES OF THIS PLAN SHEET.

LEGEND: (THIS SHEET ONLY)

PTS = POWER TRANSFER SWITCH
UPS = UNINTERRUPTIBLE POWER SUPPLY
UPSC = UNINTERRUPTIBLE POWER SUPPLY CONTROLLER
UPSM = UPS MODE
BP = BYPASS
MBPS = MANUAL BYPASS SWITCH
AC+ = UNGROUNDED CONDUCTOR
AC- = GROUNDED CONDUCTOR
C = COMMON
Grn = GREEN
Blk = BLACK
Wht = WHITE
SF = STATE-FURNISHED
Batt = BATTERY
Temp = TEMPERATURE
TB = TERMINAL BOARD
Cntl = CONTROL
Gnd = GROUND

NOTES: (THIS SHEET ONLY)

1. TYPE B REFERS TO THE BBS EQUIPMENT FROM MANUFACTURER B.
2. CASE-1 REFERS TO THE SITUATION WHEN THE ENTIRE BBS EQUIPMENT INCLUDING THE BATTERIES ARE INSTALLED IN THE BBS CABINET.
3. THE LOCATION OF THE 2"C NIPPLE WILL BE DETERMINED BY THE ENGINEER IN THE FIELD.
4. THE CONTRACTOR SHALL FURNISH AND INSTALL A NEMA-1 ENCLOSURE WITH 30 A, 1P, 120/240 VOLTS RATED CIRCUIT BREAKER MANUFACTURED PER UL STANDARD 489.
5. A TEMPERATURE PROBE SHALL BE ATTACHED TO THE BATTERY BY TAPE OR ATTACHED TO THE NEGATIVE TERMINAL OF THE BATTERY.
6. THE ELECTRICAL POWER FOR THE COOLING FAN FOR THE BBS CABINET SHALL BE TAPPED FROM THE BOTTOM OF THE TB IN THE 332 CABINET.
7. THE CONTRACTOR SHALL PROVIDE A 9-WIRE WIRING HARNESS OR BUNDLED 9 MULTICOLOR CONDUCTORS, #18 AWG WIRES FROM THE RELAY ON THE INVERTER/CHARGER UNIT TO THE CONTROLLER. THE ENDS OF THE CONDUCTORS SHALL BE INSULATED WITH TAPE AND A SIX-FOOT COIL ON EACH END.

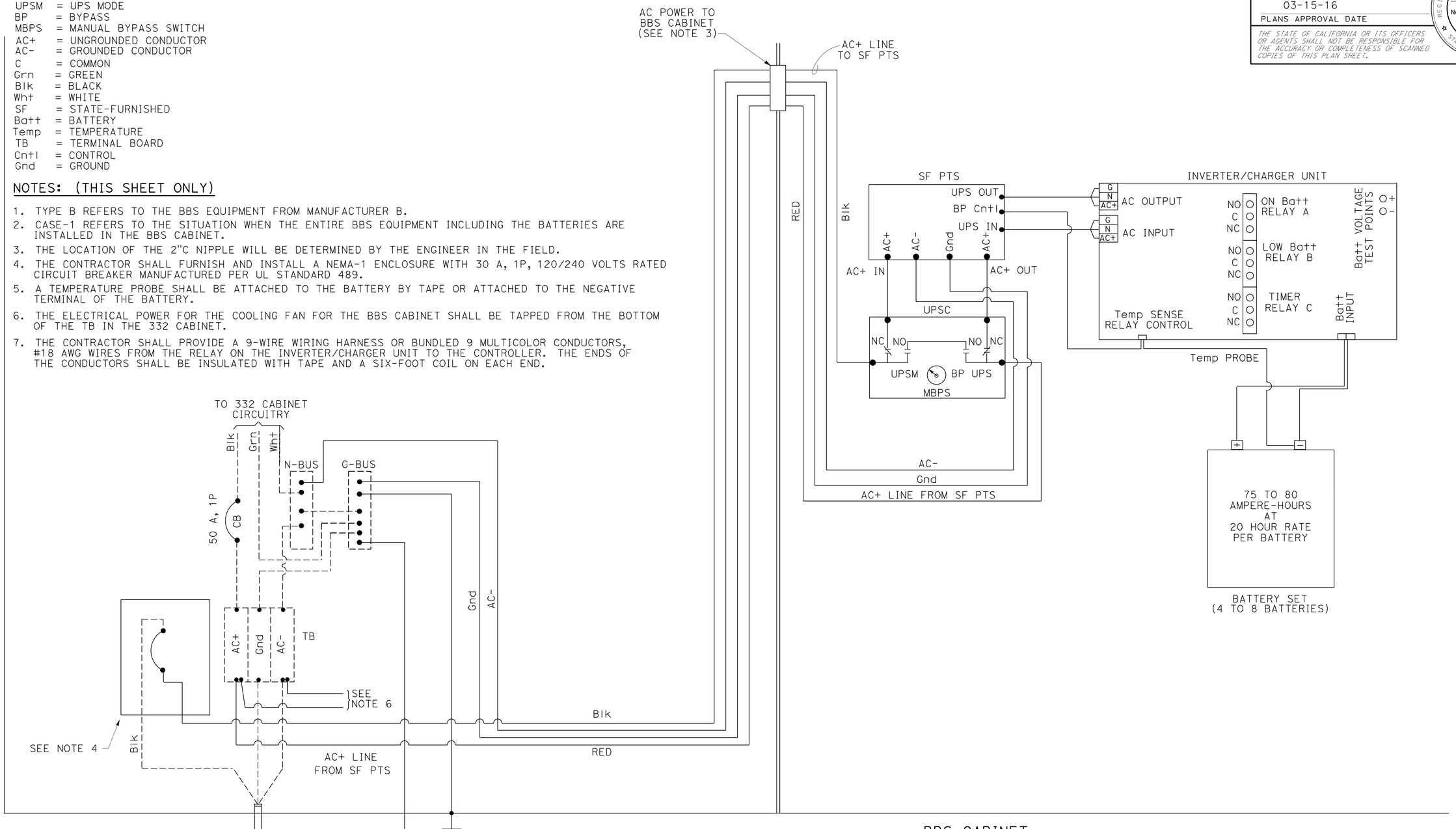

APPROVED FOR ELECTRICAL WORK ONLY

ELECTRICAL DETAILS
ELECTRICAL SYSTEMS
(BBS POWER CONNECTION DIAGRAM, TYPE B, CASE-1)

NO SCALE

E-6

STATE OF CALIFORNIA - DEPARTMENT OF TRANSPORTATION
Caltrans ELECTRICAL DESIGN
FUNCTIONAL SUPERVISOR: DAVID A GONZALEZ
CALCULATED-DESIGNED BY: THERESA A. GABIEL
CHECKED BY: JAIME ESTRADA
REVISED BY
DATE REVISED

LAST REVISION 03-14-16 | DATE PLOTTED => 26-MAY-2016 | TIME PLOTTED => 08:03

Dist	COUNTY	ROUTE	POST MILES TOTAL PROJECT	SHEET No.	TOTAL SHEETS
08	Riv	79	R33.9	39	101

Theresa Gabriel 03-14-16
REGISTERED ~~CIVIL ENGINEER~~ DATE

03-15-16
PLANS APPROVAL DATE

REGISTERED PROFESSIONAL ENGINEER THERESA A. GABRIEL No. E15129 Exp. 6-30-16 ELECT STATE OF CALIFORNIA

THE STATE OF CALIFORNIA OR ITS OFFICERS OR AGENTS SHALL NOT BE RESPONSIBLE FOR THE ACCURACY OR COMPLETENESS OF SCANNED COPIES OF THIS PLAN SHEET.

LEGEND: (THIS SHEET ONLY)

PTS = POWER TRANSFER SWITCH
UPS = UNINTERRUPTIBLE POWER SUPPLY
UPSC = UNINTERRUPTIBLE POWER SUPPLY CONTROLLER
UPSM = UPS MODE
BP = BYPASS
MBPS = MANUAL BYPASS SWITCH
AC+ = UNGROUNDED CONDUCTOR
AC- = GROUNDED CONDUCTOR
C = COMMON
Grn = GREEN
Blk = BLACK
Wht = WHITE
SF = STATE-FURNISHED
TB = TERMINAL BOARD
Cntl = CONTROL
Gnd = GROUND
Temp = TEMPERATURE
Batt = BATTERY

NOTES: (THIS SHEET ONLY)

1. TYPE A REFERS TO THE BBS EQUIPMENT FROM MANUFACTURER A.
2. CASE-1 REFERS TO THE SITUATION WHEN THE ENTIRE BBS EQUIPMENT INCLUDING THE BATTERIES ARE INSTALLED IN THE BBS CABINET.
3. THE LOCATION OF THE 2"C NIPPLE WILL BE DETERMINED BY THE ENGINEER IN THE FIELD.
4. THE CONTRACTOR SHALL FURNISH AND INSTALL A NEMA-1 ENCLOSURE WITH 30 A, 1P, 120/240 VOLTS RATED CIRCUIT BREAKER MANUFACTURED PER UL STANDARD 489.
5. A TEMPERATURE PROBE SHALL BE ATTACHED TO THE BATTERY BY TAPE OR ATTACHED TO THE NEGATIVE TERMINAL OF THE BATTERY.
6. THE ELECTRICAL POWER FOR THE COOLING FAN FOR THE BBS CABINET SHALL BE TAPPED FROM THE BOTTOM OF THE TB IN THE 332 CABINET.
7. THE CONTRACTOR SHALL PROVIDE A 9-WIRE WIRING HARNESS OR BUNDLED 9 MULTICOLOR CONDUCTORS, #18 AWG WIRES FROM THE RELAY ON THE INVERTER/CHARGER UNIT TO THE CONTROLLER. THE ENDS OF THE CONDUCTORS SHALL BE INSULATED WITH TAPE AND A SIX-FOOT COIL ON EACH END.

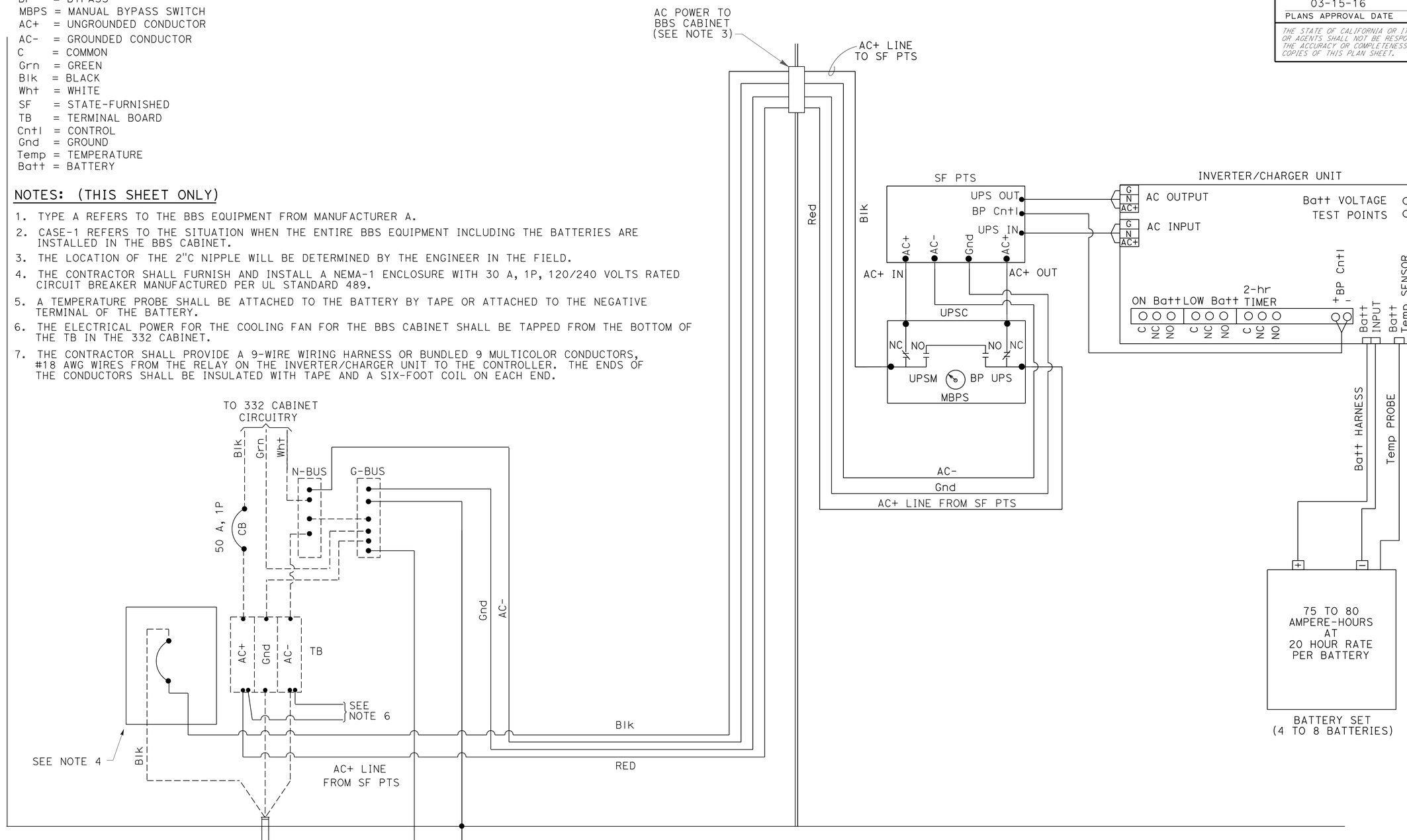

APPROVED FOR ELECTRICAL WORK ONLY

ELECTRICAL DETAILS
ELECTRICAL SYSTEMS
(BBS POWER CONNECTION DIAGRAM, TYPE A, CASE-1)

NO SCALE

E-7

STATE OF CALIFORNIA - DEPARTMENT OF TRANSPORTATION
Caltrans® ELECTRICAL DESIGN

FUNCTIONAL SUPERVISOR: DAVID A GONZALEZ
CALCULATED-DESIGNED BY: TERESA A. GABRIEL
CHECKED BY: JAIME ESTRADA
REVISED BY
DATE REVISED

LAST REVISION 03-14-16 | DATE PLOTTED => 26-MAY-2016 | TIME PLOTTED => 08:03

Dist	COUNTY	ROUTE	POST MILES TOTAL PROJECT	SHEET No.	TOTAL SHEETS
08	Riv	79	R33.9	40	101

REGISTERED ELECTRICAL ENGINEER 03-14-16 DATE

03-15-16
PLANS APPROVAL DATE

REGISTERED PROFESSIONAL ENGINEER JAIME ESTRADA No. E 18351 Exp. 06/30/2016 ELECTRICAL STATE OF CALIFORNIA

THE STATE OF CALIFORNIA OR ITS OFFICERS OR AGENTS SHALL NOT BE RESPONSIBLE FOR THE ACCURACY OR COMPLETENESS OF SCANNED COPIES OF THIS PLAN SHEET.

NOTE:

THE QUANTITIES SHOWN ON THIS SHEET ARE NOT SEPARATE PAY ITEMS, FOR INFORMATION ONLY.
FOR COMPLETE ELECTRICAL WORK, SEE ELECTRICAL PLAN SHEETS.

SIGNAL AND LIGHTING

SHEET No.	1½"C TYPE 3	2 "C TYPE 3	3"C TYPE 3	4"C TYPE 3	No. 6 (T) PB	No. 5 (T) PB	No. 6 PB	No. 6 (E) PB	No. 10 CONDUCTOR	No. 8 CONDUCTOR	No. 8 (G)	No. 4 CONDUCTOR	3 CSC CABLE	12 CSC CABLE	EVP CABLE	VIVIDS POWER CABLE	VIVIDS VIDEO CABLE	TYPE E LOOPS
	LF	LF	LF	LF	EA	EA	EA	EA	LF	LF	LF	LF	LF	LF	LF	LF	LF	EA
E-1	600	500	300	10	-	7	12	1	400	1400	1000	400	500	500	200	600	600	1
E-2	600		-	-	2	8	-	-	1000	1000	1000	1000	-	-	700	-	-	2
E-3	-	500	-	-	-	3	-	-	-	1000	1000	-	-	-	-	-	-	1

SHEET No.	TYPE III-CF SERVICE ENCLOSURE	SERVICE ENCLOSURE FOUNDATION	MODEL 332 CABINET	MODEL 332 CABINET FOUNDATION	BATTERY BACK-UP SYSTEM	1-A POLES	PPB POLES	29-5-100 POLES	19-4-100 POLES	FOUNDATION 1-A	STANDARD FOUNDATION CASE 4	STANDARD FOUNDATION CASE 5	FB TYPE 9B
	EA	EA	EA	EA	EA	EA	EA	EA	EA	EA	EA	EA	EA
E-1	-	-	1	1	1	3	4	2	1	3	1	2	-
E-2	-	1	-	-		-	-	-	-	-	-	-	-
E-3	-	-	-	-		-	-	-	-	-	-	-	1

NOTE:

FOR COMPLETE RIGHT OF WAY AND ACCURATE ACCESS DATA,
SEE RIGHT OF WAY REQUIRED MAP AT DISTRICT OFFICE.

ELETRICAL QUANTITIES

APPROVED FOR ELECTRICAL WORK ONLY

E-8

REVISED BY | DATE REVISED
JAIME ESTRADA | DAVID A GONZALEZ
CALCULATED-DESIGNED BY | CHECKED BY
FUNCTIONAL SUPERVISOR: DAVID A GONZALEZ

STATE OF CALIFORNIA - DEPARTMENT OF TRANSPORTATION
Caltrans ELECTRICAL DESIGN

LAST REVISION 03-14-16 | DATE PLOTTED => 26-MAY-2016 | TIME PLOTTED => 08:03

M

Maint	MAINTENANCE
Max	MAXIMUM
MB	METAL BEAM
MBB	METAL BEAM BARRIER
MBGR	METAL BEAM GUARD RAILING
Med	MEDIAN
MGS	MIDWEST GUARDRAIL SYSTEM
MH	MANHOLE
Min	MINIMUM
Misc	MISCELLANEOUS
Misc I & S	MISCELLANEOUS IRON AND STEEL
Mkr	MARKER
Mod	MODIFIED,
	MODIFY
Mon	MONUMENT
MP	METAL PLATE
MPGR	METAL PLATE GUARD RAILING
MR	MOVEMENT RATING
MSE	MECHANICALLY STABILIZED EMBANKMENT
Mt	MOUNTAIN, MOUNT
Mtl	MATERIAL
MVP	MAINTENANCE VEHICLE PULLOUT

N

N	NORTH
NB	NORTHBOUND
No.	NUMBER (MUST HAVE PERIOD)
Nos.	NUMBERS (MUST HAVE PERIOD)
NPS	NOMINAL PIPE SIZE
NS	NEAR SIDE
NSP	NEW STANDARD PLAN
NTS	NOT TO SCALE

O

Oblr	OBLITERATE
OC	OVERCROSSING
OD	OUTSIDE DIAMETER
OF	OUTSIDE FACE
OG	ORIGINAL GROUND
OGAC	OPEN GRADED ASPHALT CONCRETE
OGFC	OPEN GRADED FRICTION COURSE
OH	OVERHEAD
OHWM	ORDINARY HIGH WATER MARK
O-O	OUT TO OUT
Opp	OPPOSITE
OSD	OVERSIDE DRAIN

P

P	PAGE
PAP	PERFORATED ALUMINUM PIPE
PB	PULL BOX
PC	POINT OF CURVATURE,
	PRECAST
PCC	POINT OF COMPOUND CURVE,
	PORTLAND CEMENT CONCRETE
PCMS	PORTABLE CHANGEABLE MESSAGE SIGN
PCP	PERFORATED CONCRETE PIPE,
	PRESTRESSED CONCRETE PIPE
PCVC	POINT OF COMPOUND VERTICAL CURVE
PEC	PERMIT TO ENTER AND CONSTRUCT
Ped	PEDESTRIAN
Ped OC	PEDESTRIAN OVERCROSSING
Ped UC	PEDESTRIAN UNDERCROSSING
Perm Mtl	PERMEABLE MATERIAL

P continued

PG	PROFILE GRADE
PI	POINT OF INTERSECTION
PJP	PARTIAL JOINT PENETRATION
Pkwy	PARKWAY
ℙ,PL	PLATE
P/L	PROPERTY LINE
PM	POST MILE,
	TIME FROM NOON TO MIDNIGHT
PN	PAVING NOTCH
POC	POINT OF HORIZONTAL CURVE
POT	POINT OF TANGENT
POVC	POINT OF VERTICAL CURVE
PP	PIPE PILE,
	PLASTIC PIPE,
	POWER POLE
PPL	PREFORMED PERMEABLE LINER
PPP	PERFORATED PLASTIC PIPE
PRC	POINT OF REVERSE CURVE
PRF	PAVEMENT REINFORCING FABRIC
PRVC	POINT OF REVERSE VERTICAL CURVE
PS&E	PLANS, SPECIFICATIONS AND ESTIMATES
PS, P/S	PRESTRESSED
PSP	PERFORATED STEEL PIPE
PT	POINT OF TANGENCY
PVC	POLYVINYL CHLORIDE
Pvmt	PAVEMENT

Q

Qty	QUANTITY

R

R	RADIUS
R & D	REMOVE AND DISPOSE
R & S	REMOVE AND SALVAGE
R/C	RATE OF CHANGE
RCA	REINFORCED CONCRETE ARCH
RCB	REINFORCED CONCRETE BOX
RCP	REINFORCED CONCRETE PIPE
RCPA	REINFORCED CONCRETE PIPE ARCH
Rd	ROAD
Reinf	REINFORCED,
	REINFORCEMENT,
	REINFORCING
Rel	RELOCATE
Repl	REPLACEMENT
Ret	RETAINING
Rev	REVISED, REVISION
Rdwy	ROADWAY
RHMA	RUBBERIZED HOT MIX ASPHALT
Riv	RIVER
RM	ROAD-MIXED
RP	RADIUS POINT,
	REFERENCE POINT
RR	RAILROAD
RSP	ROCK SLOPE PROTECTION,
	REVISED STANDARD PLAN
Rt	RIGHT
Rte	ROUTE
RW	REDWOOD,
	RETAINING WALL
R/W	RIGHT OF WAY
Rwy	RAILWAY

S

S	SOUTH,
	SUPPLEMENT
SAE	STRUCTURE APPROACH EMBANKMENT
Salv	SALVAGE
SAPP	STRUCTURAL ALUMINUM PLATE PIPE
SB	SOUTHBOUND
SC	SAND CUSHION
SCSP	SLOTTED CORRUGATED STEEL PIPE
SD	STORM DRAIN
Sec	SECOND,
	SECTION
Sep	SEPARATION
SG	SUBGRADE
Shld	SHOULDER
Sht	SHEET
Sim	SIMILAR
℄	STATION LINE
SM	SELECTED MATERIAL
Spec	SPECIAL,
	SPECIFICATIONS
SPP	SLOTTED PLASTIC PIPE
SS	SLOPE STAKE
SSBM	STRAP AND SADDLE BRACKET METHOD
SSD	STRUCTURAL SECTION DRAIN
SSPA	STRUCTURAL STEEL PLATE ARCH
SSPP	STRUCTURAL STEEL PLATE PIPE
SSPPA	STRUCTURAL STEEL PLATE PIPE ARCH
SSRP	STEEL SPIRAL RIB PIPE
St	STREET
Sta	STATION
STBB	SINGLE THRIE BEAM BARRIER
Std	STANDARD
Str	STRUCTURE
Surf	SURFACING
SW	SIDEWALK,
	SOUND WALL
Swr	SEWER
Sym	SYMMETRICAL
S4S	SURFACE 4 SIDES

T

T	SEMI-TANGENT
Tan	TANGENT
TBB	THRIE BEAM BARRIER
Tbr	TIMBER
TC	TOP OF CURB
TCB	TRAFFIC CONTROL BOX
TCE	TEMPORARY CONSTRUCTION EASEMENT
Tel	TELEPHONE
Temp	TEMPORARY
TG	TOP OF GRADE
Tot	TOTAL
TP	TELEPHONE POLE
TPB	TREATED PERMEABLE BASE
TPM	TREATED PERMEABLE MATERIAL
Trans	TRANSITION

T continued

TS	TRANSVERSE,
	TRAFFIC SIGNAL,
	TUBULAR STEEL
Typ	TYPICAL

U

UC	UNDERCROSSING
UD	UNDERDRAIN
UG	UNDERGROUND
UON	UNLESS OTHERWISE NOTED
UP	UNDERPASS

V

V	VALVE,
	DESIGN SPEED
Var	VARIABLE,
	VARIES
VC	VERTICAL CURVE
VCP	VITRIFIED CLAY PIPE
Vert	VERTICAL
Via	VIADUCT
Vol	VOLUME

W

W	WEST,
	WIDTH
WB	WESTBOUND
WH	WEEP HOLE
WM	WIRE MESH
WS	WATER SURFACE
WSP	WELDED STEEL PIPE
Wt	WEIGHT
WV	WATER VALVE
WW	WINGWALL
WWLOL	WINGWALL LAYOUT LINE

X

X Sec	CROSS SECTION
Xing	CROSSING

Y

Yr	YEAR
Yrs	YEARS

Dist	COUNTY	ROUTE	POST MILES TOTAL PROJECT	SHEET No.	TOTAL SHEETS
08	Riv	79	R33.9	41	101

Grace M. Tsushima
REGISTERED CIVIL ENGINEER

July 19, 2013
PLANS APPROVAL DATE

REGISTERED PROFESSIONAL ENGINEER
Grace M. Tsushima
No. C49814
Exp. 9-30-14
CIVIL
STATE OF CALIFORNIA

THE STATE OF CALIFORNIA OR ITS OFFICERS OR AGENTS SHALL NOT BE RESPONSIBLE FOR THE ACCURACY OR COMPLETENESS OF SCANNED COPIES OF THIS PLAN SHEET.

TO ACCOMPANY PLANS DATED 03-15-16

UNIT OF MEASUREMENT SYMBOLS:

Some of the symbols used in the project plan quantity tables and in the Bid Item List are:

TABLE A

SYMBOL USED	DEFINITIONS
ACRE	ACRE
CF	CUBIC FOOT
CY	CUBIC YARD
EA	EACH
GAL	GALLON
LB	POUND
LF	LINEAR FOOT
SQFT	SQUARE FOOT
SQYD	SQUARE YARD
STA	100 FEET
TAB	TABLET
TON	2,000 POUNDS

Some of the symbols used in the plans other than in the project plan quantity tables are:

TABLE B

SYMBOL USED	DEFINITIONS
ksi	KIPS PER SQUARE INCH
ksf	KIPS PER SQUARE FOOT
psi	POUNDS PER SQUARE INCH
psf	POUNDS PER SQUARE FOOT
lb/ft^3, pcf	POUNDS PER CUBIC FOOT
tsf	TONS PER SQUARE FOOT
mph, MPH *	MILES PER HOUR
ø	NOMINAL DIAMETER
oz	OUNCE
lb	POUND
kip	1,000 POUNDS
cal	CALORIE
ft	FOOT OR FEET
gal	GALLON

* For use on a sign panel only

STATE OF CALIFORNIA
DEPARTMENT OF TRANSPORTATION

ABBREVIATIONS (SHEET 2 OF 2)

NO SCALE

RSP A10B DATED JULY 19, 2013 SUPERSEDES STANDARD PLAN A10B DATED MAY 20, 2011 - PAGE 2 OF THE STANDARD PLANS BOOK DATED 2010.

REVISED STANDARD PLAN RSP A10B

2010 REVISED STANDARD PLAN RSP A10B

6-7-13

Dist	COUNTY	ROUTE	POST MILES TOTAL PROJECT	SHEET No.	TOTAL SHEETS
08	Riv	79	R33.9	42	101

REGISTERED CIVIL ENGINEER

July 19, 2013
PLANS APPROVAL DATE

REGISTERED PROFESSIONAL ENGINEER Roberta L. McLaughlin No. C40375 Exp. 3-31-15 CIVIL STATE OF CALIFORNIA

THE STATE OF CALIFORNIA OR ITS OFFICERS OR AGENTS SHALL NOT BE RESPONSIBLE FOR THE ACCURACY OR COMPLETENESS OF SCANNED COPIES OF THIS PLAN SHEET.

TO ACCOMPANY PLANS DATED 03-15-16

EXIT RAMP NEUTRAL AREA (GORE) TREATMENT

DETAIL 36

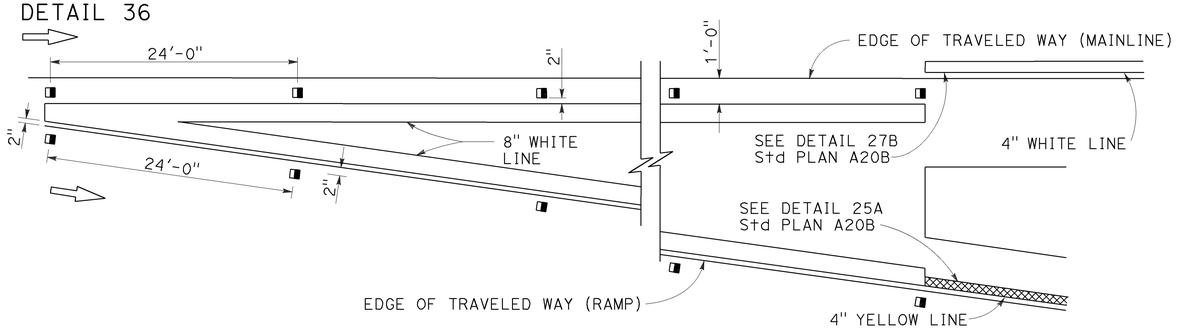

ENTRANCE RAMP NEUTRAL AREA (MERGE) TREATMENT

DETAIL 36A

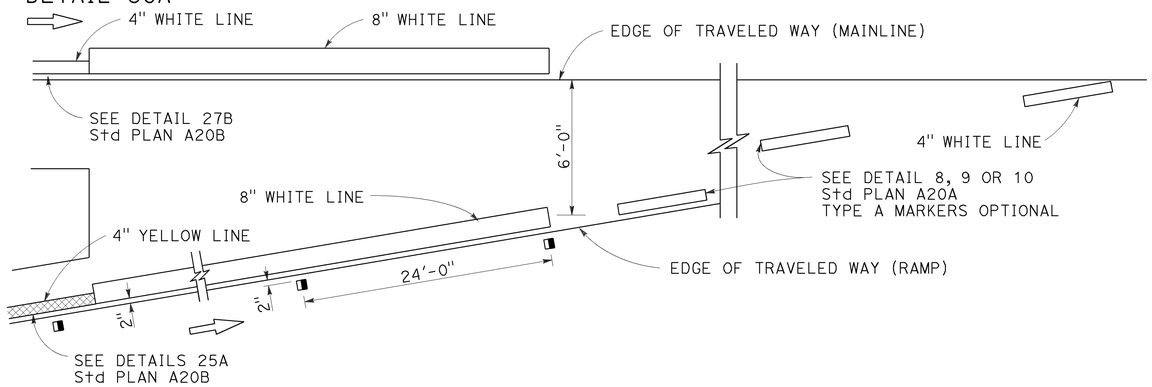

ENTRANCE RAMP NEUTRAL AREA (ACCELERATION LANE) TREATMENT

DETAIL 36B

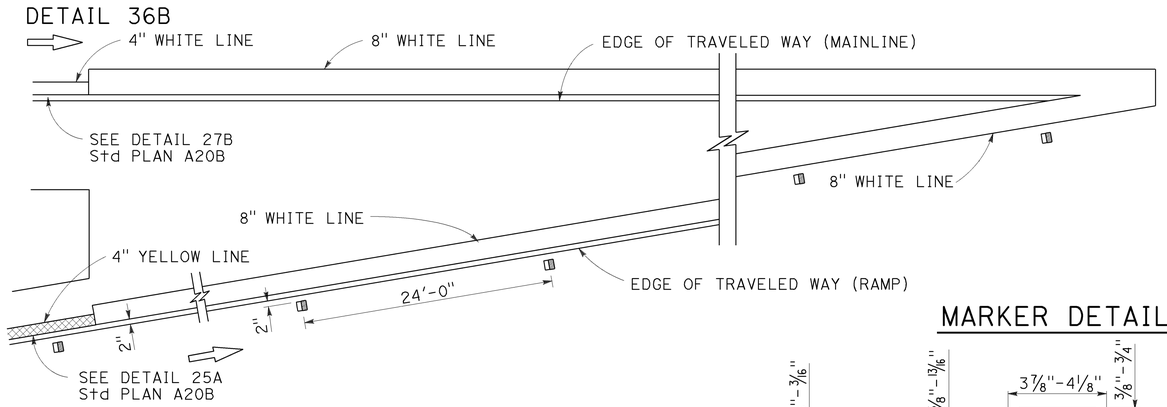

LANE DROP AT EXIT RAMPS

DETAIL 37

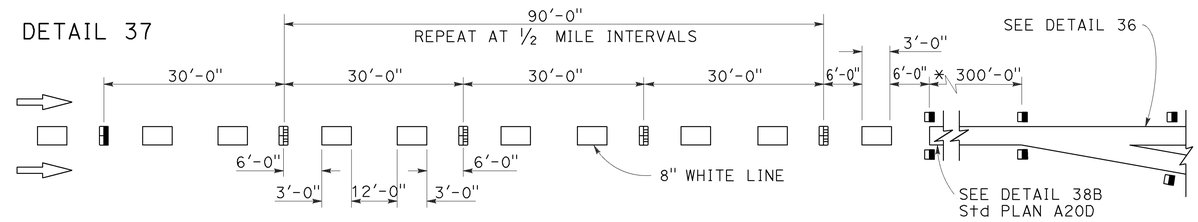

DETAIL 37A

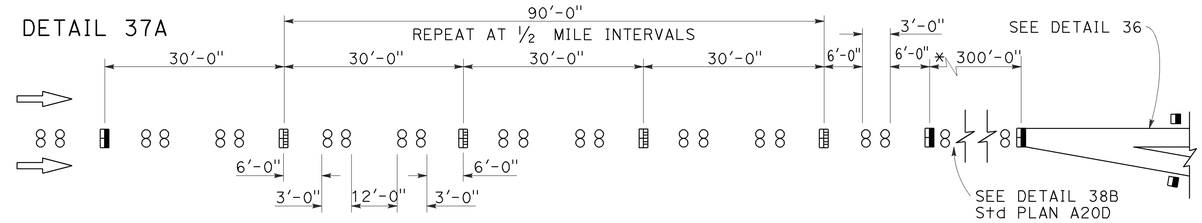

* The solid channelizing line shown may be omitted on short auxiliary lanes where weaving length is critical.

LANE DROP AT INTERSECTIONS

DETAIL 37B

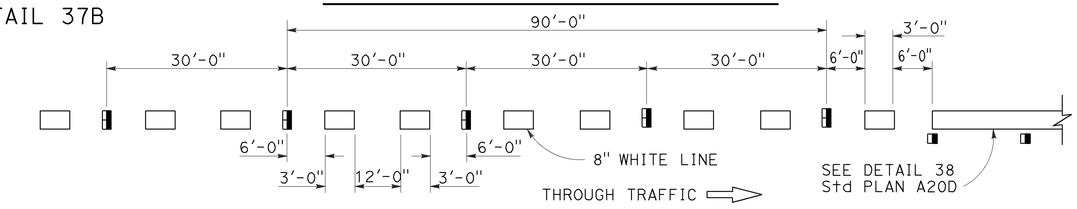

DETAIL 37C

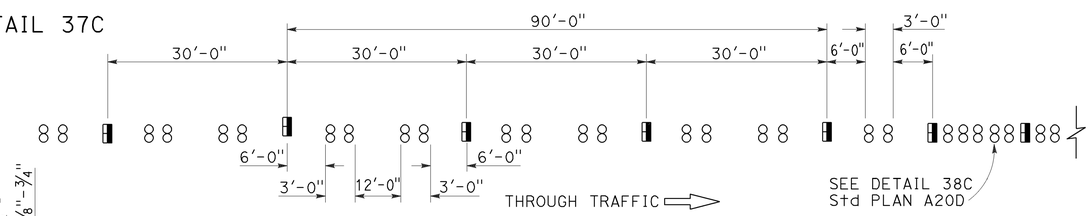

MARKER DETAILS

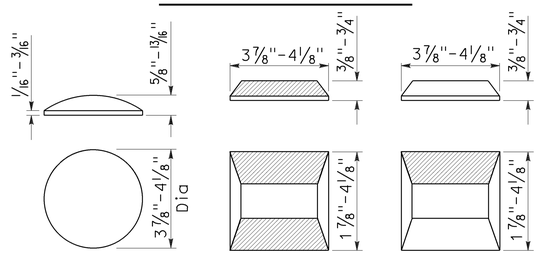

RETROREFLECTIVE FACE

LEGEND:

MARKERS

- ○ TYPE A WHITE NON-REFLECTIVE
- ⊞ TYPE C RED-CLEAR RETROREFLECTIVE
- ◨ TYPE G ONE-WAY CLEAR RETROREFLECTIVE

STATE OF CALIFORNIA
DEPARTMENT OF TRANSPORTATION

PAVEMENT MARKERS AND TRAFFIC LINE TYPICAL DETAILS

NO SCALE

RSP A20C DATED JULY 19, 2013 SUPERSEDES STANDARD PLAN A20C DATED MAY 20, 2011 - PAGE 11 OF THE STANDARD PLANS BOOK DATED 2010.

REVISED STANDARD PLAN RSP A20C

2010 REVISED STANDARD PLAN RSP A20C

4-29-13

Dist	COUNTY	ROUTE	POST MILES TOTAL PROJECT	SHEET No.	TOTAL SHEETS
08	Riv	79	R33.9	43	101

REGISTERED CIVIL ENGINEER

April 20, 2012
PLANS APPROVAL DATE

REGISTERED PROFESSIONAL ENGINEER
Roberta L. McLaughlin
No. C40375
Exp. 3-31-13
CIVIL
STATE OF CALIFORNIA

THE STATE OF CALIFORNIA OR ITS OFFICERS OR AGENTS SHALL NOT BE RESPONSIBLE FOR THE ACCURACY OR COMPLETENESS OF SCANNED COPIES OF THIS PLAN SHEET.

TO ACCOMPANY PLANS DATED 03-15-16

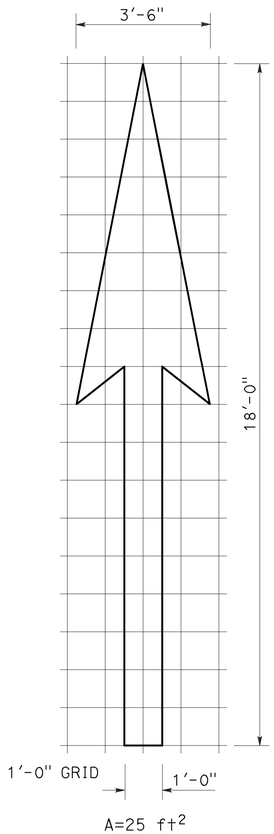

A=25 ft^2

TYPE I 18'-0" ARROW

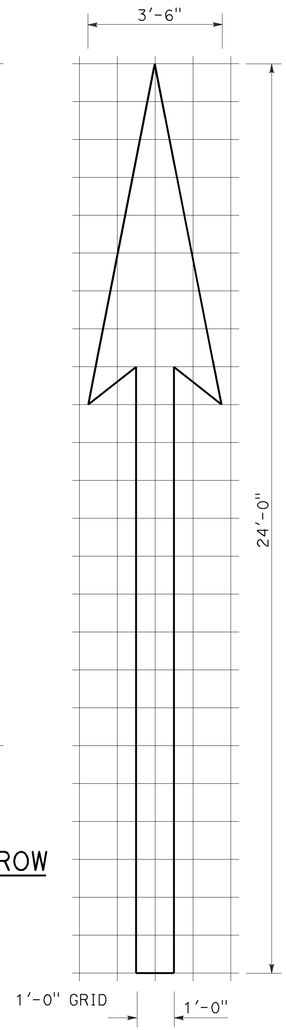

A=31 ft^2

TYPE I 24'-0" ARROW

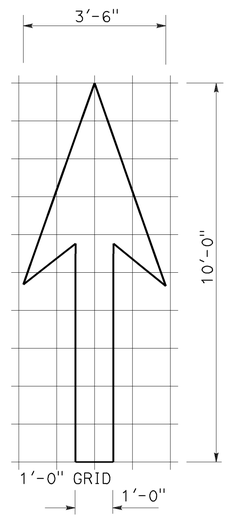

A=14 ft^2

TYPE I 10'-0" ARROW

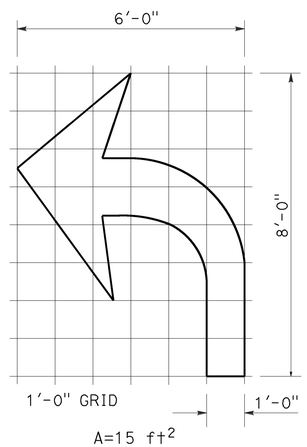

A=15 ft^2

TYPE IV (L) ARROW

(For Type IV (R) arrow, use mirror image)

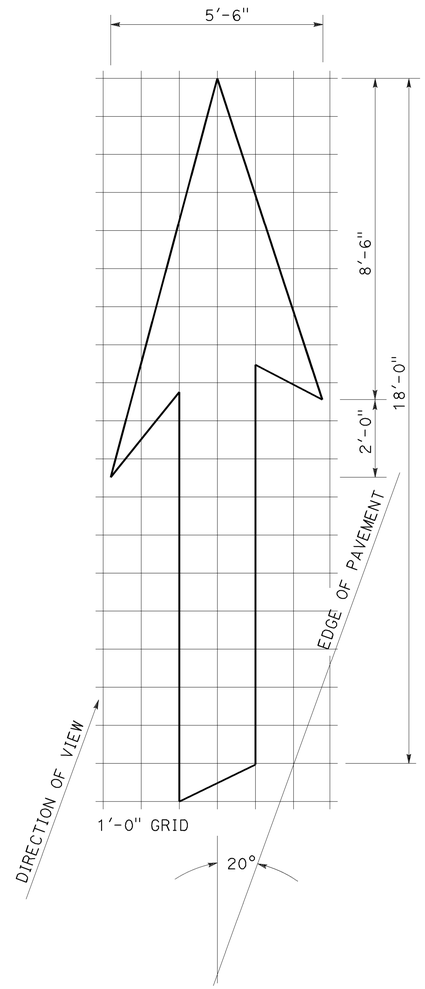

A=42 ft^2

TYPE VI ARROW

Right lane drop arrow
(For left lane, use mirror image)

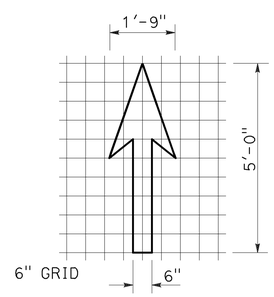

A=3.5 ft^2

BIKE LANE ARROW

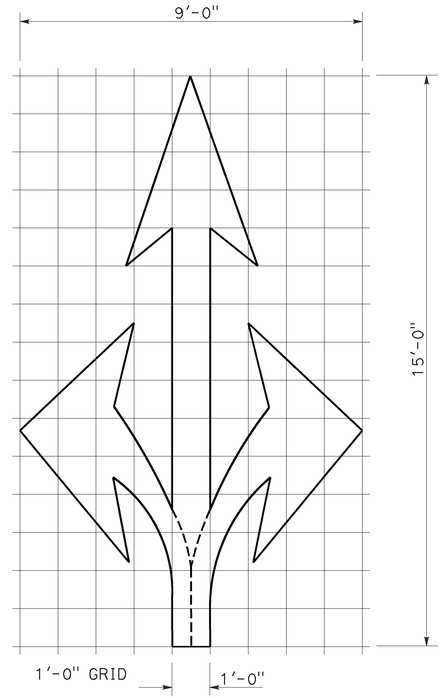

A=36 ft^2

TYPE VIII ARROW

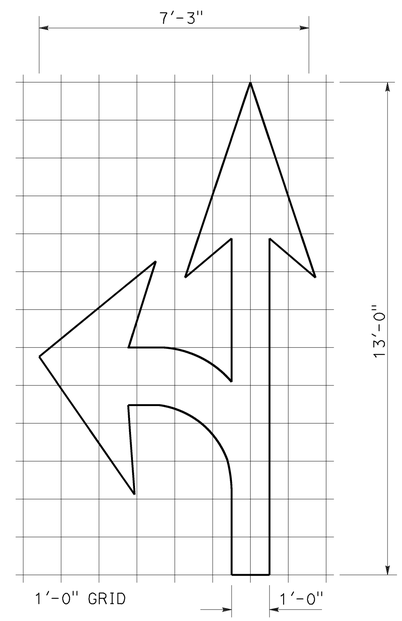

A=27 ft^2

TYPE VII (L) ARROW

(For Type VII (R) arrow, use mirror image)

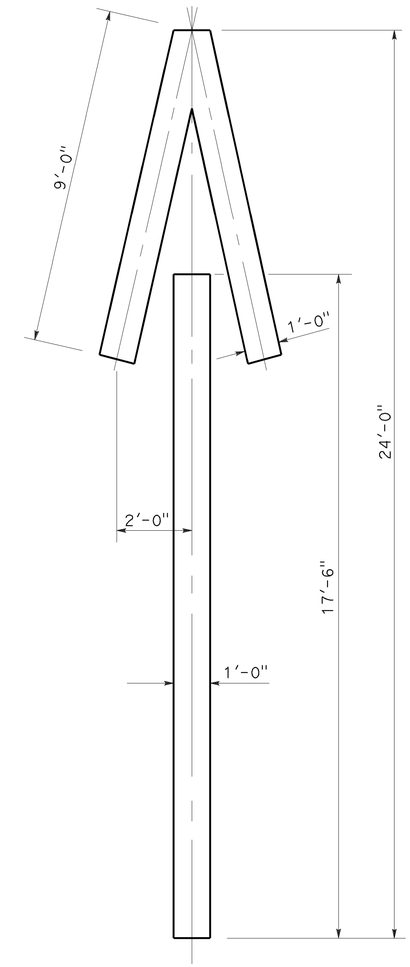

A=33 ft^2

TYPE V ARROW

NOTE:
Minor variations in dimensions may be accepted by the Engineer.

STATE OF CALIFORNIA
DEPARTMENT OF TRANSPORTATION

PAVEMENT MARKINGS ARROWS

NO SCALE

RSP A24A DATED APRIL 20, 2012 SUPERSEDES STANDARD PLAN A24A DATED MAY 20, 2011 - PAGE 13 OF THE STANDARD PLANS BOOK DATED 2010.

REVISED STANDARD PLAN RSP A24A

2010 REVISED STANDARD PLAN RSP A24A

3-14-12

Dist	COUNTY	ROUTE	POST MILES TOTAL PROJECT	SHEET No.	TOTAL SHEETS
08	Riv	79	R33.9	44	101

REGISTERED CIVIL ENGINEER

October 19, 2012
PLANS APPROVAL DATE

REGISTERED PROFESSIONAL ENGINEER Roberta L. McLaughlin No. C40375 Exp. 3-31-13 CIVIL STATE OF CALIFORNIA

THE STATE OF CALIFORNIA OR ITS OFFICERS OR AGENTS SHALL NOT BE RESPONSIBLE FOR THE ACCURACY OR COMPLETENESS OF SCANNED COPIES OF THIS PLAN SHEET.

NOTE: TO ACCOMPANY PLANS DATED 03-15-16

Minor variations in dimensions may be accepted by the Engineer.

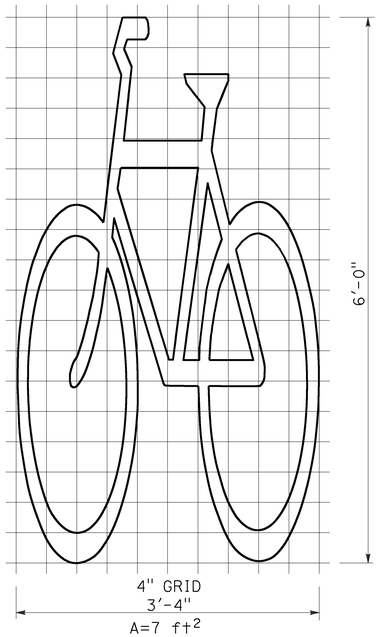

BIKE LANE SYMBOL WITHOUT PERSON

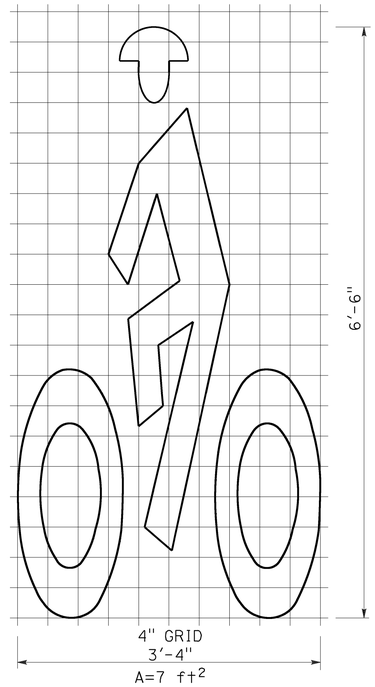

BIKE LANE SYMBOL WITH PERSON

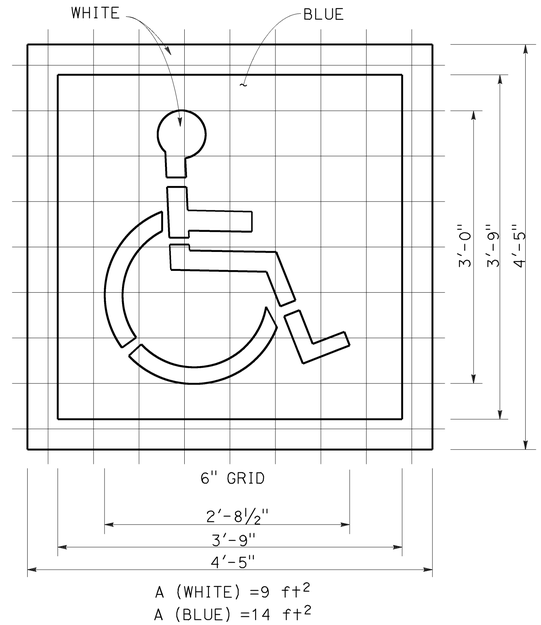

INTERNATIONAL SYMBOL OF ACCESSIBILITY (ISA) MARKING

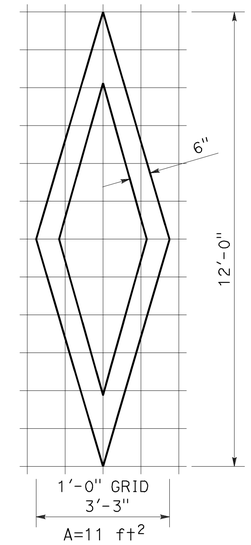

DIAMOND SYMBOL

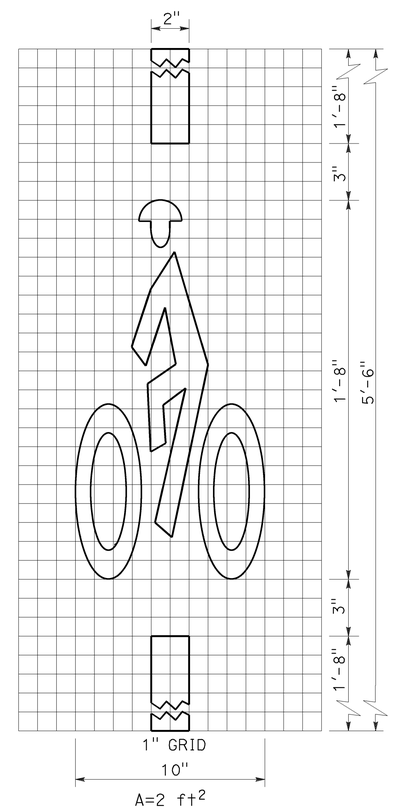

BICYCLE LOOP DETECTOR SYMBOL

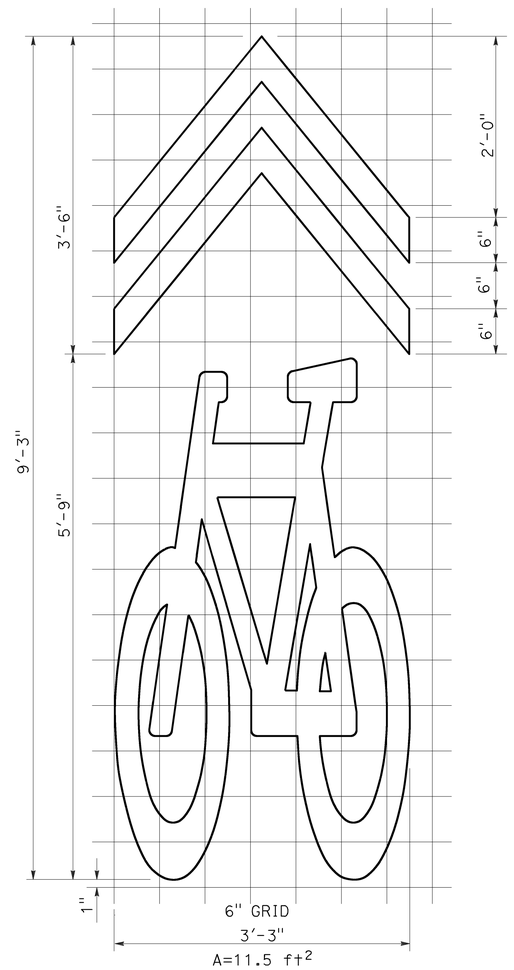

SHARED ROADWAY BICYCLE MARKING

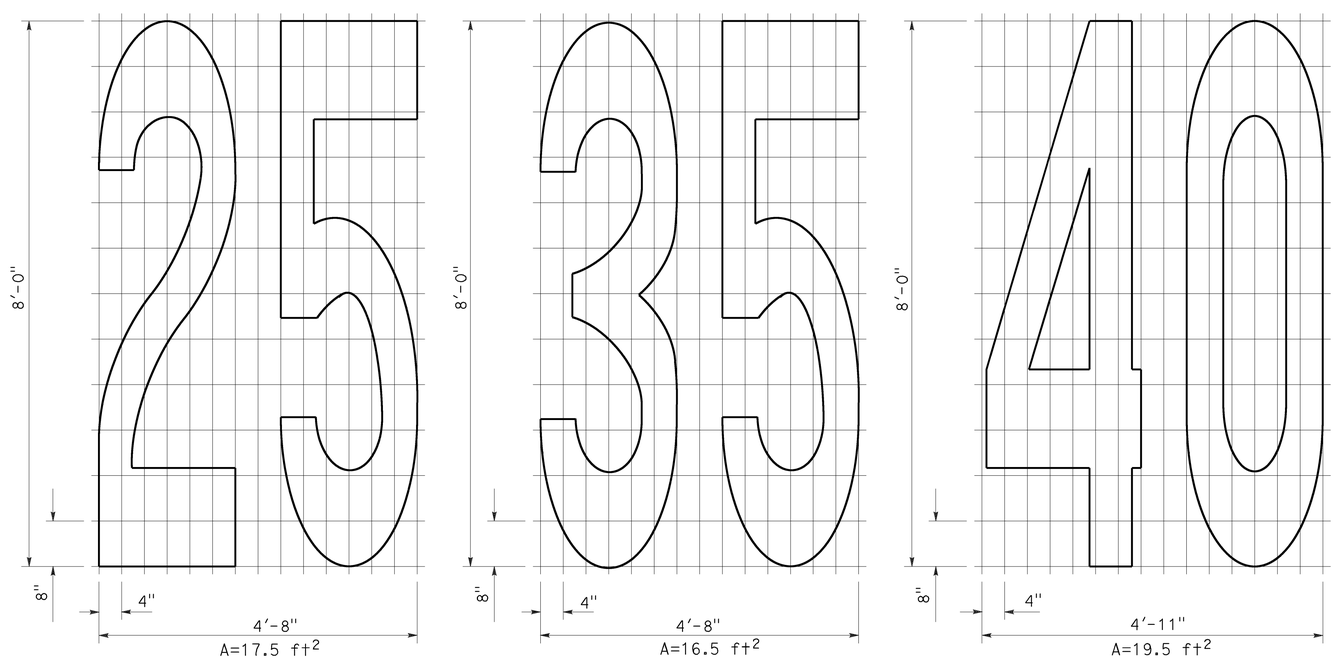

NUMERALS

STATE OF CALIFORNIA
DEPARTMENT OF TRANSPORTATION

PAVEMENT MARKINGS SYMBOLS AND NUMERALS

NO SCALE

RSP A24C DATED OCTOBER 19, 2012 SUPERSEDES STANDARD PLAN A24C DATED MAY 20, 2011 - PAGE 15 OF THE STANDARD PLANS BOOK DATED 2010.

REVISED STANDARD PLAN RSP A24C

2010 REVISED STANDARD PLAN RSP A24C

6-28-12

Dist	COUNTY	ROUTE	POST MILES TOTAL PROJECT	SHEET No.	TOTAL SHEETS
08	Riv	79	R33.9	45	101

REGISTERED CIVIL ENGINEER

July 20, 2012
PLANS APPROVAL DATE

REGISTERED PROFESSIONAL ENGINEER
Roberta L. McLaughlin
No. C40375
Exp. 3-31-13
CIVIL
STATE OF CALIFORNIA

THE STATE OF CALIFORNIA OR ITS OFFICERS OR AGENTS SHALL NOT BE RESPONSIBLE FOR THE ACCURACY OR COMPLETENESS OF SCANNED COPIES OF THIS PLAN SHEET.

TO ACCOMPANY PLANS DATED 03-15-16

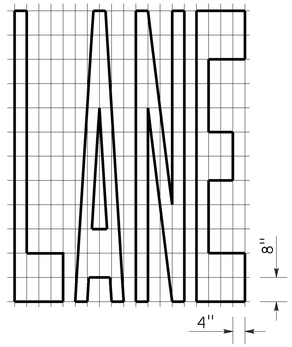

A=24 ft^2

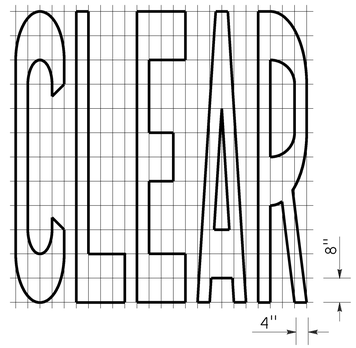

A=27 ft^2

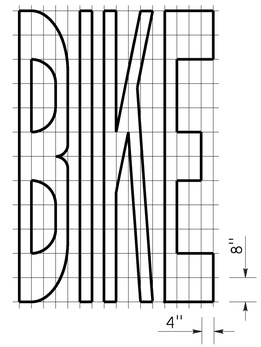

A=21 ft^2

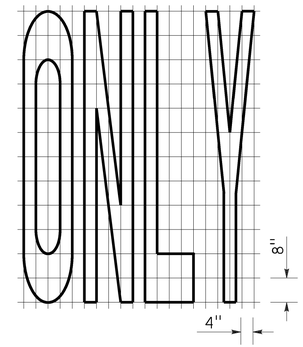

A=22 ft^2

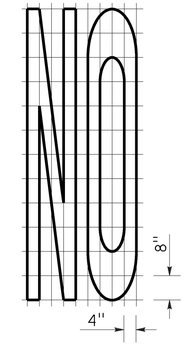

A=14 ft^2

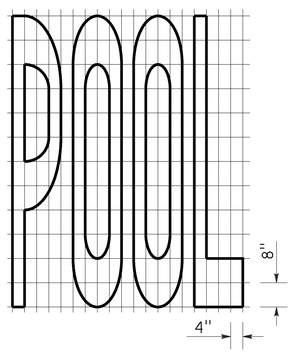

A=23 ft^2

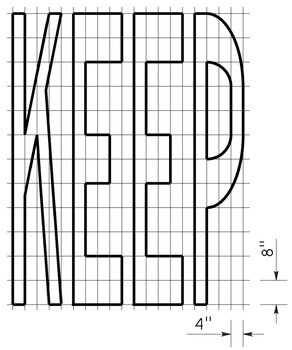

A=24 ft^2

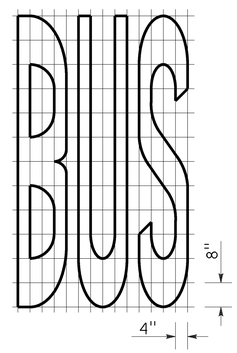

A=20 ft^2

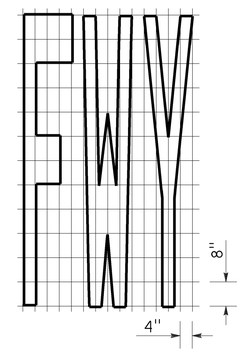

A=16 ft^2

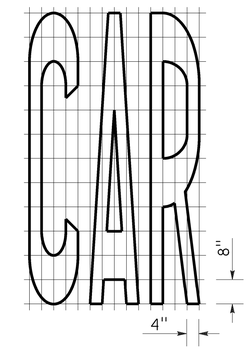

A=17 ft^2

WORD MARKINGS			
ITEM	ft^2	ITEM	ft^2
LANE	24	NO	14
POOL	23	BIKE	21
CAR	17	BUS	20
CLEAR	27	ONLY	22
KEEP	24	FWY	16

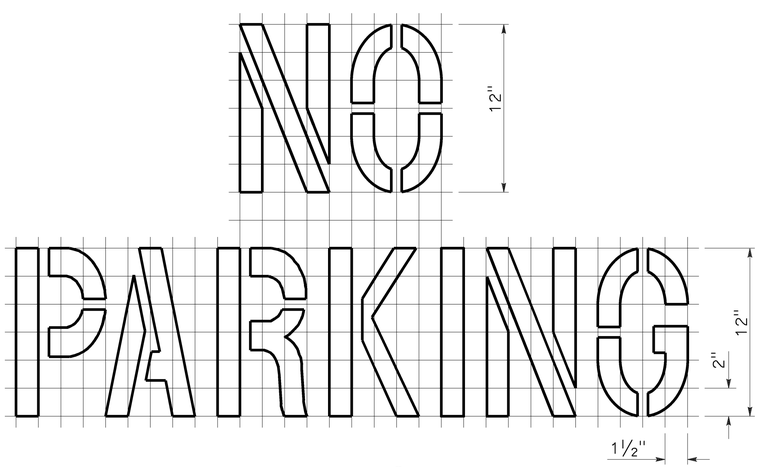

A=2 ft^2
See Notes 6 and 7

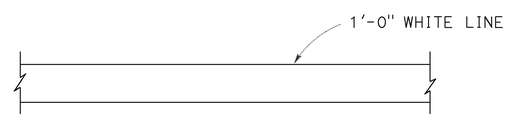

LIMIT LINE (STOP LINE)

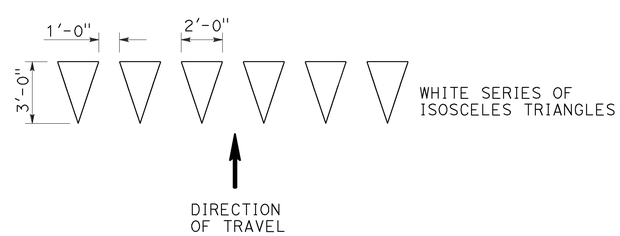

YIELD LINE

NOTES:

1. If a message consists of more than one word, it should read "UP", i.e., the first word should be nearest the driver.
2. The space between words should be at least four times the height of the characters for low speed roads, but not more than ten times the height of the characters. The space may be reduced appropriately where there is limited space because of local conditions.
3. Minor variations in dimensions may be accepted by the Engineer.
4. Portions of a letter, number or symbol may be separated by connecting segments not to exceed 2" in width.
5. The words "NO PARKING" pavement marking is to be used for parking facilities. For typical locations of markings, see Standard Plans A90A and A90B.
6. The words "NO PARKING", shall be painted in white letters no less than 1'-0" high on a contrasting background and located so that it is visible to traffic enforcement officials.

STATE OF CALIFORNIA
DEPARTMENT OF TRANSPORTATION

PAVEMENT MARKINGS WORDS, LIMIT AND YIELD LINES

NO SCALE

RSP A24E DATED JULY 20, 2012 SUPERSEDES STANDARD PLAN A24E
DATED MAY 20, 2011 - PAGE 17 OF THE STANDARD PLANS BOOK DATED 2010.

REVISED STANDARD PLAN RSP A24E

2010 REVISED STANDARD PLAN RSP A24E

6-12-12

Dist	COUNTY	ROUTE	POST MILES TOTAL PROJECT	SHEET No.	TOTAL SHEETS
08	Riv	79	R33.9	46	101

Roberta L. McLaughlin
REGISTERED CIVIL ENGINEER

July 20, 2012
PLANS APPROVAL DATE

REGISTERED PROFESSIONAL ENGINEER
Roberta L. McLaughlin
No. C40375
Exp. 3-31-13
CIVIL
STATE OF CALIFORNIA

THE STATE OF CALIFORNIA OR ITS OFFICERS OR AGENTS SHALL NOT BE RESPONSIBLE FOR THE ACCURACY OR COMPLETENESS OF SCANNED COPIES OF THIS PLAN SHEET.

TO ACCOMPANY PLANS DATED 03-15-16

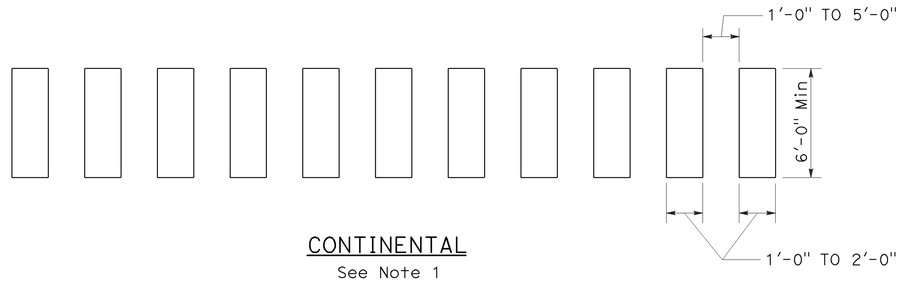

CONTINENTAL
See Note 1

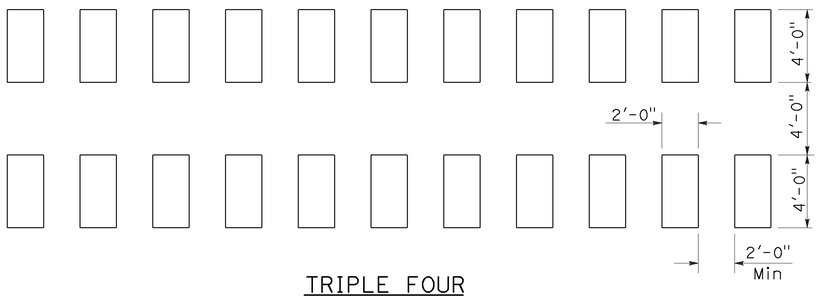

TRIPLE FOUR
See Note 1

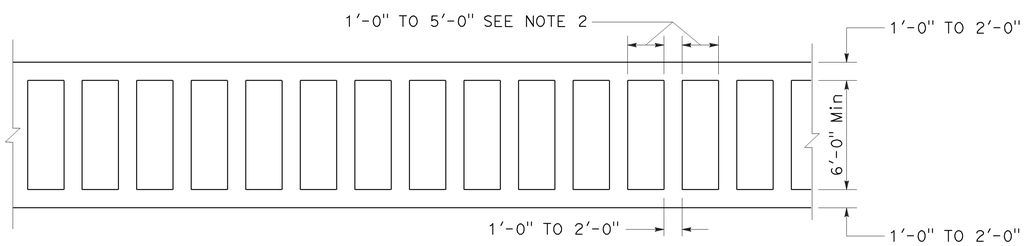

LADDER

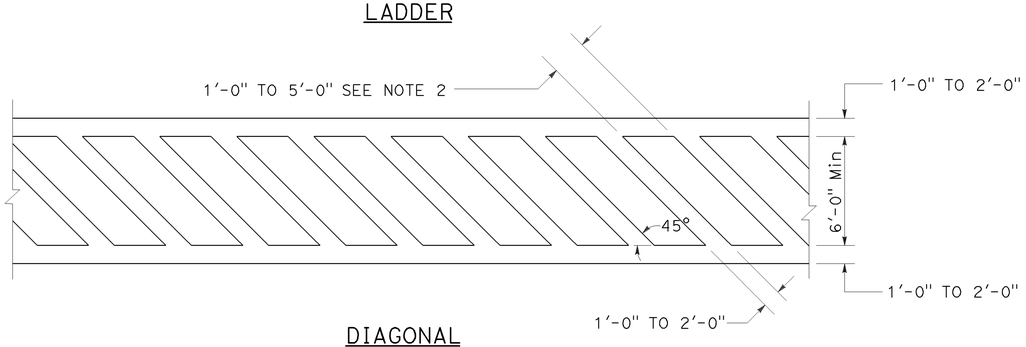

DIAGONAL

HIGHER VISIBILITY CROSSWALKS

NOTES:

1. Spaces between markings should be placed in wheel tracks of each lane.
2. Spacings not to exceed 2.5 times width of longitudinal line.
3. All crosswalk markings must be white except for those near schools must be yellow.

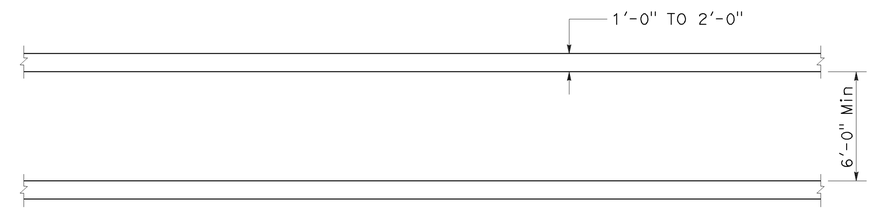

BASIC

STATE OF CALIFORNIA
DEPARTMENT OF TRANSPORTATION

PAVEMENT MARKINGS CROSSWALKS

NO SCALE

RSP A24F DATED JULY 20, 2012 SUPPLEMENTS THE STANDARD PLANS BOOK DATED 2010.

REVISED STANDARD PLAN RSP A24F

2010 REVISED STANDARD PLAN RSP A24F

6-28-12

Dist	COUNTY	ROUTE	POST MILES TOTAL PROJECT	SHEET No.	TOTAL SHEETS
08	Riv	79	R33.9	47	101

REGISTERED CIVIL ENGINEER

October 30, 2015
PLANS APPROVAL DATE

REGISTERED PROFESSIONAL ENGINEER
Carl M. Duan
No. C59976
Exp. 6-30-16
CIVIL
STATE OF CALIFORNIA

THE STATE OF CALIFORNIA OR ITS OFFICERS OR AGENTS SHALL NOT BE RESPONSIBLE FOR THE ACCURACY OR COMPLETENESS OF SCANNED COPIES OF THIS PLAN SHEET.

TO ACCOMPANY PLANS DATED 03-15-16

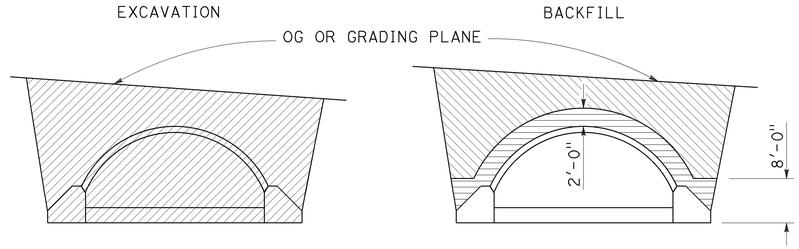

IN TRENCH

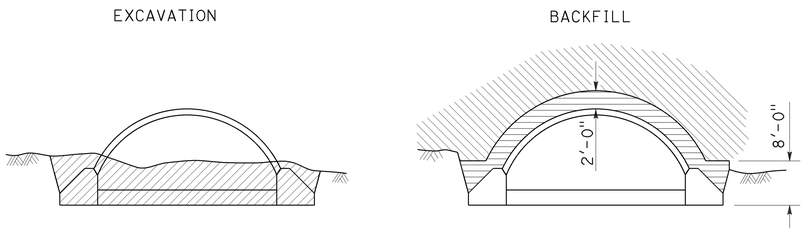

IN EMBANKMENT

STRUCTURAL STEEL PLATE ARCHES

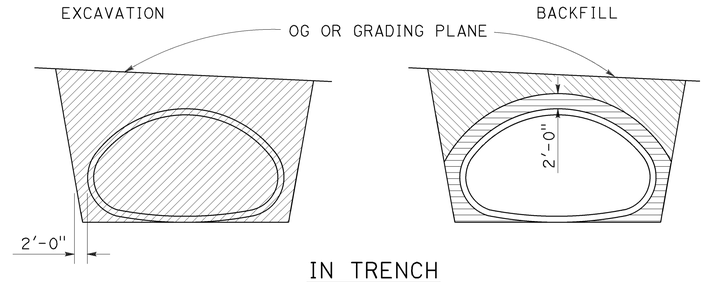

IN TRENCH

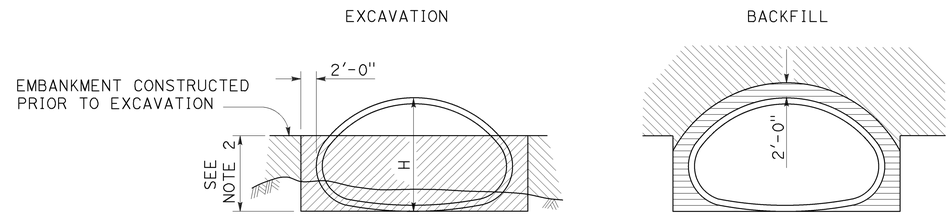

IN EMBANKMENT

STRUCTURAL STEEL PLATE PIPE ARCHES AND VEHICULAR UNDERCROSSING

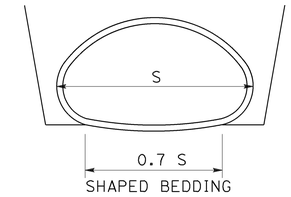

SHAPED BEDDING

S = Larger than 84"

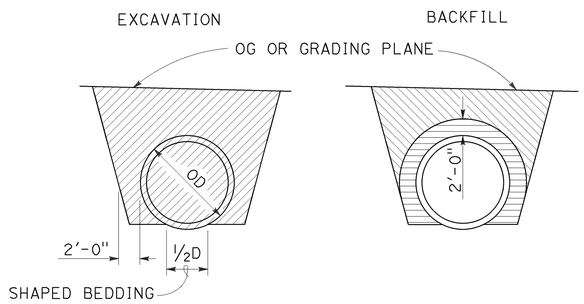

IN TRENCH

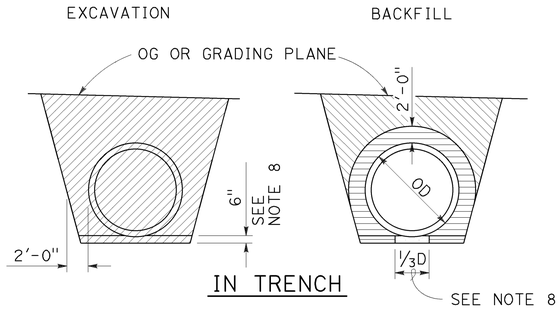

IN TRENCH

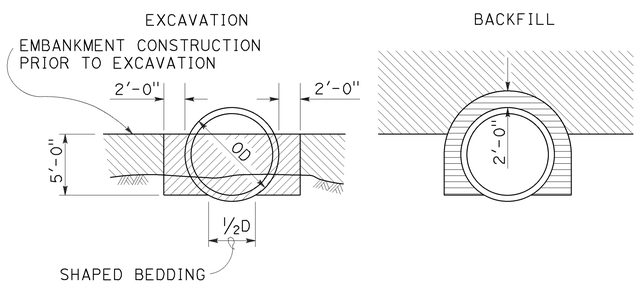

IN EMBANKMENT

PIPES

Larger than 84"

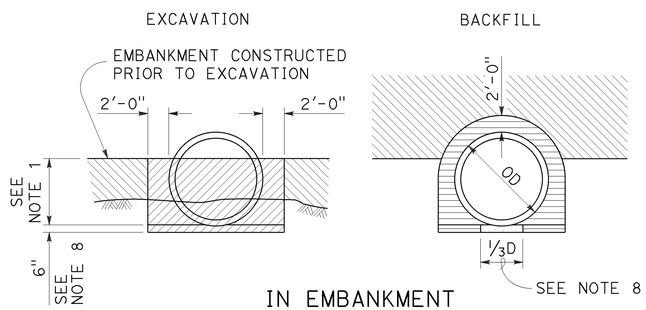

IN EMBANKMENT

METAL AND PLASTIC PIPES AND CORRUGATED METAL PIPE ARCHES

84" or Smaller

NOTES:

1. PIPES: 30" minimum for diameters up to and including 42" then ⅔ diameter but no more than 60" required. CORRUGATED METAL PIPE ARCHES: 30" maximum.
2. ⅔ H up to 60" maximum.
3. Slope or shore excavation sides as necessary.
4. Backfill shall be placed full width of excavation except as noted.
5. Diagrams do not apply to overside drains.
6. Dimensions shown are minimum.
7. Construction strutting of structural steel plate pipe, arches and vehicular undercrossing to be used when shown on the project plans. When shown, see Standard Plan D88A for strutting requirements.
8. Excavation below pipe and 80% relative compaction requirements for plastic pipes only.
9. D is the inside diameter (ID) of the pipe.

LEGEND

- STRUCTURE EXCAVATION (CULVERT)
- ROADWAY EMBANKMENT
- STRUCTURE BACKFILL (CULVERT) 95% RELATIVE COMPACTION
- STRUCTURE BACKFILL (CULVERT) 80% RELATIVE COMPACTION

STATE OF CALIFORNIA
DEPARTMENT OF TRANSPORTATION

EXCAVATION AND BACKFILL METAL AND PLASTIC CULVERTS

NO SCALE

RSP A62F DATED OCTOBER 30, 2015 SUPERSEDES STANDARD PLAN A62F DATED MAY 20, 2011 - PAGE 26 OF THE STANDARD PLANS BOOK DATED 2010.

REVISED STANDARD PLAN RSP A62F

2010 REVISED STANDARD PLAN RSP A62F

10-13-15

Dist	COUNTY	ROUTE	POST MILES TOTAL PROJECT	SHEET No.	TOTAL SHEETS
08	Riv	79	R33.9	48	101

Randell D. Hiatt
REGISTERED CIVIL ENGINEER

July 19, 2013
PLANS APPROVAL DATE

REGISTERED PROFESSIONAL ENGINEER Randell D. Hiatt No. C50200 Exp. 6-30-15 CIVIL STATE OF CALIFORNIA

THE STATE OF CALIFORNIA OR ITS OFFICERS OR AGENTS SHALL NOT BE RESPONSIBLE FOR THE ACCURACY OR COMPLETENESS OF SCANNED COPIES OF THIS PLAN SHEET.

TO ACCOMPANY PLANS DATED 03-15-16

2010 REVISED STANDARD PLAN RSP A77L1

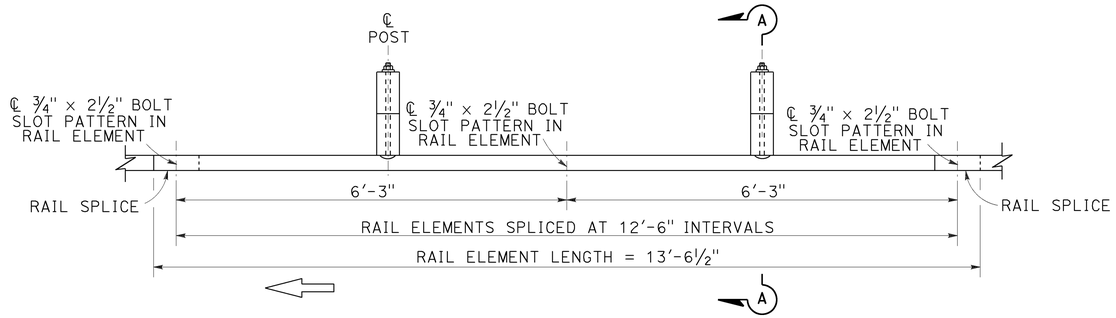

PLAN

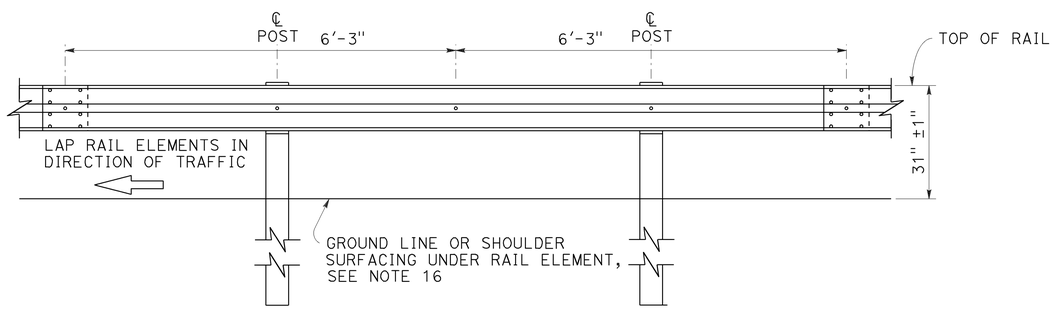

ELEVATION

MIDWEST GUARDRAIL SYSTEM WITH WOOD POST AND BLOCKS

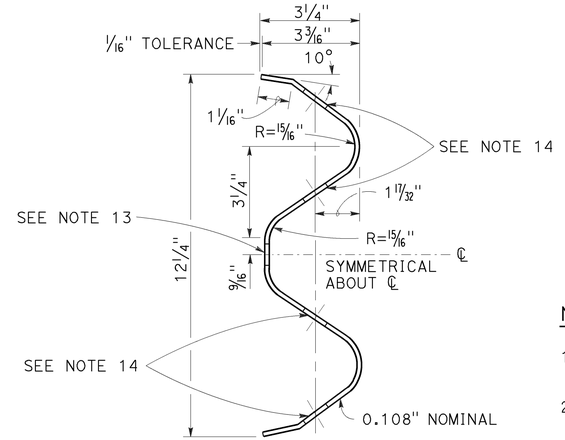

SECTION THRU RAIL ELEMENT

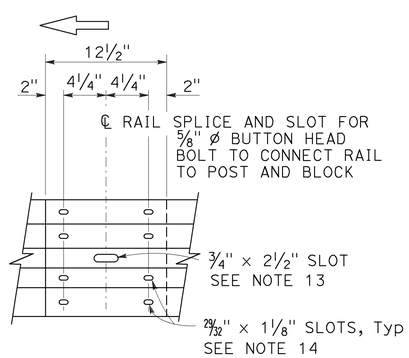

ELEVATION

RAIL ELEMENT SPLICE DETAIL

a) Connect the over lapped end of the rail elements with ⅝" ø × 1⅜" button head oval shoulder splice bolts inserted into the 29⁄32" × 1⅛" slots and bolted together with ⅝" ø recessed hex nuts. Recess of hex nut points toward rail element. A total of 8 bolts and nuts are to be used at each rail splice connection.

b) The ends of the rail elements are to be overlapped in the direction of traffic (see details).

c) Where end cap is to be attached to the end of a rail element, a total of 4 of the above described splice bolts and nuts are to be used.

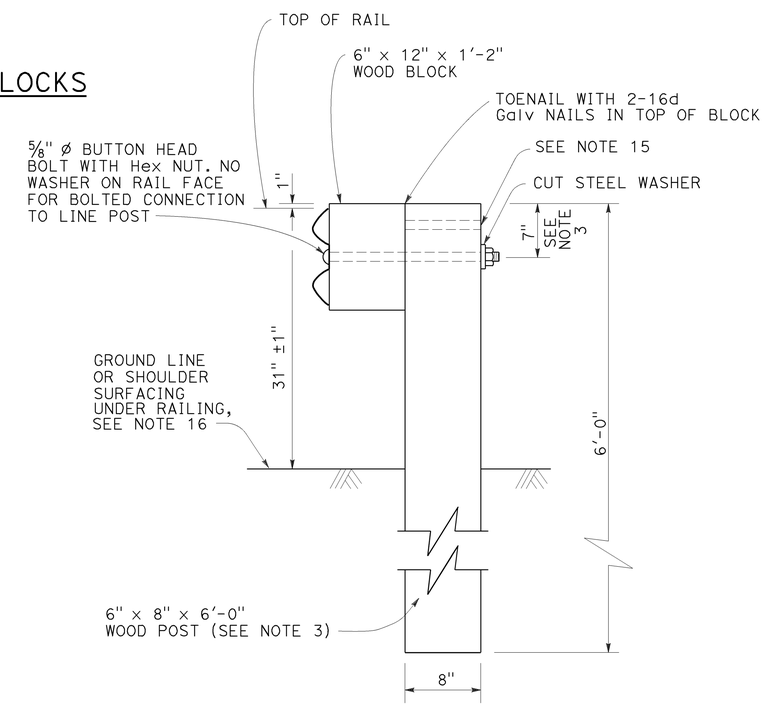

SECTION A-A

TYPICAL WOOD LINE POST INSTALLATION

See Note 4

NOTES:

1. For details of steel post installations, see Revised Standard Plan RSP A77L2.
2. For details of standard hardware used to construct MGS, see Revised Standard Plan RSP A77M1.
3. For details of wood posts and wood blocks used to construct MGS, see Revised Standard Plan RSP A77N1.
4. For additional installation details, see Revised Standard Plan RSP A77N3.
5. MGS post spacing to be 6'-3" center to center, except as otherwise noted.
6. For MGS typical layouts, see the A77P, A77Q and A77R Series of Standard Plans.
7. If railing is connected to terminal system end treatment, use 31" height terminal system end treatment.
8. For MGS end anchor details, see Revised Standard Plans RSP A77S1 and RSP A77T2.
9. For details of MGS transition to bridge railing, see Revised Standard Plan RSP A77U4.
10. For additional details of MSG connection to bridge railing, see Revised Standard Plans RSP A77U1, RSP A77U2 and RSP A77V1.
11. For MGS connection details to abutments and walls, see Revised Standard Plan RSP A77U3.
12. For typical MGS delineation and dike positioning details, see Revised Standard Plan RSP A77N4.
13. Slotted hole for bolted connection of rail element to block and post. See "Section Thru Rail Element".
14. Slotted holes for splice bolts to overlap ends of rail element. See "Section Thru Rail Element".
15. Additional hole in uppermost portion of line post is for potential future adjustments of railing height. See Revised Standard Plan RSP A77N1.
16. Install posts in soil.

STATE OF CALIFORNIA
DEPARTMENT OF TRANSPORTATION

MIDWEST GUARDRAIL SYSTEM STANDARD RAILING SECTION (WOOD POST WITH WOOD BLOCK)

NO SCALE

RSP A77L1 DATED JULY 19, 2013 SUPPLEMENTS STANDARD PLANS BOOK DATED 2010.

REVISED STANDARD PLAN RSP A77L1

Dist	COUNTY	ROUTE	POST MILES TOTAL PROJECT	SHEET No.	TOTAL SHEETS
08	Riv	79	R33.9	49	101

Randell D. Hiatt
REGISTERED CIVIL ENGINEER

July 19, 2013
PLANS APPROVAL DATE

REGISTERED PROFESSIONAL ENGINEER
Randell D. Hiatt
No. C50200
Exp. 6-30-15
CIVIL
STATE OF CALIFORNIA

THE STATE OF CALIFORNIA OR ITS OFFICERS OR AGENTS SHALL NOT BE RESPONSIBLE FOR THE ACCURACY OR COMPLETENESS OF SCANNED COPIES OF THIS PLAN SHEET.

TO ACCOMPANY PLANS DATED 03-15-16

2010 REVISED STANDARD PLAN RSP A77M1

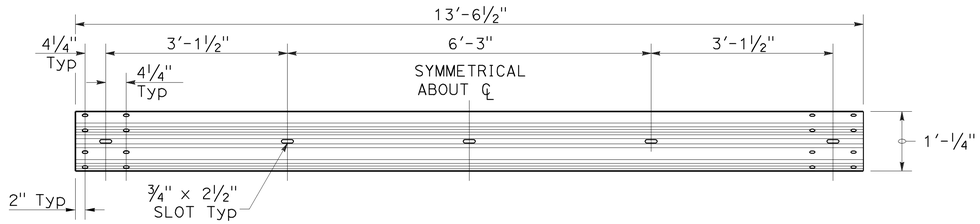

TYPICAL RAIL ELEMENT

NOTE:

1. Slotted holes for splice bolts to overlap ends of rail element.

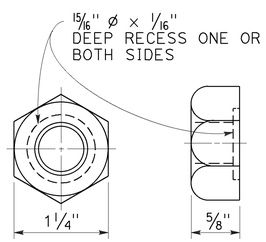

⅝" ø RECESS NUT

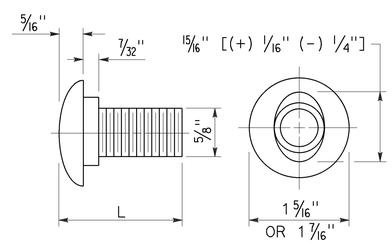

⅝" ø BUTTON HEAD BOLT

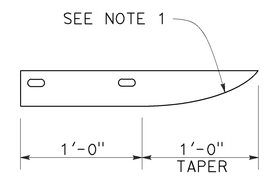

PLAN

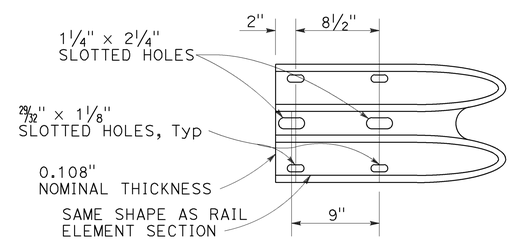

ELEVATION

END CAP (TYPE A)

BUTTON HEAD BOLT

L	THREAD LENGTH
1⅜"	FULL THREAD LENGTH
2"	FULL THREAD LENGTH
10"	4" Min THREAD LENGTH
18"	4" Min THREAD LENGTH
20"	4" Min THREAD LENGTH
22"	4" Min THREAD LENGTH
26"	4" Min THREAD LENGTH
36"	4" Min THREAD LENGTH
** 2¾"	2" Min THREAD LENGTH
** 19"	4" Min THREAD LENGTH

** For nested rail applications.

STATE OF CALIFORNIA
DEPARTMENT OF TRANSPORTATION

MIDWEST GUARDRAIL SYSTEM STANDARD HARDWARE

NO SCALE

RSP A77M1 DATED JULY 19, 2013 SUPPLEMENTS THE STANDARD PLANS BOOK DATED 2010.

REVISED STANDARD PLAN RSP A77M1

7-3-13

Dist	COUNTY	ROUTE	POST MILES TOTAL PROJECT	SHEET No.	TOTAL SHEETS
08	Riv	79	R33.9	50	101

Randell D. Hiatt
REGISTERED CIVIL ENGINEER

July 19, 2013
PLANS APPROVAL DATE

REGISTERED PROFESSIONAL ENGINEER
Randell D. Hiatt
No. C50200
Exp. 6-30-15
CIVIL
STATE OF CALIFORNIA

THE STATE OF CALIFORNIA OR ITS OFFICERS OR AGENTS SHALL NOT BE RESPONSIBLE FOR THE ACCURACY OR COMPLETENESS OF SCANNED COPIES OF THIS PLAN SHEET.

TO ACCOMPANY PLANS DATED 03-15-16

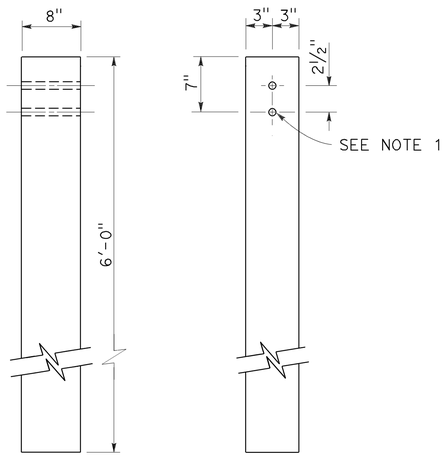

SIDE FRONT

6" x 8" WOOD POST
See Note 3

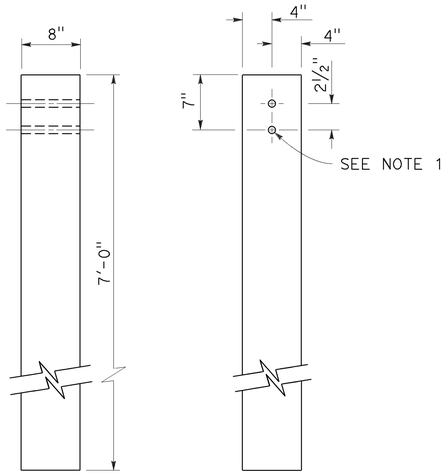

SIDE FRONT

8" x 8" WOOD POST
See Note 4

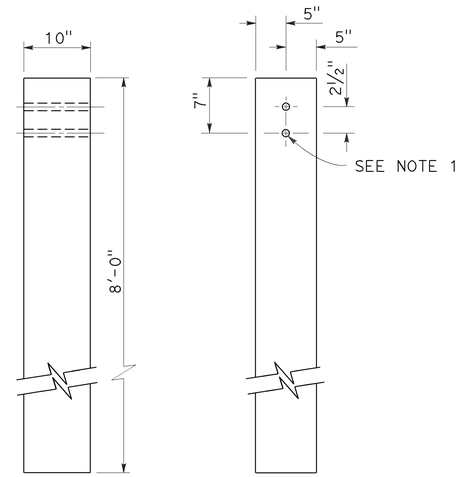

SIDE FRONT

10" x 10" WOOD POST
See Note 5

NOTES:

1. All holes in wood posts and blocks shall be 3/4" Dia ± 1/16".
2. Dimensions shown for wood post are nominal.
3. This post and block combination used for standard line post sections of MGS.
4. This post and 8" x 12" block combination used for line post sections of MGS on narrow roadways.
5. This post and 8" x 12" block combination is typically used where strengthened line post sections of MGS are warranted to shield fixed objects.
6. See Revised Standard Plan RSP A77L3 for use of 6" x 8" and 8" x 8" wood blocks.

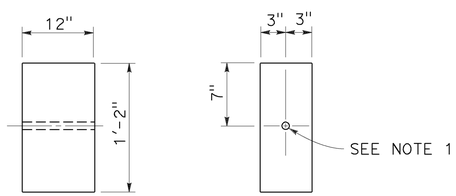

SIDE FRONT

6" x 12" WOOD BLOCK
See Note 3

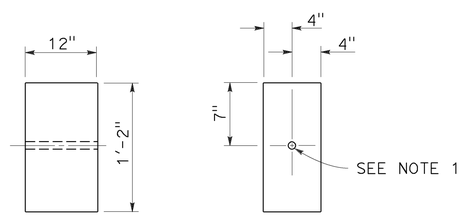

SIDE FRONT

8" x 12" WOOD BLOCK

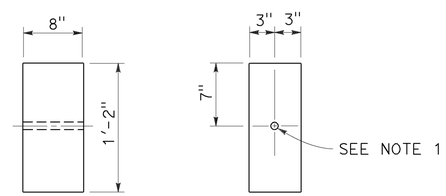

SIDE FRONT

6" x 8" WOOD BLOCK
Only for use with metal beam guard rail see Note 6

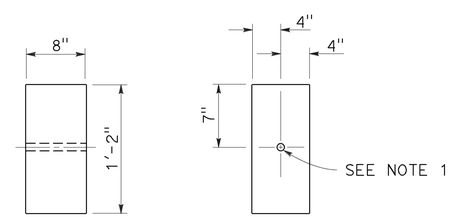

SIDE FRONT

8" x 8" WOOD BLOCK
Only for use with metal beam guard rail see Note 6

STATE OF CALIFORNIA
DEPARTMENT OF TRANSPORTATION

MIDWEST GUARDRAIL SYSTEM WOOD POST AND WOOD BLOCK DETAILS

NO SCALE

RSP A77N1 DATED JULY 19, 2013 SUPPLEMENTS THE STANDARD PLANS BOOK DATED 2010.

REVISED STANDARD PLAN RSP A77N1

2010 REVISED STANDARD PLAN RSP A77N1

7-3-13

Dist	COUNTY	ROUTE	POST MILES TOTAL PROJECT	SHEET No.	TOTAL SHEETS
08	Riv	79	R33.9	51	101

Randell D. Hiatt
REGISTERED CIVIL ENGINEER

July 19, 2013
PLANS APPROVAL DATE

REGISTERED PROFESSIONAL ENGINEER
Randell D. Hiatt
No. C50200
Exp. 6-30-15
CIVIL
STATE OF CALIFORNIA

THE STATE OF CALIFORNIA OR ITS OFFICERS OR AGENTS SHALL NOT BE RESPONSIBLE FOR THE ACCURACY OR COMPLETENESS OF SCANNED COPIES OF THIS PLAN SHEET.

TO ACCOMPANY PLANS DATED 03-15-16

NOTES:

1. When necessary to place dike more than 7" in front of face of MGS, only Type C dike may be used. For dike details, see Revised Standard Plan RSP A87B.
2. For standard railing post embedment, see Revised Standard Plan RSP A77N3.
3. MGS delineation to be used where shown on the Project Plans.
4. When dike or curb is placed under MGS, the maximum height of the dike or curb shall be 6". Mountable dike should not be used. For dike and curb details, see Revised Standard Plans RSP A87A and RSP A87B.
5. For details of typical distance between the face of rail and hinge point, see Revised Standard Plan RSP A77N3.
6. For steel line posts, use 1/4 - 20 self-tapping screws in 0.22" diameter holes or 1/4" bolts in 9/32" diameter holes.

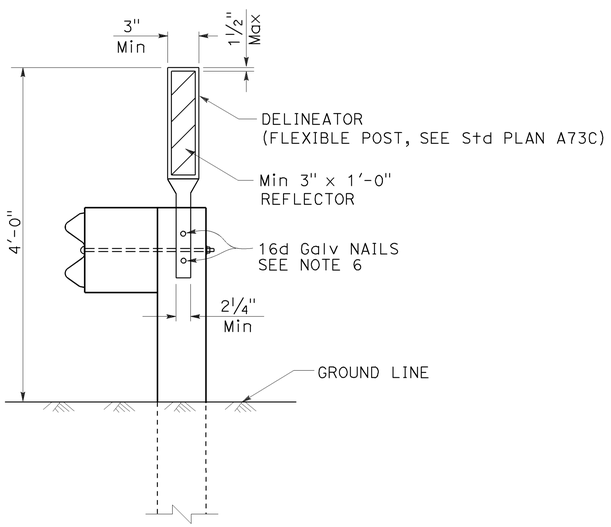

MGS DELINEATION

See Note 3

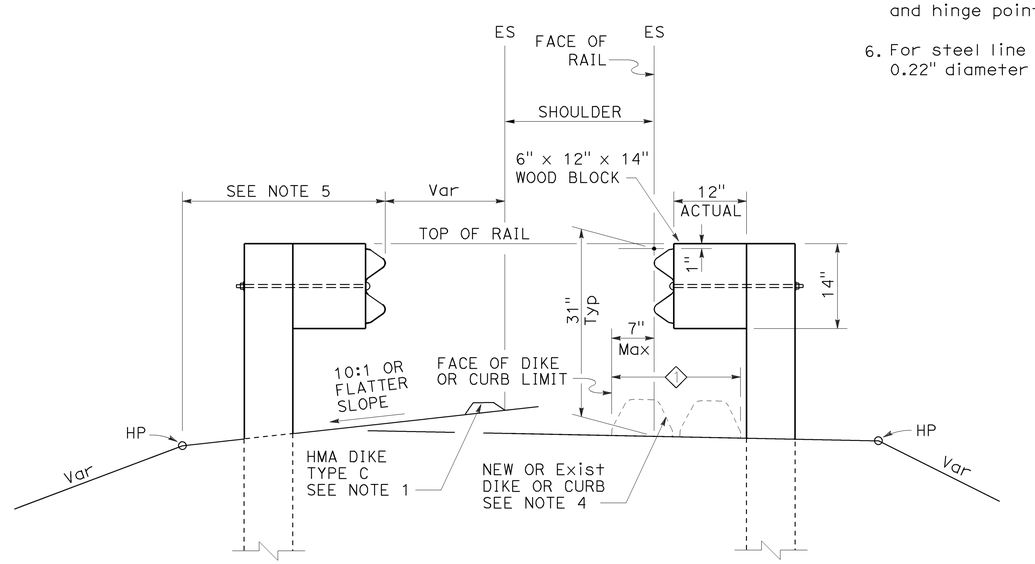

DIKE POSITIONING

See Note 1

1 PERMISSIBLE DIKE OR CURB PLACEMENT AREA

STATE OF CALIFORNIA
DEPARTMENT OF TRANSPORTATION

MIDWEST GUARDRAIL SYSTEM TYPICAL RAILING DELINEATION AND DIKE POSITIONING DETAILS

NO SCALE

RSP A77N4 DATED JULY 19, 2013 SUPPLEMENTS THE STANDARD PLANS BOOK DATED 2010.

REVISED STANDARD PLAN RSP A77N4

2010 REVISED STANDARD PLAN RSP A77N4

7-10-13

Dist	COUNTY	ROUTE	POST MILES TOTAL PROJECT	SHEET No.	TOTAL SHEETS
08	Riv	79	R33.9	52	101

Randell D. Hiatt
REGISTERED CIVIL ENGINEER

July 19, 2013
PLANS APPROVAL DATE

REGISTERED PROFESSIONAL ENGINEER
Randell D. Hiatt
No. C50200
Exp. 6-30-15
CIVIL
STATE OF CALIFORNIA

THE STATE OF CALIFORNIA OR ITS OFFICERS OR AGENTS SHALL NOT BE RESPONSIBLE FOR THE ACCURACY OR COMPLETENESS OF SCANNED COPIES OF THIS PLAN SHEET.

TO ACCOMPANY PLANS DATED 03-15-16

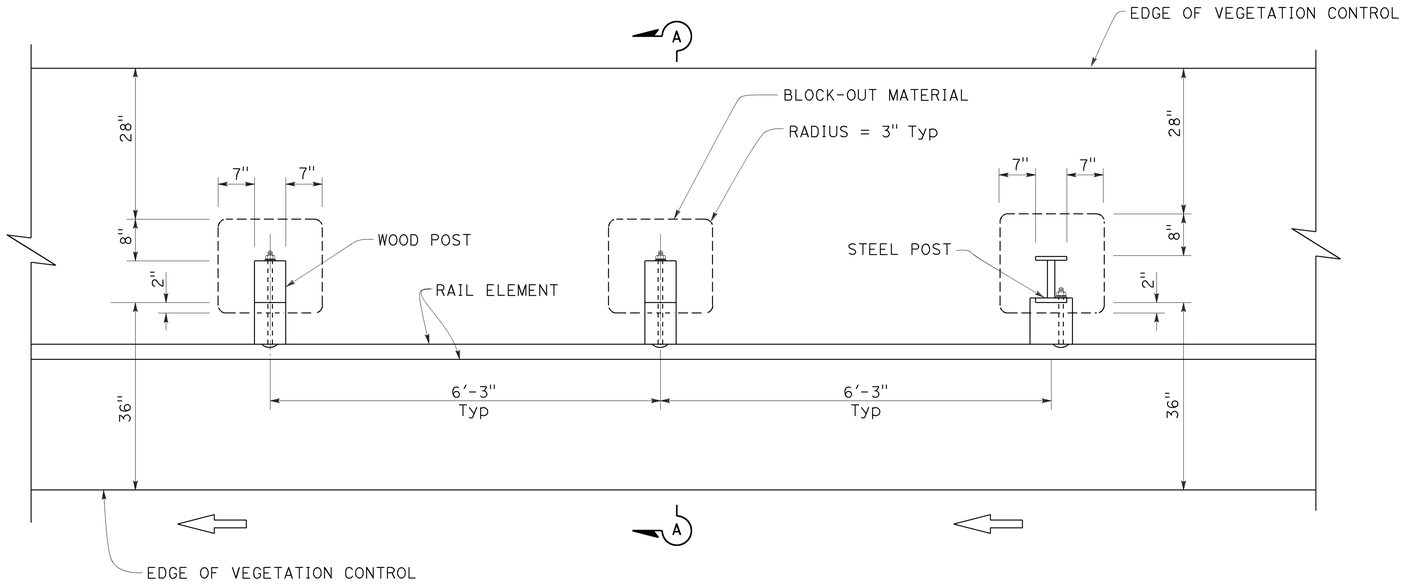

PLAN

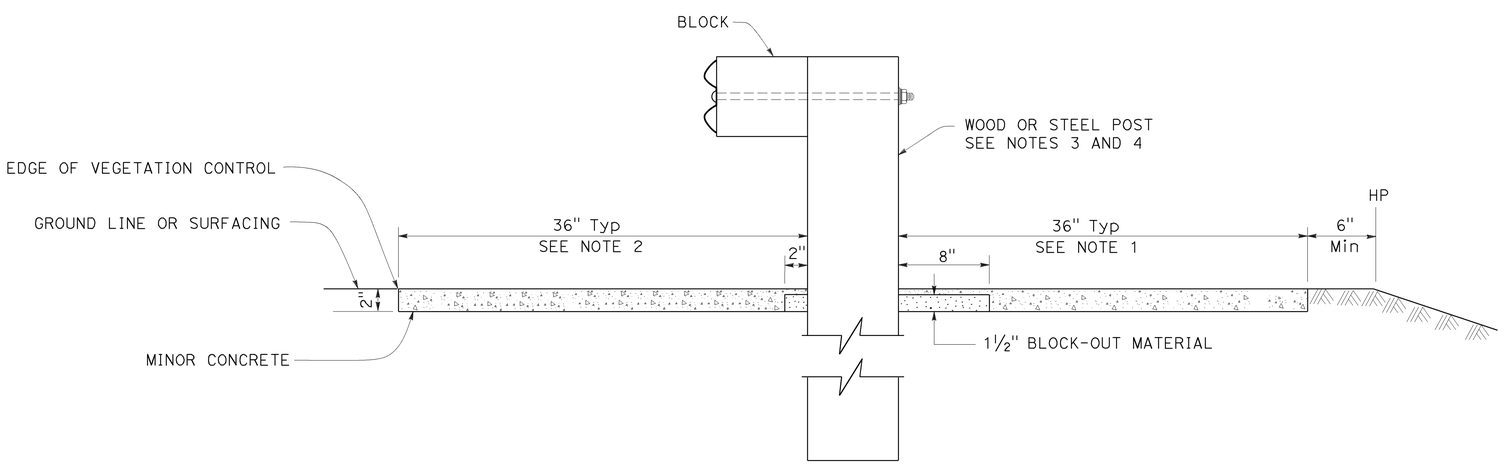

SECTION A-A

NOTES:

1. Where the distance between back of post and hinge point is less than 42", construct vegetation control to 6" from hinge point while maintaining the 8" block-out at back of post. If the 8" block-out at back of post can not be maintained, construct vegetation control flush with the back edge of post.
2. Where dike is constructed under railing, construct vegetation control to back edge of dike. Where paved shoulder is constructed within 36" in front of the post, construct vegetation control to the edge of paved shoulder.
3. For wood post sizes, see Revised Standard Plan RSP A77N1.
4. For steel post sizes, see Revised Standard Plan RSP A77N2.
5. For details not shown, see Revised Standard Plans RSP A77L1 and RSP A77L2.

STATE OF CALIFORNIA
DEPARTMENT OF TRANSPORTATION

MIDWEST GUARDRAIL SYSTEM TYPICAL VEGETATION CONTROL STANDARD RAILING SECTION

NO SCALE

RSP A77N5 DATED JULY 19, 2013 SUPPLEMENTS THE STANDARD PLANS BOOK DATED 2010.

REVISED STANDARD PLAN RSP A77N5

2010 REVISED STANDARD PLAN RSP A77N5

7-3-13

Dist	COUNTY	ROUTE	POST MILES TOTAL PROJECT	SHEET No.	TOTAL SHEETS
08	Riv	79	R33.9	53	101

Randell D. Hiatt
REGISTERED CIVIL ENGINEER

July 19, 2013
PLANS APPROVAL DATE

REGISTERED PROFESSIONAL ENGINEER
Randell D. Hiatt
No. C50200
Exp. 6-30-15
CIVIL
STATE OF CALIFORNIA

THE STATE OF CALIFORNIA OR ITS OFFICERS OR AGENTS SHALL NOT BE RESPONSIBLE FOR THE ACCURACY OR COMPLETENESS OF SCANNED COPIES OF THIS PLAN SHEET.

TO ACCOMPANY PLANS DATED 03-15-16

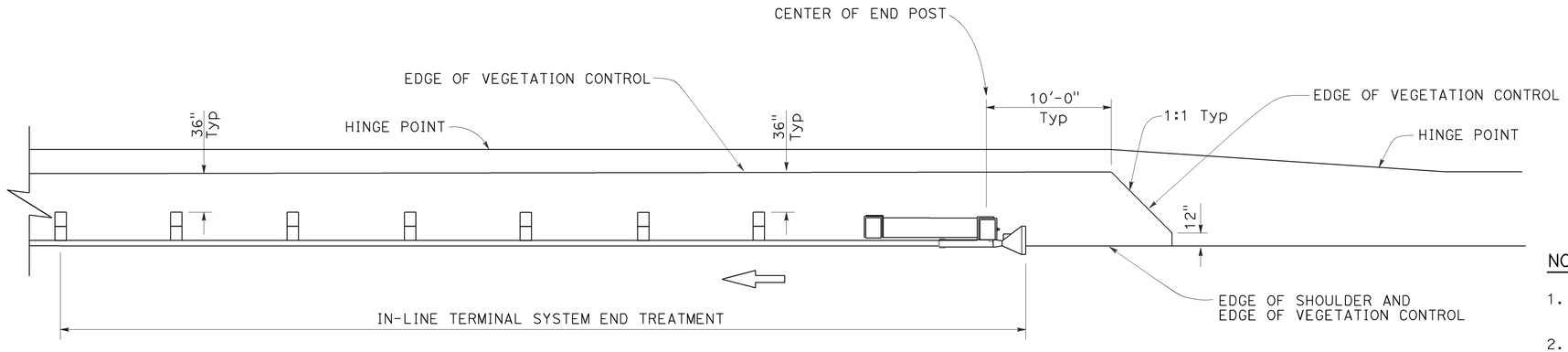

PLAN

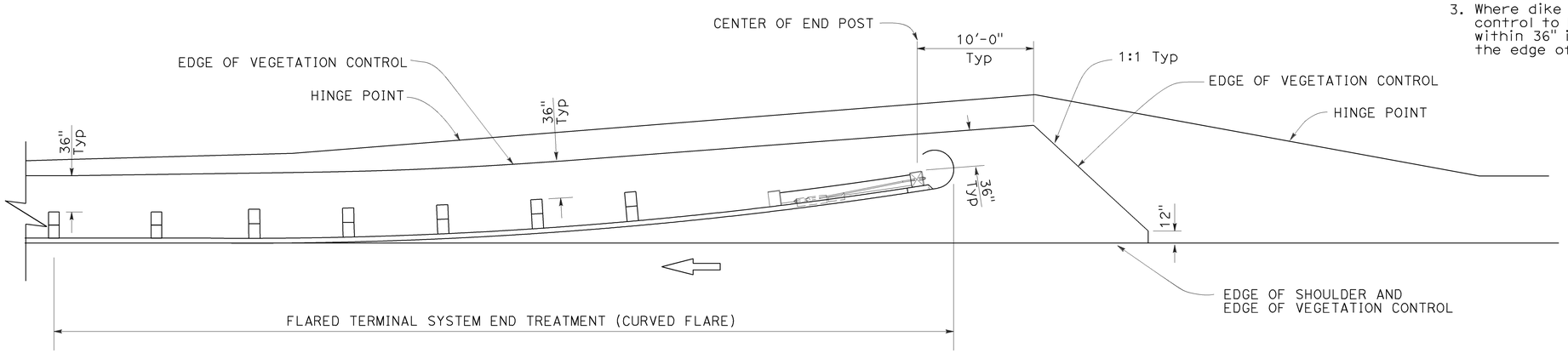

PLAN

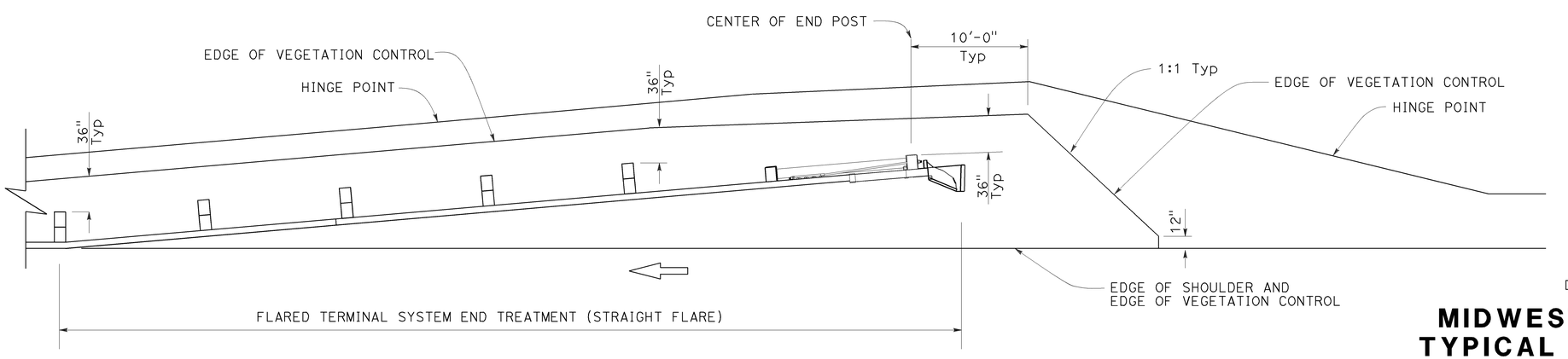

PLAN

NOTES:

1. See Revised Standard Plan RSP A77N5 for additional vegetation control details.
2. Where the distance between back of post and hinge point is less than 42", construct vegetation control to 6" from hinge point while maintaining the 8" block-out at back of post. If the 8" block-out at back of post can not be maintained, construct vegetation control flush with the back edge of post.
3. Where dike is constructed under railing, construct vegetation control to back edge of dike. Where paved shoulder is constructed within 36" in front of the post, construct vegetation control to the edge of paved shoulder.

STATE OF CALIFORNIA
DEPARTMENT OF TRANSPORTATION

MIDWEST GUARDRAIL SYSTEM TYPICAL VEGETATION CONTROL FOR TERMINAL SYSTEM END TREATMENTS

NO SCALE

RSP A77N6 DATED JULY 19, 2013 SUPPLEMENTS THE STANDARD PLANS BOOK DATED 2010.

REVISED STANDARD PLAN RSP A77N6

2010 REVISED STANDARD PLAN RSP A77N6

6-12-13

Dist	COUNTY	ROUTE	POST MILES TOTAL PROJECT	SHEET No.	TOTAL SHEETS
08	Riv	79	R33.9	54	101

REGISTERED CIVIL ENGINEER

July 19, 2013
PLANS APPROVAL DATE

REGISTERED PROFESSIONAL ENGINEER Michael Janzen No. 44788 Exp. 03-31-14 CIVIL STATE OF CALIFORNIA

THE STATE OF CALIFORNIA OR ITS OFFICERS OR AGENTS SHALL NOT BE RESPONSIBLE FOR THE ACCURACY OR COMPLETENESS OF SCANNED COPIES OF THIS PLAN SHEET.

TO ACCOMPANY PLANS DATED 03-15-16

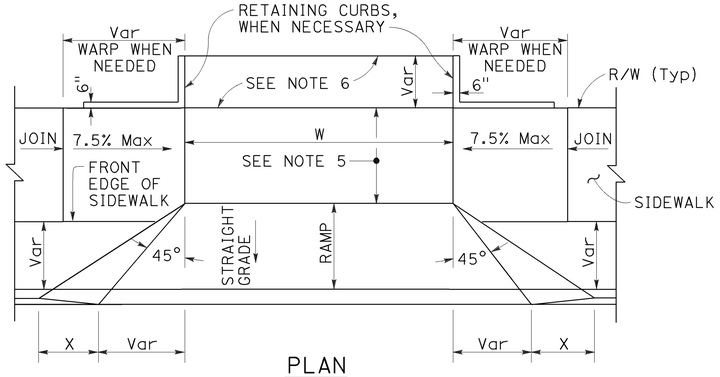

PLAN

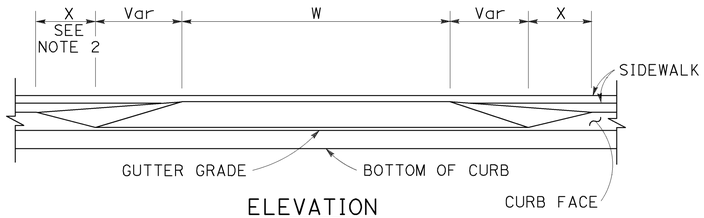

ELEVATION

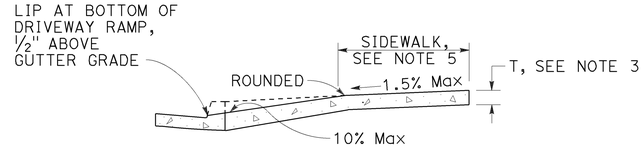

CASE A

Typical driveway, sidewalk not depressed

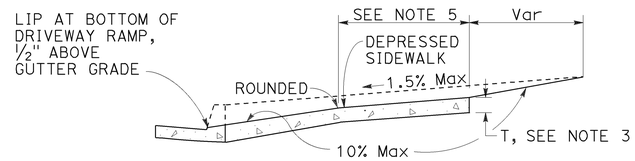

CASE B

Driveway with depressed sidewalk

SECTIONS

DRIVEWAYS

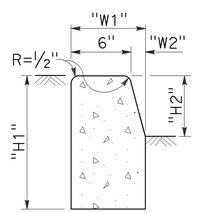

TYPE A1 CURBS

See Table A

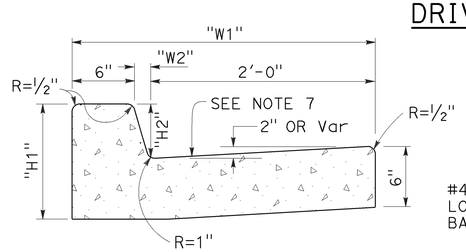

TYPE A2 CURBS

See Table A

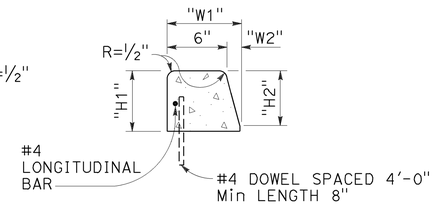

TYPE A3 CURBS

Superimposed on existing pavement
See Table A

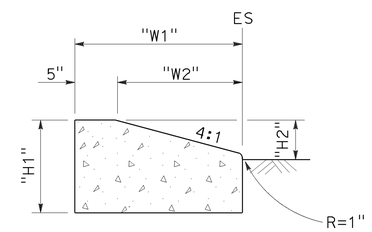

TYPE D CURBS

See Table A

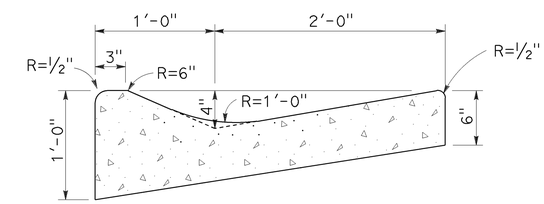

TYPE E CURB

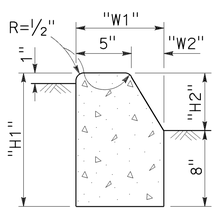

TYPE B1 CURBS

See Table A

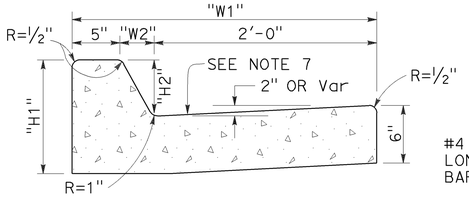

TYPE B2 CURBS

See Table A

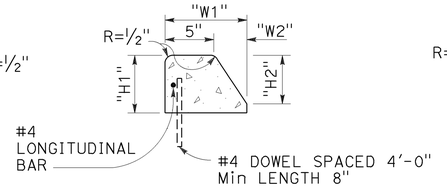

TYPE B3 CURBS

Superimposed on existing pavement
See Table A

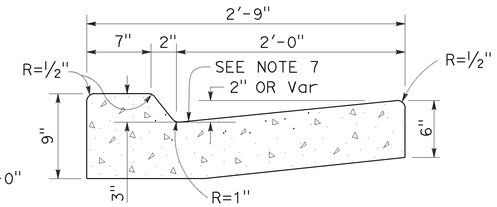

TYPE B4 CURBS

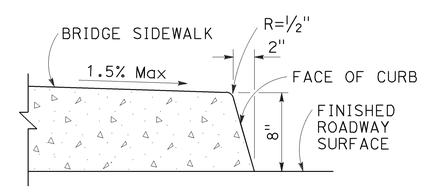

TYPE H CURB

On Bridges

CURBS

TABLE A

CURB TYPE	DIMENSIONS			
	"H1"	"H2"	"W1"	"W2"
A1-6	1'-2"	6"	7½"	1½"
A1-8	1'-4"	8"	8"	2"
A2-6	1'-0"	6"	2'-7½"	1½"
A2-8	1'-2"	8"	2'-8"	2"
A3-6	6"	5"	7¼"	1¼"
A3-8	8"	7"	7¾"	1¾"
B1-4	1'-0"	4"	7½"	2½"
B1-6	1'-2"	6"	9"	4"
B2-4	10"	4"	2'-7½"	2½"
B2-6	1'-0"	6"	2'-9"	4"
B3-4	4"	3"	7"	2"
B3-6	6"	5"	8½"	3½"
D-4	10"	4"	1'-6"	1'-1"
D-6	1'-0"	6"	2'-2"	1'-9"

CURB QUANTITIES

TYPE	CUBIC YARDS PER LINEAR FOOT
A1-6	0.02585
A1-8	0.03084
A2-6	0.05903
A2-8	0.06379
A3-6	0.01036
A3-8	0.01435
B1-4	0.02185
B1-6	0.02930
B2-4	0.05515
B2-6	0.06171
B3-4	0.00641
B3-6	0.01074
B4	0.05709
D-4	0.04083
D-6	0.06804
E	0.06661

NOTES:

1. Case A driveway section typically applies.
2. X=3'-0" except for curb heights over 10" where 4:1 slopes shall be used on curb slope.
3. Sidewalk and ramp thickness "T" at driveway shall be 4" for residental and 6" for commercial.
4. Difference in slope of the driveway ramp and the slope of a line between the gutter and a point on the roadway 5'-0" from gutter line shall not exceed 15%. Reduce driveway ramp slope, not gutter slope, where required.
5. Minimum width of clear passageway for sidewalk shall be 4'-2".
6. Retaining curbs and acquisition of construction easement may be necessary for narrow sidewalks or curb heights in excess of 6".
7. Across the pedestrian route at curb ramp locations, the gutter pan slope shall not exceed 1" of depth for each 2'-0" of width.

STATE OF CALIFORNIA
DEPARTMENT OF TRANSPORTATION

CURBS AND DRIVEWAYS

NO SCALE

RSP A87A DATED JULY 19, 2013 SUPERSEDES STANDARD PLAN A87A
DATED MAY 20, 2011 - PAGE 119 OF THE STANDARD PLANS BOOK DATED 2010.

REVISED STANDARD PLAN RSP A87A

2010 REVISED STANDARD PLAN RSP A87A

7-8-13

Dist	COUNTY	ROUTE	POST MILES TOTAL PROJECT	SHEET No.	TOTAL SHEETS
08	Riv	79	R33.9	55	101

REGISTERED CIVIL ENGINEER

July 19, 2013
PLANS APPROVAL DATE

REGISTERED PROFESSIONAL ENGINEER
Michael Janzen
No. 44788
Exp. 03-31-14
CIVIL
STATE OF CALIFORNIA

THE STATE OF CALIFORNIA OR ITS OFFICERS OR AGENTS SHALL NOT BE RESPONSIBLE FOR THE ACCURACY OR COMPLETENESS OF SCANNED COPIES OF THIS PLAN SHEET.

TO ACCOMPANY PLANS DATED _____

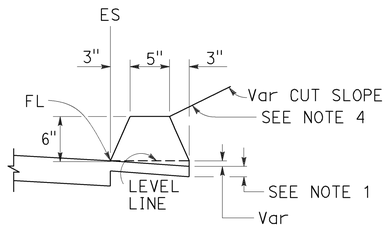

TYPE A
See Note 3

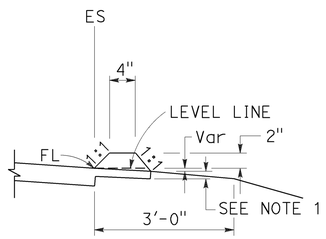

TYPE C

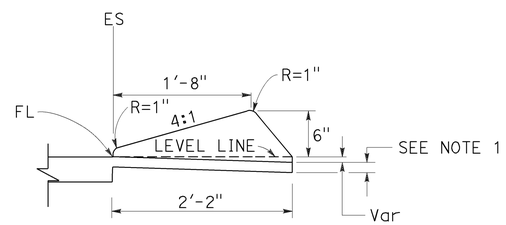

TYPE D

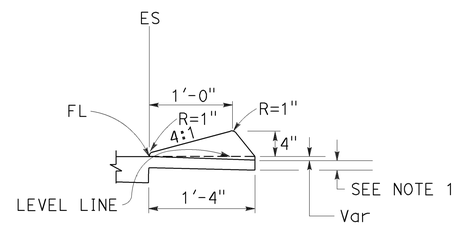

TYPE E

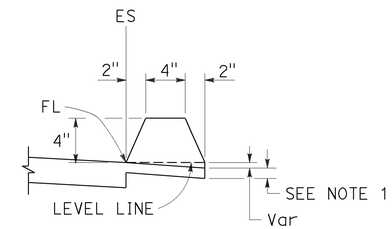

TYPE F
See Note 5

DIKES

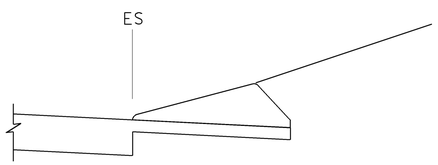

CASE C-1
Cut Slope

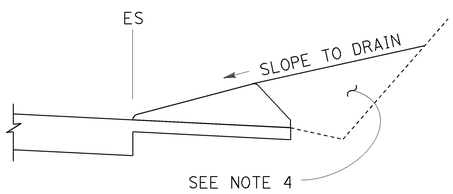

CASE C-2
Cut Slope

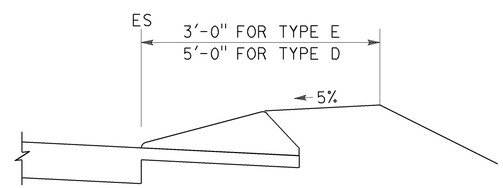

CASE F

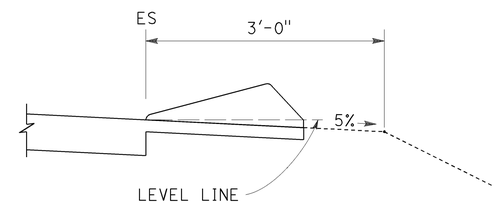

CASE R
See Note 2

TYPE D AND E BACKFILL DETAILS

NOTES:

1. For HMA shoulders only, extend top layer of HMA placed on the shoulder under dike with no joint at the ES. For projects with OGFC shoulders, do not extend OGFC under dike. See project plans for modified dike detail.
2. Case R applies to retrofit only projects where restrictive conditions do not provide enough width for Case F backfill.
3. Type A dike only to be used where restrictive slope conditions do not provide enough width to use Type D or Type E dike.
4. Fill and compact with excavated material to top of dike.
5. Use Type F dike, where dike is required with guard railing installations. See Revised Standard Plan RSP A77N4 for dike positioning details.

DIKE QUANTITIES

TYPE	CUBIC YARDS PER LINEAR FOOT
A	0.0135
C	0.0038
D	0.0293
E	0.0130
F	0.0066

Quantities based on 5% cross slope.

STATE OF CALIFORNIA
DEPARTMENT OF TRANSPORTATION

HOT MIX ASPHALT DIKES

NO SCALE

RSP A87B DATED JULY 19, 2013 SUPERSEDES STANDARD PLAN A87B
DATED MAY 20, 2011 - PAGE 120 OF THE STANDARD PLANS BOOK DATED 2010.

REVISED STANDARD PLAN RSP A87B

2010 REVISED STANDARD PLAN RSP A87B

6-27-13

Dist	COUNTY	ROUTE	POST MILES TOTAL PROJECT	SHEET No.	TOTAL SHEETS
08	Riv	79	R33.9	56	101

REGISTERED CIVIL ENGINEER

October 30, 2015
PLANS APPROVAL DATE

REGISTERED PROFESSIONAL ENGINEER Srikanth N. Balasubramanian No. C56426 Exp. 6-30-17 CIVIL STATE OF CALIFORNIA

THE STATE OF CALIFORNIA OR ITS OFFICERS OR AGENTS SHALL NOT BE RESPONSIBLE FOR THE ACCURACY OR COMPLETENESS OF SCANNED COPIES OF THIS PLAN SHEET.

TO ACCOMPANY PLANS DATED 03-15-16

ABBREVIATIONS:

TE TAPERED EDGE

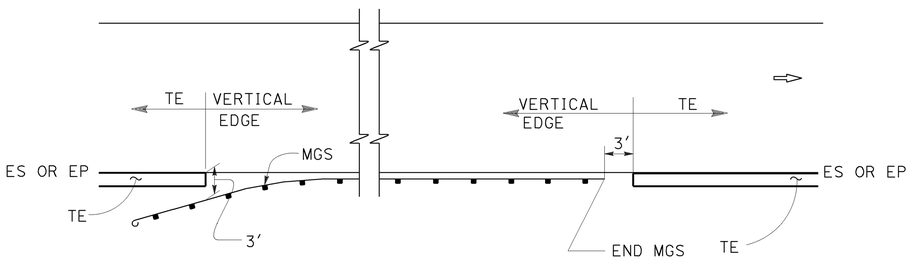

MGS

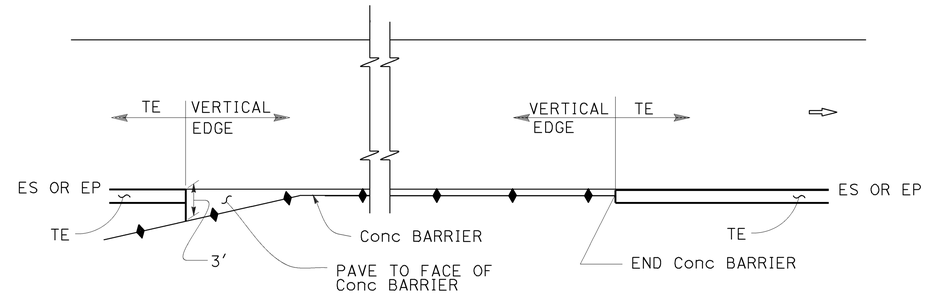

CONCRETE BARRIER

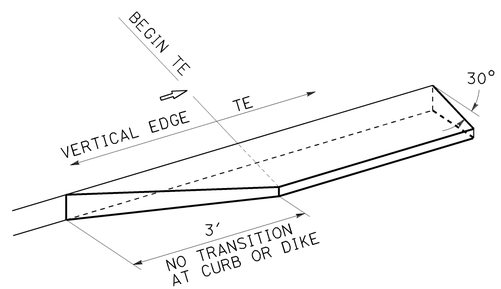

TRANSITION DETAIL FOR CONCRETE ONLY

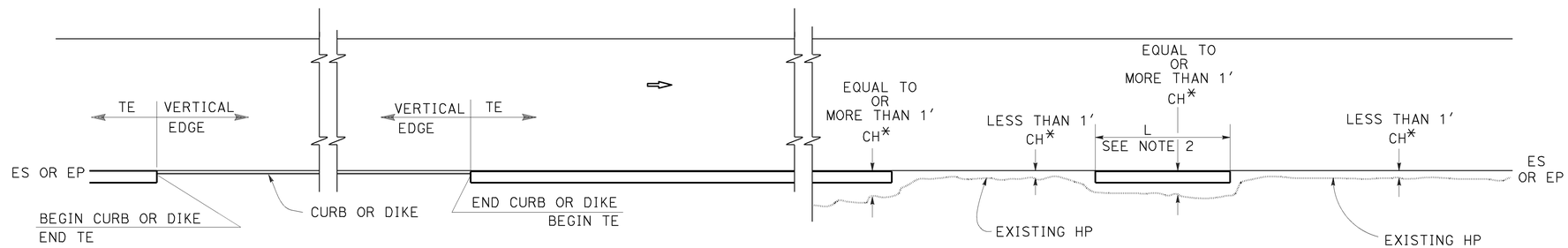

CURB OR DIKE

NARROW SIDE SLOPE

* CH = Distance from ES or EP to existing HP.

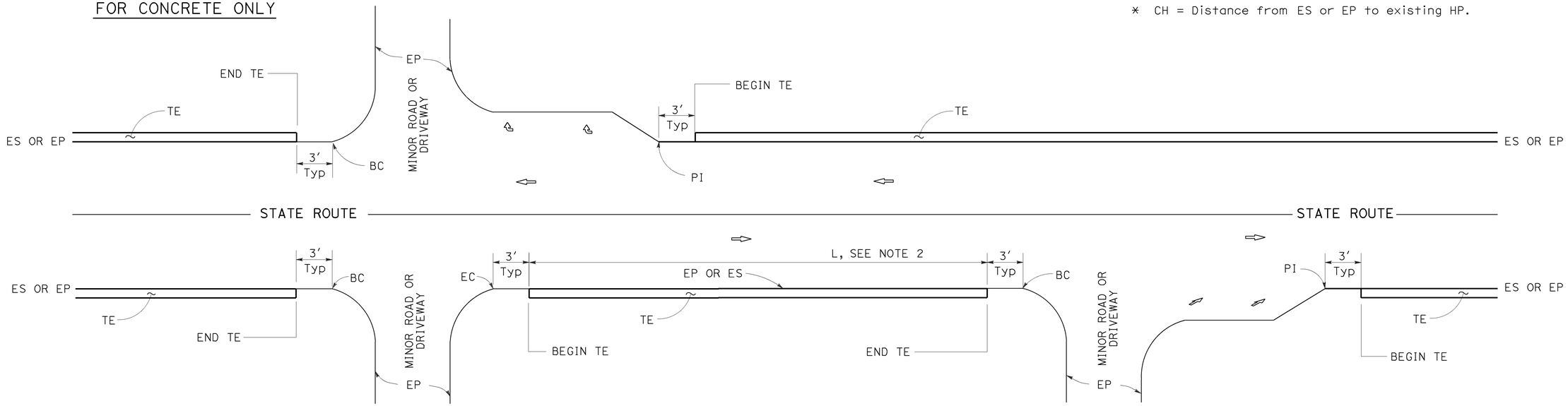

INTERTECTION

DRIVEWAY AND INTERSECTION

MINOR ROADWAY OR DRIVEWAY

STATE OF CALIFORNIA
DEPARTMENT OF TRANSPORTATION

PAVEMENT EDGE TREATMENTS

NO SCALE

NOTES:

1. For details not shown, see Revised Standard Plans RSP P75 and RSP P76.
2. Tapered edge is optional when L is less than 30′.

RSP P74 DATED OCTOBER 30, 2015 SUPERSEDES RSP P74 DATED NOVEMBER 15, 2013 AND RSP P74 DATED JANUARY 20, 2012 THAT SUPPLEMENTS THE STANDARD PLANS BOOK DATED 2010.

REVISED STANDARD PLAN RSP P74

2010 REVISED STANDARD PLAN RSP P74

10-13-15

Dist	COUNTY	ROUTE	POST MILES TOTAL PROJECT	SHEET No.	TOTAL SHEETS
08	Riv	79	R33.9	57	101

REGISTERED CIVIL ENGINEER

October 30, 2015
PLANS APPROVAL DATE

REGISTERED PROFESSIONAL ENGINEER
Srikanth N. Balasubramanian
No. C56426
Exp. 6-30-17
CIVIL
STATE OF CALIFORNIA

THE STATE OF CALIFORNIA OR ITS OFFICERS OR AGENTS SHALL NOT BE RESPONSIBLE FOR THE ACCURACY OR COMPLETENESS OF SCANNED COPIES OF THIS PLAN SHEET.

TO ACCOMPANY PLANS DATED 03-15-16

LEGEND:

- HMA PAVEMENT
- HMA OR CONCRETE PAVEMENT
- CONCRETE PAVEMENT

ABBREVIATIONS:

TE TAPERED EDGE
TT TOTAL THICKNESS OF TE
HW HINGE WIDTH, DISTANCE FROM ES OR EP TO HP

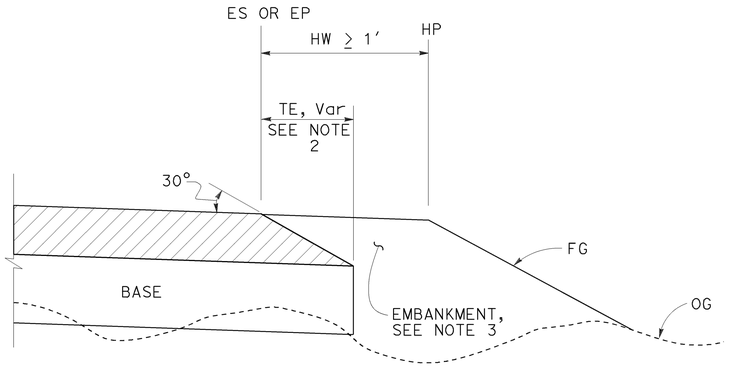

CASE K
Tapered Edge - Fill Section, HW ≥ 1′

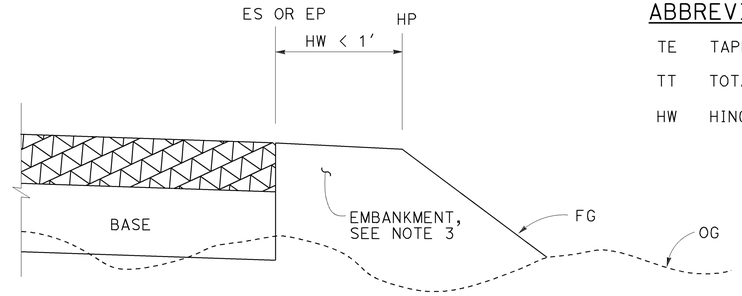

CASE L
Vertical Edge - Fill Section, HW < 1′

FILL SECTION

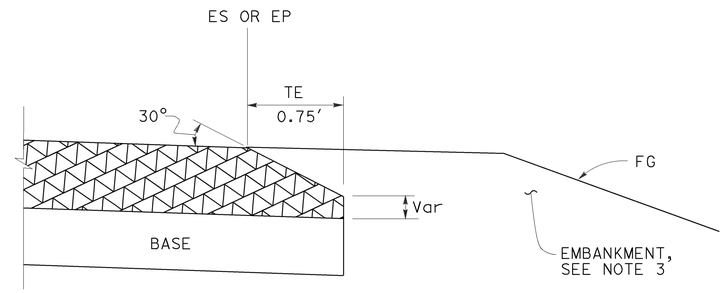

DETAIL "B"
For HMA pavement thickness more than 0.43′ or concrete pavement

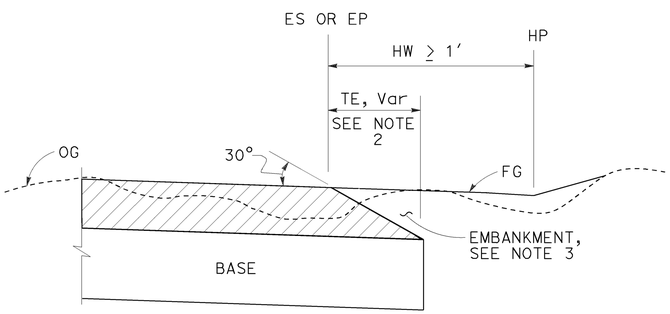

CASE M
Tapered Edge - Cut Section, HW ≥ 1′

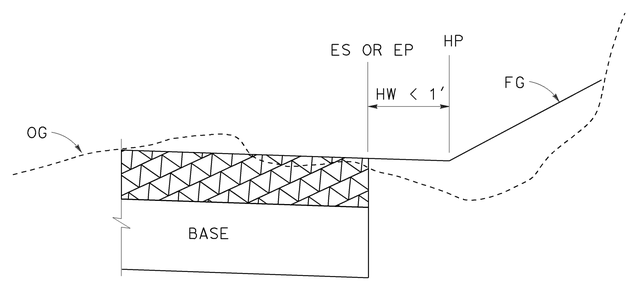

CASE N
Vertical Edge - Cut Section, HW < 1′

CUT SECTION

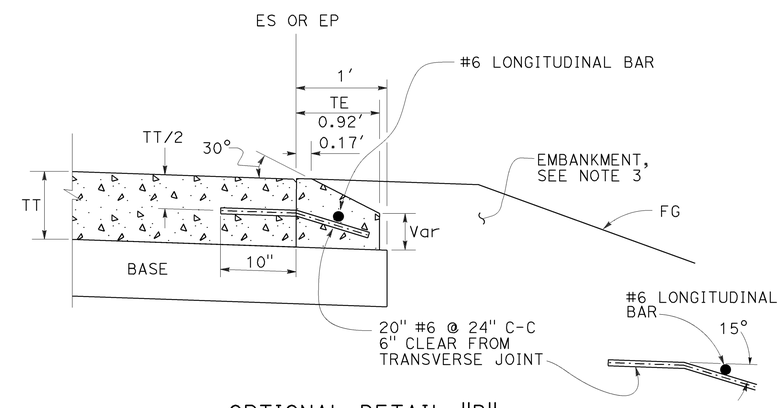

OPTIONAL DETAIL "B"
For concrete pavement
See Note 4

NOTES:

1. For limits of tapered edge and vertical edge treatments, see Revised Standard Plan RSP P74
2. Details shown for HMA pavement thickness less than 0.43′. See Detail "B" for HMA pavement thickness more than 0.43′ or concrete pavement.
3. For locations and limits of embankment see project plans.
4. Tapered edge transverse joint must match pavement transverse joint. End of #6 longitudinal bar must be 2" ±½" clear from transverse joint.
5. Tapered edge is not needed in the area of MGS, barrier, right turn lane and acceleration lane. See Revised Standard Plan RSP P74.

STATE OF CALIFORNIA
DEPARTMENT OF TRANSPORTATION

PAVEMENT EDGE TREATMENTS-NEW CONSTRUCTION

NO SCALE

RSP P76 DATED OCTOBER 30, 2015 SUPERSEDES RSP P76 DATED NOVEMBER 15, 2013 AND RSP P76 DATED JANUARY 20, 2012 THAT SUPPLEMENTS THE STANDARD PLANS BOOK DATED 2010.

REVISED STANDARD PLAN RSP P76

2010 REVISED STANDARD PLAN RSP P76

7-2-15

Dist	COUNTY	ROUTE	POST MILES TOTAL PROJECT	SHEET No.	TOTAL SHEETS
08	Riv	79	R33.9	58	101

Gregory A. Balzer
LICENSED LANDSCAPE ARCHITECT

July 19, 2013
PLANS APPROVAL DATE

THE STATE OF CALIFORNIA OR ITS OFFICERS OR AGENTS SHALL NOT BE RESPONSIBLE FOR THE ACCURACY OR COMPLETENESS OF SCANNED COPIES OF THIS PLAN SHEET.

LICENSED LANDSCAPE ARCHITECT — Gregory A. Balzer 2576 — 08 Registration — 2-28-15 Renewal Date — 7-19-13 Date — STATE OF CALIFORNIA

TO ACCOMPANY PLANS DATED 03-15-16

A

AB	AGGREGATE BASE
ABS	ACRYLONITRILE-BUTADIENE-STYRENE
AC	ASPHALT CONCRETE
ACC	ARMOR-CLAD CONDUCTORS
Adj	ADJACENT/ADJUSTABLE
AIC	AUXILIARY IRRIGATION CONTROLLER
Alt	ALTERNATIVE
AMEND	AMENDMENT
ARV	AIR RELEASE VALVE
AUTO	AUTOMATIC
AUX	AUXILIARY
AVB	ATMOSPHERIC VACUUM BREAKER

B

B&B	BALLED AND BURLAPPED
B/B	BRASS/BRONZE
B/B/PL	BRASS/BRONZE/PLASTIC
B/PL	BRASS/PLASTIC
BFM	BONDED FIBER MATRIX
Bit Ctd	BITUMINOUS COATED
BP	BOOSTER PUMP
BPA	BACKFLOW PREVENTER ASSEMBLY
BPE	BACKFLOW PREVENTER ENCLOSURE
BV	BALL VALVE

C

C	CONDUIT
CAP	CORRUGATED ALUMINUM PIPE
CARV	COMBINATION AIR RELEASE VALVE
CB	COUPLING BAND
CCA	CAM COUPLER ASSEMBLY
CEC	CONTROLLER ENCLOSURE CABINET
CHDPE	CORRUGATED HIGH DENSITY POLYETHYLENE
CL	CHAIN LINK
CNC	CONTROL AND NEUTRAL CONDUCTORS
Conc	CONCRETE
CP	COPPER PIPE
CS	COMPOST SOCK
CSP	CORRUGATED STEEL PIPE
CST	CENTER STRIP
CV	CHECK VALVE

D

Dia	DIAMETER
DIP	DUCTILE IRON PIPE
DIT	DRIP IRRIGATION TUBING
DG	DECOMPOSED GRANITE
DN	DIAMETER NOMINAL
DVA	DRIP VALVE ASSEMBLY

E

EC	EROSION CONTROL
ECTC	EROSION CONTROL TECHNOLOGY COUNCIL
Elect	ELECTRIC/ELECTRICAL
Elev	ELEVATION
ELL	ELBOW
ENCL	ENCLOSURE
EP	EDGE OF PAVEMENT
ES	EDGE OF SHOULDER
EST	END STRIP
ESTB	ESTABLISHMENT
ETW	EDGE OF TRAVELED WAY

F

F	FULL CIRCLE
F/P	FULL/PART CIRCLE
FCV	FLOW CONTROL VALVE
FERT	FERTILIZER
FG	FINISHED GRADE
FH	FLEXIBLE HOSE
FIPT	FEMALE IRON PIPE THREAD
FIS	FERTILIZER INJECTOR SYSTEM
FL	FLOW LINE
FR	FIBER ROLL
FS	FLOW SENSOR
FSC	FLOW SENSOR CABLE
FV	FLUSH VALVE

G

Galv	GALVANIZED
GARV	GARDEN VALVE
GARVA	GARDEN VALVE ASSEMBLY
GM	GRAVEL MULCH
GPH	GALLONS PER HOUR
GPM	GALLONS PER MINUTE
GSP	GALVANIZED STEEL PIPE
GV	GATE VALVE

H

H	HALF CIRCLE
HDPE	HIGH DENSITY POLYETHYLENE
HP	HORSEPOWER/HINGE POINT
HPL	HIGH PRESSURE LINE
Hwy	HIGHWAY

I

IC	IRRIGATION CONTROLLER
ICC	IRRIGATION CONTROLLER(S) IN CONTROLLER ENCLOSURE CABINET
ID	INSIDE DIAMETER
IFS	IRRIGATION FILTRATION SYSTEM
IPS	IRON PIPE SIZE
IPT	IRON PIPE THREAD
Irr	IRRIGATION

L

L	LENGTH

M

Max	MAXIMUM
MBGR	METAL BEAM GUARD RAILING
MCV	MANUAL CONTROL VALVE
MIC	MASTER IRRIGATION CONTROLLER
Min	MINIMUM
MIPT	MALE IRON PIPE THREAD
Misc	MISCELLANEOUS
Mtl	MATERIAL
MVP	MAINTENANCE VEHICLE PULLOUT

N

NCN	NO COMMON NAME
NL	NOZZLE LINE
No.	NUMBER
NPT	NATIONAL PIPE THREAD

O

O/C	ON CENTER
OD	OUTSIDE DIAMETER
OL	OVERLAP

P

P	PART CIRCLE
PB	PULL BOX
PCC	PORTLAND CEMENT CONCRETE
PE	POLYETHYLENE
Pkt	PACKET
PL	PLASTIC
PLS	PURE LIVE SEED
PLT	PLANT/PLANTING
PLT ESTB	PLANT ESTABLISHMENT
PM	POST MILE
PR	PRESSURE RATED
PRLV	PRESSURE RELIEF VALVE
PRV	PRESSURE REGULATING VALVE
PVC	POLYVINYL CHLORIDE
Pvmt	PAVEMENT

Q

Q	QUARTER CIRCLE
QCV	QUICK COUPLING VALVE

R

R	RADIUS
RCP	REINFORCED CONCRETE PIPE
RCV	REMOTE CONTROL VALVE
RCVM	REMOTE CONTROL VALVE (MASTER)
RCVMF	REMOTE CONTROL VALVE (MASTER) W/FLOW SENSOR
RCVP	REMOTE CONTROL VALVE W/PRESSURE REGULATOR
RCW	RECYCLED WATER
RECP	ROLLED EROSION CONTROL PRODUCT
REQ	REQUIRED
RICS	REMOTE IRRIGATION CONTROL SYSTEM
R/W	RIGHT OF WAY

S

S	SLIP
SCH	SCHEDULE
SF	STATE-FURNISHED
Shld	SHOULDER
Sq	SQUARE
SST	SIDE STRIP
Sta	STATION
Std	STANDARD
SW	SIDEWALK/SOUND WALL

T

T	THIRD CIRCLE/THREAD
TLS	TRUCK LOADING STANDPIPE
TQ	THREE QUARTER CIRCLE
TRM	TURF REINFORCEMENT MAT
TT	TWO-THIRDS CIRCLE
TWSA	TREE WELL SPRINKLER ASSEMBLY
Typ	TYPICAL

U

UG	UNDERGROUND

W

W	WIDTH
W/	WITH
WM	WATER METER
WS	WYE STRAINER
WSA	WYE STRAINER ASSEMBLY
WSP	WELDED STEEL PIPE
WWM	WELDED WIRE MESH

NOTE:

For additional abbreviations, see Standard Plans A10A and A10B.

STATE OF CALIFORNIA
DEPARTMENT OF TRANSPORTATION

LANDSCAPE AND EROSION CONTROL ABBREVIATIONS

NO SCALE

RSP H1 DATED JULY 19, 2013 SUPERSEDES STANDARD PLAN H1 DATED MAY 20, 2011 - PAGE 218 OF THE STANDARD PLANS BOOK DATED 2010.

REVISED STANDARD PLAN RSP H1

2010 REVISED STANDARD PLAN RSP H1

Dist	COUNTY	ROUTE	POST MILES TOTAL PROJECT	SHEET No.	TOTAL SHEETS
08	Riv	79	R33.9	59	101

Gregory A. Balzer
LICENSED LANDSCAPE ARCHITECT

November 15, 2013
PLANS APPROVAL DATE

LICENSED LANDSCAPE ARCHITECT Gregory A. Balzer 2576 STATE OF CALIFORNIA
Gregory A. Balzer 08-29-14 (Expires) DATE
2-28-15 (Expires) DATE
11-15-13 DATE

THE STATE OF CALIFORNIA OR ITS OFFICERS OR AGENTS SHALL NOT BE RESPONSIBLE FOR THE ACCURACY OR COMPLETENESS OF SCANNED COPIES OF THIS PLAN SHEET.

TO ACCOMPANY PLANS DATED 03-15-16

2010 REVISED STANDARD PLAN RSP H2

EXISTING	NEW	ITEM DESCRIPTION
		WATER METER (WM)
		BACKFLOW PREVENTER ASSEMBLY (BPA)
		BACKFLOW PREVENTER ENCLOSURE (BPE)
		BOOSTER PUMP (BP)
		TRUCK LOADING STANDPIPE (TLS)
	FS	FLOW SENSOR (FS)
		MASTER IRRIGATION CONTROLLER (MIC)
		AUXILIARY IRRIGATION CONTROLLER (AIC)
		IRRIGATION CONTROLLER (IC) IRRIGATION CONTROLLER (IC) (BATTERY) IRRIGATION CONTROLLER (IC) (SOLAR) IRRIGATION CONTROLLER (IC) (TWO WIRE) IRRIGATION CONTROLLER(S) IN CONTROLLER ENCLOSURE CABINET (ICC)
acc	ACC	ARMOR-CLAD CONDUCTORS (ACC)
cnc	CNC	CONTROL AND NEUTRAL CONDUCTORS (CNC)
		IRRIGATION CONDUIT
		EXTEND IRRIGATION CONDUIT
dip	DIP	DUCTILE IRON PIPE (SUPPLY LINE) (MAIN) (DIP)
		GALVANIZED STEEL PIPE (SUPPLY LINE) (MAIN) (GSP)
		GALVANIZED STEEL PIPE (SUPPLY LINE) (LATERAL) (GSP)
		PLASTIC PIPE (SUPPLY LINE) (MAIN)
		PLASTIC PIPE (SUPPLY LINE) (LATERAL)
cp	CP	COPPER PIPE (SUPPLY LINE)
dit	DIT	DRIP IRRIGATION TUBING
		REMOTE CONTROL VALVE (RCV) REMOTE CONTROL VALVE (MASTER) (RCVM) REMOTE CONTROL VALVE (MASTER) W/FLOW METER (RCVMF)
P	P	REMOTE CONTROL VALVE W/PRESSURE REGULATOR (RCVP)
		EXISTING MANUAL CONTROL VALVE (MCV)
V	V	DRIP VALVE ASSEMBLY (DVA)
Y	Y	WYE STRAINER ASSEMBLY (WSA)

EXISTING	NEW	ITEM DESCRIPTION
		GATE VALVE (GV)
		BALL VALVE (BV)
		QUICK COUPLING VALVE (QCV)
		CAM COUPLER ASSEMBLY (CCA)
		GARDEN VALVE ASSEMBLY (GARVA)
		PRESSURE REGULATING VALVE (PRV)
		PRESSURE RELIEF VALVE (PRLV)
		FLOW CONTROL VALVE (FCV)
		COMBINATION AIR RELEASE VALVE (CARV)
		CHECK VALVE (CV)
		FLUSH VALVE (FV)
		EXISTING NOZZLE LINE W/TURNING UNION
		EXISTING IRRIGATION SYSTEM
		EXISTING IRRIGATION SYSTEM TO BE REMOVED
		CHAIN LINK GATE
		QUICK COUPLING VALVE W/SPRINKLER PROTECTOR
3	3	SPRINKLER W/SPRINKLER PROTECTOR
	C	CONNECT TO EXISTING SYSTEM
		CAP
		CAP EXISTING
	\\\FR\\\	FIBER ROLL
	\\\CS\\\	COMPOST SOCK

RCV SIZE
IRRIGATION CONTROLLER
CONTROLLER STATION
VALVE IN PARALLEL (IF APPLICABLE)
GPM
QUANTITY OF SPRINKLERS (WHEN SHOWN)

* 2½"-A-2b-40-60

VALVE CODE

* VALVE CODES FOR EXISTING VALVES ARE SHOWN IN A DASHED ENCLOSURE.

STATE OF CALIFORNIA
DEPARTMENT OF TRANSPORTATION

LANDSCAPE AND EROSION CONTROL SYMBOLS

NO SCALE

RSP H2 DATED NOVEMBER 15, 2013 SUPERSEDES RSP H2 DATED JULY 19, 2013 AND STANDARD PLAN H2 DATED MAY 20, 2011 - PAGE 219 OF THE STANDARD PLANS BOOK DATED 2010.

REVISED STANDARD PLAN RSP H2

10-9-13

Dist	COUNTY	ROUTE	POST MILES TOTAL PROJECT	SHEET No.	TOTAL SHEETS
08	Riv	79	R33.9	60	101

REGISTERED CIVIL ENGINEER

July 19, 2013
PLANS APPROVAL DATE

REGISTERED PROFESSIONAL ENGINEER
Gurinderpal Bhullar
No. C48815
Exp. 9-30-14
CIVIL
STATE OF CALIFORNIA

THE STATE OF CALIFORNIA OR ITS OFFICERS OR AGENTS SHALL NOT BE RESPONSIBLE FOR THE ACCURACY OR COMPLETENESS OF SCANNED COPIES OF THIS PLAN SHEET.

TO ACCOMPANY PLANS DATED 03-15-16

2010 REVISED STANDARD PLAN RSP T9

TABLE 1

TAPER LENGTH CRITERIA AND CHANNELIZING DEVICE SPACING

SPEED (S)	MINIMUM TAPER LENGTH * FOR WIDTH OF OFFSET 12 FEET (W)				MAXIMUM CHANNELIZING DEVICE SPACING		
					X	Y	Z **
	TANGENT 2L	MERGING L	SHIFTING L/2	SHOULDER L/3	TAPER	TANGENT	CONFLICT
mph	ft	ft	ft	ft	ft	ft	ft
20	160	80	40	27	20	40	10
25	250	125	63	42	25	50	12
30	360	180	90	60	30	60	15
35	490	245	123	82	35	70	17
40	640	320	160	107	40	80	20
45	1080	540	270	180	45	90	22
50	1200	600	300	200	50	100	25
55	1320	660	330	220	55	110	27
60	1440	720	360	240	60	120	30
65	1560	780	390	260	65	130	32
70	1680	840	420	280	70	140	35

* - For other offsets, use the following merging taper length formula for L:
For speed of 40 mph or less, $L = WS^2/60$
For speed of 45 mph or more, $L = WS$

Where: L = Taper length in feet
W = Width of offset in feet
S = Posted speed limit, off-peak 85th-percentile speed prior to work starting, or the anticipated operating speed in mph

** - Use for taper and tangent sections where there are no pavement markings or where there is a conflict between existing pavement markings and channelizers (CA).

TABLE 2

LONGITUDINAL BUFFER SPACE AND FLAGGER STATION SPACING

SPEED *	Min D **	DOWNGRADE Min D ***		
		-3%	-6%	-9%
mph	ft	ft	ft	ft
20	115	116	120	126
25	155	158	165	173
30	200	205	215	227
35	250	257	271	287
40	305	315	333	354
45	360	378	400	427
50	425	446	474	507
55	495	520	553	593
60	570	598	638	686
65	645	682	728	785
70	730	771	825	891

* - Speed is posted speed limit, off-peak 85th-percentile speed prior to work starting, or the anticipated operating speed in mph

** - Longitudinal buffer space or flagger station spacing

*** - Use on sustained downgrade steeper than -3 percent and longer than 1 mile.

TABLE 3

ADVANCE WARNING SIGN SPACING

ROAD TYPE	DISTANCE BETWEEN SIGNS *		
	A	B	C
	ft	ft	ft
URBAN - 25 mph OR LESS	100	100	100
URBAN - MORE THAN 25 mph TO 40 mph	250	250	250
URBAN - MORE THAN 40 mph	350	350	350
RURAL	500	500	500
EXPRESSWAY / FREEWAY	1000	1500	2640

* - The distances are approximate, are intended for guidance purposes only, and should be applied with engineering judgment. These distances should be adjusted by the Engineer for field conditions, if necessary, by increasing or decreasing the recommmended distances.

STATE OF CALIFORNIA
DEPARTMENT OF TRANSPORTATION

TRAFFIC CONTROL SYSTEM TABLES FOR LANE AND RAMP CLOSURES

NO SCALE

RSP T9 DATED JULY 19, 2013 SUPERSEDES RSP T9 DATED APRIL 19, 2013 THAT SUPPLEMENTS THE STANDARD PLANS BOOK DATED 2010.

REVISED STANDARD PLAN RSP T9

Dist	COUNTY	ROUTE	POST MILES TOTAL PROJECT	SHEET No.	TOTAL SHEETS
08	Riv	79	R33.9	61	101

REGISTERED CIVIL ENGINEER

April 19, 2013
PLANS APPROVAL DATE

REGISTERED PROFESSIONAL ENGINEER
Gurinderpal Bhullar
No. C48815
Exp. 9-30-14
CIVIL
STATE OF CALIFORNIA

THE STATE OF CALIFORNIA OR ITS OFFICERS OR AGENTS SHALL NOT BE RESPONSIBLE FOR THE ACCURACY OR COMPLETENESS OF SCANNED COPIES OF THIS PLAN SHEET.

TO ACCOMPANY PLANS DATED 03-15-16

2010 REVISED STANDARD PLAN RSP T11

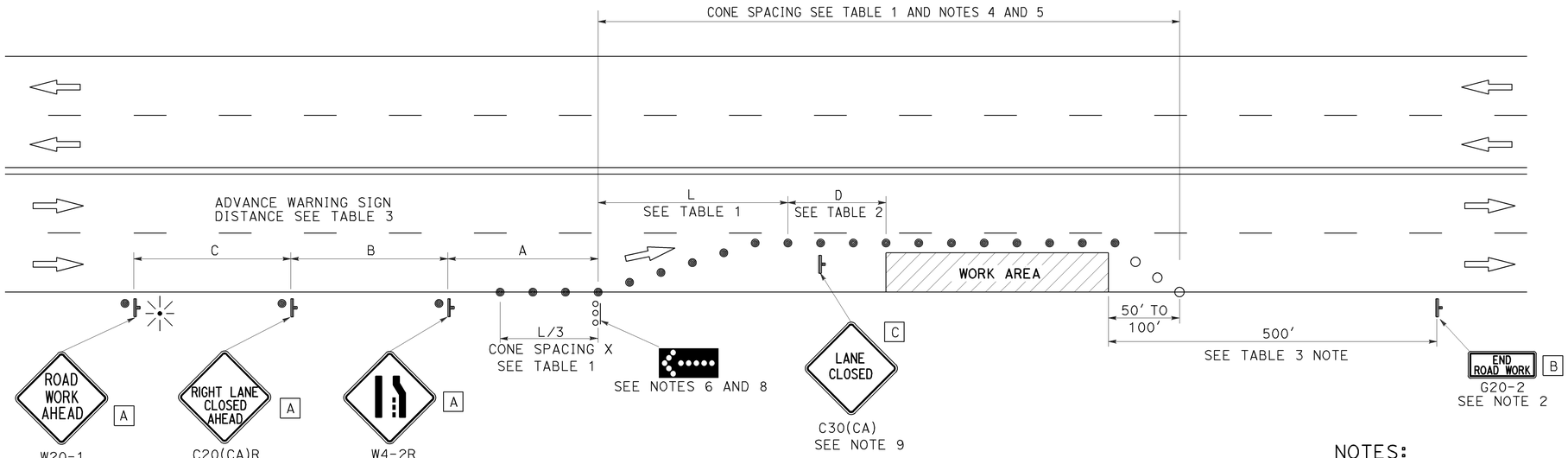

TYPICAL LANE CLOSURE

NOTES:

See Revised Standard Plan RSP T9 for tables.

Use cone spacing X for taper segment, Y for tangent segment or Z for conflict situations, as approriate, per Table 1, unless X, Y, or Z cone spacing is shown on this sheet.

Unless otherwise specified in the special provisions, all temporary warning signs shall have black legend on fluorescent orange background.

California codes are designated by (CA). Otherwise, Federal (MUTCD) codes are shown.

NOTES:

1. Each advance warning sign shall be equipped with at least two flags for daytime closure. Each flag shall be at least 16" x 16" in size and shall be orange or fluorescent red-orange in color. Flashing beacons shall be placed at the locations indicated for lane closure during hours of darkness.
2. A G20-2 "END ROAD WORK" sign, as appropriate, shall be placed at the end of the lane closure unless the end of work area is obvious, or ends within a larger project's limits.
3. If the W20-1 sign would follow within 2000' of a stationary W20-1 or G20-1 "ROAD WORK NEXT _____ MILES", use a C20(CA) sign for the first advance warning sign.
4. All cones used for lane closures during the hours of darkness shall be fitted with retroreflective bands (or sleeves) as specified in the specifications.
5. Portable delineators, placed at one-half the spacing indicated for traffic cones, may be used instead of cones for daytime closures only.
6. Flashing arrow sign shall be either Type I or Type II.
7. For approach speeds over 50 mph, use the "Traffic Control System for Lane Closure On Freeways And Expressways" plan for lane closure details and requirements.
8. A minimum 1500' of sight distance shall be provided where possible for vehicles approaching the first flashing arrow sign. Lane closures shall not begin at the top of crest vertical curve or on a horizontal curve.
9. Place a C30(CA) sign every 2000' throughout length of lane closure.
10. Median lane closures shall conform to the details as shown except that C20(CA)L and W4-2L signs shall be used.
11. At least one person shall be assigned to provide full time maintenance of traffic control devices for lane closure unless, otherwise directed by the Engineer.

LEGEND

- TRAFFIC CONE
- TRAFFIC CONE (OPTIONAL TAPER)
- TEMPORARY TRAFFIC CONTROL SIGN
- FLASHING ARROW SIGN (FAS)
- FAS SUPPORT OR TRAILER
- PORTABLE FLASHING BEACON

SIGN PANEL SIZE (Min)

A	48" x 48"
B	36" x 18"
C	30" x 30"

STATE OF CALIFORNIA
DEPARTMENT OF TRANSPORTATION

TRAFFIC CONTROL SYSTEM FOR LANE CLOSURE ON MULTILANE CONVENTIONAL HIGHWAYS

NO SCALE

RSP T11 DATED APRIL 19, 2013 SUPERSEDES STANDARD PLAN T11 DATED MAY 20, 2011 - PAGE 239 OF THE STANDARD PLANS BOOK DATED 2010.

REVISED STANDARD PLAN RSP T11

4-2-13

Dist	COUNTY	ROUTE	POST MILES TOTAL PROJECT	SHEET No.	TOTAL SHEETS
08	Riv	79	R33.9	62	101

REGISTERED CIVIL ENGINEER

April 19, 2013
PLANS APPROVAL DATE

REGISTERED PROFESSIONAL ENGINEER Gurinderpal Bhullar No. C48815 Exp. 9-30-14 CIVIL STATE OF CALIFORNIA

THE STATE OF CALIFORNIA OR ITS OFFICERS OR AGENTS SHALL NOT BE RESPONSIBLE FOR THE ACCURACY OR COMPLETENESS OF SCANNED COPIES OF THIS PLAN SHEET.

TO ACCOMPANY PLANS DATED 03-15-16

LEGEND

- TRAFFIC CONE
- TEMPORARY TRAFFIC CONTROL SIGN
- FLASHING ARROW SIGN (FAS)
- FAS SUPPORT OR TRAILER
- PORTABLE FLASHING BEACON

SIGN PANEL SIZE (Min)

- A 48" x 48"
- B 24" x 24"
- C 36" x 18"

NOTES:

See Revised Standard Plan RSP T9 for tables.

Use cone spacing X for taper segment, Y for tangent segment or Z for conflict situations, as approriate, per Table 1, unless X, Y, or Z cone spacing is shown on this sheet.

Unless otherwise specified in the special provisions, all temporary warning signs shall have black legend on fluorescent orange background.

California codes are designated by (CA). Otherwise, Federal (MUTCD) codes are shown.

TYPICAL HALF ROAD CLOSURE

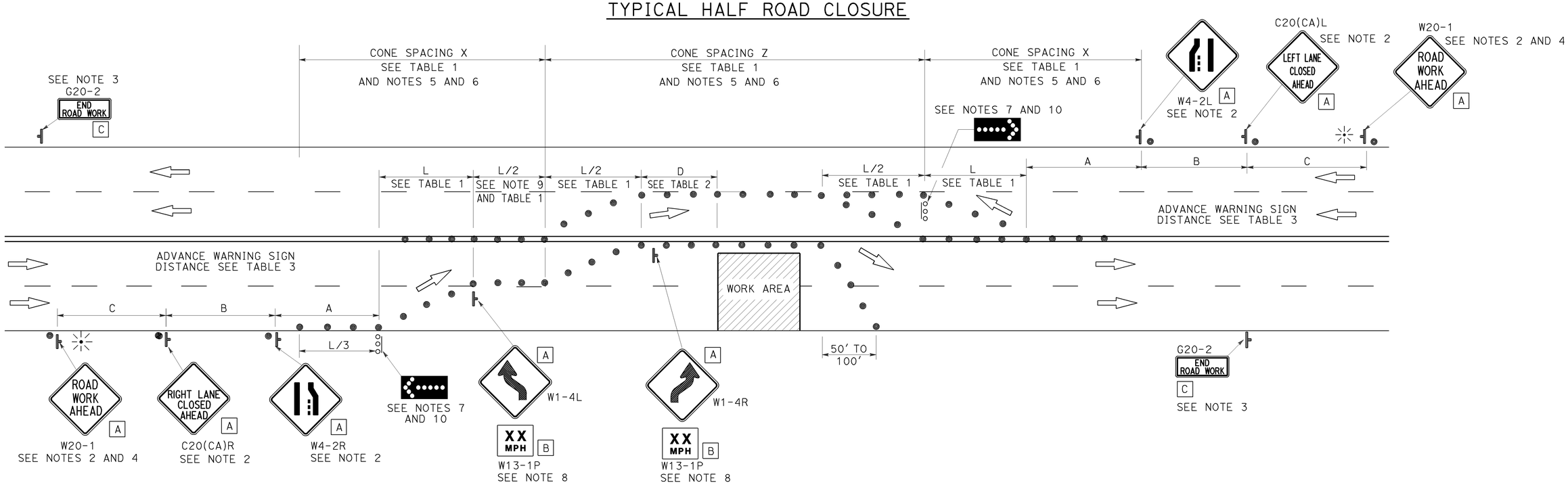

NOTES:

1. At least one person shall be assigned to provide full time maintenance of traffic control devices for lane closure unless, otherwise directed by the Engineer.
2. Each advance warning sign in each direction of travel shall be equipped with at least two flags for daytime closure. Each flag shall be at least 16" x 16" in size and shall be orange or fluorescent red-orange in color. Flashing beacons shall be placed at the locations indicated for lane closure during hours of darkness.
3. A G20-2 "END ROAD WORK" sign, as appropriate, shall be placed at the end of the lane closure unless the end of work area is obvious, or ends within a larger project's limits.
4. If the W20-1 sign would follow within 2000' of a stationary W20-1 or G20-1 "ROAD WORK NEXT _____ MILES", use a C20(CA) sign for the first advance warning sign.
5. All cones used for lane closures during the hours of darkness shall be fitted with retroreflective bands (or sleeves) as specified in the specifications.
6. Portable delineators, placed at one-half the spacing indicated for traffic cones, may be used instead of cones for daytime closures only.
7. Flashing arrow signs shall be either Type I or Type II.
8. Advisory speed will be determined by the Engineer. The W13-1P Plaque will not be required when advisory speed is more than the posted or maximum speed limit.
9. Unless otherwise specified in the special provisions, the tangent (L/2) shall be used.
10. A minimum 1500' of sight distance shall be provided where possible for vehicles approaching the first flashing arrow sign. Lane closures shall not begin at the top of crest vertical curve or on a horizontal curve.

STATE OF CALIFORNIA
DEPARTMENT OF TRANSPORTATION

TRAFFIC CONTROL SYSTEM FOR HALF ROAD CLOSURE ON MULTILANE CONVENTIONAL HIGHWAYS AND EXPRESSWAYS

NO SCALE

RSP T12 DATED APRIL 19, 2013 SUPERSEDES STANDARD PLAN T12
DATED MAY 20, 2011 - PAGE 240 OF THE STANDARD PLANS BOOK DATED 2010.

REVISED STANDARD PLAN RSP T12

2010 REVISED STANDARD PLAN RSP T12

4-2-13

Dist	COUNTY	ROUTE	POST MILES TOTAL PROJECT	SHEET No.	TOTAL SHEETS
08	Riv	79	R33.9	63	101

Devinder Singh
REGISTERED CIVIL ENGINEER

October 30, 2015
PLANS APPROVAL DATE

REGISTERED PROFESSIONAL ENGINEER
Devinder Singh
No. C50470
Exp. 6-30-17
CIVIL
STATE OF CALIFORNIA

THE STATE OF CALIFORNIA OR ITS OFFICERS OR AGENTS SHALL NOT BE RESPONSIBLE FOR THE ACCURACY OR COMPLETENESS OF SCANNED COPIES OF THIS PLAN SHEET.

TO ACCOMPANY PLANS DATED 03-15-16

2010 REVISED STANDARD PLAN RSP T13

NOTES:

See Revised Standard Plan RSP T9 for tables.

Use cone spacing X for taper segment, Y for tangent segment or Z for conflict situations, as approriate, per Table 1, unless X, Y, or Z cone spacing is shown on this sheet.

Unless otherwise specified in the special provisions, all temporary warning signs shall have black legend on fluorescent orange background.

California codes are designated by (CA). Otherwise, Federal (MUTCD) codes are shown.

TYPICAL LANE CLOSURE WITH REVERSIBLE CONTROL

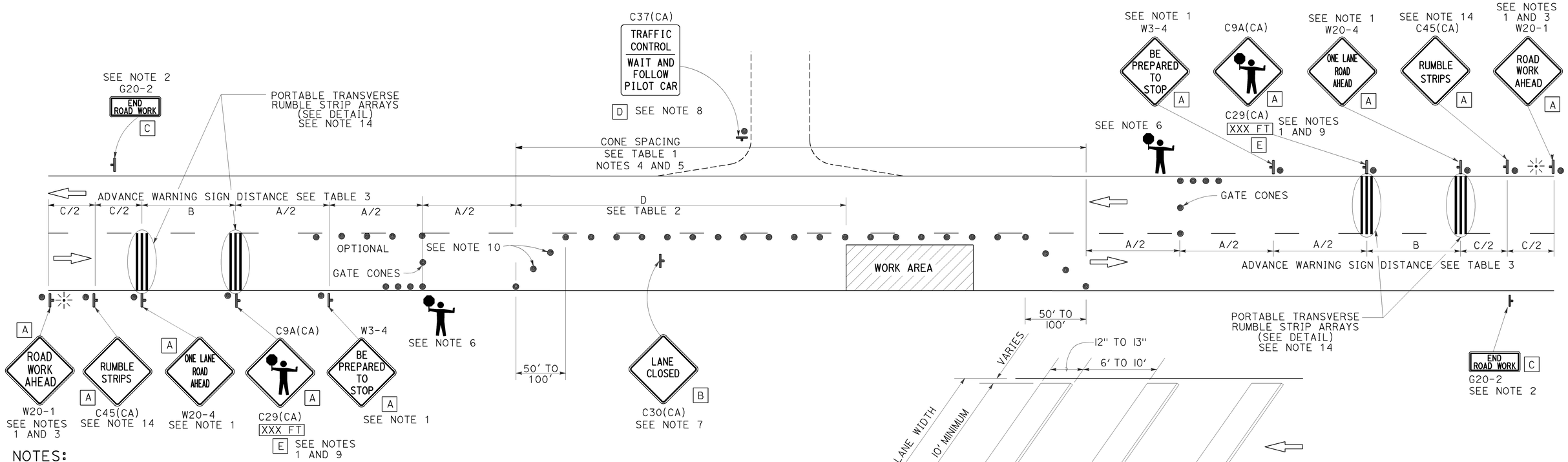

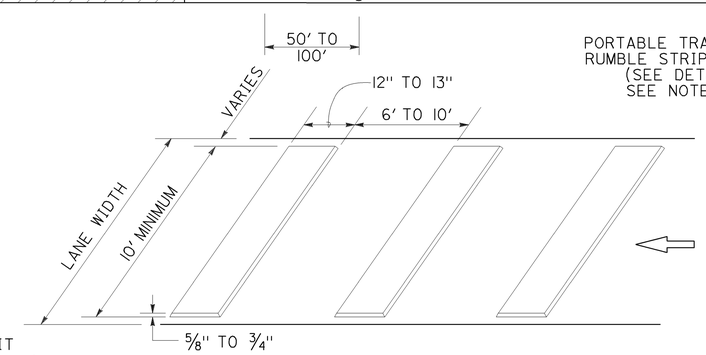

PORTABLE TRANSVERSE RUMBLE STRIP ARRAY DETAIL

NOTES:

1. Each advance warning sign in each direction of travel shall be equipped with at least two flags for daytime closure. Each flag shall be at least 16" x 16" in size and shall be orange or fluorescent red-orange in color. Flashing beacons shall be placed at the locations indicated for lane closure during hours of darkness.
2. A G20-2 "END ROAD WORK" sign, as appropriate, shall be placed at the end of the lane control unless the end of work area is obvious, or ends within a larger project's limits.
3. If the W20-1 sign would follow within 2000' of a stationary W20-1 or G20-1 "ROAD WORK NEXT _____ MILES", use a W20-4 sign for the first advance warning sign.
4. All cones used for lane closures during the hours of darkness shall be fitted with retroreflective bands (or sleeves) as specified in the specifications.
5. Portable delineators, placed at one-half the spacing indicated for traffic cones, may be used instead of cones for daytime closures only.
6. Additional advance flaggers may be required. Flagger should stand in a conspicuous place, be visible to approaching traffic as well as approaching vehicles after the first vehicle has stopped. During the hours of darkness, the flagging-station and flagger shall be illuminated and clearly visible to approaching traffic. The illumination footprint of the lighting on the ground shall be at least 20' in diameter. Place a minimum of four cones at 50' intervals in advance of flagger station as shown.
7. Place C30(CA) "LANE CLOSED" sign at 500' to 1000' intervals throughout extended work areas. They are optional if the work area is visible from the flagger station.
8. When a pilot car is used, place a C37(CA) "TRAFFIC CONTROL-WAIT AND FOLLOW PILOT CAR" sign with black legend on white background at all intersections, driveways and alleys without a flagger within traffic control area. Signs shall be clean and visible at all times. Where traffic can not be effectively self-regulated, at least one flagger shall be used at each intersection within traffic control area.
9. An optional C29(CA) sign may be placed below the C9A(CA) sign.
10. Either traffic cones or barricades shall be placed on the taper. Barricades shall be Type I, II, or III.
11. The color of the portable transverse rumble strips shall be black or orange. Use 2 arrays, each array shall consist of 3 rumble strips.
12. Portable transverse rumble strips shall not be placed on sharp horizontal or vertical curves nor shall they be placed through pedestrian crossings.
13. If the portable transverse rumble strips become out of alignment (skewed) by more than 6 inches, measured from one end to the other, they shall be readjusted to bring the placement back to the original location.
14. Portable transverse rumble strips are not required if any one of the following conditions is satisfied:
    A. Work duration occupies a location for four hours or less
    B. Posted speed limit is below 45 MPH
    C. Work is of emergency nature
    D. Work zone is in snow or icy weather conditions

LEGEND

- TRAFFIC CONE
- TEMPORARY TRAFFIC CONTROL SIGN
- PORTABLE FLASHING BEACON
- FLAGGER

SIGN PANEL SIZE (Min)

A	48" x 48"
B	30" x 30"
C	36" x 18"
D	36" x 42"
E	20" x 7"

STATE OF CALIFORNIA
DEPARTMENT OF TRANSPORTATION

TRAFFIC CONTROL SYSTEM FOR LANE CLOSURE ON TWO LANE CONVENTIONAL HIGHWAYS

NO SCALE

RSP T13 DATED OCTOBER 30, 2015 SUPERSEDES RSP T13 DATED OCTOBER 17, 2014, RSP T13 DATED JULY 18, 2014 AND RSP T13 DATED APRIL 19, 2013 AND STANDARD PLAN T13 DATED MAY 20, 2011 - PAGE 241 OF THE STANDARD PLANS BOOK DATED 2010.

REVISED STANDARD PLAN RSP T13

10-13-15

Dist	COUNTY	ROUTE	POST MILES TOTAL PROJECT	SHEET No.	TOTAL SHEETS
08	Riv	79	R33.9	64	101

REGISTERED CIVIL ENGINEER

April 19, 2013
PLANS APPROVAL DATE

REGISTERED PROFESSIONAL ENGINEER Gurinderpal Bhullar No. C48815 Exp. 9-30-14 CIVIL STATE OF CALIFORNIA

THE STATE OF CALIFORNIA OR ITS OFFICERS OR AGENTS SHALL NOT BE RESPONSIBLE FOR THE ACCURACY OR COMPLETENESS OF SCANNED COPIES OF THIS PLAN SHEET.

TO ACCOMPANY PLANS DATED 03-15-16

TYPICAL RAMP CLOSURES

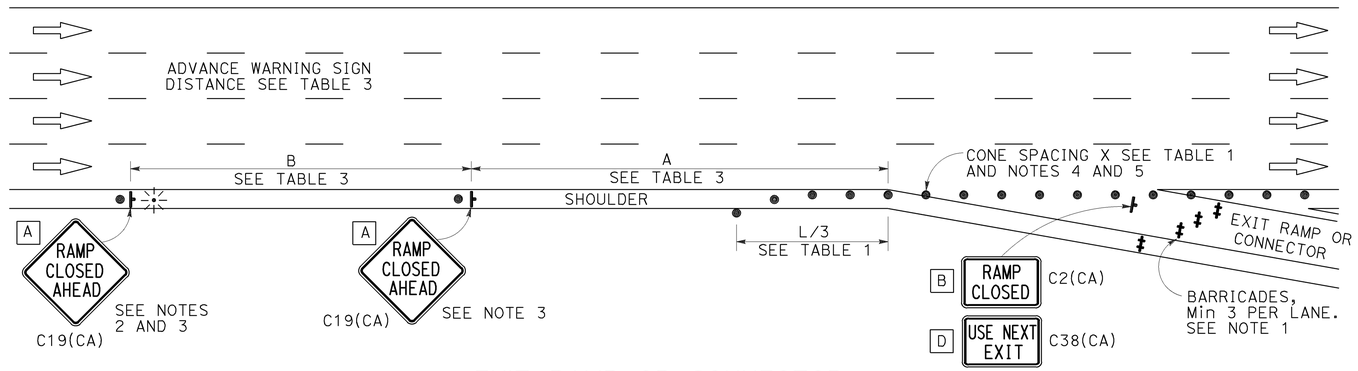

EXIT RAMP OR CONNECTOR

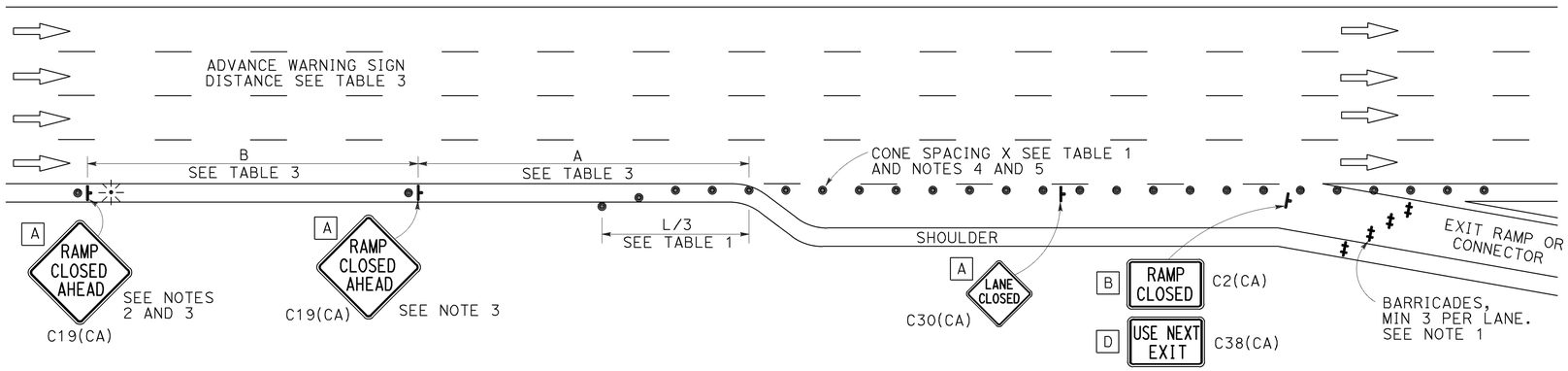

EXIT RAMP OR CONNECTOR WITH ADDITIONAL LANE

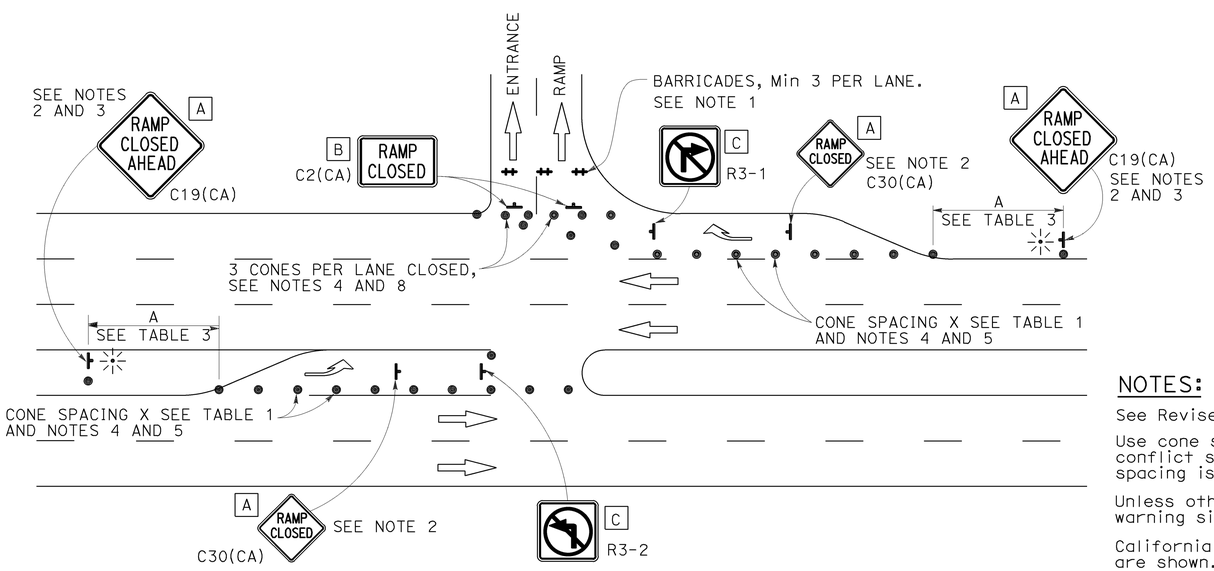

ENTRANCE RAMP WITH TURNING POCKETS

SIGN PANEL SIZE (Min)

- A 48" × 48"
- B 48" × 30"
- C 36" × 36"
- D 48" × 36"

LEGEND

- TRAFFIC CONE
- TEMPORARY TRAFFIC CONTROL SIGN
- BARRICADES
- PORTABLE FLASHING BEACON

NOTES:

1. Barricades shall be Type I, II, or III for closures lasting one week or less and Type III for closures lasting longer than one week.
2. In addition to placing the C19(CA) "RAMP CLOSED AHEAD" and C30(CA) "RAMP CLOSED" signs, black on orange overlay plates with the word "CLOSED" may be mounted, as directed by the Engineer, on all guide signs that refer to the closed ramp. The letter size on the overlay shall be the same as the guide sign.
3. Each advance C19(CA) "RAMP CLOSED AHEAD" sign shall be equipped with at least two flags for daytime closure. Each flag shall be at least 16" × 16" in size and shall be orange or fluorescent red-orange in color. A flashing beacon shall be placed on top of the first C19(CA) sign during hours of darkness.
4. All cones used for ramp closures during the hours of darkness shall be fitted with retroreflective bands (or sleeves) as specified in the specifications.
5. Portable delineators, placed at one-half the spacing indicated for traffic cones, may be used instead of cones for daytime ramp closures only.
6. At least one person shall be assigned to provide full time maintenance of traffic control devices, unless otherwise directed by the Engineer.
7. The existing "EXIT" signs shall be covered during ramp closures.
8. A minimum of 3 cones shall be placed transversely across each closed lane and shoulder.

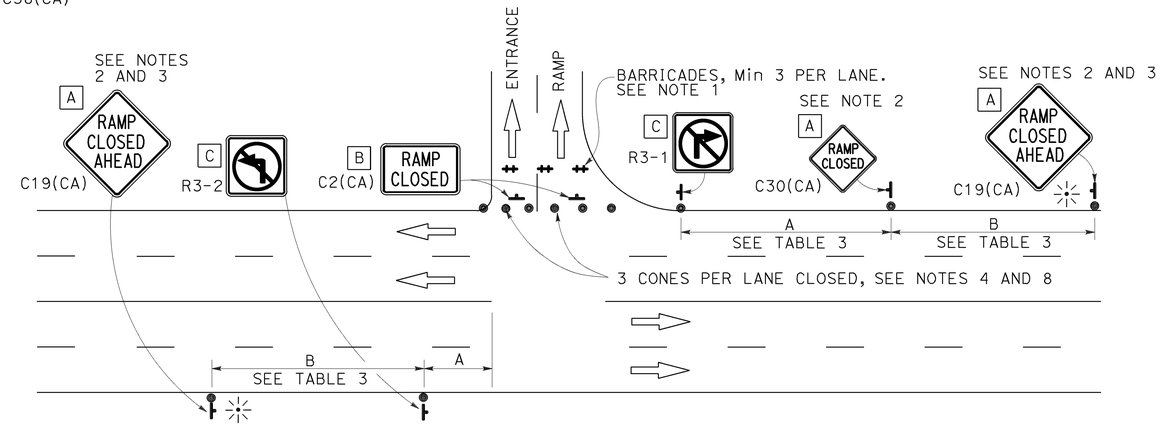

ENTRANCE RAMP WITHOUT TURNING POCKETS

NOTES:

See Revised Standard Plan RSP T9 for tables.

Use cone spacing X for taper segment, Y for tangent segment or Z for conflict situations, as approriate, per Table 1, unless X, Y, or Z cone spacing is shown on this sheet.

Unless otherwise specified in the special provisions, all temporary warning signs shall have black legend on fluorescent orange background.

California codes are designated by (CA). Otherwise, Federal (MUTCD) codes are shown.

STATE OF CALIFORNIA
DEPARTMENT OF TRANSPORTATION

TRAFFIC CONTROL SYSTEM FOR RAMP CLOSURE

NO SCALE

RSP T14 DATED APRIL 19, 2013 SUPERSEDES STANDARD PLAN T14
DATED MAY 20, 2011 - PAGE 242 OF THE STANDARD PLANS BOOK DATED 2010.

REVISED STANDARD PLAN RSP T14

2010 REVISED STANDARD PLAN RSP T14

12-18-12

Dist	COUNTY	ROUTE	POST MILES TOTAL PROJECT	SHEET No.	TOTAL SHEETS
08	Riv	79	R33.9	65	101

REGISTERED CIVIL ENGINEER

April 19, 2013
PLANS APPROVAL DATE

REGISTERED PROFESSIONAL ENGINEER Gurinderpal Bhullar No. C48815 Exp. 9-30-14 CIVIL STATE OF CALIFORNIA

THE STATE OF CALIFORNIA OR ITS OFFICERS OR AGENTS SHALL NOT BE RESPONSIBLE FOR THE ACCURACY OR COMPLETENESS OF SCANNED COPIES OF THIS PLAN SHEET.

TO ACCOMPANY PLANS DATED 03-15-16

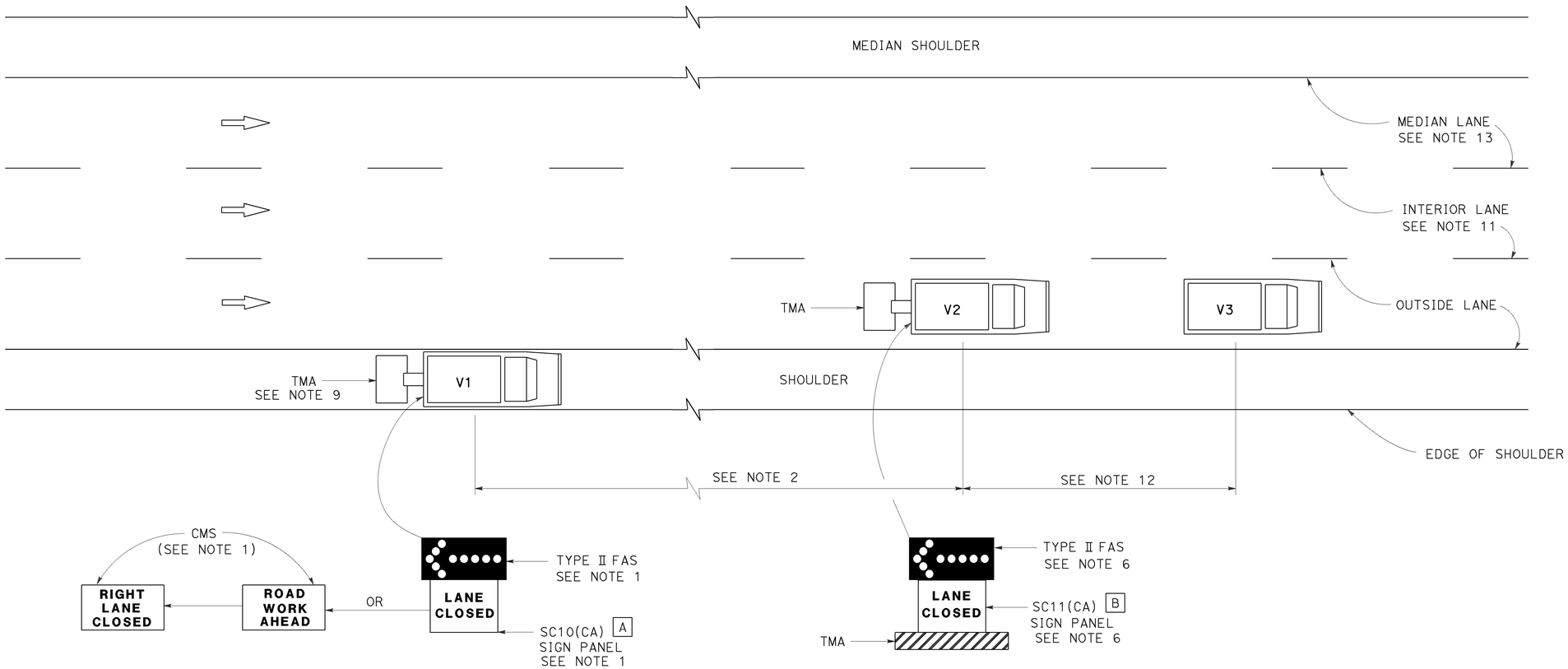

MOVING LANE CLOSURE ON MEDIAN LANE OR OUTSIDE LANE OF MULTILANE HIGHWAYS

SIGN PANEL SIZE (Min)

A 66" x 36"

B 54" x 42"

LEGEND

V1	SIGN VEHICLE
V2	SHADOW VEHICLE
V3	WORK/APPLICATION VEHICLE
	FLASHING ARROW SIGN (FAS)
CMS	CHANGEABLE MESSAGE SIGN
TMA	TRUCK-MOUNTED ATTENUATOR

NOTES:

1. Either a changeable message sign or a SC10(CA) sign panel and a Type II flashing arrow sign shall be mounted on the rear of sign vehicle V1. The changeable message sign shall be sequenced to show the "ROAD WORK AHEAD" message first, followed by the "RIGHT LANE CLOSED" message. For median lane closure, the flashing arrow symbol shall be reversed with the arrowhead on the right and the changeable message sign shall show "LEFT LANE CLOSED".
2. If traffic queues develop, sign vehicle V1 should be positioned upstream from the end of queue. Sign vehicle V1 shall be positioned where highly visible when shoulders are not available.
3. A minimum sight distance of 1500′ should be provided in advance of sign vehicle V1.
4. Sign vehicle V1 should remain at the beginning of horizontal or vertical curves until the other vehicles (V2 and V3) are far enough beyond the curve to resume the minimum sight distance of 1500′.
5. Vehicle-mounted sign panels shall have Type III or above retroreflective sheeting, black on white, or black on fluorescent orange, with 6" minimum series D letters per Caltrans sign specifications.
6. Shadow vehicle V2 shall be equipped with a truck-mounted attenuator. The sign panel shown and a Type II flashing arrow sign shall be mounted on the rear of shadow vehicle V2. For median lane closure the flashing arrow sign symbol shall be displayed with the arrowhead on the right.
7. All vehicles used for lane closures shall be equipped with two-way radios, and the vehicle operators shall maintain communication during the work or application operation.
8. All vehicles shall be equipped with flashing or rotating amber lights.
9. If sign vehicle V1 encroaches into the traffic lane due to insufficient shoulder width, sign vehicle V1 shall be equipped with a truck-mounted attenuator. Sign vehicle V1 shall stay as close to the edge of shoulder as practicable.
10. Where workers would be on foot in the work area, a stationary type lane closure (Revised Standard Plan T10, T11, etc., as applicable) shall be used instead of this plan.
11. For moving lane closure on interior lane of multilane highways, use Revised Standard Plan T16.
12. The spacing between work vehicle(s) and the shadow vehicles, and between each shadow vehicle should be minimized to deter road users from driving in between.
13. When the work/application vehicle V3 occupies the median lane, sign vehicle V1 should drive in the median shoulder and indicate left lane closed ahead.

STATE OF CALIFORNIA
DEPARTMENT OF TRANSPORTATION

TRAFFIC CONTROL SYSTEM FOR MOVING LANE CLOSURE ON MULTILANE HIGHWAYS

NO SCALE

RSP T15 DATED APRIL 19, 2013 SUPERSEDES STANDARD PLAN T15
DATED MAY 20, 2011 - PAGE 243 OF THE STANDARD PLANS BOOK DATED 2010.

REVISED STANDARD PLAN RSP T15

2010 REVISED STANDARD PLAN RSP T15

12-18-12

Dist	COUNTY	ROUTE	POST MILES TOTAL PROJECT	SHEET No.	TOTAL SHEETS
08	Riv	79	R33.9	66	101

REGISTERED CIVIL ENGINEER

April 19, 2013
PLANS APPROVAL DATE

REGISTERED PROFESSIONAL ENGINEER
Gurinderpal Bhullar
No. C48815
Exp. 9-30-14
CIVIL
STATE OF CALIFORNIA

THE STATE OF CALIFORNIA OR ITS OFFICERS OR AGENTS SHALL NOT BE RESPONSIBLE FOR THE ACCURACY OR COMPLETENESS OF SCANNED COPIES OF THIS PLAN SHEET.

TO ACCOMPANY PLANS DATED 03-15-16

2010 REVISED STANDARD PLAN RSP T16

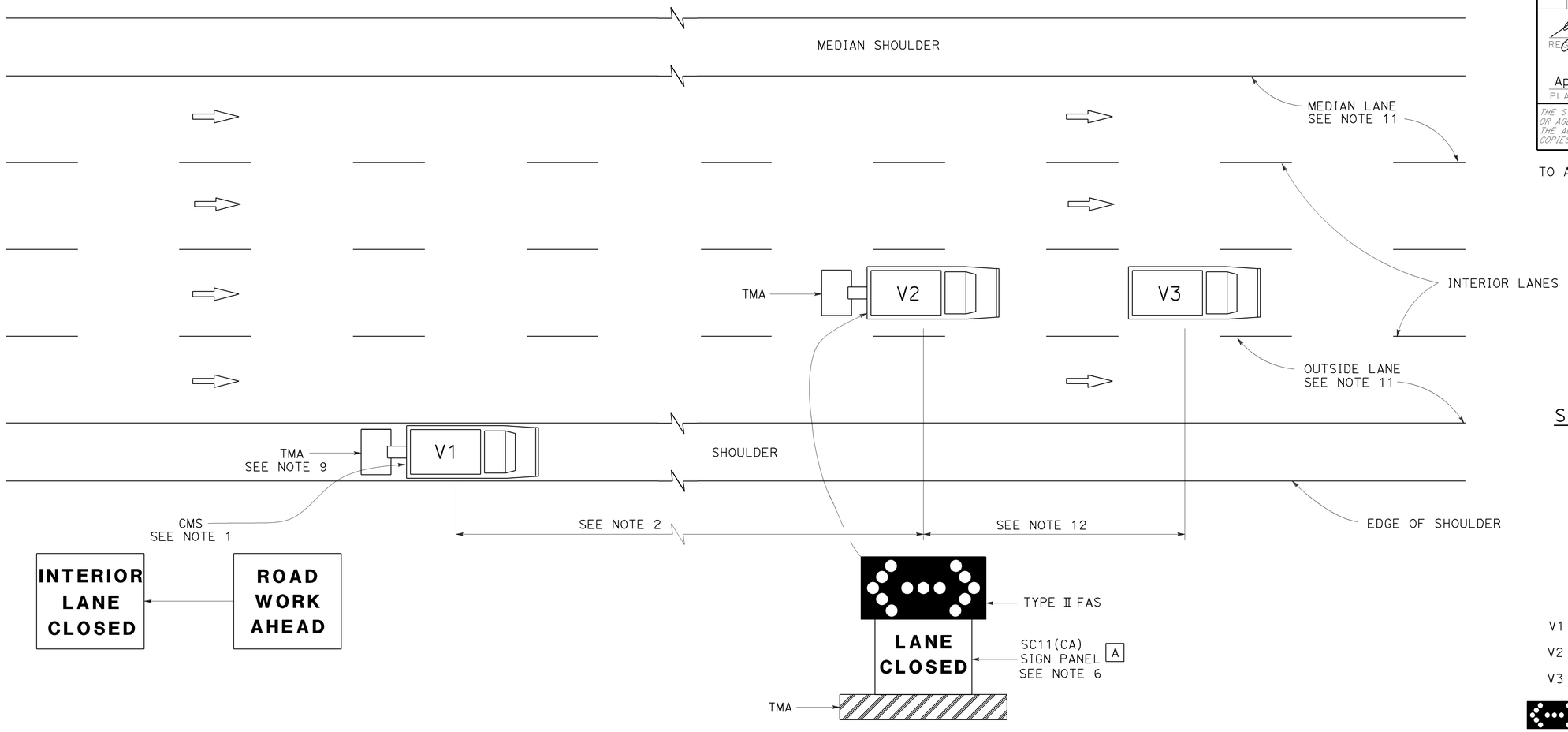

SIGN PANEL SIZE (Min)

A 54" x 42"

LEGEND

V1	SIGN VEHICLE
V2	SHADOW VEHICLE
V3	WORK/APPLICATION VEHICLE
	FLASHING ARROW SIGN (FAS) IN FLASHING DOUBLE ARROW MODE
CMS	CHANGEABLE MESSAGE SIGN
TMA	TRUCK-MOUNTED ATTENUATOR

MOVING LANE CLOSURE ON INTERIOR LANE OF MULTILANE HIGHWAYS

NOTES:

1. A changeable message sign shall be mounted on the rear of sign vehicle V1. The changeable message sign shall be sequenced to show the "ROAD WORK AHEAD" message first, followed by the "INTERIOR LANE CLOSED" message. The message "CENTER LANE CLOSED" may be used in place of the "INTERIOR LANE CLOSED" message.
2. If traffic queues develop, sign vehicle V1 should be positioned upstream from the end of queue. Sign vehicle V1 shall be positioned where highly visible when shoulders are not available.
3. A minimum sight distance of 1500′ should be provided in advance of sign vehicle V1.
4. Sign vehicle V1 should remain at the beginning of horizontal or vertical curves until the other vehicles (V2 and V3) are far enough beyond the curve to resume the minimum sight distance of 1500′.
5. Vehicle-mounted sign panels shall have Type Ⅲ or above retroreflective sheeting, black on white, or black on fluorescent orange, with 6" minimum series D letters per Caltrans sign specifications.
6. Shadow vehicle V2 shall be equipped with a truck-mounted attenuator. The sign panel shown and a Type Ⅱ flashing arrow sign shall be mounted on the rear of shadow vehicle V2.
7. All vehicles used for lane closures shall be equipped with two-way radios, and the vehicle operators shall maintain communication during the work or application operation.
8. All vehicles shall be equipped with flashing or rotating amber lights.
9. If sign vehicle V1 encroaches into the traffic lane due to insufficient shoulder width, sign vehicle V1 shall be equipped with a truck-mounted attenuator. Sign vehicle V1 shall stay as close to the edge of shoulder as practicable.
10. Where workers would be on foot in the work area, a stationary type lane closure (Revised Standard Plan T10, T11 etc., as applicable) shall be used instead of this plan.
11. For moving lane closure on median lane or outside lane of multilane highways, use Revised Standard Plan T15.
12. The spacing between work vehicle(s) and the shadow vehicles, and between each shadow vehicle should be minimized to deter road users from driving in between.

STATE OF CALIFORNIA
DEPARTMENT OF TRANSPORTATION

TRAFFIC CONTROL SYSTEM FOR MOVING LANE CLOSURE ON MULTILANE HIGHWAYS

NO SCALE

RSP T16 DATED APRIL 19, 2013 SUPERSEDES STANDARD PLAN T16
DATED MAY 20, 2011 - PAGE 244 OF THE STANDARD PLANS BOOK DATED 2010.

REVISED STANDARD PLAN RSP T16

12-18-12

Dist	COUNTY	ROUTE	POST MILES TOTAL PROJECT	SHEET No.	TOTAL SHEETS
08	Riv	79	R33.9	67	101

REGISTERED CIVIL ENGINEER

April 19, 2013
PLANS APPROVAL DATE

REGISTERED PROFESSIONAL ENGINEER
Gurinderpal Bhullar
No. C48815
Exp. 9-30-14
CIVIL
STATE OF CALIFORNIA

THE STATE OF CALIFORNIA OR ITS OFFICERS OR AGENTS SHALL NOT BE RESPONSIBLE FOR THE ACCURACY OR COMPLETENESS OF SCANNED COPIES OF THIS PLAN SHEET.

TO ACCOMPANY PLANS DATED 03-15-16

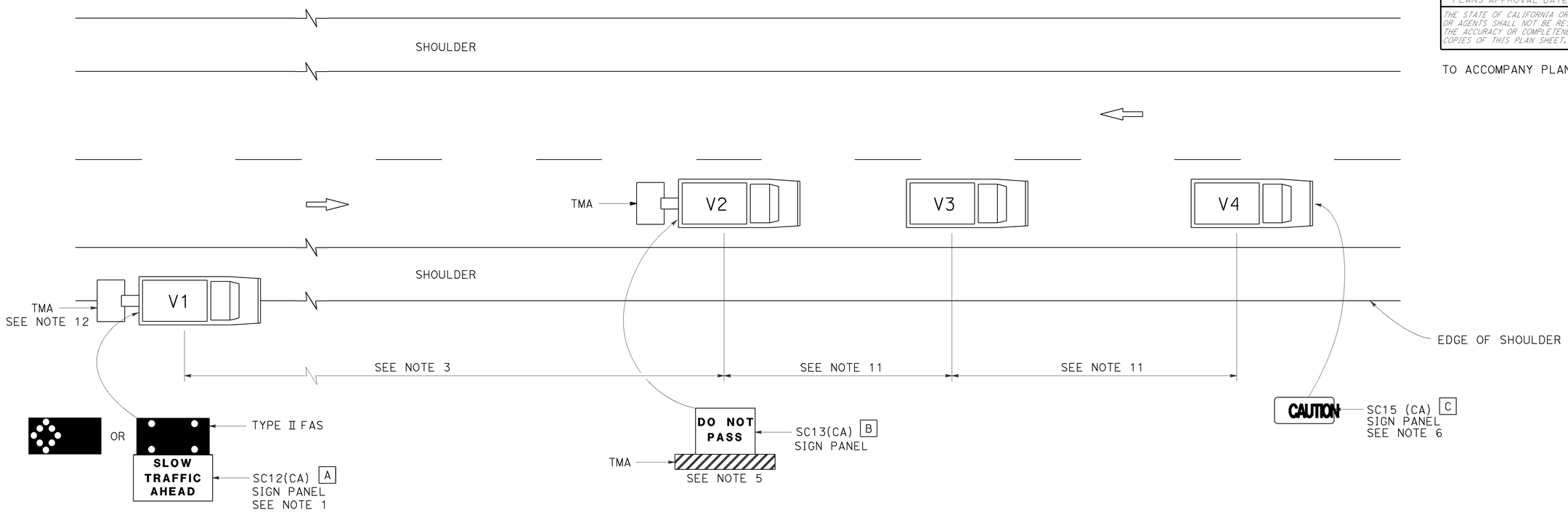

LEGEND

V1	SIGN VEHICLE
V2	SHADOW VEHICLE
V3	WORK/APPLICATION VEHICLE
V4	SIGN VEHICLE
TMA	TRUCK-MOUNTED ATTENUATOR
	FLASHING ARROW SIGN (FAS) IN FLASHING CAUTION MODE
	FLASHING ARROW SIGN (FAS) IN ALTERNATING DIAMOND CAUTION

SIGN PANEL SIZE (Min)

A	72" x 42"
B	54" x 42"
C	54" x 24"

NOTES:

1. Either a changeable message sign or a SC12(CA) "SLOW TRAFFIC AHEAD" sign shall be mounted on the rear of sign vehicle V1. The changeable message sign shall be sequenced to show the "CAUTION" message first, follow by the "SLOW TRAFFIC AHEAD" message. A Type II flashing arrow sign may be used with the SC12(CA) sign panel.
2. Sign vehicle V1 should be positioned where highly visible when shoulders are not available.
3. If traffic queues develop, sign vehicle V1 should be positioned upstream from the end of queue.
4. Vehicle-mounted sign panels shall have Type III or above retroreflective sheeting, black on white, or black on fluorescent orange, with 6" minimum series D letters per Caltrans sign specifications.
5. Shadow vehicle shall be equipped with a truck-mounted attenuator. The sign panel shown shall be mounted on the rear of shadow vehicle V2. The message "LANE CLOSED" may be used in place of the "DO NOT PASS" message.
6. The sign panel shown shall be mounted on the front of sign vehicle V4, facing opposing traffic.
7. All vehicles shall be equipped with flashing or rotating amber lights.
8. Sign vehicle V4 will not be required when the work and vehicles V2 and V3 are 2′ or more from the centerline of the highway during the work or application operations.
9. All vehicles used for lane closures shall be equipped with two-way radios and the vehicle operators shall maintain communication during the work or application operation.
10. This plan shall not be used where workers would be on foot in the work area. Use a stationary type lane closure (Revised Standard Plan T13) for this condition.
11. Minimize spacing between vehicles V2 and V3 and vehicles V3 and V4 to deter road users from driving in between them.
12. If sign vehicle V1 encroaches into the traffic lane due to insufficient shoulder width, sign vehicle V1 shall be equipped with a truck-mounted attenuator. Sign vehicle V1 shall stay as close to the edge of shoulder as practicable.

STATE OF CALIFORNIA
DEPARTMENT OF TRANSPORTATION

TRAFFIC CONTROL SYSTEM FOR MOVING LANE CLOSURE ON TWO LANE HIGHWAYS

NO SCALE

RSP T17 DATED APRIL 19, 2013 SUPERSEDES STANDARD PLAN T17
DATED MAY 20, 2011 - PAGE 245 OF THE STANDARD PLANS BOOK DATED 2010.

REVISED STANDARD PLAN RSP T17

2010 REVISED STANDARD PLAN RSP T17

12-18-12

Dist	COUNTY	ROUTE	POST MILES TOTAL PROJECT	SHEET No.	TOTAL SHEETS
08	Riv	79	R33.9	68	101

REGISTERED CIVIL ENGINEER

October 21, 2011
PLANS APPROVAL DATE

REGISTERED PROFESSIONAL ENGINEER Tillat Satter No. C42892 Exp. 3-31-12 CIVIL STATE OF CALIFORNIA

THE STATE OF CALIFORNIA OR ITS OFFICERS OR AGENTS SHALL NOT BE RESPONSIBLE FOR THE ACCURACY OR COMPLETENESS OF SCANNED COPIES OF THIS PLAN SHEET.

TO ACCOMPANY PLANS DATED 03-15-16

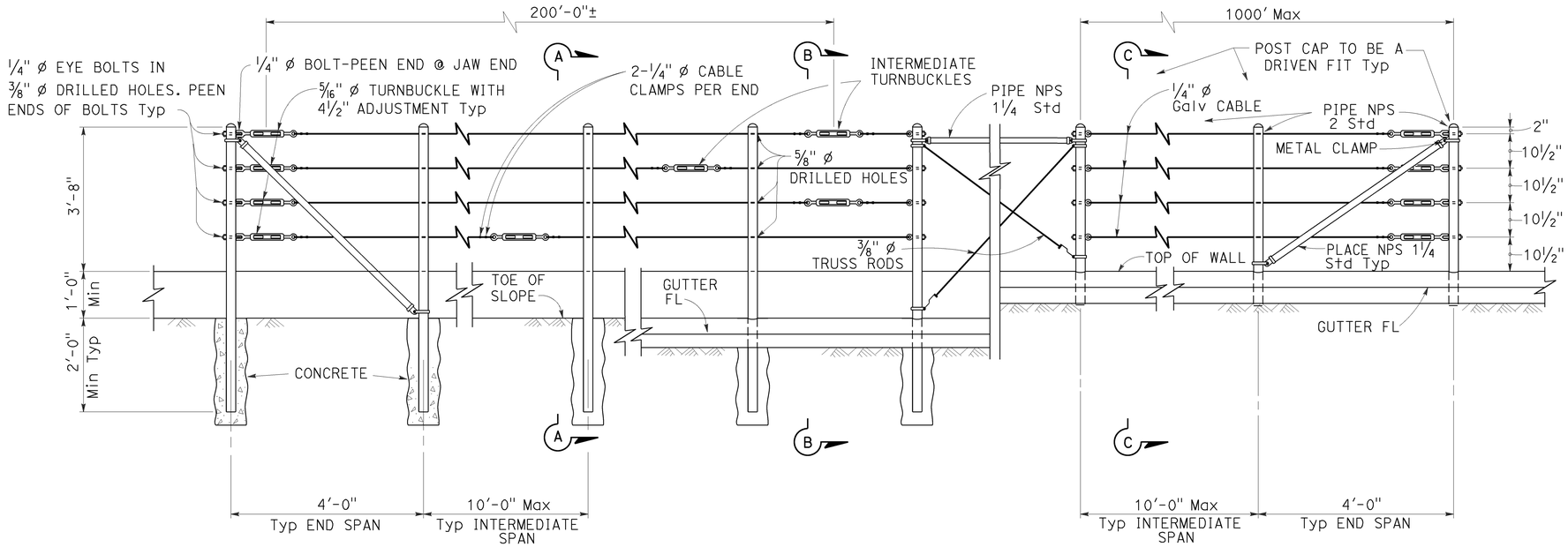

EXISTING WALL (WITHOUT GUTTER)
Existing

RETAINING WALL (WITH GUTTER)
Existing

RETAINING WALL (WITH GUTTER)
New construction

ELEVATION

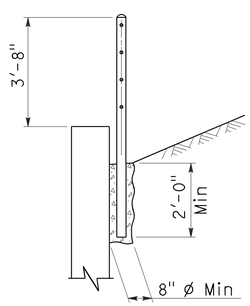

SECTION A-A
Existing

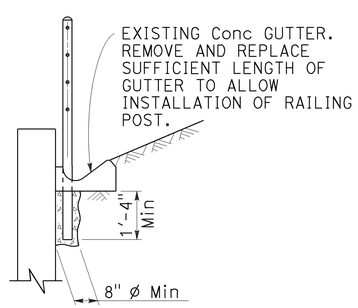

SECTION B-B
Existing

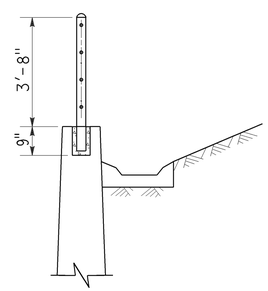

SECTION C-C
New construction

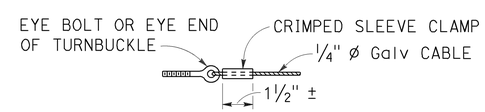

ALTERNATIVE CABLE CONNECTION

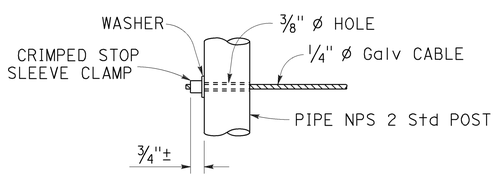

ALTERNATIVE DEAD END ANCHORAGE

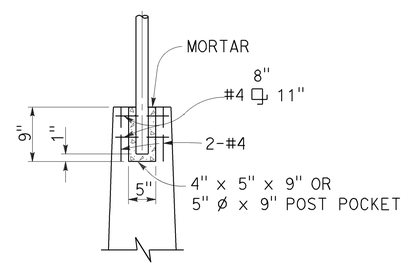

POST POCKET

NOTES:

1. Maximum distance between turnbuckles shall be 200'-0"±.
2. Intermediate turnbuckles to be placed in adjacent spans.
3. Cable shall not be spliced between intermediate turnbuckles and end posts.
4. Posts to be vertical.
5. Alignment of holes in posts may vary to conform to slope of top of retaining wall.
6. The Contractor shall verify all dependent dimensions in the field before ordering or fabricating any material.
7. Line posts shall be braced horizontally and trussed diagonally in both directions at intervals not to exceed 1000'.
8. Post pockets to be centered in top of wall.
9. Typical end spans, braced in both directions, shall be constructed at changes in line where the angle of deflection is 15° or more.
10. Provide thimbles at all cable loops.

STATE OF CALIFORNIA
DEPARTMENT OF TRANSPORTATION

CABLE RAILING

NO SCALE

RSP B11-47 DATED OCTOBER 21, 2011 SUPERSEDES STANDARD PLAN B11-47 DATED MAY 20, 2011 - PAGE 293 OF THE STANDARD PLANS BOOK DATED 2010.

REVISED STANDARD PLAN RSP B11-47

2010 REVISED STANDARD PLAN RSP B11-47

9-14-11

Dist	COUNTY	ROUTE	POST MILES TOTAL PROJECT	SHEET No.	TOTAL SHEETS
08	Riv	79	R33.9	69	101

Theresa Gabriel
REGISTERED ELECTRICAL ENGINEER

October 30, 2015
PLANS APPROVAL DATE

REGISTERED PROFESSIONAL ENGINEER Theresa Aziz Gabriel No. E15129 Exp. 6-30-16 ELECTRICAL STATE OF CALIFORNIA

THE STATE OF CALIFORNIA OR ITS OFFICERS OR AGENTS SHALL NOT BE RESPONSIBLE FOR THE ACCURACY OR COMPLETENESS OF SCANNED COPIES OF THIS PLAN SHEET.

TO ACCOMPANY PLANS DATED 03-15-16

LEGEND:

AB	ABANDON. IF APPLIED TO CONDUIT, REMOVE CONDUCTORS
BC	INSTALL PULL BOX IN EXISTING CONDUIT RUN
BP	PEDESTRIAN BARRICADE, TYPE AS INDICATED ON PLAN
CB	INSTALL CONDUIT INTO EXISTING PULL BOX
CC	CONNECT NEW AND EXISTING CONDUIT. REMOVE EXISTING CONDUCTORS AND INSTALL CONDUCTORS AS INDICATED
CF	CONDUIT TO REMAIN FOR FUTURE USE. REMOVE CONDUCTORS. INSTALL PULL TAPE
DH	DETECTOR HANDHOLE
FA	FOUNDATION TO BE ABANDONED
IS	INSTALL SIGN ON SIGNAL MAST ARM
NS	NO SLIP BASE ON STANDARD
PEC	PHOTOELECTRIC CONTROL
PEU	PHOTOELECTRIC UNIT
RC	EQUIPMENT OR MATERIAL TO BE REMOVED AND BECOME THE PROPERTY OF THE CONTRACTOR
RE	REMOVE ELECTROLIER, FUSES AND BALLAST. TAPE ENDS OF CONDUCTORS
RL	RELOCATE EQUIPMENT
RR	REMOVE AND REUSE EQUIPMENT
RS	REMOVE AND SALVAGE EQUIPMENT
SC	SPLICE NEW TO EXISTING CONDUCTORS
SD	SERVICE DISCONNECT
TSP	TELEPHONE SERVICE POINT

ABBREVIATIONS

AC+	UNDERGROUNDED CONDUCTOR
APS	ACCESSIBLE PEDESTRIAN SIGNAL
Batt	BATTERY
BBS	BATTERY BACKUP SYSTEM
BC	BOLT CIRCLE
Blk	BLACK
BP	BYPASS
BPB	BICYCLE PUSH BUTTON
C	CONDUIT
CB	CIRCUIT BREAKER
CCTV	CLOSED CIRCUIT TELEVISION
Ckt	CIRCUIT
CMS	CHANGEABLE MESSAGE SIGN
Ctid	CALTRANS IDENTIFICATION
Comm	COMMUNICATION
Cntl	CONTROL
DF	DEPARTMENT-FURNISHED
DLC	LOOP DETECTOR LEAD-IN CABLE
EMS	EXTINGUISHABLE MESSAGE SIGN
EVUC	EMERGENCY VEHICLE UNIT CABLE
EVUD	EMERGENCY VEHICLE UNIT DETECTOR
FB	FLASHING BEACON
FBCA	FLASHING BEACON CONTROL ASSEMBLY
FBS	FLASHING BEACON WITH SLIP BASE
FO	FIBER OPTIC
G	EQUIPMENT GROUNDING CONDUCTOR
GB	GROUND BUS
GFCI	GROUND FAULT CIRCUIT INTERRUPTER
Grn	GREEN
HAR	HIGHWAY ADVISORY RADIO
Hex	HEXAGONAL
HPS	HIGH PRESSURE SODIUM
IISNS	INTERNALLY ILLUMINATED STREET NAME SIGN
ISL	INDUCTION SIGN LIGHTING
LED	LIGHT EMITTING DIODE
LMA	LUMINAIRE MAST ARM
LPS	LOW PRESSURE SODIUM
Ltg	LIGHTING
Lum	LUMINAIRE
M	METERED
MAT	MAST ARM MOUNTING TOP ATTACHMENT
MAS	MAST ARM MOUNTING SIDE ATTACHMENT
MBPS	MANUAL BYPASS SWITCH
M/M	MULTIPLE TO MULTIPLE TRANSFORMER
Mtg	MOUNTING
MV	MERCURY VAPOR LIGHTING FIXTURE
MVDS	MICROWAVE VEHICLE DETECTION SYSTEM
N	NEUTRAL (GROUNDED CONDUCTOR)
NB	NEUTRAL BUS
NC	NORMALLY CLOSE
NO	NORMALLY OPEN
P	CIRCUIT BREAKER'S POLE
PB	PULL BOX
PBA	PUSH BUTTON ASSEMBLY
PEC	PHOTOELECTRIC CONTROL
Ped	PEDESTRIAN
PEU	PHOTOELECTRIC UNIT
PT	CONDUIT WITH PULL TAPE
PTR	POWER TRANSFER RELAY
RE	RELOCATED EQUIPMENT
RM	RAMP METERING
RWIS	ROADSIDE WEATHER INFORMATION SYSTEM
SB	SLIP BASE
SIC	SIGNAL INTERCONNECT CABLE
Sig	SIGNAL
SMA	SIGNAL MAST ARM
SNS	STREET NAME SIGN
SP	SERVICE POINT
TB	TERMINAL BOARD
TDC	TELEPHONE DEMARCATION CABINET
Temp	TEMPERATURE
TMS	TRAFFIC MONITORING STATION
TOS	TRAFFIC OPERATIONS SYSTEM
UPS	UNINTERRUPTABLE POWER SUPPLY
UPSC	UNINTERRUPTABLE POWER SUPPLY CONTROLLER
Veh	VEHICLE
VIVDS	VIDEO IMAGE VEHICLE DETECTION SYSTEM
Wht	WHITE
WIM	WEIGH-IN-MOTION
Xfmr	TRANSFORMER

SOFFIT AND WALL-MOUNTED LUMINAIRES

- PENDANT SOFFIT LUMINAIRE, 70 W HPS UNLESS OTHERWISE SPECIFIED
- FLUSH-MOUNTED SOFFIT LUMINAIRE, 70 W HPS UNLESS OTHERWISE SPECIFIED
- WALL-MOUNTED LUMINAIRE, 70 W HPS UNLESS OTHERWISE SPECIFIED
- EXISTING SOFFIT OR WALL-MOUNTED LUMINAIRE TO REMAIN UNMODIFIED
- (M) EXISTING SOFFIT OR WALL-MOUNTED LUMINAIRE TO BE MODIFIED AS SPECIFIED

NOTE:
Arrow indicates "street side" of luminaire.

COMMONLY USED SYMBOLS FOR UNITED STATES CUSTOMARY UNITS OF MEASUREMENT:

SYMBOL	DEFINITIONS
Ω	OHMS
min	MINUTE
s	SECOND
bps	BITS PER SECOND
Bps	BYTES PER SECOND
A	AMPERE
V	VOLT
V(dc)	VOLT (DIRECT CURRENT)
V(ac)	VOLT (ALTERNATING CURRENT)
FC	FOOT - CANDLE
W	WATTS
VA	VOLT-AMPERE
M	MEGA
k	KILO
m	MILLI
μ	MICRO
P	PICO
Hz	HERTZ

MISCELLANEOUS ELECTROLIERS

NEW	EXISTING	
		LUMINAIRE ON WOOD POLE
		NON-STANDARD ELECTROLIER (SEE PROJECT LEGEND)
		CITY ELECTROLIER
		ELECTROLIER FOUNDATION (FUTURE INSTALLATION)

NOTES:

1. LED luminaires shall be 235 W when installed on Type 21, 21D, 30, 31 and 32 Standards, unless otherwise specified. LED luminaires shall be 165 W when installed on other type standards or poles, unless otherwise specified.
2. Luminaires shall be the cutoff type, ANSI Type III medium cutoff lighting distribution, unless otherwise specified.

STANDARD ELECTROLIER

NEW	EXISTING	STANDARD TYPE
		15
		15D
		15 STRUCTURE
		15D STRUCTURE
		21
		21D
		21 STRUCTURE
		21D STRUCTURE
		30
		31
		32

STATE OF CALIFORNIA
DEPARTMENT OF TRANSPORTATION

ELECTRICAL SYSTEMS (LEGEND AND ABBREVIATIONS)

NO SCALE

RSP ES-1A DATED OCTOBER 30, 2015 SUPERSEDES RSP ES-1A DATED JULY 19, 2013 AND STANDARD PLAN ES-1A DATED MAY 20, 2011 - PAGE 425 OF THE STANDARD PLANS BOOK DATED 2010.

REVISED STANDARD PLAN RSP ES-1A

2010 REVISED STANDARD PLAN RSP ES-1A

9-29-15

Dist	COUNTY	ROUTE	POST MILES TOTAL PROJECT	SHEET No.	TOTAL SHEETS
08	Riv	79	R33.9	70	101

Theresa Gabriel
REGISTERED ELECTRICAL ENGINEER

October 30, 2015
PLANS APPROVAL DATE

REGISTERED PROFESSIONAL ENGINEER Theresa Aziz Gabriel No. E15129 Exp. 6-30-16 ELECTRICAL STATE OF CALIFORNIA

THE STATE OF CALIFORNIA OR ITS OFFICERS OR AGENTS SHALL NOT BE RESPONSIBLE FOR THE ACCURACY OR COMPLETENESS OF SCANNED COPIES OF THIS PLAN SHEET.

TO ACCOMPANY PLANS DATED 03-15-16

CONDUIT

NEW	EXISTING	
		LIGHTING CONDUIT, UNLESS OTHERWISE INDICATED OR NOTED
		TRAFFIC SIGNAL CONDUIT
C	c	COMMUNICATION CONDUIT
T	t	TELEPHONE CONDUIT
F	f	FIRE ALARM CONDUIT
FO	fo	FIBER OPTIC CONDUIT
		CONDUIT TERMINATION
R	r	CONDUIT RISER ATTACHED TO THE STRUCTURE OR SERVICE POLE

SERVICE EQUIPMENT

NEW	EXISTING	
OH	oh	OVERHEAD LINES
U	U	WOOD POLE, "U" INDICATES UTILITY OWNED
		POLE GUY WITH ANCHOR
		UTILITY TRANSFORMER - GROUND MOUNTED
III	III	SERVICE EQUIPMENT ENCLOSURE TYPE. DOOR INDICATES FRONT OF ENCLOSURE
T	t	TELEPHONE DEMARCATION CABINET

POLE-MOUNTED SERVICE DESIGNATION

TYPE H SERVICE, 28'-10" — TYPE OF INSTALLATION AND POLE HEIGHT ABOVE GRADE

FLASHING BEACON

NEW	EXISTING	
R	R	FLASHING BEACON (ONE VEHICLE SIGNAL HEAD WITH BACKPLATE AND VISOR) "R" INDICATES RED INDICATION, "Y" INDICATES YELLOW INDICATION
Y Y	Y Y	FLASHING BEACON WITH TYPE 15-FBS STANDARD AND A SIGN.
R R	R R	FLASHING BEACON WITH TYPES 9, 9A OR 9B SIGN UNLESS OTHERWISE SPECIFIED OR INDICATED

SIGNAL EQUIPMENT

NEW	EXISTING	
		PEDESTRIAN SIGNAL HEAD
		PUSH BUTTON ASSEMBLY POST
		PEDESTRIAN BARRICADE
		VEHICLE SIGNAL HEAD (WITH BACKPLATE AND 3-SECTIONS: RED, YELLOW AND GREEN)
		VEHICLE SIGNAL HEAD WITH ANGLE VISOR
PV	PV	MODIFICATIONS OF BASIC SYMBOL: "L" INDICATES ALL NON-ARROW SECTIONS LOUVERED "LG" INDICATES LOUVERED GREEN SECTION ONLY "PV" INDICATES ALL 12" SECTIONS PROGRAMMED VISIBILITY "8" INDICATES ALL 8" SECTIONS (ONLY WHEN SPECIFIED)
		VEHICLE SIGNAL HEAD CONSISTING OF RED, YELLOW AND GREEN LEFT ARROW SECTIONS
		VEHICLE SIGNAL HEAD CONSISTING OF RED AND YELLOW SECTIONS WITH AN UP GREEN ARROW SECTION
		VEHICLE SIGNAL HEAD (5 SECTION) CONSISTING OF RED, YELLOW AND GREEN SECTIONS WITH YELLOW AND GREEN RIGHT ARROW SECTIONS
		TYPE 15TS STANDARD WITH VEHICLE SIGNAL HEAD AND LUMINAIRE
		TYPE 21TS STANDARD WITH VEHICLE SIGNAL HEAD AND LUMINAIRE
		STANDARD WITH LUMINAIRE AND SIGNAL MAST ARMS AND ATTACHED VEHICLE SIGNAL HEADS
		TYPE 1 STANDARD WITH ATTACHED VEHICLE SIGNAL HEADS
		STANDARD WITH A SIGNAL MAST ARM, ATTACHED VEHICLE SIGNAL HEADS AND INTERNALLY ILLUMINATED STREET NAME SIGN
		CONTROLLER ASSEMBLY. DOOR INDICATES FRONT OF CABINET

SIGNAL EQUIPMENT Cont

NEW	EXISTING	
		GUARD POST
		TYPE 1 STANDARD WITH RAMP METERING SIGN
		OPTICAL DETECTOR FOR THE EMERGENCY VEHICLE DETECTION

NOTES:

1. All signal sections shall be 12" unless shown otherwise.
2. Signal heads shall be provided with backplates unless shown otherwise.

ILLUMINATED OVERHEAD SIGN

NEW	EXISTING	
		SINGLE POST, SINGLE ILLUMINATED SIGN, BALANCED BUTTERFLY
		SINGLE POST, DOUBLE ILLUMINATED SIGN, BALANCED BUTTERFLY
		SINGLE POST, SINGLE ILLUMINATED SIGN, FULL CANTILEVER
		DOUBLE POST, SINGLE ILLUMINATED SIGN
		SINGLE ILLUMINATED SIGN MOUNTED ON STRUCTURE
		DOUBLE POST, SINGLE ILLUMINATED SIGN WITH ELECTROLIER

STATE OF CALIFORNIA
DEPARTMENT OF TRANSPORTATION

ELECTRICAL SYSTEMS (LEGEND AND ABBREVIATIONS)

NO SCALE

RSP ES-1B DATED OCTOBER 30, 2015 SUPERSEDES RSP ES-1B DATED JULY 19, 2013 AND STANDARD PLAN ES-1B DATED MAY 20, 2011 - PAGE 426 OF THE STANDARD PLANS BOOK DATED 2010.

REVISED STANDARD PLAN RSP ES-1B

2010 REVISED STANDARD PLAN RSP ES-1B

8-19-15

Dist	COUNTY	ROUTE	POST MILES TOTAL PROJECT	SHEET No.	TOTAL SHEETS
08	Riv	79	R33.9	71	101

Theresa Gabriel
REGISTERED ELECTRICAL ENGINEER

October 30, 2015
PLANS APPROVAL DATE

REGISTERED PROFESSIONAL ENGINEER
Theresa Aziz Gabriel
No. E15129
Exp. 6-30-16
ELECTRICAL
STATE OF CALIFORNIA

THE STATE OF CALIFORNIA OR ITS OFFICERS OR AGENTS SHALL NOT BE RESPONSIBLE FOR THE ACCURACY OR COMPLETENESS OF SCANNED COPIES OF THIS PLAN SHEET.

TO ACCOMPANY PLANS DATED 03-15-16

EQUIPMENT IDENTIFICATION

ILLUMINATED SIGN IDENTIFICATION NUMBER:

SIGN No. 12345
10 ISL SCI 1.0

- SIGN NUMBER - PLACE ON POST OR STRUCTURE
- TRANSFORMER RATING (kVA)
- LIGHTING CONTROL TYPE
- NUMBER AND TYPE OF FIXTURES

} DO NOT PLACE ON STANDARD OR STRUCTURE

ELECTROLIER OR EQUIPMENT IDENTIFICATION NUMBER:

12345 - 15'-0"

- MAST ARM LENGTH, IF SHOWN. DO NOT PLACE ON STANDARD OR STRUCTURE
- EQUIPMENT NUMBER - PLACE ON STANDARD OR STRUCTURE. EXISTING EQUIPMENT NUMBERS ARE SHOWN IN PARENTHESIS

CONDUIT AND CONDUCTOR IDENTIFICATION:

1½"C, 2#10, 15#14, 2 DLC, 12P#18

- PAIR
- NUMBER AND SIZE OF CONDUCTORS AND CABLES
- SIZE OF CONDUIT IN INCHES

ø1, ø2, ø2P, etc.	TRAFFIC PHASE IDENTIFICATION FOR SIGNALS, DETECTORS AND PHASE DIAGRAMS
1 2 3	LEGEND NUMBERS
A B C	EQUIPMENT, SIGNAL POLES, INSTALLATION OR ITEMS
1 2 3	CONDUIT RUN NUMBERS

SIGNAL AND LIGHTING STANDARD (TYPICAL DESIGNATION):

19A - 3 - 100

- WIND VELOCITY = 100 mph
- CASE 3 ARM LOADING
- STANDARD TYPE
- STANDARD PLAN SHEET NUMBER
- DETAIL, NUMBER, SECTION, TYPE OR ELEVATION

MISCELLANEOUS EQUIPMENT

NEW	EXISTING	
CMS	cms	CHANGEABLE MESSAGE SIGN
		CLOSED CIRCUIT TELEVISION CAMERA
		HIGHWAY ADVISORY RADIO POLE AND ANTENNA
EMS	ems	LED EXTINGUISHABLE MESSAGE SIGN
M V	m v	DETECTION DEVICE M = MICROWAVE SENSOR V = VIDEO IMAGE SENSOR

WIRING DIAGRAM LEGEND

----	EXTERNAL CONDUCTOR
	CONDUCTOR OR BUS
	TIE POINT
	CONTACTOR COIL
	CONTACTOR, NO CONTACT
	TERMINAL BLOCKS
	CONTACTOR, NC CONTACT
	ENCLOSURE BOND
	GROUNDING ELECTRODE
	CIRCUIT BREAKER
	RECEPTACLE

PULL BOXES

NEW	EXISTING	
		PULL BOX, No. 5 UNLESS OTHERWISE INDICATED OR NOTED
3	9A(21)	PULL BOX, ADDITIONAL DESIGNATIONS OR DESCRIPTIONS

3 No. 3½ PULL BOX
5 No. 5 PULL BOX
6 No. 6 PULL BOX
7 No. 7 (CEILING PULL BOX)
8 No. 8 (PENDANT SOFFIT PULL BOX)
9 No. 9 PULL BOX
9A No. 9A PULL BOX

(C) COMMUNICATIONS PULL BOX
(E) PULL BOX WITH EXTENSION
(S) SPRINKLER CONTROL PULL BOX
(21) ANCHOR BOLTS AND CONDUIT FOR FUTURE INSTALLATION OF TYPE 21 STANDARD
(T) TRAFFIC PULL BOX

VEHICLE DETECTORS

5 J 9 U

- VEHICLE DETECTOR DESIGNATION
- U = UPPER
  L = LOWER
- SLOT NUMBER IN INPUT FILE
- INPUT FILE (I OR J)
- PHASE

NEW	EXISTING	
		TYPE A LOOP DETECTOR. OUTLINE OF SAWCUT SHOWN
		TYPE B LOOP DETECTOR. OUTLINE OF SAWCUT SHOWN
		TYPE C LOOP DETECTOR. OUTLINE OF SAWCUT SHOWN
		TYPE D LOOP DETECTOR. OUTLINE OF SAWCUT SHOWN
		TYPE E LOOP DETECTOR. OUTLINE OF SAWCUT SHOWN
		TYPE Q LOOP DETECTOR. OUTLINE OF SAWCUT SHOWN
DH	dh	DETECTOR HANDHOLE
		MICROWAVE OR VIDEO DETECTION ZONE

STATE OF CALIFORNIA
DEPARTMENT OF TRANSPORTATION

ELECTRICAL SYSTEMS (LEGEND AND ABBREVIATIONS)

NO SCALE

RSP ES-1C DATED OCTOBER 30, 2015 SUPERSEDES RSP ES-1C DATED JULY 19, 2013 AND STANDARD PLAN ES-1C DATED MAY 20, 2011 - PAGE 427 OF THE STANDARD PLANS BOOK DATED 2010.

REVISED STANDARD PLAN RSP ES-1C

2010 REVISED STANDARD PLAN RSP ES-1C

8-19-15

Dist	COUNTY	ROUTE	POST MILES TOTAL PROJECT	SHEET No.	TOTAL SHEETS
08	Riv	79	R33.9	72	101

Theresa Gabriel
REGISTERED ELECTRICAL ENGINEER

October 30, 2015
PLANS APPROVAL DATE

REGISTERED PROFESSIONAL ENGINEER Theresa Aziz Gabriel No. E15129 Exp. 6-30-16 ELECTRICAL STATE OF CALIFORNIA

THE STATE OF CALIFORNIA OR ITS OFFICERS OR AGENTS SHALL NOT BE RESPONSIBLE FOR THE ACCURACY OR COMPLETENESS OF SCANNED COPIES OF THIS PLAN SHEET.

TO ACCOMPANY PLANS DATED 03-15-16

2010 REVISED STANDARD PLAN RSP ES-2A

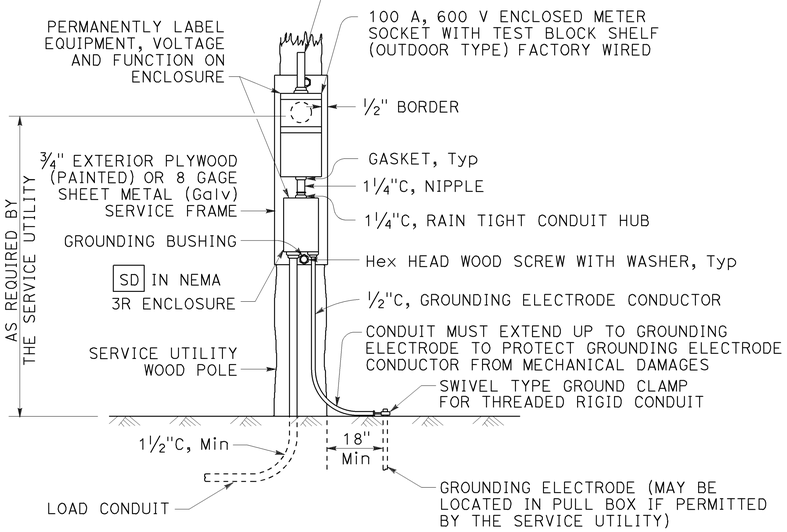

TYPE SCE-1
DETAIL A

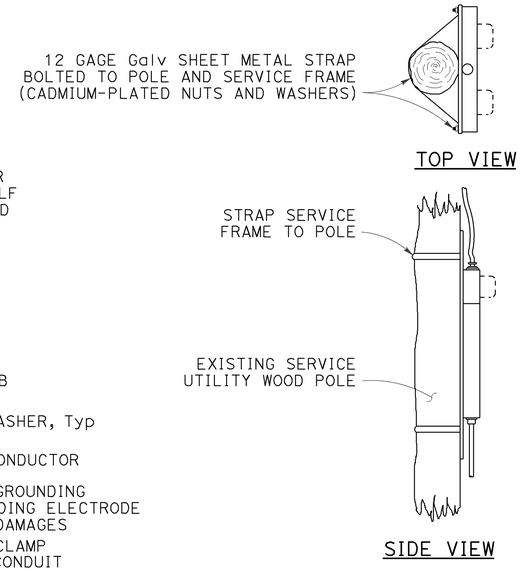

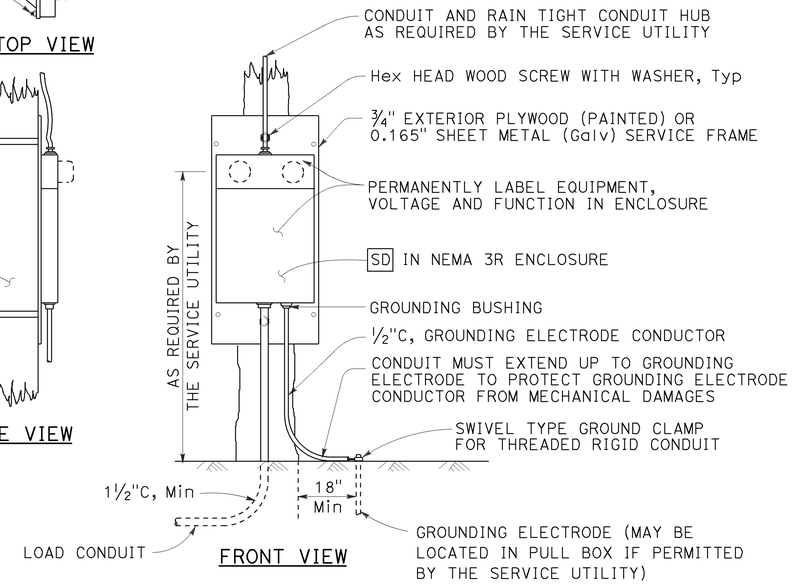

TYPE SCE-2
DETAIL B

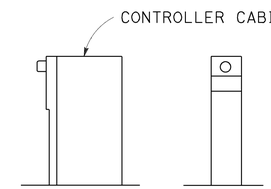

TYPE OF SERVICE (TYPICAL)
DETAIL C

See Notes 1 and 2

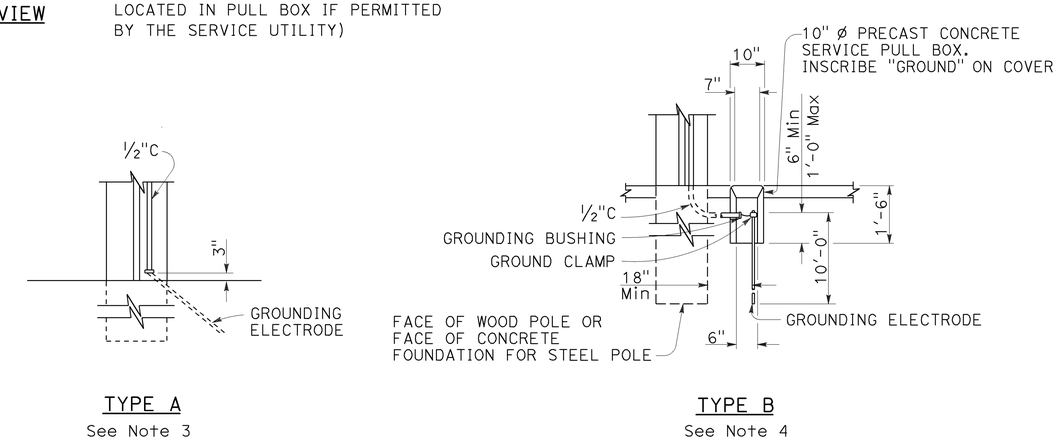

SERVICE GROUNDING
DETAIL E

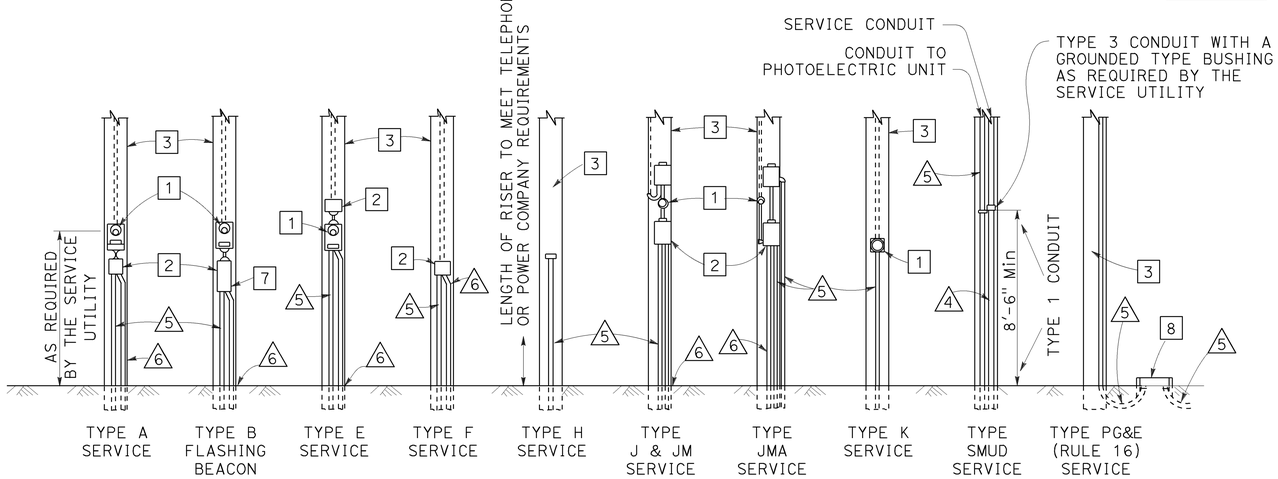

POLE MOUNTED SERVICE INSTALLATIONS
DETAIL D

LEGEND:

1. METER SOCKET.
2. SERVICE ENCLOSURE WITH A MINIMUM 60 A RATED MAIN CIRCUIT BREAKER, UNLESS OTHERWISE SHOWN.
3. A. UTILITY OWNED POLE. THE SERVICE UTILITY WILL FURNISH AND INSTALL REQUIRED SERVICE RISER, PEU WITH CONDUCTORS AND OTHER EQUIPMENT AS NEEDED.
   B. STATE OWNED POLE. THE CONTRACTOR SHALL FURNISH AND INSTALL REQUIRED SERVICE RISER AND EQUIPMENT.
4. 2"C, SERVICE CONDUIT MUST HAVE A GROUNDED TYPE BUSHING INSTALLED AT UPPER END OF THE METALLIC POLE RISER CONDUIT. A GROUNDING CONDUCTOR MUST BE ATTACHED TO THE BUSHING, CARRIED THROUGH THE CONDUIT RUN AND ATTACHED TO THE SERVICE EQUIPMENT ENCLOSURE'S GROUNDING ELECTRODE.
5. CONDUIT, LENGTH AND SIZE AS REQUIRED.
6. ½"C, 1#6. SEE DETAIL E.
7. FLASHING BEACON CONTROL ASSEMBLY.
8. SERVICE PULL BOX, No. 5 UNLESS OTHERWISE NOTED, FURNISHED AND INSTALLED BY THE CONTRACTOR. SERVICE UTILITY SHALL DETERMINE THE EXACT LOCATION.

NOTES:

1. Type II service equipment enclosure mounted on the side of a controller cabinet.
2. Type III complete free-standing service equipment enclosure.
3. Ground clamp and required fittings must be accessible. Conduit must extend to protect grounding electrode conductor from mechanical damage.
4. Use where service utility requires 18" clearance between grounding electrode and the pole or service equipment enclosure. Installation shown is for sidewalk or paved areas. In unpaved areas, omit special service pull box and locate ground clamp above ground or locate ground clamp in nearest pull box.

STATE OF CALIFORNIA
DEPARTMENT OF TRANSPORTATION

ELECTRICAL SYSTEMS (SERVICE EQUIPMENT)

NO SCALE

RSP ES-2A DATED OCTOBER 30, 2015 SUPERSEDES STANDARD PLAN ES-2A DATED MAY 20, 2011 - PAGE 428 OF THE STANDARD PLANS BOOK DATED 2010.

REVISED STANDARD PLAN RSP ES-2A

8-20-15

Dist	COUNTY	ROUTE	POST MILES TOTAL PROJECT	SHEET No.	TOTAL SHEETS
08	Riv	79	R33.9	73	101

Theresa Gabriel
REGISTERED ELECTRICAL ENGINEER

October 30, 2015
PLANS APPROVAL DATE

REGISTERED PROFESSIONAL ENGINEER
Theresa Aziz Gabriel
No. E15129
Exp. 6-30-16
ELECTRICAL
STATE OF CALIFORNIA

THE STATE OF CALIFORNIA OR ITS OFFICERS OR AGENTS SHALL NOT BE RESPONSIBLE FOR THE ACCURACY OR COMPLETENESS OF SCANNED COPIES OF THIS PLAN SHEET.

TO ACCOMPANY PLANS DATED 03-15-16

2010 REVISED STANDARD PLAN RSP ES-2C

NOTES:

1. The plan shows the approximate location of devices within the enclosure. Components may be rearranged, however, the "working" clearances within the service equipment enclosure shall be maintained.

2. In unpaved areas a raised portland cement concrete pad 2'-0" x 4" x width of foundation shall be constructed in front of new service equipment enclosure installation. Pad shall be set to elevation of foundation.

3. Plug-in circuit breakers may be mounted in the vertical or horizontal position. Cable-in/cable-out circuit breakers shall be mounted in the vertical position.

4. Type III-AF and Type III-BF service equipment enclosures shall have the meter viewing windows located on the front side of the service equipment enclosures.

5. Type III-AR and Type III-BR service equipment enclosure shall be similarly constructed as Type III-AF and Type III-BF respectively, except the meter viewing windows shall be located on the back side of the service equipment enclosures.

STATE OF CALIFORNIA
DEPARTMENT OF TRANSPORTATION

ELECTRICAL SYSTEMS (SERVICE EQUIPMENT ENCLOSURE NOTES TYPE III SERIES)

NO SCALE

RSP ES-2C DATED OCTOBER 30, 2015 SUPERSEDES STANDARD PLAN ES-2C DATED MAY 20, 2011 - PAGE 430 OF THE STANDARD PLANS BOOK DATED 2010.

REVISED STANDARD PLAN RSP ES-2C

Dist	COUNTY	ROUTE	POST MILES TOTAL PROJECT	SHEET No.	TOTAL SHEETS
08	Riv	79	R33.9	74	101

Theresa Gabriel
REGISTERED ELECTRICAL ENGINEER

October 30, 2015
PLANS APPROVAL DATE

REGISTERED PROFESSIONAL ENGINEER Theresa Aziz Gabriel No. E15129 Exp. 6-30-16 ELECTRICAL STATE OF CALIFORNIA

THE STATE OF CALIFORNIA OR ITS OFFICERS OR AGENTS SHALL NOT BE RESPONSIBLE FOR THE ACCURACY OR COMPLETENESS OF SCANNED COPIES OF THIS PLAN SHEET.

TO ACCOMPANY PLANS DATED 03-15-16

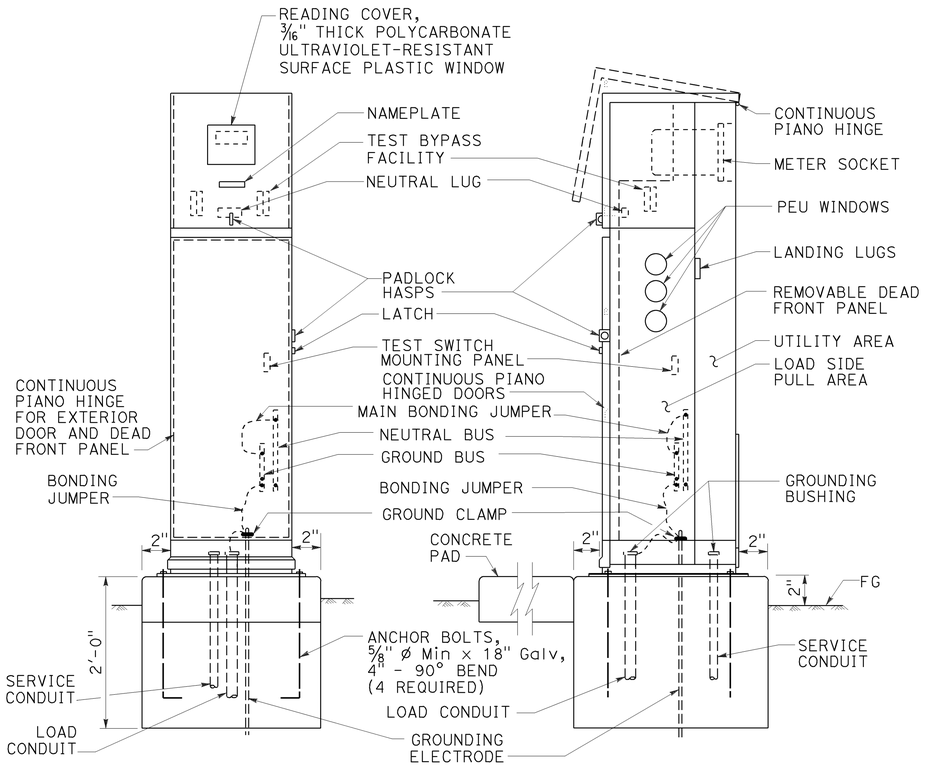

TYPE III-BF SERVICE EQUIPMENT ENCLOSURE (TYPICAL)

DETAIL A

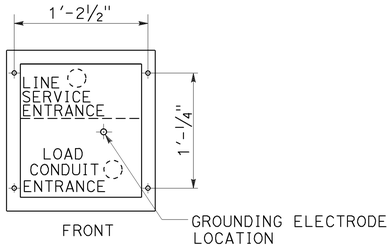

BASE FOR TYPE III-B SERVICE EQUIPMENT ENCLOSURE

DETAIL B

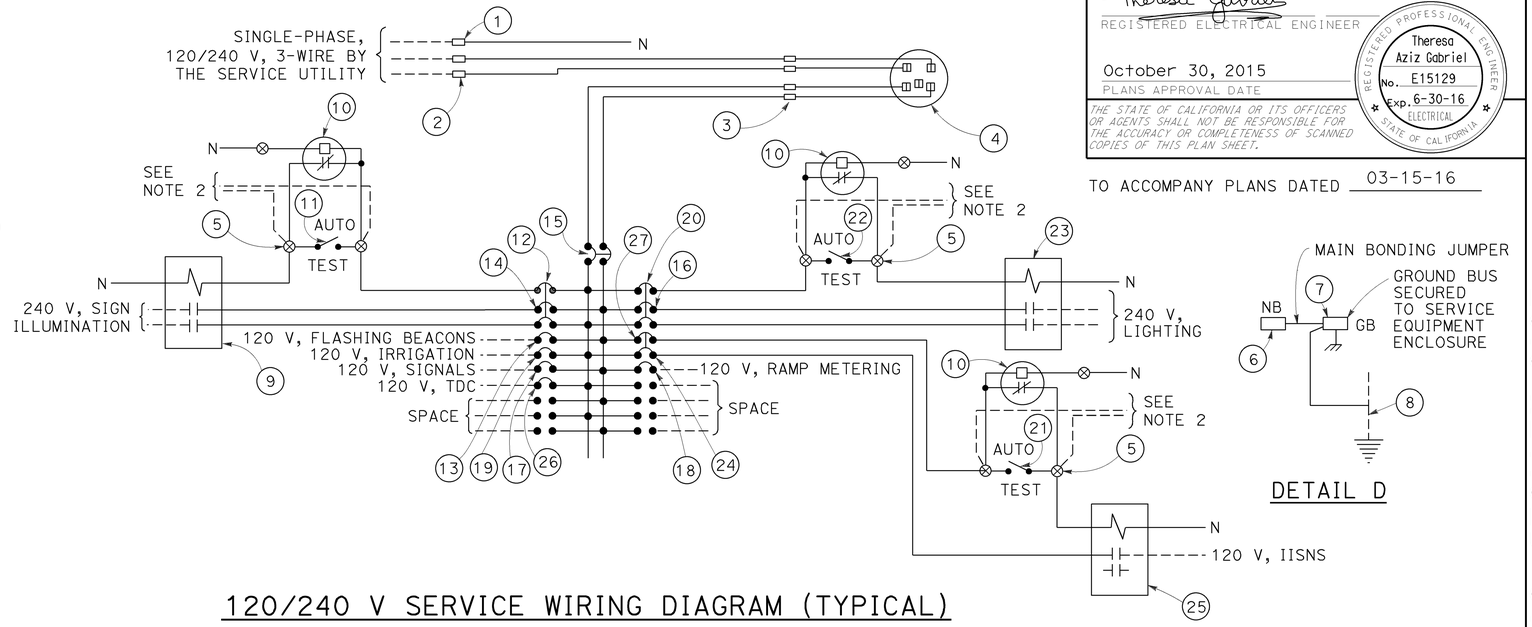

120/240 V SERVICE WIRING DIAGRAM (TYPICAL)

DETAIL C

DETAIL D

TYPE III-B SERVICE EQUIPMENT ENCLOSURE LEGEND (120/240 V)

ITEM	COMPONENT	NAMEPLATE DESCRIPTION	ITEM	COMPONENT	NAMEPLATE DESCRIPTION
1	NEUTRAL LUG		14	30 A, 240 V, 2P, CB	SIGN ILLUMINATION
2	LANDING LUG		15	100 A, 240 V, 2P, CB	MAIN BREAKER
3	TEST BYPASS FACILITY		16	30 A, 240 V, 2P, CB	LIGHTING
4	METER SOCKET AND SUPPORT		17	50 A, 120 V, 1P, CB	SIGNALS
5	TERMINAL BLOCKS		18	30 A, 120 V, 1P, CB	RAMP METERING
6	NEUTRAL BUS		19	20 A, 120 V, 1P, CB	IRRIGATION
7	GROUND BUS		20	15 A, 120 V, 1P, CB	LIGHTING CONTROL
8	GROUNDING ELECTRODE		21	15 A, 1P, TEST SWITCH	IISNS TEST SWITCH
9	30 A, 2P, NO CONTACTOR	SIGN ILLUMINATION	22	15 A, 1P, TEST SWITCH	LIGHTING TEST SWITCH
10	PHOTOELECTRIC UNIT (NOTE 4)	PEU	23	60 A, 2P, NO CONTACTOR	LIGHTING
11	15 A, 1P, TEST SWITCH	SIGN ILLUMINATION TEST SWITCH	24	15 A, 120 V, 1P, CB	IISNS
12	15 A, 120 V, 1P, CB	SIGN ILLUMINATION CONTROL	25	30 A, 2P, NO CONTACTOR	IISNS
13	15 A, 120 V, 1P, CB	FLASHING BEACON	26	20 A, 120 V, IP, CB	TELEPHONE DEMARCATION CABINET
			27	15 A, 120 V, 1P, CB	IISNS CONTROL

NOTES:

1. Unless otherwise indicated on the plans, service equipment items shall be provided for each service equipment enclosure as shown.
2. Connect to remote test switch mounted on lighting standards, sign post or structure when required.
3. Items 1 and 6 shall be isolated from the service equipment enclosure.
4. Type V photoelectric control shall be used unless otherwise indicated on the plans.
5. Item 12, 20 and 27 shall be ganged operated CB.

STATE OF CALIFORNIA
DEPARTMENT OF TRANSPORTATION

ELECTRICAL SYSTEMS (SERVICE EQUIPMENT ENCLOSURE AND TYPICAL WIRING DIAGRAM, TYPE III-B SERIES)

NO SCALE

RSP ES-2E DATED OCTOBER 30, 2015 SUPERSEDES STANDARD PLAN ES-2E DATED MAY 20, 2011 - PAGE 432 OF THE STANDARD PLANS BOOK DATED 2010.

REVISED STANDARD PLAN RSP ES-2E

2010 REVISED STANDARD PLAN RSP ES-2E

8-20-15

Dist	COUNTY	ROUTE	POST MILES TOTAL PROJECT	SHEET No.	TOTAL SHEETS
08	Riv	79	R33.9	75	101

Theresa Gabriel
REGISTERED ELECTRICAL ENGINEER

October 30, 2015
PLANS APPROVAL DATE

REGISTERED PROFESSIONAL ENGINEER Theresa Aziz Gabriel No. E15129 Exp. 6-30-16 ELECTRICAL STATE OF CALIFORNIA

THE STATE OF CALIFORNIA OR ITS OFFICERS OR AGENTS SHALL NOT BE RESPONSIBLE FOR THE ACCURACY OR COMPLETENESS OF SCANNED COPIES OF THIS PLAN SHEET.

TO ACCOMPANY PLANS DATED 03-15-16

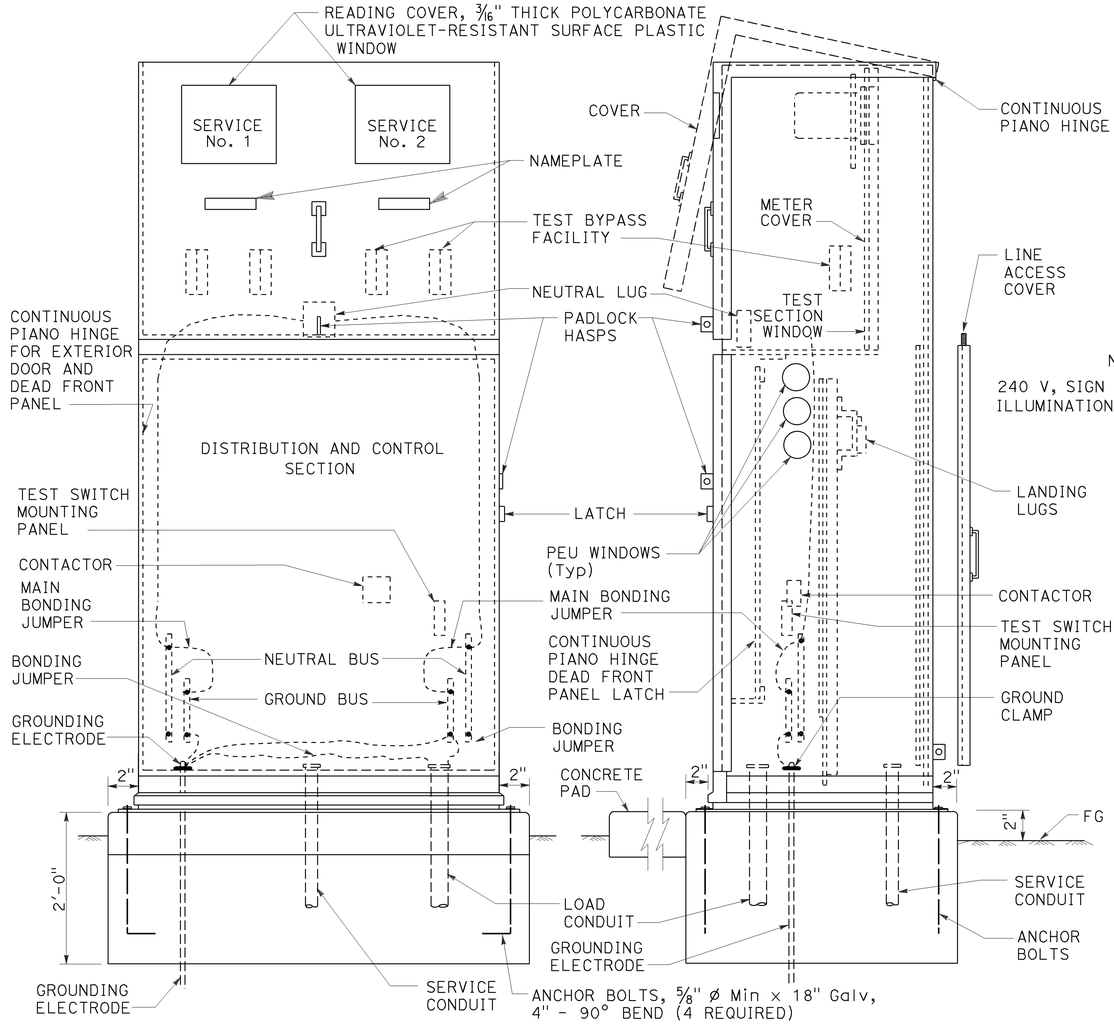

FRONT VIEW

SIDE VIEW

TYPE III-CF SERVICE EQUIPMENT ENCLOSURE (TYPICAL)

DETAIL A

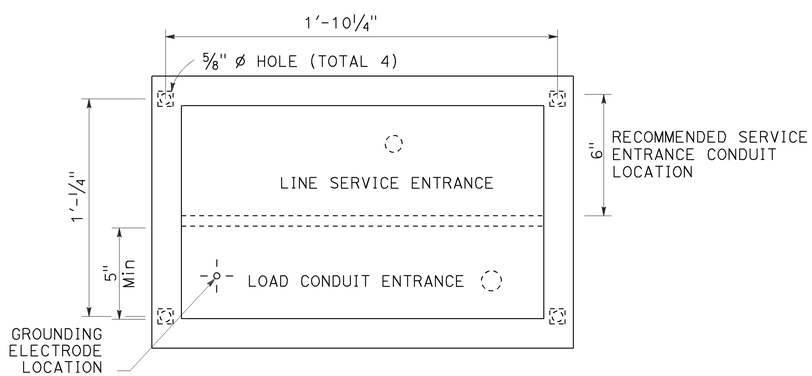

BASE FOR TYPE III-C SERVICE EQUIPMENT ENCLOSURE

DETAIL B

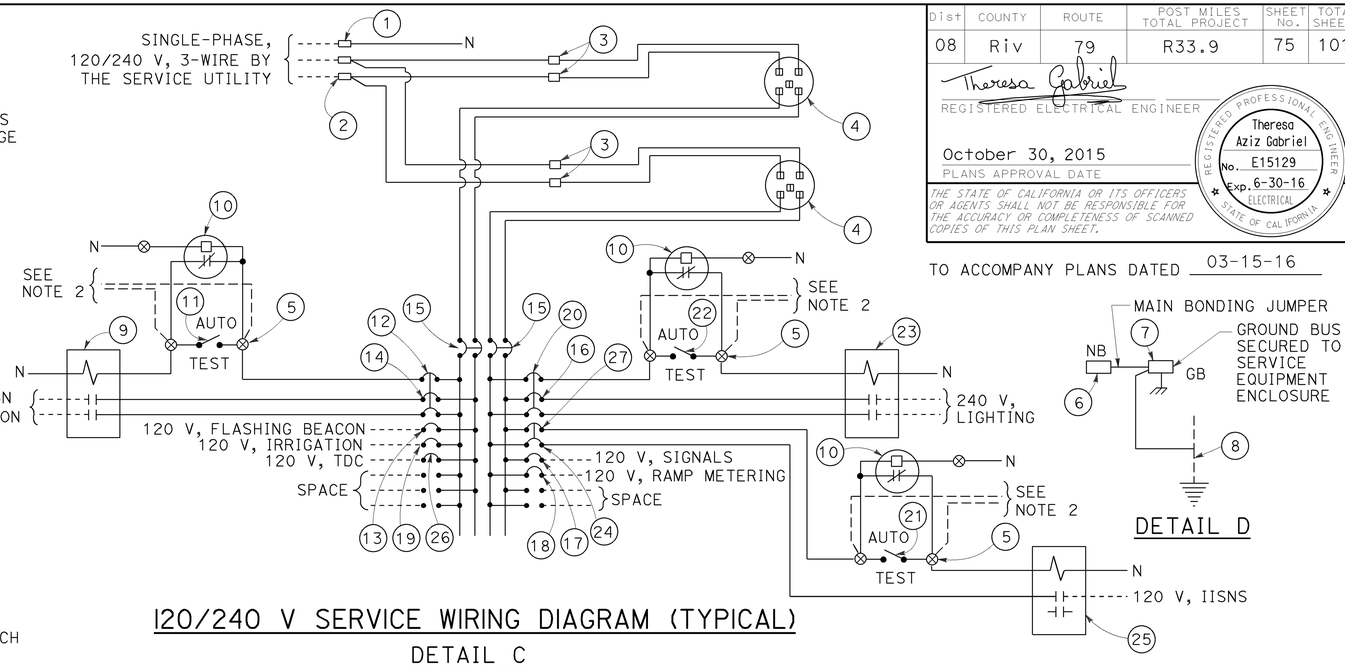

DETAIL D

120/240 V SERVICE WIRING DIAGRAM (TYPICAL)

DETAIL C

TYPE III-C SERVICE EQUIPMENT ENCLOSURE LEGEND (120/240 V)

ITEM	COMPONENT	NAMEPLATE DESCRIPTION	ITEM	COMPONENT	NAMEPLATE DESCRIPTION
1	NEUTRAL LUG		14	30 A, 240 V, 2P, CB	SIGN ILLUMINATION
2	LANDING LUG		15	100 A, 240 V, 2P, CB	MAIN BREAKER
3	TEST BYPASS FACILITY		16	30 A, 240 V, 2P, CB	LIGHTING
4	METER SOCKET AND SUPPORT		17	50 A, 120 V, 1P, CB	SIGNALS
5	TERMINAL BLOCKS		18	30 A, 120 V, 1P, CB	RAMP METERING
6	NEUTRAL BUS		19	20 A, 120 V, 1P, CB	IRRIGATION
7	GROUND BUS		20	15 A, 120 V, 1P, CB	LIGHTING CONTROL
8	GROUNDING ELECTRODE		21	15 A, 1P, TEST SWITCH	IISNS TEST SWITCH
9	30 A, 2P, NO CONTACTOR	SIGN ILLUMINATION	22	15 A, 1P, TEST SWITCH	LIGHTING TEST SWITCH
10	PHOTOELECTRIC UNIT (NOTE 4)	PEU	23	60 A, 2P, NO CONTACTOR	LIGHTING
11	15 A, 1P, TEST SWITCH	SIGN ILLUMINATION TEST SWITCH	24	15 A, 120 V, 1P, CB	IISNS
12	15 A, 120 V, 1P, CB	SIGN ILLUMINATION CONTROL	25	30 A, 2P, NO CONTACTOR	IISNS
13	15 A, 120 V, 1P, CB	FLASHING BEACON	26	20 A, 120 V, 1P, CB	TELEPHONE DEMARCATION CABINET
			27	15 A, 120 V, 1P, CB	IISNS CONTROL

NOTES:

1. Unless otherwise indicated on the plans, service equipment items shall be provided for each service equipment enclosure as shown.
2. Connect to remote test switch mounted on lighting standards, sign post or structure when required.
3. Items 1 and 6 shall be isolated from the service equipment enclosure.
4. Type V photoelectric control shall be used unless otherwise indicated on the plans.
5. Item 12, 20 and 27 shall be ganged operated CB.

STATE OF CALIFORNIA
DEPARTMENT OF TRANSPORTATION

ELECTRICAL SYSTEMS (SERVICE EQUIPMENT ENCLOSURE AND TYPICAL WIRING DIAGRAM TYPE III-C SERIES)

NO SCALE

RSP ES-2F DATED OCTOBER 30, 2015 SUPERSEDES STANDARD PLAN ES-2F DATED MAY 20, 2011 - PAGE 433 OF THE STANDARD PLANS BOOK DATED 2010.

REVISED STANDARD PLAN RSP ES-2F

2010 REVISED STANDARD PLAN RSP ES-2F

8-19-15

Dist	COUNTY	ROUTE	POST MILES TOTAL PROJECT	SHEET No.	TOTAL SHEETS
08	Riv	79	R33.9	76	101

Theresa Gabriel
REGISTERED ELECTRICAL ENGINEER

October 30, 2015
PLANS APPROVAL DATE

REGISTERED PROFESSIONAL ENGINEER
Theresa Aziz Gabriel
No. E15129
Exp. 6-30-16
ELECTRICAL
STATE OF CALIFORNIA

THE STATE OF CALIFORNIA OR ITS OFFICERS OR AGENTS SHALL NOT BE RESPONSIBLE FOR THE ACCURACY OR COMPLETENESS OF SCANNED COPIES OF THIS PLAN SHEET.

TO ACCOMPANY PLANS DATED 03-15-16

2010 REVISED STANDARD PLAN RSP ES-3C

NOTES:

1. Foundation shall be located to provide 2'-0" minimum clearance between face of curb and any portion of cabinet.
2. Controller units, plug-mounted equipment, shelf-mounted equipment and wall-mounted equipment shall be located to permit safe and easy removal or replacement without removing any other piece of equipment.
3. Cabinet fan may be installed at an alternate location near the top of the cabinet when approved by the Engineer.
4. Where telephone interconnect is required, a minimum of 5" clear vertical space shall be provided inside the cabinet for the equipment.
5. Telephone interconnect conductors shall be enclosed in a ¾"C or larger conduit through the foundation. Type 4 conduit shall be used to separate telephone and power conductors in cabinets.

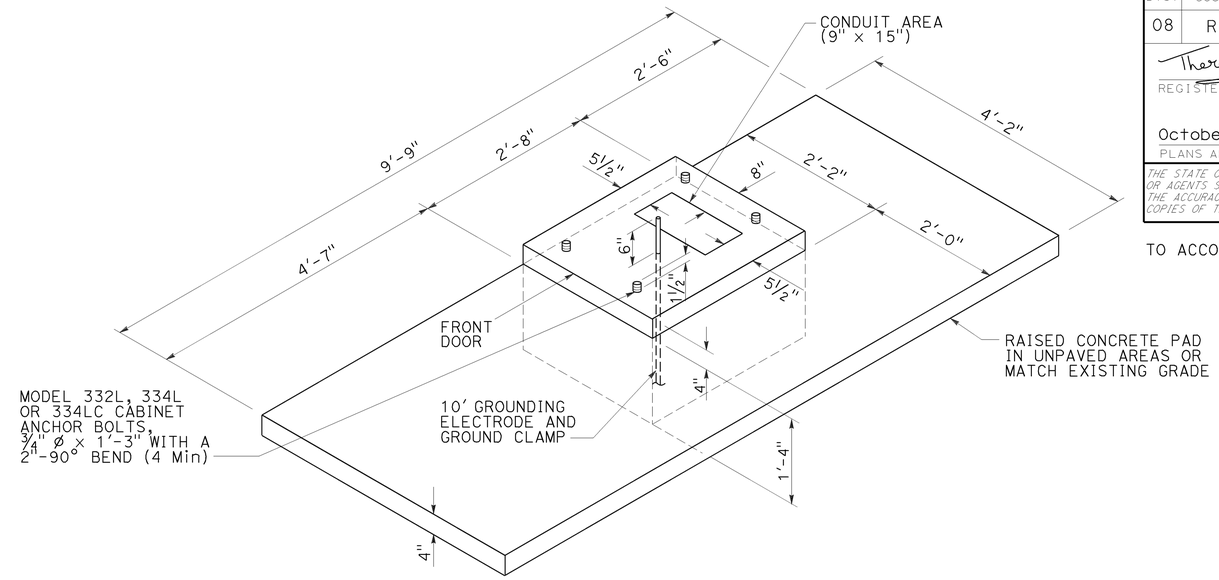

FOUNDATION AND PAD DETAIL

Model 332L, 334L and 334LC

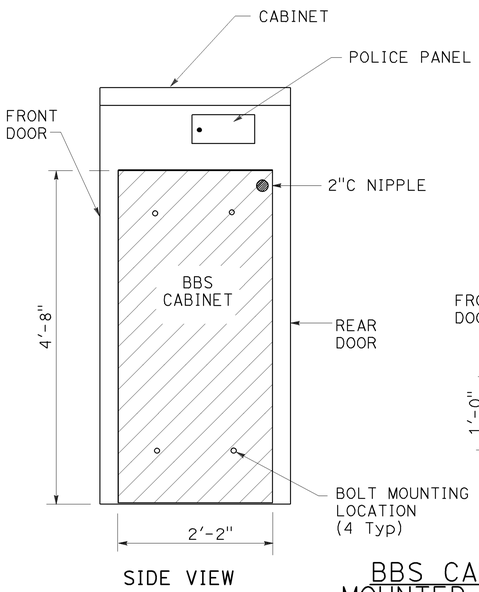

SIDE VIEW

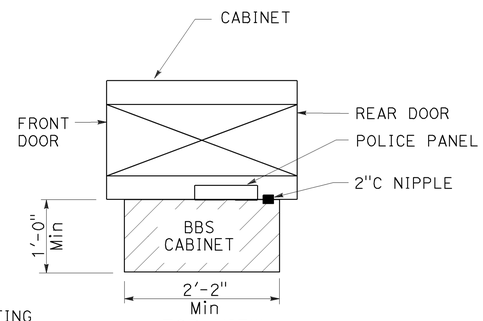

TOP VIEW

BBS CABINET MOUNTED TO THE MODEL 332L CABINET

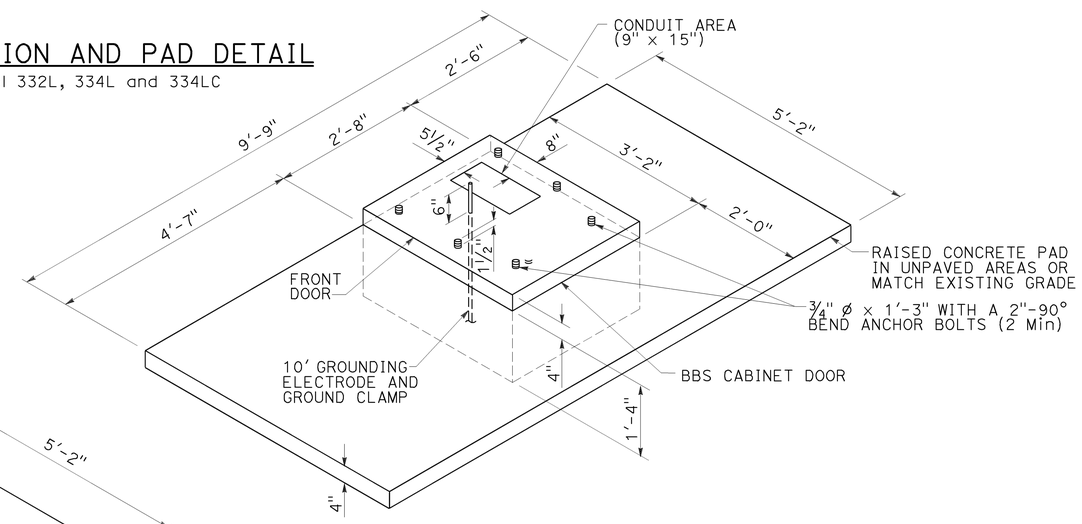

RIGHT SIDE INSTALLATION

DETAIL B

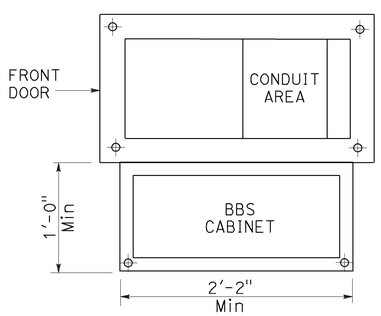

BASE PLAN FOR BBS MOUNTED TO THE MODEL 332L CABINET

(FOR DIMENSIONS AND DETAILS NOT SHOWN, SEE CABINET HOUSING DETAILS OF THE TRANSPORTATION ELECTRICAL EQUIPMENT SPECIFICATION (TEES))

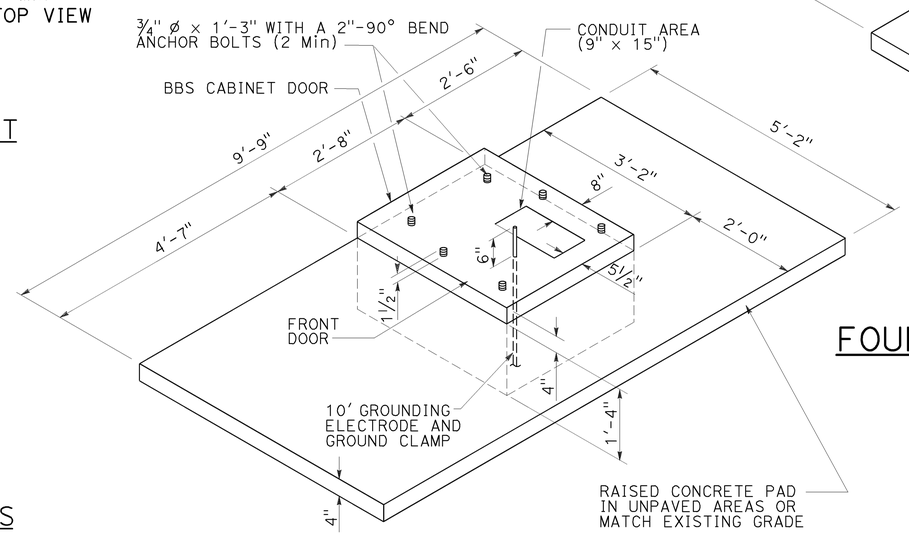

LEFT SIDE INSTALLATION

DETAIL A

MODIFIED MODEL 332L CABINET FOUNDATION DETAIL FOR BATTERY BACKUP SYSTEM

STATE OF CALIFORNIA
DEPARTMENT OF TRANSPORTATION

ELECTRICAL SYSTEMS (CONTROLLER CABINET FOUNDATION AND PAD DETAILS)

NO SCALE

RSP ES-3C DATED OCTOBER 30, 2015 SUPERSEDES STANDARD PLAN ES-3C DATED MAY 20, 2011 - PAGE 437 OF THE STANDARD PLANS BOOK DATED 2010.

REVISED STANDARD PLAN RSP ES-3C

9-2-15

Dist	COUNTY	ROUTE	POST MILES TOTAL PROJECT	SHEET No.	TOTAL SHEETS
08	Riv	79	R33.9	77	101

Theresa Gabriel
REGISTERED ELECTRICAL ENGINEER

October 30, 2015
PLANS APPROVAL DATE

REGISTERED PROFESSIONAL ENGINEER
Theresa Aziz Gabriel
No. E15129
Exp. 6-30-16
ELECTRICAL
STATE OF CALIFORNIA

THE STATE OF CALIFORNIA OR ITS OFFICERS OR AGENTS SHALL NOT BE RESPONSIBLE FOR THE ACCURACY OR COMPLETENESS OF SCANNED COPIES OF THIS PLAN SHEET.

TO ACCOMPANY PLANS DATED 03-15-16

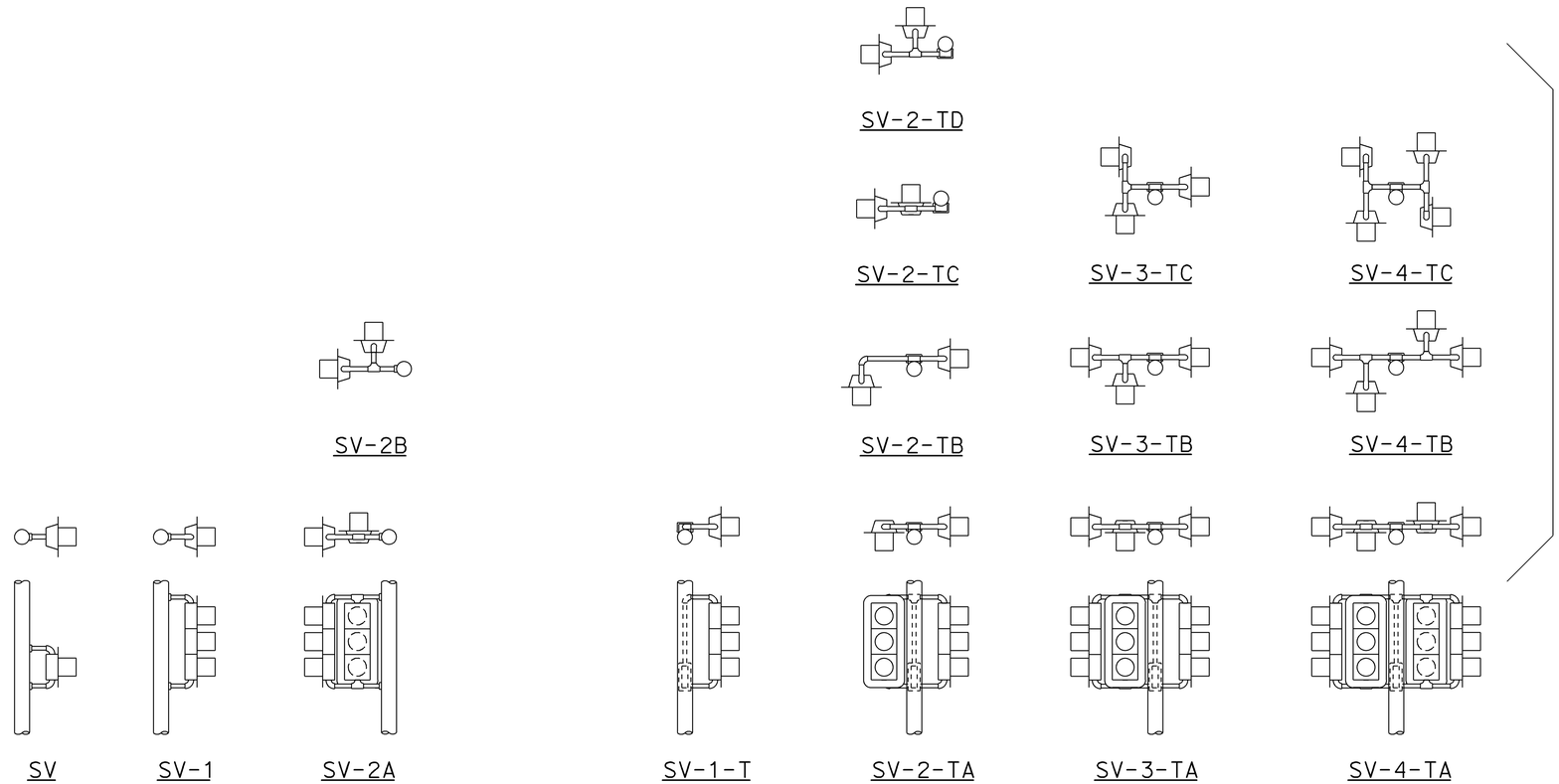

SIDE MOUNTINGS

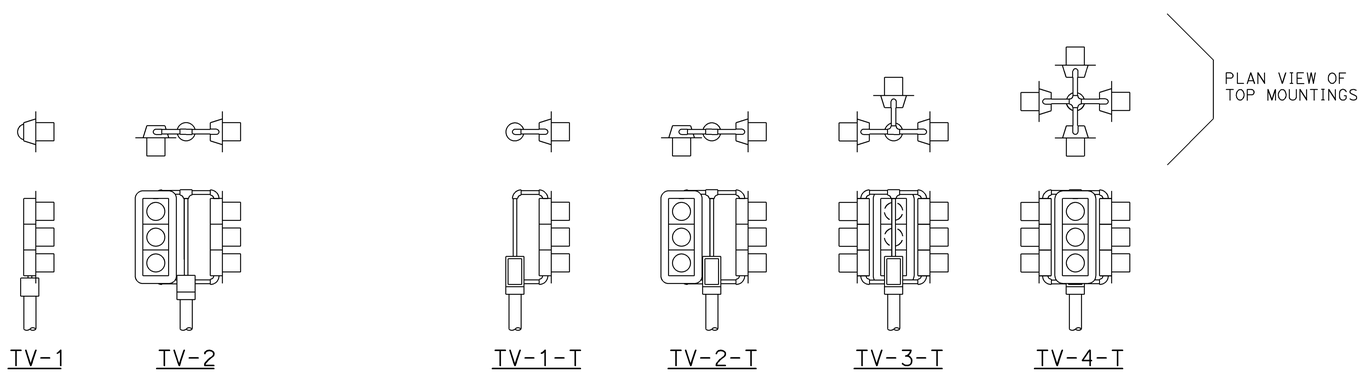

TOP MOUNTINGS

ABBREVIATIONS:

SV	SIDE MOUNTED SIGNAL HEADS
T	TERMINAL COMPARTMENT
TV	TOP MOUNTED SIGNAL HEADS
1, 2, 3, 4	NUMBER OF SIGNAL FACES (3 - SECTION, UNLESS OTHERWISE INDICATED)
A, B, C, D	CONFIGURATION OF SIGNALS

NOTES:

1. Mountings shall be oriented to provide maximum horizontal clearance to adjacent roadway.
2. Bracket arms shall be long enough to permit proper alignment of signals and backplate installation.
3. See Revised Standard Plans RSP ES-4D and RSP ES-4E for attachment fitting details.

STATE OF CALIFORNIA
DEPARTMENT OF TRANSPORTATION

ELECTRICAL SYSTEMS (SIGNAL HEADS AND MOUNTINGS)

NO SCALE

RSP ES-4A DATED OCTOBER 30, 2015 SUPERSEDES RSP ES-4A DATED JULY 19, 2013 AND STANDARD PLAN ES-4A DATED MAY 20, 2011 - PAGE 443 OF THE STANDARD PLANS BOOK DATED 2010.

REVISED STANDARD PLAN RSP ES-4A

2010 REVISED STANDARD PLAN RSP ES-4A

9-28-15

Dist	COUNTY	ROUTE	POST MILES TOTAL PROJECT	SHEET No.	TOTAL SHEETS
08	Riv	79	R33.9	78	101

Theresa Gabriel
REGISTERED ELECTRICAL ENGINEER

October 30, 2015
PLANS APPROVAL DATE

REGISTERED PROFESSIONAL ENGINEER
Theresa Aziz Gabriel
No. E15129
Exp. 6-30-16
ELECTRICAL
STATE OF CALIFORNIA

THE STATE OF CALIFORNIA OR ITS OFFICERS OR AGENTS SHALL NOT BE RESPONSIBLE FOR THE ACCURACY OR COMPLETENESS OF SCANNED COPIES OF THIS PLAN SHEET.

TO ACCOMPANY PLANS DATED 03-15-16

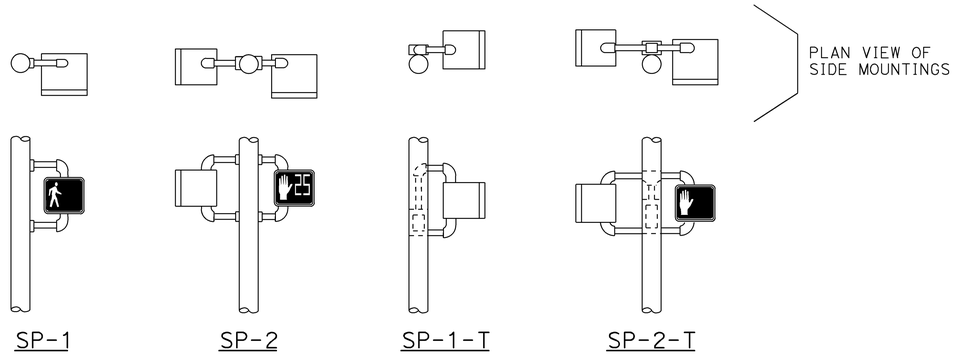

SIDE MOUNTINGS

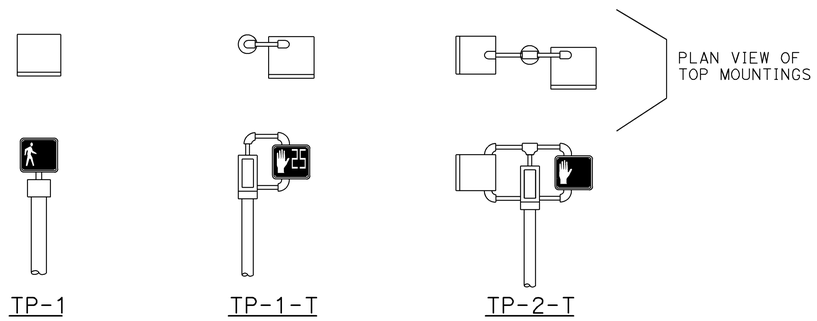

TOP MOUNTINGS

PEDESTRIAN SIGNAL HEAD MOUNTINGS

DETAIL A

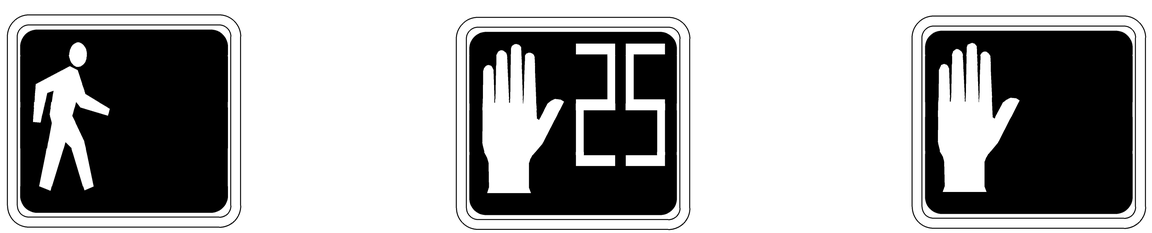

PERSON WALKING INTERVAL FLASHING UPRAISED HAND INTERVAL STEADY UPRAISED HAND INTERVAL

LED COUNTDOWN PEDESTRIAN SIGNAL FACE MODULE

DETAIL B

NOTES:

1. Mounting shall be oriented to provide maximum horizontal clearance to adjacent roadway.
2. Bracket arms shall be long enough to permit proper alignment of signals.
3. See Revised Standard Plan RSP ES-4D for attachment fittings details.

ABBREVIATIONS:

1, 2	NUMBER OF SIGNAL FACES
SP	SIDE MOUNTED PEDESTRIAN SIGNAL
T	TERMINAL COMPARTMENT
TP	TOP MOUNTED PEDESTRIAN SIGNAL

STATE OF CALIFORNIA
DEPARTMENT OF TRANSPORTATION

ELECTRICAL SYSTEMS (PEDESTRIAN SIGNAL HEADS)

NO SCALE

RSP ES-4B DATED OCTOBER 30, 2015 SUPERSEDES RSP ES-4B DATED JULY 19, 2013 AND STANDARD PLAN ES-4B DATED MAY 20, 2011 - PAGE 444 OF THE STANDARD PLANS BOOK DATED 2010.

REVISED STANDARD PLAN RSP ES-4B

2010 REVISED STANDARD PLAN RSP ES-4B

9-1-15

Dist	COUNTY	ROUTE	POST MILES TOTAL PROJECT	SHEET No.	TOTAL SHEETS
08	Riv	79	R33.9	79	101

Theresa Gabriel
REGISTERED ELECTRICAL ENGINEER

October 30, 2015
PLANS APPROVAL DATE

REGISTERED PROFESSIONAL ENGINEER Theresa Aziz Gabriel No. E15129 Exp. 6-30-16 ELECTRICAL STATE OF CALIFORNIA

THE STATE OF CALIFORNIA OR ITS OFFICERS OR AGENTS SHALL NOT BE RESPONSIBLE FOR THE ACCURACY OR COMPLETENESS OF SCANNED COPIES OF THIS PLAN SHEET.

TO ACCOMPANY PLANS DATED 03-15-16

VISORS

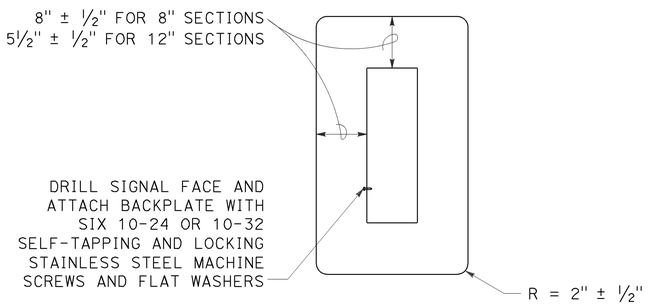

8" AND 12" SECTIONS

BACKPLATE

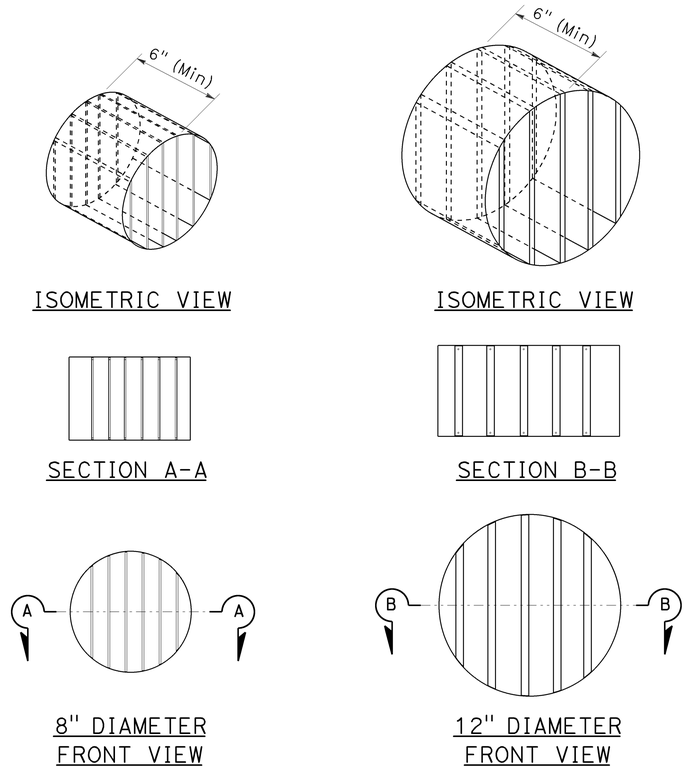

DIRECTIONAL LOUVER

Directional louvers shall be oriented and secured in place with one plated brass machine screw and nut.

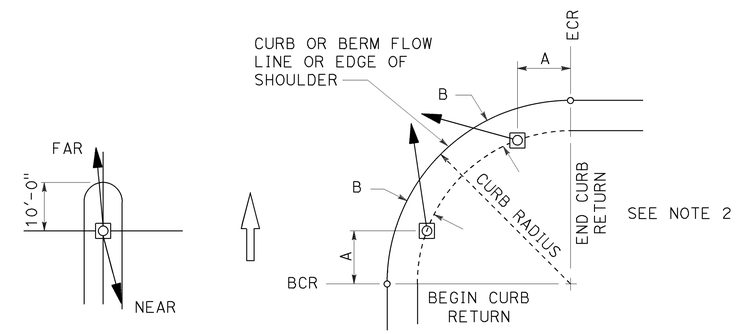

NOTES:

1. Typical signal pole placement unless dimensioned on plans.
2. For A and B dimensions, see Pole Schedule.

SIGNAL STANDARD PLACEMENT DIMENSIONS AND EQUIPMENT LOCATIONS

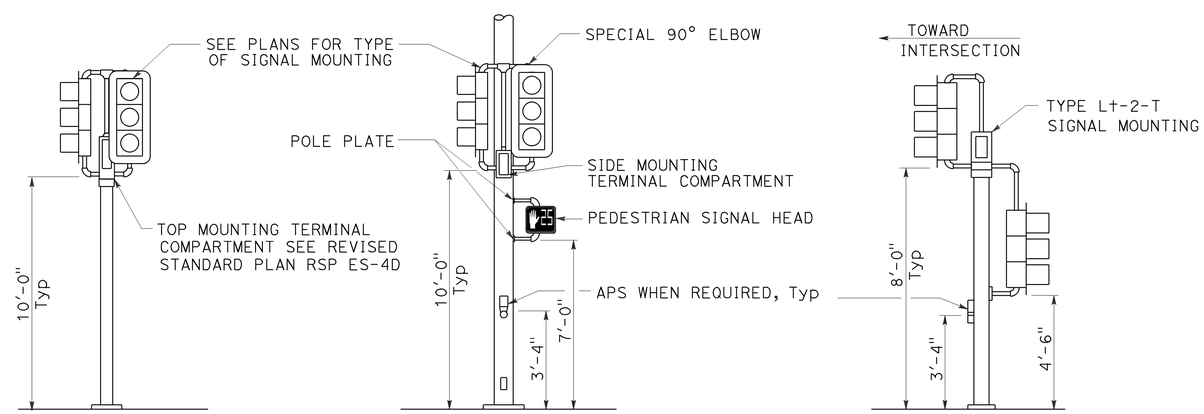

TOP MOUNTED SIGNALS (TV)
Type 1-A, 1-B, 1-C and 1-D standard as indicated on the plans

SIDE MOUNTED SIGNALS (SV AND SP)
Normally used on standards with luminaire or signal mast arm

LEFT TURN LANE SIGNAL
Type 1-A, 1-B, 1-C and 1-D standard as indicated on plans

TYPICAL SIGNAL HEAD INSTALLATIONS

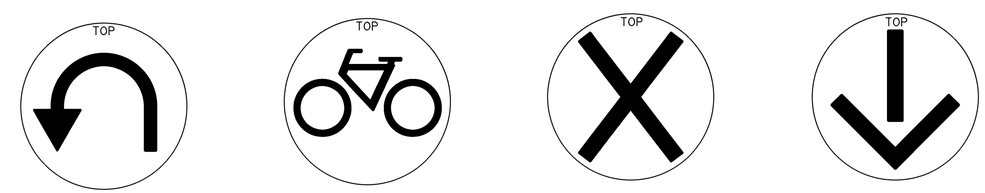

U-TURN | BICYCLE | LANE CONTROL | LANE CONTROL

SIGNAL FACES

STATE OF CALIFORNIA
DEPARTMENT OF TRANSPORTATION

ELECTRICAL SYSTEMS (SIGNAL HEADS AND MOUNTINGS)

NO SCALE

RSP ES-4C DATED OCTOBER 30, 2015 SUPERSEDES RSP ES-4C DATED JULY 19, 2013 AND STANDARD PLAN ES-4C DATED MAY 20, 2011 - PAGE 445 OF THE STANDARD PLANS BOOK DATED 2010.

REVISED STANDARD PLAN RSP ES-4C

2010 REVISED STANDARD PLAN RSP ES-4C

9-28-15

Dist	COUNTY	ROUTE	POST MILES TOTAL PROJECT	SHEET No.	TOTAL SHEETS
08	Riv	79	R33.9	80	101

Theresa Gabriel
REGISTERED ELECTRICAL ENGINEER

October 30, 2015
PLANS APPROVAL DATE

REGISTERED PROFESSIONAL ENGINEER Theresa Aziz Gabriel No. E15129 Exp. 6-30-16 ELECTRICAL STATE OF CALIFORNIA

THE STATE OF CALIFORNIA OR ITS OFFICERS OR AGENTS SHALL NOT BE RESPONSIBLE FOR THE ACCURACY OR COMPLETENESS OF SCANNED COPIES OF THIS PLAN SHEET.

TO ACCOMPANY PLANS DATED 03-15-16

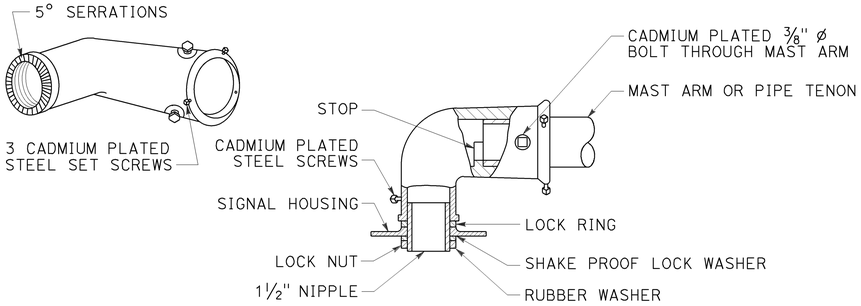

TYPE MAT
MAST ARM MOUNTING
For 2 NPS pipe, see Note 1.

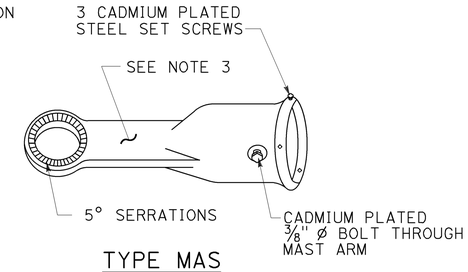

TYPE MAS
MAST ARM MOUNTING
For 2 NPS pipe, see Note 1.

SIGNAL SLIP FITTERS

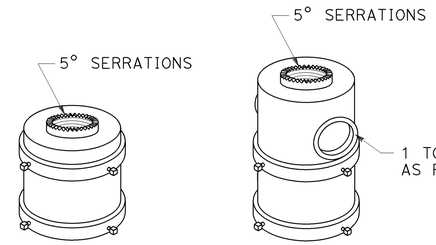

FOR ONE MOUNTING FOR MULTIPLE MOUNTINGS

TOP MOUNTINGS
For 4 NPS pipe, see Note 2.

NOTES:

1. After mast arm signal has been plumbed and secured, drill 7/16" hole through mast arm tenon in line with slip fitter hole. Place a cadmium plated ⅜" ø galvanized bolt with washer under bolt head through hole and secure with washer, nut, and locknut. Seal openings between mast arm mountings and mast arm with mastic.
2. (A) Threaded top mounted slip fitter openings shall be 1½ NPS.
   (B) Serrations in fittings shall match those on bottom of signal heads or in lock ring.
   (C) Top opening shall be offset when backplate is used.
3. Wireway shall have a cross section area of 0.95 square inch minimum. Minimum width of ½".

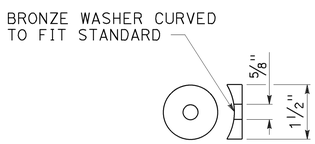

DETAIL C

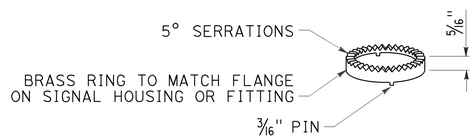

LOCK RING
Use where locking ring is not integral With signal housing or fitting.

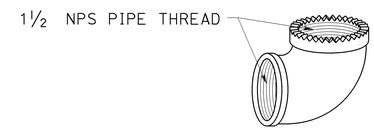

SPECIAL 90° ELBOW
One for each signal head, except those With special slip fitter mounting

MISCELLANEOUS MOUNTING HARDWARE

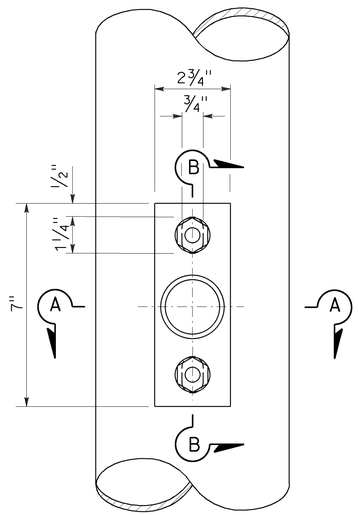

TOP VIEW

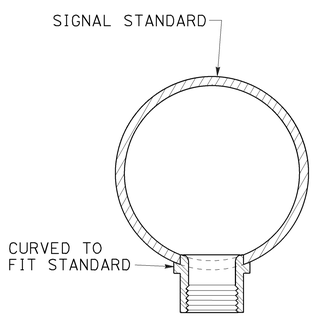

SECTION A-A

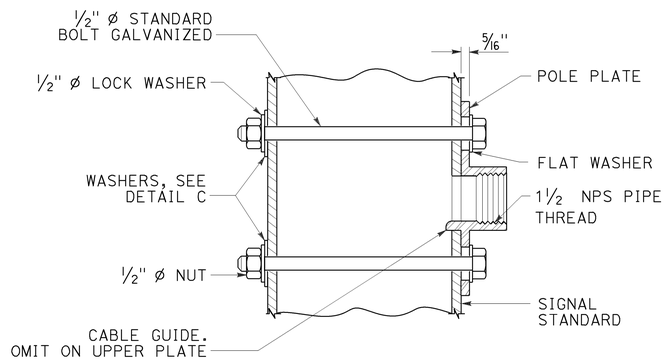

SECTION B-B

POLE PLATE FOR SIDE MOUNTED SIGNAL HEAD
WITHOUT TERMINAL COMPARTMENT

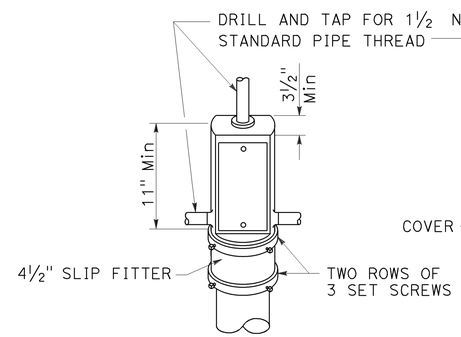

TOP MOUNTING

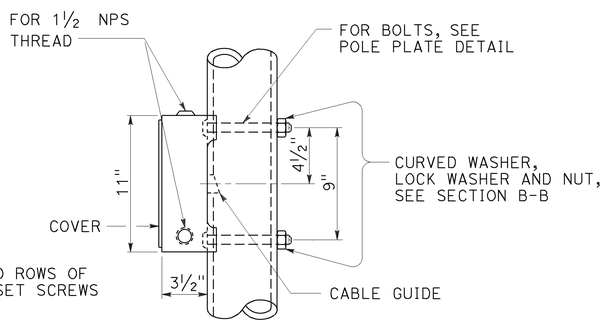

SIDE MOUNTING

TERMINAL COMPARTMENT

STATE OF CALIFORNIA
DEPARTMENT OF TRANSPORTATION

ELECTRICAL SYSTEMS (SIGNAL HEAD MOUNTING)

NO SCALE

RSP ES-4D DATED OCTOBER 30, 2015 SUPERSEDES STANDARD PLAN ES-4D DATED MAY 20, 2011 - PAGE 446 OF THE STANDARD PLANS BOOK DATED 2010.

REVISED STANDARD PLAN RSP ES-4D

2010 REVISED STANDARD PLAN RSP ES-4D

8-20-15

Dist	COUNTY	ROUTE	POST MILES TOTAL PROJECT	SHEET No.	TOTAL SHEETS
08	Riv	79	R33.9	81	101

Theresa Gabriel
REGISTERED ELECTRICAL ENGINEER

October 30, 2015
PLANS APPROVAL DATE

REGISTERED PROFESSIONAL ENGINEER
Theresa Aziz Gabriel
No. E15129
Exp. 6-30-16
ELECTRICAL
STATE OF CALIFORNIA

THE STATE OF CALIFORNIA OR ITS OFFICERS OR AGENTS SHALL NOT BE RESPONSIBLE FOR THE ACCURACY OR COMPLETENESS OF SCANNED COPIES OF THIS PLAN SHEET.

TO ACCOMPANY PLANS DATED 03-15-16

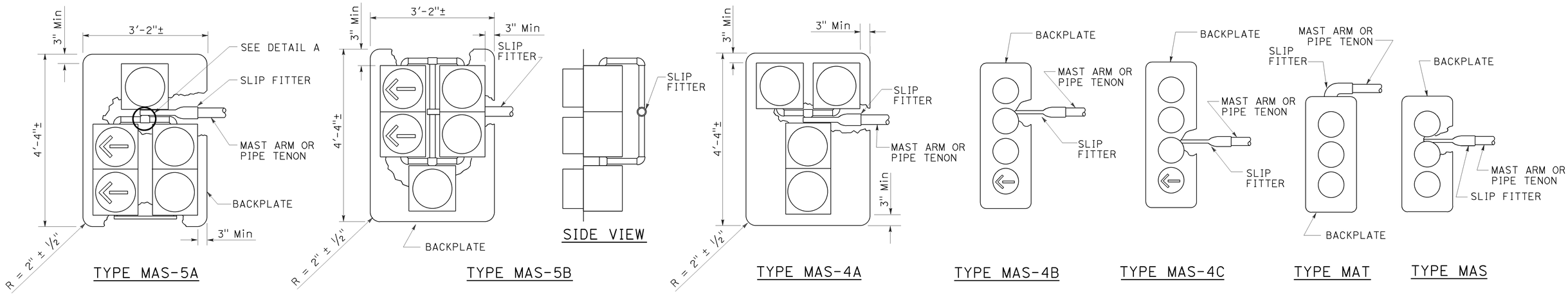

MAST ARM MOUNTINGS

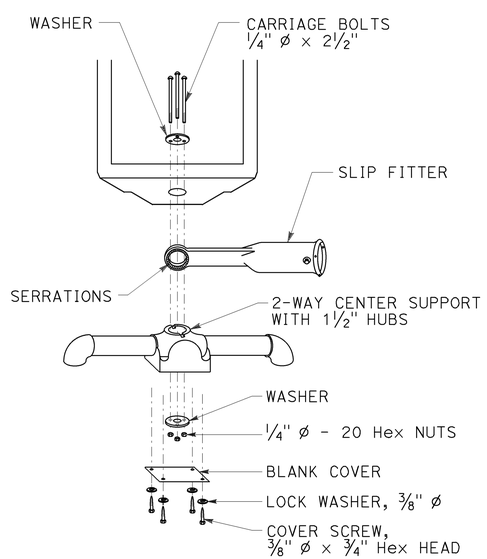

DETAIL A

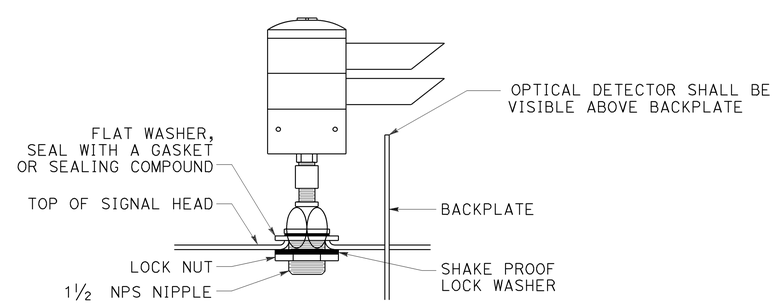

OPTICAL DETECTOR MOUNTING FOR EMERGENCY VEHICLE DETECTION

DETAIL B

STATE OF CALIFORNIA
DEPARTMENT OF TRANSPORTATION

ELECTRICAL SYSTEMS (SIGNAL HEADS AND OPTICAL DETECTOR MOUNTING)

NO SCALE

RSP ES-4E DATED OCTOBER 30, 2015 SUPERSEDES RSP ES-4E DATED JULY 19, 2013 AND STANDARD PLAN ES-4E DATED MAY 20, 2011 - PAGE 447 OF THE STANDARD PLANS BOOK DATED 2010.

REVISED STANDARD PLAN RSP ES-4E

2010 REVISED STANDARD PLAN RSP ES-4E

8-19-15

Dist	COUNTY	ROUTE	POST MILES TOTAL PROJECT	SHEET No.	TOTAL SHEETS
08	Riv	79	R33.9	82	101

Theresa Gabriel
REGISTERED ELECTRICAL ENGINEER

October 30, 2015
PLANS APPROVAL DATE

REGISTERED PROFESSIONAL ENGINEER Theresa Aziz Gabriel No. E15129 Exp. 6-30-16 ELECTRICAL STATE OF CALIFORNIA

THE STATE OF CALIFORNIA OR ITS OFFICERS OR AGENTS SHALL NOT BE RESPONSIBLE FOR THE ACCURACY OR COMPLETENESS OF SCANNED COPIES OF THIS PLAN SHEET.

TO ACCOMPANY PLANS DATED 03-15-16

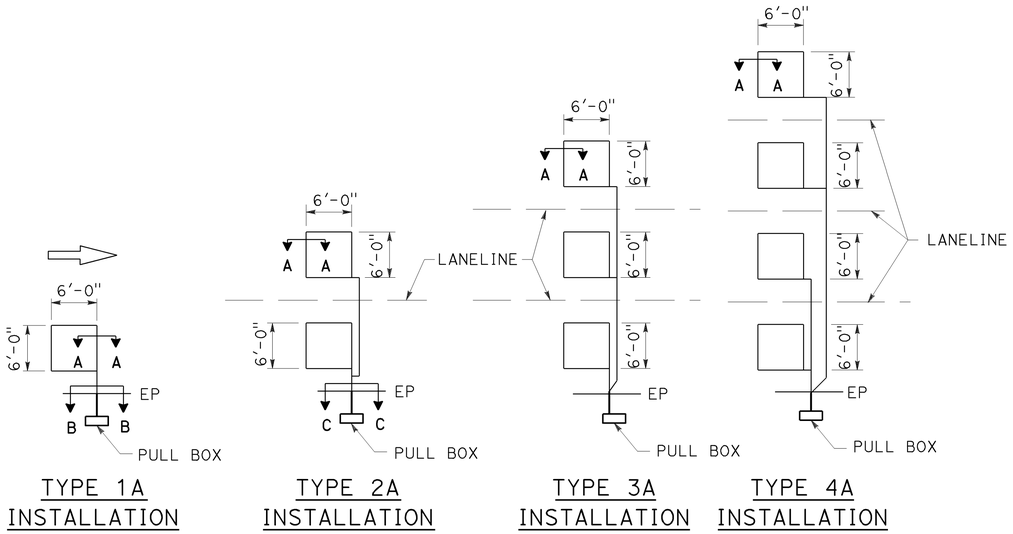

TYPE 1A INSTALLATION | TYPE 2A INSTALLATION | TYPE 3A INSTALLATION | TYPE 4A INSTALLATION

SAWCUT DETAILS

Type A loop detector configurations illustrated

1. 1A thru 4A = 1 Type A loop configuration in each lane.
2. 1B thru 4B = 1 Type B loop configuration in each lane.
3. 1C = 1 Type C loop configuration entering lanes as required.
4. 1D thru 4D = 1 Type D loop configuration in each lane.
5. 1E thru 4E = 1 Type E loop configuration in each lane.
6. 1Q thru 4Q = 1 Type Q loop configuration in each lane.
   Use Type A, B, C, D, E or Q loop detector configurations only when specified or shown on plans.

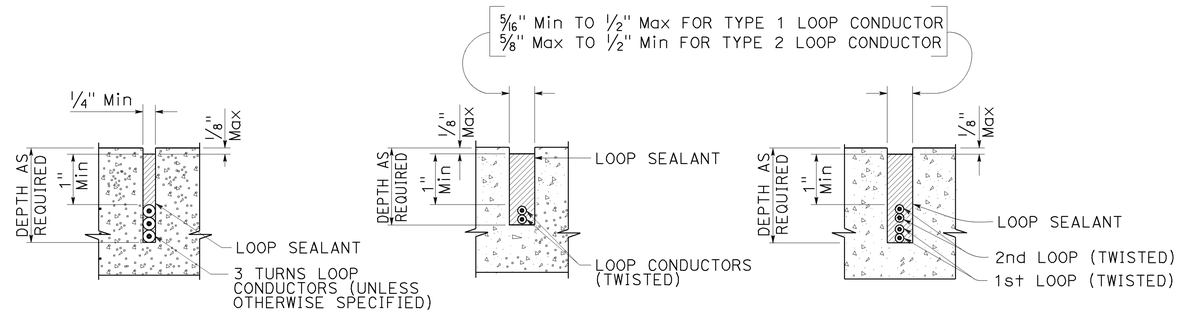

SECTION A-A | SECTION B-B | SECTION C-C

SLOT DETAILS - TYPE 1 AND TYPE 2 LOOP CONDUCTOR

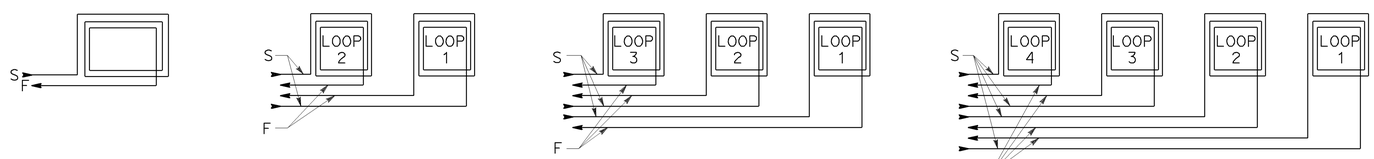

WINDING DETAILS

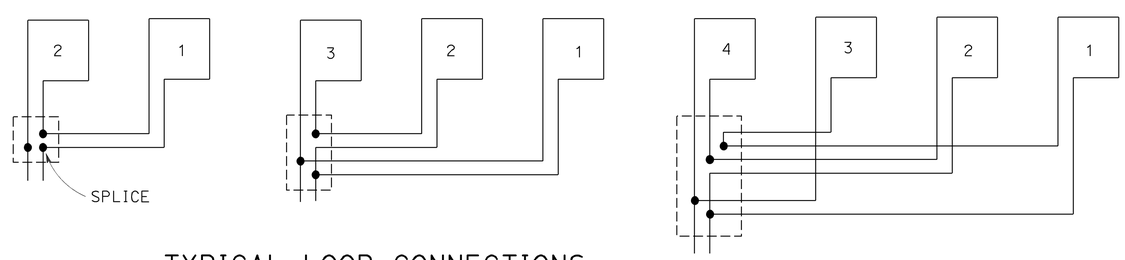

TYPICAL LOOP CONNECTIONS

Dashed lines represent the pull box

ABBREVIATIONS:

S - START
F - FINISH

STATE OF CALIFORNIA
DEPARTMENT OF TRANSPORTATION

ELECTRICAL SYSTEMS (LOOP DETECTORS)

NO SCALE

RSP ES-5A DATED OCTOBER 30, 2015 SUPERSEDES STANDARD PLAN ES-5A DATED MAY 20, 2011 - PAGE 448 OF THE STANDARD PLANS BOOK DATED 2010.

REVISED STANDARD PLAN RSP ES-5A

2010 REVISED STANDARD PLAN RSP ES-5A

8-24-15

Dist	COUNTY	ROUTE	POST MILES TOTAL PROJECT	SHEET No.	TOTAL SHEETS
08	Riv	79	R33.9	83	101

Theresa Gabriel
REGISTERED ELECTRICAL ENGINEER

October 30, 2015
PLANS APPROVAL DATE

REGISTERED PROFESSIONAL ENGINEER
Theresa Aziz Gabriel
No. E15129
Exp. 6-30-16
ELECTRICAL
STATE OF CALIFORNIA

THE STATE OF CALIFORNIA OR ITS OFFICERS OR AGENTS SHALL NOT BE RESPONSIBLE FOR THE ACCURACY OR COMPLETENESS OF SCANNED COPIES OF THIS PLAN SHEET.

TO ACCOMPANY PLANS DATED 03-15-16

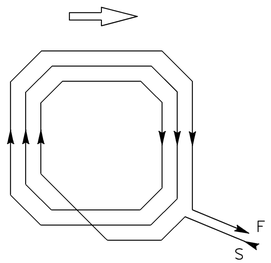

WINDING DETAIL

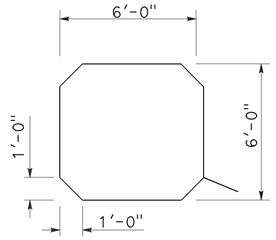

SAWCUT DETAIL

TYPE A LOOP DETECTOR CONFIGURATION

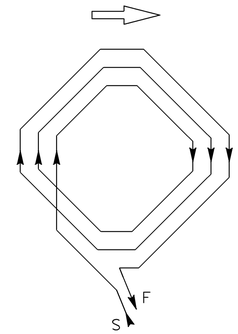

WINDING DETAIL

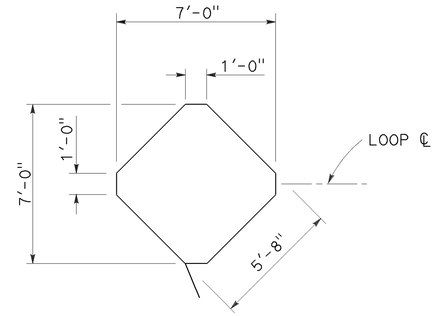

SAWCUT DETAIL

TYPE B LOOP DETECTOR CONFIGURATION

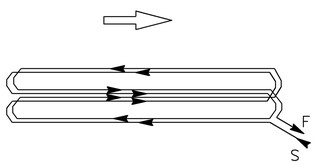

WINDING DETAIL

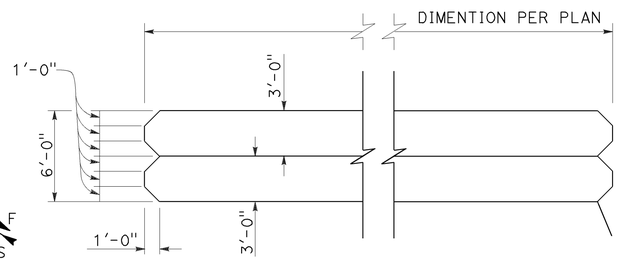

SAWCUT DETAIL

TYPE C LOOP DETECTOR CONFIGURATION

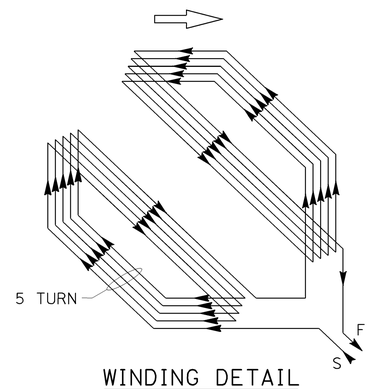

WINDING DETAIL

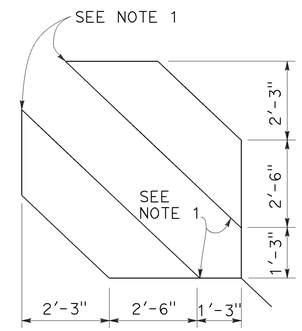

SAWCUT DETAIL

TYPE D LOOP DETECTOR CONFIGURATION

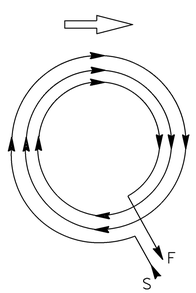

WINDING DETAIL

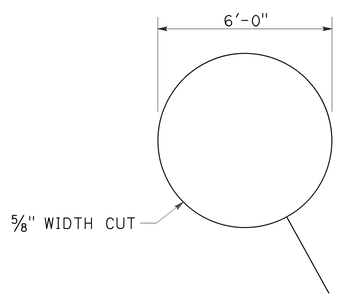

SAWCUT DETAIL

TYPE E LOOP DETECTOR CONFIGURATION

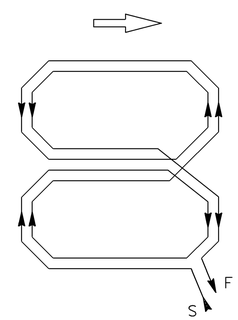

WINDING DETAIL

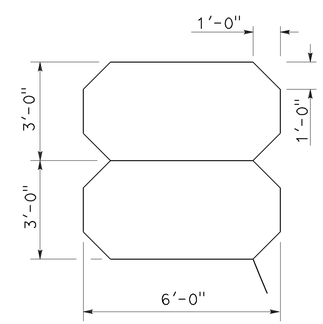

SAWCUT DETAIL

TYPE Q LOOP DETECTOR CONFIGURATION

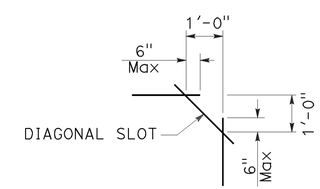

PLAN VIEW OF DIAGONAL SLOT AT CORNERS

NOTES:

1. Round corners of acute angle sawcuts to prevent damage to conductors.
2. Typical distance separating loops from edge to edge is 10' for Type A, B, D and E installation in single lane.
3. Use Type D loops for limit line detector installations in left turn and bicycle lanes.

STATE OF CALIFORNIA
DEPARTMENT OF TRANSPORTATION

ELECTRICAL SYSTEMS (DETECTORS)

NO SCALE

RSP ES-5B DATED OCTOBER 30, 2015 SUPERSEDES RSP ES-5B DATED JULY 19, 2013 AND STANDARD PLAN ES-5B DATED MAY 20, 2011 - PAGE 449 OF THE STANDARD PLANS BOOK DATED 2010.

REVISED STANDARD PLAN RSP ES-5B

2010 REVISED STANDARD PLAN RSP ES-5B

9-25-15

Dist	COUNTY	ROUTE	POST MILES TOTAL PROJECT	SHEET No.	TOTAL SHEETS
08	Riv	79	R33.9	84	101

Theresa Gabriel
REGISTERED ELECTRICAL ENGINEER

October 30, 2015
PLANS APPROVAL DATE

REGISTERED PROFESSIONAL ENGINEER
Theresa Aziz Gabriel
No. E15129
Exp. 6-30-16
ELECTRICAL
STATE OF CALIFORNIA

THE STATE OF CALIFORNIA OR ITS OFFICERS OR AGENTS SHALL NOT BE RESPONSIBLE FOR THE ACCURACY OR COMPLETENESS OF SCANNED COPIES OF THIS PLAN SHEET.

TO ACCOMPANY PLANS DATED 03-15-16

2010 REVISED STANDARD PLAN RSP ES-5C

NOTES:

1. Back casting shape to fit curvature of pole.
2. Provide cover fitting for top of post, when PBA is mounted on push button assembly post.
3. Install push button on crosswalk side of standard.
4. Use R10 series regulatory signs and plaques for pedestrian and bicycle facilities.

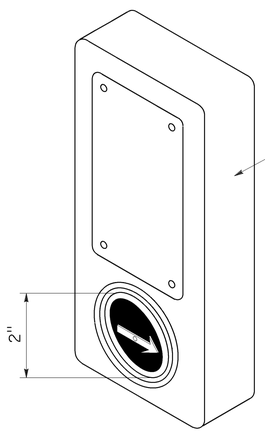

ACCESSIBLE PEDESTRIAN SIGNAL

DETAIL A

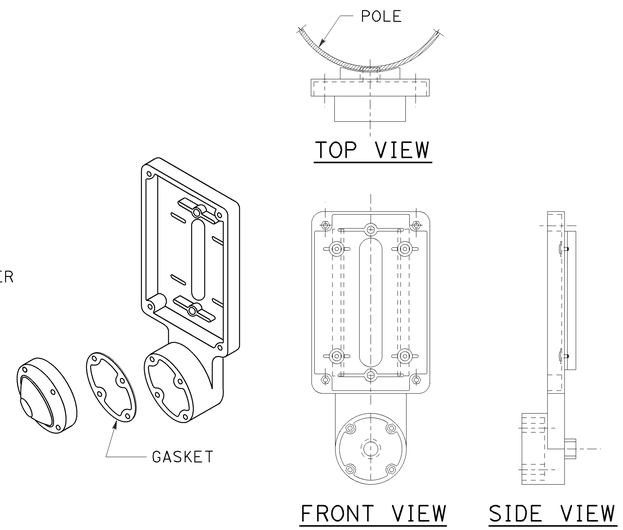

TYPE B PUSH BUTTON ASSEMBLY

DETAIL B

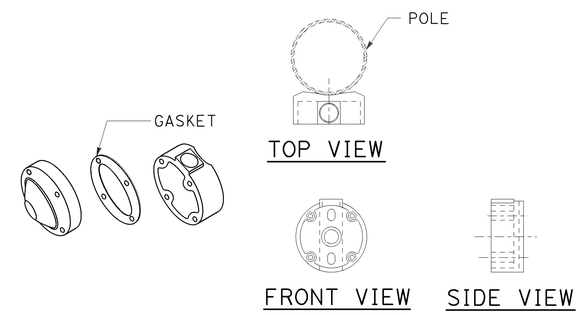

TYPE C PUSH BUTTON ASSEMBLY

DETAIL C

STATE OF CALIFORNIA
DEPARTMENT OF TRANSPORTATION

ELECTRICAL SYSTEMS (ACCESSIBLE PEDESTRIAN SIGNAL AND PUSH BUTTON ASSEMBLIES)

NO SCALE

RSP ES-5C DATED OCTOBER 30, 2015 SUPERSEDES RSP ES-5C DATED JULY 19, 2013 AND STANDARD PLAN ES-5C DATED MAY 20, 2011 - PAGE 450 OF THE STANDARD PLANS BOOK DATED 2010.

REVISED STANDARD PLAN RSP ES-5C

Dist	COUNTY	ROUTE	POST MILES TOTAL PROJECT	SHEET No.	TOTAL SHEETS
08	Riv	79	R33.9	85	101

Theresa Gabriel
REGISTERED ELECTRICAL ENGINEER

October 30, 2015
PLANS APPROVAL DATE

REGISTERED PROFESSIONAL ENGINEER Theresa Aziz Gabriel No. E15129 Exp. 6-30-16 ELECTRICAL STATE OF CALIFORNIA

THE STATE OF CALIFORNIA OR ITS OFFICERS OR AGENTS SHALL NOT BE RESPONSIBLE FOR THE ACCURACY OR COMPLETENESS OF SCANNED COPIES OF THIS PLAN SHEET.

TO ACCOMPANY PLANS DATED 03-15-16

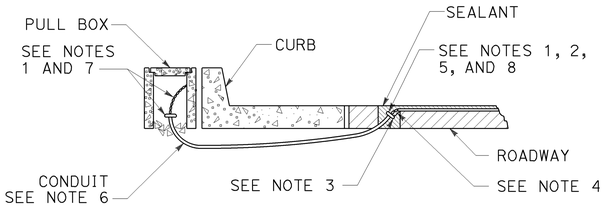

TYPE A
CURB TERMINATION DETAIL

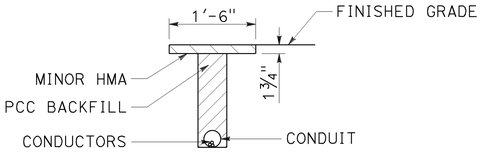

"T" TRENCH DETAIL T

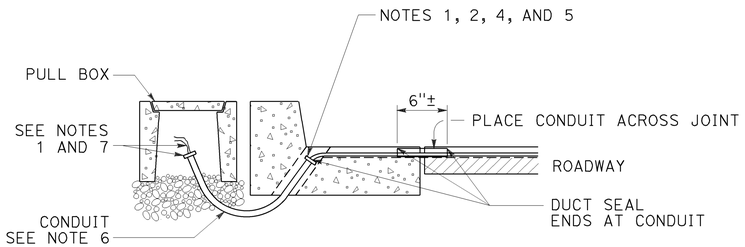

CROSS SECTION

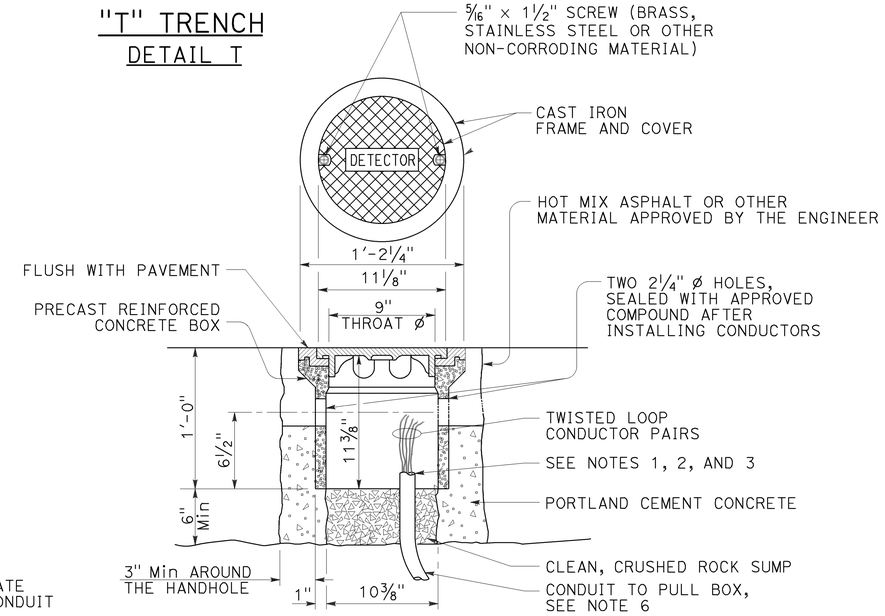

DETECTOR HANDHOLE DETAIL

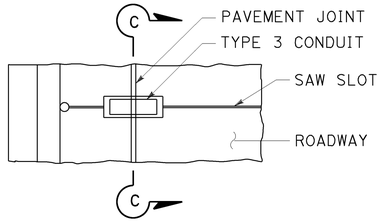

PLAN VIEW

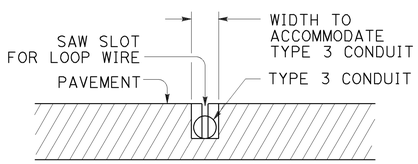

SECTION C-C

TYPE B
CURB TERMINATION DETAIL

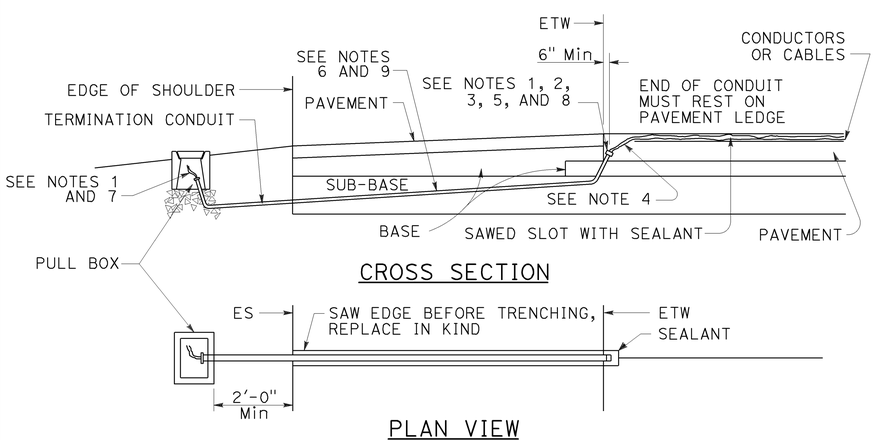

CROSS SECTION

PLAN VIEW

SHOULDER TERMINATION DETAILS

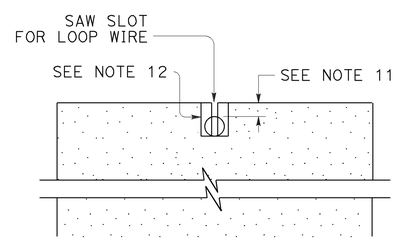

SECTION A-A

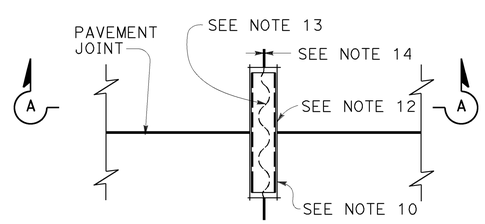

PLAN VIEW

TYPICAL LOOP LEAD-IN DETAIL AT PAVEMENT JOINT

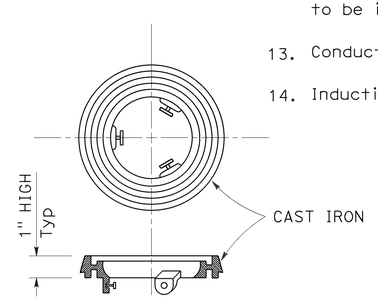

LOCKING GRADE RING

NOTES:

1. Bushing shall be used at end of conduit.
2. Tape detector conductors or cables 3" each side of bushings.
3. Install duct seal compound to each end of termination conduit before installing sealant.
4. Round all sharp edges where detector conductors or cables have to pass.
5. End of conduit shall be 3⅛" below roadway surface.
6.

Conduit size	Loop conductors
1"C minimum	1 to 2 pairs
1½"C minimum	3 to 4 pairs
2"C minimum	5 or more pairs

7. Splice detector conductors or cables to detector lead-in-cable.
8. Location of detector handhole when shown on plans.
9. When the shoulder and traveled way are paved with the same material and there is no joint between them, the conduit shall extend only 2'-0" into the shoulder pavement.
10. ¾"C, Type 3 conduit 6" long minimum, plug both ends with duct compound to keep out sealant.
11. ½" Minimum between top of conduit and pavement surface.
12. Sawcut shall not exceed 1" in width and ⅛" longer than conduit to be installed.
13. Conductors with ½" minimum slack inside conduit.
14. Inductive loop detector saw slot.

STATE OF CALIFORNIA
DEPARTMENT OF TRANSPORTATION

ELECTRICAL SYSTEMS (CURB AND SHOULDER TERMINATION, TRENCH, AND HANDHOLE DETAILS)

NO SCALE

RSP ES-5D DATED OCTOBER 30, 2015 SUPERSEDES RSP ES-5D DATED JULY 19, 2013 AND STANDARD PLAN ES-5D DATED MAY 20, 2011 - PAGE 451 OF THE STANDARD PLANS BOOK DATED 2010.

REVISED STANDARD PLAN RSP ES-5D

2010 REVISED STANDARD PLAN RSP ES-5D

8-19-15

Dist	COUNTY	ROUTE	POST MILES TOTAL PROJECT	SHEET No.	TOTAL SHEETS
08	Riv	79	R33.9	86	101

REGISTERED CIVIL ENGINEER

October 30, 2015
PLANS APPROVAL DATE

REGISTERED PROFESSIONAL ENGINEER
Stanley P. Johnson
No. C57793
Exp. 3-31-16
CIVIL
STATE OF CALIFORNIA

THE STATE OF CALIFORNIA OR ITS OFFICERS OR AGENTS SHALL NOT BE RESPONSIBLE FOR THE ACCURACY OR COMPLETENESS OF SCANNED COPIES OF THIS PLAN SHEET.

TO ACCOMPANY PLANS DATED 03-15-16

2010 REVISED STANDARD PLAN RSP ES-7A

NOTES:

1. For additional notes, details and data for Type 15TS and Type 21TS Standards, see Revised Standard Plan RSP ES-6A.
2. Handhole shall be located on the downstream side of traffic.

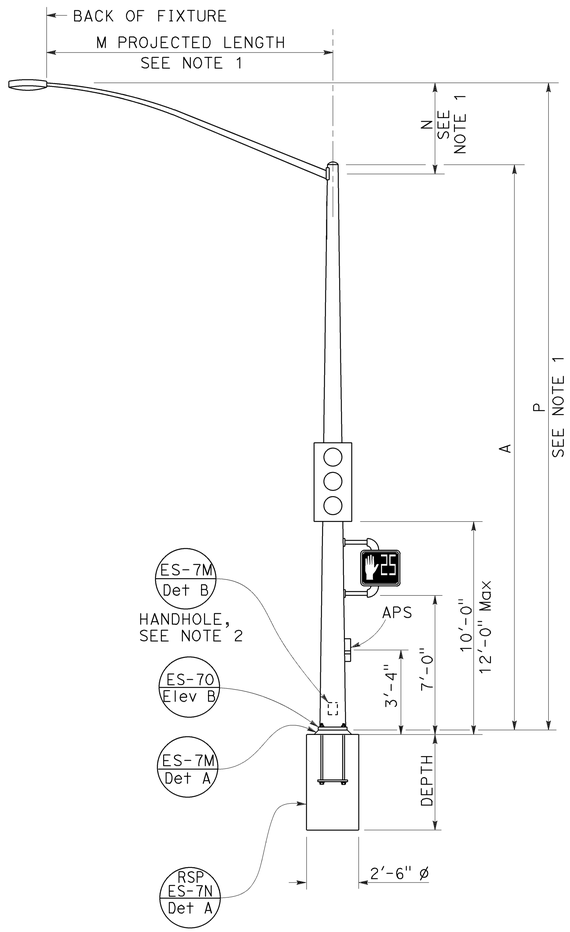

TYPE 15TS AND 21TS STANDARD

ELEVATION A

(See Note 1)

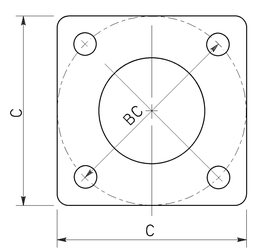

BASE PLATE

TYPE 15TS AND 21TS

DETAIL A

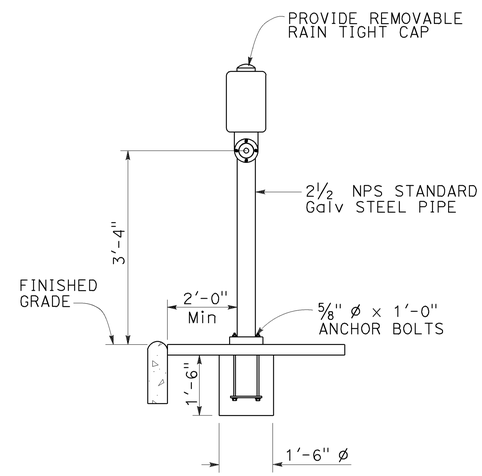

ELEVATION

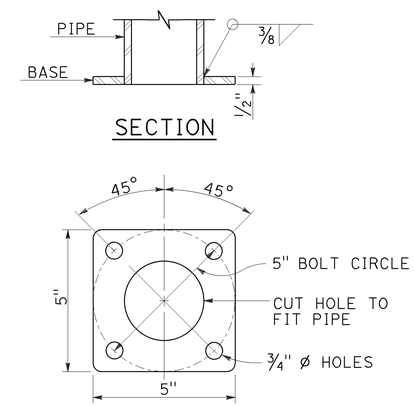

BASE PLATE

PBA POST

PUSH BUTTON ASSEMBLY POST

DETAIL B

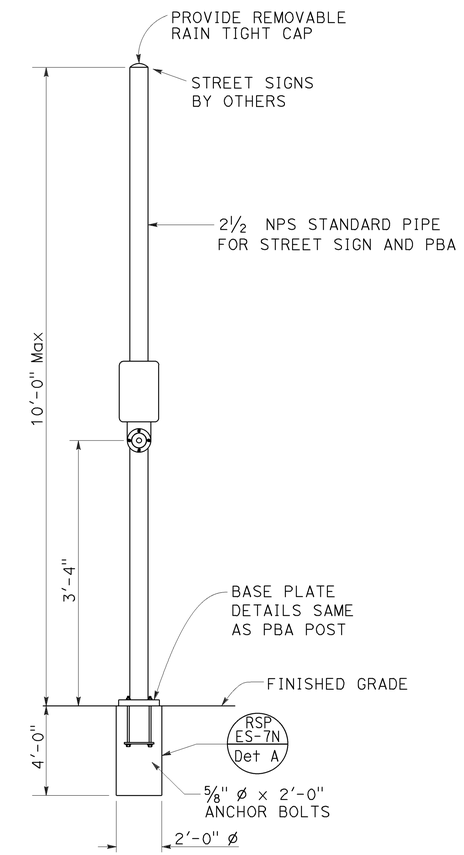

COMBINED STREET SIGN

PUSH BUTTON ASSEMBLY POST

DETAIL C

POLE TYPE	POLE DATA				BASE PLATE DATA				CIDH
	A HEIGHT	Min OD BASE	Min OD TOP	WALL THICKNESS	C	BC = BOLT CIRCLE	THICKNESS	ANCHOR BOLT SIZE	DEPTH
15TS	30'-0"	8"	3 11/16"	0.1793"	1'-1½"	1'-0"	2"	1½" ø x 42"	7'-6"
21TS	35'-0"	9⅜"	3 9/16"		1'-3"	1'-2"			8'-6"

STATE OF CALIFORNIA
DEPARTMENT OF TRANSPORTATION

ELECTRICAL SYSTEMS (SIGNAL AND LIGHTING STANDARD, TYPE TS, AND PUSH BUTTON ASSEMBLY POST)

NO SCALE

RSP ES-7A DATED OCTOBER 30, 2015 SUPERSEDES RSP ES-7A DATED JULY 19, 2013 AND STANDARD PLAN ES-7A DATED MAY 20, 2011 - PAGE 462 OF THE STANDARD PLANS BOOK DATED 2010.

REVISED STANDARD PLAN RSP ES-7A

8-24-15

Dist	COUNTY	ROUTE	POST MILES TOTAL PROJECT	SHEET No.	TOTAL SHEETS
08	Riv	79	R33.9	87	101

REGISTERED CIVIL ENGINEER

October 30, 2015
PLANS APPROVAL DATE

REGISTERED PROFESSIONAL ENGINEER
Stanley P. Johnson
No. C57793
Exp. 3-31-16
CIVIL
STATE OF CALIFORNIA

THE STATE OF CALIFORNIA OR ITS OFFICERS OR AGENTS SHALL NOT BE RESPONSIBLE FOR THE ACCURACY OR COMPLETENESS OF SCANNED COPIES OF THIS PLAN SHEET.

TO ACCOMPANY PLANS DATED 03-15-16

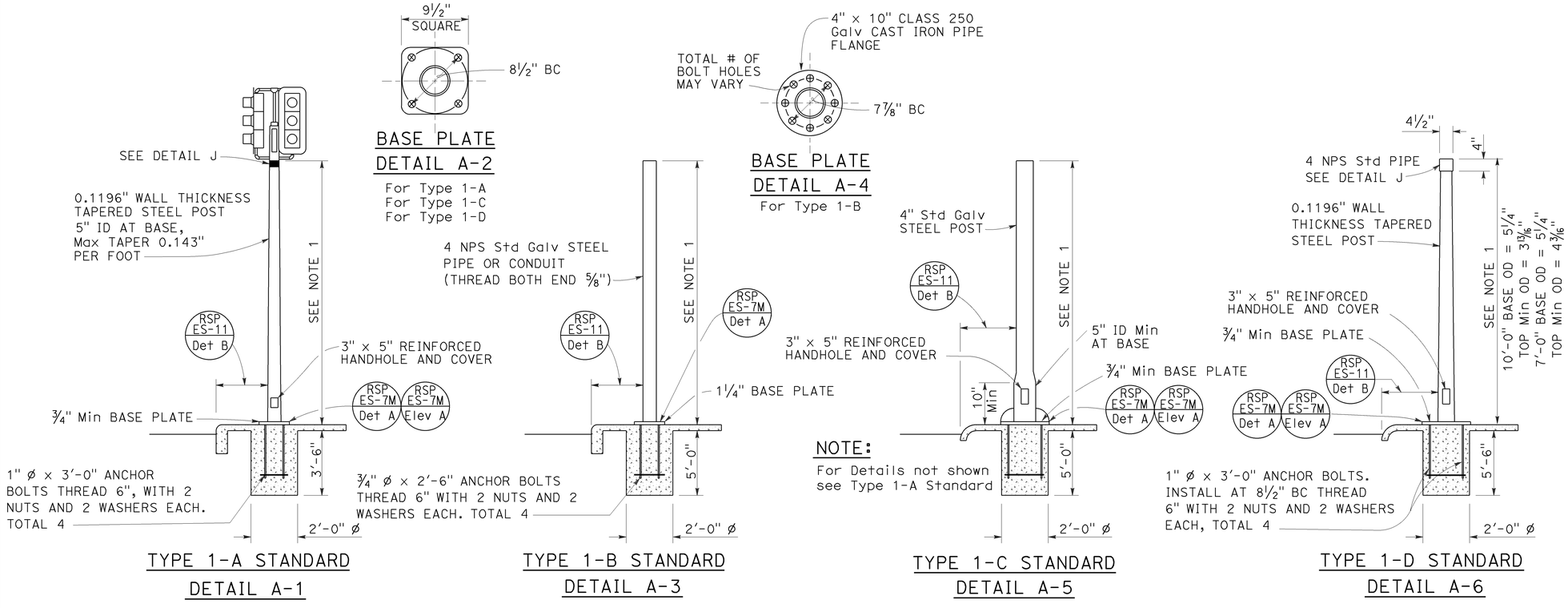

TYPE 1 SIGNAL STANDARDS
DETAIL A

NOTES:

1. Standards shall be 10'-0" ± 2" for vehicle signals and 7'-0" ± 2" for pedestrian signals unless shorter pole is noted on project plans.
2. Top of standards shall be 4½" OD.
3. Conduits shall extend 2" maximum above finished surface of foundation and for Types 1-A, 1-C and 1-D shall be sloped toward handhole.
4. Anchor bolts shall be bonded to conduit or grounding conductor.
5. For additional notes and details, see Revised Standard Plans RSP ES-7M and RSP ES-7N.
6. Pour foundation concrete against undisturbed soil.
7. For standards with handhole, locate in the downstream side of traffic.
8. Coupling nuts to be used only when shown or specified on project plans.

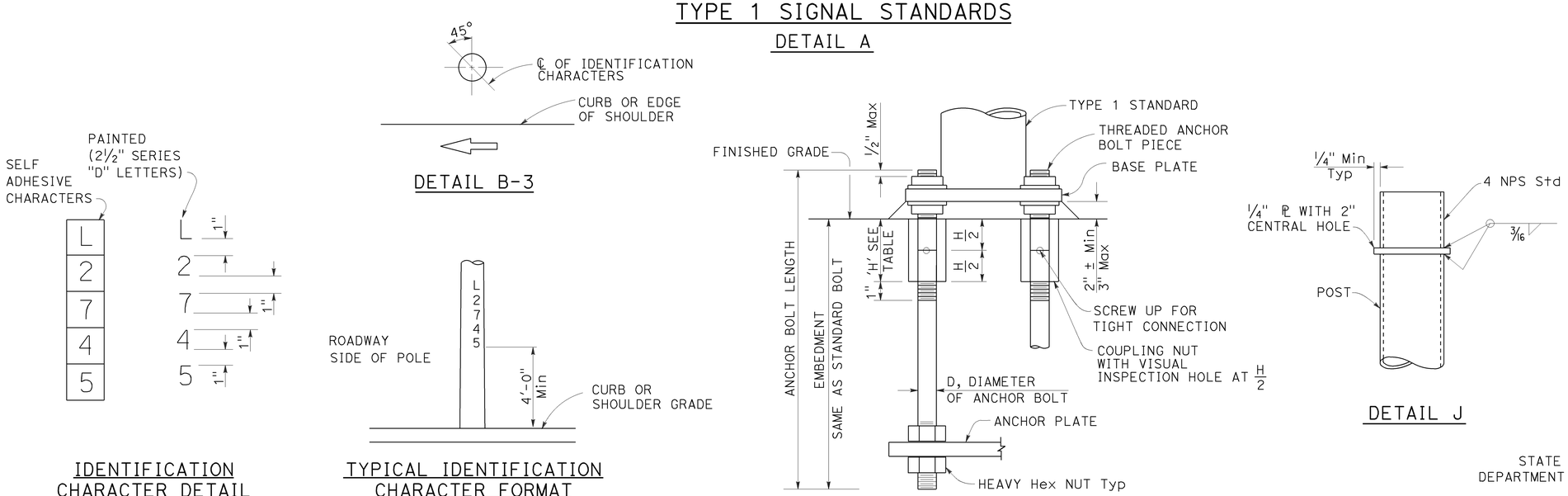

LOCATION OF EQUIPMENT IDENTIFICATION CHARACTERS ON STANDARDS AND POSTS
DETAIL B

COUPLING NUT TABLE	
BOLT DIAMETER	NUT TABLE THICKNESS 'H'
¾"	2¼"
1"	3"

STATE OF CALIFORNIA
DEPARTMENT OF TRANSPORTATION

ELECTRICAL SYSTEMS (SIGNAL AND LIGHTING STANDARD, TYPE 1 AND EQUIPMENT IDENTIFICATION CHARACTERS)

NO SCALE

RSP ES-7B DATED OCTOBER 30, 2015 SUPERSEDES STANDARD PLAN ES-7B DATED MAY 20, 2011 - PAGE 463 OF THE STANDARD PLANS BOOK DATED 2010.

REVISED STANDARD PLAN RSP ES-7B

2010 REVISED STANDARD PLAN RSP ES-7B

10-8-15

Dist	COUNTY	ROUTE	POST MILES TOTAL PROJECT	SHEET No.	TOTAL SHEETS
08	Riv	79	R33.9	88	101

REGISTERED CIVIL ENGINEER

October 30, 2015
PLANS APPROVAL DATE

REGISTERED PROFESSIONAL ENGINEER Stanley P. Johnson No. C57793 Exp. 3-31-16 CIVIL STATE OF CALIFORNIA

THE STATE OF CALIFORNIA OR ITS OFFICERS OR AGENTS SHALL NOT BE RESPONSIBLE FOR THE ACCURACY OR COMPLETENESS OF SCANNED COPIES OF THIS PLAN SHEET.

TO ACCOMPANY PLANS DATED 03-15-16

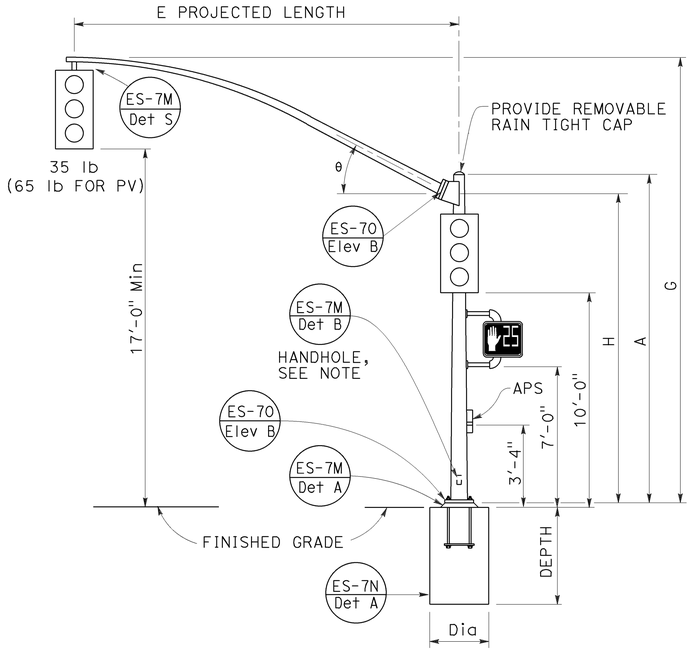

TYPE 16-1-100, 18-1-100

ELEVATION A

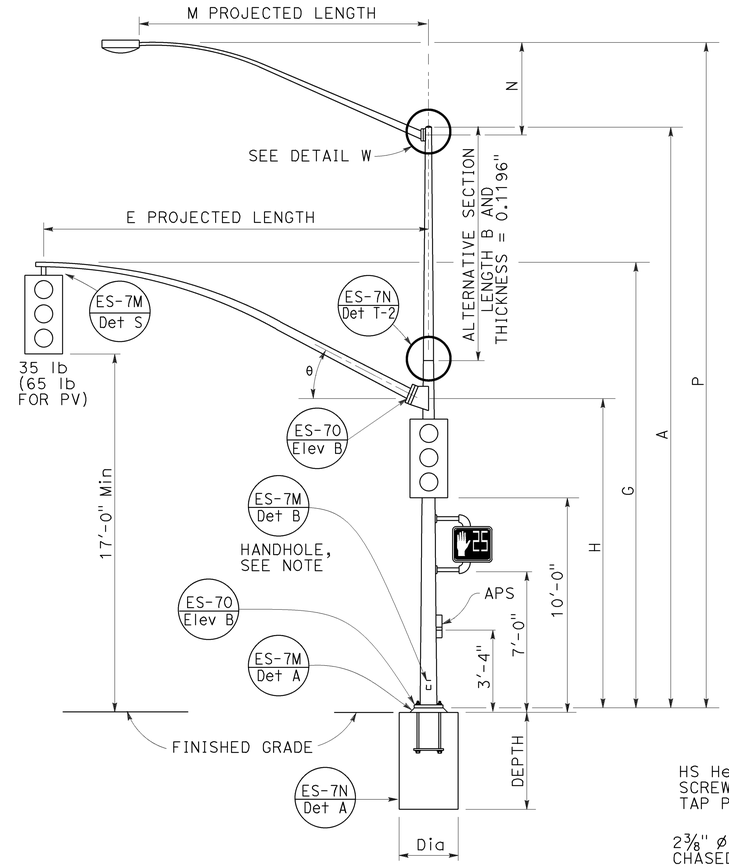

TYPE 19-1-100, 19A-1-100

ELEVATION B

Δ = LUMINAIRE MAST ARM SKEW -90° TO +90°
DEFAULT 0°

NOTE:

Handhole shall be located on the downstream side of traffic.

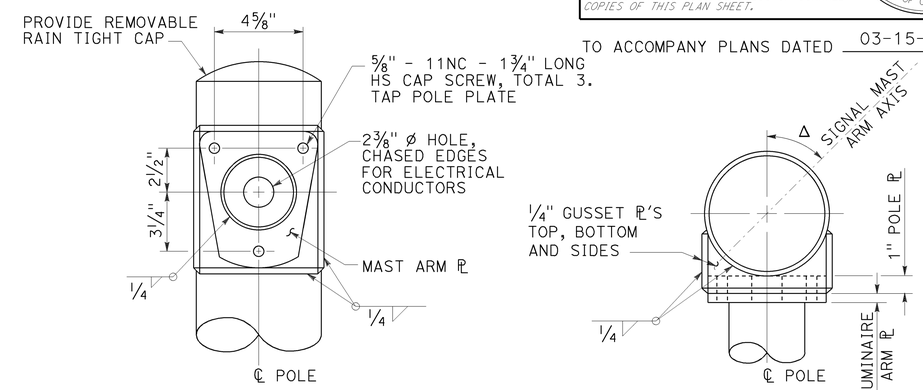

DETAIL W-1 DETAIL W-2

LUMINAIRE MAST ARM CONNECTION

DETAIL W

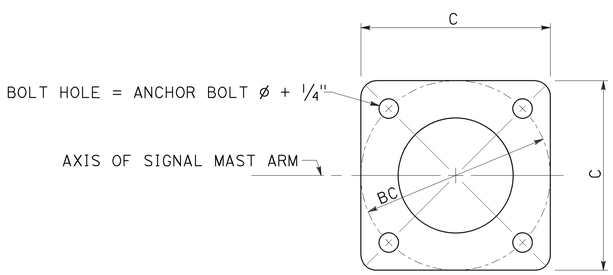

BASE PLATE

DETAIL D

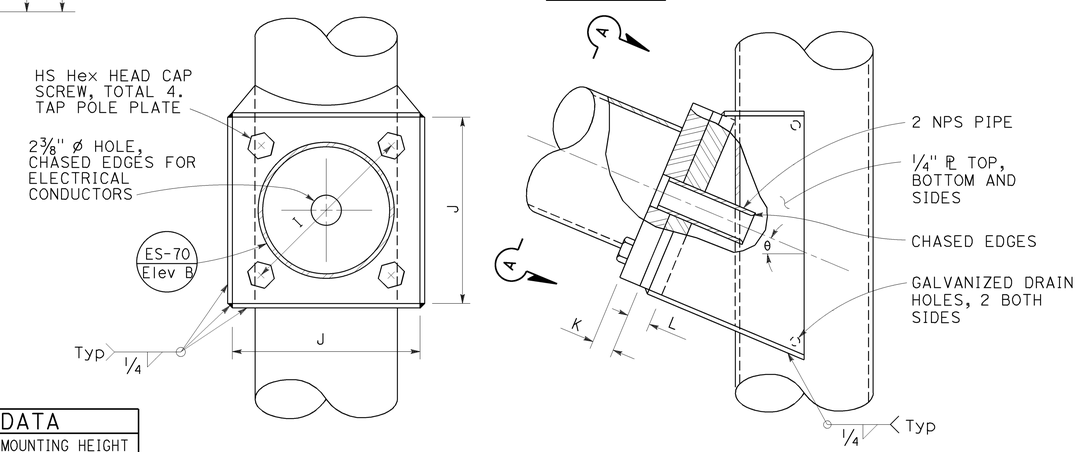

VIEW A-A ELEVATION C

SIGNAL MAST ARM CONNECTION

DETAIL C

SIGNAL MAST ARM DATA										
E PROJECTED LENGTH	G MOUNTING HEIGHT	H	Min OD AT POLE	THICKNESS	I BOLT CIRCLE	HS CAP SCREWS	J PLATE SIZE	K MAST ARM ℙ THICKNESS	L POLE ℙ THICKNESS	θ
15'-0"	21'-8"±	17'-6"	7 3/8"	0.1196"	12"	1 1/4"-7NC-3"	1'-0"	1 1/4"	1 1/2"	23°
20'-0"										
25'-0"	22'-8"±	16'-0"								
30'-0"	23'-0"±		8"							

LUMINAIRE MAST ARM DATA					
M PROJECTED LENGTH	N RISE	Min OD AT POLE	THICKNESS	P MOUNTING HEIGHT 30'-0" POLE	P MOUNTING HEIGHT 35'-0" POLE
6'-0"	2'-0"±	3 1/4"	0.1196"	31'-6"±	36'-6"±
8'-0"	2'-6"±	3 1/2"		32'-0"±	37'-0"±
10'-0"	3'-3"±	3 7/8"		32'-9"±	37'-9"±
12'-0"	4'-3"±			33'-9"±	38'-9"±
15'-0"	4'-9"±	4 1/4"		34'-3"±	39'-3"±

POLE TYPE	LOAD CASE	WIND VELOCITY (mph)	POLE DATA: A HEIGHT	Min OD BASE	Min OD TOP	THICKNESS	ALTERNATIVE SECTION B LENGTH	ALTERNATIVE SECTION BOTTOM	ALTERNATIVE SECTION TOP	BASE PLATE DATA: C	BC = BOLT CIRCLE	THICKNESS	ANCHOR BOLT SIZE	LUMINAIRE MAST ARM	SIGNAL MAST ARM	CIDH PILE FOUNDATION: DIAMETER	DEPTH	REINFORCED
16-1-100	1	100	18'-6"	10 3/4"	8 1/16"	0.1793"	None			1'-5 1/2"	1'-5 1/2"	3"	1 1/2" Ø x 42"	NONE	15'-0", [20'-0"]	2'-6"	9'-0"	YES
18-1-100			17'-0"		8 5/16"		None							NONE	25'-0", [30'-0"]			
19-1-100			30'-0"		6 7/16"		10'-0"	7 7/8"	6 7/16"					6'-15' [12'-0"]				
19A-1-100			35'-0"		5 11/16"		15'-0"		5 11/16"					6'-15' [15'-0"]				

[ ] INDICATES MAST ARM LENGTH TO BE USED UNLESS OTHERWISE NOTED ON PLANS.

STATE OF CALIFORNIA
DEPARTMENT OF TRANSPORTATION

ELECTRICAL SYSTEMS (SIGNAL AND LIGHTING STANDARD, CASE 1 SIGNAL MAST ARM LOADING, WIND VELOCITY = 100 MPH AND SIGNAL MAST ARM LENGTHS 15' TO 30')

NO SCALE

RSP ES-7C DATED OCTOBER 30, 2015 SUPERSEDES RSP ES-7C DATED JULY 19, 2013 AND STANDARD PLAN ES-7C DATED MAY 20, 2011 - PAGE 464 OF THE STANDARD PLANS BOOK DATED 2010.

REVISED STANDARD PLAN RSP ES-7C

2010 REVISED STANDARD PLAN RSP ES-7C

8-24-15

Dist	COUNTY	ROUTE	POST MILES TOTAL PROJECT	SHEET No.	TOTAL SHEETS
08	Riv	79	R33.9	89	101

REGISTERED CIVIL ENGINEER

October 30, 2015
PLANS APPROVAL DATE

REGISTERED PROFESSIONAL ENGINEER Stanley P. Johnson No. C57793 Exp. 3-31-16 CIVIL STATE OF CALIFORNIA

THE STATE OF CALIFORNIA OR ITS OFFICERS OR AGENTS SHALL NOT BE RESPONSIBLE FOR THE ACCURACY OR COMPLETENESS OF SCANNED COPIES OF THIS PLAN SHEET.

TO ACCOMPANY PLANS DATED 03-15-16

2010 REVISED STANDARD PLAN RSP ES-7F

NOTE:
Handhole shall be located on the downstream side of traffic.

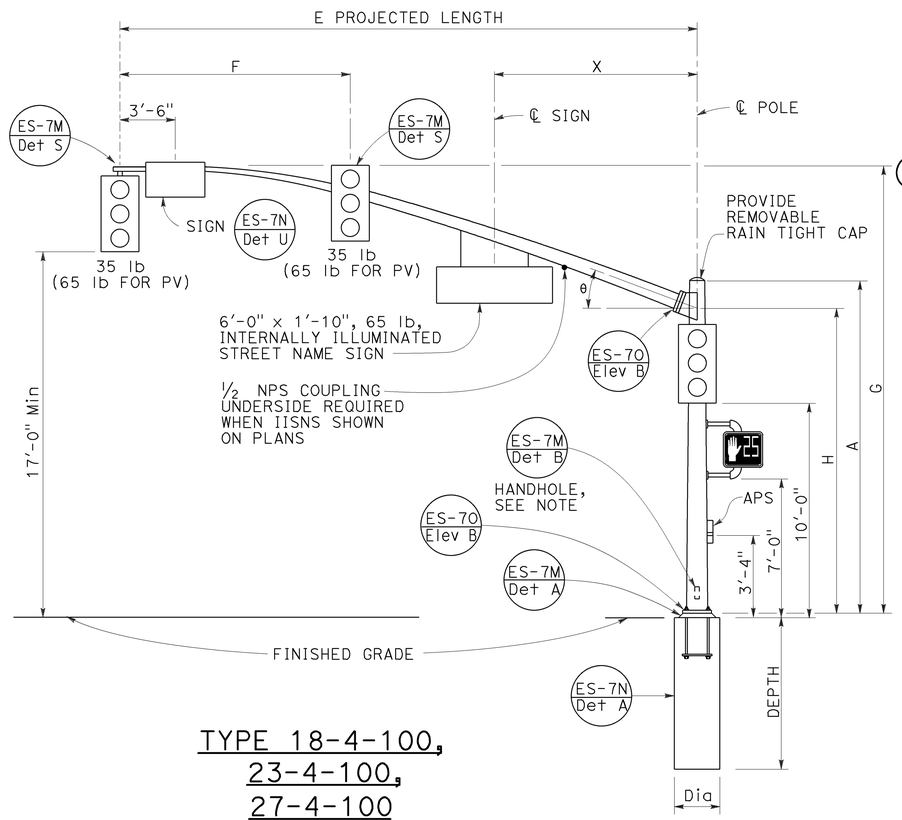

TYPE 18-4-100,
23-4-100,
27-4-100
ELEVATION A

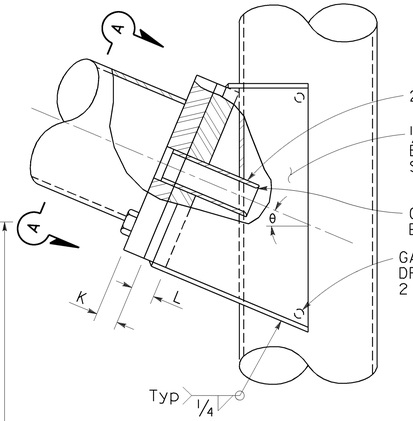

ELEVATION C

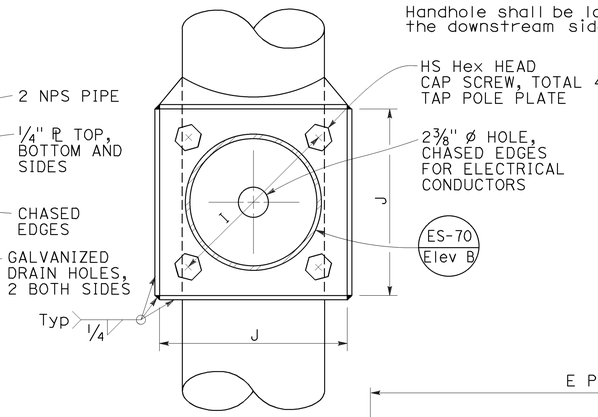

VIEW A-A

SIGNAL MAST ARM CONNECTION
DETAIL A

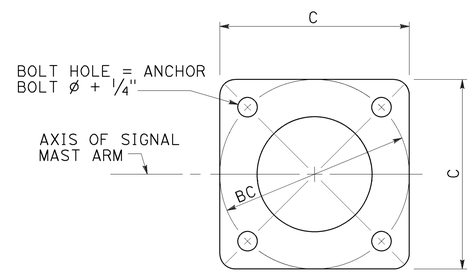

BASE PLATE
DETAIL B

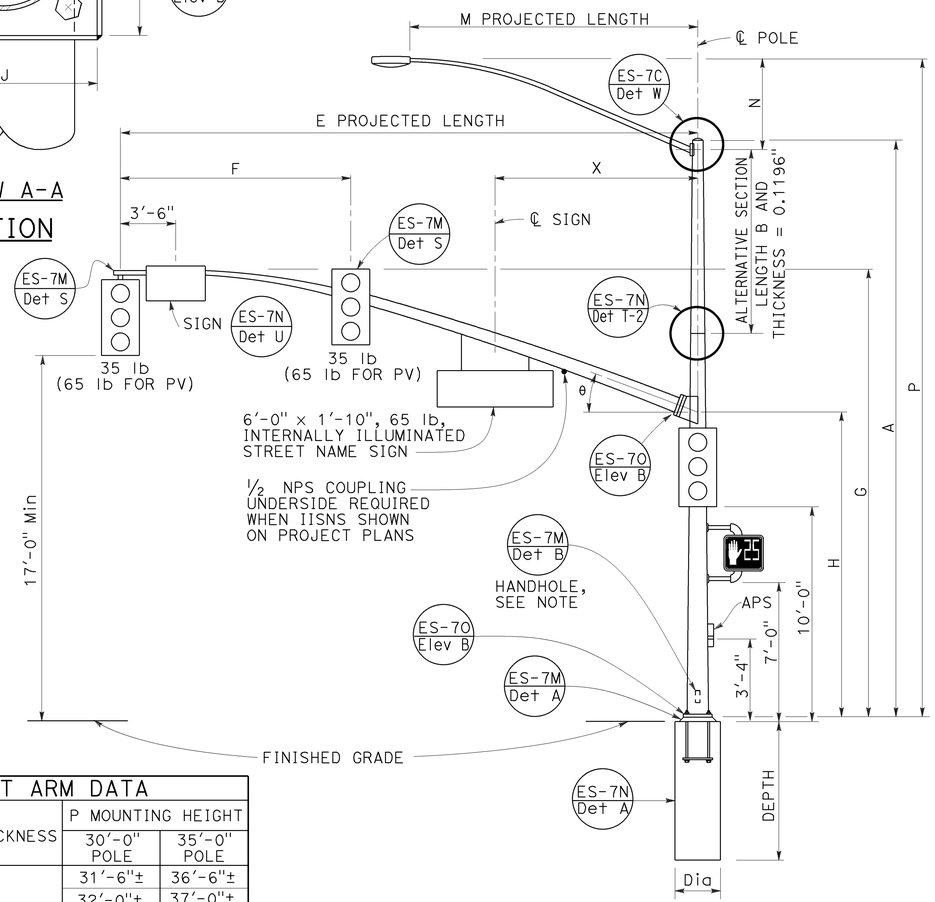

TYPE 19-4-100, 19A-4-100,
24-4-100, 24A-4-100,
26-4-100, 26A-4-100
ELEVATION B

SIGNAL MAST ARM DATA

E PROJECTED LENGTH	F Min SPACING	G MOUNTING HEIGHT	H	Min OD AT POLE	THICKNESS	I BOLT CIRCLE	HS CAP SCREWS	J PLATE SIZE	K MAST ARM PL THICKNESS	L POLE PL THICKNESS	θ	X Max
25'-0"	10'-0"	22'-8"±	16'-0"	7 3/8"	0.2391"	12"	1 1/4"-7NC-3"	1'-0"	1 1/4"	1 1/2"	23°	10'-6"
30'-0"	12'-0"	23'-0"±		8"								
35'-0"	14'-0"			8 11/16"		13 1/2"		1'-1 1/2"	1 1/2"	1 3/4"	21°	
40'-0"	15'-0"			9 3/8"							15°	13'-0"
45'-0"		23'-8"±		10 1/4"								

LUMINAIRE MAST ARM DATA

M PROJECTED LENGTH	N RISE	Min OD AT POLE	THICKNESS	P MOUNTING HEIGHT 30'-0" POLE	P MOUNTING HEIGHT 35'-0" POLE
6'-0"	2'-0"±	3 1/4"	0.1196"	31'-6"±	36'-6"±
8'-0"	2'-6"±	3 1/2"		32'-0"±	37'-0"±
10'-0"	3'-3"±	3 7/8"		32'-9"±	37'-9"±
12'-0"	4'-3"±			33'-9"±	38'-9"±
15'-0"	4'-9"±	4 1/4"		34'-3"±	39'-3"±

POLE DATA / BASE PLATE DATA / CIDH PILE FOUNDATION

POLE TYPE	LOAD CASE	WIND VELOCITY (mph)	A HEIGHT	Min OD BASE	Min OD TOP	THICKNESS	ALTERNATIVE SECTION B LENGTH	ALTERNATIVE SECTION BOTTOM	ALTERNATIVE SECTION TOP	C	BC = BOLT CIRCLE	THICKNESS	ANCHOR BOLT SIZE	LUMINAIRE MAST ARM	SIGNAL MAST ARM	CIDH Dia	CIDH DEPTH	CIDH REINFORCED
18-4-100	4	100	17'-0"	12 1/8"	9 9/16"	0.3125"	NONE			1'-7"	1'-5 1/2"	3"	2" Ø x 42"	NONE	25'-0", 30'-0"	3'-0"	11'-0"	YES
19-4-100			30'-0"		7 11/16"		10'-0"	9 1/8"	7 11/16"					6'-15' 12'-0"				
19A-4-100			35'-0"		6 15/16"		15'-0'		6 15/16"					6'-15' 15'-0"				
23-4-100			17'-0"		9 9/16"		NONE							NONE	35'-0"			
24-4-100			30'-0"		7 11/16"		10'-0"	9 1/8"	7 11/16"					6'-15' 12'-0"				
24A-4-100			35'-0"		6 15/16"		15'-0"		6 15/16"					6'-15' 15'-0"				
26-4-100			30'-0"	14"	8 3/16"		10'-0"	9 5/8"	8 3/16"	23"	21"		2 1/2" Ø x 42"	6'-15' 12'-0"	40'-0", 45'-0"	3'-6"	12'-0"	
26A-4-100			35'-0"		7 7/16"		15'-0"		7 7/16"					6'-15' 15'-0"				
27-4-100			17'-0"		10 1/16"		NONE							NONE				

INDICATES MAST ARM LENGTH TO BE USED UNLESS OTHERWISE NOTED ON PLANS.

STATE OF CALIFORNIA
DEPARTMENT OF TRANSPORTATION

ELECTRICAL SYSTEMS (SIGNAL AND LIGHTING STANDARD, CASE 4 SIGNAL MAST ARM LOADING, WIND VELOCITY=100 MPH AND SIGNAL MAST ARM LENGTHS 25' TO 45')

NO SCALE

RSP ES-7F DATED OCTOBER 30, 2015 SUPERSEDES RSP ES-7F DATED JULY 19, 2013 AND ES-7F DATED MAY 20, 2011 - PAGE 467 OF THE STANDARD PLANS BOOK DATED 2010.

REVISED STANDARD PLAN RSP ES-7F

8-24-15

Dist	COUNTY	ROUTE	POST MILES TOTAL PROJECT	SHEET No.	TOTAL SHEETS
08	Riv	79	R33.9	90	101

REGISTERED CIVIL ENGINEER

October 30, 2015
PLANS APPROVAL DATE

REGISTERED PROFESSIONAL ENGINEER Stanley P. Johnson No. C57793 Exp. 3-31-16 CIVIL STATE OF CALIFORNIA

THE STATE OF CALIFORNIA OR ITS OFFICERS OR AGENTS SHALL NOT BE RESPONSIBLE FOR THE ACCURACY OR COMPLETENESS OF SCANNED COPIES OF THIS PLAN SHEET.

TO ACCOMPANY PLANS DATED 03-15-16

NOTE:
Handhole shall be located on the downstream side of traffic.

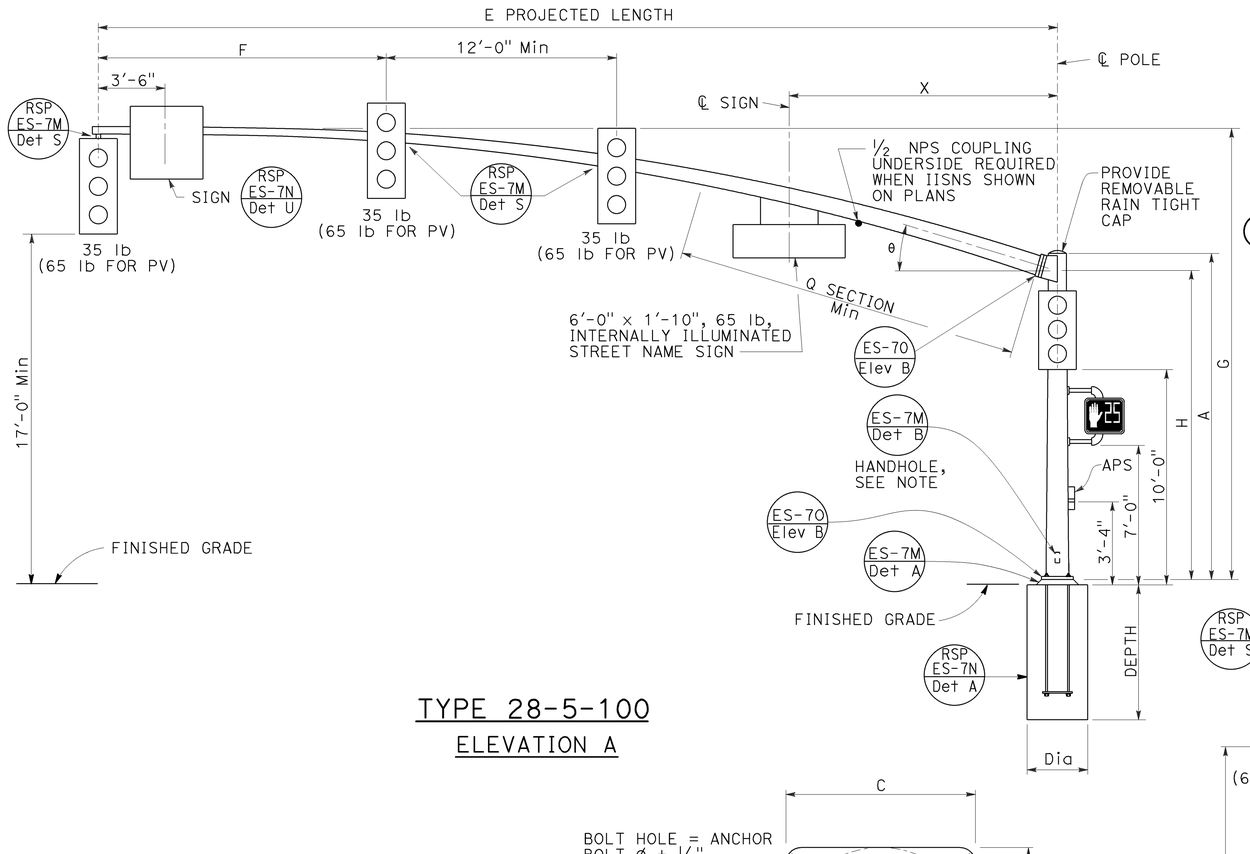

TYPE 28-5-100
ELEVATION A

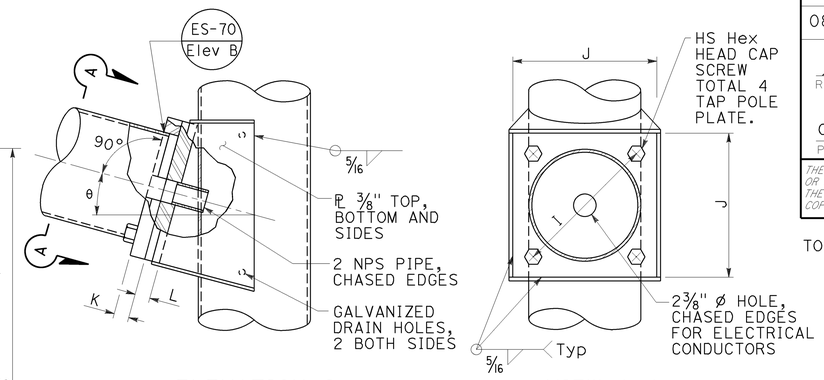

ELEVATION C

VIEW A-A

SIGNAL MAST ARM CONNECTION
DETAIL A

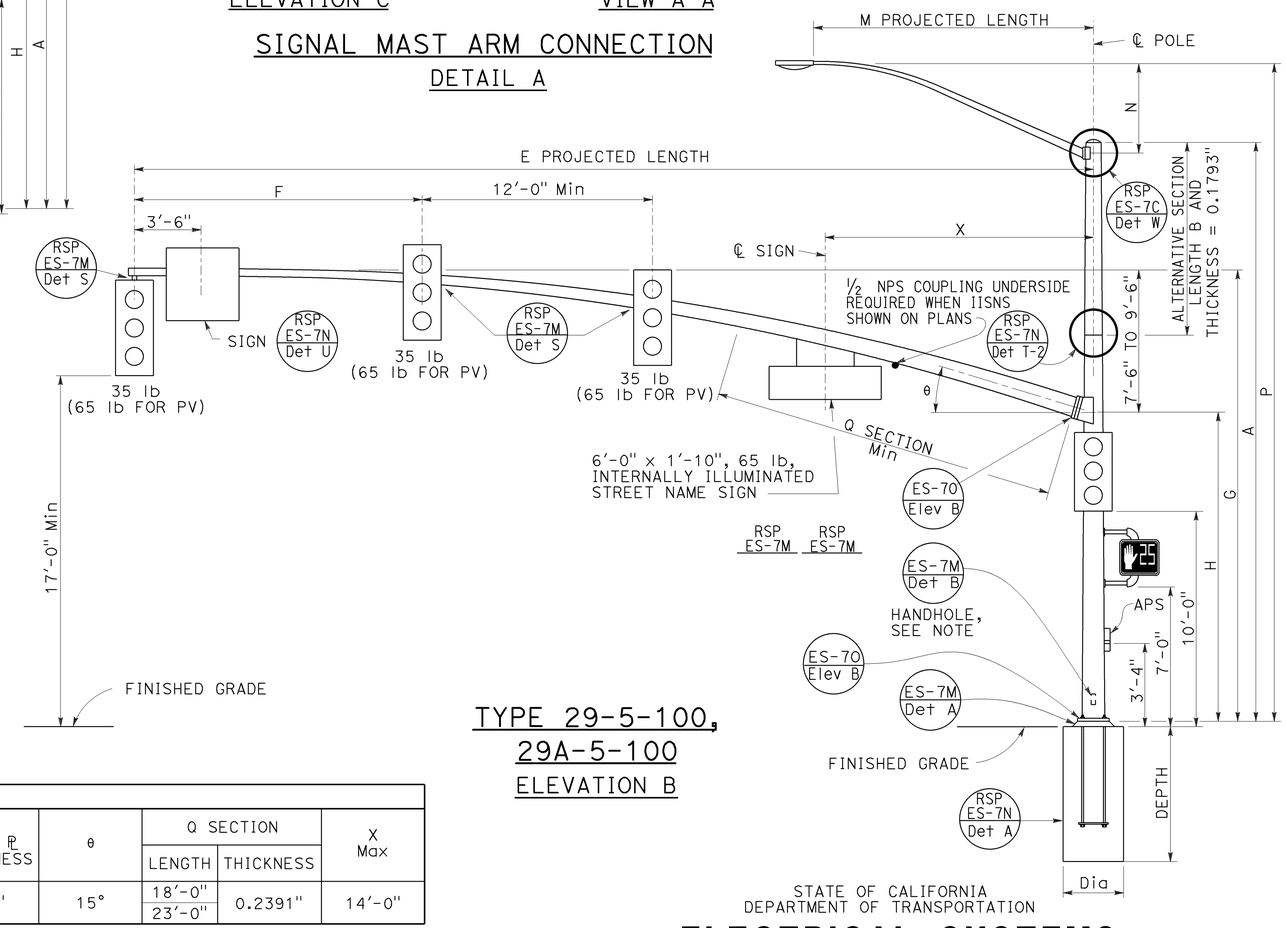

TYPE 29-5-100,
29A-5-100
ELEVATION B

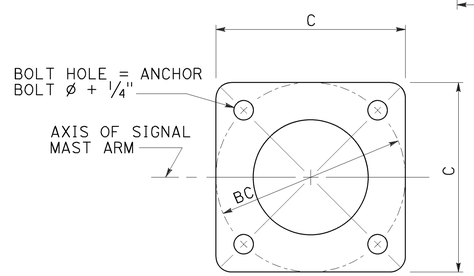

BASE PLATE
DETAIL B

LUMINAIRE MAST ARM DATA					
M PROJECTED LENGTH	N RISE	Min OD AT POLE	THICKNESS	P MOUNTING HEIGHT 30'-0" POLE	P MOUNTING HEIGHT 35'-0" POLE
6'-0"	2'-0"±	3 1/4"	0.1196"	31'-6"±	36'-6"±
8'-0"	2'-6"±	3 1/2"		32'-0"±	37'-0"±
10'-0"	3'-3"±	3 7/8"		32'-9"±	37'-9"±
12'-0"	4'-3"±			33'-9"±	38'-9"±
15'-0"	4'-9"±	4 1/4"		34'-3"±	39'-3"±

SIGNAL MAST ARM DATA														
E PROJECTED LENGTH	F Min SPACING	G MOUNTING HEIGHT	H	Min OD AT POLE	THICKNESS	I BOLT CIRCLE	HS CAP SCREWS	J PLATE SIZE	K MAST ARM ℄ THICKNESS	L POLE ℄ THICKNESS	θ	Q SECTION LENGTH	Q SECTION THICKNESS	X Max
50'-0"	15'-0"	23'-7"± TO 25'-7"±	16'-0"	11 7/16"	0.1793"	16"	1 1/2"-6NC-3 1/4"	1'-4"	1 3/4"	1 3/4"	15°	18'-0"	0.2391"	14'-0"
55'-0"				1'-1/4"								23'-0"		

POLE TYPE	LOAD CASE	WIND VELOCITY (mph)	POLE DATA A HEIGHT	Min OD BASE	Min OD TOP	THICKNESS	ALTERNATIVE SECTION B LENGTH	ALTERNATIVE SECTION BOTTOM	ALTERNATIVE SECTION TOP	BASE PLATE DATA C	BC = BOLT CIRCLE	THICKNESS	ANCHOR BOLT SIZE	LUMINAIRE MAST ARM	SIGNAL MAST ARM	CIDH PILE FOUNDATION Dia	DEPTH	REINFORCED
28-5-100	5	100	17'-0"	14"	11 9/16"	0.3125"	NONE	11 1/8"	9 11/16"	23"	21"	3"	2 1/2" ø x 42"	NONE	50'-0", 55'-0"	3'-6"	12'-0"	YES
29-5-100			30'-0"		9 11/16"		10'-0"							6'-15' 15'-0"				
29A-5-100			35'-0"		8 15/16"		15'-0"		8 15/16"									

☐ INDICATES MAST ARM LENGTH TO BE USED UNLESS OTHERWISE NOTED ON PLANS.

STATE OF CALIFORNIA
DEPARTMENT OF TRANSPORTATION

ELECTRICAL SYSTEMS (SIGNAL AND LIGHTING STANDARD, CASE 5 SIGNAL MAST ARM LOADING, WIND VELOCITY=100 MPH AND SIGNAL MAST ARM LENGTHS 50' TO 55')

NO SCALE

RSP ES-7G DATED OCTOBER 30, 2015 SUPERSEDES RSP ES-7G DATED JULY 19, 2013 AND ES-7G DATED MAY 20, 2011 - PAGE 468 OF THE STANDARD PLANS BOOK DATED 2010.

REVISED STANDARD PLAN RSP ES-7G

2010 REVISED STANDARD PLAN RSP ES-7G

8-24-15

Dist	COUNTY	ROUTE	POST MILES TOTAL PROJECT	SHEET No.	TOTAL SHEETS
08	Riv	79	R33.9	91	101

REGISTERED CIVIL ENGINEER

October 30, 2015
PLANS APPROVAL DATE

REGISTERED PROFESSIONAL ENGINEER
Stanley P. Johnson
No. C57793
Exp. 3-31-16
CIVIL
STATE OF CALIFORNIA

THE STATE OF CALIFORNIA OR ITS OFFICERS OR AGENTS SHALL NOT BE RESPONSIBLE FOR THE ACCURACY OR COMPLETENESS OF SCANNED COPIES OF THIS PLAN SHEET.

TO ACCOMPANY PLANS DATED 03-15-16

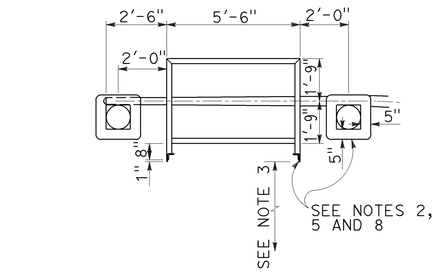

TYPE 9

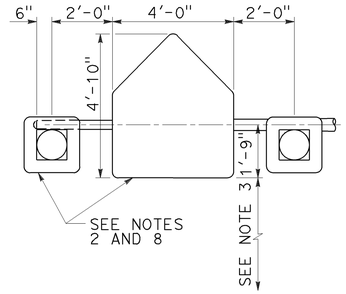

TYPE 9A

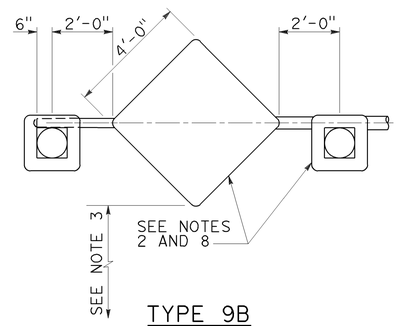

TYPE 9B

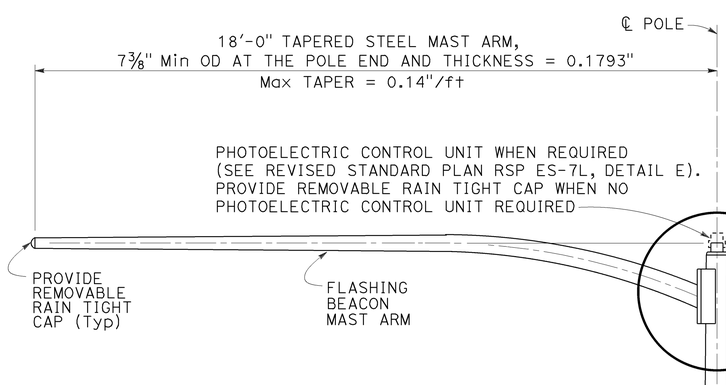

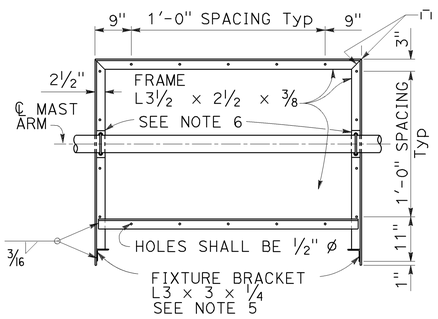

TYPE 9

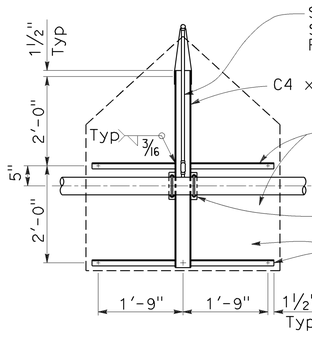

TYPE 9A

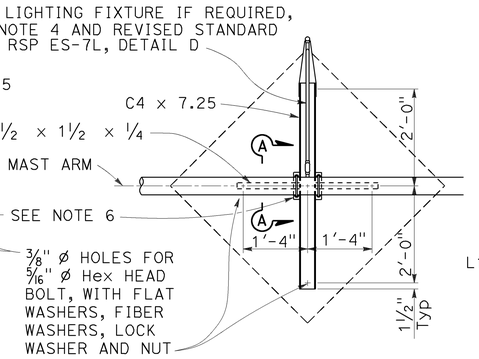

TYPE 9B

FRAME DETAILS
DETAIL A

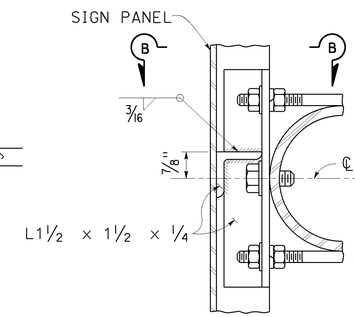

SECTION A-A

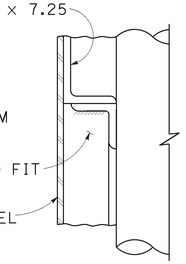

SECTION B-B

TYPE 9B
DETAIL B

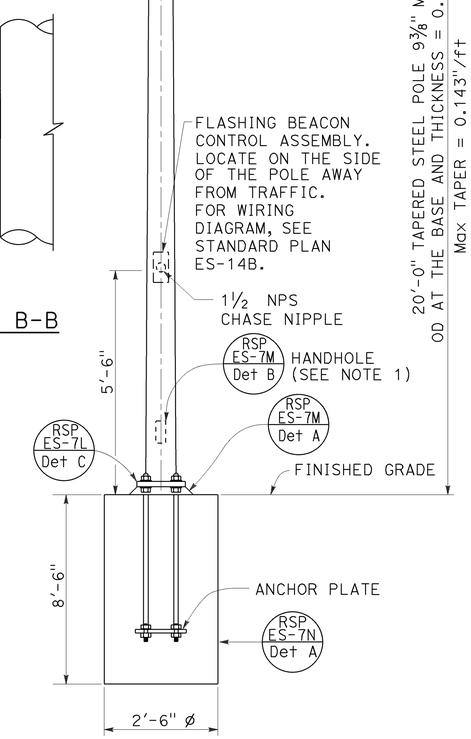

ELEVATION A

NOTES:

1. Handhole shall be located on the downstream side of traffic.
2. Install flashing beacons and sign frame. Flashing beacons shall be MAT mounted on pipe tenon (See Revised Standard Plan RSP ES-7M, Detail S).
3. Vertical clearance shall be 17'-0" minimum between roadway and bottom of signal panel or lighting fixture bracket.
4. Special provisions or plans will indicate when sign lighting fixture is required on Type 9A or 9B sign frames.
5. Type 9 sign frames shall be provided with a 3'-0" fluorescent fixture. For fluorescent lighting details, see Revised Standard Plan RSP ES-7L, Detail F and Standard Plan ES-15B.
6. See Revised Standard Plan RSP ES-7L, Detail B, for sign frame mounting details.
7. For additional notes and details, see Revised Standard Plan RSP ES-7L, Detail B-3.
8. 12" flashing beacon with signal indication, standard visor and 5" x 5" backplate (total 2).

STATE OF CALIFORNIA
DEPARTMENT OF TRANSPORTATION

ELECTRICAL SYSTEMS (FLASHING BEACON WITH TYPE 9, 9A AND 9B SIGN)

NO SCALE

RSP ES-7K DATED OCTOBER 30, 2015 SUPERSEDES STANDARD PLAN ES-7K DATED MAY 20, 2011 - PAGE 472 OF THE STANDARD PLANS BOOK DATED 2010.

REVISED STANDARD PLAN RSP ES-7K

2010 REVISED STANDARD PLAN RSP ES-7K

8-24-15

Dist	COUNTY	ROUTE	POST MILES TOTAL PROJECT	SHEET No.	TOTAL SHEETS
08	Riv	79	R33.9	92	101

REGISTERED CIVIL ENGINEER

October 30, 2015
PLANS APPROVAL DATE

REGISTERED PROFESSIONAL ENGINEER
Stanley P. Johnson
No. C57793
Exp. 3-31-16
CIVIL
STATE OF CALIFORNIA

THE STATE OF CALIFORNIA OR ITS OFFICERS OR AGENTS SHALL NOT BE RESPONSIBLE FOR THE ACCURACY OR COMPLETENESS OF SCANNED COPIES OF THIS PLAN SHEET.

TO ACCOMPANY PLANS DATED 03-15-16

2010 REVISED STANDARD PLAN RSP ES-7L

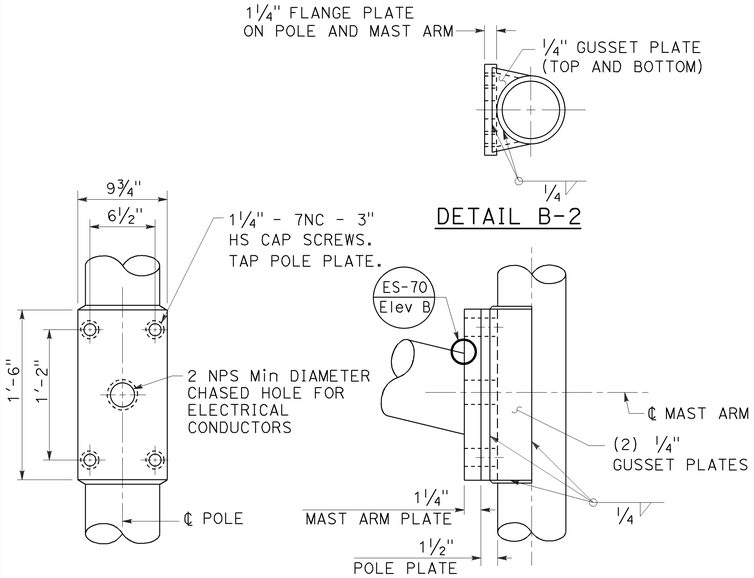

DETAIL B-2

FLASHING BEACON MAST ARM CONNECTION DETAILS

DETAIL B-1

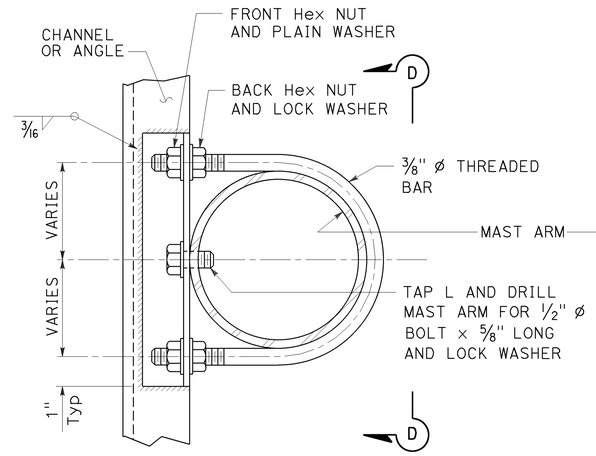

DETAIL B-3

NOTE: Tighten front Hex nuts first, then tighten back Hex nuts.

SIGN FRAME MOUNTING DETAILS

All types

DETAIL B

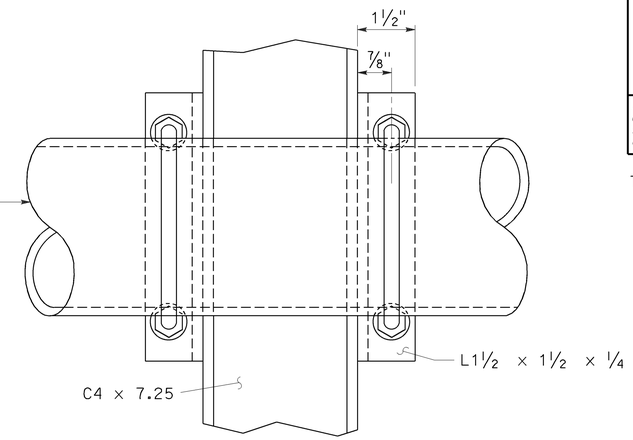

VIEW D-D

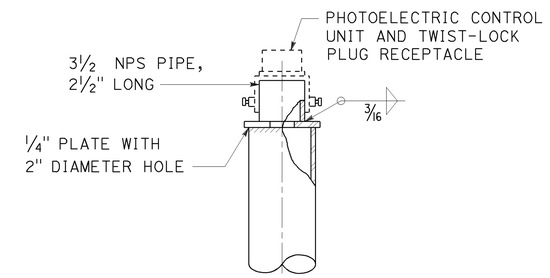

POLE TOP DETAIL

DETAIL E

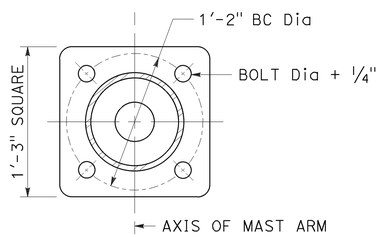

PLAN

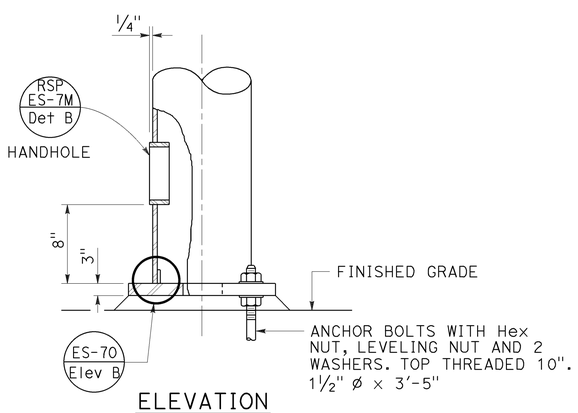

ELEVATION

BASE PLATE AND ANCHORAGE DETAIL

DETAIL C

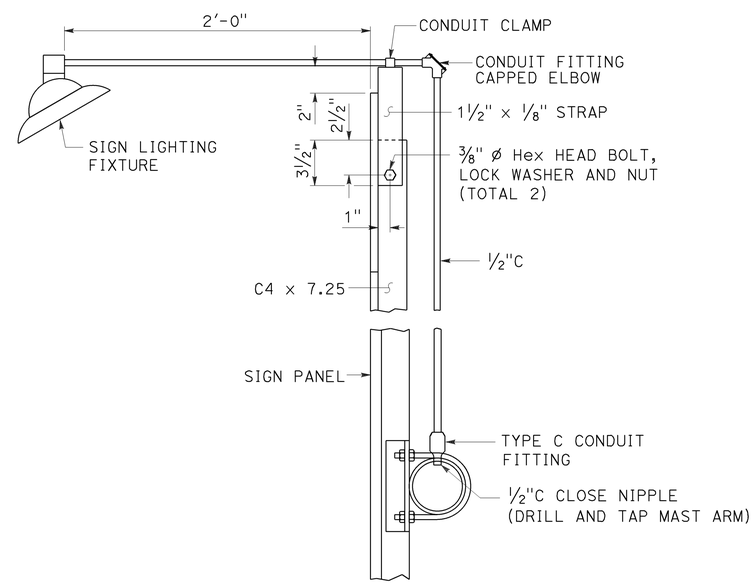

SIGN LIGHTING FIXTURE TYPES 9A AND 9B

DETAIL D

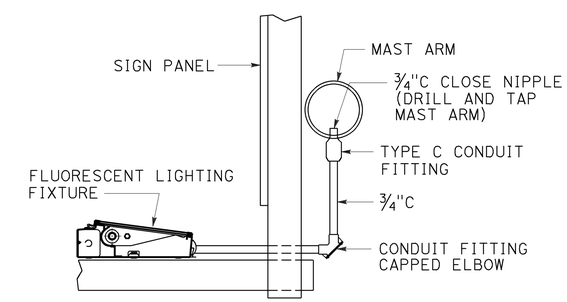

SIGN LIGHTING FIXTURE TYPE 9 FRAME

DETAIL F

STATE OF CALIFORNIA
DEPARTMENT OF TRANSPORTATION

ELECTRICAL SYSTEMS (FLASHING BEACON WITH TYPE 9, 9A AND 9B SIGN)

NO SCALE

RSP ES-7L DATED OCTOBER 30, 2015 SUPERSEDES STANDARD PLAN ES-7L DATED MAY 20, 2011 - PAGE 473 OF THE STANDARD PLANS BOOK DATED 2010.

REVISED STANDARD PLAN RSP ES-7L

8-24-15

Dist	COUNTY	ROUTE	POST MILES TOTAL PROJECT	SHEET No.	TOTAL SHEETS
08	Riv	79	R33.9	93	101

REGISTERED CIVIL ENGINEER

October 30, 2015
PLANS APPROVAL DATE

REGISTERED PROFESSIONAL ENGINEER Stanley P. Johnson No. C57793 Exp. 3-31-16 CIVIL STATE OF CALIFORNIA

THE STATE OF CALIFORNIA OR ITS OFFICERS OR AGENTS SHALL NOT BE RESPONSIBLE FOR THE ACCURACY OR COMPLETENESS OF SCANNED COPIES OF THIS PLAN SHEET.

TO ACCOMPANY PLANS DATED 03-15-16

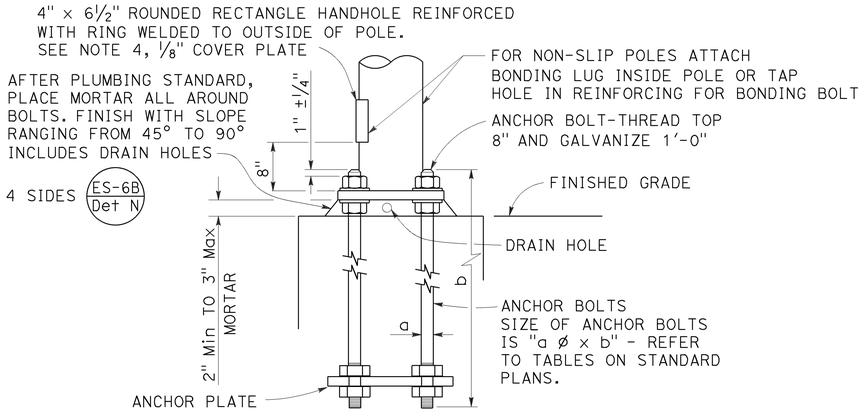

HANDHOLE AND ANCHORAGE
DETAIL A

IDENTIFICATION NUMBER

1. Attach a stamped metal tag with pole's identification number above the handhole. ¼" high number, minimum.
2. Attach a stamped metal tag with mast arm's identification number to the bottom of the signal mast arm near the pole plate. ¼" high number, minimum.

Type — Load case (Use SL for special load case) — Design wind velocity (mph) — Signal mast arm length (ft) { Near handhole: Maximum signal mast arm length / Near pole plate: Installed signal mast arm length } — Standard plan year — Only for poles or mast arms using Detail F — Only for poles or mast arms using ES-7D

26A - 3 - 100 - 45 - 10 - F or FB

SAMPLE IDENTIFICATION NUMBER

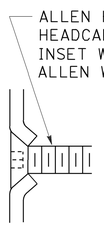

TYPICAL DETAIL
DETAIL B-1

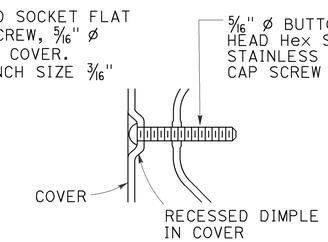

ALTERNATIVE DETAIL
DETAIL B-2

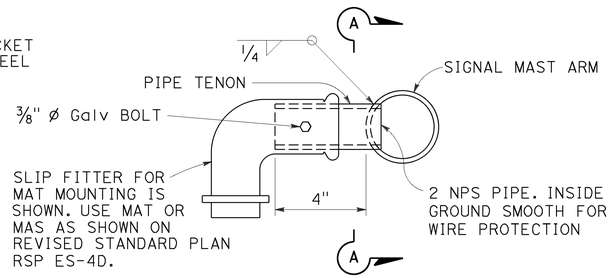

SIDE TENON
DETAIL S-1

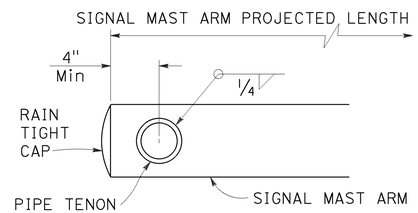

SECTION A-A

PIPE TENONS
DETAIL S

NOTES:

1. Provide a Hex nut, leveling nut and 2 washers for each bolt.
2. Luminaire mast arms shall be round, tapered steel tubes, taper of 0.1375" to 0.143-inch per foot with an end section 2⅜" OD for mounting hardware. Extensions of 2 NPS Standard pipe and 7" long may be used at the option of the manufacturer. When low pressure sodium luminaires are required, the extension shall be 1'-3".
3. Signal mast arms shall be round, tapered steel tubes, maximum taper 0.143-inch per foot.
4. Handhole reinforcement ring shall be ¼" x 2" for 0.1196" to 0.2391" thick poles, ⅜" x 2" for 0.3125" thick poles.
5. Handholes shall be located on the downstream side of traffic.
6. Detail F, fatigue resistant weld, is required at socket welded signal mast arm plate and pole base plate.
7. Cap screws shall be tightened by the turn-of-nut method ⅓ turn from a snug tight condition. No washer will be required.
8. Outside diameter, wall thickness, and corresponding section properties of poles and mast arms as shown in the Standard Plans are minimums. Unless otherwise specified, alternative sections shall require approval by the Engineer.
9. Wind Loading (3 seconds gust): 100 mph
10. Unit Stresses (Structural steel):
    fy = 55,000 psi (tapered steel tube and anchor bolts)
    fy = 50,000 psi (unless otherwise noted)
11. Unit Stresses (Reinforced concrete):
    f'c = 3,625 psi
    fy = 60,000 psi

WELD SIZE	WALL THICKNESS
3/16"	0.1196"
¼"	0.1793"
5/16"	0.2391"
⅜"	0.3125"

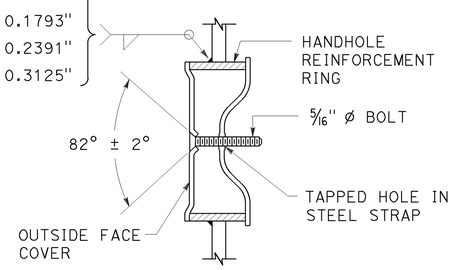

TAMPER RESISTANT HANDHOLE COVER
DETAIL B

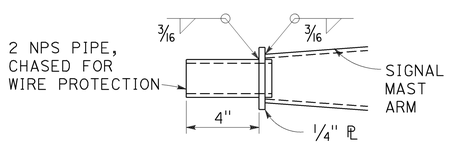

TIP TENON
DETAIL TL

This detail supersedes Detail S when so designated

WELD SIZE	WALL THICKNESS
⅛"	0.1196"
3/16"	0.1793"
¼"	0.2391"

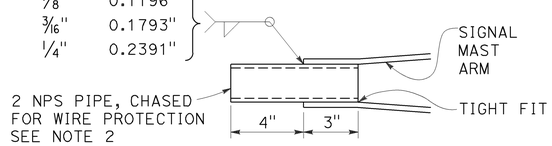

TIP TENON
DETAIL TS

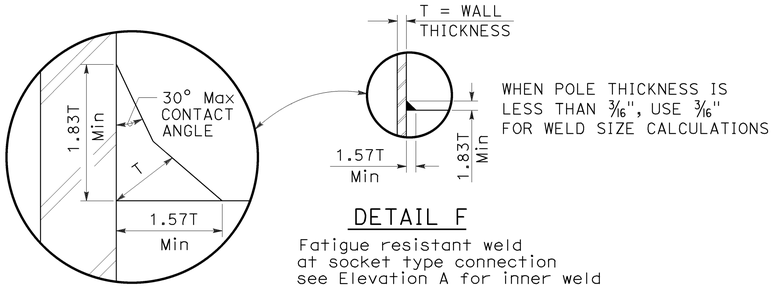

DETAIL F

Fatigue resistant weld at socket type connection see Elevation A for inner weld

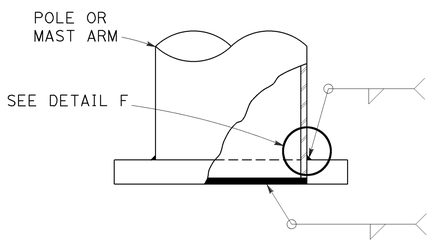

WELD SIZE	WALL THICKNESS
¼"	0.1196"
5/16"	0.1793"
⅜"	0.2391"
7/16"	0.3125"

⅛"	0.1196"
3/16"	0.1793"
¼"	0.2391"
5/16"	0.3125"

ELEVATION A

STATE OF CALIFORNIA
DEPARTMENT OF TRANSPORTATION

ELECTRICAL SYSTEMS (SIGNAL AND LIGHTING STANDARD, DETAIL No. 1)

NO SCALE

RSP ES-7M DATED OCTOBER 30, 2015 SUPERSEDES STANDARD PLAN ES-7M DATED MAY 20, 2011 - PAGE 474 OF THE STANDARD PLANS BOOK DATED 2010.

REVISED STANDARD PLAN RSP ES-7M

2010 REVISED STANDARD PLAN RSP ES-7M

9-1-15

Dist	COUNTY	ROUTE	POST MILES TOTAL PROJECT	SHEET No.	TOTAL SHEETS
08	Riv	79	R33.9	94	101

REGISTERED CIVIL ENGINEER

October 30, 2015
PLANS APPROVAL DATE

REGISTERED PROFESSIONAL ENGINEER
Stanley P. Johnson
No. C57793
Exp. 3-31-16
CIVIL
STATE OF CALIFORNIA

THE STATE OF CALIFORNIA OR ITS OFFICERS OR AGENTS SHALL NOT BE RESPONSIBLE FOR THE ACCURACY OR COMPLETENESS OF SCANNED COPIES OF THIS PLAN SHEET.

TO ACCOMPANY PLANS DATED 03-15-16

2010 REVISED STANDARD PLAN RSP ES-7N

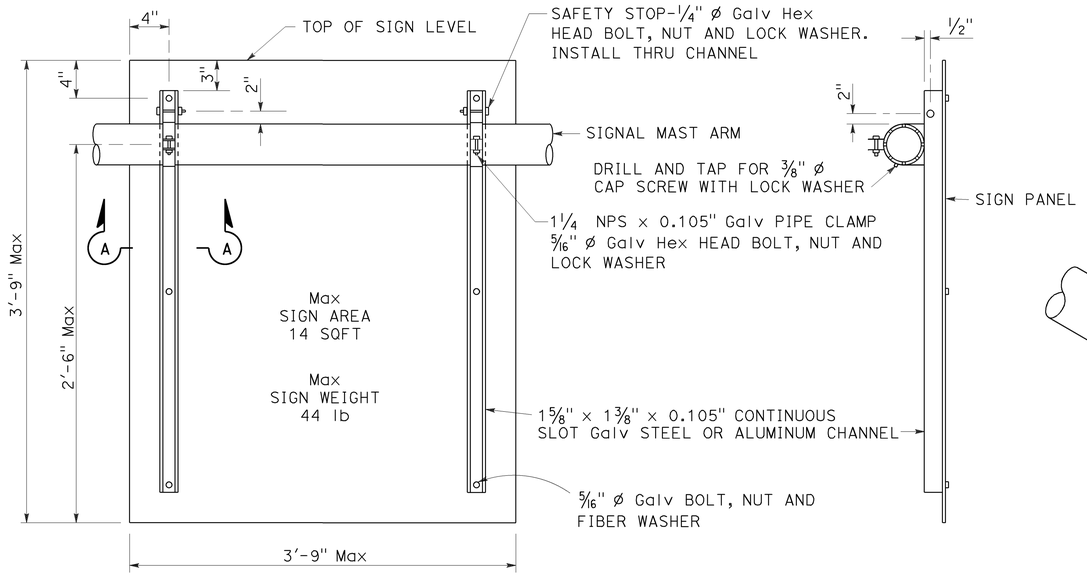

REAR VIEW

SIDE VIEW

SIGN MOUNTING DETAILS
DETAIL U

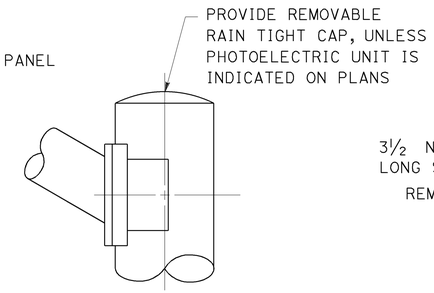

STANDARD TOP
DETAIL B-1

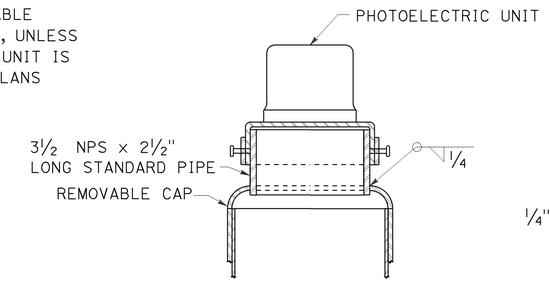

MOUNTING ADAPTER FOR
PHOTOELECTRIC UNIT
DETAIL B-2

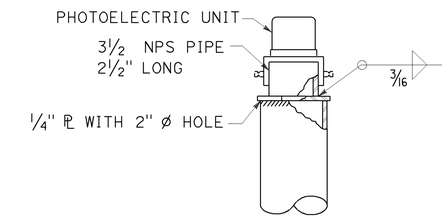

ALTERNATIVE
MOUNTING ADAPTER
DETAIL B-3

POLE TOP DETAILS
DETAIL B

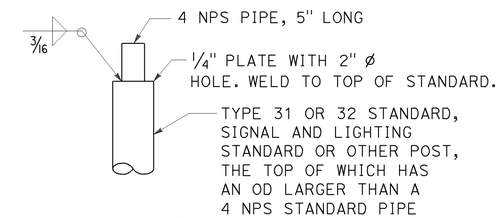

DETAIL C-1

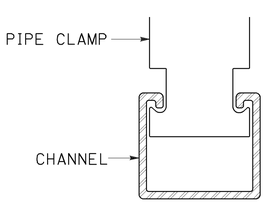

SECTION A-A

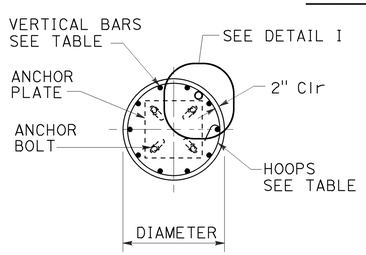

SECTION B-B

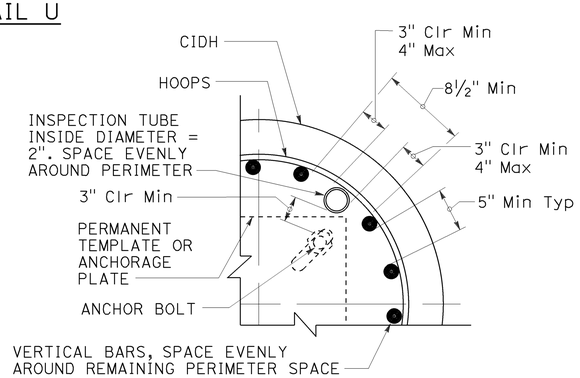

INSPECTION TUBE PLACEMENT
DETAIL I

CIDH REINFORCING AND INSPECTION TUBE SCHEDULE			
CIDH DIAMETER	VERTICAL BARS	HOOPS (WELDED)	INSPECTION TUBE
2 ft	8-#5	#4 AT 6	2
2.5 ft	10-#6		4*
3 ft	12-#7	#5 AT 6	
3.5 ft	14-#8		4
4 ft	18-#9	2-#4 AT 7	5
5 ft	22-#10	2-#5 AT 7	6
6 ft	26-#11	2-#6 AT 7	7

* FOR SLIP BASE VERSIONS WITH 3 ANCHOR BOLTS USE 3 INSPECTION TUBES.

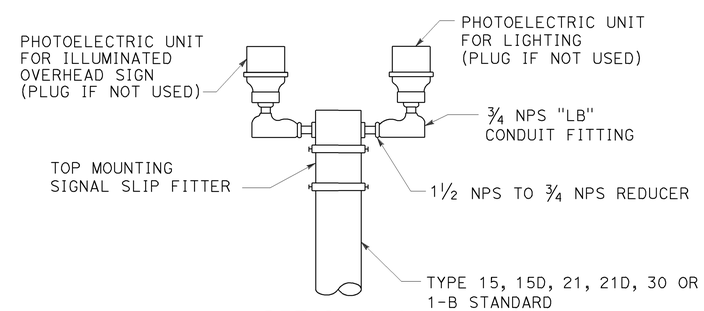

DETAIL C-2

DUAL PHOTOELECTRIC UNIT MOUNTING DETAIL
DETAIL C

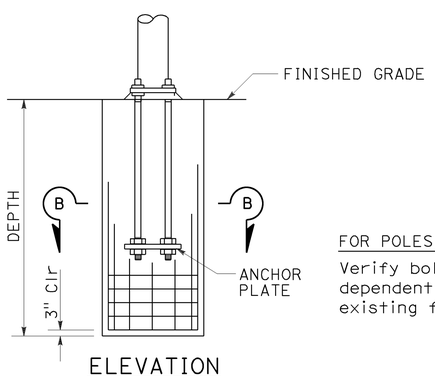

ELEVATION

FOR POLES TO BE INSTALLED ON EXISTING FOUNDATION:
Verify bolt circles, anchor bolt sizes and dependent dimensions for poles to be installed on existing foundations before fabricating the poles.

CAST-IN-DRILLED-HOLE PILE FOUNDATION, REINFORCED PILE
DETAIL A

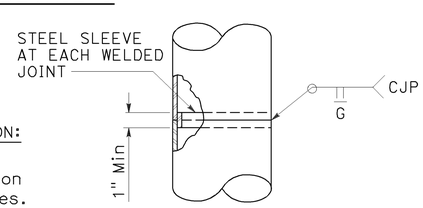

FOR UNIFORM TUBE THICKNESS
DETAIL T-1

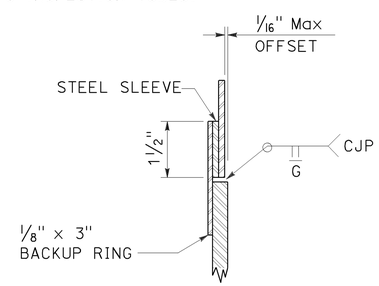

AT TUBE THICKNESS CHANGE
DETAIL T-2

POLE SPLICES
DETAIL T

STATE OF CALIFORNIA
DEPARTMENT OF TRANSPORTATION

ELECTRICAL SYSTEMS (SIGNAL AND LIGHTING STANDARD, DETAIL No. 2)

NO SCALE

RSP ES-7N DATED OCTOBER 30, 2015 SUPERSEDES STANDARD PLAN ES-7N DATED MAY 20, 2011 - PAGE 475 OF THE STANDARD PLANS BOOK DATED 2010.

REVISED STANDARD PLAN RSP ES-7N

9-1-15

Dist	COUNTY	ROUTE	POST MILES TOTAL PROJECT	SHEET No.	TOTAL SHEETS
08	Riv	79	R33.9	95	101

REGISTERED CIVIL ENGINEER

October 30, 2015
PLANS APPROVAL DATE

REGISTERED PROFESSIONAL ENGINEER
Stanley P. Johnson
No. C57793
Exp. 3-31-16
CIVIL
STATE OF CALIFORNIA

THE STATE OF CALIFORNIA OR ITS OFFICERS OR AGENTS SHALL NOT BE RESPONSIBLE FOR THE ACCURACY OR COMPLETENESS OF SCANNED COPIES OF THIS PLAN SHEET.

TO ACCOMPANY PLANS DATED 03-15-16

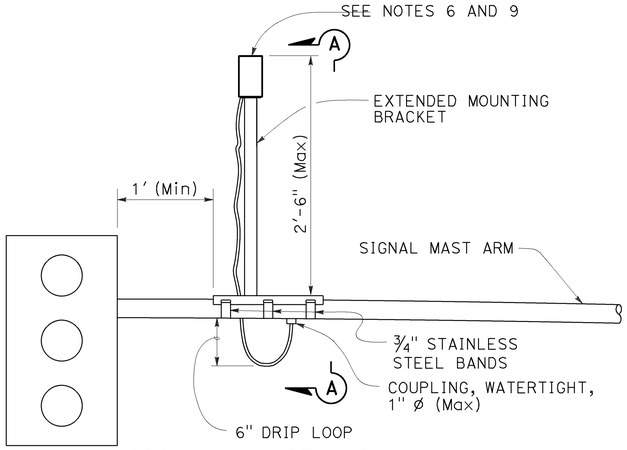

SIGNAL MAST ARM MOUNT

DETAIL A

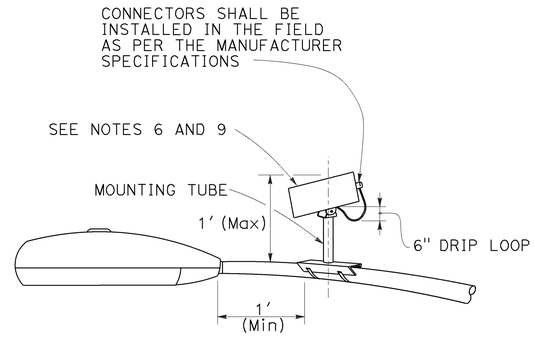

LUMINAIRE MAST ARM MOUNT

DETAIL B

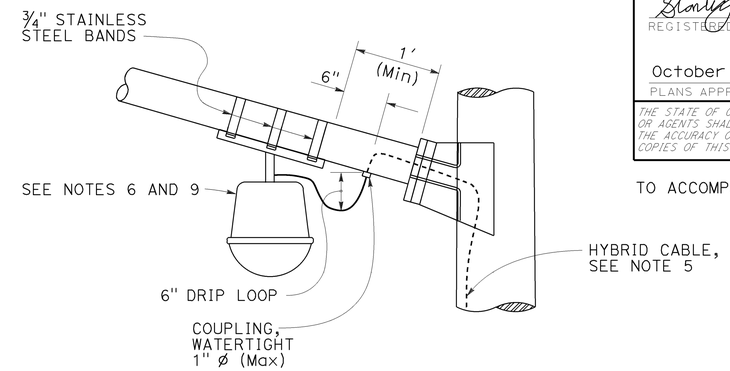

LUMINAIRE MAST ARM MOUNT

DETAIL C

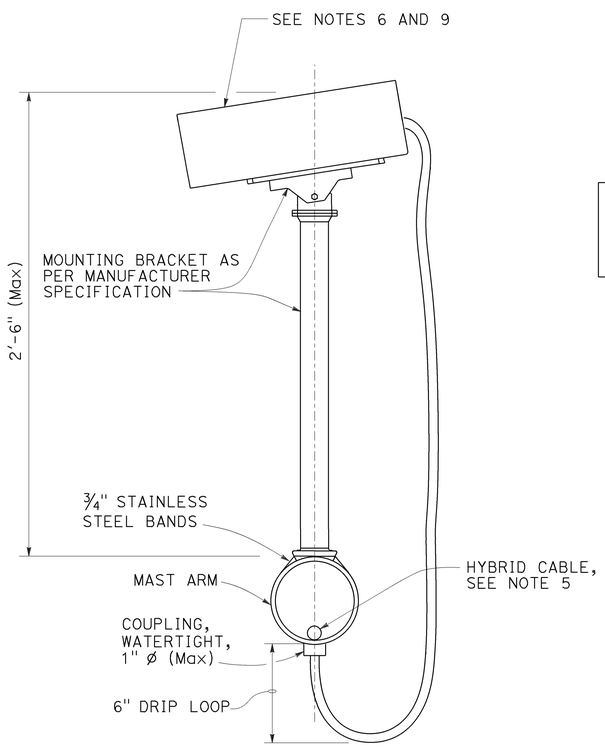

SECTION A-A

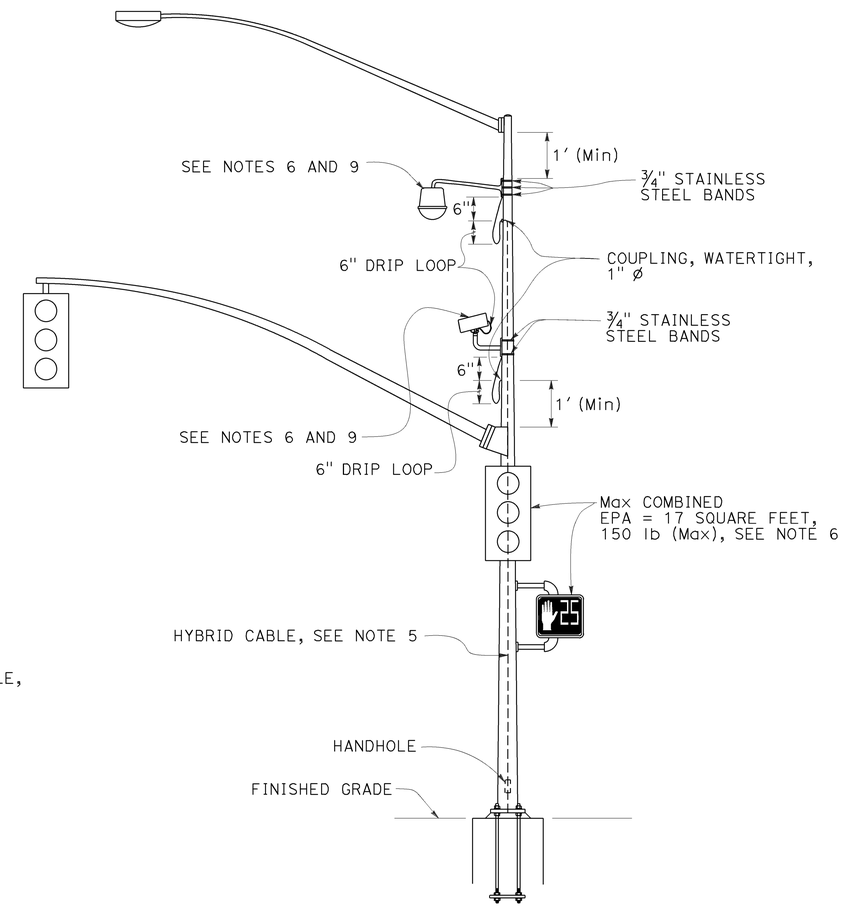

SIGNAL POLE MOUNT

DETAIL D

NOTES:

1. Exact mounting location of miscellaneous attachment and bracket shall be approved by the Engineer per manufacturer's recommendation.
2. Location of cable entrances on signal pole shall be a minimum of 1′ from any flange or base plate.
3. Hybrid cable entrances on signal pole shall be drilled for weathertight coupling as required.
4. Hybrid cable shall have a drip loop at the entrance into signal pole, luminaire mast arm and signal mast arm.
5. A single hybrid cable shall run continuous and shall not be twisted from the miscellaneous attachment to the controller cabinet. No splices shall be allowed.
6. Use the manufacturer's Effective Projected Area (EPA) for miscellaneous attachment. The maximum EPA for each miscellaneous attachment shall be 1.6 square feet with 10 lb Max.
7. Maximum of two miscellaneous attachments per traffic signal standard.
8. Maximum of one miscellaneous attachment per mast arm.
9. Miscellaneous attachment shall be mounted using clamping devices.

STATE OF CALIFORNIA
DEPARTMENT OF TRANSPORTATION

ELECTRICAL SYSTEMS (SIGNAL AND LIGHTING, MISCELLANEOUS ATTACHMENT)

NO SCALE

RSP ES-7R DATED OCTOBER 30, 2015 SUPERSEDES RSP ES-7R DATED JULY 19, 2013 AND STANDARD PLAN ES-7R DATED MAY 20, 2011 - PAGE 479 OF THE STANDARD PLANS BOOK DATED 2010.

REVISED STANDARD PLAN RSP ES-7R

2010 REVISED STANDARD PLAN RSP ES-7R

8-21-15

DIST	COUNTY	ROUTE	POST MILES TOTAL PROJECT	SHEET NO.	TOTAL SHEETS
08	Riv	79	R33.9	96	101

Theresa Gabriel
REGISTERED ELECTRICAL ENGINEER

October 30, 2015
PLANS APPROVAL DATE

REGISTERED PROFESSIONAL ENGINEER Theresa Aziz Gabriel No. E15129 Exp. 6-30-16 ELECTRICAL STATE OF CALIFORNIA

THE STATE OF CALIFORNIA OR ITS OFFICERS OR AGENTS SHALL NOT BE RESPONSIBLE FOR THE ACCURACY OR COMPLETENESS OF SCANNED COPIES OF THIS PLAN SHEET.

TO ACCOMPANY PLANS DATED 03-15-16

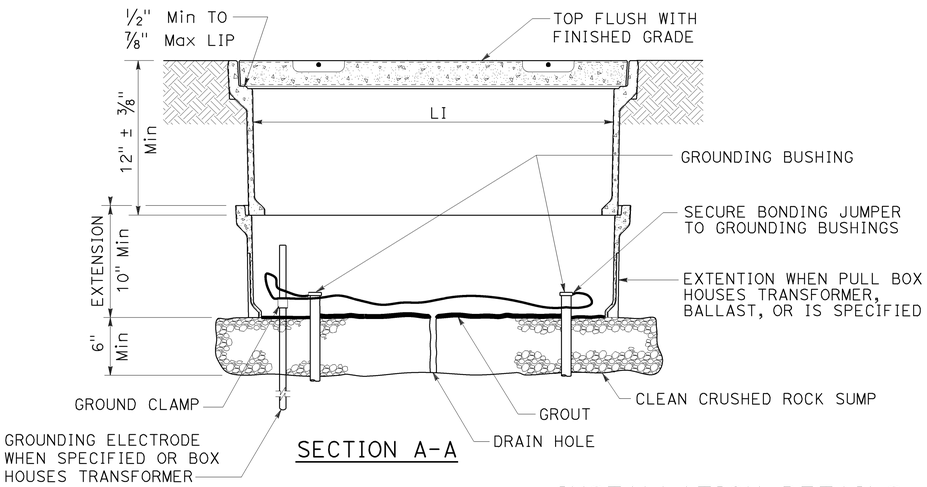

SECTION A-A

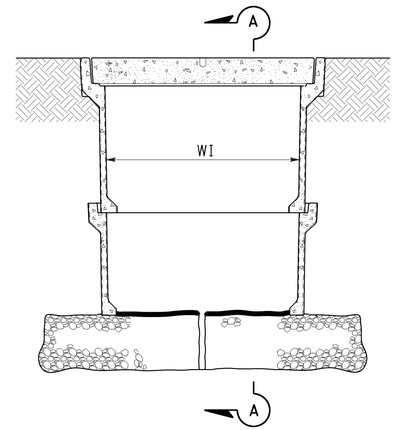

SIDE VIEW

INSTALLATION DETAILS

DETAIL A

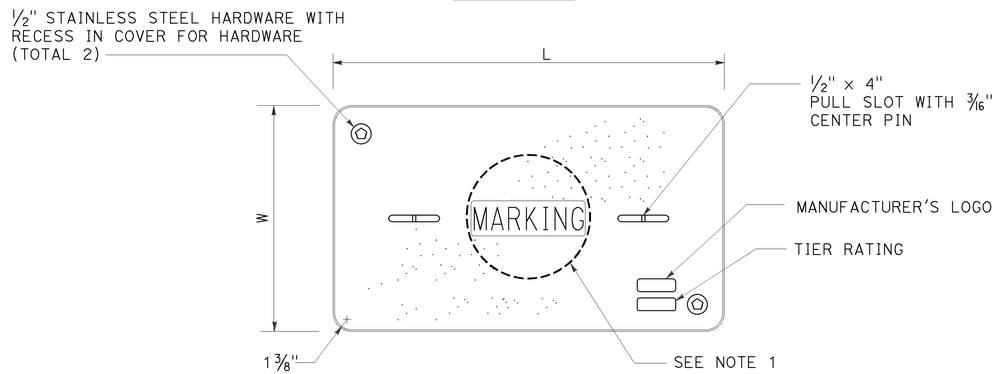

COVER TOP VIEW

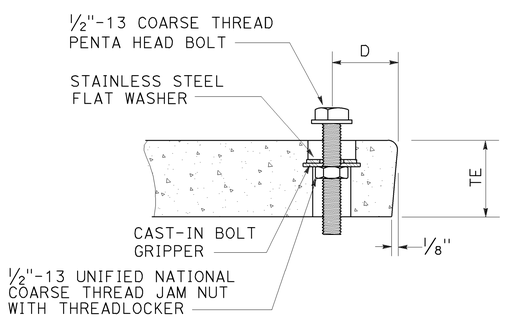

TYPICAL COVER CAPTIVE BOLT

OR SIMILAR

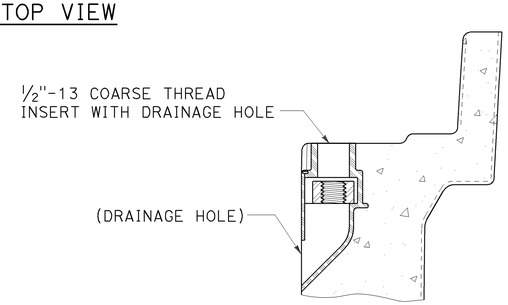

TYPICAL THREADED INSERT

OR SIMILAR

NOTES:

1. Pull box covers shall be marked as follows: "SERVICE" Service circuits between service point and service disconnect; "SPRINKLER-CONTROL" sprinkler control circuits, 50 V or less; "CALTRANS" on all pull boxes, except pull boxes marked "SPRINKLER-CONTROL"; and "TELEPHONE" Telephone service;
   - A) No. 3½ pull box.
     - 1) "SIGNAL" - Traffic signal circuits with or without lighting or sign lighting circuits.
     - 2) "LIGHTING" - Lighting or sign lighting circuits where voltage is under 600 V.
   - B) No. 5, 6, 9 or 9A pull box.
     - 1) "TRAFFIC SIGNAL" - Traffic signal circuits with or without lighting or sign lighting circuits.
     - 2) "LIGHTING" - Lighting or sign lighting circuits where voltage is under 600 V.
     - 3) "LIGHTING-HIGH VOLTAGE" - Lighting or sign lighting circuits where voltage is above 600 V.
     - 4) "IRRIGATION" - Circuits to irrigation controller 120 V or more.
     - 5) "RAMP METER" - Ramp meter circuits.
     - 6) "COUNT STATION" - Count or speed monitor circuits.
     - 7) "COMMUNICATIONS" - Communication circuits.
     - 8) "TOS COMMUNICATIONS" - TOS communication line.
     - 9) "TOS POWER" - TOS power.
     - 10) "TDC POWER" - Telephone demarcation cabinet power.
     - 11) "CCTV" - Closed circuit television circuits.
     - 12) "TMS" - Traffic monitoring station circuits.
     - 13) "CMS" - Changeable message sign circuits.
     - 14) "HAR" - Highway advisory radio circuits.
     - 15) "BOOSTER PUMP" - Booster pump circuit.
2. The nominal dimensions of the opening in which the cover sets shall be the same as the cover dimensions except the length and width dimensions shall be ⅛" greater.
3. Covers and boxes shall be interchangeable with California standard male and female gages. When interchanged with a standard male or female gage, the top surfaces shall be flush within ⅛". Top outside radius of covers and pull boxes shall have a ⅛" radius.
4. Pull box extension may be another pull box as long as the bottom edge of the pull box can fit into the cover opening.
5. Dimensions for the cover for non-traffic pull box are nominal values.

DIMENSION TABLE

PULL BOX	PULL BOX					COVER				
	MINIMUM DEPTH BOX	MINIMUM DEPTH EXTENSION	MINIMUM WEIGHT	LI Min	WI Min	TE	D	L	W	MINIMUM WEIGHT
No. 3½	12"	N/A	40 lb	1' - 3"	9"	1¾"	1¾"	1'-3¼" - 1'-3⅜"	10" - 10⅛"	30 lb
No. 5	12"	10"	55 lb	1' - 8"	11"	2"	1¾"	1'-11¼"	1'-1¾"	60 lb
No. 6	12"	10"	70 lb	2' - 4¼"	1' - 3¼"	2"	2"	2'-6½"	1'-5½"	85 lb

STATE OF CALIFORNIA
DEPARTMENT OF TRANSPORTATION

ELECTRICAL SYSTEMS (NON-TRAFFIC PULL BOX)

NO SCALE

RSP ES-8A DATED OCTOBER 30, 2015 SUPERSEDES RSP ES-8A DATED JULY 19, 2013 AND RSP ES-8A DATED JANUARY 20, 2012 THAT SUPPLEMENTS THE STANDARD PLANS BOOK DATED 2010.

REVISED STANDARD PLAN RSP ES-8A

2010 REVISED STANDARD PLAN RSP ES-8A

8-25-15

DIST	COUNTY	ROUTE	POST MILES TOTAL PROJECT	SHEET NO.	TOTAL SHEETS
08	Riv	79	R33.9	97	101

Theresa Gabriel
REGISTERED ELECTRICAL ENGINEER

October 30, 2015
PLANS APPROVAL DATE

REGISTERED PROFESSIONAL ENGINEER
Theresa Aziz Gabriel
No. E15129
Exp. 6-30-16
ELECTRICAL
STATE OF CALIFORNIA

THE STATE OF CALIFORNIA OR ITS OFFICERS OR AGENTS SHALL NOT BE RESPONSIBLE FOR THE ACCURACY OR COMPLETENESS OF SCANNED COPIES OF THIS PLAN SHEET.

TO ACCOMPANY PLANS DATED 03-15-16

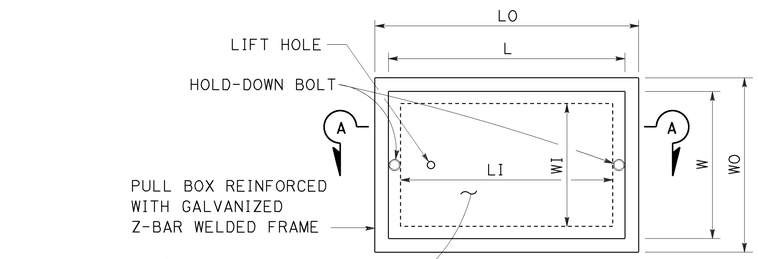

TOP VIEW

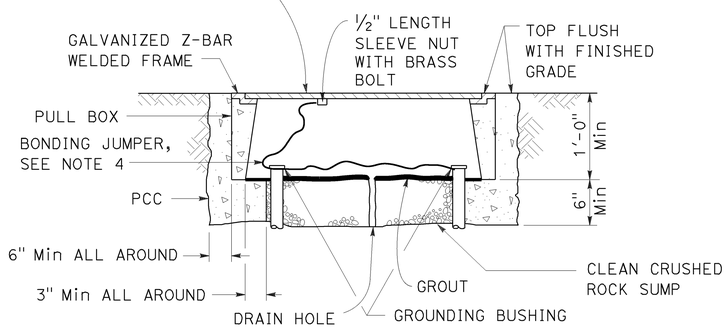

SECTION A-A

No. 3½(T), No. 5(T) AND No. 6(T) TRAFFIC PULL BOX

NOTES:

1. Traffic pull box shall be provided with steel cover and special concrete footing. Steel cover shall have embossed non-skid pattern.
2. Steel reinforcing shall be as regularly used in the standard products of the respective manufacturer.
3. Pull box covers shall be marked as follows: "SERVICE" Service circuits between service point and service disconnect; "SPRINKLER-CONTROL" Sprinkler control circuits, 50 V or less; "CALTRANS" On all pull boxes, except pull boxes marked "SPRINKLER-CONTROL"; and "TELEPHONE" Telephone service.
   A) No. 3½(T) pull box.
      1) "SIGNAL" - Traffic signal circuits with or without lighting or sign lighting circuits.
      2) "LIGHTING" - Lighting or sign lighting circuits where voltage is under 600 V.
   B) No. 5(T) or 6(T) pull box.
      1) "TRAFFIC SIGNAL" - Traffic signal circuits with or without lighting or sign lighting circuits.
      2) "LIGHTING" - Lighting or sign lighting circuits where voltage is under 600 V.
      3) "LIGHTING-HIGH VOLTAGE" - Lighting or sign lighting circuits where voltage is above 600 V.
      4) "IRRIGATION" - Circuits to irrigation controller 120 V or more.
      5) "RAMP METER" - Ramp meter circuits.
      6) "COUNT STATION" - Count or speed monitor circuits.
      7) "COMMUNICATION" - Communication circuits.
      8) "TOS COMMUNICATIONS" - TOS communications line.
      9) "TOS POWER" - TOS power.
      10) "TDC POWER" - Telephone demarcation cabinet power.
      11) "CCTV" - Closed circuit television circuits.
      12) "TMS" - Traffic monitoring station circuits.
      13) "CMS" - Changeable message sign circuits.
      14) "HAR" - Highway advisory radio circuits.
      15) "BOOSTER PUMP" - Booster pump circuit.
4. Bonding jumper for metal covers shall be 3' long, minimum.
5. The nominal dimensions of the opening in which the cover sets shall be the same as the cover dimensions except the length and width dimensions shall be ⅛" greater.
6. Covers and boxes shall be interchangeable with California standard male and female gages. When interchanged with a standard male or female gage, the top surfaces shall be flush within ⅛".

DIMENSION TABLE

PULL BOX	PULL BOX						COVER	
	MINIMUM * THICKNESS	MINIMUM DEPTH BOX AND EXTENSION	LO	LI	WO	WI	L **	W **
No. 3½(T)	1½"	1'-0"	1'-10" - 1'-11"	1'-5" - 1'-6½"	1'-3" - 1'-4"	10" - 1'-0"	1'-8" -1'-8½"	1'-1" - 1'-2"
No. 5(T)	1¾"	1'-0"	2'-5" - 2'-6"	2'-0" - 2'-1"	1'-6" - 1'-7"	1'-1" - 1'-2"	2'-3" - 2'-3½"	1'-4" - 1'-4½"
No. 6(T)	2"	1'-0"	2'-11" - 3'-1"	2'-6" - 2'-7"	1'-10" - 2'-0"	1'-5" - 1'-6"	2'-9" - 2'-9½"	1'-8" - 1'-8½"

* EXCLUDING CONDUIT WEB ** TOP DIMENSION

STATE OF CALIFORNIA
DEPARTMENT OF TRANSPORTATION

ELECTRICAL SYSTEMS (TRAFFIC PULL BOX)

NO SCALE

RSP ES-8B DATED OCTOBER 30, 2015 SUPERSEDES RSP ES-8B DATED JULY 19, 2013 AND RSP ES-8B DATED JANUARY 20, 2012 THAT SUPPLEMENTS THE STANDARD PLANS BOOK DATED 2010.

REVISED STANDARD PLAN RSP ES-8B

2010 REVISED STANDARD PLAN RSP ES-8B

Dist	COUNTY	ROUTE	POST MILES TOTAL PROJECT	SHEET No.	TOTAL SHEETS
08	Riv	79	R33.9	98	101

Theresa Gabriel
REGISTERED ELECTRICAL ENGINEER

October 30, 2015
PLANS APPROVAL DATE

REGISTERED PROFESSIONAL ENGINEER
Theresa Aziz Gabriel
No. E15129
Exp. 6-30-16
ELECTRICAL
STATE OF CALIFORNIA

THE STATE OF CALIFORNIA OR ITS OFFICERS OR AGENTS SHALL NOT BE RESPONSIBLE FOR THE ACCURACY OR COMPLETENESS OF SCANNED COPIES OF THIS PLAN SHEET.

TO ACCOMPANY PLANS DATED 03-15-16

NOTE:

Curves represent the minimum footcandle (FC).

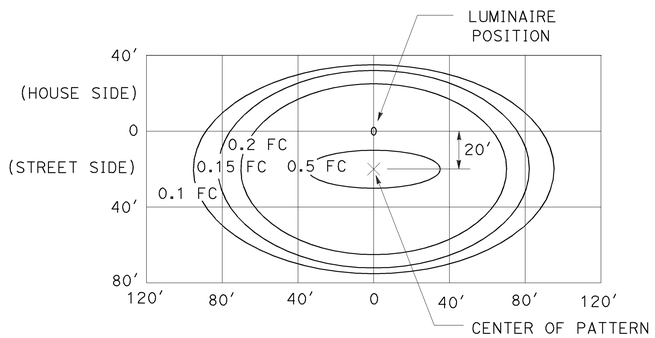

LED LUMINAIRE 165 W

34′ Mounting Height

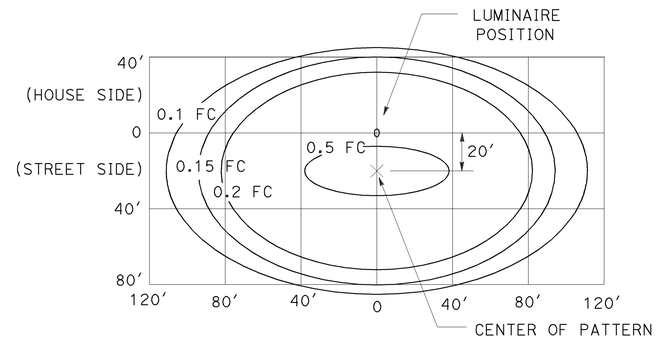

LED LUMINAIRE 235 W

40′ Mounting Height

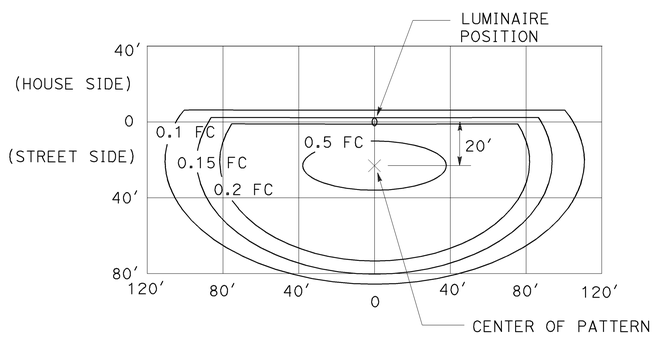

LED LUMINAIRE 235 W

40′ Mounting Height
with back side control

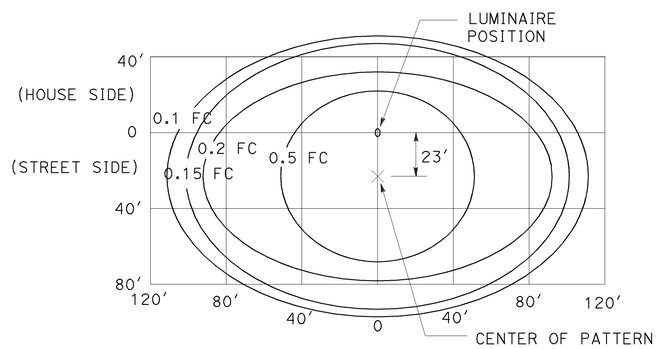

LED LUMINAIRE 300 W

40′ Mounting Height

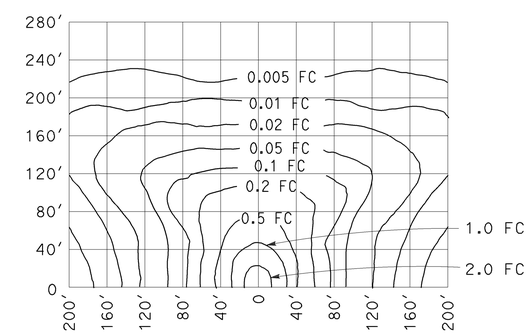

LOW-PRESSURE SODIUM LUMINAIRE 180 W

40′ Mounting Height
Lamp operated at 33,000 lm

STATE OF CALIFORNIA
DEPARTMENT OF TRANSPORTATION

ELECTRICAL SYSTEMS (ISOFOOTCANDLE CURVES)

NO SCALE

RSP ES-10A DATED OCTOBER 30, 2015 SUPERSEDES RSP ES-10A DATED JULY 19, 2013 THAT SUPPLEMENTS THE STANDARD PLANS BOOK DATED 2010.

REVISED STANDARD PLAN RSP ES-10A

2010 REVISED STANDARD PLAN RSP ES-10A

9-29-15

Dist	COUNTY	ROUTE	POST MILES TOTAL PROJECT	SHEET No.	TOTAL SHEETS
08	Riv	79	R33.9	99	101

REGISTERED CIVIL ENGINEER

July 19, 2013
PLANS APPROVAL DATE

Registered Professional Engineer — Stanley P. Johnson, No. C57793, Exp. 3-31-14, CIVIL, State of California

THE STATE OF CALIFORNIA OR ITS OFFICERS OR AGENTS SHALL NOT BE RESPONSIBLE FOR THE ACCURACY OR COMPLETENESS OF SCANNED COPIES OF THIS PLAN SHEET.

TO ACCOMPANY PLANS DATED 03-15-16

STANDARD TYPE	SETBACK (DIMENSION A)
32	30'-0" (Min)
31	20'-0" (Min)
15, 15D, 15-SB, 21, 21D, 30	ARM LENGTH (Min)

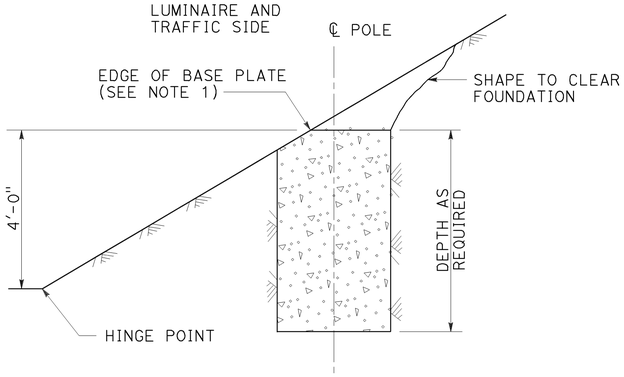

CUT SLOPES
STEEPER THAN 4:1,
LESS THAN 2:1
DETAIL A-1
See Note 2 and 3

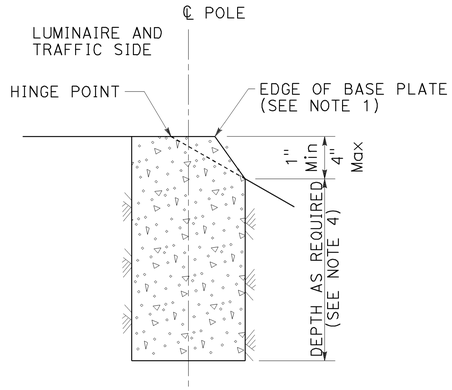

FILL SLOPES
STEEPER THAN 4:1,
LESS THAN 2:1
DETAIL A-2
See Note 2 and 3

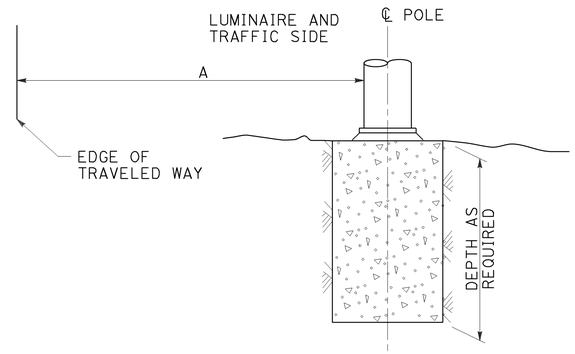

FLAT SECTIONS, CUT OR FILL SLOPES
4:1 OR FLATTER
DETAIL A-3
See Note 2

FOUNDATIONS ADJACENT TO ALL ROADWAYS EXCEPT
IN SIDEWALK, MEDIAN AND ISLAND AREAS
DETAIL A

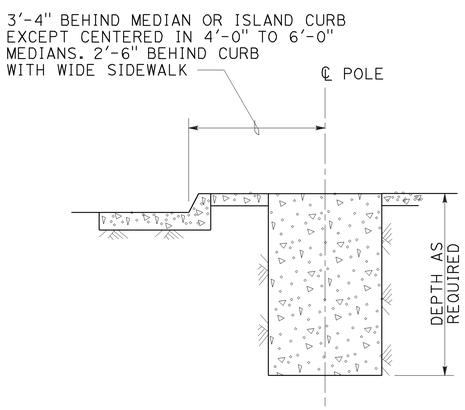

MEDIAN, ISLAND
OR WIDE SIDEWALK
DETAIL B-1
7' Wide and wider

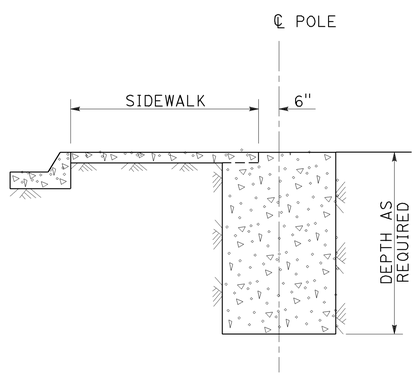

NARROW SIDEWALK
DETAIL B-2
Less than 7' wide

FOUNDATIONS IN SIDEWALK, MEDIAN AND ISLAND AREAS
DETAIL B

NOTES:

1. Where a portion of the foundation is above grade, the top edges shall have a 1" chamfer.
2. Slopes shall be horizontal to vertical ratio (Horizontal : Vertical).
3. Horizontal setbacks on cut and fill slopes steeper than 4:1 shall not exceed the distance shown for flat sections.
4. CIDH embedment depth shall be increased beyond standard depths by the diameter of the CIDH.

STATE OF CALIFORNIA
DEPARTMENT OF TRANSPORTATION

ELECTRICAL SYSTEMS (FOUNDATION INSTALLATIONS)

NO SCALE

RSP ES-11 DATED JULY 19, 2013 SUPERSEDES STANDARD PLAN ES-11
DATED MAY 20, 2011 - PAGE 488 OF THE STANDARD PLANS BOOK DATED 2010.

REVISED STANDARD PLAN RSP ES-11

2010 REVISED STANDARD PLAN RSP ES-11

7-9-13

Dist	COUNTY	ROUTE	POST MILES TOTAL PROJECT	SHEET No.	TOTAL SHEETS
08	Riv	79	R33.9	100	101

Theresa Gabriel
REGISTERED ELECTRICAL ENGINEER

October 30, 2015
PLANS APPROVAL DATE

REGISTERED PROFESSIONAL ENGINEER
Theresa Aziz Gabriel
No. E15129
Exp. 6-30-16
ELECTRICAL
STATE OF CALIFORNIA

THE STATE OF CALIFORNIA OR ITS OFFICERS OR AGENTS SHALL NOT BE RESPONSIBLE FOR THE ACCURACY OR COMPLETENESS OF SCANNED COPIES OF THIS PLAN SHEET.

TO ACCOMPANY PLANS DATED 03-15-16

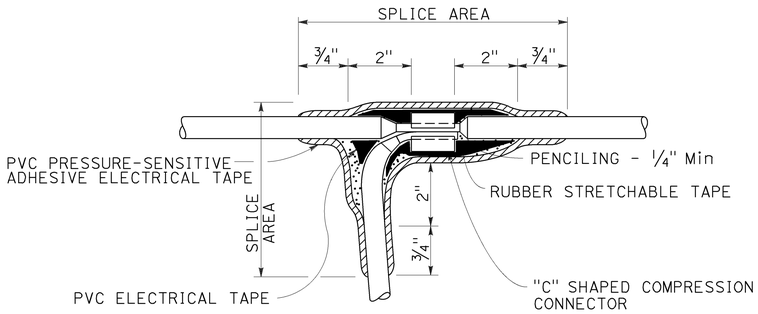

TYPE C SPLICE

See Note 3

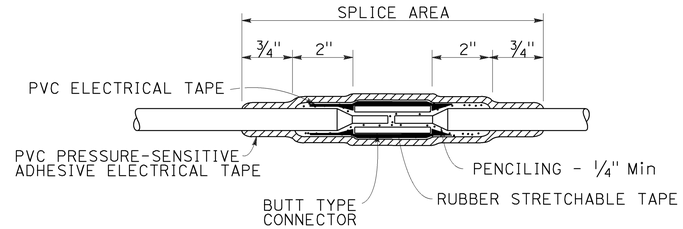

TYPE S SPLICE

See Note 4

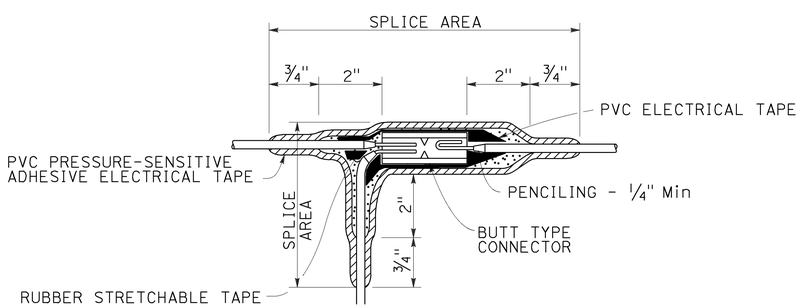

TYPE ST SPLICE

See Note 5

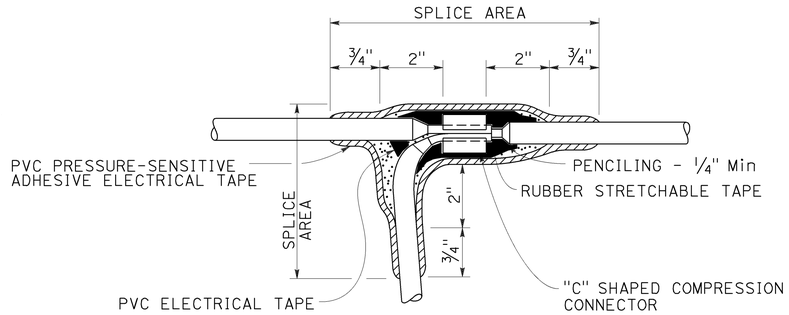

TYPE T SPLICE

See Note 5

NOTES:

1. Dimensions are minimum.
2. Rubber tapes shall be rolled after application.
3. Between 1 free-end and 1 through conductor.
4. Between 2 free-end conductors.
5. Between 3 free-end conductors.

STATE OF CALIFORNIA
DEPARTMENT OF TRANSPORTATION

ELECTRICAL SYSTEMS (SPLICING DETAILS)

NO SCALE

RSP ES-13A DATED OCTOBER 30, 2015 SUPERSEDES STANDARD PLAN ES-13A DATED MAY 20, 2011 - PAGE 491 OF THE STANDARD PLANS BOOK DATED 2010.

REVISED STANDARD PLAN RSP ES-13A

2010 REVISED STANDARD PLAN RSP ES-13A

9-28-15

Dist	COUNTY	ROUTE	POST MILES TOTAL PROJECT	SHEET No.	TOTAL SHEETS
08	Riv	79	R33.9	101	101

Theresa Gabriel
REGISTERED ELECTRICAL ENGINEER

April 15, 2016
PLANS APPROVAL DATE

REGISTERED PROFESSIONAL ENGINEER
Theresa Aziz Gabriel
No. E15129
Exp. 6-30-16
ELECTRICAL
STATE OF CALIFORNIA

THE STATE OF CALIFORNIA OR ITS OFFICERS OR AGENTS SHALL NOT BE RESPONSIBLE FOR THE ACCURACY OR COMPLETENESS OF SCANNED COPIES OF THIS PLAN SHEET.

TO ACCOMPANY PLANS DATED 03-15-16

CIRCUIT VOLTAGE	FUSE VOLTAGE RATING	FUSE CURRENT RATING						
		HPS LAMP BALLAST		LOW PRESSURE SODIUM BALLAST	INDUCTION SIGN LIGHTING	SINGLE PHASE (TWO WIRE) TRANSFORMERS (PRIMARY SIDE)		
		70 W	100 W	180 W	85 W	1 kVA	2 kVA	3 kVA
120 V	250 V	5 A	5 A	5 A	5 A	10 A	20 A	30 A
240 V	250 V	5 A	5 A	5 A	5 A	6 A	10 A	20 A
480 V	500-600 V	5 A	5 A	3 A	1 A (SEE NOTE 2)	3 A	6 A	10 A

NOTES:

1. Primary lines of multiple ballasts shall be provided with fused connectors. Fuse ratings shall be as noted above.
2. See Standard Plan ES-15D, Type SC3 control.

FUSE RATINGS FOR FUSED CONNECTORS

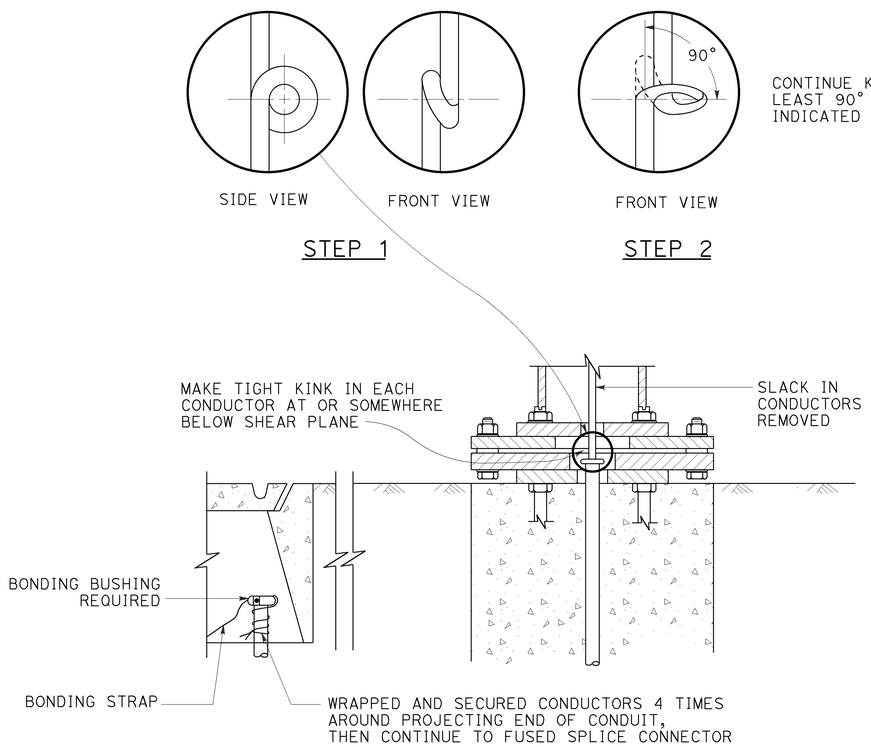

KINKING DETAIL FOR SLIP BASE STANDARDS

DETAIL A

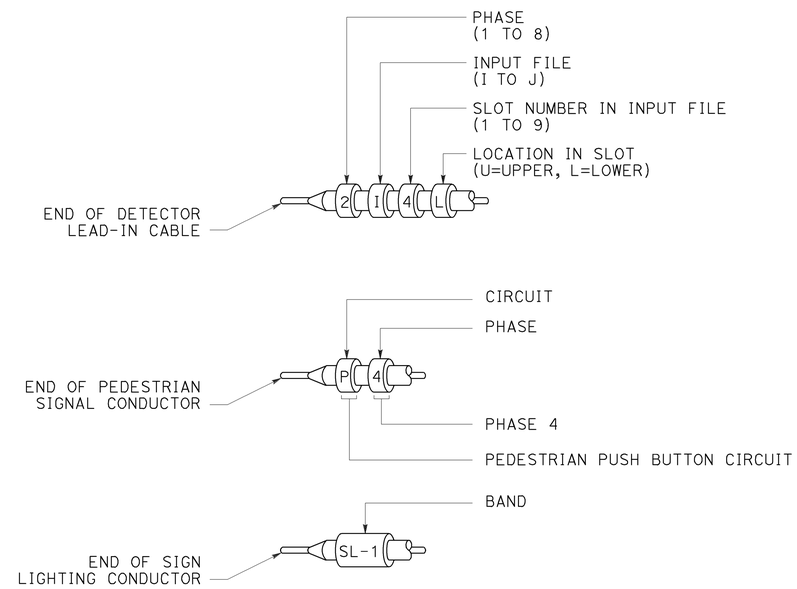

TYPICAL BANDING DETAILS

DETAIL B

STATE OF CALIFORNIA
DEPARTMENT OF TRANSPORTATION

ELECTRICAL SYSTEMS (FUSE RATING, KINKING AND BANDING DETAIL)

NO SCALE

RSP ES-13B DATED APRIL 15, 2016 SUPERSEDES STANDARD PLAN ES-13B DATED OCTOBER 30, 2015 - PAGE 485 OF THE STANDARD PLANS BOOK DATED 2015.

REVISED STANDARD PLAN RSP ES-13B

2015 REVISED STANDARD PLAN RSP ES-13B

1-12-16