Dist	COUNTY	ROUTE	POST MILES TOTAL PROJECT	SHEET No.	TOTAL SHEETS
08	SBd	10	0.0/30.9	19	115

REGISTERED CIVIL ENGINEER 8-28-14 DATE

8-25-14
PLANS APPROVAL DATE

REGISTERED PROFESSIONAL ENGINEER WILLIAM AMBROSE No. C72098 Exp. 6-30-16 CIVIL STATE OF CALIFORNIA

THE STATE OF CALIFORNIA OR ITS OFFICERS OR AGENTS SHALL NOT BE RESPONSIBLE FOR THE ACCURACY OR COMPLETENESS OF SCANNED COPIES OF THIS PLAN SHEET.

CONSTRUCTION NOTES:

(1) CONNECT TO EXIST CRASH CUSHION, REFER TO SCI PRODUCTS INC. INSTALLATION MANUAL.

LOCATION CHART

LOCATION	PM	DIRECTION	DESCRIPTION
W-29	0.81	WB	NEAR WB EXIT RAMP TO MONTE VISTA Ave

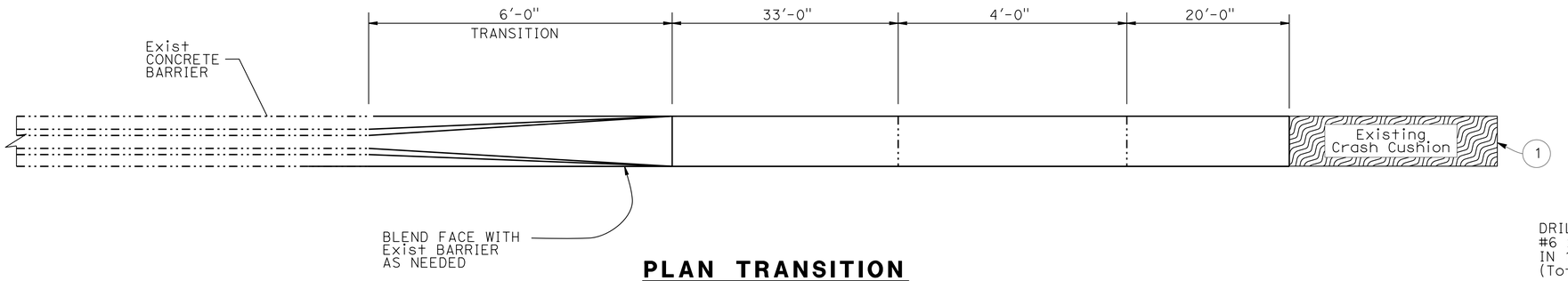

PLAN TRANSITION

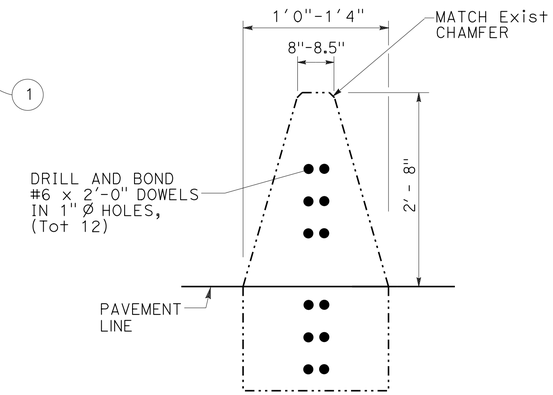

SECTION B-B

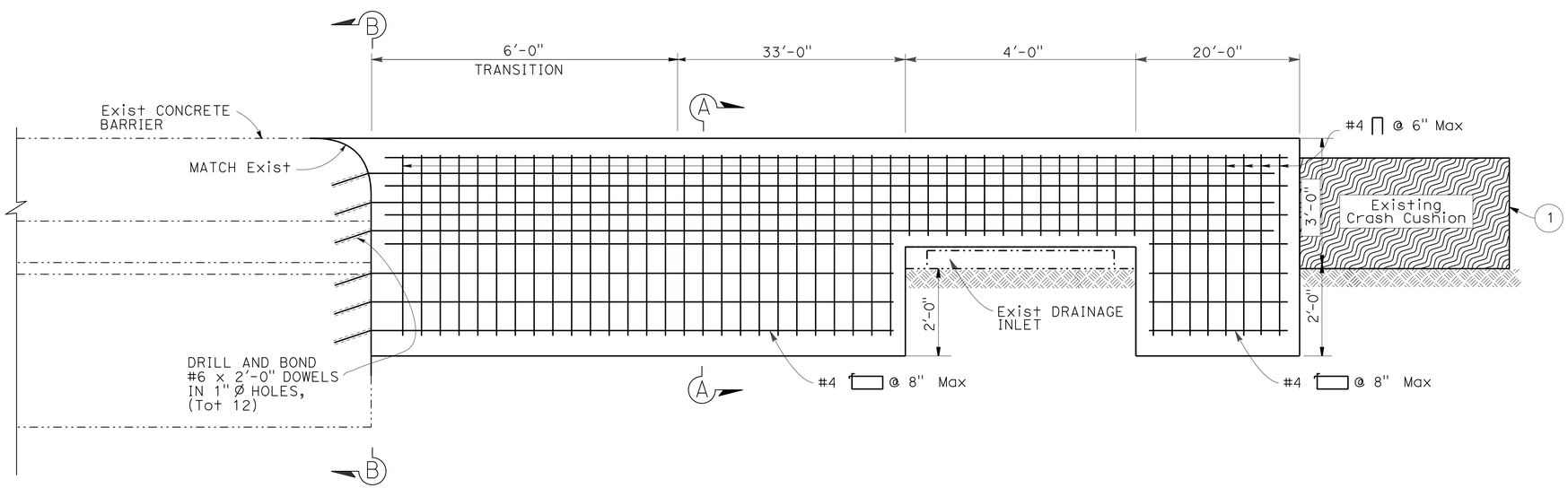

ELEVATION

ANCHOR BLOCK

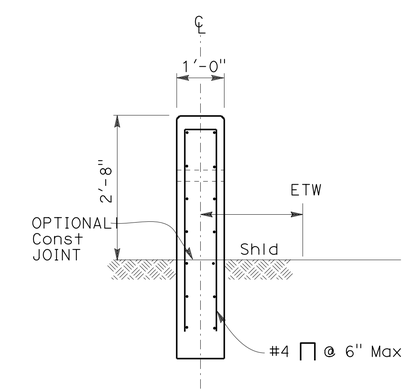

SECTION A-A

1 REPLACED PER ADDENDUM No. 1 DATED OCTOBER 24, 2014

CONSTRUCTION DETAILS

NO SCALE

C-14

STATE OF CALIFORNIA - DEPARTMENT OF TRANSPORTATION
Caltrans MAINTENANCE DESIGN

FUNCTIONAL SUPERVISOR: KUANG H. CHEN
CALCULATED-DESIGNED BY: WILLIAM AMBROSE
CHECKED BY: KUANG H. CHEN
REVISED BY
DATE REVISED

LAST REVISION 08-28-14
DATE PLOTTED => 23-OCT-2014
TIME PLOTTED => 14:38

Dist	COUNTY	ROUTE	POST MILES TOTAL PROJECT	SHEET No.	TOTAL SHEETS
08	SBd	10	0.0/30.9	55	115

REGISTERED CIVIL ENGINEER 8-28-14 DATE

8-25-14
PLANS APPROVAL DATE

REGISTERED PROFESSIONAL ENGINEER TRAN HOANG No. C54996 Exp. 6-30-16 CIVIL STATE OF CALIFORNIA

THE STATE OF CALIFORNIA OR ITS OFFICERS OR AGENTS SHALL NOT BE RESPONSIBLE FOR THE ACCURACY OR COMPLETENESS OF SCANNED COPIES OF THIS PLAN SHEET.

PAVEMENT DELINEATION QUANTITIES

LOCATION	DIRECTION	DETAIL # OR MARKING	PAVEMENT MARKER: NON-REFLECTIVE TYPE A	PAVEMENT MARKER: RETROREFLECTIVE TYPE D	PAVEMENT MARKER: RETROREFLECTIVE TYPE G	PAVEMENT MARKER: RETROREFLECTIVE TYPE H	THERMOPLASTIC TRAFFIC STRIPE (SPRAYABLE) 1: 4 INCH YELLOW	THERMOPLASTIC TRAFFIC STRIPE (SPRAYABLE) 1: 4 INCH WHITE	THERMOPLASTIC TRAFFIC STRIPE (SPRAYABLE) 1: 8 INCH WHITE	THERMOPLASTIC PAVEMENT MARKING	COMMENTS
			EA	EA	EA	EA	LF	LF	LF	SQFT	
PM 0 TO 30.9	EB	25				3400	163152				
PM 0 TO 30.9	EB	27B	1		1			163152			
PM 0 TO 8.3	EB	M9				2654	31824	31824			
PM 0 TO 8.3	EB	M10			802				12000		
PM 8.3 TO 9.2	EB	M10			320				4752		
PM 0 TO 10.0 (X3 LANES)	EB	13M	13212 ~~3303~~	3303	~~13212~~			158400			BLACK SHADOW
PM 10.0 TO 15.96 (X3 LANES)	EB	13M	7880 ~~1970~~	1970	~~7880~~			94406			
PM 15.96 TO 16.74 (X4 LANES)	EB	13M	1388		347			16473			
PM 16.73 TO 20.0 (X3 LANES)	EB	13M	4328		1082			51796			
PM 24.0 TO 30.9 (X3 LANES)	EB	13M	9120		2280			109296			BLACK SHADOW
PM 0.86 TO 1.07	EB	37			76				1108		
PM 1.43 TO 2.16	EB	37			174				3854		
PM 2.155 TO 2.188	EB	38A							175		
PM 6.38A3 TO 6.66	EB	37			100				1478		
PM 7.37 TO 7.86	EB	37			174				2578		
PM 7.86 TO 7.91	EB	38A							265		
PM 8.35 TO 8.4	EB	8						300			
PM 11.7 TO 11.947	EB	TYPE VI (R) ARROW								126	
PM 8.4 TO 8.8	EB	37			143				2112		
PM 15.38A6 TO 15.913	EB	37			188				2800		
PM 15.913 TO 15.978	EB	38A							370		
PM 18.82 TO 18.85	EB	8						159			
PM 20.16 TO 20.2	EB	8						212			
PM 21.17 TO 21.2	EB	8						159			
PM 22.164 TO 22.194	EB	8						159			
PM 22.9 TO 23.18	EB	37			101				1479		
PM 23.306 TO 23.694	EB	37			139				2049		
PM 23.694 TO 23.75	EB	38A							295		
PM 28.7 TO 29.23	EB	37			188				2800		
PM 29.23 TO 29.33	EB	38A							500		
PM 0 TO 9.2	EB	20 DIAMOND SYMBOLS	35928		11387			626336		440	
SUBTOTAL			~~20109~~		~~27553~~	6054	194976	~~463184~~	38615	566	
SHEET TOTAL			~~20109~~ 35928		~~33607~~ 17441			~~696775~~ 859927		566	

NOTES:

1. CONTRACTOR WILL REPLACE PAVEMENT DELINEATION IN KIND.
2. CONTRACTOR WILL PLACE DIAMOND SYMBOLS AT 1/4 MILE SPACING IN BOTH DIRECTION WITHIN THE POSTMILE SHOWN ON THE TABLE.

DETAIL 13M

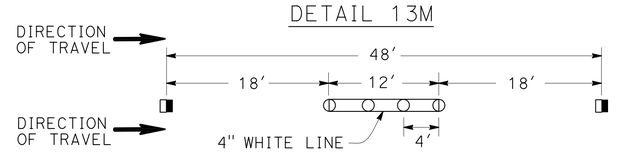

○ TYPE A WHITE NON-REFLECTIVE MARKER
◨ TYPE G ONE-WAY CLEAR RETROREFLECTIVE MARKER

1 REPLACED PER ADDENDUM No. 1 DATED OCTOBER 24, 2014

PAVEMENT DELINEATION QUANTITIES
PDQ-1

REVISED BY | DATE REVISED
TRAN HOANG | HORMUZD SETHNA
CALCULATED-DESIGNED BY | CHECKED BY
FUNCTIONAL SUPERVISOR: WILLIAM E. WASSER

STATE OF CALIFORNIA - DEPARTMENT OF TRANSPORTATION
Caltrans® TRAFFIC DESIGN

LAST REVISION 08-28-14 | DATE PLOTTED => 23-OCT-2014 | TIME PLOTTED => 14:38

Dist	COUNTY	ROUTE	POST MILES TOTAL PROJECT	SHEET No.	TOTAL SHEETS
08	SBd	10	0.0/30.9	56	115

REGISTERED CIVIL ENGINEER 8-28-14 DATE

8-25-14
PLANS APPROVAL DATE

REGISTERED PROFESSIONAL ENGINEER TRAN HOANG No. C54996 Exp. 6-30-16 CIVIL STATE OF CALIFORNIA

THE STATE OF CALIFORNIA OR ITS OFFICERS OR AGENTS SHALL NOT BE RESPONSIBLE FOR THE ACCURACY OR COMPLETENESS OF SCANNED COPIES OF THIS PLAN SHEET.

PAVEMENT DELINEATION QUANTITIES

LOCATION	DIRECTION	DETAIL # OR MARKING	PAVEMENT MARKER NON-REFLECTIVE TYPE A	PAVEMENT MARKER RETROREFLECTIVE TYPE D	PAVEMENT MARKER RETROREFLECTIVE TYPE G	PAVEMENT MARKER RETROREFLECTIVE TYPE H	THERMOPLASTIC TRAFFIC STRIPE (SPRAYABLE) 4 INCH YELLOW	THERMOPLASTIC TRAFFIC STRIPE (SPRAYABLE) 4 INCH WHITE	THERMOPLASTIC TRAFFIC STRIPE (SPRAYABLE) 8 INCH WHITE	THERMOPLASTIC PAVEMENT MARKING	COMMENTS
			EA	EA	EA	EA	LF	LF	LF	SQFT	
PM 0 TO 30.9	WB	25				3400	163152				
PM 0 TO 30.9	WB	27B						163152			
PM 0 TO 8.3	WB	M9				2820	43824	43824			
PM 0 TO 8.3	WB	M10			668				10000		
PM 8.3 TO 9.2	WB	M10			320				4752		
PM 0 TO 9.4 (X3 LANES)	WB	13M	12420		3105			148896			BLACK SHADOW
PM 9.4 TO 20 (X3 LANES)	WB	13M	4668		1167			167904			
PM 24.5 TO 30.9 (X3 LANES)	WB	13M	2820		705			101376			BLACK SHADOW
PM 0.468 TO 0.499	WB	8						165			
PM 0.88 TO 1.096	WB	37			78				1140		
PM 2.156 TO 2.196	WB	8						210			
PM 3.235 TO 3.278	WB	8						220			
PM 7.134 TO 7.189	WB	38A							300		
PM 7.189 TO 7.905	WB	37			254				3780		
PM 7.905 TO 7.968	WB	8						300			
PM 8.113 TO 8.166	WB	8						280			
PM 8.406 TO 8.437	WB	38A							160		
PM 8.437 TO 8.756	WB	37						114	1680		
PM 8.886 TO 8.93	WB	37			18				230		
PM 9.144	WB	3 TYPE VI ARROW								126	
PM 9.305 TO 9.366	WB	38A							320		
PM 9.366 TO 9.499	WB	37			48				700		
PM 9.545 TO 9.695	WB	37			54				800		
PM 10.46 TO 10.55	WB	38A							475		
PM 10.55 TO 10.98	WB	37			154				2270		
PM 10.98 TO 11.00	WB	8						100			
PM 12.99 TO 13.01	WB	8						100			
PM 15.01 TO 15.03	WB	8						100			
PM 15.39 TO 15.44	WB	8						260			
PM 15.44 TO 15.91	WB	37							2480		
PM 16.49 TO 16.54	WB	38A						260			
PM 16.54 TO 16.73	WB	37			70			1000			
PM 18.21 TO 18.27	WB	8							310		
PM 19.796 TO 19.825	WB	8							150		
PM 24.8 TO 24.9	WB	38A						2100			
PM 24.9 TO 25.3	WB	37			20				264		
PM 26.9 TO 26.95	WB	8						260			
PM 27.92 TO 27.95	WB	8						160			
PM 23.51 TO 23.6	WB	TYPE VI (R) ARROW								126	
PM 28.49 TO 28.59	WB	TYPE VI (R) ARROW								126	
PM 28.49 TO 29.26	WB	37			274				4066		
PM 30.3 TO 30.9	WB	37			214				3170		
SUBTOTAL			19908		7149	6220	206976	630781	37047	378	
SHEET TOTAL			19908		13369			~~787832~~ 874804		378	

1

1 REPLACED PER ADDENDUM No. 1 DATED OCTOBER 24, 2014

PAVEMENT DELINEATION QUANTITIES
PDQ-2

STATE OF CALIFORNIA - DEPARTMENT OF TRANSPORTATION
Caltrans TRAFFIC DESIGN

FUNCTIONAL SUPERVISOR: WILLIAM E. WASSER
CALCULATED-DESIGNED BY: TRAN HOANG
CHECKED BY: HORMUZD SETHNA
REVISED BY
DATE REVISED

LAST REVISION 08-28-14
DATE PLOTTED => 23-OCT-2014
TIME PLOTTED => 14:38

Dist	COUNTY	ROUTE	POST MILES TOTAL PROJECT	SHEET No.	TOTAL SHEETS
08	SBd	10	0.0/30.9	59	115

REGISTERED CIVIL ENGINEER 8-28-14 DATE

8-25-14
PLANS APPROVAL DATE

REGISTERED PROFESSIONAL ENGINEER TRAN HOANG No. C54996 Exp. 6-30-16 CIVIL STATE OF CALIFORNIA

THE STATE OF CALIFORNIA OR ITS OFFICERS OR AGENTS SHALL NOT BE RESPONSIBLE FOR THE ACCURACY OR COMPLETENESS OF SCANNED COPIES OF THIS PLAN SHEET.

PAVEMENT DELINEATION QUANTITIES

LOCATION	DIRECTION	DETAIL # OR MARKING	PAVEMENT MARKER				THERMOPLASTIC TRAFFIC STRIPE (SPRAYABLE)			THERMOPLASTIC PAVEMENT MARKING	COMMENTS
			NON-REFLECTIVE TYPE A	RETROREFLECTIVE TYPE D	RETROREFLECTIVE TYPE G	RETROREFLECTIVE TYPE H	4 INCH YELLOW	4 INCH WHITE	8 INCH WHITE		
			EA	EA	EA	EA	LF	LF	LF	SQFT	
HOLT Blvd LANE #3	WB	13M	5		3			54			BLACK SHADOW BOTH SIDES
HOLT Blvd LANE #4	WB	13M	9		4			108			BLACK SHADOW BOTH SIDES
VINEYARD Ave LANE #2	WB	13M	62		17			744			BLACK SHADOW BOTH SIDES
VINEYARD Ave LANE #3	WB	13M	503		127			6036			BLACK SHADOW BOTH SIDES
VINEYARD Ave LANE #4	WB	13M	14		5			162			BLACK SHADOW BOTH SIDES
4TH St LANE #2	WB	13M	45		13			540			BLACK SHADOW BOTH SIDES
4TH St LANE #3	WB	13M	179		46			2148			BLACK SHADOW BOTH SIDES
4TH St LANE #4	WB	13M	63		17			756			BLACK SHADOW BOTH SIDES
JCT 10 & 83 LANE #1	WB	42			7				216		BLACK SHADOW BOTH SIDES
JCT 10 & 83 LANE #1	WB	13M	9		4			108			BLACK SHADOW BOTH SIDES
JCT 10 & 83 LANE #3	WB	13M	144		37			1728			BLACK SHADOW BOTH SIDES
JCT 10 & 83 LANE #4	WB	13M	72		19			864			BLACK SHADOW BOTH SIDES
MOUNTAIN Ave LANE #2	WB	13M	14		5			162			BLACK SHADOW BOTH SIDES
MOUNTAIN Ave LANE #3	WB	13M	192		49			2298			BLACK SHADOW BOTH SIDES
MOUNTAIN Ave LANE #4	WB	13M	94		25			1122			BLACK SHADOW BOTH SIDES
CENTRAL Ave LANE #3	WB	13M	90		24			1080			BLACK SHADOW BOTH SIDES
CENTRAL Ave LANE #4	WB	13M	18		6			216			BLACK SHADOW BOTH SIDES
SUBTOTAL			1513		408			18126	216		
SHEET TOTAL			1513		408			18342			
GRAND TOTAL			~~44614~~		~~48450~~			~~1524335~~		944	
			60433		32284			1792801			
			1		1			1			

1 REPLACED PER ADDENDUM No. 1 DATED OCTOBER 24, 2014

PAVEMENT DELINEATION QUANTITIES
PDQ-5

STATE OF CALIFORNIA - DEPARTMENT OF TRANSPORTATION
Caltrans TRAFFIC DESIGN

FUNCTIONAL SUPERVISOR: WILLIAM E. WASSER
CALCULATED-DESIGNED BY: TRAN HOANG
CHECKED BY: HORMUZD SETHNA
REVISED BY
DATE REVISED

LAST REVISION 08-28-14
DATE PLOTTED => 23-OCT-2014
TIME PLOTTED => 14:38

Dist	COUNTY	ROUTE	POST MILES TOTAL PROJECT	SHEET No.	TOTAL SHEETS
08	SBd	10	0.0/30.9	67	115

REGISTERED CIVIL ENGINEER 8-28-14 DATE

8-25-14
PLANS APPROVAL DATE

REGISTERED PROFESSIONAL ENGINEER KEVIN H. CHEN No. C70017 Exp. 9-30-14 CIVIL STATE OF CALIFORNIA

THE STATE OF CALIFORNIA OR ITS OFFICERS OR AGENTS SHALL NOT BE RESPONSIBLE FOR THE ACCURACY OR COMPLETENESS OF SCANNED COPIES OF THIS PLAN SHEET.

EASTBOUND MIDWEST GUARDRAIL SYSTEM

LOCATION	DESCRIPTION	POST MILE	RIGHT/LEFT	(N) EXISTING MBGR LF	REMOVE GUARDRAIL LF	REMOVE AC DIKE LF	REMOVE CONCRETE (Misc) SQFT	PLACE HMA DIKE (TYPE F) LF	PLACE HMA DIKE (TYPE C) LF	MGS (WOOD POST) LF	MGS (STEEL POST) LF	DOUBLE MGS (WOOD POST) LF	TRANSITION RAILING (TYPE WB-31) EA	END ANCHOR ASSEMBLY (TYPE SFT) EA	MINOR CONCRETE (MINOR STRUCTURE) CY	(N) BURIED POST END ANCHOR EA	ALTERNATIVE FLARED END TREATMENT EA	ALTERNATIVE IN-LINE END TREATMENT EA	CRASH CUSHION (SMART) EA	CRASH CUSHION (TYPE CAT) EA	REMOVE CRASH CUSHION EA	DETAIL PLAN SHEET
E-23	ABOVE NEVADA St UC Br 54-594	28.80	Rt	100.0	100.0	125.0	0.0	50.0	75.0	100.0	0.0	0.0	1	0	0.7	0	0	1	0	0	0	C-6
E-24	UNDER ALABAMA St OC 54-593	29.32	Rt	143.8	143.8	0.0	0.0	0.0	0.0	143.8	0.0	0.0	1	1	0.0	0	1	0	0	0	0	C-27
E-25	EB Rte 10 to NB 210 CONNECTOR COLUMN	29.64	Rt	216.0	~~216.0~~ 184.8	0.0	0.0	0.0	0.0	216.0	0.0	25.0	0	2	0.0	0	0	0	0	1	1	C-29
E-26	TENNESSEE St OC COLUMN	29.83	Rt	141.0	141.0	0.0	0.0	0.0	0.0	0.0	0.0	0.0	1	1	50.0	0	0	1	0	0	0	C-24, C-28, C-30
E-27	ABOVE COLTON-NY UC Br 54-591	30.06	Rt	75.0	75.0	100.0	0.0	31.0	69.0	75.0	0.0	0.0	1	0	0.7	0	0	1	0	0	0	C-6, C-31
E-28	END OF EB ENTRANCE RAMP ABOVE TEXAS St UC Br 54-583	30.37	Rt	1168.8	52.6	0.0	0.0	0.0	0.0	53.7	0.0	0.0	1	0	0.7	0	0	0	0	0	0	C-6, C-23
E-29	ABOVE EUREKA St UC Br 54-580	30.66	Rt	87.5	87.5	100.0	0.0	25.0	75.0	87.5	0.0	0.0	1	0	0.7	0	0	1	0	0	0	C-6, C-32
TOTAL THIS SHEET				1932.1	~~815.9~~ 784.7	325.0	0.0	106.0	219.0	676.0	0.0	25.0	6	4	52.8	0	1	4	0	1	1	
TOTAL SHEET Q-1				969.0	695.6	854.0	0.0	479.0	300.0	52.0	0.0	0.0	7	0	104.0	0	1	5	1	0	0	
TOTAL SHEET Q-2				1612.0	495.6	902.0	16.0	590.0	305.0	115.5	150.0	0.0	6	1	7.0	0	2	2	0	0	0	
TOTAL SHEET Q-3				589.6	516.6	319.0	0.0	114.0	231.0	136.7	0.0	0.0	8	0	8.9	1	1	4	0	0	0	
TOTAL SHEET Q-4				835.4	289.8	879.4	16.0	622.0	251.0	68.0	0.0	0.0	4	0	28.0	0	2	0	0	0	0	
TOTAL SHEET Q-5				1149.4	483.5	1059.0	5.1	168.0	872.0	309.3	0.0	0.0	8	0	12.3	0	1	4	0	0	0	
TOTAL SHEET Q-6				1176.0	471.0	403.5	0.0	25.0	378.5	140.6	0.0	0.0	7	0	10.0	1	1	2	0	0	0	
TOTAL SHEET Q-7				2127.3	428.9	1318.8	0.0	975.1	343.8	242.3	0.0	0.0	7	0	4.9	0	1	1	0	0	0	
TOTAL					~~4196.9~~ 4165.7	*6060.7	37.1	3079.1	2904	1740.4	150.0	25.0	53	5	227.9	4	10	22	1	1	1	

(N) - NOT A SEPARATE PAY ITEM, FOR INFORMATION ONLY
* FOR TOTAL REMOVE AC DIKE SEE SHEET Q-11

1 REPLACED PER ADDENDUM No. 1 DATED OCTOBER 24, 2014

SUMMARY OF QUANTITIES

Q-8

STATE OF CALIFORNIA - DEPARTMENT OF TRANSPORTATION
Caltrans MAINTENANCE DESIGN

FUNCTIONAL SUPERVISOR: KUANG H. CHEN
CALCULATED-DESIGNED BY: KEVIN H. CHEN
CHECKED BY: KUANG H. CHEN
REVISED BY
DATE REVISED

LAST REVISION 08-28-14
DATE PLOTTED => 23-OCT-2014
TIME PLOTTED => 14:38

Dist	COUNTY	ROUTE	POST MILES TOTAL PROJECT	SHEET No.	TOTAL SHEETS
08	SBd	10	0.0/30.9	71	115

REGISTERED ELECTRICAL ENGINEER 8-28-14 DATE

8-25-14
PLANS APPROVAL DATE

REGISTERED PROFESSIONAL ENGINEER FERDINAND DE LA CRUZ No. E 17215 Exp. 6-30-16 ELECTRICAL STATE OF CALIFORNIA

THE STATE OF CALIFORNIA OR ITS OFFICERS OR AGENTS SHALL NOT BE RESPONSIBLE FOR THE ACCURACY OR COMPLETENESS OF SCANNED COPIES OF THIS PLAN SHEET.

LEGEND: (SHEETS E-1 AND E-2)

1. EXISTING 120/240 V, 1Ø, 3 WIRE, TYPE III-AF SERVICE EQUIPMENT ENCLOSURE WITH THE FOLLOWING CIRCUIT BREAKERS: (ADDRESS: 10281 CALABASH, FONTANA, CA)

   CTID No. 08-54-010-0-012.437-M (METER No. 208-572466)

   METER A: 100 A, 240 V, 2P, CB. MAIN BREAKER (TC-1)
   15 A, 120 V, 1P, CB. (SIGN ILLUMINATION)
   30 A, 120 V, 1P, CB. (WIM EB)
   30 A, 120 V, 1P, CB. (WIM WB)
   30 A, 120 V, 1P, CB. (TDC)
   30 A, 120 V, 1P, CB. (COUNT STATION)
   15 A, 120 V, 1P, CB. (ICC)

2. EXISTING MODEL 334 CABINET WITH WIM EQUIPMENT.
3. EXISTING MODEL 334 CABINET.
4. RC ALL WIM EQUIPMENT AND INSTALL NEW EQUIPMENT IN SAME LOCATION AS SHOWN ON SHEET E-2. REFER TO SHEETS ~~E-3~~ E-8 AND ~~E-4~~ E-9 FOR DETAILS. 1
5. EXISTING IRRIGATION CONTROLLER ENCLOSURE CABINET.
6. RC EXISTING TELEPHONE DEMARCATION CABINET.
7. INSTALL NEW TYPE A TELEPHONE DEMARCATION CABINET ON EXISTING FOUNDATION.

NOTES:

1. FOR ACCURATE RIGHT OF WAY DATA, CONTACT RIGHT OF WAY ENGINEERING AT THE DISTRICT OFFICE.
2. REFER TO SHEET E-2 FOR PROPOSED ELECTRICAL EQUIPMENT.

ABBREVIATIONS:

TC-1	-	SCE TRAFFIC CONTROL RATE
LS-3	-	SCE LIGHTING RATE
STC	-	SCREENED TRANSMISSION CABLE
SLC	-	SCALE LEAD IN CABLE

FIBER OPTIC EQUIPMENT:

- WIM SCALE
- Exist PIEZO ELECTRIC SENSOR
- Exist FIBER OPTIC SPLICE VAULT
- —— fo —— Exist 4" CONDUIT WITH 4-1" INNERDUCTS AND ONE TYPE A, B AND C FIBER OPTIC CABLES IN SEPARATE INNERDUCTS.

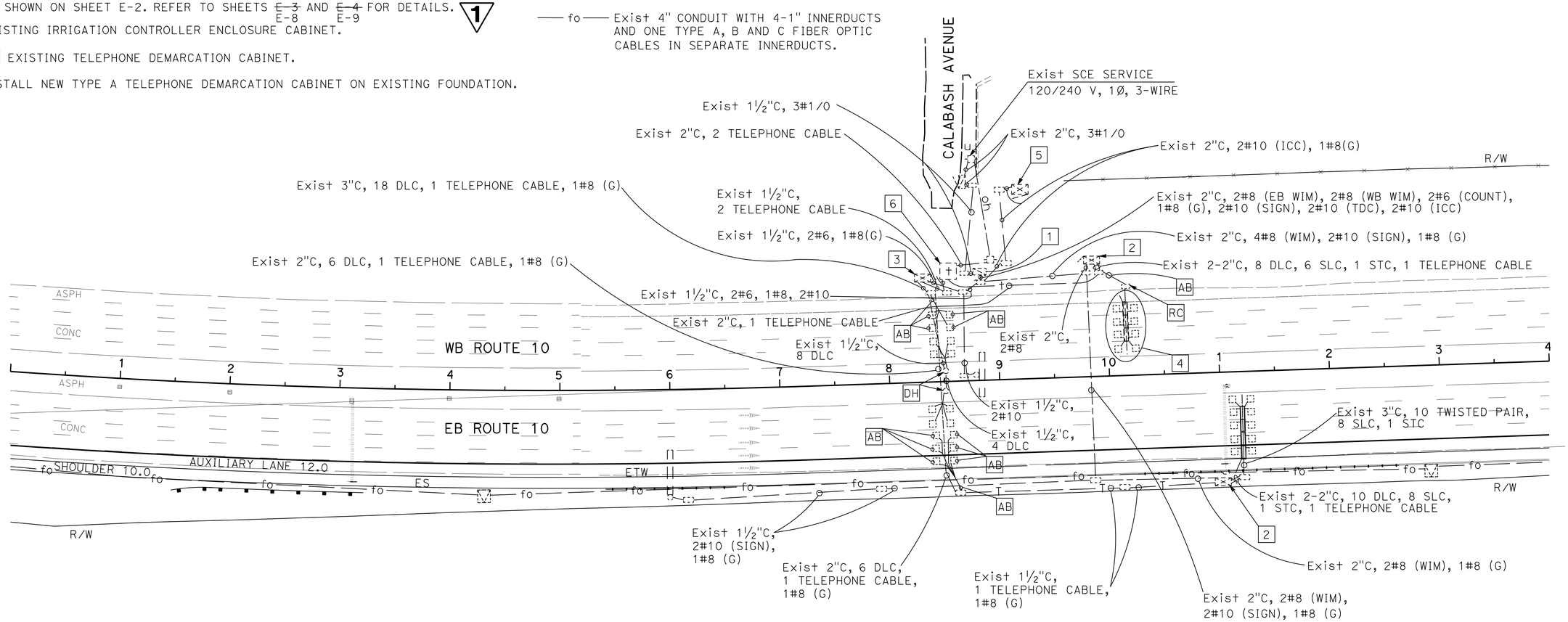

EXISTING SYSTEMS

1 **REPLACED PER ADDENDUM No. 1 DATED OCTOBER 24, 2014**

APPROVED FOR ELECTRICAL WORK ONLY

MODIFY HIGH SPEED WEIGH-IN-MOTION SYSTEM

SCALE: 1" = 50'

E-1

STATE OF CALIFORNIA - DEPARTMENT OF TRANSPORTATION
Caltrans® ELECTRICAL DESIGN B

FUNCTIONAL SUPERVISOR: FERDINAND DE LA CRUZ
CALCULATED-DESIGNED BY: WALEED ABOUL-HOSN
CHECKED BY: FERDINAND DE LA CRUZ
REVISED BY
DATE REVISED

LAST REVISION 08-28-14
DATE PLOTTED => 23-OCT-2014
TIME PLOTTED => 14:38

Dist	COUNTY	ROUTE	POST MILES TOTAL PROJECT	SHEET No.	TOTAL SHEETS
08	SBd	10	0.0/30.9	74	115

REGISTERED ELECTRICAL ENGINEER 8-28-14 DATE

8-25-14
PLANS APPROVAL DATE

REGISTERED PROFESSIONAL ENGINEER FERDINAND DE LA CRUZ No. E 17215 Exp. 6-30-16 ELECTRICAL STATE OF CALIFORNIA

THE STATE OF CALIFORNIA OR ITS OFFICERS OR AGENTS SHALL NOT BE RESPONSIBLE FOR THE ACCURACY OR COMPLETENESS OF SCANNED COPIES OF THIS PLAN SHEET.

GENERAL NOTES:

1. ALL POST MILE LOCATIONS ARE APPROXIMATE. PRIOR TO CONSTRUCTION, THE CONTRACTOR SHALL VERIFY ALL VEHICLE SENSOR NODE LOCATIONS.
2. ~~RS~~ RC ALL EXISTING SENSYS VSN.
3. AFTER ROADWAY REHABILITATION, INSTALL THE NEW VEHICLE SENSOR NODES AT THE EXISTING LOCATIONS PER MANUFACTURER'S INSTRUCTION.
4. VEHICLE SENSOR NODES WILL BE DEPARTMENT FURNISHED.

1

VSN EQUIPMENT:

- EXISTING VEHICLE SENSOR NODE (VSN)
- NEW VEHICLE SENSOR NODE (VSN)

ABBREVIATIONS (THIS SHEET ONLY):

VSN VEHICLE SENSOR NODE
VDS VEHICLE DETECTION SYSTEM

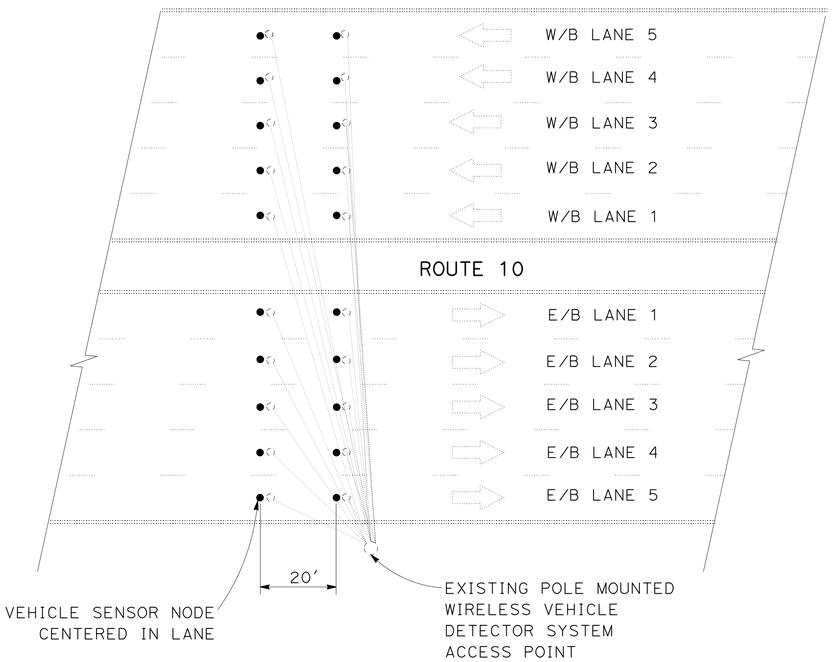

DETAIL A
PLACEMENT DETAIL

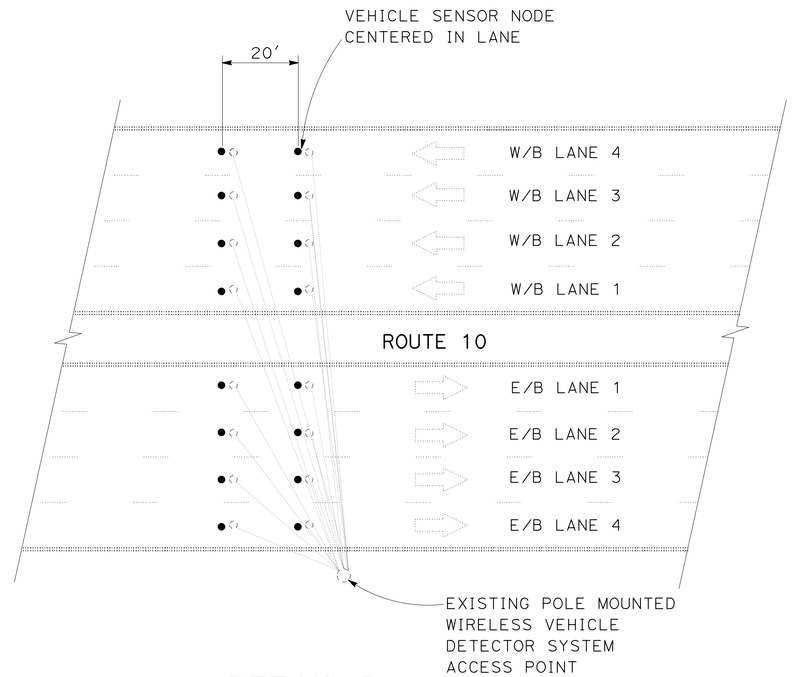

DETAIL B
PLACEMENT DETAIL

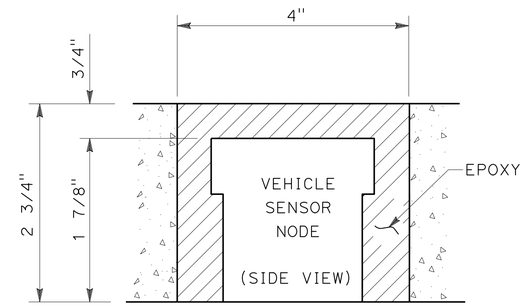

DETAIL C
VEHICLE SENSOR NODE (VSN) INSTALLED IN ROADWAY

VEHICLE SENSOR NODE INSTALLATION PROCEDURE

1. PRIOR TO INSTALLATION, IDENTIFY SENSOR'S ID, LANE NUMBER AND LOCATION IN LANE.
2. CORE A HOLE AT LEAST 2 1/4" DEEP WITH THE TOP OF SENSOR AT LEAST 3/4" BELOW SURFACE.
3. INSTALL SENSOR FLAT ON THE BOTTOM OF THE CORED HOLE AND DO NOT INSTALL SENSOR TILTED.
4. USE THE HEAT-GUN OR HOT COMPRESSED AIR TO DRY THE INSIDE OF THE CORED HOLE. NO MOISTURE PERMITTED ON THE APPLIED SURFACE.
5. FILL THE HOLE ABOUT 1/4 FULL OF SENSOR EPOXY/ADHESIVE.
6. ORIENT THE SENSOR IN THE HOLE WITH THE ARROW POINTING IN THE DIRECTION OF TRAFFIC. IF NEEDED, THE EPOXY SHOULD STILL HAVE SOME WORK TIME SO THAT THE SENSOR CAN BE ROTATED TO THE CORRECT POSITION. PUSH SENSOR DOWN FLAT ON THE BOTTOM OF THE HOLE TO INSURE A BOND UNDERNEATH THE SENSOR WITH THE EPOXY.
7. FILL THE HOLE WITH THE REMAINING EPOXY TO COVER THE SENSOR. LEVEL EPOXY WITH THE SURFACE OF THE ROAD.
8. DO NOT LET THE EPOXY SIT FOR MORE THAN 30 SECONDS BETWEEN THE FIRST AND SECOND APPLICATION.
9. THE INSTALLATION PAVEMENT TEMPERATURE SHOULD BE GREATER THAN -37° C.
10. DEPENDING ON AMBIENT TEMPERATURE AND HUMIDITY, ADHESIVE DRYING TIME WILL VARY FROM 5 TO 15 MINUTES. VERIFY HARDNESS OF EPOXY BEFORE REOPENING THE LANE FOR TRAFFIC.
11. RECORD THE DISTANCES BETWEEN EACH SENSOR PAIR.

TABLE A
LOCATION OF INSTALLATIONS

No.	COUNTY	ROUTE	POSTMILE	DESCRIPTION	DIRECTION	DETAIL	No. OF VSN
1	SBd	10	9.7	WEST OF I-15	EB & WB	A	20
2	SBd	10	10.2	EAST OF I-15	EB & WB	B	16
3	SBd	10	12.2	WEST OF MULBERRY CREEK	EB & WB	B	18
4	SBd	10	12.6	EAST OF MULBERRY CREEK	EB & WB	B	18
5	SBd	10	13.8	WEST OF FONTANA REST AREA	EB & WB	B	18
6	SBd	10	14.4	EAST OF FONTANA REST AREA	EB & WB	B	18
7	SBd	10	17.0	EAST OF SIERRA Ave	EB & WB	B	16
8	SBd	10	17.7	WEST OF CEDAR Ave	EB & WB	B	18
9	SBd	10	19.3	EAST OF CEDAR Ave	EB & WB	B	18
10	SBd	10	29.9	TENNESSE Ave	EB & WB	B	16
						TOTAL	176

1 **REPLACED PER ADDENDUM No. 1 DATED OCTOBER 24, 2014**

VEHICLE SENSOR NODES INSTALLATION

NO SCALE

E-4

STATE OF CALIFORNIA - DEPARTMENT OF TRANSPORTATION
Caltrans ELECTRICAL DESIGN B

FUNCTIONAL SUPERVISOR: FERDINAND DE LA CRUZ
CALCULATED-DESIGNED BY: WALEED ABOUL-HOSN
CHECKED BY: FERDINAND DE LA CRUZ
REVISED BY
DATE REVISED

LAST REVISION 08-28-14
DATE PLOTTED => 23-OCT-2014
TIME PLOTTED => 14:38

Dist	COUNTY	ROUTE	POST MILES TOTAL PROJECT	SHEET No.	TOTAL SHEETS
08	SBd	10	0.0/30.9	97A	115

Randell D. Hiatt
REGISTERED CIVIL ENGINEER

July 19, 2013
PLANS APPROVAL DATE

REGISTERED PROFESSIONAL ENGINEER
Randell D. Hiatt
No. C50200
Exp. 6-30-15
CIVIL
STATE OF CALIFORNIA

THE STATE OF CALIFORNIA OR ITS OFFICERS OR AGENTS SHALL NOT BE RESPONSIBLE FOR THE ACCURACY OR COMPLETENESS OF SCANNED COPIES OF THIS PLAN SHEET.

TO ACCOMPANY PLANS DATED 8-25-14

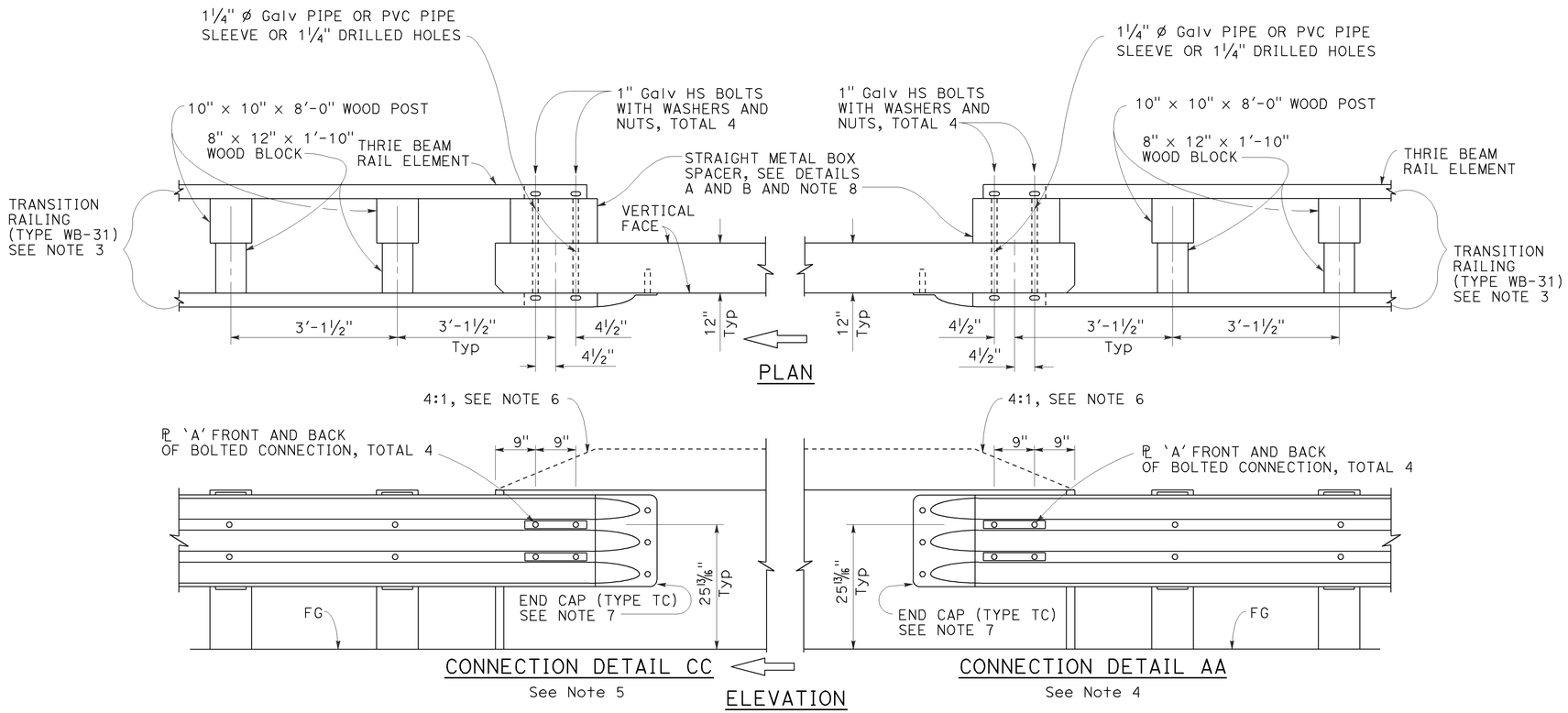

MIDWEST GUARDRAIL SYSTEM CONNECTION TO BRIDGE RAILING WITHOUT SIDEWALK

NOTES:

1. See Revised Standard Plan RSP A77U1 for additional connection details to bridges without sidewalks.
2. Additional details of posts, blocks and hardware are shown on Revised Standard Plans RSP A77M1, RSP A77N1 and RSP A77N2.
3. For additional details of Transition Railing (Type WB-31), see Revised Standard Plan RSP A77U4. Transition Railing (Type WB-31) transitions the 12 gauge MGS railing section to a heavier gage nested thrie beam railing section which is connected to the concrete bridge railing.
4. For typical use of Connection Detail AA, see Layout Types 12A and 12B on Revised Standard Plan RSP A77Q1, Layout Types 12C and 12D on Revised Standard Plan RSP A77Q2, and Layout Type 12E on Revised Standard Plan RSP A77Q3.
5. For typical use of Connection Detail CC, see Layout Types 12AA and 12BB on Revised Standard Plan RSP A77Q4 and Layout Type 12CC on Revised Standard Plan RSP A77Q5.
6. Where the height of the bridge railing exceeds the height of the thrie beam railing by more than 1" at Connection Detail AA and connection Detail CC, taper the top of the end of the bridge railing at 4:1 to match the top elevation of the thrie beam railing.
7. For details of End Cap (Type TC), see Revised Standard Plan RSP A77U4.
8. See Revised Standard Plan RSP A77U4 for additional details regarding depth dimension for straight metal box spacer.

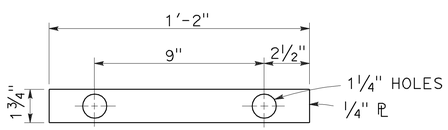

PLATE 'A'

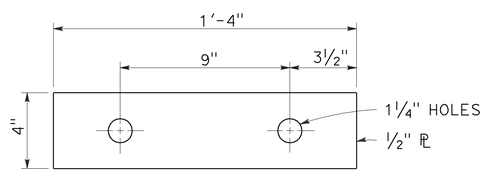

PLATE 'B'
(For backside of connection BB)

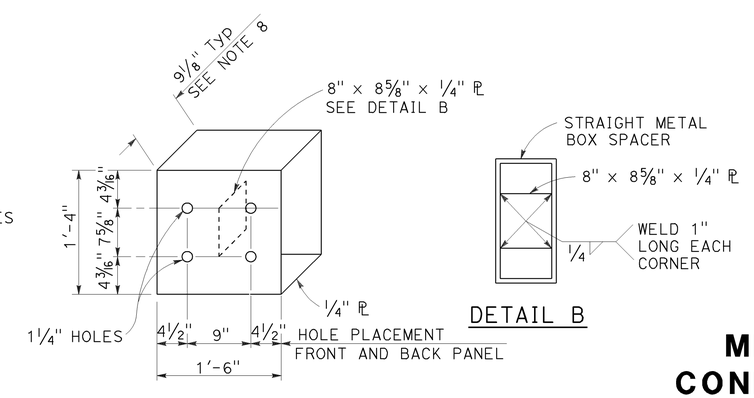

DETAIL A

STRAIGHT METAL BOX SPACER

STATE OF CALIFORNIA
DEPARTMENT OF TRANSPORTATION

MIDWEST GUARDRAIL SYSTEM CONNECTIONS TO BRIDGE RAILINGS WITHOUT SIDEWALKS DETAILS No. 2

NO SCALE

1 **ADDED PER ADDENDUM No. 1 DATED OCTOBER 24, 2014**

RSP A77U2 DATED JULY 19, 2013 SUPPLEMENTS THE STANDARD PLANS BOOK DATED 2010.

REVISED STANDARD PLAN RSP A77U2

2010 REVISED STANDARD PLAN RSP A77U2

6-20-13

Dist	COUNTY	ROUTE	POST MILES TOTAL PROJECT	SHEET No.	TOTAL SHEETS
08	SBd	10	0.0/30.9	99	115

Randell D. Hiatt
REGISTERED CIVIL ENGINEER

November 15, 2013
PLANS APPROVAL DATE

REGISTERED PROFESSIONAL ENGINEER Randell D. Hiatt No. C50200 Exp. 6-30-15 CIVIL STATE OF CALIFORNIA

THE STATE OF CALIFORNIA OR ITS OFFICERS OR AGENTS SHALL NOT BE RESPONSIBLE FOR THE ACCURACY OR COMPLETENESS OF SCANNED COPIES OF THIS PLAN SHEET.

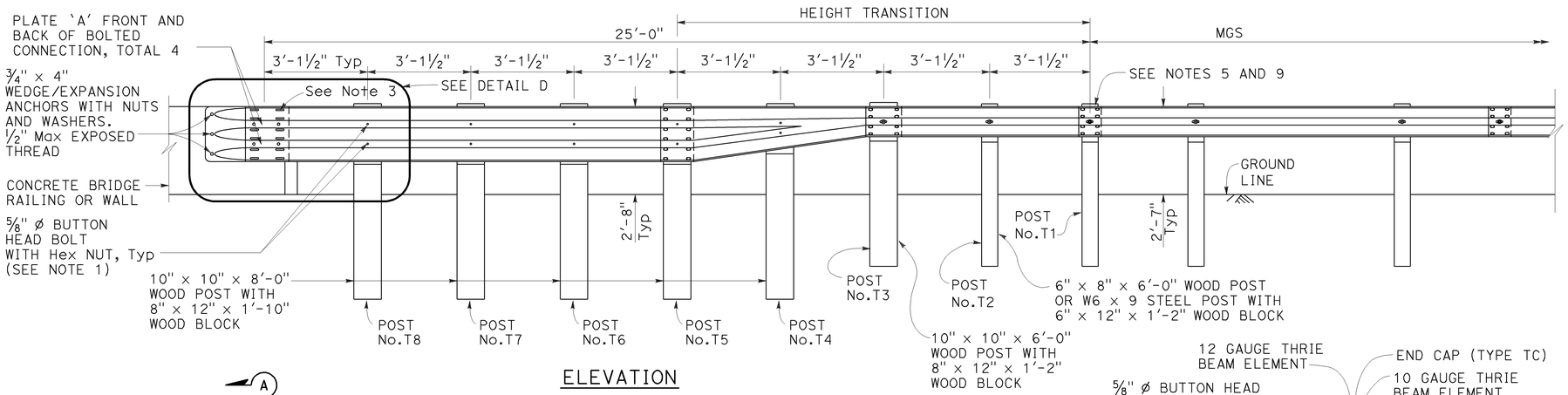

ELEVATION

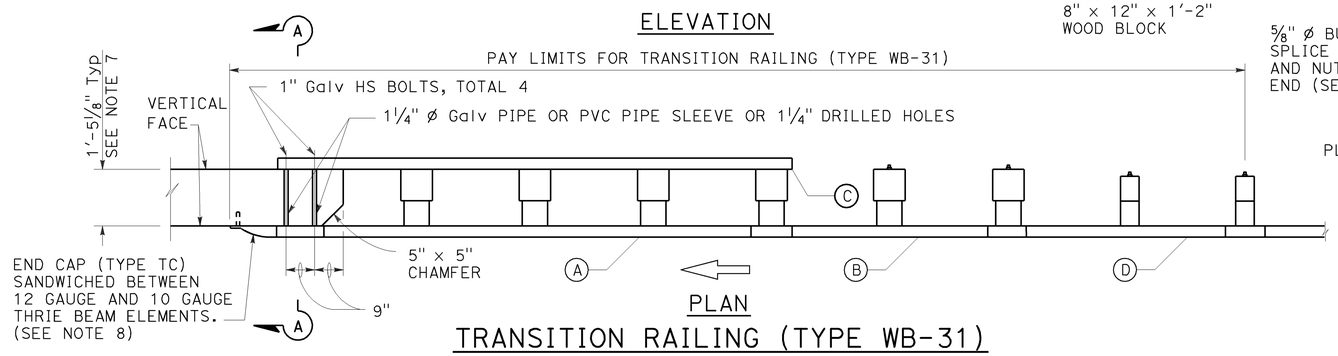

PLAN

TRANSITION RAILING (TYPE WB-31)

(No Blockout Attachment)

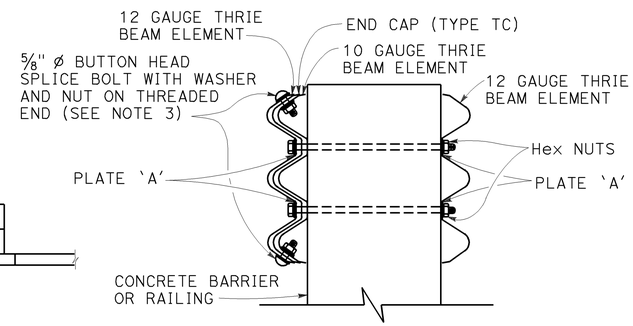

SECTION A-A

1 ADDED PER ADDENDUM No. 1 DATED OCTOBER 24, 2014

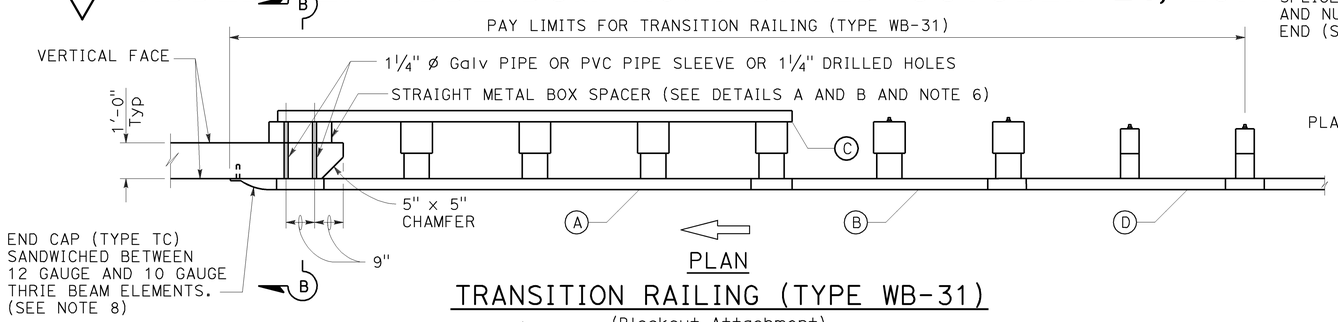

PLAN

TRANSITION RAILING (TYPE WB-31)

(Blockout Attachment)

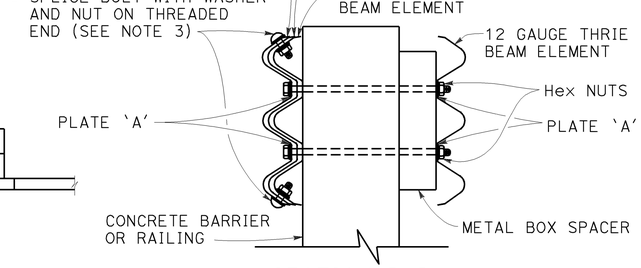

SECTION B-B

NOTES:

TO ACCOMPANY PLANS DATED 8-25-14

1. Use 5/8" ø Button head bolts and hex nuts for connections to posts. No washer on rail face for bolted connections to post.
2. The nested rail elements, end cap, and 'W' beam to thrie beam element may be spliced together prior to bolting the elements to the wood post and concrete barrier or railing.
3. Exterior splice bolt holes for rail element splices at Post No. T5 and the connection to the concrete barrier or railing shall be the standard 29/32" x 1 1/8" slot size. Interior splice bolt holes at these locations may be increased up to 1 1/4" ø. Only the top 4 and the bottom 4 splice bolts with washers and nuts are required for rail splices at Post No. T5 and the connection to the concrete barrier or railing.
4. The top elevation of Posts No. T2 through No. T7 shall not project more than 1" above the top elevation of the rail element.
5. Typically, the railing connected to Transition Railing (Type WB-31) will be either standard railing section of MGS with height transition ratio of 150:1 or a Caltrans approved 31" end treatment attached to Post No. T1.
6. The depth of the metal box spacer varies from the 9 1/8" to 1 1/2" and is dependent on the width of the concrete railing or wall. The combined dimension for the depth of the metal box spacer plus the width of railing or wall is typically 21 1/8". Where the space between the backside of the concrete railing or wall and the rear thrie beam element is less than 1 1/2", metal plates similar to Plate 'A' are to be used as spacers.
7. Where the width of the concrete railing or wall is greater than 17 1/8", wood blocks are to be used to fill the space created between the backside of Posts No. T5 through No. T8 and the rear thrie beam element. These wood blocks shall be 8" in width and 1'-2" in length. The dimension between the front thrie beam element and the rear thrie beam element is to match the width of the concrete railing or wall.
8. End cap may be installed over 12 gauge and 10 gauge thrie beam elements where transition railing is installed on the departure end of bridge railing.
9. Conform standard railing section height to 31" at Post No. T1 using height transition ratio of 150:1.

LEGEND:

(A) NESTED THRIE BEAM ELEMENTS (ONE 12 GAUGE ELEMENT NESTED OVER ONE 10 GAUGE ELEMENT).

(B) ONE ASYMMETRICAL 10 GAUGE "W" BEAM TO THRIE BEAM ELEMENT.

(C) ONE 12 GAUGE THRIE BEAM ELEMENT.

(D) ONE 10 GAUGE "W" BEAM RAIL ELEMENT (7'-3 1/2" LENGTH)

10 GAUGE = 0.138" THICK
12 GAUGE = 0.108" THICK

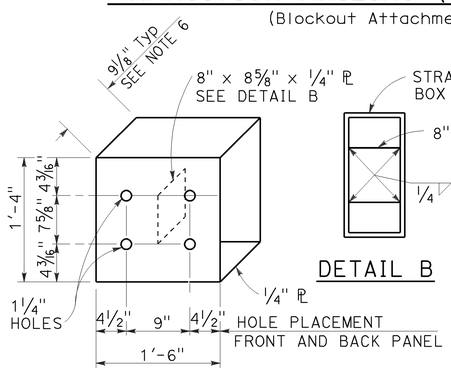

DETAIL A

STRAIGHT METAL BOX SPACER

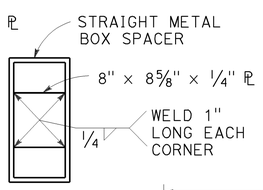

DETAIL B

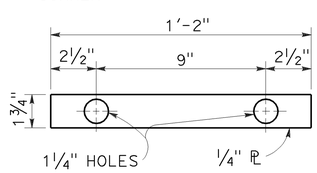

DETAIL C

PLATE 'A'

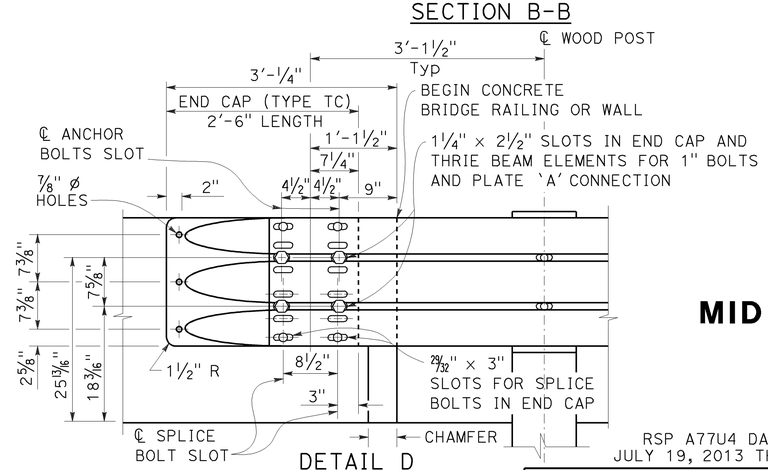

DETAIL D

STATE OF CALIFORNIA
DEPARTMENT OF TRANSPORTATION

MIDWEST GUARDRAIL SYSTEM TRANSITION RAILING (TYPE WB-31)

NO SCALE

RSP A77U4 DATED NOVEMBER 15, 2013 SUPERSEDES RSP A77U4 DATED JULY 19, 2013 THAT SUPPLEMENTS THE STANDARD PLANS BOOK DATED 2010.

REVISED STANDARD PLAN RSP A77U4

2010 REVISED STANDARD PLAN RSP A77U4

10-4-13