Dist	COUNTY	ROUTE	POST MILES TOTAL PROJECT	SHEET No.	TOTAL SHEETS
08	SBd	40	R105.2/R106.5	1	110

STATE OF CALIFORNIA **ACNHPI-040-2(063)N**

DEPARTMENT OF TRANSPORTATION

PROJECT PLANS FOR CONSTRUCTION ON

STATE HIGHWAY

IN SAN BERNARDINO COUNTY NEAR FENNER FROM 0.7 MILE WEST TO 0.6 MILE EAST OF WATSON WASH BRIDGE

TO BE SUPPLEMENTED BY STANDARD PLANS DATED 2010

INDEX OF PLANS

SHEET No.	DESCRIPTION
1	TITLE AND LOCATION MAP
2	TYPICAL CROSS SECTIONS
3-5	LAYOUTS
6-8	PROFILE AND SUPERELEVATION DIAGRAM
9-11	CONSTRUCTION DETAILS
12	TEMPORARY WATER POLLUTION CONTROL QUANTITIES
13-15	CONSTRUCTION AREA SIGNS
16-25	STAGE CONSTRUCTION
26-40	TRAFFIC HANDLING PLANS
41	TRAFFIC HANDLING QUANTITIES
42-46	DETOUR PLANS
47	PAVEMENT DELINEATION QUANTITIES
48	SUMMARY OF QUANTITIES
49	EROSION CONTROL LEGEND
50-51	EROSION CONTROL PLANS
52-79	REVISED STANDARD PLANS

STRUCTURE PLANS

80-110	WATSON WASH BRIDGE, Br No. 54-1282L

THE STANDARD PLANS LIST APPLICABLE TO THIS CONTRACT IS INCLUDED IN THE NOTICE TO BIDDERS AND SPECIAL PROVISIONS BOOK.

LOCATION MAP

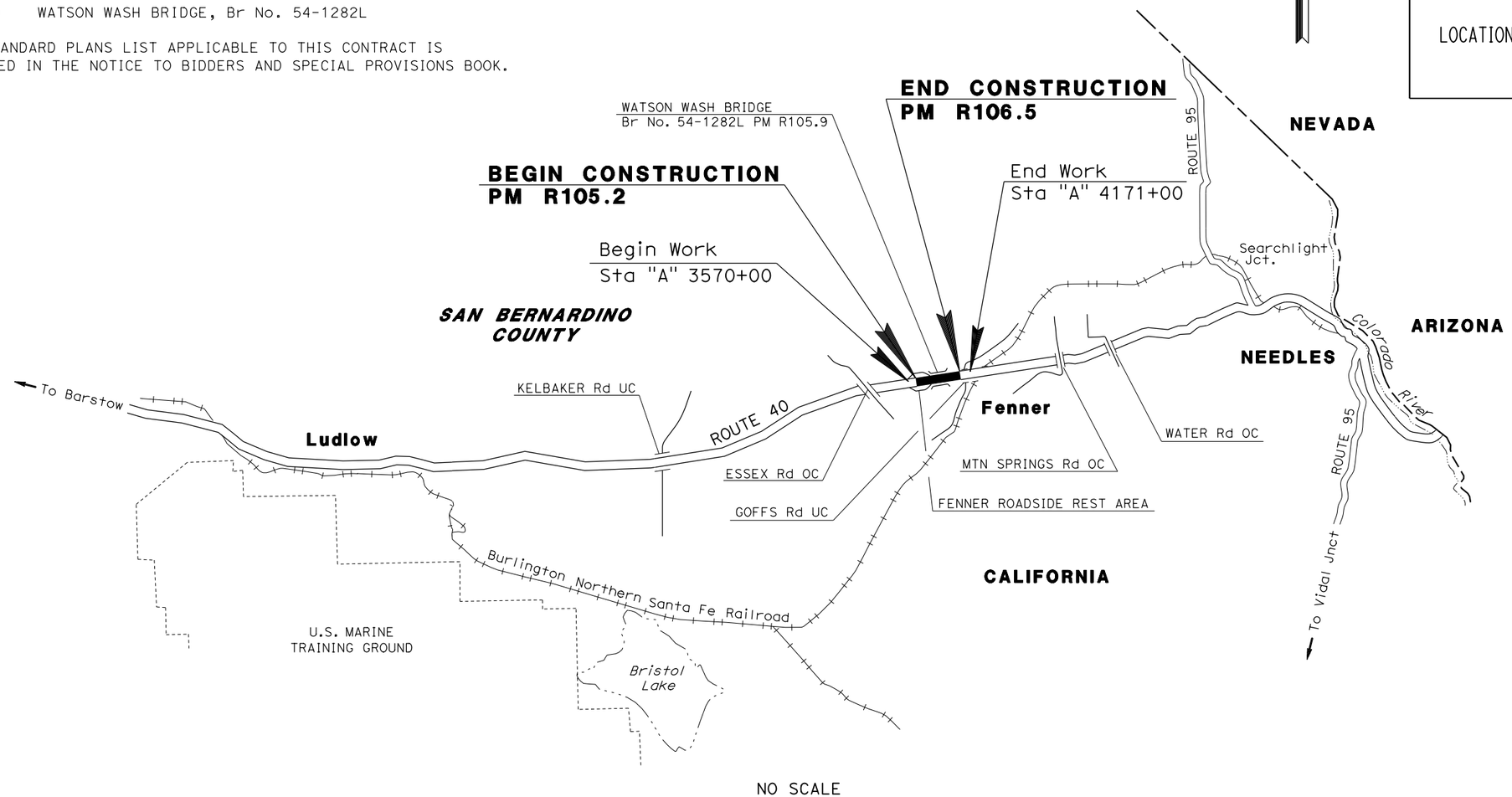

NO SCALE

PROJECT MANAGER JUAN LIZARDE

DESIGN MANAGER JAMAL ELSALEH

PROJECT ENGINEER REGISTERED CIVIL ENGINEER — DATE 6-24-15

June 25, 2015
PLANS APPROVAL DATE

REGISTERED PROFESSIONAL ENGINEER — DUNG HUY PHAN — No. C73061 — Exp. 12-31-16 — CIVIL — STATE OF CALIFORNIA

THE STATE OF CALIFORNIA OR ITS OFFICERS OR AGENTS SHALL NOT BE RESPONSIBLE FOR THE ACCURACY OR COMPLETENESS OF SCANNED COPIES OF THIS PLAN SHEET.

THE CONTRACTOR SHALL POSSESS THE CLASS (OR CLASSES) OF LICENSE AS SPECIFIED IN THE "NOTICE TO BIDDERS."

CONTRACT No.	08-0N5504
PROJECT ID	0800020102

LAST REVISION 06-24-15 — DATE PLOTTED => 25-NOV-2015 — TIME PLOTTED => 16:23

Dist	COUNTY	ROUTE	POST MILES TOTAL PROJECT	SHEET No.	TOTAL SHEETS
08	SBd	40	R105.2/106.5	2	110

REGISTERED CIVIL ENGINEER 6-24-15 DATE

6-25-15
PLANS APPROVAL DATE

REGISTERED PROFESSIONAL ENGINEER DUNG HUY PHAN No. C73061 Exp. 12-31-16 CIVIL STATE OF CALIFORNIA

THE STATE OF CALIFORNIA OR ITS OFFICERS OR AGENTS SHALL NOT BE RESPONSIBLE FOR THE ACCURACY OR COMPLETENESS OF SCANNED COPIES OF THIS PLAN SHEET.

NOTES:

1. DIMENSIONS OF STRUCTURAL SECTION ARE SUBJECT TO TOLERANCES SPECIFIED IN THE STANDARD SPECIFICATIONS.
2. SUPERELEVATION AS SHOWN OR AS DIRECTED BY THE ENGINEER.
3. SHOULDER RUMBLE STRIPS WILL BE CONSTRUCTED BY GROUND-IN METHOD (SEE STD PLANS A40B) AND TO BE INSTALLED ONLY AFTER COMPLETION OF FINAL PAVEMENT DELINEATION.
4. EXACT LOCATIONS AND TYPES OF DIKES, RUMBLE STRIP, AND MIDWEST GUARDRAIL SYSTEM (MGS) ARE SHOWN ON LAYOUTS, STAGE CONSTRUCTIONS, AND IN THE SUMMARY OF QUANTITIES SHEETS.
5. EXACT LOCATIONS AND QUANTITY OF TEMPORARY FENCE (TYPE DESERT TORTOISE) ARE SHOWN ON LAYOUTS AND IN THE SUMMARY OF QUANTITIES SHEETS.

ABREVIATIONS:

ADT: AVERAGE DAILY TRAFFIC
AADT: ANNUAL AVERAGE DAILY TRAFFIC
DHV: DESIGN HOUR VOLUME
T: TRUCK PERCENT
DS: DIRECTIONAL SPLIT

DESIGN DESIGNATION (ROUTE 40)
2012 AADT = 10,890, DHV = 1,320, DS = 54%, T(ADT) = 45%, T(DHV)= 29%
2016 AADT = 12,600, DHV = 1,400, DS = 54%, T(ADT) = 48%, T(DHV)= 30%
2036 AADT = 26,140, DHV = 1,870, DS = 54%, T(ADT) = 59%, T(DHV)= 40%
V = 65 MPH CLIMATE REGION: DESERT

TRAFFIC INDEX	MAINLINE	SHOULDERS
10 YEAR	13.50	8.50
20 YEAR	15.50	9.50
40 YEAR	17.00	10.50

PAVEMENT STRUCTURE TYPES

1: 0.25' Min - 0.55' Max HMA (TYPE A)
0.25' COLD PLANE AC Pvmt

2*: 0.60' HMA (TYPE A) (DETOUR ROAD)
0.65' CLASS 2 AB

*SEE STAGE CONSTRUCTION AND DETOUR PLANS

3**: 0.60' HMA (TYPE A)
1.40' CLASS 2 AB

**SEE STAGE CONSTRUCTION PLANS FOR RECONSTRUCT SHOULDER

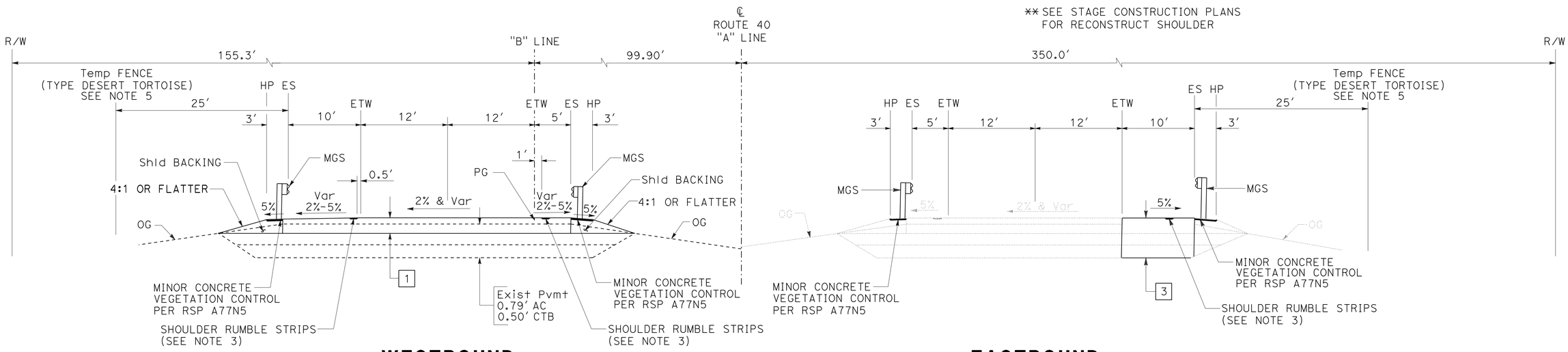

WESTBOUND

Sta "B" 3823+00.00 TO 3824+46.94
Sta "B" 3832+48.44 TO 3834+00.00

EASTBOUND

Sta "A" 3817+60.00 TO 3822+53.96
Sta "A" 3830+25.38 TO 3839+00.00

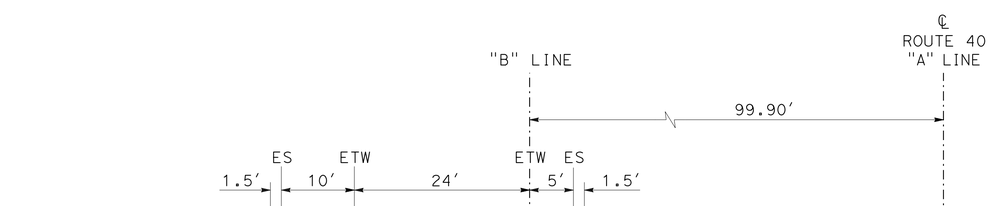

WATSON WASH Br No. 54-1282L

TYPICAL CROSS SECTIONS

NO SCALE

X-1

REVISED BY | DATE REVISED
DON NGUYEN | DUNG HUY PHAN
CALCULATED-DESIGNED BY | CHECKED BY
FUNCTIONAL SUPERVISOR: MUSTAPHA RAOUF
STATE OF CALIFORNIA - DEPARTMENT OF TRANSPORTATION
Caltrans DESIGN

LAST REVISION 06-24-15 | DATE PLOTTED => 25-NOV-2015 | TIME PLOTTED => 08:42

Dist	COUNTY	ROUTE	POST MILES TOTAL PROJECT	SHEET No.	TOTAL SHEETS
08	SBd	40	R105.2/106.5	3	110

REGISTERED CIVIL ENGINEER 6-24-15 DATE

6-25-15
PLANS APPROVAL DATE

REGISTERED PROFESSIONAL ENGINEER DUNG HUY PHAN No. C73061 Exp. 12-31-16 CIVIL STATE OF CALIFORNIA

THE STATE OF CALIFORNIA OR ITS OFFICERS OR AGENTS SHALL NOT BE RESPONSIBLE FOR THE ACCURACY OR COMPLETENESS OF SCANNED COPIES OF THIS PLAN SHEET.

NOTE:

FOR ACCURATE RIGHT OF WAY DATA, CONTACT RIGHT OF WAY ENGINEERING AT THE DISTRICT OFFICE.

ABREVIATION:

AFTS ALTERNATIVE FLARED TERMINAL SYSTEM

LEGEND:

TFESA — TEMPORARY FENCE (TYPE DESERT TORTOISE)

EXISTING BRIDGE STRUCTURE TO BE DEMOLISHED & REPLACED (SEE STRUCTURE PLANS)

RSP (1/4 TON METHOD B)

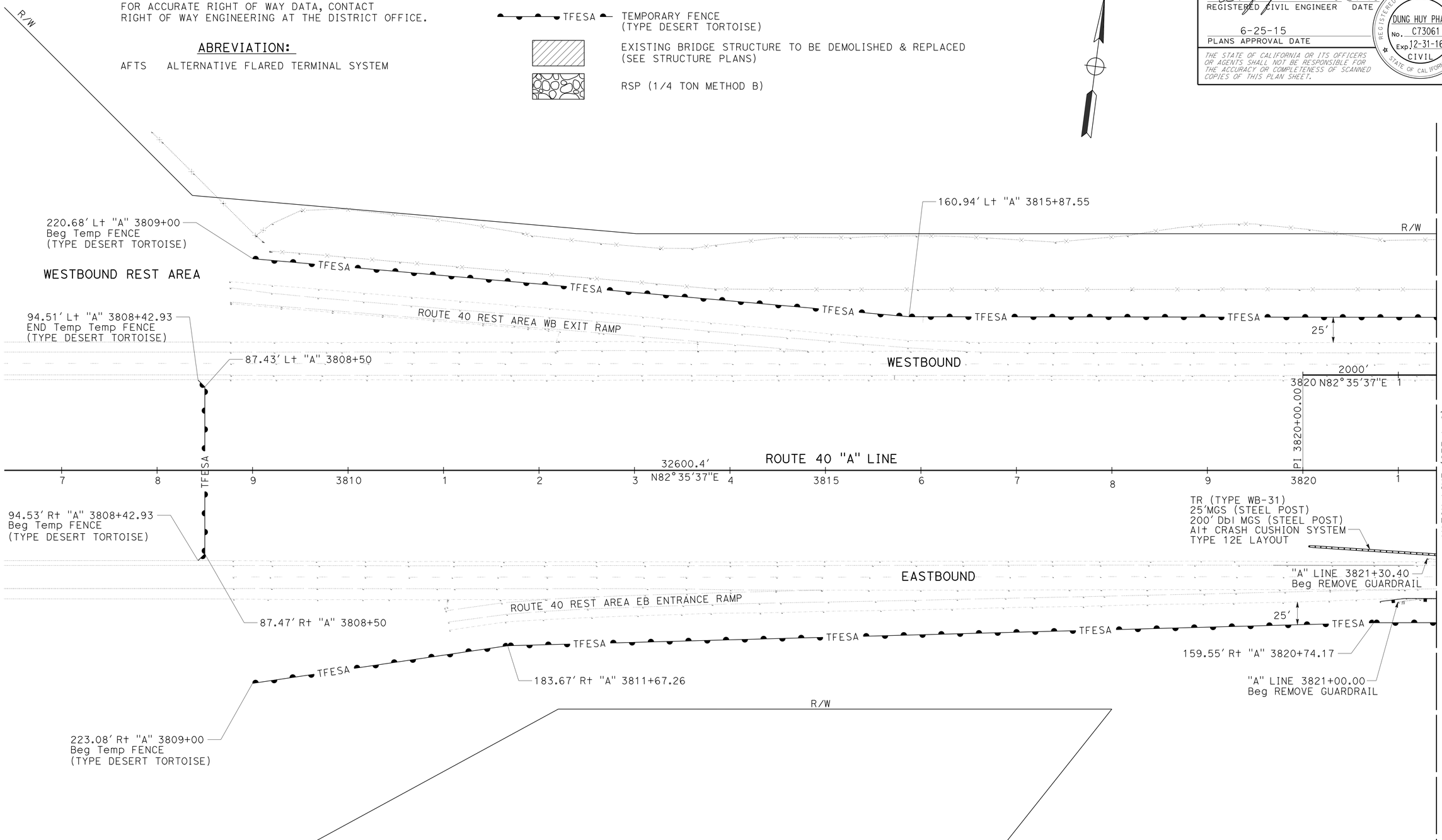

LAYOUT

SCALE: 1" = 50′ **L-1**

STATE OF CALIFORNIA - DEPARTMENT OF TRANSPORTATION
Caltrans® **DESIGN**

FUNCTIONAL SUPERVISOR: MUSTAPHA RAOUF
CALCULATED-DESIGNED BY: DON NGUYEN
CHECKED BY: DUNG HUY PHAN
REVISED BY
DATE REVISED

LAST REVISION 06-24-15 | DATE PLOTTED => 25-NOV-2015 | TIME PLOTTED => 08:42

Dist	COUNTY	ROUTE	POST MILES TOTAL PROJECT	SHEET No.	TOTAL SHEETS
08	SBd	40	R105.2/106.5	4	110

REGISTERED CIVIL ENGINEER 6-24-15 DATE

6-25-15
PLANS APPROVAL DATE

REGISTERED PROFESSIONAL ENGINEER DUNG HUY PHAN No. C73061 Exp. 12-31-16 CIVIL STATE OF CALIFORNIA

THE STATE OF CALIFORNIA OR ITS OFFICERS OR AGENTS SHALL NOT BE RESPONSIBLE FOR THE ACCURACY OR COMPLETENESS OF SCANNED COPIES OF THIS PLAN SHEET.

NOTE:

FOR ACCURATE RIGHT OF WAY DATA, CONTACT RIGHT OF WAY ENGINEERING AT THE DISTRICT OFFICE.

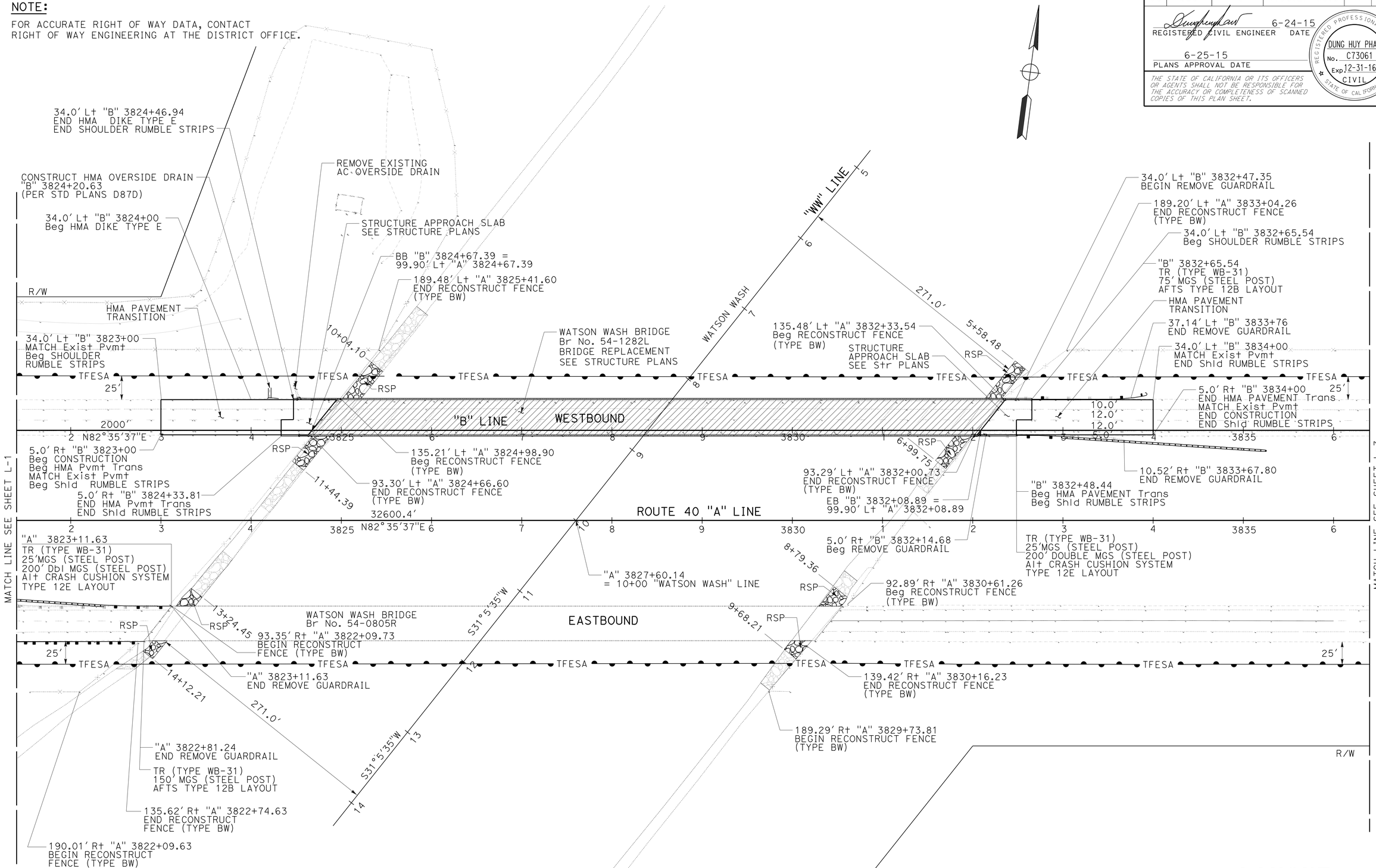

LAYOUT

SCALE: 1" = 50' **L-2**

STATE OF CALIFORNIA - DEPARTMENT OF TRANSPORTATION

Caltrans® **DESIGN**

FUNCTIONAL SUPERVISOR: MUSTAPHA RAOUF

CALCULATED-DESIGNED BY: DON NGUYEN

CHECKED BY: DUNG HUY PHAN

REVISED BY | DATE REVISED

LAST REVISION 06-24-15 | DATE PLOTTED => 25-NOV-2015 | TIME PLOTTED => 08:42

Dist	COUNTY	ROUTE	POST MILES TOTAL PROJECT	SHEET No.	TOTAL SHEETS
08	SBd	40	R105.2/106.5	5	110

REGISTERED CIVIL ENGINEER 6-24-15 DATE

6-25-15
PLANS APPROVAL DATE

REGISTERED PROFESSIONAL ENGINEER DUNG HUY PHAN No. C73061 Exp. 12-31-16 CIVIL STATE OF CALIFORNIA

THE STATE OF CALIFORNIA OR ITS OFFICERS OR AGENTS SHALL NOT BE RESPONSIBLE FOR THE ACCURACY OR COMPLETENESS OF SCANNED COPIES OF THIS PLAN SHEET.

NOTE:

FOR ACCURATE RIGHT OF WAY DATA, CONTACT RIGHT OF WAY ENGINEERING AT THE DISTRICT OFFICE.

CURVE DATA

No. ⊕	R	Δ	T	L
5	70000′	02°47′20″	1703.91′	3407.14′

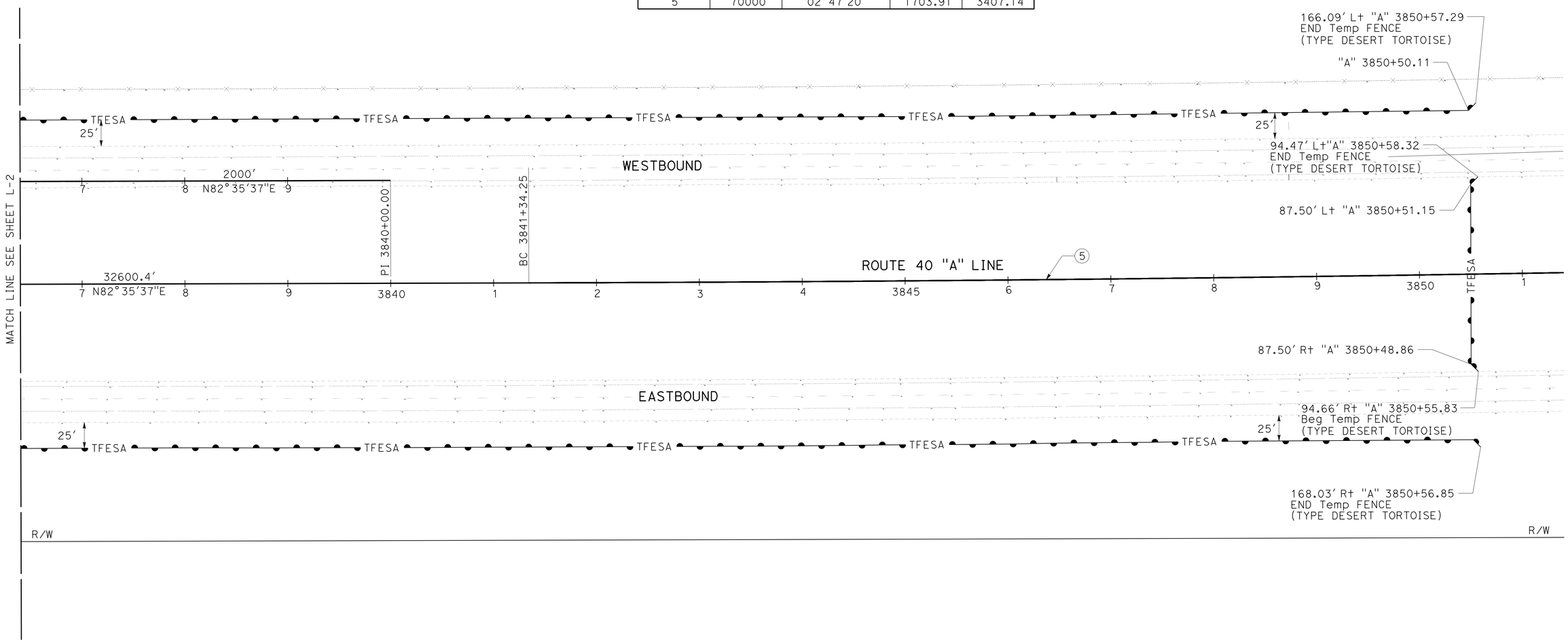

LAYOUT

SCALE: 1″ = 50′ **L-3**

STATE OF CALIFORNIA - DEPARTMENT OF TRANSPORTATION

Caltrans® **DESIGN**

FUNCTIONAL SUPERVISOR: MUSTAPHA RAOUF

CALCULATED-DESIGNED BY: DON NGUYEN

CHECKED BY: DUNG HUY PHAN

REVISED BY

DATE REVISED

LAST REVISION 06-24-15 | DATE PLOTTED => 25-NOV-2015 | TIME PLOTTED => 08:42

Dist	COUNTY	ROUTE	POST MILES TOTAL PROJECT	SHEET No.	TOTAL SHEETS
08	SBd	40	R105.2/106.5	6	110

REGISTERED CIVIL ENGINEER 6-24-15 DATE

6-25-15
PLANS APPROVAL DATE

REGISTERED PROFESSIONAL ENGINEER
DUNG HUY PHAN
No. C73061
Exp. 12-31-16
CIVIL
STATE OF CALIFORNIA

THE STATE OF CALIFORNIA OR ITS OFFICERS OR AGENTS SHALL NOT BE RESPONSIBLE FOR THE ACCURACY OR COMPLETENESS OF SCANNED COPIES OF THIS PLAN SHEET.

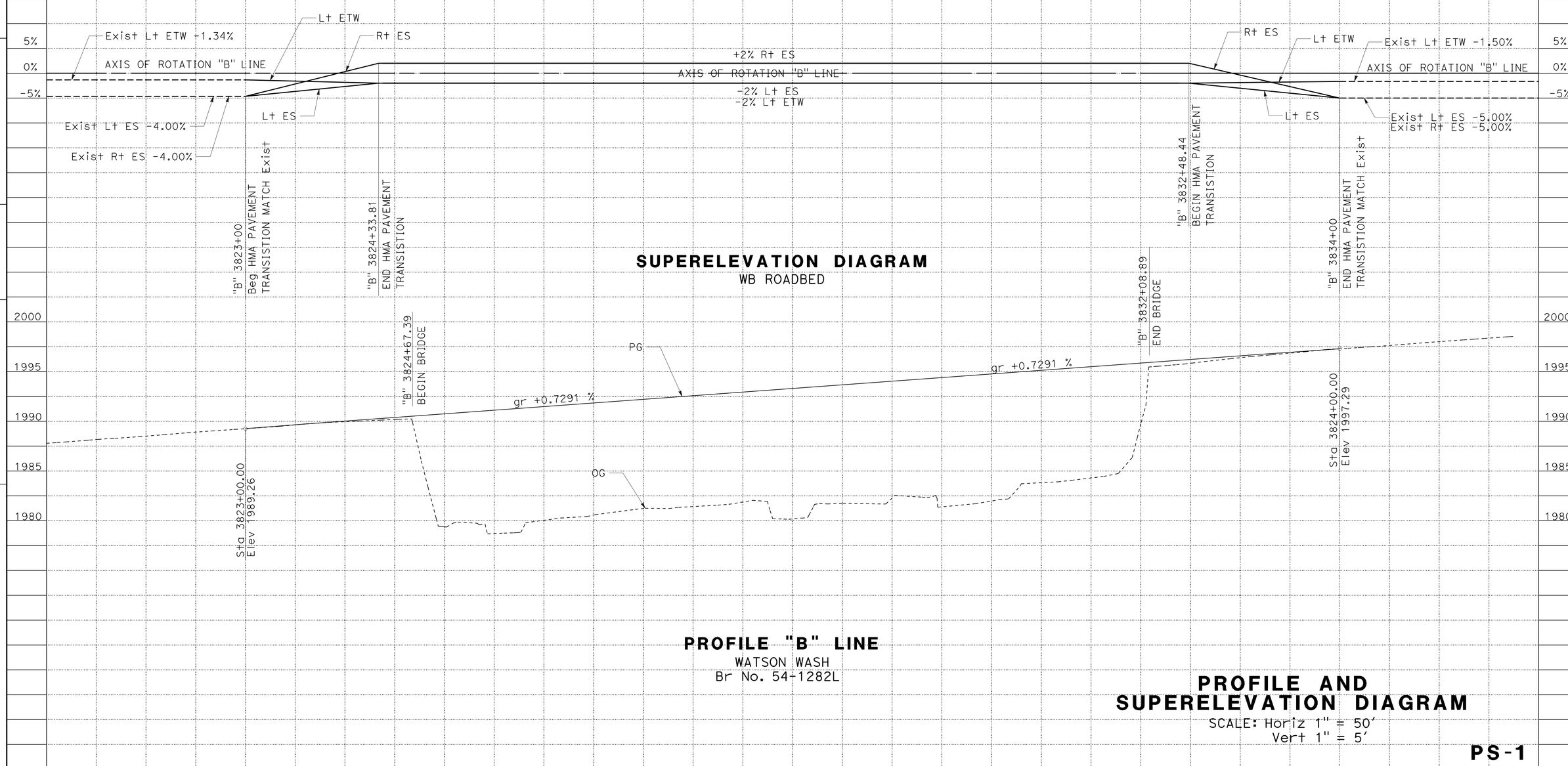

SUPERELEVATION DIAGRAM
WB ROADBED

PROFILE "B" LINE
WATSON WASH
Br No. 54-1282L

PROFILE AND SUPERELEVATION DIAGRAM
SCALE: Horiz 1" = 50'
Vert 1" = 5'

PS-1

REVISED BY	DATE REVISED
DON NGUYEN	DUNG HUY PHAN
CALCULATED-DESIGNED BY	CHECKED BY
FUNCTIONAL SUPERVISOR	MUSTAPHA RAOUF

STATE OF CALIFORNIA - DEPARTMENT OF TRANSPORTATION
Caltrans
DESIGN

LAST REVISION 06-24-15
DATE PLOTTED => 25-NOV-2015
TIME PLOTTED => 08:42

Dist	COUNTY	ROUTE	POST MILES TOTAL PROJECT	SHEET No.	TOTAL SHEETS
08	SBd	40	R105.2/106.5	7	110

REGISTERED CIVIL ENGINEER 6-24-15 DATE

6-25-15
PLANS APPROVAL DATE

REGISTERED PROFESSIONAL ENGINEER
DUNG HUY PHAN
No. C73061
Exp. 12-31-16
CIVIL
STATE OF CALIFORNIA

THE STATE OF CALIFORNIA OR ITS OFFICERS OR AGENTS SHALL NOT BE RESPONSIBLE FOR THE ACCURACY OR COMPLETENESS OF SCANNED COPIES OF THIS PLAN SHEET.

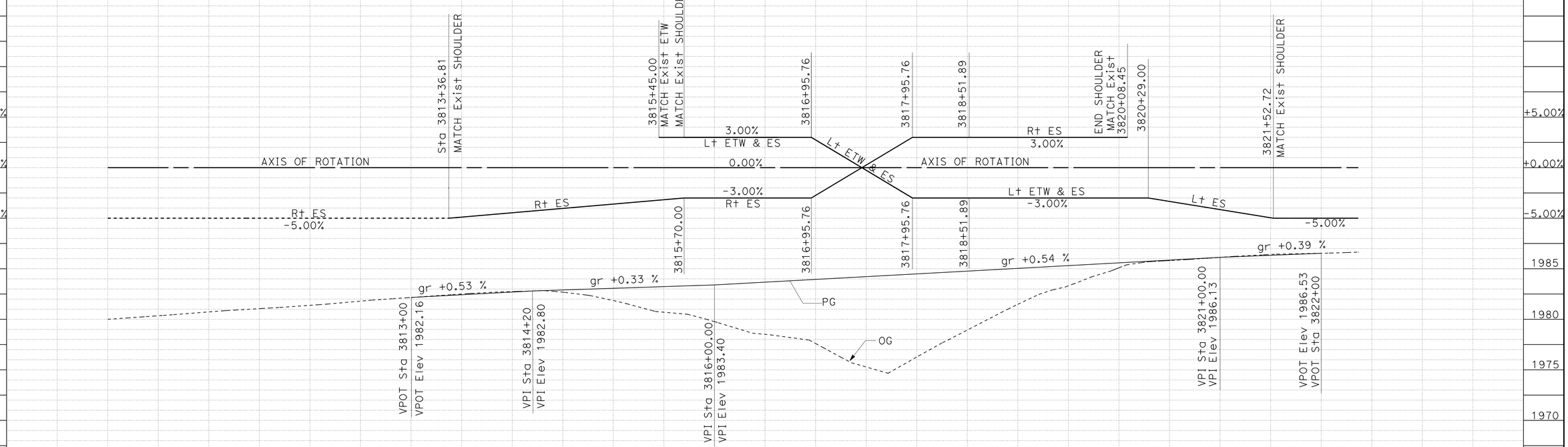

PROFILE
DETOUR LINE "C"
EAST TO WEST

DETOUR PROFILE AND SUPERELEVATION DIAGRAM

SCALE: Horiz 1" = 50'
Vert 1" = 5'

PS-2

STATION	3810	3811	3812	3813	3814	3815	3816	3817	3818	3819	3820	3821	3822	TOTAL
CY Exc														
CY Emb														

STATE OF CALIFORNIA - DEPARTMENT OF TRANSPORTATION
Caltrans® DESIGN

FUNCTIONAL SUPERVISOR: MUSTAPHA RAOUF
CALCULATED-DESIGNED BY: DON NGUYEN
CHECKED BY: DUNG HUY PHAN
REVISED BY
DATE REVISED

LAST REVISION 06-24-15
DATE PLOTTED => 25-NOV-2015
TIME PLOTTED => 08:42

Dist	COUNTY	ROUTE	POST MILES TOTAL PROJECT	SHEET No.	TOTAL SHEETS
08	SBd	40	R105.2/106.5	8	110

REGISTERED CIVIL ENGINEER 6-24-15 DATE

6-25-15
PLANS APPROVAL DATE

REGISTERED PROFESSIONAL ENGINEER
DUNG HUY PHAN
No. C73061
Exp. 12-31-16
CIVIL
STATE OF CALIFORNIA

THE STATE OF CALIFORNIA OR ITS OFFICERS OR AGENTS SHALL NOT BE RESPONSIBLE FOR THE ACCURACY OR COMPLETENESS OF SCANNED COPIES OF THIS PLAN SHEET.

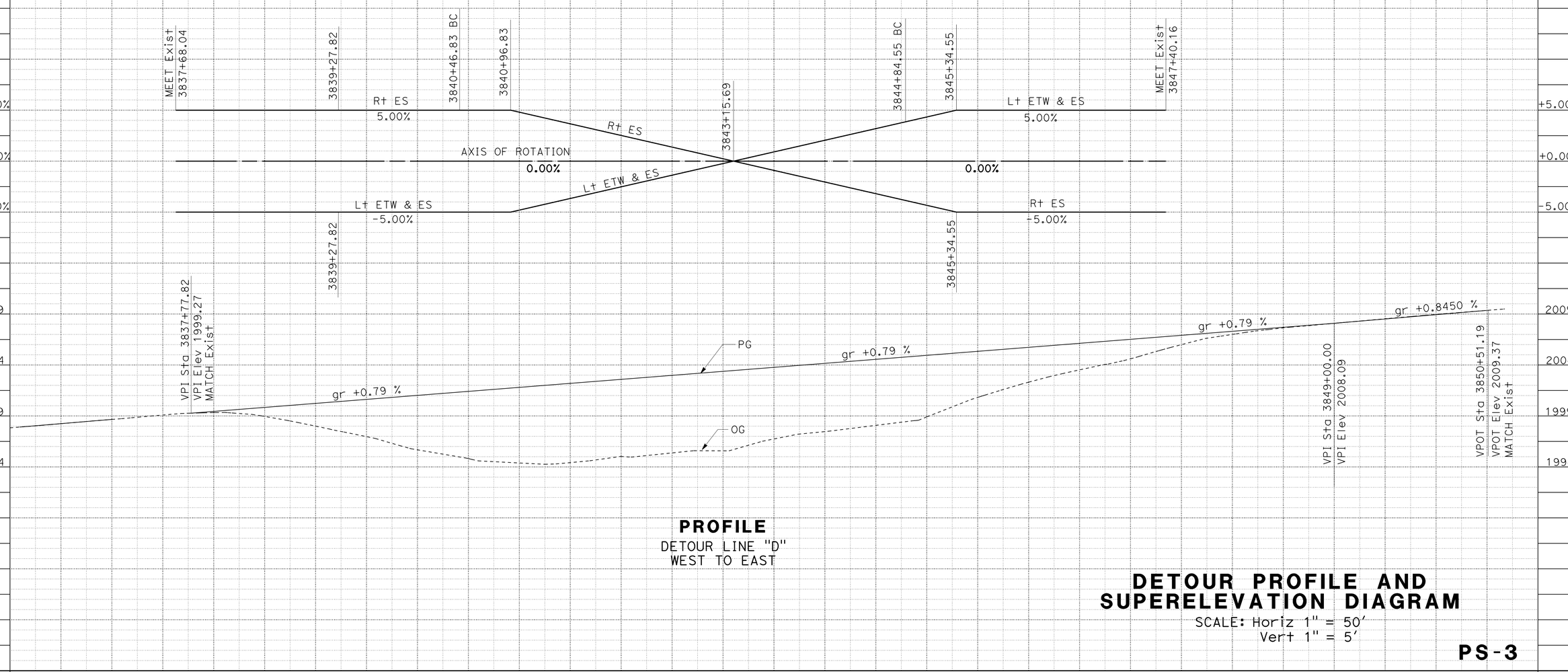

PROFILE
DETOUR LINE "D"
WEST TO EAST

DETOUR PROFILE AND SUPERELEVATION DIAGRAM

SCALE: Horiz 1" = 50'
Vert 1" = 5'

PS-3

STATE OF CALIFORNIA - DEPARTMENT OF TRANSPORTATION
Caltrans
DESIGN

FUNCTIONAL SUPERVISOR: MUSTAPHA RAOUF
CALCULATED-DESIGNED BY: DON NGUYEN
CHECKED BY: DUNG HUY PHAN
REVISED BY
DATE REVISED

LAST REVISION 06-24-15
DATE PLOTTED => 25-NOV-2015
TIME PLOTTED => 08:42

Dist	COUNTY	ROUTE	POST MILES TOTAL PROJECT	SHEET No.	TOTAL SHEETS
08	SBd	40	R105.2/106.5	9	110

REGISTERED CIVIL ENGINEER 6-24-15 DATE

6-25-15
PLANS APPROVAL DATE

REGISTERED PROFESSIONAL ENGINEER
DUNG HUY PHAN
No. C73061
Exp. 12-31-16
CIVIL
STATE OF CALIFORNIA

THE STATE OF CALIFORNIA OR ITS OFFICERS OR AGENTS SHALL NOT BE RESPONSIBLE FOR THE ACCURACY OR COMPLETENESS OF SCANNED COPIES OF THIS PLAN SHEET.

NOTES:

1. LIMITS OF REMOVE CONCRETED ROCK SLOPE PROTECTION AND CONCRETED ROCK SLOPE PROTECTION AS SHOWN ARE APPROXIMATE. FINAL LIMITS TO BE DETERMINED BY THE ENGINEER.
2. ROCK SLOPE PROTECTION SHALL BE CONTINUOUS UNDER THE BRIDGES.
3. DIMENSION 7.5′ IS APPROXIMATE AND MAY VARY. ROCK SLOPE PROTECTION SHOULD EXTEND TO THE TOP OF THE BANK AND MATCH EXISTING TOP OF ROCK SLOPE PROTECTION ELEVATIONS AT A MINIMUM.
4. DIMENSION 6′ IS A MINIMUM DEPTH BELOW THE CHANNEL BOTTOM. IF EXISTING TOE IS DEEPER THEN MATCH EXISTING.
5. SEE QUANTITY SHEET Q-1 FOR LOCATION OF HMA OVERSIDE DRAINS AND HMA DIKES.
6. SEE 2010 STANDARD PLAN RSP A87B FOR CONSTRUCTION DETAILS OF HMA DIKES.

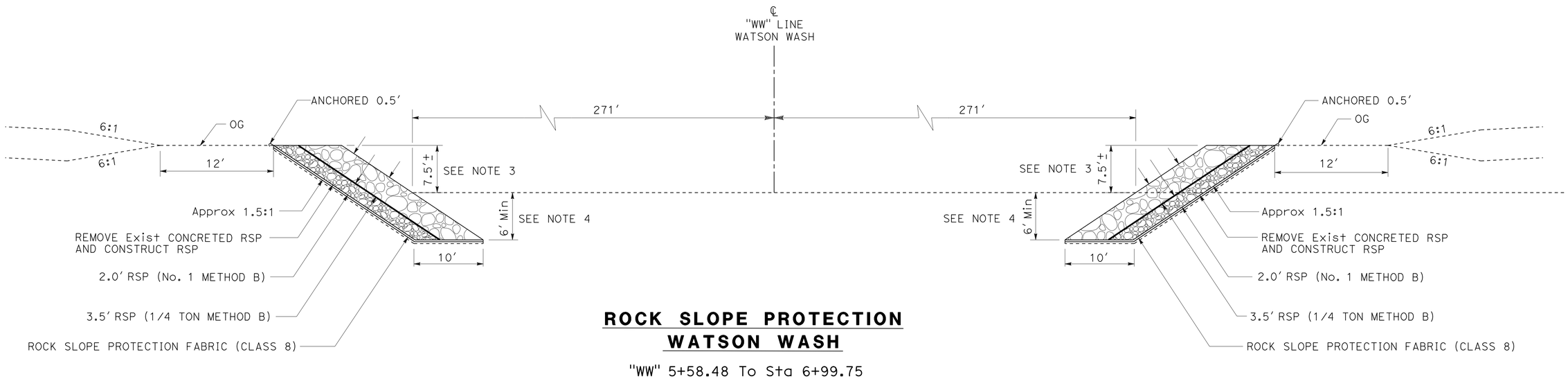

ROCK SLOPE PROTECTION
WATSON WASH

"WW" 5+58.48 To Sta 6+99.75
"WW" 8+79.36 To Sta 9+68.21
"WW" 10+04.10 To Sta 11+44.39
"WW" 13+24.45 To Sta 14+12.21

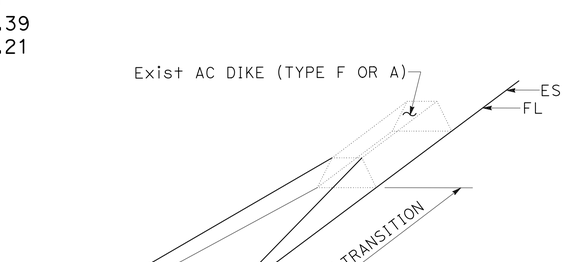

HMA DIKE TRANSITION

CONSTRUCTION DETAILS
NO SCALE

C-1

STATE OF CALIFORNIA - DEPARTMENT OF TRANSPORTATION
Caltrans® DESIGN

FUNCTIONAL SUPERVISOR: MUSTAPHA RAOUF
CALCULATED-DESIGNED BY: DON NGUYEN
CHECKED BY: DUNG HUY PHAN
REVISED BY
DATE REVISED

LAST REVISION 06-24-15
DATE PLOTTED => 25-NOV-2015
TIME PLOTTED => 08:42

Dist	COUNTY	ROUTE	POST MILES TOTAL PROJECT	SHEET No.	TOTAL SHEETS
08	SBd	40	R105.2/106.5	10	110

REGISTERED CIVIL ENGINEER 6-24-15 DATE

6-25-15
PLANS APPROVAL DATE

REGISTERED PROFESSIONAL ENGINEER
DUNG HUY PHAN
No. C73061
Exp. 12-31-16
CIVIL
STATE OF CALIFORNIA

THE STATE OF CALIFORNIA OR ITS OFFICERS OR AGENTS SHALL NOT BE RESPONSIBLE FOR THE ACCURACY OR COMPLETENESS OF SCANNED COPIES OF THIS PLAN SHEET.

NOTES:

1. FOR ADDITIONAL DETAILS NOT SHOWN ON THIS PLAN, REFER TO RSP A77L1 AND RSP A77L2.
2. CRT POST TO BE WOOD ONLY.

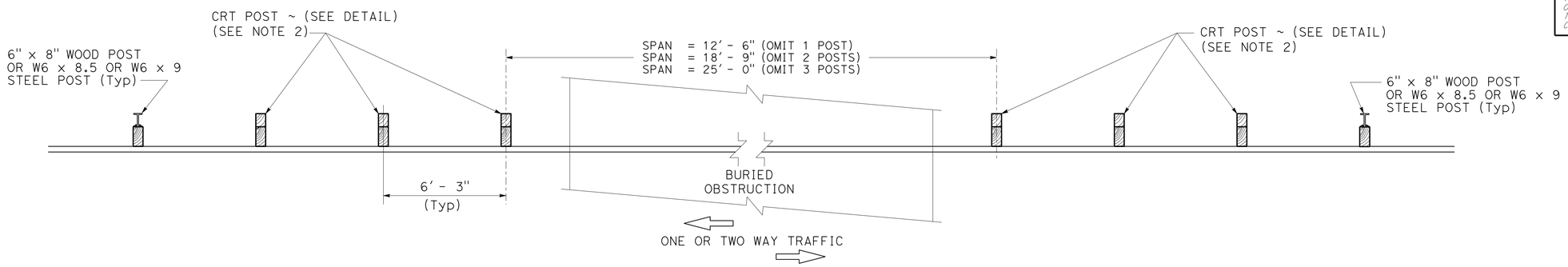

PLAN

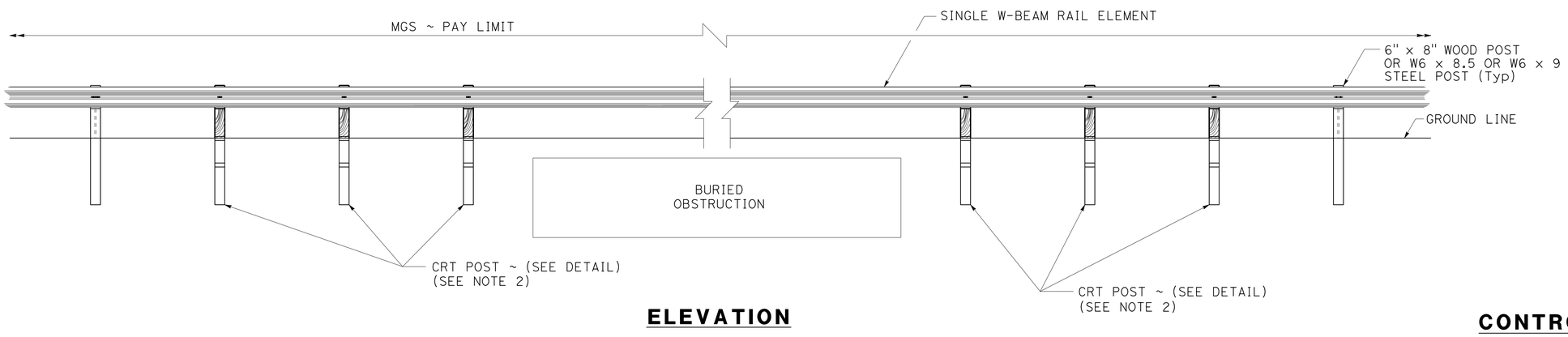

ELEVATION

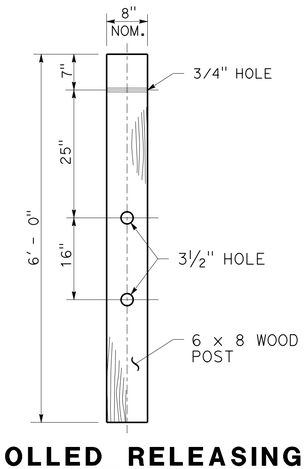

CONTROLLED RELEASING TERMINAL (CRT) POST DETAIL

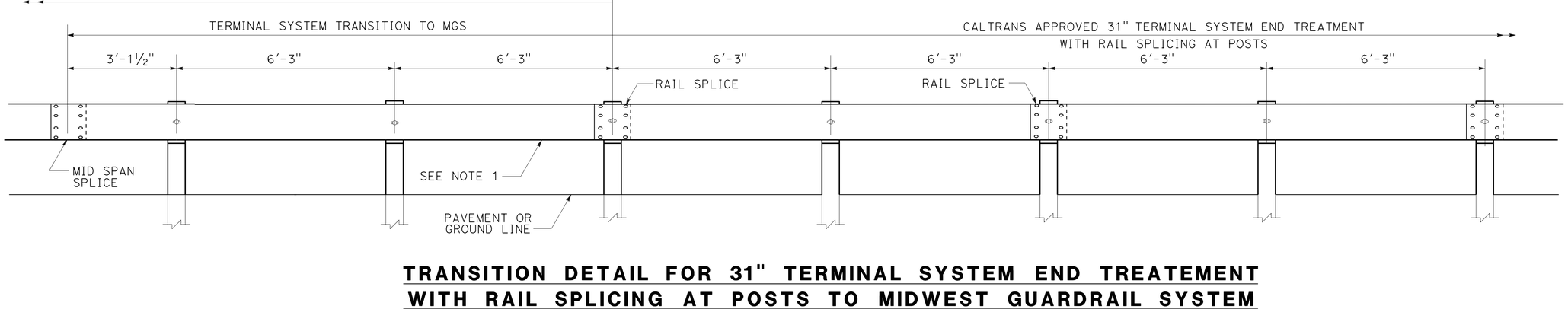

TRANSITION DETAIL FOR 31" TERMINAL SYSTEM END TREATEMENT WITH RAIL SPLICING AT POSTS TO MIDWEST GUARDRAIL SYSTEM

MIDWEST GUARDRAIL SYSTEM DETAILS

CONSTRUCTION DETAILS

NO SCALE

C-2

STATE OF CALIFORNIA - DEPARTMENT OF TRANSPORTATION
Caltrans®
DESIGN

FUNCTIONAL SUPERVISOR: MUSTAPHA RAOUF
CALCULATED-DESIGNED BY: DON NGUYEN
CHECKED BY: DUNG HUY PHAN
REVISED BY
DATE REVISED

LAST REVISION 06-24-15
DATE PLOTTED => 25-NOV-2015
TIME PLOTTED => 08:42

Dist	COUNTY	ROUTE	POST MILES TOTAL PROJECT	SHEET No.	TOTAL SHEETS
08	SBd	40	R105.2/106.5	11	110

REGISTERED CIVIL ENGINEER 6-24-15 DATE

6-25-15
PLANS APPROVAL DATE

REGISTERED PROFESSIONAL ENGINEER
DUNG HUY PHAN
No. C73061
Exp. 12-31-16
CIVIL
STATE OF CALIFORNIA

THE STATE OF CALIFORNIA OR ITS OFFICERS OR AGENTS SHALL NOT BE RESPONSIBLE FOR THE ACCURACY OR COMPLETENESS OF SCANNED COPIES OF THIS PLAN SHEET.

NOTE:

1. EXACT LOCATIONS FOR TEMPORARY FENCE (TYPE DESERT TORTOISE) WILL BE DETERMINED BY THE ENGINEER.

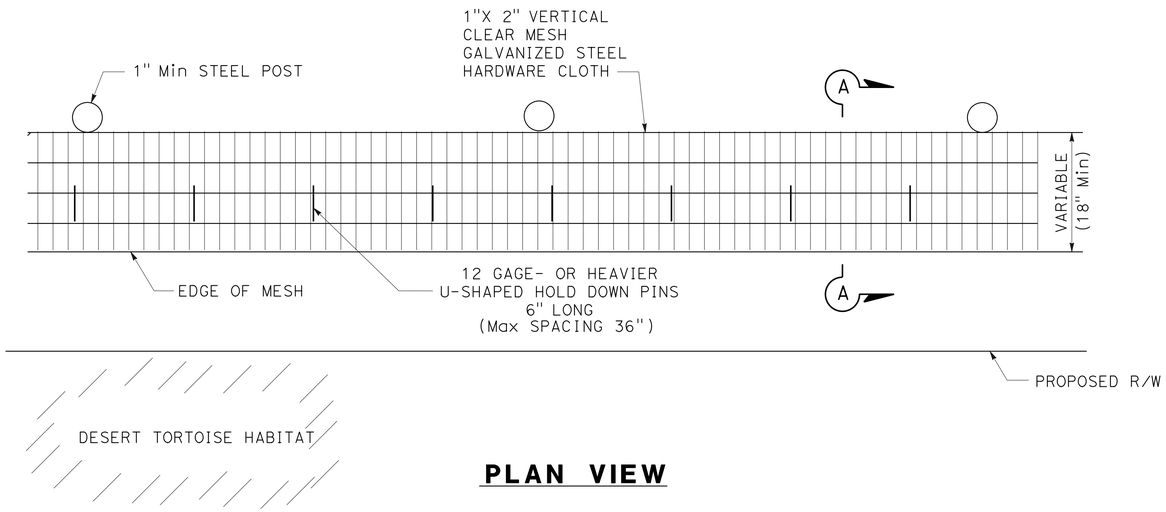

PLAN VIEW

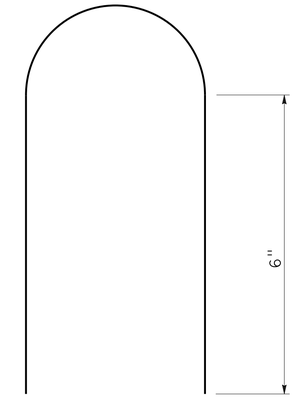

12 GAGE- OR HEAVIER U-SHAPED HOLD DOWN PINS 6" LONG (Max SPACING 36")

PIN DETAIL

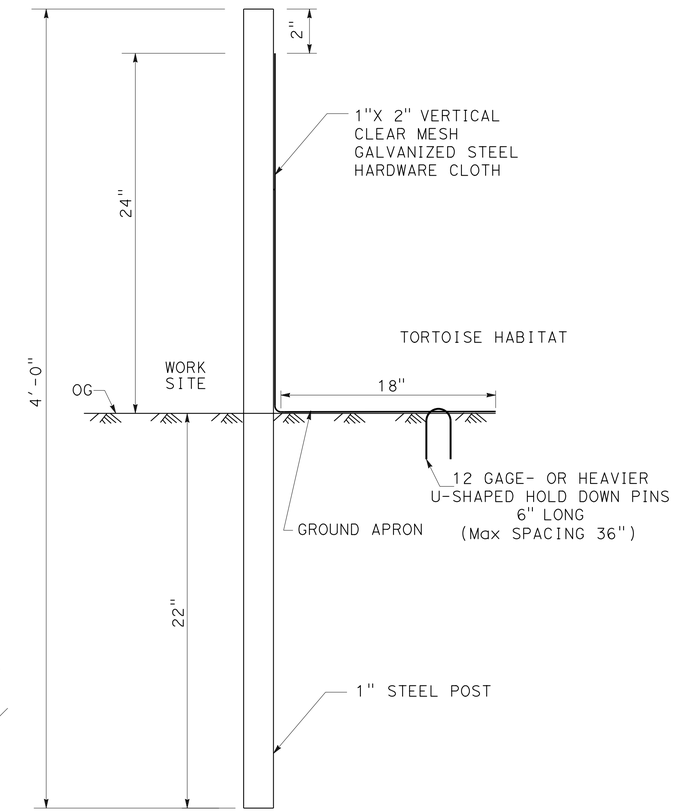

SECTION A-A

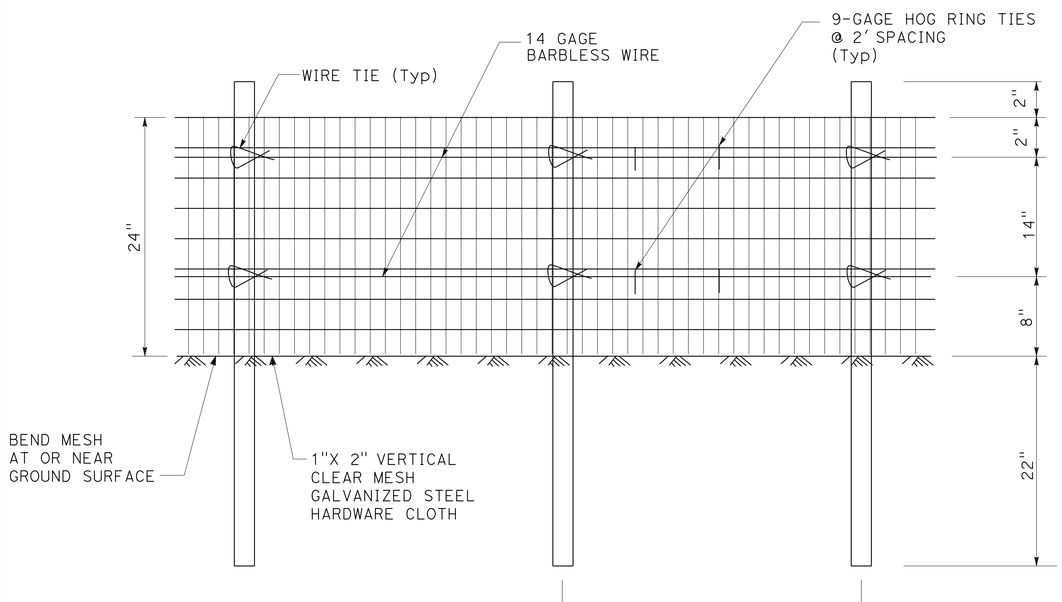

FRONT VIEW

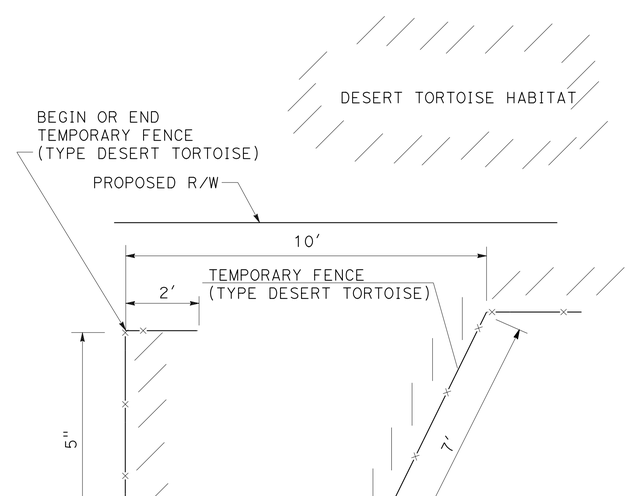

PLAN VIEW

REDIRECTIONAL CONFIGURATION

TEMPORARY FENCE (TYPE DESERT TORTOISE)

CONSTRUCTION DETAILS

NO SCALE

C-3

REVISED BY | DATE REVISED
DON NGUYEN | DUNG HUY PHAN
CALCULATED-DESIGNED BY | CHECKED BY
FUNCTIONAL SUPERVISOR | MUSTAPHA RAOUF
STATE OF CALIFORNIA - DEPARTMENT OF TRANSPORTATION
Caltrans® DESIGN

LAST REVISION 06-24-15 | DATE PLOTTED => 25-NOV-2015 | TIME PLOTTED => 08:42

Dist	COUNTY	ROUTE	POST MILES TOTAL PROJECT	SHEET No.	TOTAL SHEETS
08	SBd	40	R105.2/106.5	12	110

John M Rogers 6-24-15
REGISTERED CIVIL ENGINEER DATE

6-25-15
PLANS APPROVAL DATE

REGISTERED PROFESSIONAL ENGINEER
JOHN M. ROGERS
No. C52748
Exp. 3-2-17
CIVIL
STATE OF CALIFORNIA

THE STATE OF CALIFORNIA OR ITS OFFICERS OR AGENTS SHALL NOT BE RESPONSIBLE FOR THE ACCURACY OR COMPLETENESS OF SCANNED COPIES OF THIS PLAN SHEET.

QUANTITIES FOR TEMPORARY CONSTRUCTION BMPs

TEMPORARY JOB SITE BMPS	UNITS	QUANTITIES
TEMPORARY SOIL BINDER	SQYD	14,520
TEMPORARY FIBER ROLL	LF	1,480
TEMPORARY HYDRAULIC MULCH	SQFT	44,000
* ROCK SLOPE PROTECTION (LIGHT, METHOD B)	CY	2
* ROCK SLOPE PROTECTION FABRIC, (CLASS 8)	SQYD	2
REMOVE ROCK SLOPE PROTECTION	CY	2

* FOR ADDITIONAL QUANTITIES SEE SHEET Q-1

TEMPORARY WATER POLLUTION CONTROL QUANTITIES

WPCQ-1

STATE OF CALIFORNIA - DEPARTMENT OF TRANSPORTATION
Caltrans® HYDRAULICS DESIGN

FUNCTIONAL SUPERVISOR: JOHN ROGERS
CALCULATED-DESIGNED BY: DIEP PHUONG
CHECKED BY: JOHN ROGERS
REVISED BY
DATE REVISED

LAST REVISION 06-24-15
DATE PLOTTED => 25-NOV-2015
TIME PLOTTED => 08:43

Dist	COUNTY	ROUTE	POST MILES TOTAL PROJECT	SHEET No.	TOTAL SHEETS
08	SBd	40	R105.2/106.5	13	110

Daryush Nami 6-24-15
REGISTERED CIVIL ENGINEER DATE

6-25-15
PLANS APPROVAL DATE

REGISTERED PROFESSIONAL ENGINEER
DARYUSH NAMI
No. C78890
Exp. 3-31-16
CIVIL
STATE OF CALIFORNIA

THE STATE OF CALIFORNIA OR ITS OFFICERS OR AGENTS SHALL NOT BE RESPONSIBLE FOR THE ACCURACY OR COMPLETENESS OF SCANNED COPIES OF THIS PLAN SHEET.

NOTES:

1. LOCATIONS OF CONSTRUCTION AREA SIGNS, AND PCMS ARE APPROXIMATE. EXACT LOCATIONS OF THE CONSTRUCTION AREA SIGNS AND PCMS WILL BE DETERMINED BY THE ENGINEER.
2. REFER TO THE TRAFFIC HANDLING PLAN SHEETS FOR ADDITIONAL CONSTRUCTION AREA SIGNS.
3. REFER TO STANDARD PLANS RSPT9, RSPT10, RSPT10A, AND RSPT11 FOR ADDITIONAL TRAFFIC CONTROL NOTES, AND REQUIREMENTS.
4. INSTALL SPEED REDUCTION SIGNS PRIOR TO THE CONSTRUCTION AREA.
5. FLASHING ARROW SIGNS WHEN USED, SHALL BE EITHER TYPE I OR TYPE II.
6. COVER ALL CONFLICTING SIGNING.
8. ALL CONSTRUCTION AREA SIGNS ARE BLACK ON ORANGE EXCEPT FOR REGULATORY SIGNS AND C40(CA) SIGN.

LEGEND:

- CONSTRUCTION AREA
- CONSTRUCTION AREA SIGN (ONE POST)
- CONSTRUCTION AREA SIGN (TWO POST)
- (X) CONSTRUCTION AREA SIGN NUMBER
- PORTABLE CHANGEABLE MESSAGE SIGN (PCMS)
- PORTABLE FLASHING BEACON

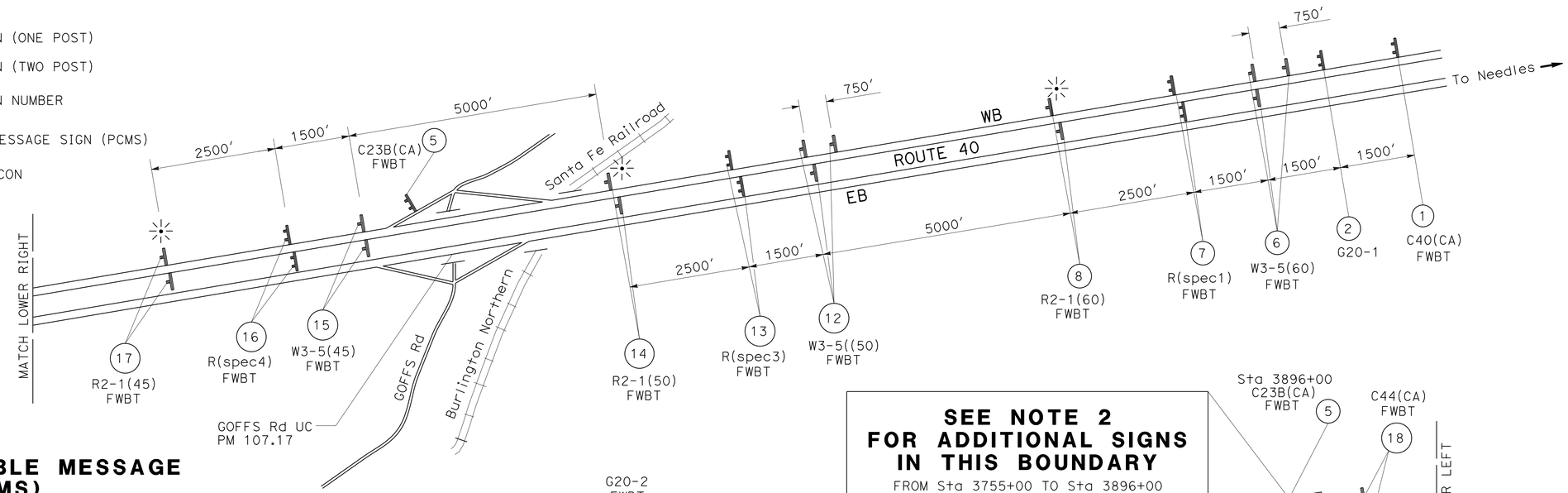

SEE NOTE 2 FOR ADDITIONAL SIGNS IN THIS BOUNDARY
FROM Sta 3755+00 TO Sta 3896+00

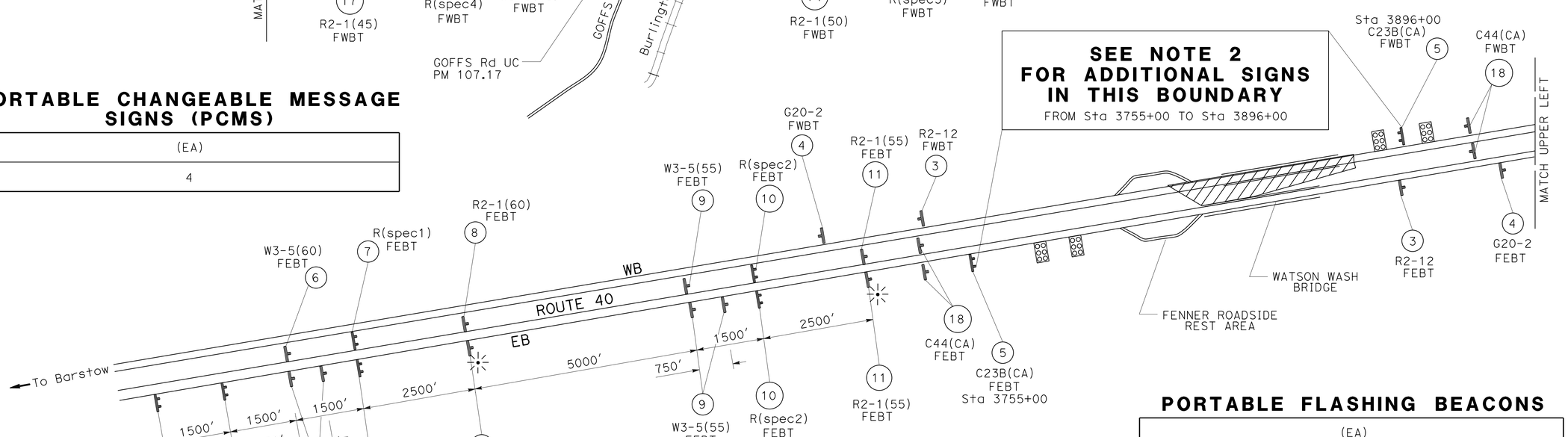

PORTABLE CHANGEABLE MESSAGE SIGNS (PCMS)

(EA)
4

PORTABLE FLASHING BEACONS

(EA)
5

CONSTRUCTION AREA SIGNS

NO SCALE

CS-1

APPROVED FOR CONSTRUCTION AREA SIGN WORK ONLY

STATE OF CALIFORNIA - DEPARTMENT OF TRANSPORTATION
Caltrans® TRAFFIC DESIGN

FUNCTIONAL SUPERVISOR: MARIO AMANCIO
CALCULATED-DESIGNED BY: DARYUSH NAMI
CHECKED BY: MEHDI KAMGAR
REVISED BY
DATE REVISED

LAST REVISION 06-24-15 | DATE PLOTTED => 25-NOV-2015 | TIME PLOTTED => 08:43

Dist	COUNTY	ROUTE	POST MILES TOTAL PROJECT	SHEET No.	TOTAL SHEETS
08	SBd	40	R105.2/106.5	14	110

Daryush Nami 6-24-15
REGISTERED CIVIL ENGINEER DATE

6-25-15
PLANS APPROVAL DATE

REGISTERED PROFESSIONAL ENGINEER
DARYUSH NAMI
No. C78890
Exp. 3-31-16
CIVIL
STATE OF CALIFORNIA

THE STATE OF CALIFORNIA OR ITS OFFICERS OR AGENTS SHALL NOT BE RESPONSIBLE FOR THE ACCURACY OR COMPLETENESS OF SCANNED COPIES OF THIS PLAN SHEET.

STATIONARY MOUNTED CONSTRUCTION AREA SIGNS

SIGN No. (X)	SIGN CODE FEDERAL	SIGN CODE CALIFORNIA	PANEL SIZE	No. OF POSTS AND POST SIZE	SIGN MESSAGE	ONE POST	TWO POST	No. OF SIGNS AND SHEET No. CS-1 (EA)	TH-1 (EA)	TH-15 (EA)
1		C40(CA)	144" X 60"	2- 6" X 8"	TRAFFIC FINES DOUBLED IN CONSTRUCTION ZONES		*	2		
2	G20-1		90" X 48"	2- 6" X 6"	ROAD WORK NEXT 5 MILES		*	2		
3	R2-12		36" X 54"	1- 4" X 6"	END WORK ZONE SPEED LIMIT	*		2		
4	G20-2		48" X 24"	1- 4" X 6"	END ROAD WORK	*		2		
5	G20-1	C23B(CA)	90" X 48"	2- 6" X 6"	BRIDGE REPLACEMENT AHAED		*	3		
6	W3-5(60)		48" X 48"	1- 6" X 6"	SPEED REDUCTION 60	*		6		
7		R(spec1)	132" x 48"	2- 6" X 6"	60 ZONE AHEAD STRICTLY ENFORCED		*	4		
8	R2-1(60)		36" X 48"	1- 4" X 6"	SPEED LIMIT 60	*		4		
9	W3-5(55)		48" X 48"	1- 6" X 6"	SPEED REDUCTION 55	*		3		
10		R(spec2)	132" x 48"	2- 6" X 6"	55 ZONE AHEAD STRICTLY ENFORCED		*	2		
11	R2-1(55)		36" X 48"	1- 4" X 6"	SPEED LIMIT 55	*		2		
12	W3-5(50)		48" X 48"	1- 6" X 6"	SPEED REDUCTION 50	*		3		
13		R(spec3)	132" x 48"	2- 6" X 6"	50 ZONE AHEAD STRICTLY ENFORCED		*	2		
14	R2-1(50)		36" X 48"	1- 4" X 6"	SPEED LIMIT 50	*		2		
15	W3-5(45)		48" X 48"	1- 6" X 6"	SPEED REDUCTION 45	*		2		
16		R(spec4)	132" x 48"	2- 6" X 6"	45 ZONE AHEAD STRICTLY ENFORCED		*	2		
17	R2-1(45)		36" X 48"	1- 4" X 6"	SPEED LIMIT 45	*		2		
18		C44(CA)	48" X 48"	1- 6" X 6"	TRUCKS ENTERING EXITING	*		4	1	
19	W9-1(R)	C20(CA)	48" X 48"	1- 6" X 6"	RIGHT LANE CLOSED AHEAD	*			2	2
20	W4-2(R)		48" X 48"	1- 6" X 6"	RIGHT LANE ENDS SYMBOL	*			2	2
21	W20-5(R)	C29(CA)	48" X 48"	1- 6" X 6"	RIGHT LANE CLOSED 1000'	*			2	

60 ZONE AHEAD
STRICTLY ENFORCED

PANEL SIZE: 132"X48",
LETTER SIZES:
"60 ZONE AHEAD" 12" C;
"STRICTLY ENFORCED" 10" C
BLACK ON WHITE

(7) R(spec1)

55 ZONE AHEAD
STRICTLY ENFORCED

PANEL SIZE: 132"X48",
LETTER SIZES:
"55 ZONE AHEAD" 12" C;
"STRICTLY ENFORCED" 10" C
BLACK ON WHITE

(10) R(spec2)

50 ZONE AHEAD
STRICTLY ENFORCED

PANEL SIZE: 132"X48",
LETTER SIZES:
"50 ZONE AHEAD" 12" C;
"STRICTLY ENFORCED" 10" C
BLACK ON WHITE

(13) R(spec3)

45 ZONE AHEAD
STRICTLY ENFORCED

PANEL SIZE: 132"X48",
LETTER SIZES:
"45 ZONE AHEAD" 12" C;
"STRICTLY ENFORCED" 10" C
BLACK ON WHITE

(15) R(spec4)

BRIDGE OUT
2 MILES AHEAD
USE DETOUR

PANEL SIZE: 120"X60",
LETTER SIZES:
"BRIDGE OUT" 12" C;
"2 MILES AHEAD" 10" C
"USE DETOUR" 8" C
BLACK ON WHITE

(39) R-11(spec1)

BRIDGE OUT
1½ MILES AHEAD
USE DETOUR

PANEL SIZE: 120"X60",
LETTER SIZES:
"BRIDGE OUT" 12" C;
"1½MILES AHEAD" 10" C
"USE DETOUR" 8" C
BLACK ON WHITE

(40) R-11(spec2)

BRIDGE OUT
1 MILE AHEAD
USE DETOUR

PANEL SIZE: 120"X60",
LETTER SIZES:
"BRIDGE OUT" 12" C;
"1 MILE AHEAD" 10" C
"USE DETOUR" 8" C
BLACK ON WHITE

(41) R-11(spec3)

CONSTRUCTION AREA SIGNS
CS-2

REVISED BY | DATE REVISED
DARYUSH NAMI | MEHDI KAMGAR
CALCULATED-DESIGNED BY | CHECKED BY
FUNCTIONAL SUPERVISOR
MARIO AMANCIO
STATE OF CALIFORNIA - DEPARTMENT OF TRANSPORTATION
Caltrans® TRAFFIC DESIGN

LAST REVISION 06-24-15 | DATE PLOTTED => 25-NOV-2015 | TIME PLOTTED => 08:43

Dist	COUNTY	ROUTE	POST MILES TOTAL PROJECT	SHEET No.	TOTAL SHEETS
08	SBd	40	R105.2/106.5	15	110

Daryush Nami 6-24-15
REGISTERED CIVIL ENGINEER DATE

6-25-15
PLANS APPROVAL DATE

REGISTERED PROFESSIONAL ENGINEER
DARYUSH NAMI
No. C78890
Exp. 3-31-16
CIVIL
STATE OF CALIFORNIA

THE STATE OF CALIFORNIA OR ITS OFFICERS OR AGENTS SHALL NOT BE RESPONSIBLE FOR THE ACCURACY OR COMPLETENESS OF SCANNED COPIES OF THIS PLAN SHEET.

STATIONARY MOUNTED CONSTRUCTION AREA SIGNS

SIGN No. (X)	SIGN CODE		PANEL SIZE	No. OF POSTS AND POST SIZE	SIGN MESSAGE	ONE POST	TWO POST	No. OF SIGNS AND SHEET No.												
								TH-2	TH-3	TH-4	TH-5	TH-6	TH-8	TH-9	TH-10	TH-11	TH-12	TH-13	TH-14	TH-15
	FEDERAL	CALIFORNIA						(EA)	(EA)	(EA)	(EA)	(EA)	(EA)	(EA)	(EA)	(EA)	(EA)	(EA)	(EA)	(EA)
22	W5-2		48" X 48"	1- 6" X 6"	NARROW BRIDGE	*		1	2				1						1	
23	R4-1		36" X 48"	1- 4" X 6"	DO NOT PASS	*		2												2
24		C30(CA)	48" X 48"	MOUNTED ON TYPE III BARRICADE	LANE CLOSED	–	–		2	1	1		3	2	2					
25	W9-1(L)		48" X 48"	1- 6" X 6"	LEFT LANE CLOSED AHEAD	*						2				2				
26	W4-2(L)		48" X 48"	1- 6" X 6"	LEFT LANE ENDS SYMBOL	*						2				1				
27	W20-5(L)		48" X 48"	1- 6" X 6"	LEFT LANE CLOSED 1000'	*						2								
28	M3-4	SC3(CA) G27.2(CA)	48" X 18" 36" X 36" 36" X 18"	1- 6" X 6"	DETOUR / UP ARROW CALIFORNIA SHIELD "40" WEST	*												1		4
29	W20-2 (1000)		48" X 48"	1- 6" X 6"	DETOUR 1000 FT	*														2
30		W4-19(CA) (L)(40)	60" X 60"	2- 6" X 6"	REVERSE CURVE (LEFT) SYMBOL 40 MPH		*													2
31		W4-19(CA) (R)(40)	60" X 60"	2- 6" X 6"	REVERSE CURVE (RIGHT) SYMBOL 40 MPH		*											1		
32	R5-1		36" X 36"	MOUNTED ON TYPE III BARRICADE	DO NOT ENTER	–	–										4		2	
33	D5-2		114" X 60"	2- 6" X 6"	REST AREA EXIT DIRECTION		*										1			
34	M4-10(LT) M3-4	G27.2(CA)	48" X 18" 36" X 36" 24" X 12"	1- 4" X 6"	DETOUR / LEFT ARROW RTE 40 WEST	*											1			
35	M4-8A		24" X 18"	1- 4" X 4"	END DETOUR	*											1			
36		W4-7(CA) (R)(40)	60" X 60"	2- 6" X 6"	RIGHT CURVE SYMBOL 40 MPH		*											1		
37		W4-7(CA) (L)(40)	60" X 60"	2- 6" X 6"	LEFT CURVE SYMBOL 40 MPH		*										1			
38	R-11(spec1)		120" X 60"	2- 6" X 8"	BRIDGE OUT 2 MILES AHEAD USE DETOUR		*													2
39	R-11(spec2)		120" X 60"	2- 6 "X 8"	BRIDGE OUT 1.5 MILES AHEAD USE DETOUR		*													2
40	R-11(spec3)		120" X 60"	2- 6" X 8"	BRIDGE OUT 1 MILE AHEAD USE DETOUR		*													2
41	W20-2(1 MILE)		60" X 60"	2- 6" X 6"	DETOUR AHEAD 1 MILE		*													2

REVISED BY | DATE REVISED

DARYUSH NAMI | MEHDI KAMGAR

CALCULATED-DESIGNED BY | CHECKED BY

FUNCTIONAL SUPERVISOR: MARIO AMANCIO

STATE OF CALIFORNIA - DEPARTMENT OF TRANSPORTATION
Caltrans® TRAFFIC DESIGN

CONSTRUCTION AREA SIGNS

CS-3

LAST REVISION 06-24-15 | DATE PLOTTED => 25-NOV-2015 | TIME PLOTTED => 08:43

Dist	COUNTY	ROUTE	POST MILES TOTAL PROJECT	SHEET No.	TOTAL SHEETS
08	SBd	40	R105.2/106.5	16	110

REGISTERED CIVIL ENGINEER 6-24-15 DATE

6-25-15
PLANS APPROVAL DATE

REGISTERED PROFESSIONAL ENGINEER
DUNG HUY PHAN
No. C73061
Exp. 12-31-16
CIVIL
STATE OF CALIFORNIA

THE STATE OF CALIFORNIA OR ITS OFFICERS OR AGENTS SHALL NOT BE RESPONSIBLE FOR THE ACCURACY OR COMPLETENESS OF SCANNED COPIES OF THIS PLAN SHEET.

NOTES:

1. FOR COMPLETE RIGHT OF WAY AND ACCURATE ACCESS DATA, SEE RIGHT OF WAY RECORD MAPS AT DISTRICT OFFICE.
2. REMOVE HOT MIX ASPHALT (HMA) PAVEMENT DETOUR WHEN BRIDGE IS COMPLETED AND DETOUR IS CLOSED.

LEGEND:

CONSTRUCTION AREA THIS STAGE

Pvmt STRUCTURAL SECTION, SEE SHEET X-1

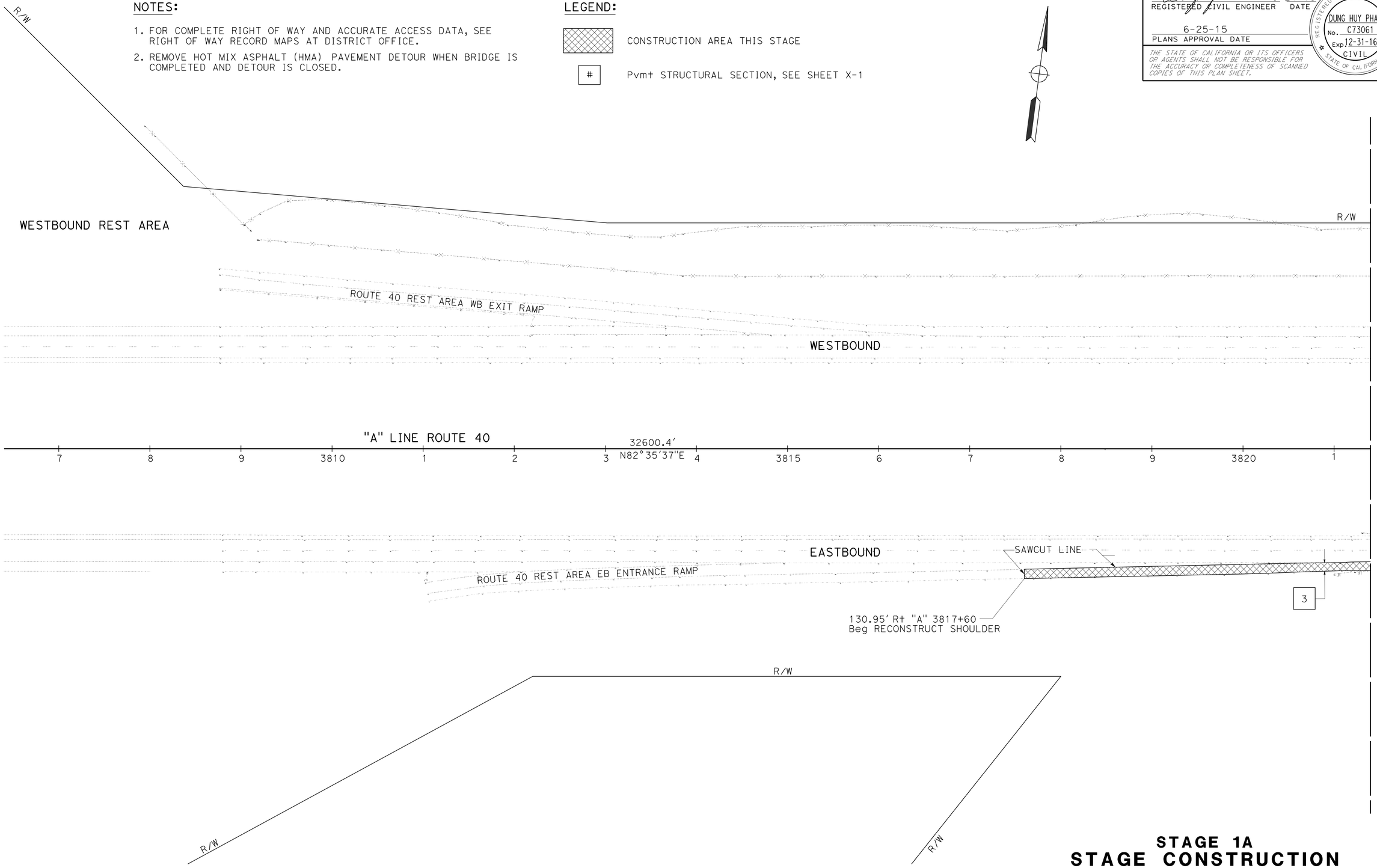

APPROVED FOR STAGE CONSTRUCTION WORK ONLY

STAGE 1A
STAGE CONSTRUCTION

SCALE: 1" = 50'

SC-1

STATE OF CALIFORNIA - DEPARTMENT OF TRANSPORTATION
Caltrans
DESIGN

FUNCTIONAL SUPERVISOR: MUSTAPHA RAOUF
CALCULATED-DESIGNED BY: DON NGUYEN
CHECKED BY: DUNG HUY PHAN
REVISED BY
DATE REVISED

LAST REVISION 06-24-15
DATE PLOTTED => 25-NOV-2015
TIME PLOTTED => 08:43

Dist	COUNTY	ROUTE	POST MILES TOTAL PROJECT	SHEET No.	TOTAL SHEETS
08	SBd	40	R105.2/106.5	17	110

REGISTERED CIVIL ENGINEER 6-24-15 DATE

6-25-15
PLANS APPROVAL DATE

REGISTERED PROFESSIONAL ENGINEER
DUNG HUY PHAN
No. C73061
Exp. 12-31-16
CIVIL
STATE OF CALIFORNIA

THE STATE OF CALIFORNIA OR ITS OFFICERS OR AGENTS SHALL NOT BE RESPONSIBLE FOR THE ACCURACY OR COMPLETENESS OF SCANNED COPIES OF THIS PLAN SHEET.

NOTE:

FOR ACCURATE RIGHT OF WAY DATA, CONTACT RIGHT OF WAY ENGINEERING AT THE DISTRICT OFFICE.

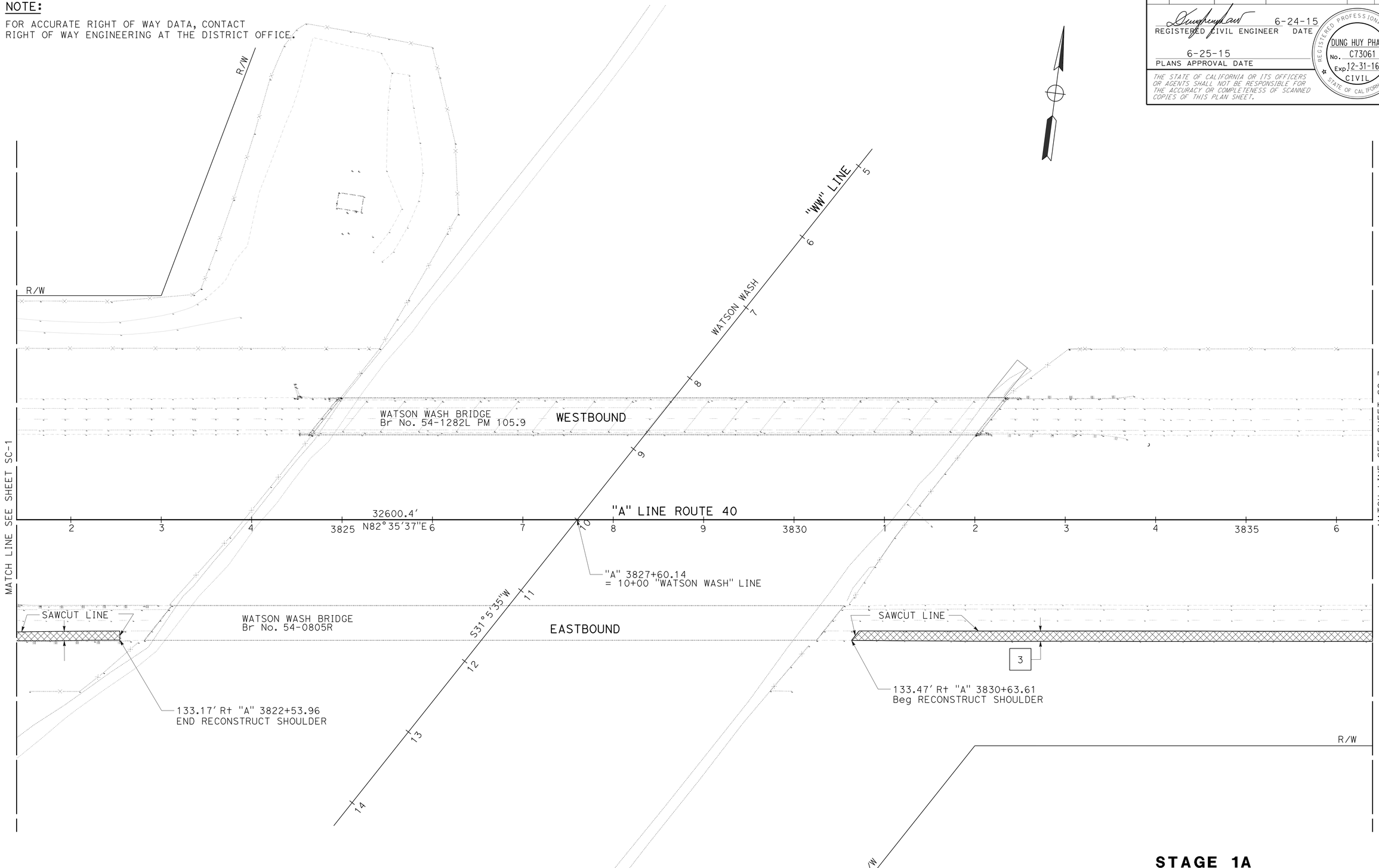

STAGE 1A
STAGE CONSTRUCTION
SCALE: 1" = 50'

SC-2

APPROVED FOR STAGE CONSTRUCTION WORK ONLY

STATE OF CALIFORNIA - DEPARTMENT OF TRANSPORTATION
Caltrans
DESIGN

FUNCTIONAL SUPERVISOR: MUSTAPHA RAOUF
CALCULATED-DESIGNED BY: DON NGUYEN
CHECKED BY: DUNG HUY PHAN
REVISED BY
DATE REVISED

LAST REVISION 06-24-15
DATE PLOTTED => 25-NOV-2015
TIME PLOTTED => 08:43

Dist	COUNTY	ROUTE	POST MILES TOTAL PROJECT	SHEET No.	TOTAL SHEETS
08	SBd	40	R105.2/106.5	18	110

REGISTERED CIVIL ENGINEER 6-24-15 DATE

6-25-15
PLANS APPROVAL DATE

REGISTERED PROFESSIONAL ENGINEER
DUNG HUY PHAN
No. C73061
Exp. 12-31-16
CIVIL
STATE OF CALIFORNIA

THE STATE OF CALIFORNIA OR ITS OFFICERS OR AGENTS SHALL NOT BE RESPONSIBLE FOR THE ACCURACY OR COMPLETENESS OF SCANNED COPIES OF THIS PLAN SHEET.

NOTE:

FOR ACCURATE RIGHT OF WAY DATA, CONTACT
RIGHT OF WAY ENGINEERING AT THE DISTRICT OFFICE.

CURVE DATA

No. ⊕	R	Δ	T	L
5	70000′	02°47′20″	1703.91′	3407.14′

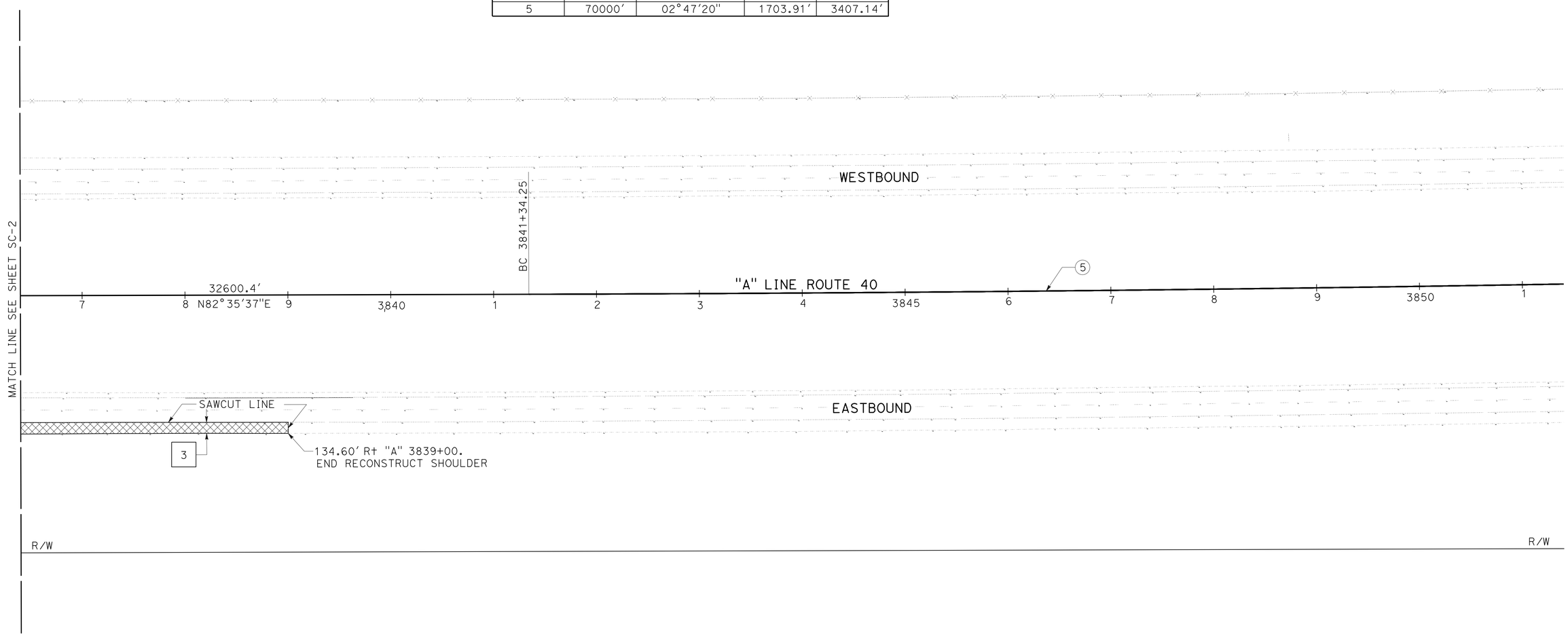

STAGE 1A
STAGE CONSTRUCTION
SCALE: 1" = 50′

SC-3

APPROVED FOR STAGE CONSTRUCTION WORK ONLY

STATE OF CALIFORNIA - DEPARTMENT OF TRANSPORTATION
Caltrans
DESIGN

FUNCTIONAL SUPERVISOR: MUSTAPHA RAOUF
CALCULATED-DESIGNED BY: DON NGUYEN
CHECKED BY: DUNG HUY PHAN
REVISED BY
DATE REVISED

LAST REVISION 06-24-15
DATE PLOTTED => 25-NOV-2015
TIME PLOTTED => 08:43

Dist	COUNTY	ROUTE	POST MILES TOTAL PROJECT	SHEET No.	TOTAL SHEETS
08	SBd	40	R105.2/106.5	19	110

REGISTERED CIVIL ENGINEER 6-24-15 DATE

6-25-15
PLANS APPROVAL DATE

REGISTERED PROFESSIONAL ENGINEER DUNG HUY PHAN No. C73061 Exp. 12-31-16 CIVIL STATE OF CALIFORNIA

THE STATE OF CALIFORNIA OR ITS OFFICERS OR AGENTS SHALL NOT BE RESPONSIBLE FOR THE ACCURACY OR COMPLETENESS OF SCANNED COPIES OF THIS PLAN SHEET.

NOTE:

FOR ACCURATE RIGHT OF WAY DATA, CONTACT RIGHT OF WAY ENGINEERING AT THE DISTRICT OFFICE.

CURVE DATA

No. ⊕	R	Δ	T	L
1	800′	26°54′12″	191.35′	375.64′
2	780′	26°56′19″	186.82′	366.73′

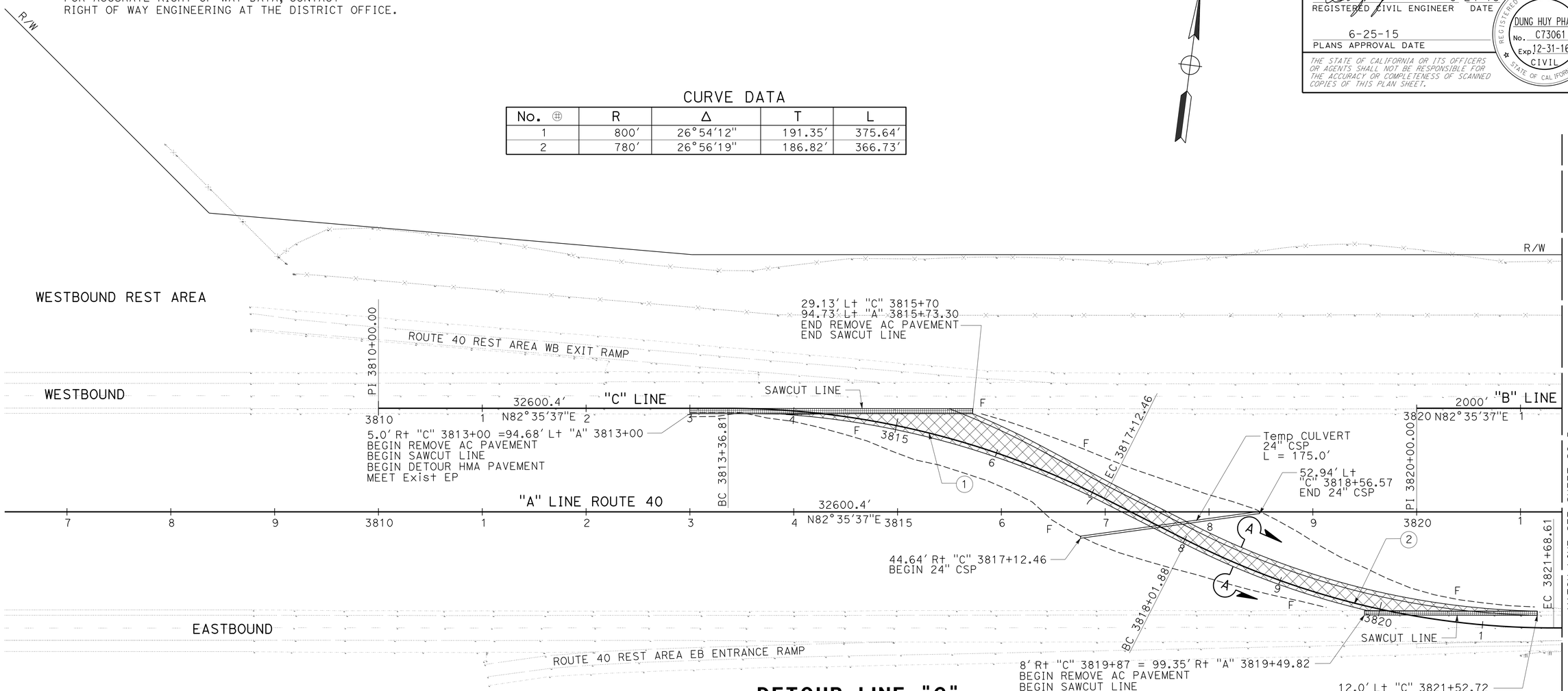

DETOUR LINE "C" EAST TO WEST (STAGE 1B)

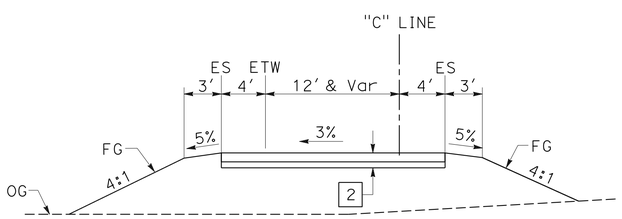

SECTION A-A

DETOUR ROAD (Typ)

NO SCALE

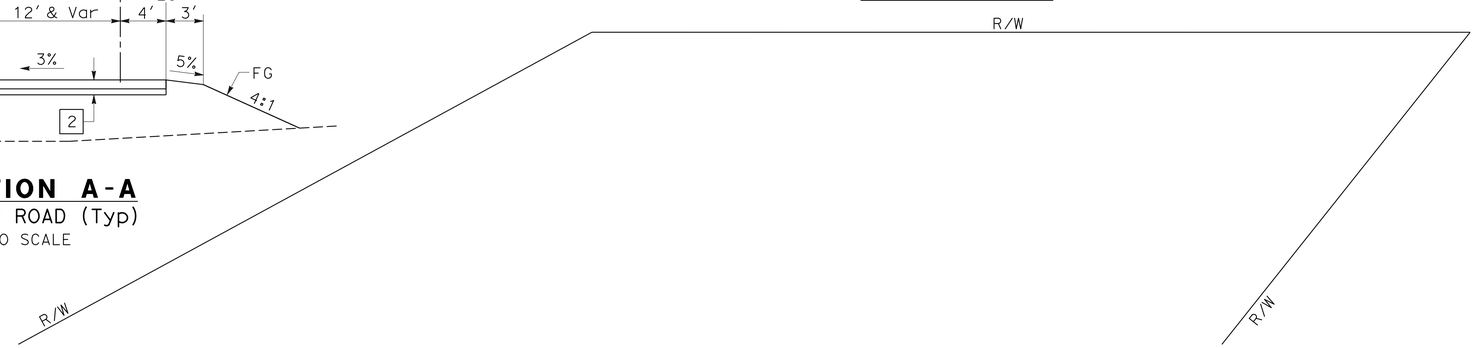

STAGE 1B
STAGE CONSTRUCTION

SCALE: 1" = 50′

SC-4

APPROVED FOR STAGE CONSTRUCTION WORK ONLY

STATE OF CALIFORNIA - DEPARTMENT OF TRANSPORTATION

Caltrans® **DESIGN**

FUNCTIONAL SUPERVISOR: MUSTAPHA RAOUF

CALCULATED-DESIGNED BY: DON NGUYEN

CHECKED BY: DUNG HUY PHAN

REVISED BY | DATE REVISED

LAST REVISION 06-24-15 | DATE PLOTTED => 25-NOV-2015 | TIME PLOTTED => 08:43

Dist	COUNTY	ROUTE	POST MILES TOTAL PROJECT	SHEET No.	TOTAL SHEETS
08	SBd	40	R105.2/106.5	20	110

REGISTERED CIVIL ENGINEER 6-24-15 DATE

6-25-15
PLANS APPROVAL DATE

REGISTERED PROFESSIONAL ENGINEER
DUNG HUY PHAN
No. C73061
Exp. 12-31-16
CIVIL
STATE OF CALIFORNIA

THE STATE OF CALIFORNIA OR ITS OFFICERS OR AGENTS SHALL NOT BE RESPONSIBLE FOR THE ACCURACY OR COMPLETENESS OF SCANNED COPIES OF THIS PLAN SHEET.

NOTE:

FOR ACCURATE RIGHT OF WAY DATA, CONTACT RIGHT OF WAY ENGINEERING AT THE DISTRICT OFFICE.

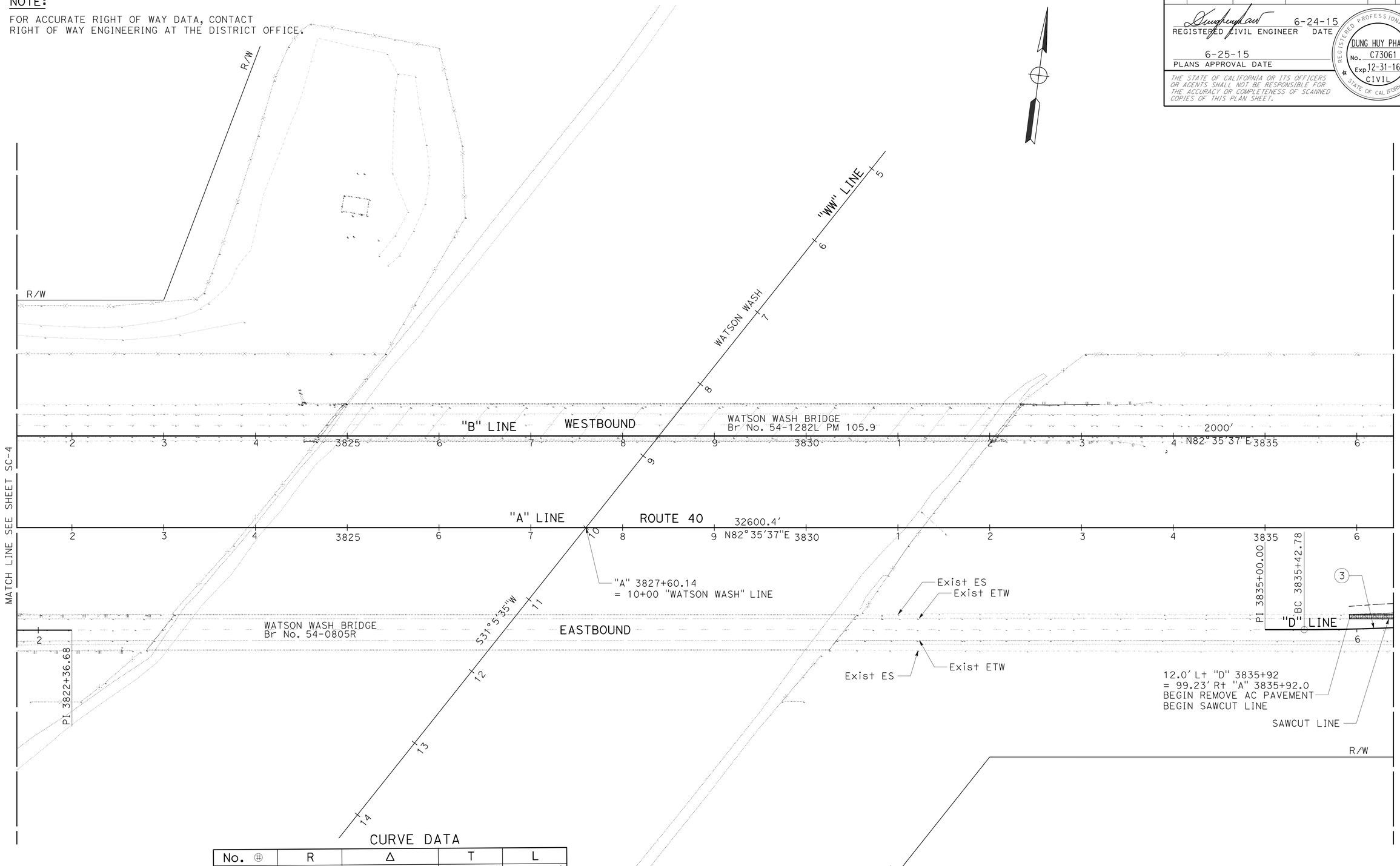

CURVE DATA

No. ⊕	R	Δ	T	L
3	2200'	13°07'38"	253.13'	504.05'

APPROVED FOR STAGE CONSTRUCTION WORK ONLY

STAGE 1B
STAGE CONSTRUCTION

SCALE: 1" = 50'

SC-5

STATE OF CALIFORNIA - DEPARTMENT OF TRANSPORTATION
Caltrans
DESIGN

FUNCTIONAL SUPERVISOR: MUSTAPHA RAOUF
CALCULATED-DESIGNED BY: DON NGUYEN
CHECKED BY: DUNG HUY PHAN
REVISED BY
DATE REVISED

LAST REVISION 06-24-15
DATE PLOTTED => 25-NOV-2015
TIME PLOTTED => 08:43

Dist	COUNTY	ROUTE	POST MILES TOTAL PROJECT	SHEET No.	TOTAL SHEETS
08	SBd	40	R105.2/106.5	21	110

REGISTERED CIVIL ENGINEER 6-24-15 DATE

6-25-15
PLANS APPROVAL DATE

REGISTERED PROFESSIONAL ENGINEER DUNG HUY PHAN No. C73061 Exp. 12-31-16 CIVIL STATE OF CALIFORNIA

THE STATE OF CALIFORNIA OR ITS OFFICERS OR AGENTS SHALL NOT BE RESPONSIBLE FOR THE ACCURACY OR COMPLETENESS OF SCANNED COPIES OF THIS PLAN SHEET.

NOTE:

FOR ACCURATE RIGHT OF WAY DATA, CONTACT RIGHT OF WAY ENGINEERING AT THE DISTRICT OFFICE.

CURVE DATA

No. ⊕	R	Δ	T	L
3	2200′	13°07′38"	253.13′	504.05′
4	2200′	12°13′15"	235.52′	469.25′
5	70000′	02°47′20"	1703.91′	3407.14′

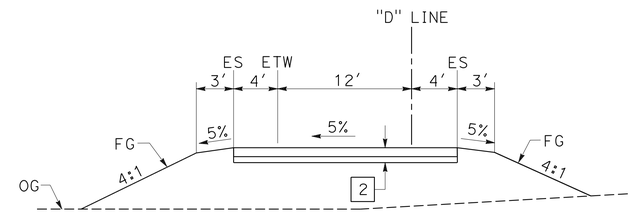

SECTION B-B
NO SCALE

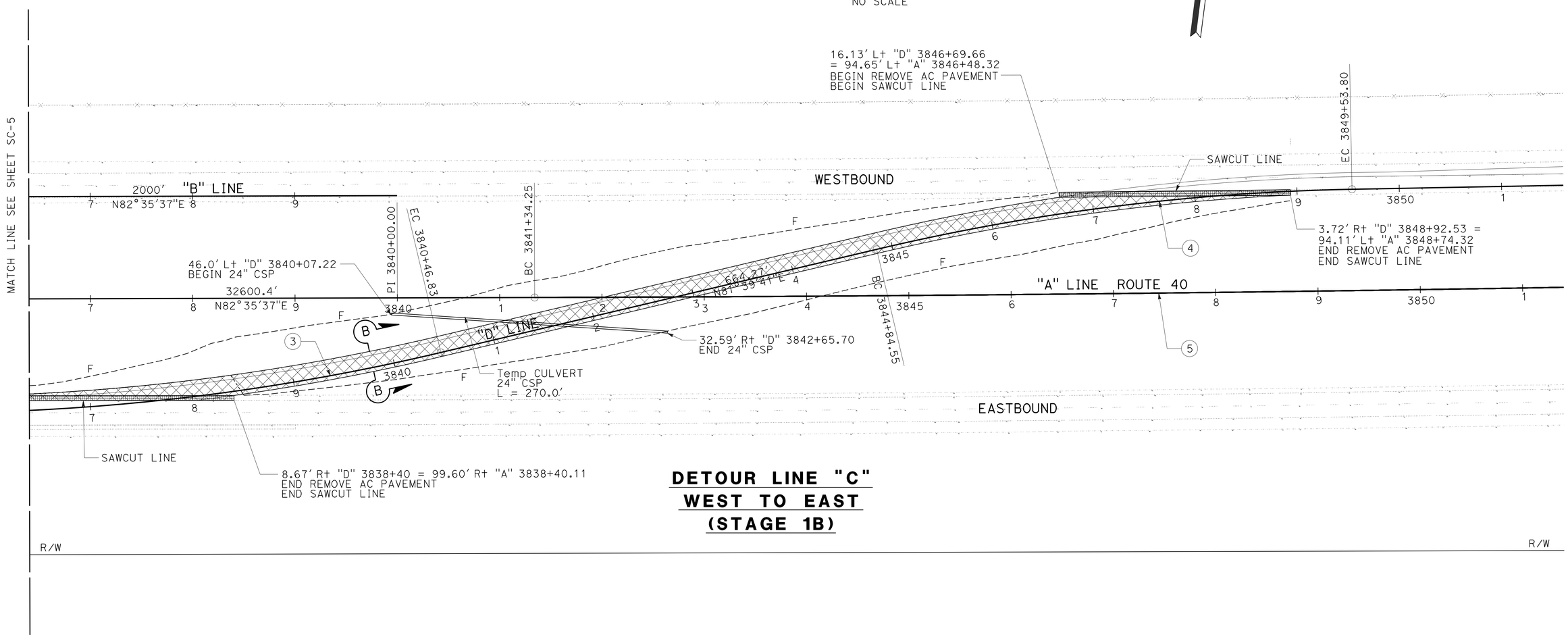

DETOUR LINE "C"
WEST TO EAST
(STAGE 1B)

STAGE 1B
STAGE CONSTRUCTION
SCALE: 1" = 50′

SC-6

APPROVED FOR STAGE CONSTRUCTION WORK ONLY

STATE OF CALIFORNIA - DEPARTMENT OF TRANSPORTATION
Caltrans
DESIGN

FUNCTIONAL SUPERVISOR: MUSTAPHA RAOUF
CALCULATED-DESIGNED BY: DON NGUYEN
CHECKED BY: DUNG HUY PHAN
REVISED BY
DATE REVISED

LAST REVISION 06-24-15
DATE PLOTTED => 25-NOV-2015
TIME PLOTTED => 08:43

Dist	COUNTY	ROUTE	POST MILES TOTAL PROJECT	SHEET No.	TOTAL SHEETS
08	SBd	40	R105.2/106.5	22	110

REGISTERED CIVIL ENGINEER 6-24-15 DATE

6-25-15
PLANS APPROVAL DATE

REGISTERED PROFESSIONAL ENGINEER
DUNG HUY PHAN
No. C73061
Exp. 12-31-16
CIVIL
STATE OF CALIFORNIA

THE STATE OF CALIFORNIA OR ITS OFFICERS OR AGENTS SHALL NOT BE RESPONSIBLE FOR THE ACCURACY OR COMPLETENESS OF SCANNED COPIES OF THIS PLAN SHEET.

NOTE:

FOR ACCURATE RIGHT OF WAY DATA, CONTACT RIGHT OF WAY ENGINEERING AT THE DISTRICT OFFICE.

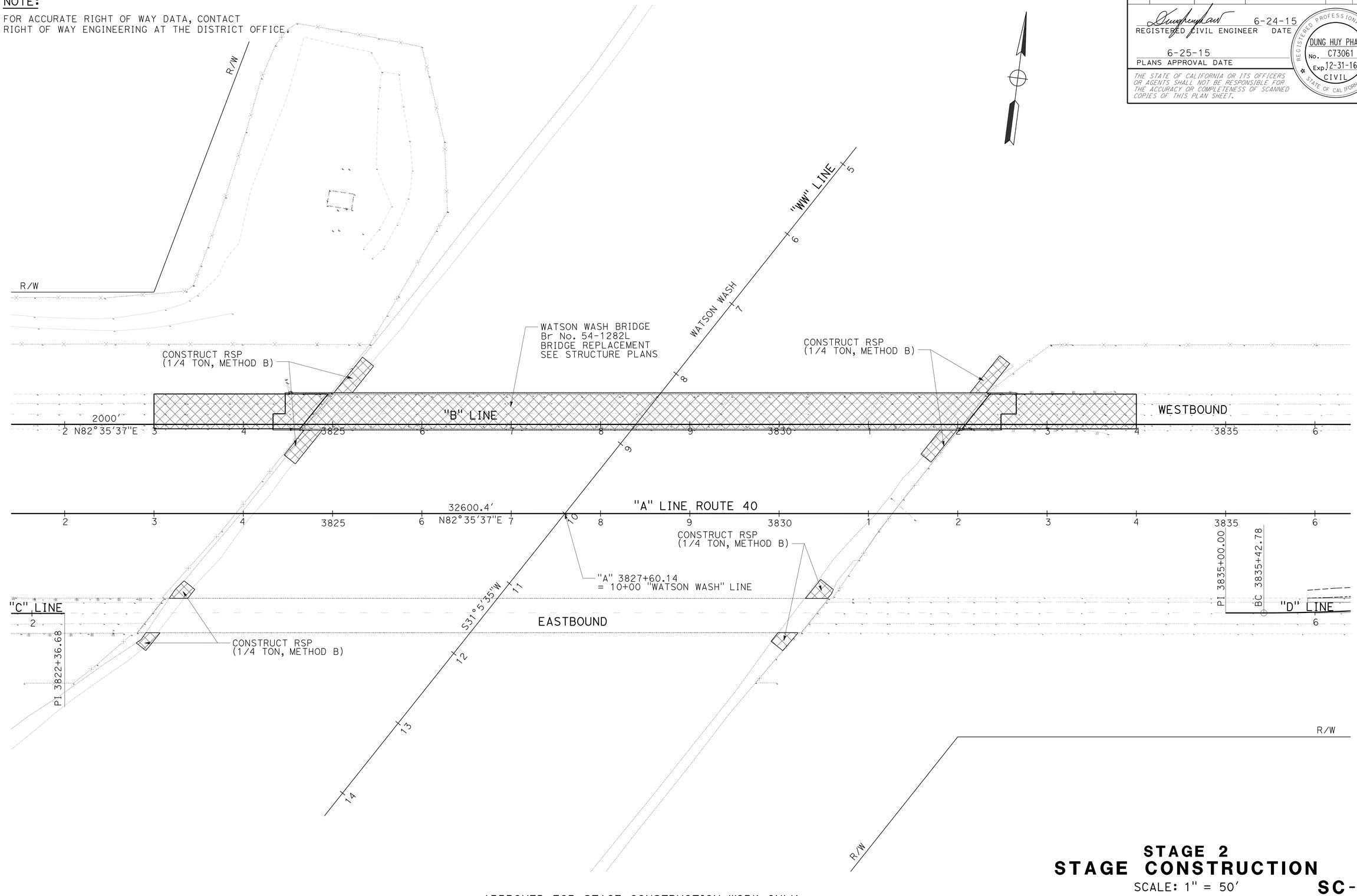

STAGE 2
STAGE CONSTRUCTION
SCALE: 1" = 50'

SC-7

APPROVED FOR STAGE CONSTRUCTION WORK ONLY

STATE OF CALIFORNIA - DEPARTMENT OF TRANSPORTATION
Caltrans®
DESIGN

FUNCTIONAL SUPERVISOR: MUSTAPHA RAOUF
CALCULATED-DESIGNED BY: DON NGUYEN
CHECKED BY: DUNG HUY PHAN
REVISED BY
DATE REVISED

LAST REVISION 06-24-15
DATE PLOTTED => 25-NOV-2015
TIME PLOTTED => 08:43

Dist	COUNTY	ROUTE	POST MILES TOTAL PROJECT	SHEET No.	TOTAL SHEETS
08	SBd	40	R105.2/106.5	23	110

REGISTERED CIVIL ENGINEER 6-24-15 DATE

6-25-15
PLANS APPROVAL DATE

REGISTERED PROFESSIONAL ENGINEER DUNG HUY PHAN No. C73061 Exp. 12-31-16 CIVIL STATE OF CALIFORNIA

THE STATE OF CALIFORNIA OR ITS OFFICERS OR AGENTS SHALL NOT BE RESPONSIBLE FOR THE ACCURACY OR COMPLETENESS OF SCANNED COPIES OF THIS PLAN SHEET.

NOTE:
FOR ACCURATE RIGHT OF WAY DATA, CONTACT RIGHT OF WAY ENGINEERING AT THE DISTRICT OFFICE.

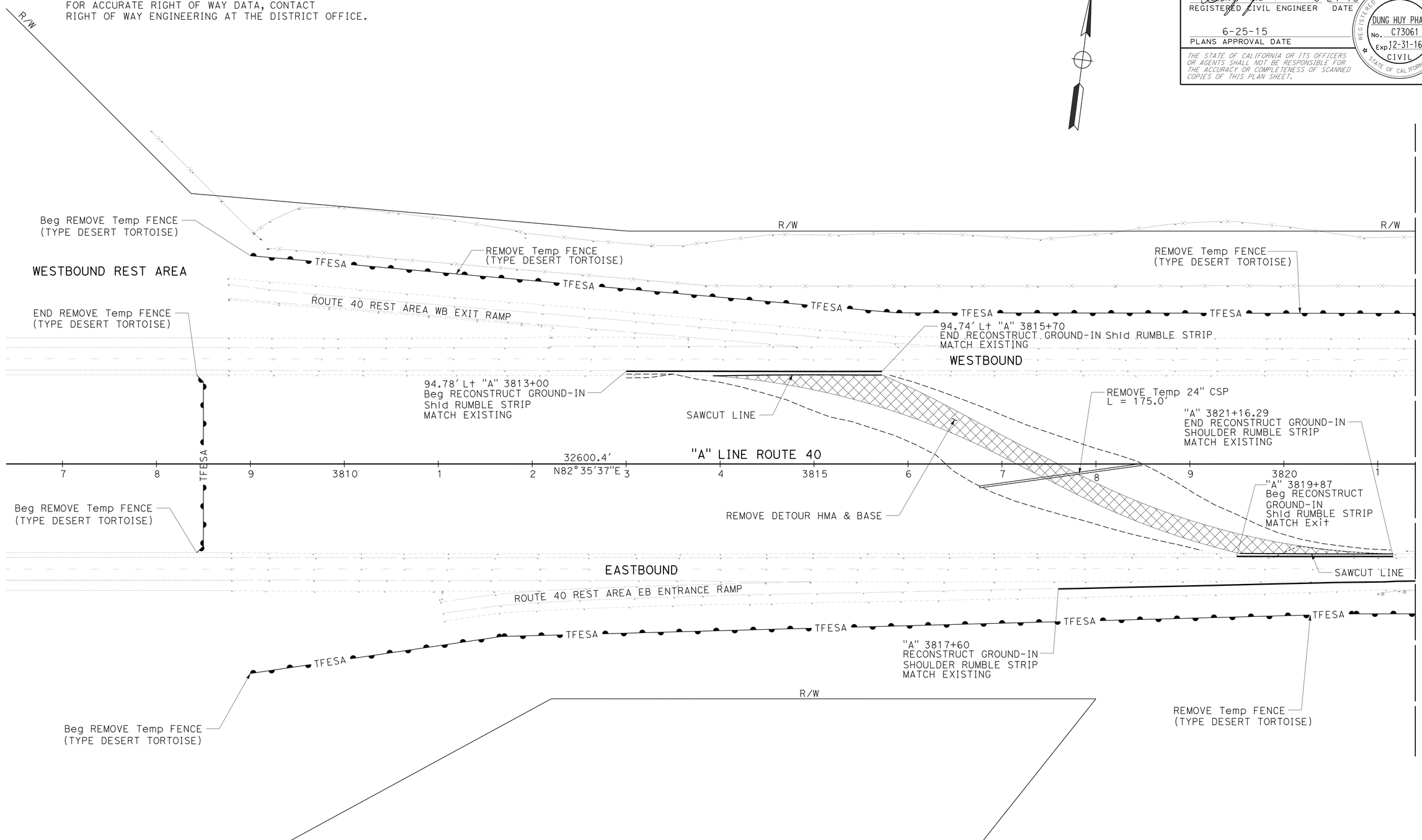

STAGE 3
STAGE CONSTRUCTION
SCALE: 1" = 50'

SC-8

APPROVED FOR STAGE CONSTRUCTION WORK ONLY

STATE OF CALIFORNIA - DEPARTMENT OF TRANSPORTATION
Caltrans
DESIGN

FUNCTIONAL SUPERVISOR: MUSTAPHA RAOUF
CALCULATED-DESIGNED BY: DON NGUYEN
CHECKED BY: DUNG HUY PHAN
REVISED BY
DATE REVISED

LAST REVISION 06-24-15
DATE PLOTTED => 25-NOV-2015
TIME PLOTTED => 08:43

Dist	COUNTY	ROUTE	POST MILES TOTAL PROJECT	SHEET No.	TOTAL SHEETS
08	SBd	40	R105.2/106.5	24	110

REGISTERED CIVIL ENGINEER 6-24-15 DATE

6-25-15
PLANS APPROVAL DATE

REGISTERED PROFESSIONAL ENGINEER
DUNG HUY PHAN
No. C73061
Exp. 12-31-16
CIVIL
STATE OF CALIFORNIA

THE STATE OF CALIFORNIA OR ITS OFFICERS OR AGENTS SHALL NOT BE RESPONSIBLE FOR THE ACCURACY OR COMPLETENESS OF SCANNED COPIES OF THIS PLAN SHEET.

NOTE:

FOR ACCURATE RIGHT OF WAY DATA, CONTACT RIGHT OF WAY ENGINEERING AT THE DISTRICT OFFICE.

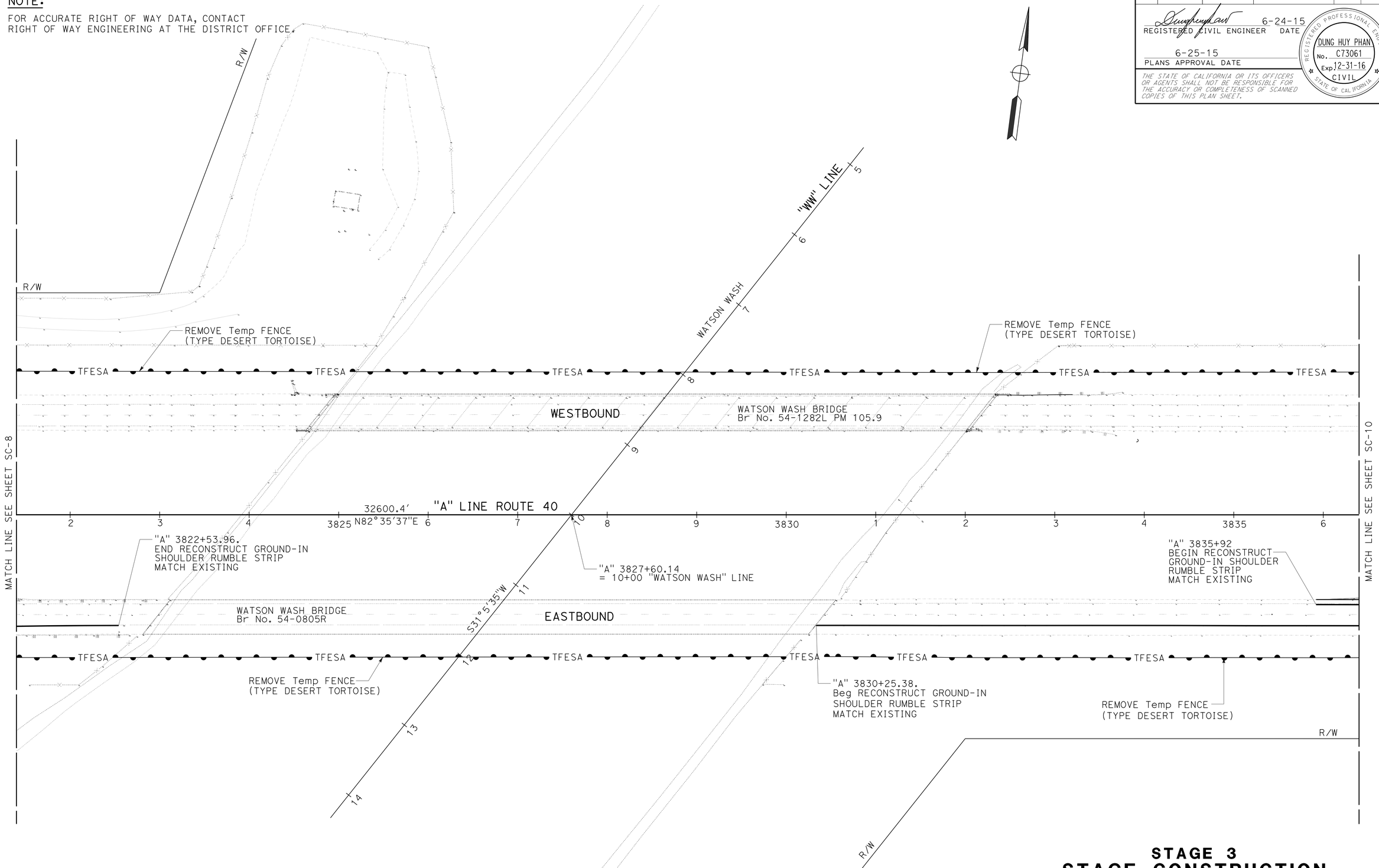

APPROVED FOR STAGE CONSTRUCTION WORK ONLY

STAGE 3
STAGE CONSTRUCTION

SCALE: 1" = 50'

SC-9

STATE OF CALIFORNIA - DEPARTMENT OF TRANSPORTATION
Caltrans
DESIGN

FUNCTIONAL SUPERVISOR: MUSTAPHA RAOUF
CALCULATED-DESIGNED BY: DON NGUYEN
CHECKED BY: DUNG HUY PHAN
REVISED BY
DATE REVISED

LAST REVISION 06-24-15
DATE PLOTTED => 25-NOV-2015
TIME PLOTTED => 08:43

Dist	COUNTY	ROUTE	POST MILES TOTAL PROJECT	SHEET No.	TOTAL SHEETS
08	SBd	40	R105.2/106.5	25	110

REGISTERED CIVIL ENGINEER 6-24-15 DATE

6-25-15
PLANS APPROVAL DATE

REGISTERED PROFESSIONAL ENGINEER DUNG HUY PHAN No. C73061 Exp. 12-31-16 CIVIL STATE OF CALIFORNIA

THE STATE OF CALIFORNIA OR ITS OFFICERS OR AGENTS SHALL NOT BE RESPONSIBLE FOR THE ACCURACY OR COMPLETENESS OF SCANNED COPIES OF THIS PLAN SHEET.

NOTE:

FOR ACCURATE RIGHT OF WAY DATA, CONTACT RIGHT OF WAY ENGINEERING AT THE DISTRICT OFFICE.

CURVE DATA

No. ⊕	R	Δ	T	L
5	70000′	02°47′20″	1703.91′	3407.14′

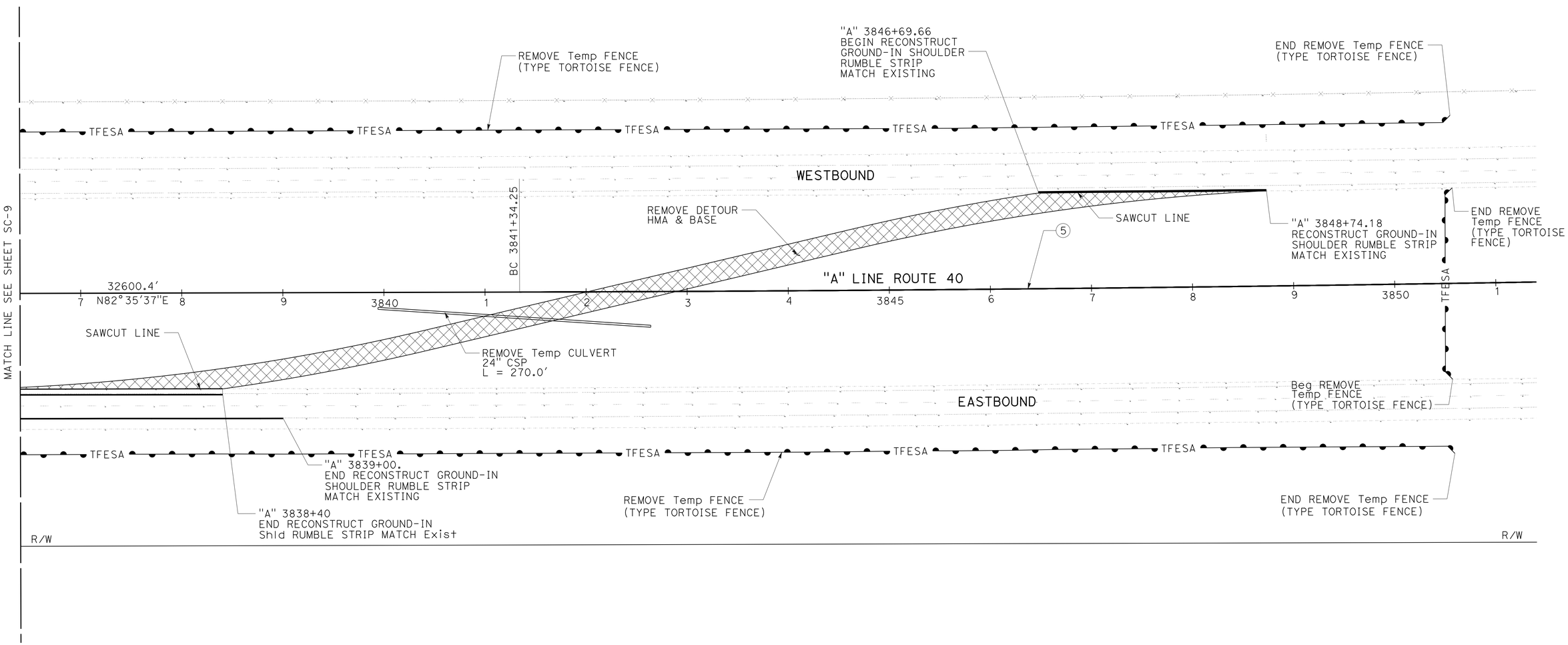

STAGE 3
STAGE CONSTRUCTION
SCALE: 1" = 50′

SC-10

APPROVED FOR STAGE CONSTRUCTION WORK ONLY

STATE OF CALIFORNIA - DEPARTMENT OF TRANSPORTATION
Caltrans
DESIGN

FUNCTIONAL SUPERVISOR: MUSTAPHA RAOUF
CALCULATED-DESIGNED BY: DON NGUYEN
CHECKED BY: DUNG HUY PHAN
REVISED BY
DATE REVISED

LAST REVISION 06-24-15
DATE PLOTTED => 25-NOV-2015
TIME PLOTTED => 08:43

Dist	COUNTY	ROUTE	POST MILES TOTAL PROJECT	SHEET No.	TOTAL SHEETS
08	SBd	40	R105.2/106.5	26	110

Daryush Nami 6-24-15
REGISTERED CIVIL ENGINEER DATE

6-25-15
PLANS APPROVAL DATE

REGISTERED PROFESSIONAL ENGINEER
DARYUSH NAMI
No. C78890
Exp. 3-31-16
CIVIL
STATE OF CALIFORNIA

THE STATE OF CALIFORNIA OR ITS OFFICERS OR AGENTS SHALL NOT BE RESPONSIBLE FOR THE ACCURACY OR COMPLETENESS OF SCANNED COPIES OF THIS PLAN SHEET.

NOTES:

1. REFER TO THE CONSTRUCTION AREA SIGN PLAN SHEETS FOR ADDITIONAL NOTES, AND INFORMATION.
2. ALL Temp MARKINGS SHALL BE PAINT(2 COATS), AND ALL Temp STRIPING IS THERMOPLASTIC SPRAYABLE.
3. PRIOR TO WORK, SHOULDER AREAS TO BE USED FOR TRAVEL WAY WHICH CURRENTLY HAVE RUMBLE STRIPS WILL BE OVERLAID WITH AC.
4. LOCATION OF THE PORTABLE CONSTRUCTION AREA SIGNS COULD BE ADJUSTED BY THE ENGINEER IN THE FIELD.
5. REMOVE ALL CONFLICTING STRIPING, AND COVER ALL CONFLICTING SIGNS.

LEGEND:

- (X) CONSTRUCTION AREA SIGN LETTER
- PORTABLE SIGN ON TYPE II BARRICADE (OR AS NOTED)
- CONSTRUCTION AREA SIGN (ONE POST)
- CONSTRUCTION AREA SIGN (TWO POST)
- TXX Temp STRIPE (SPRAYABLE THERMOPLASTIC) DETAIL NO.
- Temp STRIPING TERMINATION
- CHANNELIZER (SURFACE MOUNTED) @ 20′ SPACING (OR AS NOTED)
- PLASTIC TRAFFIC DRUM @ 50′ SPACING (OR AS NOTED)
- Temp RAILING (TYPE K)
- PORTABLE CHANGEABLE MESSAGE SIGN (PCMS)
- FLASHING ARROW SIGN (FAS)
- FAS SUPPORT OR TRAILER
- PORTABLE FLASHING BEACON
- DIRECTION OF TRAVEL
- CONSTRUCTION AREA

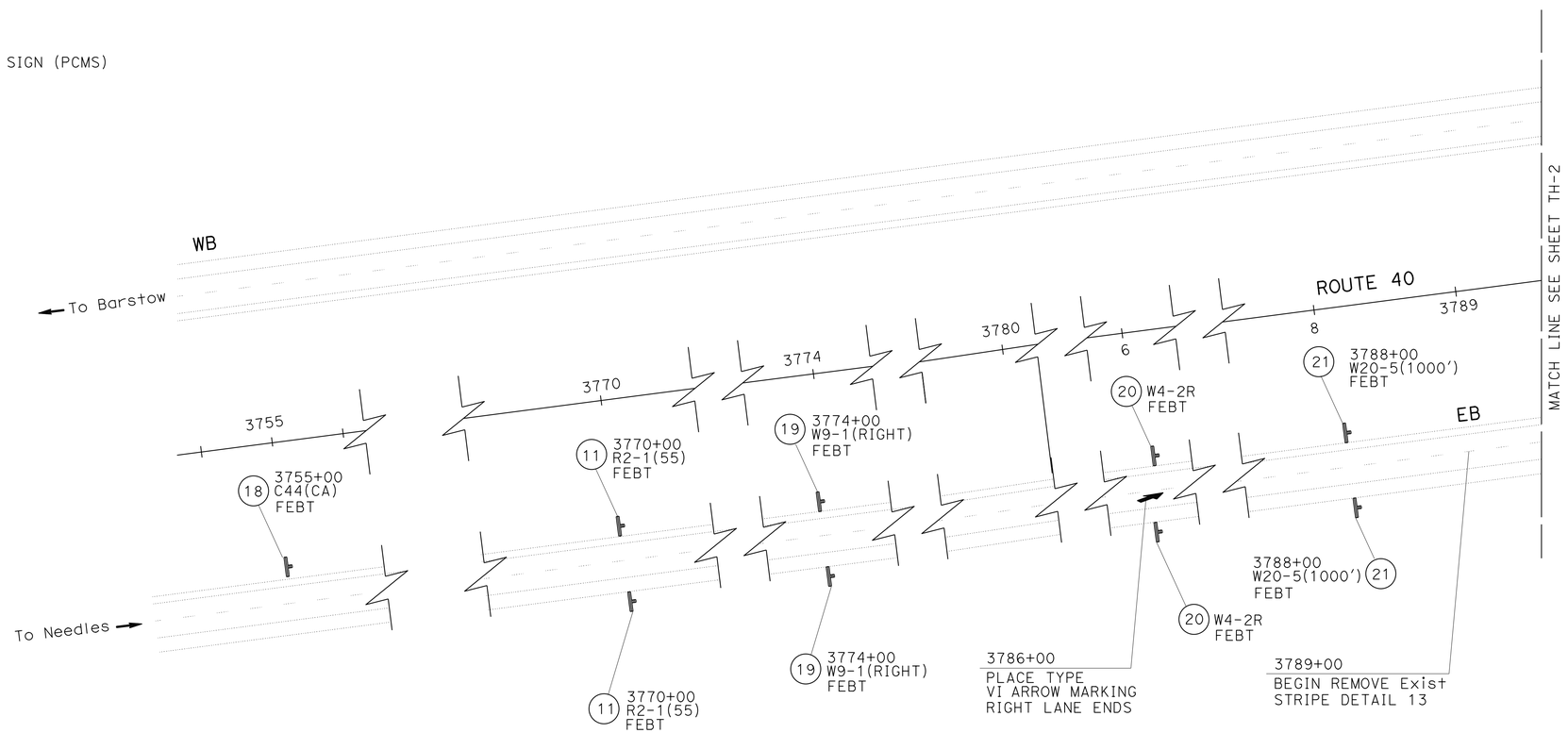

STAGE 1A
TRAFFIC HANDLING PLAN

SCALE: 1" = 50′

TH-1

APPROVED FOR TRAFFIC HANDLING WORK ONLY

STATE OF CALIFORNIA - DEPARTMENT OF TRANSPORTATION
Caltrans® TRAFFIC DESIGN

FUNCTIONAL SUPERVISOR: MARIO AMANCIO
CALCULATED-DESIGNED BY: DARYUSH NAMI
CHECKED BY: MEHDI KAMGAR
REVISED BY
DATE REVISED

LAST REVISION 06-24-15
DATE PLOTTED => 25-NOV-2015
TIME PLOTTED => 08:43

Dist	COUNTY	ROUTE	POST MILES TOTAL PROJECT	SHEET No.	TOTAL SHEETS
08	SBd	40	R105.2/106.5	27	110

Daryush Nami 6-24-15
REGISTERED CIVIL ENGINEER DATE

6-25-15
PLANS APPROVAL DATE

REGISTERED PROFESSIONAL ENGINEER
DARYUSH NAMI
No. C78890
Exp. 3-31-16
CIVIL
STATE OF CALIFORNIA

THE STATE OF CALIFORNIA OR ITS OFFICERS OR AGENTS SHALL NOT BE RESPONSIBLE FOR THE ACCURACY OR COMPLETENESS OF SCANNED COPIES OF THIS PLAN SHEET.

NOTE:

FOR ACCURATE RIGHT OF WAY DATA, CONTACT RIGHT OF WAY ENGINEERING AT THE DISTRICT OFFICE.

SECTION C-C

Sta 3798+00 TO Sta 3811+00
ROUTE 40 EB (STAGE 1A)

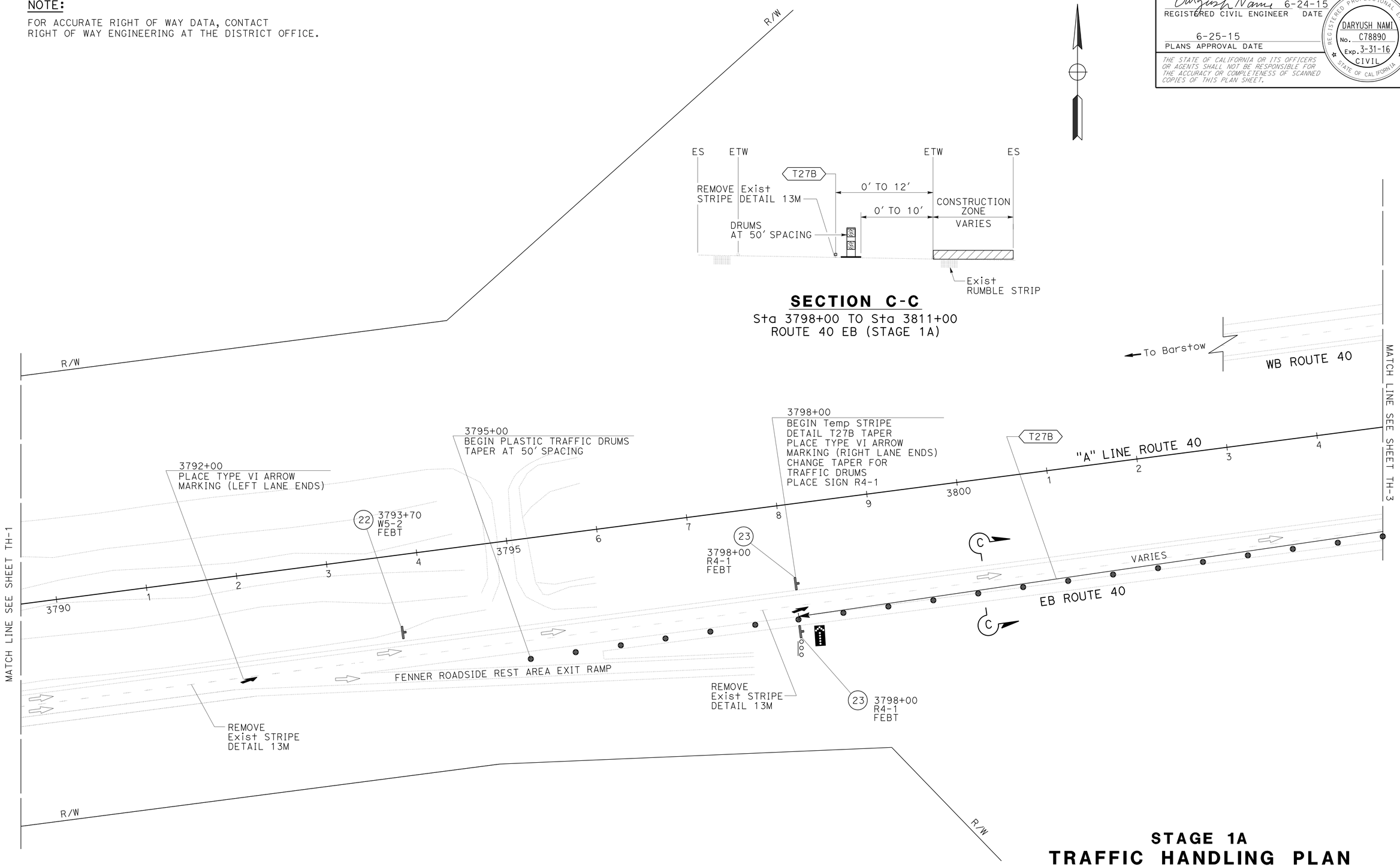

STAGE 1A
TRAFFIC HANDLING PLAN

SCALE: 1" = 50'

TH-2

APPROVED FOR TRAFFIC HANDLING WORK ONLY

STATE OF CALIFORNIA - DEPARTMENT OF TRANSPORTATION
Caltrans® **TRAFFIC DESIGN**

FUNCTIONAL SUPERVISOR: MARIO AMANCIO
CALCULATED-DESIGNED BY: DARYUSH NAMI
CHECKED BY: MEHDI KAMGAR
REVISED BY
DATE REVISED

LAST REVISION 06-24-15 | DATE PLOTTED => 25-NOV-2015 | TIME PLOTTED => 08:43

Dist	COUNTY	ROUTE	POST MILES TOTAL PROJECT	SHEET No.	TOTAL SHEETS
08	SBd	40	R105.2/106.5	28	110

Daryush Nami 6-24-15
REGISTERED CIVIL ENGINEER DATE

6-25-15
PLANS APPROVAL DATE

REGISTERED PROFESSIONAL ENGINEER
DARYUSH NAMI
No. C78890
Exp. 3-31-16
CIVIL
STATE OF CALIFORNIA

THE STATE OF CALIFORNIA OR ITS OFFICERS OR AGENTS SHALL NOT BE RESPONSIBLE FOR THE ACCURACY OR COMPLETENESS OF SCANNED COPIES OF THIS PLAN SHEET.

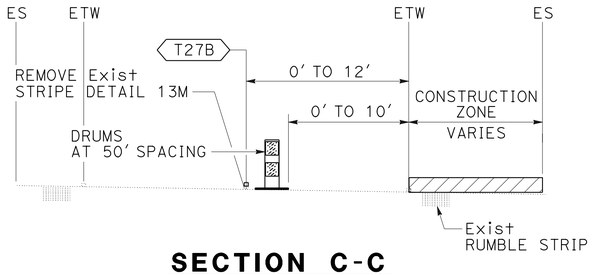

SECTION C-C

Sta 3798+00 TO Sta 3811+00
ROUTE 40 EB (STAGE 1A)

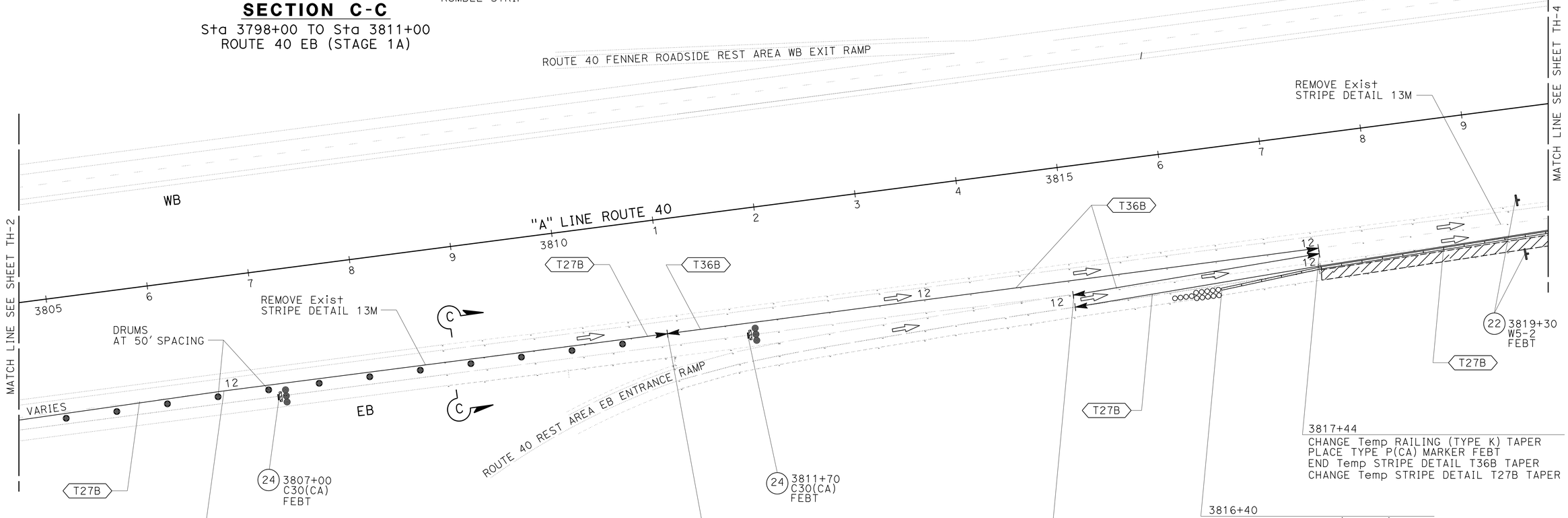

STAGE 1A
TRAFFIC HANDLING PLAN

SCALE: 1" = 50'

TH-3

APPROVED FOR TRAFFIC HANDLING WORK ONLY

STATE OF CALIFORNIA - DEPARTMENT OF TRANSPORTATION
Caltrans® TRAFFIC DESIGN

FUNCTIONAL SUPERVISOR: MARIO AMANCIO
CALCULATED-DESIGNED BY: DARYUSH NAMI
CHECKED BY: MEHDI KAMGAR
REVISED BY
DATE REVISED

LAST REVISION 06-24-15
DATE PLOTTED => 25-NOV-2015
TIME PLOTTED => 08:43

Dist	COUNTY	ROUTE	POST MILES TOTAL PROJECT	SHEET No.	TOTAL SHEETS
08	SBd	40	R105.2/106.5	29	110

Daryush Nami 6-24-15
REGISTERED CIVIL ENGINEER DATE

6-25-15
PLANS APPROVAL DATE

REGISTERED PROFESSIONAL ENGINEER
DARYUSH NAMI
No. C78890
Exp. 3-31-16
CIVIL
STATE OF CALIFORNIA

THE STATE OF CALIFORNIA OR ITS OFFICERS OR AGENTS SHALL NOT BE RESPONSIBLE FOR THE ACCURACY OR COMPLETENESS OF SCANNED COPIES OF THIS PLAN SHEET.

NOTE:

FOR ACCURATE RIGHT OF WAY DATA, CONTACT RIGHT OF WAY ENGINEERING AT THE DISTRICT OFFICE.

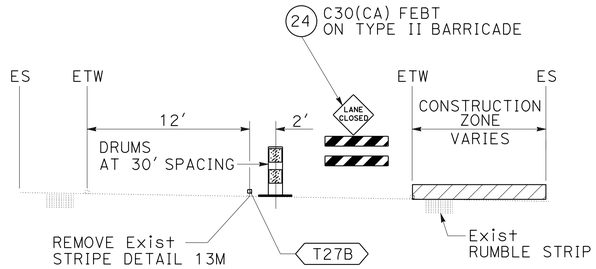

SECTION C1-C1

Sta 3823+70 TO Sta 3828+00
ROUTE 40 EB (STAGE 1A)

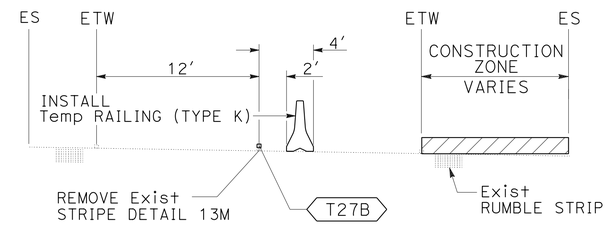

SECTION C2-C2

Sta 3829+70 TO Sta 3839+50
ROUTE 40 EB (STAGE 1A)

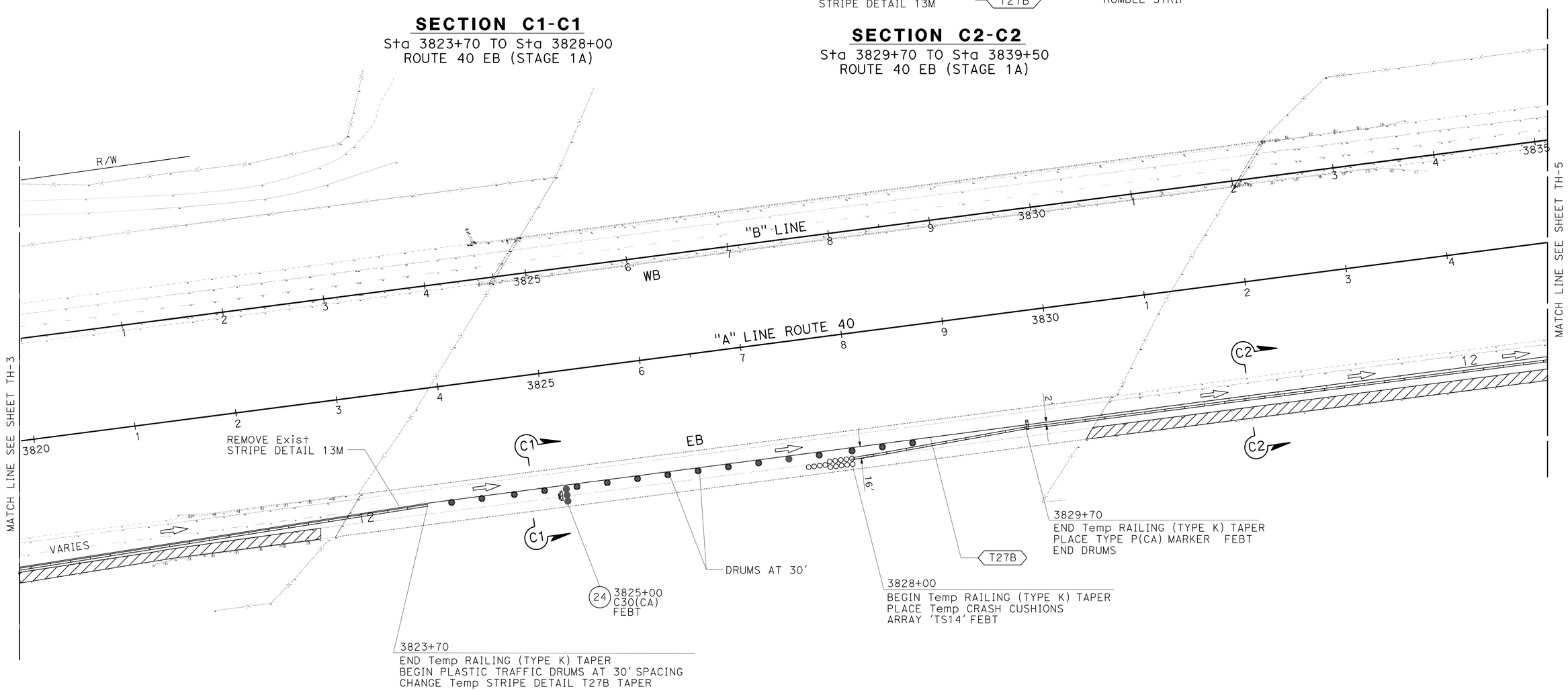

STAGE 1A
TRAFFIC HANDLING PLAN

SCALE: 1" = 50'

TH-4

APPROVED FOR TRAFFIC HANDLING WORK ONLY

STATE OF CALIFORNIA - DEPARTMENT OF TRANSPORTATION
Caltrans® **TRAFFIC DESIGN**

FUNCTIONAL SUPERVISOR: MARIO AMANCIO
CALCULATED-DESIGNED BY: DARYUSH NAMI
CHECKED BY: MEHDI KAMGAR
REVISED BY
DATE REVISED

LAST REVISION 06-24-15
DATE PLOTTED => 25-NOV-2015
TIME PLOTTED => 08:43

Dist	COUNTY	ROUTE	POST MILES TOTAL PROJECT	SHEET No.	TOTAL SHEETS
08	SBd	40	R105.2/106.5	30	110

Daryush Nami 6-24-15
REGISTERED CIVIL ENGINEER DATE

6-25-15
PLANS APPROVAL DATE

REGISTERED PROFESSIONAL ENGINEER
DARYUSH NAMI
No. C78890
Exp. 3-31-16
CIVIL
STATE OF CALIFORNIA

THE STATE OF CALIFORNIA OR ITS OFFICERS OR AGENTS SHALL NOT BE RESPONSIBLE FOR THE ACCURACY OR COMPLETENESS OF SCANNED COPIES OF THIS PLAN SHEET.

NOTE:

FOR ACCURATE RIGHT OF WAY DATA, CONTACT
RIGHT OF WAY ENGINEERING AT THE DISTRICT OFFICE.

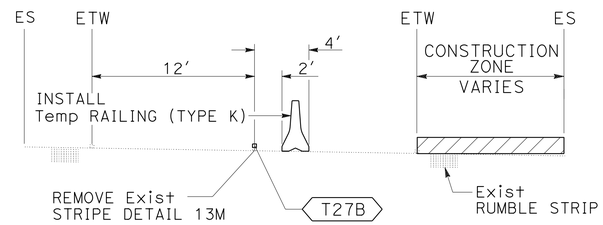

SECTION C2-C2

Sta 3829+70 TO Sta 3839+50
ROUTE 40 EB (STAGE 1A)

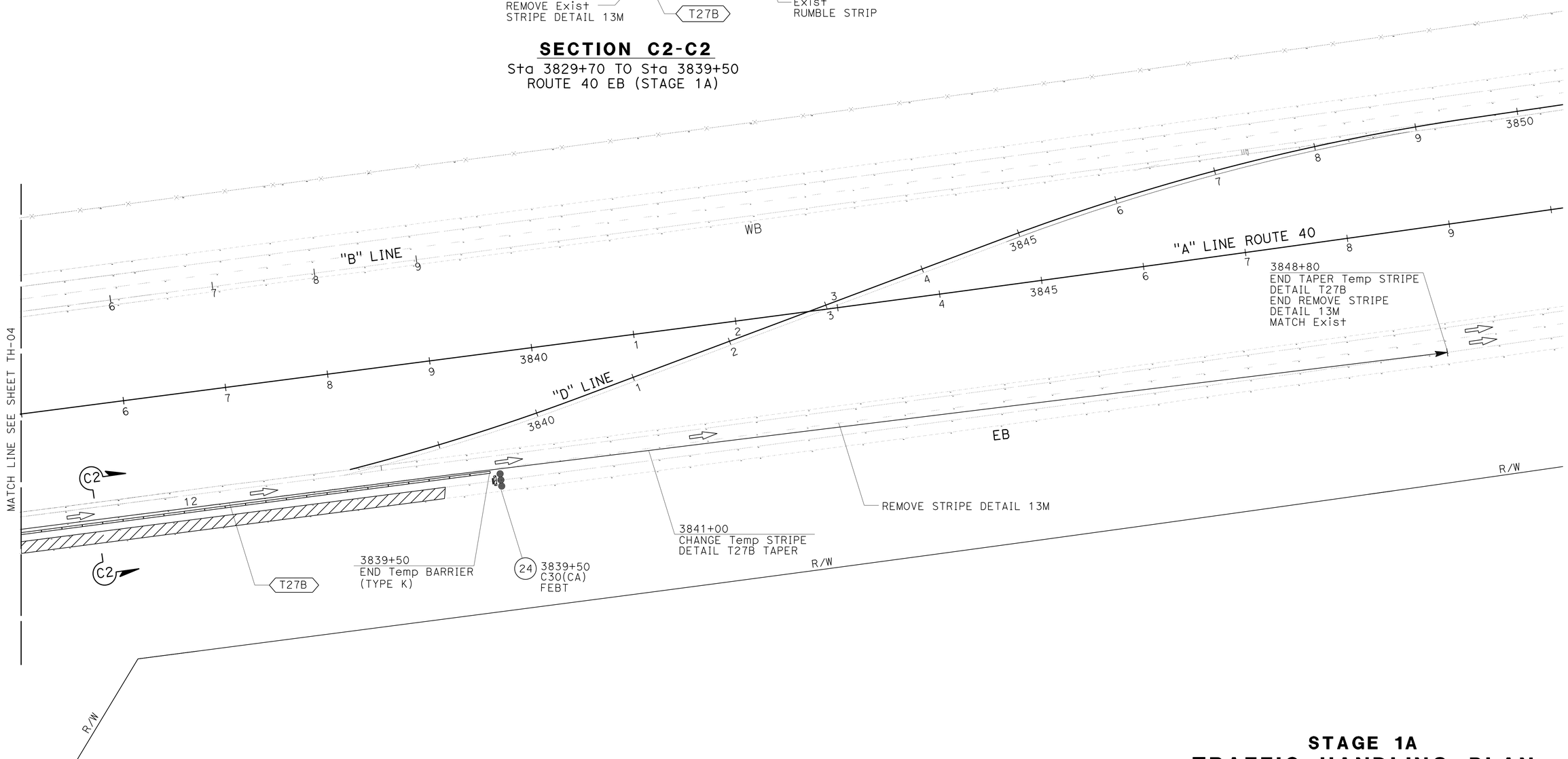

STAGE 1A
TRAFFIC HANDLING PLAN

SCALE: 1" = 50'

TH-5

APPROVED FOR TRAFFIC HANDLING WORK ONLY

STATE OF CALIFORNIA - DEPARTMENT OF TRANSPORTATION
Caltrans® **TRAFFIC DESIGN**

FUNCTIONAL SUPERVISOR: MARIO AMANCIO
CALCULATED-DESIGNED BY: DARYUSH NAMI
CHECKED BY: MEHDI KAMGAR
REVISED BY
DATE REVISED

LAST REVISION 06-24-15
DATE PLOTTED => 25-NOV-2015
TIME PLOTTED => 08:43

Dist	COUNTY	ROUTE	POST MILES TOTAL PROJECT	SHEET No.	TOTAL SHEETS
08	SBd	40	R105.2/106.5	31	110

Daryush Nami 6-24-15
REGISTERED CIVIL ENGINEER DATE

6-25-15
PLANS APPROVAL DATE

REGISTERED PROFESSIONAL ENGINEER
DARYUSH NAMI
No. C78890
Exp. 3-31-16
CIVIL
STATE OF CALIFORNIA

THE STATE OF CALIFORNIA OR ITS OFFICERS OR AGENTS SHALL NOT BE RESPONSIBLE FOR THE ACCURACY OR COMPLETENESS OF SCANNED COPIES OF THIS PLAN SHEET.

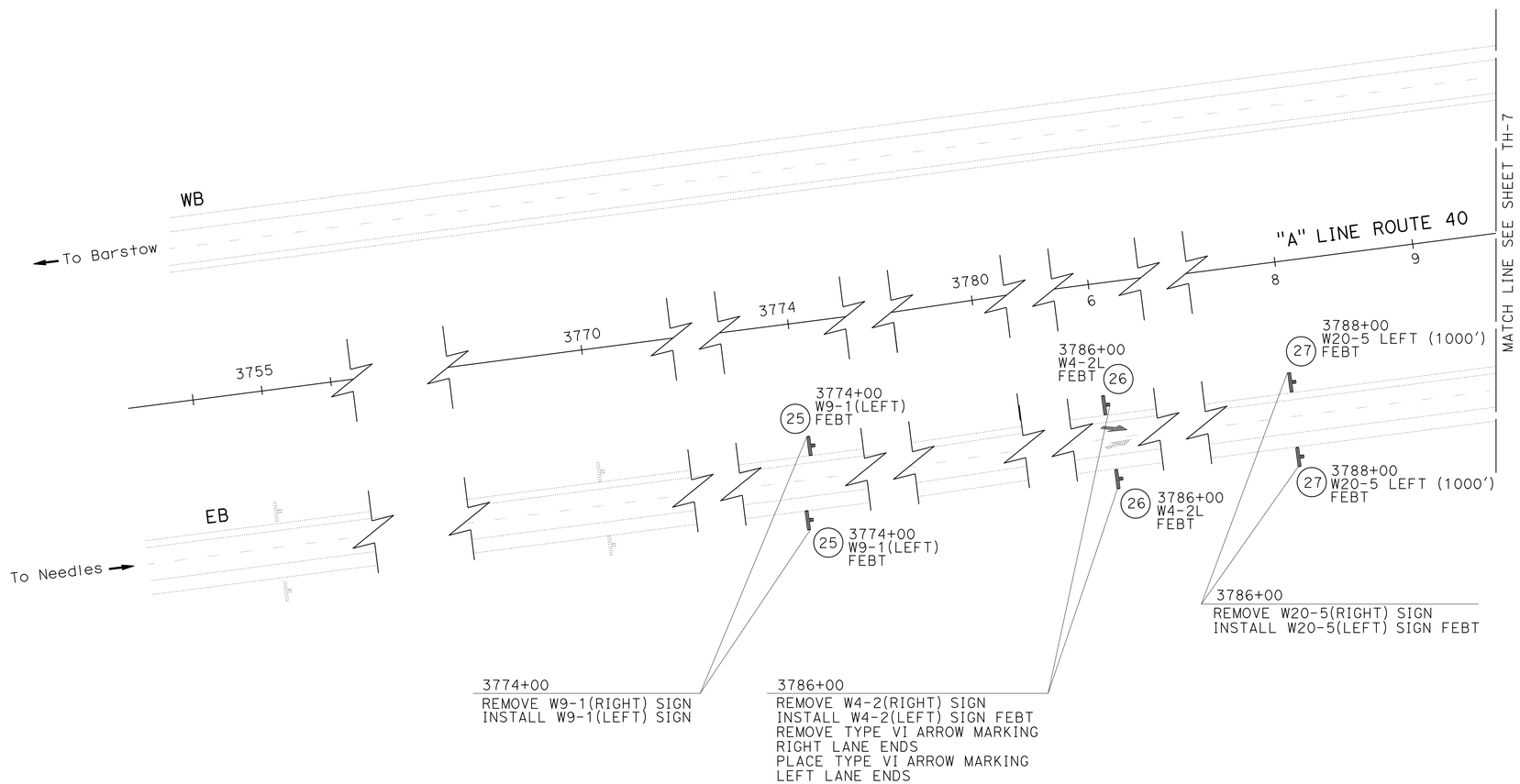

STAGE 1B
TRAFFIC HANDLING PLAN

SCALE: 1" = 50'

TH-6

APPROVED FOR TRAFFIC HANDLING WORK ONLY

STATE OF CALIFORNIA - DEPARTMENT OF TRANSPORTATION
Caltrans® **TRAFFIC DESIGN**

FUNCTIONAL SUPERVISOR: MARIO AMANCIO
CALCULATED-DESIGNED BY: DARYUSH NAMI
CHECKED BY: MEHDI KAMGAR
REVISED BY
DATE REVISED

LAST REVISION 06-24-15
DATE PLOTTED => 25-NOV-2015
TIME PLOTTED => 08:43

Dist	COUNTY	ROUTE	POST MILES TOTAL PROJECT	SHEET No.	TOTAL SHEETS
08	SBd	40	R105.2/106.5	32	110

Daryush Nami 6-24-15
REGISTERED CIVIL ENGINEER DATE

6-25-15
PLANS APPROVAL DATE

REGISTERED PROFESSIONAL ENGINEER
DARYUSH NAMI
No. C78890
Exp. 3-31-16
CIVIL
STATE OF CALIFORNIA

THE STATE OF CALIFORNIA OR ITS OFFICERS OR AGENTS SHALL NOT BE RESPONSIBLE FOR THE ACCURACY OR COMPLETENESS OF SCANNED COPIES OF THIS PLAN SHEET.

NOTE:

FOR ACCURATE RIGHT OF WAY DATA, CONTACT RIGHT OF WAY ENGINEERING AT THE DISTRICT OFFICE.

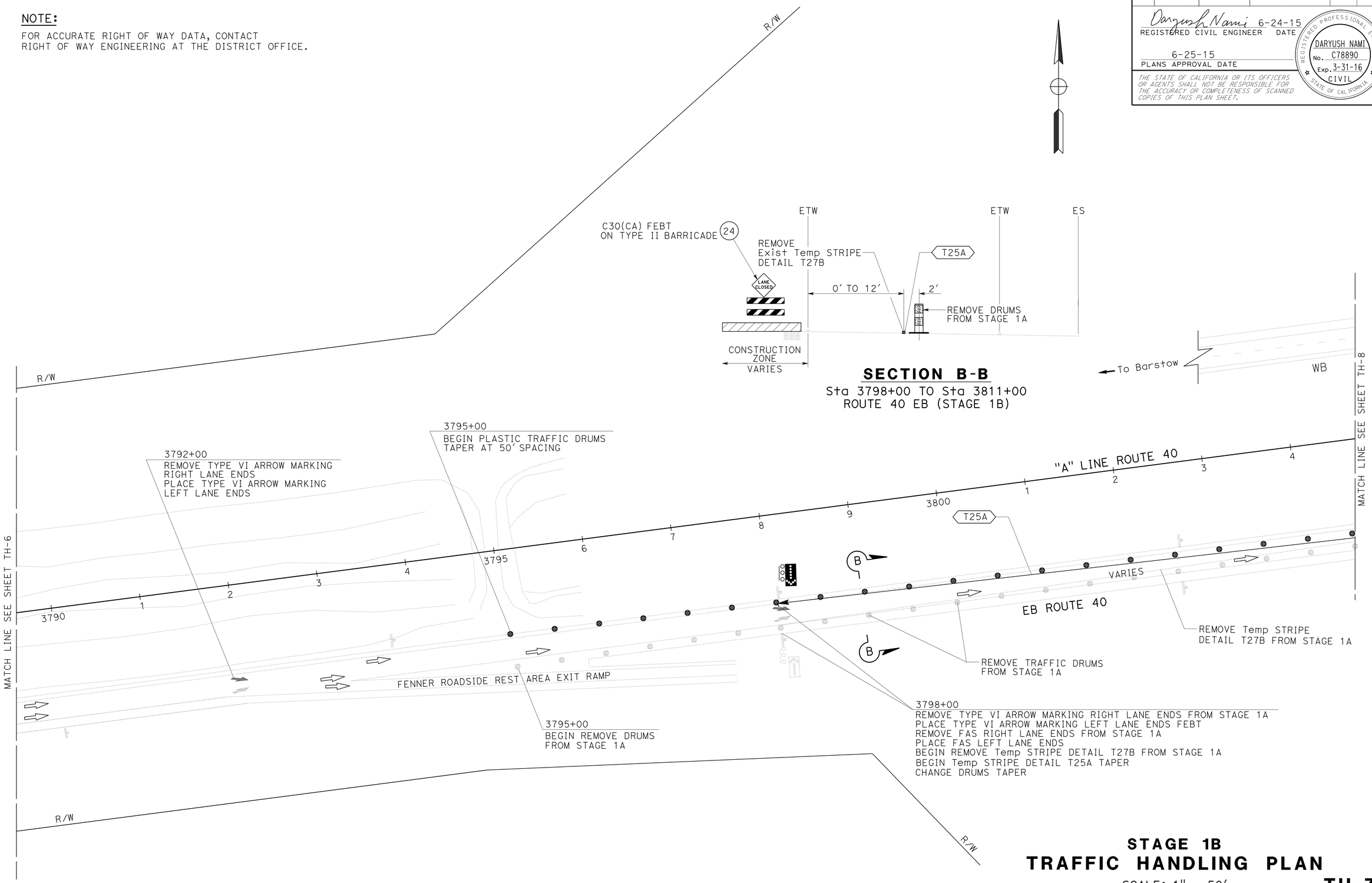

SECTION B-B

Sta 3798+00 TO Sta 3811+00
ROUTE 40 EB (STAGE 1B)

STAGE 1B
TRAFFIC HANDLING PLAN

SCALE: 1" = 50'

TH-7

APPROVED FOR TRAFFIC HANDLING WORK ONLY

STATE OF CALIFORNIA - DEPARTMENT OF TRANSPORTATION
Caltrans® **TRAFFIC DESIGN**

FUNCTIONAL SUPERVISOR: MARIO AMANCIO
CALCULATED-DESIGNED BY: DARYUSH NAMI
CHECKED BY: MEHDI KAMGAR
REVISED BY
DATE REVISED

LAST REVISION 06-24-15
DATE PLOTTED => 25-NOV-2015
TIME PLOTTED => 08:43

Dist	COUNTY	ROUTE	POST MILES TOTAL PROJECT	SHEET No.	TOTAL SHEETS
08	SBd	40	R105.2/106.5	33	110

Daryush Nami 6-24-15
REGISTERED CIVIL ENGINEER DATE

6-25-15
PLANS APPROVAL DATE

REGISTERED PROFESSIONAL ENGINEER
DARYUSH NAMI
No. C78890
Exp. 3-31-16
CIVIL
STATE OF CALIFORNIA

THE STATE OF CALIFORNIA OR ITS OFFICERS OR AGENTS SHALL NOT BE RESPONSIBLE FOR THE ACCURACY OR COMPLETENESS OF SCANNED COPIES OF THIS PLAN SHEET.

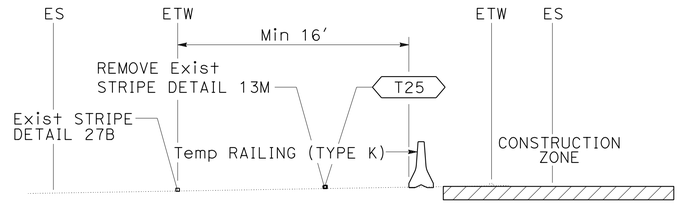

SECTION B1-B1

Sta 3812+20 TO Sta 3816+00
ROUTE 40 WB (STAGE 1B)

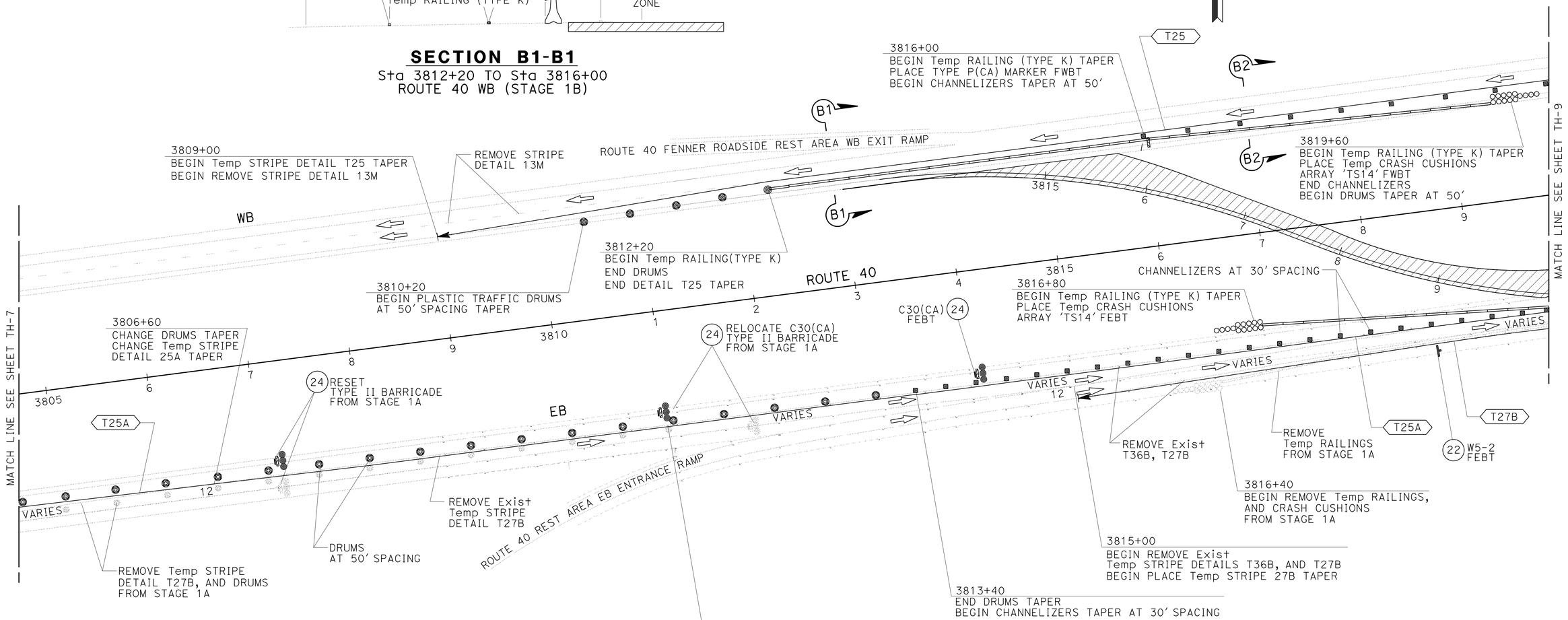

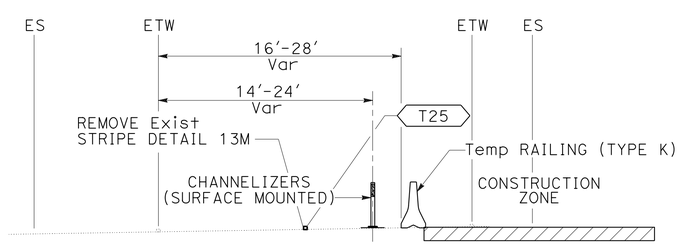

SECTION B2-B2

Sta 3816+00 TO Sta 3819+60
ROUTE 40 WB (STAGE 1B)

STAGE 1B
TRAFFIC HANDLING PLAN

SCALE: 1" = 50'

TH-8

APPROVED FOR TRAFFIC HANDLING WORK ONLY

STATE OF CALIFORNIA - DEPARTMENT OF TRANSPORTATION
Caltrans® TRAFFIC DESIGN

FUNCTIONAL SUPERVISOR: MARIO AMANCIO
CALCULATED-DESIGNED BY: DARYUSH NAMI
CHECKED BY: MEHDI KAMGAR
REVISED BY
DATE REVISED

LAST REVISION 06-24-15
DATE PLOTTED => 25-NOV-2015
TIME PLOTTED => 08:43

Dist	COUNTY	ROUTE	POST MILES TOTAL PROJECT	SHEET No.	TOTAL SHEETS
08	SBd	40	R105.2/106.5	34	110

Daryush Nami 6-24-15
REGISTERED CIVIL ENGINEER DATE

6-25-15
PLANS APPROVAL DATE

REGISTERED PROFESSIONAL ENGINEER
DARYUSH NAMI
No. C78890
Exp. 3-31-16
CIVIL
STATE OF CALIFORNIA

THE STATE OF CALIFORNIA OR ITS OFFICERS OR AGENTS SHALL NOT BE RESPONSIBLE FOR THE ACCURACY OR COMPLETENESS OF SCANNED COPIES OF THIS PLAN SHEET.

NOTE:

FOR ACCURATE RIGHT OF WAY DATA, CONTACT RIGHT OF WAY ENGINEERING AT THE DISTRICT OFFICE.

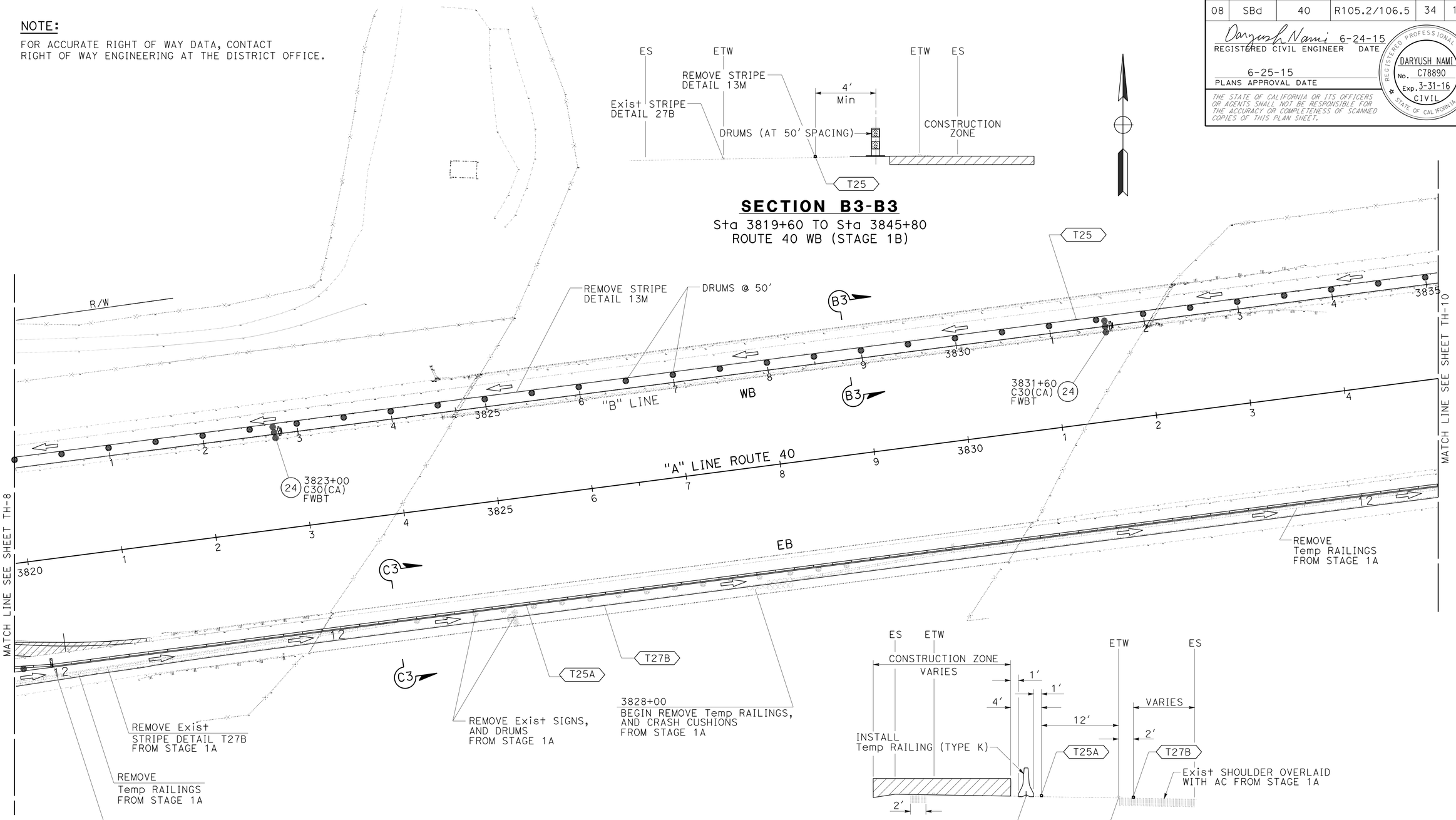

SECTION B3-B3

Sta 3819+60 TO Sta 3845+80
ROUTE 40 WB (STAGE 1B)

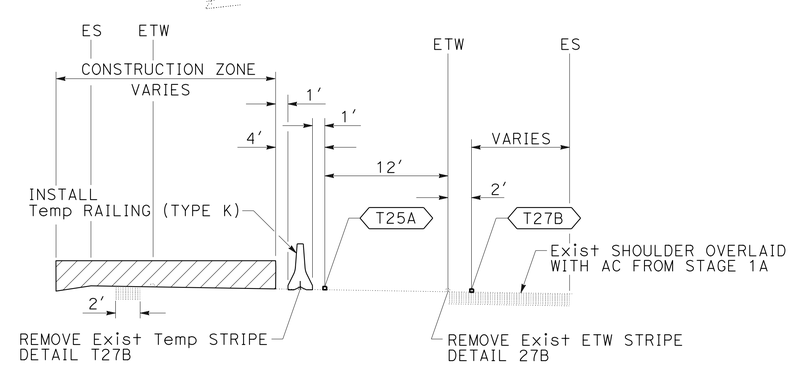

SECTION C3-C3

Sta 3820+00 TO Sta 3839+50
ROUTE 40 EB (STAGE 1B)

STAGE 1B
TRAFFIC HANDLING PLAN

SCALE: 1" = 50′

TH-9

APPROVED FOR TRAFFIC HANDLING WORK ONLY

STATE OF CALIFORNIA - DEPARTMENT OF TRANSPORTATION
Caltrans® **TRAFFIC DESIGN**

FUNCTIONAL SUPERVISOR: MARIO AMANCIO
CALCULATED-DESIGNED BY: DARYUSH NAMI
CHECKED BY: MEHDI KAMGAR
REVISED BY
DATE REVISED

LAST REVISION 06-24-15
DATE PLOTTED => 25-NOV-2015
TIME PLOTTED => 08:43

Dist	COUNTY	ROUTE	POST MILES TOTAL PROJECT	SHEET No.	TOTAL SHEETS
08	SBd	40	R105.2/106.5	35	110

Daryush Nami 6-24-15
REGISTERED CIVIL ENGINEER DATE

6-25-15
PLANS APPROVAL DATE

REGISTERED PROFESSIONAL ENGINEER
DARYUSH NAMI
No. C78890
Exp. 3-31-16
CIVIL
STATE OF CALIFORNIA

THE STATE OF CALIFORNIA OR ITS OFFICERS OR AGENTS SHALL NOT BE RESPONSIBLE FOR THE ACCURACY OR COMPLETENESS OF SCANNED COPIES OF THIS PLAN SHEET.

NOTE:

FOR ACCURATE RIGHT OF WAY DATA, CONTACT RIGHT OF WAY ENGINEERING AT THE DISTRICT OFFICE.

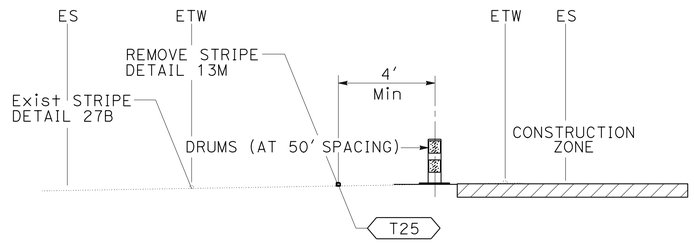

SECTION B3-B3

Sta 3819+60 TO Sta 3845+80
ROUTE 40 WB (STAGE 1B)

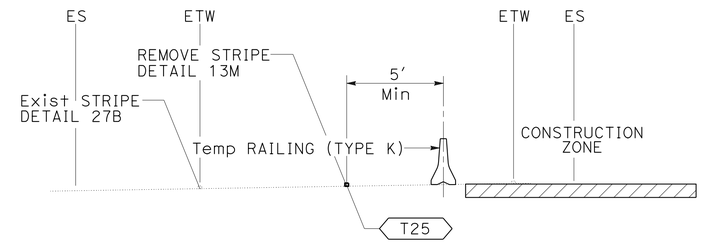

SECTION B4-B4

Sta 3845+80 TO Sta 3852+40
ROUTE 40 WB (STAGE 1B)

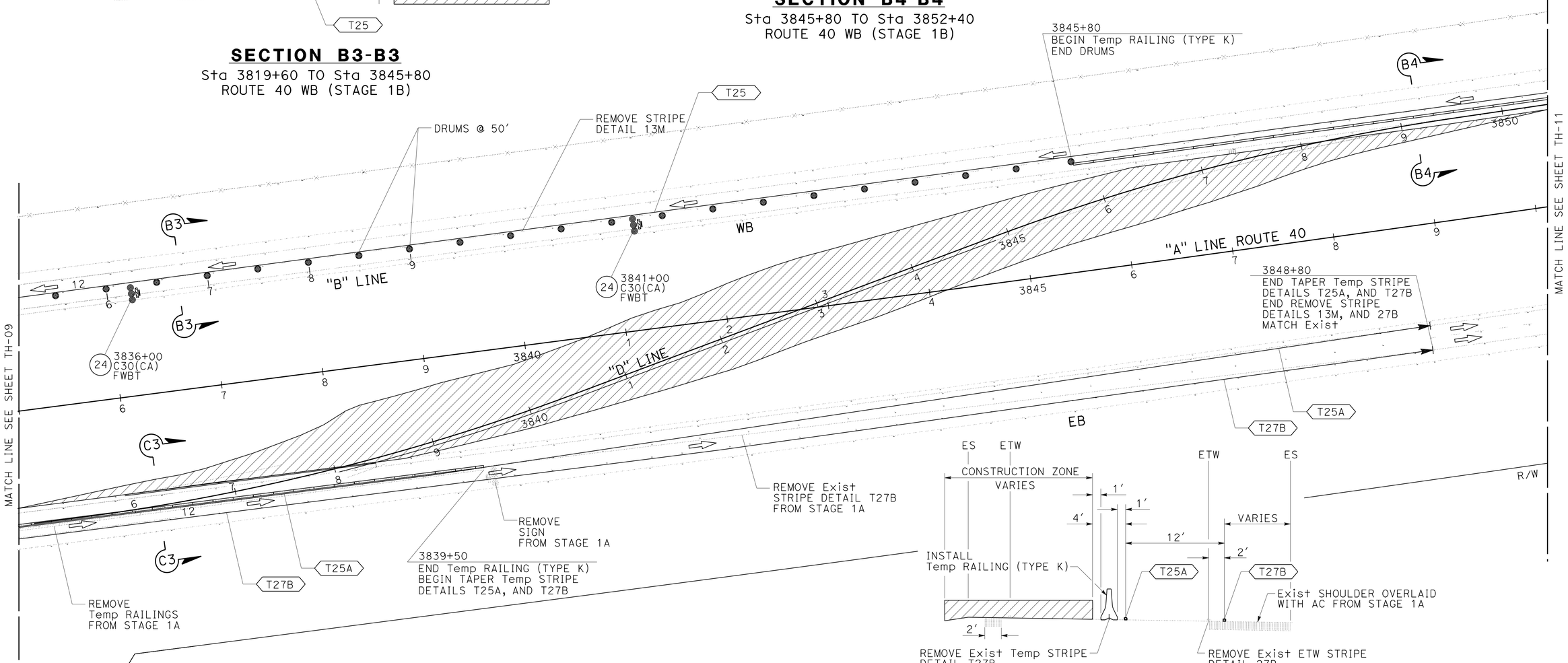

SECTION C3-C3

Sta 3820+00 TO Sta 3839+50
ROUTE 40 EB (STAGE 1B)

STAGE 1B
TRAFFIC HANDLING PLAN

SCALE: 1" = 50'

TH-10

APPROVED FOR TRAFFIC HANDLING WORK ONLY

STATE OF CALIFORNIA - DEPARTMENT OF TRANSPORTATION
Caltrans® TRAFFIC DESIGN

FUNCTIONAL SUPERVISOR: MARIO AMANCIO
CALCULATED-DESIGNED BY: DARYUSH NAMI
CHECKED BY: MEHDI KAMGAR
REVISED BY
DATE REVISED

LAST REVISION 06-24-15
DATE PLOTTED => 25-NOV-2015
TIME PLOTTED => 08:43

Dist	COUNTY	ROUTE	POST MILES TOTAL PROJECT	SHEET No.	TOTAL SHEETS
08	SBd	40	R105.2/106.5	36	110

Daryush Nami 6-24-15
REGISTERED CIVIL ENGINEER DATE

6-25-15
PLANS APPROVAL DATE

REGISTERED PROFESSIONAL ENGINEER
DARYUSH NAMI
No. C78890
Exp. 3-31-16
CIVIL
STATE OF CALIFORNIA

THE STATE OF CALIFORNIA OR ITS OFFICERS OR AGENTS SHALL NOT BE RESPONSIBLE FOR THE ACCURACY OR COMPLETENESS OF SCANNED COPIES OF THIS PLAN SHEET.

NOTE:

FOR ACCURATE RIGHT OF WAY DATA, CONTACT RIGHT OF WAY ENGINEERING AT THE DISTRICT OFFICE.

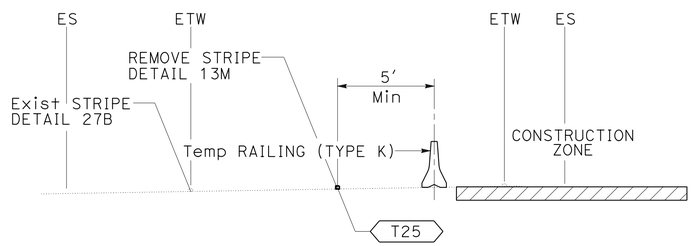

SECTION B4-B4

Sta 3845+80 TO Sta 3852+40
ROUTE 40 WB (STAGE 1B)

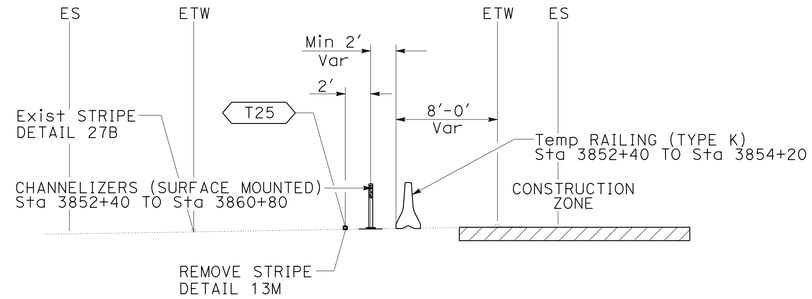

SECTION B5-B5

Sta 3852+40 TO Sta 3862+00
ROUTE 40 WB (STAGE 1B)

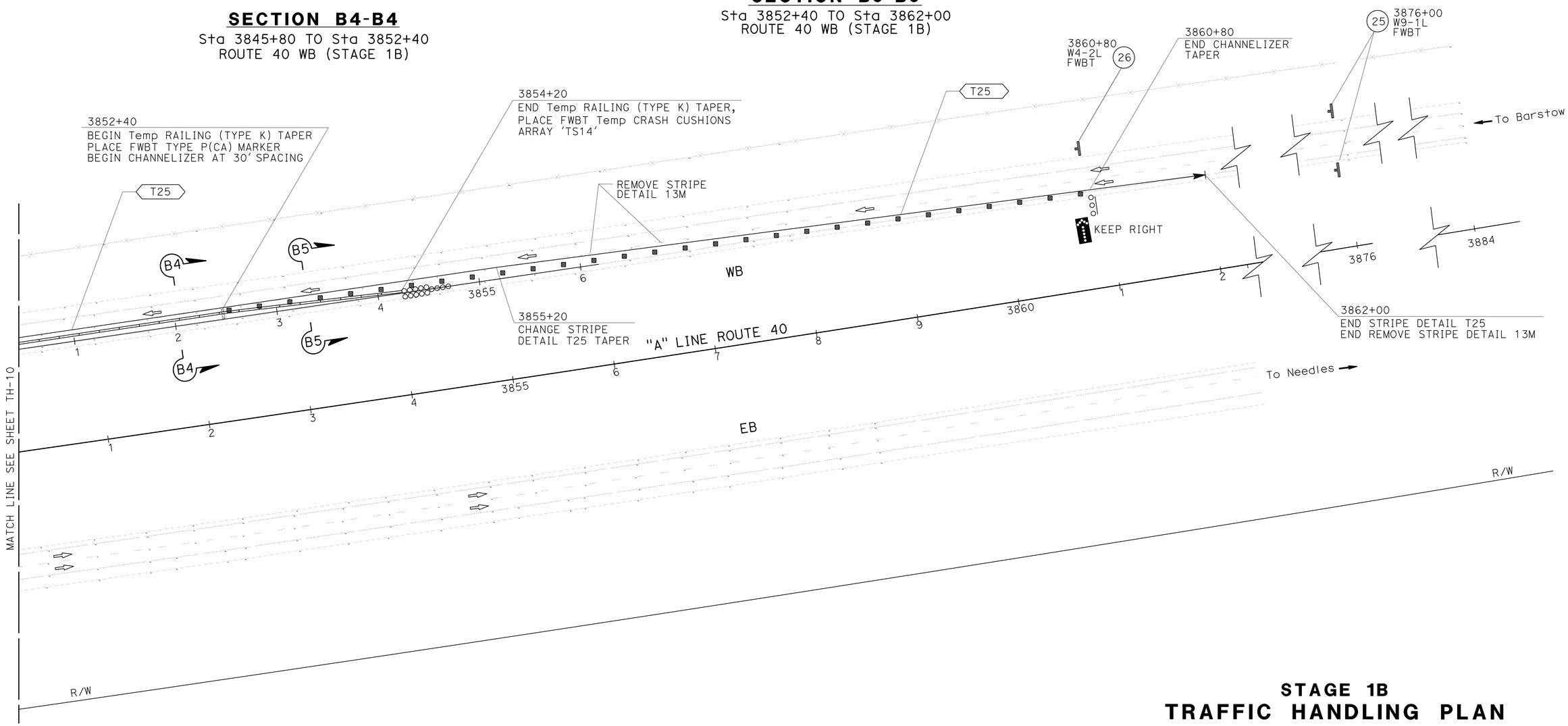

STAGE 1B
TRAFFIC HANDLING PLAN

SCALE: 1" = 50'

TH-11

APPROVED FOR TRAFFIC HANDLING WORK ONLY

STATE OF CALIFORNIA - DEPARTMENT OF TRANSPORTATION
Caltrans® **TRAFFIC DESIGN**

FUNCTIONAL SUPERVISOR: MARIO AMANCIO
CALCULATED-DESIGNED BY: DARYUSH NAMI
CHECKED BY: MEHDI KAMGAR
REVISED BY
DATE REVISED

LAST REVISION 06-24-15
DATE PLOTTED => 25-NOV-2015
TIME PLOTTED => 08:43

Dist	COUNTY	ROUTE	POST MILES TOTAL PROJECT	SHEET No.	TOTAL SHEETS
08	SBd	40	R105.2/106.5	37	110

Daryush Nami 6-24-15
REGISTERED CIVIL ENGINEER DATE

6-25-15
PLANS APPROVAL DATE

REGISTERED PROFESSIONAL ENGINEER
DARYUSH NAMI
No. C78890
Exp. 3-31-16
CIVIL
STATE OF CALIFORNIA

THE STATE OF CALIFORNIA OR ITS OFFICERS OR AGENTS SHALL NOT BE RESPONSIBLE FOR THE ACCURACY OR COMPLETENESS OF SCANNED COPIES OF THIS PLAN SHEET.

NOTE:

FOR ACCURATE RIGHT OF WAY DATA, CONTACT RIGHT OF WAY ENGINEERING AT THE DISTRICT OFFICE.

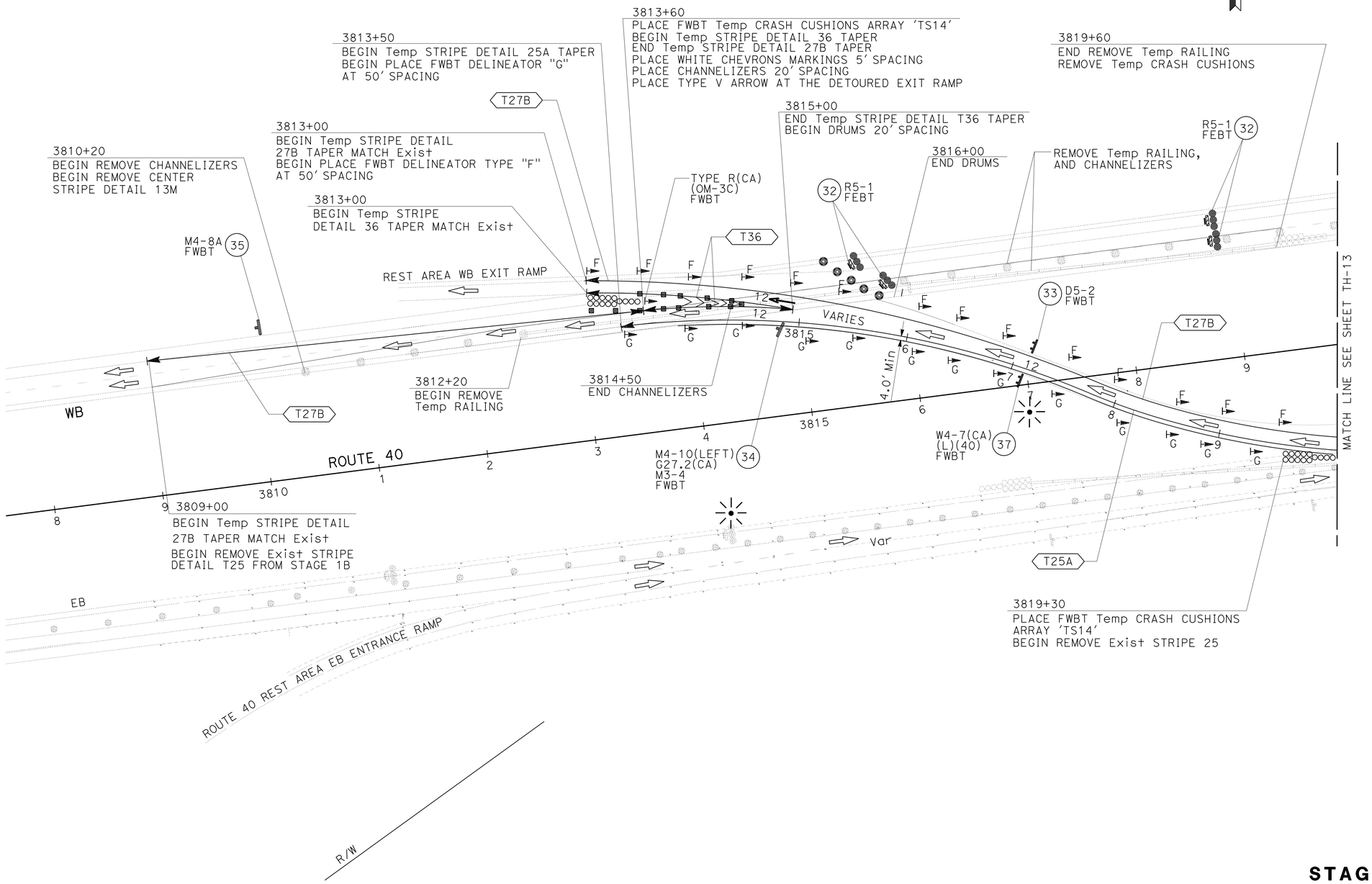

STAGE 2
TRAFFIC HANDLING PLAN

SCALE: 1" = 50'

TH-12

APPROVED FOR TRAFFIC HANDLING WORK ONLY

STATE OF CALIFORNIA - DEPARTMENT OF TRANSPORTATION
Caltrans® **TRAFFIC DESIGN**

FUNCTIONAL SUPERVISOR: MARIO AMANCIO
CALCULATED-DESIGNED BY: DARYUSH NAMI
CHECKED BY: MEHDI KAMGAR
REVISED BY
DATE REVISED

LAST REVISION 06-24-15
DATE PLOTTED => 25-NOV-2015
TIME PLOTTED => 08:43

Dist	COUNTY	ROUTE	POST MILES TOTAL PROJECT	SHEET No.	TOTAL SHEETS
08	SBd	40	R105.2/106.5	38	110

Daryush Nami 6-24-15
REGISTERED CIVIL ENGINEER DATE

6-25-15
PLANS APPROVAL DATE

REGISTERED PROFESSIONAL ENGINEER
DARYUSH NAMI
No. C78890
Exp. 3-31-16
CIVIL
STATE OF CALIFORNIA

THE STATE OF CALIFORNIA OR ITS OFFICERS OR AGENTS SHALL NOT BE RESPONSIBLE FOR THE ACCURACY OR COMPLETENESS OF SCANNED COPIES OF THIS PLAN SHEET.

NOTE:

FOR ACCURATE RIGHT OF WAY DATA, CONTACT RIGHT OF WAY ENGINEERING AT THE DISTRICT OFFICE.

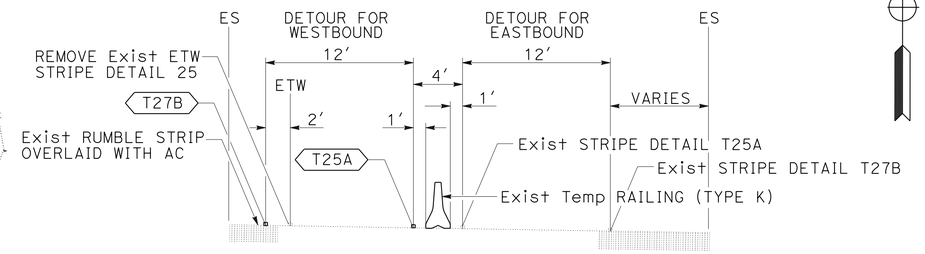

SECTION D-D

Sta 3820+00 TO Sta 3839+00
ROUTE 40 (STAGE 2)

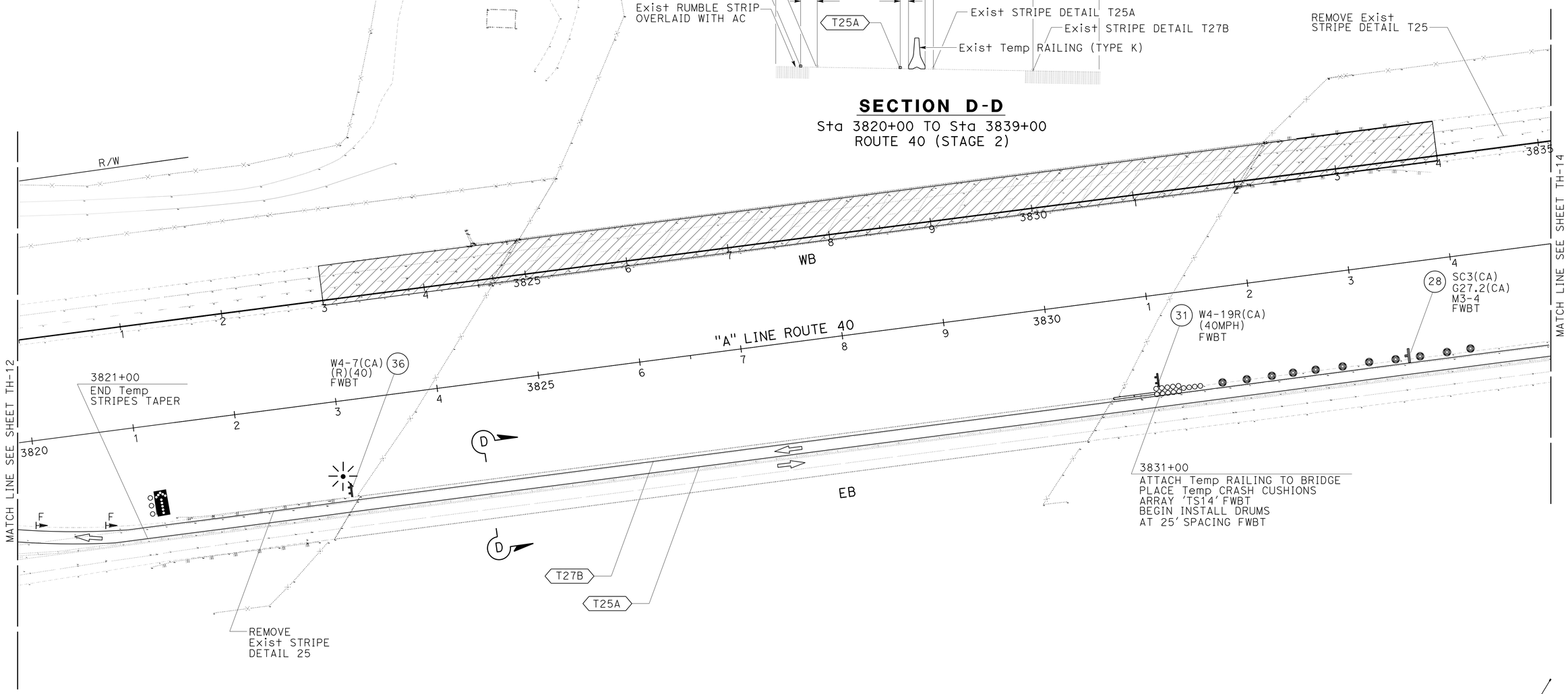

STAGE 2
TRAFFIC HANDLING PLAN

SCALE: 1" = 50′

TH-13

APPROVED FOR TRAFFIC HANDLING WORK ONLY

STATE OF CALIFORNIA - DEPARTMENT OF TRANSPORTATION
Caltrans® **TRAFFIC DESIGN**

FUNCTIONAL SUPERVISOR: MARIO AMANCIO
CALCULATED-DESIGNED BY: DARYUSH NAMI
CHECKED BY: MEHDI KAMGAR
REVISED BY
DATE REVISED

LAST REVISION 06-24-15
DATE PLOTTED => 25-NOV-2015
TIME PLOTTED => 08:43

Dist	COUNTY	ROUTE	POST MILES TOTAL PROJECT	SHEET No.	TOTAL SHEETS
08	SBd	40	R105.2/106.5	39	110

Daryush Nami 6-24-15
REGISTERED CIVIL ENGINEER DATE

6-25-15
PLANS APPROVAL DATE

REGISTERED PROFESSIONAL ENGINEER
DARYUSH NAMI
No. C78890
Exp. 3-31-16
CIVIL
STATE OF CALIFORNIA

THE STATE OF CALIFORNIA OR ITS OFFICERS OR AGENTS SHALL NOT BE RESPONSIBLE FOR THE ACCURACY OR COMPLETENESS OF SCANNED COPIES OF THIS PLAN SHEET.

NOTE:

FOR ACCURATE RIGHT OF WAY DATA, CONTACT
RIGHT OF WAY ENGINEERING AT THE DISTRICT OFFICE.

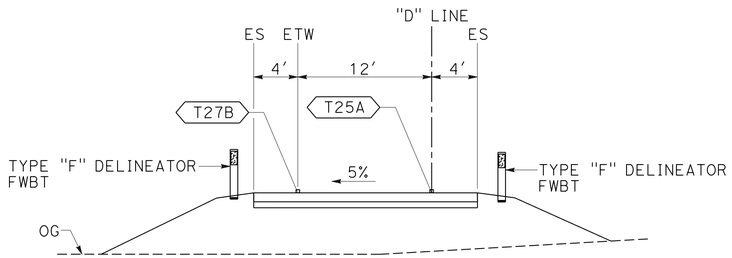

SECTION E-E

Sta 3839+00 TO Sta 3850+00
ROUTE 40 (STAGE 2)

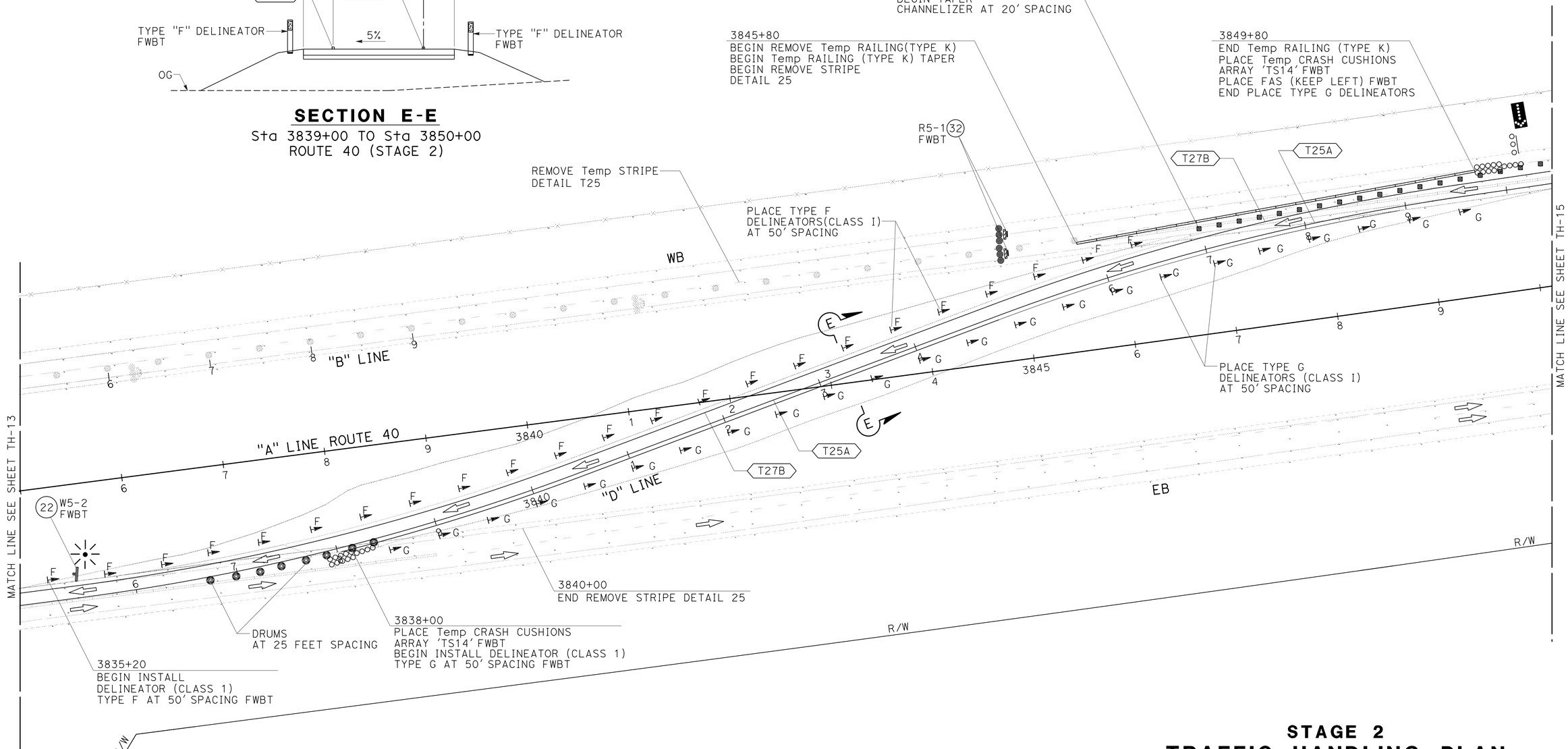

STAGE 2
TRAFFIC HANDLING PLAN

SCALE: 1" = 50'

TH-14

APPROVED FOR TRAFFIC HANDLING WORK ONLY

STATE OF CALIFORNIA - DEPARTMENT OF TRANSPORTATION
Caltrans TRAFFIC DESIGN

FUNCTIONAL SUPERVISOR: MARIO AMANCIO
CALCULATED-DESIGNED BY: DARYUSH NAMI
CHECKED BY: MEHDI KAMGAR
REVISED BY / DATE REVISED

LAST REVISION 06-24-15
DATE PLOTTED => 25-NOV-2015
TIME PLOTTED => 08:43

Dist	COUNTY	ROUTE	POST MILES TOTAL PROJECT	SHEET No.	TOTAL SHEETS
08	SBd	40	R105.2/106.5	40	110

Daryush Nami 6-24-15
REGISTERED CIVIL ENGINEER DATE

6-25-15
PLANS APPROVAL DATE

REGISTERED PROFESSIONAL ENGINEER
DARYUSH NAMI
No. C78890
Exp. 3-31-16
CIVIL
STATE OF CALIFORNIA

THE STATE OF CALIFORNIA OR ITS OFFICERS OR AGENTS SHALL NOT BE RESPONSIBLE FOR THE ACCURACY OR COMPLETENESS OF SCANNED COPIES OF THIS PLAN SHEET.

NOTE:

FOR ACCURATE RIGHT OF WAY DATA, CONTACT RIGHT OF WAY ENGINEERING AT THE DISTRICT OFFICE.

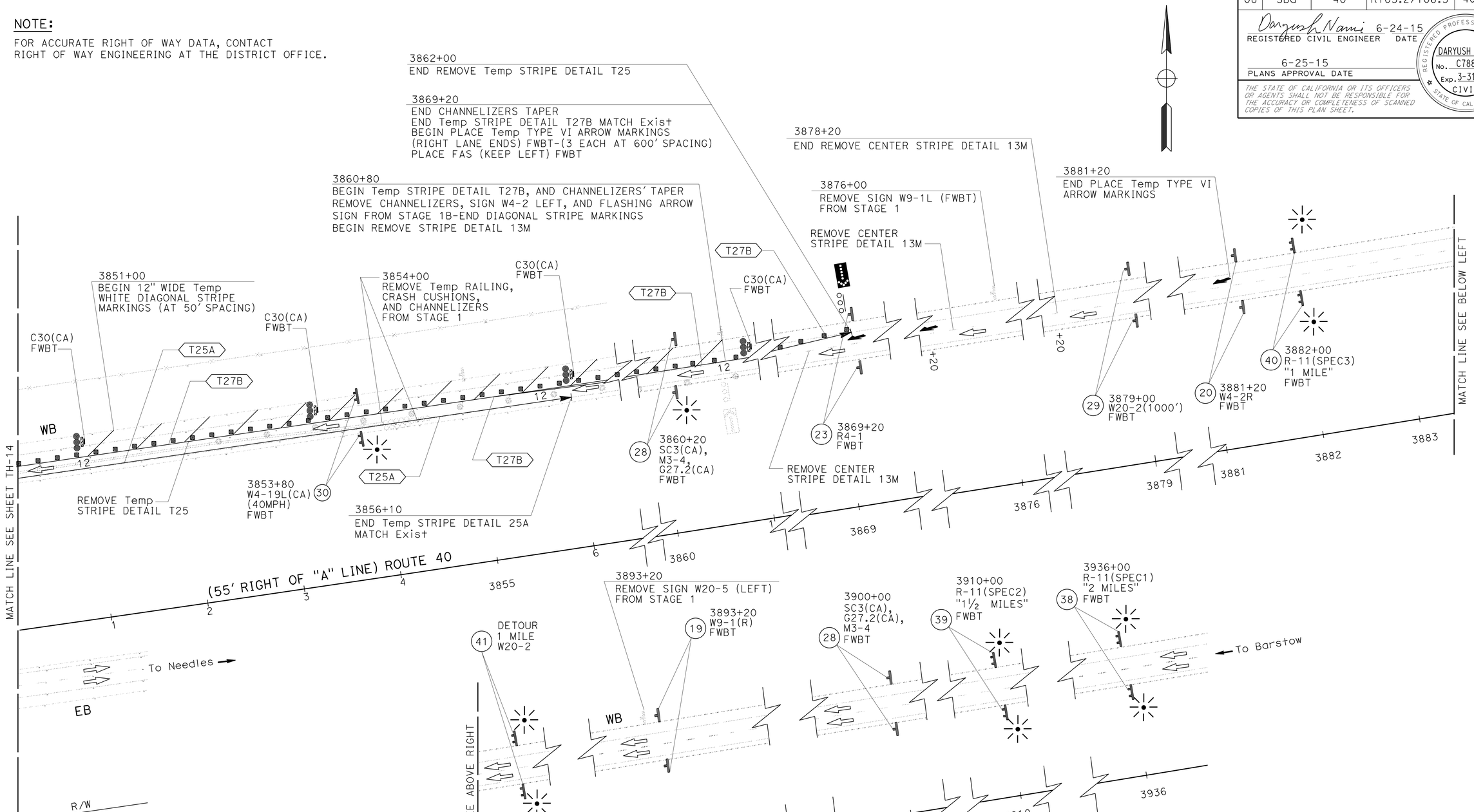

STAGE 2
TRAFFIC HANDLING PLAN

SCALE: 1" = 50'

TH-15

APPROVED FOR TRAFFIC HANDLING WORK ONLY

STATE OF CALIFORNIA - DEPARTMENT OF TRANSPORTATION
Caltrans® TRAFFIC DESIGN

FUNCTIONAL SUPERVISOR: MARIO AMANCIO
CALCULATED-DESIGNED BY: DARYUSH NAMI
CHECKED BY: MEHDI KAMGAR
REVISED BY
DATE REVISED

LAST REVISION 06-24-15
DATE PLOTTED => 25-NOV-2015
TIME PLOTTED => 08:43

Dist	COUNTY	ROUTE	POST MILES TOTAL PROJECT	SHEET No.	TOTAL SHEETS
08	SBd	40	R105.2/106.5	41	110

Daryush Nami 6-24-15
REGISTERED CIVIL ENGINEER DATE

6-25-15
PLANS APPROVAL DATE

REGISTERED PROFESSIONAL ENGINEER
DARYUSH NAMI
No. C78890
Exp. 3-31-16
CIVIL
STATE OF CALIFORNIA

THE STATE OF CALIFORNIA OR ITS OFFICERS OR AGENTS SHALL NOT BE RESPONSIBLE FOR THE ACCURACY OR COMPLETENESS OF SCANNED COPIES OF THIS PLAN SHEET.

TRAFFIC HANDLING PAVEMENT DELINEATION QUANTITIES

SHEET No.	REMOVE PAINTED PAVEMENT MARKING	REMOVE YELLOW THERMOPLASTIC TRAFFIC STRIPE (HAZARDOUS WASTE)	REMOVE THERMOPLASTIC TRAFFIC STRIPE		REMOVE PAVEMENT MARKER	THERMOPLASTIC TRAFFIC STRIPE (SPRAYABLE)			PAINT PAVEMENT MARKING (2-COAT)	PAVEMENT MARKER RETROREFLECTIVE	
			YELLOW	WHITE		4" WHITE	4" YELLOW	8" WHITE	WHITE	TYPE G	TYPE H
	SQFT	LF	LF	LF	EA	LF	LF	LF	SQFT	EA	EA
TH-1	99			25	6				42		
TH-2	198			375	161	700			84		
TH-3				375	161	1100		888		40	
TH-4				375	161	1500					
TH-5				370	150	1380					
TH-6	99								42		
TH-7	198			700	31		700		84		31
TH-8				3135	188	500	2600				88
TH-9				1875	262	1500	3000				97
TH-10				1775	257	1380	2930				92
TH-11		1150		300	150		1200				25
TH-12	233	70	1800	1900	49	1160	700	400	233	18	31
TH-13		1500	4500	3000	59	1500	1500				59
TH-14			4700	2800	31	1500	1500				31
TH-15	297			2325	175	1920			126		
TOTAL	1124	2720	30330		1881	29158			611	512	

NOTES:

1. MAINTAIN TEMPORARY PAVEMENT DELINEATION UNTIL IT IS SUPERSEDED OR IS TO BE REPLACED WITH A NEW PATTERN OF TEMPORARY PAVEMENT DELINEATION, OR PERMANENT PAVEMENT DELINEATION.
2. TEMPORARY PAVEMENT DELINEATION SHALL BE REMOVED WHEN IT IS TO BE REPLACED WITH A NEW PATTERN OF TEMPORARY PAVEMENT DELINEATION, OR PERMANENT PAVEMENT DELINEATION.

TRAFFIC HANDLING QUANTITIES

SHEET No.	FLASHING ARROW SIGN (FAS)	BARRICADE TYPE II	CHANNELIZER (SURFACE MOUNTED)	TRAFFIC PLASTIC DRUM	FLASHING BEACON (PORTABLE)	TEMPORARY RAILING (TYPE K)	TEMPORARY RAILING (TYPE K) REFLECTORS (N)	TEMPORARY CRASH CUSHION MODULE	DELINEATORS CLASS 1		OBJECT MARKER	
									TYPE G	TYPE F	TYPE P	TYPE R(CA)
	EA	EA	EA	EA	EA	LF	EA	EA	EA	EA	EA	EA
CS-1					5							
TH-1												
TH-2	1			20								
TH-3		2		13		360	18	14			1	
TH-4		1		16		1070	54	14			1	
TH-5		1				450	23					
TH-6												
TH-7	1			21								
TH-8		3	21	32		1060	53	28			1	
TH-9		2		31		1500	75				1	
TH-10		2		22		870	44					
TH-11	1		18			420	21	14			1	
TH-12		4	11	5	2			28	15	15		1
TH-13	1				1	40		14	2	2		
TH-14	1	2	16	6	1	420	21	28	32	32		
TH-15	1	4	97		10							
TOTAL	6	21	163	166	19	6190	311	140	98		6	

(N) - NOT A SEPARATE PAY ITEM, FOR INFORMATION ONLY.

TRAFFIC HANDLING QUANTITIES

THQ-1

STATE OF CALIFORNIA - DEPARTMENT OF TRANSPORTATION
Caltrans® TRAFFIC DESIGN

FUNCTIONAL SUPERVISOR: MARIO AMANCIO
CALCULATED-DESIGNED BY: DARYUSH NAMI
CHECKED BY: MEHDI KAMGAR
REVISED BY
DATE REVISED

LAST REVISION 06-24-15
DATE PLOTTED => 25-NOV-2015
TIME PLOTTED => 08:43

Dist	COUNTY	ROUTE	POST MILES TOTAL PROJECT	SHEET No.	TOTAL SHEETS
08	SBd	40	R105.2/106.5	42	110

REGISTERED CIVIL ENGINEER 6-24-15 DATE

6-25-15
PLANS APPROVAL DATE

REGISTERED PROFESSIONAL ENGINEER
DUNG HUY PHAN
No. C73061
Exp. 12-31-16
CIVIL
STATE OF CALIFORNIA

THE STATE OF CALIFORNIA OR ITS OFFICERS OR AGENTS SHALL NOT BE RESPONSIBLE FOR THE ACCURACY OR COMPLETENESS OF SCANNED COPIES OF THIS PLAN SHEET.

NOTES:

1. FOR COMPLETE RIGHT OF WAY AND ACCURATE ACCESS DATA, SEE RIGHT OF WAY RECORD MAPS AT DISTRICT OFFICE.
2. REMOVE HOT MIX ASPHALT (HMA) PAVEMENT DETOUR WHEN BRIDGE IS COMPLETED AND DETOUR IS CLOSED.

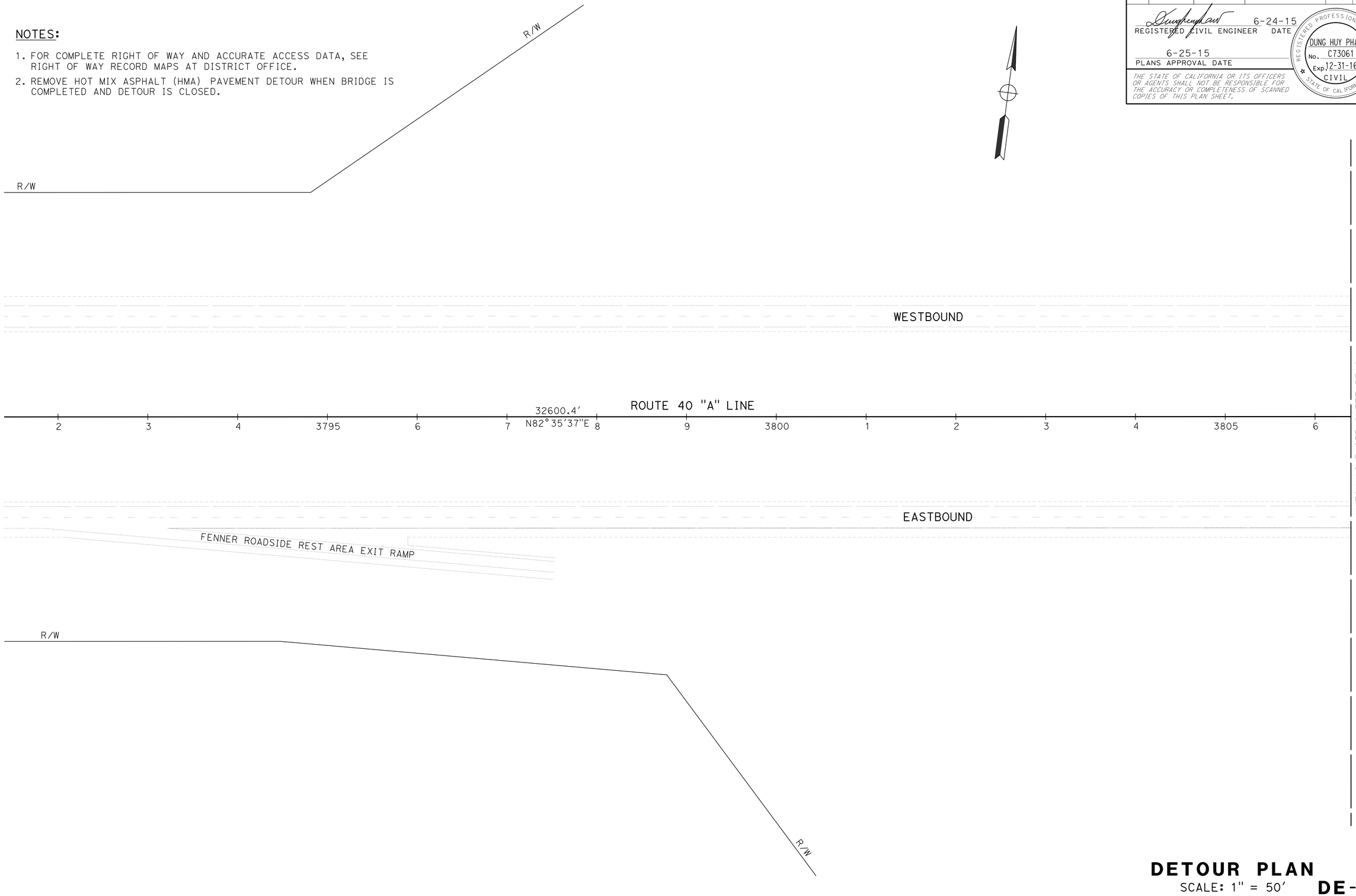

DETOUR PLAN

SCALE: 1" = 50'

DE-1

APPROVED FOR DETOUR CONSTRUCTION WORK ONLY

STATE OF CALIFORNIA - DEPARTMENT OF TRANSPORTATION

Caltrans

DESIGN

FUNCTIONAL SUPERVISOR: MUSTAPHA RAOUF

CALCULATED-DESIGNED BY: DON NGUYEN

CHECKED BY: DUNG HUY PHAN

REVISED BY

DATE REVISED

LAST REVISION 06-24-15

DATE PLOTTED => 25-NOV-2015
TIME PLOTTED => 08:43

Dist	COUNTY	ROUTE	POST MILES TOTAL PROJECT	SHEET No.	TOTAL SHEETS
08	SBd	40	R105.2/106.5	43	110

REGISTERED CIVIL ENGINEER 6-24-15 DATE

6-25-15
PLANS APPROVAL DATE

REGISTERED PROFESSIONAL ENGINEER DUNG HUY PHAN No. C73061 Exp. 12-31-16 CIVIL STATE OF CALIFORNIA

THE STATE OF CALIFORNIA OR ITS OFFICERS OR AGENTS SHALL NOT BE RESPONSIBLE FOR THE ACCURACY OR COMPLETENESS OF SCANNED COPIES OF THIS PLAN SHEET.

NOTE:

FOR ACCURATE RIGHT OF WAY DATA, CONTACT RIGHT OF WAY ENGINEERING AT THE DISTRICT OFFICE.

CURVE DATA

No. ⊕	R	Δ	T	L
1	800′	26°54′12"	191.35′	375.64′
2	780′	26°56′19"	186.82′	366.73′

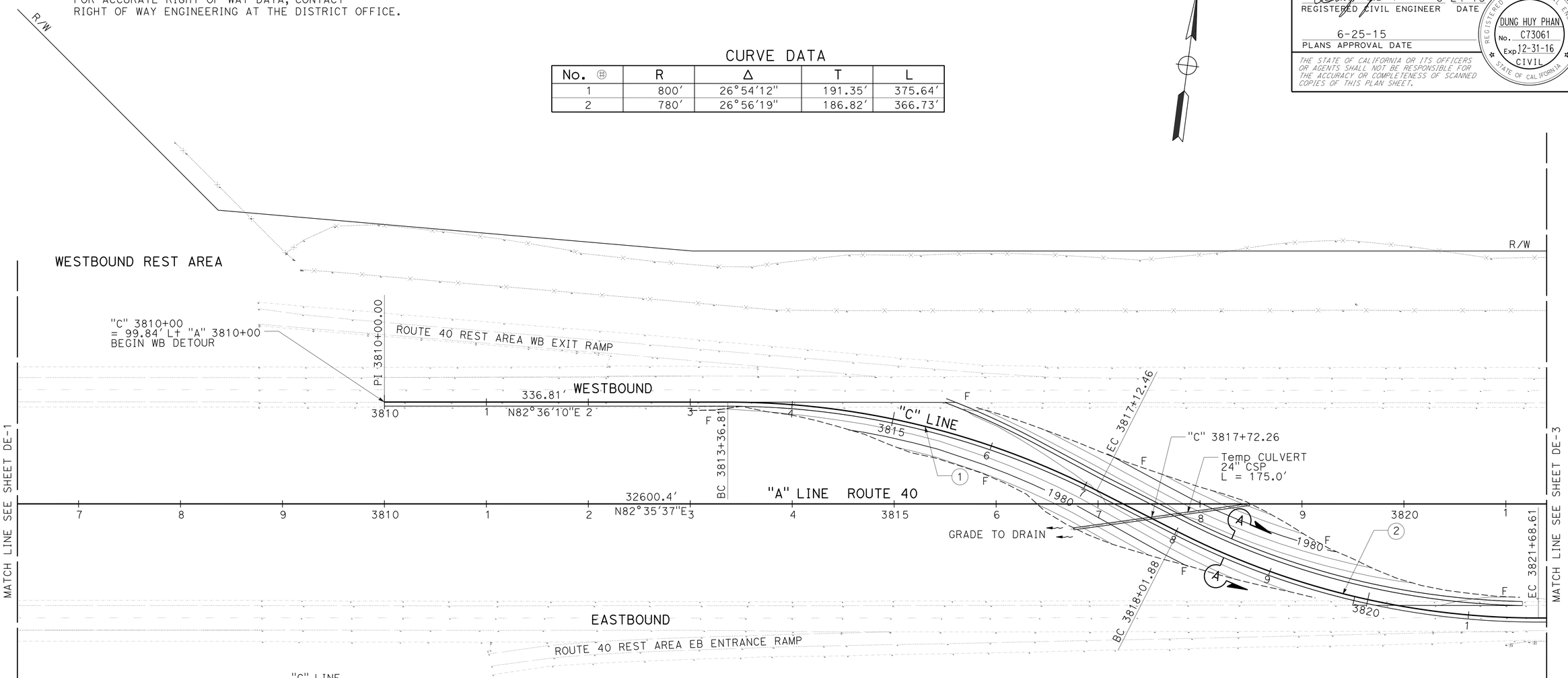

DETOUR LINE "C"
EAST TO WEST

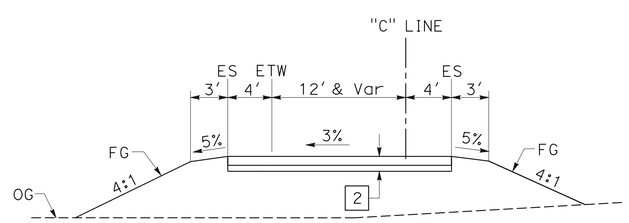

SECTION A-A
DETOUR ROAD (Typ)
NO SCALE

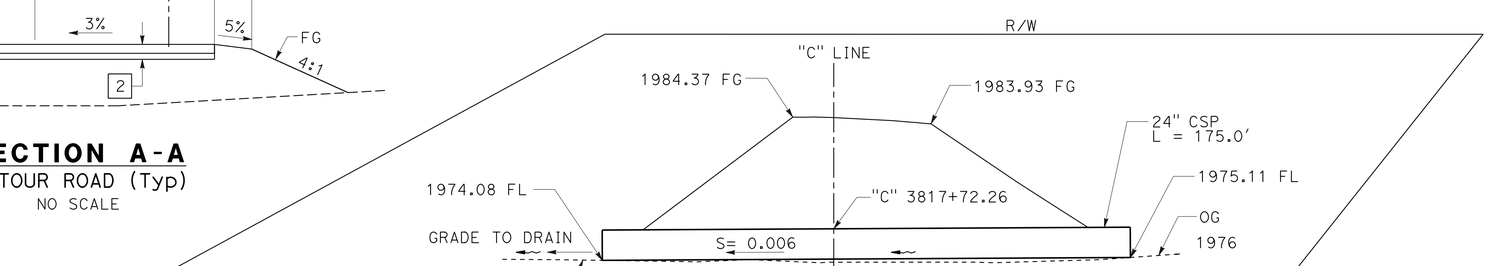

DRAINAGE PROFILE Temp CULVERT
NO SCALE

DETOUR PLAN
SCALE: 1" = 50′ **DE-2**

APPROVED FOR DETOUR CONSTRUCTION WORK ONLY

STATE OF CALIFORNIA - DEPARTMENT OF TRANSPORTATION
Caltrans DESIGN
FUNCTIONAL SUPERVISOR: MUSTAPHA RAOUF
CALCULATED-DESIGNED BY: DON NGUYEN
CHECKED BY: DUNG HUY PHAN
REVISED BY
DATE REVISED

LAST REVISION 06-24-15
DATE PLOTTED => 25-NOV-2015
TIME PLOTTED => 08:43

Dist	COUNTY	ROUTE	POST MILES TOTAL PROJECT	SHEET No.	TOTAL SHEETS
08	SBd	40	R105.2/106.5	44	110

REGISTERED CIVIL ENGINEER 6-24-15 DATE

6-25-15
PLANS APPROVAL DATE

REGISTERED PROFESSIONAL ENGINEER
DUNG HUY PHAN
No. C73061
Exp. 12-31-16
CIVIL
STATE OF CALIFORNIA

THE STATE OF CALIFORNIA OR ITS OFFICERS OR AGENTS SHALL NOT BE RESPONSIBLE FOR THE ACCURACY OR COMPLETENESS OF SCANNED COPIES OF THIS PLAN SHEET.

NOTE:

FOR ACCURATE RIGHT OF WAY DATA, CONTACT RIGHT OF WAY ENGINEERING AT THE DISTRICT OFFICE.

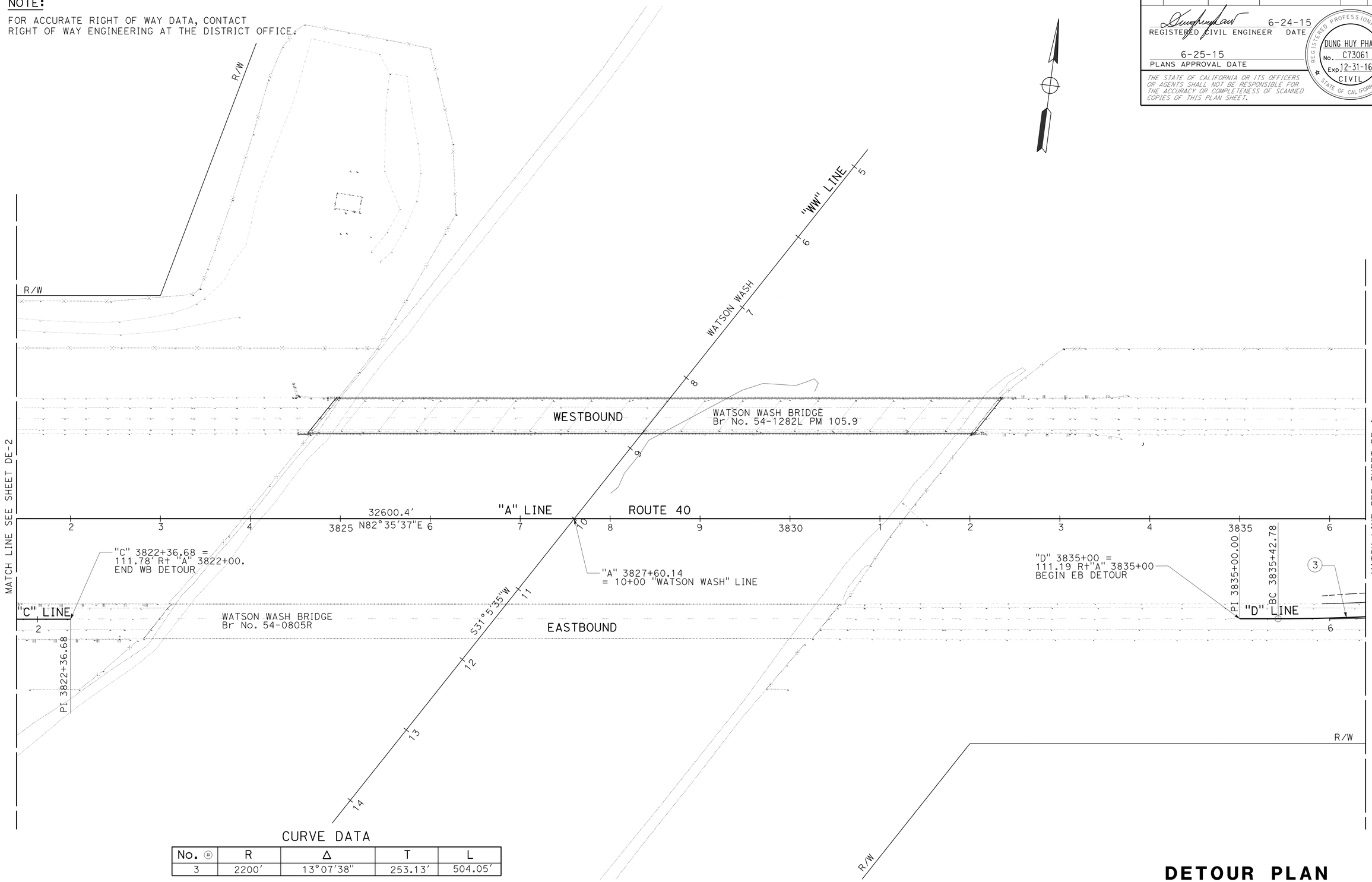

CURVE DATA

No. ⊕	R	Δ	T	L
3	2200'	13°07'38"	253.13'	504.05'

DETOUR PLAN

SCALE: 1" = 50'

DE-3

APPROVED FOR DETOUR CONSTRUCTION WORK ONLY

STATE OF CALIFORNIA - DEPARTMENT OF TRANSPORTATION
Caltrans
DESIGN

FUNCTIONAL SUPERVISOR: MUSTAPHA RAOUF
CALCULATED-DESIGNED BY: DON NGUYEN
CHECKED BY: DUNG HUY PHAN
REVISED BY
DATE REVISED

LAST REVISION 06-24-15
DATE PLOTTED => 25-NOV-2015
TIME PLOTTED => 08:43

Dist	COUNTY	ROUTE	POST MILES TOTAL PROJECT	SHEET No.	TOTAL SHEETS
08	SBd	40	R105.2/106.5	45	110

REGISTERED CIVIL ENGINEER 6-24-15 DATE

6-25-15
PLANS APPROVAL DATE

REGISTERED PROFESSIONAL ENGINEER DUNG HUY PHAN No. C73061 Exp. 12-31-16 CIVIL STATE OF CALIFORNIA

THE STATE OF CALIFORNIA OR ITS OFFICERS OR AGENTS SHALL NOT BE RESPONSIBLE FOR THE ACCURACY OR COMPLETENESS OF SCANNED COPIES OF THIS PLAN SHEET.

NOTE:

FOR ACCURATE RIGHT OF WAY DATA, CONTACT RIGHT OF WAY ENGINEERING AT THE DISTRICT OFFICE.

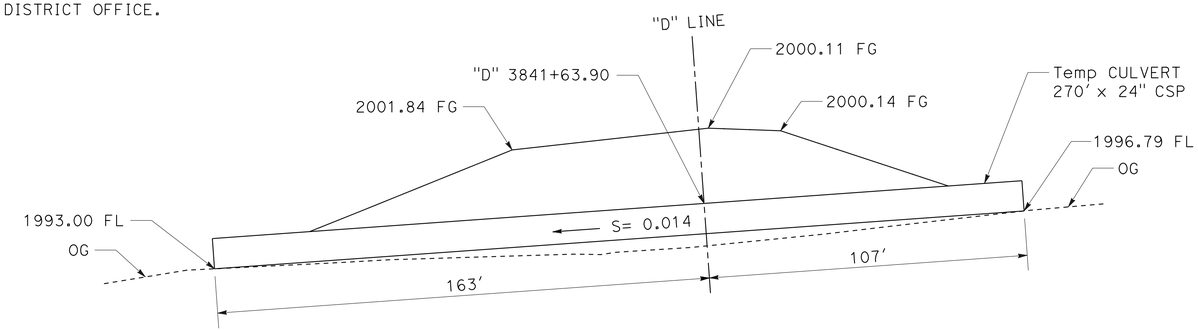

DRAINAGE PROFILE Temp CULVERT

NO SCALE

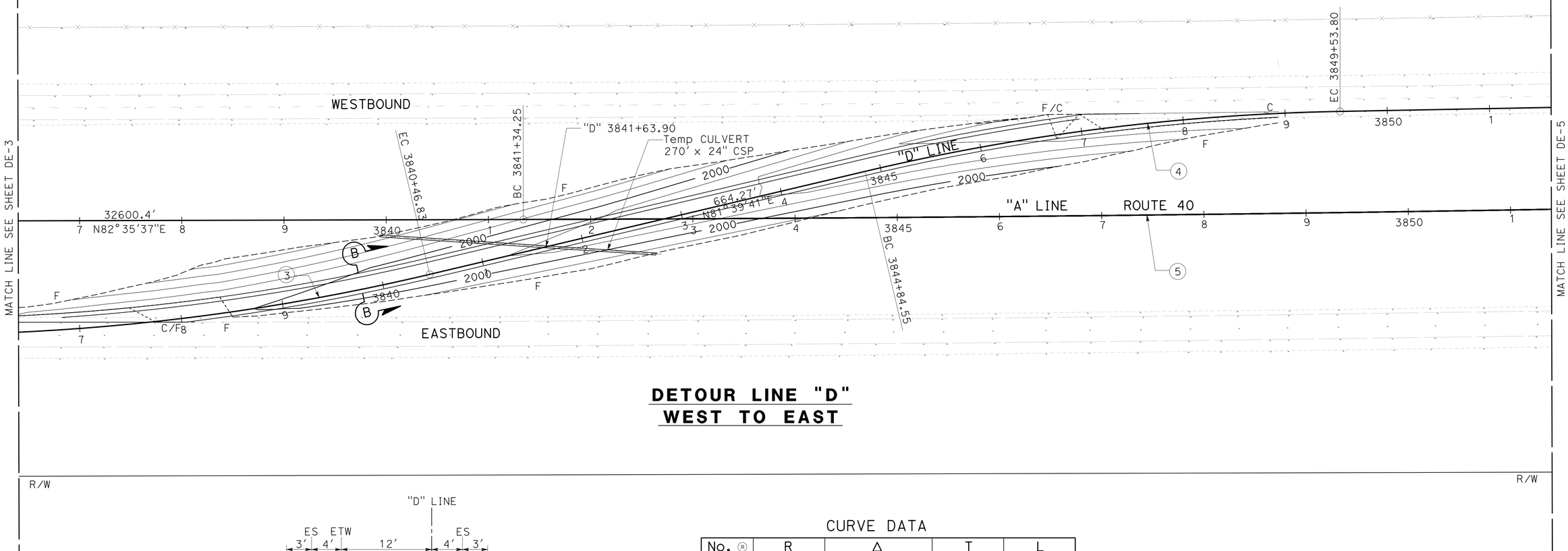

DETOUR LINE "D"
WEST TO EAST

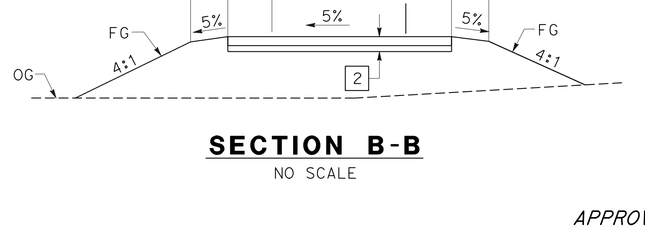

SECTION B-B

NO SCALE

CURVE DATA

No. ⊕	R	Δ	T	L
3	2200′	13°07′38"	253.13′	504.05′
4	2200′	12°13′15"	235.52′	469.25′
5	70000′	02°47′20"	1703.91′	3407.14′

DETOUR PLAN

SCALE: 1" = 50′ **DE-4**

APPROVED FOR DETOUR CONSTRUCTION WORK ONLY

STATE OF CALIFORNIA - DEPARTMENT OF TRANSPORTATION
Caltrans® DESIGN

FUNCTIONAL SUPERVISOR: MUSTAPHA RAOUF
CALCULATED-DESIGNED BY: DON NGUYEN
CHECKED BY: DUNG HUY PHAN
REVISED BY
DATE REVISED

LAST REVISION 06-24-15
DATE PLOTTED => 25-NOV-2015
TIME PLOTTED => 08:43

Dist	COUNTY	ROUTE	POST MILES TOTAL PROJECT	SHEET No.	TOTAL SHEETS
08	SBd	40	R105.2/106.5	46	110

REGISTERED CIVIL ENGINEER 6-24-15 DATE

6-25-15
PLANS APPROVAL DATE

REGISTERED PROFESSIONAL ENGINEER
DUNG HUY PHAN
No. C73061
Exp. 12-31-16
CIVIL
STATE OF CALIFORNIA

THE STATE OF CALIFORNIA OR ITS OFFICERS OR AGENTS SHALL NOT BE RESPONSIBLE FOR THE ACCURACY OR COMPLETENESS OF SCANNED COPIES OF THIS PLAN SHEET.

NOTE:

FOR ACCURATE RIGHT OF WAY DATA, CONTACT
RIGHT OF WAY ENGINEERING AT THE DISTRICT OFFICE.

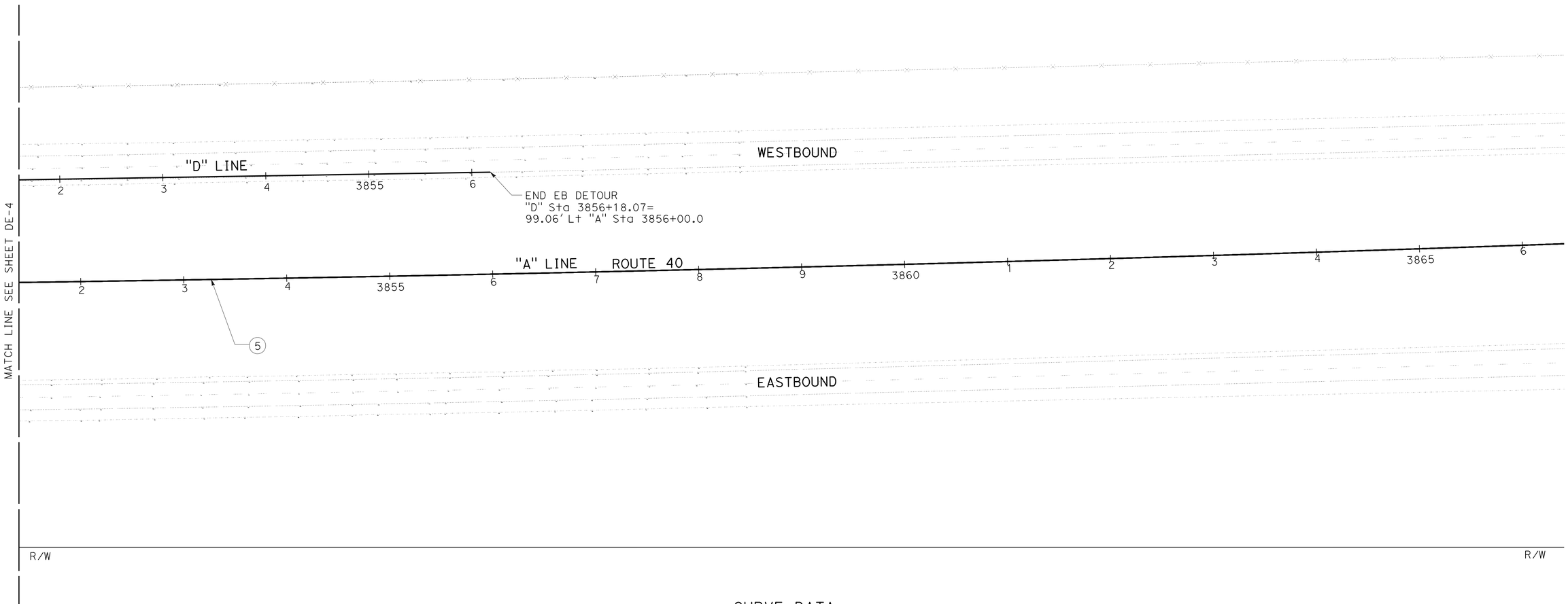

CURVE DATA

No. ⊕	R	Δ	T	L
5	70000'	02°47'20"	1703.91'	3407.14'

DETOUR PLAN

SCALE: 1" = 50' **DE-5**

APPROVED FOR DETOUR CONSTRUCTION WORK ONLY

STATE OF CALIFORNIA - DEPARTMENT OF TRANSPORTATION
Caltrans
DESIGN

FUNCTIONAL SUPERVISOR: MUSTAPHA RAOUF
CALCULATED-DESIGNED BY: DON NGUYEN
CHECKED BY: DUNG HUY PHAN
REVISED BY
DATE REVISED

LAST REVISION 06-24-15
DATE PLOTTED => 25-NOV-2015
TIME PLOTTED => 08:43

Dist	COUNTY	ROUTE	POST MILES TOTAL PROJECT	SHEET No.	TOTAL SHEETS
08	SBd	40	R105.2/106.5	47	110

Daryush Nami 6-24-15
REGISTERED CIVIL ENGINEER DATE

6-25-15
PLANS APPROVAL DATE

REGISTERED PROFESSIONAL ENGINEER
DARYUSH NAMI
No. C78890
Exp. 3-31-16
CIVIL
STATE OF CALIFORNIA

THE STATE OF CALIFORNIA OR ITS OFFICERS OR AGENTS SHALL NOT BE RESPONSIBLE FOR THE ACCURACY OR COMPLETENESS OF SCANNED COPIES OF THIS PLAN SHEET.

PAVEMENT DELINEATION QUANTITIES

SHEET No. FROM	SHEET No. TO	LOCATION AND FROM STATION TO STATION FROM	TO	ROUTE	DIRECTION	DETAIL No. AND QUANTITY OF PAVEMENT MARKING DETAIL	REMOVE YELLOW THERMOPLASTIC TRAFFIC STRIPE (HAZARDOUS WASTE) LF	REMOVE THERMOPLASTIC TRAFFIC STRIPE LF	REMOVE PAVEMENT MARKER EA	PAINT PAVEMENT MARKING (2-COAT) SQFT	THERMOPLASTIC TRAFFIC STRIPE (SPRAYABLE) 4" WHITE LF	4" YELLOW LF	8" WHITE LF	PAVEMENT MARKER NON REFLE-CTIVE TYPE A EA	RETROREFLECTIVE TYPE G EA	TYPE H EA	TYPE C EA
TH-2	TH-2	3793+00	3796+00	ROUTE 40	EB	36							600		25		
TH-3	TH-3	3811+00	3815+00	ROUTE 40	EB	36A							600		25		
TH-1	TH-1	3788+56	3789+00	ROUTE 40	EB	14M					144			12			4
TH-2	TH-10	3798+00	3848+80	ROUTE 40	EB	27B					5080						
TH-1	TH-10	3789+00	3848+80	ROUTE 40	EB	13M					5980			500	125		
TH-3	TH-3	3815+00	3816+65	ROUTE 40	EB	8					165						
TH-7	TH-14	3798+00	3848+80	ROUTE 40	EB	25	5080					5080				106	
TH-8	TH-9	3817+50	3818+94	ROUTE 40	WB	14M					144			12			4
TH-12	TH-12	3810+00	3814+20	ROUTE 40	WB	36							528		70		
TH-12	TH-15	3809+00	3878+20	ROUTE 40	WB	13M					6920			580	145		
TH-12	TH-15	3809+00	3869+20	ROUTE 40	WB	27B					6020						
TH-12	TH-15	3809+00	3869+20	ROUTE 40	WB	25	6020					6020				127	
TOTAL PDQ-1							11100	0	0	0	37281			1104	631		
TOTAL THQ-1							2720	30330	1881	611	29158			0	512		
TOTAL PDQ-1 & THQ-1							13820	30330	1881	611	66439			1104	1143		

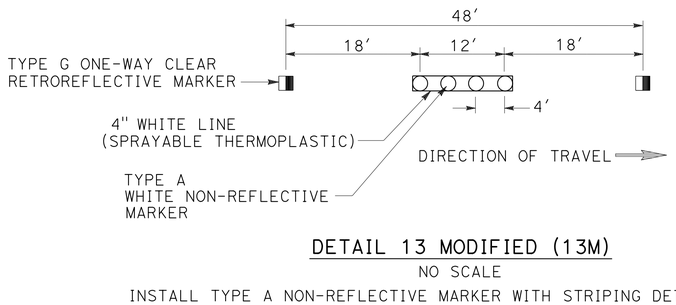

DETAIL 13 MODIFIED (13M)

NO SCALE

INSTALL TYPE A NON-REFLECTIVE MARKER WITH STRIPING DETAIL 13M
INSTALL TYPE A MARKER BEFORE STRIPING TO GET THE PROPER BONDING

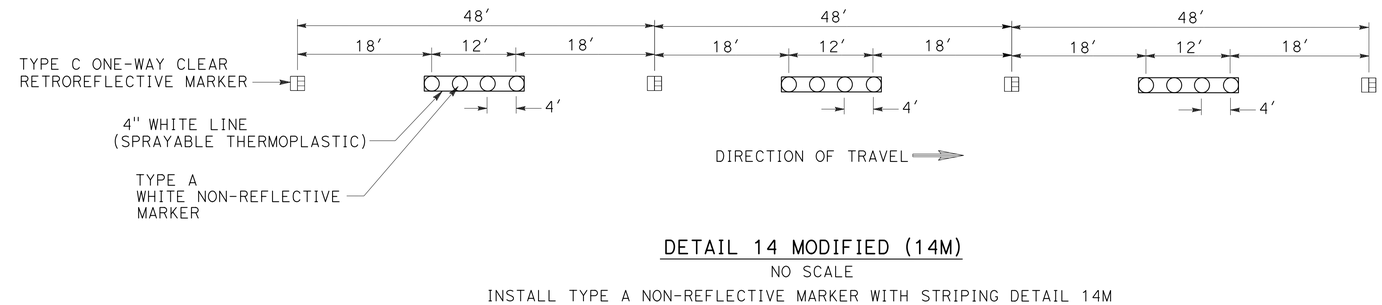

DETAIL 14 MODIFIED (14M)

NO SCALE

INSTALL TYPE A NON-REFLECTIVE MARKER WITH STRIPING DETAIL 14M
INSTALL TYPE A MARKER BEFORE STRIPING TO GET THE PROPER BONDING

PAVEMENT DELINEATION QUANTITIES

PDQ-1

STATE OF CALIFORNIA - DEPARTMENT OF TRANSPORTATION
Caltrans® TRAFFIC DESIGN

FUNCTIONAL SUPERVISOR: MARIO AMANCIO
CALCULATED-DESIGNED BY: DARYUSH NAMI
CHECKED BY: MEHDI KAMGAR
REVISED BY
DATE REVISED

LAST REVISION 06-24-15
DATE PLOTTED => 25-NOV-2015
TIME PLOTTED => 08:43

Dist	COUNTY	ROUTE	POST MILES TOTAL PROJECT	SHEET No.	TOTAL SHEETS
08	SBd	40	R105.2/106.5	48	110

REGISTERED CIVIL ENGINEER 6-24-15 DATE

6-25-15
PLANS APPROVAL DATE

REGISTERED PROFESSIONAL ENGINEER DUNG HUY PHAN No. C73061 Exp. 12-31-16 CIVIL STATE OF CALIFORNIA

THE STATE OF CALIFORNIA OR ITS OFFICERS OR AGENTS SHALL NOT BE RESPONSIBLE FOR THE ACCURACY OR COMPLETENESS OF SCANNED COPIES OF THIS PLAN SHEET.

ROADWAY QUANTITIES

SHEET No.	DIRECTION	STATION LIMITS	COLD PLANE AC PAVEMENT	Shld BACKING	PLACE HMA DIKE (TYPE E)		HOT MIX ASPHALT (TYPE A)	PLACE HMA Misc AREA		CLASS 2 AGGREGATE BASE	TACK COAT	SHOULDER RUMBLE STRIP (HMA, GROUND-IN IDENTATIONS)	Temp FENCE (TORTOISE FENCE)	REMOVE FENCE	REMOVE AC OVERSIDE DRAIN	REMOVE AC Pvmt
					LF	HMA (TYPE A)		HMA (TYPE A)	SQYD							
			SQYD	TON		TON	TON	TON		CY	TON	Sta	LF	LF	EA	SQFT
L-2	WESTBOUND	"B" 3823+00.00 TO 3824+33.81	611	9.0			163	1	5	0.24		2				
L-2	WESTBOUND	"B" 3832+48.44 TO 3834+00.00	615	9.0			164			0.25		2				
L-2	WESTBOUND	"B" 3824+00.00 TO 3824+46.94			47	1	2									
L-2	WESTBOUND	"B" 3823+00.00 TO 3824+46.94										2				
L-2	WESTBOUND	"B" 3832+65.54 TO 3834+00.00										2				
L-1 TO L-3	EASTBOUND	"A" 3809+00.00 TO 3850+57.29											4,162	4,162		
L-1 TO L-3	WESTBOUND	"A" 3809+00.00 TO 3850+57.29											4,163	4,163		
L-1	EB/WB	"A" 3808+42.93 TO 3808+42.93											195	195		
L-3	EB/WB	"A" 3850+55.83 TO 3850+58.32											195	195		
SC-8	DETOUR EAST TO WEST	"C" 3813+00.00 TO 3821+52.72					656			356	0.66					
SC-5 & SC-6	DETOUR WEST TO EAST	"D" 3835+92.00 TO 3848+92.53					1,002			543	1.00					
SC-1 & SC-2/ SC-8 & SC-9	EASTBOUND	"A" 3817+60.00 TO 3822+53.96					224			93	0.24	3				
SC-2 & SC-3/ SC-9 & SC-10	EASTBOUND	"A" 3830+63.61 TO 3839+00.00					428			178	0.43	9				
SC-8	WESTBOUND	"A" 3813+00.00 TO 3815+70.00										3				1,347
SC-8	EASTBOUND	"A" 3819+87.00 TO 3821+16.29										2				641
SC-10	WESTBOUND	"A" 3846+69.66 TO 3848+92.53										3				1,118
SC-9 & SC-10	EASTBOUND	"A" 3835+92.00 TO 3838+40.00										3				1,173
SC-10	WESTBOUND	"A" 3846+69.66 TO 3848+74.18										2				
SUBTOTAL			1,226	18	47	1	2,639	1	5	1,170	3	33	8,715	8,715	1.0	4,279
TOTAL			1,226	18	47	1	2,641		5	1,170	3	33	8,715	8,715	1.0	4,279

DRAINAGE QUANTITIES

SHEET No.	STATION LIMITS	24" CSP (.064" THICK)	REMOVE PIPE
		LF	LF
SC-4/SC-8	"C" 3817+09.70 TO 3819+56.82	175	175
SC-6/SC-10	"D" 3840+07.22 TO 3842+65.70	270	270
TOTAL		445	445

MIDWEST GUARDRAIL SYSTEM

STATION LIMITS	SIDE	VEGETATION CONTROL (MINOR CONCRETE)	REMOVE GUARDRAIL	TREATED WOOD WASTE	MGS (STEEL POST)	DOUBLE MGS (STEEL POST)	ALTERNATIVE FLARED TERMINAL SYSTEM	(N) MGS LAYOUT TYPE	TRANSITION RAILING (TYPE WB-31)	Alt CRASH CUSHION SYSTEM
		SQYD	LF	LB	LF	LF	EA		EA	EA
"B" 3832+47.35 TO "B" 3833+76.00	Lt		125	1,815						
"B" 3832+14.68 TO "B" 3833+67.80	Rt		163	2,359						
"B" 3832+65.54 TO "B" 3833+93.01	Lt	59			75		1	12B	1	
"B" 3832+48.44 TO "B" 3834+48.54	Rt	278			25	400		12E	1	1
"A" 3821+00.00 TO "A" 3822+81.24	Rt	150	175	2,615	150		1	12B	1	
"A" 3821+30.40 TO "A" 3823+11.63	Lt	278	175	2,615	25	400		12E	1	1
SUBTOTAL		765	638	9,404	275	800	2		4	2
TOTAL		765	638	9,404	1,075		2		4	2

(N) - NOT A SEPARATE PAY ITEM, FOR INFORMATION ONLY

RECONSTRUCT FENCE

SHEET No.	DIRECTION	STATION LIMITS	RECONSTRUCT FENCE (TYPE BW)
			LF
L-2	EB/WB	"A" 3822+09.63 TO 3822+74.63	65
L-2	EB/WB	"A" 3823+09.73 TO 3824+66.60	157
L-2	EB/WB	"A" 3824+98.90 TO 3825+41.60	43
L-2	EB/WB	"A" 3829+73.81 TO 3830+16.23	43
L-2	EB/WB	"A" 3830+61.26 TO 3832+00.73	140
L-2	EB/WB	"A" 3832+33.54 TO 3833+04.26	71
TOTAL			519

ROCK SLOPE PROTECTION

SHEET No.	BRIDGE SIDE	STATION LIMITS	REMOVE CONCRETE RSP	RSP (No. 1 METHOD B)	RSP (1/4 TON METHOD B)	RSP FABRIC (CLASS 8)	RSP (LIGHT METHOD B)	REMOVE RSP (LIGHT METHOD B)
			CY	CY	CY	SQYD	CY	CY
L-2	Lt	5+58.48 TO 6+99.75	360	130	230	196		
	Rt	8+79.36 TO 9+68.21	226	82	144	123		
	Lt	10+04.10 TO 11+44.39	356	130	226	195		
	Rt	13+24.45 TO 14+12.21	225	82	143	122		
FROM Temp WATER POLLUTION CONTROL SEE WPCQ-1						2	2	2
TOTAL			1,167	424	743	638	2	2

EARTHWORK QUANTITIES

SHEET No.	DIRECTION	STATION LIMITS	(N) EMBANKMENT	ROADWAY EXCAVATION	IMPORTED BORROW
			CY	CY	CY
DE-2	EAST TO WEST	"C" 3813+00.00 TO 3821+52.72	10,000	4,000	4,000
DE-3 & 4	WEST TO EAST	"D" 3835+92.00 TO 3848+92.53	16,000	8,000	8,000
SC-1 & SC-2	EB SHOULDER	"A" 3817+60.00 TO 3822+53.96		250	
SC-2 & SC-3	EB SHOULDER	"A" 3830+25.38 TO 3839+00.00		450	
TOTAL				12,700	12,000

(N) - NOT A SEPARATE PAY ITEM, FOR INFORMATION ONLY

SUMMARY OF QUANTITIES

Q-1

REVISED BY | DATE REVISED
DON NGUYEN | DUNG HUY PHAN
CALCULATED-DESIGNED BY | CHECKED BY
FUNCTIONAL SUPERVISOR: MUSTAPHA RAOUF
STATE OF CALIFORNIA - DEPARTMENT OF TRANSPORTATION
Caltrans DESIGN

LAST REVISION 06-24-15 | DATE PLOTTED => 25-NOV-2015 | TIME PLOTTED => 08:43

Dist	COUNTY	ROUTE	POST MILES TOTAL PROJECT	SHEET No.	TOTAL SHEETS
08	SBd	40	R105.2/106.5	49	110

Michael M. Babich
LICENSED LANDSCAPE ARCHITECT

6-25-15
PLANS APPROVAL DATE

LICENSED LANDSCAPE ARCHITECT M. M. BABICH 4053 Signature 2-29-16 Renewal Date 6-24-15 Date STATE OF CALIFORNIA

THE STATE OF CALIFORNIA OR ITS OFFICERS OR AGENTS SHALL NOT BE RESPONSIBLE FOR THE ACCURACY OR COMPLETENESS OF SCANNED COPIES OF THIS PLAN SHEET.

PERMANENT EROSION CONTROL

SEQUENCE	ITEM	MATERIALS		APPLICATION RATE	REMARKS
		DESCRIPTION	TYPE		
STEP 1	LOCAL TOP SOIL (N)	UNIFORM THICKNESS	---	4"	STOCK PILE TOP SOIL AND PLACE A SIGN WITH THE WORD "TOP SOIL" ON THE TOP OF THE PILE
STEP 2	DUFF	CHIPPED VEGETATION INCLUDING ROOTS AND SOIL REMOVED AND COLLECTED	---	SPREAD OVER ENTIRE AREA TO A UNIFORM DEPTH	STOCK PILE DUFF AND PLACE A SIGN WITH THE WORD "DUFF" ON THE TOP OF THE PILE
STEP 3	INCORPORATE	MIXING TOP SOIL AND DUFF INTO THE SOIL SURFACE		Use of Rototilling or tractor drawn disk may be use for mixing materials	
STEP 4	HYDROSEED	SEED	MIX	33.4 LB PURE LIVE SEEDS/AC	
		BFM FIBER	WOOD	3000 LB/ACRE	
		BFM TACKIFIER	ORGANIC		

(N) - NOT BIDDABLE ITEM

SEED MIX

SEED	BOTANICAL NAME (COMMON NAME)	PERCENT GERMINATION (MINIMUM)	POUNDS PURE LIVE SEED PER ACRE (SLOPE MEASUREMENT)
	Achnatherum hymenoides (Rice grass)	30	7.6
	Ambrosia dumosa (Burro-weed)	20	3.00
	Baileya farinosa (Desert Marigold)	30	0.5
	Encelia farinosa (Brittlebush)	30	2.0
	Eiogonum fasciculatum (California Buckwheat)	20	10
	Larrea tridentata (Creosote bush)	20	10
	Phacelia campanularia (California Bluebells)	40	0.3
		TOTAL	33.4

PERMANENT EROSION CONTROL QUANTITIES

DESCRIPTION	QUANTITY (MEASUREMENT)
LOCAL TOP SOIL (N)	114000 SQFT
DUFF	3 ACRE
INCORPORATE MATERIALS	114000 SQFT
HYDROSEED	114000 SQFT

(N) - NOT BIDDABLE ITEM

EROSION CONTROL LEGEND

ECL-1

REVISED BY | DATE REVISED
MARY ANN JOHNS | MIKE BABICH
CALCULATED-DESIGNED BY | CHECKED BY
SENIOR LANDSCAPE ARCHITECT | STEVEN MAGALLANES
STATE OF CALIFORNIA - DEPARTMENT OF TRANSPORTATION
Caltrans LANDSCAPE ARCHITECTURE

LAST REVISION 06-24-15 | DATE PLOTTED => 25-NOV-2015 | TIME PLOTTED => 08:44

Dist	COUNTY	ROUTE	POST MILES TOTAL PROJECT	SHEET No.	TOTAL SHEETS
08	SBd	40	R105.2/106.5	50	110

Michael M. Babich
LICENSED LANDSCAPE ARCHITECT

6-25-15
PLANS APPROVAL DATE

LICENSED LANDSCAPE ARCHITECT
M. M. BABICH 4053
Michael M. Babich
Signature
2-29-16
Renewal Date
6-24-15
Date
STATE OF CALIFORNIA

THE STATE OF CALIFORNIA OR ITS OFFICERS OR AGENTS SHALL NOT BE RESPONSIBLE FOR THE ACCURACY OR COMPLETENESS OF SCANNED COPIES OF THIS PLAN SHEET.

NOTE:

FOR ACCURATE RIGHT OF WAY DATA, CONTACT
RIGHT OF WAY ENGINEERING AT THE DISTRICT OFFICE.

LEGEND:

EROSION CONTROL

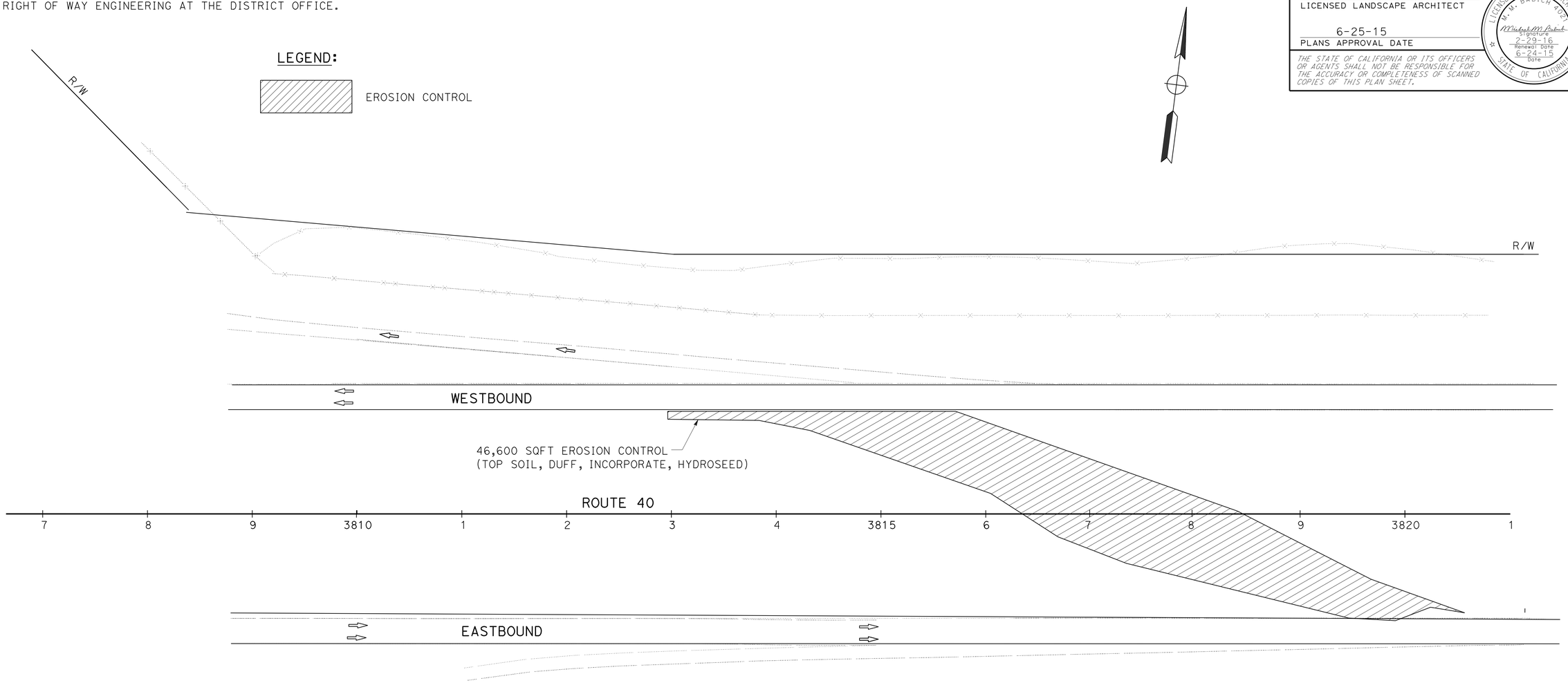

EROSION CONTROL PLAN

SCALE: 1" = 50'

EC-1

APPROVED FOR EROSION CONTROL WORK ONLY

STATE OF CALIFORNIA - DEPARTMENT OF TRANSPORTATION
Caltrans® LANDSCAPE ARCHITECTURE

SENIOR LANDSCAPE ARCHITECT: STEVEN MAGALLANES

CALCULATED-DESIGNED BY: MARY ANN JOHNS
CHECKED BY: MIKE BABICH

REVISED BY
DATE REVISED

LAST REVISION 06-24-15
DATE PLOTTED => 25-NOV-2015
TIME PLOTTED => 08:44

Dist	COUNTY	ROUTE	POST MILES TOTAL PROJECT	SHEET No.	TOTAL SHEETS
08	SBd	40	R105.2/106.5	51	110

Michael M. Babich
LICENSED LANDSCAPE ARCHITECT

6-25-15
PLANS APPROVAL DATE

LICENSED LANDSCAPE ARCHITECT
M. M. BABICH 4053
Michael M. Babich
Signature
2-29-16
Renewal Date
6-24-15
Date
STATE OF CALIFORNIA

THE STATE OF CALIFORNIA OR ITS OFFICERS OR AGENTS SHALL NOT BE RESPONSIBLE FOR THE ACCURACY OR COMPLETENESS OF SCANNED COPIES OF THIS PLAN SHEET.

NOTE:

FOR ACCURATE RIGHT OF WAY DATA, CONTACT
RIGHT OF WAY ENGINEERING AT THE DISTRICT OFFICE.

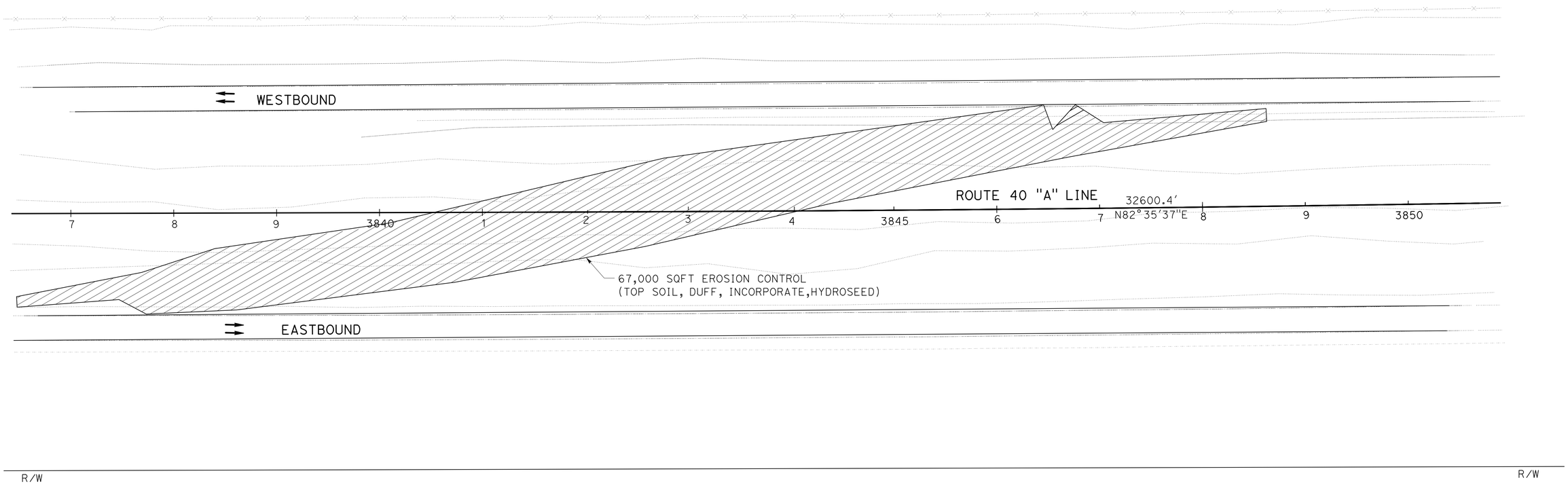

EROSION CONTROL PLAN

SCALE: 1" = 50'

EC-2

APPROVED FOR EROSION CONTROL WORK ONLY

REVISED BY | DATE REVISED

MARY ANN JOHNS | MIKE BABICH

CALCULATED-DESIGNED BY | CHECKED BY

SENIOR LANDSCAPE ARCHITECT | STEVEN MAGALLANES

STATE OF CALIFORNIA - DEPARTMENT OF TRANSPORTATION
Caltrans® LANDSCAPE ARCHITECTURE

LAST REVISION 06-24-15 | DATE PLOTTED => 25-NOV-2015 | TIME PLOTTED => 08:44

M

Maint	MAINTENANCE
Max	MAXIMUM
MB	METAL BEAM
MBB	METAL BEAM BARRIER
MBGR	METAL BEAM GUARD RAILING
Med	MEDIAN
MGS	MIDWEST GUARDRAIL SYSTEM
MH	MANHOLE
Min	MINIMUM
Misc	MISCELLANEOUS
Misc I & S	MISCELLANEOUS IRON AND STEEL
Mkr	MARKER
Mod	MODIFIED,
	MODIFY
Mon	MONUMENT
MP	METAL PLATE
MPGR	METAL PLATE GUARD RAILING
MR	MOVEMENT RATING
MSE	MECHANICALLY STABILIZED EMBANKMENT
Mt	MOUNTAIN, MOUNT
Mtl	MATERIAL
MVP	MAINTENANCE VEHICLE PULLOUT

N

N	NORTH
NB	NORTHBOUND
No.	NUMBER (MUST HAVE PERIOD)
Nos.	NUMBERS (MUST HAVE PERIOD)
NPS	NOMINAL PIPE SIZE
NS	NEAR SIDE
NSP	NEW STANDARD PLAN
NTS	NOT TO SCALE

O

Oblr	OBLITERATE
OC	OVERCROSSING
OD	OUTSIDE DIAMETER
OF	OUTSIDE FACE
OG	ORIGINAL GROUND
OGAC	OPEN GRADED ASPHALT CONCRETE
OGFC	OPEN GRADED FRICTION COURSE
OH	OVERHEAD
OHWM	ORDINARY HIGH WATER MARK
O-O	OUT TO OUT
Opp	OPPOSITE
OSD	OVERSIDE DRAIN

P

P	PAGE
PAP	PERFORATED ALUMINUM PIPE
PB	PULL BOX
PC	POINT OF CURVATURE,
	PRECAST
PCC	POINT OF COMPOUND CURVE,
	PORTLAND CEMENT CONCRETE
PCMS	PORTABLE CHANGEABLE MESSAGE SIGN
PCP	PERFORATED CONCRETE PIPE,
	PRESTRESSED CONCRETE PIPE
PCVC	POINT OF COMPOUND VERTICAL CURVE
PEC	PERMIT TO ENTER AND CONSTRUCT
Ped	PEDESTRIAN
Ped OC	PEDESTRIAN OVERCROSSING
Ped UC	PEDESTRIAN UNDERCROSSING
Perm Mtl	PERMEABLE MATERIAL

P continued

PG	PROFILE GRADE
PI	POINT OF INTERSECTION
PJP	PARTIAL JOINT PENETRATION
Pkwy	PARKWAY
ℙ,PL	PLATE
P/L	PROPERTY LINE
PM	POST MILE,
	TIME FROM NOON TO MIDNIGHT
PN	PAVING NOTCH
POC	POINT OF HORIZONTAL CURVE
POT	POINT OF TANGENT
POVC	POINT OF VERTICAL CURVE
PP	PIPE PILE,
	PLASTIC PIPE,
	POWER POLE
PPL	PREFORMED PERMEABLE LINER
PPP	PERFORATED PLASTIC PIPE
PRC	POINT OF REVERSE CURVE
PRF	PAVEMENT REINFORCING FABRIC
PRVC	POINT OF REVERSE VERTICAL CURVE
PS&E	PLANS, SPECIFICATIONS AND ESTIMATES
PS, P/S	PRESTRESSED
PSP	PERFORATED STEEL PIPE
PT	POINT OF TANGENCY
PVC	POLYVINYL CHLORIDE
Pvmt	PAVEMENT

Q

Qty	QUANTITY

R

R	RADIUS
R & D	REMOVE AND DISPOSE
R & S	REMOVE AND SALVAGE
R/C	RATE OF CHANGE
RCA	REINFORCED CONCRETE ARCH
RCB	REINFORCED CONCRETE BOX
RCP	REINFORCED CONCRETE PIPE
RCPA	REINFORCED CONCRETE PIPE ARCH
Rd	ROAD
Reinf	REINFORCED,
	REINFORCEMENT,
	REINFORCING
Rel	RELOCATE
Repl	REPLACEMENT
Ret	RETAINING
Rev	REVISED, REVISION
Rdwy	ROADWAY
RHMA	RUBBERIZED HOT MIX ASPHALT
Riv	RIVER
RM	ROAD-MIXED
RP	RADIUS POINT,
	REFERENCE POINT
RR	RAILROAD
RSP	ROCK SLOPE PROTECTION,
	REVISED STANDARD PLAN
Rt	RIGHT
Rte	ROUTE
RW	REDWOOD,
	RETAINING WALL
R/W	RIGHT OF WAY
Rwy	RAILWAY

S

S	SOUTH,
	SUPPLEMENT
SAE	STRUCTURE APPROACH EMBANKMENT
Salv	SALVAGE
SAPP	STRUCTURAL ALUMINUM PLATE PIPE
SB	SOUTHBOUND
SC	SAND CUSHION
SCSP	SLOTTED CORRUGATED STEEL PIPE
SD	STORM DRAIN
Sec	SECOND,
	SECTION
Sep	SEPARATION
SG	SUBGRADE
Shld	SHOULDER
Sht	SHEET
Sim	SIMILAR
℄	STATION LINE
SM	SELECTED MATERIAL
Spec	SPECIAL,
	SPECIFICATIONS
SPP	SLOTTED PLASTIC PIPE
SS	SLOPE STAKE
SSBM	STRAP AND SADDLE BRACKET METHOD
SSD	STRUCTURAL SECTION DRAIN
SSPA	STRUCTURAL STEEL PLATE ARCH
SSPP	STRUCTURAL STEEL PLATE PIPE
SSPPA	STRUCTURAL STEEL PLATE PIPE ARCH
SSRP	STEEL SPIRAL RIB PIPE
St	STREET
Sta	STATION
STBB	SINGLE THRIE BEAM BARRIER
Std	STANDARD
Str	STRUCTURE
Surf	SURFACING
SW	SIDEWALK,
	SOUND WALL
Swr	SEWER
Sym	SYMMETRICAL
S4S	SURFACE 4 SIDES

T

T	SEMI-TANGENT
Tan	TANGENT
TBB	THRIE BEAM BARRIER
Tbr	TIMBER
TC	TOP OF CURB
TCB	TRAFFIC CONTROL BOX
TCE	TEMPORARY CONSTRUCTION EASEMENT
Tel	TELEPHONE
Temp	TEMPORARY
TG	TOP OF GRADE
Tot	TOTAL
TP	TELEPHONE POLE
TPB	TREATED PERMEABLE BASE
TPM	TREATED PERMEABLE MATERIAL
Trans	TRANSITION

T continued

TS	TRANSVERSE,
	TRAFFIC SIGNAL,
	TUBULAR STEEL
Typ	TYPICAL

U

UC	UNDERCROSSING
UD	UNDERDRAIN
UG	UNDERGROUND
UON	UNLESS OTHERWISE NOTED
UP	UNDERPASS

V

V	VALVE,
	DESIGN SPEED
Var	VARIABLE,
	VARIES
VC	VERTICAL CURVE
VCP	VITRIFIED CLAY PIPE
Vert	VERTICAL
Via	VIADUCT
Vol	VOLUME

W

W	WEST,
	WIDTH
WB	WESTBOUND
WH	WEEP HOLE
WM	WIRE MESH
WS	WATER SURFACE
WSP	WELDED STEEL PIPE
Wt	WEIGHT
WV	WATER VALVE
WW	WINGWALL
WWLOL	WINGWALL LAYOUT LINE

X

X Sec	CROSS SECTION
Xing	CROSSING

Y

Yr	YEAR
Yrs	YEARS

Dist	COUNTY	ROUTE	POST MILES TOTAL PROJECT	SHEET No.	TOTAL SHEETS
08	SBd	40	R105.2/R106.5	52	110

Grace M. Tsushima
REGISTERED CIVIL ENGINEER

July 19, 2013
PLANS APPROVAL DATE

REGISTERED PROFESSIONAL ENGINEER
Grace M. Tsushima
No. C49814
Exp. 9-30-14
CIVIL
STATE OF CALIFORNIA

THE STATE OF CALIFORNIA OR ITS OFFICERS OR AGENTS SHALL NOT BE RESPONSIBLE FOR THE ACCURACY OR COMPLETENESS OF SCANNED COPIES OF THIS PLAN SHEET.

TO ACCOMPANY PLANS DATED 6-25-15

UNIT OF MEASUREMENT SYMBOLS:

Some of the symbols used in the project plan quantity tables and in the Bid Item List are:

TABLE A

SYMBOL USED	DEFINITIONS
ACRE	ACRE
CF	CUBIC FOOT
CY	CUBIC YARD
EA	EACH
GAL	GALLON
LB	POUND
LF	LINEAR FOOT
SQFT	SQUARE FOOT
SQYD	SQUARE YARD
STA	100 FEET
TAB	TABLET
TON	2,000 POUNDS

Some of the symbols used in the plans other than in the project plan quantity tables are:

TABLE B

SYMBOL USED	DEFINITIONS
ksi	KIPS PER SQUARE INCH
ksf	KIPS PER SQUARE FOOT
psi	POUNDS PER SQUARE INCH
psf	POUNDS PER SQUARE FOOT
lb/ft^3, pcf	POUNDS PER CUBIC FOOT
tsf	TONS PER SQUARE FOOT
mph, MPH *	MILES PER HOUR
ø	NOMINAL DIAMETER
oz	OUNCE
lb	POUND
kip	1,000 POUNDS
cal	CALORIE
ft	FOOT OR FEET
gal	GALLON

* For use on a sign panel only

STATE OF CALIFORNIA
DEPARTMENT OF TRANSPORTATION

ABBREVIATIONS (SHEET 2 OF 2)

NO SCALE

RSP A10B DATED JULY 19, 2013 SUPERSEDES STANDARD PLAN A10B DATED MAY 20, 2011 - PAGE 2 OF THE STANDARD PLANS BOOK DATED 2010.

REVISED STANDARD PLAN RSP A10B

2010 REVISED STANDARD PLAN RSP A10B

6-7-13

REFERENCE: CALTRANS SOIL & ROCK LOGGING, CLASSIFICATION, AND PRESENTATION MANUAL (2010)

Dist	COUNTY	ROUTE	POST MILES TOTAL PROJECT	SHEET No.	TOTAL SHEETS
08	SBd	40	R105.2/R106.5	53	110

CERTIFIED ENGINEERING GEOLOGIST

October 30, 2015
PLANS APPROVAL DATE

REGISTERED GEOLOGIST
CHRIS A. RISDEN
CERTIFIED ENGINEERING GEOLOGIST
No. 2541
Exp. 9-30-17
STATE OF CALIFORNIA

THE STATE OF CALIFORNIA OR ITS OFFICERS OR AGENTS SHALL NOT BE RESPONSIBLE FOR THE ACCURACY OR COMPLETENESS OF SCANNED COPIES OF THIS PLAN SHEET.

TO ACCOMPANY PLANS DATED 6-25-15

ABBREVIATION:

GWS = Ground Water Surface

CEMENTATION

DESCRIPTION	CRITERIA
WEAK	CRUMBLES OR BREAKS WITH HANDLING OR LITTLE FINGER PRESSURE.
MODERATE	CRUMBLES OR BREAKS WITH CONSIDERABLE FINGER PRESSURE.
STRONG	WILL NOT CRUMBLE OR BREAK WITH FINGER PRESSURE.

BOREHOLE IDENTIFICATION

SYMBOL	HOLE TYPE	DESCRIPTION
Size	A	AUGER BORING (HOLLOW OR SOLID STEM BUCKET)
Size	R	ROTARY DRILLED BORING (CONVENTIONAL)
	RW	ROTARY DRILLED WITH SELF-CASING WIRE-LINE
	RC	ROTARY CORE WITH CONTINUOUSLY-SAMPLED, SELF-CASING WIRE-LINE
	P	ROTARY PERCUSSION BORING (AIR)
Size	R	ROTARY DRILLED DIAMOND CORE
	RC	ROTARY DRILLED DIAMOND CORE, CONTINUOUSLY SAMPLED
Size	HD	HAND DRIVEN (1-INCH SOIL TUBE)
	HA	HAND AUGER
●	D	DYNAMIC CONE PENETRATION BORING
▲	CPT	CONE PENETRATION TEST (ASTM D 5778)
⬚	O	OTHER (NOTE ON LOTB)

Note: Size in inches.

CONSISTENCY OF COHESIVE SOILS

DESCRIPTION	SHEAR STRENGTH (tsf)	POCKET PENETROMETER MEASUREMENT, PP, (tsf)	TORVANE MEASUREMENT, TV, (tsf)	VANE SHEAR MEASUREMENT, VS, (tsf)
VERY SOFT	LESS THAN 0.12	LESS THAN 0.25	LESS THAN 0.12	LESS THAN 0.12
SOFT	0.12 - 0.25	0.25 - 0.5	0.12 - 0.25	0.12 - 0.25
MEDIUM STIFF	0.25 - 0.5	0.5 - 1	0.25 - 0.5	0.25 - 0.5
STIFF	0.5 - 1	1 - 2	0.5 - 1	0.5 - 1
VERY STIFF	1 - 2	2 - 4	1 - 2	1 - 2
HARD	GREATER THAN 2	GREATER THAN 4	GREATER THAN 2	GREATER THAN 2

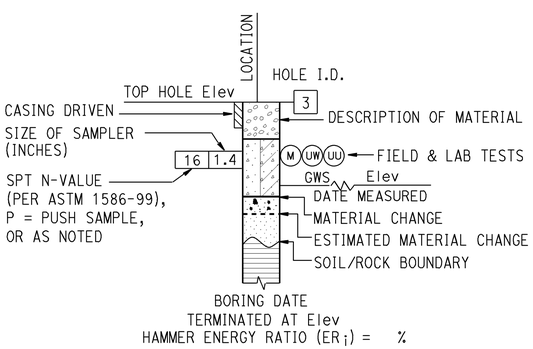

ROTARY BORING

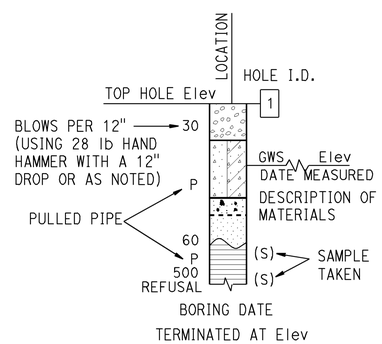

HAND BORING

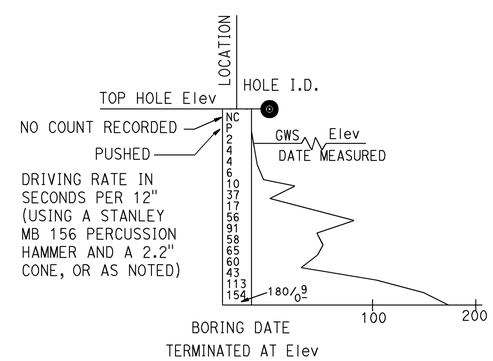

DYNAMIC CONE PENETRATION BORING

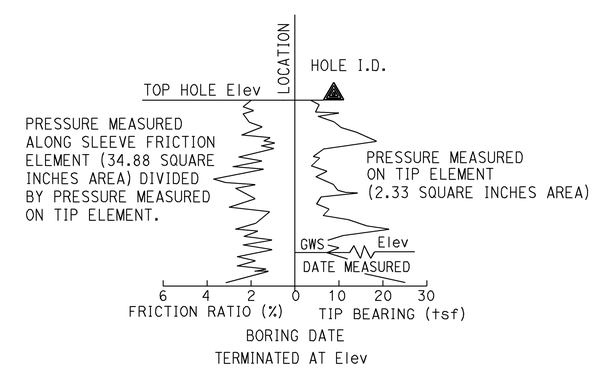

CONE PENETRATION TEST (CPT) BORING

STATE OF CALIFORNIA
DEPARTMENT OF TRANSPORTATION

LEGEND - SOIL (SHEET 1 OF 2)

NO SCALE

RSP A10F DATED OCTOBER 30, 2015 SUPERSEDES STANDARD PLAN A10F DATED MAY 20, 2011 - PAGE 6 OF THE STANDARD PLANS BOOK DATED 2010.

REVISED STANDARD PLAN RSP A10F

2010 REVISED STANDARD PLAN RSP A10F

8-18-15

REFERENCE: CALTRANS SOIL & ROCK LOGGING, CLASSIFICATION, AND PRESENTATION MANUAL (2010)

Dist	COUNTY	ROUTE	POST MILES TOTAL PROJECT	SHEET No.	TOTAL SHEETS
08	SBd	40	R105.2/R106.5	54	110

CERTIFIED ENGINEERING GEOLOGIST

October 30, 2015
PLANS APPROVAL DATE

REGISTERED GEOLOGIST
CHRIS A. RISDEN
CERTIFIED ENGINEERING GEOLOGIST
No. 2541
Exp. 9-30-17
STATE OF CALIFORNIA

THE STATE OF CALIFORNIA OR ITS OFFICERS OR AGENTS SHALL NOT BE RESPONSIBLE FOR THE ACCURACY OR COMPLETENESS OF SCANNED COPIES OF THIS PLAN SHEET.

TO ACCOMPANY PLANS DATED 6-25-15

GROUP SYMBOLS AND NAMES

GRAPHIC/SYMBOL	GROUP NAMES	GRAPHIC/SYMBOL	GROUP NAMES
GW	WELL-GRADED GRAVEL WELL-GRADED GRAVEL WITH SAND	CL	LEAN CLAY LEAN CLAY WITH SAND LEAN CLAY WITH GRAVEL SANDY LEAN CLAY SANDY LEAN CLAY WITH GRAVEL GRAVELLY LEAN CLAY GRAVELLY LEAN CLAY WITH SAND
GP	POORLY-GRADED GRAVEL POORLY-GRADED GRAVEL WITH SAND		
GW-GM	WELL-GRADED GRAVEL WITH SILT WELL-GRADED GRAVEL WITH SILT AND SAND	CL-ML	SILTY CLAY SILTY CLAY WITH SAND SILTY CLAY WITH GRAVEL SANDY SILTY CLAY SANDY SILTY CLAY WITH GRAVEL GRAVELLY SILTY CLAY GRAVELLY SILTY CLAY WITH SAND
GW-GC	WELL-GRADED GRAVEL WITH CLAY (OR SILTY CLAY) WELL-GRADED GRAVEL WITH CLAY AND SAND (OR SILTY CLAY AND SAND)		
GP-GM	POORLY-GRADED GRAVEL WITH SILT POORLY-GRADED GRAVEL WITH SILT AND SAND	ML	SILT SILT WITH SAND SILT WITH GRAVEL SANDY SILT SANDY SILT WITH GRAVEL GRAVELLY SILT GRAVELLY SILT WITH SAND
GP-GC	POORLY-GRADED GRAVEL WITH CLAY (OR SILTY CLAY) POORLY-GRADED GRAVEL WITH CLAY AND SAND (OR SILTY CLAY AND SAND)		
GM	SILTY GRAVEL SILTY GRAVEL WITH SAND	OL	ORGANIC LEAN CLAY ORGANIC LEAN CLAY WITH SAND ORGANIC LEAN CLAY WITH GRAVEL SANDY ORGANIC LEAN CLAY SANDY ORGANIC LEAN CLAY WITH GRAVEL GRAVELLY ORGANIC LEAN CLAY GRAVELLY ORGANIC LEAN CLAY WITH SAND
GC	CLAYEY GRAVEL CLAYEY GRAVEL WITH SAND		
GC-GM	SILTY, CLAYEY GRAVEL SILTY, CLAYEY GRAVEL WITH SAND	OL	ORGANIC SILT ORGANIC SILT WITH SAND ORGANIC SILT WITH GRAVEL SANDY ORGANIC SILT SANDY ORGANIC SILT WITH GRAVEL GRAVELLY ORGANIC SILT GRAVELLY ORGANIC SILT WITH SAND
SW	WELL-GRADED SAND WELL-GRADED SAND WITH GRAVEL		
SP	POORLY-GRADED SAND POORLY-GRADED SAND WITH GRAVEL	CH	FAT CLAY FAT CLAY WITH SAND FAT CLAY WITH GRAVEL SANDY FAT CLAY SANDY FAT CLAY WITH GRAVEL GRAVELLY FAT CLAY GRAVELLY FAT CLAY WITH SAND
SW-SM	WELL-GRADED SAND WITH SILT WELL-GRADED SAND WITH SILT AND GRAVEL		
SW-SC	WELL-GRADED SAND WITH CLAY (OR SILTY CLAY) WELL-GRADED SAND WITH CLAY AND GRAVEL (OR SILTY CLAY AND GRAVEL)	MH	ELASTIC SILT ELASTIC SILT WITH SAND ELASTIC SILT WITH GRAVEL SANDY ELASTIC SILT SANDY ELASTIC SILT WITH GRAVEL GRAVELLY ELASTIC SILT GRAVELLY ELASTIC SILT WITH SAND
SP-SM	POORLY-GRADED SAND WITH SILT POORLY-GRADED SAND WITH SILT AND GRAVEL		
SP-SC	POORLY-GRADED SAND WITH CLAY (OR SILTY CLAY) POORLY-GRADED SAND WITH CLAY AND GRAVEL (OR SILTY CLAY AND GRAVEL)	OH	ORGANIC FAT CLAY ORGANIC FAT CLAY WITH SAND ORGANIC FAT CLAY WITH GRAVEL SANDY ORGANIC FAT CLAY SANDY ORGANIC FAT CLAY WITH GRAVEL GRAVELLY ORGANIC FAT CLAY GRAVELLY ORGANIC FAT CLAY WITH SAND
SM	SILTY SAND SILTY SAND WITH GRAVEL		
SC	CLAYEY SAND CLAYEY SAND WITH GRAVEL	OH	ORGANIC ELASTIC SILT ORGANIC ELASTIC SILT WITH SAND ORGANIC ELASTIC SILT WITH GRAVEL SANDY ORGANIC ELASTIC SILT SANDY ORGANIC ELASTIC SILT WITH GRAVEL GRAVELLY ORGANIC ELASTIC SILT GRAVELLY ORGANIC ELASTIC SILT WITH SAND
SC-SM	SILTY, CLAYEY SAND SILTY, CLAYEY SAND WITH GRAVEL		
PT	PEAT	OL/OH	ORGANIC SOIL ORGANIC SOIL WITH SAND ORGANIC SOIL WITH GRAVEL SANDY ORGANIC SOIL SANDY ORGANIC SOIL WITH GRAVEL GRAVELLY ORGANIC SOIL GRAVELLY ORGANIC SOIL WITH SAND
	COBBLES COBBLES AND BOULDERS BOULDERS		

FIELD AND LABORATORY TESTING

- (C) CONSOLIDATION (ASTM D2435)
- (CL) COLLAPSE POTENTIAL (ASTM D4546)
- (CP) COMPACTION CURVE (CTM 216)
- (CR) CORROSIVITY TESTING (CTM 643, CTM 422, CTM 417)
- (CU) CONSOLIDATED UNDRAINED TRIAXIAL (ASTM D4767)
- (DS) DIRECT SHEAR (ASTM D3080)
- (EI) EXPANSION INDEX (ASTM D4829)
- (M) MOISTURE CONTENT (ASTM D2216)
- (OC) ORGANIC CONTENT-% (ASTM D2974)
- (P) PERMEABILITY (CTM 220)
- (PA) PARTICLE SIZE ANALYSIS (ASTM D422)
- (PI) PLASTICITY INDEX (AASHTO T 90) LIQUID LIMIT (AASHTO T 89)
- (PL) POINT LOAD INDEX (ASTM D5731)
- (PM) PRESSURE METER
- (R) R-VALUE (CTM 301)
- (SE) SAND EQUIVALENT (CTM 217)
- (SG) SPECIFIC GRAVITY (AASHTO T 100)
- (SL) SHRINKAGE LIMIT (ASTM D4943)
- (SW) SWELL POTENTIAL (ASTM D4546)
- (UC) UNCONFINED COMPRESSION-SOIL (ASTM D2166) UNCONFINED COMPRESSION-ROCK (ASTM D7012 - METHOD C)
- (UU) UNCONSOLIDATED UNDRAINED TRIAXIAL (ASTM D2850)
- (UW) UNIT WEIGHT (ASTM D7263 - METHOD B)

APPARENT DENSITY OF COHESIONLESS SOILS

DESCRIPTION	SPT N_{60} (BLOWS / 12 INCHES)
VERY LOOSE	0 - 5
LOOSE	5 - 10
MEDIUM DENSE	10 - 30
DENSE	30 - 50
VERY DENSE	GREATER THAN 50

MOISTURE

DESCRIPTION	CRITERIA
DRY	NO DISCERNABLE MOISTURE
MOIST	MOISTURE PRESENT, BUT NO FREE WATER
WET	VISIBLE FREE WATER

PERCENT OR PROPORTION OF SOILS

DESCRIPTION	CRITERIA
TRACE	PARTICLES ARE PRESENT BUT ESTIMATED TO BE LESS THAN 5%
FEW	5% - 10%
LITTLE	15% - 25%
SOME	30% - 45%
MOSTLY	50% - 100%

PARTICLE SIZE

DESCRIPTION		SIZE
BOULDER		GREATER THAN 12"
COBBLE		3" - 12"
GRAVEL	COARSE	3/4" - 3"
	FINE	1/5" - 3/4"
SAND	COARSE	1/16" - 1/5"
	MEDIUM	1/64" - 1/16"
	FINE	1/300" - 1/64"
SILT AND CLAY		LESS THAN 1/300"

STATE OF CALIFORNIA
DEPARTMENT OF TRANSPORTATION

LEGEND - SOIL (SHEET 2 OF 2)

NO SCALE

RSP A10G DATED OCTOBER 30, 2015 SUPERSEDES STANDARD PLAN A10G DATED MAY 20, 2011 - PAGE 7 OF THE STANDARD PLANS BOOK DATED 2010.

REVISED STANDARD PLAN RSP A10G

2010 REVISED STANDARD PLAN RSP A10G

9-22-15

Dist	COUNTY	ROUTE	POST MILES TOTAL PROJECT	SHEET No.	TOTAL SHEETS
08	SBd	40	R105.2/R106.5	55	110

REGISTERED CIVIL ENGINEER

July 19, 2013
PLANS APPROVAL DATE

REGISTERED PROFESSIONAL ENGINEER Roberta L. McLaughlin No. C40375 Exp. 3-31-15 CIVIL STATE OF CALIFORNIA

THE STATE OF CALIFORNIA OR ITS OFFICERS OR AGENTS SHALL NOT BE RESPONSIBLE FOR THE ACCURACY OR COMPLETENESS OF SCANNED COPIES OF THIS PLAN SHEET.

TO ACCOMPANY PLANS DATED 6-25-15

EXIT RAMP NEUTRAL AREA (GORE) TREATMENT

DETAIL 36

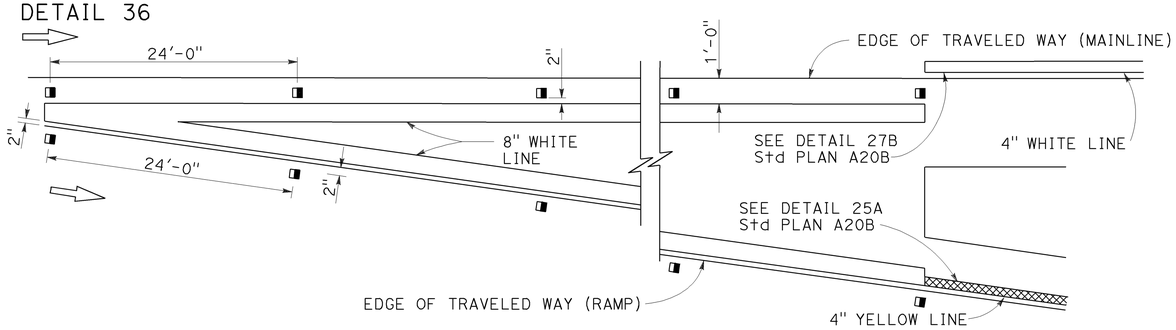

ENTRANCE RAMP NEUTRAL AREA (MERGE) TREATMENT

DETAIL 36A

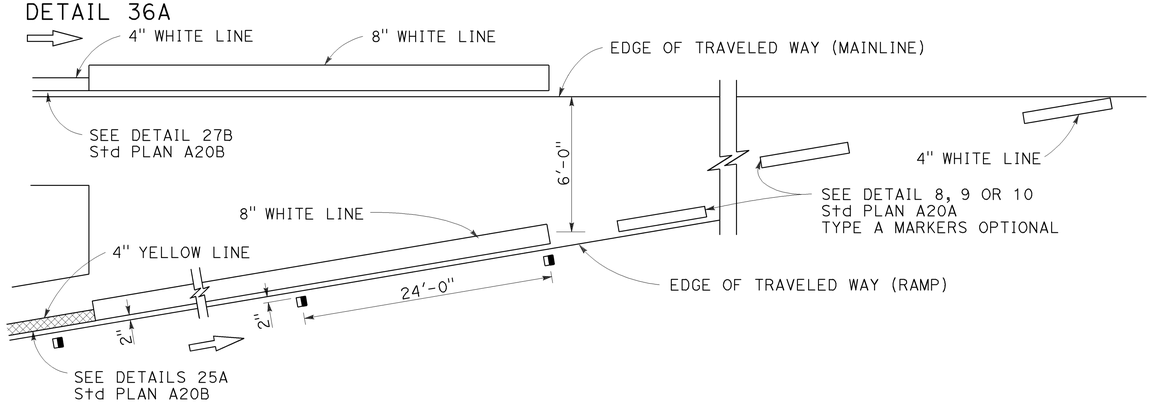

ENTRANCE RAMP NEUTRAL AREA (ACCELERATION LANE) TREATMENT

DETAIL 36B

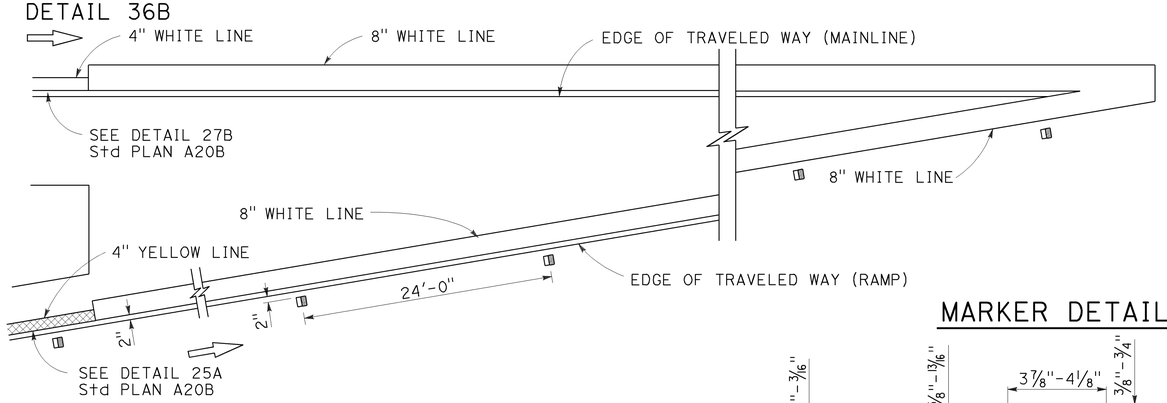

LANE DROP AT EXIT RAMPS

DETAIL 37

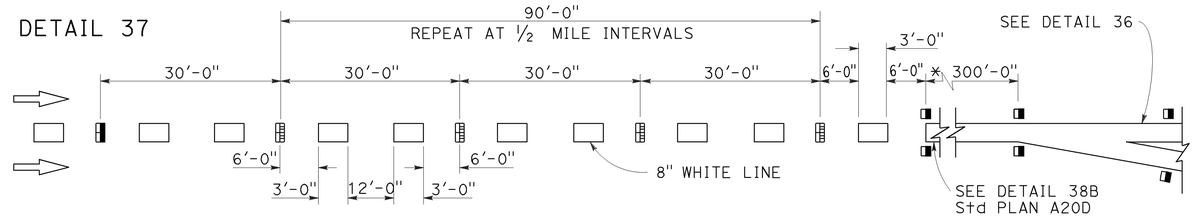

DETAIL 37A

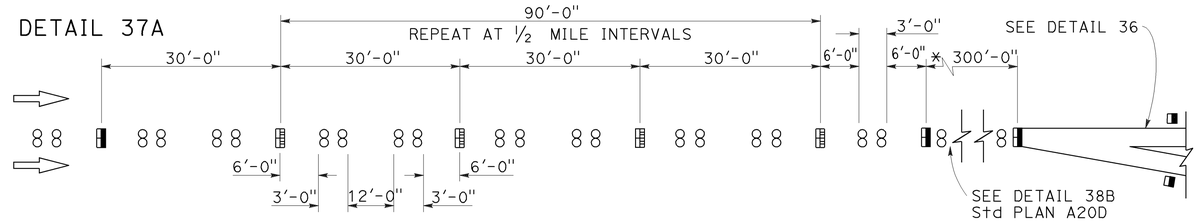

* The solid channelizing line shown may be omitted on short auxiliary lanes where weaving length is critical.

LANE DROP AT INTERSECTIONS

DETAIL 37B

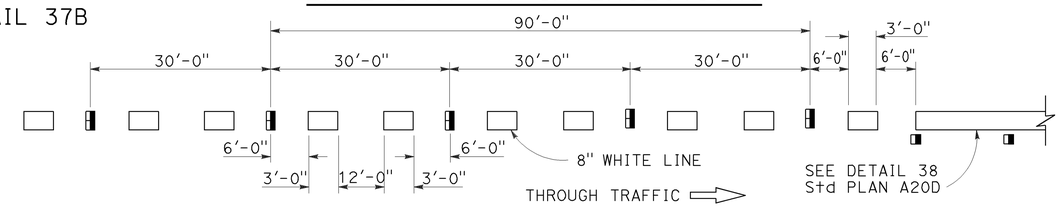

DETAIL 37C

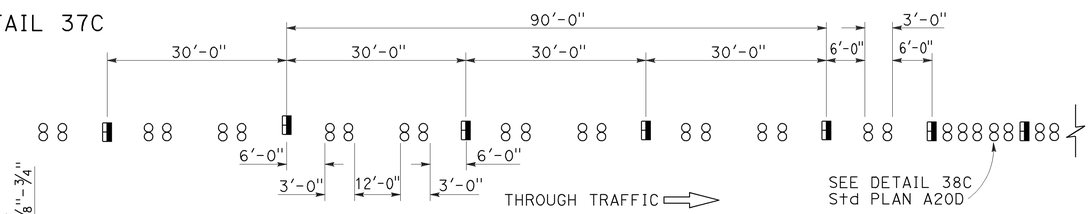

MARKER DETAILS

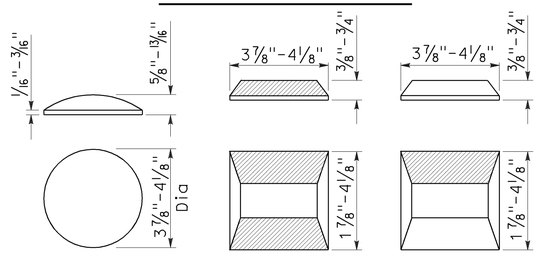

LEGEND:

MARKERS

- ○ TYPE A WHITE NON-REFLECTIVE
- ⊟ TYPE C RED-CLEAR RETROREFLECTIVE
- ◨ TYPE G ONE-WAY CLEAR RETROREFLECTIVE

STATE OF CALIFORNIA
DEPARTMENT OF TRANSPORTATION

PAVEMENT MARKERS AND TRAFFIC LINE TYPICAL DETAILS

NO SCALE

RSP A20C DATED JULY 19, 2013 SUPERSEDES STANDARD PLAN A20C DATED MAY 20, 2011 - PAGE 11 OF THE STANDARD PLANS BOOK DATED 2010.

REVISED STANDARD PLAN RSP A20C

2010 REVISED STANDARD PLAN RSP A20C

4-29-13

Dist	COUNTY	ROUTE	POST MILES TOTAL PROJECT	SHEET No.	TOTAL SHEETS
08	SBd	40	R105.2/R106.5	56	110

REGISTERED CIVIL ENGINEER

April 20, 2012
PLANS APPROVAL DATE

REGISTERED PROFESSIONAL ENGINEER
Roberta L. McLaughlin
No. C40375
Exp. 3-31-13
CIVIL
STATE OF CALIFORNIA

THE STATE OF CALIFORNIA OR ITS OFFICERS OR AGENTS SHALL NOT BE RESPONSIBLE FOR THE ACCURACY OR COMPLETENESS OF SCANNED COPIES OF THIS PLAN SHEET.

TO ACCOMPANY PLANS DATED 6-25-15

2010 REVISED STANDARD PLAN RSP A24A

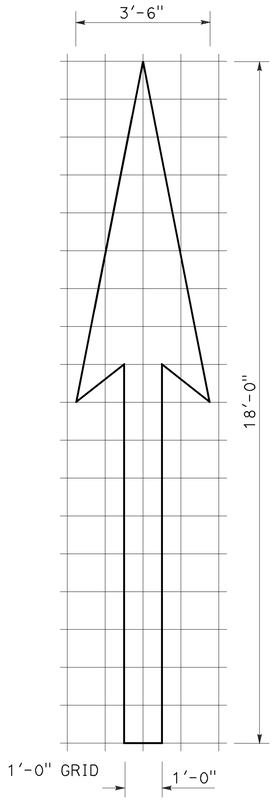

A=25 ft^2

TYPE I 18'-0" ARROW

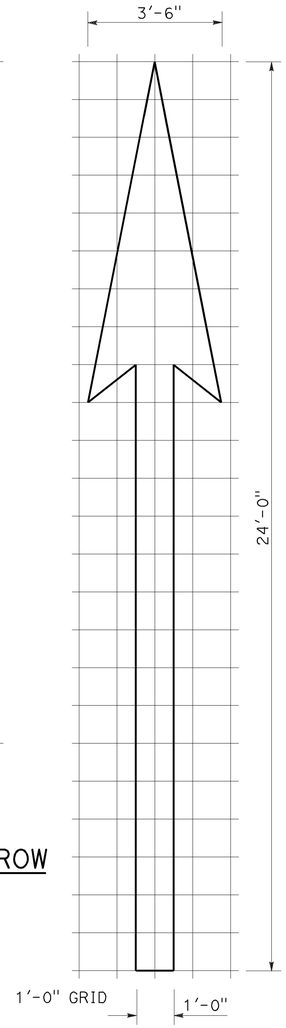

A=31 ft^2

TYPE I 24'-0" ARROW

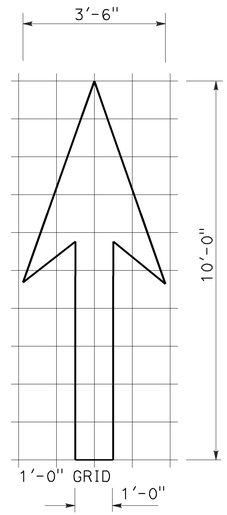

A=14 ft^2

TYPE I 10'-0" ARROW

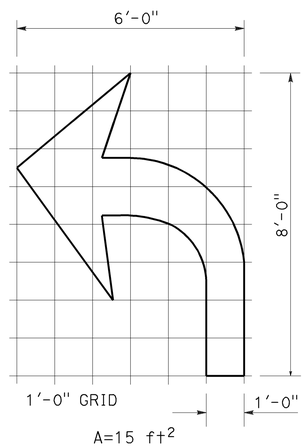

A=15 ft^2

TYPE IV (L) ARROW

(For Type IV (R) arrow, use mirror image)

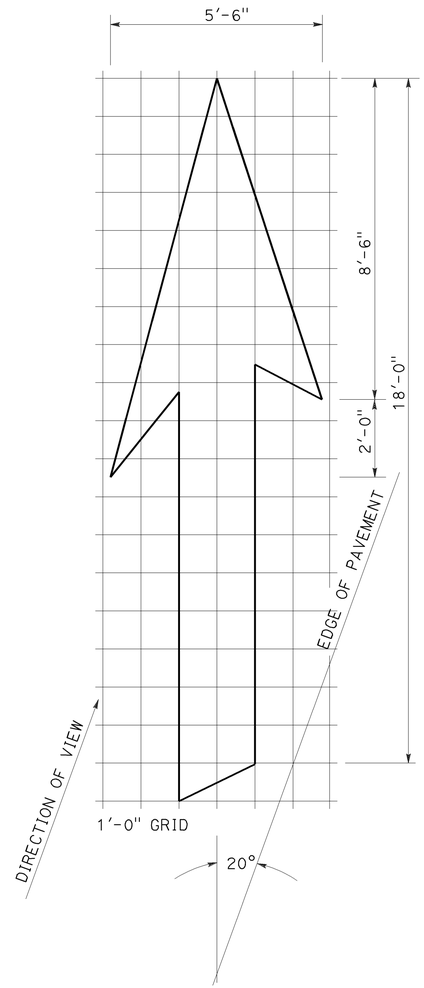

A=42 ft^2

TYPE VI ARROW

Right lane drop arrow
(For left lane, use mirror image)

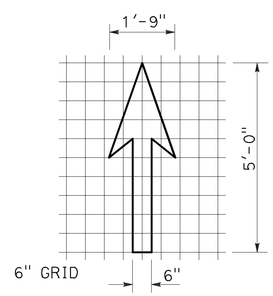

A=3.5 ft^2

BIKE LANE ARROW

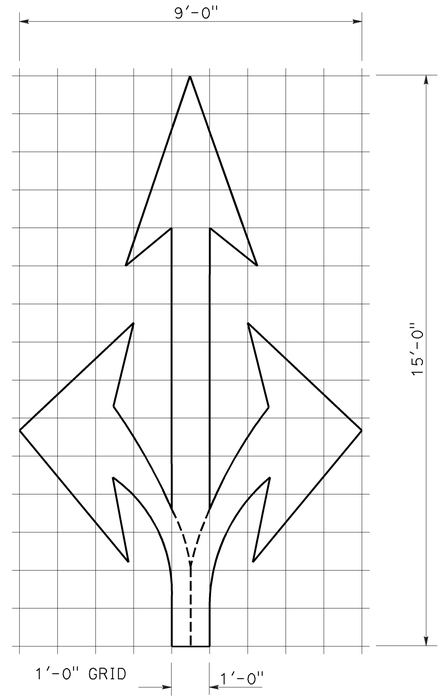

A=36 ft^2

TYPE VIII ARROW

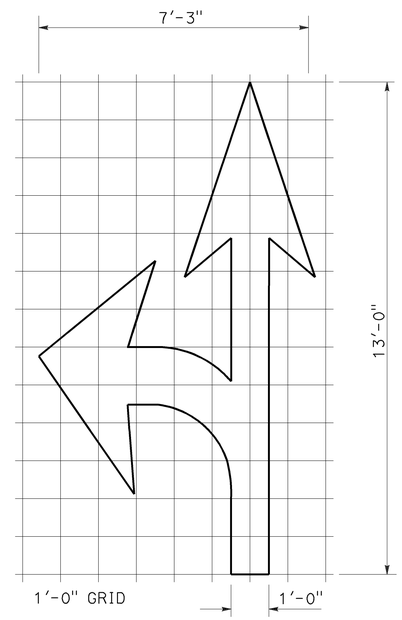

A=27 ft^2

TYPE VII (L) ARROW

(For Type VII (R) arrow, use mirror image)

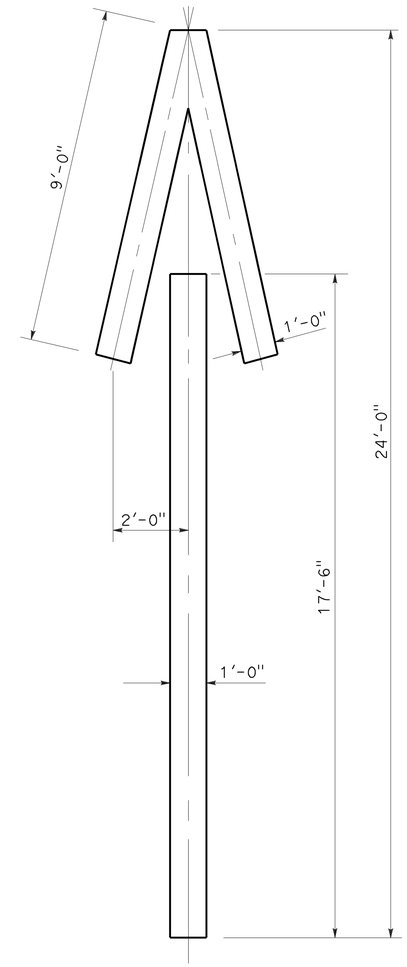

A=33 ft^2

TYPE V ARROW

NOTE:
Minor variations in dimensions may be accepted by the Engineer.

STATE OF CALIFORNIA
DEPARTMENT OF TRANSPORTATION

PAVEMENT MARKINGS ARROWS

NO SCALE

RSP A24A DATED APRIL 20, 2012 SUPERSEDES STANDARD PLAN A24A DATED MAY 20, 2011 - PAGE 13 OF THE STANDARD PLANS BOOK DATED 2010.

REVISED STANDARD PLAN RSP A24A

3-14-12

Dist	COUNTY	ROUTE	POST MILES TOTAL PROJECT	SHEET No.	TOTAL SHEETS
08	SBd	40	R105.2/R106.5	57	110

Randell D. Hiatt
REGISTERED CIVIL ENGINEER

July 19, 2013
PLANS APPROVAL DATE

REGISTERED PROFESSIONAL ENGINEER
Randell D. Hiatt
No. C50200
Exp. 6-30-15
CIVIL
STATE OF CALIFORNIA

THE STATE OF CALIFORNIA OR ITS OFFICERS OR AGENTS SHALL NOT BE RESPONSIBLE FOR THE ACCURACY OR COMPLETENESS OF SCANNED COPIES OF THIS PLAN SHEET.

TO ACCOMPANY PLANS DATED 6-25-15

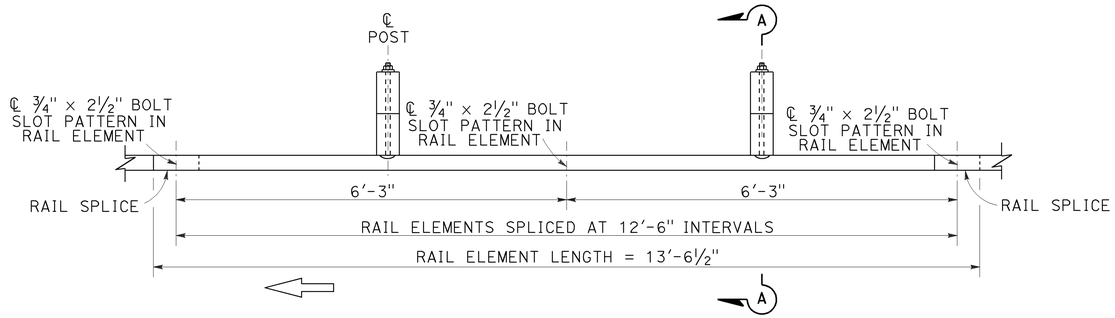

PLAN

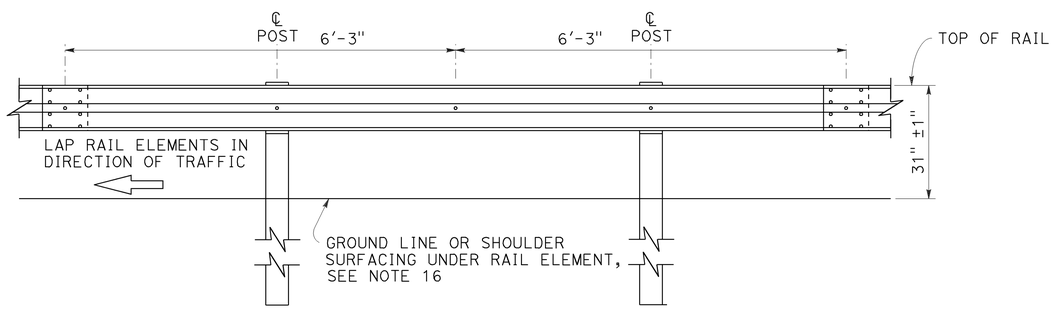

ELEVATION

MIDWEST GUARDRAIL SYSTEM WITH WOOD POST AND BLOCKS

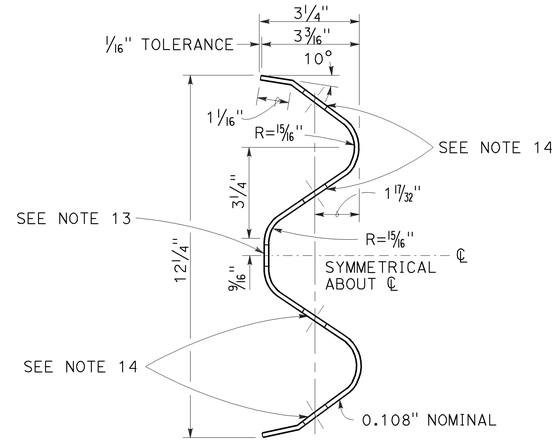

SECTION THRU RAIL ELEMENT

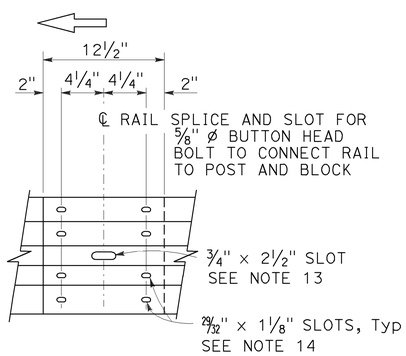

ELEVATION

RAIL ELEMENT SPLICE DETAIL

a) Connect the over lapped end of the rail elements with ⅝" ø × 1⅜" button head oval shoulder splice bolts inserted into the 29⁄32" × 1⅛" slots and bolted together with ⅝" ø recessed hex nuts. Recess of hex nut points toward rail element. A total of 8 bolts and nuts are to be used at each rail splice connection.

b) The ends of the rail elements are to be overlapped in the direction of traffic (see details).

c) Where end cap is to be attached to the end of a rail element, a total of 4 of the above described splice bolts and nuts are to be used.

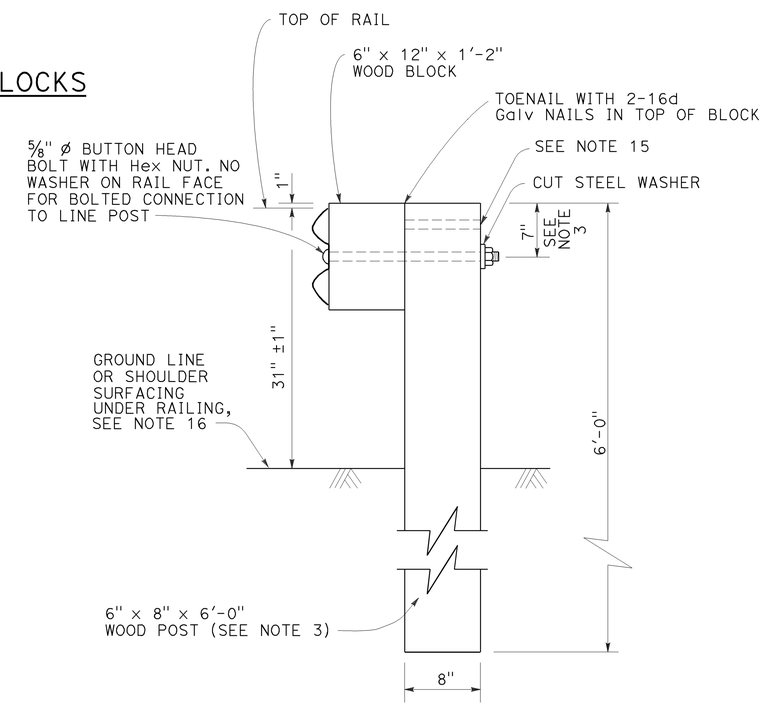

SECTION A-A

TYPICAL WOOD LINE POST INSTALLATION

See Note 4

NOTES:

1. For details of steel post installations, see Revised Standard Plan RSP A77L2.
2. For details of standard hardware used to construct MGS, see Revised Standard Plan RSP A77M1.
3. For details of wood posts and wood blocks used to construct MGS, see Revised Standard Plan RSP A77N1.
4. For additional installation details, see Revised Standard Plan RSP A77N3.
5. MGS post spacing to be 6'-3" center to center, except as otherwise noted.
6. For MGS typical layouts, see the A77P, A77Q and A77R Series of Standard Plans.
7. If railing is connected to terminal system end treatment, use 31" height terminal system end treatment.
8. For MGS end anchor details, see Revised Standard Plans RSP A77S1 and RSP A77T2.
9. For details of MGS transition to bridge railing, see Revised Standard Plan RSP A77U4.
10. For additional details of MSG connection to bridge railing, see Revised Standard Plans RSP A77U1, RSP A77U2 and RSP A77V1.
11. For MGS connection details to abutments and walls, see Revised Standard Plan RSP A77U3.
12. For typical MGS delineation and dike positioning details, see Revised Standard Plan RSP A77N4.
13. Slotted hole for bolted connection of rail element to block and post. See "Section Thru Rail Element".
14. Slotted holes for splice bolts to overlap ends of rail element. See "Section Thru Rail Element".
15. Additional hole in uppermost portion of line post is for potential future adjustments of railing height. See Revised Standard Plan RSP A77N1.
16. Install posts in soil.

STATE OF CALIFORNIA
DEPARTMENT OF TRANSPORTATION

MIDWEST GUARDRAIL SYSTEM STANDARD RAILING SECTION (WOOD POST WITH WOOD BLOCK)

NO SCALE

RSP A77L1 DATED JULY 19, 2013 SUPPLEMENTS STANDARD PLANS BOOK DATED 2010.

REVISED STANDARD PLAN RSP A77L1

2010 REVISED STANDARD PLAN RSP A77L1

Dist	COUNTY	ROUTE	POST MILES TOTAL PROJECT	SHEET No.	TOTAL SHEETS
08	SBd	40	R105.2/R106.5	58	110

Randell D. Hiatt
REGISTERED CIVIL ENGINEER

July 19, 2013
PLANS APPROVAL DATE

REGISTERED PROFESSIONAL ENGINEER
Randell D. Hiatt
No. C50200
Exp. 6-30-15
CIVIL
STATE OF CALIFORNIA

THE STATE OF CALIFORNIA OR ITS OFFICERS OR AGENTS SHALL NOT BE RESPONSIBLE FOR THE ACCURACY OR COMPLETENESS OF SCANNED COPIES OF THIS PLAN SHEET.

TO ACCOMPANY PLANS DATED 6-25-15

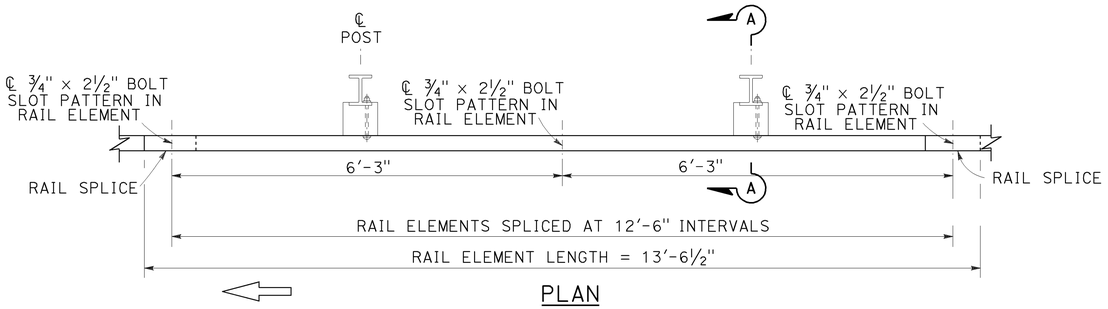

PLAN

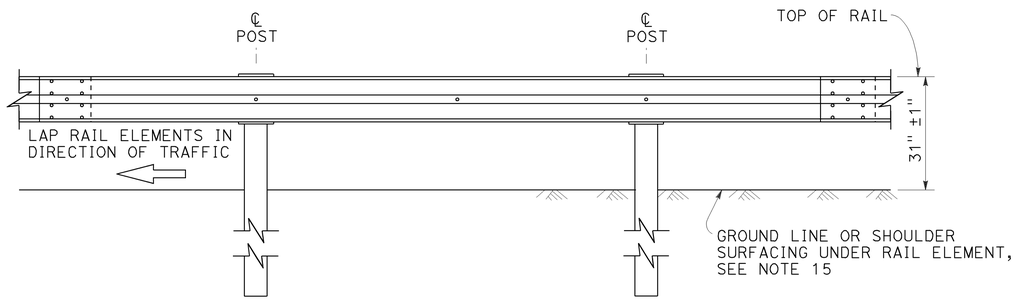

ELEVATION

MIDWEST GUARDRAIL SYSTEM WITH STEEL POSTS AND NOTCHED WOOD OR NOTCHED RECYCLED PLASTIC BLOCKS

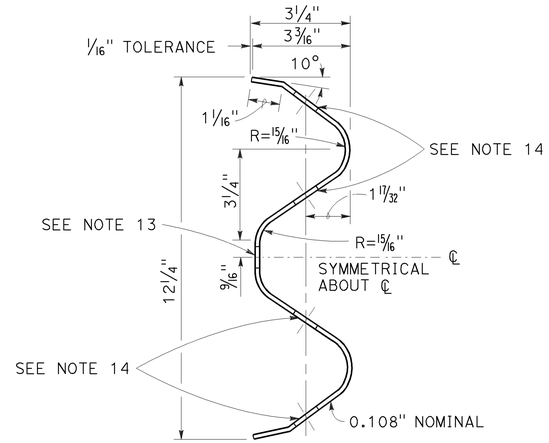

SECTION THRU RAIL ELEMENT

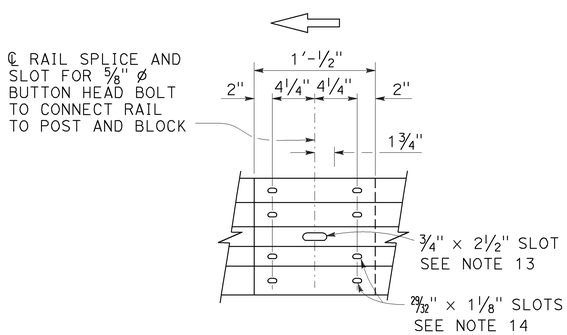

ELEVATION

RAIL ELEMENT SPLICE DETAIL

a) Connect the over lapped end of the rail elements with ⅝" ø × 1⅜" button head oval shoulder splice bolts inserted into the 29⁄32" × 1⅛" slots and bolted together with ⅝" ø recessed hex nuts. Recess of hex nut points toward rail element. A total of 8 bolts and nuts are to be used at each rail splice connection.

b) The ends of the rail elements are to be overlapped in the direction of traffic (see details).

c) Where end cap is to be attached to the end of a rail element, a total of 4 of the above described splice bolts and nuts are to be used.

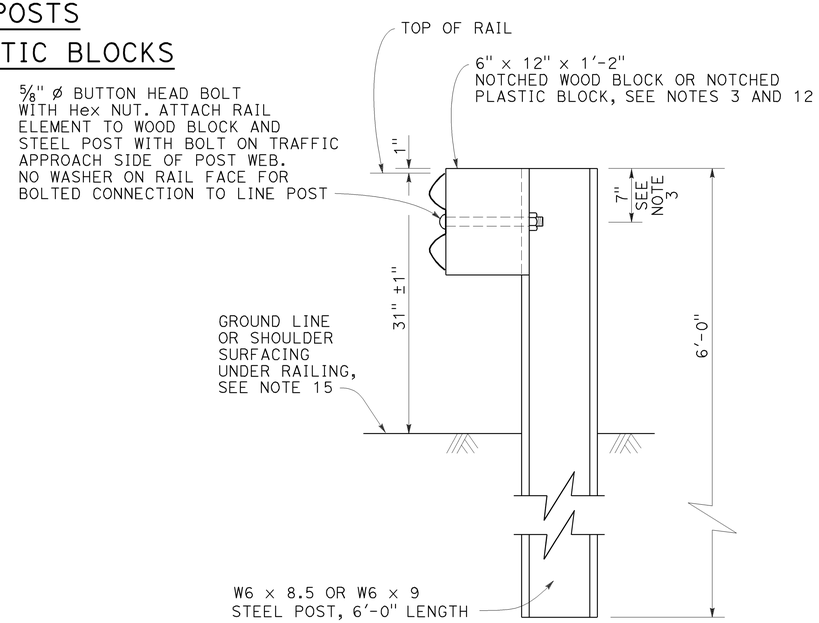

SECTION A-A

TYPICAL STEEL LINE POST INSTALLATION

See Note 4

NOTES:

1. For details of wood post installations, see Revised Standard Plan RSP A77L1.
2. For details of standard hardware used to construct MGS, see Revised Standard Plan RSP A77M1.
3. For details of steel posts and notched wood blocks used to construct MGS, see Revised Standard Plan RSP A77N2.
4. For additional installation details, see Revised Standard Plan RSP A77N3.
5. MGS post spacing to be 6'-3" center to center, except as otherwise noted.
6. For MGS typical layouts, see the A77P, A77Q and A77R Series of Standard Plans.
7. If railing is connected to terminal system end treatment, use 31" height terminal system end treatment.
8. For MGS end anchor details, see Revised Standard Plans RSP A77S1 and RSP A77T2.
9. For details of MGS transition to bridge railing, see Revised Standard Plan RSP A77U4.
10. For additional details of MGS connection to bridge railings, see Revised Standard Plans RSP A77U1, RSP A77U2 and RSP A77V1.
11. For dike positioning and MGS delineation details, see Revised Standard Plan RSP A77N4.
12. Notched face of block faces steel post.
13. Slotted hole for bolted connection of rail element to block and post. See "Section Thru Rail Element".
14. Slotted holes for splice bolts to overlap ends of rail element. See "Section Thru Rail Element".
15. Install posts in soil.

STATE OF CALIFORNIA
DEPARTMENT OF TRANSPORTATION

MIDWEST GUARDRAIL SYSTEM STANDARD RAILING SECTION (STEEL POST WITH NOTCHED WOOD OR NOTCHED RECYCLED PLASTIC BLOCK)

NO SCALE

RSP A77L2 DATED JULY 19, 2013 SUPPLEMENTS THE STANDARD PLANS BOOK DATED 2010.

REVISED STANDARD PLAN RSP A77L2

2010 REVISED STANDARD PLAN RSP A77L2

7-3-13

Dist	COUNTY	ROUTE	POST MILES TOTAL PROJECT	SHEET No.	TOTAL SHEETS
08	SBd	40	R105.2/R106.5	59	110

Randell D. Hiatt
REGISTERED CIVIL ENGINEER

July 19, 2013
PLANS APPROVAL DATE

REGISTERED PROFESSIONAL ENGINEER
Randell D. Hiatt
No. C50200
Exp. 6-30-15
CIVIL
STATE OF CALIFORNIA

THE STATE OF CALIFORNIA OR ITS OFFICERS OR AGENTS SHALL NOT BE RESPONSIBLE FOR THE ACCURACY OR COMPLETENESS OF SCANNED COPIES OF THIS PLAN SHEET.

TO ACCOMPANY PLANS DATED 6-25-15

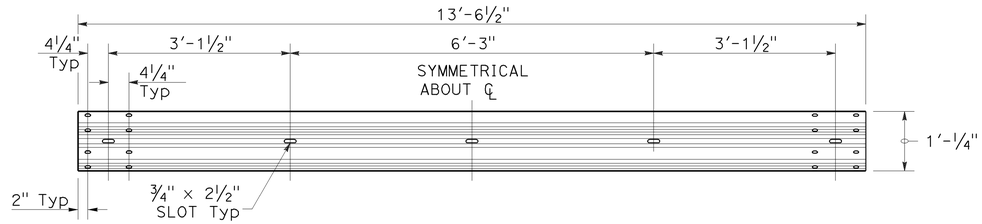

TYPICAL RAIL ELEMENT

NOTE:

1. Slotted holes for splice bolts to overlap ends of rail element.

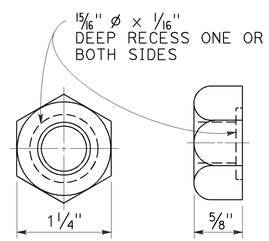

⅝" ø RECESS NUT

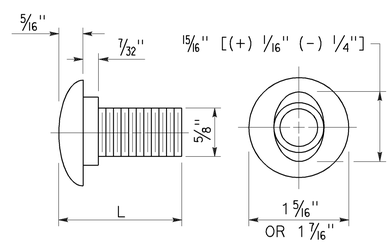

⅝" ø BUTTON HEAD BOLT

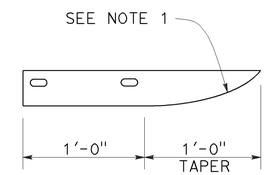

PLAN

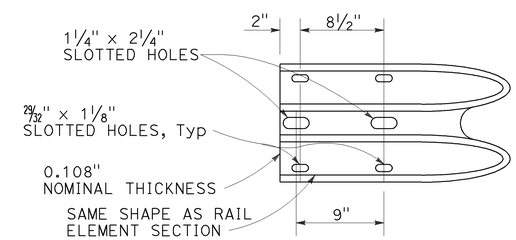

ELEVATION

END CAP
(TYPE A)

BUTTON HEAD BOLT

L	THREAD LENGTH
1⅜"	FULL THREAD LENGTH
2"	FULL THREAD LENGTH
10"	4" Min THREAD LENGTH
18"	4" Min THREAD LENGTH
20"	4" Min THREAD LENGTH
22"	4" Min THREAD LENGTH
26"	4" Min THREAD LENGTH
36"	4" Min THREAD LENGTH
** 2¾"	2" Min THREAD LENGTH
** 19"	4" Min THREAD LENGTH

** For nested rail applications.

STATE OF CALIFORNIA
DEPARTMENT OF TRANSPORTATION

MIDWEST GUARDRAIL SYSTEM STANDARD HARDWARE

NO SCALE

RSP A77M1 DATED JULY 19, 2013 SUPPLEMENTS THE STANDARD PLANS BOOK DATED 2010.

REVISED STANDARD PLAN RSP A77M1

2010 REVISED STANDARD PLAN RSP A77M1

Dist	COUNTY	ROUTE	POST MILES TOTAL PROJECT	SHEET No.	TOTAL SHEETS
08	SBd	40	R105.2/R106.5	60	110

Randell D. Hiatt
REGISTERED CIVIL ENGINEER

July 19, 2013
PLANS APPROVAL DATE

REGISTERED PROFESSIONAL ENGINEER
Randell D. Hiatt
No. C50200
Exp. 6-30-15
CIVIL
STATE OF CALIFORNIA

THE STATE OF CALIFORNIA OR ITS OFFICERS OR AGENTS SHALL NOT BE RESPONSIBLE FOR THE ACCURACY OR COMPLETENESS OF SCANNED COPIES OF THIS PLAN SHEET.

TO ACCOMPANY PLANS DATED 6-25-15

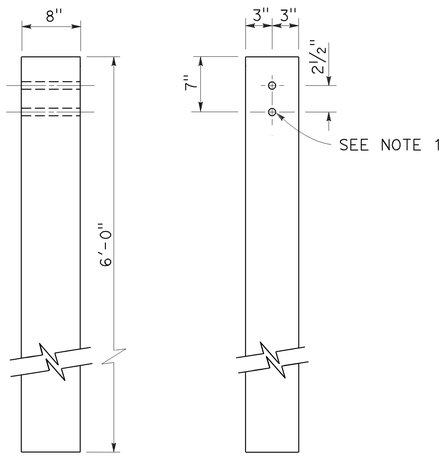

SIDE FRONT

6" x 8" WOOD POST
See Note 3

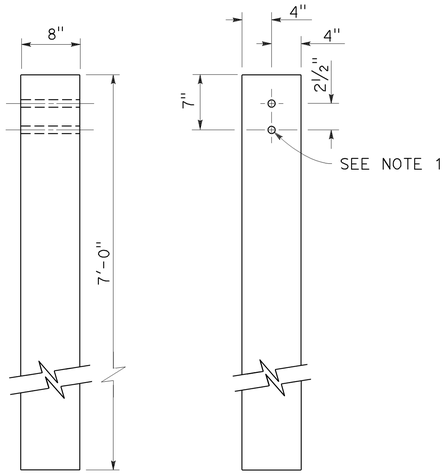

SIDE FRONT

8" x 8" WOOD POST
See Note 4

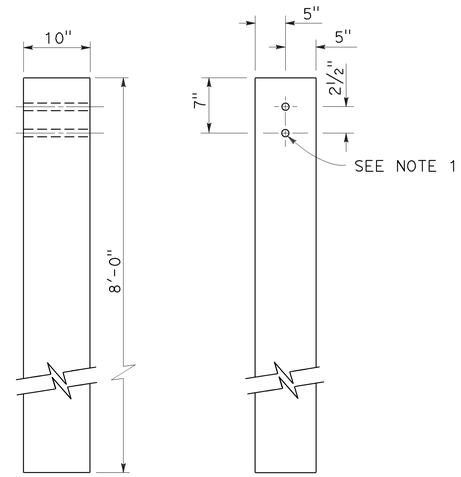

SIDE FRONT

10" x 10" WOOD POST
See Note 5

NOTES:

1. All holes in wood posts and blocks shall be 3/4" Dia ± 1/16".
2. Dimensions shown for wood post are nominal.
3. This post and block combination used for standard line post sections of MGS.
4. This post and 8" x 12" block combination used for line post sections of MGS on narrow roadways.
5. This post and 8" x 12" block combination is typically used where strengthened line post sections of MGS are warranted to shield fixed objects.
6. See Revised Standard Plan RSP A77L3 for use of 6" x 8" and 8" x 8" wood blocks.

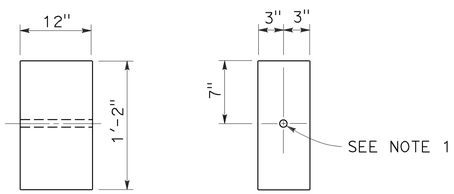

SIDE FRONT

6" x 12" WOOD BLOCK
See Note 3

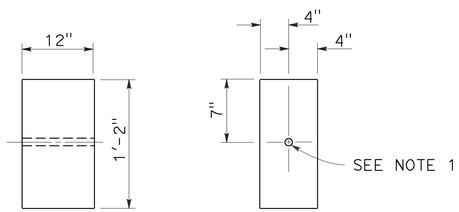

SIDE FRONT

8" x 12" WOOD BLOCK

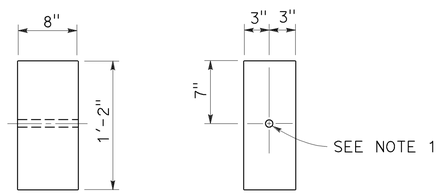

SIDE FRONT

6" x 8" WOOD BLOCK
Only for use with metal beam guard rail see Note 6

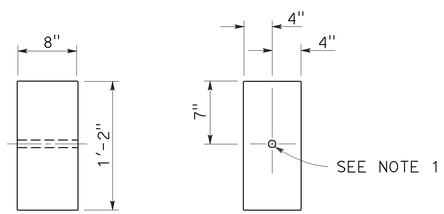

SIDE FRONT

8" x 8" WOOD BLOCK
Only for use with metal beam guard rail see Note 6

STATE OF CALIFORNIA
DEPARTMENT OF TRANSPORTATION

MIDWEST GUARDRAIL SYSTEM WOOD POST AND WOOD BLOCK DETAILS

NO SCALE

RSP A77N1 DATED JULY 19, 2013 SUPPLEMENTS THE STANDARD PLANS BOOK DATED 2010.

REVISED STANDARD PLAN RSP A77N1

2010 REVISED STANDARD PLAN RSP A77N1

7-3-13

Dist	COUNTY	ROUTE	POST MILES TOTAL PROJECT	SHEET No.	TOTAL SHEETS
08	SBd	40	R105.2/R106.5	61	110

Randell D. Hiatt
REGISTERED CIVIL ENGINEER

November 15, 2013
PLANS APPROVAL DATE

REGISTERED PROFESSIONAL ENGINEER
Randell D. Hiatt
No. C50200
Exp. 6-30-15
CIVIL
STATE OF CALIFORNIA

THE STATE OF CALIFORNIA OR ITS OFFICERS OR AGENTS SHALL NOT BE RESPONSIBLE FOR THE ACCURACY OR COMPLETENESS OF SCANNED COPIES OF THIS PLAN SHEET.

TO ACCOMPANY PLANS DATED 6-25-15

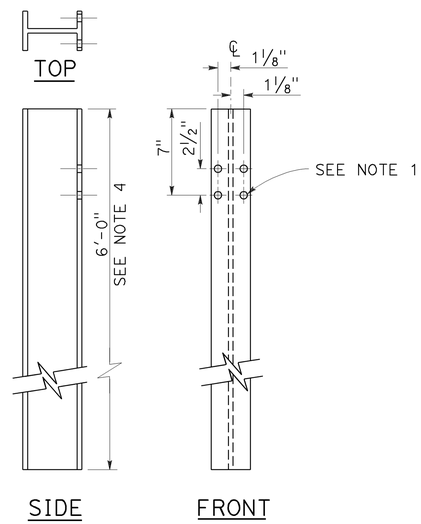

W6 x 9 OR W6 x 8.5
STEEL POST
See Note 4

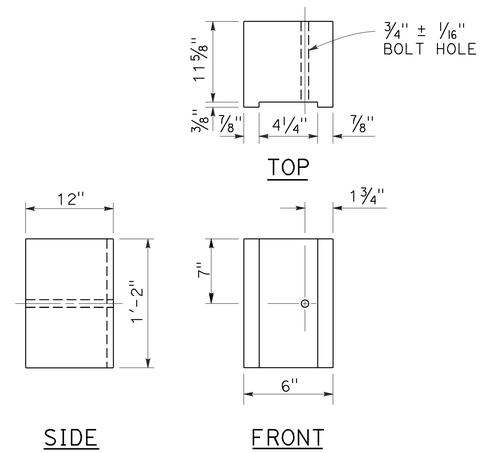

6" x 12"
NOTCHED WOOD BLOCK
See Notes 2 and 3

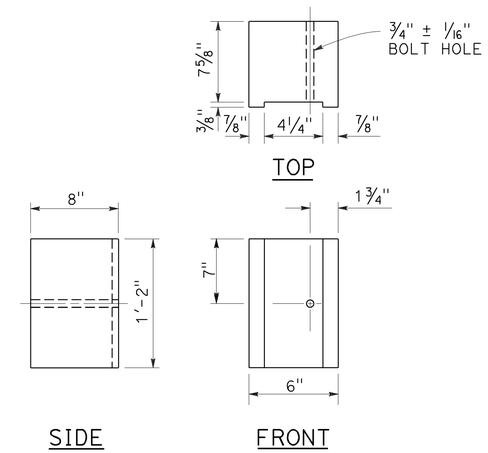

6" x 8"
NOTCHED WOOD BLOCK
Only for use with metal beam guard railing. See Note 5

NOTES:

1. All holes in steel post shall be 13/16" Dia maximum.
2. Dimensions shown for wood block are nominal.
3. Notched face of block faces steel post.
4. 6'-0" length posts to be used for typical roadway installation. See Revised Standard Plan RSP A77N3.
5. See Revised Standard Plan RSP A77L3 for use of 6" x 8" and 8" x 8" notched wood blocks.
6. This post and 8" x 12" block combination to be used for line post sections of MGS on narrow roadways and where strengthened line post sections of MGS are warranted to shield fixed objects.

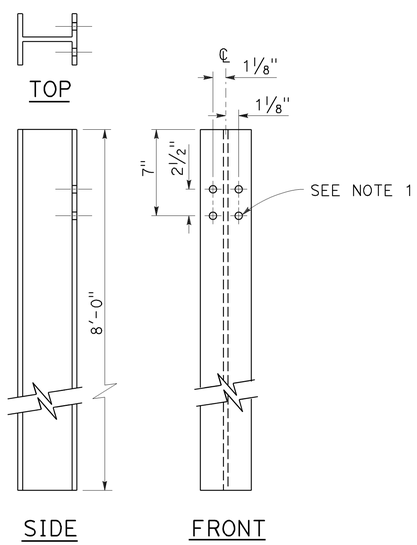

W6 x 15
STEEL POST
See Note 6

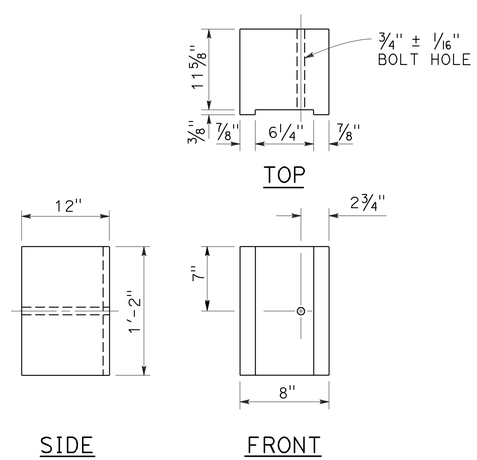

8" x 12"
NOTCHED WOOD BLOCK
See Notes 2 and 3

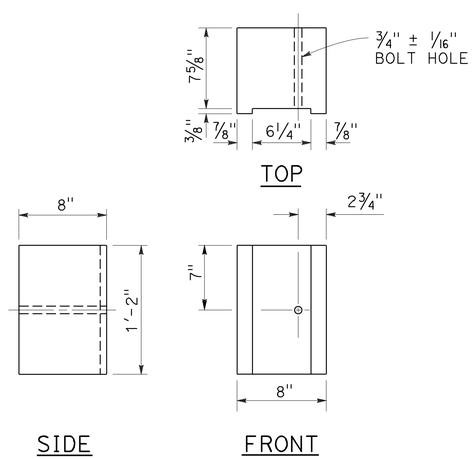

8" x 8"
NOTCHED WOOD BLOCK
Only for use with metal beam guard railing. See Note 5

STATE OF CALIFORNIA
DEPARTMENT OF TRANSPORTATION

MIDWEST GUARDRAIL SYSTEM STEEL POST AND NOTCHED WOOD BLOCK DETAILS

NO SCALE

RSP A77N2 DATED NOVEMBER 15, 2013 SUPERSEDES RSP A77N2
DATED JULY 19, 2013 THAT SUPPLEMENTS THE STANDARD PLANS BOOK DATED 2010.

REVISED STANDARD PLAN RSP A77N2

2010 REVISED STANDARD PLAN RSP A77N2

10-29-13

Dist	COUNTY	ROUTE	POST MILES TOTAL PROJECT	SHEET No.	TOTAL SHEETS
08	SBd	40	R105.2/R106.5	62	110

Randell D. Hiatt
REGISTERED CIVIL ENGINEER

November 15, 2013
PLANS APPROVAL DATE

REGISTERED PROFESSIONAL ENGINEER
Randell D. Hiatt
No. C50200
Exp. 6-30-15
CIVIL
STATE OF CALIFORNIA

THE STATE OF CALIFORNIA OR ITS OFFICERS OR AGENTS SHALL NOT BE RESPONSIBLE FOR THE ACCURACY OR COMPLETENESS OF SCANNED COPIES OF THIS PLAN SHEET.

TO ACCOMPANY PLANS DATED 6-25-15

2010 REVISED STANDARD PLAN RSP A77N3

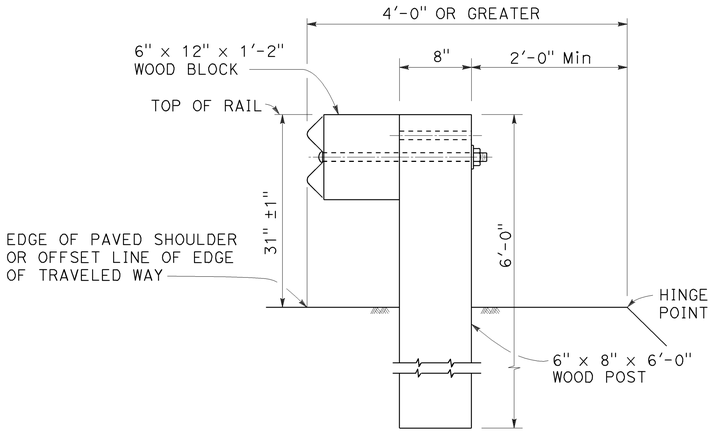

DETAIL A

TYPICAL ROADWAY INSTALLATION

See Note 1

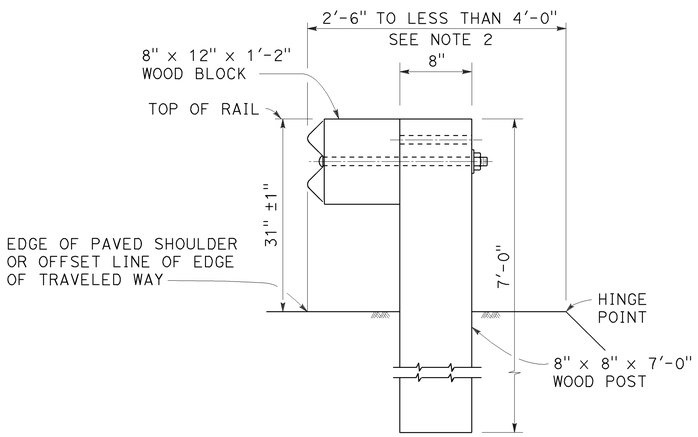

DETAIL B

NARROW ROADWAY INSTALLATION

See Note 1

POST EMBEDMENT

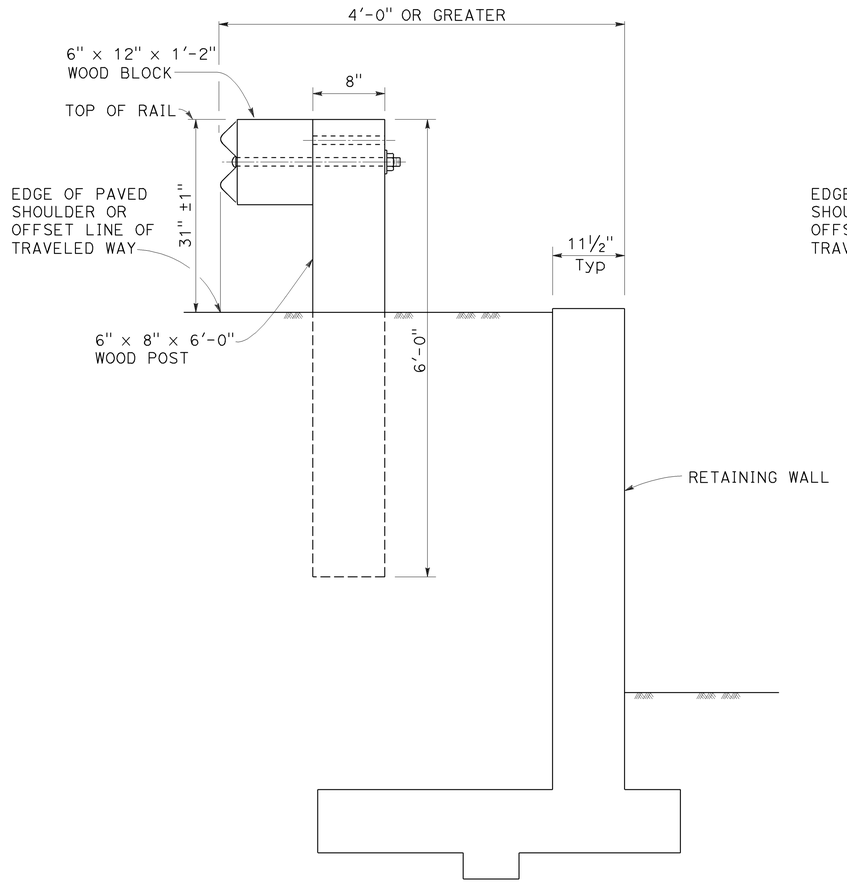

DETAIL C

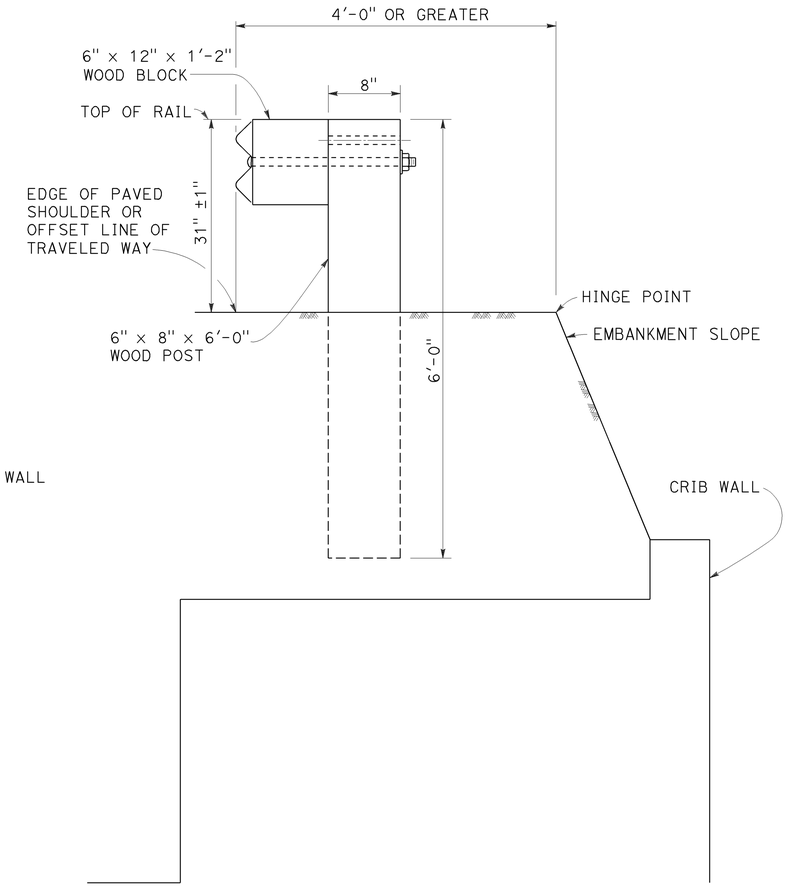

DETAIL D

INSTALLATION AT EARTH RETAINING WALLS

NOTES:

1. These installation details also applicable to steel line post installations. For Detail A, C, and D, where steel line post installations are constructed, W6 x 8.5 or W6 x 9 steel post, 6'-0" in length, with 6" x 12" x 1'-2" notched wood blocks or notched recycled plastic blocks are to be used in place of the size of wood post and wood block shown. For Detail B, where steel line post installations are constructed, W6 x 15 steel post, 8'-0" in length, with 8" x 12" x 1'-2" notched wood blocks or notched recycled plastic blocks are to be used in place of the size of wood post and wood block shown. For additional installation details, see Revised Standard Plan RSP A77L1 and RSP A77L2.
2. Where the distance between the face of the rail and the hinge point is less than 2'-6", see the Project Plans for special details.
3. For dike positioning with MGS installations, see Revised Standard Plan RSP A77N4.

STATE OF CALIFORNIA
DEPARTMENT OF TRANSPORTATION

MIDWEST GUARDRAIL SYSTEM TYPICAL LINE POST EMBEDMENT AND HINGE POINT OFFSET DETAILS

NO SCALE

RSP A77N3 DATED NOVEMBER 15, 2013 SUPERSEDES RSP A77N3
DATED JULY 19, 2013 THAT SUPPLEMENTS THE STANDARD PLANS BOOK DATED 2010.

REVISED STANDARD PLAN RSP A77N3

10-29-13

Dist	COUNTY	ROUTE	POST MILES TOTAL PROJECT	SHEET No.	TOTAL SHEETS
08	SBd	40	R105.2/R106.5	63	110

Randell D. Hiatt
REGISTERED CIVIL ENGINEER

July 19, 2013
PLANS APPROVAL DATE

REGISTERED PROFESSIONAL ENGINEER
Randell D. Hiatt
No. C50200
Exp. 6-30-15
CIVIL
STATE OF CALIFORNIA

THE STATE OF CALIFORNIA OR ITS OFFICERS OR AGENTS SHALL NOT BE RESPONSIBLE FOR THE ACCURACY OR COMPLETENESS OF SCANNED COPIES OF THIS PLAN SHEET.

TO ACCOMPANY PLANS DATED 6-25-15

NOTES:

1. When necessary to place dike more than 7" in front of face of MGS, only Type C dike may be used. For dike details, see Revised Standard Plan RSP A87B.
2. For standard railing post embedment, see Revised Standard Plan RSP A77N3.
3. MGS delineation to be used where shown on the Project Plans.
4. When dike or curb is placed under MGS, the maximum height of the dike or curb shall be 6". Mountable dike should not be used. For dike and curb details, see Revised Standard Plans RSP A87A and RSP A87B.
5. For details of typical distance between the face of rail and hinge point, see Revised Standard Plan RSP A77N3.
6. For steel line posts, use 1/4 - 20 self-tapping screws in 0.22" diameter holes or 1/4" bolts in 9/32" diameter holes.

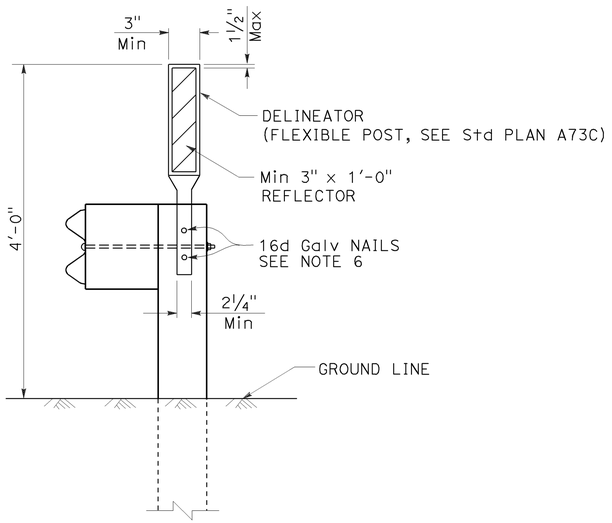

MGS DELINEATION
See Note 3

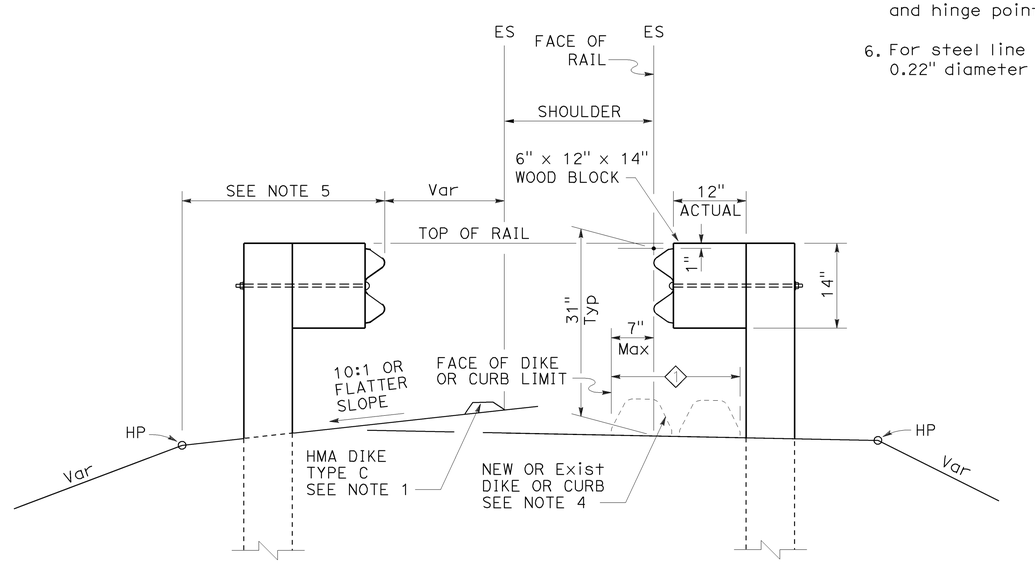

DIKE POSITIONING
See Note 1

1 PERMISSIBLE DIKE OR CURB PLACEMENT AREA

STATE OF CALIFORNIA
DEPARTMENT OF TRANSPORTATION

MIDWEST GUARDRAIL SYSTEM TYPICAL RAILING DELINEATION AND DIKE POSITIONING DETAILS

NO SCALE

RSP A77N4 DATED JULY 19, 2013 SUPPLEMENTS THE STANDARD PLANS BOOK DATED 2010.

REVISED STANDARD PLAN RSP A77N4

2010 REVISED STANDARD PLAN RSP A77N4

7-10-13

Dist	COUNTY	ROUTE	POST MILES TOTAL PROJECT	SHEET No.	TOTAL SHEETS
08	SBd	40	R105.2/R106.5	64	110

Randell D. Hiatt
REGISTERED CIVIL ENGINEER

July 19, 2013
PLANS APPROVAL DATE

REGISTERED PROFESSIONAL ENGINEER
Randell D. Hiatt
No. C50200
Exp. 6-30-15
CIVIL
STATE OF CALIFORNIA

THE STATE OF CALIFORNIA OR ITS OFFICERS OR AGENTS SHALL NOT BE RESPONSIBLE FOR THE ACCURACY OR COMPLETENESS OF SCANNED COPIES OF THIS PLAN SHEET.

TO ACCOMPANY PLANS DATED 6-25-15

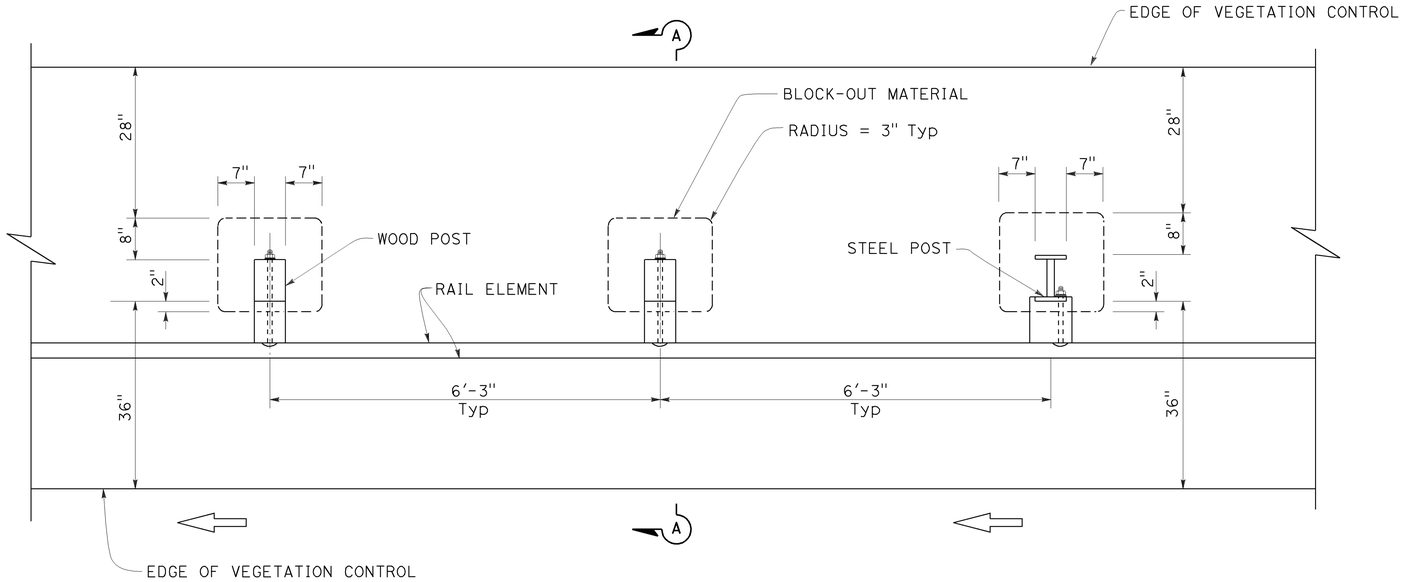

PLAN

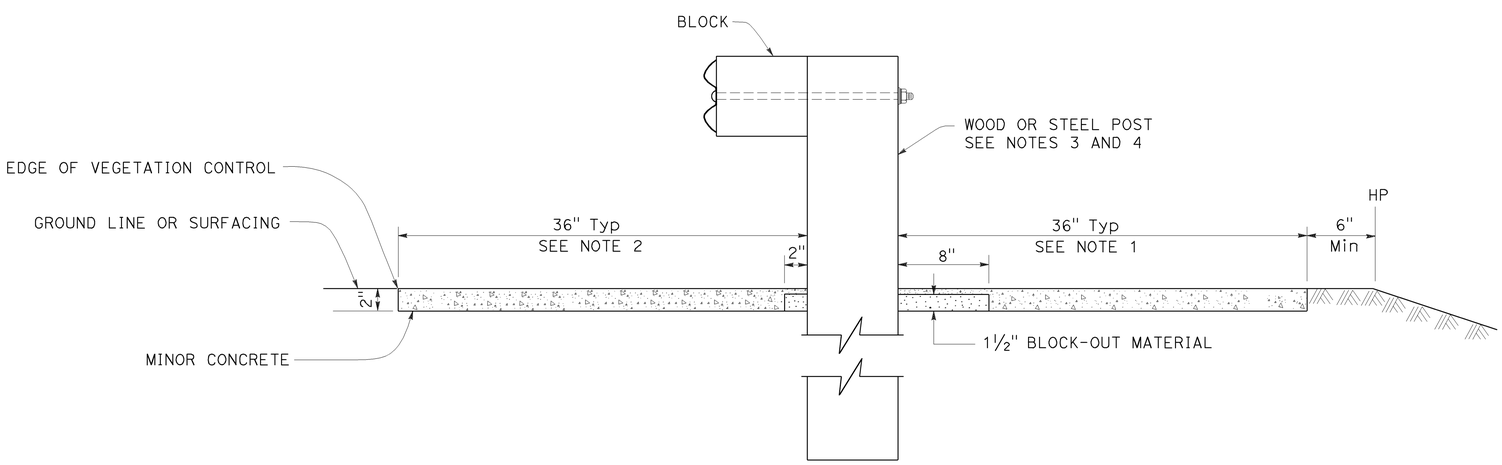

SECTION A-A

NOTES:

1. Where the distance between back of post and hinge point is less than 42", construct vegetation control to 6" from hinge point while maintaining the 8" block-out at back of post. If the 8" block-out at back of post can not be maintained, construct vegetation control flush with the back edge of post.
2. Where dike is constructed under railing, construct vegetation control to back edge of dike. Where paved shoulder is constructed within 36" in front of the post, construct vegetation control to the edge of paved shoulder.
3. For wood post sizes, see Revised Standard Plan RSP A77N1.
4. For steel post sizes, see Revised Standard Plan RSP A77N2.
5. For details not shown, see Revised Standard Plans RSP A77L1 and RSP A77L2.

STATE OF CALIFORNIA
DEPARTMENT OF TRANSPORTATION

MIDWEST GUARDRAIL SYSTEM TYPICAL VEGETATION CONTROL STANDARD RAILING SECTION

NO SCALE

RSP A77N5 DATED JULY 19, 2013 SUPPLEMENTS THE STANDARD PLANS BOOK DATED 2010.

REVISED STANDARD PLAN RSP A77N5

2010 REVISED STANDARD PLAN RSP A77N5

7-3-13

Dist	COUNTY	ROUTE	POST MILES TOTAL PROJECT	SHEET No.	TOTAL SHEETS
08	SBd	40	R105.2/R106.5	65	110

Randell D. Hiatt
REGISTERED CIVIL ENGINEER

July 19, 2013
PLANS APPROVAL DATE

REGISTERED PROFESSIONAL ENGINEER
Randell D. Hiatt
No. C50200
Exp. 6-30-15
CIVIL
STATE OF CALIFORNIA

THE STATE OF CALIFORNIA OR ITS OFFICERS OR AGENTS SHALL NOT BE RESPONSIBLE FOR THE ACCURACY OR COMPLETENESS OF SCANNED COPIES OF THIS PLAN SHEET.

TO ACCOMPANY PLANS DATED 6-25-15

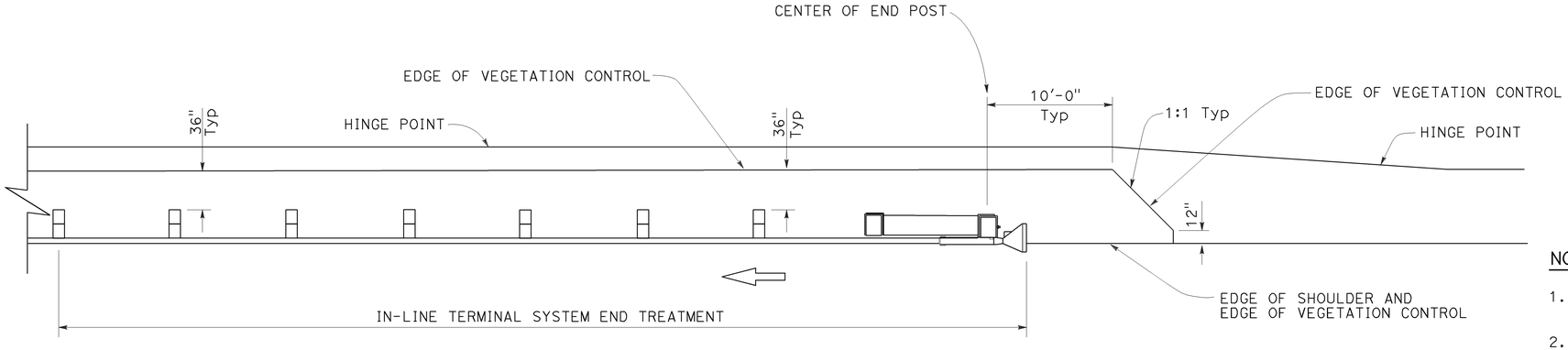

PLAN

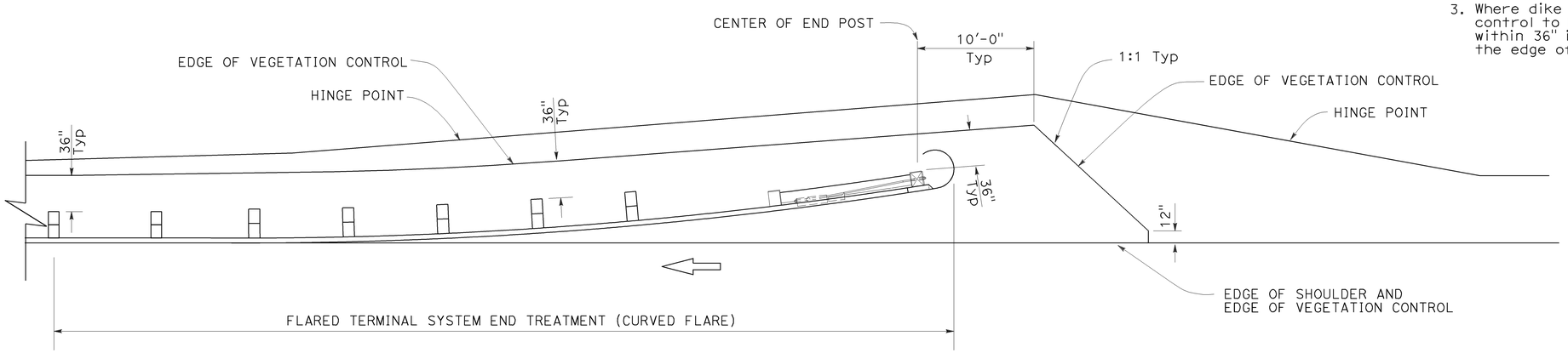

PLAN

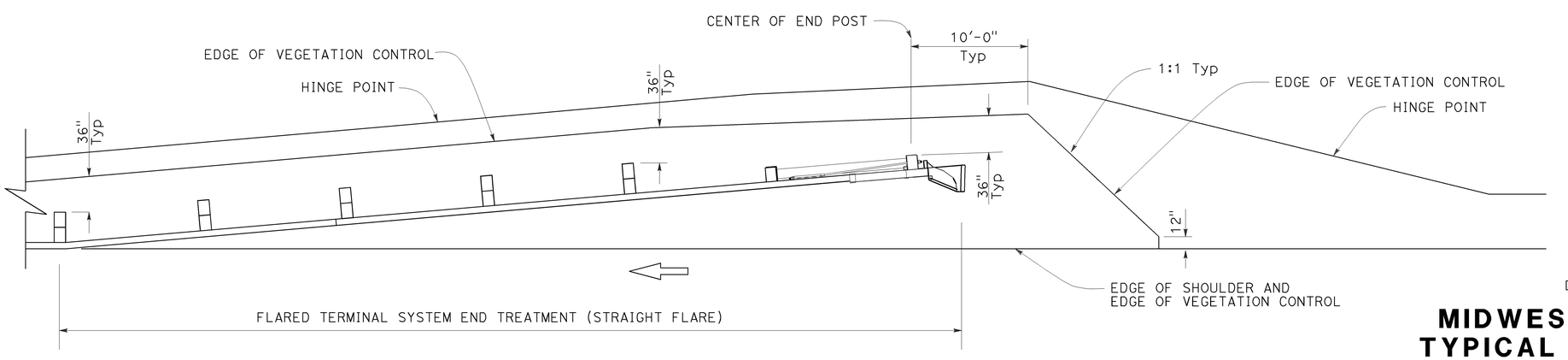

PLAN

NOTES:

1. See Revised Standard Plan RSP A77N5 for additional vegetation control details.
2. Where the distance between back of post and hinge point is less than 42", construct vegetation control to 6" from hinge point while maintaining the 8" block-out at back of post. If the 8" block-out at back of post can not be maintained, construct vegetation control flush with the back edge of post.
3. Where dike is constructed under railing, construct vegetation control to back edge of dike. Where paved shoulder is constructed within 36" in front of the post, construct vegetation control to the edge of paved shoulder.

STATE OF CALIFORNIA
DEPARTMENT OF TRANSPORTATION

MIDWEST GUARDRAIL SYSTEM TYPICAL VEGETATION CONTROL FOR TERMINAL SYSTEM END TREATMENTS

NO SCALE

RSP A77N6 DATED JULY 19, 2013 SUPPLEMENTS THE STANDARD PLANS BOOK DATED 2010.

REVISED STANDARD PLAN RSP A77N6

2010 REVISED STANDARD PLAN RSP A77N6

6-12-13

Dist	COUNTY	ROUTE	POST MILES TOTAL PROJECT	SHEET No.	TOTAL SHEETS
08	SBd	40	R105.2/R106.5	66	110

Randell D. Hiatt
REGISTERED CIVIL ENGINEER

July 19, 2013
PLANS APPROVAL DATE

REGISTERED PROFESSIONAL ENGINEER
Randell D. Hiatt
No. C50200
Exp. 6-30-15
CIVIL
STATE OF CALIFORNIA

THE STATE OF CALIFORNIA OR ITS OFFICERS OR AGENTS SHALL NOT BE RESPONSIBLE FOR THE ACCURACY OR COMPLETENESS OF SCANNED COPIES OF THIS PLAN SHEET.

TO ACCOMPANY PLANS DATED 6-25-15

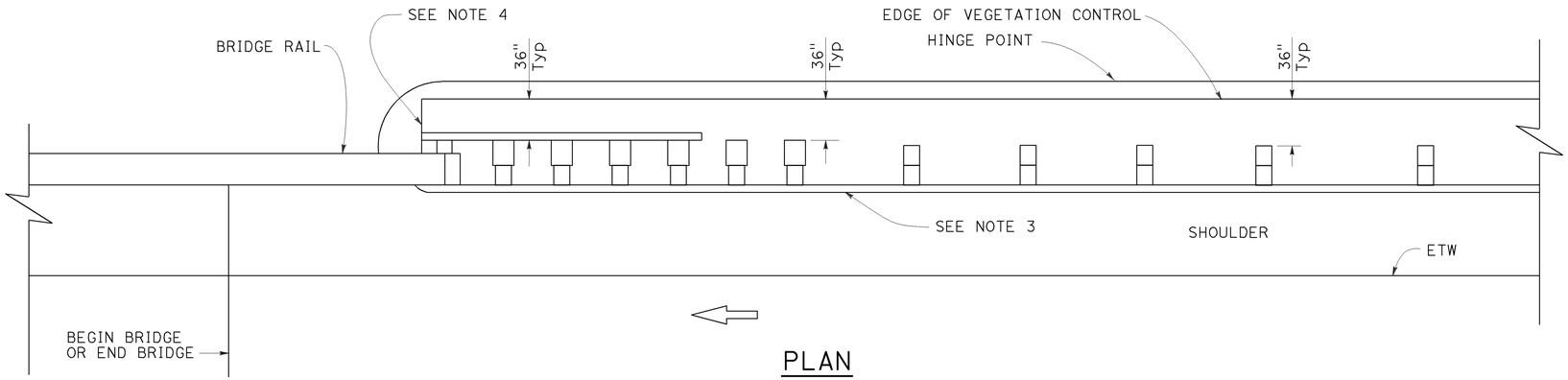

PLAN

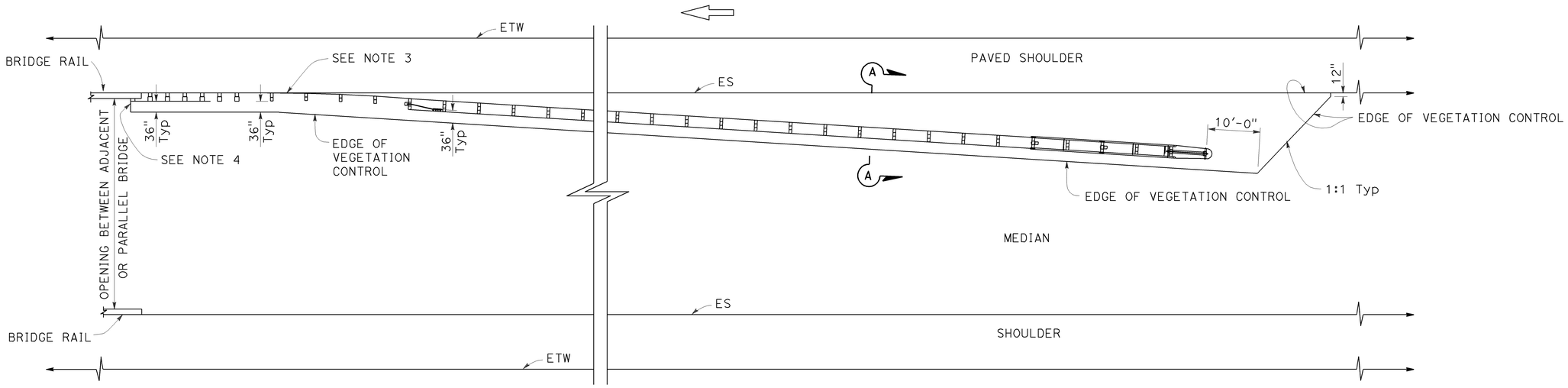

PLAN

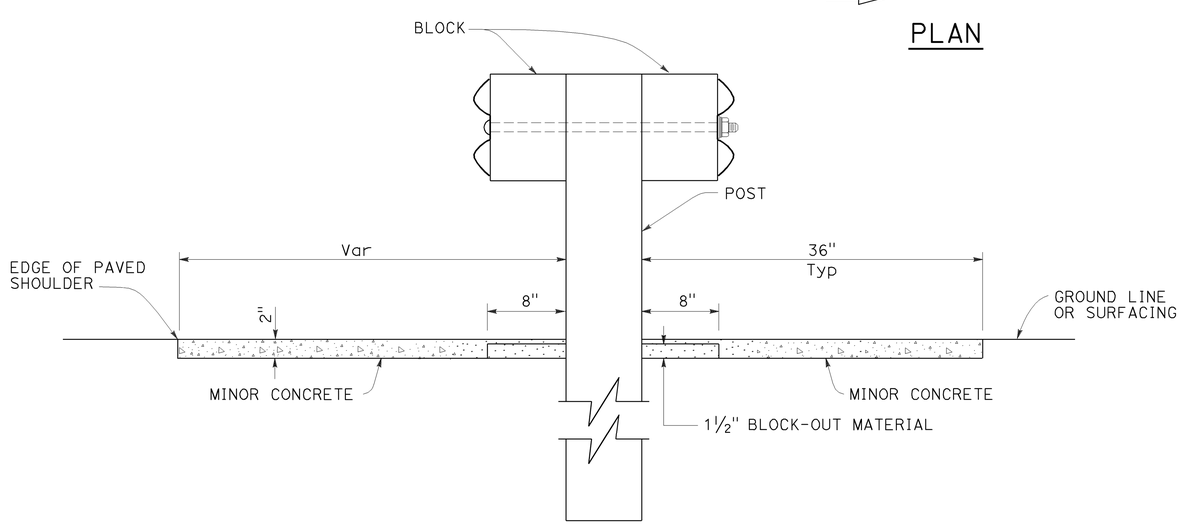

SECTION A-A

NOTES:

1. See Revised Standard Plan RSP A77N5 for additional vegetation control details.
2. Where the distance between back of post and hinge point is less than 42", construct vegetation control to 6" from hinge point while maintaining the 8" block-out at back of post. If the 8" block-out at back of post can not be maintained, construct vegetation control flush with the back edge of post.
3. Where dike is constructed under railing, construct vegetation control to back edge of dike. Where paved shoulder is constructed within 36" in front of the post, construct vegetation control to the edge of paved shoulder.
4. End vegetation control at end of backside rail element.

STATE OF CALIFORNIA
DEPARTMENT OF TRANSPORTATION

MIDWEST GUARDRAIL SYSTEM TYPICAL VEGETATION CONTROL AT STRUCTURE APPROACH

NO SCALE

RSP A77N7 DATED JULY 19, 2013 SUPPLEMENTS THE STANDARD PLANS BOOK DATED 2010.

REVISED STANDARD PLAN RSP A77N7

2010 REVISED STANDARD PLAN RSP A77N7

6-12-13

Dist	COUNTY	ROUTE	POST MILES TOTAL PROJECT	SHEET No.	TOTAL SHEETS
08	SBd	40	R105.2/R106.5	67	110

Randell D. Hiatt
REGISTERED CIVIL ENGINEER

July 19, 2013
PLANS APPROVAL DATE

REGISTERED PROFESSIONAL ENGINEER
Randell D. Hiatt
No. C50200
Exp. 6-30-15
CIVIL
STATE OF CALIFORNIA

THE STATE OF CALIFORNIA OR ITS OFFICERS OR AGENTS SHALL NOT BE RESPONSIBLE FOR THE ACCURACY OR COMPLETENESS OF SCANNED COPIES OF THIS PLAN SHEET.

TO ACCOMPANY PLANS DATED 6-25-15

2010 REVISED STANDARD PLAN RSP A77Q1

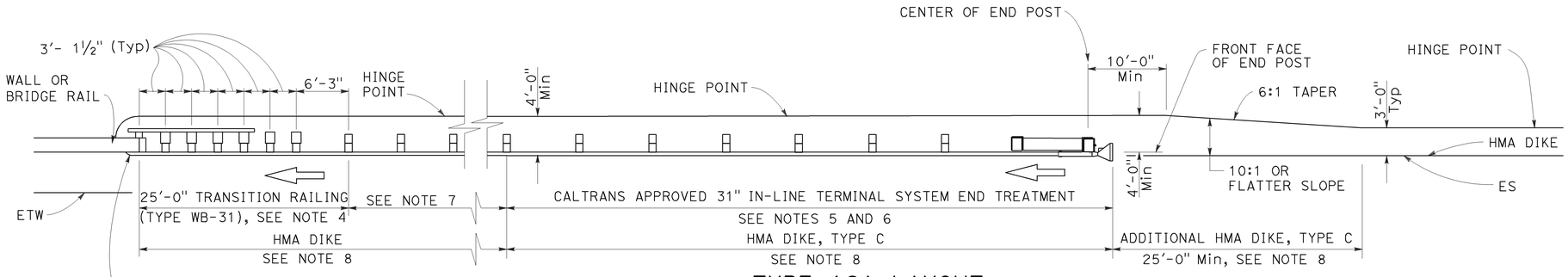

TYPE 12A LAYOUT

(MGS installation at structure approach with
31" In-line end treatment at traffic approach end of railing)
See Notes 9

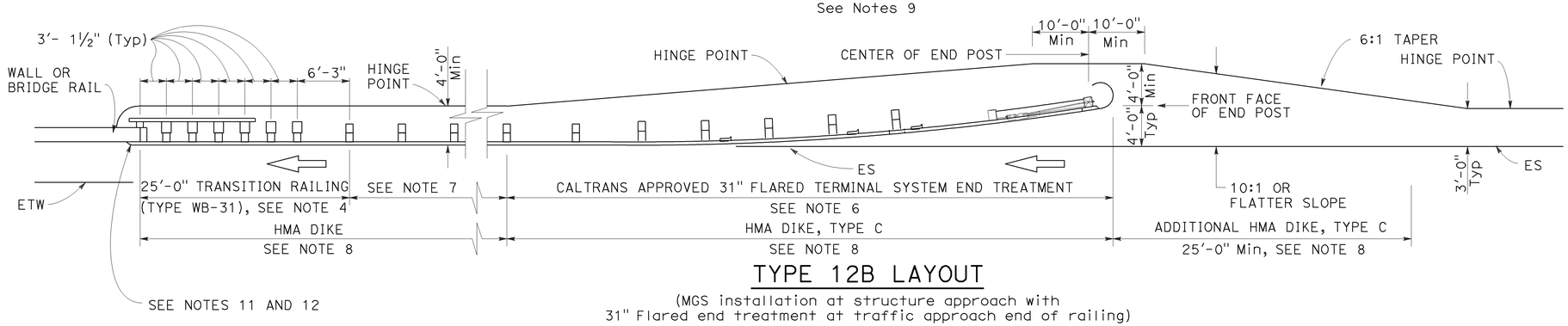

TYPE 12B LAYOUT

(MGS installation at structure approach with
31" Flared end treatment at traffic approach end of railing)
See Notes 9

NOTES:

1. Line post, blocks and hardware to be used are shown on Revised Standard Plans RSP A77L1, RSP A77L2, RSP A77M1, RSP A77N1 and RSP A77N2.
2. MGS post spacing to be 6'-3" center to center, except as otherwise noted.
3. Except as noted, line posts are 6" x 8" x 6'-0" wood with 6" x 12" x 1'-2" wood blocks. W6 x 8.5 or W6 x 9 steel posts, 6'-0" in length, with 6" x 12" x 1'-2" notched wood blocks or plastic blocks may be used for 6" x 8" x 6'-0" wood posts with 6" x 12" x 1'-2" wood blocks where applicable and when specified.
4. For Transition Railing (Type WB-31) details for Types 12A and 12B Layouts, see Revised Standard Plan RSP A77U4.
5. 31" in-line terminal system end treatments are used where site conditions will not accommodate a 31" flared end treatment.
6. The type 31" of terminal system end treatment to be used will be shown on the Project Plans.
7. Dependent on site conditions (embankment height, side slopes, or other fixed objects), it may be advisable to construct additional guard railing (a length equal to multiples of 12'-6" with 6'-3" post spacing) between the transition railing and end treatment. A 12.5 degree angle of departure can be drawn on the Project Plans from the edge of traveled way through the outer most point of the fixed object to determine the additional length of railing needed.
8. Where placement of dike is required with guard railing installations, see Revised Standard Plan RSP A77N4 for dike positioning details.
9. Type 12A or Type 12B Layouts are typically used:
   a. To the right of approaching traffic, at the end of a structure, on two-lane conventional highway where the roadbed width across the structure is less than 40 feet.
   b. To the left of approaching traffic, at the end of a structure, on two-lane conventional highway where the roadbed width across the structure is less than 40 feet.
   c. To the right of approaching traffic at the end of each structure on multilane freeways or expressways with separate adjacent or parallel bridges.
   d. To the right of approaching traffic at the end of the structure on multilane freeways or expressways with decked median on the bridge.
10. See Revised Standard Plan RSP A77Q3 for typical layout used left of approaching traffic at the ends of each structure on multilane freeways or expressways with separate adjacent or parallel bridges.
11. For additional details of typical connections to bridge rail, see Connection Detail AA on Revised Standard Plans RSP A77U1 and RSP A77U2 and Connection Detail FF on Revised Standard Plans RSP A77V1 and RSP A77V2.
12. For additional details of a typical connection to walls or abutments, see Revised Standard Plan RSP A77U3.

STATE OF CALIFORNIA
DEPARTMENT OF TRANSPORTATION

MIDWEST GUARDRAIL SYSTEM TYPICAL LAYOUTS FOR STRUCTURE APPROACH

NO SCALE

RSP A77Q1 DATED JULY 19, 2013 SUPPLEMENTS THE STANDARD PLANS BOOK DATED 2010.

REVISED STANDARD PLAN RSP A77Q1

Dist	COUNTY	ROUTE	POST MILES TOTAL PROJECT	SHEET No.	TOTAL SHEETS
08	SBd	40	R105.2/R106.5	68	110

Randell D. Hiatt
REGISTERED CIVIL ENGINEER

July 19, 2013
PLANS APPROVAL DATE

REGISTERED PROFESSIONAL ENGINEER
Randell D. Hiatt
No. C50200
Exp. 6-30-15
CIVIL
STATE OF CALIFORNIA

THE STATE OF CALIFORNIA OR ITS OFFICERS OR AGENTS SHALL NOT BE RESPONSIBLE FOR THE ACCURACY OR COMPLETENESS OF SCANNED COPIES OF THIS PLAN SHEET.

TO ACCOMPANY PLANS DATED 6-25-15

2010 REVISED STANDARD PLAN RSP A77Q3

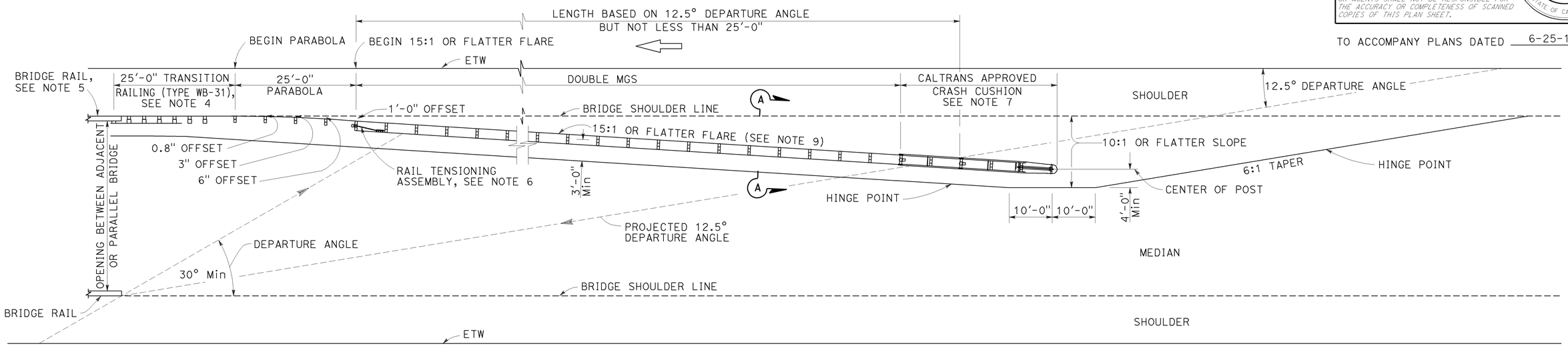

TYPE 12E LAYOUT

See Note 9

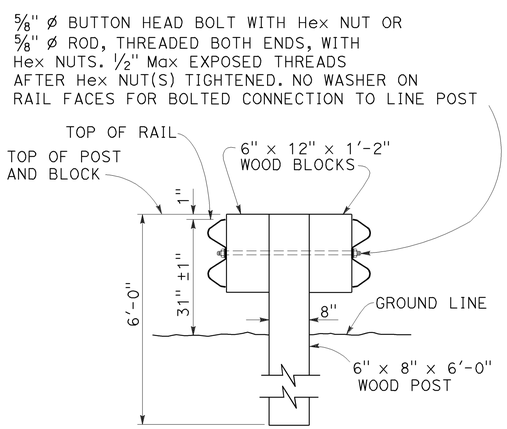

SECTION A-A

TYPICAL DOUBLE MIDWEST GUARDRAIL SYSTEM

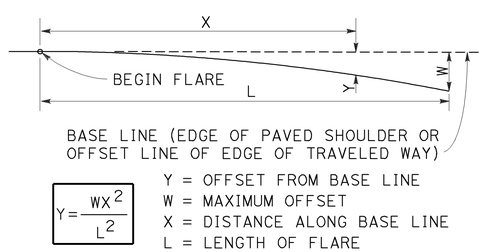

$$Y = \frac{WX^2}{L^2}$$

Y = OFFSET FROM BASE LINE
W = MAXIMUM OFFSET
X = DISTANCE ALONG BASE LINE
L = LENGTH OF FLARE

PARABOLIC FLARE OFFSETS

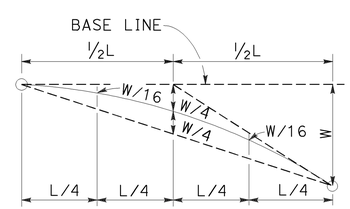

TYPICAL PARABOLIC LAYOUT

NOTES:

1. Line post, blocks and hardware to be used are shown on Revised Standard Plans RSP A77L1, RSP A77L2, RSP A77M1, RSP A77N1 and RSP A77N2.
2. MGS post spacing to be 6'-3" center to center, except as otherwise noted.
3. Except as noted, line posts are 6" x 8" x 6'-0" wood with 6" x 12" x 1'-2" wood blocks. W6 x 8.5 or W6 x 9 steel posts, 6'-0" in length, with 6" x 12" x 1'-2" notched wood blocks or notched recycled plastic blocks may be used for 6" x 8" x 6'-0" wood line posts with 6" x 12" x 1'-2" wood blocks where applicable and when specified.
4. For Transition Railing (Type WB-31) details, see Revised Standard Plan RSP A77U4.
5. For additional details of a typical connection to bridge rail, see Connection Detail AA on Revised Standard Plan RSP A77U1.
6. For Rail Tensioning Assembly details, see Revised Standard Plan RSP A77S2.
7. The type of Crash Cushion to be used will be shown on the Project Plans.
8. Type 12E Layout is typically used left of approaching traffic at the end of each structure on multilane freeways or expressways where a median type barrier is not constructed between separated roadbeds.
9. The 15:1 or flatter flare is measured off of the edge of traveled way.

STATE OF CALIFORNIA
DEPARTMENT OF TRANSPORTATION

MIDWEST GUARDRAIL SYSTEM TYPICAL LAYOUTS FOR STRUCTURE APPROACH

NO SCALE

RSP A77Q3 DATED JULY 19, 2013 SUPPLEMENTS THE STANDARD PLANS BOOK DATED 2010.

REVISED STANDARD PLAN RSP A77Q3

Dist	COUNTY	ROUTE	POST MILES TOTAL PROJECT	SHEET No.	TOTAL SHEETS
08	SBd	40	R105.2/R106.5	69	110

Randell D. Hiatt
REGISTERED CIVIL ENGINEER

January 23, 2015
PLANS APPROVAL DATE

REGISTERED PROFESSIONAL ENGINEER
Randell D. Hiatt
No. C50200
Exp. 6-30-15
CIVIL
STATE OF CALIFORNIA

THE STATE OF CALIFORNIA OR ITS OFFICERS OR AGENTS SHALL NOT BE RESPONSIBLE FOR THE ACCURACY OR COMPLETENESS OF SCANNED COPIES OF THIS PLAN SHEET.

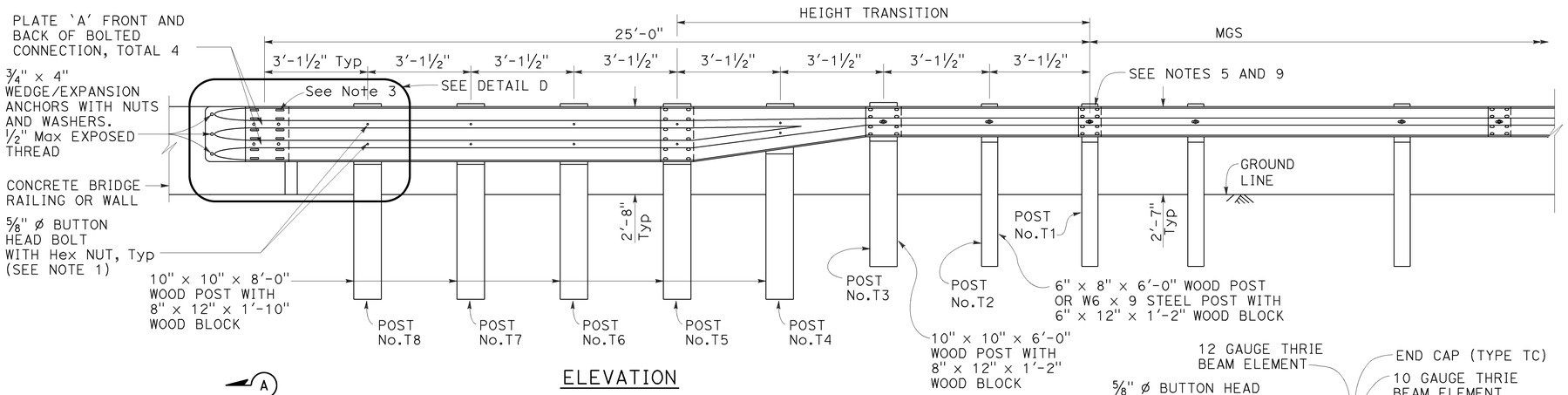

ELEVATION

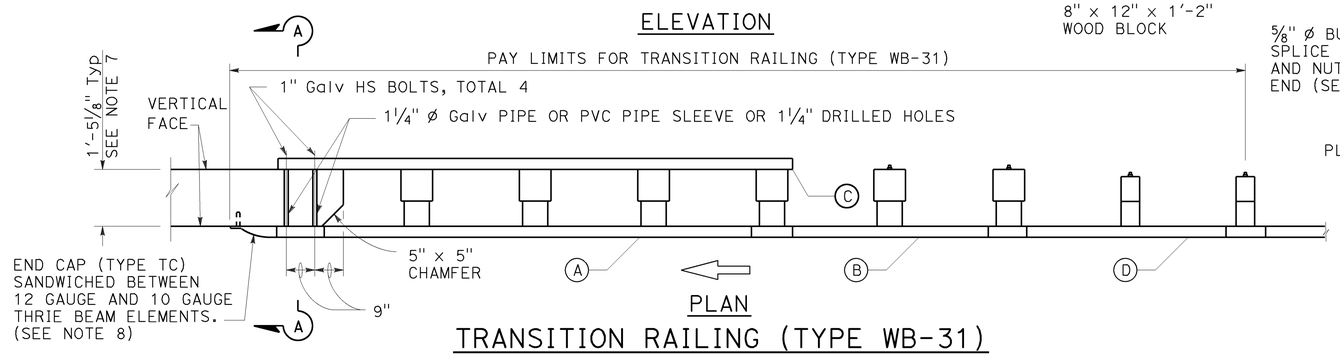

PLAN

TRANSITION RAILING (TYPE WB-31)

(No Blockout Attachment)

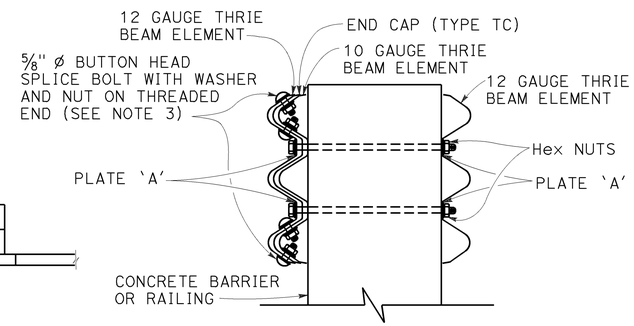

SECTION A-A

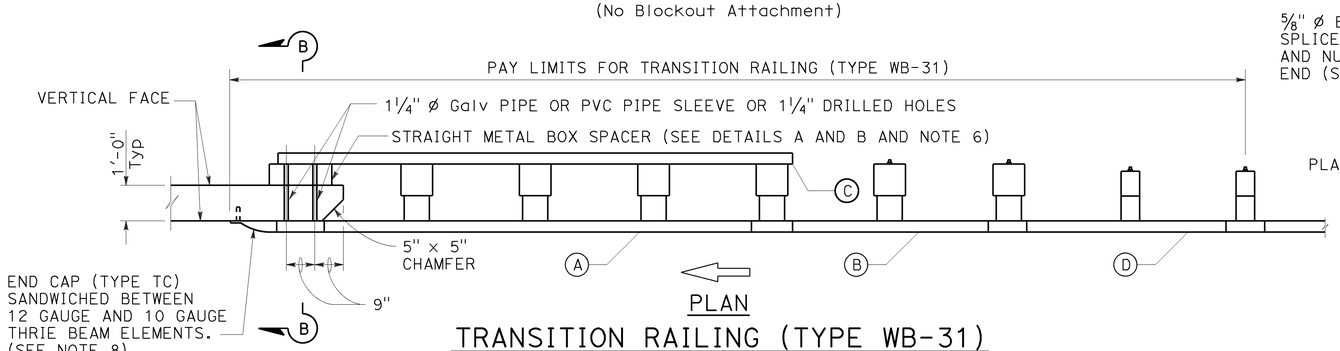

PLAN

TRANSITION RAILING (TYPE WB-31)

(Blockout Attachment)

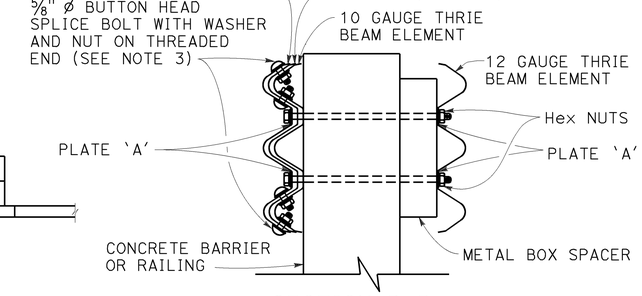

SECTION B-B

NOTES:

TO ACCOMPANY PLANS DATED 6-25-15

1. Use 5/8" ø Button head bolts and hex nuts for connections to posts. No washer on rail face for bolted connections to post.
2. The nested rail elements, end cap, and 'W' beam to thrie beam element may be spliced together prior to bolting the elements to the wood post and concrete barrier or railing.
3. Exterior splice bolt holes for rail element splices at Post No. T5 and the connection to the concrete barrier or railing shall be the standard 29/32" x 1 1/8" slot size. Interior splice bolt holes at these locations may be increased up to 1 1/4" ø. Only the top 4 and the bottom 4 splice bolts with washers and nuts are required for rail splices at Post No. T5 and the connection to the concrete barrier or railing.
4. The top elevation of Posts No. T2 through No. T7 shall not project more than 1" above the top elevation of the rail element.
5. Typically, the railing connected to Transition Railing (Type WB-31) will be either standard railing section of MGS with height transition ratio of 150:1 or a Caltrans approved 31" end treatment attached to Post No. T1.
6. The depth of the metal box spacer varies from the 9 1/8" to 1 1/2" and is dependent on the width of the concrete railing or wall. The combined dimension for the depth of the metal box spacer plus the width of railing or wall is typically 21 1/8". Where the space between the backside of the concrete railing or wall and the rear thrie beam element is less than 1 1/2", metal plates similar to Plate 'A' are to be used as spacers.
7. Where the width of the concrete railing or wall is greater than 17 1/8", wood blocks are to be used to fill the space created between the backside of Posts No. T5 through No. T8 and the rear thrie beam element. These wood blocks shall be 8" in width and 1'-2" in length. The dimension between the front thrie beam element and the rear thrie beam element is to match the width of the concrete railing or wall.
8. End cap may be installed over 12 gauge and 10 gauge thrie beam elements where transition railing is installed on the departure end of bridge railing.
9. Conform standard railing section height to 31" at Post No. T1 using height transition ratio of 150:1.

LEGEND:

(A) NESTED THRIE BEAM ELEMENTS (ONE 12 GAUGE ELEMENT NESTED OVER ONE 10 GAUGE ELEMENT).

(B) ONE ASYMMETRICAL 10 GAUGE "W" BEAM TO THRIE BEAM ELEMENT.

(C) ONE 12 GAUGE THRIE BEAM ELEMENT.

(D) ONE 10 GAUGE "W" BEAM RAIL ELEMENT (7'-3 1/2"LENGTH)

10 GAUGE = 0.138" THICK
12 GAUGE = 0.108" THICK

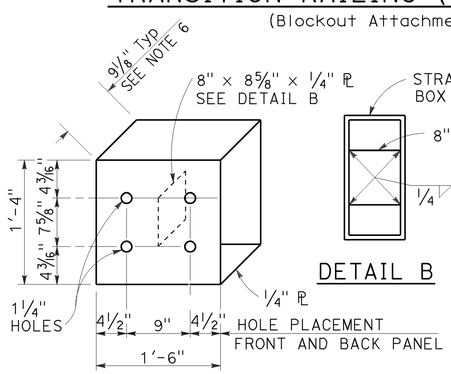

DETAIL A

STRAIGHT METAL BOX SPACER

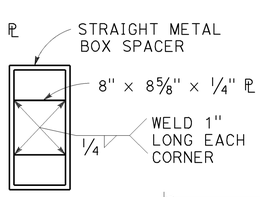

DETAIL B

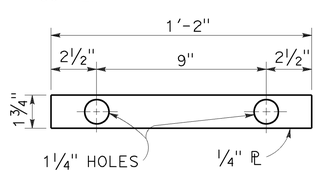

DETAIL C

PLATE 'A'

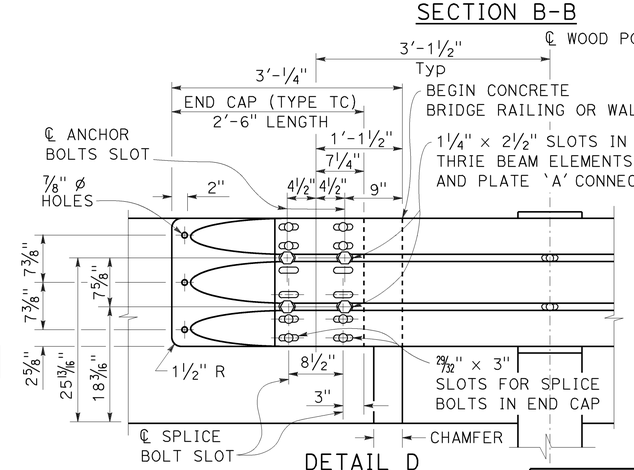

DETAIL D

STATE OF CALIFORNIA
DEPARTMENT OF TRANSPORTATION

MIDWEST GUARDRAIL SYSTEM TRANSITION RAILING (TYPE WB-31)

NO SCALE

RSP A77U4 DATED JANUARY 23, 2015 SUPERSEDES RSP A77U4 DATED NOVEMBER 15, 2013 AND RSP A77U4 DATED JULY 19, 2013 THAT SUPPLEMENTS THE STANDARD PLANS BOOK DATED 2010.

REVISED STANDARD PLAN RSP A77U4

2010 REVISED STANDARD PLAN RSP A77U4

1-8-15

Dist	COUNTY	ROUTE	POST MILES TOTAL PROJECT	SHEET No.	TOTAL SHEETS
08	SBd	40	R105.2/R106.5	70	110

REGISTERED CIVIL ENGINEER

July 19, 2013
PLANS APPROVAL DATE

REGISTERED PROFESSIONAL ENGINEER
Michael Janzen
No. 44788
Exp. 03-31-14
CIVIL
STATE OF CALIFORNIA

THE STATE OF CALIFORNIA OR ITS OFFICERS OR AGENTS SHALL NOT BE RESPONSIBLE FOR THE ACCURACY OR COMPLETENESS OF SCANNED COPIES OF THIS PLAN SHEET.

TO ACCOMPANY PLANS DATED 6-25-15

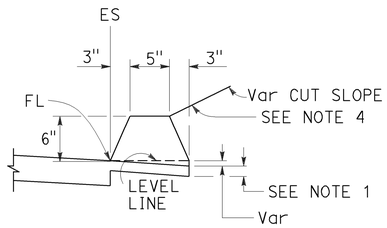

TYPE A
See Note 3

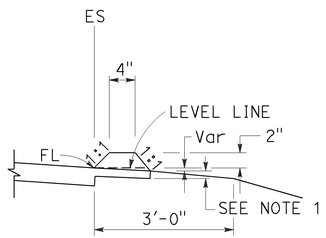

TYPE C

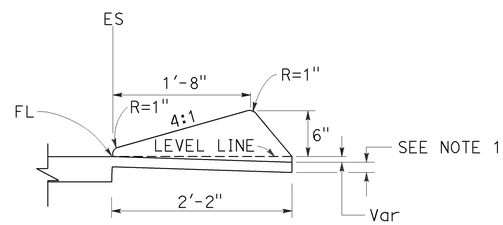

TYPE D

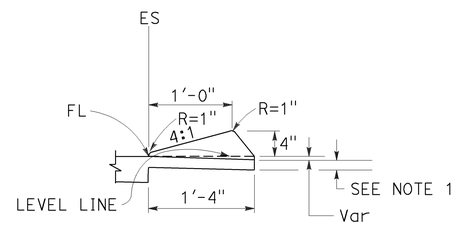

TYPE E

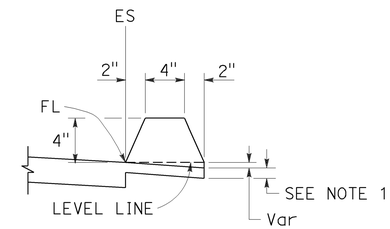

TYPE F
See Note 5

DIKES

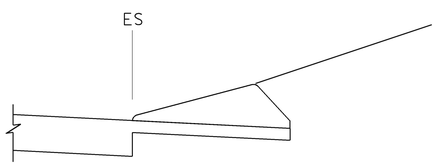

CASE C-1
Cut Slope

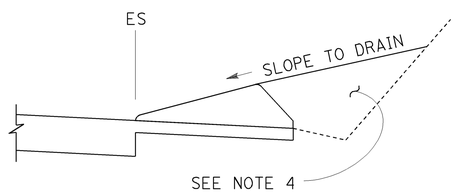

CASE C-2
Cut Slope

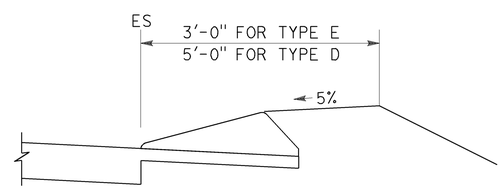

CASE F

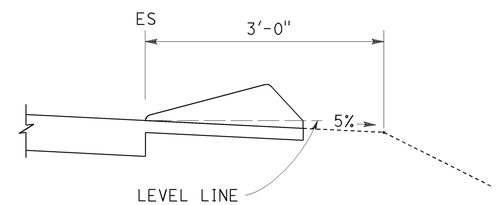

CASE R
See Note 2

TYPE D AND E BACKFILL DETAILS

NOTES:

1. For HMA shoulders only, extend top layer of HMA placed on the shoulder under dike with no joint at the ES. For projects with OGFC shoulders, do not extend OGFC under dike. See project plans for modified dike detail.
2. Case R applies to retrofit only projects where restrictive conditions do not provide enough width for Case F backfill.
3. Type A dike only to be used where restrictive slope conditions do not provide enough width to use Type D or Type E dike.
4. Fill and compact with excavated material to top of dike.
5. Use Type F dike, where dike is required with guard railing installations. See Revised Standard Plan RSP A77N4 for dike positioning details.

DIKE QUANTITIES

TYPE	CUBIC YARDS PER LINEAR FOOT
A	0.0135
C	0.0038
D	0.0293
E	0.0130
F	0.0066

Quantities based on 5% cross slope.

STATE OF CALIFORNIA
DEPARTMENT OF TRANSPORTATION

HOT MIX ASPHALT DIKES

NO SCALE

RSP A87B DATED JULY 19, 2013 SUPERSEDES STANDARD PLAN A87B DATED MAY 20, 2011 - PAGE 120 OF THE STANDARD PLANS BOOK DATED 2010.

REVISED STANDARD PLAN RSP A87B

2010 REVISED STANDARD PLAN RSP A87B

6-27-13

Dist	COUNTY	ROUTE	POST MILES TOTAL PROJECT	SHEET No.	TOTAL SHEETS
08	SBd	40	R105.2/R106.5	71	110

REGISTERED CIVIL ENGINEER

October 30, 2015
PLANS APPROVAL DATE

REGISTERED PROFESSIONAL ENGINEER Bruce D. Swanger No. C61257 Exp. 6-30-17 CIVIL STATE OF CALIFORNIA

THE STATE OF CALIFORNIA OR ITS OFFICERS OR AGENTS SHALL NOT BE RESPONSIBLE FOR THE ACCURACY OR COMPLETENESS OF SCANNED COPIES OF THIS PLAN SHEET.

TO ACCOMPANY PLANS DATED 6-25-15

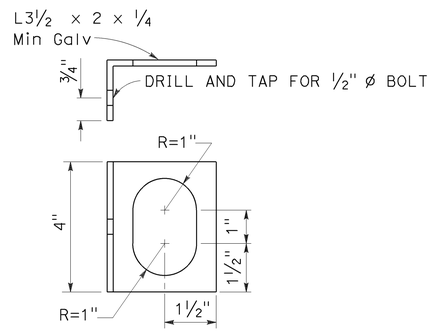

ALTERNATIVE CLIP BRACKET DETAIL

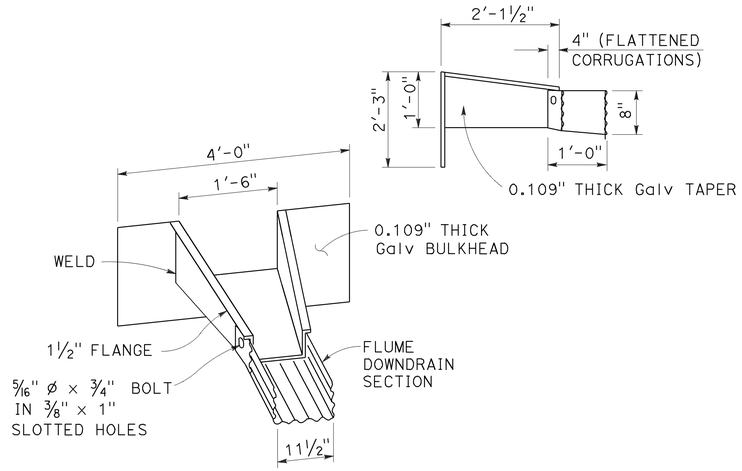

TAPERED INLET

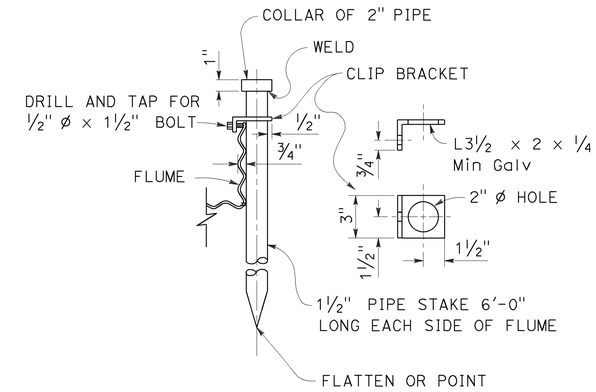

PIPE STAKE ANCHOR DETAIL

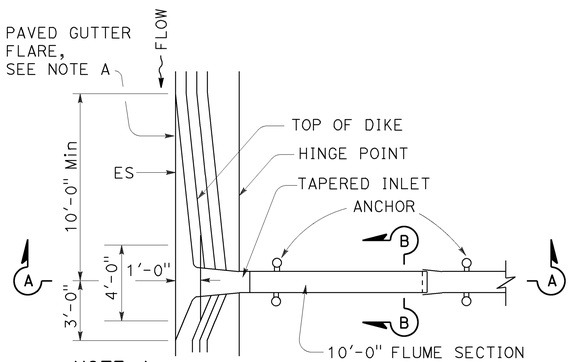

NOTE A

In sag location, use 10'-0" length of paved gutter flare on both sides of inlet.

PLAN

TAPERED INLET AND FLUME DOWNDRAIN

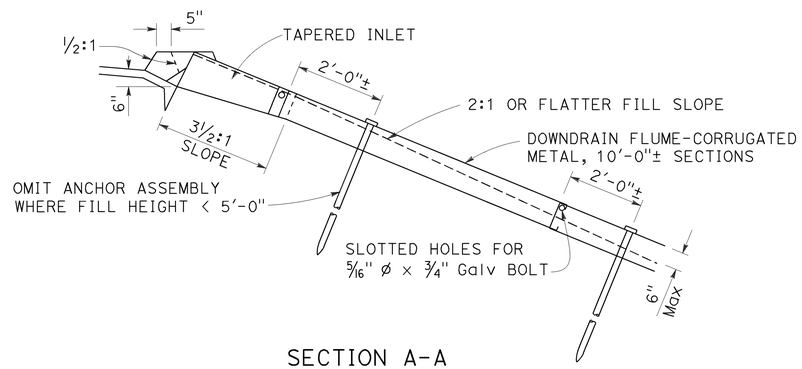

SECTION A-A

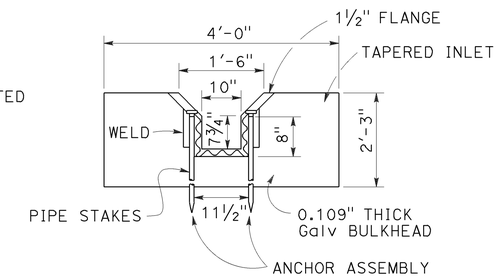

SECTION B-B

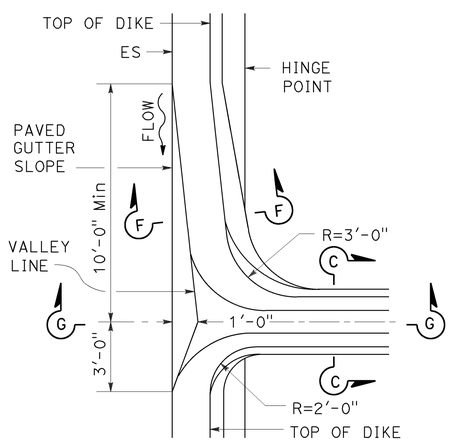

PLAN

MOUNTABLE DIKE

HOT MIX ASPHALT OVERSIDE DRAINS

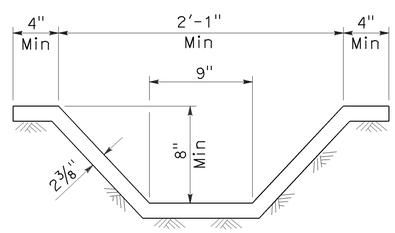

SECTION C-C

See Note 1

NOTE:

1. Cross section of slope ditch may be semicircular, vee or trapezoidal.

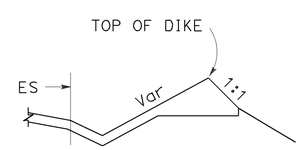

SECTION F-F

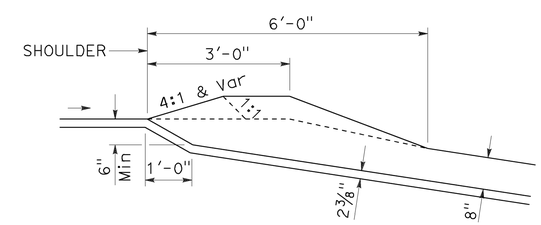

SECTION G-G

STATE OF CALIFORNIA
DEPARTMENT OF TRANSPORTATION

OVERSIDE DRAINS

NO SCALE

RSP D87D DATED OCTOBER 30, 2015 SUPERSEDES STANDARD PLAN D87D DATED MAY 20, 2011 - PAGE 185 OF THE STANDARD PLANS BOOK DATED 2010.

REVISED STANDARD PLAN RSP D87D

2010 REVISED STANDARD PLAN RSP D87D

9-28-15

Dist	COUNTY	ROUTE	POST MILES TOTAL PROJECT	SHEET No.	TOTAL SHEETS
08	SBd	40	R105.2/R106.5	72	110

REGISTERED CIVIL ENGINEER

July 19, 2013
PLANS APPROVAL DATE

REGISTERED PROFESSIONAL ENGINEER
Gurinderpal Bhullar
No. C48815
Exp. 9-30-14
CIVIL
STATE OF CALIFORNIA

THE STATE OF CALIFORNIA OR ITS OFFICERS OR AGENTS SHALL NOT BE RESPONSIBLE FOR THE ACCURACY OR COMPLETENESS OF SCANNED COPIES OF THIS PLAN SHEET.

TO ACCOMPANY PLANS DATED 6-25-15

TABLE 1

TAPER LENGTH CRITERIA AND CHANNELIZING DEVICE SPACING

SPEED (S)	MINIMUM TAPER LENGTH * FOR WIDTH OF OFFSET 12 FEET (W)				MAXIMUM CHANNELIZING DEVICE SPACING		
					X	Y	Z **
	TANGENT 2L	MERGING L	SHIFTING L/2	SHOULDER L/3	TAPER	TANGENT	CONFLICT
mph	ft	ft	ft	ft	ft	ft	ft
20	160	80	40	27	20	40	10
25	250	125	63	42	25	50	12
30	360	180	90	60	30	60	15
35	490	245	123	82	35	70	17
40	640	320	160	107	40	80	20
45	1080	540	270	180	45	90	22
50	1200	600	300	200	50	100	25
55	1320	660	330	220	55	110	27
60	1440	720	360	240	60	120	30
65	1560	780	390	260	65	130	32
70	1680	840	420	280	70	140	35

* - For other offsets, use the following merging taper length formula for L:
For speed of 40 mph or less, $L = WS^2/60$
For speed of 45 mph or more, $L = WS$

Where: L = Taper length in feet
W = Width of offset in feet
S = Posted speed limit, off-peak 85th-percentile speed prior to work starting, or the anticipated operating speed in mph

** - Use for taper and tangent sections where there are no pavement markings or where there is a conflict between existing pavement markings and channelizers (CA).

TABLE 2

LONGITUDINAL BUFFER SPACE AND FLAGGER STATION SPACING

SPEED *	Min D **	DOWNGRADE Min D ***		
		-3%	-6%	-9%
mph	ft	ft	ft	ft
20	115	116	120	126
25	155	158	165	173
30	200	205	215	227
35	250	257	271	287
40	305	315	333	354
45	360	378	400	427
50	425	446	474	507
55	495	520	553	593
60	570	598	638	686
65	645	682	728	785
70	730	771	825	891

* - Speed is posted speed limit, off-peak 85th-percentile speed prior to work starting, or the anticipated operating speed in mph

** - Longitudinal buffer space or flagger station spacing

*** - Use on sustained downgrade steeper than -3 percent and longer than 1 mile.

TABLE 3

ADVANCE WARNING SIGN SPACING

ROAD TYPE	DISTANCE BETWEEN SIGNS *		
	A	B	C
	ft	ft	ft
URBAN - 25 mph OR LESS	100	100	100
URBAN - MORE THAN 25 mph TO 40 mph	250	250	250
URBAN - MORE THAN 40 mph	350	350	350
RURAL	500	500	500
EXPRESSWAY / FREEWAY	1000	1500	2640

* - The distances are approximate, are intended for guidance purposes only, and should be applied with engineering judgment. These distances should be adjusted by the Engineer for field conditions, if necessary, by increasing or decreasing the recommmended distances.

STATE OF CALIFORNIA
DEPARTMENT OF TRANSPORTATION

TRAFFIC CONTROL SYSTEM TABLES FOR LANE AND RAMP CLOSURES

NO SCALE

RSP T9 DATED JULY 19, 2013 SUPERSEDES RSP T9 DATED APRIL 19, 2013 THAT SUPPLEMENTS THE STANDARD PLANS BOOK DATED 2010.

REVISED STANDARD PLAN RSP T9

2010 REVISED STANDARD PLAN RSP T9

4-30-13

Dist	COUNTY	ROUTE	POST MILES TOTAL PROJECT	SHEET No.	TOTAL SHEETS
08	SBd	40	R105.2/R106.5	73	110

REGISTERED CIVIL ENGINEER

April 19, 2013
PLANS APPROVAL DATE

REGISTERED PROFESSIONAL ENGINEER Gurinderpal Bhullar No. C48815 Exp. 9-30-14 CIVIL STATE OF CALIFORNIA

THE STATE OF CALIFORNIA OR ITS OFFICERS OR AGENTS SHALL NOT BE RESPONSIBLE FOR THE ACCURACY OR COMPLETENESS OF SCANNED COPIES OF THIS PLAN SHEET.

TO ACCOMPANY PLANS DATED 6-25-15

NOTES:

See Revised Standard Plan RSP T9 for tables.

Use cone spacing X for taper segment, Y for tangent segment or Z for conflict situations, as approriate, per Table 1, unless X, Y, or Z cone spacing is shown on this sheet.

Unless otherwise specified in the special provisions, all temporary warning signs shall have black legend on fluorescent orange background.

California codes are designated by (CA). Otherwise, Federal (MUTCD) codes are shown.

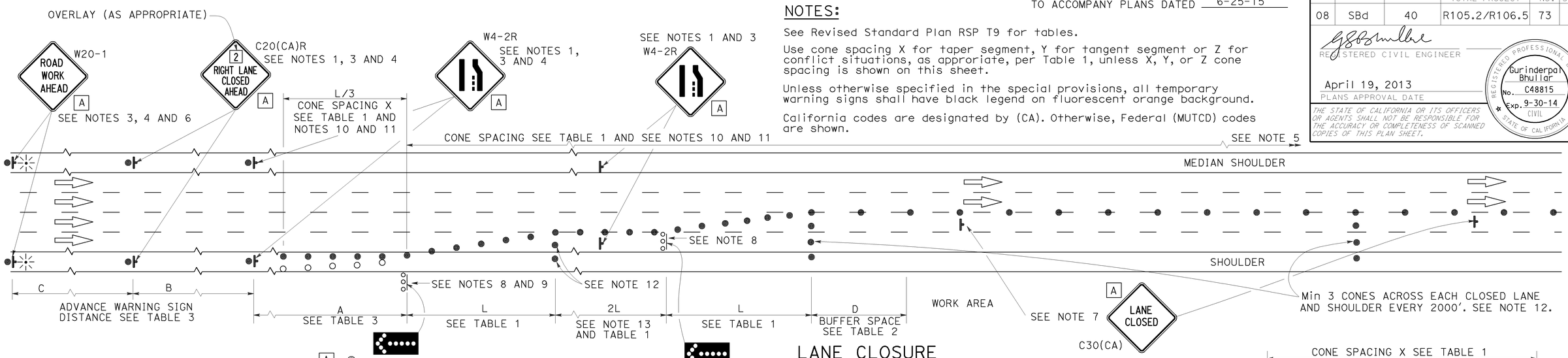

LANE CLOSURE

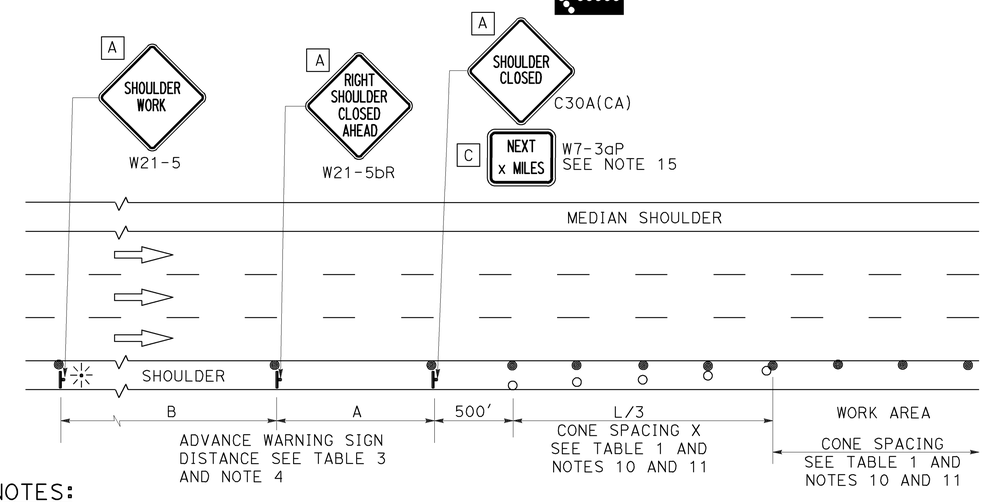

SHOULDER CLOSURE

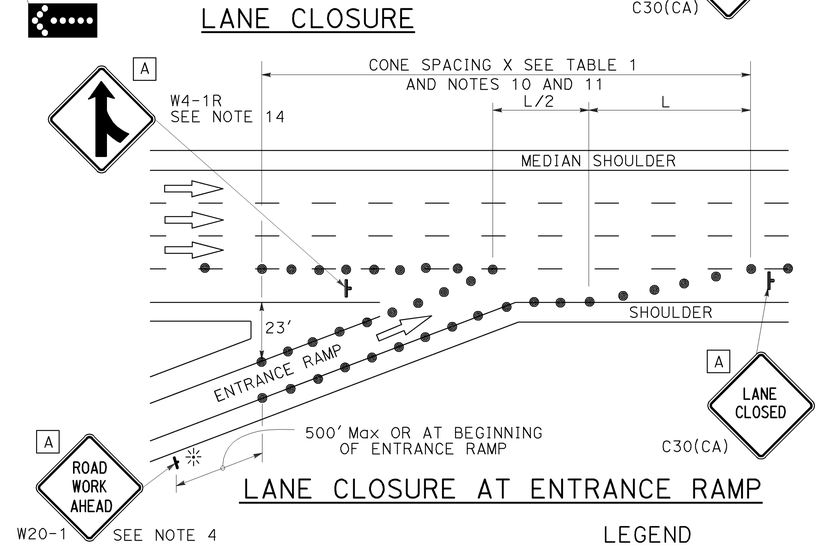

LANE CLOSURE AT ENTRANCE RAMP

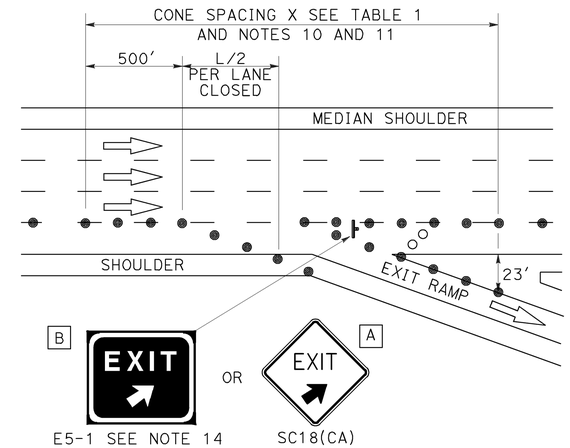

LANE CLOSURE AT EXIT RAMP

NOTES:

1. Median lane closures shall conform to the details as shown except that C20(CA)L and W4-2L signs shall be used.
2. At least one person shall be assigned to provide full time maintenance of traffic control devices for lane closures.
3. Duplicate sign installations are not required:
   a) On opposite shoulder if at least one-half of the available lanes remain open to traffic.
   b) In the median if the width of the median shoulder is less than 8' and the outside lanes are to be closed.
4. Each advance warning sign on each side of the roadway shall be equipped with at least two flags for daytime closure. Each flag shall be at least 16" x 16" in size and shall be orange or fluorescent red-orange in color. Flashing beacons shall be placed at the locations indicated for lane closure during hours of darkness.
5. A G20-2 "END ROAD WORK" sign, with minimum size of 48" x 24" as appropriate, shall be placed at the end of the lane closure unless the end of work area is obvious or ends within a larger project's limits.
6. If the W20-1 sign would follow within 2000' of a stationary W20-1 or G20-1 "ROAD WORK NEXT _____ MILES", use a C20(CA) sign for the first advance warning sign.
7. Place a C30(CA) sign every 2000' throughout length of lane closure.
8. One flashing arrow sign for each lane closed. The flashing arrow signs shall be Type I.
9. A minimum 1500' of sight distance shall be provided where possible for vehicles approaching the first flashing arrow sign. Lane closures shall not begin at top of crest vertical curve or on a horizontal curve.
10. All cones used for lane closures during the hours of darkness shall be fitted with retroreflective bands (or sleeves) as specified in the specifications.
11. Portable delineators, placed at one-half the spacing indicated for traffic cones may be used instead of cones for daytime closures only.
12. Unless otherwise specified in the special provisions, a minimum of 3 cones shall be placed transversely across each closed lane and shoulder at each location where a taper across a traffic lane ends and every 2000' as shown on the "Lane Closure" detail. Two Type II barricades may be used instead of the 3 cones. The transverse alignment of the cones or barricades on the closed shoulder may be shifted from the transverse alignment to provide access to the work.
13. Unless otherwise specified in the special provisions, the 2L tangent shown along lane lines shall be used between the L tapers required for each closed traffic lane.
14. Unless otherwise specified in the special provisions, the E5-1 or SC18(CA) and W4-1 signs shall be used as shown.
15. A W7-3aP "NEXT____ MILES" plaque must be used if theshoulder closure extends beyond the distance that can be perceived by road users.

LEGEND

- TRAFFIC CONE
- TRAFFIC CONE (OPTIONAL TAPER)
- TEMPORARY TRAFFIC CONTROL SIGN
- FLASHING ARROW SIGN (FAS)
- FAS SUPPORT OR TRAILER
- PORTABLE FLASHING BEACON

SIGN PANEL SIZE (Min)

A	48" x 48"
B	72" x 60"
C	36" x 30"

STATE OF CALIFORNIA
DEPARTMENT OF TRANSPORTATION

TRAFFIC CONTROL SYSTEM FOR LANE CLOSURE ON FREEWAYS AND EXPRESSWAYS

NO SCALE

RSP T10 DATED APRIL 19, 2013 SUPERSEDES STANDARD PLAN T10 DATED MAY 20, 2011 - PAGE 237 OF THE STANDARD PLANS BOOK DATED 2010.

REVISED STANDARD PLAN RSP T10

2010 REVISED STANDARD PLAN RSP T10

12-18-12

TO ACCOMPANY PLANS DATED 6-25-15

Dist	COUNTY	ROUTE	POST MILES TOTAL PROJECT	SHEET No.	TOTAL SHEETS
08	SBd	40	R105.2/R106.5	74	110

REGISTERED CIVIL ENGINEER

April 19, 2013
PLANS APPROVAL DATE

REGISTERED PROFESSIONAL ENGINEER Gurinderpal Bhullar No. C48815 Exp. 9-30-14 CIVIL STATE OF CALIFORNIA

THE STATE OF CALIFORNIA OR ITS OFFICERS OR AGENTS SHALL NOT BE RESPONSIBLE FOR THE ACCURACY OR COMPLETENESS OF SCANNED COPIES OF THIS PLAN SHEET.

NOTES: See Revised Standard Plan RSP T9 for tables.

Use cone spacing X for taper segment, Y for tangent segment or Z for conflict situations, as approriate, per Table 1, unless X, Y, or Z cone spacing is shown on this sheet.

Unless otherwise specified in the special provisions, all temporary warning signs shall have black legend on fluorescent orange background.

California codes are designated by (CA). Otherwise, Federal (MUTCD) codes are shown.

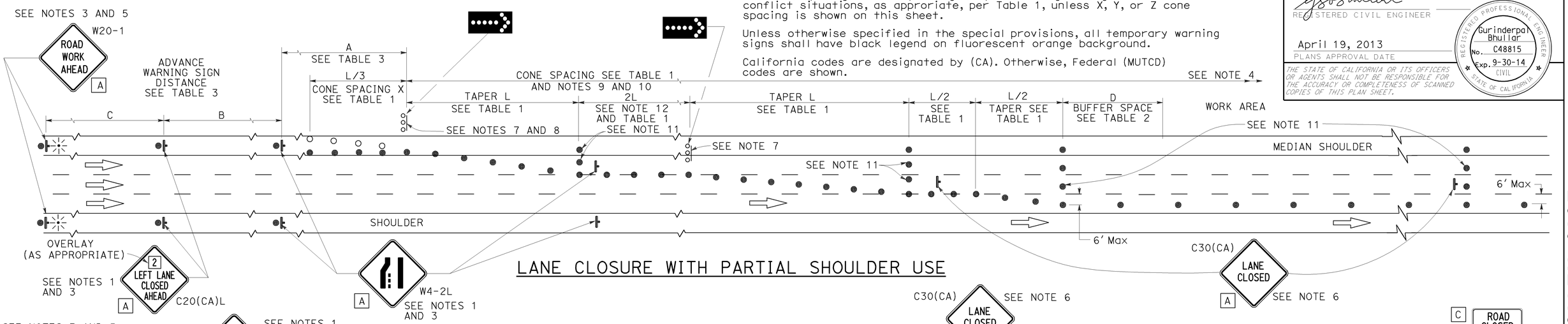

LANE CLOSURE WITH PARTIAL SHOULDER USE

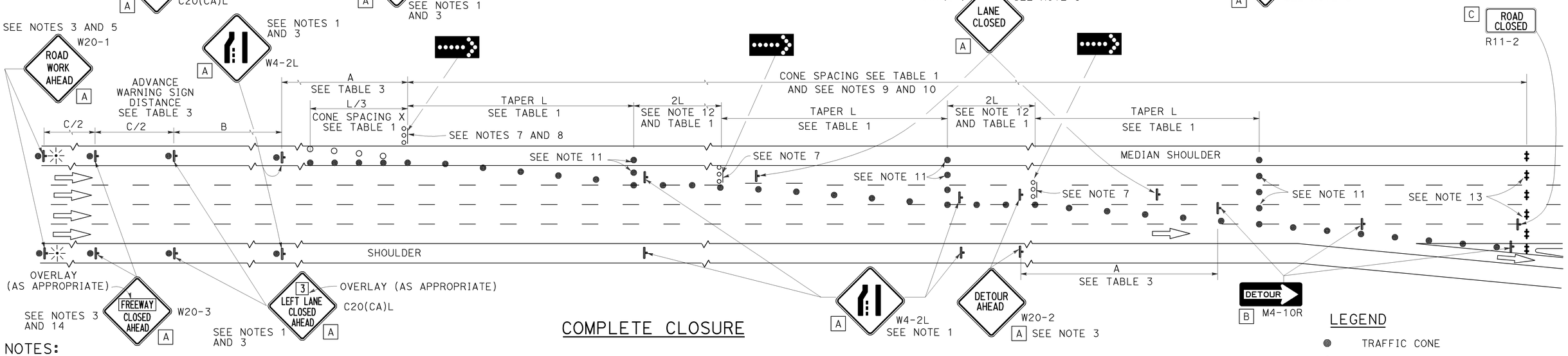

COMPLETE CLOSURE

NOTES:

1. Lane closures on the right side using partial median shoulder as a traffic lane shall conform to the details as shown except that C20(CA)R and W4-2R signs shall be used.
2. At least one person shall be assigned to provide full time maintenance of traffic control devices for lane closures.
3. Each advance warning sign on each side of the roadway shall be equipped with at least two flags for daytime closure. Each flag shall be at least 16" X 16" in size and shall be orange or fluorescent red-orange in color. Flashing beacons shall be placed at the locations indicated for lane closure during hours of darkness.
4. A G20-2 "END ROAD WORK" sign, with minimum size of 48" x 24" as appropriate, shall be placed at the end of the lane closure unless the end of work area is obvious or ends within a larger project's limits.
5. If the W20-1 sign would follow within 2000' of a stationary W20-1 or G20-1 "ROAD WORK NEXT ___ MILES", use a C20(CA) sign for the first advance warning sign.
6. Place a C30(CA) sign every 2000' throughout length of lane closure.
7. One flashing arrow sign for each lane closed. The flashing arrow signs shall be Type I.
8. A minimum 1500' of sight distance shall be provided where possible for vehicles approaching the first flashing arrow sign. Lane closures shall not begin at the top of crest vertical curve or on a horizontal curve.
9. All cones used for lane closures during the hours of darkness shall be fitted with retroreflective bands (or sleeves) as specified in the specifications.
10. Portable delineators, placed at one-half the spacing indicated for traffic cones, may be used instead of cones for daytime closures only.
11. Unless otherwise specified in the special provisions, a minimum of 3 cones shall be placed transversely across each closed lane and shoulder at each location where a taper across a traffic lane ends and every 2000' as shown on the "Lane Closure With Partial Shoulder Use" detail. Two Type II barricades may be used instead of the 3 cones. The transverse alignment of the cones or barricades on the closed shoulder may be shifted from the transverse alignment to provide access to the work.
12. Unless otherwise specified in the special provisions, the 2L tangent shown along lane lines shall be used between the L tapers required for each closed traffic lane.
13. A minimum of Two Type II or III barricades shall be placed across each closed lane and shoulder at the location shown and every 2000' within the complete closure area. Within the complete closure area, the transverse alignment of the barricades on the closed shoulder may be shifted from the transverse alignment to provide access to the work.
14. When specified in the special provisions, a W20-2 "DETOUR AHEAD" sign is to be used in place of the W20-3 "FREEWAY CLOSED AHEAD" sign.

SIGN PANEL SIZE (Min)

A	48" x 48"
B	48" x 18"
C	48" x 30"

LEGEND

- TRAFFIC CONE
- TRAFFIC CONE (OPTIONAL TAPER)
- TEMPORARY TRAFFIC CONTROL SIGN
- FLASHING ARROW SIGN (FAS)
- FAS SUPPORT OR TRAILER
- PORTABLE FLASHING BEACON

STATE OF CALIFORNIA
DEPARTMENT OF TRANSPORTATION

TRAFFIC CONTROL SYSTEM FOR LANE CLOSURES ON FREEWAYS AND EXPRESSWAYS

NO SCALE

RSP T10A DATED APRIL 19, 2013 SUPERSEDES STANDARD PLAN T10A DATED MAY 20, 2011 - PAGE 238 OF THE STANDARD PLANS BOOK DATED 2010.

REVISED STANDARD PLAN RSP T10A

2010 REVISED STANDARD PLAN RSP T10A

12-18-12

Dist	COUNTY	ROUTE	POST MILES TOTAL PROJECT	SHEET No.	TOTAL SHEETS
08	SBd	40	R105.2/R106.5	75	110

REGISTERED CIVIL ENGINEER

April 19, 2013
PLANS APPROVAL DATE

REGISTERED PROFESSIONAL ENGINEER
Gurinderpal Bhullar
No. C48815
Exp. 9-30-14
CIVIL
STATE OF CALIFORNIA

THE STATE OF CALIFORNIA OR ITS OFFICERS OR AGENTS SHALL NOT BE RESPONSIBLE FOR THE ACCURACY OR COMPLETENESS OF SCANNED COPIES OF THIS PLAN SHEET.

TO ACCOMPANY PLANS DATED 6-25-15

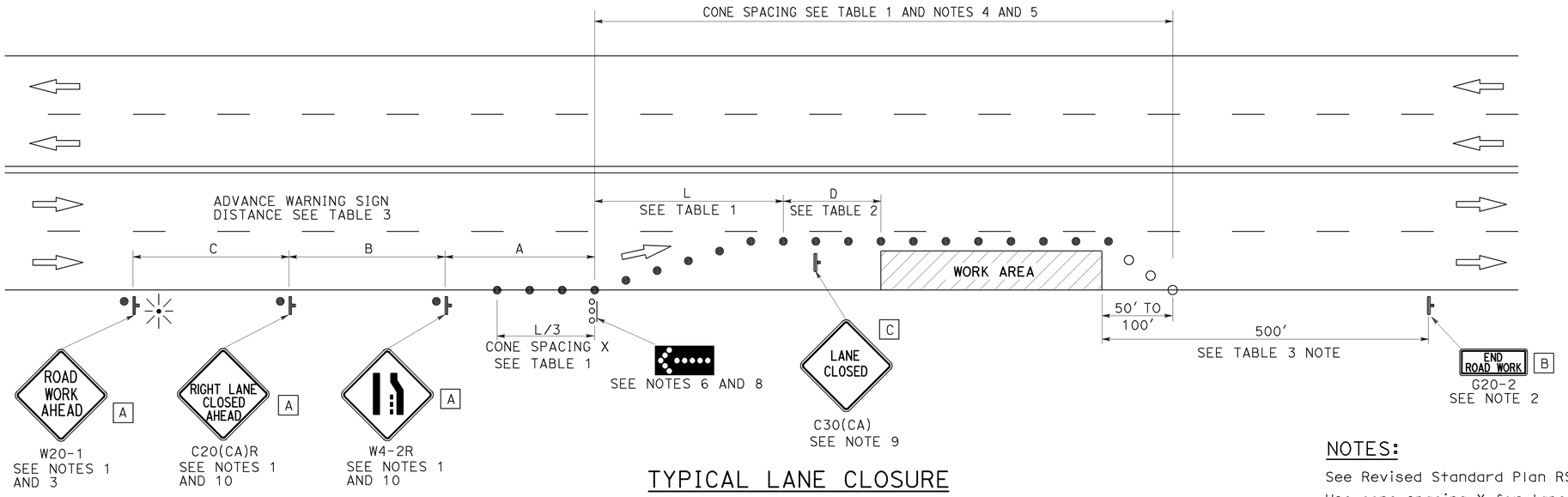

TYPICAL LANE CLOSURE

NOTES:

See Revised Standard Plan RSP T9 for tables.

Use cone spacing X for taper segment, Y for tangent segment or Z for conflict situations, as approriate, per Table 1, unless X, Y, or Z cone spacing is shown on this sheet.

Unless otherwise specified in the special provisions, all temporary warning signs shall have black legend on fluorescent orange background.

California codes are designated by (CA). Otherwise, Federal (MUTCD) codes are shown.

NOTES:

1. Each advance warning sign shall be equipped with at least two flags for daytime closure. Each flag shall be at least 16" x 16" in size and shall be orange or fluorescent red-orange in color. Flashing beacons shall be placed at the locations indicated for lane closure during hours of darkness.
2. A G20-2 "END ROAD WORK" sign, as appropriate, shall be placed at the end of the lane closure unless the end of work area is obvious, or ends within a larger project's limits.
3. If the W20-1 sign would follow within 2000' of a stationary W20-1 or G20-1 "ROAD WORK NEXT _____ MILES", use a C20(CA) sign for the first advance warning sign.
4. All cones used for lane closures during the hours of darkness shall be fitted with retroreflective bands (or sleeves) as specified in the specifications.
5. Portable delineators, placed at one-half the spacing indicated for traffic cones, may be used instead of cones for daytime closures only.
6. Flashing arrow sign shall be either Type I or Type II.
7. For approach speeds over 50 mph, use the "Traffic Control System for Lane Closure On Freeways And Expressways" plan for lane closure details and requirements.
8. A minimum 1500' of sight distance shall be provided where possible for vehicles approaching the first flashing arrow sign. Lane closures shall not begin at the top of crest vertical curve or on a horizontal curve.
9. Place a C30(CA) sign every 2000' throughout length of lane closure.
10. Median lane closures shall conform to the details as shown except that C20(CA)L and W4-2L signs shall be used.
11. At least one person shall be assigned to provide full time maintenance of traffic control devices for lane closure unless, otherwise directed by the Engineer.

LEGEND

- ● TRAFFIC CONE
- ○ TRAFFIC CONE (OPTIONAL TAPER)
- TEMPORARY TRAFFIC CONTROL SIGN
- FLASHING ARROW SIGN (FAS)
- FAS SUPPORT OR TRAILER
- PORTABLE FLASHING BEACON

SIGN PANEL SIZE (Min)

A	48" x 48"
B	36" x 18"
C	30" x 30"

STATE OF CALIFORNIA
DEPARTMENT OF TRANSPORTATION

TRAFFIC CONTROL SYSTEM FOR LANE CLOSURE ON MULTILANE CONVENTIONAL HIGHWAYS

NO SCALE

RSP T11 DATED APRIL 19, 2013 SUPERSEDES STANDARD PLAN T11 DATED MAY 20, 2011 - PAGE 239 OF THE STANDARD PLANS BOOK DATED 2010.

REVISED STANDARD PLAN RSP T11

2010 REVISED STANDARD PLAN RSP T11

4-2-13

Dist	COUNTY	ROUTE	POST MILES TOTAL PROJECT	SHEET No.	TOTAL SHEETS
08	SBd	40	R105.2/R106.5	76	110

Devinder Singh
REGISTERED CIVIL ENGINEER

October 17, 2014
PLANS APPROVAL DATE

REGISTERED PROFESSIONAL ENGINEER
Devinder Singh
No. C50470
Exp. 6-30-15
CIVIL
STATE OF CALIFORNIA

THE STATE OF CALIFORNIA OR ITS OFFICERS OR AGENTS SHALL NOT BE RESPONSIBLE FOR THE ACCURACY OR COMPLETENESS OF SCANNED COPIES OF THIS PLAN SHEET.

TO ACCOMPANY PLANS DATED 6-25-15

NOTES:

See Revised Standard Plan RSP T9 for tables.

Use cone spacing X for taper segment, Y for tangent segment or Z for conflict situations, as approriate, per Table 1, unless X, Y, or Z cone spacing is shown on this sheet.

Unless otherwise specified in the special provisions, all temporary warning signs shall have black legend on fluorescent orange background.

California codes are designated by (CA). Otherwise, Federal (MUTCD) codes are shown.

TYPICAL LANE CLOSURE WITH REVERSIBLE CONTROL

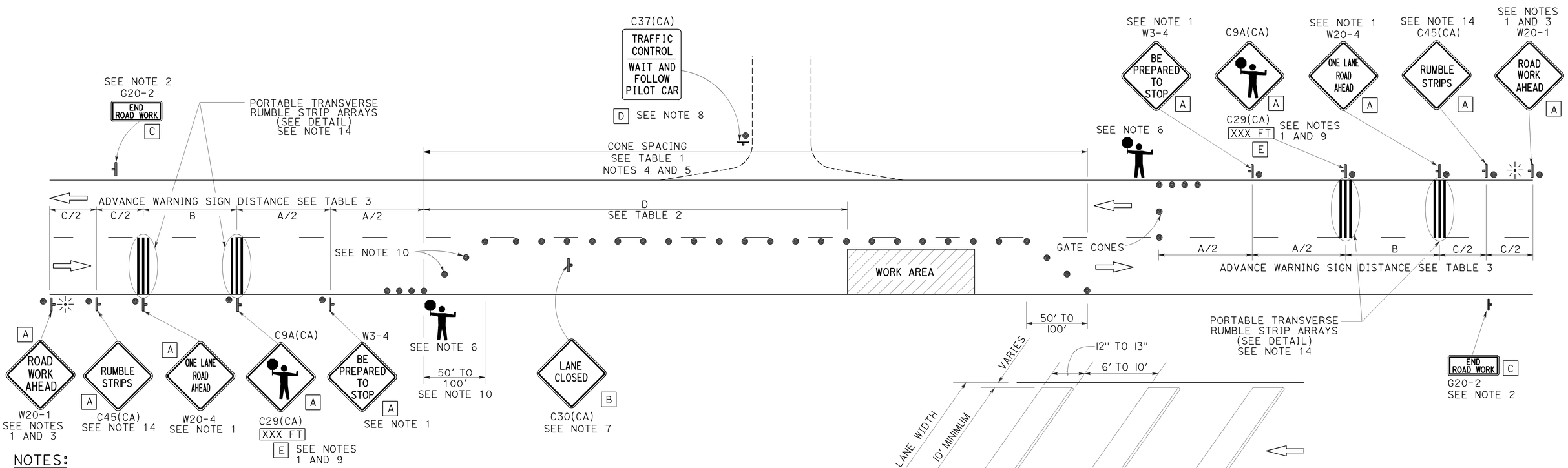

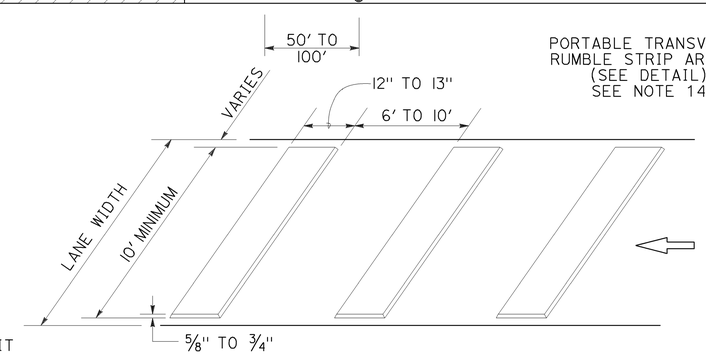

PORTABLE TRANSVERSE RUMBLE STRIP ARRAY DETAIL

NOTES:

1. Each advance warning sign in each direction of travel shall be equipped with at least two flags for daytime closure. Each flag shall be at least 16" x 16" in size and shall be orange or fluorescent red-orange in color. Flashing beacons shall be placed at the locations indicated for lane closure during hours of darkness.
2. A G20-2 "END ROAD WORK" sign, as appropriate, shall be placed at the end of the lane control unless the end of work area is obvious, or ends within a larger project's limits.
3. If the W20-1 sign would follow within 2000' of a stationary W20-1 or G20-1 "ROAD WORK NEXT _____ MILES", use a W20-4 sign for the first advance warning sign.
4. All cones used for lane closures during the hours of darkness shall be fitted with retroreflective bands (or sleeves) as specified in the specifications.
5. Portable delineators, placed at one-half the spacing indicated for traffic cones, may be used instead of cones for daytime closures only.
6. Additional advance flaggers may be required. Flagger should stand in a conspicuous place, be visible to approaching traffic as well as approaching vehicles after the first vehicle has stopped. During the hours of darkness, the flagging-station and flagger shall be illuminated and clearly visible to approaching traffic. The illumination footprint of the lighting on the ground shall be at least 20' in diameter. Place a minimum of four cones at 50' intervals in advance of flagger station as shown.
7. Place C30(CA) "LANE CLOSED" sign at 500' to 1000' intervals throughout extended work areas. They are optional if the work area is visible from the flagger station.
8. When a pilot car is used, place a C37(CA) "TRAFFIC CONTROL-WAIT AND FOLLOW PILOT CAR" sign with black legend on white background at all intersections, driveways and alleys without a flagger within traffic control area. Signs shall be clean and visible at all times. Where traffic can not be effectively self-regulated, at least one flagger shall be used at each intersection within traffic control area.
9. An optional C29(CA) sign may be placed below the C9A(CA) sign.
10. Either traffic cones or barricades shall be placed on the taper. Barricades shall be Type I, II, or III.
11. The color of the portable transverse rumble strips shall be black or orange. Use 2 arrays, each array shall consist of 3 rumble strips.
12. Portable transverse rumble strips shall not be placed on sharp horizontal or vertical curves nor shall they be placed through pedestrian crossings.
13. If the portable transverse rumble strips become out of alignment (skewed) by more than 6 inches, measured from one end to the other, they shall be readjusted to bring the placement back to the original location.
14. Portable transverse rumble strips are not required if any one of the following conditions is satisfied:
    A. Work duration occupies a location for four hours or less
    B. Posted speed limit is below 45 MPH
    C. Work is of emergency nature
    D. Work zone is in snow or icy weather conditions

LEGEND

- TRAFFIC CONE
- TEMPORARY TRAFFIC CONTROL SIGN
- PORTABLE FLASHING BEACON
- FLAGGER

SIGN PANEL SIZE (Min)

A	48" x 48"
B	30" x 30"
C	36" x 18"
D	36" x 42"
E	20" x 7"

STATE OF CALIFORNIA
DEPARTMENT OF TRANSPORTATION

TRAFFIC CONTROL SYSTEM FOR LANE CLOSURE ON TWO LANE CONVENTIONAL HIGHWAYS

NO SCALE

RSP T13 DATED OCTOBER 17, 2014 SUPERSEDES RSP T13 DATED JULY 18, 2014 AND RSP T13 DATED APRIL 19, 2013 AND STANDARD PLAN T13 DATED MAY 20, 2011 - PAGE 241 OF THE STANDARD PLANS BOOK DATED 2010.

REVISED STANDARD PLAN RSP T13

2010 REVISED STANDARD PLAN RSP T13

9-26-14

Dist	COUNTY	ROUTE	POST MILES TOTAL PROJECT	SHEET No.	TOTAL SHEETS
08	SBd	40	R105.2/R106.5	77	110

REGISTERED CIVIL ENGINEER

April 19, 2013
PLANS APPROVAL DATE

REGISTERED PROFESSIONAL ENGINEER Gurinderpal Bhullar No. C48815 Exp. 9-30-14 CIVIL STATE OF CALIFORNIA

THE STATE OF CALIFORNIA OR ITS OFFICERS OR AGENTS SHALL NOT BE RESPONSIBLE FOR THE ACCURACY OR COMPLETENESS OF SCANNED COPIES OF THIS PLAN SHEET.

TO ACCOMPANY PLANS DATED 6-25-15

TYPICAL RAMP CLOSURES

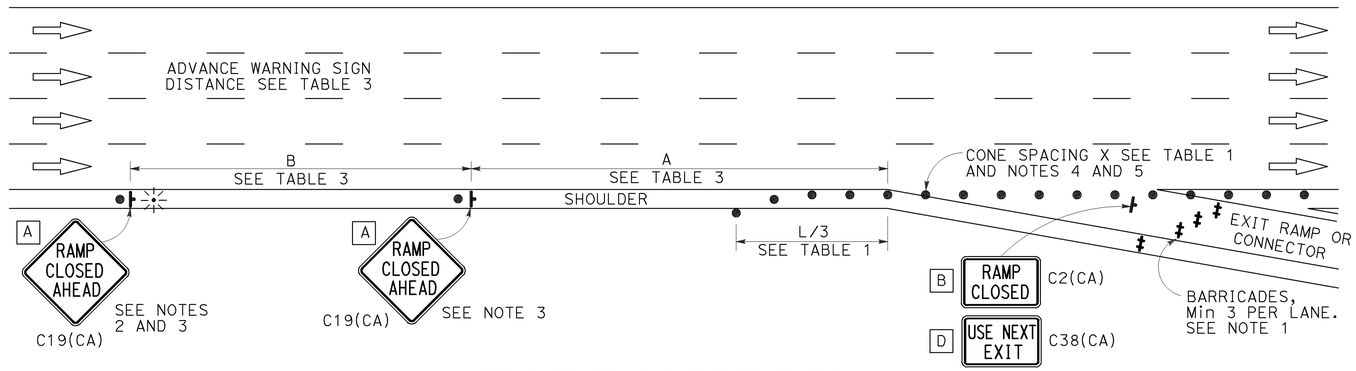

EXIT RAMP OR CONNECTOR

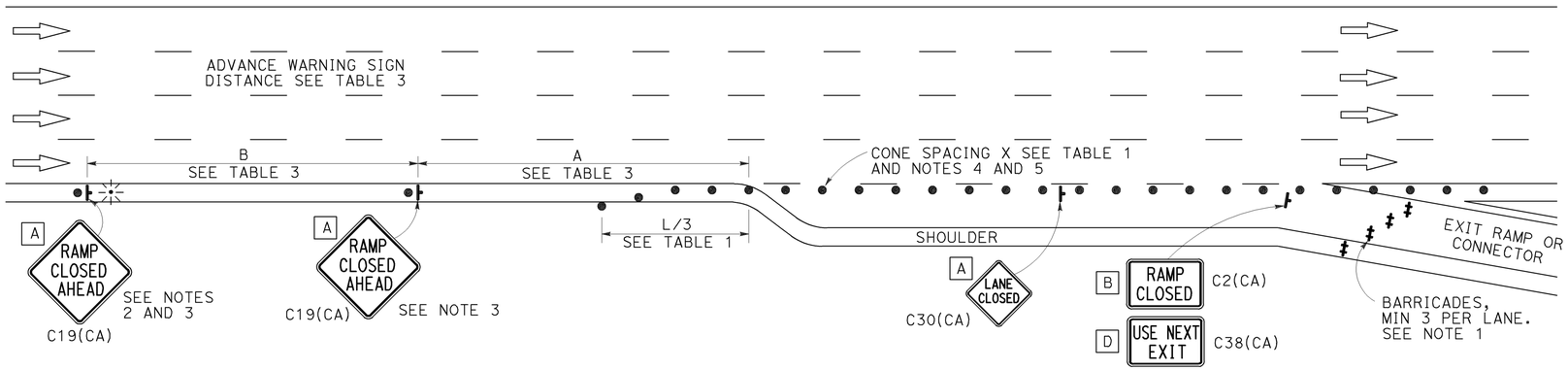

EXIT RAMP OR CONNECTOR WITH ADDITIONAL LANE

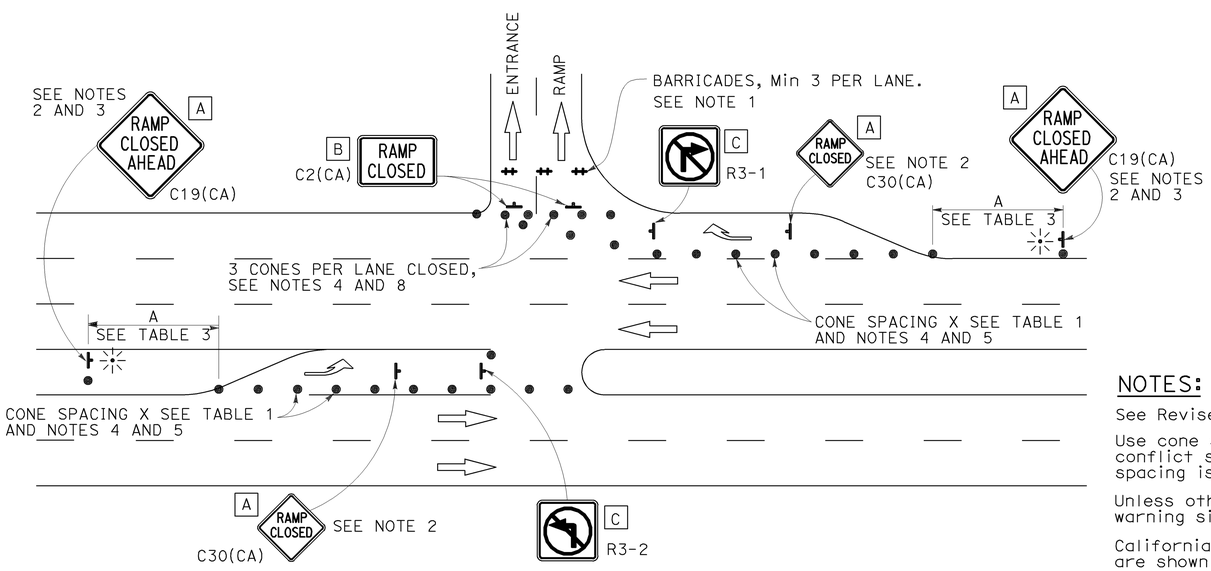

ENTRANCE RAMP WITH TURNING POCKETS

SIGN PANEL SIZE (Min)

- A 48" × 48"
- B 48" × 30"
- C 36" × 36"
- D 48" × 36"

LEGEND

- TRAFFIC CONE
- TEMPORARY TRAFFIC CONTROL SIGN
- BARRICADES
- PORTABLE FLASHING BEACON

NOTES:

1. Barricades shall be Type I, II, or III for closures lasting one week or less and Type III for closures lasting longer than one week.
2. In addition to placing the C19(CA) "RAMP CLOSED AHEAD" and C30(CA) "RAMP CLOSED" signs, black on orange overlay plates with the word "CLOSED" may be mounted, as directed by the Engineer, on all guide signs that refer to the closed ramp. The letter size on the overlay shall be the same as the guide sign.
3. Each advance C19(CA) "RAMP CLOSED AHEAD" sign shall be equipped with at least two flags for daytime closure. Each flag shall be at least 16" × 16" in size and shall be orange or fluorescent red-orange in color. A flashing beacon shall be placed on top of the first C19(CA) sign during hours of darkness.
4. All cones used for ramp closures during the hours of darkness shall be fitted with retroreflective bands (or sleeves) as specified in the specifications.
5. Portable delineators, placed at one-half the spacing indicated for traffic cones, may be used instead of cones for daytime ramp closures only.
6. At least one person shall be assigned to provide full time maintenance of traffic control devices, unless otherwise directed by the Engineer.
7. The existing "EXIT" signs shall be covered during ramp closures.
8. A minimum of 3 cones shall be placed transversely across each closed lane and shoulder.

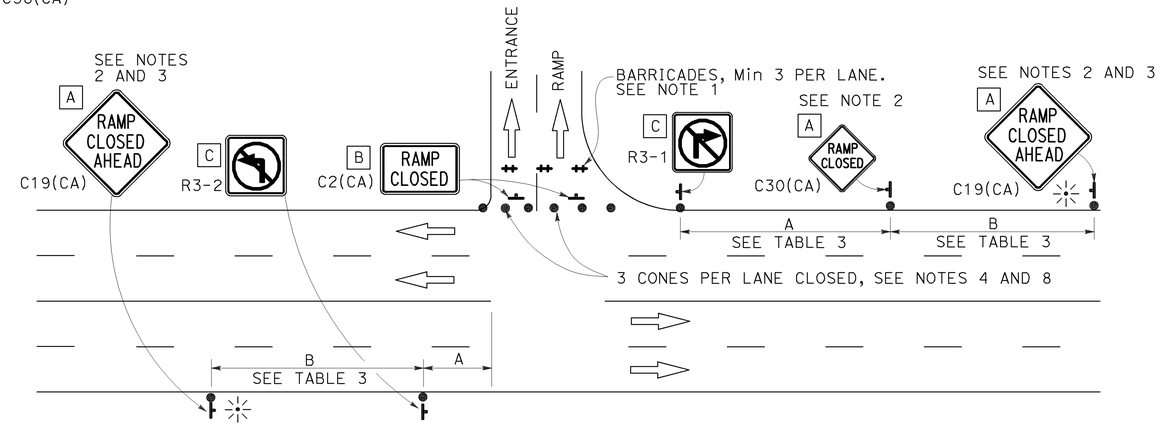

ENTRANCE RAMP WITHOUT TURNING POCKETS

NOTES:

See Revised Standard Plan RSP T9 for tables.

Use cone spacing X for taper segment, Y for tangent segment or Z for conflict situations, as approriate, per Table 1, unless X, Y, or Z cone spacing is shown on this sheet.

Unless otherwise specified in the special provisions, all temporary warning signs shall have black legend on fluorescent orange background.

California codes are designated by (CA). Otherwise, Federal (MUTCD) codes are shown.

STATE OF CALIFORNIA
DEPARTMENT OF TRANSPORTATION

TRAFFIC CONTROL SYSTEM FOR RAMP CLOSURE

NO SCALE

RSP T14 DATED APRIL 19, 2013 SUPERSEDES STANDARD PLAN T14
DATED MAY 20, 2011 - PAGE 242 OF THE STANDARD PLANS BOOK DATED 2010.

REVISED STANDARD PLAN RSP T14

2010 REVISED STANDARD PLAN RSP T14

12-18-12

Dist	COUNTY	ROUTE	POST MILES TOTAL PROJECT	SHEET No.	TOTAL SHEETS
08	SBd	40	R105.2/R106.5	78	110

REGISTERED CIVIL ENGINEER

October 30, 2015
PLANS APPROVAL DATE

REGISTERED PROFESSIONAL ENGINEER Efthymios Delis No. C51434 Exp. 6-30-17 CIVIL STATE OF CALIFORNIA

THE STATE OF CALIFORNIA OR ITS OFFICERS OR AGENTS SHALL NOT BE RESPONSIBLE FOR THE ACCURACY OR COMPLETENESS OF SCANNED COPIES OF THIS PLAN SHEET.

TO ACCOMPANY PLANS DATED 6-25-15

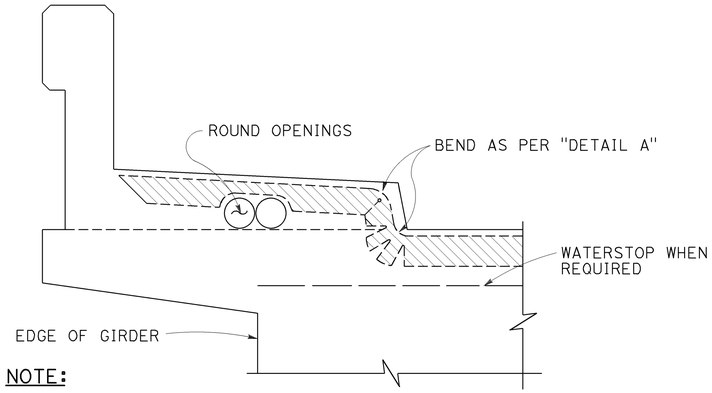

NOTE:
Type "B" seal shown. Type "A" seals to comform to the general path of seal shown, cuts for bending not required. Bend type "A" seals 3" up into curb or barrier rail on only the low end of the seal.

CONCRETE BARRIER AND SIDEWALK

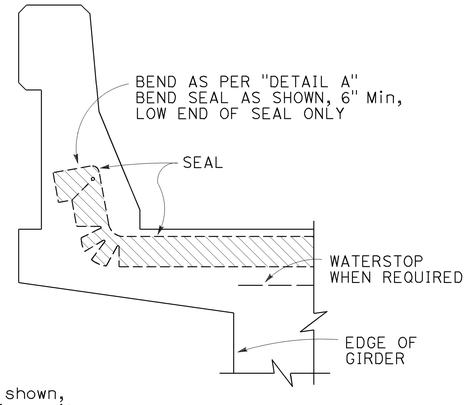

CONCRETE BARRIER

JOINT SEALS DETAILS

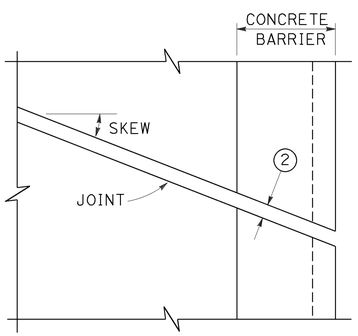

PLAN OF JOINT (SKEW ≤ 20°)

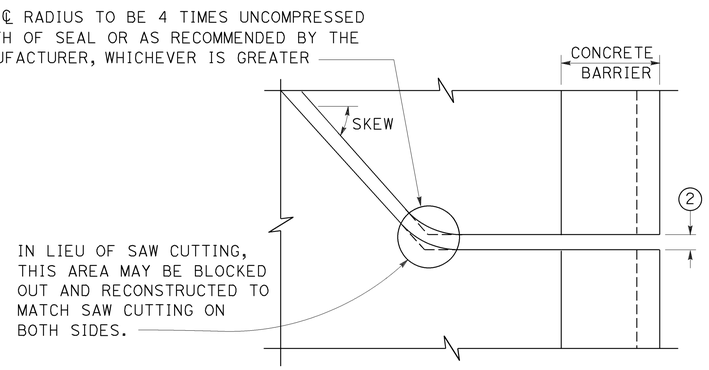

PLAN OF JOINT (SKEW > 20°)

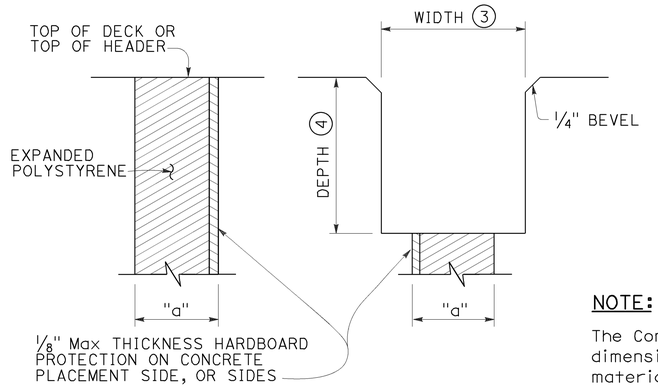

FORMING DETAIL SAWCUT DETAIL

NOTE:
The Contractor shall verify all controlling field dimensions before ordering or fabricatiing any material.

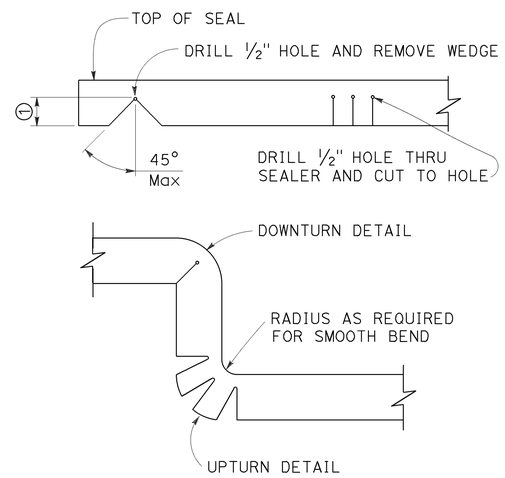

DETAIL A

NOTES:

1. Make smooth cuts from the bottom of seal to 1½" clear of top leaving at least one complete cell between the top of the cut and top of the seal. When necessary cut back of seal to clear conduit and round openings.
2. Opening in barrier to match width of sawn deck joint.
3. Sawcut groove widths shall be as ordered by the Engineer.
4. Depth of sawcut: Type A - Depth to be 2" minimum.
   Type B - Depth to be equal to or greater than the depth of seal measured along the contact surface, when compressed to minimum width position (W_2) plus dimensions shown.
5. MR (movement rating) as shown on other plan sheets.
6. Other depths must be approved by the Engineer.
7. A sidewalk joint shall be covered by an expansion joint armor.

DIMENSIONS "a" OF JOINT REQUIRED

MOVEMENT RATING (MR) 5	BRIDGE TYPE	"a" DIMENSION DECK CONCRETE PLACED		
		WINTER	FALL-SPRING	SUMMER
2"	ALL EXCEPT CIP/PS	1½"	1¼"	¾"
	CIP/PS	1¼"	1"	½"
1½"	ALL EXCEPT CIP/PS	1¼"	1"	½"
	CIP/PS	1"	¾"	½"
1"	ALL EXCEPT CIP/PS	1"	¾"	½"
	CIP/PS	¾"	½"	½"
½"	ALL EXCEPT CIP/PS	¾"	¾"	½"
	CIP/PS	½"	½"	½"

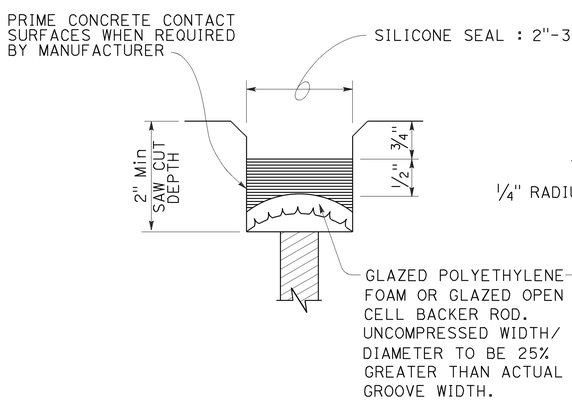

TYPE A SEAL
Movement rating : Silicone = 1" Max

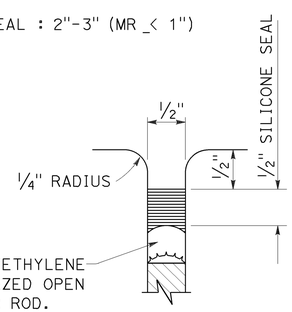

TYPE AL SEAL
Longitudinal joints only

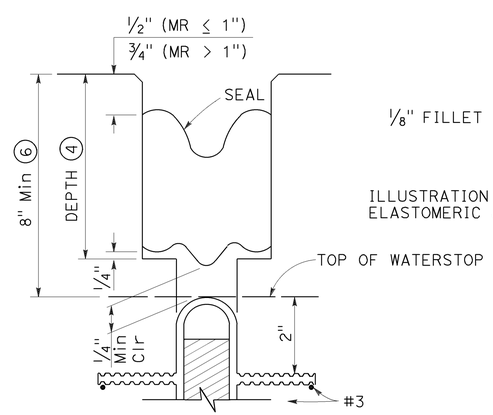

TYPE B JOINT SEAL
IN MINIMUM WIDTH POSITION (W_2)

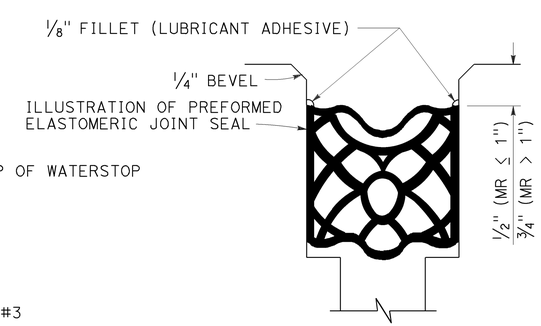

TYPE B SEAL
Movement Rating ≤ 2"

STATE OF CALIFORNIA
DEPARTMENT OF TRANSPORTATION

JOINT SEALS (MAXIMUM MOVEMENT RATING = 2")

NO SCALE

RSP B6-21 DATED OCTOBER 30, 2015 SUPERSEDES STANDARD PLAN B6-21 DATED MAY 20, 2011 - PAGE 283 OF THE STANDARD PLANS BOOK DATED 2010.

REVISED STANDARD PLAN RSP B6-21

2010 REVISED STANDARD PLAN RSP B6-21

8-18-15

Dist	COUNTY	ROUTE	POST MILES TOTAL PROJECT	SHEET No.	TOTAL SHEETS
08	SBd	40	R105.2/R106.5	79	110

REGISTERED CIVIL ENGINEER

November 15, 2013
PLANS APPROVAL DATE

REGISTERED PROFESSIONAL ENGINEER
Tillat Satter
No. C42892
Exp. 3-31-14
CIVIL
STATE OF CALIFORNIA

THE STATE OF CALIFORNIA OR ITS OFFICERS OR AGENTS SHALL NOT BE RESPONSIBLE FOR THE ACCURACY OR COMPLETENESS OF SCANNED COPIES OF THIS PLAN SHEET.

TO ACCOMPANY PLANS DATED 6-25-15

2010 REVISED STANDARD PLAN RSP B11-56

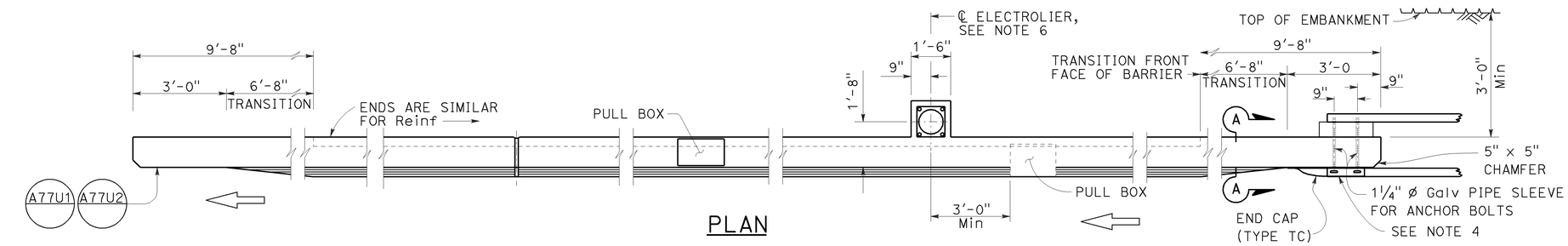

PLAN

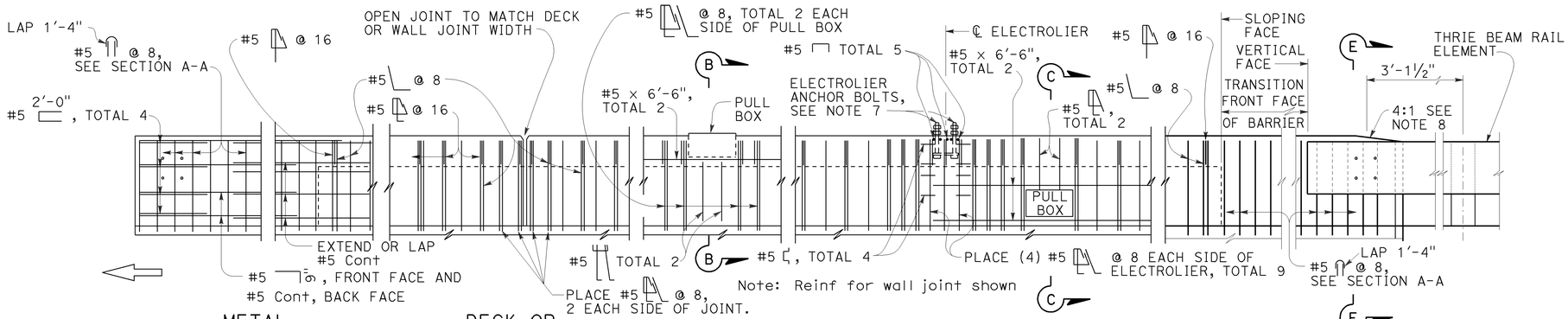

ELEVATION

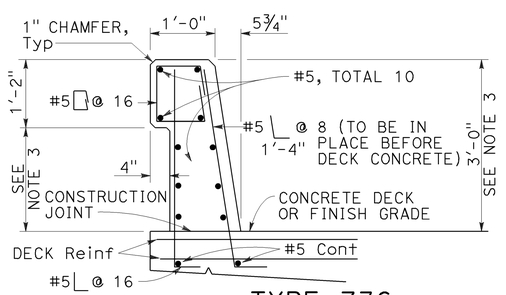

TYPE 736

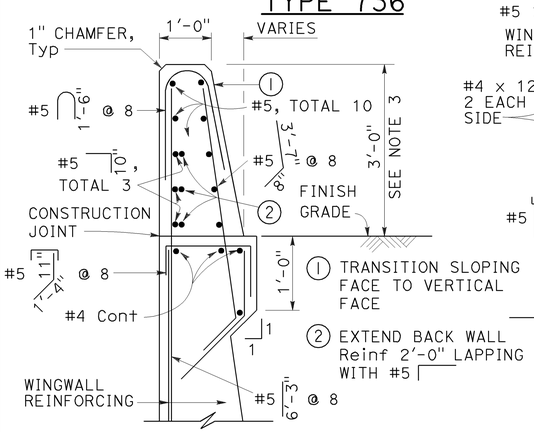

SECTION A-A

Details shown for barrier anchorage to Type 736A. Anchorgae for barrier Types 736 and 736B are similar to their respective details.

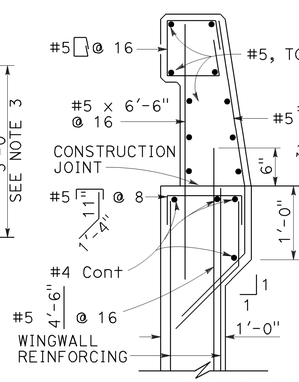

TYPE 736A

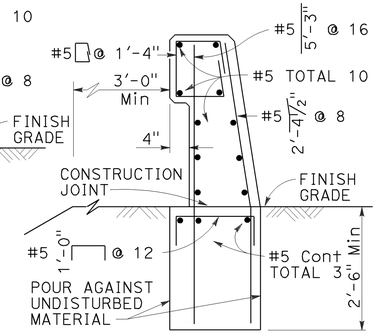

TYPE 736B

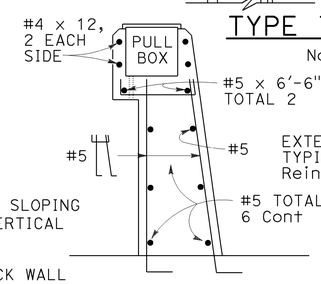

SECTION B-B

Note: Types 736A & 736B are similar to Type 736 except as noted

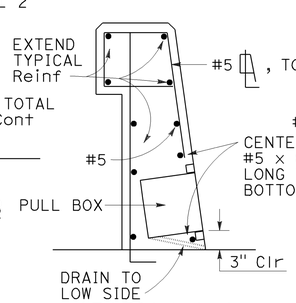

SECTION C-C

See Notes

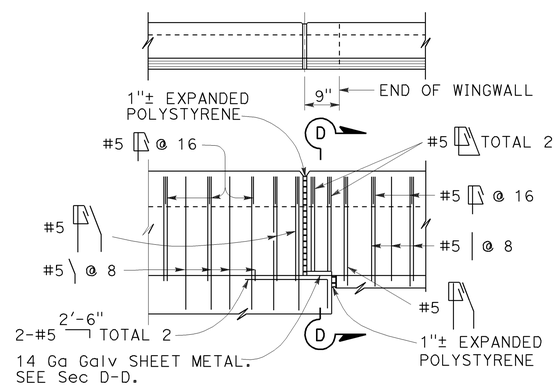

TYPE 736A TYPE 736B

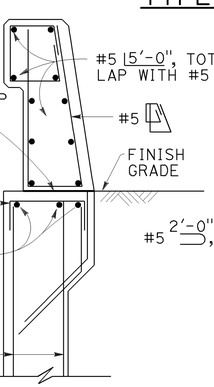

SECTION D-D

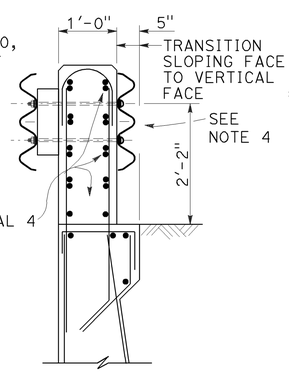

SECTION E-E

See Notes

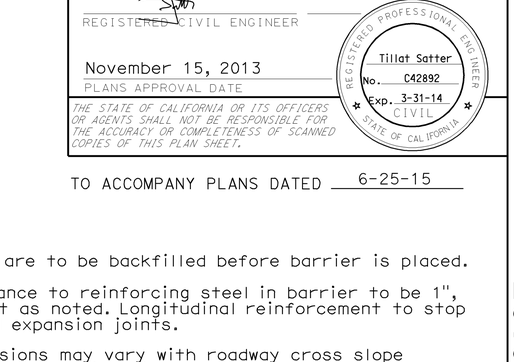

PEDESTAL ELEVATION

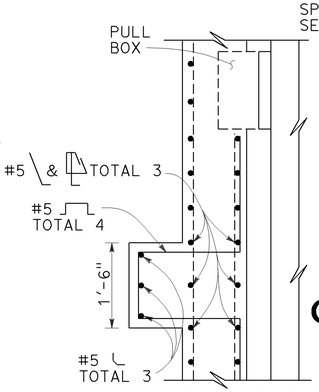

SECTION F-F

STATE OF CALIFORNIA
DEPARTMENT OF TRANSPORTATION

CONCRETE BARRIER TYPE 736

NO SCALE

NOTES:

1. Walls are to be backfilled before barrier is placed.
2. Clearance to reinforcing steel in barrier to be 1", except as noted. Longitudinal reinforcement to stop at all expansion joints.
3. Dimensions may vary with roadway cross slope and with certain thickness of surfacing. See Project Plans.
4. For typical metal railing connection details not shown, see Revised Standard Plans RSP A77U1 and RSP A77U2.
5. See Standard Plans ES-9A, ES-9B, ES-9C, ES-9D and ES-9E for electrical details. The maximum number of conduits in the barrier is limited to two 2" conduits along with one 3" conduit. When a 3" conduit is used, it is restricted to the base of the barrier.
6. For electrolier mounting details, See Standard Plans ES-6A and ES-6B.
7. Minimum concrete edge distance, to the reinforcing shown, shall be maintained. Edge distance may be adjusted to accommodate increase in concrete cover for architectual treatment.
8. Taper the top of the end of the bridge railing at 4:1 to match the top elevation of the thrie beam rail element.

RSP B11-56 DATED NOVEMBER 15, 2013 SUPERSEDES RSP B11-56 DATED JULY 19, 2013 AND STANDARD PLAN B11-56 DATED MAY 20, 2011 - PAGE 298 OF THE STANDARD PLANS BOOK DATED 2010.

REVISED STANDARD PLAN RSP B11-56

10-4-13

DIST	COUNTY	ROUTE	POST MILES TOTAL PROJECT	SHEET No.	TOTAL SHEETS
08	SBd	40	R105.2/R106.5	80	110

REGISTERED CIVIL ENGINEER 01-29-15 DATE

6-25-15
PLANS APPROVAL DATE

REGISTERED PROFESSIONAL ENGINEER RUI WANG No. C52910 Exp. 12/31/16 CIVIL STATE OF CALIFORNIA

The State of California or its officers or agents shall not be responsible for the accuracy or completeness of electronic copies of this plan sheet.

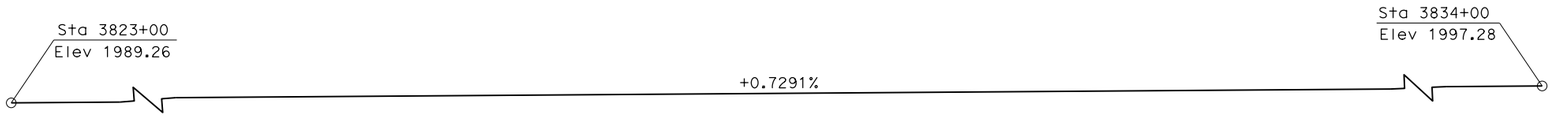

PROFILE GRADE
NO SCALE

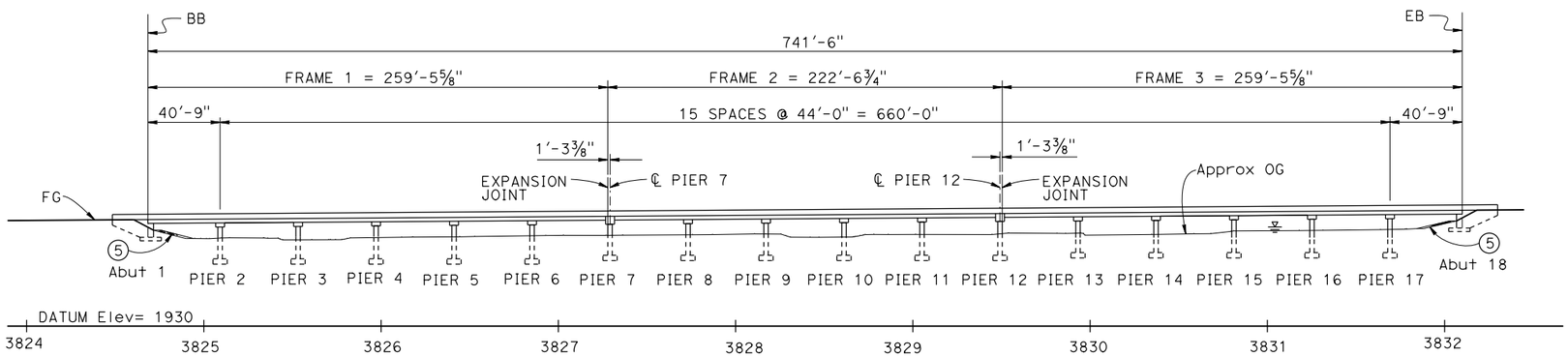

ELEVATION
1" = 40'-0"

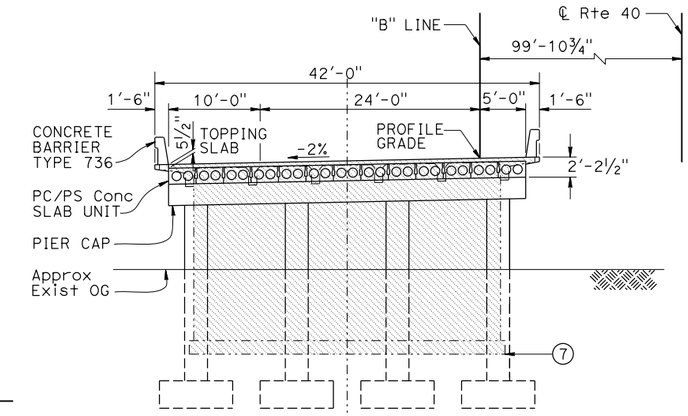

TYPICAL SECTION
⅛" = 1'-0"

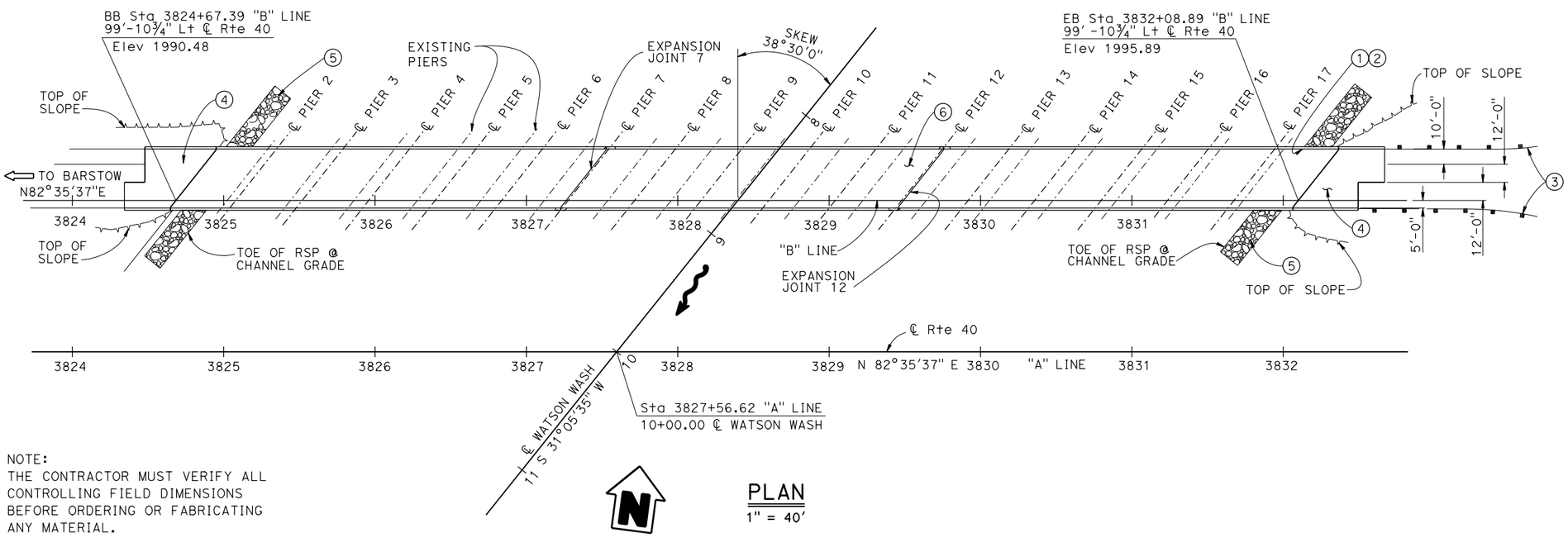

NOTE:
THE CONTRACTOR MUST VERIFY ALL CONTROLLING FIELD DIMENSIONS BEFORE ORDERING OR FABRICATING ANY MATERIAL.

PLAN
1" = 40'

NOTES:

1. Paint "Br. No. 54-1282L".
2. Paint "WATSON WASH BRIDGE".
3. Midwest Guardrail system, See "ROADWAY PLANS".
4. Structure Approach Type N(30S).
5. Rock Slope Protection, See "ROADWAY PLANS".
6. Remove existing bridge (Br. No. 54-0805L).
7. Remove existing piers 2 thru 18 completely.
8. For details not shown, see "STRUCTURE PLAN NO. 1" and "STRUCTURE PLAN NO. 2" sheets.
9. For QUANTITIES, see "DECK COUNTOURS" sheet.

LEGEND:

- Indicates Bridge Removal
- Indicates Existing structure
- Indicates New structure
- Direction of traffic
- Rock slope protection
- High water mark
- Direction flow of water

B. GUNTER
DESIGN ENGINEER

	BY	CHECKED			
DESIGN	R. WANG	E. MERCADO	LOAD & RESISTANCE FACTOR DESIGN	LIVE LOADING: HL93 W/"LOW-BOY"; PERMIT DESIGN VEHICLE	
DETAILS	H. MAHBOOBI / H. INIGUEZ	E. MERCADO	LAYOUT	R. WANG	E. MERCADO
QUANTITIES	S. YEH / E. MU	E. MERCADO / B. GUNTER	SPECIFICATIONS	K. ELLINGSON	K. ELLINGSON

ORIGINAL SCALE IN INCHES FOR REDUCED PLANS 0 1 2 3

STATE OF CALIFORNIA
DEPARTMENT OF TRANSPORTATION

DIVISION OF ENGINEERING SERVICES
STRUCTURE DESIGN
DESIGN BRANCH 19

BRIDGE NO. 54-1282L
POST MILE R105.9

WATSON WASH BRIDGE - LEFT (REPLACE)
GENERAL PLAN

UNIT: 3621
PROJECT NUMBER & PHASE: 0800020102 1 CONTRACT NO.: 08-0N5504

DISREGARD PRINTS BEARING EARLIER REVISION DATES → 03-10-14 01-23-15 01-29-15

SHEET 1 OF 31

STRUCTURES DESIGN GENERAL PLAN SHEET (ENGLISH) (REV.09-01-10)

FILE => 54-1282l-a-gp01.dgn

USERNAME => s125726 DATE PLOTTED => 24-NOV-2015 TIME PLOTTED => 15:47

DIST	COUNTY	ROUTE	POST MILES TOTAL PROJECT	SHEET NO.	TOTAL SHEETS
08	SBd	40	R105.2/R106.5	81	110

REGISTERED CIVIL ENGINEER 01-29-15 DATE

6-25-15
PLANS APPROVAL DATE

REGISTERED PROFESSIONAL ENGINEER RUI WANG No. C52910 Exp. 12/31/16 CIVIL STATE OF CALIFORNIA

The State of California or its officers or agents shall not be responsible for the accuracy or completeness of electronic copies of this plan sheet.

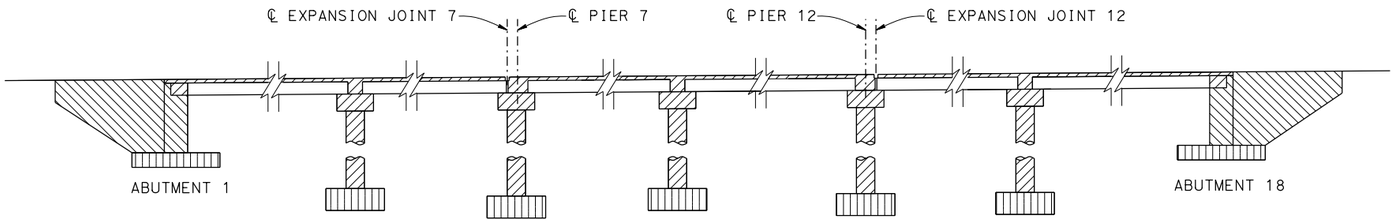

Precast Prestressed Concrete Slab (Type SIV-36). See prestressing notes on "PRECAST CONCRETE SLAB DETAILS NO. 1" and "PRECAST CONCRETE SLAB DETAILS NO. 2" sheets.

Structural Concrete, Bridge Footing

Structural Concrete, Bridge (5 ksi at 28 days)

Structural Concrete, Bridge (4 ksi at 28 days)

CONCRETE STRENGTH AND TYPE LIMITS

NO SCALE

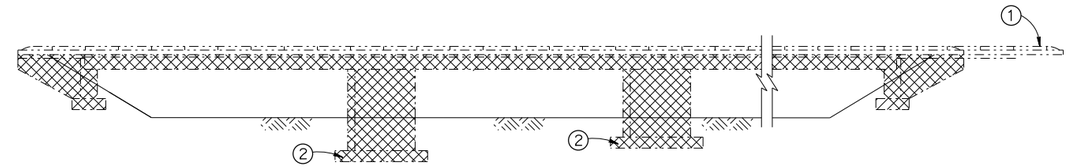

LIMITS OF BRIDGE REMOVAL

NO SCALE

NOTES:

1. Remove MBGR. See "ROADWAY PLANS"
2. Remove all Piers completely and structure backfill to OG.

Indicates Bridge removal

ACCELERATION RESPONSE SPECTRUM (5% DAMPING)

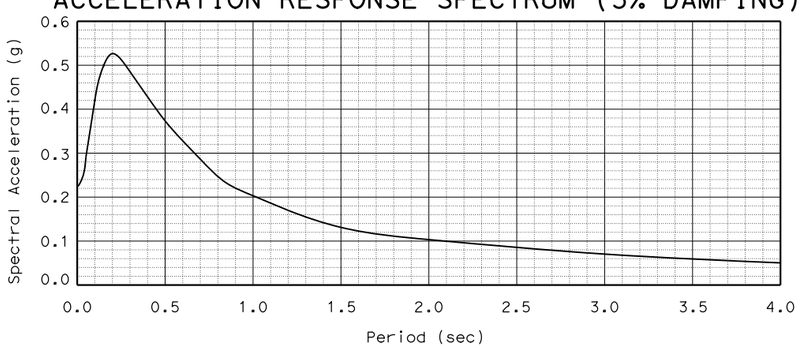

STANDARD PLANS DATED 2010

	A10A	ABBREVIATIONS (SHEET 1 OF 2)
RSP	A10B	ABBREVIATIONS (SHEET 2 OF 2)
	A10C	LINES AND SYMBOLS (SHEET 1 OF 3)
	A10D	LINES AND SYMBOLS (SHEET 2 OF 3)
	A10E	LINES AND SYMBOLS (SHEET 3 OF 3)
	A10F	LEGEND - SOIL (SHEET 1 OF 2)
	A10G	LEGEND - SOIL (SHEET 2 OF 2)
	A10H	LEGEND - ROCK
	A62C	LIMITS OF PAYMENT FOR EXCAVATION AND BACKFILL BRIDGE
	B0-1	BRIDGE DETAILS
	B0-13	BRIDGE DETAILS
	B6-21	JOINT SEALS (MAXIMUM MOVEMENT RATING = 2")
	B7-8	DECK DRAINAGE DETAILS
RSP	B11-56	CONCRETE BARRIER TYPE 736

STANDARD PLAN SHEET NO.

DETAIL NO.

INDEX TO PLANS

NO.	SHEET NAME
1	GENERAL PLAN
2	INDEX TO PLANS
3	STRUCTURE PLAN NO. 1
4	STRUCTURE PLAN NO. 2
5	CONSTRUCTION SEQUENCE
6	DECK CONTOURS
7	FOUNDATION PLAN NO. 1
8	FOUNDATION PLAN NO. 2
9	ABUTMENT LAYOUT
10	ABUTMENT DETAILS NO. 1
11	ABUTMENT DETAILS NO. 2
12	PIERS 2-6, 8-11, AND 13-17 LAYOUT
13	PIERS 7 AND 12 LAYOUT
14	PIER DETAILS NO. 1
15	PIER DETAILS NO. 2
16	PIER DETAILS NO. 3
17	TYPICAL SECTION
18	END DIAPHRAGM DETAILS
19	PRECAST CONCRETE SLAB LAYOUT
20	PRECAST CONCRETE SLAB DETAILS NO. 1
21	PRECAST CONCRETE SLAB DETAILS NO. 2
22	DECK CORNER DETAILS
23	STRUCTURE APPROACH DRAINAGE DETAILS
24	STRUCTURE APPROACH TYPE N(30S)
25	LOG OF TEST BORINGS 1 OF 7
26	LOG OF TEST BORINGS 2 OF 7
27	LOG OF TEST BORINGS 3 OF 7
28	LOG OF TEST BORINGS 4 OF 7
29	LOG OF TEST BORINGS 5 OF 7
30	LOG OF TEST BORINGS 6 OF 7
31	LOG OF TEST BORINGS 7 OF 7

SPREAD FOOTING DATA TABLE

SUPPORT LOCATIONS	WORKING STRESS DESIGN (WSD)		LOAD RESISTANCE FACTOR DESIGN (LRFD)		
	PERMISSIBLE GROSS CONTACT STRESS (SETTLEMENT) (ksf)	ALLOWABLE GROSS BEARING CAPACITY (ksf)	SERVICE PERMISSIBLE NET CONTACT STRESS (SETTLEMENT) (ksf)	STRENGTH FACTORED GROSS NOMINAL BEARING RESISTANCE Øb = 0.45 (ksf)	EXTREME EVENT FACTORED GROSS NOMINAL BEARING RESISTANCE Øb = 1.00 (ksf)
ABUTMENT 1	5.8	3	N/A	N/A	N/A
PIERS 2 TO 17 PER COLUMN	N/A	N/A	14.7	18.5	53.0
ABUTMENT 18	5.8	3	N/A	N/A	N/A

GENERAL NOTES
LOAD AND RESISTANCE FACTOR DESIGN

DESIGN:	AASHTO LRFD Bridge Design Specification, 4th Edition with the Caltrans Amendments, Preface dated November 2011.
SEISMIC DESIGN:	Caltrans Seismic Design Criteria (SDC), Version 1.7 dated April 2013
DEAD LOAD:	Includes 35 psf for future wearing surfaces
LIVE LOADING:	HL93 and permit design load
SEISMIC LOADING:	Soil Profile: Vs30 = 350 m/s Moment Magnitude: Mmax = 6.5 Peak Ground Acceleration = 0.23g
REINFORCED CONCRETE:	f_y = 60 ksi f'_c = 3.6 ksi (Except as shown on concrete Strength and Type Limits Diagram)
PRESTRESSED CONCRETE:	Prestresssing Notes (Pre-Tensioning) on "PRECAST CONCRETE SLAB DETAILS NO. 2" sheet.

	BY	CHECKED
DESIGN	R. WANG	E. MERCADO
DETAILS	H. MAHBOOBI / H. INIGUEZ	E. MERCADO
QUANTITIES	S. YEH / E. MU	E. MERCADO / B. GUNTER

STATE OF CALIFORNIA
DEPARTMENT OF TRANSPORTATION

DIVISION OF ENGINEERING SERVICES
STRUCTURE DESIGN
DESIGN BRANCH 19

BRIDGE NO. 54-1282L
POST MILE R105.9

WATSON WASH BRIDGE - LEFT (REPLACE)
INDEX TO PLANS

STRUCTURES DESIGN DETAIL SHEET (ENGLISH) (REV. 09-01-10)

ORIGINAL SCALE IN INCHES FOR REDUCED PLANS 0 1 2 3

UNIT: 3621
PROJECT NUMBER & PHASE: 0800020102 1 CONTRACT NO.: 08-0N5504

DISREGARD PRINTS BEARING EARLIER REVISION DATES

REVISION DATES 03-10-14 01-29-15 01-23-15

SHEET 2 OF 31

FILE => 54-1282l-a-itp.dgn

USERNAME => s125726 DATE PLOTTED => 24-NOV-2015 TIME PLOTTED => 15:48

DIST	COUNTY	ROUTE	POST MILES TOTAL PROJECT	SHEET NO.	TOTAL SHEETS
08	SBd	40	R105.2/R106.5	82	110

REGISTERED CIVIL ENGINEER 01-29-15 DATE

6-25-15
PLANS APPROVAL DATE

REGISTERED PROFESSIONAL ENGINEER RUI WANG No. C52910 Exp. 12/31/16 CIVIL STATE OF CALIFORNIA

The State of California or its officers or agents shall not be responsible for the accuracy or completeness of electronic copies of this plan sheet.

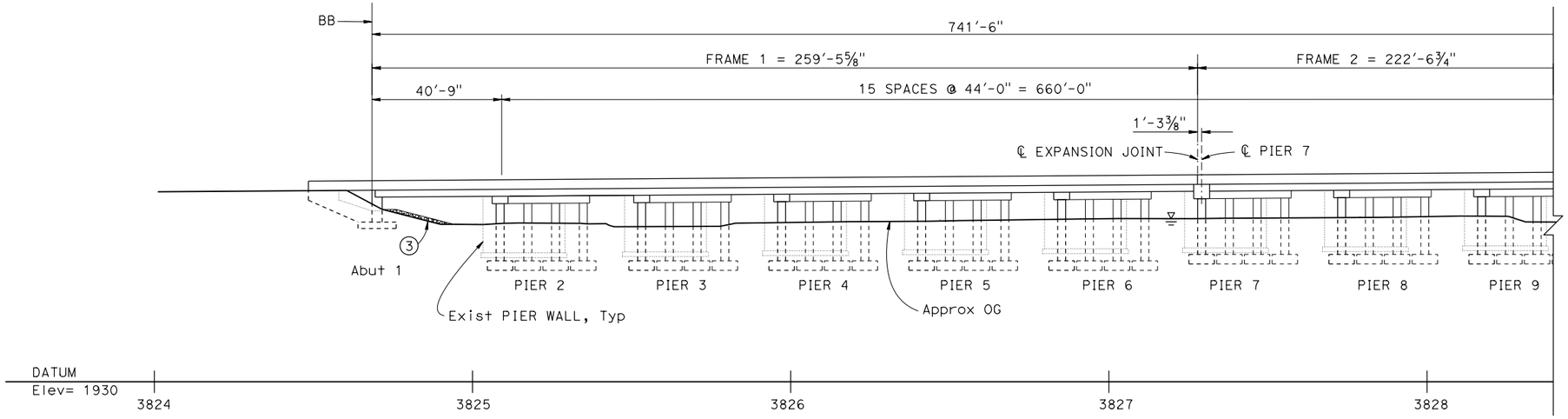

ELEVATION

1" = 20'

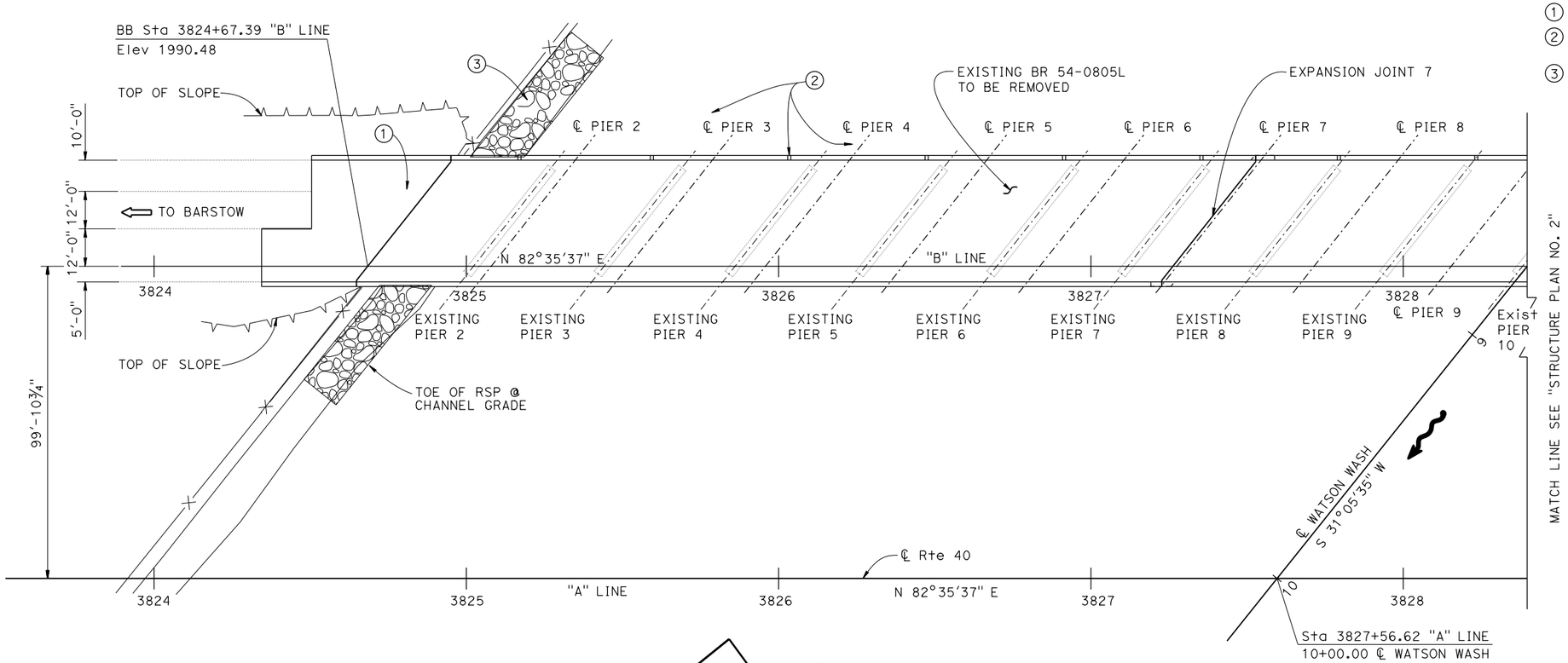

PLAN

1" = 20'

NOTES:

1. Structure Approach Type N(30S)
2. Scuppers at deck grade total 17 Place at midpoint of each span (B7-8)
3. Rock slope protection, see "ROADWAY PLANS"

LEGEND:

- Direction of traffic
- Rock slope protection
- High water mark
- Direction flow of water

	BY	CHECKED
DESIGN	R. WANG	E. MERCADO
DETAILS	H. MAHBOOBI	E. MERCADO
QUANTITIES	S. YEH / E. MU	E. MERCADO / B. GUNTER

STATE OF CALIFORNIA
DEPARTMENT OF TRANSPORTATION

DIVISION OF ENGINEERING SERVICES
STRUCTURE DESIGN
DESIGN BRANCH 19

BRIDGE NO. 54-1282L
POST MILE R105.9

WATSON WASH BRIDGE - LEFT (REPLACE)
STRUCTURE PLAN NO. 1

STRUCTURES DESIGN DETAIL SHEET (ENGLISH) (REV. 09-01-10)

ORIGINAL SCALE IN INCHES FOR REDUCED PLANS 0 1 2 3

UNIT: 3621
PROJECT NUMBER & PHASE: 0800020102 1 CONTRACT NO.: 08-0N5504

DISREGARD PRINTS BEARING EARLIER REVISION DATES

REVISION DATES: 08-08-14 01-29-15 01-06-15

SHEET 3 OF 31

FILE => 54-1282l-c_sp01.dgn

USERNAME => s125726 DATE PLOTTED => 24-NOV-2015 TIME PLOTTED => 15:49

DIST	COUNTY	ROUTE	POST MILES TOTAL PROJECT	SHEET No.	TOTAL SHEETS
08	SBd	40	R105.2/R106.5	83	110

REGISTERED CIVIL ENGINEER 01-29-15 DATE

6-25-15
PLANS APPROVAL DATE

REGISTERED PROFESSIONAL ENGINEER RUI WANG No. C52910 Exp. 12/31/16 CIVIL STATE OF CALIFORNIA

The State of California or its officers or agents shall not be responsible for the accuracy or completeness of electronic copies of this plan sheet.

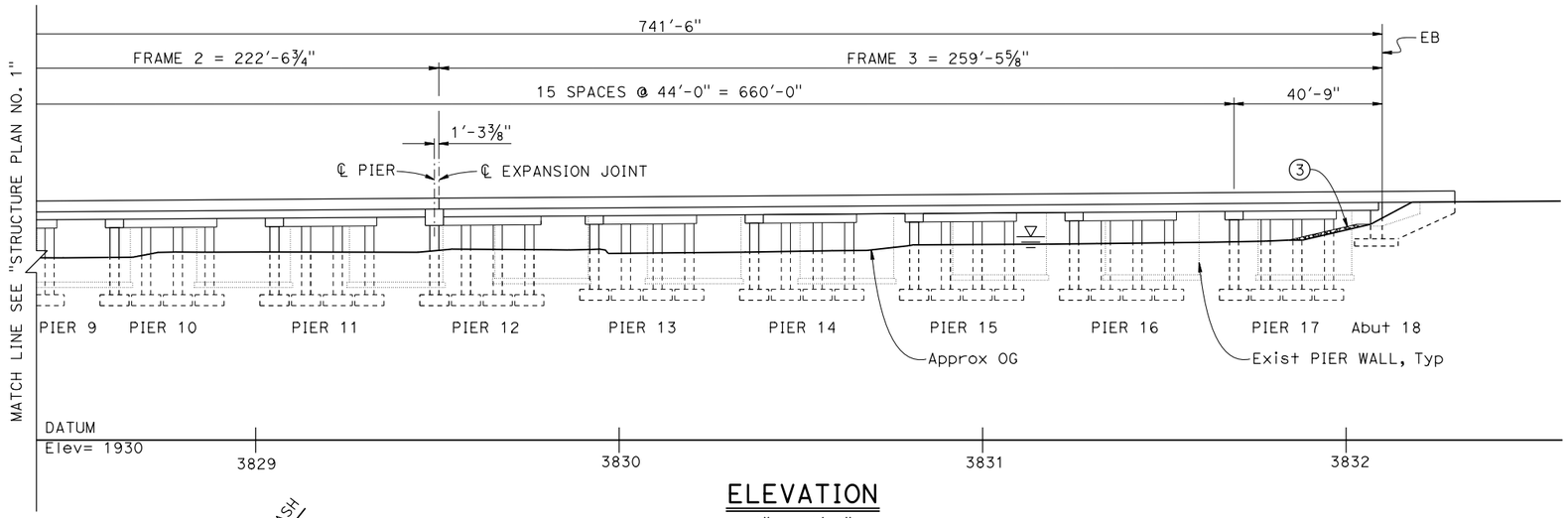

ELEVATION

1" = 20'-0"

NOTES:

1. Structure Approach Type N(30S)
2. Scuppers at deck grade total 17 Place at midpoint of each span (B7-8)
3. Rock slope protection, see "ROADWAY PLANS"
4. MGS see "ROADWAY PLANS".

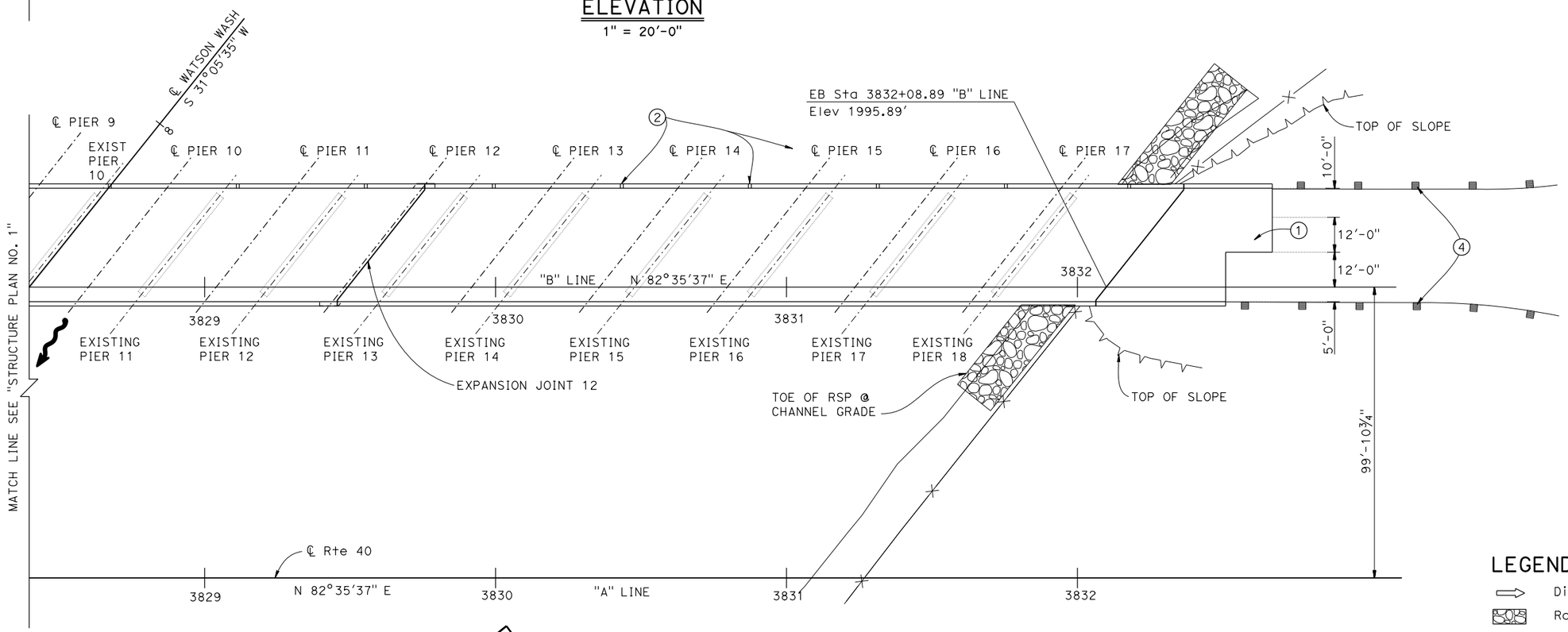

PLAN

1" = 20'

LEGEND:

- Direction of traffic
- Rock slope protection
- High water mark
- Direction flow of water

	BY	CHECKED
DESIGN	R. WANG	E. MERCADO
DETAILS	H. MAHBOOBI	E. MERCADO
QUANTITIES	S. YEH / E. MU	E. MERCADO / B. GUNTER

STATE OF CALIFORNIA
DEPARTMENT OF TRANSPORTATION

DIVISION OF ENGINEERING SERVICES
STRUCTURE DESIGN
DESIGN BRANCH 19

BRIDGE NO. 54-1282L
POST MILE R105.9

WATSON WASH BRIDGE - LEFT (REPLACE)
STRUCTURE PLAN NO. 2

STRUCTURES DESIGN DETAIL SHEET (ENGLISH) (REV. 09-01-10)

ORIGINAL SCALE IN INCHES FOR REDUCED PLANS 0 1 2 3

UNIT: 3621
PROJECT NUMBER & PHASE: 0800020102 1 CONTRACT NO.: 08-0N5504

DISREGARD PRINTS BEARING EARLIER REVISION DATES

REVISION DATES 08-08-14 01-29-15 01-06-15

SHEET 4 OF 31

FILE => 54-1282l-c_sp02.dgn

USERNAME => s125726 DATE PLOTTED => 24-NOV-2015 TIME PLOTTED => 15:49

DIST	COUNTY	ROUTE	POST MILES TOTAL PROJECT	SHEET NO.	TOTAL SHEETS
08	SBd	40	R105.2/R106.5	84	110

REGISTERED CIVIL ENGINEER 01-29-15 DATE

6-25-15
PLANS APPROVAL DATE

REGISTERED PROFESSIONAL ENGINEER RUI WANG No. C52910 Exp. 12/31/16 CIVIL STATE OF CALIFORNIA

The State of California or its officers or agents shall not be responsible for the accuracy or completeness of electronic copies of this plan sheet.

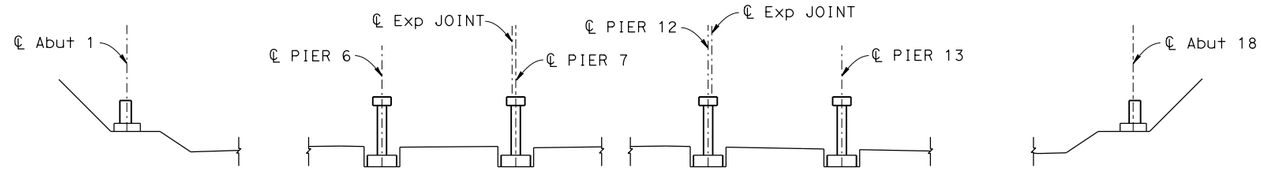

STEP 1

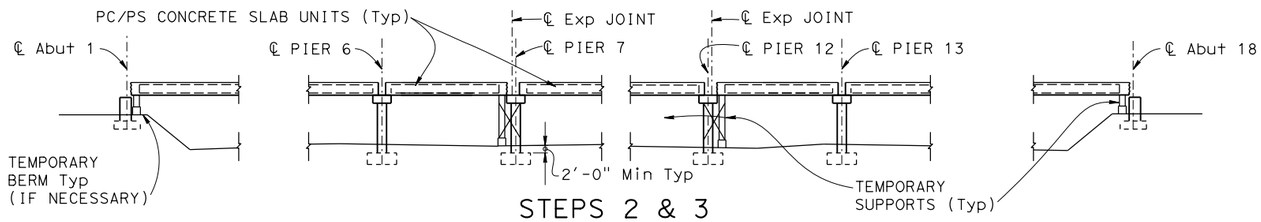

STEPS 2 & 3

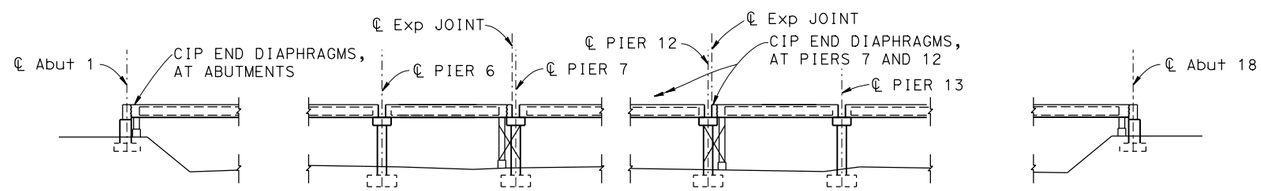

STEP 4

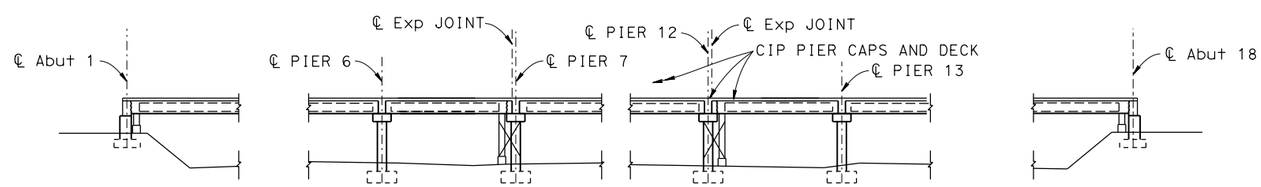

STEP 5

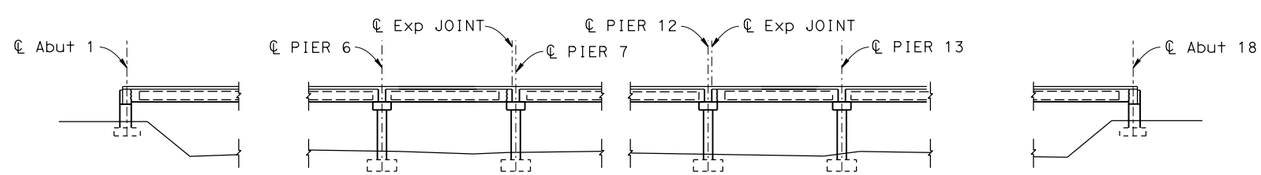

STEP 6

BRIDGE CONSTRUCTION SEQUENCE

NO SCALE

ANY ALTERNATIVES TO THIS CONSTRUCTION SEQUENCE MUST BE APPROVED.

STEP 1: Construct abutments, pier footings, columns and drop caps.

STEP 2: Erect temporary supports at abutments and piers 7 and 12 only. Temporary supports shall be capable of supporting a minimum PC/PS concrete slab unit selfweight and deck dead load of W kips per each precast concrete slab unit. This does not include forces due to wind, impact, or construction loads. See "SPAN 1, SPAN 6, SPAN 12, and SPAN 17 PRECAST CONCRETE SLAB LOADING DETAIL". The Temporary supports shall bear on a minimum of 2'-0" of structural backfill. Temporary supports shall be located within 1'-9" of precast concrete slab.

STEP 3: Erect precast/prestressed concrete slab units on temporary supports and permanent supports.
A temporary berm may be necessary for temporary supports.

STEP 4: Construct cast-in-place end diaphragms at abutments, piers 7 and 12.

STEP 5: Construct cast-in-place pier caps and place deck concrete.

STEP 6: Remove temporary supports. Complete abutment construction and remaining items of work.

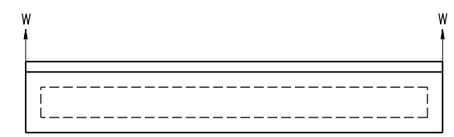

SPAN 1, SPAN 6, SPAN 12 AND SPAN 17 PRECAST CONCRETE SLAB LOADING DETAIL ①②

NO SCALE

NOTES:

① Loads can be applied top or bottom of PC/PS Concrete Slab unit.

② W= 25 kips for all temporary supports at each concrete slab.

③ All piers not shown

④ For additional details, see "PIERS 2-6, 8-11, AND 13-17 LAYOUT", "PIERS 7 AND 12 LAYOUT", "PIER DETAILS NO. 1", "PRECAST CONCRETE SLAB LAYOUT", "PRECAST CONCRETE SLAB DETAILS NO. 1", and "PRECAST CONCRETE SLAB DETAILS NO. 2" sheets.

	BY	CHECKED
DESIGN	R. WANG	E. MERCADO
DETAILS	H. MAHBOOBI	E. MERCADO
QUANTITIES	R. WANG	E. MERCADO

STATE OF CALIFORNIA DEPARTMENT OF TRANSPORTATION

DIVISION OF ENGINEERING SERVICES STRUCTURE DESIGN DESIGN BRANCH 19

BRIDGE NO. 54-1282L
POST MILE R105.9

WATSON WASH BRIDGE - LEFT (REPLACE)
CONSTRUCTION SEQUENCE

STRUCTURES DESIGN DETAIL SHEET (ENGLISH) (REV. 09-01-10)

ORIGINAL SCALE IN INCHES FOR REDUCED PLANS 0 1 2 3

UNIT: 3621
PROJECT NUMBER & PHASE: 0800020102 1 CONTRACT NO.: 08-0N5504

DISREGARD PRINTS BEARING EARLIER REVISION DATES

REVISION DATES 08-13-14 01-29-15 01-06-15

SHEET 5 OF 31

FILE => 54-1282l-c_sq.dgn

USERNAME => s125726 DATE PLOTTED => 24-NOV-2015 TIME PLOTTED => 15:50

DIST	COUNTY	ROUTE	POST MILES TOTAL PROJECT	SHEET No.	TOTAL SHEETS
08	SBd	40	R105.2/R106.5	85	110

REGISTERED CIVIL ENGINEER 06-08-15 DATE

6-25-15
PLANS APPROVAL DATE

REGISTERED PROFESSIONAL ENGINEER RUI WANG No. C52910 Exp. 12/31/16 CIVIL STATE OF CALIFORNIA

The State of California or its officers or agents shall not be responsible for the accuracy or completeness of electronic copies of this plan sheet.

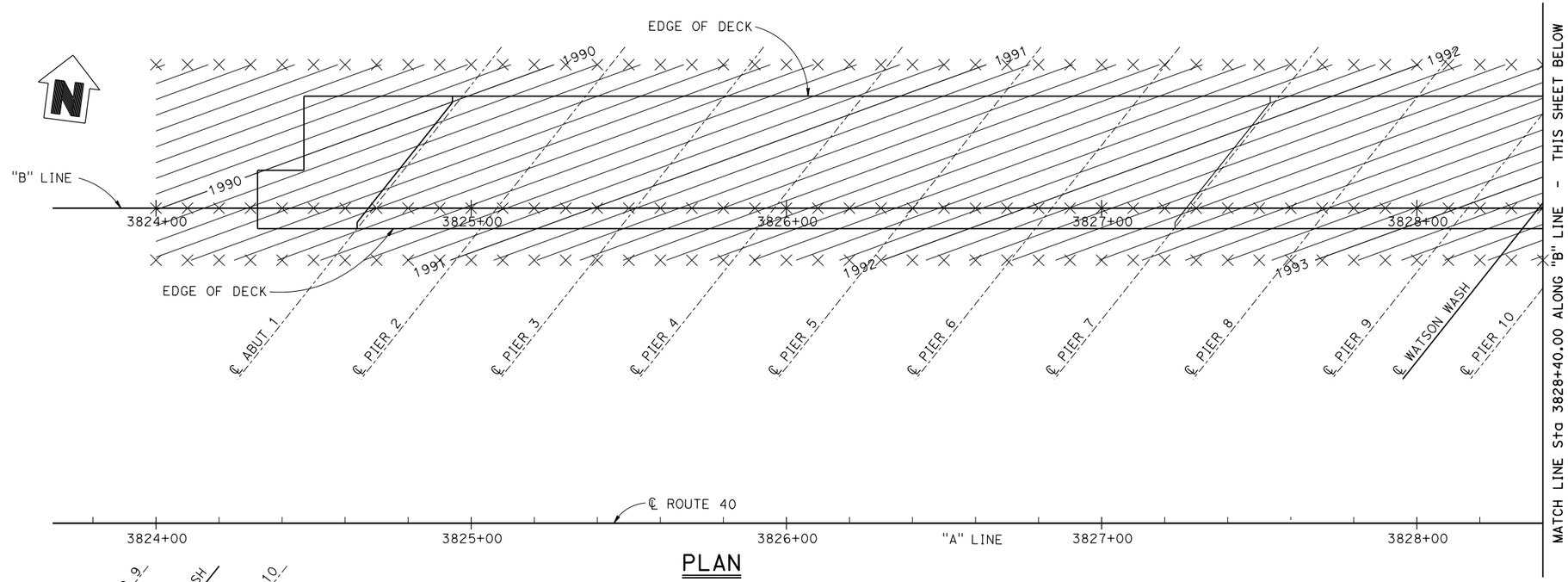

PLAN
1" = 20'

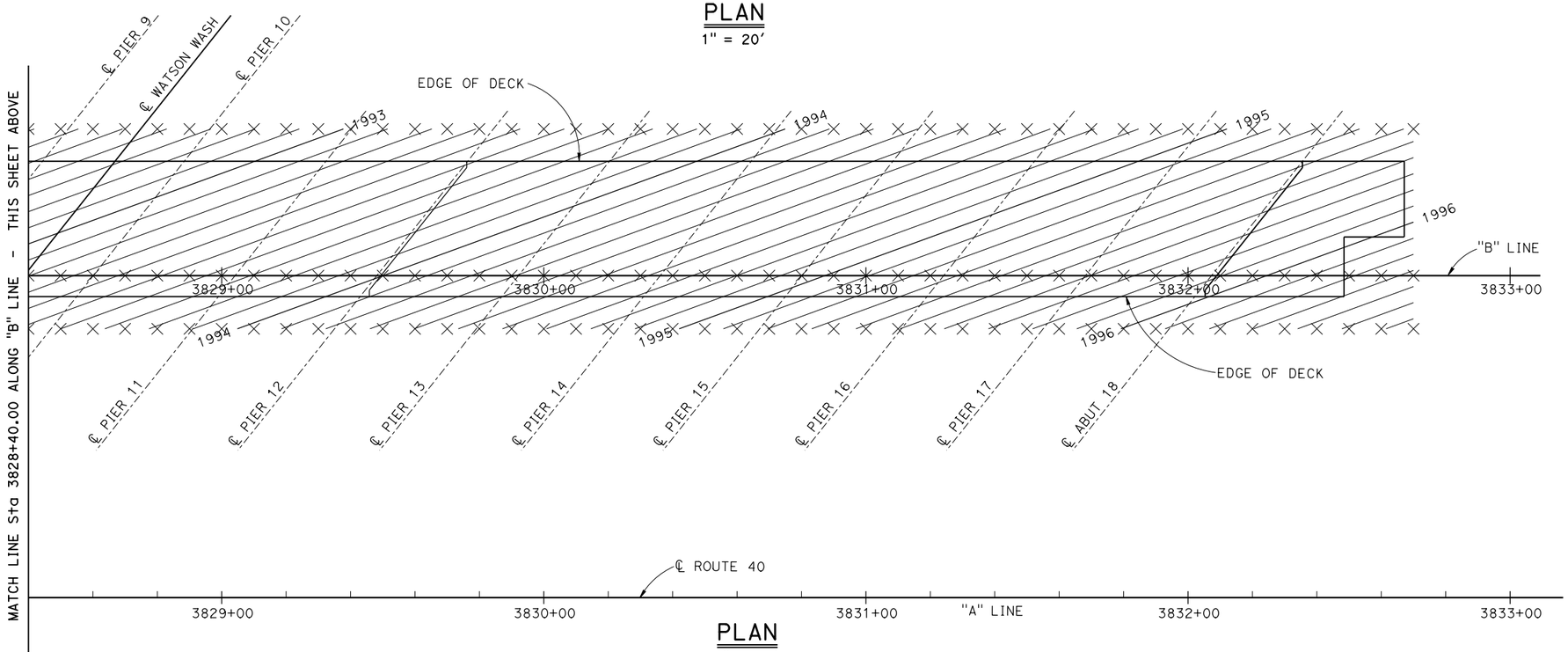

PLAN
1" = 20'

QUANTITIES

BRIDGE REMOVAL	LUMP	SUM
STRUCTURE EXCAVATION (BRIDGE)	4,221	CY
STRUCTURE BACKFILL (BRIDGE)	493	CY
STRUCTURAL CONCRETE, BRIDGE FOOTING	474	CY
STRUCTURAL CONCRETE, BRIDGE	1,403	CY
STRUCTURAL CONCRETE, APPROACH SLAB (TYPE N)	150	CY
FURNISH PRECAST PRESTRESSED CONCRETE SLAB (TYPE SIV)	26,963	SQFT
ERECT PRECAST PRESTRESSED CONCRETE DECK UNIT	221	EA
JOINT SEAL (MR 1½")	106	LF
JOINT SEAL (MR 2")	106	LF
BAR REINFORCING STEEL (BRIDGE)	608,968	LB
CONCRETE BARRIER (TYPE 736)	1,630	LF

NOTES:

1. X - 10' intervals along station line.
2. Contour interval = 0.1'.
3. Contours do not include camber.

	BY	CHECKED
DESIGN	R. WANG	E. MERCADO
DETAILS	H. INIGUEZ / H. MAHBOOBI	E. MERCADO
QUANTITIES	S. YEH / E. MU	E. MERCADO / B. GUNTER

STATE OF CALIFORNIA
DEPARTMENT OF TRANSPORTATION

DIVISION OF ENGINEERING SERVICES
STRUCTURE DESIGN
DESIGN BRANCH 19

BRIDGE NO. 54-1282L
POST MILE R105.9

WATSON WASH BRIDGE - LEFT (REPLACE)
DECK CONTOURS

STRUCTURES DESIGN DETAIL SHEET (ENGLISH) (REV. 09-01-10)

ORIGINAL SCALE IN INCHES FOR REDUCED PLANS 0 1 2 3

UNIT: 3621
PROJECT NUMBER & PHASE: 0800020102 1 CONTRACT NO.: 08-0N5504

DISREGARD PRINTS BEARING EARLIER REVISION DATES

REVISION DATES 11-04-14 06-08-15 01-29-15

SHEET 6 OF 31

FILE => 54-1282l-d-dec_cont.dgn

USERNAME => s129726 DATE PLOTTED => 24-NOV-2015 TIME PLOTTED => 15:51

DIST	COUNTY	ROUTE	POST MILES TOTAL PROJECT	SHEET No.	TOTAL SHEETS
8	SBd	40	R105.2/R106.5	86	110

REGISTERED CIVIL ENGINEER — DATE 01-29-15

6-25-15
PLANS APPROVAL DATE

REGISTERED PROFESSIONAL ENGINEER — RUI WANG — No. C52910 — Exp. 12/31/16 — CIVIL — STATE OF CALIFORNIA

The State of California or its officers or agents shall not be responsible for the accuracy or completeness of electronic copies of this plan sheet.

HYDRAULIC SUMMARY			
Drainage Area: SQUARE MILES			
	DESIGN FLOOD	BASE FLOOD	OVERTOPPING FLOOD
Frequency (YEARS)	50	100	N/A
Discharge (cfs)	26,600	37,100	N/A
Average Velocity (fps)	N/A	12.0	N/A
Minimum Soffit Elevation (feet)	N/A	1987.8	N/A
Flood plain data are based upon information available when the plans were prepared and are shown to meet federal requirements. The accuracy of said information is not warranted by the State and interested or affected parties should make their own investigation.			

Existing Bridge Location (54-0805L)

(1) - 34.017 Lt "B" Line, Sta 3824+94.903, Elev 1989.210

(2) - 4.846 Rt "B" Line, Sta 3824+63.793, Elev 1990.228

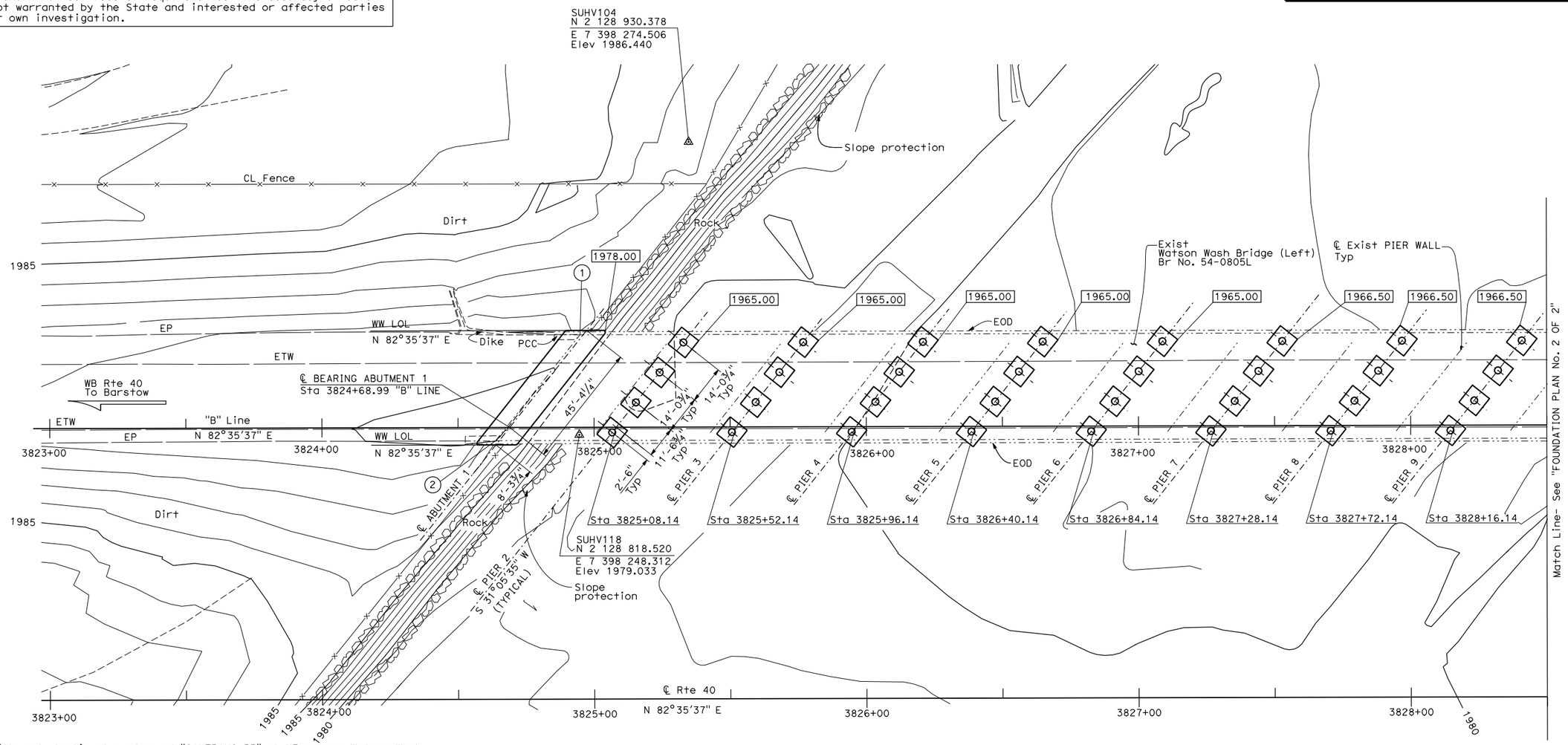

SURVEY CONTROL

SUHV104

PD: Set 1" IP Flush with red plastic plug stamped "CALTRANS RP" at NE corner Watson Wash
104.811 Lt "B" Line
Sta 3825+34.947
N 2 128 930.378
E 7 398 274.506
Elev 1986.440

SUHV103

PD: Set 1" IP Flush with red plastic plug stamped "CALTRANS RP" at NE corner Watson Wash
54.754 Lt "B" Line
Sta 3832+94.784
N 2 128 978.685
E 7 399 034.457
Elev 1994.120

NOTES:

1. Indicates bottom of footing elevation.
2. Existing contours shown. For final contours, see "ROADWAY PLANS".
3. For footing dimensions, see "ABUTMENT LAYOUT", and "PIER DETAILS NO. 2" sheets.
4. Underground utilities as shown are approximate, see "ROADWAY PLANS" for details.
5. For footing locations at each pier, see pier 2 (Typical).
6. The 4 footings of each pier keep same bottom elevation as indicated.

NOTE:

See District Utility Plans for Utility details.

PRELIMINARY INVESTIGATION SECTION					
SCALE 1"=20'	VERT.DATUM NGVD1929	PHOTOGRAMMETRY AS OF: X			
	HORZ.DATUM NAD1983	SURVEYED	BY District	CHECKED	BY X
ALIGNMENT TIES Dist. Traverse Sheet		DRAFTED	BY C. Pham	CHECKED	BY E. Viajar

DESIGN	BY R. WANG	CHECKED E. MERCADO
DETAILS	BY H. MAHBOOBI	CHECKED E. MERCADO
QUANTITIES	BY S. YEH / E. MU	CHECKED E. MERCADO / B. GUNTER

STATE OF CALIFORNIA
DEPARTMENT OF TRANSPORTATION

DIVISION OF ENGINEERING SERVICES
STRUCTURE DESIGN
DESIGN BRANCH 19

BRIDGE NO. 54-1282L
POST MILE R105.9

WATSON WASH BRIDGE - LEFT (REPLACE)
FOUNDATION PLAN NO. 1 OF 2

STRUCTURES FOUNDATION PLAN SHEET (ENGLISH) (REV. 09-01-10)

ORIGINAL SCALE IN INCHES FOR REDUCED PLANS 0 1 2 3

UNIT: 3647
PROJECT NUMBER & PHASE: 08 00020102 1 CONTRACT NO.: 08-0N5504

DISREGARD PRINTS BEARING EARLIER REVISION DATES

REVISION DATES 04/28/14 01/23/15 01/29/15

SHEET 7 OF 31

FILE => 54-1282l-e-fdpl01.dgn

USERNAME => s125726 DATE PLOTTED => 24-NOV-2015 TIME PLOTTED => 15:51

DIST	COUNTY	ROUTE	POST MILES TOTAL PROJECT	SHEET No.	TOTAL SHEETS
8	SBd	40	R105.2/R106.5	87	110

REGISTERED CIVIL ENGINEER 01-29-15 DATE

6-25-15
PLANS APPROVAL DATE

REGISTERED PROFESSIONAL ENGINEER RUI WANG No. C52910 Exp. 12/31/16 CIVIL STATE OF CALIFORNIA

The State of California or its officers or agents shall not be responsible for the accuracy or completeness of electronic copies of this plan sheet.

Existing Bridge Location (54-0805L)

(3) - 34.017 Lt "B" Line, Sta 3832+35.906, Elev 1995.218

(4) - 4.872 Rt "B" Line, Sta 3832+04.850, Elev 1994.640

NOTES:

1. ▭ Indicates bottom of footing elevation.
2. Existing contours shown. For final contours, see "ROADWAY PLANS".
3. For footing dimensions, see "ABUTMENT LAYOUT", and "PIER DETAILS NO. 2" sheets.
4. Underground utilities as shown are approximate See "ROADWAY PLANS" for details.
5. For footing locations at each pier, see pier 17 (Typical).
6. The 4 footings of each pier keep same bottom elevation as indicated.

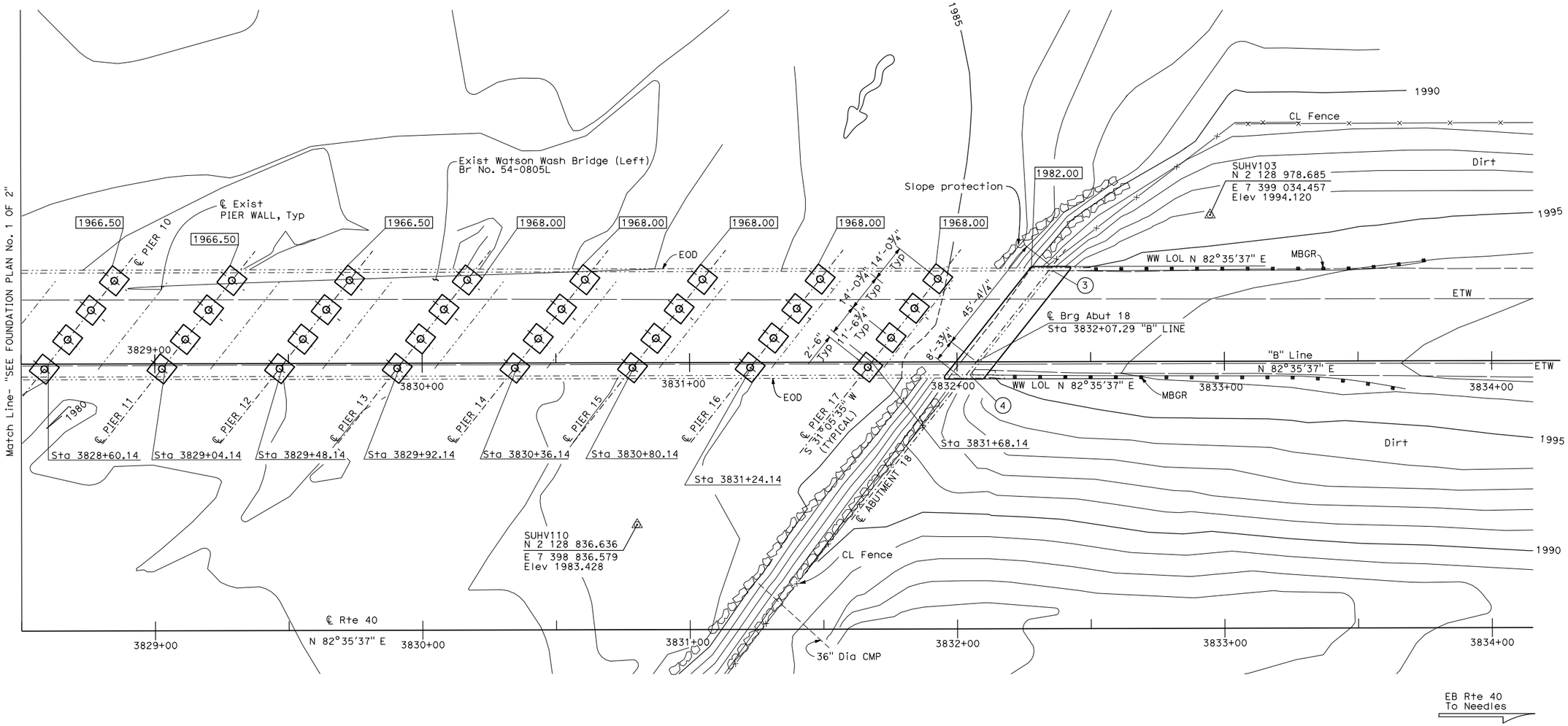

SURVEY CONTROL

See "FOUNDATION PLAN No. 1 OF 2"

NOTE:

See District Utility Plans for Utility details.

PRELIMINARY INVESTIGATION SECTION					
SCALE 1"=20'	VERT.DATUM NGVD1929	PHOTOGRAMMETRY AS OF: X			
	HORZ.DATUM NAD1983	SURVEYED	BY District	CHECKED	BY X
ALIGNMENT TIES Dist. Traverse Sheet		DRAFTED	BY C. Pham	CHECKED	BY E. Vigiar

STRUCTURES FOUNDATION PLAN SHEET (ENGLISH) (REV. 09-01-10)

DESIGN	BY R. WANG	CHECKED E. MERCADO
DETAILS	BY H. MAHBOOBI	CHECKED E. MERCADO
QUANTITIES	BY S. YEH	CHECKED E. MU

ORIGINAL SCALE IN INCHES FOR REDUCED PLANS 0 1 2 3

STATE OF CALIFORNIA
DEPARTMENT OF TRANSPORTATION

DIVISION OF ENGINEERING SERVICES
STRUCTURE DESIGN
DESIGN BRANCH 19

BRIDGE NO. 54-1282L
POST MILE R105.9

WATSON WASH BRIDGE - LEFT (REPLACE)
FOUNDATION PLAN NO. 2 OF 2

UNIT: 3647
PROJECT NUMBER & PHASE: 08 00020102 1 CONTRACT NO.: 08-0N5504

DISREGARD PRINTS BEARING EARLIER REVISION DATES

REVISION DATES 04/28/14 01/23/15 01/29/15

SHEET 8 OF 31

FILE => 54-1282l-e-fdp102.dgn

USERNAME => s125726 DATE PLOTTED => 24-NOV-2015 TIME PLOTTED => 15:52

DIST	COUNTY	ROUTE	POST MILES TOTAL PROJECT	SHEET NO.	TOTAL SHEETS
08	SBd	40	R105.2/R106.5	88	110

REGISTERED CIVIL ENGINEER 01-29-15 DATE

6-25-15
PLANS APPROVAL DATE

REGISTERED PROFESSIONAL ENGINEER RUI WANG No. C52910 Exp. 12/31/16 CIVIL STATE OF CALIFORNIA

The State of California or its officers or agents shall not be responsible for the accuracy or completeness of electronic copies of this plan sheet.

NOTES:

1. For rock slope protection, see "ROADWAY PLANS".
2. See "END DIAPHRAGM DETAILS" sheet.
3. See Detail A on "ABUTMENT DETAILS NO. 1" sheet.
4. See "STRUCTURE APPROACH TYPE N(30S)" sheet.
5. See joint protection detail on"ABUTMENT DETAILS NO. 1" sheet.
6. For shear key reinforcement, see "ABUTMENT DETAILS NO. 2" sheet.
7. See "STRUCTURAL APPROACH DRAINAGE DETAILS" sheet.
8. For Sections B-B and C-C, see "ABUTMENT DETAILS NO. 2" sheet.
9. Barrier rails not shown for clarity.

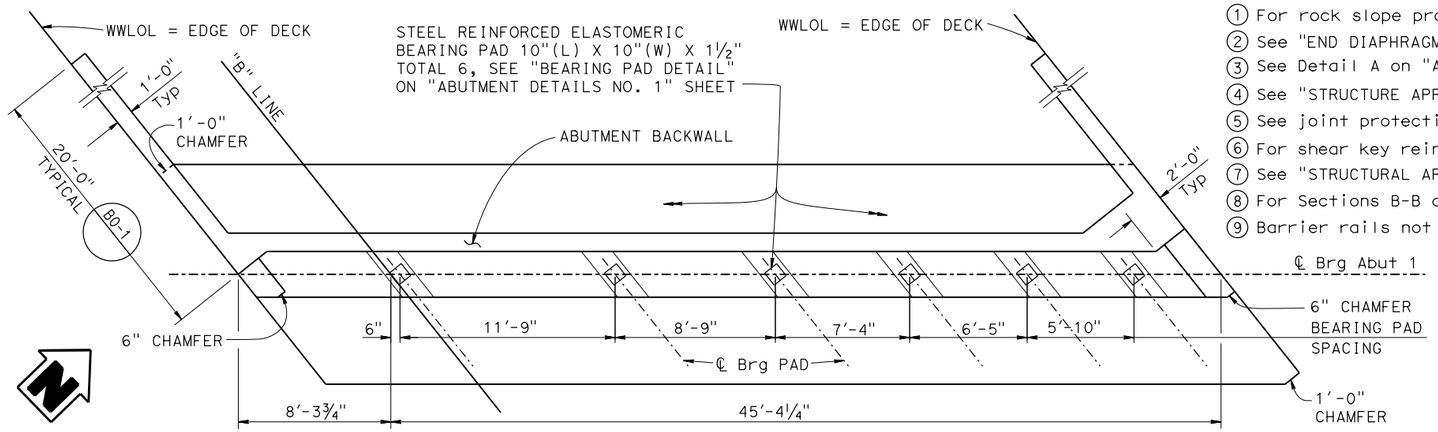

ABUTMENT 1 PLAN

¼" = 1'-0"

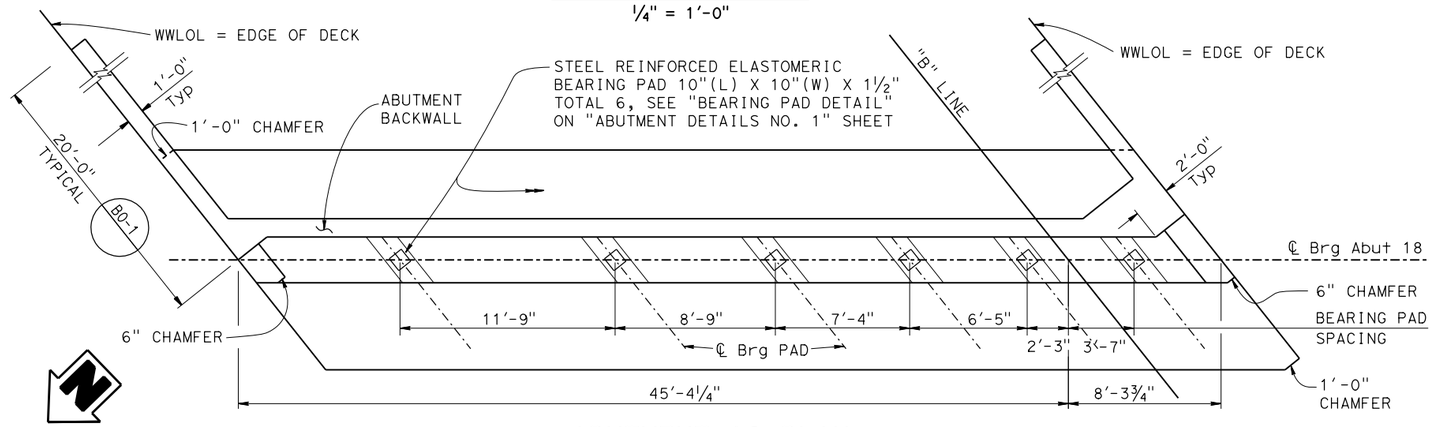

ABUTMENT 18 PLAN

¼" = 1'-0"

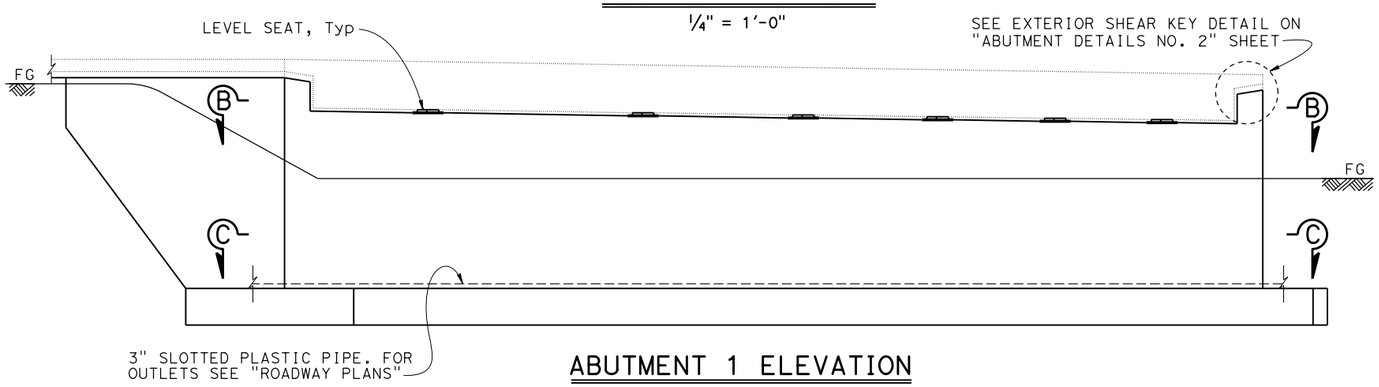

ABUTMENT 1 ELEVATION

¼" = 1'-0"

ABUTMENT 18 SIMILAR BUT OPPOSITE HAND

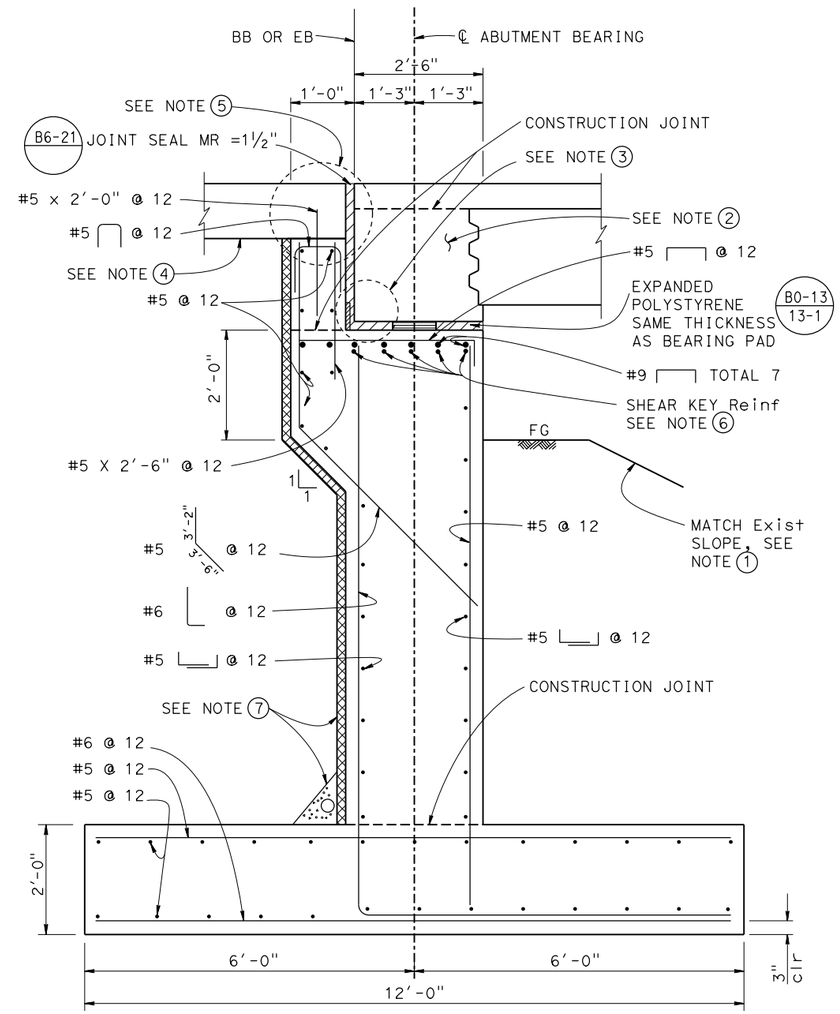

ABUTMENT TYPICAL SECTION

¾" = 1'-0"

	BY	CHECKED
DESIGN	R. WANG	D. BALBAS
DETAILS	H. MAHBOOBI	D. BALBAS
QUANTITIES	E. MU	B. GUNTER

STATE OF CALIFORNIA
DEPARTMENT OF TRANSPORTATION

DIVISION OF ENGINEERING SERVICES
STRUCTURE DESIGN
DESIGN BRANCH 19

BRIDGE NO. 54-1282L
POST MILE R105.9

WATSON WASH BRIDGE - LEFT (REPLACE)
ABUTMENT LAYOUT

STRUCTURES DESIGN DETAIL SHEET (ENGLISH) (REV. 09-01-10)

ORIGINAL SCALE IN INCHES FOR REDUCED PLANS 0 1 2 3

UNIT: 3621
PROJECT NUMBER & PHASE: 0800020102 1 CONTRACT NO.: 08-0N5504

DISREGARD PRINTS BEARING EARLIER REVISION DATES

REVISION DATES 06-04-14 01-29-15 01-06-15

SHEET 9 OF 31

FILE => 54-1282l-f-a01_lo1.dgn

USERNAME => s125726 DATE PLOTTED => 24-NOV-2015 TIME PLOTTED => 15:54

DIST	COUNTY	ROUTE	POST MILES TOTAL PROJECT	SHEET No.	TOTAL SHEETS
08	SBd	40	R105.2/R106.5	89	110

REGISTERED CIVIL ENGINEER 01-29-15 DATE

6-25-15
PLANS APPROVAL DATE

REGISTERED PROFESSIONAL ENGINEER RUI WANG No. C52910 Exp. 12/31/16 CIVIL STATE OF CALIFORNIA

The State of California or its officers or agents shall not be responsible for the accuracy or completeness of electronic copies of this plan sheet.

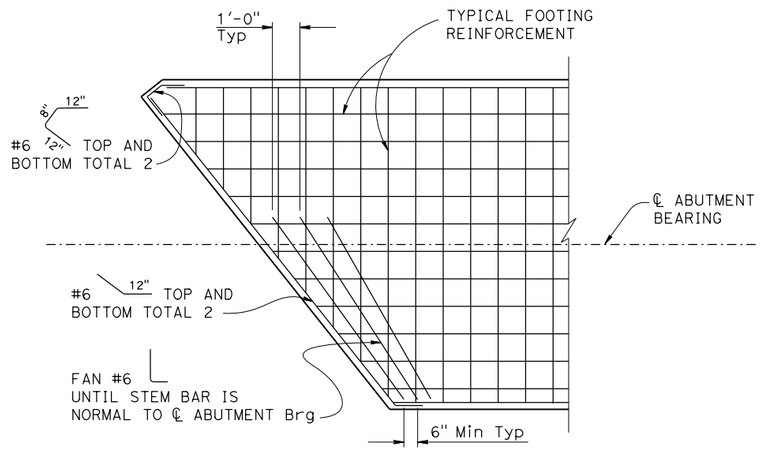

ABUTMENT FOOTING CORNER DETAIL

3/8" = 1'-0"

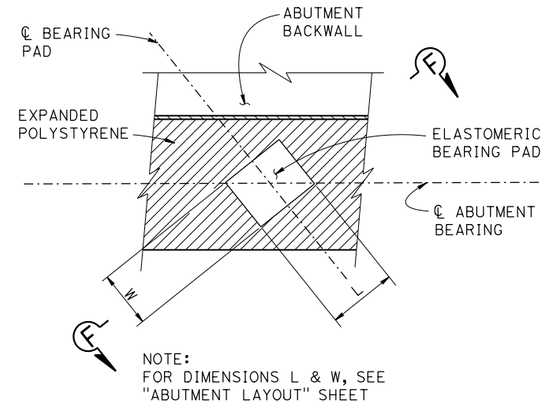

BEARING PAD DETAIL

NO SCALE

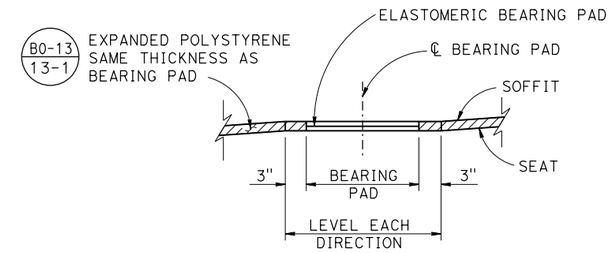

SECTION F-F

NO SCALE

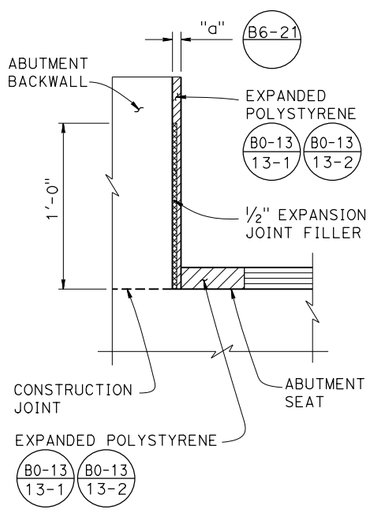

DETAIL A

NO SCALE

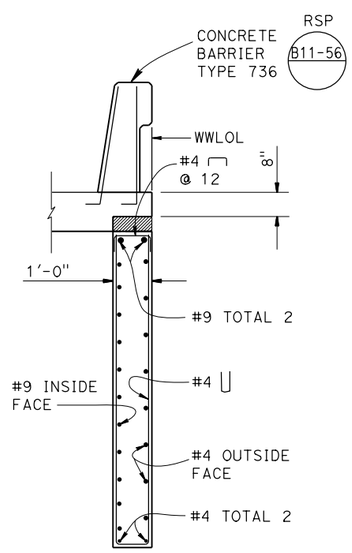

SECTION D-D

1/2" = 1'-0"

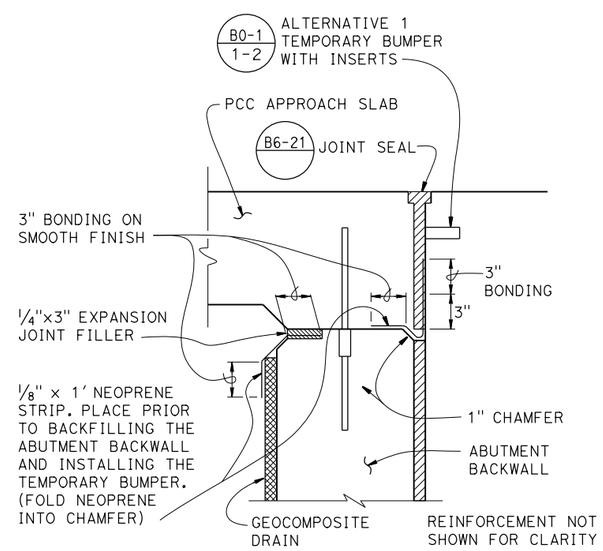

JOINT PROTECTION DETAIL

NO SCALE

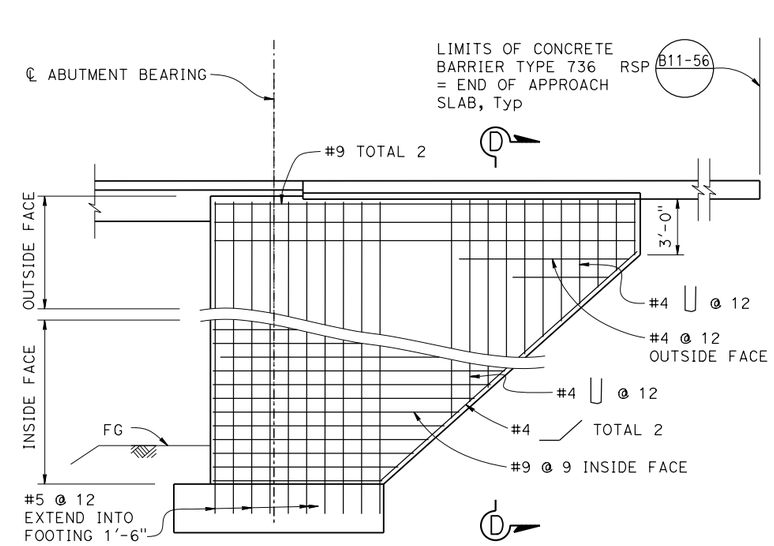

WINGWALL ELEVATION (TYP)

B0-1

1/4" = 1'-0"

NOTES:

1. Barrier not shown in "ELEVATION" view.
2. Not all bars shown.

DESIGN	BY R. WANG	CHECKED D. BALBAS	
DETAILS	BY H. MAHBOOBI	CHECKED D. BALBAS	
QUANTITIES	BY E. MU	CHECKED B. GUNTER	

STATE OF CALIFORNIA DEPARTMENT OF TRANSPORTATION

DIVISION OF ENGINEERING SERVICES STRUCTURE DESIGN DESIGN BRANCH 19

BRIDGE NO. 54-1282L

POST MILE R105.9

WATSON WASH BRIDGE - LEFT (REPLACE)

ABUTMENT DETAILS NO. 1

STRUCTURES DESIGN DETAIL SHEET (ENGLISH) (REV. 09-01-10)

ORIGINAL SCALE IN INCHES FOR REDUCED PLANS 0 1 2 3

UNIT: 3621
PROJECT NUMBER & PHASE: 0800020102 1 CONTRACT NO.: 08-0N5504

DISREGARD PRINTS BEARING EARLIER REVISION DATES

REVISION DATES 06-06-14 01-06-15 01-29-15

SHEET 10 OF 31

FILE => 54-1282l-f-a-dt01.dgn

USERNAME => s125726 DATE PLOTTED => 24-NOV-2015 TIME PLOTTED => 15:52

DIST	COUNTY	ROUTE	POST MILES TOTAL PROJECT	SHEET NO.	TOTAL SHEETS
08	SBd	40	R105.2/R106.5	90	110

REGISTERED CIVIL ENGINEER 01-29-15 DATE

6-25-15
PLANS APPROVAL DATE

REGISTERED PROFESSIONAL ENGINEER RUI WANG No. C52910 Exp. 12/31/16 CIVIL STATE OF CALIFORNIA

The State of California or its officers or agents shall not be responsible for the accuracy or completeness of electronic copies of this plan sheet.

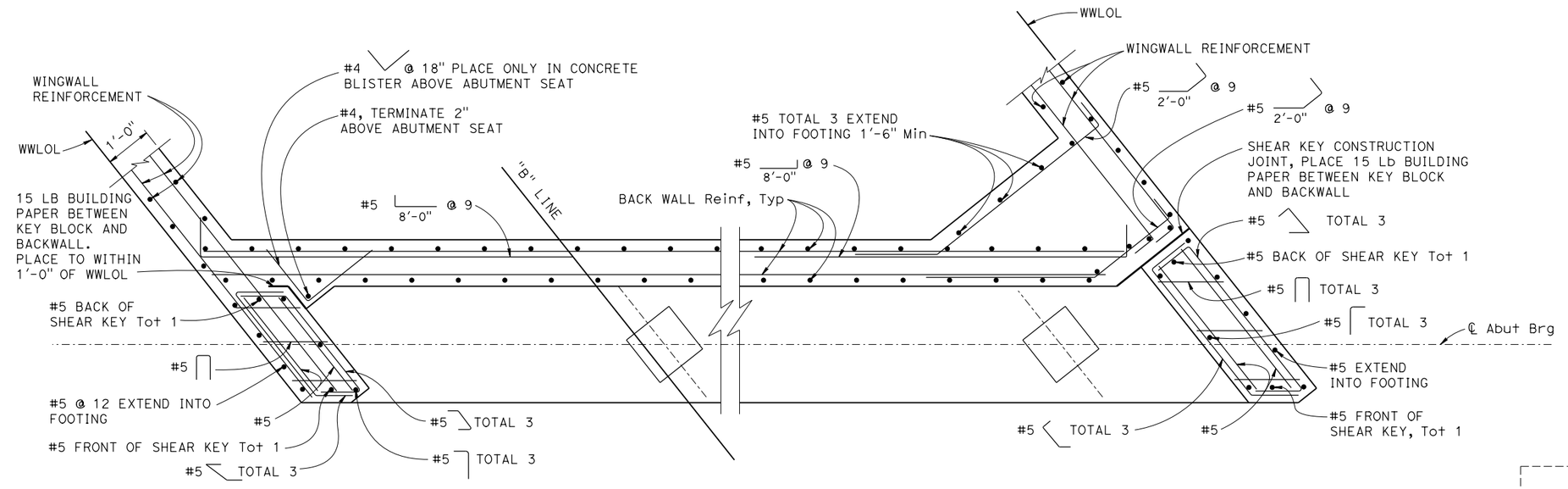

SECTION B-B

3/4" = 1'-0"

ABUTMENT 1 SHOWN, ABUTMENT 18 SIMILAR, BUT OPPOSITE HAND

NOTES:

1. For locations of "SECTION B-B" and "SECTION C-C", see "ABUTMENT LAYOUT" sheet.
2. For wingwall reinforcement, see "ABUTMENT DETAILS NO. 1" sheet.

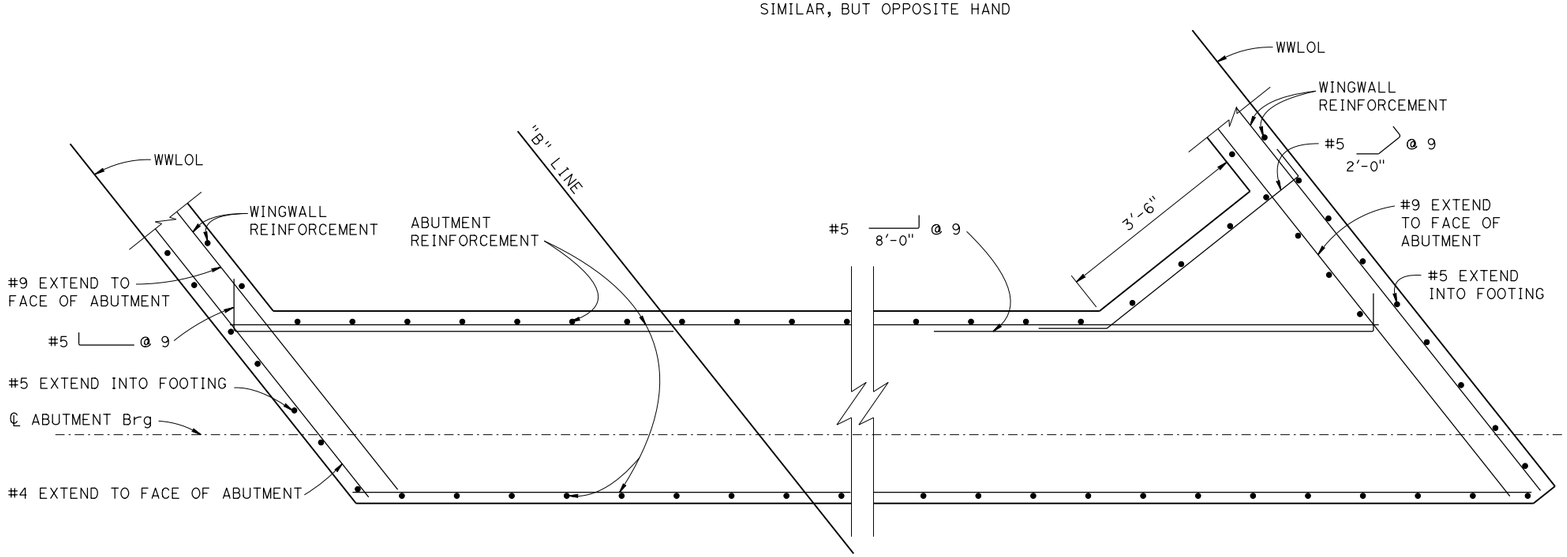

SECTION C-C

3/4" = 1'-0"

ABUTMENT 1 SHOWN, ABUTMENT 18 SIMILAR, BUT OPPOSITE HAND

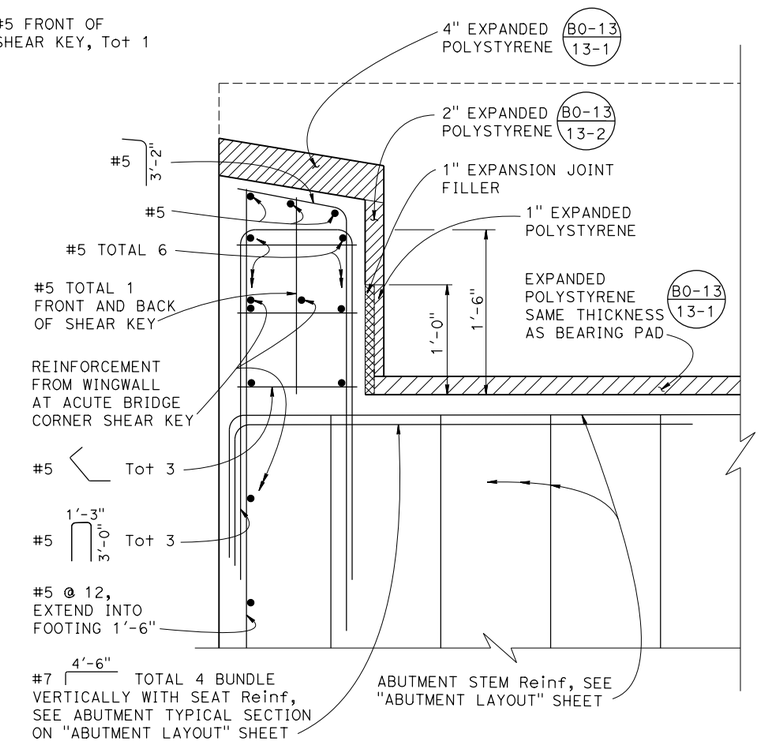

EXTERIOR SHEAR KEY DETAIL

1 1/2" = 1'-0"

ABUTMENT 1 LEFT SHOWN
OTHER LOCATIONS SIMILAR

	BY	CHECKED
DESIGN	R. WANG	D. BALBAS
DETAILS	H. MAHBOOBI / H. INIGUEZ	D. BALBAS
QUANTITIES	E. MU	B. GUNTER

STATE OF CALIFORNIA
DEPARTMENT OF TRANSPORTATION

DIVISION OF ENGINEERING SERVICES
STRUCTURE DESIGN
DESIGN BRANCH 19

BRIDGE NO. 54-1282L
POST MILE R105.9

WATSON WASH BRIDGE - LEFT (REPLACE)
ABUTMENT DETAILS NO. 2

STRUCTURES DESIGN DETAIL SHEET (ENGLISH) (REV. 09-01-10)

ORIGINAL SCALE IN INCHES FOR REDUCED PLANS 0 1 2 3

UNIT: 3621
PROJECT NUMBER & PHASE: 0800020102 1 CONTRACT NO.: 08-0N5504

DISREGARD PRINTS BEARING EARLIER REVISION DATES

REVISION DATES 08-04-14 12-23-14 01-29-15

SHEET 11 OF 31

FILE => 54-1282l-h-a-dt02.dgn

USERNAME => s125726 DATE PLOTTED => 24-NOV-2015 TIME PLOTTED => 15:56

DIST	COUNTY	ROUTE	POST MILES TOTAL PROJECT	SHEET NO.	TOTAL SHEETS
08	SBd	40	R105.2/R106.5	91	110

REGISTERED CIVIL ENGINEER 01-29-15 DATE

6-25-15
PLANS APPROVAL DATE

REGISTERED PROFESSIONAL ENGINEER RUI WANG No. C52910 Exp. 12/31/16 CIVIL STATE OF CALIFORNIA

The State of California or its officers or agents shall not be responsible for the accuracy or completeness of electronic copies of this plan sheet.

NOTES:

1. Place stirrups perpendicular to and space along ℄ of piers.
2. All hoops must be ultimate butt spliced.
3. Concrete barrier Type 736 not shown for clarity.
4. For PC/PS concrete slab unit, see "PRECAST CONCRETE SLAB DETAILS NO. 1" and "PRECAST CONCRETE SLAB DETAILS NO. 2" sheets.
5. For SECTION C-C see "PIER DETAILS NO. 2" sheet.
6. For SECTION A-A and SECTION B-B, see "PIER DETAILS NO. 1" sheet.
7. No splice in main pier cap reinforcements.
8. For section D-D, see "PIER DETAILS NO. 3" sheet.

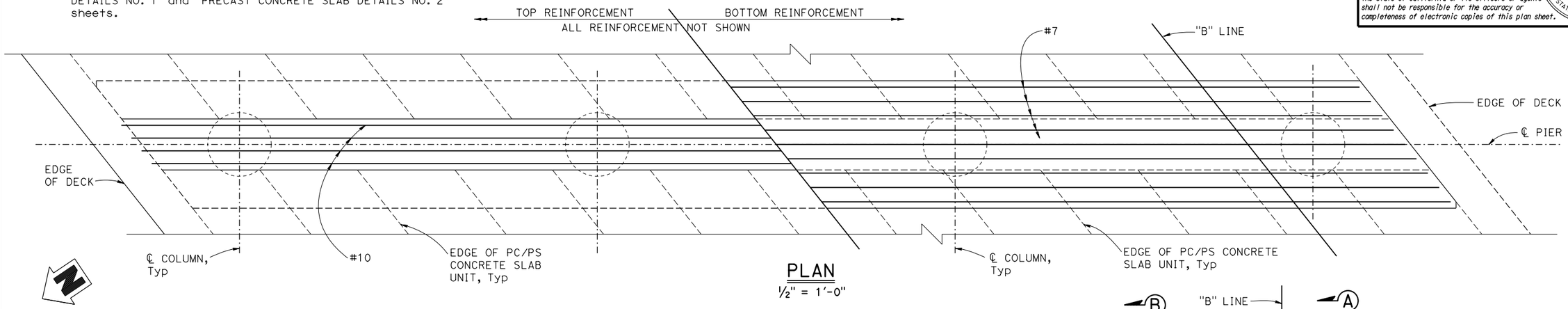

PLAN
½" = 1'-0"

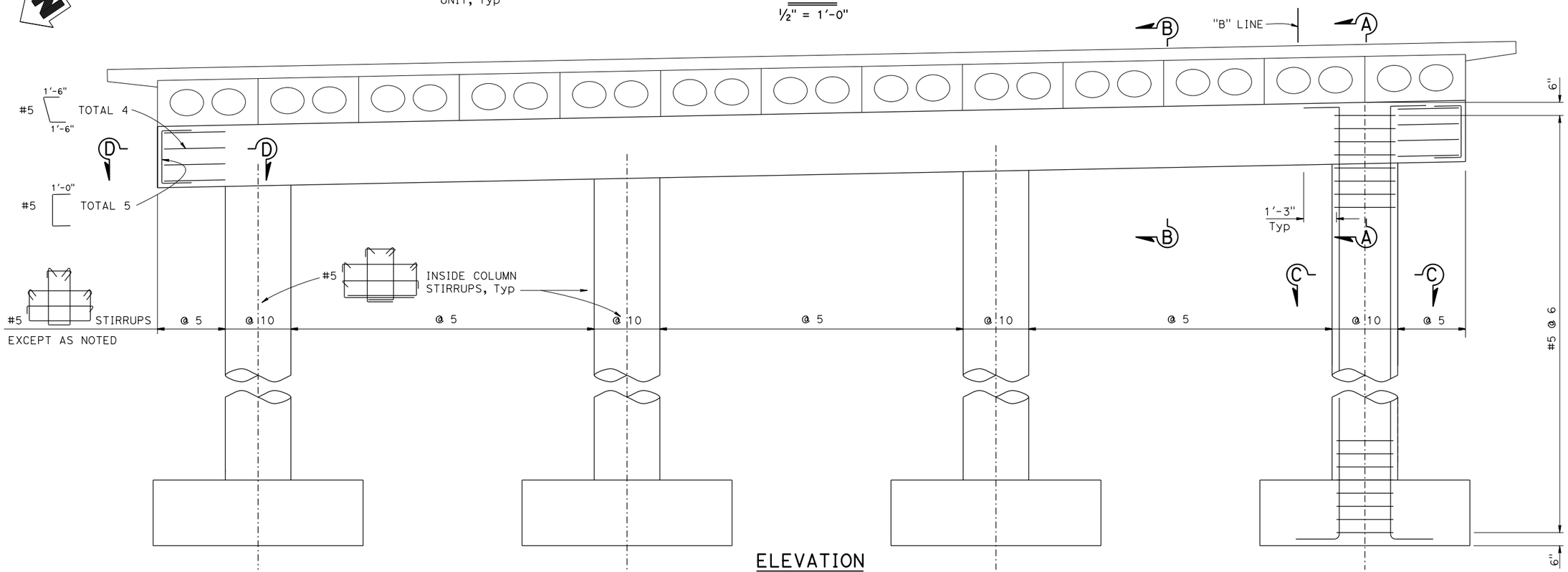

ELEVATION
½" = 1'-0"

DESIGN	BY E. MERCADO	CHECKED R. WANG	
DETAILS	BY H. MAHBOOBI / H. INIGUEZ	CHECKED R. WANG	
QUANTITIES	BY S. YEH	CHECKED E. MU	

STATE OF CALIFORNIA
DEPARTMENT OF TRANSPORTATION

DIVISION OF ENGINEERING SERVICES
STRUCTURE DESIGN
DESIGN BRANCH 19

BRIDGE NO. 54-1282L
POST MILE R105.9

WATSON WASH BRIDGE - LEFT (REPLACE)
PIERS 2-6, 8-11, AND 13-17 LAYOUT

STRUCTURES DESIGN DETAIL SHEET (ENGLISH) (REV. 09-01-10)

ORIGINAL SCALE IN INCHES FOR REDUCED PLANS 0 1 2 3

UNIT: 3621
PROJECT NUMBER & PHASE: 0800020102 1 CONTRACT NO.: 08-0N5504

DISREGARD PRINTS BEARING EARLIER REVISION DATES

REVISION DATES 06-26-14 01-06-15 01-29-15

SHEET 12 OF 31

FILE => 54-1282l-h-b01_lo01.dgn

USERNAME => s125726 DATE PLOTTED => 24-NOV-2015 TIME PLOTTED => 15:57

DIST	COUNTY	ROUTE	POST MILES TOTAL PROJECT	SHEET NO.	TOTAL SHEETS
08	SBd	40	R105.2/R106.5	92	110

REGISTERED CIVIL ENGINEER 01-29-15 DATE

6-25-15
PLANS APPROVAL DATE

REGISTERED PROFESSIONAL ENGINEER RUI WANG No. C52910 Exp. 12/31/16 CIVIL STATE OF CALIFORNIA

The State of California or its officers or agents shall not be responsible for the accuracy or completeness of electronic copies of this plan sheet.

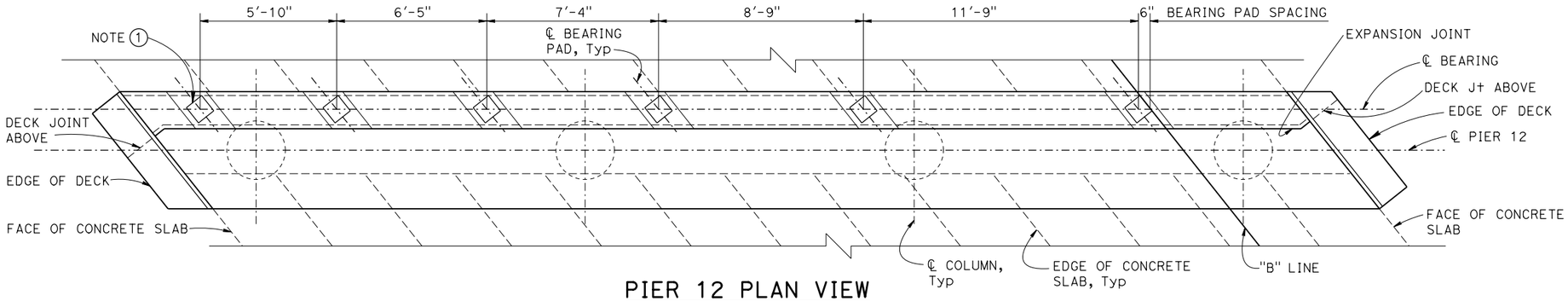

PIER 12 PLAN VIEW

3/8" = 1'-0"

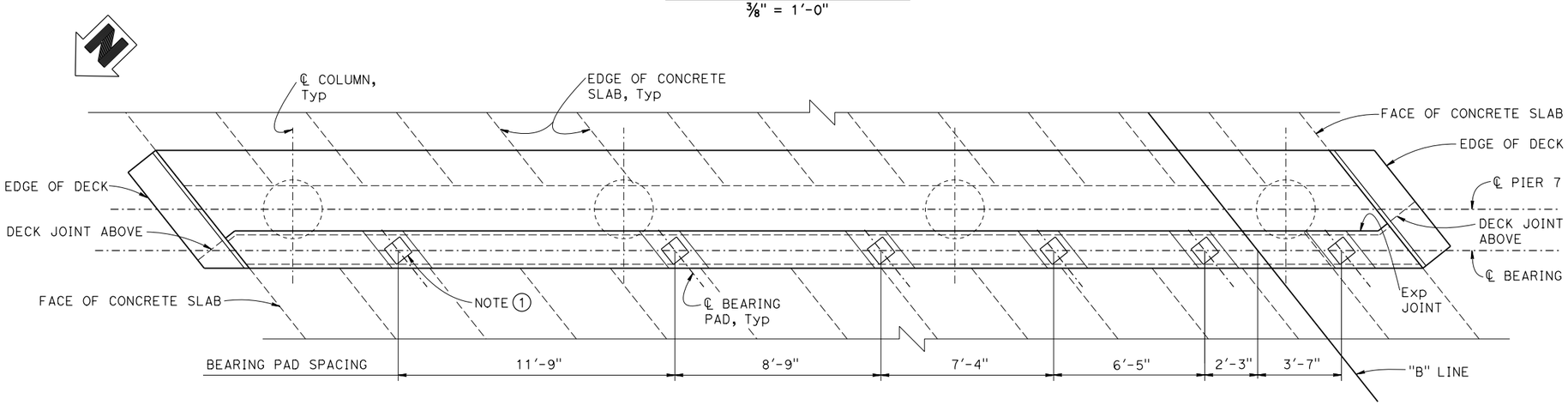

PIER 7 PLAN VIEW

3/8" = 1'-0"

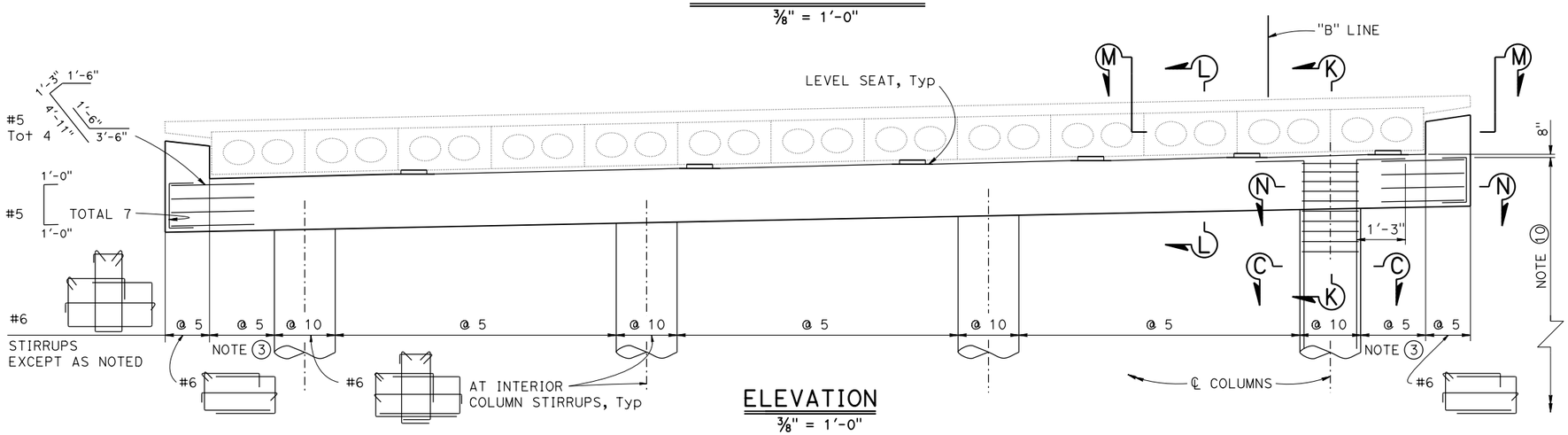

ELEVATION

3/8" = 1'-0"

NOTES:

1. Steel reinforced Elastomeric Bearing Pad 10"(L) X 10"(W) X 3", total 6. See BEARING PAD DETAIL on "ABUTMENT DETAILS NO. 1" sheet.
2. For PC/PS Concrete Slab unit Details, see "PRECAST CONCRETE SLAB DETAILS NO. 1" and "PRECAST CONCRETE SLAB DETAILS NO. 2" sheets.
3. For sections M-M and N-N, see "PIER DETAILS NO. 3" sheet.
4. Concrete Barrier Type 736 not shown for clarity.
5. For SECTIONS K-K and L-L, see "PIER DETAILS NO. 1" sheet.
6. For SECTION C-C, see "PIER DETAILS NO. 2" sheet.
7. For main pier cap reinforcement details, see "PIER DETAILS NO. 2" sheet.
8. Place stirrups perpendicular to and space along ℄ of piers.
9. All hoops must be ultimate butt spliced.
10. For column hoop spacings, see elevation on " PIERS 2-6, 8-11, and 13-17 LAYOUT" sheet.

	BY	CHECKED
DESIGN	R. WANG	E. MERCADO
DETAILS	H. MAHBOOBI / H. INIGUEZ	E. MERCADO
QUANTITIES	S. YEH	E. MERCADO

STATE OF CALIFORNIA
DEPARTMENT OF TRANSPORTATION

DIVISION OF ENGINEERING SERVICES
STRUCTURE DESIGN
DESIGN BRANCH 19

BRIDGE NO. 54-1282L
POST MILE R105.9

WATSON WASH BRIDGE - LEFT (REPLACE)
PIERS 7 AND 12 LAYOUT

STRUCTURES DESIGN DETAIL SHEET (ENGLISH) (REV. 09-01-10)

ORIGINAL SCALE IN INCHES FOR REDUCED PLANS 0 1 2 3

UNIT: 3621
PROJECT NUMBER & PHASE: 0800020102 1 CONTRACT NO.: 08-0N5504

DISREGARD PRINTS BEARING EARLIER REVISION DATES

REVISION DATES 08-04-14 01-29-15 01-06-15

SHEET 13 OF 31

FILE => 54-1282l-n-b01_lo02.dgn

USERNAME => s125726 DATE PLOTTED => 24-NOV-2015 TIME PLOTTED => 15:58

DIST	COUNTY	ROUTE	POST MILES TOTAL PROJECT	SHEET No.	TOTAL SHEETS
08	SBd	40	R105.2/R106.5	93	110

REGISTERED CIVIL ENGINEER 01-29-15 DATE

6-25-15
PLANS APPROVAL DATE

REGISTERED PROFESSIONAL ENGINEER RUI WANG No. C52910 Exp. 12/31/16 CIVIL STATE OF CALIFORNIA

The State of California or its officers or agents shall not be responsible for the accuracy or completeness of electronic copies of this plan sheet.

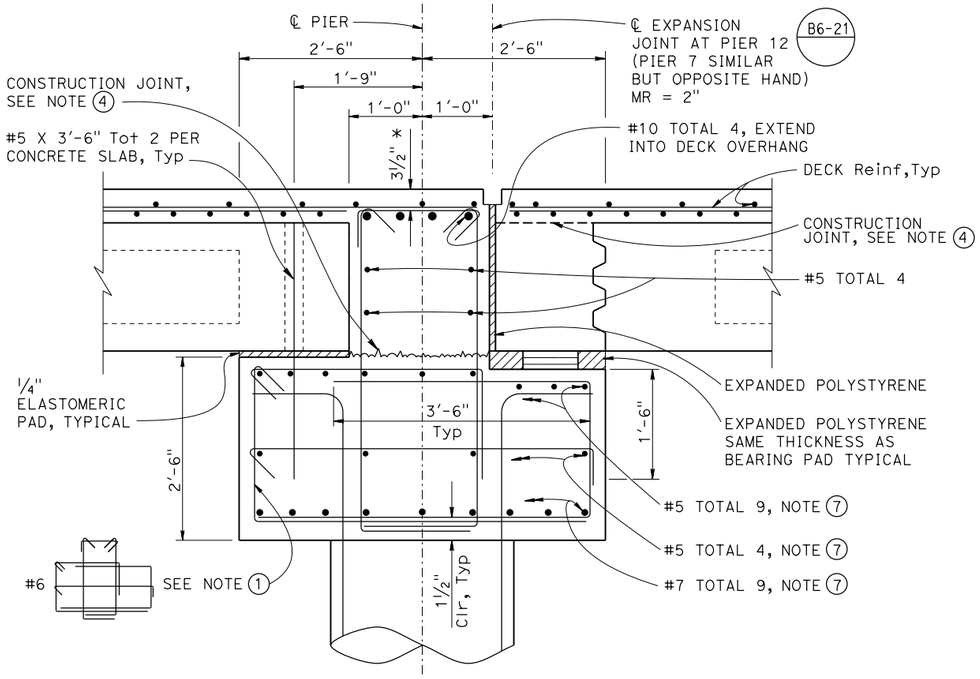

SECTION K-K

1" = 1'-0"

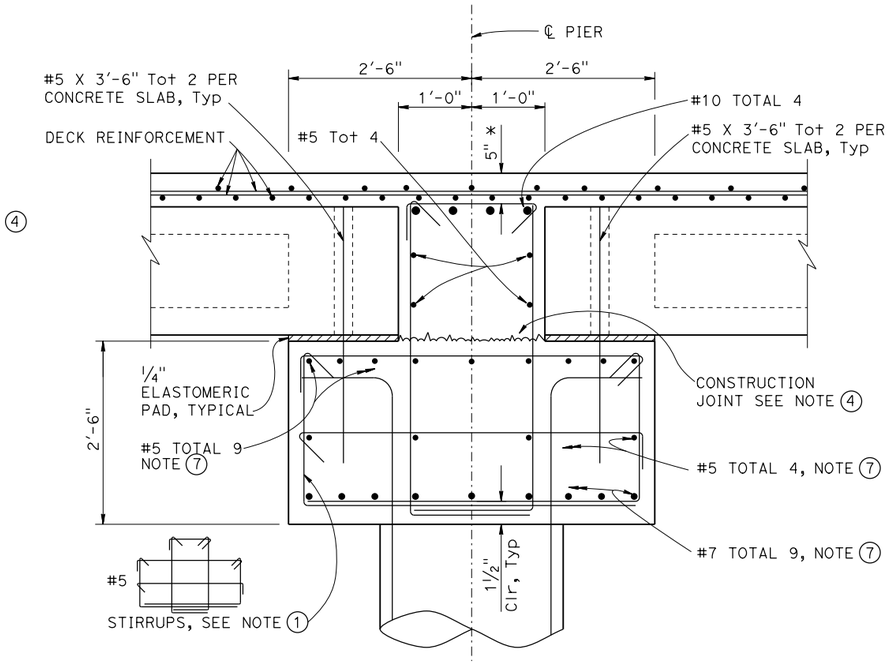

SECTION A-A

1" = 1'-0"

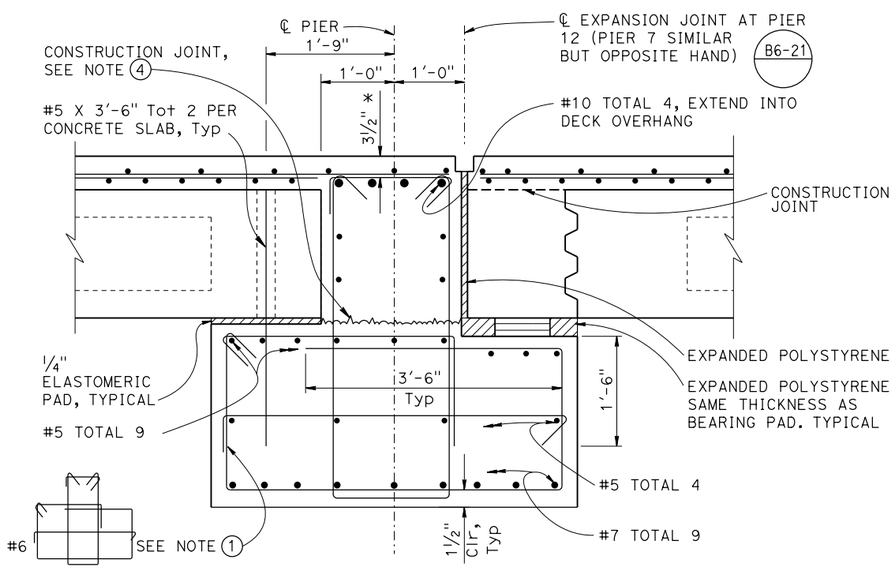

SECTION L-L

1" = 1'-0"

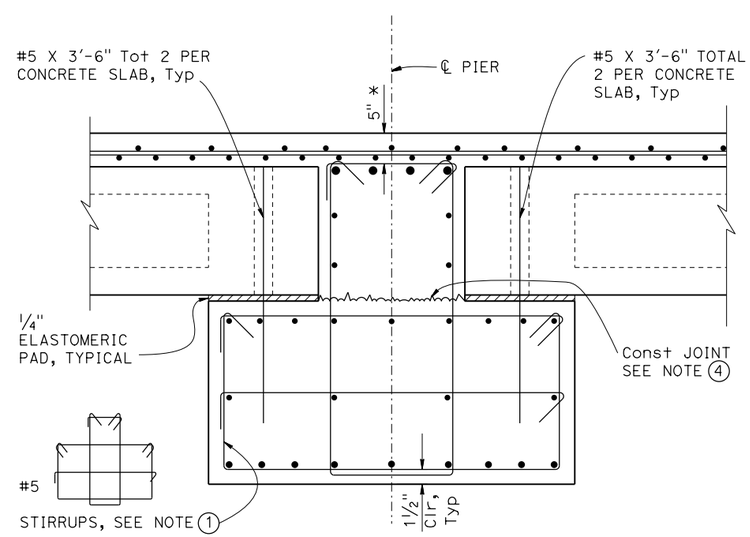

SECTION B-B

1" = 1'-0"

NOTES:

1. Place stirrups perpendicular to and space along ℄ of piers.
2. Concrete barrier Type 736 not shown for clarity.
3. For PC/PS concrete slab unit, see "PRECAST CONCRETE SLAB DETAILS NO. 1" and "PRECAST CONCRETE SLAB DETAILS NO. 2" sheets.
4. Roughen the construction joint surface to 1/4" amplitude.
5. For locations of SECTION K-K and SECTION L-L, see "PIERS 7 and 12 LAYOUT" sheet.
6. For locations of SECTION A-A and SECTION B-B, see "PIERS 2-6, 8-11, and 13-17 LAYOUT" sheet.
7. Extend bars to both ends of pier caps.
8. For clarity, column hoops not shown.

* Clearance to main cap reinforcement.

	BY	CHECKED
DESIGN	E. MERCADO	R. WANG
DETAILS	H. MAHBOOBI / H. INIGUEZ	R. WANG
QUANTITIES	S. YEH	E. MU

STATE OF CALIFORNIA
DEPARTMENT OF TRANSPORTATION

DIVISION OF ENGINEERING SERVICES
STRUCTURE DESIGN
DESIGN BRANCH 19

BRIDGE NO. 54-1282L
POST MILE R105.9

WATSON WASH BRIDGE - LEFT (REPLACE)

PIER DETAILS NO. 1

STRUCTURES DESIGN DETAIL SHEET (ENGLISH) (REV. 09-01-10)

ORIGINAL SCALE IN INCHES FOR REDUCED PLANS 0 1 2 3

UNIT: 3621
PROJECT NUMBER & PHASE: 0800020102 1 CONTRACT NO.: 08-0N5504

DISREGARD PRINTS BEARING EARLIER REVISION DATES → REVISION DATES 08-04-14 01-07-15 01-29-15

SHEET 14 OF 31

FILE => 54-1282l-h-b01det01.dgn

USERNAME => s125726 DATE PLOTTED => 24-NOV-2015 TIME PLOTTED => 15:58

DIST	COUNTY	ROUTE	POST MILES TOTAL PROJECT	SHEET No.	TOTAL SHEETS
08	SBd	40	R105.2/R106.5	94	110

REGISTERED CIVIL ENGINEER 01-29-15 DATE

6-25-15
PLANS APPROVAL DATE

REGISTERED PROFESSIONAL ENGINEER RUI WANG No. C52910 Exp. 12/31/16 CIVIL STATE OF CALIFORNIA

The State of California or its officers or agents shall not be responsible for the accuracy or completeness of electronic copies of this plan sheet.

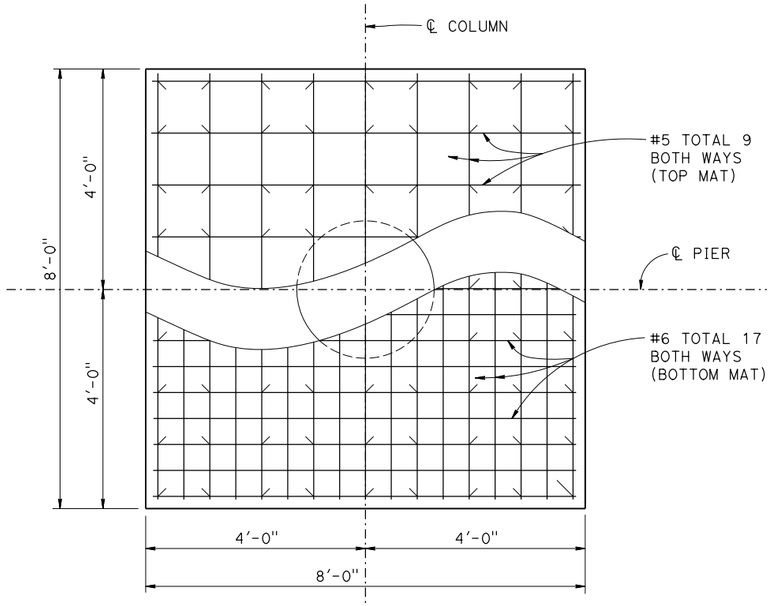

FOOTING PLAN

¾" = 1'-0"

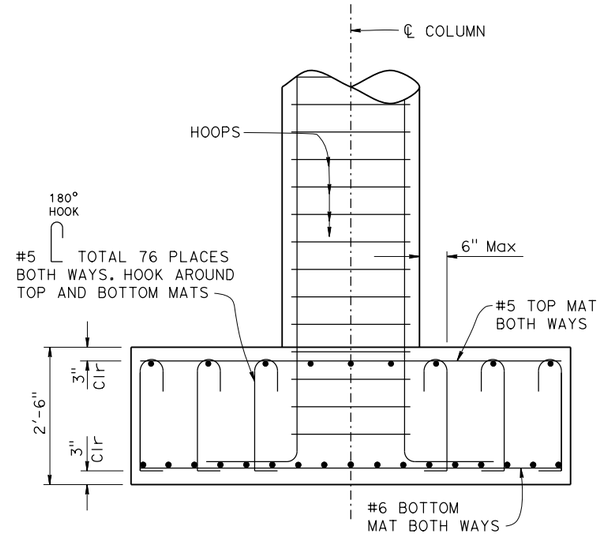

FOOTING ELEVATION

¾" = 1'-0"

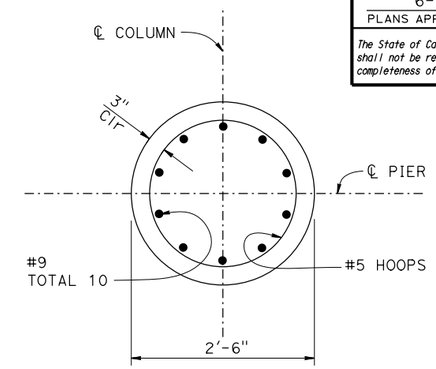

SECTION C-C

1" = 1'-0"

NOTES:

1. For SECTION C-C, see "PIERS 7 and 12 LAYOUT" and "PIERS 2-6, 8-11 and 13-17 LAYOUT" sheets.
2. All hoops must be ultimate butt spliced.
3. For PC/PS concrete slab, see "PRECAST CONCRETE SLAB DETAILS NO. 1" and "PRECAST CONCRETE SLAB DETAILS NO. 2" sheets.
4. No splice in main pier cap reinforcements.

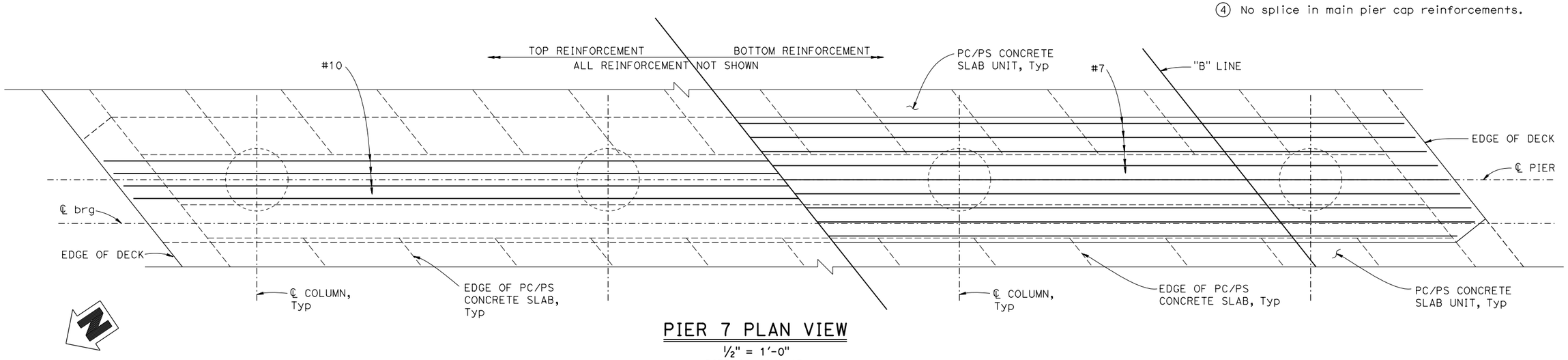

PIER 7 PLAN VIEW

½" = 1'-0"
PIER 12 SIMILAR

DESIGN	BY E. MERCADO	CHECKED R. WANG	
DETAILS	BY H. MAHBOOBI / H. INIGUEZ	CHECKED R. WANG	
QUANTITIES	BY S. YEH	CHECKED E. MU	

STATE OF CALIFORNIA
DEPARTMENT OF TRANSPORTATION

DIVISION OF ENGINEERING SERVICES
STRUCTURE DESIGN
DESIGN BRANCH 19

BRIDGE NO. 54-1282L
POST MILE R105.9

WATSON WASH BRIDGE - LEFT (REPLACE)
PIER DETAILS NO. 2

STRUCTURES DESIGN DETAIL SHEET (ENGLISH) (REV. 09-01-10)

ORIGINAL SCALE IN INCHES FOR REDUCED PLANS 0 1 2 3

UNIT: 3621
PROJECT NUMBER & PHASE: 0800020102 1 CONTRACT NO.: 08-0N5504

DISREGARD PRINTS BEARING EARLIER REVISION DATES → REVISION DATES 06-04-14 01-07-15 01-29-15

SHEET 15 OF 31

FILE => 54-1282l-h-b01det02.dgn

USERNAME => s125726 DATE PLOTTED => 24-NOV-2015 TIME PLOTTED => 15:59

DIST	COUNTY	ROUTE	POST MILES TOTAL PROJECT	SHEET No.	TOTAL SHEETS
08	SBd	40	R105.2/R106.5	95	110

REGISTERED CIVIL ENGINEER 01-29-15 DATE

6-25-15
PLANS APPROVAL DATE

REGISTERED PROFESSIONAL ENGINEER RUI WANG No. C52910 Exp. 12/31/16 CIVIL STATE OF CALIFORNIA

The State of California or its officers or agents shall not be responsible for the accuracy or completeness of electronic copies of this plan sheet.

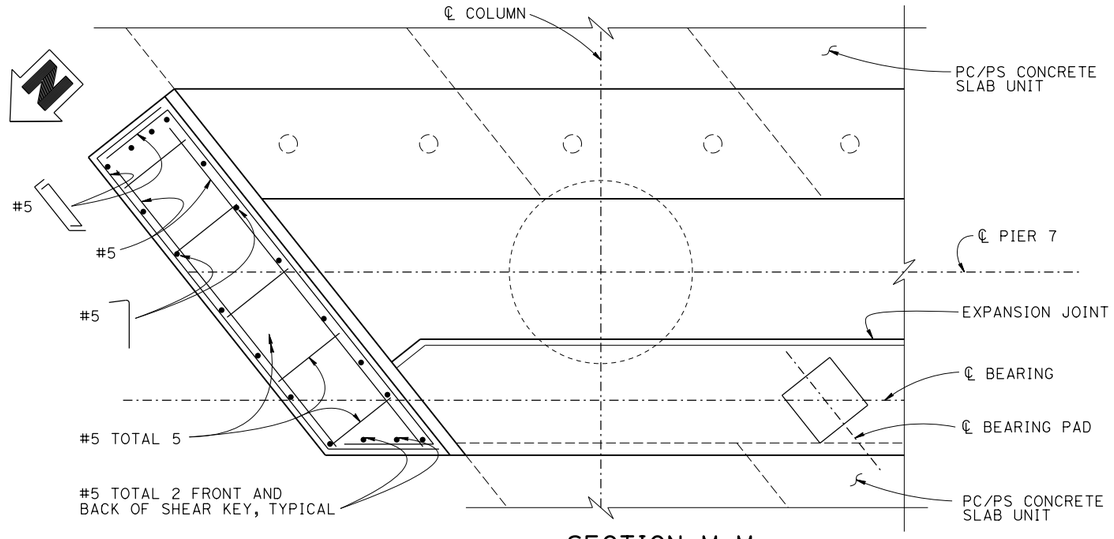

SECTION M-M

1" = 1'-0"
EXPANSION JOINT 7 SHOWN
EXPANSION JOINT 12 SIMILAR

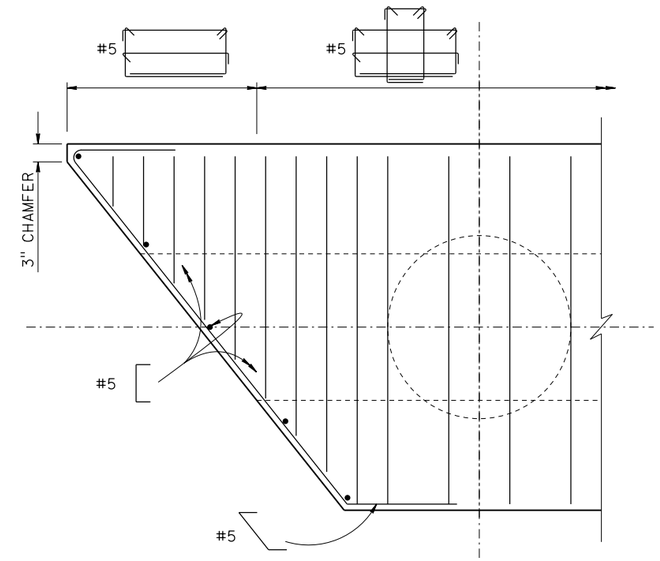

SECTION D-D

1" = 1'-0"

NOTES:

1. For locatons of SECTIONS M-M AND N-N, see "PIERS 7 AND 12 LAYOUT" sheet.
2. See ELEVATION on "PEIRS 7 AND 12 LAYOUT" sheet.
3. For location of section D-D, see "PEIRS 2-6, 8-11, and 13-17 LAYOUT" sheet.

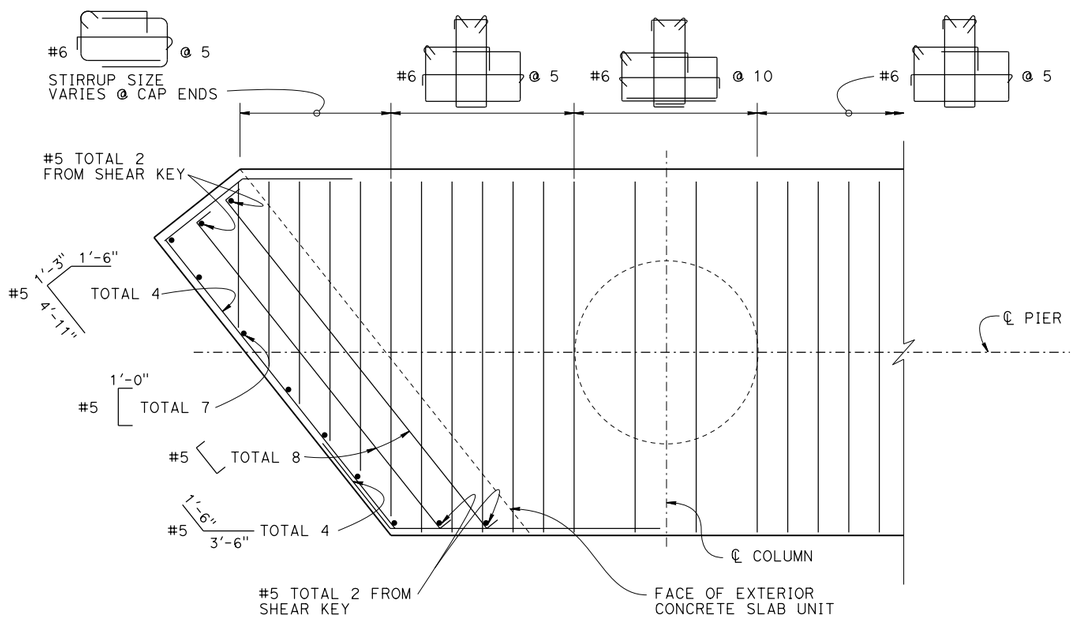

SECTION N-N ②

1" = 1'-0"

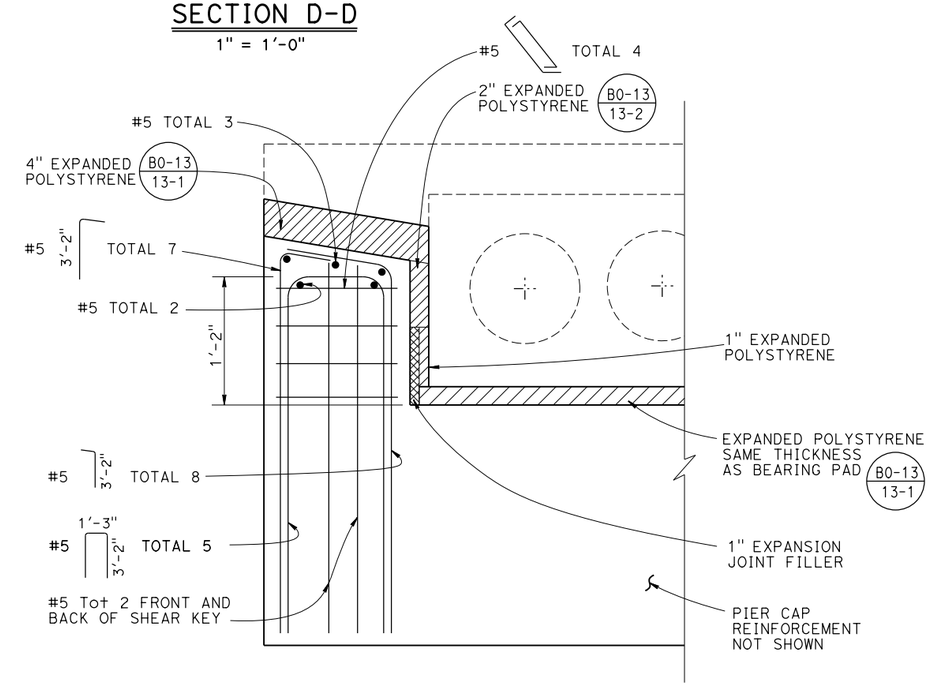

PIER 7 & 12 SHEAR KEY DETAIL

1½" = 1'-0"

	BY	CHECKED
DESIGN	R. WANG	E. MERCADO
DETAILS	H. MAHBOOBI / H. INIGUEZ	E. MERCADO
QUANTITIES	S. YEH	E. MERCADO

STATE OF CALIFORNIA
DEPARTMENT OF TRANSPORTATION

DIVISION OF ENGINEERING SERVICES
STRUCTURE DESIGN
DESIGN BRANCH 19

BRIDGE NO. 54-1282L
POST MILE R105.9

WATSON WASH BRIDGE - LEFT (REPLACE)
PIER DETAILS NO. 3

STRUCTURES DESIGN DETAIL SHEET (ENGLISH) (REV. 09-01-10)

ORIGINAL SCALE IN INCHES FOR REDUCED PLANS 0 1 2 3

UNIT: 3621
PROJECT NUMBER & PHASE: 0800020102 1 CONTRACT NO.: 08-0N5504

DISREGARD PRINTS BEARING EARLIER REVISION DATES

REVISION DATES: 08-04-14 01-29-15 01-04-15

SHEET 16 OF 31

FILE => 54-1282l-h-b01det03.dgn

USERNAME => s125726 DATE PLOTTED => 24-NOV-2015 TIME PLOTTED => 15:59

DIST	COUNTY	ROUTE	POST MILES TOTAL PROJECT	SHEET NO.	TOTAL SHEETS
08	SBd	40	R105.2/R106.5	96	110

REGISTERED CIVIL ENGINEER 01-29-15 DATE

6-25-15
PLANS APPROVAL DATE

REGISTERED PROFESSIONAL ENGINEER RUI WANG No. C52910 Exp. 12/31/16 CIVIL STATE OF CALIFORNIA

The State of California or its officers or agents shall not be responsible for the accuracy or completeness of electronic copies of this plan sheet.

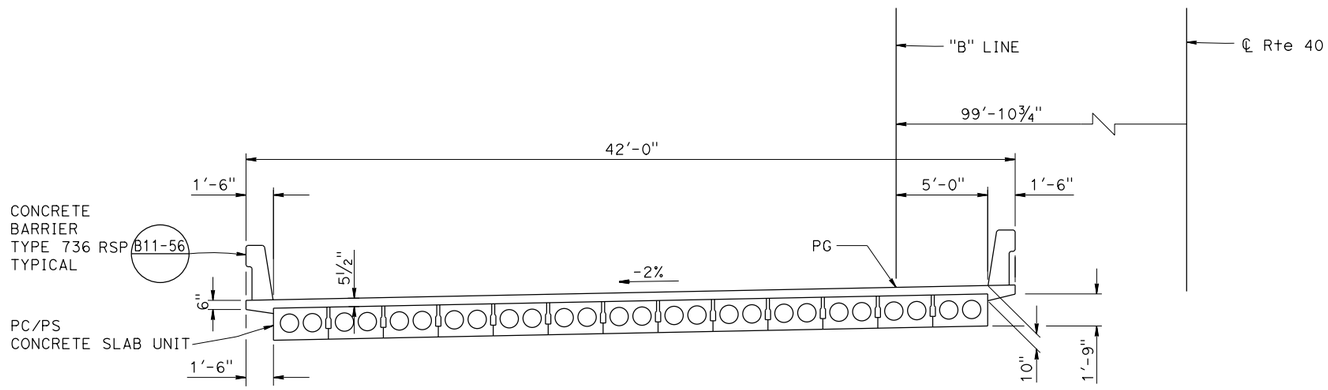

TYPICAL SECTION

1/4" = 1'-0"

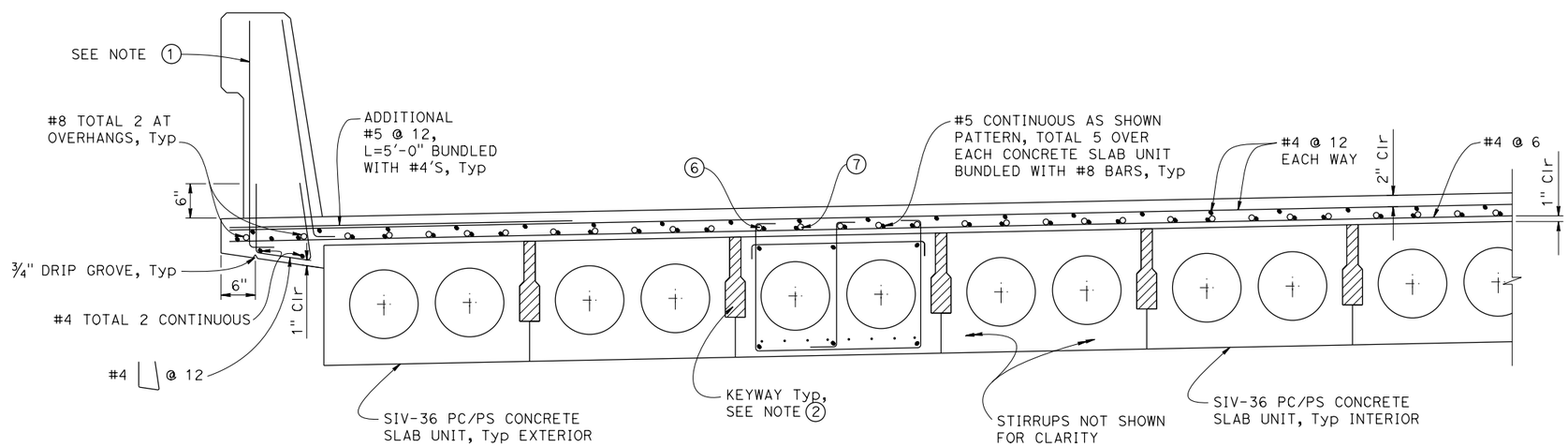

PART TYPICAL SECTION

1" = 1'-0"

NOTES:

1. For concrete Barrier Type 736 details, see "PRECAST CONCRETE SLAB DETAILS NO. 2" sheet.
2. Keyway to be filled with grout.
3. For method of placing deck, see "PRECAST CONCRETE SLAB LAYOUT" sheet.
4. For Precast Concrete Slab details, see "PRECAST CONCRETE SLAB DETAILS NO. 1" and "PRECAST CONCRETE SLAB DETAILS NO. 2" sheets.
5. All #8 bars continuous throughout lengths of frames. Double lap splice required. For no splice zone, see "PRECAST CONCRETE SLAB LAYOUT" sheet.
6. Place 1-#8 bar at each hooked corner of stirrups. Total 3 bars per PC/PS concrete slab unit, typical.
7. Place 1-#8 bar equally spaced among stirrups. Total 2 bars per PC/PS concrete slab unit, typical.

	BY	CHECKED
DESIGN	E. MERCADO	R. WANG
DETAILS	H. MAHBOOBI / H. INIGUEZ	R. WANG
QUANTITIES	S. YEH	E. MERCADO

STATE OF CALIFORNIA
DEPARTMENT OF TRANSPORTATION

DIVISION OF ENGINEERING SERVICES
STRUCTURE DESIGN
DESIGN BRANCH 19

BRIDGE NO. 54-1282L
POST MILE R105.9

WATSON WASH BRIDGE - LEFT (REPLACE)
TYPICAL SECTION

STRUCTURES DESIGN DETAIL SHEET (ENGLISH) (REV. 09-01-10)

ORIGINAL SCALE IN INCHES FOR REDUCED PLANS 0 1 2 3

UNIT: 3621
PROJECT NUMBER & PHASE: 0800020102 1 CONTRACT NO.: 08-0N5504

DISREGARD PRINTS BEARING EARLIER REVISION DATES

REVISION DATES 07-14-14 01-07-15 01-29-15

SHEET 17 OF 31

FILE => 54-1282l-k-ts01.dgn

USERNAME => s125726 DATE PLOTTED => 24-NOV-2015 TIME PLOTTED => 16:00

DIST	COUNTY	ROUTE	POST MILES TOTAL PROJECT	SHEET No.	TOTAL SHEETS
08	SBd	40	R105.2/R106.5	97	110

REGISTERED CIVIL ENGINEER 01-29-15 DATE

6-25-15
PLANS APPROVAL DATE

REGISTERED PROFESSIONAL ENGINEER RUI WANG No. C52910 Exp. 12/31/16 CIVIL STATE OF CALIFORNIA

The State of California or its officers or agents shall not be responsible for the accuracy or completeness of electronic copies of this plan sheet.

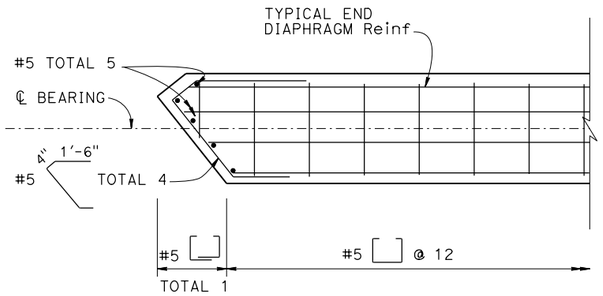

END DIAPHRAGM CORNER DETAIL

EXPANSION JOINT 7 Lt SHOWN,
EXPANSION JOINT 12 Rt SIMILIAR

1" = 1'-0"

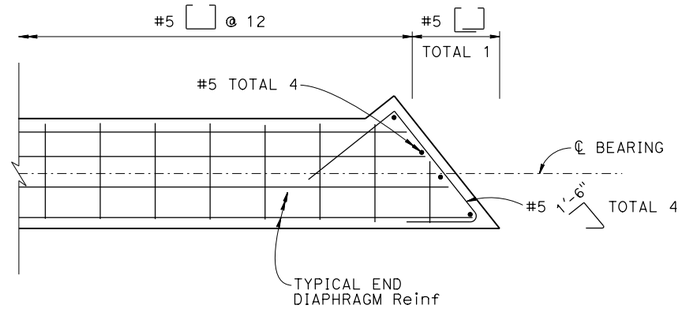

END DIAPHRAGM CORNER DETAIL

EXPANSION JOINT 7 Rt SHOWN,
EXPANSION JOINT 12 Lt SIMILIAR

1" = 1'-0"

NOTES:

1. For locations of "SECTION D-D" and "SECTION E-E", see "PRECAST CONCRETE SLAB LAYOUT" sheet.
2. For "a" dimension, see B6-21

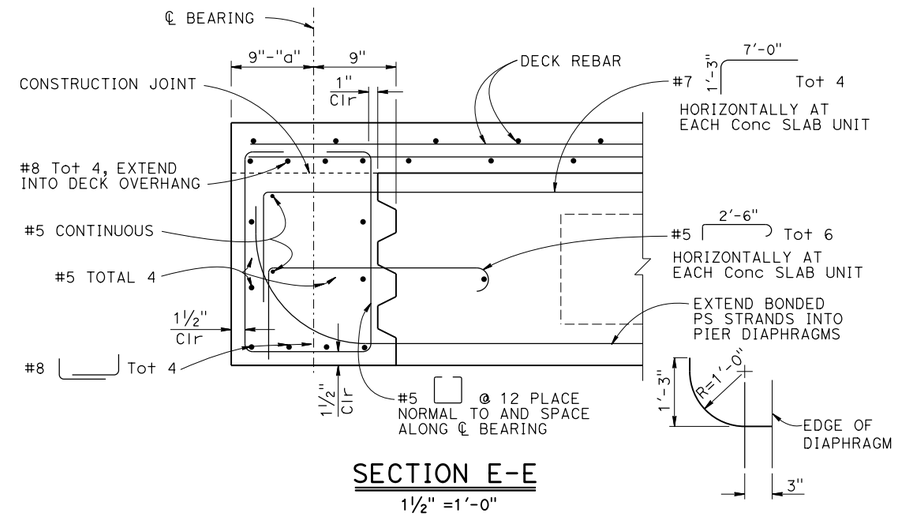

SECTION E-E

1½" =1'-0"

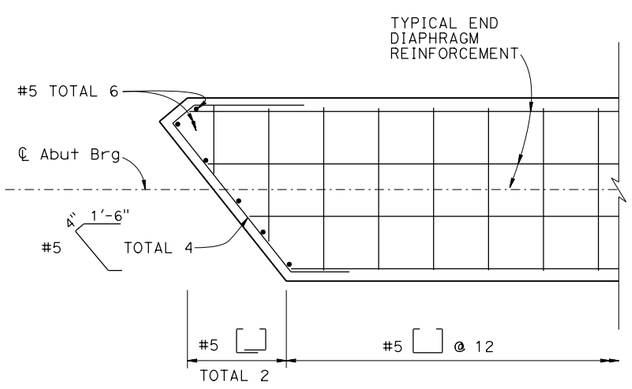

END DIAPHRAGM CORNER DETAIL

(ABUTMENT 1 Lt SHOWN, ABUTMENT 18 Rt SIMILIAR)

1" = 1'-0"

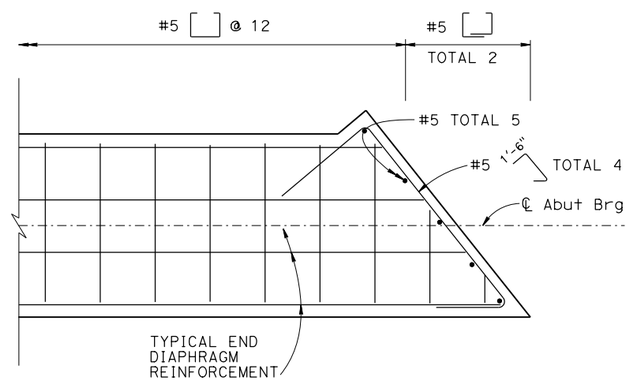

END DIAPHRAGM CORNER DETAIL

(ABUTMENT 1 Rt SHOWN, ABUTMENT 18 Lt SIMILIAR)

1" = 1'-0"

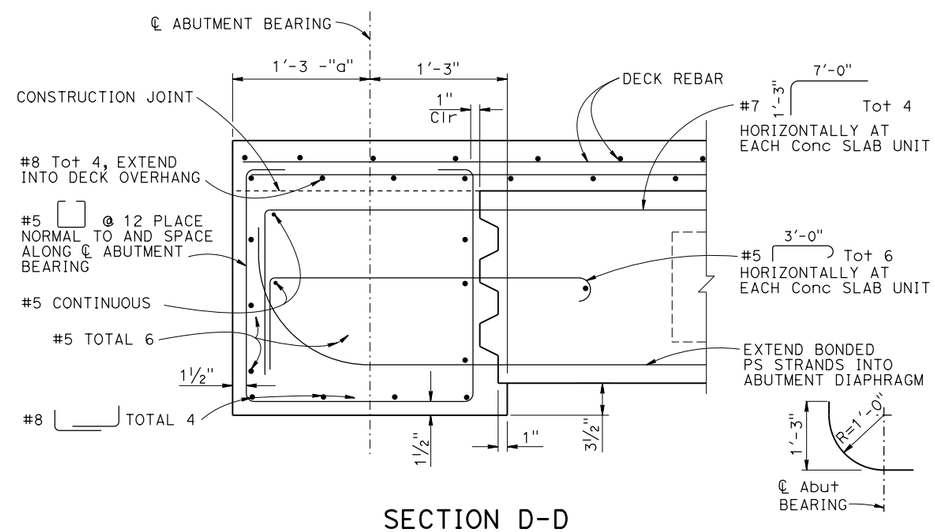

SECTION D-D

1½" =1'-0"

DESIGN	BY E. MERCADO	CHECKED R. WANG
DETAILS	BY H. MAHBOOBI / H. INIGUEZ	CHECKED R. WANG
QUANTITIES	BY S. YEH	CHECKED E. MERCADO

STATE OF CALIFORNIA
DEPARTMENT OF TRANSPORTATION

DIVISION OF ENGINEERING SERVICES
STRUCTURE DESIGN
DESIGN BRANCH 19

BRIDGE NO. 54-1282L
POST MILE R105.9

WATSON WASH BRIDGE - LEFT (REPLACE)
END DIAPHRAGM DETAILS

STRUCTURES DESIGN DETAIL SHEET (ENGLISH) (REV. 09-01-10)

ORIGINAL SCALE IN INCHES FOR REDUCED PLANS 0 1 2 3

UNIT: 3621
PROJECT NUMBER & PHASE: 0800020102 1 CONTRACT NO.: 08-0N5504

DISREGARD PRINTS BEARING EARLIER REVISION DATES

REVISION DATES 08-14-14 01-29-15 01-07-15

SHEET 18 OF 31

FILE => 54-1282l-l-eddt.dgn

USERNAME => s125726 DATE PLOTTED => 24-NOV-2015 TIME PLOTTED => 16:01

DIST	COUNTY	ROUTE	POST MILES TOTAL PROJECT	SHEET NO.	TOTAL SHEETS
08	SBd	40	R105.2/R106.5	98	110

REGISTERED CIVIL ENGINEER 01-29-15 DATE

6-25-15
PLANS APPROVAL DATE

REGISTERED PROFESSIONAL ENGINEER RUI WANG No. C52910 Exp. 12/31/16 CIVIL STATE OF CALIFORNIA

The State of California or its officers or agents shall not be responsible for the accuracy or completeness of electronic copies of this plan sheet.

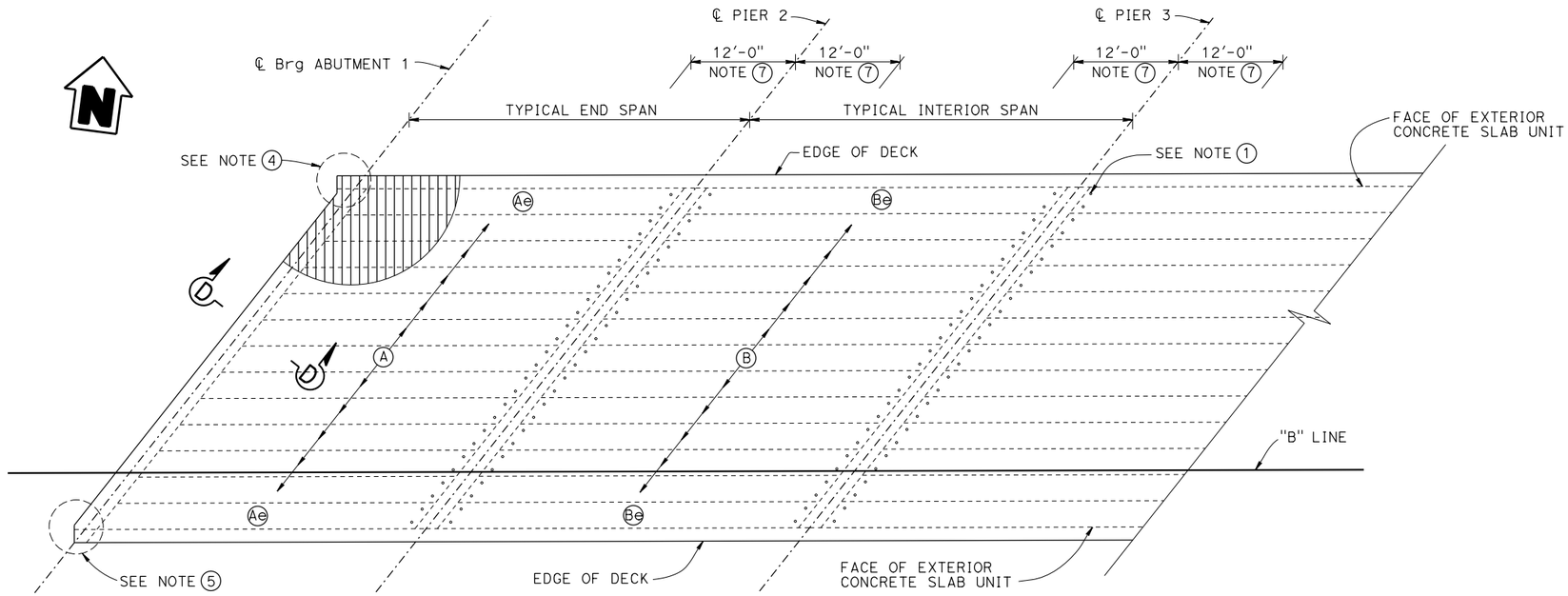

NOTES:

1. 3" ø panel holes to be filled with grout before deck pour, typical.
2. For Concrete slab details, see "PRECAST CONCRETE SLAB DETAILS NO. 1" and "PRECAST CONCRETE SLAB DETAILS NO. 2" sheets.
3. For topping slab corner details at Piers 7 and 12, see Deck Acute Corner and Deck Obtuse Corner details on "DECK CORNER DETAILS" sheet.
4. For topping slab corner details, see Approach Slab Acute Corner and Deck Obtuse Corner details on "DECK CORNER DETAILS" sheet.
5. For topping slab corner details, see Approach Slab Obtuse Corner and Deck Acute Corner details on "DECK CORNER DETAILS" sheet.
6. For SECTIONS D-D and E-E, see "END DIAPHRAGM DETAILS" sheet.
7. No splice zone for #8 continuous bars, Typical at all Piers.

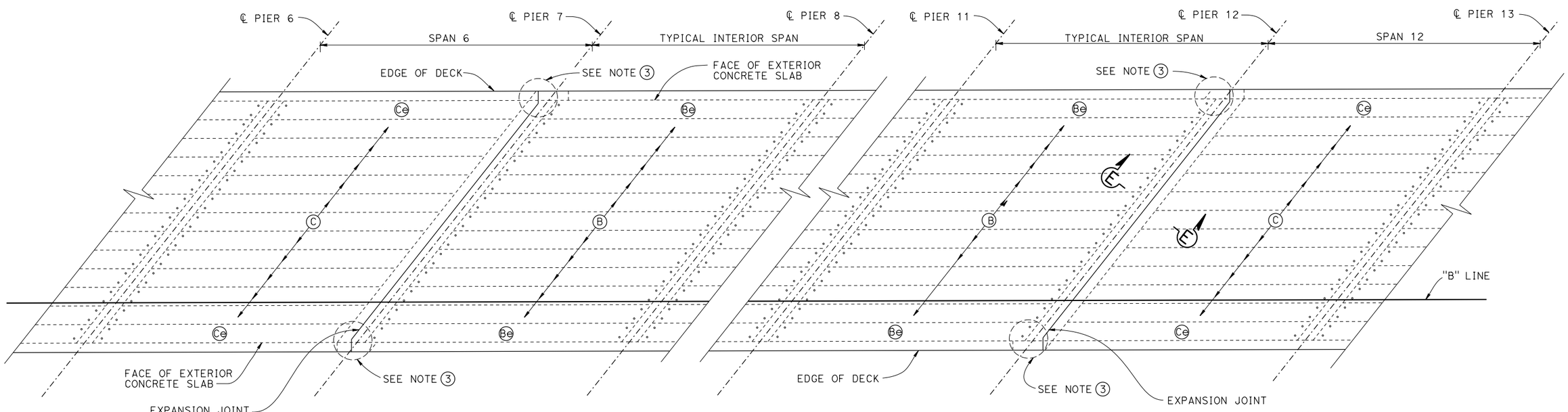

SLAB LAYOUT

1/8" = 1'-0'

LEGEND:

Ⓐ Ⓐe Ⓑ Ⓑe Ⓒ Ⓒe Indicates Concrete Slab Unit Designation

DESIGN	BY E. MERCADO	CHECKED R. WANG	
DETAILS	BY H. MAHBOOBI / H. INIGUEZ	CHECKED R. WANG	
QUANTITIES	BY S. YEH	CHECKED E. MERCADO	

STATE OF CALIFORNIA DEPARTMENT OF TRANSPORTATION

DIVISION OF ENGINEERING SERVICES STRUCTURE DESIGN DESIGN BRANCH 19

BRIDGE NO. 54-1282L POST MILE R105.9

WATSON WASH BRIDGE - LEFT (REPLACE)
PRECAST CONCRETE SLAB LAYOUT

STRUCTURES DESIGN DETAIL SHEET (ENGLISH) (REV. 09-01-10)

ORIGINAL SCALE IN INCHES FOR REDUCED PLANS 0 1 2 3

UNIT: 3621
PROJECT NUMBER & PHASE: 0800020102 1 CONTRACT NO.: 08-0N5504

DISREGARD PRINTS BEARING EARLIER REVISION DATES

REVISION DATES 07-18-14 01-08-15 01-29-15

SHEET 19 OF 31

FILE => 54-1282l-l-pcc-slo_01.dgn

USERNAME => s125726 DATE PLOTTED => 24-NOV-2015 TIME PLOTTED => 16:01

DIST	COUNTY	ROUTE	POST MILES TOTAL PROJECT	SHEET No.	TOTAL SHEETS
08	SBd	40	R105.2/R106.5	99	110

REGISTERED CIVIL ENGINEER 01-29-15 DATE

6-25-15
PLANS APPROVAL DATE

REGISTERED PROFESSIONAL ENGINEER RUI WANG No. C52910 Exp. 12/31/16 CIVIL STATE OF CALIFORNIA

The State of California or its officers or agents shall not be responsible for the accuracy or completeness of electronic copies of this plan sheet.

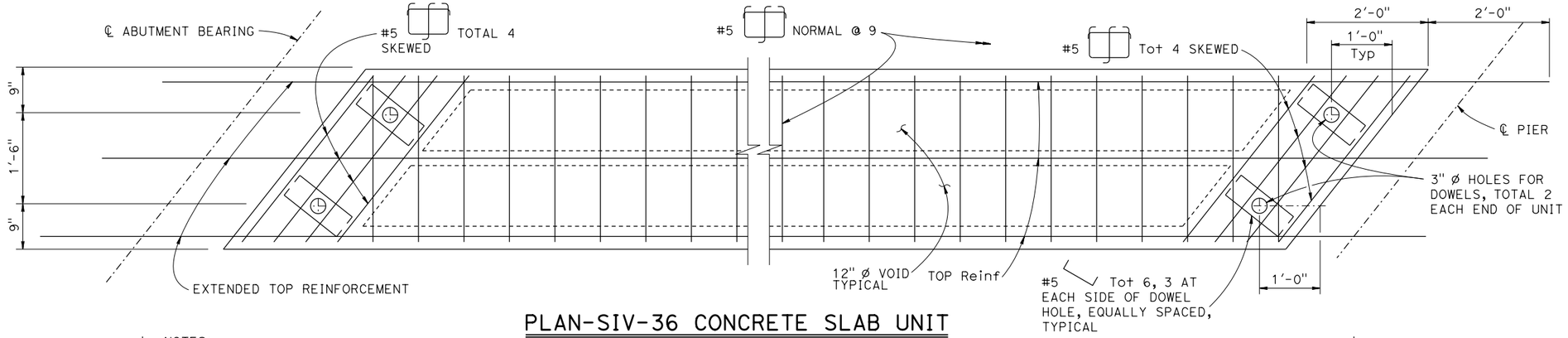

PLAN-SIV-36 CONCRETE SLAB UNIT

1" = 1'-0"

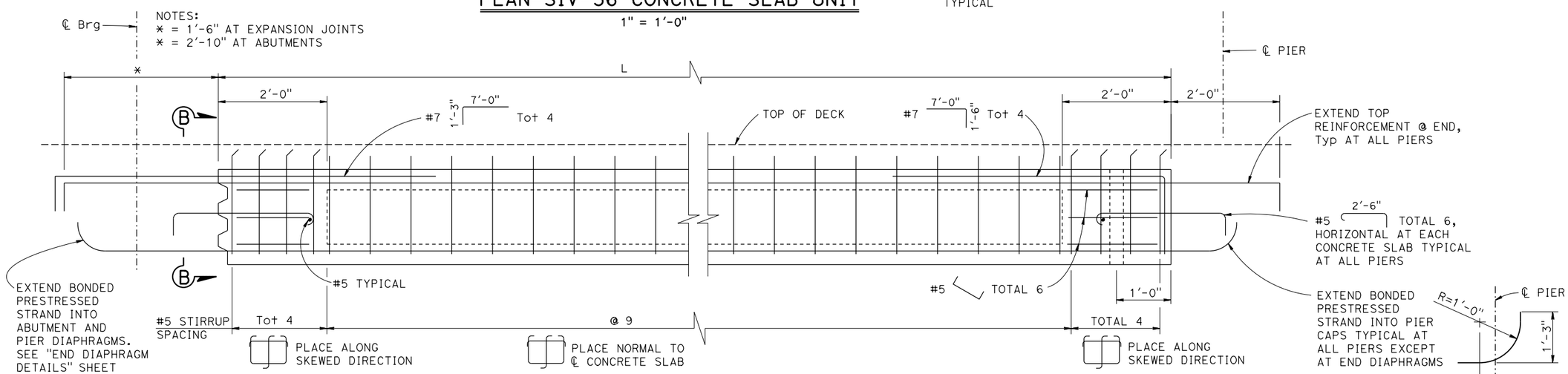

ELEVATION-CONCRETE SLAB UNIT ⒶⒸⒶeⒸe

1" = 1'-0"

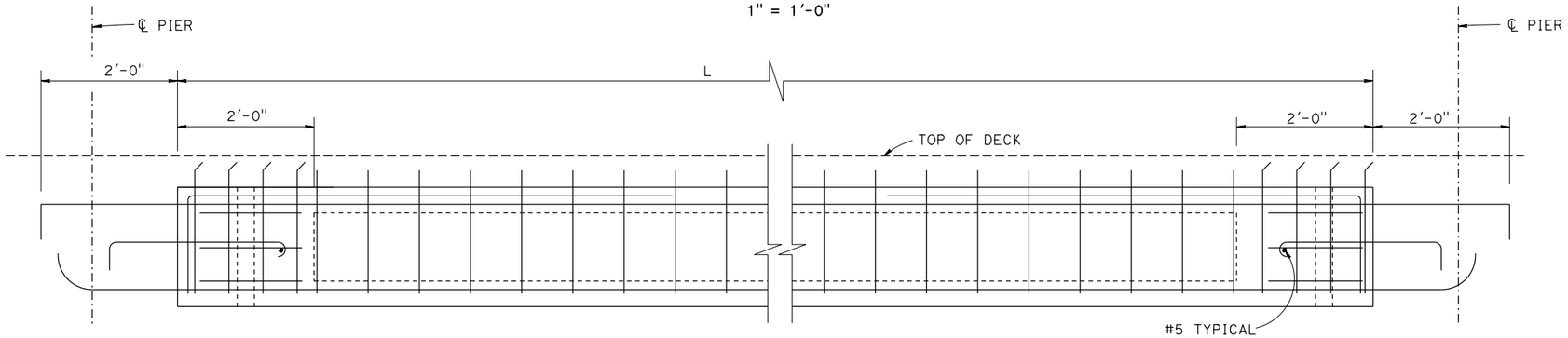

ELEVATION-CONCRETE SLAB UNIT ⒷⒷe

1" = 1'-0"

NOTES:

1. For length "L" and other details of PC/PS concrete slab units, see "PRECAST CONCRETE SLAB DETAILS NO. 2" sheet.
2. For VIEW B-B, see "PRECAST CONCRETE SLAB DETAILS NO. 2" sheet.

	BY	CHECKED
DESIGN	E. MERCADO	R. WANG
DETAILS	H. MAHBOOBI / H. INIGUEZ	R. WANG
QUANTITIES	S. YEH	E. MERCADO

STATE OF CALIFORNIA
DEPARTMENT OF TRANSPORTATION

DIVISION OF ENGINEERING SERVICES
STRUCTURE DESIGN
DESIGN BRANCH 19

BRIDGE NO. 54-1282L
POST MILE R105.9

WATSON WASH BRIDGE - LEFT (REPLACE)
PRECAST CONCRETE SLAB DETAILS NO. 1

STRUCTURES DESIGN DETAIL SHEET (ENGLISH) (REV. 09-01-10)

ORIGINAL SCALE IN INCHES FOR REDUCED PLANS 0 1 2 3

UNIT: 3621
PROJECT NUMBER & PHASE: 0800020102 1 CONTRACT NO.: 08-0N5504

DISREGARD PRINTS BEARING EARLIER REVISION DATES

REVISION DATES: 07-22-14 01-06-15 01-29-15

SHEET 20 OF 31

FILE => 54-1282l-l-pcs-slab-det_01.dgn

USERNAME => s125726 DATE PLOTTED => 24-NOV-2015 TIME PLOTTED => 16:02

DIST	COUNTY	ROUTE	POST MILES TOTAL PROJECT	SHEET No.	TOTAL SHEETS
08	SBd	40	R105.2/R106.5	100	110

REGISTERED CIVIL ENGINEER 01-29-15 DATE

6-25-15
PLANS APPROVAL DATE

REGISTERED PROFESSIONAL ENGINEER RUI WANG No. C52910 Exp. 12/31/16 CIVIL STATE OF CALIFORNIA

The State of California or its officers or agents shall not be responsible for the accuracy or completeness of electronic copies of this plan sheet.

PRESTRESSING NOTES:

1. The Jacking Force (PJ) is the jacking force required at the point of control along the span.The jacking force does not include any fabrication specific losses.
2. The maximum tensile stress in the prestressing steel upon release shall not exceed 75% of the specified minimum ultimate tensile strength of the prestressing steel.
3. The maximum temporary tensile stress (jacking stress) in the prestressing steel shall not exceed 80% of the specified minimum ultimate tensile strength of the prestressing steel.
4. Concrete Strength:
   f'ci = 4 ksi at time of stressing.
   fc = 5 ksi at 28 days.
5. Number of prestressing strands based on 0.6" Ø, fpu = 270 ksi low relaxation strand.
6. Coarse Broom Finish at top of concrete slab units applied perpendicularly to longitudinal axes of Conc slabs and parallel to transverse direction of extended top stirrups at skewed ends.

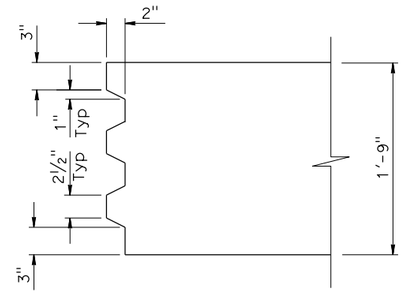

PRECAST END DETAIL AT ABUTMENTS, PIERS 7 AND 12

1½" = 1'-0"

PRESTRESSING TABLE

LOCATION	NO OF Conc SLAB	"L"	CG OF STRANDS (in)	PJ (Kips)	NO OF STRANDS (BOTTOM)
A	22	36'-6⅝"	3.25	270	6
B	143	41'-5⅜"	3.25	300	7
C	22	39'-8⅜"	3.25	300	7
Ae	4	36'-6⅝"	3.25	270	6
Be	26	41'-5⅜"	3.25	300	7
Ce	4	39'-8⅜"	3.25	300	7

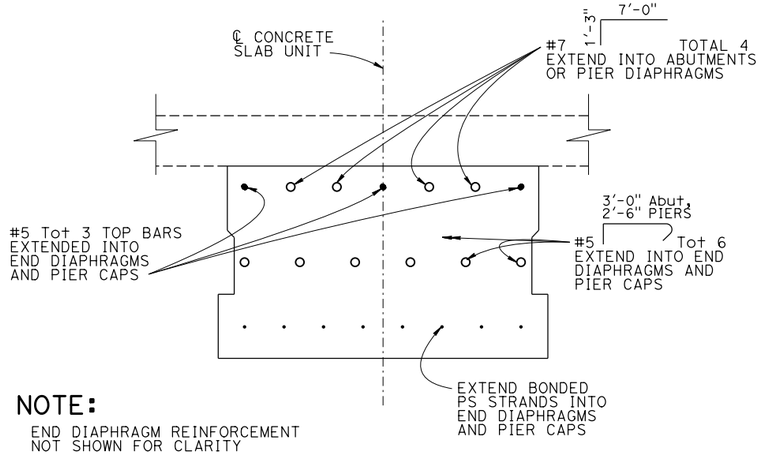

NOTE:
END DIAPHRAGM REINFORCEMENT NOT SHOWN FOR CLARITY

VIEW B-B(A)(C)(Ae)(Ce)
ABUTMENTS OR PIER DIAPHRAGMS

1½" = 1'-0"

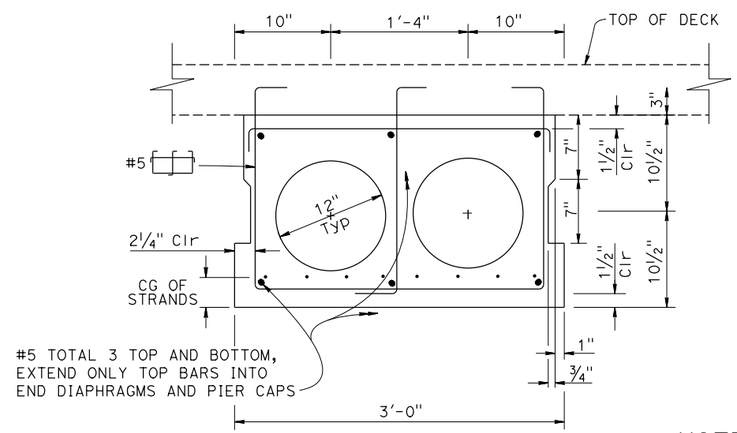

SIV-36 CONCRETE SLAB UNIT INTERIOR (A)(B)OR(C)

1½" = 1'-0"

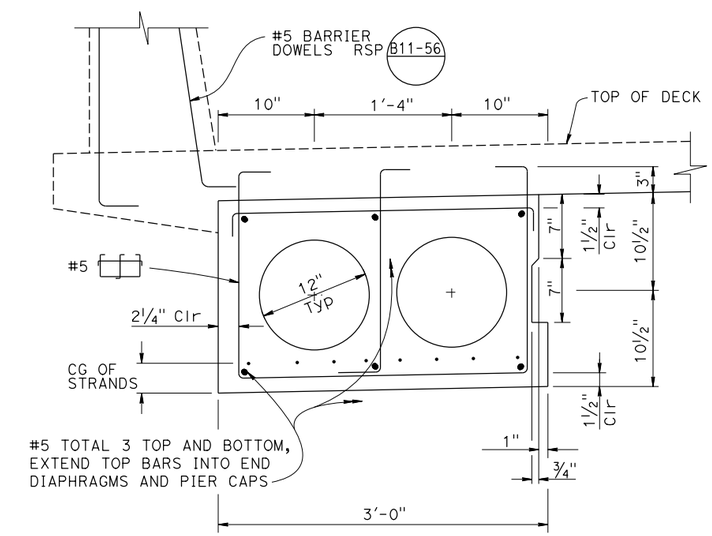

NOTE:
(1) Minimum distance of prestressing strands to edge of holes shall be 1".

SIV-36 CONCRETE SLAB UNIT EXTERIOR(Ae)(Be)OR(Ce)

1½" = 1'-0"

	BY	CHECKED
DESIGN	E. MERCADO	R. WANG
DETAILS	H. MAHBOOBI / H. INIGUEZ	R. WANG
QUANTITIES	S. YEH	E. MERCADO

STATE OF CALIFORNIA DEPARTMENT OF TRANSPORTATION

DIVISION OF ENGINEERING SERVICES STRUCTURE DESIGN DESIGN BRANCH 19

BRIDGE NO. 54-1282L
POST MILE R105.9

WATSON WASH BRIDGE - LEFT (REPLACE)
PRECAST CONCRETE SLAB DETAILS NO. 2

STRUCTURES DESIGN DETAIL SHEET (ENGLISH) (REV. 09-01-10)

ORIGINAL SCALE IN INCHES FOR REDUCED PLANS 0 1 2 3

UNIT: 3621
PROJECT NUMBER & PHASE: 0800020102 1 CONTRACT NO.: 08-0N5504

DISREGARD PRINTS BEARING EARLIER REVISION DATES

REVISION DATES 07-22-14 01-06-15 01-29-15

SHEET 21 OF 31

FILE => 54-1282l-l-pcs-slab-det_02.dgn

USERNAME => s125726 DATE PLOTTED => 24-NOV-2015 TIME PLOTTED => 16:03