DIST.	COUNTY	ROUTE	POST MILES TOTAL PROJECT	SHEET NO.	TOTAL SHEETS
08	Riv,SBd	91,215	21.5/21.7, 43.2/45.2,0.0/5.1	701	1743

1-2-12
REGISTERED ENGINEER - CIVIL

4-16-12
PLANS APPROVAL DATE

REGISTERED PROFESSIONAL ENGINEER JUSTINE NIU No. C 62897 Exp. 06-30-12 CIVIL STATE OF CALIFORNIA

The State of California or its officers or agents shall not be responsible for the accuracy or completeness of electronic copies of this plan sheet.

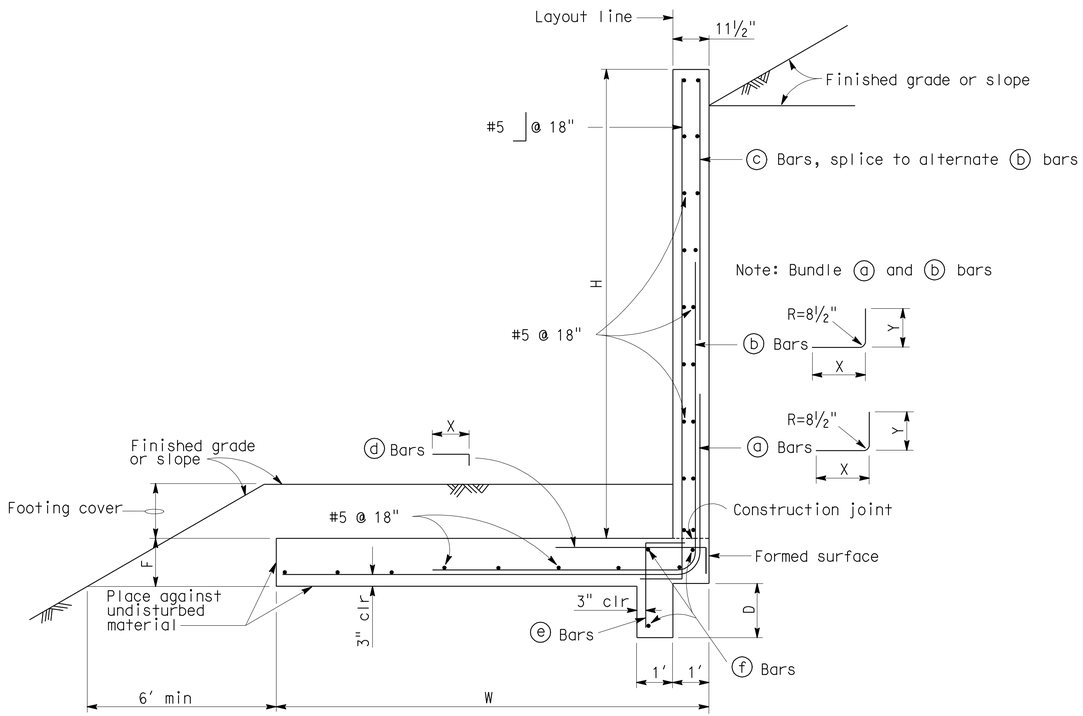

TYPICAL SECTION

Note: For details not shown, see B3-8

TABLE OF DIMENSIONS AND REINFORCING STEEL

DESIGN H	4'	6'	8'	10'	12'
W	4'-0"	5'-10"	7'-3"	9'-7"	11'-10"
F	1'-0"	1'-0"	1'-3"	1'-3"	1'-3"
D	0'-9"	0'-9"	0'9"	1'-6"	1'-6"
FOOTING COVER	1' min	1' min	1'-6" min	1'-6" min	1'-6" min
ⓐ Bars	#5 @ 18"	#5 @ 12"	#6 @ 12"	#6 @ 12"	#6 @ 9"
X	Cont	Cont	Cont	Cont	Cont
Y	Cont	Cont	Cont	5'-11"	5'-11"
ⓑ Bars	———	———	———	#6 @ 12"	#6 @ 9"
X	———	———	———	5'-3"	7'-3"
Y	———	———	———	Cont	8'-2"
ⓒ Bars	———	———	———	———	#5 @ 18"
ⓓ Bars	———	———	———	#5 @ 12"	#5 @ 12"
X	———	———	———	5'-11"	5'-11"
ⓔ Bars	———	———	———	#5 @ 12"	#5 @ 12"
ⓕ Bars	———	———	———	3-#5	3-#5

Cont = Continuous

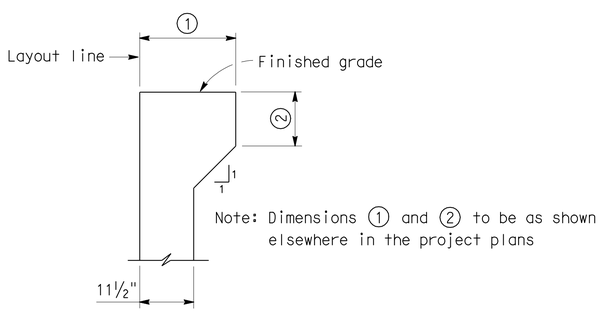

HAUNCH FOR CONCRETE BARRIER

GENERAL NOTES

Design: Service load design
Loading case:
1. Level slope with 240 psf surcharge
2. 2:1 unlimited slope

Concrete: n=9, f'_c=3250 psi, f_c= 1300 psi
Reinforcing steel: fy=60,000 psi f_s=24,000 psi
Soil:
Backfill: Ø=34°, γ=120 pcf
Foundation: Ø=34°, c=200 psf, γ=120 pcf
Minimum allowable bearing pressure=2.0 ksf

Lateral earth pressure: Coulomb's theory with δ=0°
Seismic:
1. Level slope, k_h=0.3g
2. 2:1 unlimited slope, k_h=0.1g

NO SCALE

STANDARD DRAWING					
RELEASE DATE 9/22/93	DESIGN	BY J.C. MOESE	CHECKED O. HOR	RELEASED BY	
FILE NO. xs14-010	DETAILS	BY R. YEE	CHECKED O. HOR		
	SUBMITTED	BY J.C. MOESE	DRAWING DATE 10/92	OFFICE CHIEF	

DS OSD 2147A (METRIC) (REV. 2/25/97)

STATE OF CALIFORNIA DEPARTMENT OF TRANSPORTATION

DIVISION OF ENGINEERING SERVICES

CU
EA

BRIDGE NO.

POST MILES

RETAINING WALL PLAN R3-2

RETAINING WALL NO. 543

RETAINING WALL TYPE 7, H = 4'-12'

DISREGARD PRINTS BEARING EARLIER REVISION DATES

REVISION DATES (PRELIMINARY STAGE ONLY) SHEET OF

USERNAME => s114640

80m94uqc002.dgn

DATE PLOTTED => 17-APR-2012 TIME PLOTTED => 20:25

Dist	COUNTY	ROUTE	POST MILES TOTAL PROJECT	SHEET No.	TOTAL SHEETS
08	Riv,SBd	91,215	21.5/21.7, 43.2/45.2,0.0/5.1	702	1743

REGISTERED CIVIL ENGINEER 1-2-12 DATE

4-16-12
PLANS APPROVAL DATE

REGISTERED PROFESSIONAL ENGINEER JUSTINE NIU No. C 62897 Exp. 6-30-12 CIVIL STATE OF CALIFORNIA

THE STATE OF CALIFORNIA OR ITS OFFICERS OR AGENTS SHALL NOT BE RESPONSIBLE FOR THE ACCURACY OR COMPLETENESS OF SCANNED COPIES OF THIS PLAN SHEET.

NOTES

1. SEE RETAINING WALL DETAILS FOR CONCRETE BARRIER (TYPE 60D MOD).
2. CONTRACTOR OPTIONS FOR FILL BETWEEN CONCRETE BARRIER WALLS:
   A. PLACE 4" PCC AT BASE BETWEEN CONCRETE BARRIER WALLS.
   B. PLACE 12" OF GRANULAR MATERIAL AT BASE BETWEEN WALLS.
   C. PLACE GRANULAR MATERIAL FROM BASE TO BOTTOM OF 4" CAP.
   D. MONOLITHIC CONCRETE WITH FOAM BLOCKOUTS IS NOT PERMITTED.
3. REINFORCING STEEL SHALL EXTEND CONTINUOUS THROUGH CONSTRUCTION JOINTS.
4. ADJUST HEIGHT OF CONCRETE BARRIER WALL ON LOW SIDE OF OFFSET OR SUPERELEVATED ROADWAYS TO PROVIDE LEVEL GRADE ACROSS TOP OF CONCRETE BARRIER CAP.
5. PULL BOXES TO BE PLACED AS SHOWN OR AS DIRECTED BY THE ENGINEER.

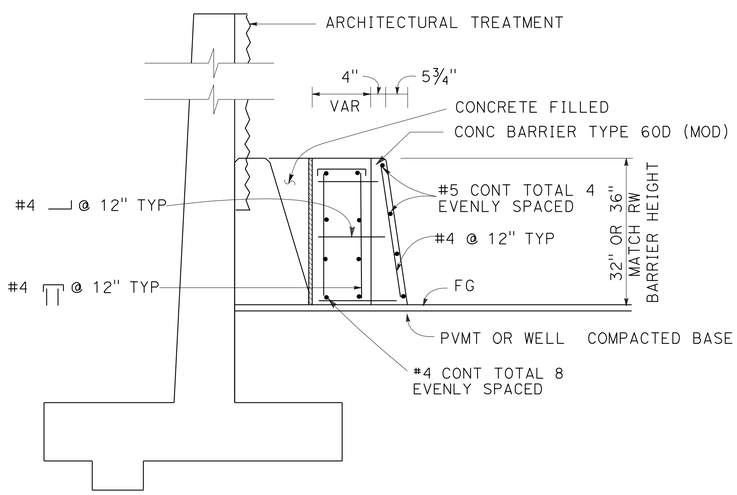

DETAIL A

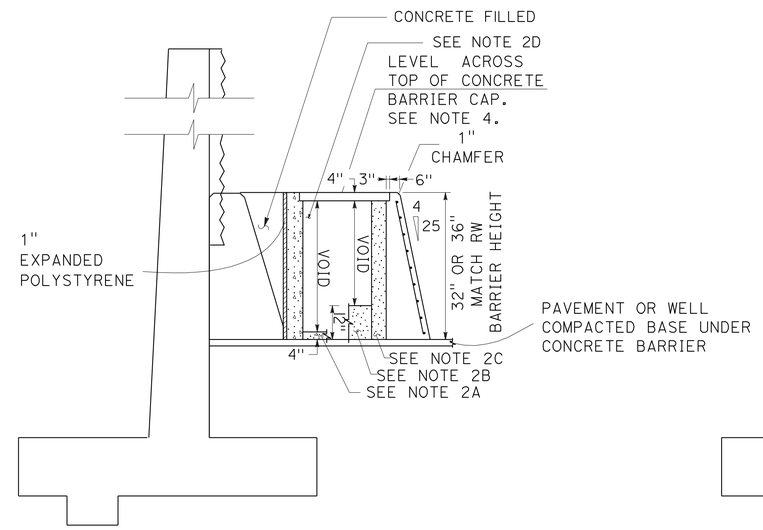

SECTION A-A

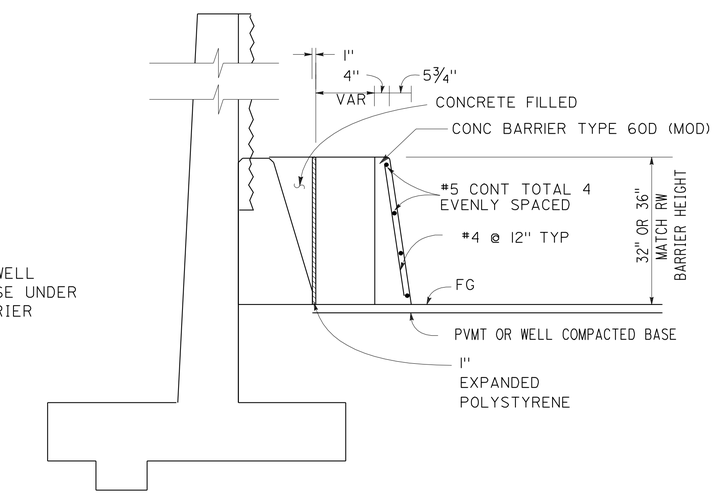

SECTION B-B

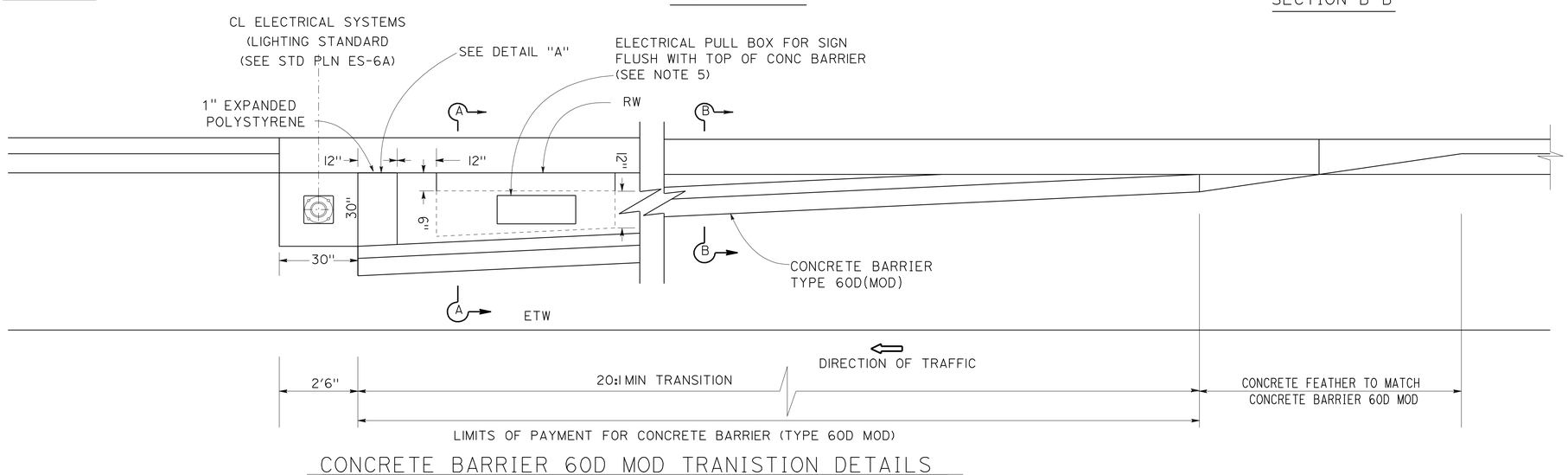

CONCRETE BARRIER 60D MOD TRANISTION DETAILS FOR LIGHTING STANDARD

NO SCALE

RETAINING WALL DETAILS

RETAINING WALL No. 543

SCALE AS SHOWN **R3-3**

APPROVED FOR RETAINING WALL WORK ONLY

STATE OF CALIFORNIA - DEPARTMENT OF TRANSPORTATION
Caltrans®
DESIGN

FUNCTIONAL SUPERVISOR: BEN AMIRI
CALCULATED-DESIGNED BY: DAT H. WONG
CHECKED BY: JUSTINE NIU
REVISED BY
DATE REVISED

LAST REVISION 01-02-12
DATE PLOTTED => 17-APR-2012
TIME PLOTTED => 20:25

Dist	COUNTY	ROUTE	POST MILES TOTAL PROJECT	SHEET No.	TOTAL SHEETS
08	Riv,SBd	91,215	21.5/21.7, 43.2/45.2,0.0/5.1	703	1743

LICENSED LANDSCAPE ARCHITECT

4-16-12
PLANS APPROVAL DATE

LICENSED LANDSCAPE ARCHITECT
RAY J. DESSELLE No. 2272
Signature
11/30/13
Renewal Date
01/02/12
Date
STATE OF CALIFORNIA

THE STATE OF CALIFORNIA OR ITS OFFICERS OR AGENTS SHALL NOT BE RESPONSIBLE FOR THE ACCURACY OR COMPLETENESS OF SCANNED COPIES OF THIS PLAN SHEET.

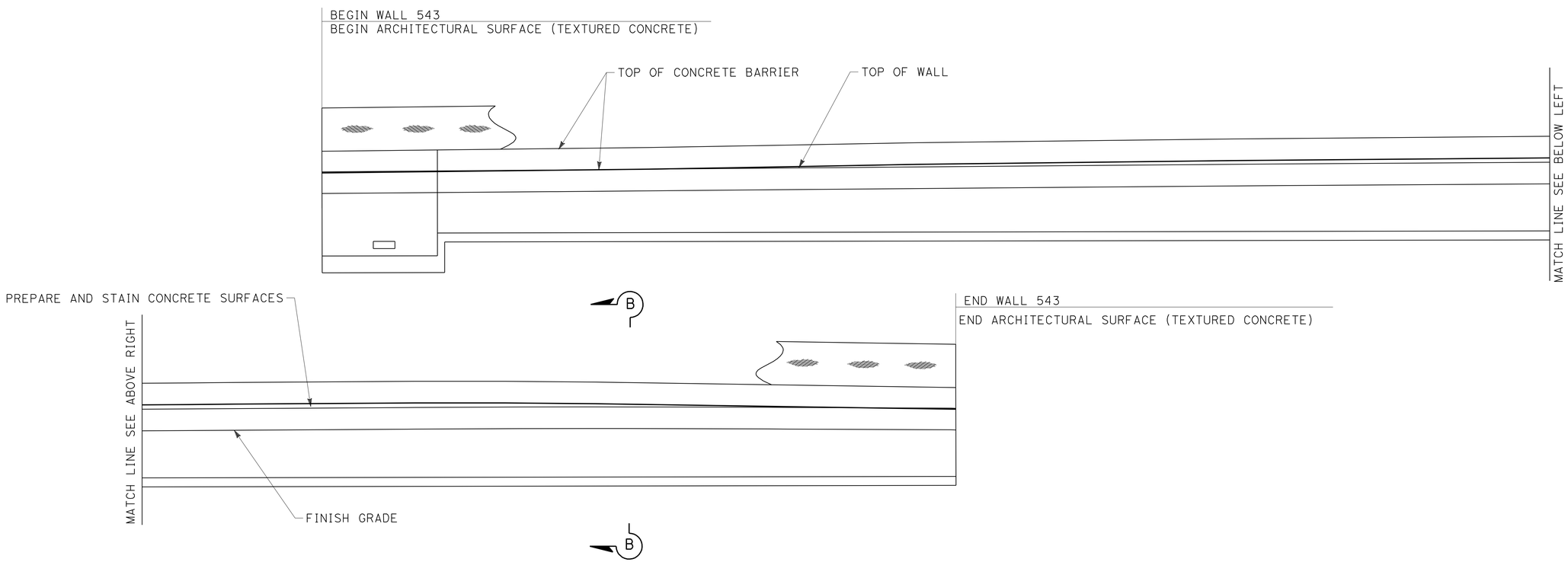

ELEVATION FOR PREPARE AND STAIN CONCRETE SURFACES
RETAINING WALL No. 543

ARCHITECTURAL SURFACE
RETAINING WALL No. 543

SCALE: 1/8" = 1'0

R3-4

APPROVED FOR RETAINING WALL WORK ONLY

STATE OF CALIFORNIA - DEPARTMENT OF TRANSPORTATION
Caltrans® LANDSCAPE ARCHITECTURE

SENIOR LANDSCAPE ARCHITECT: RAY DESSELLE

CALCULATED-DESIGNED BY: MATTHEW HALL
CHECKED BY: MIRIAM BISHOP

REVISED BY
DATE REVISED

LAST REVISION 01-02-12
DATE PLOTTED => 17-APR-2012
TIME PLOTTED => 20:25

DIST	COUNTY	ROUTE	POST MILES TOTAL PROJECT	SHEET No.	TOTAL SHEETS
08	Riv,SBd	91,215	21.5/21.7, 43.2/45.2,0.0/5.1	704	1743

REGISTERED CIVIL ENGINEER 1-11-12 DATE

4-16-12
PLANS APPROVAL DATE

REGISTERED PROFESSIONAL ENGINEER Brian Gutierrez No. C66258 Exp. 6-30-12 CIVIL STATE OF CALIFORNIA

The State of California or its officers or agents shall not be responsible for the accuracy or completeness of electronic copies of this plan sheet.

This LOTB sheet was prepared in accordance with the Caltrans Soil & Rock Logging, Classification, & Presentation Manual (2010 Edition).

BENCH MARK

BM 445
Set 1" IP W/ALUM PLUG STAMPED "RIV 215 PM 44.5" GPS 2010 NB RIV 215 ACROSS FROM MEDIAN FREEWAY SIGN "CENTER1/4LA CADENA 1 BARTON RD 2"; 4.8L WLY R/W FENCE; 13.5' ELY EP; 30' SLY ELECT. METER POLE AT R/W FENCE.
N 1,826,360.256
E 6,759,731.282
Elev 890.645
NAVD88

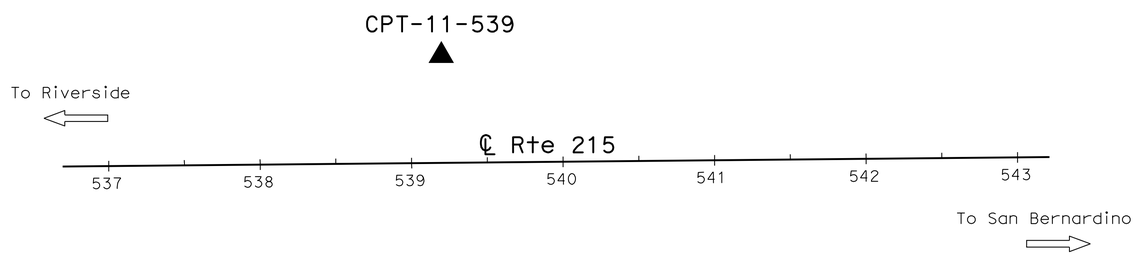

PLAN

1" = 50'

Note: No ground water encountered during field investigation.

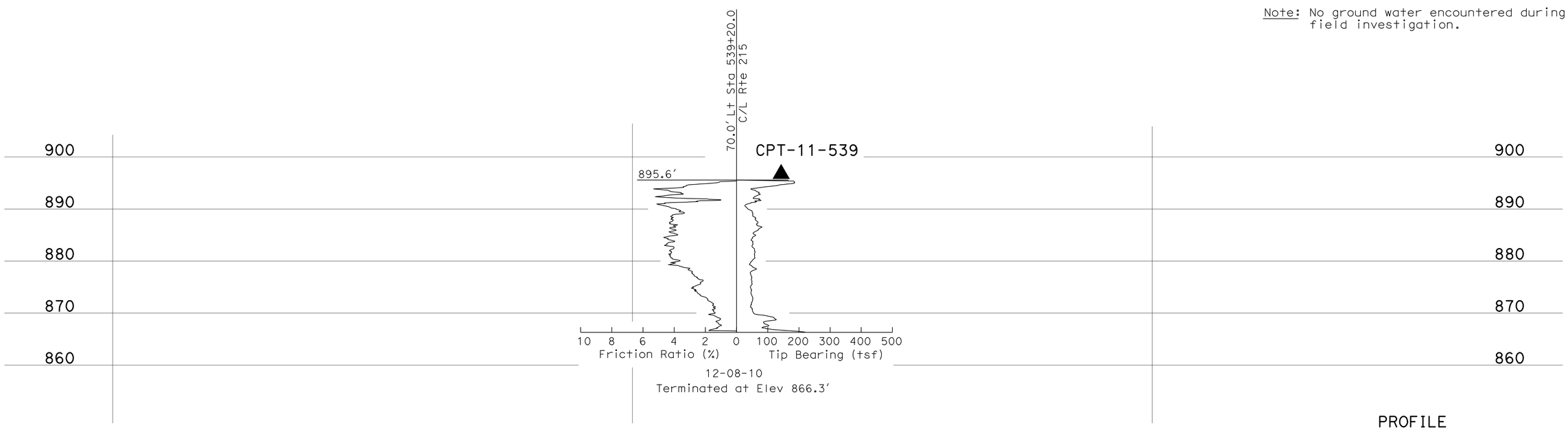

PROFILE

Horiz: 1" = 10'
Vert: 1" = 10'

ENGINEERING SERVICES	MATERIALS AND GEOTECHNICAL SERVICES	STATE OF CALIFORNIA DEPARTMENT OF TRANSPORTATION	DIVISION OF ENGINEERING SERVICES STRUCTURE DESIGN DESIGN BRANCH X	BRIDGE NO. / POST MILE 0.0-5.0	RETAINING WALLS 543 LOG OF TEST BORINGS 1 OF 2
FUNCTIONAL SUPERVISOR NAME: S. Wei	DRAWN BY: W. Tang 10/11 CHECKED BY: B. Levine	FIELD INVESTIGATION BY: B. Gutierrez			

OGS CIVIL LOG OF TEST BORINGS SHEET

ORIGINAL SCALE IN INCHES FOR REDUCED PLANS 0 1 2 3

UNIT: 3643
PROJECT NUMBER & PHASE: 08000005061 CONTRACT NO.: 08-0M9401

DISREGARD PRINTS BEARING EARLIER REVISION DATES

REVISION DATES: ~~10-12-11~~ 12-21-11 SHEET X OF X

FILE => 80m94uqc005.dgn

USERNAME => s121614 DATE PLOTTED => 24-APR-2012 TIME PLOTTED => 10:59

DIST	COUNTY	ROUTE	POST MILES TOTAL PROJECT	SHEET No.	TOTAL SHEETS
08	Riv,SBd	91,215	21.5/21.7, 43.2/45.2,0.0/5.1	705	1743

REGISTERED CIVIL ENGINEER 1-11-12 DATE

4-16-12
PLANS APPROVAL DATE

REGISTERED PROFESSIONAL ENGINEER Brian Gutierrez No. C66258 Exp. 6-30-12 CIVIL STATE OF CALIFORNIA

The State of California or its officers or agents shall not be responsible for the accuracy or completeness of electronic copies of this plan sheet.

REFERENCE: CALTRANS SOIL & ROCK LOGGING, CLASSIFICATION, AND PRESENTATION MANUAL (2010)

CEMENTATION

Description	Criteria
Weak	Crumbles or breaks with handling or little finger pressure.
Moderate	Crumbles or breaks with considerable finger pressure.
Strong	Will not crumble or break with finger pressure.

BOREHOLE IDENTIFICATION

Symbol	Hole Type	Description
Size	A	Auger Boring (hollow or solid stem bucket)
Size	R RW RC P	Rotary drilled boring (conventional) Rotary drilled with self-casing wire-line Rotary core with continuously-sampled, self-casing wire-line Rotary percussion boring (air)
Size	R RC	Rotary drilled diamond core Rotary drilled rock core
Size	HD HA	Hand driven (1-inch soil tube) Hand Auger
●	D	Dynamic Cone Penetration Boring
▲	CPT	Cone Penetration Test (ASTM D 5778)
⬚	O	Other (note on LOTB)

Note: Size in inches.

CONSISTENCY OF COHESIVE SOILS

Description	Shear Strength (tsf)	Pocket Penetrometer Measurement, PP, (tsf)	Torvane Measurement, TV, (tsf)	Vane Shear Measurement, VS, (tsf)
Very Soft	Less than 0.12	Less than 0.25	Less than 0.12	Less than 0.12
Soft	0.12 - 0.25	0.25 - 0.5	0.12 - 0.25	0.12 - 0.25
Medium Stiff	0.25 - 0.5	0.5 - 1	0.25 - 0.5	0.25 - 0.5
Stiff	0.5 - 1	1 - 2	0.5 - 1	0.5 - 1
Very Stiff	1 - 2	2 - 4	1 - 2	1 - 2
Hard	Greater than 2	Greater than 4	Greater than 2	Greater than 2

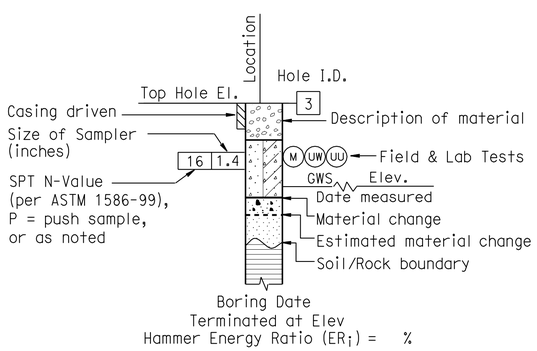

ROTARY BORING

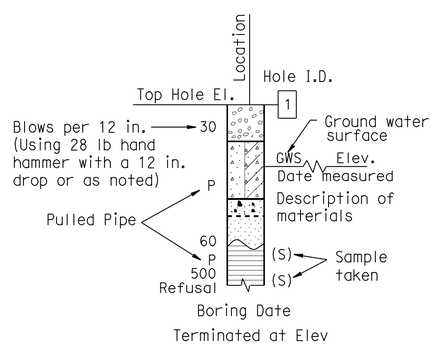

HAND BORING

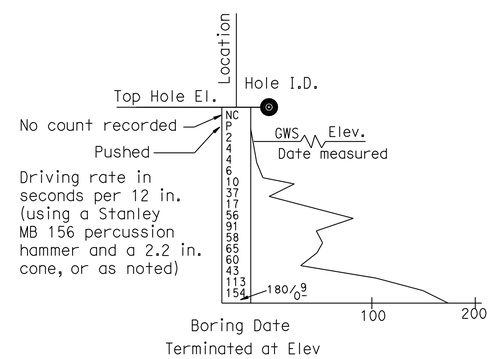

DYNAMIC CONE PENETRATION BORING

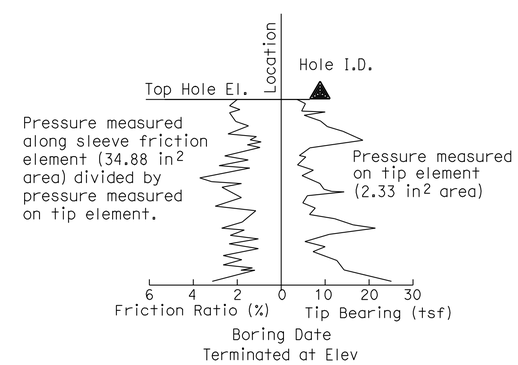

CONE PENETRATION TEST (CPT) BORING

ENGINEERING SERVICES	MATERIALS AND GEOTECHNICAL SERVICES	STATE OF CALIFORNIA DEPARTMENT OF TRANSPORTATION	DIVISION OF ENGINEERING SERVICES STRUCTURE DESIGN DESIGN BRANCH X	BRIDGE NO. / POST MILE 0.0-5.0	RETAINING WALLS 543 LOG OF TEST BORINGS 2 OF 2
	PREPARED BY: W. Tang 10/11				

GS LOTB SOIL LEGEND

ORIGINAL SCALE IN INCHES FOR REDUCED PLANS 0 1 2 3

UNIT: 3643
PROJECT NUMBER & PHASE: 08000005061 CONTRACT NO.: 08-0M9401

DISREGARD PRINTS BEARING EARLIER REVISION DATES

REVISION DATES | SHEET X | OF X

FILE => 80m94uqc006.dgn

USERNAME => s114640 DATE PLOTTED => 17-APR-2012 TIME PLOTTED => 20:25

Dist	COUNTY	ROUTE	POST MILES TOTAL PROJECT	SHEET No.	TOTAL SHEETS
08	Riv,SBd	91,215	21.5/21.7, 43.2/45.2,0.0/5.1	706	1743

REGISTERED CIVIL ENGINEER 1-2-12 DATE

4-16-12
PLANS APPROVAL DATE

REGISTERED PROFESSIONAL ENGINEER JUSTINE NIU No. C 62897 Exp. 6-30-12 CIVIL STATE OF CALIFORNIA

THE STATE OF CALIFORNIA OR ITS OFFICERS OR AGENTS SHALL NOT BE RESPONSIBLE FOR THE ACCURACY OR COMPLETENESS OF SCANNED COPIES OF THIS PLAN SHEET.

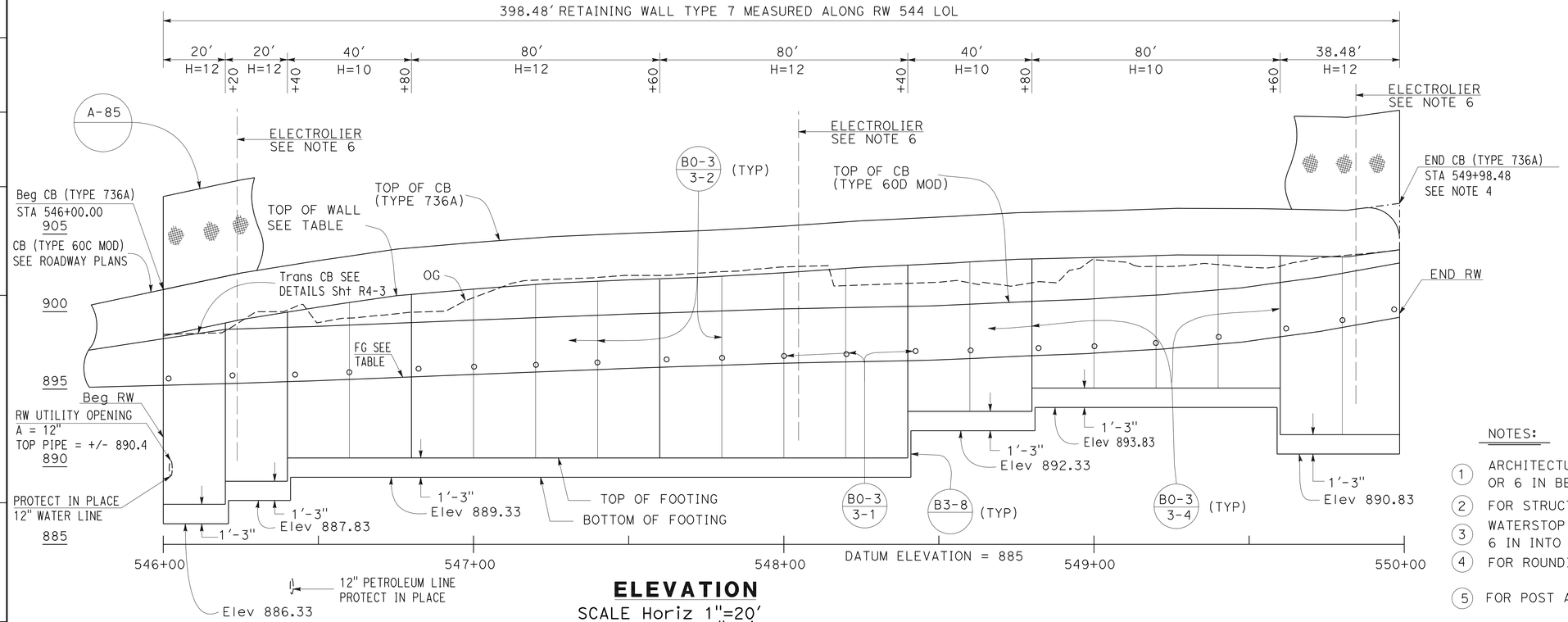

ELEVATION

SCALE Horiz 1"=20'
Vert 1"=4'

ELEVATION TABLE		
STATION	TOP OF WALL	FG
546+00.00	898.43	895.25
546+50.00	900.29	895.56
547+00.00	901.46	895.95
547+50.00	902.05	896.34
548+00.00	902.50	896.68
548+50.00	903.09	896.89
549+00.00	903.49	897.33
549+50.00	903.64	898.10
549+98.48	903.98	899.63

NOTES:

1. ARCHITECTURAL TREATMENT SHOULD EXTEND 6 IN BELOW FG OR 6 IN BELOW TOP CB (TYPE 60D MOD)
2. FOR STRUCTURAL SECTIONS, SEE ROADWAY PLANS
3. WATERSTOP IN EXPANSION JOINT SHALL BE EXTEND 6 IN INTO THE BARRIER
4. FOR ROUNDING DETAILS, SEE ARCHITECTURAL TREATMENT PLANS
5. FOR POST ANCHORAGE DETAILS, SEE B11-52
6. FOR ELECTROLIER DETAILS, SEE ELECTRICAL DETAILS SHEETS. FOR MOUNTING DETAILS, SEE STANDARD PLANS B11-56

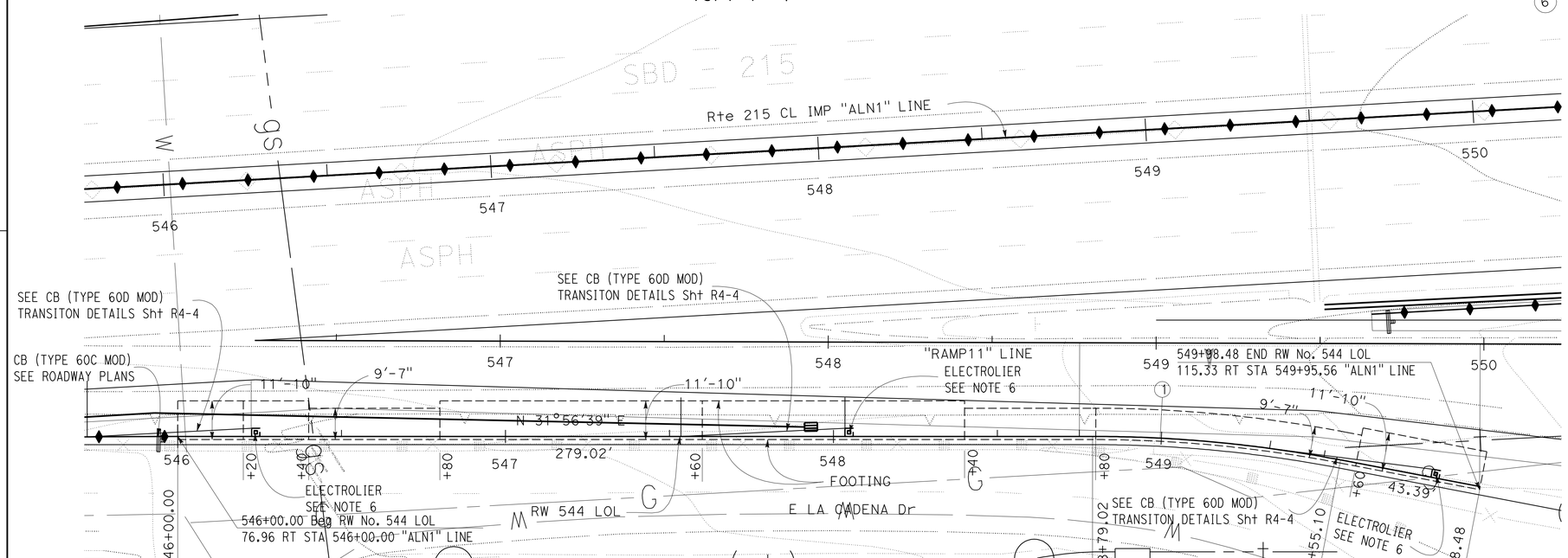

PLAN

SCALE 1"=20'

CURVE DATA

No.	R	Δ	T	L
1	402'	10°49'45"	38.15'	76.07'

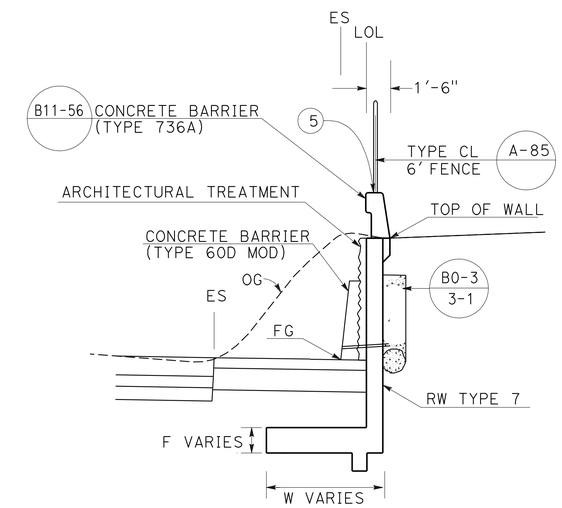

TYPICAL SECTION

546+00.00 TO 549+98.48
NO SCALE

RETAINING WALL PLAN

RETAINING WALL No. 544

SCALE AS SHOWN **R4-1**

APPROVED FOR RETAINING WALL WORK ONLY

STATE OF CALIFORNIA - DEPARTMENT OF TRANSPORTATION
Caltrans® DESIGN
FUNCTIONAL SUPERVISOR: BEN AMIRI
CALCULATED-DESIGNED BY: DAT H. WONG
CHECKED BY: JUSTINE NIU
REVISED BY / DATE REVISED

LAST REVISION 01-02-12 | DATE PLOTTED => 23-APR-2012 | TIME PLOTTED => 10:47

DIST.	COUNTY	ROUTE	POST MILES TOTAL PROJECT	SHEET NO.	TOTAL SHEETS
08	Riv,SBd	91,215	21.5/21.7, 43.2/45.2,0.0/5.1	707	1743

REGISTERED ENGINEER - CIVIL 1-2-12

PLANS APPROVAL DATE 4-16-12

REGISTERED PROFESSIONAL ENGINEER JUSTINE NIU No. C 62897 Exp. 06-30-12 CIVIL STATE OF CALIFORNIA

The State of California or its officers or agents shall not be responsible for the accuracy or completeness of electronic copies of this plan sheet.

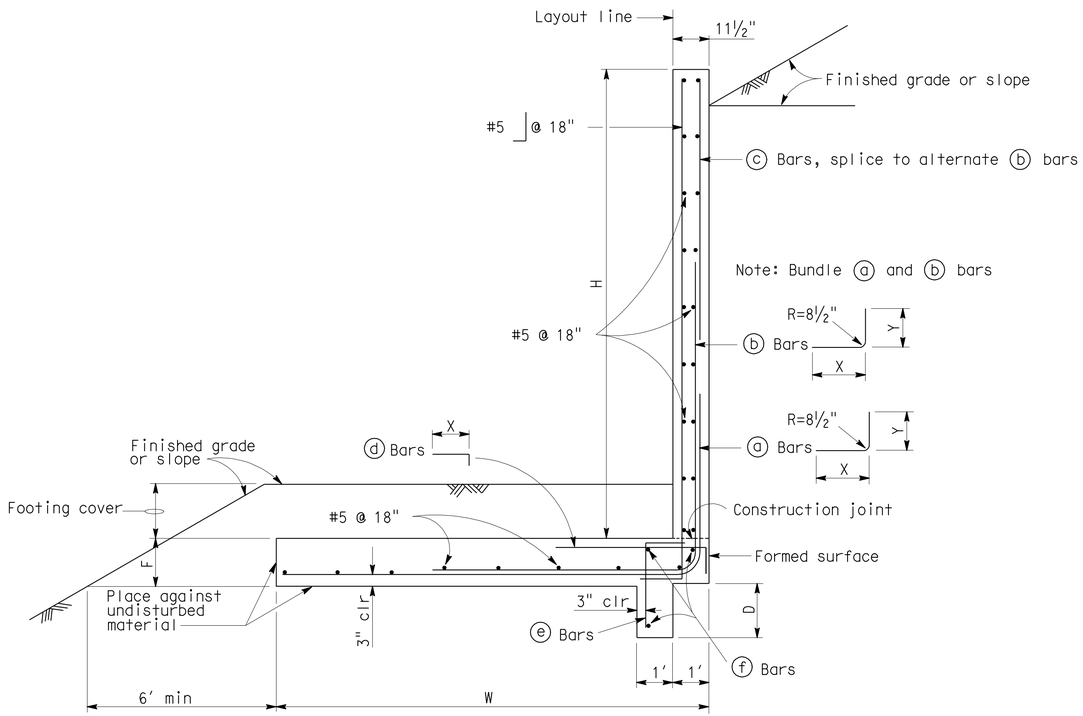

TYPICAL SECTION

Note: For details not shown, see B3-8

TABLE OF DIMENSIONS AND REINFORCING STEEL

DESIGN H	4'	6'	8'	10'	12'
W	4'-0"	5'-10"	7'-3"	9'-7"	11'-10"
F	1'-0"	1'-0"	1'-3"	1'-3"	1'-3"
D	0'-9"	0'-9"	0'9"	1'-6"	1'-6"
FOOTING COVER	1' min	1' min	1'-6" min	1'-6" min	1'-6" min
ⓐ Bars	#5 @ 18"	#5 @ 12"	#6 @ 12"	#6 @ 12"	#6 @ 9"
X	Cont	Cont	Cont	Cont	Cont
Y	Cont	Cont	Cont	5'-11"	5'-11"
ⓑ Bars	———	———	———	#6 @ 12"	#6 @ 9"
X	———	———	———	5'-3"	7'-3"
Y	———	———	———	Cont	8'-2"
ⓒ Bars	———	———	———	———	#5 @ 18"
ⓓ Bars	———	———	———	#5 @ 12"	#5 @ 12"
X	———	———	———	5'-11"	5'-11"
ⓔ Bars	———	———	———	#5 @ 12"	#5 @ 12"
ⓕ Bars	———	———	———	3-#5	3-#5

Cont = Continuous

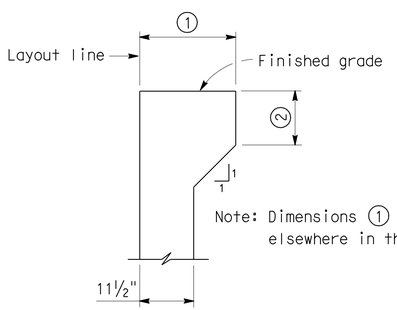

HAUNCH FOR CONCRETE BARRIER

GENERAL NOTES

Design: Service load design
Loading case:
1. Level slope with 240 psf surcharge
2. 2:1 unlimited slope

Concrete: n=9, f'_c=3250 psi, f_c= 1300 psi
Reinforcing steel: fy=60,000 psi f_s=24,000 psi
Soil:
Backfill: Ø=34°, γ=120 pcf
Foundation: Ø=34°, c=200 psf, γ=120 pcf
Minimum allowable bearing pressure=2.0 ksf

Lateral earth pressure: Coulomb's theory with δ=0°

Seismic:
1. Level slope, k_h=0.3g
2. 2:1 unlimited slope, k_h=0.1g

NO SCALE

STANDARD DRAWING					
RELEASE DATE 9/22/93	DESIGN	BY J.C. MOESE	CHECKED O. HOR	RELEASED BY	
FILE NO. xs14-010	DETAILS	BY R. YEE	CHECKED O. HOR		
	SUBMITTED	BY J.C. MOESE	DRAWING DATE 10/92	OFFICE CHIEF	

DS OSD 2147A (METRIC) (REV. 2/25/97)

STATE OF CALIFORNIA DEPARTMENT OF TRANSPORTATION

DIVISION OF ENGINEERING SERVICES

CU
EA

BRIDGE NO.

POST MILES

RETAINING WALL PLAN R4-2

RETAINING WALL NO. 544

RETAINING WALL TYPE 7, H = 4'-12'

DISREGARD PRINTS BEARING EARLIER REVISION DATES

REVISION DATES (PRELIMINARY STAGE ONLY) SHEET OF

USERNAME => s114640

80m94uqd002.dgn

DATE PLOTTED => 17-APR-2012 TIME PLOTTED => 20:25

Dist	COUNTY	ROUTE	POST MILES TOTAL PROJECT	SHEET No.	TOTAL SHEETS
08	Riv,SBd	91,215	21.5/21.7, 43.2/45.2,0.0/5.1	708	1743

REGISTERED CIVIL ENGINEER 1-2-12 DATE

4-16-12
PLANS APPROVAL DATE

REGISTERED PROFESSIONAL ENGINEER
JUSTINE NIU
No. C 62897
Exp. 6-30-12
CIVIL
STATE OF CALIFORNIA

THE STATE OF CALIFORNIA OR ITS OFFICERS OR AGENTS SHALL NOT BE RESPONSIBLE FOR THE ACCURACY OR COMPLETENESS OF SCANNED COPIES OF THIS PLAN SHEET.

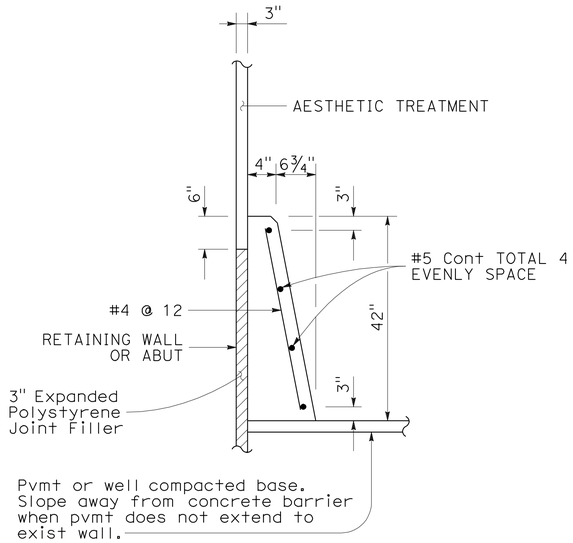

CONCRETE BARRIER (TYPE 60D MOD)

QUANTITIES

STRUCTURAL CONCRETE (RETAINING WALL)	408.2	CY
BAR REINFORCING STEEL (RETAINING WALL)	41556	LB
STRUCTURAL EXCAVATION (RETAINING WALL)	1322.1	CY
STRUCTURAL BACKFILL (RETAINING WALL)	899.8	CY
PERVIOUS BACKFILL MATERIAL (RETAINING WALL)	53.8	CY
CONCRETE BARRIER (60D MOD)	398.5	LF
CONCRETE BARRIER (TYPE 736A)	398.5	LF
PLASTIC PIPE (N)	28.5	LF
WATERSTOP (N)	33.5	LF
CHAIN LINK FENCE (TYPE CL-6)	398.5	LF
ARCHITECTURE SURFACE (TEXTURE CONCRETE)	980	SF

(N) = NOT A SEPARATE PAY ITEM, FOR INFORMATION ONLY

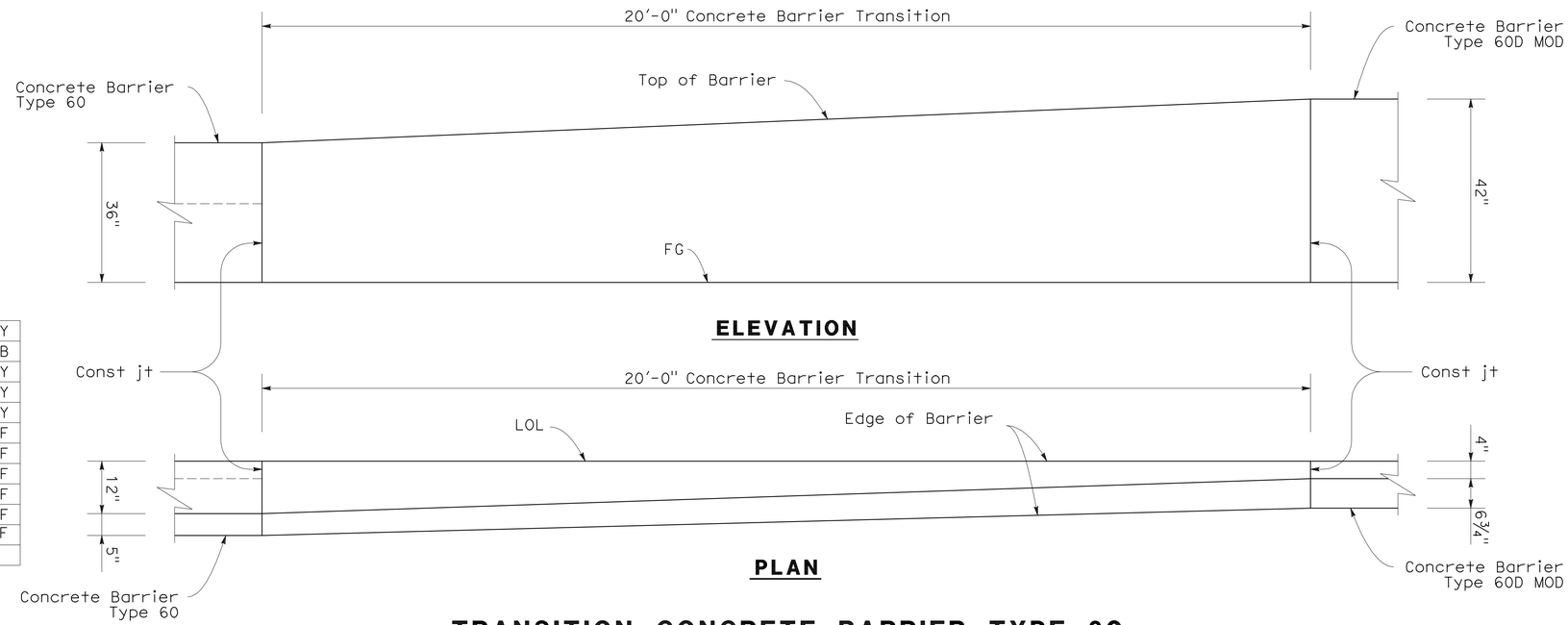

TRANSITION CONCRETE BARRIER TYPE 60 TO CONCRETE BARRIER TYPE 60D MOD

RETAINING WALL DETAILS

RETAINING WALL No. 544

NO SCALE

R4-3

APPROVED FOR RETAINING WALL WORK ONLY

STATE OF CALIFORNIA - DEPARTMENT OF TRANSPORTATION
Caltrans
DESIGN

FUNCTIONAL SUPERVISOR: BEN AMIRI
CALCULATED-DESIGNED BY: DAT H. WONG
CHECKED BY: JUSTINE NIU
REVISED BY
DATE REVISED

LAST REVISION 01-02-12
DATE PLOTTED => 17-APR-2012
TIME PLOTTED => 20:25

Dist	COUNTY	ROUTE	POST MILES TOTAL PROJECT	SHEET No.	TOTAL SHEETS
08	Riv,SBd	91,215	21.5/21.7, 43.2/45.2,0.0/5.1	709	1743

REGISTERED CIVIL ENGINEER 1-2-12 DATE

4-16-12
PLANS APPROVAL DATE

REGISTERED PROFESSIONAL ENGINEER JUSTINE NIU No. C 62897 Exp. 6-30-12 CIVIL STATE OF CALIFORNIA

THE STATE OF CALIFORNIA OR ITS OFFICERS OR AGENTS SHALL NOT BE RESPONSIBLE FOR THE ACCURACY OR COMPLETENESS OF SCANNED COPIES OF THIS PLAN SHEET.

NOTES

1. SEE RETAINING WALL DETAILS FOR CONCRETE BARRIER (TYPE 60D MOD).
2. CONTRACTOR OPTIONS FOR FILL BETWEEN CONCRETE BARRIER WALLS:
   A. PLACE 4" PCC AT BASE BETWEEN CONCRETE BARRIER WALLS.
   B. PLACE 12" OF GRANULAR MATERIAL AT BASE BETWEEN WALLS.
   C. PLACE GRANULAR MATERIAL FROM BASE TO BOTTOM OF 4" CAP.
   D. MONOLITHIC CONCRETE WITH FOAM BLOCKOUTS IS NOT PERMITTED.
3. REINFORCING STEEL SHALL EXTEND CONTINUOUS THROUGH CONSTRUCTION JOINTS.
4. ADJUST HEIGHT OF CONCRETE BARRIER WALL ON LOW SIDE OF OFFSET OR SUPERELEVATED ROADWAYS TO PROVIDE LEVEL GRADE ACROSS TOP OF CONCRETE BARRIER CAP.
5. PULL BOXES TO BE PLACED AS SHOWN OR AS DIRECTED BY THE ENGINEER.

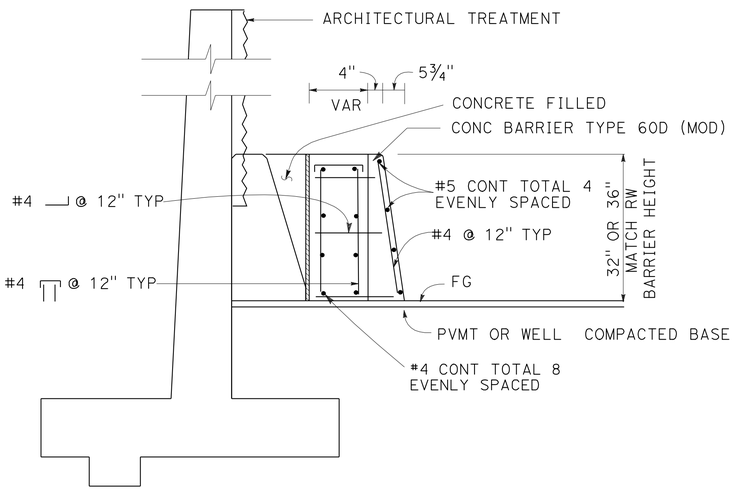

DETAIL A

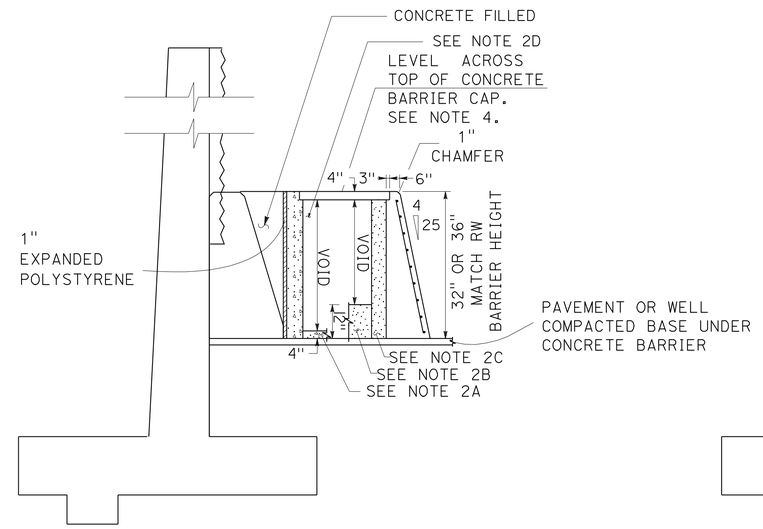

SECTION A-A

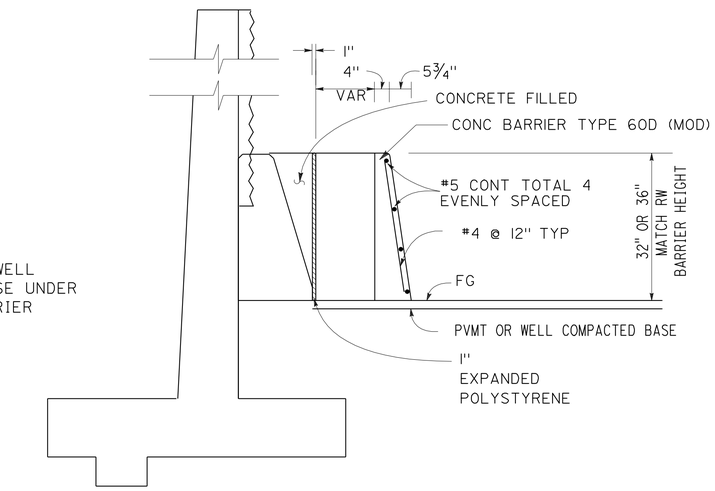

SECTION B-B

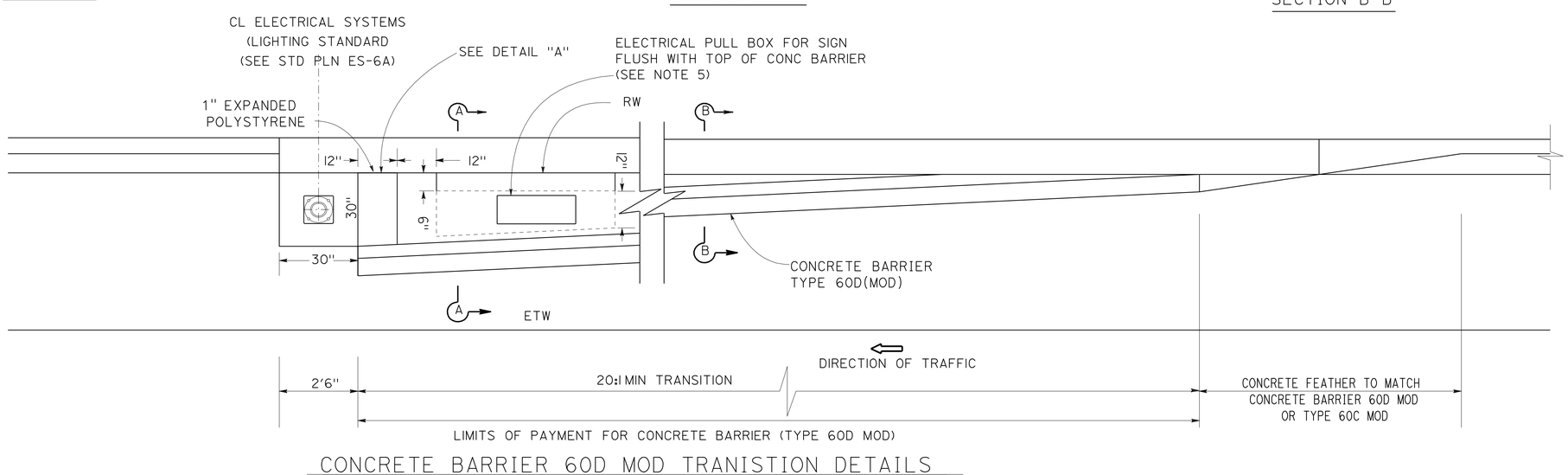

CONCRETE BARRIER 60D MOD TRANISTION DETAILS FOR LIGHTING STANDARD

NO SCALE

APPROVED FOR RETAINING WALL WORK ONLY

RETAINING WALL DETAILS

RETAINING WALL No. 544

SCALE AS SHOWN **R4-4**

STATE OF CALIFORNIA - DEPARTMENT OF TRANSPORTATION
Caltrans®
DESIGN

FUNCTIONAL SUPERVISOR: BEN AMIRI
CALCULATED-DESIGNED BY: DAT H. WONG
CHECKED BY: JUSTINE NIU
REVISED BY
DATE REVISED

LAST REVISION 01-02-12
DATE PLOTTED => 17-APR-2012
TIME PLOTTED => 20:25

Dist	COUNTY	ROUTE	POST MILES TOTAL PROJECT	SHEET No.	TOTAL SHEETS
08	Riv,SBd	91,215	21.5/21.7, 43.2/45.2,0.0/5.1	710	1743

LICENSED LANDSCAPE ARCHITECT

4-16-12
PLANS APPROVAL DATE

LICENSED LANDSCAPE ARCHITECT
RAY J. DESSELLE No. 2272
Signature
11/30/13
Renewal Date
01/02/12
Date
STATE OF CALIFORNIA

THE STATE OF CALIFORNIA OR ITS OFFICERS OR AGENTS SHALL NOT BE RESPONSIBLE FOR THE ACCURACY OR COMPLETENESS OF SCANNED COPIES OF THIS PLAN SHEET.

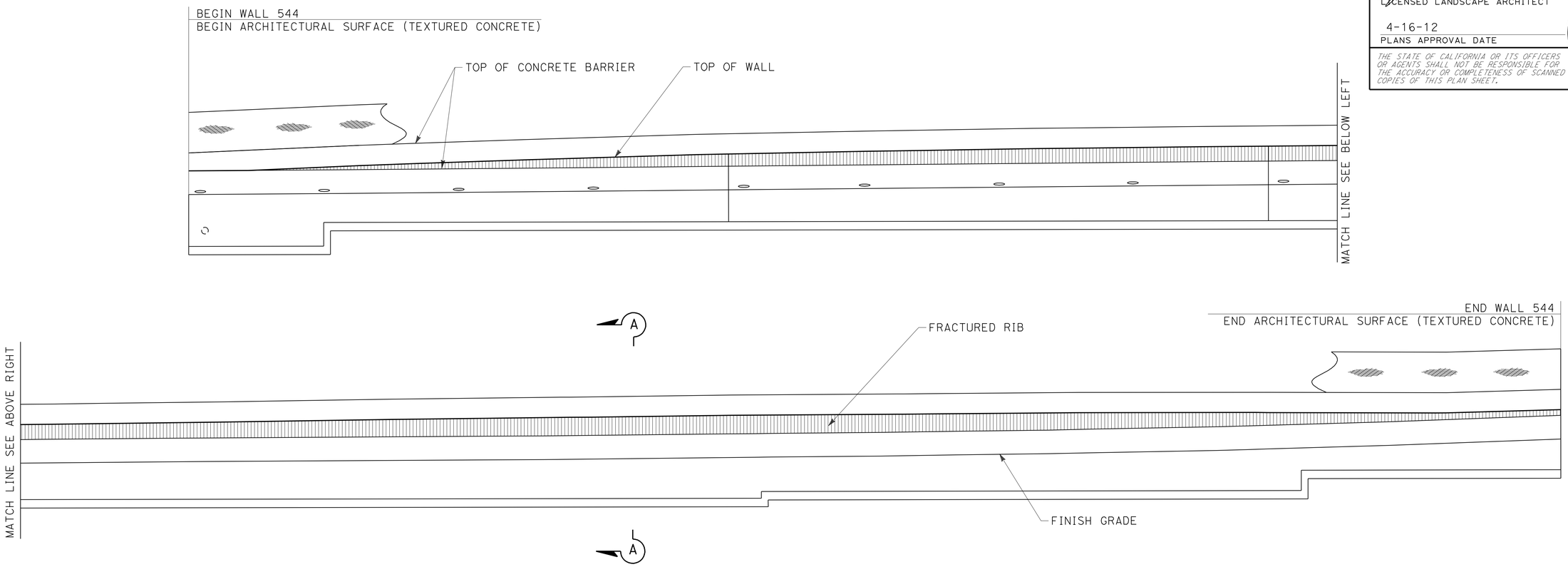

ELEVATION FOR FRACTURED RIB
RETAINING WALL No. 544

ARCHITECTURAL SURFACE
RETAINING WALL No. 544

SCALE: 1/8" = 1'0

R4-5

APPROVED FOR RETAINING WALL WORK ONLY

STATE OF CALIFORNIA - DEPARTMENT OF TRANSPORTATION
Caltrans® LANDSCAPE ARCHITECTURE

SENIOR LANDSCAPE ARCHITECT: RAY DESSELLE
CALCULATED-DESIGNED BY: MATTHEW HALL
CHECKED BY: MIRIAM BISHOP
REVISED BY
DATE REVISED

LAST REVISION 01-02-12
DATE PLOTTED => 17-APR-2012
TIME PLOTTED => 20:25

DIST	COUNTY	ROUTE	POST MILES TOTAL PROJECT	SHEET No.	TOTAL SHEETS
08	Riv,SBd	91,215	21.5/21.7, 43.2/45.2,0.0/5.1	711	1743

REGISTERED CIVIL ENGINEER 1-11-12 DATE

4-16-12
PLANS APPROVAL DATE

REGISTERED PROFESSIONAL ENGINEER Brian Gutierrez No. C66258 Exp. 6-30-12 CIVIL STATE OF CALIFORNIA

The State of California or its officers or agents shall not be responsible for the accuracy or completeness of electronic copies of this plan sheet.

This LOTB sheet was prepared in accordance with the Caltrans Soil & Rock Logging, Classification, & Presentation Manual (2010 Edition).

BENCH MARK

BM 445
Set 1" IP W/ALUM PLUG STAMPED "RIV 215 PM 44.5" GPS 2010 NB RIV 215 ACROSS FROM MEDIAN FREEWAY SIGN "CENTER1/4LA CADENA 1 BARTON RD 2"; 4.8L WLY R/W FENCE; 13.5' ELY EP; 30' SLY ELECT. METER POLE AT R/W FENCE.
N 1,826,360.256
E 6,759,731.282
Elev 890.645
NAVD88

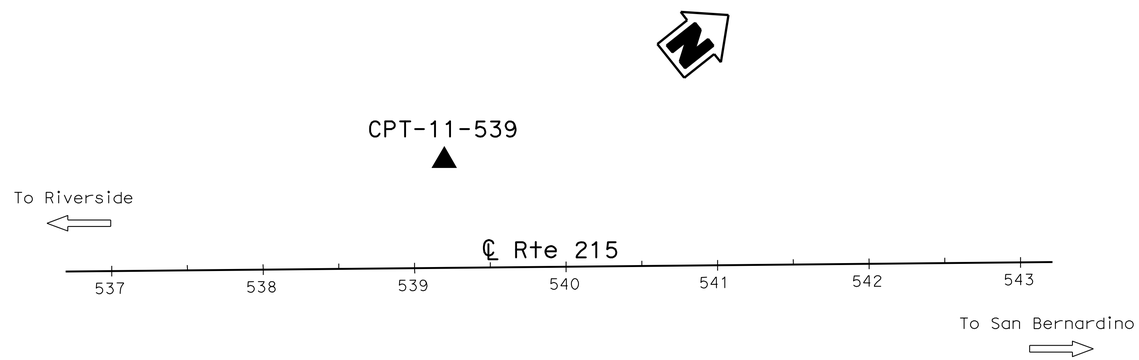

PLAN
1" = 50'

Note: No ground water encountered during field investigation.

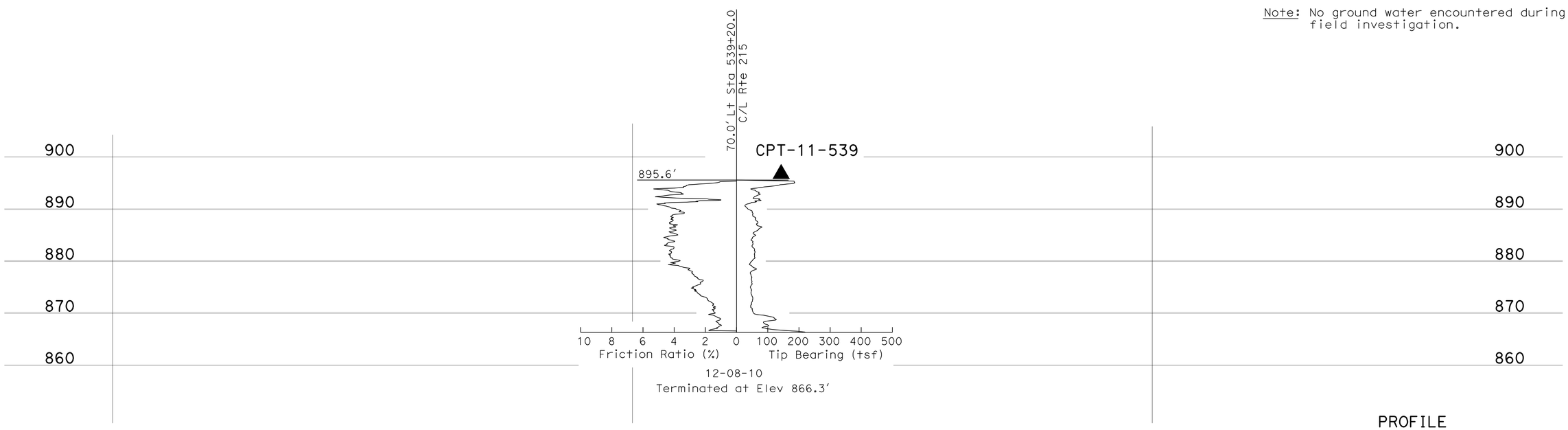

PROFILE
Horiz: 1" = 10'
Vert: 1" = 10'

ENGINEERING SERVICES	MATERIALS AND GEOTECHNICAL SERVICES	STATE OF CALIFORNIA DEPARTMENT OF TRANSPORTATION	DIVISION OF ENGINEERING SERVICES STRUCTURE DESIGN DESIGN BRANCH X	BRIDGE NO. / POST MILE 0.0-5.0	RETAINING WALLS 544 LOG OF TEST BORINGS 1 OF 2
FUNCTIONAL SUPERVISOR NAME: S. Wei	DRAWN BY: W. Tang 10/11 CHECKED BY: B. Levine	FIELD INVESTIGATION BY: B. Gutierrez			

OGS CIVIL LOG OF TEST BORINGS SHEET

ORIGINAL SCALE IN INCHES FOR REDUCED PLANS 0 1 2 3

UNIT: 3643
PROJECT NUMBER & PHASE: 08000005061 CONTRACT NO.: 08-0M9401

DISREGARD PRINTS BEARING EARLIER REVISION DATES → REVISION DATES ~~10-12-11~~ 12-21-11 SHEET X OF X

FILE => 80m94uqd006.dgn

USERNAME => s114640 DATE PLOTTED => 17-APR-2012 TIME PLOTTED => 20:25

DIST	COUNTY	ROUTE	POST MILES TOTAL PROJECT	SHEET No.	TOTAL SHEETS
08	Riv,SBd	91,215	21.5/21.7, 43.2/45.2,0.0/5.1	712	1743

REGISTERED CIVIL ENGINEER 1-11-12 DATE

4-16-12
PLANS APPROVAL DATE

REGISTERED PROFESSIONAL ENGINEER Brian Gutierrez No. C66258 Exp. 6-30-12 CIVIL STATE OF CALIFORNIA

The State of California or its officers or agents shall not be responsible for the accuracy or completeness of electronic copies of this plan sheet.

REFERENCE: CALTRANS SOIL & ROCK LOGGING, CLASSIFICATION, AND PRESENTATION MANUAL (2010)

CEMENTATION

Description	Criteria
Weak	Crumbles or breaks with handling or little finger pressure.
Moderate	Crumbles or breaks with considerable finger pressure.
Strong	Will not crumble or break with finger pressure.

BOREHOLE IDENTIFICATION

Symbol	Hole Type	Description
Size	A	Auger Boring (hollow or solid stem bucket)
Size	R RW RC P	Rotary drilled boring (conventional) Rotary drilled with self-casing wire-line Rotary core with continuously-sampled, self-casing wire-line Rotary percussion boring (air)
Size	R RC	Rotary drilled diamond core Rotary drilled rock core
Size	HD HA	Hand driven (1-inch soil tube) Hand Auger
●	D	Dynamic Cone Penetration Boring
▲	CPT	Cone Penetration Test (ASTM D 5778)
⬚	O	Other (note on LOTB)

Note: Size in inches.

CONSISTENCY OF COHESIVE SOILS

Description	Shear Strength (tsf)	Pocket Penetrometer Measurement, PP, (tsf)	Torvane Measurement, TV, (tsf)	Vane Shear Measurement, VS, (tsf)
Very Soft	Less than 0.12	Less than 0.25	Less than 0.12	Less than 0.12
Soft	0.12 - 0.25	0.25 - 0.5	0.12 - 0.25	0.12 - 0.25
Medium Stiff	0.25 - 0.5	0.5 - 1	0.25 - 0.5	0.25 - 0.5
Stiff	0.5 - 1	1 - 2	0.5 - 1	0.5 - 1
Very Stiff	1 - 2	2 - 4	1 - 2	1 - 2
Hard	Greater than 2	Greater than 4	Greater than 2	Greater than 2

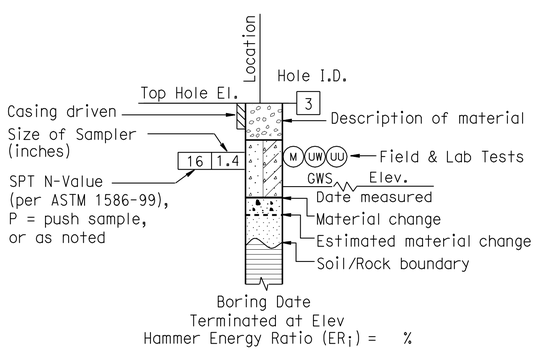

ROTARY BORING

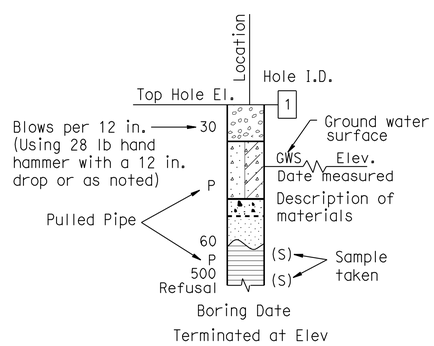

HAND BORING

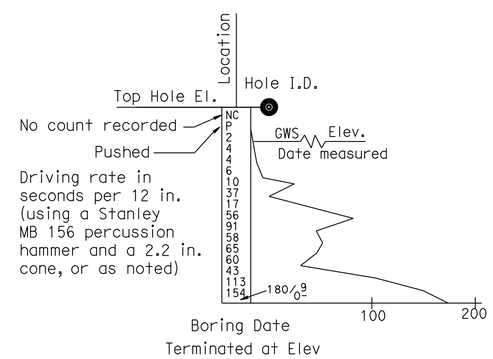

DYNAMIC CONE PENETRATION BORING

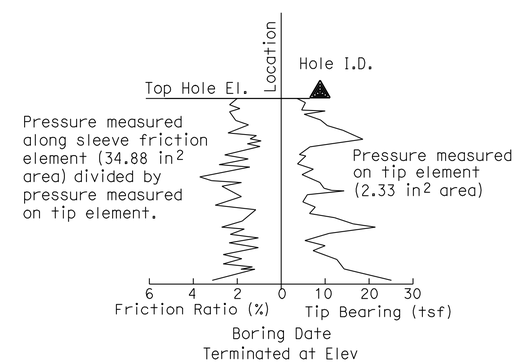

CONE PENETRATION TEST (CPT) BORING

ENGINEERING SERVICES	MATERIALS AND GEOTECHNICAL SERVICES	STATE OF CALIFORNIA DEPARTMENT OF TRANSPORTATION	DIVISION OF ENGINEERING SERVICES STRUCTURE DESIGN DESIGN BRANCH X	BRIDGE NO. / POST MILE 0.0-5.0	RETAINING WALLS 544 LOG OF TEST BORINGS 2 OF 2
	PREPARED BY: W. Tang 10/11				

GS LOTB SOIL LEGEND

ORIGINAL SCALE IN INCHES FOR REDUCED PLANS 0 1 2 3

UNIT: 3643
PROJECT NUMBER & PHASE: 08000005061 CONTRACT NO.: 08-0M9401

DISREGARD PRINTS BEARING EARLIER REVISION DATES

REVISION DATES | SHEET X | OF X

FILE => 80m94uqd007.dgn

USERNAME => s114640 DATE PLOTTED => 17-APR-2012 TIME PLOTTED => 20:25

Dist	COUNTY	ROUTE	POST MILES TOTAL PROJECT	SHEET No.	TOTAL SHEETS
08	Riv,SBd	91,215	21.5/21.7, 43.2/45.2,0.0/5.1	713	1743

REGISTERED CIVIL ENGINEER 2-10-12 DATE

4-16-12
PLANS APPROVAL DATE

REGISTERED PROFESSIONAL ENGINEER JUSTINE NIU No. C 62897 Exp. 6-30-12 CIVIL STATE OF CALIFORNIA

THE STATE OF CALIFORNIA OR ITS OFFICERS OR AGENTS SHALL NOT BE RESPONSIBLE FOR THE ACCURACY OR COMPLETENESS OF SCANNED COPIES OF THIS PLAN SHEET.

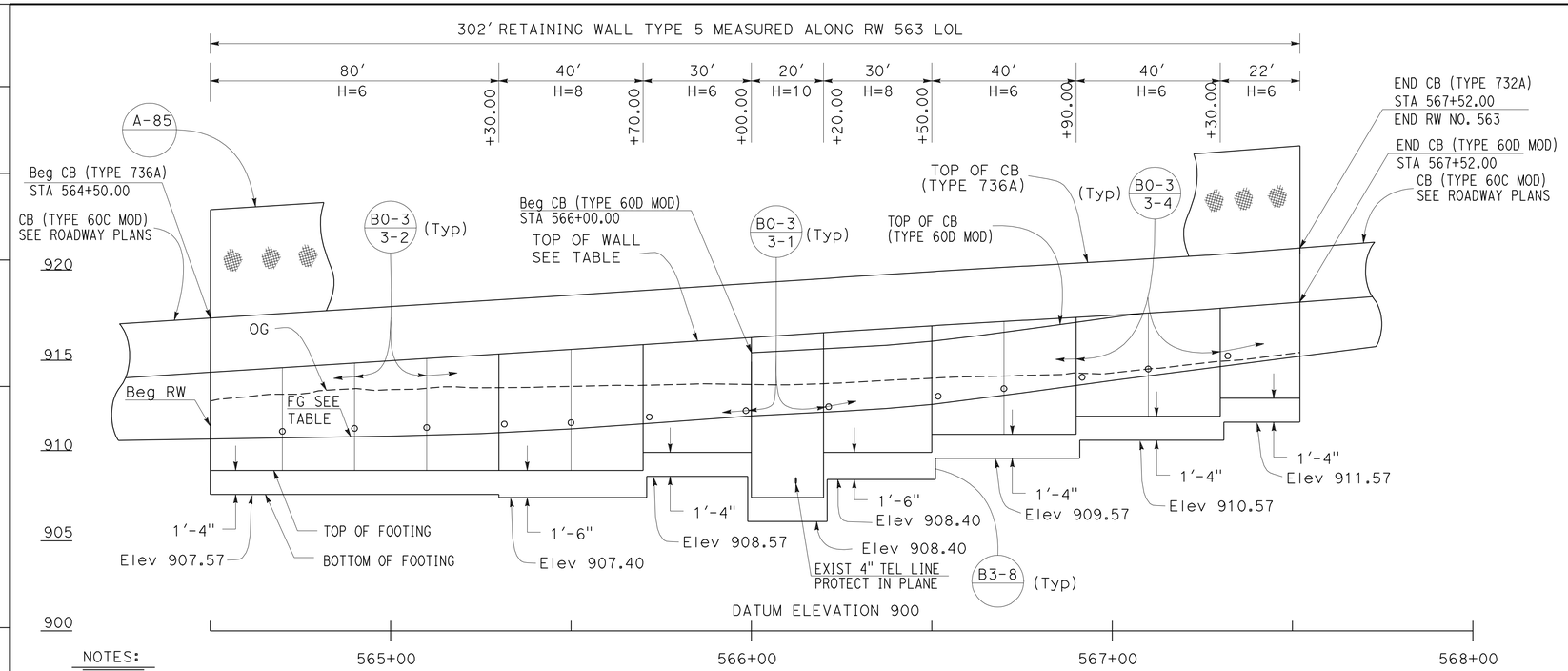

ELEVATION TABLE		
STATION	TOP OF WALL	FG
564+50.00	914.34	910.64
565+00.00	914.97	910.80
565+50.00	915.60	911.20
566+00.00	916.26	911.92
566+50.00	916.91	912.55
567+00.00	917.49	913.88
567+50.00	918.19	915.17
567+52.00	918.22	915.22

NOTES:

1. ARCHITECTURAL TREATMENT SHOULD EXTEND 6 IN BELOW FG OR 6 IN BELOW TOP CB (TYPE 60D MOD)
2. FOR STRUCTURAL SECTIONS, SEE ROADWAY PLANS
3. WATERSTOP IN EXPANSION JOINT SHALL BE EXTEND 6 IN INTO THE BARRIER
4. FOR POST ANCHORAGE DETAILS, SEE B11-52

ELEVATION

SCALE Horiz 1"=20'
Vert 1"=4'

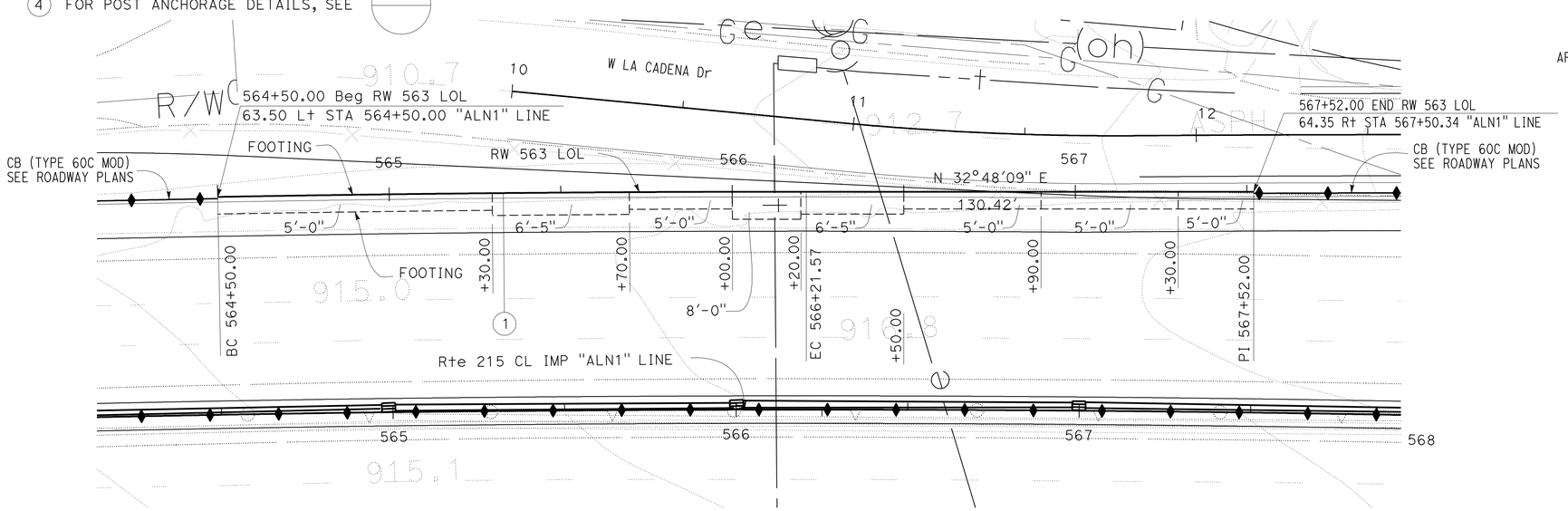

PLAN

SCALE 1"=20'

CURVE DATA

No.	R	Δ	T	L
1	9663'	1°1'02"	85.79'	171.57'

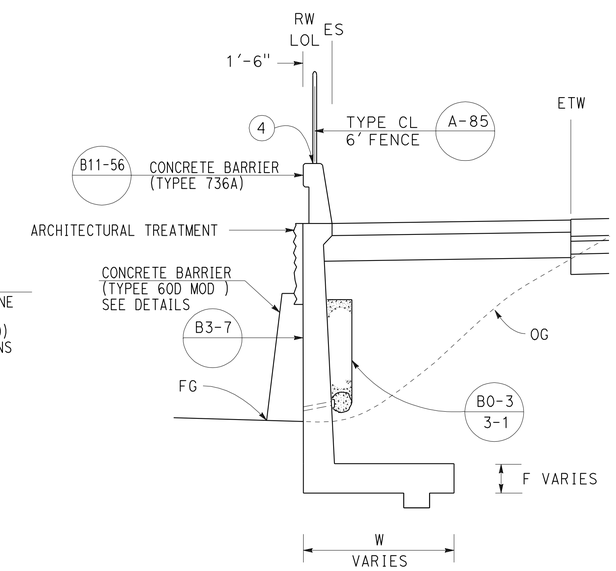

TYPEICAL SECTION

NO SCALE

FROM STA 564+50.00 TO STA 567+52.00

RETAINING WALL PLAN

RETAINING WALL No. 563

SCALE AS SHOWN **R5-1**

APPROVED FOR RETAINING WALL WORK ONLY

STATE OF CALIFORNIA - DEPARTMENT OF TRANSPORTATION
DESIGN
Caltrans

FUNCTIONAL SUPERVISOR: BEN AMIRI
CALCULATED-DESIGNED BY: DAT H. WONG
CHECKED BY: JUSTINE NIU
REVISED BY
DATE REVISED

LAST REVISION 02-10-12
DATE PLOTTED => 17-APR-2012
TIME PLOTTED => 20:25

Dist	COUNTY	ROUTE	POST MILES TOTAL PROJECT	SHEET No.	TOTAL SHEETS
08	Riv,SBd	91,215	21.5/21.7, 43.2/45.2,0.0/5.1	714	1743

REGISTERED CIVIL ENGINEER 1-2-12 DATE

4-16-12
PLANS APPROVAL DATE

REGISTERED PROFESSIONAL ENGINEER
JUSTINE NIU
No. C 62897
Exp. 6-30-12
CIVIL
STATE OF CALIFORNIA

THE STATE OF CALIFORNIA OR ITS OFFICERS OR AGENTS SHALL NOT BE RESPONSIBLE FOR THE ACCURACY OR COMPLETENESS OF SCANNED COPIES OF THIS PLAN SHEET.

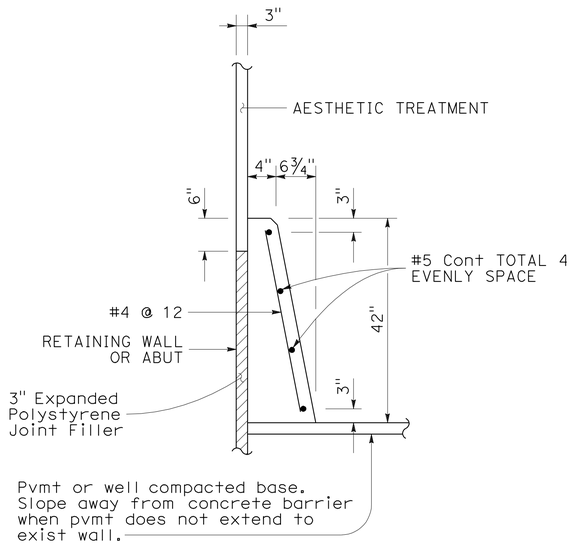

CONCRETE BARRIER
(TYPE 60D MOD)

NO SCALE

QUANTITIES

STRUCTURAL CONCRETE (RETAINING WALL)	178.7	CY
BAR REINFORCING STEEL (RETAINING WALL)	15186	LB
STRUCTURAL EXCAVATION (RETAINING WALL)	466.1	CY
STRUCTURAL BACKFILL (RETAINING WALL)	325.4	CY
PERVIOUS BACKFILL MATERIAL (RETAINING WALL)	9.6	CY
CONCRETE BARRIER (TYPE 736A)	302.0	LF
CONCRETE BARRIER (TYPE 60 D MOD)	152.0	LF
PLASTIC PIPE (N)	15.0	LF
WATERSTOP (N)	28.9	LF
CHAIN LINK FENCE (TYPE CL-6)	302.0	LF
ARCHITECTURE SURFACE (TEXTURE CONCRETE)	767	SF

(N) = NOT A SEPARATE PAY ITEM, FOR INFORMATION ONLY

RETAINING WALL PLAN
RETAINING WALL No. 563

SCALE AS SHOWN **R5-2**

APPROVED FOR RETAINING WALL WORK ONLY

STATE OF CALIFORNIA - DEPARTMENT OF TRANSPORTATION
Caltrans
DESIGN

FUNCTIONAL SUPERVISOR: BEN AMIRI
CALCULATED-DESIGNED BY: DAT H. WONG
CHECKED BY: JUSTINE NIU
REVISED BY
DATE REVISED

LAST REVISION 01-02-12
DATE PLOTTED => 17-APR-2012
TIME PLOTTED => 20:25

Dist	COUNTY	ROUTE	POST MILES TOTAL PROJECT	SHEET No.	TOTAL SHEETS
08	Riv,SBd	91,215	21.5/21.7, 43.2/45.2,0.0/5.1	715	1743

LICENSED LANDSCAPE ARCHITECT

4-16-12
PLANS APPROVAL DATE

LICENSED LANDSCAPE ARCHITECT
RAY T. DESSELLE No. 2548
Signature
11/30/13
Renewal Date
01/02/12
Date
STATE OF CALIFORNIA

THE STATE OF CALIFORNIA OR ITS OFFICERS OR AGENTS SHALL NOT BE RESPONSIBLE FOR THE ACCURACY OR COMPLETENESS OF SCANNED COPIES OF THIS PLAN SHEET.

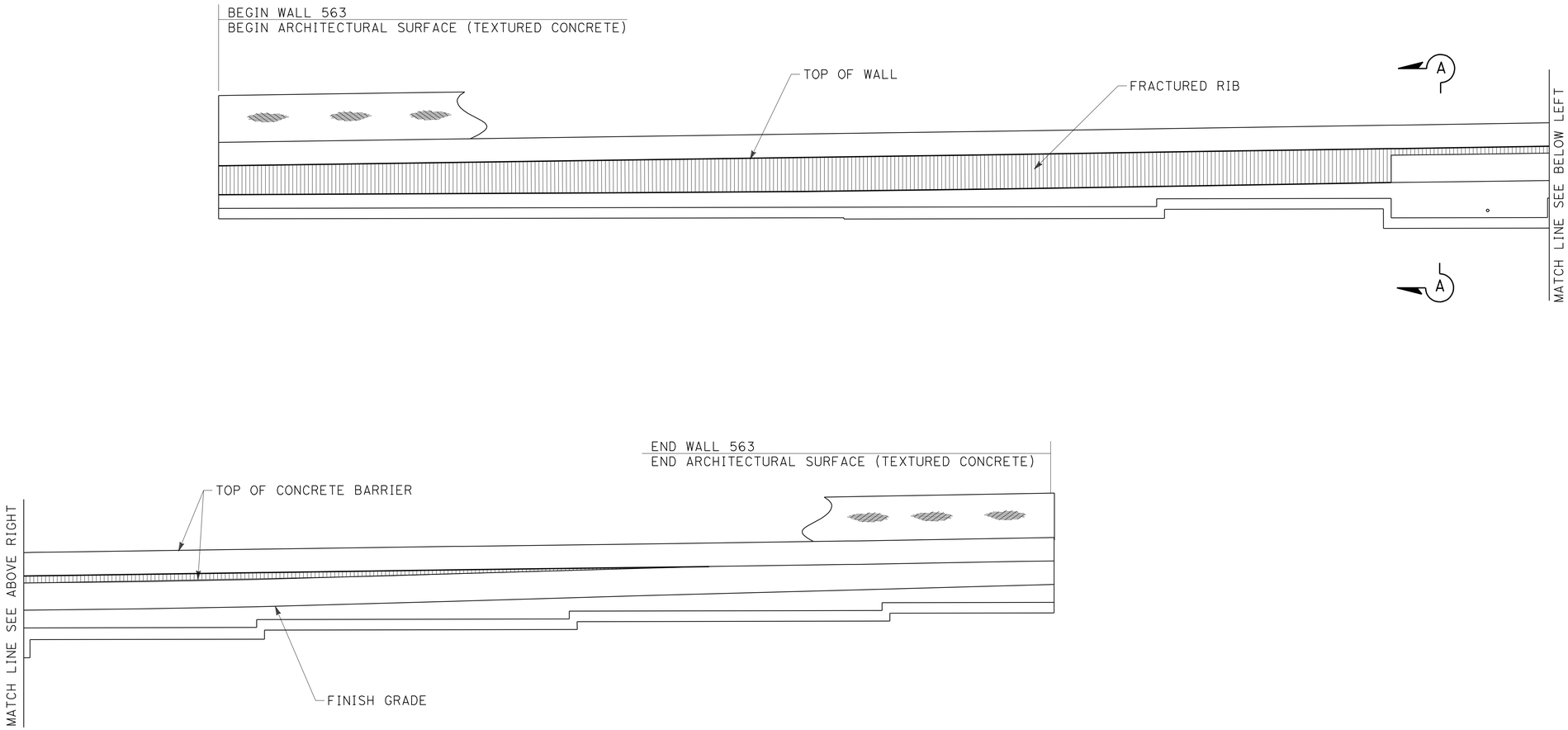

ELEVATION FOR FRACTURED RIB RETAINING WALL No. 563

APPROVED FOR RETAINING WALL WORK ONLY

ARCHITECTURAL SURFACE
RETAINING WALL No. 563

SCALE: 1/8" = 1'0

R5-3

STATE OF CALIFORNIA - DEPARTMENT OF TRANSPORTATION
Caltrans® LANDSCAPE ARCHITECTURE

SENIOR LANDSCAPE ARCHITECT: RAY DESSELLE
CALCULATED-DESIGNED BY: MATTHEW HALL
CHECKED BY: MIRIAM BISHOP
REVISED BY
DATE REVISED

LAST REVISION 01-02-12
DATE PLOTTED => 17-APR-2012
TIME PLOTTED => 20:25

DIST	COUNTY	ROUTE	POST MILES TOTAL PROJECT	SHEET No.	TOTAL SHEETS
08	Riv,SBd	91,215	21.5/21.7, 43.2/45.2,0.0/5.1	716	1743

REGISTERED CIVIL ENGINEER 1-11-12 DATE

4-16-12
PLANS APPROVAL DATE

REGISTERED PROFESSIONAL ENGINEER Brian Gutierrez No. C66258 Exp. 6-30-12 CIVIL STATE OF CALIFORNIA

The State of California or its officers or agents shall not be responsible for the accuracy or completeness of electronic copies of this plan sheet.

This LOTB sheet was prepared in accordance with the Caltrans Soil & Rock Logging, Classification, & Presentation Manual (2010 Edition).

BENCH MARK

BM 445
Set 1" IP W/ALUM PLUG STAMPED "RIV 215 PM 44.5" GPS 2010 NB RIV 215 ACROSS FROM MEDIAN FREEWAY SIGN "CENTER1/4LA CADENA 1 BARTON RD 2"; 4.8L WLY R/W FENCE; 13.5' ELY EP; 30' SLY ELECT. METER POLE AT R/W FENCE.
N 1,826,360.256
E 6,759,731.282
Elev 890.645
NAVD88

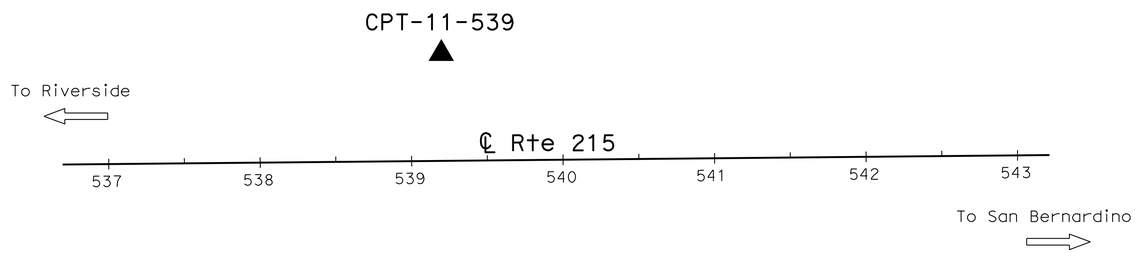

PLAN

1" = 50'

Note: No ground water encountered during field investigation.

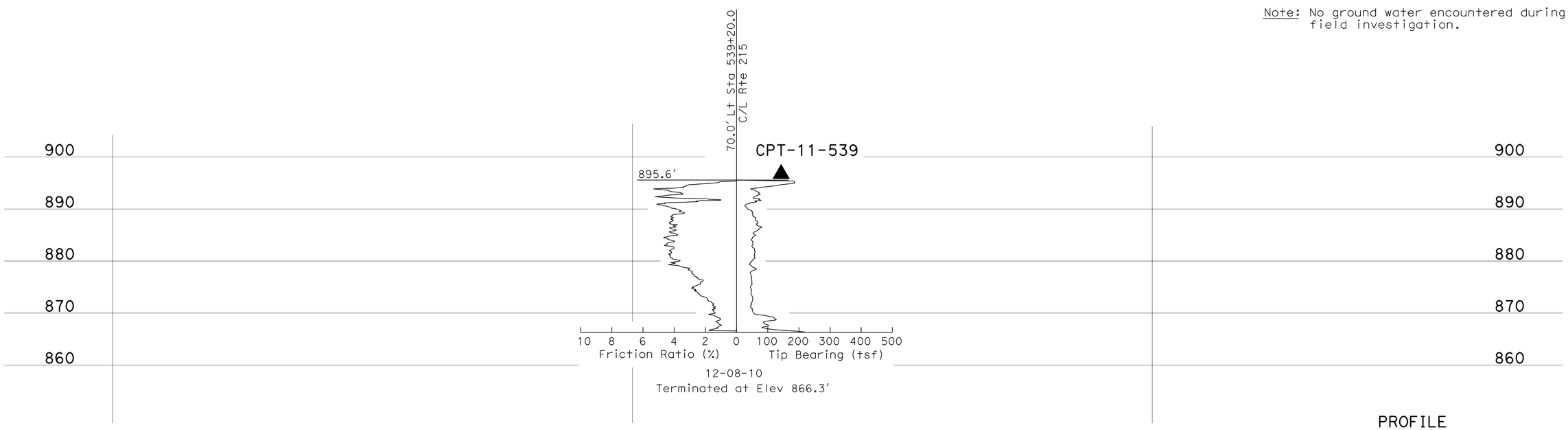

PROFILE

Horiz: 1" = 10'
Vert: 1" = 10'

ENGINEERING SERVICES	MATERIALS AND GEOTECHNICAL SERVICES	STATE OF CALIFORNIA DEPARTMENT OF TRANSPORTATION	DIVISION OF ENGINEERING SERVICES STRUCTURE DESIGN DESIGN BRANCH X	BRIDGE NO. / POST MILE 0.0-5.0	RETAINING WALLS 563 LOG OF TEST BORINGS 1 OF 2
FUNCTIONAL SUPERVISOR NAME: S. Wei	DRAWN BY: W. Tang 10/11 CHECKED BY: B. Levine	FIELD INVESTIGATION BY: B. Gutierrez			

OGS CIVIL LOG OF TEST BORINGS SHEET

ORIGINAL SCALE IN INCHES FOR REDUCED PLANS 0 1 2 3

UNIT: 3643
PROJECT NUMBER & PHASE: 08000005061 CONTRACT NO.: 08-0M9401

DISREGARD PRINTS BEARING EARLIER REVISION DATES → REVISION DATES ~~10-12-11~~ 12-21-11 SHEET X OF X

FILE => 80m94uqe004.dgn

USERNAME => s114640 DATE PLOTTED => 17-APR-2012 TIME PLOTTED => 20:25

DIST	COUNTY	ROUTE	POST MILES TOTAL PROJECT	SHEET No.	TOTAL SHEETS
08	Riv,SBd	91,215	21.5/21.7, 43.2/45.2,0.0/5.1	717	1743

REGISTERED CIVIL ENGINEER 1-11-12 DATE

4-16-12
PLANS APPROVAL DATE

REGISTERED PROFESSIONAL ENGINEER Brian Gutierrez No. C66258 Exp. 6-30-12 CIVIL STATE OF CALIFORNIA

The State of California or its officers or agents shall not be responsible for the accuracy or completeness of electronic copies of this plan sheet.

REFERENCE: CALTRANS SOIL & ROCK LOGGING, CLASSIFICATION, AND PRESENTATION MANUAL (2010)

CEMENTATION

Description	Criteria
Weak	Crumbles or breaks with handling or little finger pressure.
Moderate	Crumbles or breaks with considerable finger pressure.
Strong	Will not crumble or break with finger pressure.

BOREHOLE IDENTIFICATION

Symbol	Hole Type	Description
Size	A	Auger Boring (hollow or solid stem bucket)
Size	R RW RC P	Rotary drilled boring (conventional) Rotary drilled with self-casing wire-line Rotary core with continuously-sampled, self-casing wire-line Rotary percussion boring (air)
Size	R RC	Rotary drilled diamond core Rotary drilled rock core
Size	HD HA	Hand driven (1-inch soil tube) Hand Auger
●	D	Dynamic Cone Penetration Boring
▲	CPT	Cone Penetration Test (ASTM D 5778)
⬚	O	Other (note on LOTB)

Note: Size in inches.

CONSISTENCY OF COHESIVE SOILS

Description	Shear Strength (tsf)	Pocket Penetrometer Measurement, PP, (tsf)	Torvane Measurement, TV, (tsf)	Vane Shear Measurement, VS, (tsf)
Very Soft	Less than 0.12	Less than 0.25	Less than 0.12	Less than 0.12
Soft	0.12 - 0.25	0.25 - 0.5	0.12 - 0.25	0.12 - 0.25
Medium Stiff	0.25 - 0.5	0.5 - 1	0.25 - 0.5	0.25 - 0.5
Stiff	0.5 - 1	1 - 2	0.5 - 1	0.5 - 1
Very Stiff	1 - 2	2 - 4	1 - 2	1 - 2
Hard	Greater than 2	Greater than 4	Greater than 2	Greater than 2

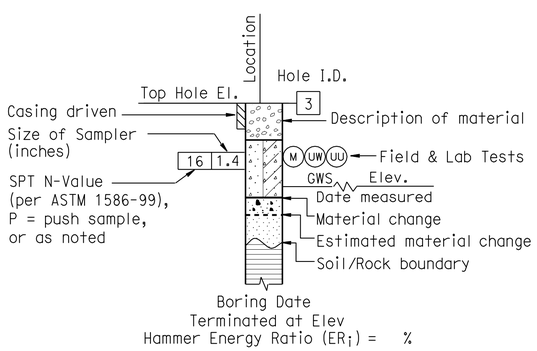

ROTARY BORING

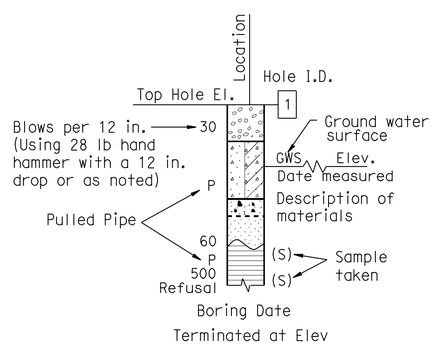

HAND BORING

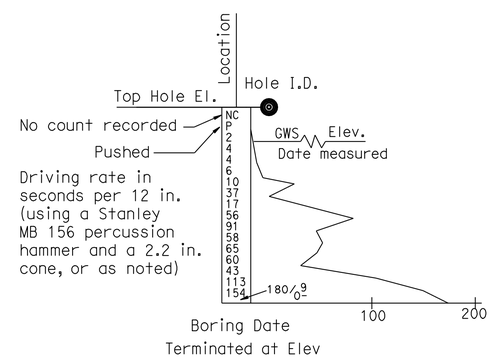

DYNAMIC CONE PENETRATION BORING

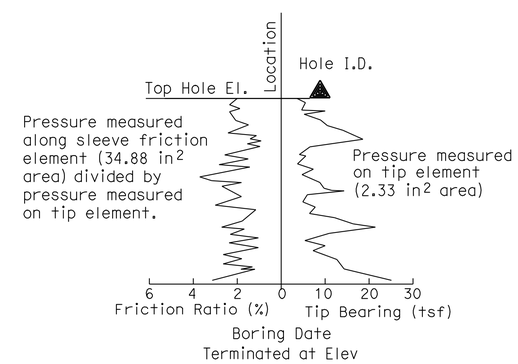

CONE PENETRATION TEST (CPT) BORING

ENGINEERING SERVICES	MATERIALS AND GEOTECHNICAL SERVICES	STATE OF CALIFORNIA DEPARTMENT OF TRANSPORTATION	DIVISION OF ENGINEERING SERVICES STRUCTURE DESIGN DESIGN BRANCH X	BRIDGE NO. / POST MILE 0.0-5.0	RETAINING WALLS 563 LOG OF TEST BORINGS 2 OF 2
	PREPARED BY: W. Tang 10/11				

GS LOTB SOIL LEGEND

ORIGINAL SCALE IN INCHES FOR REDUCED PLANS 0 1 2 3

UNIT: 3643
PROJECT NUMBER & PHASE: 08000005061 CONTRACT NO.: 08-0M9401

DISREGARD PRINTS BEARING EARLIER REVISION DATES

REVISION DATES | SHEET X | OF X

FILE => 80m94uqe005.dgn

USERNAME => s114640 DATE PLOTTED => 17-APR-2012 TIME PLOTTED => 20:25

Dist	COUNTY	ROUTE	POST MILES TOTAL PROJECT	SHEET No.	TOTAL SHEETS
08	Riv,SBd	91,215	21.5/21.7, 43.2/45.2,0.0/5.1	718	1743

REGISTERED CIVIL ENGINEER 4-3-12 DATE

4-16-12
PLANS APPROVAL DATE

REGISTERED PROFESSIONAL ENGINEER JUSTINE NIU No. C 62897 Exp. 6-30-12 CIVIL STATE OF CALIFORNIA

THE STATE OF CALIFORNIA OR ITS OFFICERS OR AGENTS SHALL NOT BE RESPONSIBLE FOR THE ACCURACY OR COMPLETENESS OF SCANNED COPIES OF THIS PLAN SHEET.

ELEVATION TABLE		
STATION	TOP OF WALL	FG
27+62.72	913.29	913.94
28+00.00	911.72	906.10
28+50.00	910.59	907.37
28+85.52	910.19	908.27

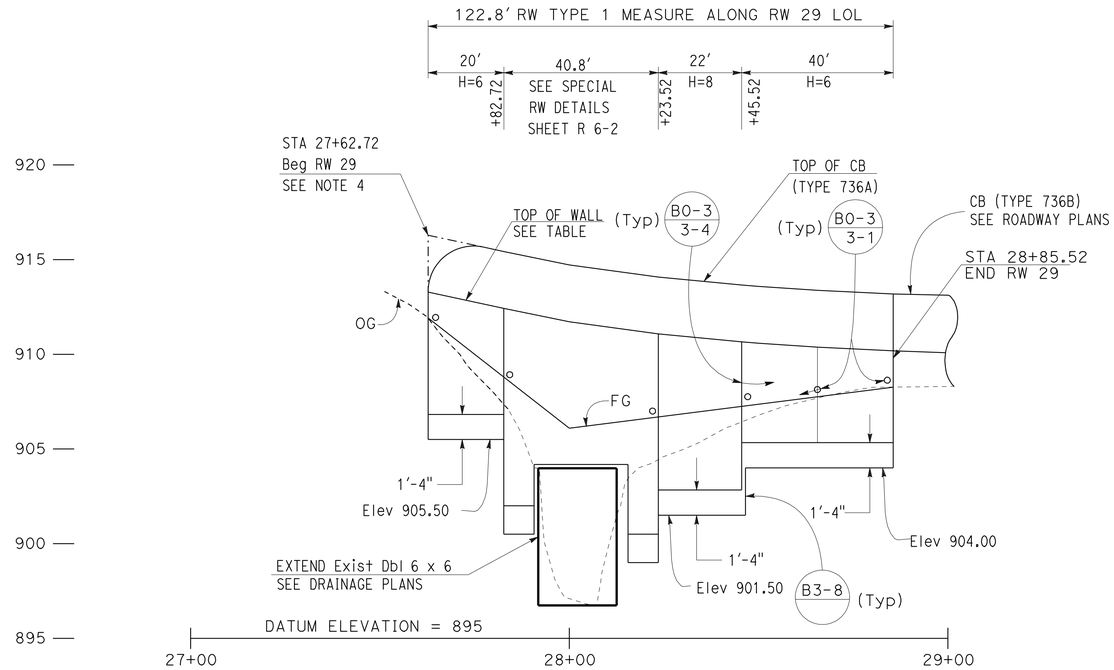

ELEVATION

SCALE Horiz 1"=20'
Vert 1"=4'

NOTES:

1. ARCHITECTURAL TREATMENT SHOULD EXTEND 6 IN BELOW FG OR 6 IN BELOW TOP CB (TYPE 60D MOD)
2. FOR STRUCTURAL SECTIONS, SEE ROADWAY PLANS
3. WATERSTOP IN EXPANSION JOINT SHALL BE EXTEND 6 IN INTO THE BARRIER
4. FOR ROUNDING DETAILS, SEE ARCHITECTURAL TREATMENT PLANS

QUANTITIES

STRUCTURAL CONCRETE (RETAINING WALL)	72.7	CY
BAR REINFORCING STEEL (RETAINING WALL)	7573	LB
STRUCTURAL EXCAVATION (RETAINING WALL)	184.7	CY
STRUCTURAL BACKFILL (RETAINING WALL)	188.7	CY
PERVIOUS BACKFILL MATERIAL (RETAINING WALL)	3.0	CY
CONCRETE BARRIER (TYPE 736A)	122.8	LF
PLASTIC PIPE (N)	7.2	LF
WATERSTOP (N)	12.9	LF
ARCHITECTURE SURFACE (TEXTURE CONCRETE)	459	SF
FURNISH PILING (CLASS 90 ALTERNATIVE X)	198.0	LF
DRIVE PILE (CLASS 90 ALTERNATIVE X)	8	EA

(N) = NOT A SEPARATE PAY ITEM, FOR INFORMATION ONLY

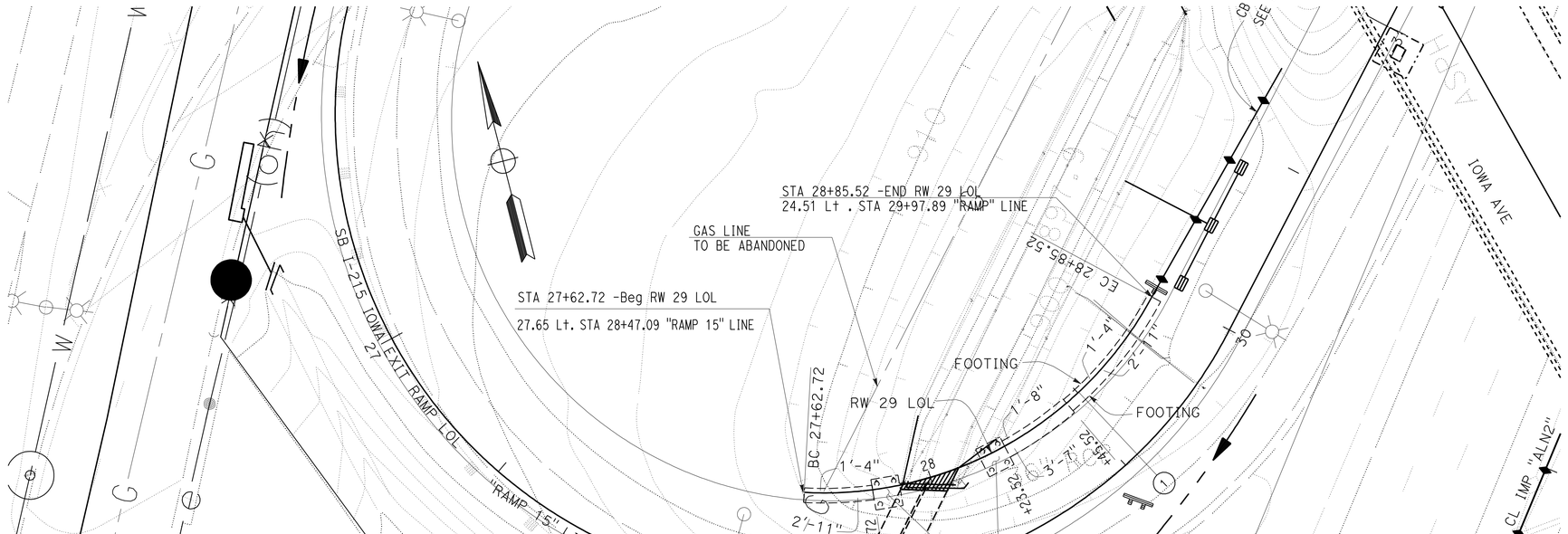

CURVE DATA

No.	R	Δ	T	L
1	109'	64°50'43"	68.92'	122.80'

PLAN

SCALE 1"=20'

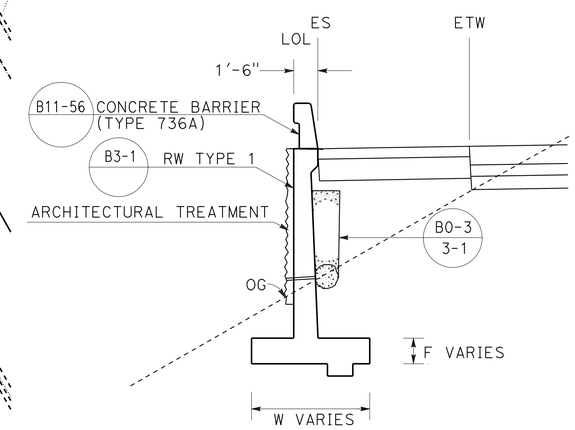

TYPICAL SECTION

NO SCALE

27+62.72 TO 28+85.52

RETAINING WALL PLAN

RETAINING WALL No. 29

SCALE AS SHOWN **R6-1**

APPROVED FOR RETAINING WALL WORK ONLY

STATE OF CALIFORNIA - DEPARTMENT OF TRANSPORTATION
Caltrans
DESIGN
FUNCTIONAL SUPERVISOR: BEN AMIRI
CALCULATED-DESIGNED BY: VINH TRUONG
CHECKED BY: DAT H. WONG
REVISED BY
DATE REVISED

LAST REVISION 04-03-12
DATE PLOTTED => 17-APR-2012
TIME PLOTTED => 20:25

DIST	COUNTY	ROUTE	POST MILES TOTAL PROJECT	SHEET No.	TOTAL SHEETS
08	Riv,SBd	91,215	21.5/21.7, 43.2/45.2,0.0/5.1	719	1743

REGISTERED CIVIL ENGINEER 1-2-12 DATE

4-16-12
PLANS APPROVAL DATE

REGISTERED PROFESSIONAL ENGINEER LARRY WU No. C57035 Exp. 6-30-13 CIVIL STATE OF CALIFORNIA

The State of California or its officers or agents shall not be responsible for the accuracy or completeness of electronic copies of this plan sheet.

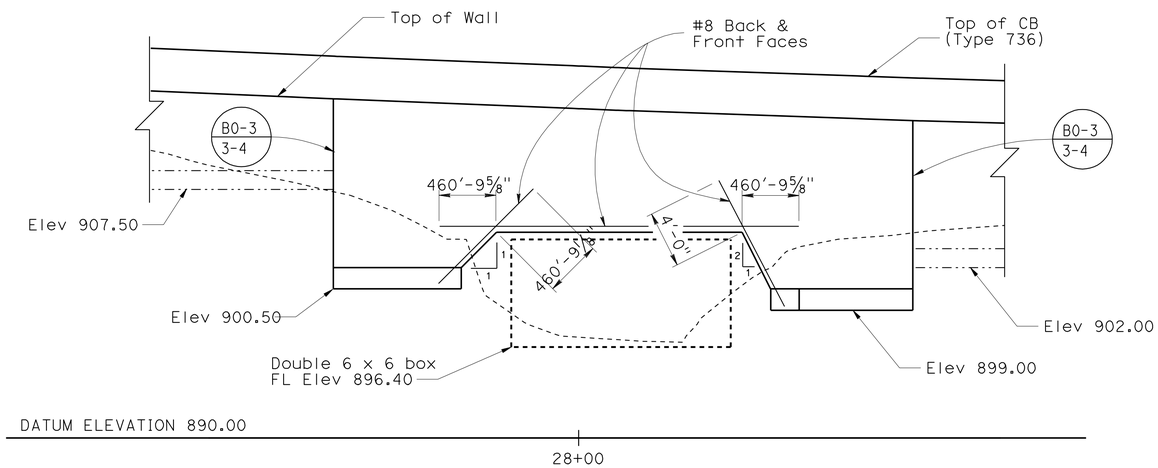

MIRROR DEVELOPED ELEVATION

3/16"=1'-0"

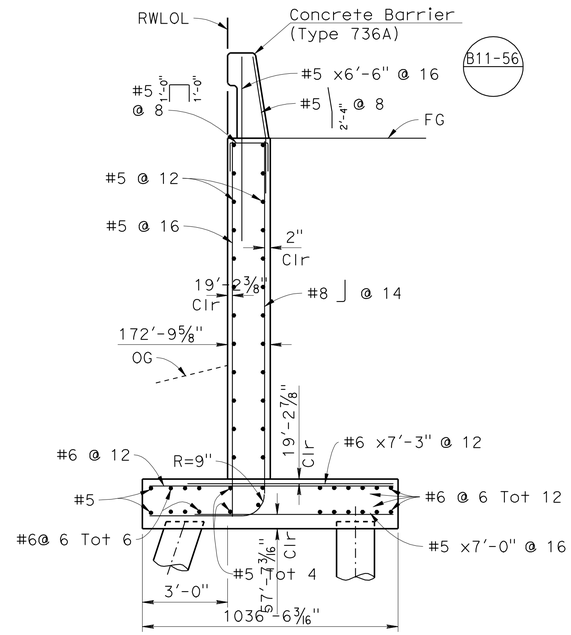

SECTION A-A

3/8"=1'-0"

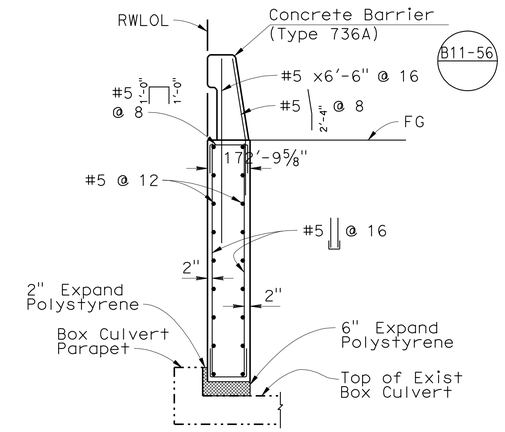

SECTION B-B

3/8"=1'-0"

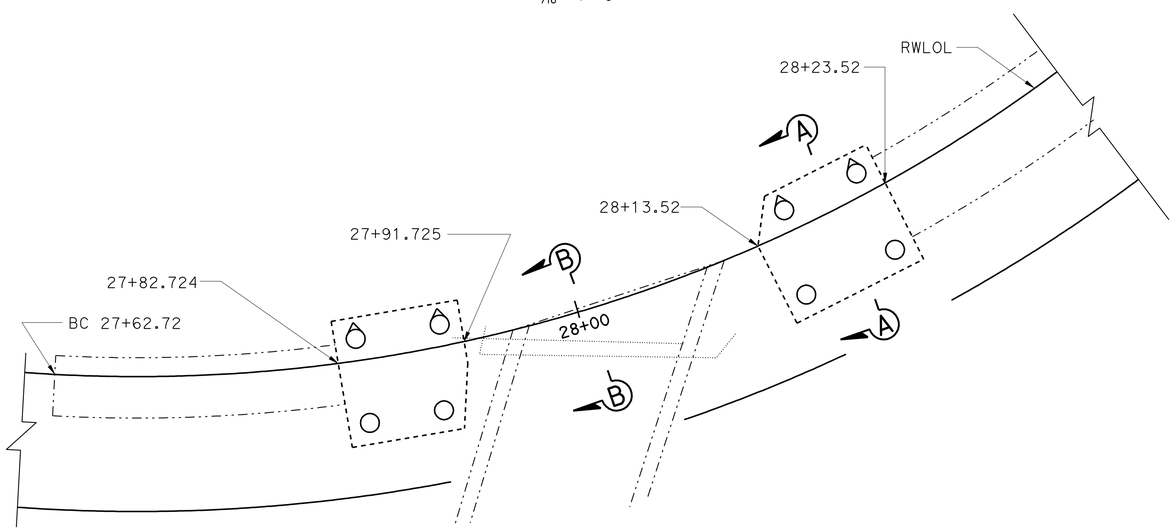

PLAN

3/16"=1'-0"

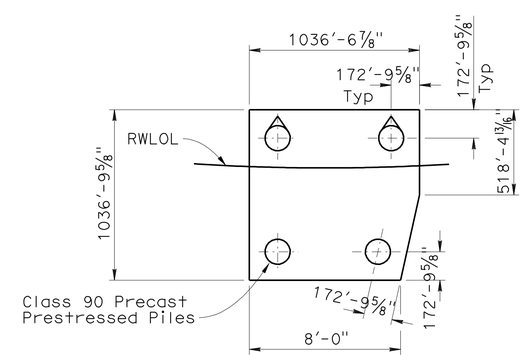

FOOTING AND PILE LAYOUT

1/4"=1'-0"

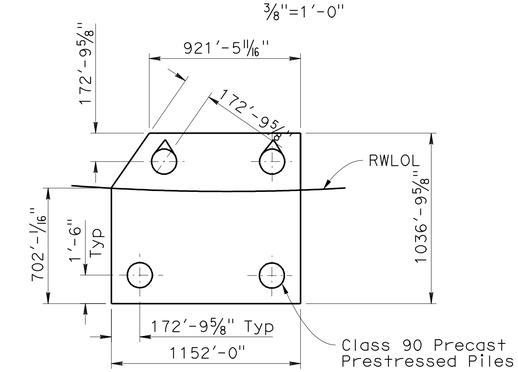

LEGEND:

Indicates 1:3 Battered Piles

PILE DATA TABLE

Locations	Pile Type	Required Nominal Resistance (kips)		Design Tip Elevation (ft)	Specidied Tip Elevation (ft)	Nominal Driving Resistance (kips)
		Compression	Tension			
Ret Wall 29	Class 90 Alt "X"	90	0	875.0	875.0	90

NOTE:
THE CONTRACTOR SHALL VERIFY ALL CONTROLLING FIELD DIMENSIONS BEFORE ORDERING OR FABRICATING ANY MATERIAL.

R6-2

X DESIGN ENGINEER	DESIGN	BY H. Vu	CHECKED X	LOAD & RESISTANCE FACTOR DESIGN	LIVE LOADING: HL93 W/"LOW-BOY": PERMIT DESIGN VEHICLE	
	DETAILS	BY Y. Tang	CHECKED X	LAYOUT	BY X	CHECKED X
	QUANTITIES	BY X	CHECKED X	SPECIFICATIONS	BY X	PLANS AND SPECS COMPARED X

ORIGINAL SCALE IN INCHES FOR REDUCED PLANS 0 1 2 3

STATE OF CALIFORNIA
DEPARTMENT OF TRANSPORTATION

DIVISION OF ENGINEERING SERVICES
STRUCTURE DESIGN
DESIGN BRANCH 10

BRIDGE NO. RW 29
POST MILE X

RETAINING WALL NO. 29
RETAINING WALL DETAILS

UNIT: 3589
PROJECT NUMBER & PHASE: 08000005061
CONTRACT NO.: 08-0M9401

DISREGARD PRINTS BEARING EARLIER REVISION DATES

REVISION DATES				SHEET	OF
11-10-11				X	X

USERNAME => s114640 DATE PLOTTED => 17-APR-2012 TIME PLOTTED => 20:25

STRUCTURES DESIGN GENERAL PLAN SHEET (ENGLISH) (REV.09-01-10)

FILE => 80m94uqf002.dgn

Dist	COUNTY	ROUTE	POST MILES TOTAL PROJECT	SHEET No.	TOTAL SHEETS
08	Riv,SBd	91,215	21.5/21.7, 43.2/45.2,0.0/5.1	720	1743

LICENSED LANDSCAPE ARCHITECT

4-16-12
PLANS APPROVAL DATE

LICENSED LANDSCAPE ARCHITECT
RAY T. DESSELLE No. 2272
Signature
11/30/13
Renewal Date
01/02/12
Date
STATE OF CALIFORNIA

THE STATE OF CALIFORNIA OR ITS OFFICERS OR AGENTS SHALL NOT BE RESPONSIBLE FOR THE ACCURACY OR COMPLETENESS OF SCANNED COPIES OF THIS PLAN SHEET.

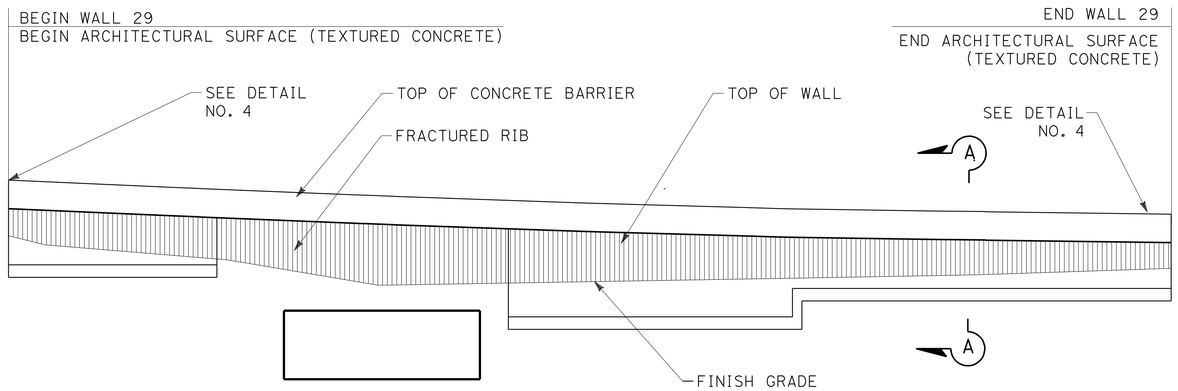

ELEVATION FOR FRACTURED RIB TEXTURE RETAINING WALL No. 29

ARCHITECTURAL SURFACE
RETAINING WALL No. 29

SCALE: 1/8" = 1'0

R6-3

APPROVED FOR RETAINING WALL WORK ONLY

STATE OF CALIFORNIA - DEPARTMENT OF TRANSPORTATION
Caltrans® LANDSCAPE ARCHITECTURE

SENIOR LANDSCAPE ARCHITECT: RAY DESSELLE

CALCULATED-DESIGNED BY: MATTHEW HALL
CHECKED BY: MIRIAM BISHOP

REVISED BY
DATE REVISED

LAST REVISION 01-02-12
DATE PLOTTED => 17-APR-2012
TIME PLOTTED => 20:25

DIST	COUNTY	ROUTE	POST MILES TOTAL PROJECT	SHEET No	TOTAL SHEETS
08	Riv,SBd	91,215	21.5/21.7, 43.2/45.2,0.0/5.1	721	1743

PROFESSIONAL GEOLOGIST 1-2-12

4-16-12
PLANS APPROVAL DATE

PROFESSIONAL GEOLOGIST Mark Wilson No. 8164 Exp. 06-30-12 STATE OF CALIFORNIA

The State of California or its officers or agents shall not be responsible for the accuracy or completeness of electronic copies of this plan sheet.

This LOTB sheet was prepared in accordance with the Caltrans Soil & Rock Logging, Classification, & Presentation Manual (June 2007).

BENCH MARK

BM 048
Set 1" IP W/ALUM PLUG STAMPED "SBD 215 PM 0.48 GPS 2010" TOP SLOPE NB IOWA AVE ON-RAMP; 13' WLY R/W FENCE; 6' WLY CL V-DITCH; 70' NELY RAMP METER SIGNAL.
N 1,832,045.099
E 6,763,416.060
Elev 927.971

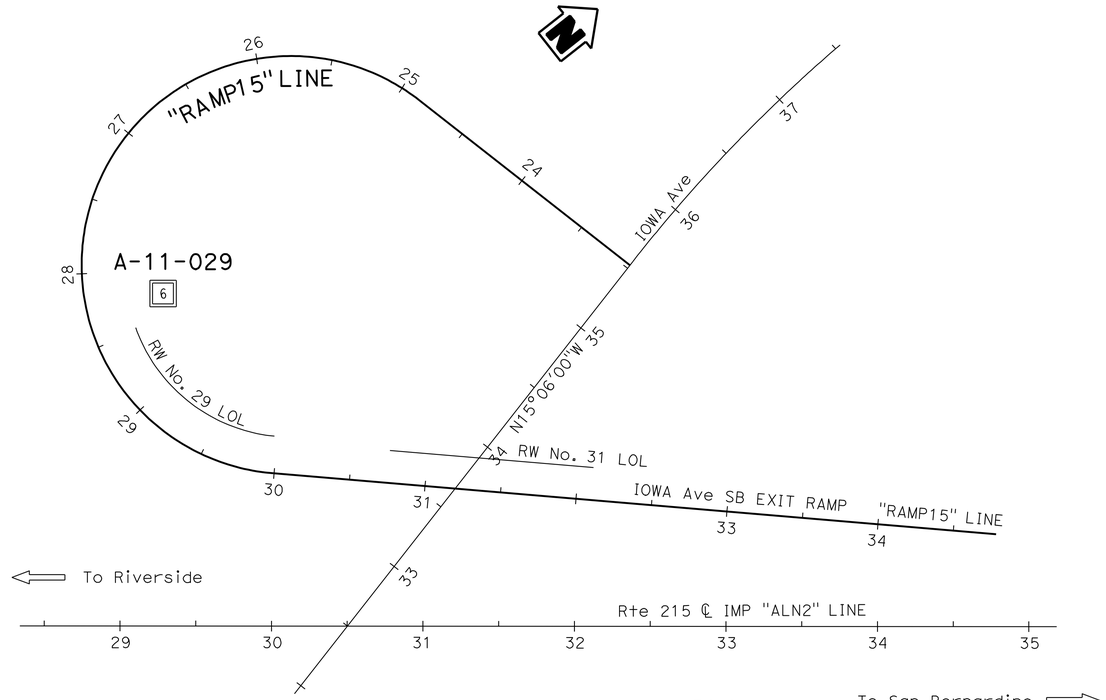

PLAN
1" = 50'

Note: No ground water encountered during field investigation.

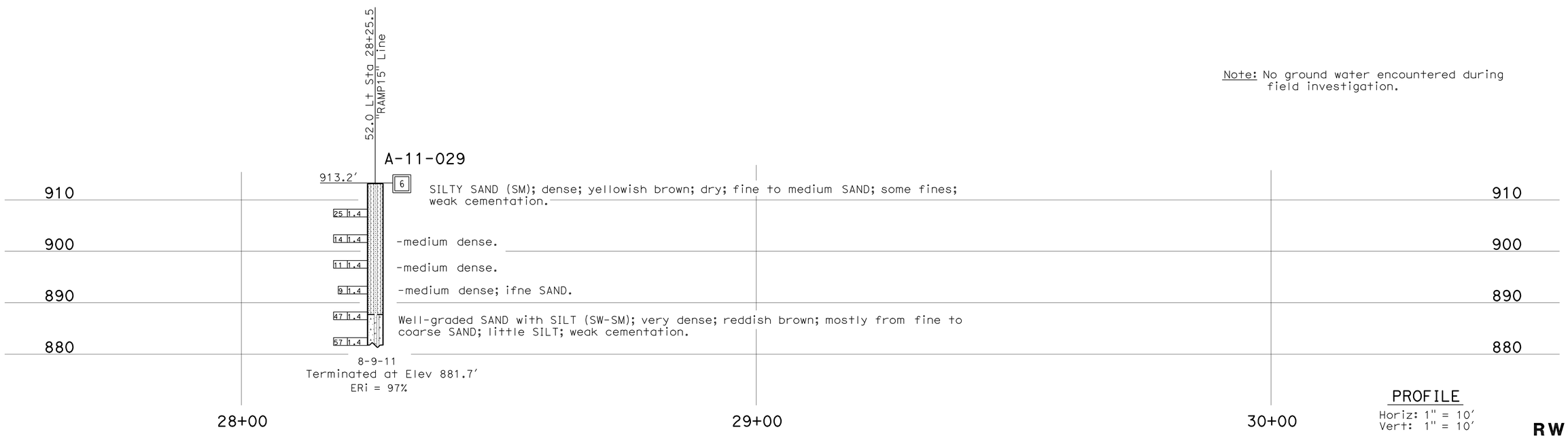

PROFILE
Horiz: 1" = 10'
Vert: 1" = 10'

RW6-4

ENGINEERING SERVICES	MATERIALS AND GEOTECHNICAL SERVICES	STATE OF CALIFORNIA DEPARTMENT OF TRANSPORTATION	DIVISION OF ENGINEERING SERVICES STRUCTURE DESIGN DESIGN BRANCH X	BRIDGE NO. / POST MILE 0.0-5.7	RETAINING WALL 29 LOG OF TEST BORINGS 1 OF 3
FUNCTIONAL SUPERVISOR NAME: S. Wei	DRAWN BY: W. Tang 11/11 CHECKED BY: B. Gutierrez	FIELD INVESTIGATION BY: M. Wilson			

OGS CIVIL LOG OF TEST BORINGS SHEET

ORIGINAL SCALE IN INCHES FOR REDUCED PLANS 0 1 2 3

UNIT: 3643
PROJECT NUMBER & PHASE: 08000005061 CONTRACT NO.: 08-0M9401

DISREGARD PRINTS BEARING EARLIER REVISION DATES → REVISION DATES 11-09-11 12-19-11 SHEET X OF X

FILE => 80m94uqf004.dgn

USERNAME => s114640 DATE PLOTTED => 17-APR-2012 TIME PLOTTED => 20:24

DIST	COUNTY	ROUTE	POST MILES TOTAL PROJECT	SHEET No	TOTAL SHEETS
08	Riv,SBd	91,215	21.5/21.7, 43.2/45.2,0.0/5.1	722	1743

PROFESSIONAL GEOLOGIST 1-2-12

4-16-12
PLANS APPROVAL DATE

PROFESSIONAL GEOLOGIST Mark Wilson No. 8164 Exp. 06-30-12 STATE OF CALIFORNIA

The State of California or its officers or agents shall not be responsible for the accuracy or completeness of electronic copies of this plan sheet.

REFERENCE: CALTRANS SOIL & ROCK LOGGING, CLASSIFICATION, AND PRESENTATION MANUAL (2010)

CEMENTATION

Description	Criteria
Weak	Crumbles or breaks with handling or little finger pressure.
Moderate	Crumbles or breaks with considerable finger pressure.
Strong	Will not crumble or break with finger pressure.

BOREHOLE IDENTIFICATION

Symbol	Hole Type	Description
Size	A	Auger Boring (hollow or solid stem bucket)
Size	R RW RC P	Rotary drilled boring (conventional) Rotary drilled with self-casing wire-line Rotary core with continuously-sampled, self-casing wire-line Rotary percussion boring (air)
Size	R RC	Rotary drilled diamond core Rotary drilled rock core
Size	HD HA	Hand driven (1-inch soil tube) Hand Auger
●	D	Dynamic Cone Penetration Boring
▲	CPT	Cone Penetration Test (ASTM D 5778)
⬚	O	Other (note on LOTB)

Note: Size in inches.

CONSISTENCY OF COHESIVE SOILS

Description	Shear Strength (tsf)	Pocket Penetrometer Measurement, PP, (tsf)	Torvane Measurement, TV, (tsf)	Vane Shear Measurement, VS, (tsf)
Very Soft	Less than 0.12	Less than 0.25	Less than 0.12	Less than 0.12
Soft	0.12 - 0.25	0.25 - 0.5	0.12 - 0.25	0.12 - 0.25
Medium Stiff	0.25 - 0.5	0.5 - 1	0.25 - 0.5	0.25 - 0.5
Stiff	0.5 - 1	1 - 2	0.5 - 1	0.5 - 1
Very Stiff	1 - 2	2 - 4	1 - 2	1 - 2
Hard	Greater than 2	Greater than 4	Greater than 2	Greater than 2

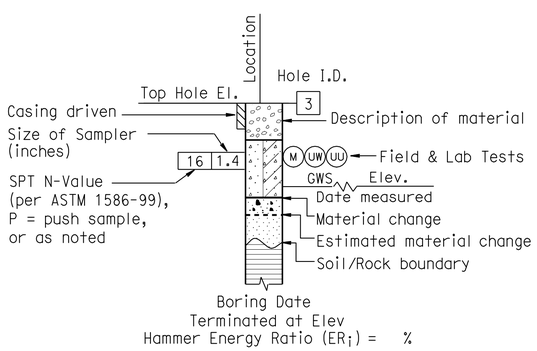

ROTARY BORING

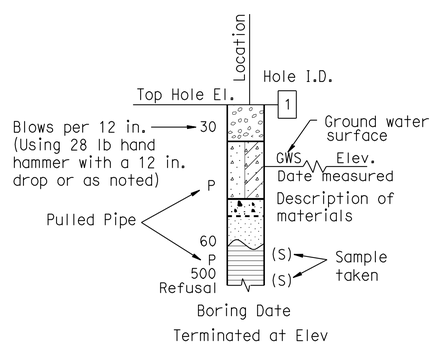

HAND BORING

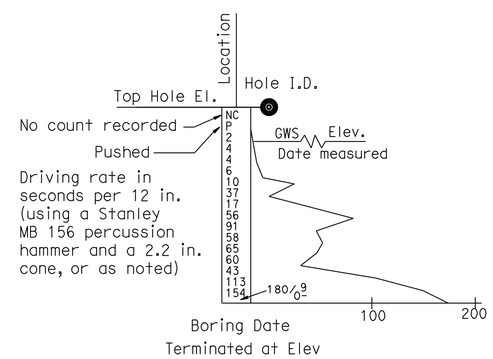

DYNAMIC CONE PENETRATION BORING

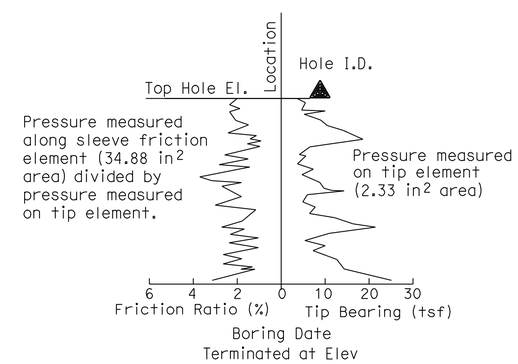

CONE PENETRATION TEST (CPT) BORING

RW6-5

ENGINEERING SERVICES	MATERIALS AND GEOTECHNICAL SERVICES	STATE OF CALIFORNIA DEPARTMENT OF TRANSPORTATION	DIVISION OF ENGINEERING SERVICES STRUCTURE DESIGN DESIGN BRANCH X	BRIDGE NO. / POST MILE 0.0-5.7	RETAINING WALL 29 LOG OF TEST BORINGS 2 OF 3
	PREPARED BY: W. Tang 11/11				

GS LOTB SOIL LEGEND

ORIGINAL SCALE IN INCHES FOR REDUCED PLANS 0 1 2 3

UNIT: 3643
PROJECT NUMBER & PHASE: 08000005061 CONTRACT NO.: 08-0M9401

DISREGARD PRINTS BEARING EARLIER REVISION DATES

REVISION DATES | SHEET X | OF X

FILE => 80m94uqf005.dgn

USERNAME => s114640 DATE PLOTTED => 17-APR-2012 TIME PLOTTED => 20:24

REFERENCE: CALTRANS SOIL & ROCK LOGGING, CLASSIFICATION, AND PRESENTATION MANUAL (2010)

DIST	COUNTY	ROUTE	POST MILES TOTAL PROJECT	SHEET No	TOTAL SHEETS
08	Riv,SBd	91,215	21.5/21.7, 43.2/45.2,0.0/5.1	723	1743

PROFESSIONAL GEOLOGIST 1-2-12

4-16-12
PLANS APPROVAL DATE

PROFESSIONAL GEOLOGIST Mark Wilson No. 8164 Exp. 06-30-12 STATE OF CALIFORNIA

The State of California or its officers or agents shall not be responsible for the accuracy or completeness of electronic copies of this plan sheet.

GROUP SYMBOLS AND NAMES

Graphic/Symbol	Group Names	Graphic/Symbol	Group Names
GW	Well-graded GRAVEL Well-graded GRAVEL with SAND	CL	Lean CLAY Lean CLAY with SAND Lean CLAY with GRAVEL SANDY lean CLAY SANDY lean CLAY with GRAVEL GRAVELLY lean CLAY GRAVELLY lean CLAY with SAND
GP	Poorly-graded GRAVEL Poorly-graded GRAVEL with SAND		
GW-GM	Well-graded GRAVEL with SILT Well-graded GRAVEL with SILT and SAND	CL-ML	SILTY CLAY SILTY CLAY with SAND SILTY CLAY with GRAVEL SANDY SILTY CLAY SANDY SILTY CLAY with GRAVEL GRAVELLY SILTY CLAY GRAVELLY SILTY CLAY with SAND
GW-GC	Well-graded GRAVEL with CLAY (or SILTY CLAY) Well-graded GRAVEL with CLAY and SAND (or SILTY CLAY and SAND)		
GP-GM	Poorly-graded GRAVEL with SILT Poorly-graded GRAVEL with SILT and SAND	ML	SILT SILT with SAND SILT with GRAVEL SANDY SILT SANDY SILT with GRAVEL GRAVELLY SILT GRAVELLY SILT with SAND
GP-GC	Poorly-graded GRAVEL with CLAY (or SILTY CLAY) Poorly-graded GRAVEL with CLAY and SAND (or SILTY CLAY and SAND)		
GM	SILTY GRAVEL SILTY GRAVEL with SAND	OL	ORGANIC lean CLAY ORGANIC lean CLAY with SAND ORGANIC lean CLAY with GRAVEL SANDY ORGANIC lean CLAY SANDY ORGANIC lean CLAY with GRAVEL GRAVELLY ORGANIC lean CLAY GRAVELLY ORGANIC lean CLAY with SAND
GC	CLAYEY GRAVEL CLAYEY GRAVEL with SAND		
GC-GM	SILTY, CLAYEY GRAVEL SILTY, CLAYEY GRAVEL with SAND	OL	ORGANIC SILT ORGANIC SILT with SAND ORGANIC SILT with GRAVEL SANDY ORGANIC SILT SANDY ORGANIC SILT with GRAVEL GRAVELLY ORGANIC SILT GRAVELLY ORGANIC SILT with SAND
SW	Well-graded SAND Well-graded SAND with GRAVEL		
SP	Poorly-graded SAND Poorly-graded SAND with GRAVEL	CH	Fat CLAY Fat CLAY with SAND Fat CLAY with GRAVEL SANDY fat CLAY SANDY fat CLAY with GRAVEL GRAVELLY fat CLAY GRAVELLY fat CLAY with SAND
SW-SM	Well-graded SAND with SILT Well-graded SAND with SILT and GRAVEL		
SW-SC	Well-graded SAND with CLAY (or SILTY CLAY) Well-graded SAND with CLAY and GRAVEL (or SILTY CLAY and GRAVEL)	MH	Elastic SILT Elastic SILT with SAND Elastic SILT with GRAVEL SANDY elastic SILT SANDY elastic SILT with GRAVEL GRAVELLY elastic SILT GRAVELLY elastic SILT with SAND
SP-SM	Poorly-graded SAND with SILT Poorly-graded SAND with SILT and GRAVEL		
SP-SC	Poorly-graded SAND with CLAY (or SILTY CLAY) Poorly-graded SAND with CLAY and GRAVEL (or SILTY CLAY and GRAVEL)	OH	ORGANIC fat CLAY ORGANIC fat CLAY with SAND ORGANIC fat CLAY with GRAVEL SANDY ORGANIC fat CLAY SANDY ORGANIC fat CLAY with GRAVEL GRAVELLY ORGANIC fat CLAY GRAVELLY ORGANIC fat CLAY with SAND
SM	SILTY SAND SILTY SAND with GRAVEL		
SC	CLAYEY SAND CLAYEY SAND with GRAVEL	OH	ORGANIC elastic SILT ORGANIC elastic SILT with SAND ORGANIC elastic SILT with GRAVEL SANDY ORGANIC elastic SILT SANDY ORGANIC elastic SILT with GRAVEL GRAVELLY ORGANIC elastic SILT GRAVELLY ORGANIC elastic SILT with SAND
SC-SM	SILTY, CLAYEY SAND SILTY, CLAYEY SAND with GRAVEL		
PT	PEAT	OL/OH	ORGANIC SOIL ORGANIC SOIL with SAND ORGANIC SOIL with GRAVEL SANDY ORGANIC SOIL SANDY ORGANIC SOIL with GRAVEL GRAVELLY ORGANIC SOIL GRAVELLY ORGANIC SOIL with SAND
	COBBLES COBBLES and BOULDERS BOULDERS		

FIELD AND LABORATORY TESTING

- (C) Consolidation (ASTM D 2435)
- (CL) Collapse Potential (ASTM D 5333)
- (CP) Compaction Curve (CTM 216)
- (CR) Corrosivity Testing (CTM 643, CTM 422, CTM 417)
- (CU) Consolidated Undrained Triaxial (ASTM D 4767)
- (DS) Direct Shear (ASTM D 3080)
- (EI) Expansion Index (ASTM D 4829)
- (M) Moisture Content (ASTM D 2216)
- (OC) Organic Content-% (ASTM D 2974)
- (P) Permeability (CTM 220)
- (PA) Particle Size Analysis (ASTM D 422)
- (PI) Plasticity Index (AASHTO T 90) Liquid Limit (AASHTO T 89)
- (PL) Point Load Index (ASTM D 5731)
- (PM) Pressure Meter
- (R) R-Value (CTM 301)
- (SE) Sand Equivalent (CTM 217)
- (SG) Specific Gravity (AASHTO T 100)
- (SL) Shrinkage Limit (ASTM D 427)
- (SW) Swell Potential (ASTM D 4546)
- (UC) Unconfined Compression-Soil (ASTM D 2166) Unconfined Compression-Rock (ASTM D 2938)
- (UU) Unconsolidated Undrained Triaxial (ASTM D 2850)
- (UW) Unit Weight (ASTM D 4767)

APPARENT DENSITY OF COHESIONLESS SOILS

Description	SPT N_{60} (Blows / 12 in.)
Very Loose	0 - 5
Loose	5 - 10
Medium Dense	10 - 30
Dense	30 - 50
Very Dense	Greater than 50

MOISTURE

Description	Criteria
Dry	No discernable moisture
Moist	Moisture present, but no free water
Wet	Visible free water

PERCENT OR PROPORTION OF SOILS

Description	Criteria
Trace	Particles are present but estimated to be less than 5%
Few	5% - 10%
Little	15% - 25%
Some	30% - 45%
Mostly	50% - 100%

PARTICLE SIZE

Description		Size (in.)
Boulder		Greater than 12
Cobble		3 - 12
Gravel	Coarse	3/4 - 3
	Fine	1/5 - 3/4
Sand	Coarse	1/16 - 1/5
	Medium	1/64 - 1/16
	Fine	1/300 - 1/64
Silt and Clay		Less than 1/300

RW6-6

ENGINEERING SERVICES

MATERIALS AND GEOTECHNICAL SERVICES

PREPARED BY: W. Tang 11/11

STATE OF CALIFORNIA DEPARTMENT OF TRANSPORTATION

DIVISION OF ENGINEERING SERVICES STRUCTURE DESIGN DESIGN BRANCH X

BRIDGE NO.

POST MILE 0.0-5.7

RETAINING WALL 29

LOG OF TEST BORINGS 3 OF 3

GS LOTB SOIL LEGEND

ORIGINAL SCALE IN INCHES FOR REDUCED PLANS 0 1 2 3

UNIT: 3643
PROJECT NUMBER & PHASE: 08000005061 CONTRACT NO.: 08-0M9401

DISREGARD PRINTS BEARING EARLIER REVISION DATES

REVISION DATES SHEET X OF X

FILE => 80m94uqf006.dgn

USERNAME => s114640 DATE PLOTTED => 17-APR-2012 TIME PLOTTED => 20:24

Dist	COUNTY	ROUTE	POST MILES TOTAL PROJECT	SHEET No.	TOTAL SHEETS
08	Riv,SBd	91,215	21.5/21.7, 43.2/45.2,0.0/5.1	724	1743

REGISTERED CIVIL ENGINEER 4-3-12 DATE

4-16-12
PLANS APPROVAL DATE

REGISTERED PROFESSIONAL ENGINEER JUSTINE NIU No. C 62897 Exp. 6-30-12 CIVIL STATE OF CALIFORNIA

THE STATE OF CALIFORNIA OR ITS OFFICERS OR AGENTS SHALL NOT BE RESPONSIBLE FOR THE ACCURACY OR COMPLETENESS OF SCANNED COPIES OF THIS PLAN SHEET.

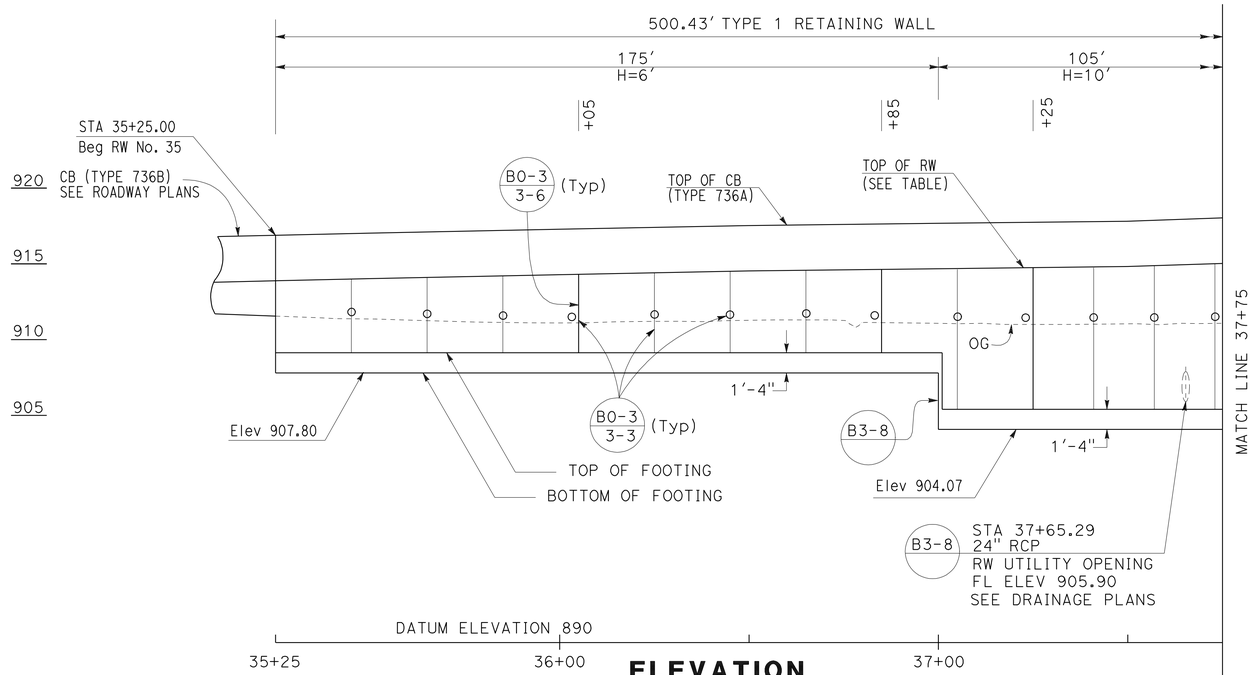

ELEVATION

SCALE Horiz 1"=20'
Vert 1"=5'

NOTES:

1. ARCHITECTURAL TREATMENT SHOULD EXTEND 6" BELOW FG.
2. FOR STRUCTURAL SECTIONS, SEE ROADWAY PLANS.
3. WATERSTOP IN EXPANSION JOINT SHALL BE EXTEND 6" INTO THE BARRIER.

QUANTITIES

STRUCTURAL CONCRETE (RETAINING WALL)	349.7	CY
BAR REINFORCING STEEL (RETAINING WALL)	28 120	LB
STRUCTURAL EXCAVATION (RETAINING WALL)	1121.8	CY
STRUCTURAL BACKFILL (RETAINING WALL)	1117.8	CY
PERVIOUS BACKFILL MATERIAL (RETAINING WALL)	22.5	CY
CONCRETE BARRIER (TYPE 736A)	500.4	LF
PLASTIC PIPE (N)	28.2	LF
WATERSTOP (N)	50.2	LF
ARCHITECTURAL SURFACE (TEXTURED CONCRETE)	2287	SQFT

(N) = NOT A SEPARATE PAY ITEM, FOR INFORMATION ONLY

ELEVATION TABLE

STATION	TOP OF RW
35+25.00	913.88
35+50.00	914.03
36+00.00	914.28
36+50.00	914.53
37+00.00	914.68
37+50.00	914.82
38+00.00	915.24
38+50.00	915.72
39+00.00	916.19
39+50.00	916.62
39+75.00	916.91
40+00.00	917.18
40+10.00	917.28
40+25.43	917.45

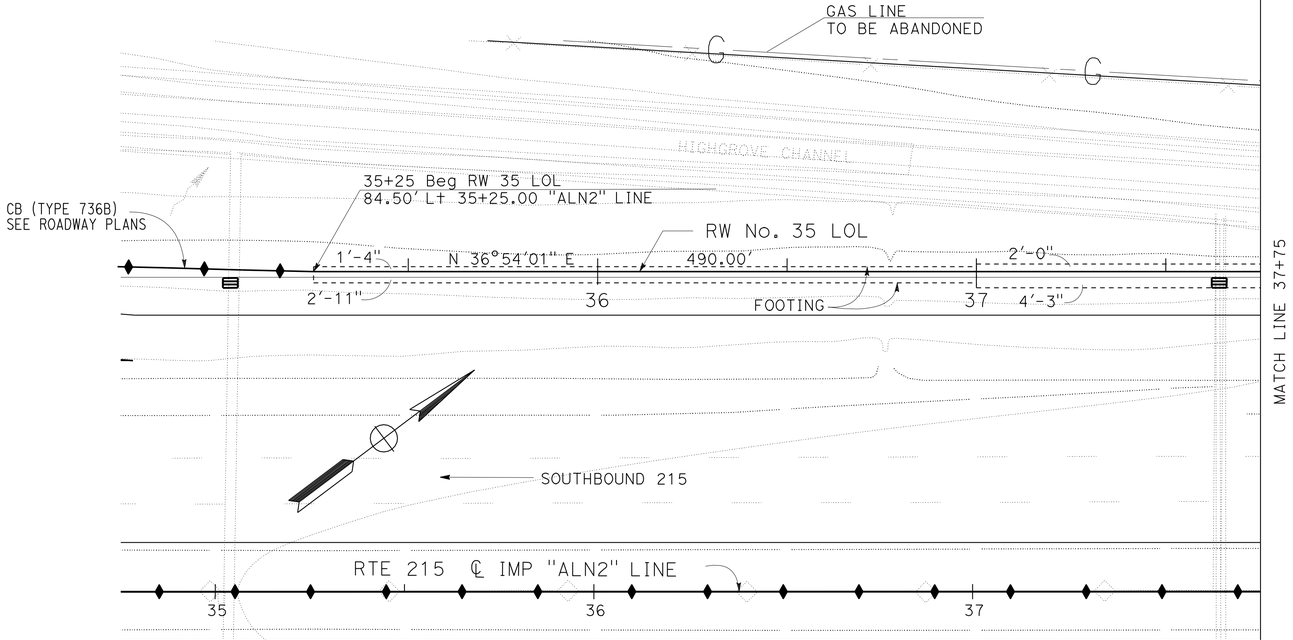

PLAN

SCALE 1"=20'

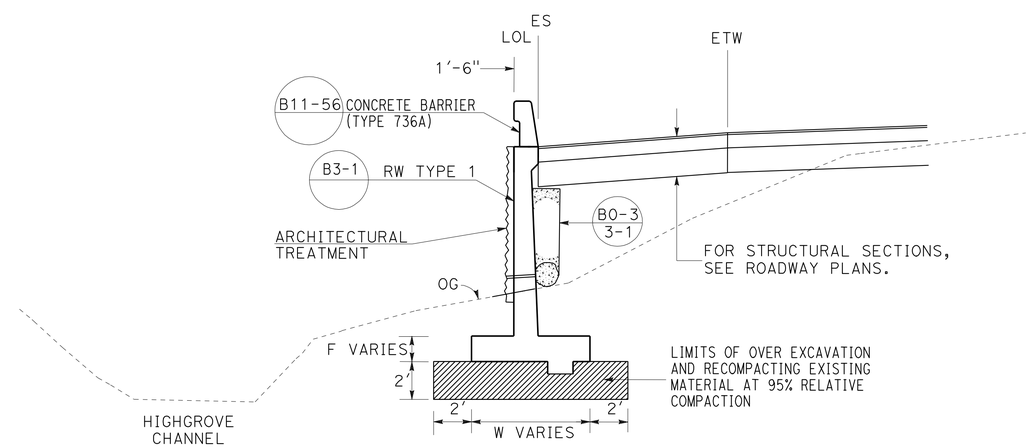

TYPICAL SECTION

FROM STA 35+25.00 TO 40+25.43
NO SCALE

RETAINING WALL PLAN

RETAINING WALL No. 35

SCALE AS SHOWN **R7-1**

APPROVED FOR RETAINING WALL WORK ONLY

STATE OF CALIFORNIA - DEPARTMENT OF TRANSPORTATION
Caltrans
DESIGN
FUNCTIONAL SUPERVISOR: BEN AMIRI
CALCULATED-DESIGNED BY: MARK DE LA VEGA
CHECKED BY: JUSTINE NIU
REVISED BY
DATE REVISED

LAST REVISION 04-03-12
DATE PLOTTED => 17-APR-2012
TIME PLOTTED => 20:24

Dist	COUNTY	ROUTE	POST MILES TOTAL PROJECT	SHEET No.	TOTAL SHEETS
08	Riv,SBd	91,215	21.5/21.7, 43.2/45.2,0.0/5.1	725	1743

REGISTERED CIVIL ENGINEER 4-3-12 DATE

4-16-12
PLANS APPROVAL DATE

REGISTERED PROFESSIONAL ENGINEER
JUSTINE NIU
No. C 62897
Exp. 6-30-12
CIVIL
STATE OF CALIFORNIA

THE STATE OF CALIFORNIA OR ITS OFFICERS OR AGENTS SHALL NOT BE RESPONSIBLE FOR THE ACCURACY OR COMPLETENESS OF SCANNED COPIES OF THIS PLAN SHEET.

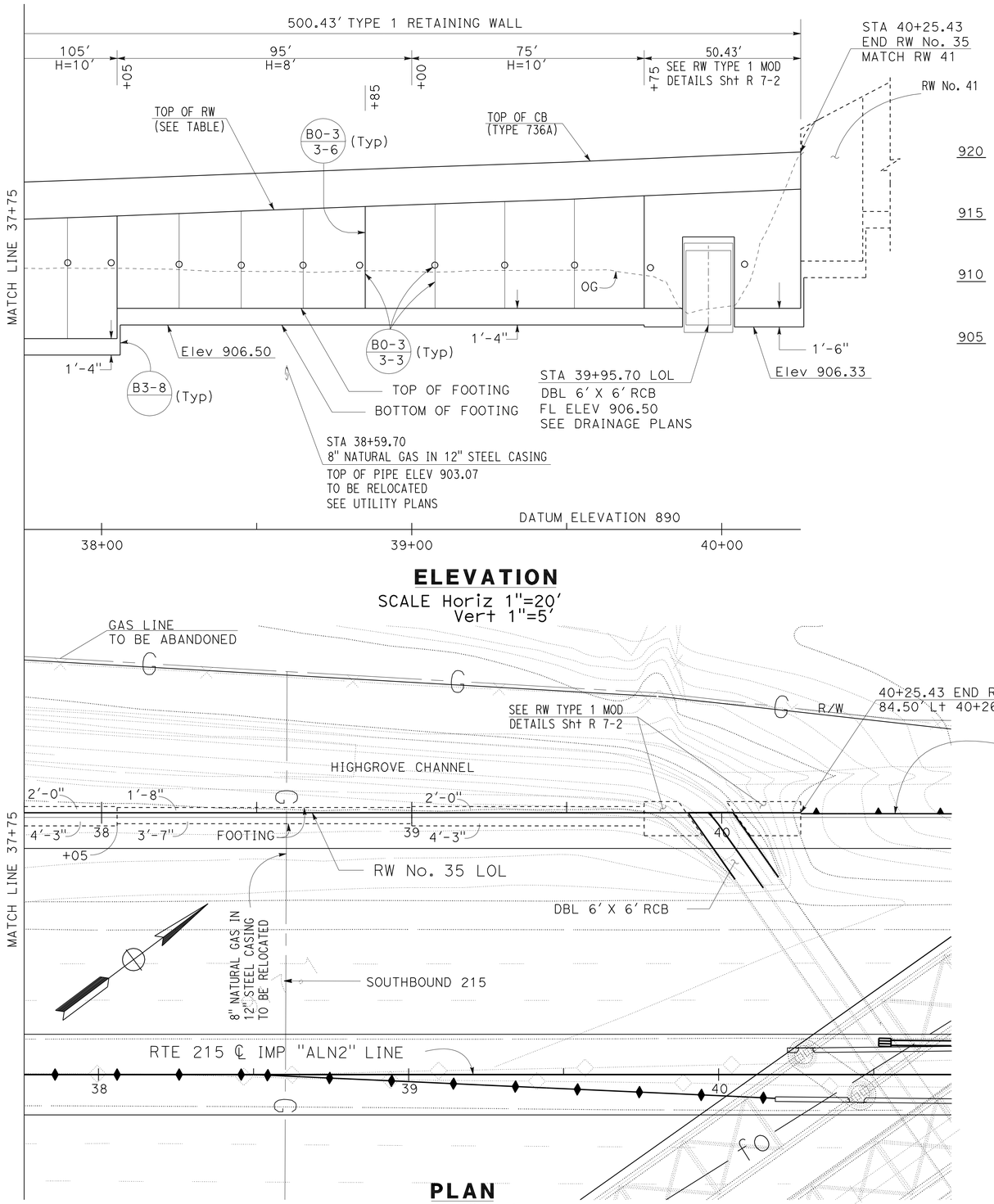

APPROVED FOR RETAINING WALL WORK ONLY

RETAINING WALL PLAN
RETAINING WALL No. 35

SCALE AS SHOWN **R7-2**

STATE OF CALIFORNIA - DEPARTMENT OF TRANSPORTATION
Caltrans
DESIGN

FUNCTIONAL SUPERVISOR: BEN AMIRI
CALCULATED-DESIGNED BY: MARK DE LA VEGA
CHECKED BY: DAT WONG
REVISED BY
DATE REVISED

LAST REVISION 04-03-12
DATE PLOTTED => 17-APR-2012
TIME PLOTTED => 20:24

DIST	COUNTY	ROUTE	POST MILES TOTAL PROJECT	SHEET No.	TOTAL SHEETS
08	Riv,SBd	91,215	21.5/21.7, 43.2/45.2,0.0/5.1	726	1743

REGISTERED CIVIL ENGINEER 1-2-12 DATE

4-16-12
PLANS APPROVAL DATE

REGISTERED PROFESSIONAL ENGINEER LARRY WU No. C57035 Exp. 6-30-13 CIVIL STATE OF CALIFORNIA

The State of California or its officers or agents shall not be responsible for the accuracy or completeness of electronic copies of this plan sheet.

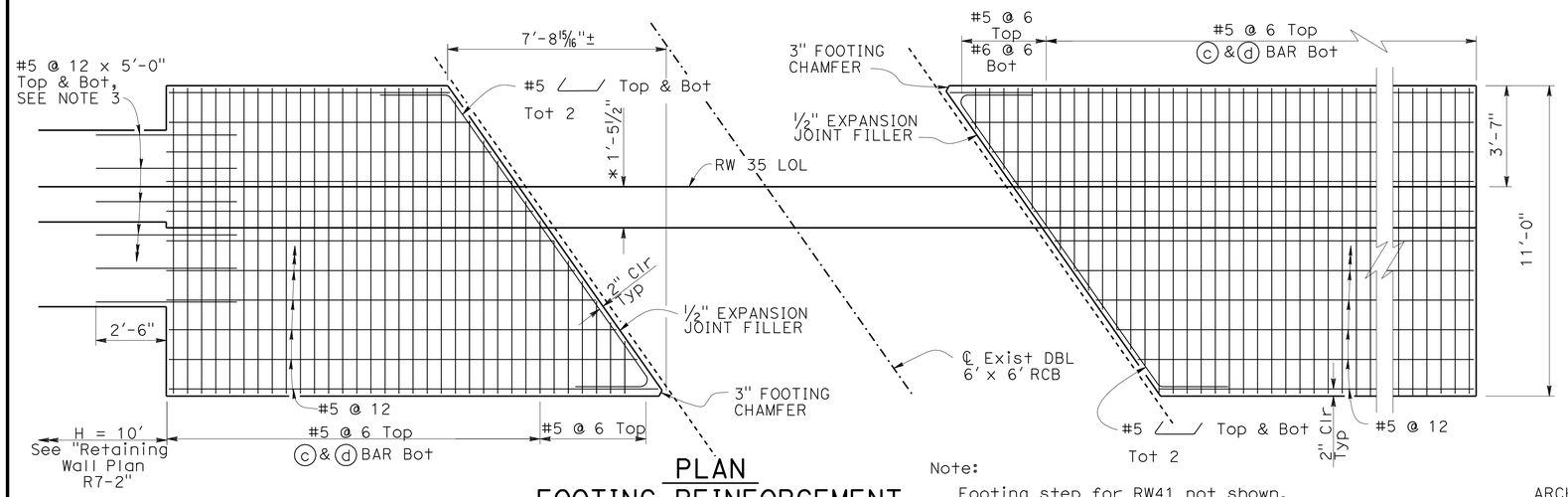

PLAN
FOOTING REINFORCEMENT

Note:
Footing step for RW41 not shown, See "Retaining Wall Plan R35-2 & R41-1" for footing step.

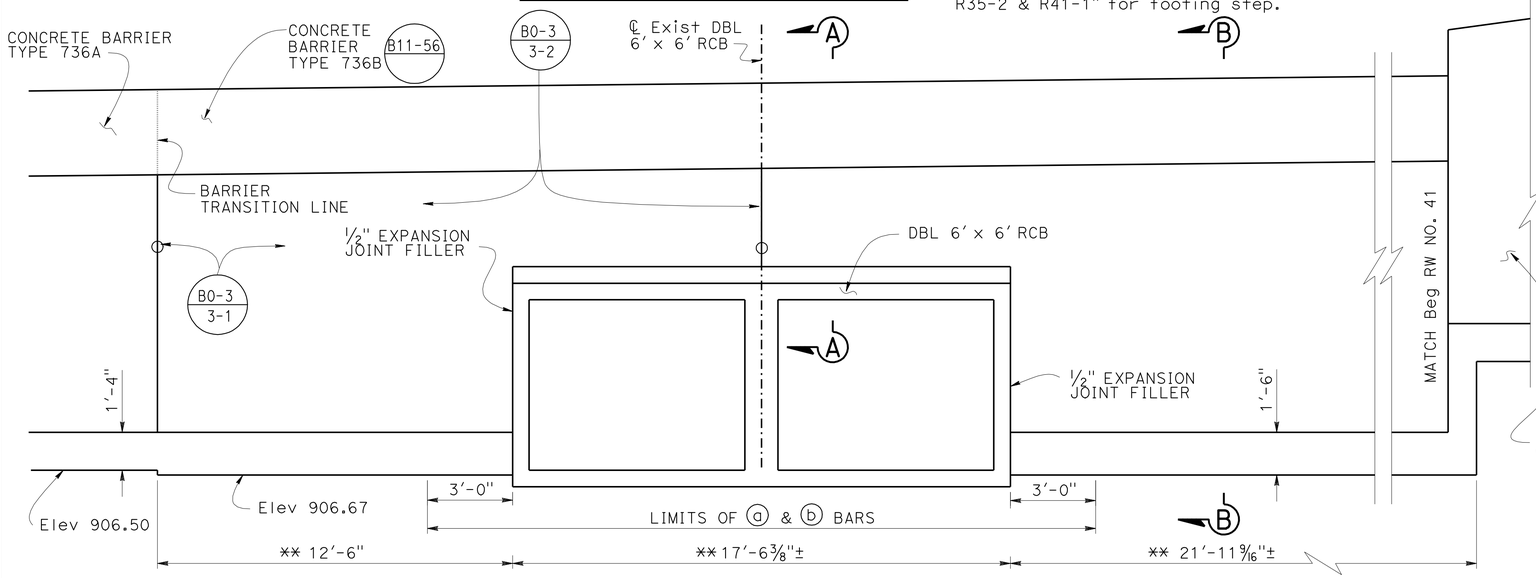

ELEVATION
RETAINING WALL NO. 35
3/8" = 1'-0"
Sta 39+95.70±

Note:
Architectural treatment not shown.

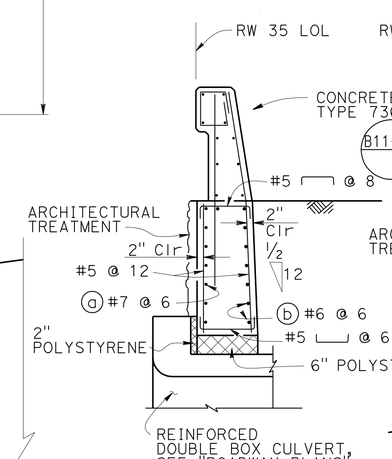

SECTION A-A
1/2" = 1'-0"

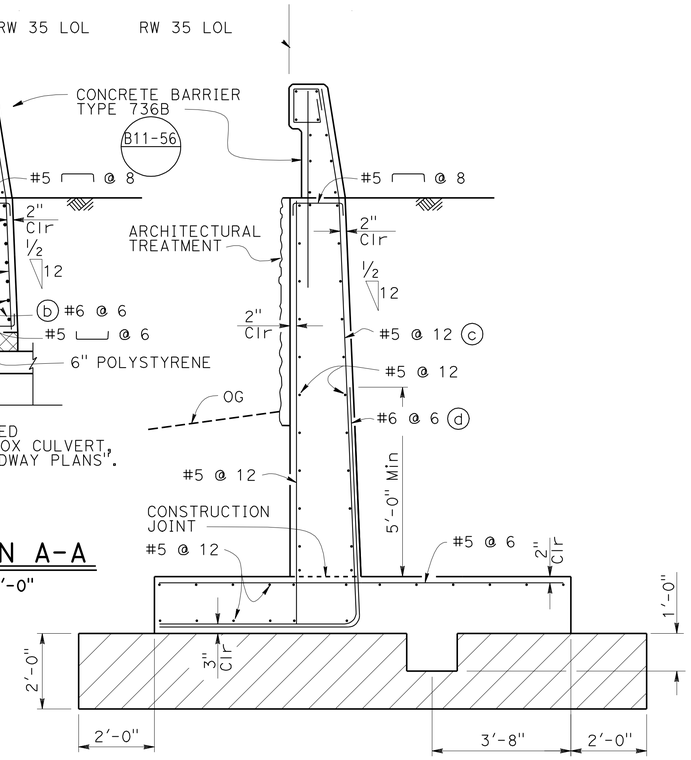

SECTION B-B
1/2" = 1'-0"

Note:
1. For Architectural treatment and Concrete Barrier (Type 736A), see " Retaining Wall Plan R35-1".
2. Previous backfill and wheep hole not shown in Section A-A and Section B-B.
3. Place the bottom rebars on short ⓒ bar for Type 1 retaining wall shown "Standard Plan B3-1".

Legend:
- Indicates typical overexcavation. See "Retaining Wall Plan R35-1"
- * Indicates retaining wall top width.
- ** Indicates dimension along RW 35 LOL

NOTE:
THE CONTRACTOR SHALL VERIFY ALL CONTROLLING FIELD DIMENSIONS BEFORE ORDERING OR FABRICATING ANY MATERIAL.

	BY	CHECKED
DESIGN	Jun Ki Jung	
DETAILS	Yingjue Feng	
QUANTITIES		

STATE OF CALIFORNIA
DEPARTMENT OF TRANSPORTATION

DIVISION OF ENGINEERING SERVICES
STRUCTURE DESIGN
DESIGN BRANCH 10

BRIDGE NO. RW 35
POST MILE X

RETAINING WALL NO. 35 R7-3
RETAINING WALL TYPE 1 MOD DETAILS

STRUCTURES DESIGN DETAIL SHEET (ENGLISH) (REV. 09-01-10)

ORIGINAL SCALE IN INCHES FOR REDUCED PLANS 0 1 2 3

UNIT: 3589
PROJECT NUMBER & PHASE: 08000005061
CONTRACT NO.: 08-0M9401

DISREGARD PRINTS BEARING EARLIER REVISION DATES

REVISION DATES: 9-20-11 10-3-11 | SHEET | OF

FILE => 80m94uqg003.dgn

USERNAME => s114640 DATE PLOTTED => 17-APR-2012 TIME PLOTTED => 20:24

Dist	COUNTY	ROUTE	POST MILES TOTAL PROJECT	SHEET No.	TOTAL SHEETS
08	Riv,SBd	91,215	21.5/21.7, 43.2/45.2,0.0/5.1	727	1743

LICENSED LANDSCAPE ARCHITECT

4-16-12
PLANS APPROVAL DATE

LICENSED LANDSCAPE ARCHITECT — RAY T. DESSELLE No. 2272 — Signature — Renewal Date 11/30/13 — Date 01/02/12 — STATE OF CALIFORNIA

THE STATE OF CALIFORNIA OR ITS OFFICERS OR AGENTS SHALL NOT BE RESPONSIBLE FOR THE ACCURACY OR COMPLETENESS OF SCANNED COPIES OF THIS PLAN SHEET.

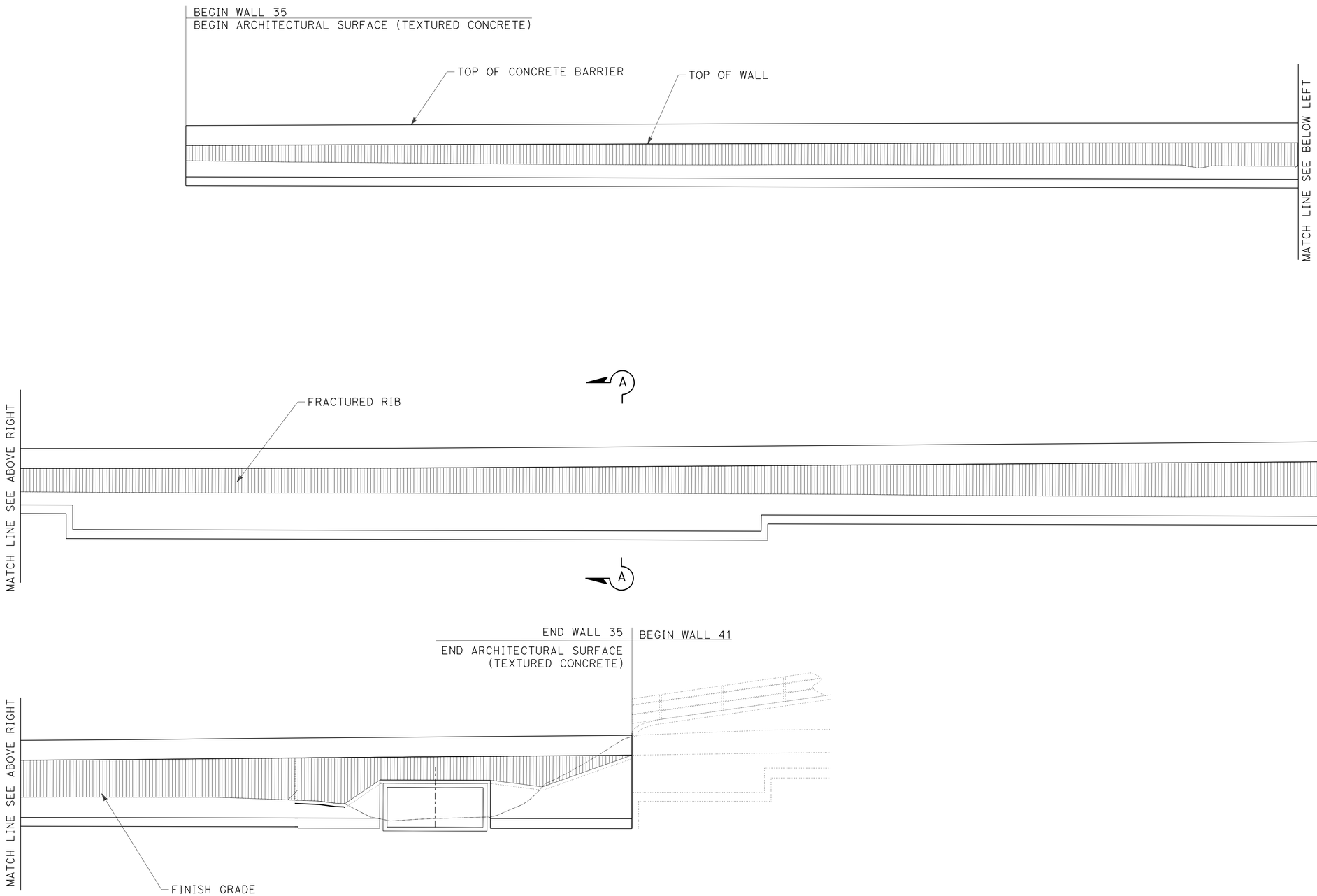

ELEVATION FOR FRACTURED RIB RETAINING WALL No. 35

APPROVED FOR RETAINING WALL WORK ONLY

ARCHITECTURAL SURFACE
RETAINING WALL No. 35

SCALE: 1/8" = 1'0

R7-4

STATE OF CALIFORNIA - DEPARTMENT OF TRANSPORTATION
Caltrans® LANDSCAPE ARCHITECTURE

SENIOR LANDSCAPE ARCHITECT: RAY DESSELLE
CALCULATED-DESIGNED BY: MATTHEW HALL
CHECKED BY: MIRIAM BISHOP
REVISED BY
DATE REVISED

LAST REVISION 01-02-12
DATE PLOTTED => 17-APR-2012
TIME PLOTTED => 20:24

DIST	COUNTY	ROUTE	POST MILES TOTAL PROJECT	SHEET No.	TOTAL SHEETS
08	Riv,SBd	91,215	21.5/21.7, 43.2/45.2,0.0/5.1	728	1743

REGISTERED CIVIL ENGINEER 1-11-12 DATE

4-16-12
PLANS APPROVAL DATE

REGISTERED PROFESSIONAL ENGINEER Brian Gutierrez No. C66258 Exp. 6-30-12 CIVIL STATE OF CALIFORNIA

The State of California or its officers or agents shall not be responsible for the accuracy or completeness of electronic copies of this plan sheet.

This LOTB sheet was prepared in accordance with the Caltrans Soil & Rock Logging, Classification, & Presentation Manual (2010 Edition).

BENCH MARK

BM 048
Set 1" IP W/ALUM PLUG STAMPED "SBD 215 PM 0.48 GPS 2010" TOP SLOPE NB IOWA AVE ON-RAMP; 13' WLY R/W FENCE; 6' WLY CL V-DITCH; 70' NELY RAMP METER SIGNAL.
N 1,832,045.099
E 6,763,416.060
Elev 927.971
NAVD88

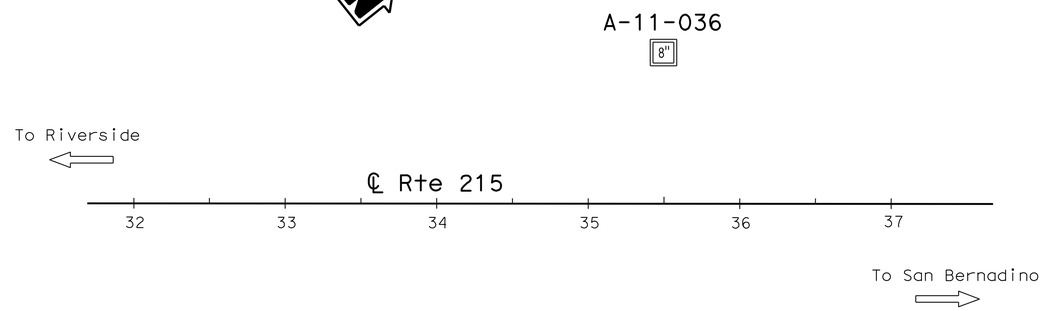

PLAN
1" = 50'

Note: No ground water encountered during field investigation.

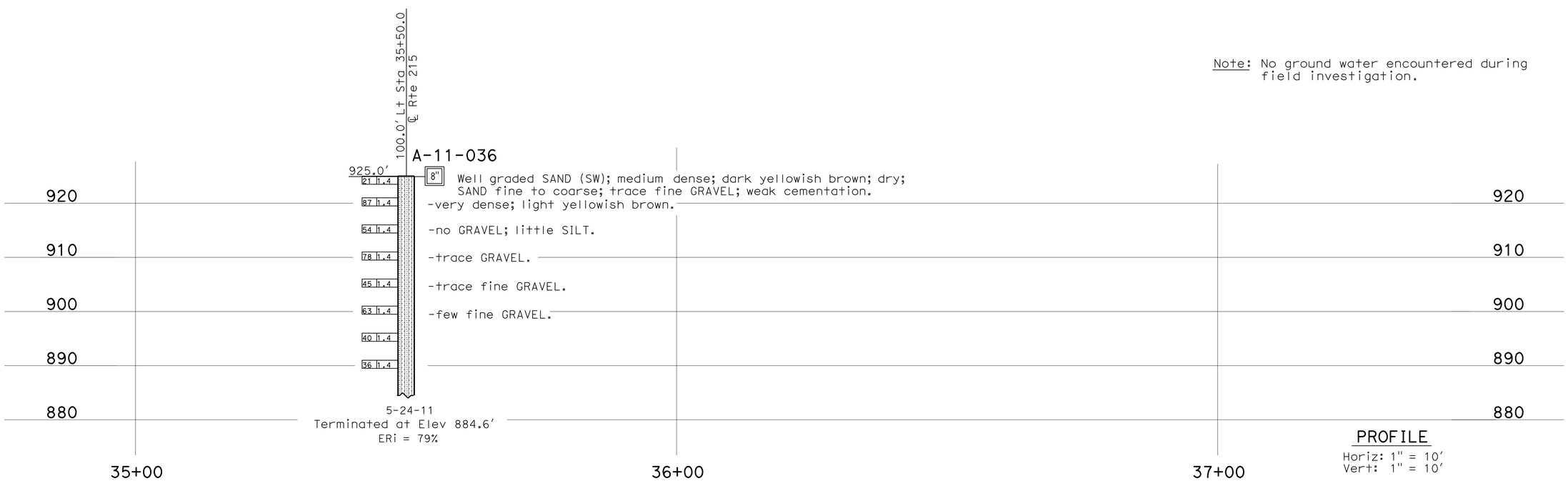

PROFILE
Horiz: 1" = 10'
Vert: 1" = 10'

ENGINEERING SERVICES	MATERIALS AND GEOTECHNICAL SERVICES	STATE OF CALIFORNIA DEPARTMENT OF TRANSPORTATION	DIVISION OF ENGINEERING SERVICES STRUCTURE DESIGN DESIGN BRANCH X	BRIDGE NO. / POST MILE 0.0-5.0	RETAINING WALLS 35 LOG OF TEST BORINGS 1 OF 3
FUNCTIONAL SUPERVISOR NAME: S. Wei	DRAWN BY: W. Tang, I.G-Remmen CHECKED BY: B. Levine	FIELD INVESTIGATION BY: C. Hoadley			

OGS CIVIL LOG OF TEST BORINGS SHEET

ORIGINAL SCALE IN INCHES FOR REDUCED PLANS 0 1 2 3

UNIT: 3643
PROJECT NUMBER & PHASE: 08000005061 CONTRACT NO.: 08-0M9401

DISREGARD PRINTS BEARING EARLIER REVISION DATES

REVISION DATES				SHEET	OF
12-20-11	01-06-12			X	X

FILE => 80m94uqg005.dgn

USERNAME => s114640 DATE PLOTTED => 17-APR-2012 TIME PLOTTED => 20:24

DIST	COUNTY	ROUTE	POST MILES TOTAL PROJECT	SHEET No.	TOTAL SHEETS
08	Riv,SBd	91,215	21.5/21.1, 43.2/45.2,0.0/5.1	729	1743

REGISTERED CIVIL ENGINEER 1-11-12 DATE

4-16-12
PLANS APPROVAL DATE

REGISTERED PROFESSIONAL ENGINEER Brian Gutierrez No. C66258 Exp. 6-30-12 CIVIL STATE OF CALIFORNIA

The State of California or its officers or agents shall not be responsible for the accuracy or completeness of electronic copies of this plan sheet.

REFERENCE: CALTRANS SOIL & ROCK LOGGING, CLASSIFICATION, AND PRESENTATION MANUAL (2010)

CEMENTATION

Description	Criteria
Weak	Crumbles or breaks with handling or little finger pressure.
Moderate	Crumbles or breaks with considerable finger pressure.
Strong	Will not crumble or break with finger pressure.

BOREHOLE IDENTIFICATION

Symbol	Hole Type	Description
Size	A	Auger Boring (hollow or solid stem bucket)
Size	R RW RC P	Rotary drilled boring (conventional) Rotary drilled with self-casing wire-line Rotary core with continuously-sampled, self-casing wire-line Rotary percussion boring (air)
Size	R	Rotary drilled diamond core
Size	HD HA	Hand driven (1-inch soil tube) Hand Auger
●	D	Dynamic Cone Penetration Boring
▲	CPT	Cone Penetration Test (ASTM D 5778)
⬚	O	Other (note on LOTB)

Note: Size in inches.

CONSISTENCY OF COHESIVE SOILS

Description	Shear Strength (tsf)	Pocket Penetrometer Measurement, PP, (tsf)	Torvane Measurement, TV, (tsf)	Vane Shear Measurement, VS, (tsf)
Very Soft	Less than 0.12	Less than 0.25	Less than 0.12	Less than 0.12
Soft	0.12 - 0.25	0.25 - 0.5	0.12 - 0.25	0.12 - 0.25
Medium Stiff	0.25 - 0.5	0.5 - 1	0.25 - 0.5	0.25 - 0.5
Stiff	0.5 - 1	1 - 2	0.5 - 1	0.5 - 1
Very Stiff	1 - 2	2 - 4	1 - 2	1 - 2
Hard	Greater than 2	Greater than 4	Greater than 2	Greater than 2

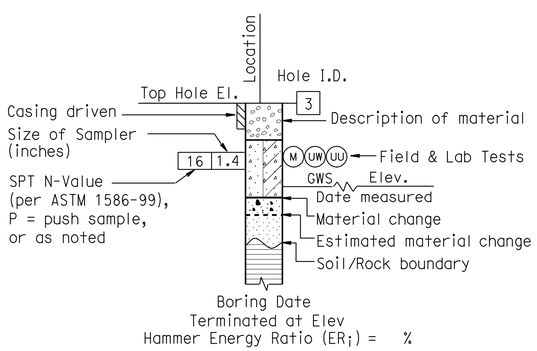

ROTARY BORING

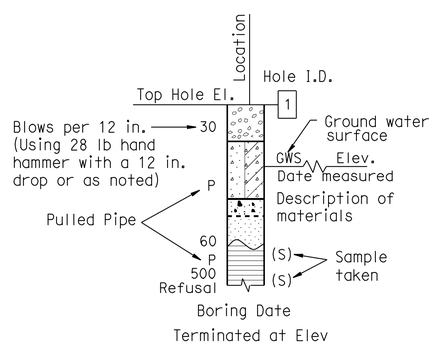

HAND BORING

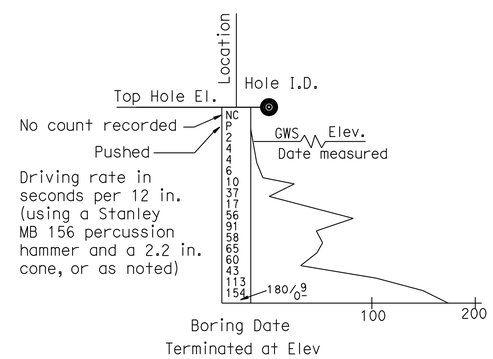

DYNAMIC CONE PENETRATION BORING

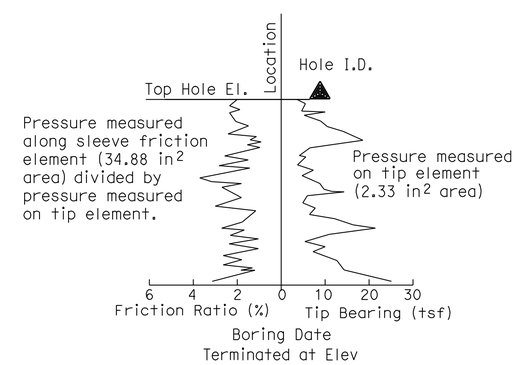

CONE PENETRATION TEST (CPT) BORING

ENGINEERING SERVICES	GEOTECHNICAL SERVICES	STATE OF CALIFORNIA DEPARTMENT OF TRANSPORTATION	DIVISION OF ENGINEERING SERVICES STRUCTURE DESIGN DESIGN BRANCH X	BRIDGE NO. / POST MILE 0.0-5.0	RETAINING WALLS 35 LOG OF TEST BORINGS 2 OF 2
	PREPARED BY: I.G-Remmen				

GS LOTB SOIL LEGEND

ORIGINAL SCALE IN INCHES FOR REDUCED PLANS 0 1 2 3

UNIT: 3643
PROJECT NUMBER & PHASE: 08000005061 CONTRACT NO.: 08-0M9401

DISREGARD PRINTS BEARING EARLIER REVISION DATES

REVISION DATES | SHEET X | OF X

FILE => 80m94uqg006.dgn

USERNAME => s114640 DATE PLOTTED => 17-APR-2012 TIME PLOTTED => 20:24

REFERENCE: CALTRANS SOIL & ROCK LOGGING, CLASSIFICATION, AND PRESENTATION MANUAL (2010)

DIST	COUNTY	ROUTE	POST MILES TOTAL PROJECT	SHEET No.	TOTAL SHEETS
08	Riv,SBd	91,215	21.5/21.7, 43.2/45.2,0.0/5.1	730	1743

REGISTERED CIVIL ENGINEER 1-11-12 DATE

4-16-12
PLANS APPROVAL DATE

REGISTERED PROFESSIONAL ENGINEER Brian Gutierrez No. C66258 Exp. 6-30-12 CIVIL STATE OF CALIFORNIA

The State of California or its officers or agents shall not be responsible for the accuracy or completeness of electronic copies of this plan sheet.

GROUP SYMBOLS AND NAMES

Graphic/Symbol	Group Names	Graphic/Symbol	Group Names
GW	Well-graded GRAVEL Well-graded GRAVEL with SAND	CL	Lean CLAY Lean CLAY with SAND Lean CLAY with GRAVEL SANDY lean CLAY SANDY lean CLAY with GRAVEL GRAVELLY lean CLAY GRAVELLY lean CLAY with SAND
GP	Poorly-graded GRAVEL Poorly-graded GRAVEL with SAND		
GW-GM	Well-graded GRAVEL with SILT Well-graded GRAVEL with SILT and SAND	CL-ML	SILTY CLAY SILTY CLAY with SAND SILTY CLAY with GRAVEL SANDY SILTY CLAY SANDY SILTY CLAY with GRAVEL GRAVELLY SILTY CLAY GRAVELLY SILTY CLAY with SAND
GW-GC	Well-graded GRAVEL with CLAY (or SILTY CLAY) Well-graded GRAVEL with CLAY and SAND (or SILTY CLAY and SAND)		
GP-GM	Poorly-graded GRAVEL with SILT Poorly-graded GRAVEL with SILT and SAND	ML	SILT SILT with SAND SILT with GRAVEL SANDY SILT SANDY SILT with GRAVEL GRAVELLY SILT GRAVELLY SILT with SAND
GP-GC	Poorly-graded GRAVEL with CLAY (or SILTY CLAY) Poorly-graded GRAVEL with CLAY and SAND (or SILTY CLAY and SAND)		
GM	SILTY GRAVEL SILTY GRAVEL with SAND	OL	ORGANIC lean CLAY ORGANIC lean CLAY with SAND ORGANIC lean CLAY with GRAVEL SANDY ORGANIC lean CLAY SANDY ORGANIC lean CLAY with GRAVEL GRAVELLY ORGANIC lean CLAY GRAVELLY ORGANIC lean CLAY with SAND
GC	CLAYEY GRAVEL CLAYEY GRAVEL with SAND		
GC-GM	SILTY, CLAYEY GRAVEL SILTY, CLAYEY GRAVEL with SAND	OL	ORGANIC SILT ORGANIC SILT with SAND ORGANIC SILT with GRAVEL SANDY ORGANIC SILT SANDY ORGANIC SILT with GRAVEL GRAVELLY ORGANIC SILT GRAVELLY ORGANIC SILT with SAND
SW	Well-graded SAND Well-graded SAND with GRAVEL		
SP	Poorly-graded SAND Poorly-graded SAND with GRAVEL	CH	Fat CLAY Fat CLAY with SAND Fat CLAY with GRAVEL SANDY fat CLAY SANDY fat CLAY with GRAVEL GRAVELLY fat CLAY GRAVELLY fat CLAY with SAND
SW-SM	Well-graded SAND with SILT Well-graded SAND with SILT and GRAVEL		
SW-SC	Well-graded SAND with CLAY (or SILTY CLAY) Well-graded SAND with CLAY and GRAVEL (or SILTY CLAY and GRAVEL)	MH	Elastic SILT Elastic SILT with SAND Elastic SILT with GRAVEL SANDY elastic SILT SANDY elastic SILT with GRAVEL GRAVELLY elastic SILT GRAVELLY elastic SILT with SAND
SP-SM	Poorly-graded SAND with SILT Poorly-graded SAND with SILT and GRAVEL		
SP-SC	Poorly-graded SAND with CLAY (or SILTY CLAY) Poorly-graded SAND with CLAY and GRAVEL (or SILTY CLAY and GRAVEL)	OH	ORGANIC fat CLAY ORGANIC fat CLAY with SAND ORGANIC fat CLAY with GRAVEL SANDY ORGANIC fat CLAY SANDY ORGANIC fat CLAY with GRAVEL GRAVELLY ORGANIC fat CLAY GRAVELLY ORGANIC fat CLAY with SAND
SM	SILTY SAND SILTY SAND with GRAVEL		
SC	CLAYEY SAND CLAYEY SAND with GRAVEL	OH	ORGANIC elastic SILT ORGANIC elastic SILT with SAND ORGANIC elastic SILT with GRAVEL SANDY ORGANIC elastic SILT SANDY ORGANIC elastic SILT with GRAVEL GRAVELLY ORGANIC elastic SILT GRAVELLY ORGANIC elastic SILT with SAND
SC-SM	SILTY, CLAYEY SAND SILTY, CLAYEY SAND with GRAVEL		
PT	PEAT	OL/OH	ORGANIC SOIL ORGANIC SOIL with SAND ORGANIC SOIL with GRAVEL SANDY ORGANIC SOIL SANDY ORGANIC SOIL with GRAVEL GRAVELLY ORGANIC SOIL GRAVELLY ORGANIC SOIL with SAND
	COBBLES COBBLES and BOULDERS BOULDERS		

FIELD AND LABORATORY TESTING

- (C) Consolidation (ASTM D 2435)
- (CL) Collapse Potential (ASTM D 5333)
- (CP) Compaction Curve (CTM 216)
- (CR) Corrosivity Testing (CTM 643, CTM 422, CTM 417)
- (CU) Consolidated Undrained Triaxial (ASTM D 4767)
- (DS) Direct Shear (ASTM D 3080)
- (EI) Expansion Index (ASTM D 4829)
- (M) Moisture Content (ASTM D 2216)
- (OC) Organic Content-% (ASTM D 2974)
- (P) Permeability (CTM 220)
- (PA) Particle Size Analysis (ASTM D 422)
- (PI) Plasticity Index (AASHTO T 90) Liquid Limit (AASHTO T 89)
- (PL) Point Load Index (ASTM D 5731)
- (PM) Pressure Meter
- (R) R-Value (CTM 301)
- (SE) Sand Equivalent (CTM 217)
- (SG) Specific Gravity (AASHTO T 100)
- (SL) Shrinkage Limit (ASTM D 427)
- (SW) Swell Potential (ASTM D 4546)
- (UC) Unconfined Compression-Soil (ASTM D 2166) Unconfined Compression-Rock (ASTM D 2938)
- (UU) Unconsolidated Undrained Triaxial (ASTM D 2850)
- (UW) Unit Weight (ASTM D 4767)

APPARENT DENSITY OF COHESIONLESS SOILS

Description	SPT N_{60} (Blows / 12 in.)
Very Loose	0 - 5
Loose	5 - 10
Medium Dense	10 - 30
Dense	30 - 50
Very Dense	Greater than 50

MOISTURE

Description	Criteria
Dry	No discernable moisture
Moist	Moisture present, but no free water
Wet	Visible free water

PERCENT OR PROPORTION OF SOILS

Description	Criteria
Trace	Particles are present but estimated to be less than 5%
Few	5% - 10%
Little	15% - 25%
Some	30% - 45%
Mostly	50% - 100%

PARTICLE SIZE

Description		Size (in.)
Boulder		Greater than 12
Cobble		3 - 12
Gravel	Coarse	3/4 - 3
	Fine	1/5 - 3/4
Sand	Coarse	1/16 - 1/5
	Medium	1/64 - 1/16
	Fine	1/300 - 1/64
Silt and Clay		Less than 1/300

ENGINEERING SERVICES

GEOTECHNICAL SERVICES

PREPARED BY: I.G-Remmen

STATE OF CALIFORNIA DEPARTMENT OF TRANSPORTATION

DIVISION OF ENGINEERING SERVICES STRUCTURE DESIGN DESIGN BRANCH X

BRIDGE NO.

POST MILE 0.0-5.0

RETAINING WALLS 35

LOG OF TEST BORINGS 3 OF 3

GS LOTB SOIL LEGEND

ORIGINAL SCALE IN INCHES FOR REDUCED PLANS 0 1 2 3

UNIT: 3643
PROJECT NUMBER & PHASE: 08000005061
CONTRACT NO.: 08-0M9401

DISREGARD PRINTS BEARING EARLIER REVISION DATES

REVISION DATES | SHEET X | OF X

FILE => 80m94uqg007.dgn

USERNAME => s114640 DATE PLOTTED => 17-APR-2012 TIME PLOTTED => 20:24

Dist	COUNTY	ROUTE	POST MILES TOTAL PROJECT	SHEET No.	TOTAL SHEETS
08	Riv,SBd	91,215	21.5/21.7, 43.2/45.2,0.0/5.1	731	1743

REGISTERED CIVIL ENGINEER 1-2-12 DATE

4-16-12
PLANS APPROVAL DATE

REGISTERED PROFESSIONAL ENGINEER JUSTINE NIU No. C 62897 Exp. 6-30-12 CIVIL STATE OF CALIFORNIA

THE STATE OF CALIFORNIA OR ITS OFFICERS OR AGENTS SHALL NOT BE RESPONSIBLE FOR THE ACCURACY OR COMPLETENESS OF SCANNED COPIES OF THIS PLAN SHEET.

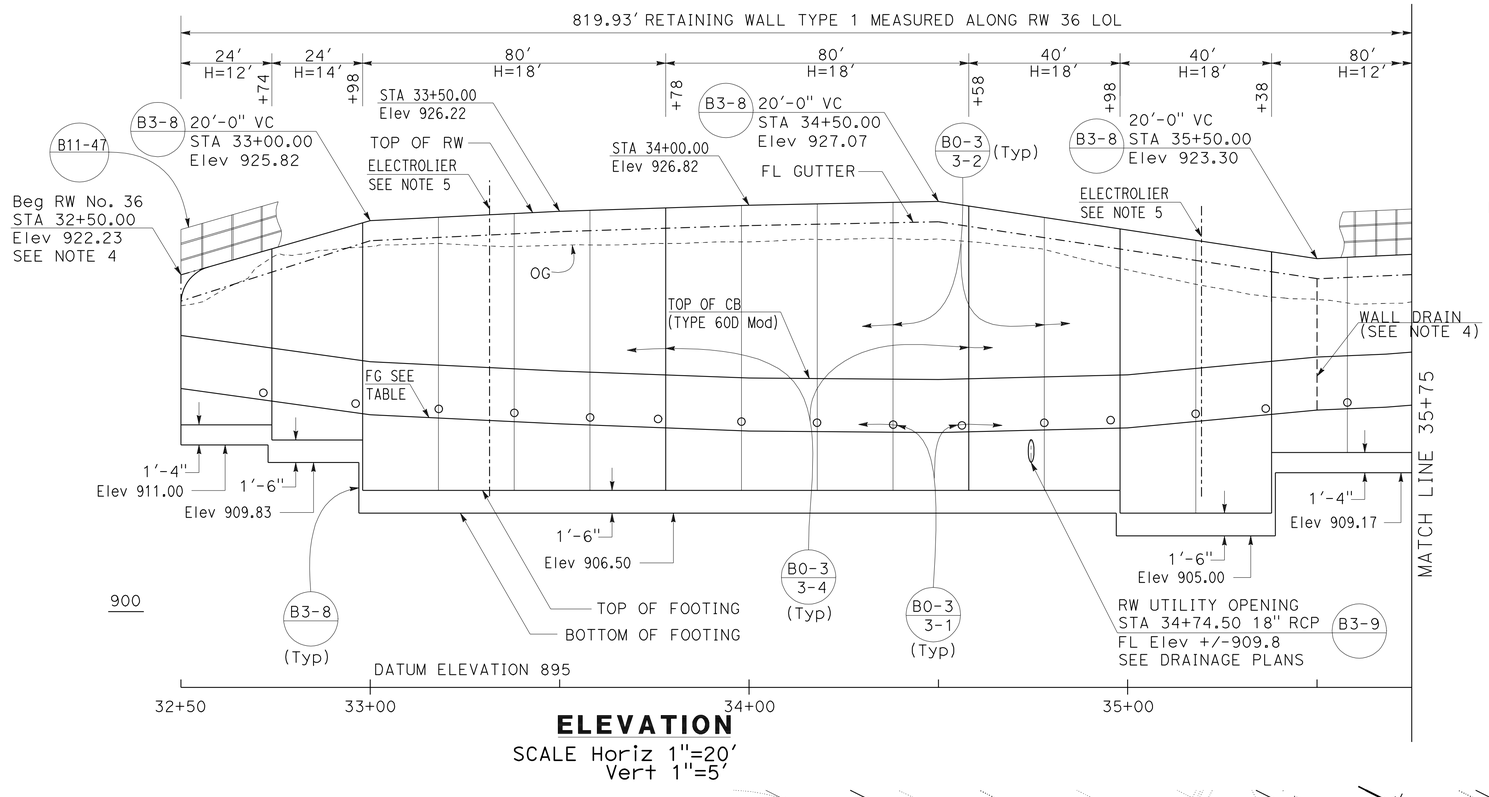

ELEVATION

SCALE Horiz 1"=20'
Vert 1"=5'

NOTES:

1. ARCHITECTURAL TREATMENT SHOULD EXTEND 6" BELOW FG.
2. FOR STRUCTURAL SECTIONS, SEE ROADWAY PLANS.
3. FOR WALL DRAIN, SEE STD PLAN B3-9.
4. FOR ROUNDING DETAILS, SEE ARCHITECTURAL TREATMENT PLANS.
5. FOR ELECTROLIER DETAILS, SEE ELECTRICAL DETAILS SHEETS.

QUANTITIES

STRUCTURAL CONCRETE (RETAINING WALL)	1064.8	CY
BAR REINFORCING STEEL (RETAINING WALL)	101 169	LB
STRUCTURAL EXCAVATION (RETAINING WALL)	8161.7	CY
STRUCTURAL BACKFILL (RETAINING WALL)	4315.6	CY
PERVIOUS BACKFILL MATERIAL (RETAINING WALL)	462.1	CY
CONCRETE BARRIER (TYPE 60D MOD)	819.9	LF
CABLE RAILING	819.9	LF
MINOR CONCRETE (GUTTER)	819.9	LF
PLASTIC PIPE (N)	48.8	LF
WATERSTOP (N)	180.9	LF
ARCHITECTURAL SURFACE (TEXTURED CONCRETE)	6742.0	SQFT

(N) NOT A SEPARATEPAY ITEM, FOR INFORMATION ONLY

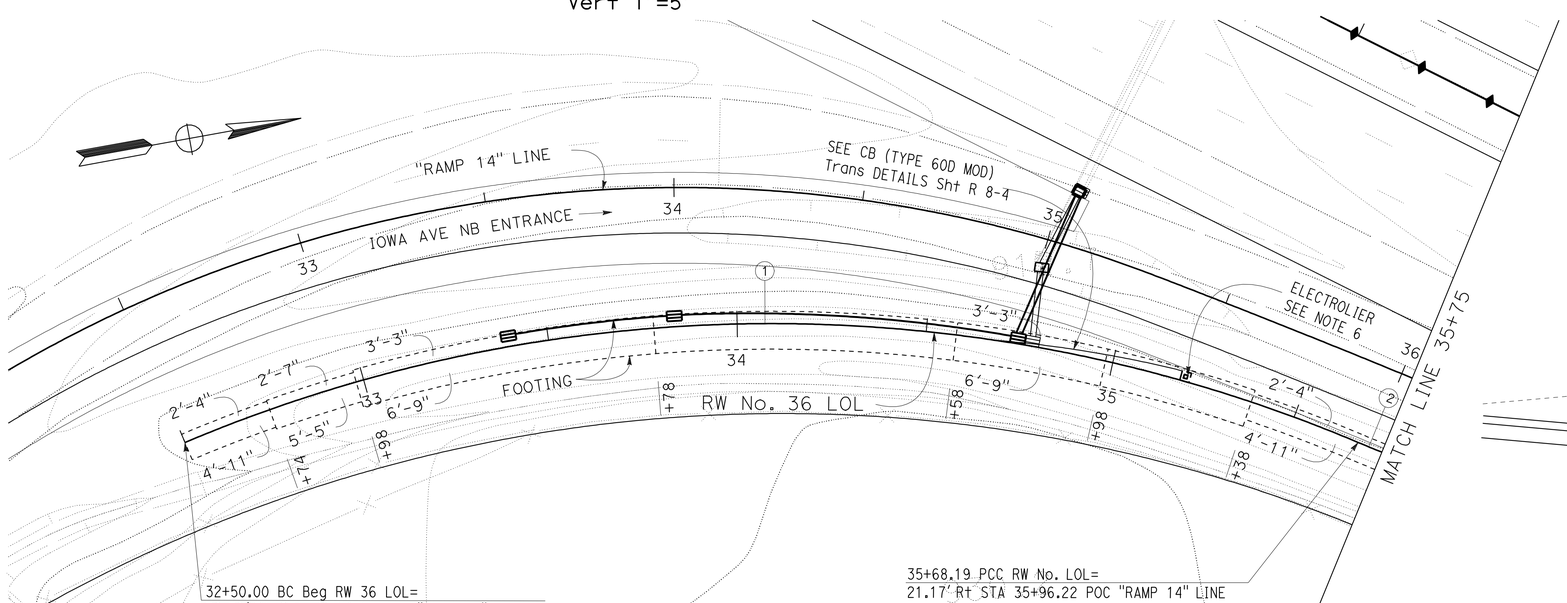

CURVE DATA

No.	R	Δ	T	L
1	397.8'	45°49'37"	168.16'	318.19'
2	2978.9'	3°11'29"	82.98'	165.92'

PLAN

SCALE 1"=20'

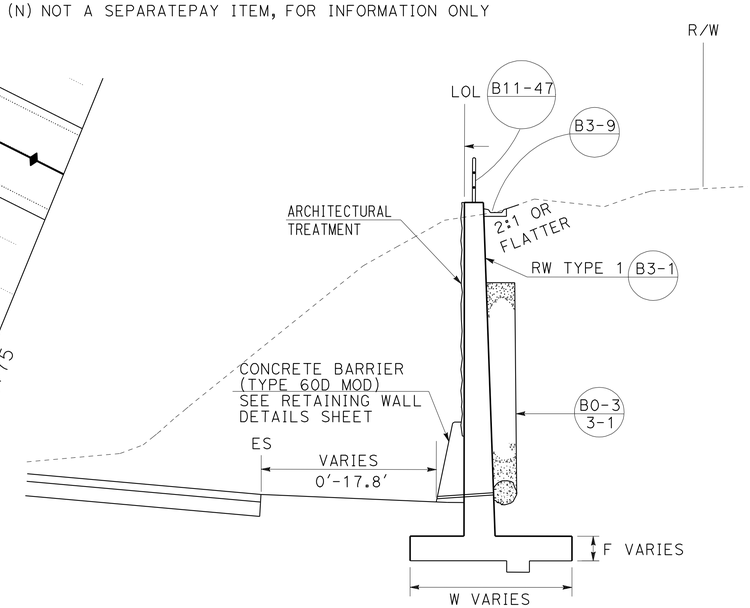

TYPICAL SECTION

FROM STA 32+50.00 TO STA 40+69.93
NO SCALE

RETAINING WALL PLAN

RETAINING WALL No. 36

SCALE AS SHOWN **R8-1**

APPROVED FOR RETAINING WALL WORK ONLY

STATE OF CALIFORNIA - DEPARTMENT OF TRANSPORTATION
Caltrans DESIGN
FUNCTIONAL SUPERVISOR BEN AMIRI
CALCULATED-DESIGNED BY MARK DE LA VEGA
CHECKED BY DAT H. WONG
REVISED BY
DATE REVISED

LAST REVISION 01-02-12
DATE PLOTTED => 17-APR-2012
TIME PLOTTED => 20:24

Dist	COUNTY	ROUTE	POST MILES TOTAL PROJECT	SHEET No.	TOTAL SHEETS
08	Riv,SBd	91,215	21.5/21.7, 43.2/45.2,0.0/5.1	732	1743

REGISTERED CIVIL ENGINEER 1-2-12 DATE

4-16-12
PLANS APPROVAL DATE

REGISTERED PROFESSIONAL ENGINEER JUSTINE NIU No. C 62897 Exp. 6-30-12 CIVIL STATE OF CALIFORNIA

THE STATE OF CALIFORNIA OR ITS OFFICERS OR AGENTS SHALL NOT BE RESPONSIBLE FOR THE ACCURACY OR COMPLETENESS OF SCANNED COPIES OF THIS PLAN SHEET.

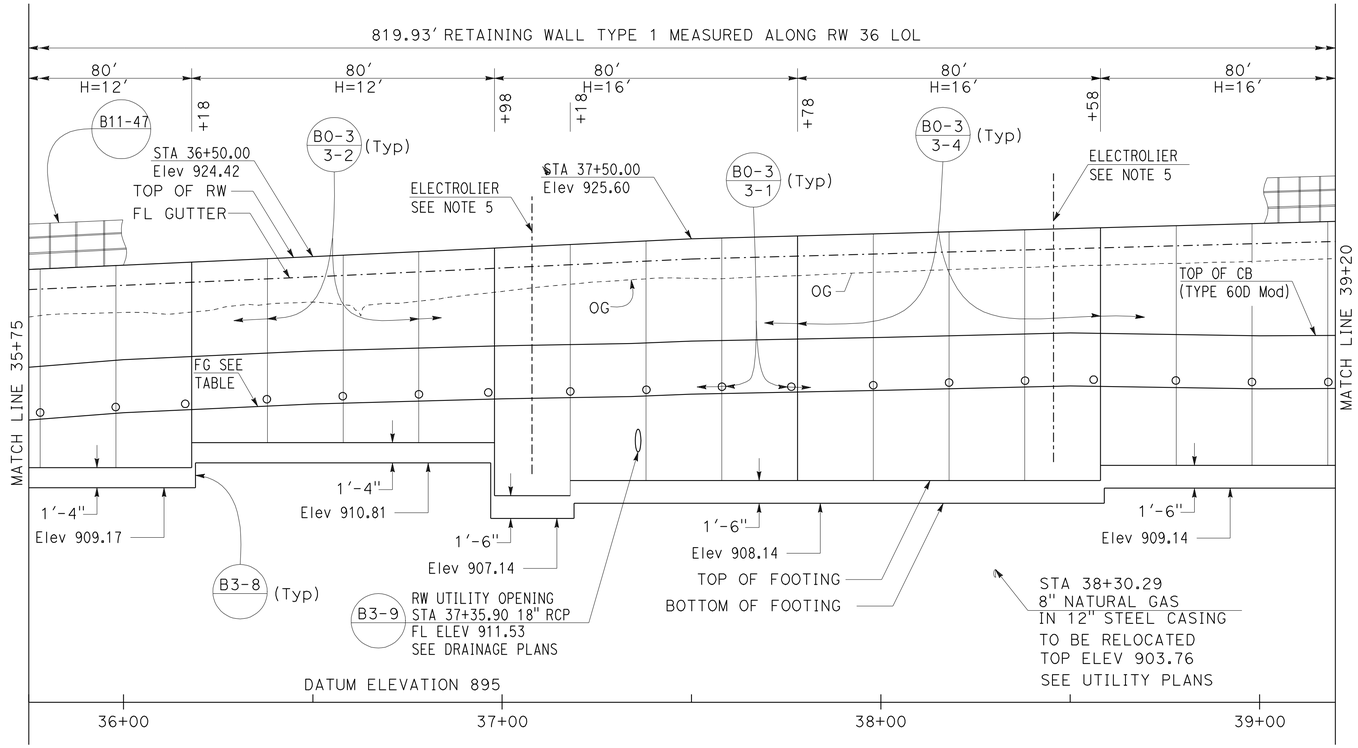

ELEVATION

SCALE Horiz 1"=20'
Vert 1"=5'

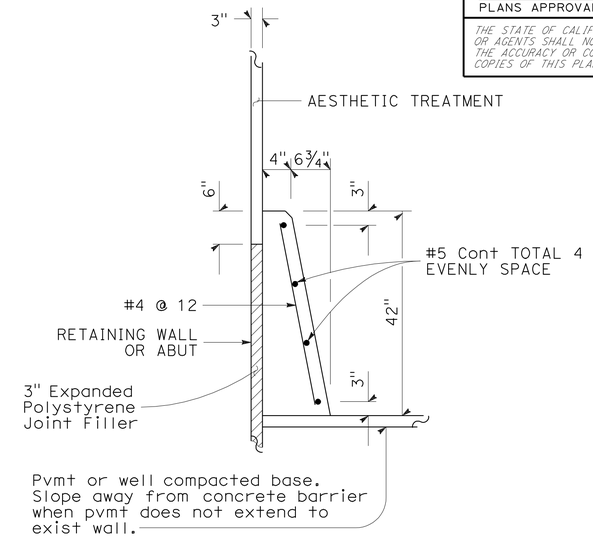

CONCRETE BARRIER (TYPE 60D MOD)

FINISH GRADE (FG) TABLE	
STATION	ELEVATION
32+50.00	914.73
33+00.00	912.99
33+50.00	912.39
34+00.00	911.92
34+50.00	911.81
35+00.00	912.13
35+50.00	913.31
35+68.19	913.49
36+00.00	914.13
36+50.00	914.70
37+00.00	915.04
37+34.11	915.18
37+50.00	915.34
38+00.00	915.59
38+50.00	915.89
39+00.00	915.70
39+28.72	915.73
39+50.00	915.70
40+00.00	915.95
40+50.00	916.19
40+69.93	916.03

CURVE DATA

No. Ⓗ	R	Δ	T	L
②	2978.9'	3°11'29"	82.98'	165.92'

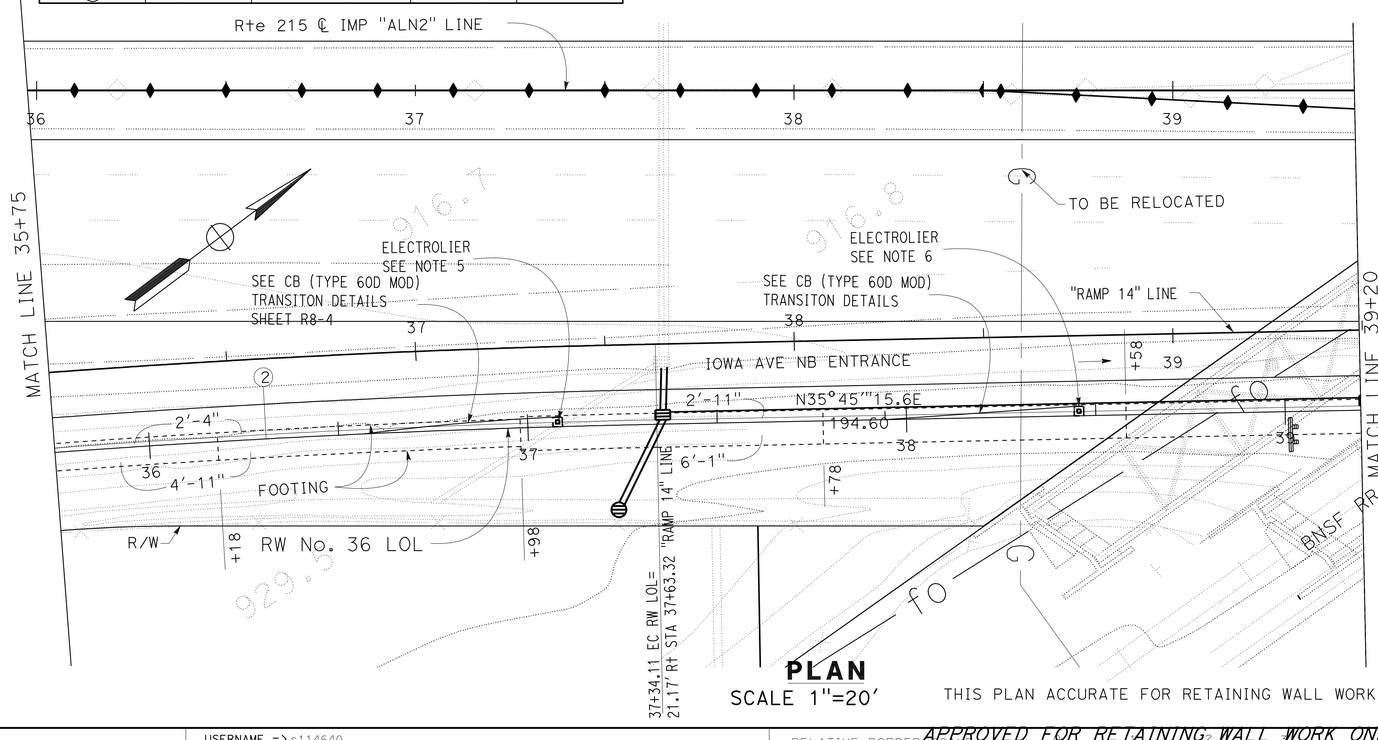

PLAN

SCALE 1"=20'

THIS PLAN ACCURATE FOR RETAINING WALL WORK ONLY.

APPROVED FOR RETAINING WALL WORK ONLY

RETAINING WALL PLAN

RETAINING WALL No.36

SCALE AS SHOWN **R8-2**

STATE OF CALIFORNIA - DEPARTMENT OF TRANSPORTATION
Caltrans® DESIGN

FUNCTIONAL SUPERVISOR: BEN AMIRI
CALCULATED-DESIGNED BY: MARK DE LA VEGA
CHECKED BY: DAT H. WONG
REVISED BY / DATE REVISED

LAST REVISION 01-02-12
DATE PLOTTED => 17-APR-2012
TIME PLOTTED => 20:24

Dist	COUNTY	ROUTE	POST MILES TOTAL PROJECT	SHEET No.	TOTAL SHEETS
08	Riv,SBd	91,215	21.5/21.7, 43.2/45.2,0.0/5.1	733	1743

REGISTERED CIVIL ENGINEER 1-2-12 DATE

4-16-12
PLANS APPROVAL DATE

REGISTERED PROFESSIONAL ENGINEER
JUSTINE NIU
No. C 62897
Exp. 6-30-12
CIVIL
STATE OF CALIFORNIA

THE STATE OF CALIFORNIA OR ITS OFFICERS OR AGENTS SHALL NOT BE RESPONSIBLE FOR THE ACCURACY OR COMPLETENESS OF SCANNED COPIES OF THIS PLAN SHEET.

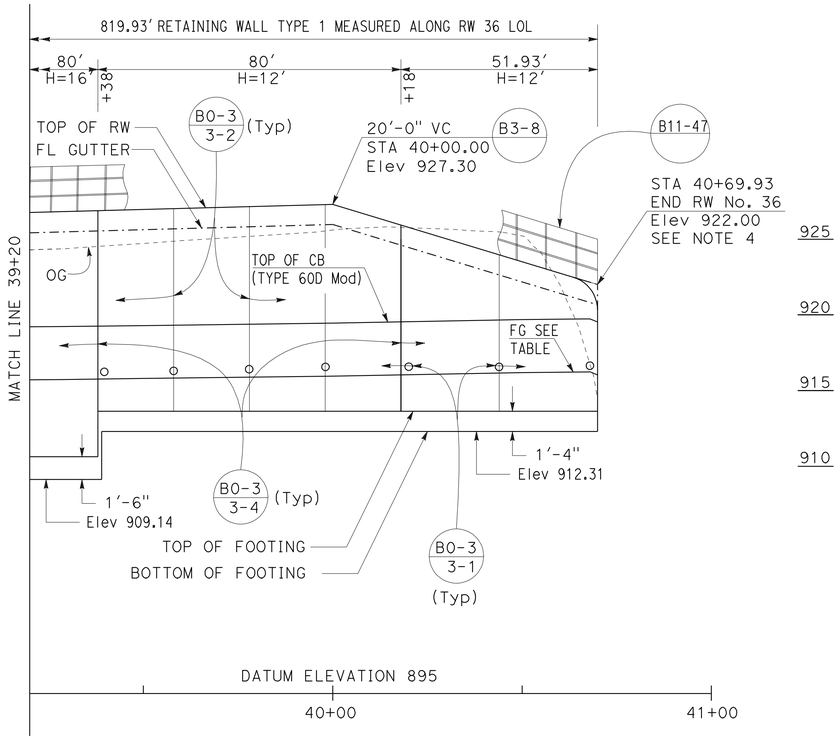

ELEVATION

SCALE Horiz 1"=20'
Vert 1"=5'

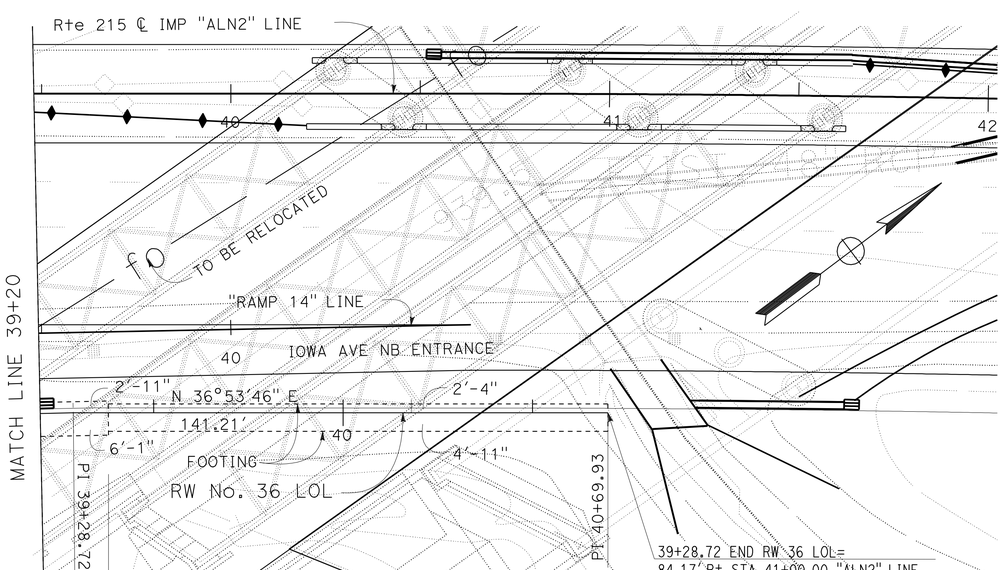

PLAN

SCALE 1"=20'

APPROVED FOR RETAINING WALL WORK ONLY

RETAINING WALL PLAN

RETAINING WALL No.36

SCALE AS SHOWN **R8-3**

STATE OF CALIFORNIA - DEPARTMENT OF TRANSPORTATION
Caltrans
DESIGN

FUNCTIONAL SUPERVISOR: BEN AMIRI
CALCULATED-DESIGNED BY: MARK DE LA VEGA
CHECKED BY: DAT H. WONG
REVISED BY
DATE REVISED

LAST REVISION 01-02-12
DATE PLOTTED => 17-APR-2012
TIME PLOTTED => 20:24

Dist	COUNTY	ROUTE	POST MILES TOTAL PROJECT	SHEET No.	TOTAL SHEETS
08	Riv,SBd	91,215	21.5/21.7, 43.2/45.2,0.0/5.1	734	1743

REGISTERED CIVIL ENGINEER 1-2-12 DATE

4-16-12
PLANS APPROVAL DATE

REGISTERED PROFESSIONAL ENGINEER JUSTINE NIU No. C 62897 Exp. 6-30-12 CIVIL STATE OF CALIFORNIA

THE STATE OF CALIFORNIA OR ITS OFFICERS OR AGENTS SHALL NOT BE RESPONSIBLE FOR THE ACCURACY OR COMPLETENESS OF SCANNED COPIES OF THIS PLAN SHEET.

NOTES

1. SEE RETAINING WALL DETAILS FOR CONCRETE BARRIER (TYPE 60D MOD).
2. CONTRACTOR OPTIONS FOR FILL BETWEEN CONCRETE BARRIER WALLS:
   A. PLACE 4" PCC AT BASE BETWEEN CONCRETE BARRIER WALLS.
   B. PLACE 12" OF GRANULAR MATERIAL AT BASE BETWEEN WALLS.
   C. PLACE GRANULAR MATERIAL FROM BASE TO BOTTOM OF 4" CAP.
   D. MONOLITHIC CONCRETE WITH FOAM BLOCKOUTS IS NOT PERMITTED.
3. REINFORCING STEEL SHALL EXTEND CONTINUOUS THROUGH CONSTRUCTION JOINTS.
4. ADJUST HEIGHT OF CONCRETE BARRIER WALL ON LOW SIDE OF OFFSET OR SUPERELEVATED ROADWAYS TO PROVIDE LEVEL GRADE ACROSS TOP OF CONCRETE BARRIER CAP.
5. PULL BOXES TO BE PLACED AS SHOWN OR AS DIRECTED BY THE ENGINEER.

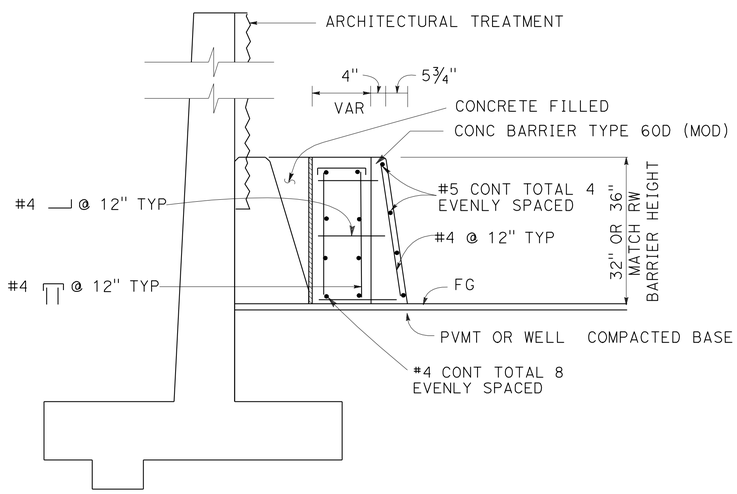

DETAIL A

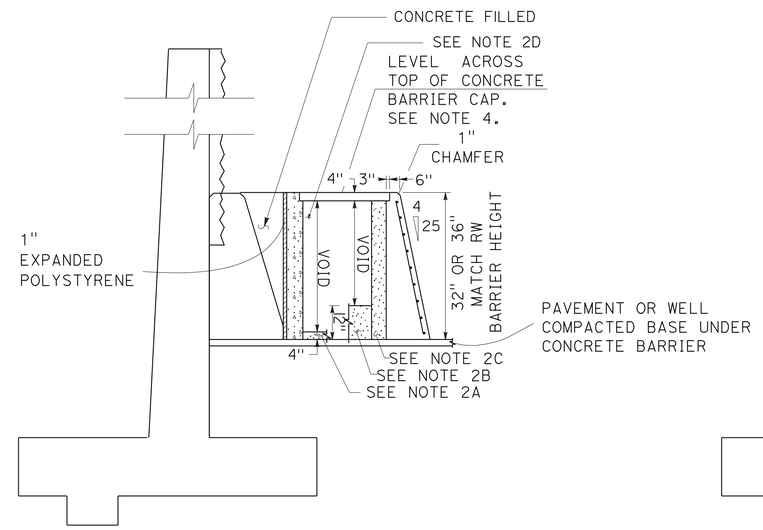

SECTION A-A

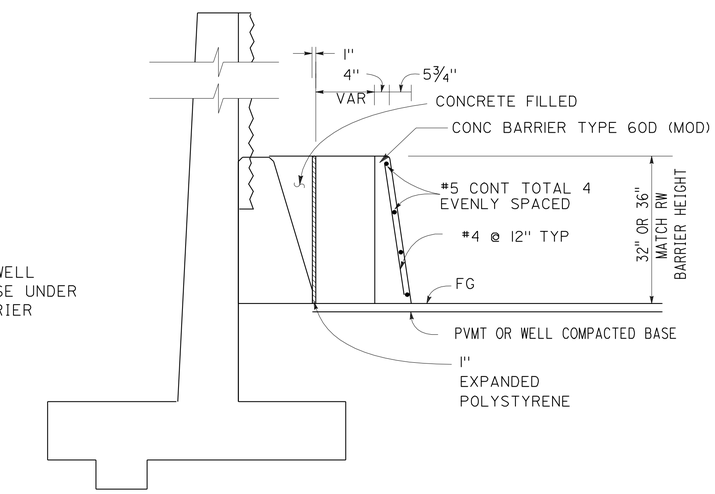

SECTION B-B

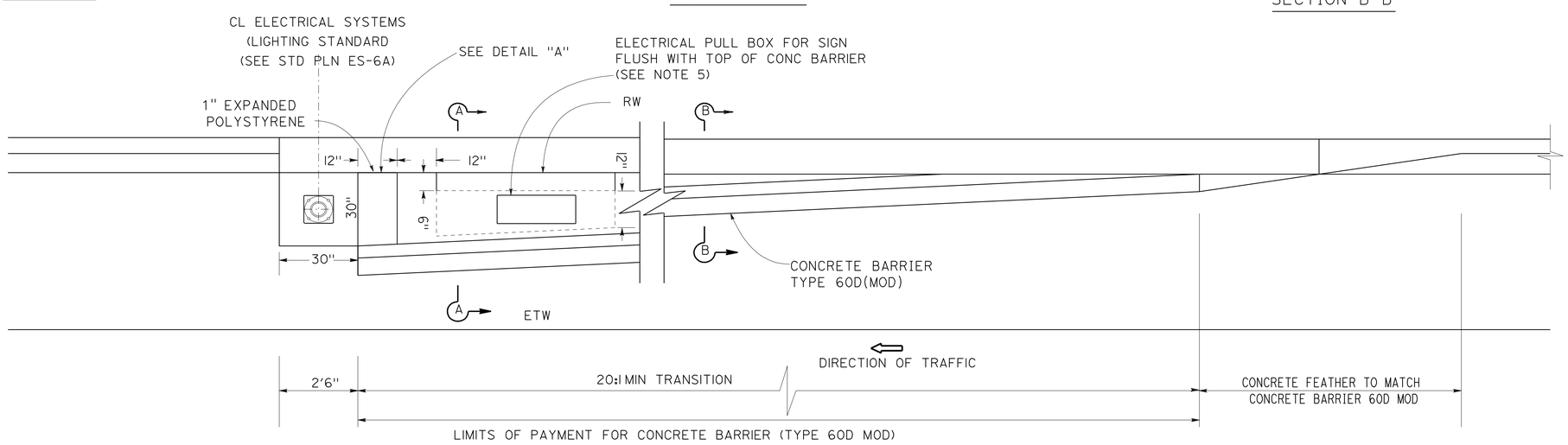

CONCRETE BARRIER 60D MOD TRANISTION DETAILS FOR LIGHTING STANDARD

NO SCALE

RETAINING WALL DETAILS

RETAINING WALL No. 36

SCALE AS SHOWN **R8-4**

APPROVED FOR RETAINING WALL WORK ONLY

REVISED BY | DATE REVISED
MARK DE LA VEGA | JUSTINE NIU
CALCULATED-DESIGNED BY | CHECKED BY
FUNCTIONAL SUPERVISOR: BEN AMIRI
STATE OF CALIFORNIA - DEPARTMENT OF TRANSPORTATION
Caltrans® DESIGN

LAST REVISION 01-02-12 | DATE PLOTTED => 17-APR-2012 | TIME PLOTTED => 20:24

Dist	COUNTY	ROUTE	POST MILES TOTAL PROJECT	SHEET No.	TOTAL SHEETS
08	Riv,SBd	91,215	21.5/21.7, 43.2/45.2,0.0/5.1	735	1743

LICENSED LANDSCAPE ARCHITECT

4-16-12
PLANS APPROVAL DATE

LICENSED LANDSCAPE ARCHITECT
RAY L. DESSELLE No. 2524
Signature
11/30/13
Renewal Date
01/02/12
Date
STATE OF CALIFORNIA

THE STATE OF CALIFORNIA OR ITS OFFICERS OR AGENTS SHALL NOT BE RESPONSIBLE FOR THE ACCURACY OR COMPLETENESS OF SCANNED COPIES OF THIS PLAN SHEET.

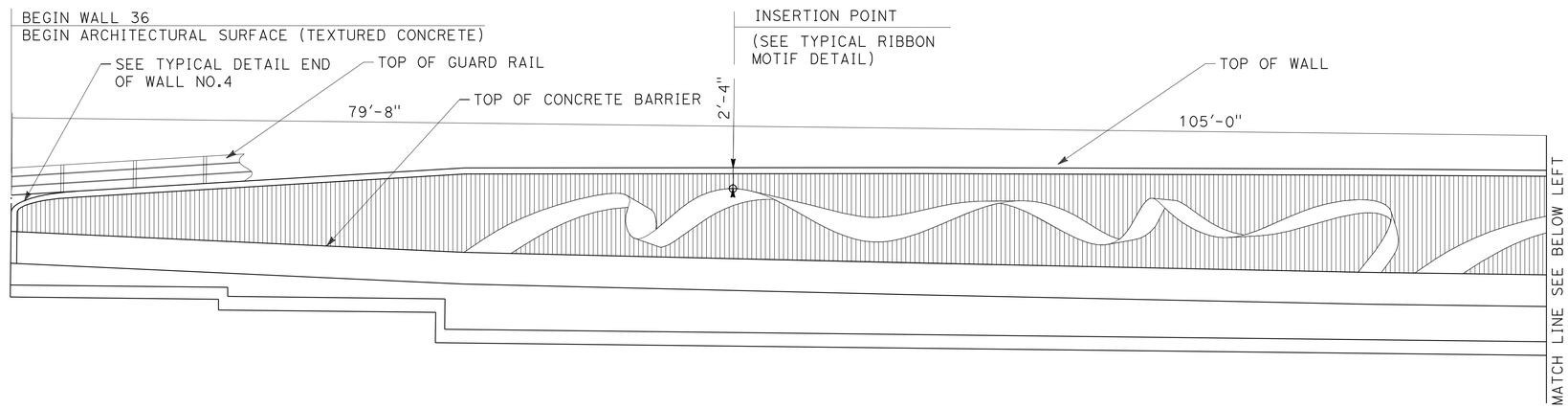

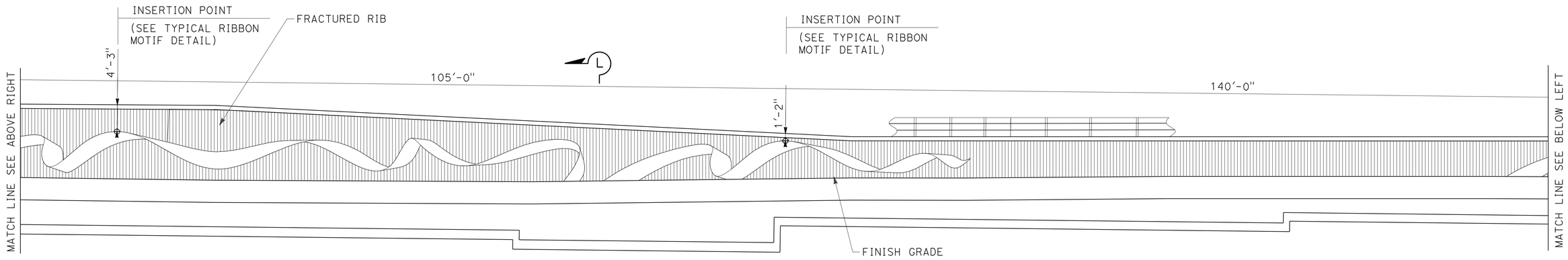

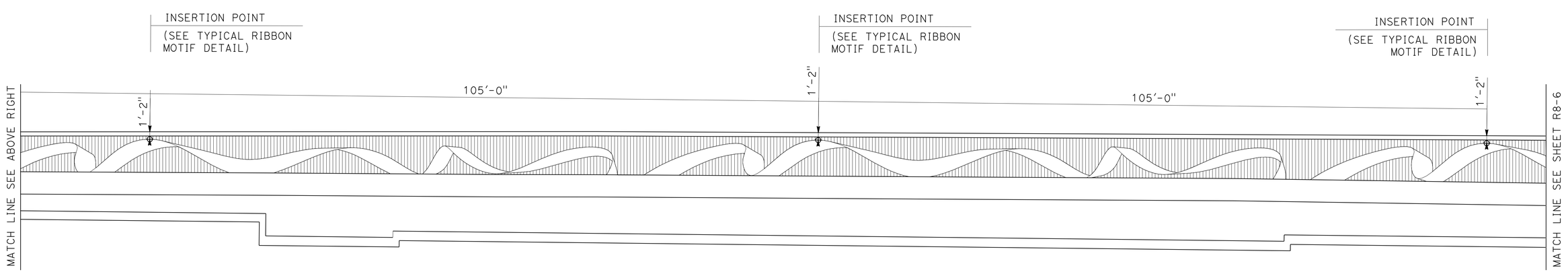

ELEVATION FOR FRACTURED RIB WITH RIBBON MOTIF TEXTURE RETAINING WALL No. 36

APPROVED FOR RETAINING WALL WORK ONLY

ARCHITECTURAL SURFACE
RETAINING WALL No. 36

SCALE: 1/8" = 1'0

R8-5

STATE OF CALIFORNIA - DEPARTMENT OF TRANSPORTATION
Caltrans® LANDSCAPE ARCHITECTURE

SENIOR LANDSCAPE ARCHITECT: RAY DESSELLE
CALCULATED-DESIGNED BY: MATTHEW HALL
CHECKED BY: MIRIAM BISHOP
REVISED BY
DATE REVISED

LAST REVISION 01-02-12
DATE PLOTTED => 17-APR-2012
TIME PLOTTED => 20:24

Dist	COUNTY	ROUTE	POST MILES TOTAL PROJECT	SHEET No.	TOTAL SHEETS
08	Riv,SBd	91,215	21.5/21.7, 43.2/45.2,0.0/5.1	736	1743

LICENSED LANDSCAPE ARCHITECT

4-16-12
PLANS APPROVAL DATE

LICENSED LANDSCAPE ARCHITECT
RAY T. DESSELLE No. 2544
Signature
11/30/13
Renewal Date
01/02/12
Date
STATE OF CALIFORNIA

THE STATE OF CALIFORNIA OR ITS OFFICERS OR AGENTS SHALL NOT BE RESPONSIBLE FOR THE ACCURACY OR COMPLETENESS OF SCANNED COPIES OF THIS PLAN SHEET.

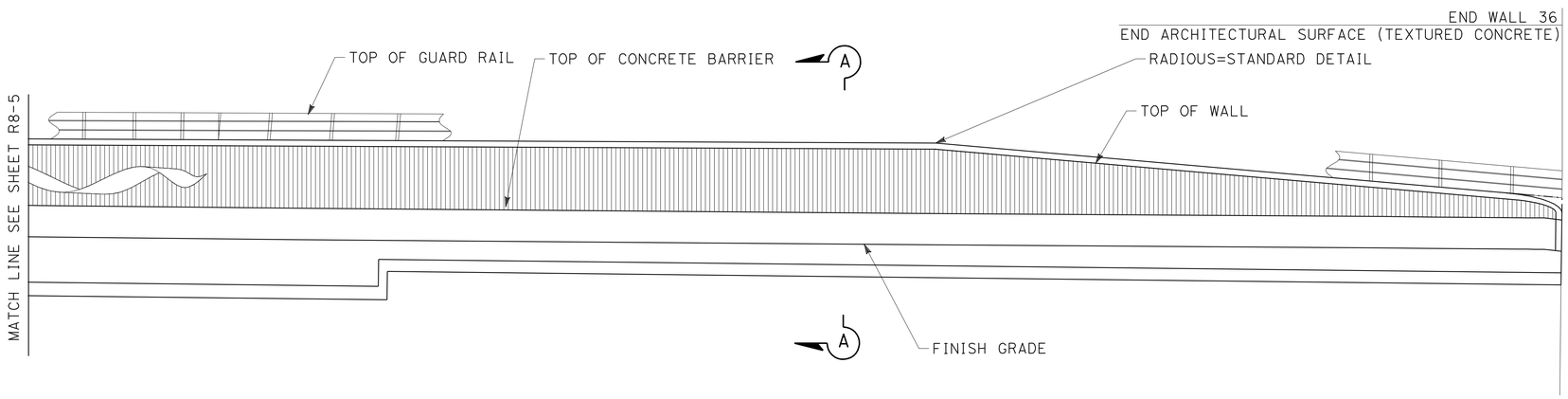

ELEVATION FOR FRACTURED RIB WITH RIBBON MOTIF TEXTURE RETAINING WALL No. 36

APPROVED FOR RETAINING WALL WORK ONLY

ARCHITECTURAL SURFACE
RETAINING WALL No. 36

SCALE: 1/8" = 1'0

R8-6

STATE OF CALIFORNIA - DEPARTMENT OF TRANSPORTATION
Caltrans® LANDSCAPE ARCHITECTURE

SENIOR LANDSCAPE ARCHITECT: RAY DESSELLE
CALCULATED-DESIGNED BY: MATTHEW HALL
CHECKED BY: MIRIAM BISHOP
REVISED BY
DATE REVISED

LAST REVISION 01-02-12
DATE PLOTTED => 17-APR-2012
TIME PLOTTED => 20:24

DIST	COUNTY	ROUTE	POST MILES TOTAL PROJECT	SHEET No.	TOTAL SHEETS
08	Riv,SBd	91,215	21.5/21.7, 43.2/45.2,0.0/5.1	737	1743

REGISTERED CIVIL ENGINEER 1-11-12 DATE

4-16-12
PLANS APPROVAL DATE

REGISTERED PROFESSIONAL ENGINEER Brian Gutierrez No. C66258 Exp. 6-30-12 CIVIL STATE OF CALIFORNIA

The State of California or its officers or agents shall not be responsible for the accuracy or completeness of electronic copies of this plan sheet.

This LOTB sheet was prepared in accordance with the Caltrans Soil & Rock Logging, Classification, & Presentation Manual (2010 Edition).

BENCH MARK

BM 048
Set 1" IP W/ALUM PLUG STAMPED "SBD 215 PM 0.48 GPS 2010" TOP SLOPE NB IOWA AVE ON-RAMP; 13' WLY R/W FENCE; 6' WLY CL V-DITCH; 70' NELY RAMP METER SIGNAL.
N 1,832,045.099
E 6,763,416.060
Elev 927.971
NAVD88

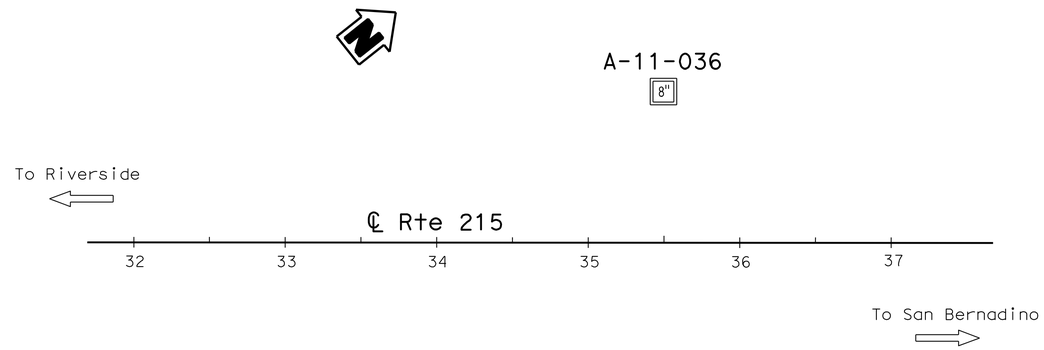

PLAN
1" = 50'

Note: No ground water encountered during field investigation.

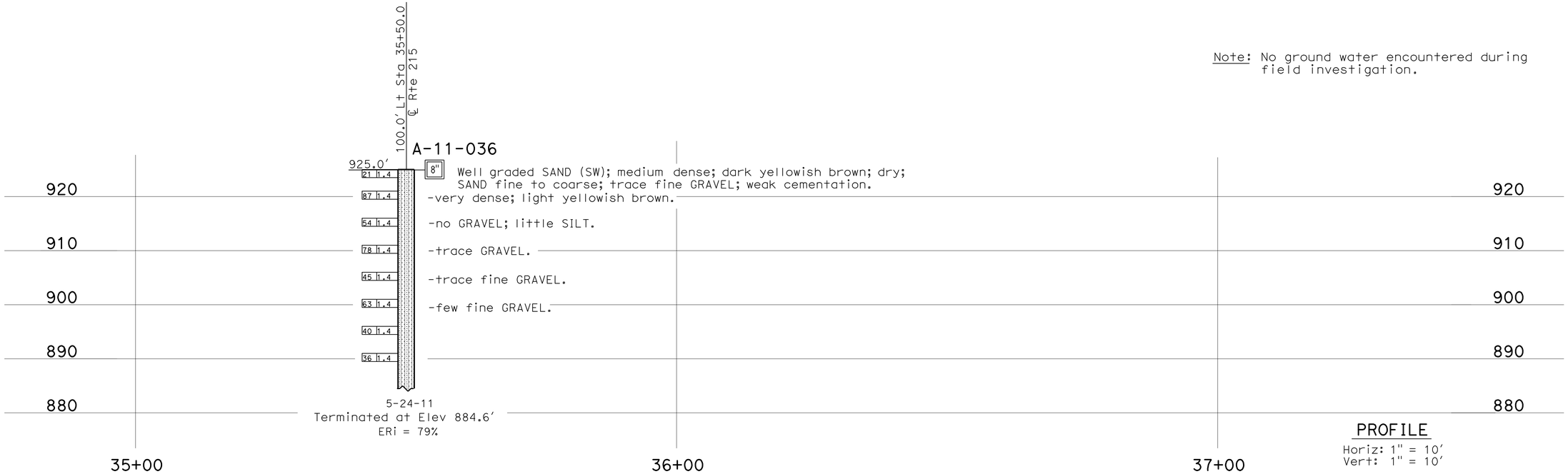

PROFILE
Horiz: 1" = 10'
Vert: 1" = 10'

ENGINEERING SERVICES	MATERIALS AND GEOTECHNICAL SERVICES	STATE OF CALIFORNIA DEPARTMENT OF TRANSPORTATION	DIVISION OF ENGINEERING SERVICES STRUCTURE DESIGN DESIGN BRANCH X	BRIDGE NO. / POST MILE 0.0-5.0	RETAINING WALLS 36 LOG OF TEST BORINGS 1 OF 3
FUNCTIONAL SUPERVISOR NAME: S. Wei	DRAWN BY: W. Tang, I.G-Remmen CHECKED BY: B. Levine	FIELD INVESTIGATION BY: C. Hoadley			

OGS CIVIL LOG OF TEST BORINGS SHEET

ORIGINAL SCALE IN INCHES FOR REDUCED PLANS 0 1 2 3

UNIT: 3643
PROJECT NUMBER & PHASE: 08000005061 CONTRACT NO.: 08-0M9401

DISREGARD PRINTS BEARING EARLIER REVISION DATES

REVISION DATES: 12-20-11 01-06-12 SHEET X OF X

FILE => 80m94uqh007.dgn

USERNAME => s114640 DATE PLOTTED => 17-APR-2012 TIME PLOTTED => 20:24

REFERENCE: CALTRANS SOIL & ROCK LOGGING, CLASSIFICATION, AND PRESENTATION MANUAL (2010)

DIST	COUNTY	ROUTE	POST MILES TOTAL PROJECT	SHEET No.	TOTAL SHEETS
08	Riv,SBd	91,215	21.5/21.7, 43.2/45.2,0.0/5.1	738	1743

REGISTERED CIVIL ENGINEER 1-11-12 DATE

4-16-12
PLANS APPROVAL DATE

REGISTERED PROFESSIONAL ENGINEER Brian Gutierrez No. C66258 Exp. 6-30-12 CIVIL STATE OF CALIFORNIA

The State of California or its officers or agents shall not be responsible for the accuracy or completeness of electronic copies of this plan sheet.

CEMENTATION

Description	Criteria
Weak	Crumbles or breaks with handling or little finger pressure.
Moderate	Crumbles or breaks with considerable finger pressure.
Strong	Will not crumble or break with finger pressure.

BOREHOLE IDENTIFICATION

Symbol	Hole Type	Description
Size	A	Auger Boring (hollow or solid stem bucket)
Size	R RW RC P	Rotary drilled boring (conventional) Rotary drilled with self-casing wire-line Rotary core with continuously-sampled, self-casing wire-line Rotary percussion boring (air)
Size	R	Rotary drilled diamond core
Size	HD HA	Hand driven (1-inch soil tube) Hand Auger
●	D	Dynamic Cone Penetration Boring
▲	CPT	Cone Penetration Test (ASTM D 5778)
⬚	O	Other (note on LOTB)

Note: Size in inches.

CONSISTENCY OF COHESIVE SOILS

Description	Shear Strength (tsf)	Pocket Penetrometer Measurement, PP, (tsf)	Torvane Measurement, TV, (tsf)	Vane Shear Measurement, VS, (tsf)
Very Soft	Less than 0.12	Less than 0.25	Less than 0.12	Less than 0.12
Soft	0.12 - 0.25	0.25 - 0.5	0.12 - 0.25	0.12 - 0.25
Medium Stiff	0.25 - 0.5	0.5 - 1	0.25 - 0.5	0.25 - 0.5
Stiff	0.5 - 1	1 - 2	0.5 - 1	0.5 - 1
Very Stiff	1 - 2	2 - 4	1 - 2	1 - 2
Hard	Greater than 2	Greater than 4	Greater than 2	Greater than 2

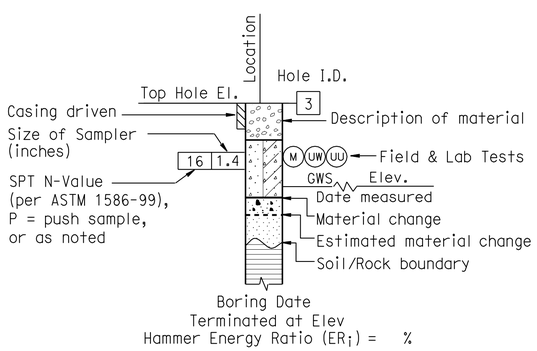

ROTARY BORING

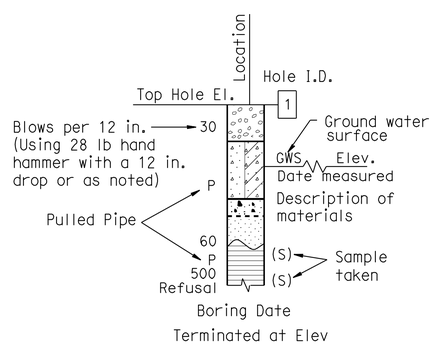

HAND BORING

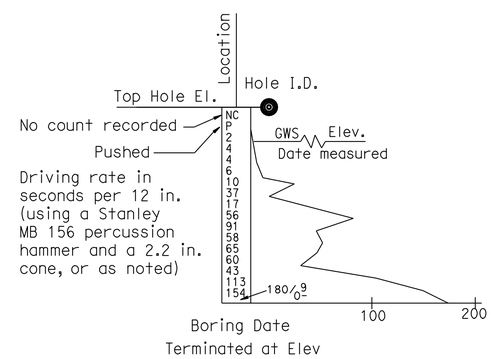

DYNAMIC CONE PENETRATION BORING

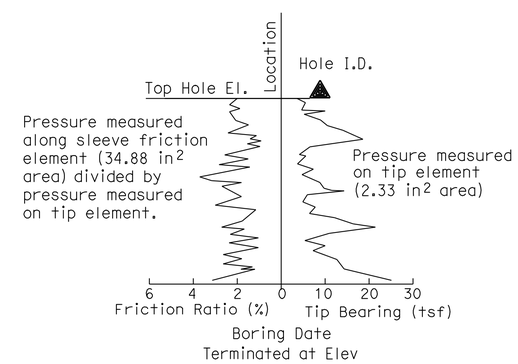

CONE PENETRATION TEST (CPT) BORING

ENGINEERING SERVICES	GEOTECHNICAL SERVICES	STATE OF CALIFORNIA DEPARTMENT OF TRANSPORTATION	DIVISION OF ENGINEERING SERVICES STRUCTURE DESIGN DESIGN BRANCH X	BRIDGE NO. / POST MILE 0.0-5.0	RETAINING WALLS 36 LOG OF TEST BORINGS 2 OF 2
	PREPARED BY: I.G-Remmen				

GS LOTB SOIL LEGEND

ORIGINAL SCALE IN INCHES FOR REDUCED PLANS 0 1 2 3

UNIT: 3643
PROJECT NUMBER & PHASE: 08000005061 CONTRACT NO.: 08-0M9401

DISREGARD PRINTS BEARING EARLIER REVISION DATES

REVISION DATES | SHEET X | OF X

FILE => 80m94uqh008.dgn

USERNAME => s124496 DATE PLOTTED => 18-APR-2012 TIME PLOTTED => 14:03

REFERENCE: CALTRANS SOIL & ROCK LOGGING, CLASSIFICATION, AND PRESENTATION MANUAL (2010)

DIST	COUNTY	ROUTE	POST MILES TOTAL PROJECT	SHEET No.	TOTAL SHEETS
08	Riv,SBd	91,215	21.5/21.7, 43.2/45.2,0.0/5.1	739	1743

REGISTERED CIVIL ENGINEER 1-11-12 DATE

4-16-12
PLANS APPROVAL DATE

REGISTERED PROFESSIONAL ENGINEER Brian Gutierrez No. C66258 Exp. 6-30-12 CIVIL STATE OF CALIFORNIA

The State of California or its officers or agents shall not be responsible for the accuracy or completeness of electronic copies of this plan sheet.

GROUP SYMBOLS AND NAMES

Graphic/Symbol	Group Names	Graphic/Symbol	Group Names
GW	Well-graded GRAVEL Well-graded GRAVEL with SAND	CL	Lean CLAY Lean CLAY with SAND Lean CLAY with GRAVEL SANDY lean CLAY SANDY lean CLAY with GRAVEL GRAVELLY lean CLAY GRAVELLY lean CLAY with SAND
GP	Poorly-graded GRAVEL Poorly-graded GRAVEL with SAND		
GW-GM	Well-graded GRAVEL with SILT Well-graded GRAVEL with SILT and SAND	CL-ML	SILTY CLAY SILTY CLAY with SAND SILTY CLAY with GRAVEL SANDY SILTY CLAY SANDY SILTY CLAY with GRAVEL GRAVELLY SILTY CLAY GRAVELLY SILTY CLAY with SAND
GW-GC	Well-graded GRAVEL with CLAY (or SILTY CLAY) Well-graded GRAVEL with CLAY and SAND (or SILTY CLAY and SAND)		
GP-GM	Poorly-graded GRAVEL with SILT Poorly-graded GRAVEL with SILT and SAND	ML	SILT SILT with SAND SILT with GRAVEL SANDY SILT SANDY SILT with GRAVEL GRAVELLY SILT GRAVELLY SILT with SAND
GP-GC	Poorly-graded GRAVEL with CLAY (or SILTY CLAY) Poorly-graded GRAVEL with CLAY and SAND (or SILTY CLAY and SAND)		
GM	SILTY GRAVEL SILTY GRAVEL with SAND	OL	ORGANIC lean CLAY ORGANIC lean CLAY with SAND ORGANIC lean CLAY with GRAVEL SANDY ORGANIC lean CLAY SANDY ORGANIC lean CLAY with GRAVEL GRAVELLY ORGANIC lean CLAY GRAVELLY ORGANIC lean CLAY with SAND
GC	CLAYEY GRAVEL CLAYEY GRAVEL with SAND		
GC-GM	SILTY, CLAYEY GRAVEL SILTY, CLAYEY GRAVEL with SAND	OL	ORGANIC SILT ORGANIC SILT with SAND ORGANIC SILT with GRAVEL SANDY ORGANIC SILT SANDY ORGANIC SILT with GRAVEL GRAVELLY ORGANIC SILT GRAVELLY ORGANIC SILT with SAND
SW	Well-graded SAND Well-graded SAND with GRAVEL		
SP	Poorly-graded SAND Poorly-graded SAND with GRAVEL	CH	Fat CLAY Fat CLAY with SAND Fat CLAY with GRAVEL SANDY fat CLAY SANDY fat CLAY with GRAVEL GRAVELLY fat CLAY GRAVELLY fat CLAY with SAND
SW-SM	Well-graded SAND with SILT Well-graded SAND with SILT and GRAVEL		
SW-SC	Well-graded SAND with CLAY (or SILTY CLAY) Well-graded SAND with CLAY and GRAVEL (or SILTY CLAY and GRAVEL)	MH	Elastic SILT Elastic SILT with SAND Elastic SILT with GRAVEL SANDY elastic SILT SANDY elastic SILT with GRAVEL GRAVELLY elastic SILT GRAVELLY elastic SILT with SAND
SP-SM	Poorly-graded SAND with SILT Poorly-graded SAND with SILT and GRAVEL		
SP-SC	Poorly-graded SAND with CLAY (or SILTY CLAY) Poorly-graded SAND with CLAY and GRAVEL (or SILTY CLAY and GRAVEL)	OH	ORGANIC fat CLAY ORGANIC fat CLAY with SAND ORGANIC fat CLAY with GRAVEL SANDY ORGANIC fat CLAY SANDY ORGANIC fat CLAY with GRAVEL GRAVELLY ORGANIC fat CLAY GRAVELLY ORGANIC fat CLAY with SAND
SM	SILTY SAND SILTY SAND with GRAVEL		
SC	CLAYEY SAND CLAYEY SAND with GRAVEL	OH	ORGANIC elastic SILT ORGANIC elastic SILT with SAND ORGANIC elastic SILT with GRAVEL SANDY ORGANIC elastic SILT SANDY ORGANIC elastic SILT with GRAVEL GRAVELLY ORGANIC elastic SILT GRAVELLY ORGANIC elastic SILT with SAND
SC-SM	SILTY, CLAYEY SAND SILTY, CLAYEY SAND with GRAVEL		
PT	PEAT	OL/OH	ORGANIC SOIL ORGANIC SOIL with SAND ORGANIC SOIL with GRAVEL SANDY ORGANIC SOIL SANDY ORGANIC SOIL with GRAVEL GRAVELLY ORGANIC SOIL GRAVELLY ORGANIC SOIL with SAND
	COBBLES COBBLES and BOULDERS BOULDERS		

FIELD AND LABORATORY TESTING

- (C) Consolidation (ASTM D 2435)
- (CL) Collapse Potential (ASTM D 5333)
- (CP) Compaction Curve (CTM 216)
- (CR) Corrosivity Testing (CTM 643, CTM 422, CTM 417)
- (CU) Consolidated Undrained Triaxial (ASTM D 4767)
- (DS) Direct Shear (ASTM D 3080)
- (EI) Expansion Index (ASTM D 4829)
- (M) Moisture Content (ASTM D 2216)
- (OC) Organic Content-% (ASTM D 2974)
- (P) Permeability (CTM 220)
- (PA) Particle Size Analysis (ASTM D 422)
- (PI) Plasticity Index (AASHTO T 90) Liquid Limit (AASHTO T 89)
- (PL) Point Load Index (ASTM D 5731)
- (PM) Pressure Meter
- (R) R-Value (CTM 301)
- (SE) Sand Equivalent (CTM 217)
- (SG) Specific Gravity (AASHTO T 100)
- (SL) Shrinkage Limit (ASTM D 427)
- (SW) Swell Potential (ASTM D 4546)
- (UC) Unconfined Compression-Soil (ASTM D 2166) Unconfined Compression-Rock (ASTM D 2938)
- (UU) Unconsolidated Undrained Triaxial (ASTM D 2850)
- (UW) Unit Weight (ASTM D 4767)

APPARENT DENSITY OF COHESIONLESS SOILS

Description	SPT N_{60} (Blows / 12 in.)
Very Loose	0 - 5
Loose	5 - 10
Medium Dense	10 - 30
Dense	30 - 50
Very Dense	Greater than 50

MOISTURE

Description	Criteria
Dry	No discernable moisture
Moist	Moisture present, but no free water
Wet	Visible free water

PERCENT OR PROPORTION OF SOILS

Description	Criteria
Trace	Particles are present but estimated to be less than 5%
Few	5% - 10%
Little	15% - 25%
Some	30% - 45%
Mostly	50% - 100%

PARTICLE SIZE

Description		Size (in.)
Boulder		Greater than 12
Cobble		3 - 12
Gravel	Coarse	3/4 - 3
	Fine	1/5 - 3/4
Sand	Coarse	1/16 - 1/5
	Medium	1/64 - 1/16
	Fine	1/300 - 1/64
Silt and Clay		Less than 1/300

ENGINEERING SERVICES

GEOTECHNICAL SERVICES

PREPARED BY: I.G-Remmen

STATE OF CALIFORNIA DEPARTMENT OF TRANSPORTATION

DIVISION OF ENGINEERING SERVICES STRUCTURE DESIGN DESIGN BRANCH X

BRIDGE NO.

POST MILE 0.0-5.0

RETAINING WALLS 36

LOG OF TEST BORINGS 3 OF 3

GS LOTB SOIL LEGEND

ORIGINAL SCALE IN INCHES FOR REDUCED PLANS 0 1 2 3

UNIT: 3643
PROJECT NUMBER & PHASE: 08000005061
CONTRACT NO.: 08-0M9401

DISREGARD PRINTS BEARING EARLIER REVISION DATES

REVISION DATES

SHEET X OF X

FILE => 80m94uqh009.dgn

USERNAME => s114640 DATE PLOTTED => 17-APR-2012 TIME PLOTTED => 20:24

Dist	COUNTY	ROUTE	POST MILES TOTAL PROJECT	SHEET No.	TOTAL SHEETS
08	Riv,SBd	91,215	21.5/21.7, 43.2/45.2,0.0/5.1	740	1743

REGISTERED CIVIL ENGINEER 4-13-12 DATE

4-16-12
PLANS APPROVAL DATE

REGISTERED PROFESSIONAL ENGINEER JUSTINE NIU No. C 62897 Exp. 6-30-12 CIVIL STATE OF CALIFORNIA

THE STATE OF CALIFORNIA OR ITS OFFICERS OR AGENTS SHALL NOT BE RESPONSIBLE FOR THE ACCURACY OR COMPLETENESS OF SCANNED COPIES OF THIS PLAN SHEET.

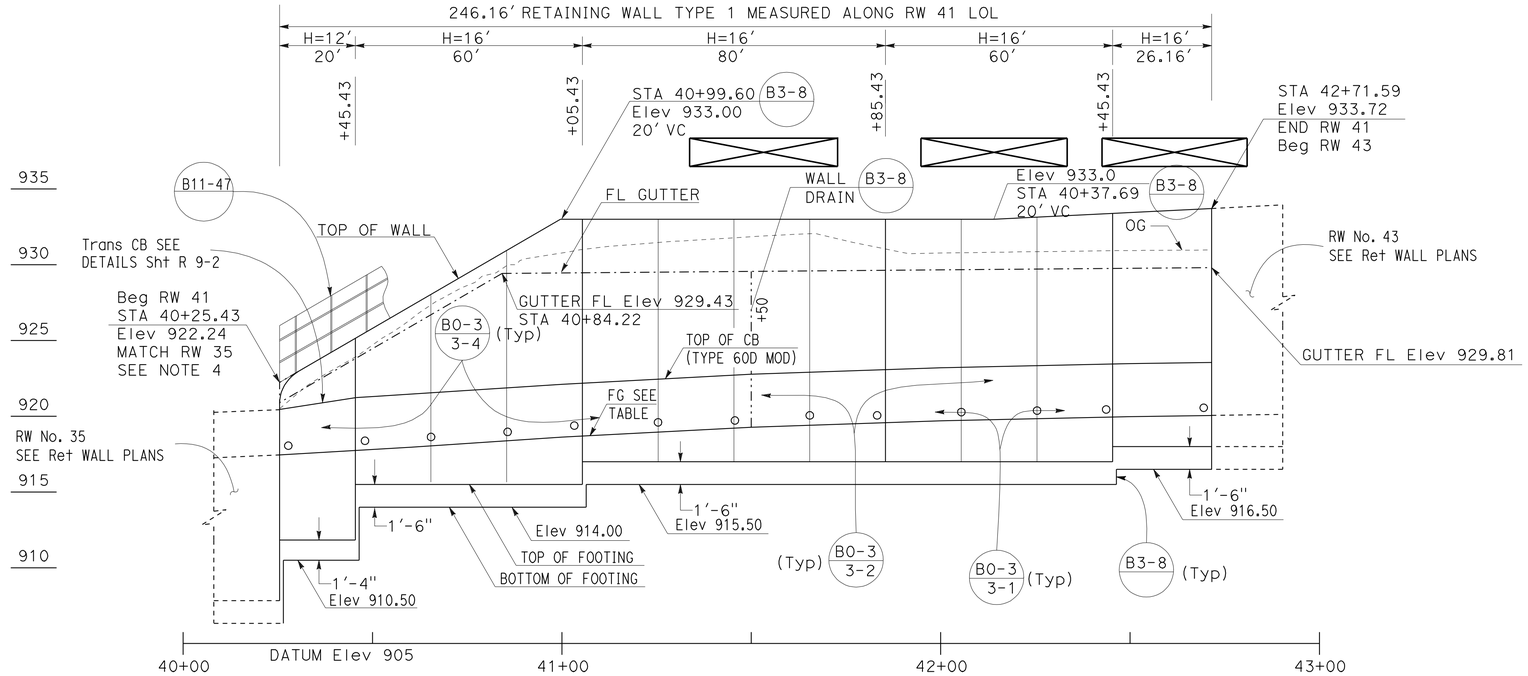

ELEVATION

SCALE Horiz 1"=20'
Vert 1"=5'

NOTES:

1. ARCHITECTURAL TREATMENT SHOULD EXTEND 6" TOP CB (TYPE 60D MOD)
2. FOR STRUCTURAL SECTIONS, SEE ROADWAY PLANS
3. FOR POST ANCHORAGE DETAILS, SEE Std PLAN B11-52
4. FOR ROUNDIND DETAILS, SEE ARCHITECTURAL TREATMENT PLANS

ELEVATION TABLE	
STATION	FG
40+25.43	917.45'
40+50	917.80'
41+00	918.62'
41+50	919.28'
42+00	919.70'
42+50	919.98'
42+71.59	920.05'

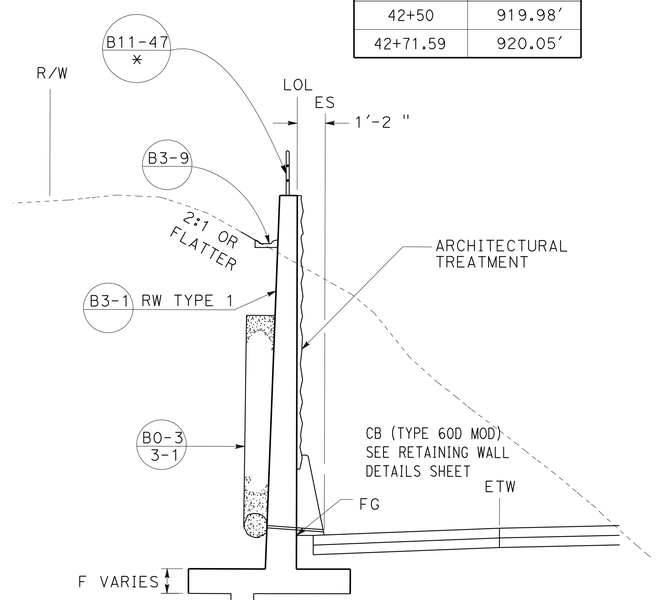

TYPICAL SECTION

NO SCALE

FROM STA 40+25.43 TO STA 42+71.59

* CABLE RAILING FROM STA 40+25.43 TO STA 41+00.00

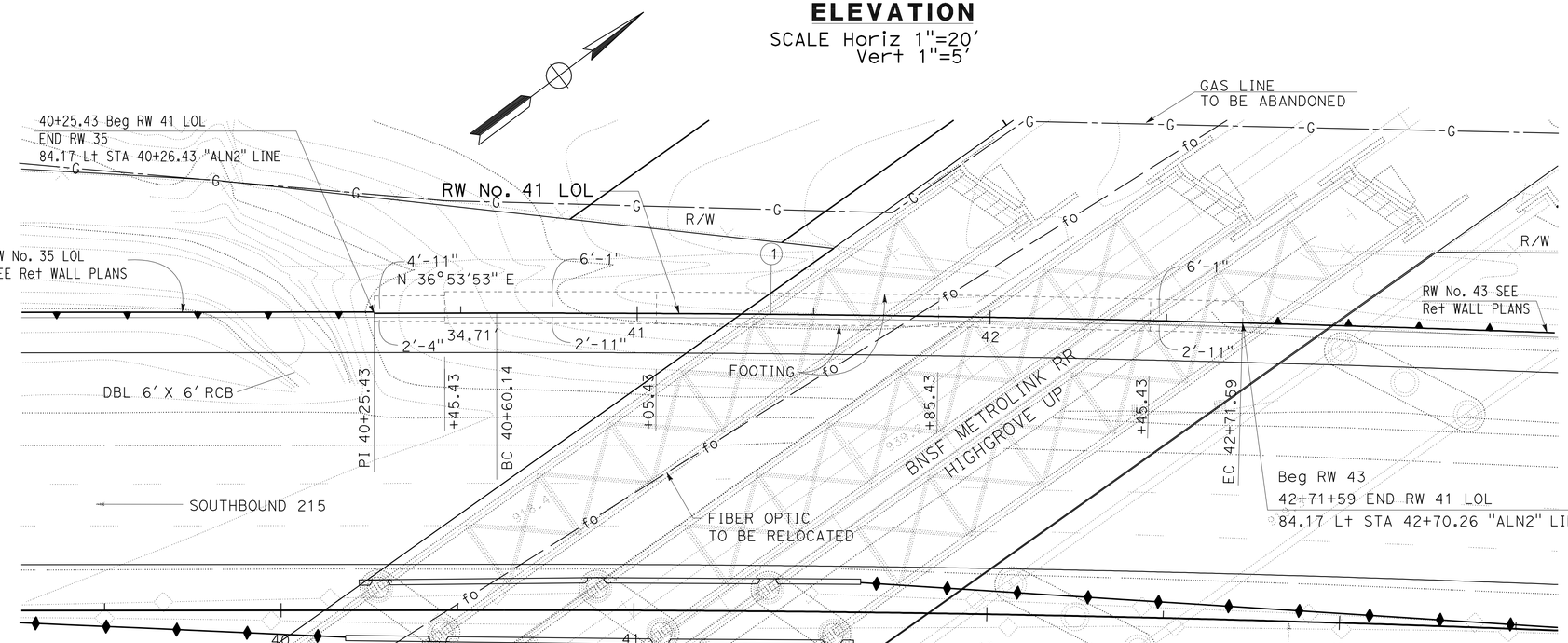

CURVE DATA

No.	R	Δ	T	L
1	7589'	1°35'47"	105.73'	211.45'

PLAN

SCALE 1"=20'

APPROVED FOR RETAINING WALL WORK ONLY

RETAINING WALL PLAN

RETAINING WALL No. 41

SCALE AS SHOWN **R9-1**

STATE OF CALIFORNIA - DEPARTMENT OF TRANSPORTATION
Caltrans
DESIGN
FUNCTIONAL SUPERVISOR: BEN AMIRI
CALCULATED-DESIGNED BY: JUSTINE NIU
CHECKED BY: DAT H. WONG
REVISED BY
DATE REVISED

LAST REVISION 04-13-12
DATE PLOTTED => 03-MAY-2012
TIME PLOTTED => 14:37

Dist	COUNTY	ROUTE	POST MILES TOTAL PROJECT	SHEET No.	TOTAL SHEETS
08	Riv,SBd	91,215	21.5/21.7, 43.2/45.2,0.0/5.1	741	1743

REGISTERED CIVIL ENGINEER 4-13-12 DATE

4-16-12
PLANS APPROVAL DATE

REGISTERED PROFESSIONAL ENGINEER
JUSTINE NIU
No. C 62897
Exp. 6-30-12
CIVIL
STATE OF CALIFORNIA

THE STATE OF CALIFORNIA OR ITS OFFICERS OR AGENTS SHALL NOT BE RESPONSIBLE FOR THE ACCURACY OR COMPLETENESS OF SCANNED COPIES OF THIS PLAN SHEET.

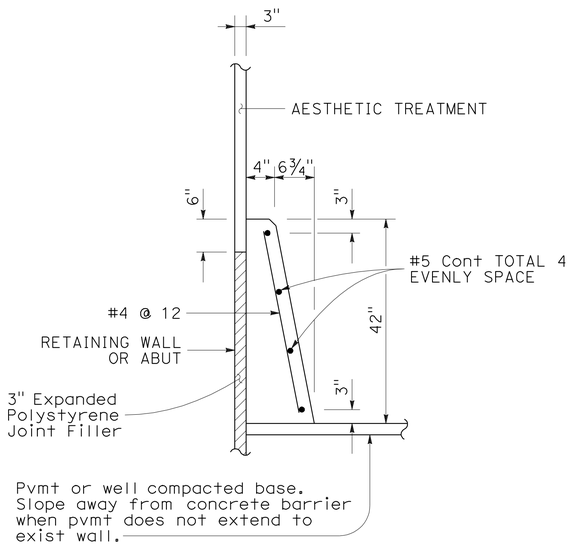

CONCRETE BARRIER (TYPE 60D MOD)

QUANTITIES

STRUCTURAL CONCRETE (RETAINING WALL)	324.1	CY
BAR REINFORCING STEEL (RETAINING WALL)	29461	LB
STRUCTURAL EXCAVATION (RETAINING WALL)	1127.8	CY
STRUCTURAL BACKFILL (RETAINING WALL)	757.3	CY
PERVIOUS BACKFILL MATERIAL (RETAINING WALL)	88.1	CY
CONCRETE BARRIER (TYPE 60D MOD)	246.2	LF
CABLE RAILING	74.6	LF
MINOR CONCRETE (GUTTER)	246.2	LF
PLASTIC PIPE (N)	20.0	LF
WATERSTOP (N)	50.9	LF
ARCHITECTURAL SURFACE (TEXTURED CONCRETE)	2302	SQFT

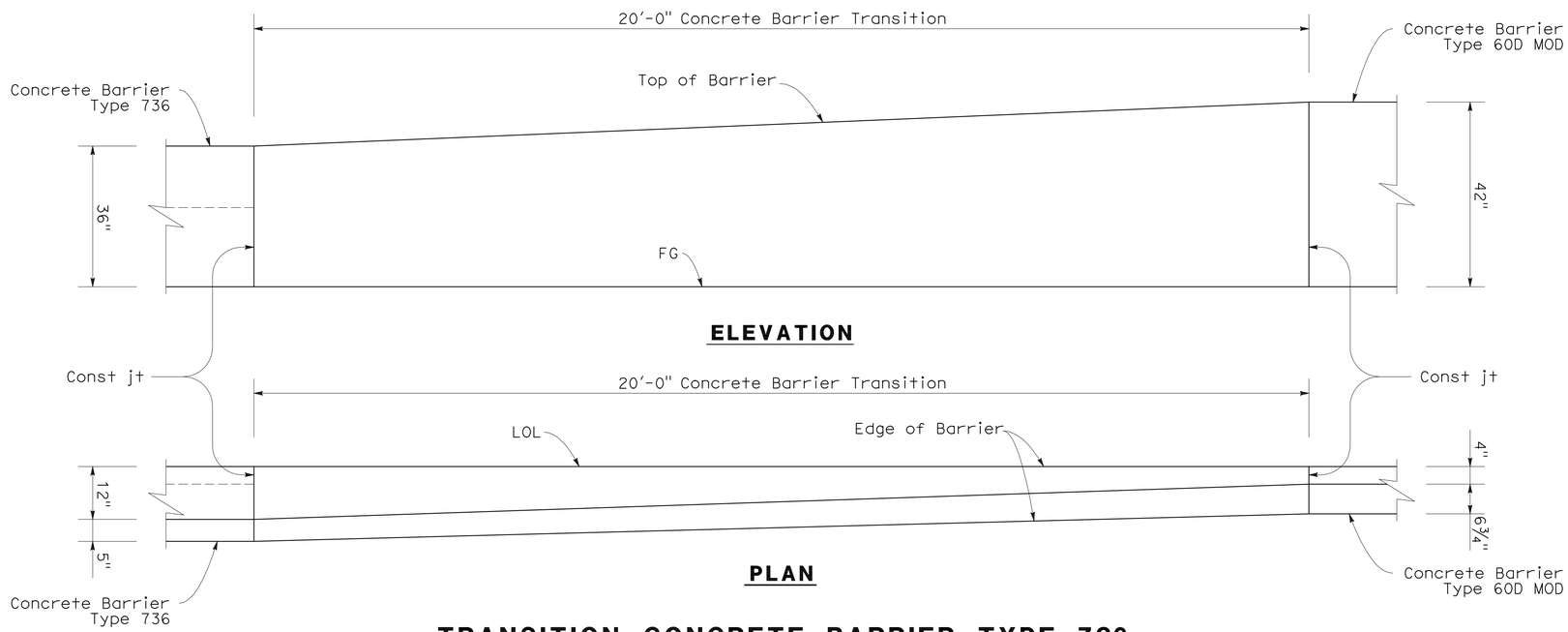

TRANSITION CONCRETE BARRIER TYPE 736 TO CONCRETE BARRIER TYPE 60D MOD

RETAINING WALL DETAILS

RETAINING WALL No. 41

SCALE AS SHOWN **R9-2**

APPROVED FOR RETAINING WALL WORK ONLY

STATE OF CALIFORNIA - DEPARTMENT OF TRANSPORTATION
Caltrans
DESIGN

FUNCTIONAL SUPERVISOR: BEN AMIRI
CALCULATED-DESIGNED BY: JUSTINE NIU
CHECKED BY: DAT H. WONG
REVISED BY
DATE REVISED

LAST REVISION 04-13-12
DATE PLOTTED => 17-APR-2012
TIME PLOTTED => 20:24

Dist	COUNTY	ROUTE	POST MILES TOTAL PROJECT	SHEET No.	TOTAL SHEETS
08	Riv,SBd	91,215	21.5/21.7, 43.2/45.2,0.0/5.1	742	1743

LICENSED LANDSCAPE ARCHITECT

4-16-12
PLANS APPROVAL DATE

LICENSED LANDSCAPE ARCHITECT — RAY L. DESSELLE No. 2272 — Signature — Renewal Date 11/30/13 — Date 04/13/12 — STATE OF CALIFORNIA

THE STATE OF CALIFORNIA OR ITS OFFICERS OR AGENTS SHALL NOT BE RESPONSIBLE FOR THE ACCURACY OR COMPLETENESS OF SCANNED COPIES OF THIS PLAN SHEET.

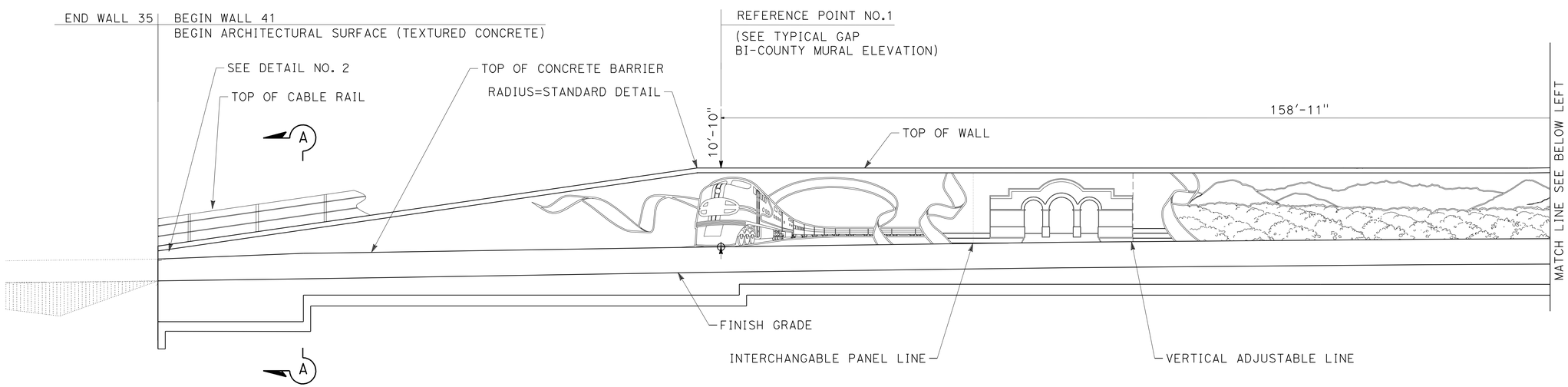

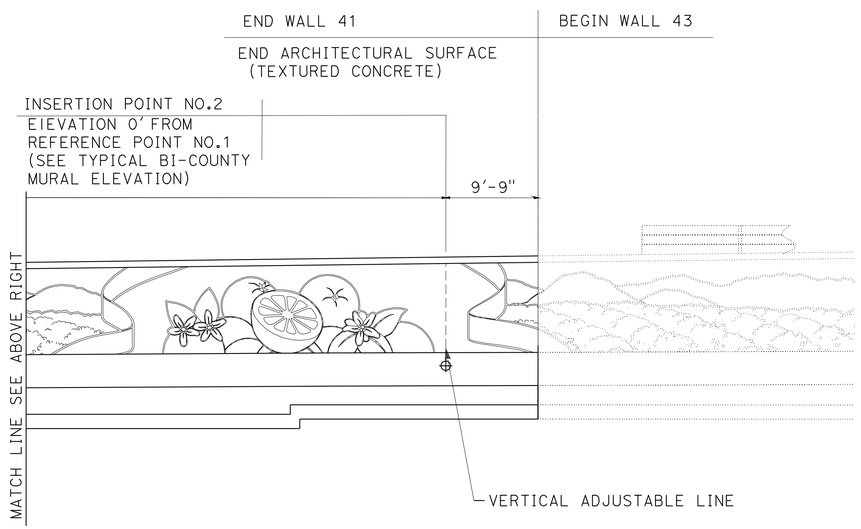

ELEVATION FOR BI-COUNTY MURAL MOTIF TEXTURE RETAINING WALL No. 41

THIS PLAN IS ACCURATE FOR ARCHITECTUAL TREATMENT WORK ONLY.

ARCHITECTURAL SURFACE
RETAINING WALL No. 41

SCALE: 1/8" = 1'0

R9-3

REVISED BY | DATE REVISED
MATTHEW HALL | MICHAEL BABICH
CALCULATED-DESIGNED BY | CHECKED BY
SENIOR LANDSCAPE ARCHITECT | RAY DESSELLE
STATE OF CALIFORNIA - DEPARTMENT OF TRANSPORTATION
Caltrans LANDSCAPE ARCHITECTURE

LAST REVISION 04-13-12 | DATE PLOTTED => 17-APR-2012 | TIME PLOTTED => 20:24

DIST	COUNTY	ROUTE	POST MILES TOTAL PROJECT	SHEET No.	TOTAL SHEETS
08	Riv,SBd	91,215	21.5/21.7, 43.2/45.2,0.0/5.1	743	1743

REGISTERED CIVIL ENGINEER 1-11-12 DATE

4-16-12
PLANS APPROVAL DATE

REGISTERED PROFESSIONAL ENGINEER Brian Gutierrez No. C66258 Exp. 6-30-12 CIVIL STATE OF CALIFORNIA

The State of California or its officers or agents shall not be responsible for the accuracy or completeness of electronic copies of this plan sheet.

This LOTB sheet was prepared in accordance with the Caltrans Soil & Rock Logging, Classification, & Presentation Manual (2010 Edition).

BENCH MARK

BM 048
Set 1" IP W/ALUM PLUG STAMPED "SBD 215 PM 0.48 GPS 2010" TOP SLOPE NB IOWA AVE ON-RAMP; 13' WLY R/W FENCE; 6' WLY CL V-DITCH; 70' NELY RAMP METER SIGNAL.
N 1,832,045.099
E 6,763,416.060
Elev 927.971
NAVD88

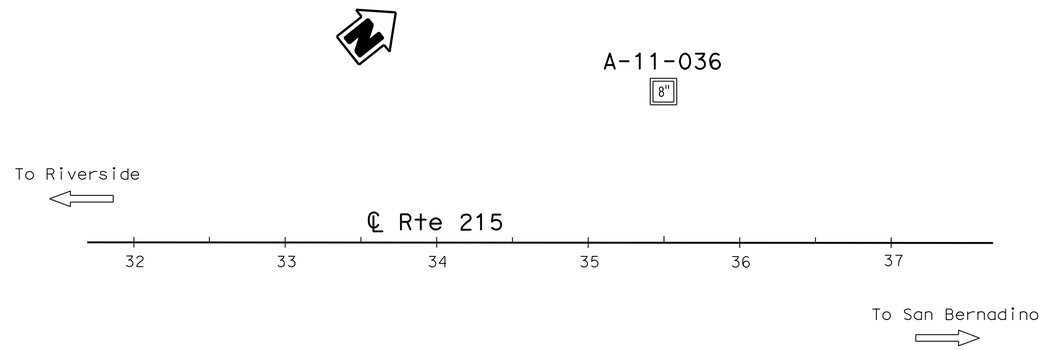

PLAN
1" = 50'

Note: No ground water encountered during field investigation.

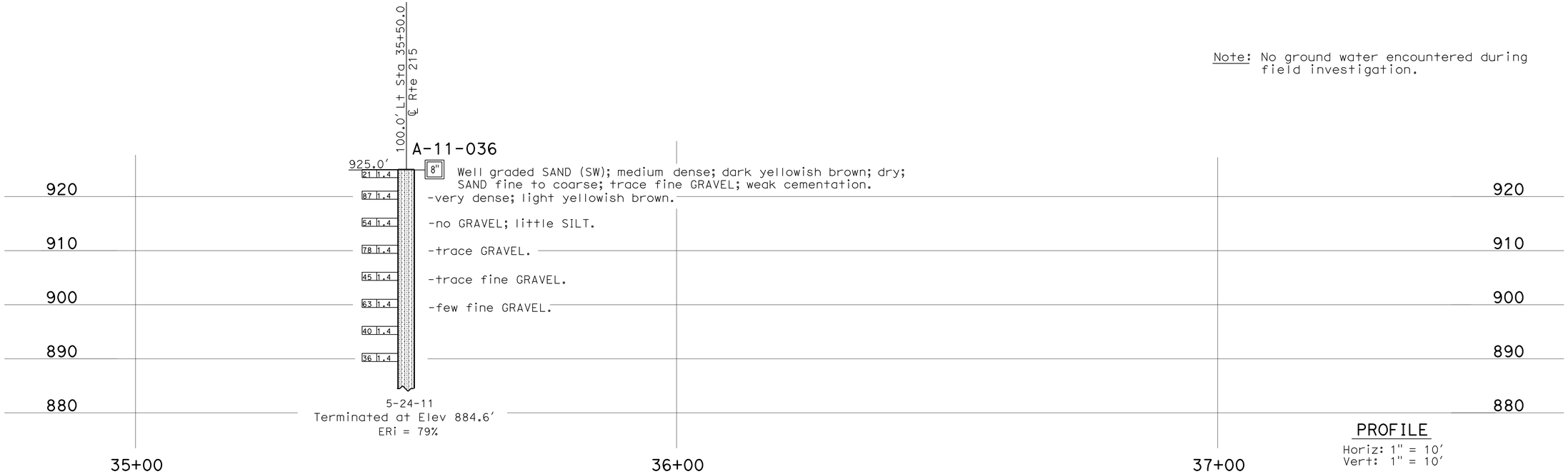

PROFILE
Horiz: 1" = 10'
Vert: 1" = 10'

ENGINEERING SERVICES	MATERIALS AND GEOTECHNICAL SERVICES	STATE OF CALIFORNIA DEPARTMENT OF TRANSPORTATION	DIVISION OF ENGINEERING SERVICES STRUCTURE DESIGN DESIGN BRANCH X	BRIDGE NO. / POST MILE 0.0-5.0	RETAINING WALLS 41 LOG OF TEST BORINGS 1 OF 3
FUNCTIONAL SUPERVISOR NAME: S. Wei	DRAWN BY: W. Tang, I.G-Remmen CHECKED BY: B. Levine	FIELD INVESTIGATION BY: C. Hoadley			

OGS CIVIL LOG OF TEST BORINGS SHEET

ORIGINAL SCALE IN INCHES FOR REDUCED PLANS 0 1 2 3

UNIT: 3643
PROJECT NUMBER & PHASE: 08000005061 CONTRACT NO.: 08-0M9401

DISREGARD PRINTS BEARING EARLIER REVISION DATES

REVISION DATES				SHEET	OF
12-20-11	01-06-12			X	X

FILE => 80m94uqi004.dgn

USERNAME => s114640 DATE PLOTTED => 17-APR-2012 TIME PLOTTED => 20:24

DIST	COUNTY	ROUTE	POST MILES TOTAL PROJECT	SHEET No.	TOTAL SHEETS
08	Riv,SBd	91,215	21.5/21.1, 43.2/45.2,0.0/5.1	744	1743

REGISTERED CIVIL ENGINEER 1-11-12 DATE

4-16-12
PLANS APPROVAL DATE

REGISTERED PROFESSIONAL ENGINEER Brian Gutierrez No. C66258 Exp. 6-30-12 CIVIL STATE OF CALIFORNIA

The State of California or its officers or agents shall not be responsible for the accuracy or completeness of electronic copies of this plan sheet.

REFERENCE: CALTRANS SOIL & ROCK LOGGING, CLASSIFICATION, AND PRESENTATION MANUAL (2010)

CEMENTATION

Description	Criteria
Weak	Crumbles or breaks with handling or little finger pressure.
Moderate	Crumbles or breaks with considerable finger pressure.
Strong	Will not crumble or break with finger pressure.

BOREHOLE IDENTIFICATION

Symbol	Hole Type	Description
Size	A	Auger Boring (hollow or solid stem bucket)
Size	R RW RC P	Rotary drilled boring (conventional) Rotary drilled with self-casing wire-line Rotary core with continuously-sampled, self-casing wire-line Rotary percussion boring (air)
Size	R	Rotary drilled diamond core
Size	HD HA	Hand driven (1-inch soil tube) Hand Auger
●	D	Dynamic Cone Penetration Boring
▲	CPT	Cone Penetration Test (ASTM D 5778)
⬚	O	Other (note on LOTB)

Note: Size in inches.

CONSISTENCY OF COHESIVE SOILS

Description	Shear Strength (tsf)	Pocket Penetrometer Measurement, PP, (tsf)	Torvane Measurement, TV, (tsf)	Vane Shear Measurement, VS, (tsf)
Very Soft	Less than 0.12	Less than 0.25	Less than 0.12	Less than 0.12
Soft	0.12 - 0.25	0.25 - 0.5	0.12 - 0.25	0.12 - 0.25
Medium Stiff	0.25 - 0.5	0.5 - 1	0.25 - 0.5	0.25 - 0.5
Stiff	0.5 - 1	1 - 2	0.5 - 1	0.5 - 1
Very Stiff	1 - 2	2 - 4	1 - 2	1 - 2
Hard	Greater than 2	Greater than 4	Greater than 2	Greater than 2

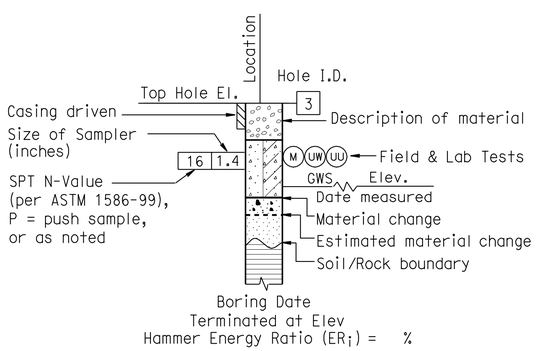

ROTARY BORING

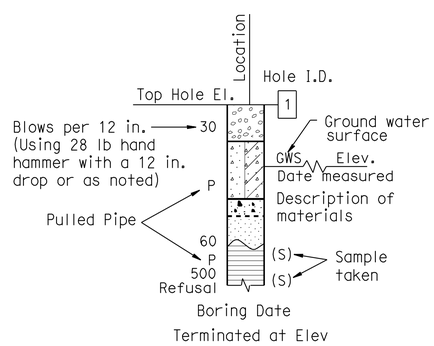

HAND BORING

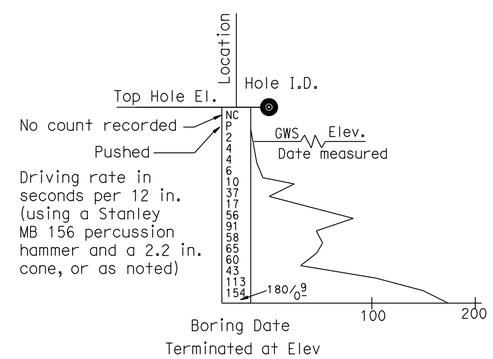

DYNAMIC CONE PENETRATION BORING

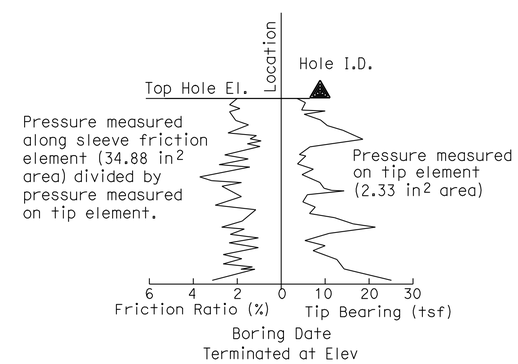

CONE PENETRATION TEST (CPT) BORING

ENGINEERING SERVICES	GEOTECHNICAL SERVICES	STATE OF CALIFORNIA DEPARTMENT OF TRANSPORTATION	DIVISION OF ENGINEERING SERVICES STRUCTURE DESIGN DESIGN BRANCH X	BRIDGE NO. / POST MILE 0.0-5.0	RETAINING WALLS 41 LOG OF TEST BORINGS 2 OF 2
	PREPARED BY: I.G-Remmen				

GS LOTB SOIL LEGEND

ORIGINAL SCALE IN INCHES FOR REDUCED PLANS 0 1 2 3

UNIT: 3643
PROJECT NUMBER & PHASE: 08000005061 CONTRACT NO.: 08-0M9401

DISREGARD PRINTS BEARING EARLIER REVISION DATES

REVISION DATES | SHEET X | OF X

FILE => 80m94uqi005.dgn

USERNAME => s114640 DATE PLOTTED => 17-APR-2012 TIME PLOTTED => 20:24

REFERENCE: CALTRANS SOIL & ROCK LOGGING, CLASSIFICATION, AND PRESENTATION MANUAL (2010)

DIST	COUNTY	ROUTE	POST MILES TOTAL PROJECT	SHEET No.	TOTAL SHEETS
08	Riv,SBd	91,215	21.5/21.7, 43.2/45.2,0.0/5.1	745	1743

REGISTERED CIVIL ENGINEER 1-11-12 DATE

4-16-12
PLANS APPROVAL DATE

REGISTERED PROFESSIONAL ENGINEER Brian Gutierrez No. C66258 Exp. 6-30-12 CIVIL STATE OF CALIFORNIA

The State of California or its officers or agents shall not be responsible for the accuracy or completeness of electronic copies of this plan sheet.

GROUP SYMBOLS AND NAMES

Graphic/Symbol	Group Names	Graphic/Symbol	Group Names
GW	Well-graded GRAVEL Well-graded GRAVEL with SAND	CL	Lean CLAY Lean CLAY with SAND Lean CLAY with GRAVEL SANDY lean CLAY SANDY lean CLAY with GRAVEL GRAVELLY lean CLAY GRAVELLY lean CLAY with SAND
GP	Poorly-graded GRAVEL Poorly-graded GRAVEL with SAND		
GW-GM	Well-graded GRAVEL with SILT Well-graded GRAVEL with SILT and SAND	CL-ML	SILTY CLAY SILTY CLAY with SAND SILTY CLAY with GRAVEL SANDY SILTY CLAY SANDY SILTY CLAY with GRAVEL GRAVELLY SILTY CLAY GRAVELLY SILTY CLAY with SAND
GW-GC	Well-graded GRAVEL with CLAY (or SILTY CLAY) Well-graded GRAVEL with CLAY and SAND (or SILTY CLAY and SAND)		
GP-GM	Poorly-graded GRAVEL with SILT Poorly-graded GRAVEL with SILT and SAND	ML	SILT SILT with SAND SILT with GRAVEL SANDY SILT SANDY SILT with GRAVEL GRAVELLY SILT GRAVELLY SILT with SAND
GP-GC	Poorly-graded GRAVEL with CLAY (or SILTY CLAY) Poorly-graded GRAVEL with CLAY and SAND (or SILTY CLAY and SAND)		
GM	SILTY GRAVEL SILTY GRAVEL with SAND	OL	ORGANIC lean CLAY ORGANIC lean CLAY with SAND ORGANIC lean CLAY with GRAVEL SANDY ORGANIC lean CLAY SANDY ORGANIC lean CLAY with GRAVEL GRAVELLY ORGANIC lean CLAY GRAVELLY ORGANIC lean CLAY with SAND
GC	CLAYEY GRAVEL CLAYEY GRAVEL with SAND		
GC-GM	SILTY, CLAYEY GRAVEL SILTY, CLAYEY GRAVEL with SAND	OL	ORGANIC SILT ORGANIC SILT with SAND ORGANIC SILT with GRAVEL SANDY ORGANIC SILT SANDY ORGANIC SILT with GRAVEL GRAVELLY ORGANIC SILT GRAVELLY ORGANIC SILT with SAND
SW	Well-graded SAND Well-graded SAND with GRAVEL		
SP	Poorly-graded SAND Poorly-graded SAND with GRAVEL	CH	Fat CLAY Fat CLAY with SAND Fat CLAY with GRAVEL SANDY fat CLAY SANDY fat CLAY with GRAVEL GRAVELLY fat CLAY GRAVELLY fat CLAY with SAND
SW-SM	Well-graded SAND with SILT Well-graded SAND with SILT and GRAVEL		
SW-SC	Well-graded SAND with CLAY (or SILTY CLAY) Well-graded SAND with CLAY and GRAVEL (or SILTY CLAY and GRAVEL)	MH	Elastic SILT Elastic SILT with SAND Elastic SILT with GRAVEL SANDY elastic SILT SANDY elastic SILT with GRAVEL GRAVELLY elastic SILT GRAVELLY elastic SILT with SAND
SP-SM	Poorly-graded SAND with SILT Poorly-graded SAND with SILT and GRAVEL		
SP-SC	Poorly-graded SAND with CLAY (or SILTY CLAY) Poorly-graded SAND with CLAY and GRAVEL (or SILTY CLAY and GRAVEL)	OH	ORGANIC fat CLAY ORGANIC fat CLAY with SAND ORGANIC fat CLAY with GRAVEL SANDY ORGANIC fat CLAY SANDY ORGANIC fat CLAY with GRAVEL GRAVELLY ORGANIC fat CLAY GRAVELLY ORGANIC fat CLAY with SAND
SM	SILTY SAND SILTY SAND with GRAVEL		
SC	CLAYEY SAND CLAYEY SAND with GRAVEL	OH	ORGANIC elastic SILT ORGANIC elastic SILT with SAND ORGANIC elastic SILT with GRAVEL SANDY ORGANIC elastic SILT SANDY ORGANIC elastic SILT with GRAVEL GRAVELLY ORGANIC elastic SILT GRAVELLY ORGANIC elastic SILT with SAND
SC-SM	SILTY, CLAYEY SAND SILTY, CLAYEY SAND with GRAVEL		
PT	PEAT	OL/OH	ORGANIC SOIL ORGANIC SOIL with SAND ORGANIC SOIL with GRAVEL SANDY ORGANIC SOIL SANDY ORGANIC SOIL with GRAVEL GRAVELLY ORGANIC SOIL GRAVELLY ORGANIC SOIL with SAND
	COBBLES COBBLES and BOULDERS BOULDERS		

FIELD AND LABORATORY TESTING

- (C) Consolidation (ASTM D 2435)
- (CL) Collapse Potential (ASTM D 5333)
- (CP) Compaction Curve (CTM 216)
- (CR) Corrosivity Testing (CTM 643, CTM 422, CTM 417)
- (CU) Consolidated Undrained Triaxial (ASTM D 4767)
- (DS) Direct Shear (ASTM D 3080)
- (EI) Expansion Index (ASTM D 4829)
- (M) Moisture Content (ASTM D 2216)
- (OC) Organic Content-% (ASTM D 2974)
- (P) Permeability (CTM 220)
- (PA) Particle Size Analysis (ASTM D 422)
- (PI) Plasticity Index (AASHTO T 90) Liquid Limit (AASHTO T 89)
- (PL) Point Load Index (ASTM D 5731)
- (PM) Pressure Meter
- (R) R-Value (CTM 301)
- (SE) Sand Equivalent (CTM 217)
- (SG) Specific Gravity (AASHTO T 100)
- (SL) Shrinkage Limit (ASTM D 427)
- (SW) Swell Potential (ASTM D 4546)
- (UC) Unconfined Compression-Soil (ASTM D 2166) Unconfined Compression-Rock (ASTM D 2938)
- (UU) Unconsolidated Undrained Triaxial (ASTM D 2850)
- (UW) Unit Weight (ASTM D 4767)

APPARENT DENSITY OF COHESIONLESS SOILS

Description	SPT N_{60} (Blows / 12 in.)
Very Loose	0 - 5
Loose	5 - 10
Medium Dense	10 - 30
Dense	30 - 50
Very Dense	Greater than 50

MOISTURE

Description	Criteria
Dry	No discernable moisture
Moist	Moisture present, but no free water
Wet	Visible free water

PERCENT OR PROPORTION OF SOILS

Description	Criteria
Trace	Particles are present but estimated to be less than 5%
Few	5% - 10%
Little	15% - 25%
Some	30% - 45%
Mostly	50% - 100%

PARTICLE SIZE

Description		Size (in.)
Boulder		Greater than 12
Cobble		3 - 12
Gravel	Coarse	3/4 - 3
	Fine	1/5 - 3/4
Sand	Coarse	1/16 - 1/5
	Medium	1/64 - 1/16
	Fine	1/300 - 1/64
Silt and Clay		Less than 1/300

ENGINEERING SERVICES

GEOTECHNICAL SERVICES

PREPARED BY: I.G-Remmen

STATE OF CALIFORNIA
DEPARTMENT OF TRANSPORTATION

DIVISION OF ENGINEERING SERVICES
STRUCTURE DESIGN
DESIGN BRANCH X

BRIDGE NO.

POST MILE 0.0-5.0

RETAINING WALLS 41

LOG OF TEST BORINGS 3 OF 3

GS LOTB SOIL LEGEND

ORIGINAL SCALE IN INCHES FOR REDUCED PLANS 0 1 2 3

UNIT: 3643
PROJECT NUMBER & PHASE: 08000005061
CONTRACT NO.: 08-0M9401

DISREGARD PRINTS BEARING EARLIER REVISION DATES

REVISION DATES | SHEET X | OF X

FILE => 80m94uqi006.dgn

USERNAME => s114640 DATE PLOTTED => 17-APR-2012 TIME PLOTTED => 20:24

Dist	COUNTY	ROUTE	POST MILES TOTAL PROJECT	SHEET No.	TOTAL SHEETS
08	Riv,SBd	91,215	21.5/21.7, 43.2/45.2,0.0/5.1	746	1743

REGISTERED CIVIL ENGINEER 4-13-12 DATE

4-16-12
PLANS APPROVAL DATE

REGISTERED PROFESSIONAL ENGINEER JUSTINE NIU No. C 62897 Exp. 6-30-12 CIVIL STATE OF CALIFORNIA

THE STATE OF CALIFORNIA OR ITS OFFICERS OR AGENTS SHALL NOT BE RESPONSIBLE FOR THE ACCURACY OR COMPLETENESS OF SCANNED COPIES OF THIS PLAN SHEET.

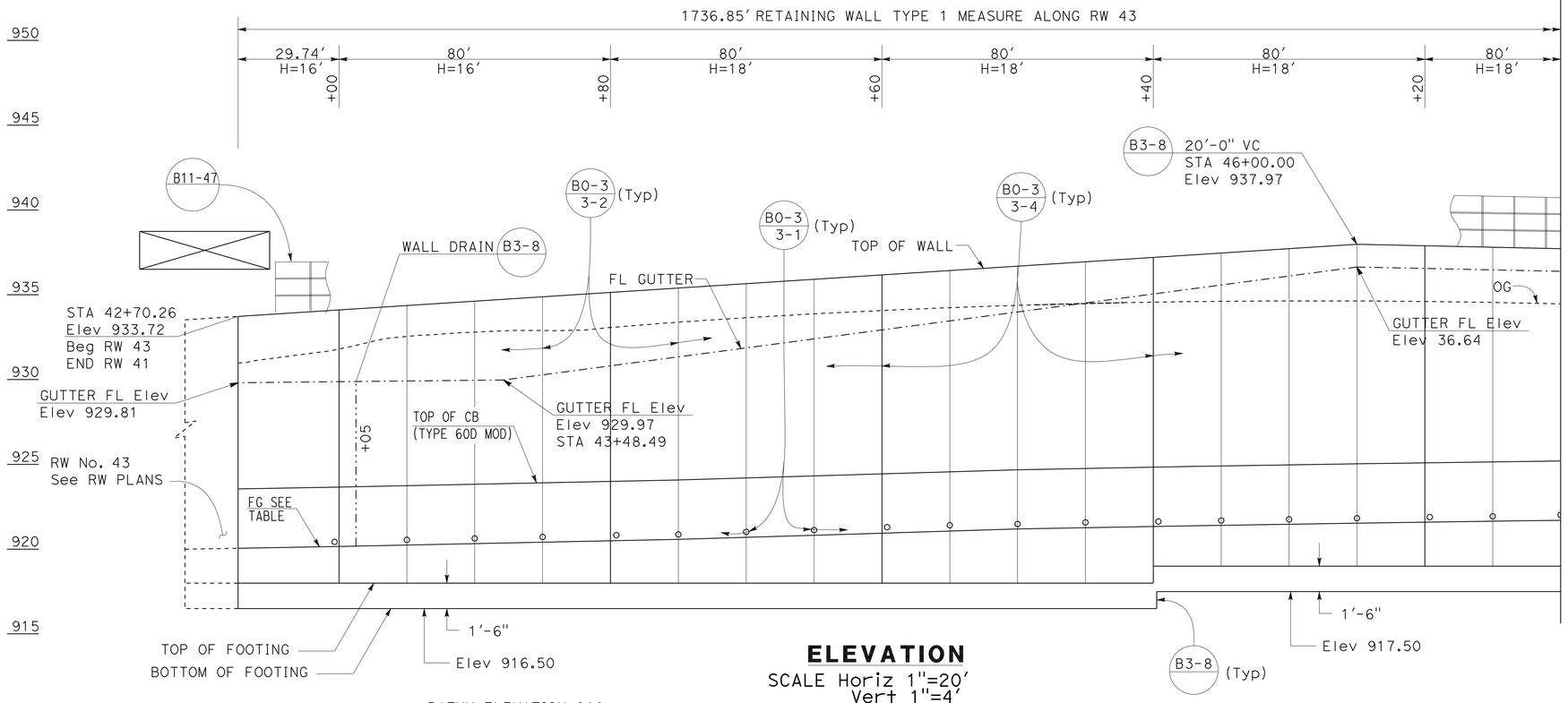

ELEVATION

SCALE Horiz 1"=20'
Vert 1"=4'

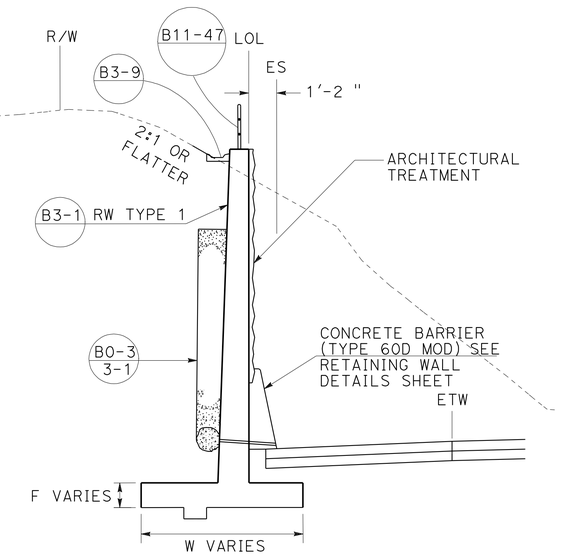

TYPICAL SECTION

STA 42+70.26 TO 60+07.11
NO SCALE

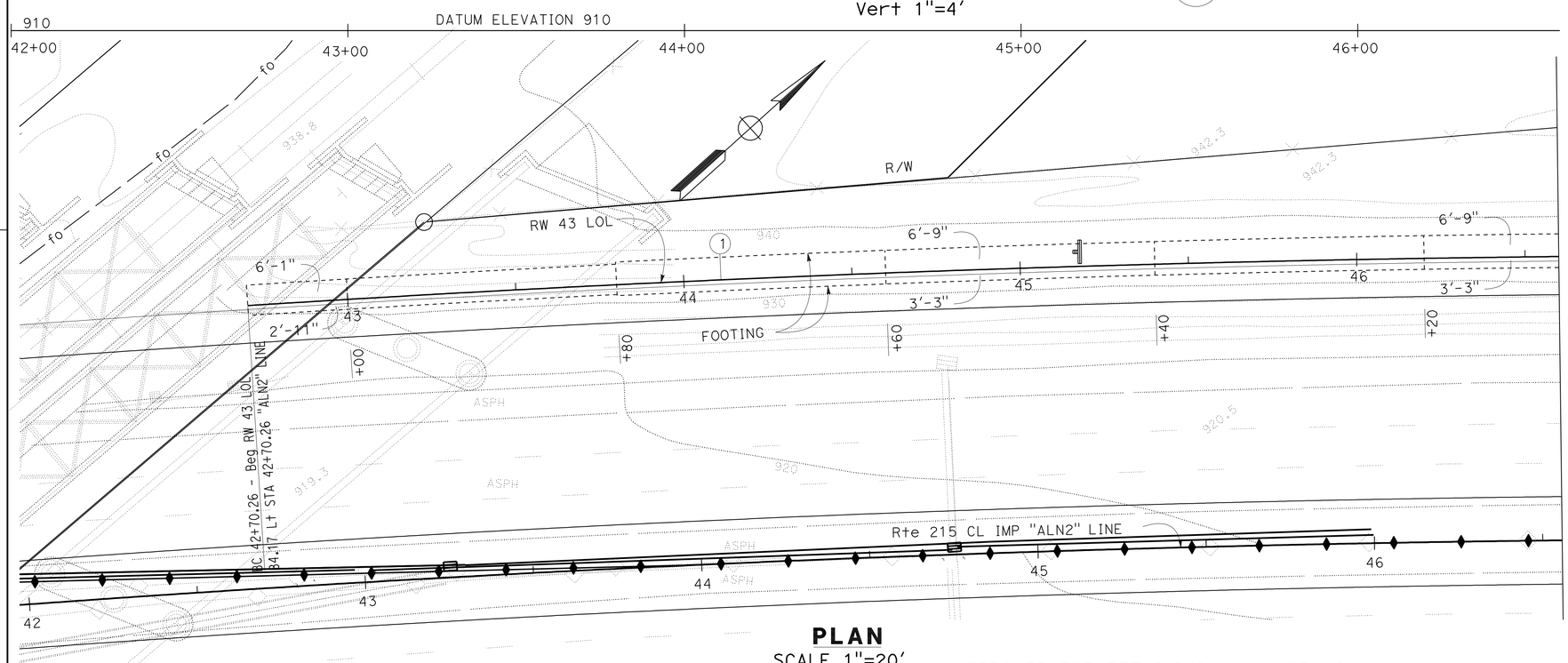

PLAN

SCALE 1"=20'

NOTES:

1. ARCHITECTURAL TREATMENT SHOULD EXTEND 6 IN BELOW FG OR 6 IN BELOW TOP CB (TYPE 60D MOD)
2. FOR STRUCTURAL SECTIONS, SEE ROADWAY PLANS
3. FOR POST ANCHORAGE DETAILS, SEE B11-52

CURVE DATA

No.	R	Δ	T	L
1	7341'	4°30'47"	289.27'	578.24'

RETAINING WALL PLAN

RETAINING WALL No. 43

SCALE AS SHOWN

R10-1

APPROVED FOR RETAINING WALL WORK ONLY

STATE OF CALIFORNIA - DEPARTMENT OF TRANSPORTATION
DESIGN
Caltrans

FUNCTIONAL SUPERVISOR: BEN AMIRI
CALCULATED-DESIGNED BY: DAT H. WONG
CHECKED BY: JUSTINE NIU
REVISED BY
DATE REVISED

LAST REVISION 04-13-12
DATE PLOTTED => 17-APR-2012
TIME PLOTTED => 20:24

Dist	COUNTY	ROUTE	POST MILES TOTAL PROJECT	SHEET No.	TOTAL SHEETS
08	Riv,SBd	91,215	21.5/21.7, 43.2/45.2,0.0/5.1	747	1743

REGISTERED CIVIL ENGINEER 1-2-12 DATE

4-16-12
PLANS APPROVAL DATE

REGISTERED PROFESSIONAL ENGINEER JUSTINE NIU No. C 62897 Exp. 6-30-12 CIVIL STATE OF CALIFORNIA

THE STATE OF CALIFORNIA OR ITS OFFICERS OR AGENTS SHALL NOT BE RESPONSIBLE FOR THE ACCURACY OR COMPLETENESS OF SCANNED COPIES OF THIS PLAN SHEET.

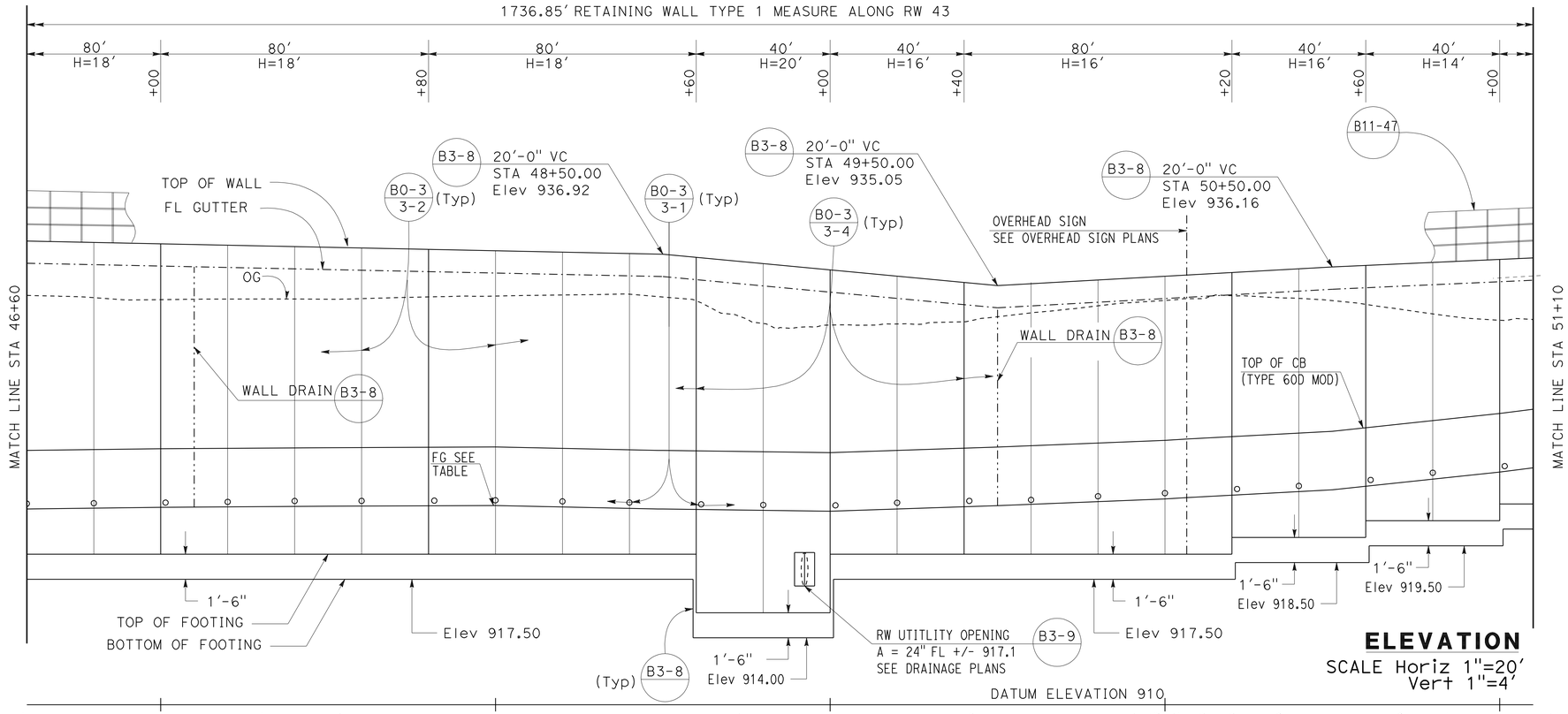

ELEVATION
SCALE Horiz 1"=20'
Vert 1"=4'

CURVE DATA

No.	R	Δ	T	L
1	7341'	4°30'47"	289.27'	578.24'

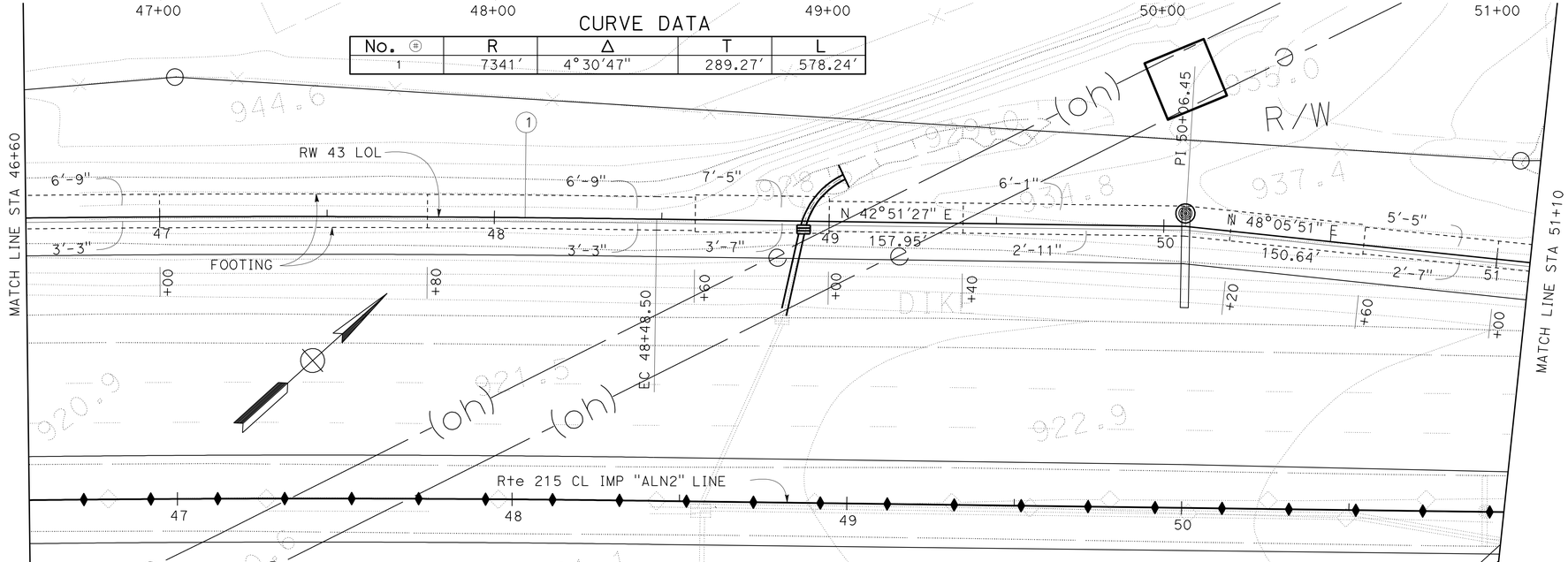

PLAN
SCALE 1"=20'

APPROVED FOR RETAINING WALL WORK ONLY

ELEVATION TABLE	
STATION	FG
42+70.26	920.05
43+00.00	920.16
43+50.00	920.37
44+00.00	920.58
44+50.00	920.88
45+00.00	921.18
45+50.00	921.37
46+00.00	921.53
46+50.00	921.67
47+00.00	921.80
47+50.00	921.86
48+00.00	921.91
48+50.00	921.70
49+00.00	921.57
49+50.00	921.90
50+00.00	922.30
50+50.00	922.84
51+00.00	923.91
51+50.00	925.17
52+00.00	926.81
52+50.00	928.61
53+00.00	930.37
53+50.00	932.12
54+00.00	933.95
54+50.00	935.80
55+00.00	937.53
55+50.00	939.24
56+00.00	941.03
56+50.00	942.82
57+00.00	944.60
57+50.00	946.39
58+00.00	948.17
58+50.00	949.92
59+00.00	951.54
59+50.00	953.09
60+07.11	954.72

RETAINING WALL PLAN
RETAINING WALL No. 43

SCALE AS SHOWN **R10-2**

STATE OF CALIFORNIA - DEPARTMENT OF TRANSPORTATION
Caltrans® **DESIGN**

FUNCTIONAL SUPERVISOR: BEN AMIRI
CALCULATED-DESIGNED BY: DAT H. WONG
CHECKED BY: JUSTINE NIU
REVISED BY
DATE REVISED

LAST REVISION 01-02-12
DATE PLOTTED => 17-APR-2012
TIME PLOTTED => 20:24

Dist	COUNTY	ROUTE	POST MILES TOTAL PROJECT	SHEET No.	TOTAL SHEETS
08	Riv,SBd	91,215	21.5/21.7, 43.2/45.2,0.0/5.1	748	1743

REGISTERED CIVIL ENGINEER 1-2-12 DATE

4-16-12
PLANS APPROVAL DATE

REGISTERED PROFESSIONAL ENGINEER
JUSTINE NIU
No. C 62897
Exp. 6-30-12
CIVIL
STATE OF CALIFORNIA

THE STATE OF CALIFORNIA OR ITS OFFICERS OR AGENTS SHALL NOT BE RESPONSIBLE FOR THE ACCURACY OR COMPLETENESS OF SCANNED COPIES OF THIS PLAN SHEET.

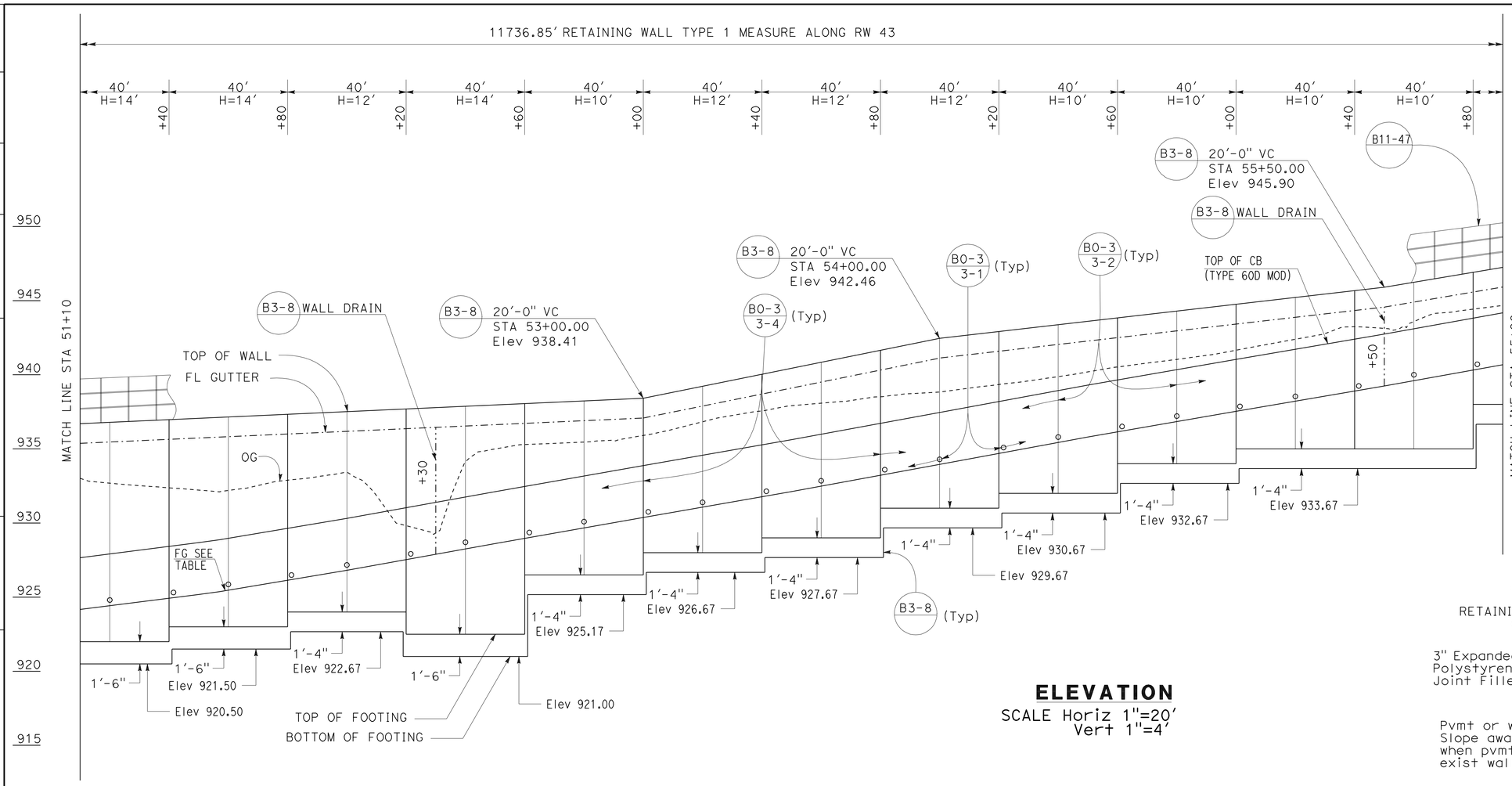

ELEVATION

SCALE Horiz 1"=20'
Vert 1"=4'

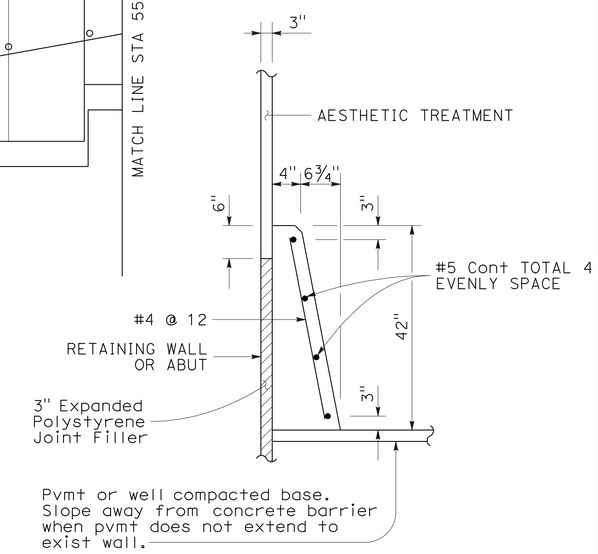

CONCRETE BARRIER (TYPE 60D MOD)

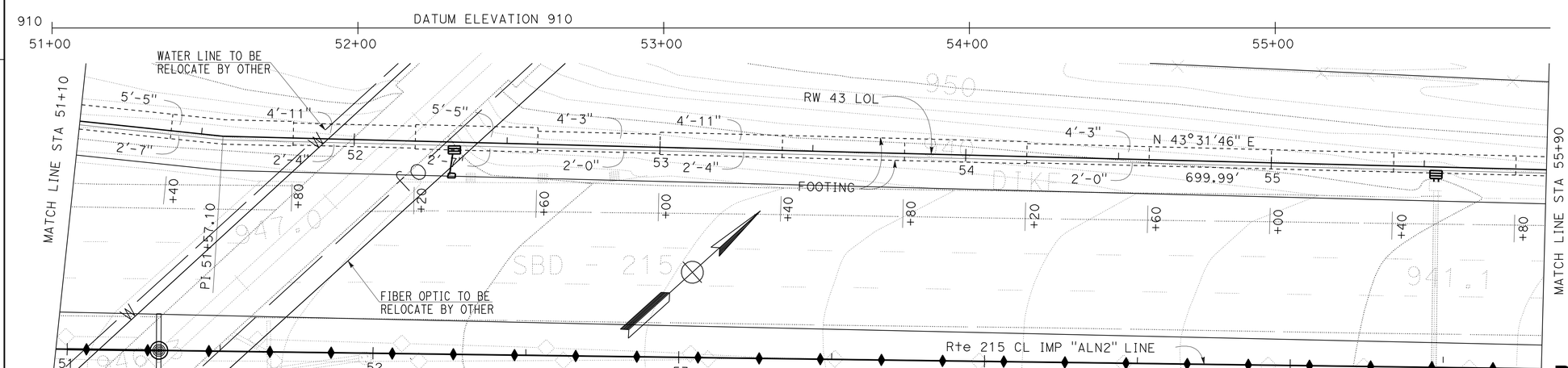

PLAN

SCALE 1"=20'

APPROVED FOR RETAINING WALL WORK ONLY

RETAINING WALL PLAN

RETAINING WALL No. 43

SCALE AS SHOWN **R10-3**

REVISED BY | DATE REVISED
DAT H. WONG | JUSTINE NIU
CALCULATED-DESIGNED BY | CHECKED BY
FUNCTIONAL SUPERVISOR: BEN AMIRI

STATE OF CALIFORNIA - DEPARTMENT OF TRANSPORTATION
Caltrans
DESIGN

LAST REVISION 01-02-12 | DATE PLOTTED => 17-APR-2012 | TIME PLOTTED => 20:24

Dist	COUNTY	ROUTE	POST MILES TOTAL PROJECT	SHEET No.	TOTAL SHEETS
08	Riv,SBd	91,215	21.5/21.7, 43.2/45.2,0.0/5.1	749	1743

REGISTERED CIVIL ENGINEER 4-13-12 DATE

4-16-12
PLANS APPROVAL DATE

REGISTERED PROFESSIONAL ENGINEER
JUSTINE NIU
No. C 62897
Exp. 6-30-12
CIVIL
STATE OF CALIFORNIA

THE STATE OF CALIFORNIA OR ITS OFFICERS OR AGENTS SHALL NOT BE RESPONSIBLE FOR THE ACCURACY OR COMPLETENESS OF SCANNED COPIES OF THIS PLAN SHEET.

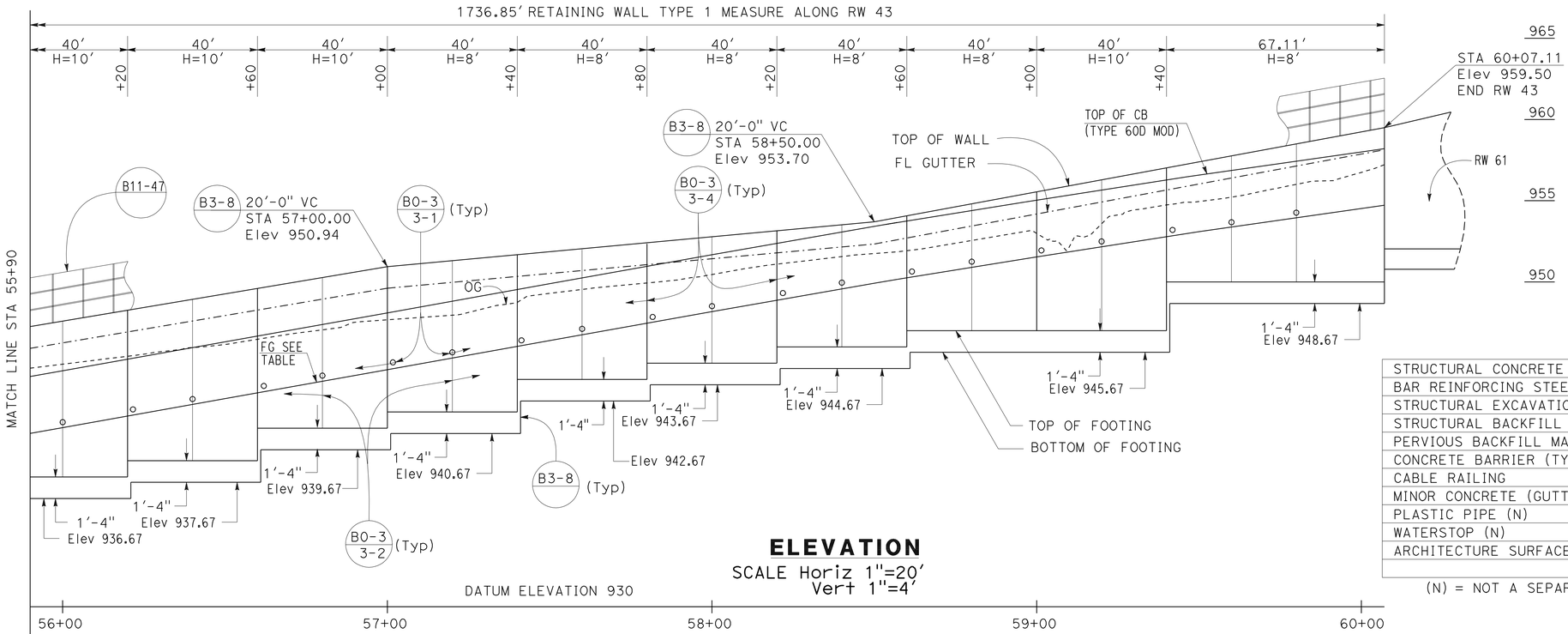

ELEVATION

SCALE Horiz 1"=20'
Vert 1"=4'

QUANTITIES

STRUCTURAL CONCRETE (RETAINING WALL)	2031.9	CY
BAR REINFORCING STEEL (RETAINING WALL)	190 389	LB
STRUCTURAL EXCAVATION (RETAINING WALL)	7975.6	CY
STRUCTURAL BACKFILL (RETAINING WALL)	5488.4	CY
PERVIOUS BACKFILL MATERIAL (RETAINING WALL)	489.6	CY
CONCRETE BARRIER (TYPE 60D MOD)	1736.9	LF
CABLE RAILING	1736.9	LF
MINOR CONCRETE (GUTTER)	1736.9	LF
PLASTIC PIPE (N)	123.8	LF
WATERSTOP (N)	346.6	LF
ARCHITECTURE SURFACE (TEXTURE CONCRETE)	13357	SF

(N) = NOT A SEPARATE PAY ITEM, FOR INFORMATION ONLY

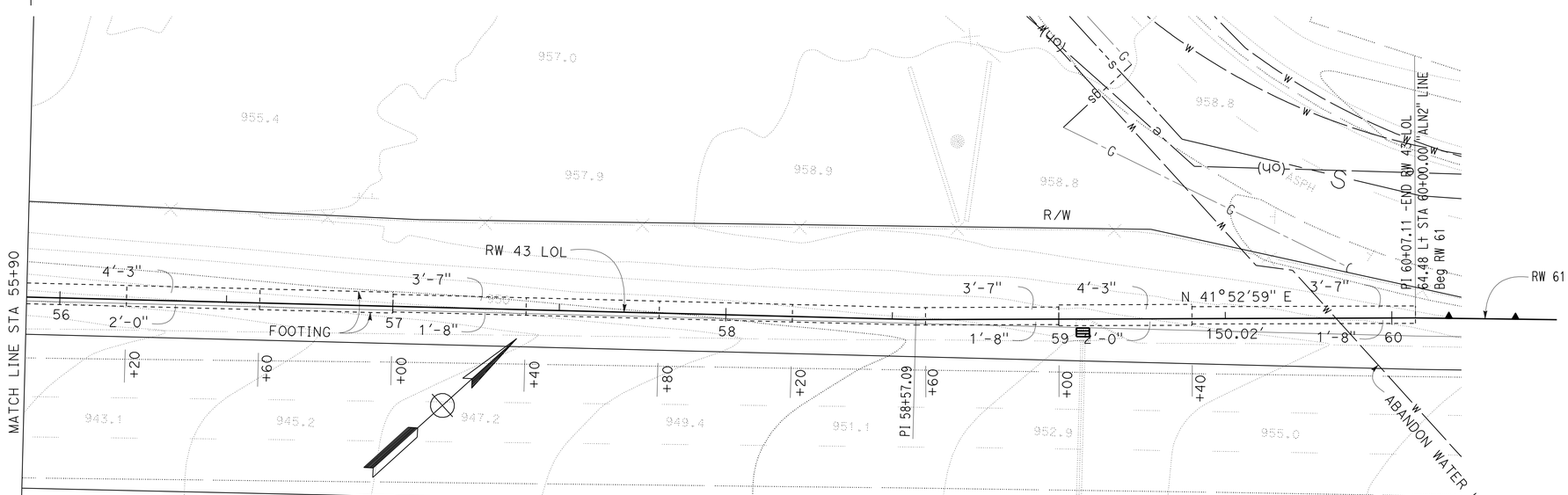

PLAN

SCALE 1"=20'

APPROVED FOR RETAINING WALL WORK ONLY

RETAINING WALL PLAN

RETAINING WALL No. 43

SCALE AS SHOWN **R10-4**

REVISED BY | DATE REVISED
DAT H. WONG | JUSTINE NIU
CALCULATED-DESIGNED BY | CHECKED BY
FUNCTIONAL SUPERVISOR: BEN AMIRI

STATE OF CALIFORNIA - DEPARTMENT OF TRANSPORTATION
Caltrans
DESIGN

LAST REVISION 04-13-12 | DATE PLOTTED => 17-APR-2012 | TIME PLOTTED => 20:24

Dist	COUNTY	ROUTE	POST MILES TOTAL PROJECT	SHEET No.	TOTAL SHEETS
08	Riv,SBd	91,215	21.5/21.7, 43.2/45.2,0.0/5.1	750	1743

LICENSED LANDSCAPE ARCHITECT

4-16-12
PLANS APPROVAL DATE

LICENSED LANDSCAPE ARCHITECT — RAY DESSELLE — Signature — Renewal Date 11/30/13 — Date 04/13/12 — STATE OF CALIFORNIA

THE STATE OF CALIFORNIA OR ITS OFFICERS OR AGENTS SHALL NOT BE RESPONSIBLE FOR THE ACCURACY OR COMPLETENESS OF SCANNED COPIES OF THIS PLAN SHEET.

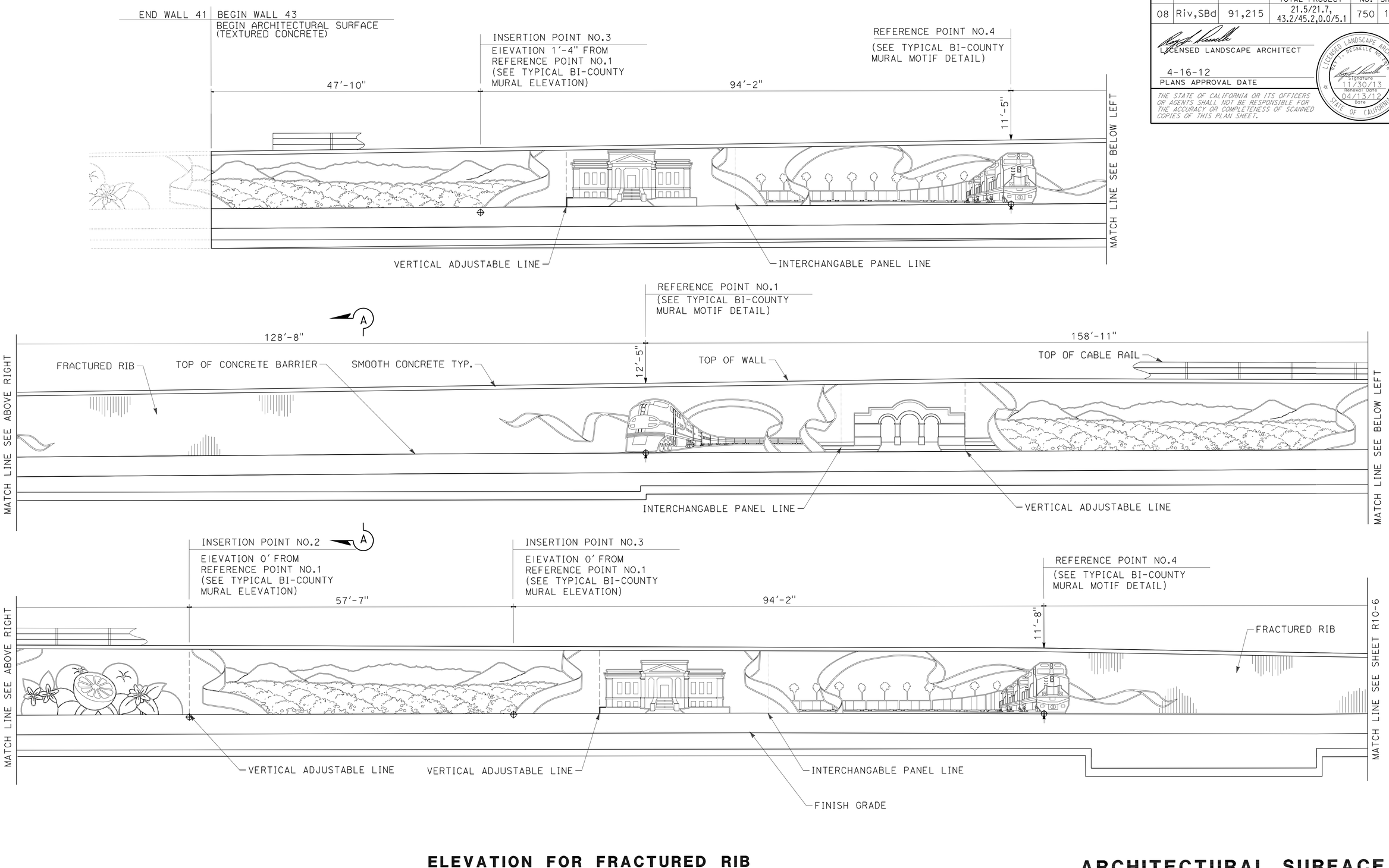

ELEVATION FOR FRACTURED RIB TEXTURE RETAINING WALL No. 43

THIS PLAN IS ACCURATE FOR ARCHITECTUAL TREATMENT WORK ONLY.

ARCHITECTURAL SURFACE
RETAINING WALL No. 43

SCALE: 1/8"=1'0

R10-5

STATE OF CALIFORNIA - DEPARTMENT OF TRANSPORTATION
Caltrans® LANDSCAPE ARCHITECTURE

SENIOR LANDSCAPE ARCHITECT: RAY DESSELLE
CALCULATED-DESIGNED BY: MATTHEW HALL
CHECKED BY: MICHAEL BABICH
REVISED BY / DATE REVISED

LAST REVISION 04-13-12
DATE PLOTTED => 03-MAY-2012
TIME PLOTTED => 14:37

Dist	COUNTY	ROUTE	POST MILES TOTAL PROJECT	SHEET No.	TOTAL SHEETS
08	Riv,SBd	91,215	21.5/21.7, 43.2/45.2,0.0/5.1	751	1743

LICENSED LANDSCAPE ARCHITECT

4-16-12
PLANS APPROVAL DATE

LICENSED LANDSCAPE ARCHITECT
RAY DESSELLE No. 2272
Signature
11/30/13
Renewal Date
04/13/12
Date
STATE OF CALIFORNIA

THE STATE OF CALIFORNIA OR ITS OFFICERS OR AGENTS SHALL NOT BE RESPONSIBLE FOR THE ACCURACY OR COMPLETENESS OF SCANNED COPIES OF THIS PLAN SHEET.

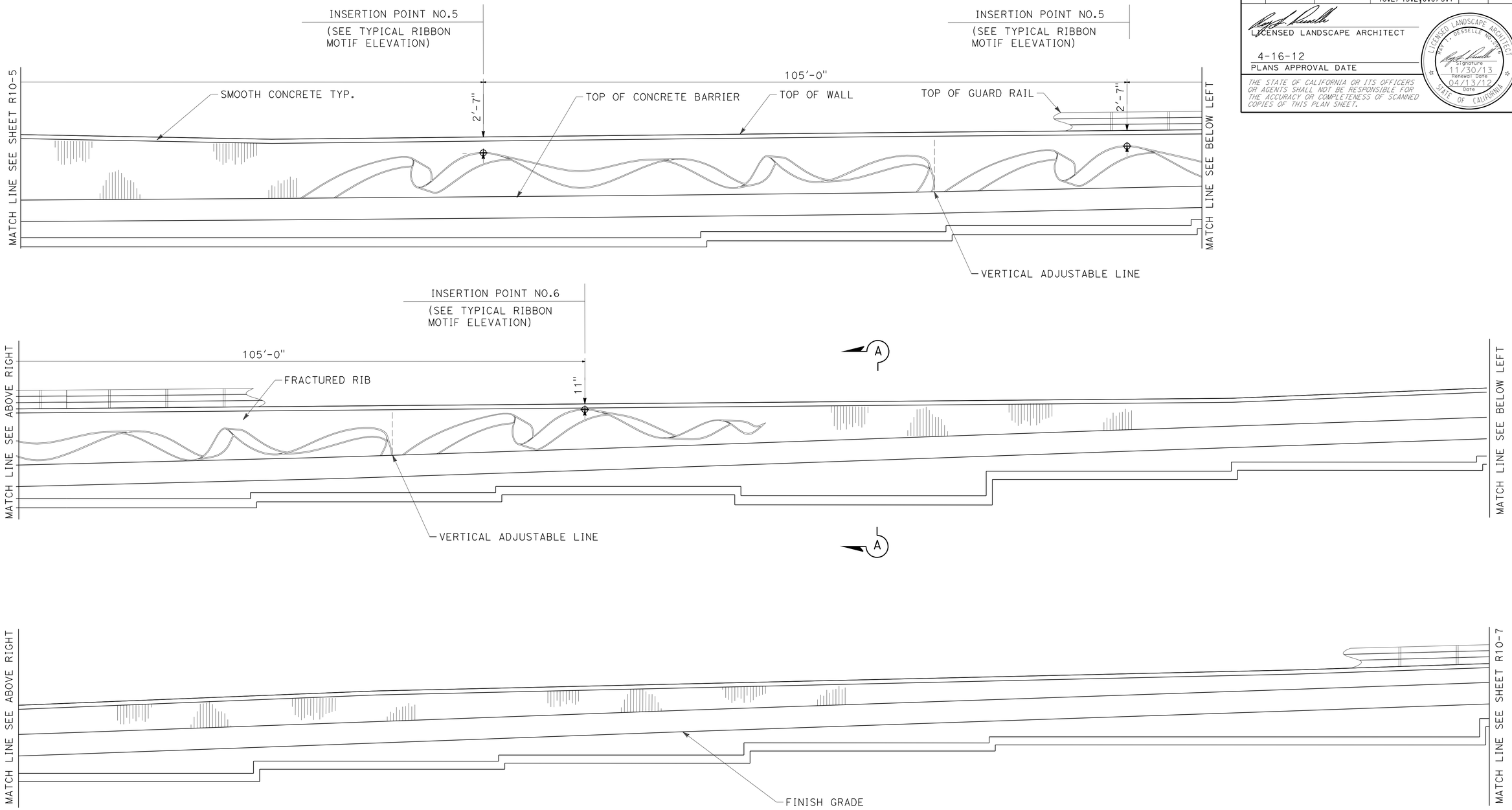

ELEVATION FOR BI-COUNTY MURAL TEXTURE RETAINING WALL No.43

THIS PLAN IS ACCURATE FOR ARCHITECTUAL TREATMENT WORK ONLY.

ARCHITECTURAL SURFACE
RETAINING WALL No. 43

SCALE: 1/8"=1'0

R10-6

STATE OF CALIFORNIA - DEPARTMENT OF TRANSPORTATION
Caltrans® LANDSCAPE ARCHITECTURE

SENIOR LANDSCAPE ARCHITECT: RAY DESSELLE
CALCULATED-DESIGNED BY: MATTHEW HALL
CHECKED BY: MICHAEL BABICH
REVISED BY
DATE REVISED

LAST REVISION 04-13-12
DATE PLOTTED => 03-MAY-2012
TIME PLOTTED => 14:37

Dist	COUNTY	ROUTE	POST MILES TOTAL PROJECT	SHEET No.	TOTAL SHEETS
08	Riv,SBd	91,215	21.5/21.7, 43.2/45.2,0.0/5.1	752	1743

LICENSED LANDSCAPE ARCHITECT

4-16-12
PLANS APPROVAL DATE

LICENSED LANDSCAPE ARCHITECT
RAY T. DESSELLE No. 2272
Signature
11/30/13
Renewal Date
04/13/12
Date
STATE OF CALIFORNIA

THE STATE OF CALIFORNIA OR ITS OFFICERS OR AGENTS SHALL NOT BE RESPONSIBLE FOR THE ACCURACY OR COMPLETENESS OF SCANNED COPIES OF THIS PLAN SHEET.

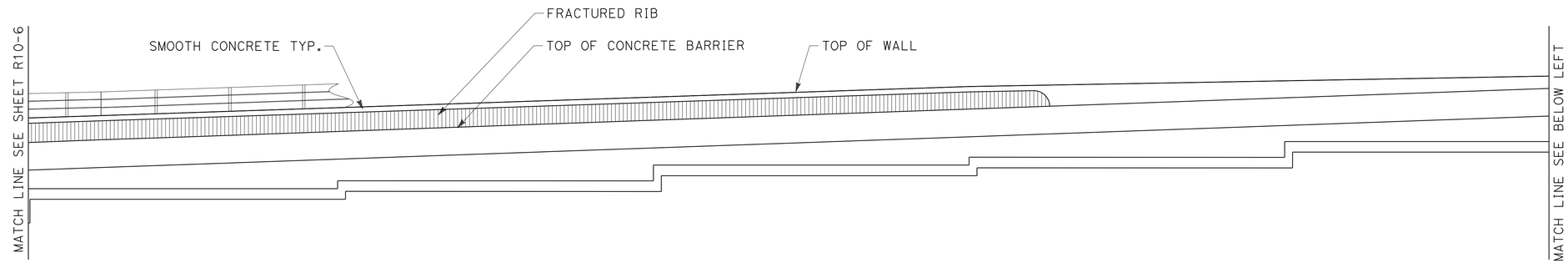

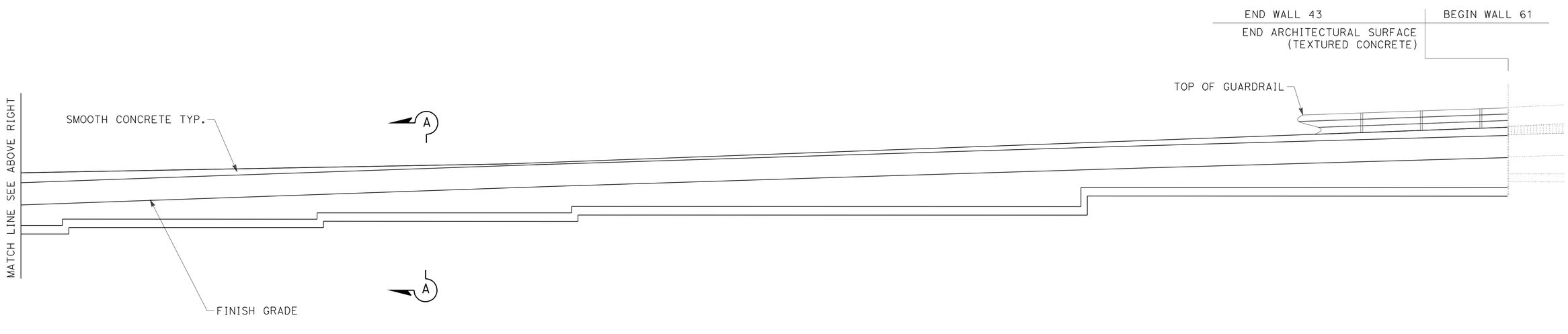

ELEVATION FOR FRACTURED RIB TEXTURE RETAINING WALL No. 43

THIS PLAN IS ACCURATE FOR ARCHITECTURAL TREATMENT WORK ONLY.

ARCHITECTURAL SURFACE
RETAINING WALL No. 43

SCALE: 1/8"=1'0

R10-7

STATE OF CALIFORNIA - DEPARTMENT OF TRANSPORTATION
Caltrans LANDSCAPE ARCHITECTURE

SENIOR LANDSCAPE ARCHITECT: RAY DESSELLE
CALCULATED-DESIGNED BY: MATTHEW HALL
CHECKED BY: MICHAEL BABICH
REVISED BY
DATE REVISED

LAST REVISION 04-13-12
DATE PLOTTED => 03-MAY-2012
TIME PLOTTED => 14:38

DIST	COUNTY	ROUTE	POST MILES TOTAL PROJECT	SHEET No.	TOTAL SHEETS
08	Riv,SBd	91,215	21.5/21.7, 43.2/45.2,0.0/5.1	753	1743

REGISTERED CIVIL ENGINEER 1-11-12 DATE

4-16-12
PLANS APPROVAL DATE

REGISTERED PROFESSIONAL ENGINEER Brian Gutierrez No. C66258 Exp. 6-30-12 CIVIL STATE OF CALIFORNIA

The State of California or its officers or agents shall not be responsible for the accuracy or completeness of electronic copies of this plan sheet.

This LOTB sheet was prepared in accordance with the Caltrans Soil & Rock Logging, Classification, & Presentation Manual (2010 Edition).

BENCH MARK

BM 048
Set 1" IP W/ALUM PLUG STAMPED "SBD 215 PM 0.48 GPS 2010" TOP SLOPE NB IOWA AVE ON-RAMP; 13' WLY R/W FENCE; 6' WLY CL V-DITCH; 70' NELY RAMP METER SIGNAL.
N 1,832,045.099
E 6,763,416.060
Elev 927.971
NAVD88

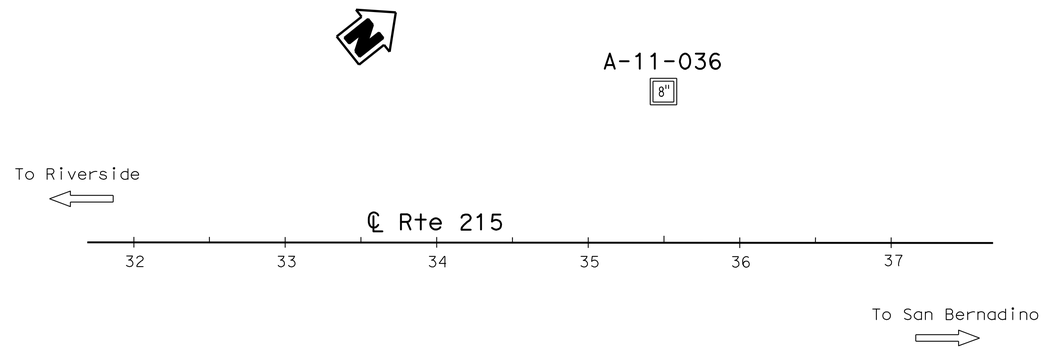

PLAN
1" = 50'

Note: No ground water encountered during field investigation.

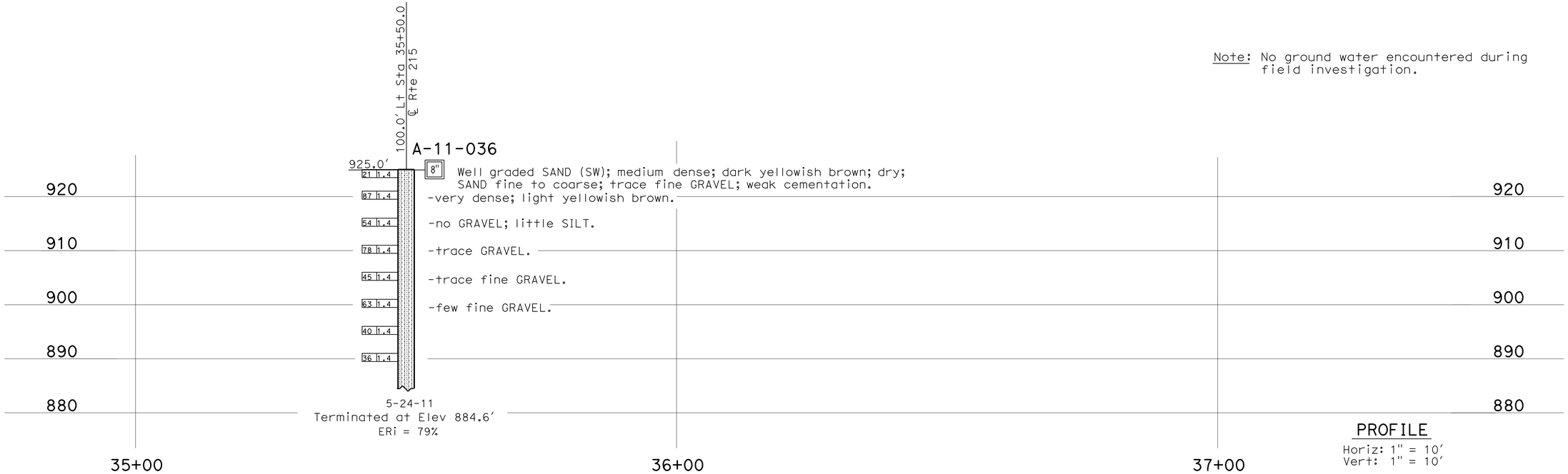

PROFILE
Horiz: 1" = 10'
Vert: 1" = 10'

ENGINEERING SERVICES	MATERIALS AND GEOTECHNICAL SERVICES	STATE OF CALIFORNIA DEPARTMENT OF TRANSPORTATION	DIVISION OF ENGINEERING SERVICES STRUCTURE DESIGN DESIGN BRANCH X	BRIDGE NO. / POST MILE 0.0-5.0	RETAINING WALLS 43 LOG OF TEST BORINGS 1 OF 3
FUNCTIONAL SUPERVISOR NAME: S. Wei	DRAWN BY: W. Tang, I.G-Remmen CHECKED BY: B. Levine	FIELD INVESTIGATION BY: C. Hoadley			

OGS CIVIL LOG OF TEST BORINGS SHEET

ORIGINAL SCALE IN INCHES FOR REDUCED PLANS 0 1 2 3

UNIT: 3643
PROJECT NUMBER & PHASE: 08000005061 CONTRACT NO.: 08-0M9401

DISREGARD PRINTS BEARING EARLIER REVISION DATES

REVISION DATES		SHEET	OF
12-20-11	01-06-12	X	X

FILE => 80m94uqj008.dgn

USERNAME => s124496 DATE PLOTTED => 17-APR-2012 TIME PLOTTED => 13:05

REFERENCE: CALTRANS SOIL & ROCK LOGGING, CLASSIFICATION, AND PRESENTATION MANUAL (2010)

DIST	COUNTY	ROUTE	POST MILES TOTAL PROJECT	SHEET No.	TOTAL SHEETS
08	Riv,SBd	91,215	21.5/21.7, 43.2/45.2,0.0/5.1	754	1743

REGISTERED CIVIL ENGINEER 1-11-12 DATE

4-16-12
PLANS APPROVAL DATE

REGISTERED PROFESSIONAL ENGINEER Brian Gutierrez No. C66258 Exp. 6-30-12 CIVIL STATE OF CALIFORNIA

The State of California or its officers or agents shall not be responsible for the accuracy or completeness of electronic copies of this plan sheet.

CEMENTATION

Description	Criteria
Weak	Crumbles or breaks with handling or little finger pressure.
Moderate	Crumbles or breaks with considerable finger pressure.
Strong	Will not crumble or break with finger pressure.

BOREHOLE IDENTIFICATION

Symbol	Hole Type	Description
Size	A	Auger Boring (hollow or solid stem bucket)
Size	R RW RC P	Rotary drilled boring (conventional) Rotary drilled with self-casing wire-line Rotary core with continuously-sampled, self-casing wire-line Rotary percussion boring (air)
Size	R	Rotary drilled diamond core
Size	HD HA	Hand driven (1-inch soil tube) Hand Auger
●	D	Dynamic Cone Penetration Boring
▲	CPT	Cone Penetration Test (ASTM D 5778)
⬚	O	Other (note on LOTB)

Note: Size in inches.

CONSISTENCY OF COHESIVE SOILS

Description	Shear Strength (tsf)	Pocket Penetrometer Measurement, PP, (tsf)	Torvane Measurement, TV, (tsf)	Vane Shear Measurement, VS, (tsf)
Very Soft	Less than 0.12	Less than 0.25	Less than 0.12	Less than 0.12
Soft	0.12 - 0.25	0.25 - 0.5	0.12 - 0.25	0.12 - 0.25
Medium Stiff	0.25 - 0.5	0.5 - 1	0.25 - 0.5	0.25 - 0.5
Stiff	0.5 - 1	1 - 2	0.5 - 1	0.5 - 1
Very Stiff	1 - 2	2 - 4	1 - 2	1 - 2
Hard	Greater than 2	Greater than 4	Greater than 2	Greater than 2

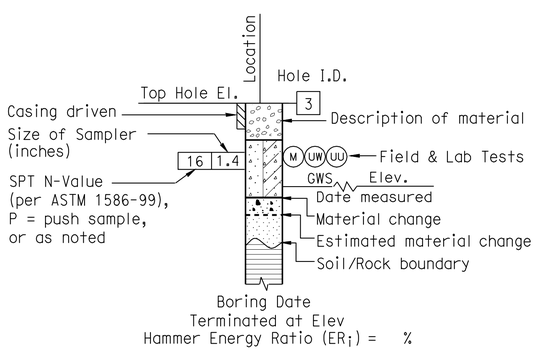

ROTARY BORING

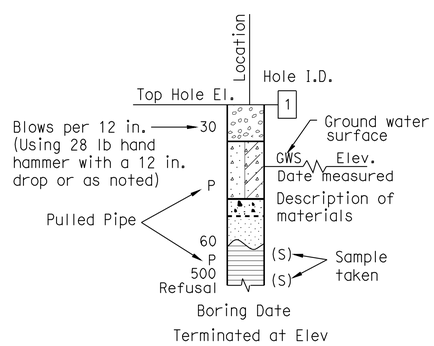

HAND BORING

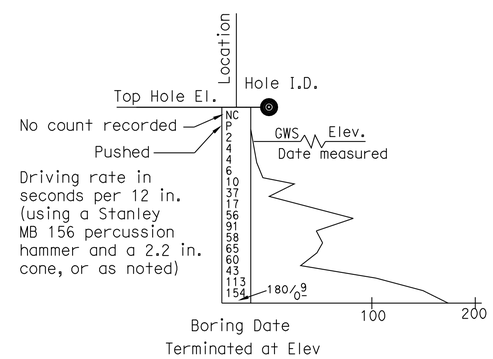

DYNAMIC CONE PENETRATION BORING

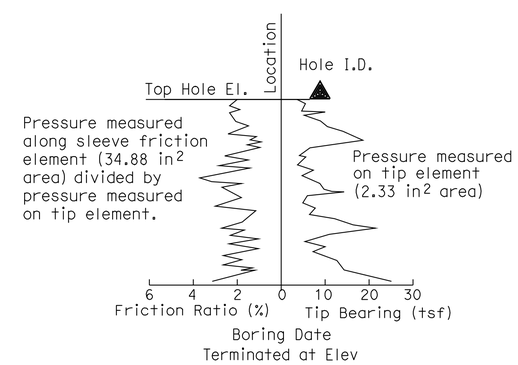

CONE PENETRATION TEST (CPT) BORING

ENGINEERING SERVICES	GEOTECHNICAL SERVICES	STATE OF CALIFORNIA DEPARTMENT OF TRANSPORTATION	DIVISION OF ENGINEERING SERVICES STRUCTURE DESIGN DESIGN BRANCH X	BRIDGE NO. / POST MILE 0.0-5.0	RETAINING WALLS 43 LOG OF TEST BORINGS 2 OF 3
	PREPARED BY: I.G-Remmen				

GS LOTB SOIL LEGEND

ORIGINAL SCALE IN INCHES FOR REDUCED PLANS 0 1 2 3

UNIT: 3643
PROJECT NUMBER & PHASE: 08000005061 CONTRACT NO.: 08-0M9401

DISREGARD PRINTS BEARING EARLIER REVISION DATES

REVISION DATES | SHEET X | OF X

FILE => 80m94uqj009.dgn

USERNAME => s121614 DATE PLOTTED => 23-APR-2012 TIME PLOTTED => 11:58

REFERENCE: CALTRANS SOIL & ROCK LOGGING, CLASSIFICATION, AND PRESENTATION MANUAL (2010)

DIST	COUNTY	ROUTE	POST MILES TOTAL PROJECT	SHEET No.	TOTAL SHEETS
08	Riv,SBd	91,215	21.5/21.7, 43.2/45.2,0.0/5.1	755	1743

REGISTERED CIVIL ENGINEER 1-11-12 DATE

4-16-12
PLANS APPROVAL DATE

REGISTERED PROFESSIONAL ENGINEER Brian Gutierrez No. C66258 Exp. 6-30-12 CIVIL STATE OF CALIFORNIA

The State of California or its officers or agents shall not be responsible for the accuracy or completeness of electronic copies of this plan sheet.

GROUP SYMBOLS AND NAMES

Graphic/Symbol	Group Names	Graphic/Symbol	Group Names
GW	Well-graded GRAVEL Well-graded GRAVEL with SAND	CL	Lean CLAY Lean CLAY with SAND Lean CLAY with GRAVEL SANDY lean CLAY SANDY lean CLAY with GRAVEL GRAVELLY lean CLAY GRAVELLY lean CLAY with SAND
GP	Poorly-graded GRAVEL Poorly-graded GRAVEL with SAND		
GW-GM	Well-graded GRAVEL with SILT Well-graded GRAVEL with SILT and SAND	CL-ML	SILTY CLAY SILTY CLAY with SAND SILTY CLAY with GRAVEL SANDY SILTY CLAY SANDY SILTY CLAY with GRAVEL GRAVELLY SILTY CLAY GRAVELLY SILTY CLAY with SAND
GW-GC	Well-graded GRAVEL with CLAY (or SILTY CLAY) Well-graded GRAVEL with CLAY and SAND (or SILTY CLAY and SAND)		
GP-GM	Poorly-graded GRAVEL with SILT Poorly-graded GRAVEL with SILT and SAND	ML	SILT SILT with SAND SILT with GRAVEL SANDY SILT SANDY SILT with GRAVEL GRAVELLY SILT GRAVELLY SILT with SAND
GP-GC	Poorly-graded GRAVEL with CLAY (or SILTY CLAY) Poorly-graded GRAVEL with CLAY and SAND (or SILTY CLAY and SAND)		
GM	SILTY GRAVEL SILTY GRAVEL with SAND	OL	ORGANIC lean CLAY ORGANIC lean CLAY with SAND ORGANIC lean CLAY with GRAVEL SANDY ORGANIC lean CLAY SANDY ORGANIC lean CLAY with GRAVEL GRAVELLY ORGANIC lean CLAY GRAVELLY ORGANIC lean CLAY with SAND
GC	CLAYEY GRAVEL CLAYEY GRAVEL with SAND		
GC-GM	SILTY, CLAYEY GRAVEL SILTY, CLAYEY GRAVEL with SAND	OL	ORGANIC SILT ORGANIC SILT with SAND ORGANIC SILT with GRAVEL SANDY ORGANIC SILT SANDY ORGANIC SILT with GRAVEL GRAVELLY ORGANIC SILT GRAVELLY ORGANIC SILT with SAND
SW	Well-graded SAND Well-graded SAND with GRAVEL		
SP	Poorly-graded SAND Poorly-graded SAND with GRAVEL	CH	Fat CLAY Fat CLAY with SAND Fat CLAY with GRAVEL SANDY fat CLAY SANDY fat CLAY with GRAVEL GRAVELLY fat CLAY GRAVELLY fat CLAY with SAND
SW-SM	Well-graded SAND with SILT Well-graded SAND with SILT and GRAVEL		
SW-SC	Well-graded SAND with CLAY (or SILTY CLAY) Well-graded SAND with CLAY and GRAVEL (or SILTY CLAY and GRAVEL)	MH	Elastic SILT Elastic SILT with SAND Elastic SILT with GRAVEL SANDY elastic SILT SANDY elastic SILT with GRAVEL GRAVELLY elastic SILT GRAVELLY elastic SILT with SAND
SP-SM	Poorly-graded SAND with SILT Poorly-graded SAND with SILT and GRAVEL		
SP-SC	Poorly-graded SAND with CLAY (or SILTY CLAY) Poorly-graded SAND with CLAY and GRAVEL (or SILTY CLAY and GRAVEL)	OH	ORGANIC fat CLAY ORGANIC fat CLAY with SAND ORGANIC fat CLAY with GRAVEL SANDY ORGANIC fat CLAY SANDY ORGANIC fat CLAY with GRAVEL GRAVELLY ORGANIC fat CLAY GRAVELLY ORGANIC fat CLAY with SAND
SM	SILTY SAND SILTY SAND with GRAVEL		
SC	CLAYEY SAND CLAYEY SAND with GRAVEL	OH	ORGANIC elastic SILT ORGANIC elastic SILT with SAND ORGANIC elastic SILT with GRAVEL SANDY ORGANIC elastic SILT SANDY ORGANIC elastic SILT with GRAVEL GRAVELLY ORGANIC elastic SILT GRAVELLY ORGANIC elastic SILT with SAND
SC-SM	SILTY, CLAYEY SAND SILTY, CLAYEY SAND with GRAVEL		
PT	PEAT	OL/OH	ORGANIC SOIL ORGANIC SOIL with SAND ORGANIC SOIL with GRAVEL SANDY ORGANIC SOIL SANDY ORGANIC SOIL with GRAVEL GRAVELLY ORGANIC SOIL GRAVELLY ORGANIC SOIL with SAND
	COBBLES COBBLES and BOULDERS BOULDERS		

FIELD AND LABORATORY TESTING

- (C) Consolidation (ASTM D 2435)
- (CL) Collapse Potential (ASTM D 5333)
- (CP) Compaction Curve (CTM 216)
- (CR) Corrosivity Testing (CTM 643, CTM 422, CTM 417)
- (CU) Consolidated Undrained Triaxial (ASTM D 4767)
- (DS) Direct Shear (ASTM D 3080)
- (EI) Expansion Index (ASTM D 4829)
- (M) Moisture Content (ASTM D 2216)
- (OC) Organic Content-% (ASTM D 2974)
- (P) Permeability (CTM 220)
- (PA) Particle Size Analysis (ASTM D 422)
- (PI) Plasticity Index (AASHTO T 90) Liquid Limit (AASHTO T 89)
- (PL) Point Load Index (ASTM D 5731)
- (PM) Pressure Meter
- (R) R-Value (CTM 301)
- (SE) Sand Equivalent (CTM 217)
- (SG) Specific Gravity (AASHTO T 100)
- (SL) Shrinkage Limit (ASTM D 427)
- (SW) Swell Potential (ASTM D 4546)
- (UC) Unconfined Compression-Soil (ASTM D 2166) Unconfined Compression-Rock (ASTM D 2938)
- (UU) Unconsolidated Undrained Triaxial (ASTM D 2850)
- (UW) Unit Weight (ASTM D 4767)

APPARENT DENSITY OF COHESIONLESS SOILS

Description	SPT N_{60} (Blows / 12 in.)
Very Loose	0 - 5
Loose	5 - 10
Medium Dense	10 - 30
Dense	30 - 50
Very Dense	Greater than 50

MOISTURE

Description	Criteria
Dry	No discernable moisture
Moist	Moisture present, but no free water
Wet	Visible free water

PERCENT OR PROPORTION OF SOILS

Description	Criteria
Trace	Particles are present but estimated to be less than 5%
Few	5% - 10%
Little	15% - 25%
Some	30% - 45%
Mostly	50% - 100%

PARTICLE SIZE

Description		Size (in.)
Boulder		Greater than 12
Cobble		3 - 12
Gravel	Coarse	3/4 - 3
	Fine	1/5 - 3/4
Sand	Coarse	1/16 - 1/5
	Medium	1/64 - 1/16
	Fine	1/300 - 1/64
Silt and Clay		Less than 1/300

ENGINEERING SERVICES

GEOTECHNICAL SERVICES

PREPARED BY: I.G-Remmen

STATE OF CALIFORNIA DEPARTMENT OF TRANSPORTATION

DIVISION OF ENGINEERING SERVICES STRUCTURE DESIGN DESIGN BRANCH X

BRIDGE NO.

POST MILE 0.0-5.0

RETAINING WALLS 43

LOG OF TEST BORINGS 3 OF 3

GS LOTB SOIL LEGEND

ORIGINAL SCALE IN INCHES FOR REDUCED PLANS 0 1 2 3

UNIT: 3643
PROJECT NUMBER & PHASE: 08000005061
CONTRACT NO.: 08-0M9401

DISREGARD PRINTS BEARING EARLIER REVISION DATES

REVISION DATES

SHEET X OF X

FILE => 80m94uqj010.dgn

USERNAME => s124096 DATE PLOTTED => 17-APR-2012 TIME PLOTTED => 19:05

Dist	COUNTY	ROUTE	POST MILES TOTAL PROJECT	SHEET No.	TOTAL SHEETS
08	Riv,SBd	91,215	21.5/21.7, 43.2/45.2,0.0/5.1	756	1743

REGISTERED CIVIL ENGINEER 1-2-12 DATE

4-16-12
PLANS APPROVAL DATE

REGISTERED PROFESSIONAL ENGINEER JUSTINE NIU No.C 62897 Exp. 6-30-12 CIVIL STATE OF CALIFORNIA

THE STATE OF CALIFORNIA OR ITS OFFICERS OR AGENTS SHALL NOT BE RESPONSIBLE FOR THE ACCURACY OR COMPLETENESS OF SCANNED COPIES OF THIS PLAN SHEET.

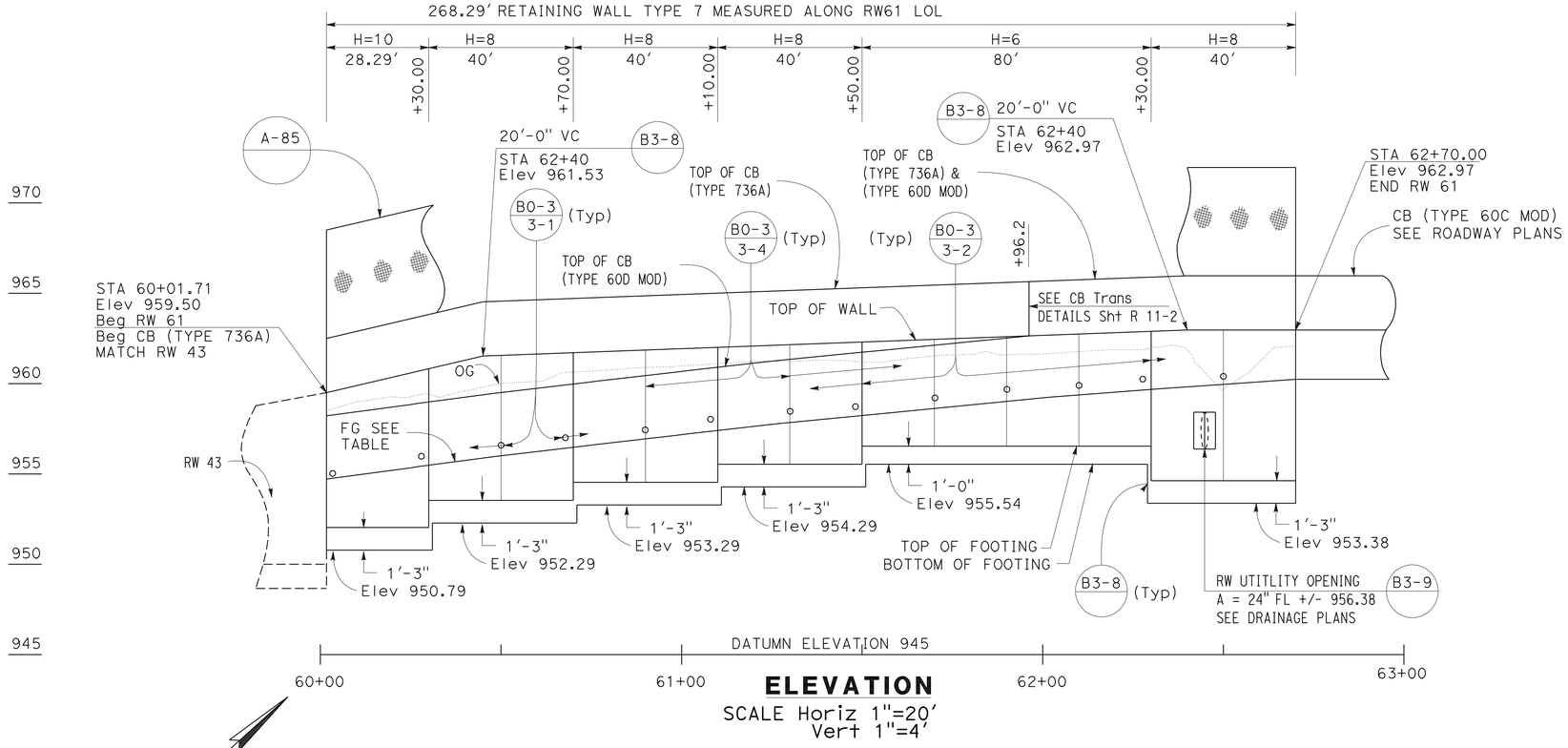

ELEVATION

SCALE Horiz 1"=20'
Vert 1"=4'

FG ELEVATION TABLE	
STATION	ELEVATION
60+01.71	954.72
60+50.00	955.88
61+00.00	957.05
61+50.00	958.10
62+00.00	959.08
62+50.00	959.82
62+70.00	960.11

NOTES:

1. ARCHITECTURAL TREATMENT SHOULD EXTEND 6 IN BELOW FG OR 6 IN BELOW TOP CB (TYPE 60D MOD)
2. FOR STRUCTURAL SECTIONS, SEE ROADWAY PLANS
3. WATERSTOP IN EXPANSION JOINT SHALL BE EXTEND 6 IN INTO THE BARRIER
4. FOR POST ANCHORAGE DETAILS, SEE B11-52

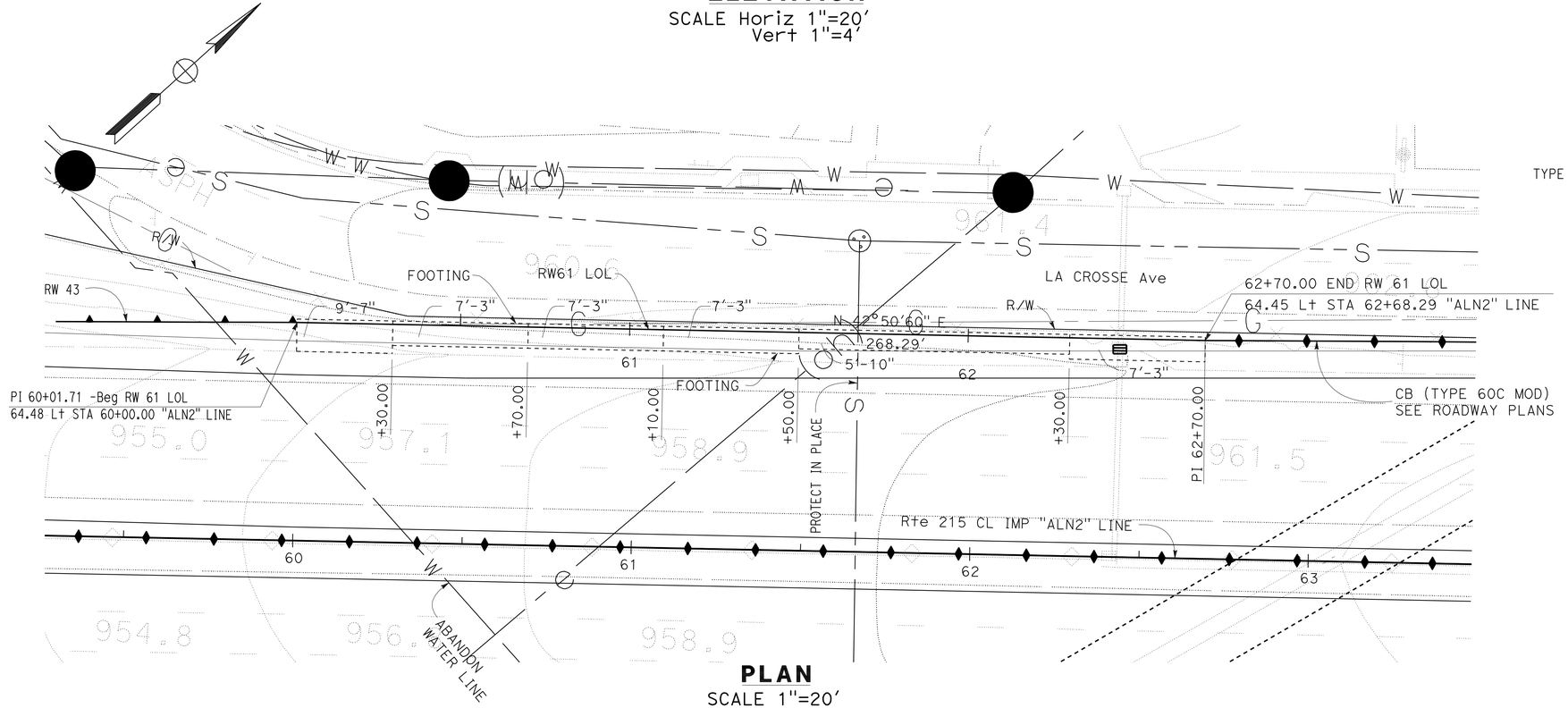

PLAN

SCALE 1"=20'

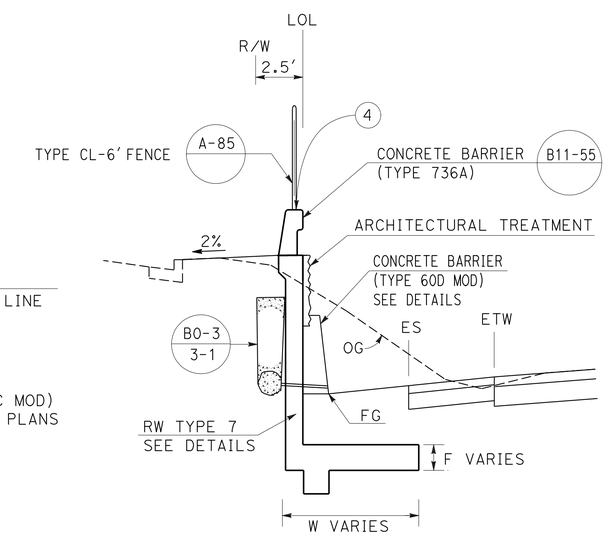

TYPICAL SECTION

NO SCALE

FROM STA 60+01.71 TO STA 62+70.00

RETAINING WALL PLAN

RETAINING WALL No. 61

SCALE AS SHOWN

R11-1

APPROVED FOR RETAINING WALL WORK ONLY

STATE OF CALIFORNIA - DEPARTMENT OF TRANSPORTATION
Caltrans
DESIGN
FUNCTIONAL SUPERVISOR: BEN AMIRI
CALCULATED-DESIGNED BY: VINH TRUONG
CHECKED BY: DAT H. WONG
REVISED BY
DATE REVISED

LAST REVISION 01-02-12
DATE PLOTTED => 17-APR-2012
TIME PLOTTED => 19:05

Dist	COUNTY	ROUTE	POST MILES TOTAL PROJECT	SHEET No.	TOTAL SHEETS
08	Riv,SBd	91,215	21.5/21.7, 43.2/45.2,0.0/5.1	757	1743

REGISTERED CIVIL ENGINEER 1-2-12 DATE

4-16-12
PLANS APPROVAL DATE

REGISTERED PROFESSIONAL ENGINEER JUSTINE NIU No. C 62897 Exp. 6-30-12 CIVIL STATE OF CALIFORNIA

THE STATE OF CALIFORNIA OR ITS OFFICERS OR AGENTS SHALL NOT BE RESPONSIBLE FOR THE ACCURACY OR COMPLETENESS OF SCANNED COPIES OF THIS PLAN SHEET.

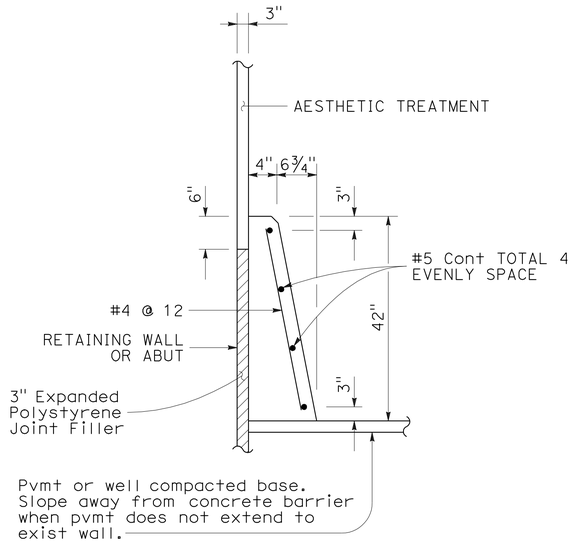

CONCRETE BARRIER (TYPE 60D MOD)

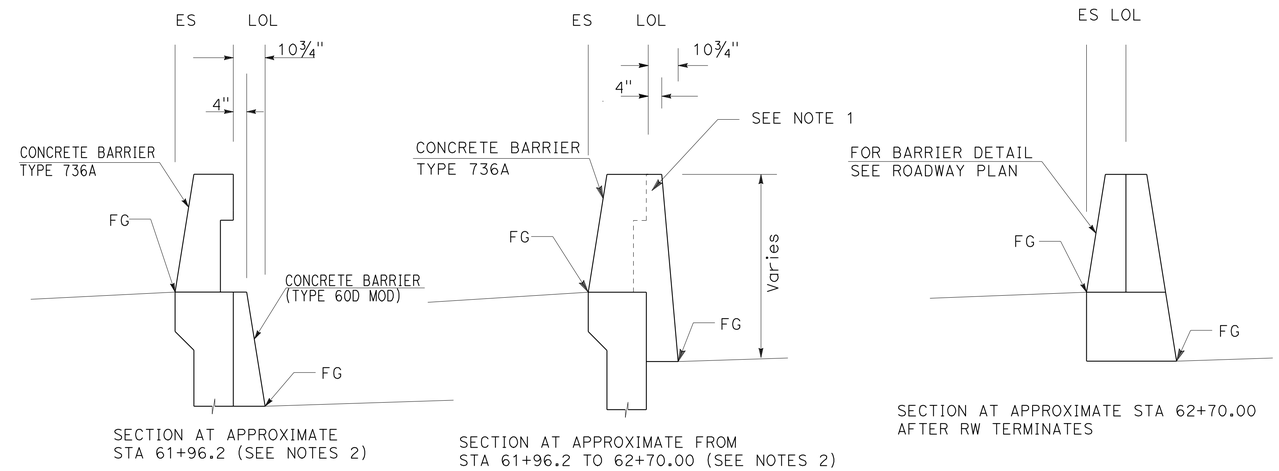

CONCRETE BARRIER TRANSITION TYPE 60D MOD AND TYPE 736A DETAILS

NO SCALE

NOTES:

1. CONCRETE FOR CONCRETE BARRIER TYPE 60D MOD AND TYPE 736A CAN BE POURED MONOLITHIC
2. EXACT LOCATION WILL BE DETERMINED BY THE ENGINEER IN THE FIELD.

QUANTITIES

STRUCTURAL CONCRETE (RETAINING WALL)	182.8	CY
BAR REINFORCING STEEL (RETAINING WALL)	16113	LB
STRUCTURAL EXCAVATION (RETAINING WALL)	465.6	CY
STRUCTURAL BACKFILL (RETAINING WALL)	250.3	CY
PERVIOUS BACKFILL MATERIAL (RETAINING WALL)	11.3	CY
CONCRETE BARRIER (TYPE 736A)	268.3	LF
CONCRETE BARRIER (TYPE 60D MOD)	268.3	LF
PLASTIC PIPE (N)	15.7	LF
WATERSTOP (N)	24.9	LF
CHAIN LINK FENCE (TYPE CL-6)	268.3	LF
ARCHITECTURE SURFACE (TEXTURE CONCRETE)	325	SF

(N) = NOT A SEPARATE PAY ITEM, FOR INFORMATION ONLY

REVISED BY | DATE REVISED
VINH TRUONG | DAT H. WONG
CALCULATED-DESIGNED BY | CHECKED BY
FUNCTIONAL SUPERVISOR
BEN AMIRI

STATE OF CALIFORNIA - DEPARTMENT OF TRANSPORTATION
Caltrans
DESIGN

RETAINING WALL DETAILS
RETAINING WALL No. 61

SCALE AS SHOWN **R11-2**

APPROVED FOR RETAINING WALL WORK ONLY

LAST REVISION 01-02-12 | DATE PLOTTED => 17-APR-2012 TIME PLOTTED => 19:05

DIST.	COUNTY	ROUTE	POST MILES TOTAL PROJECT	SHEET NO.	TOTAL SHEETS
08	Riv,SBd	91,215	21.5/21.7, 43.2/45.2,0.0/5.1	758	1743

REGISTERED ENGINEER - CIVIL 1-2-12

PROFESSIONAL ENGINEER REGISTERED JUSTINE NIU No. C 62897 Exp. 06-30-12 CIVIL STATE OF CALIFORNIA

4-16-12
PLANS APPROVAL DATE

The State of California or its officers or agents shall not be responsible for the accuracy or completeness of electronic copies of this plan sheet.

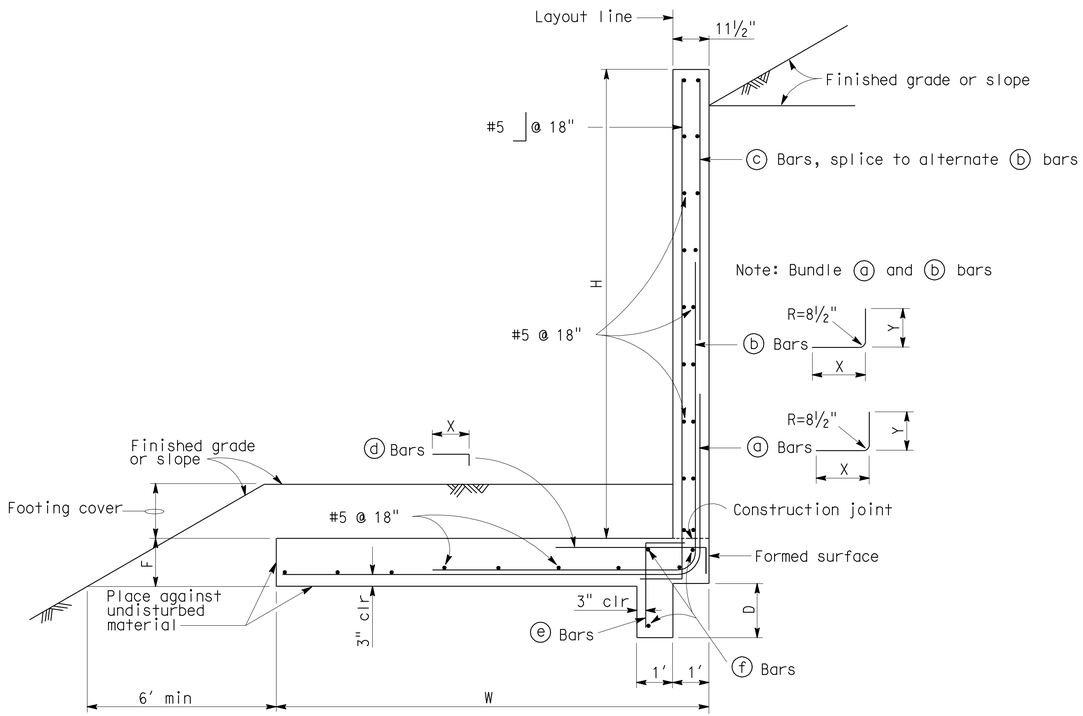

TYPICAL SECTION

Note: For details not shown, see B3-8

TABLE OF DIMENSIONS AND REINFORCING STEEL

DESIGN H	4'	6'	8'	10'	12'
W	4'-0"	5'-10"	7'-3"	9'-7"	11'-10"
F	1'-0"	1'-0"	1'-3"	1'-3"	1'-3"
D	0'-9"	0'-9"	0'9"	1'-6"	1'-6"
FOOTING COVER	1' min	1' min	1'-6" min	1'-6" min	1'-6" min
ⓐ Bars	#5 @ 18"	#5 @ 12"	#6 @ 12"	#6 @ 12"	#6 @ 9"
X	Cont	Cont	Cont	Cont	Cont
Y	Cont	Cont	Cont	5'-11"	5'-11"
ⓑ Bars	———	———	———	#6 @ 12"	#6 @ 9"
X	———	———	———	5'-3"	7'-3"
Y	———	———	———	Cont	8'-2"
ⓒ Bars	———	———	———	———	#5 @ 18"
ⓓ Bars	———	———	———	#5 @ 12"	#5 @ 12"
X	———	———	———	5'-11"	5'-11"
ⓔ Bars	———	———	———	#5 @ 12"	#5 @ 12"
ⓕ Bars	———	———	———	3-#5	3-#5

Cont = Continuous

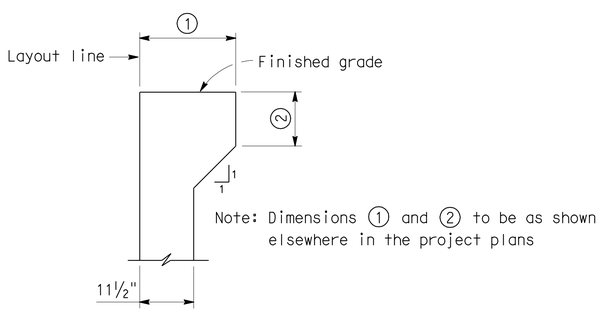

HAUNCH FOR CONCRETE BARRIER

GENERAL NOTES

Design: Service load design
Loading case:
1. Level slope with 240 psf surcharge
2. 2:1 unlimited slope

Concrete: n=9, f'_c=3250 psi, f_c= 1300 psi
Reinforcing steel: fy=60,000 psi f_s=24,000 psi
Soil:
Backfill: Ø=34°, γ=120 pcf
Foundation: Ø=34°, c=200 psf, γ=120 pcf
Minimum allowable bearing pressure=2.0 ksf

Lateral earth pressure: Coulomb's theory with δ=0°
Seismic:
1. Level slope, k_h=0.3g
2. 2:1 unlimited slope, k_h=0.1g

NO SCALE

STANDARD DRAWING

RELEASE DATE	9/22/93	DESIGN	BY J.C. MOESE	CHECKED O. HOR	RELEASED BY
FILE NO.	xs14-010	DETAILS	BY R. YEE	CHECKED O. HOR	
		SUBMITTED	BY J.C. MOESE	DRAWING DATE 10/92	OFFICE CHIEF

DS OSD 2147A (METRIC) (REV. 2/25/97)

STATE OF CALIFORNIA DEPARTMENT OF TRANSPORTATION

DIVISION OF ENGINEERING SERVICES

CU
EA

BRIDGE NO.

POST MILES

DISREGARD PRINTS BEARING EARLIER REVISION DATES

REVISION DATES (PRELIMINARY STAGE ONLY) SHEET OF

RETAINING WALL PLAN R11-3

RETAINING WALL NO. 61

RETAINING WALL TYPE 7, H = 4'-12'

DATE PLOTTED => 17-APR-2012 TIME PLOTTED => 19:05

USERNAME => s124496

80m94uqk003.dgn

Dist	COUNTY	ROUTE	POST MILES TOTAL PROJECT	SHEET No.	TOTAL SHEETS
08	Riv,SBd	91,215	21.5/21.7, 43.2/45.2,0.0/5.1	759	1743

LICENSED LANDSCAPE ARCHITECT

4-16-12
PLANS APPROVAL DATE

LICENSED LANDSCAPE ARCHITECT
RAY T. DESSELLE No. 2272
Signature
11/30/13
Renewal Date
01/02/12
Date
STATE OF CALIFORNIA

THE STATE OF CALIFORNIA OR ITS OFFICERS OR AGENTS SHALL NOT BE RESPONSIBLE FOR THE ACCURACY OR COMPLETENESS OF SCANNED COPIES OF THIS PLAN SHEET.

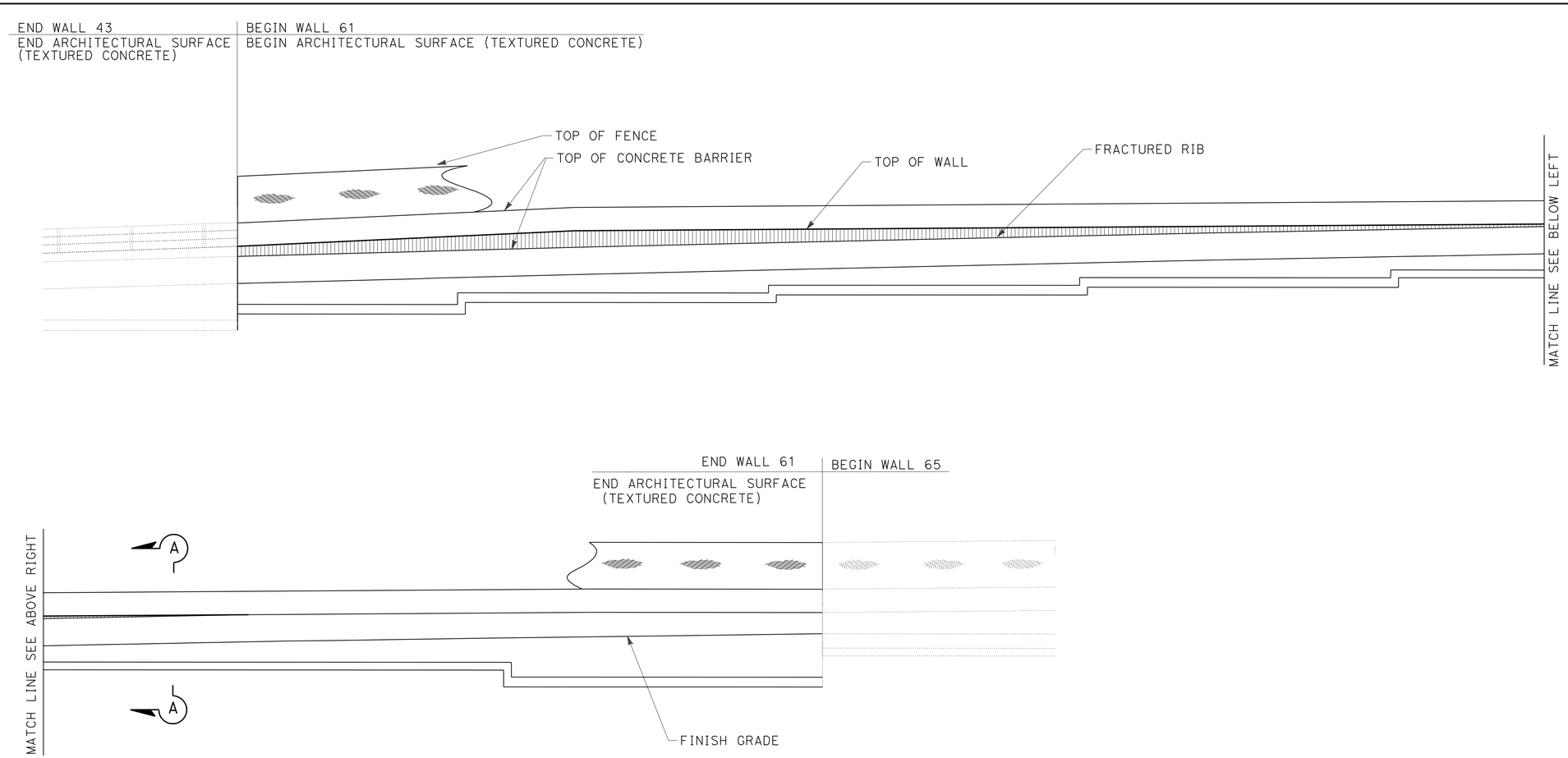

ELEVATION FOR FRACTURED RIB RETAINING WALL No. 61

APPROVED FOR RETAINING WALL WORK ONLY

ARCHITECTURAL SURFACE
RETAINING WALL No. 61

SCALE: 1/8"=1'0

R11-4

STATE OF CALIFORNIA - DEPARTMENT OF TRANSPORTATION
Caltrans LANDSCAPE ARCHITECTURE

SENIOR LANDSCAPE ARCHITECT: RAY DESSELLE
CALCULATED-DESIGNED BY: MATTHEW HALL
CHECKED BY: MIRIAM BISHOP
REVISED BY
DATE REVISED

LAST REVISION 01-02-12
DATE PLOTTED => 17-APR-2012
TIME PLOTTED => 19:05

FED. ROAD DIST. NO.	STATE	PROJ. NO.	FISCAL YEAR	SHEET NO.	TOTAL SHEETS
7	CAL.	DP-0264(3)		139	145

DIST.	COUNTY	ROUTE	PROJECT	SHEET NO.	TOTAL SHEETS
VIII	SBd	215	F	7	7

Chief, Bridge Design Branch (Designer in Responsible Charge)

DATE APPROVED: APR 2 1958

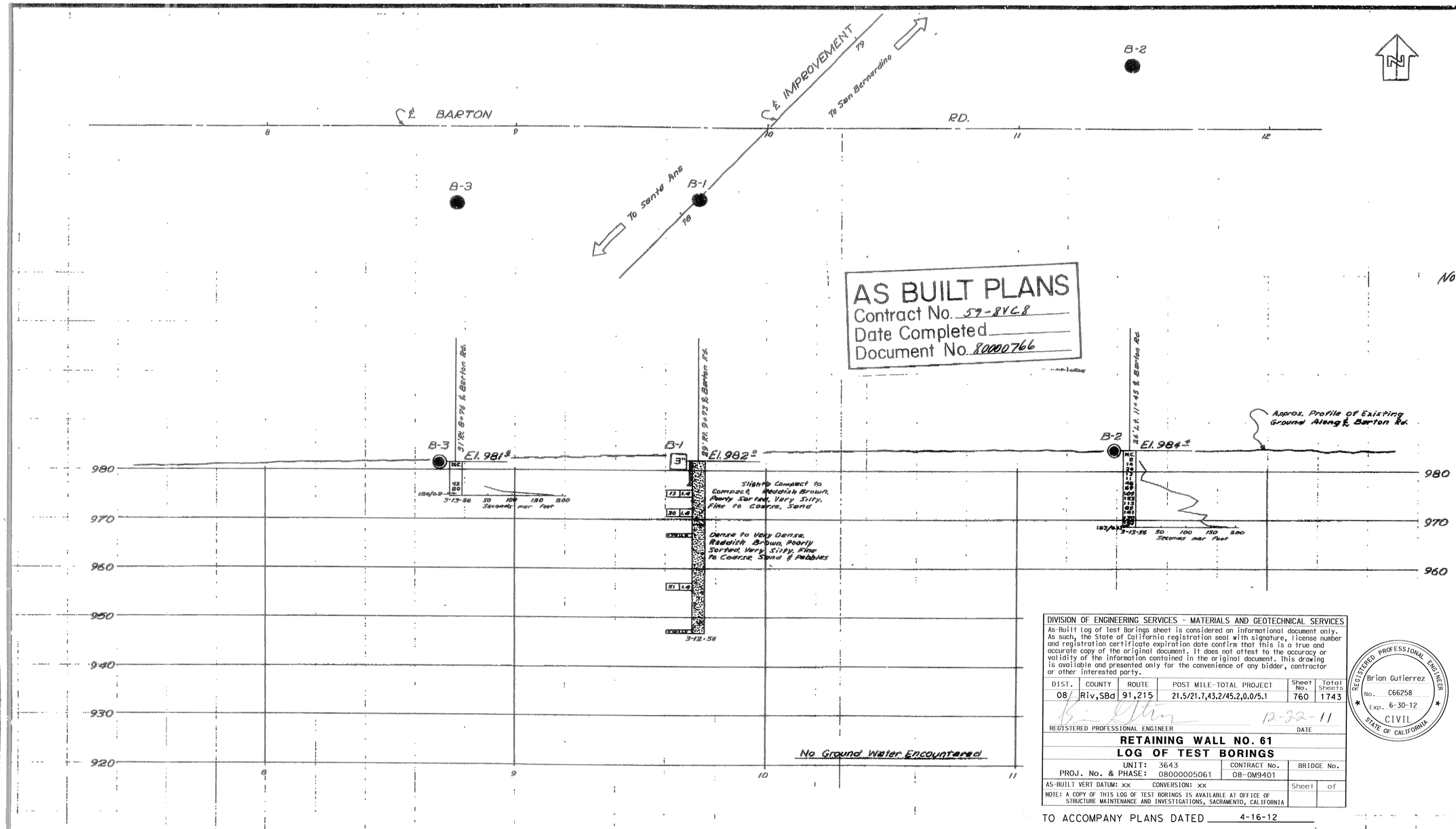

BRIDGE DEPARTMENT

CHECKED

DIVISION OF ENGINEERING SERVICES - MATERIALS AND GEOTECHNICAL SERVICES

As-Built Log of Test Borings sheet is considered an informational document only. As such, the State of California registration seal with signature, license number and registration certificate expiration date confirm that this is a true and accurate copy of the original document. It does not attest to the accuracy or validity of the information contained in the original document. This drawing is available and presented only for the convenience of any bidder, contractor or other interested party.

DIST.	COUNTY	ROUTE	POST MILE-TOTAL PROJECT	Sheet No.	Total Sheets
08	Riv,SBd	91,215	21.5/21.7,43.2/45.2,0.0/5.1	760	1743

REGISTERED PROFESSIONAL ENGINEER — DATE 12-22-11

REGISTERED PROFESSIONAL ENGINEER — Brian Gutierrez — No. C66258 — Exp. 6-30-12 — CIVIL — STATE OF CALIFORNIA

RETAINING WALL NO. 61

LOG OF TEST BORINGS

UNIT: 3643	CONTRACT No.	BRIDGE No.
PROJ. No. & PHASE: 08000005061	08-0M9401	

AS-BUILT VERT DATUM: xx CONVERSION: xx — Sheet ___ of ___

NOTE: A COPY OF THIS LOG OF TEST BORINGS IS AVAILABLE AT OFFICE OF STRUCTURE MAINTENANCE AND INVESTIGATIONS, SACRAMENTO, CALIFORNIA

TO ACCOMPANY PLANS DATED 4-16-12

B.M. P_2^{34} 12A-54
Sp. hd. nail in 2" x 2" rwd. hub buried 14". 250' Ely. of La Crosse Ave. 55' N'ly of ℄ Barton Rd.
Elev. 985.73

CLASSIFICATION OF MATERIAL BASED ON STANDARD GRADE SIZE LIMITS

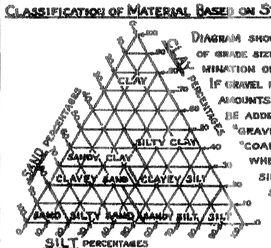

DIAGRAM SHOWING THE BASIS FOR ESTIMATES OF GRADE SIZE DISTRIBUTION USED IN DETERMINATION OF CLASS NAMES.

IF GRAVEL IS PRESENT IN APPRECIABLE AMOUNTS THE TERM "GRAVELLY" MAY BE ADDED TO THE CLASS NAME, VIZ. "GRAVELLY SAND." THE TERMS "COARSE," "MEDIUM" AND "FINE" WHEN USED TO DESCRIBE SAND, SILT AND GRAVEL REFER TO STANDARD GRADE SIZE LIMITS.

LEGEND OF EARTH MATERIALS

- GRAVEL
- SAND
- SILT
- CLAY
- SANDY CLAY OR CLAYEY SAND
- SANDY SILT OR SILTY SAND
- SILTY CLAY OR CLAYEY SILT
- PEAT AND/OR ORGANIC MATTER
- FILL MATERIAL
- IGNEOUS ROCK
- SEDIMENTARY ROCK
- METAMORPHIC ROCK

LEGEND OF BORING OPERATIONS

- PLAN OF ANY BORING
- PENETROMETER
- 2½" CONE PENETROMETER
- SAMPLER BORING (DRY)
- ROTARY BORING (WET)
- AUGER BORING (DRY)
- JET BORING
- CORE BORING
- TEST PIT

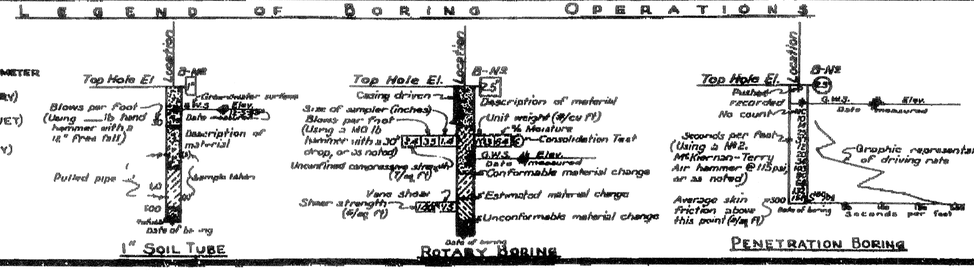

NOTES

The contractor's attention is directed to Section 2, Article (c) of the Standard Specifications, and to the Special Provisions accompanying this set of plans.

Classification of earth material as shown on this sheet is based upon field inspection and is not to be construed to imply mechanical analysis.

STATE OF CALIFORNIA
DEPARTMENT OF PUBLIC WORKS
DIVISION OF HIGHWAYS

BARTON RD. OVERCROSSING

LOG OF TEST BORINGS

SCALE	BRIDGE	FILE	DRAWING
Horiz. 1"=20' Vert. 1"=10'	54-528	E-54	C-4958-7

PREL. DRAWING NO. 4958 10

Dist	COUNTY	ROUTE	POST MILES TOTAL PROJECT	SHEET No.	TOTAL SHEETS
08	Riv,SBd	91,215	21.5/21.7, 43.2/45.2,0.0/5.1	761	1743

REGISTERED CIVIL ENGINEER 1-2-12 DATE

4-16-12
PLANS APPROVAL DATE

REGISTERED PROFESSIONAL ENGINEER JUSTINE NIU No.C 62897 Exp. 6-30-12 CIVIL STATE OF CALIFORNIA

THE STATE OF CALIFORNIA OR ITS OFFICERS OR AGENTS SHALL NOT BE RESPONSIBLE FOR THE ACCURACY OR COMPLETENESS OF SCANNED COPIES OF THIS PLAN SHEET.

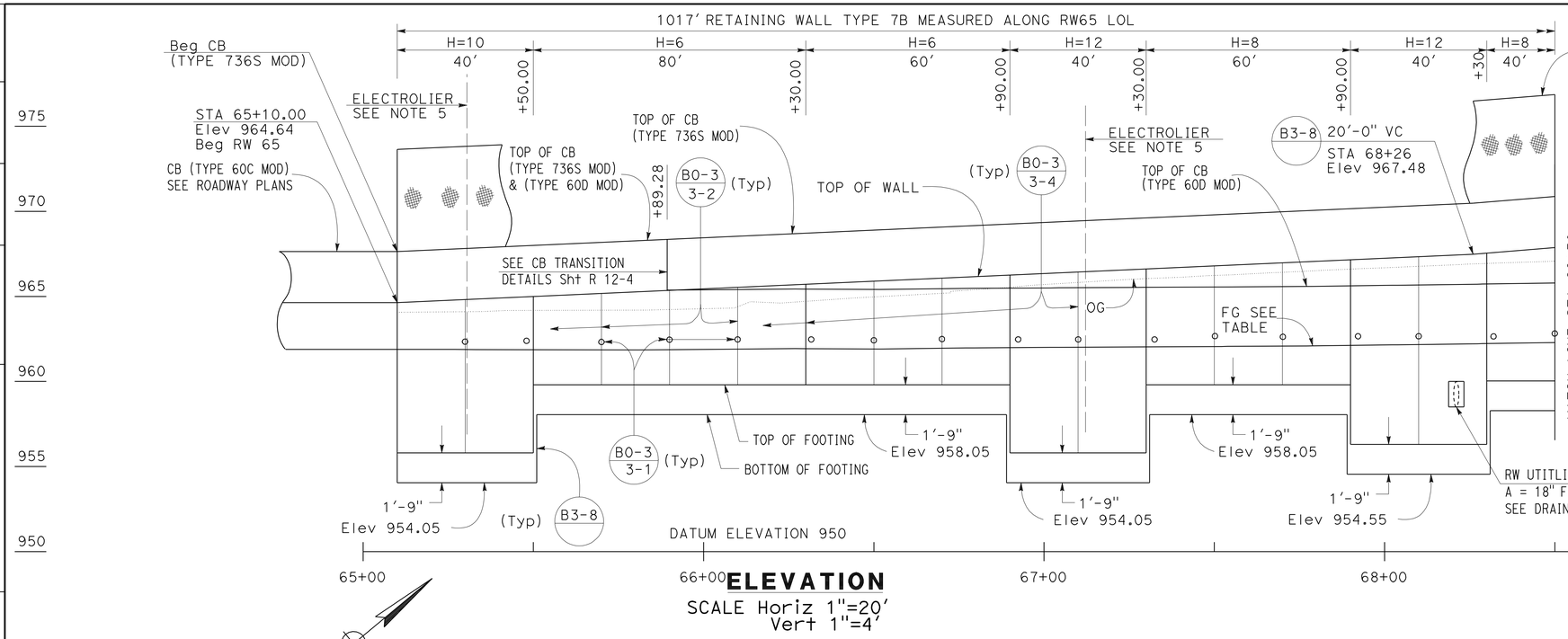

ELEVATION

SCALE Horiz 1"=20'
Vert 1"=4'

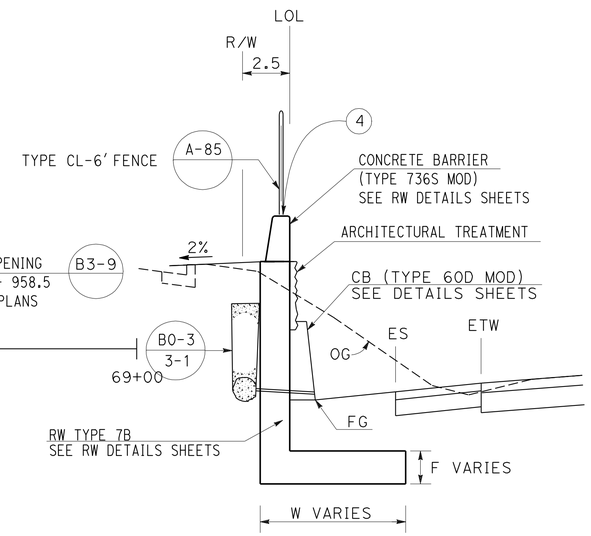

TYPICAL SECTION

NO SCALE

FROM STA 65+10.00 TO STA 75+27.00

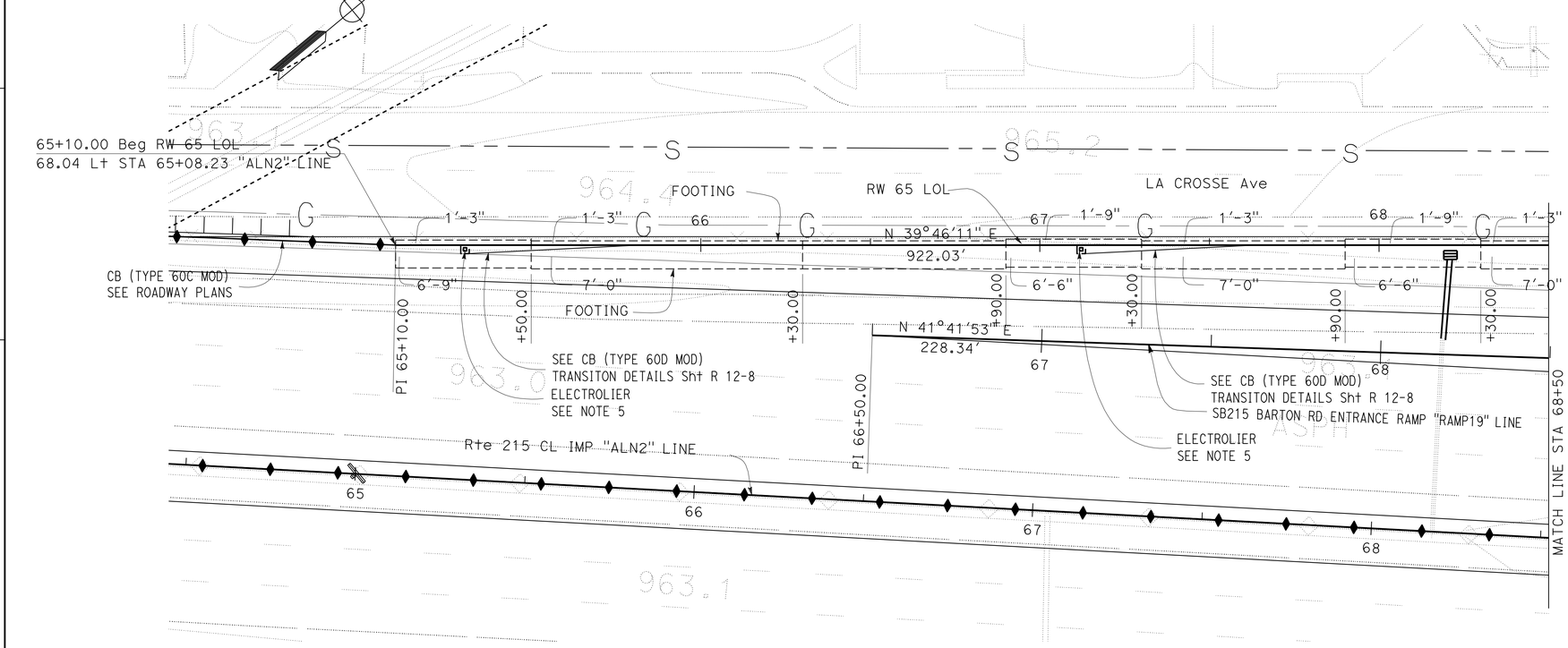

PLAN

SCALE 1"=20'

NOTES:

1. ARCHITECTURAL TREATMENT SHOULD EXTEND 6 IN BELOW FG OR 6 IN BELOW TOP CB (TYPE 60D MOD)
2. FOR STRUCTURAL SECTIONS, SEE ROADWAY PLANS
3. WATERSTOP IN EXPANSION JOINT SHALL BE EXTEND 6 IN INTO THE BARRIER
4. FOR POST ANCHORAGE DETAILS, SEE B11-52
5. FOR ELECTROLIER DETAILS, SEE ELECTRICAL DETAILS SHEETS. FOR MOUNTING DETAILS, SEE STANDARD PLANS B11-56

APPROVED FOR RETAINING WALL WORK ONLY

RETAINING WALL PLAN

RETAINING WALL No. 65

SCALE AS SHOWN **R12-1**

STATE OF CALIFORNIA - DEPARTMENT OF TRANSPORTATION
Caltrans
DESIGN

FUNCTIONAL SUPERVISOR: BEN AMIRI
CALCULATED-DESIGNED BY: VINH TRUONG
CHECKED BY: DAT H. WONG
REVISED BY / DATE REVISED

LAST REVISION 01-02-12
DATE PLOTTED => 17-APR-2012
TIME PLOTTED => 19:05

Dist	COUNTY	ROUTE	POST MILES TOTAL PROJECT	SHEET No.	TOTAL SHEETS
08	Riv,SBd	91,215	21.5/21.7, 43.2/45.2,0.0/5.1	762	1743

REGISTERED CIVIL ENGINEER 1-2-12 DATE

4-16-12
PLANS APPROVAL DATE

REGISTERED PROFESSIONAL ENGINEER JUSTINE NIU No.C 62897 Exp. 6-30-12 CIVIL STATE OF CALIFORNIA

THE STATE OF CALIFORNIA OR ITS OFFICERS OR AGENTS SHALL NOT BE RESPONSIBLE FOR THE ACCURACY OR COMPLETENESS OF SCANNED COPIES OF THIS PLAN SHEET.

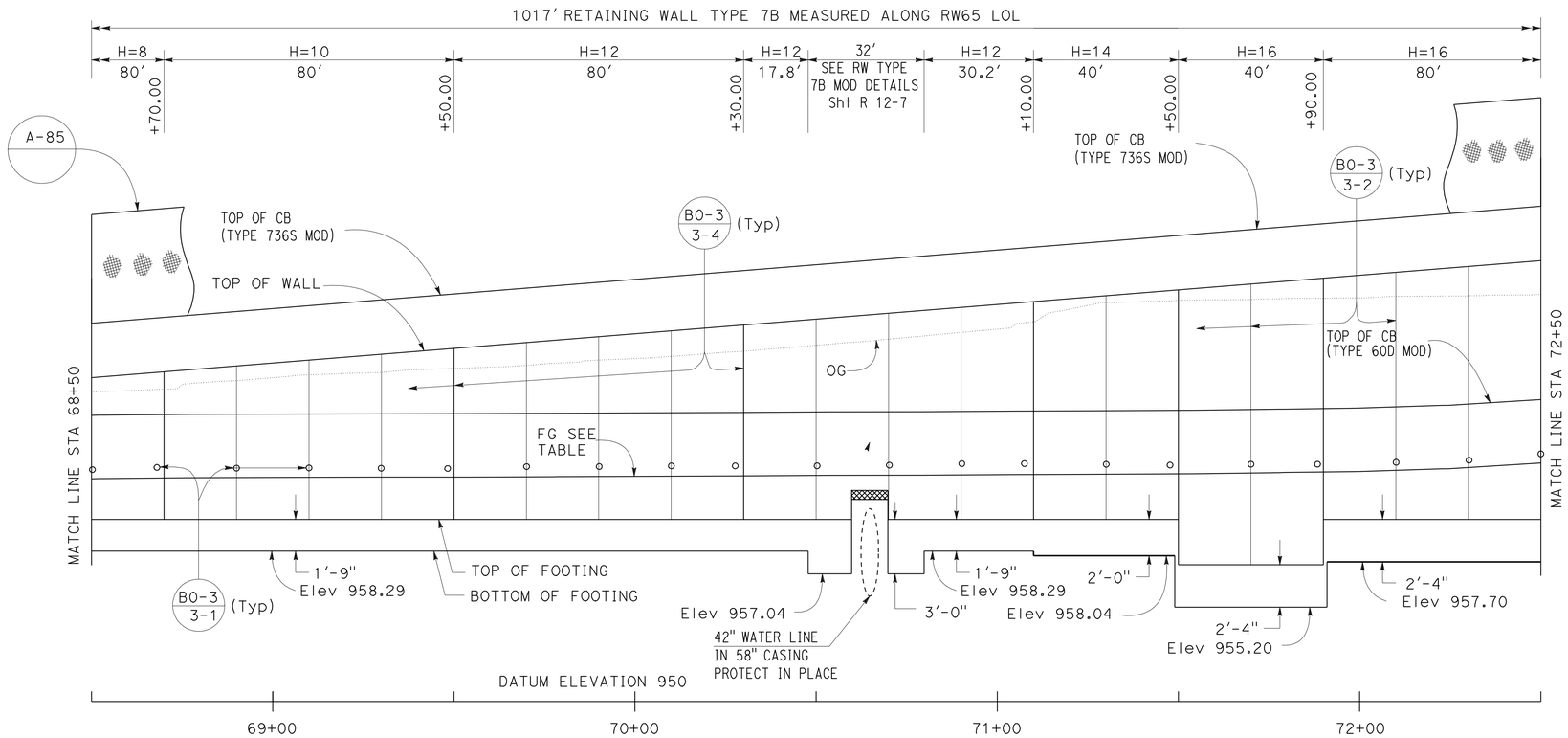

ELEVATION

SCALE Horiz. 1"=20'
Vert 1"=4'

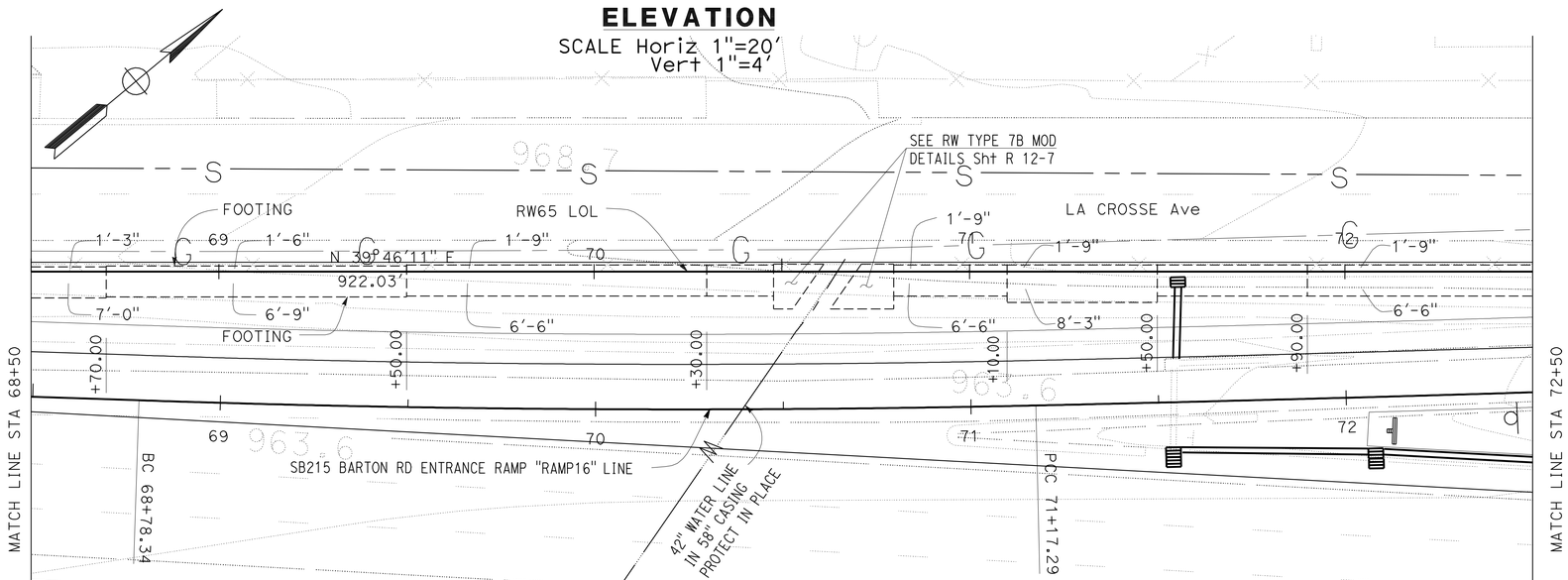

PLAN

SCALE 1"=20'

APPROVED FOR RETAINING WALL WORK ONLY

RETAINING WALL PLAN

RETAINING WALL No. 65

SCALE AS SHOWN **R12-2**

STATE OF CALIFORNIA - DEPARTMENT OF TRANSPORTATION
Caltrans® DESIGN

FUNCTIONAL SUPERVISOR: BEN AMIRI
CALCULATED-DESIGNED BY: VINH TRUONG
CHECKED BY: DAT H. WONG
REVISED BY
DATE REVISED

LAST REVISION 01-02-12
DATE PLOTTED => 17-APR-2012
TIME PLOTTED => 19:05

Dist	COUNTY	ROUTE	POST MILES TOTAL PROJECT	SHEET No.	TOTAL SHEETS
08	Riv,SBd	91,215	21.5/21.7, 43.2/45.2,0.0/5.1	763	1743

REGISTERED CIVIL ENGINEER 1-2-12 DATE

4-16-12
PLANS APPROVAL DATE

REGISTERED PROFESSIONAL ENGINEER JUSTINE NIU No. C 62897 Exp. 6-30-12 CIVIL STATE OF CALIFORNIA

THE STATE OF CALIFORNIA OR ITS OFFICERS OR AGENTS SHALL NOT BE RESPONSIBLE FOR THE ACCURACY OR COMPLETENESS OF SCANNED COPIES OF THIS PLAN SHEET.

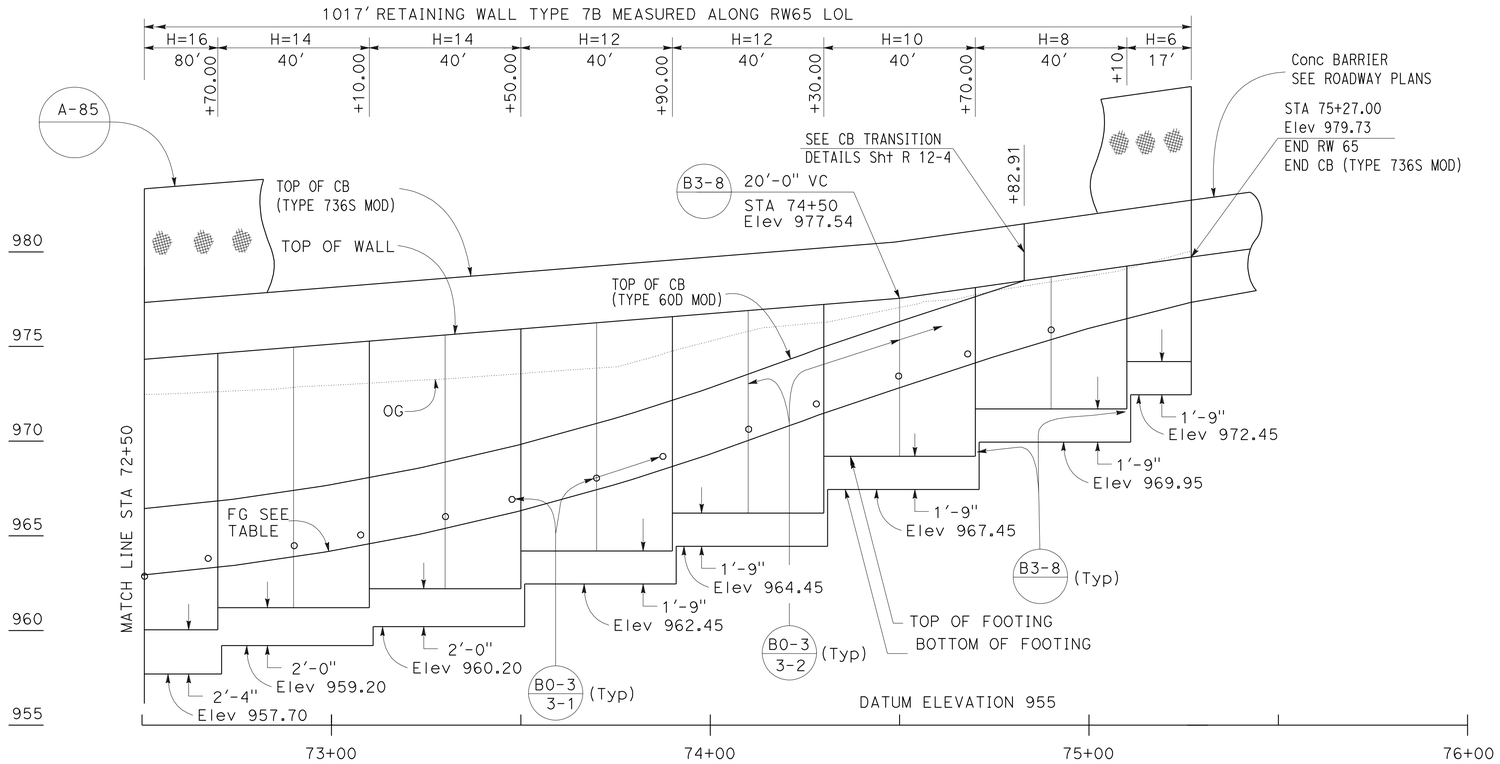

ELEVATION

SCALE Horiz 1"=20'
Vert 1"=4'

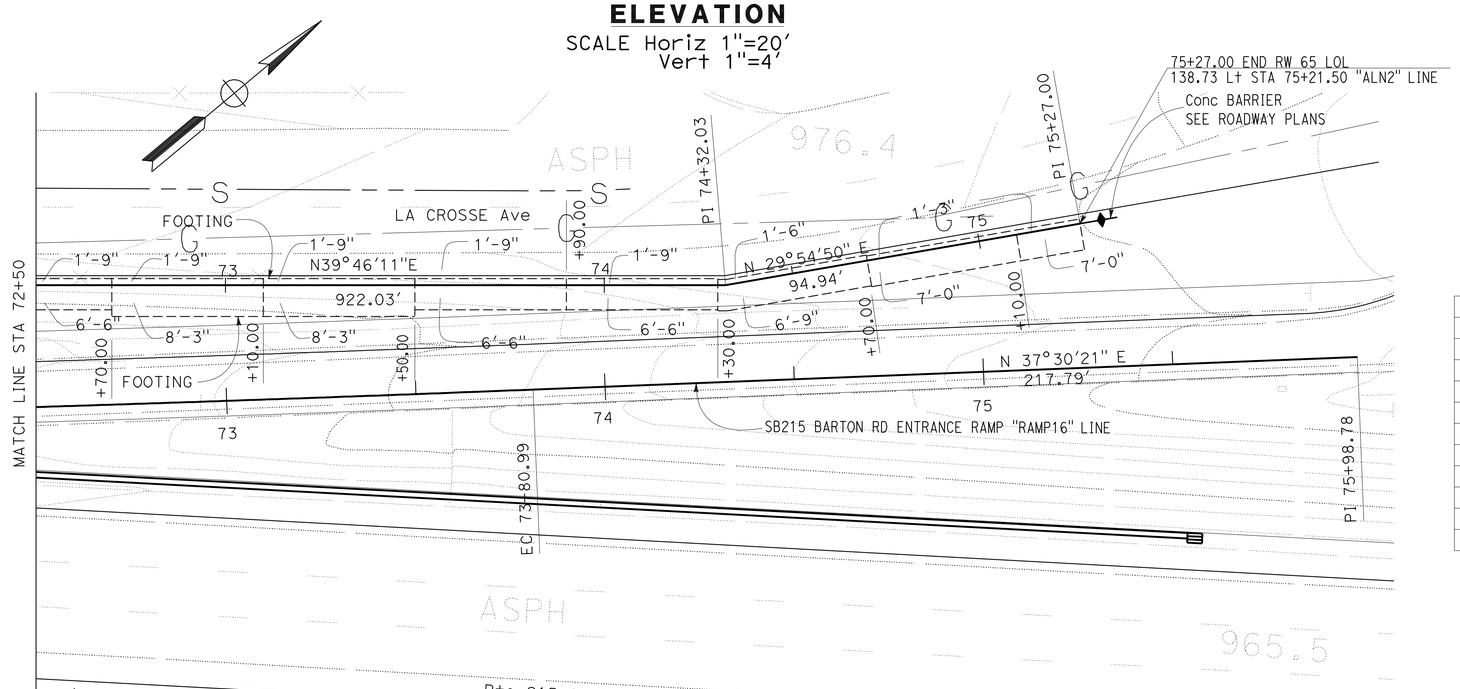

PLAN

SCALE 1"=20'

APPROVED FOR RETAINING WALL WORK ONLY

FG ELEVATION TABLE	
STATION	ELEVATION
65+10.00	961.74
65+50.00	961.71
66+00.00	961.75
66+50.00	961.85
67+00.00	961.86
67+50.00	961.91
68+00.00	961.98
68+50.00	962.06
69+00.00	961.99
69+50.00	962.01
70+00.00	962.06
70+50.00	962.13
71+00.00	962.18
71+50.00	962.38
72+00.00	962.48
72+50.00	962.92
73+00.00	964.15
73+50.00	966.24
74+00.00	969.20
74+50.00	973.03
75+00.00	976.35
75+27.00	978.04

QUANTITIES

STRUCTURAL CONCRETE (RETAINING WALL)	1168.1	CY
BAR REINFORCING STEEL (RETAINING WALL)	115795	LB
STRUCTURAL EXCAVATION (RETAINING WALL)	2641.9	CY
STRUCTURAL BACKFILL (RETAINING WALL)	1413.2	CY
PERVIOUS BACKFILL MATERIAL (RETAINING WALL)	134.9	CY
CONCRETE BARRIER (TYPE 60D MOD)	1017.0	LF
CONCRETE BARRIER (TYPE 736S MOD)	1017.0	LF
PLASTIC PIPE (N)	65.7	LF
WATERSTOP (N)	134.2	LF
CHAIN LINK FENCE (TYPE CL-6)	1017.0	LF
ARCHITECTURE SURFACE (TEXTURE CONCRETE)	3858	SF

(N) = NOT A SEPARATE PAY ITEM, FOR INFORMATION ONLY

RETAINING WALL PLAN

RETAINING WALL No. 65

SCALE AS SHOWN **R12-3**

REVISED BY | DATE REVISED
VINH TRUONG | DAT H. WONG
CALCULATED-DESIGNED BY | CHECKED BY
FUNCTIONAL SUPERVISOR: BEN AMIRI

STATE OF CALIFORNIA - DEPARTMENT OF TRANSPORTATION
Caltrans
DESIGN

LAST REVISION 01-02-12 | DATE PLOTTED => 17-APR-2012 | TIME PLOTTED => 19:06

Dist	COUNTY	ROUTE	POST MILES TOTAL PROJECT	SHEET No.	TOTAL SHEETS
08	Riv,SBd	91,215	21.5/21.7, 43.2/45.2,0.0/5.1	764	1743

REGISTERED CIVIL ENGINEER 1-2-12 DATE

4-16-12
PLANS APPROVAL DATE

REGISTERED PROFESSIONAL ENGINEER JUSTINE NIU No. C 62897 Exp. 6-30-12 CIVIL STATE OF CALIFORNIA

THE STATE OF CALIFORNIA OR ITS OFFICERS OR AGENTS SHALL NOT BE RESPONSIBLE FOR THE ACCURACY OR COMPLETENESS OF SCANNED COPIES OF THIS PLAN SHEET.

NOTES:

1. CONCRETE FOR CONCRETE BARRIER TYPE 60D MOD AND TYPE 736A CAN BE POURED MONOLITHIC
2. EXACT LOCATION WILL BE DETERMINED BY THE ENGINEER IN THE FIELD.

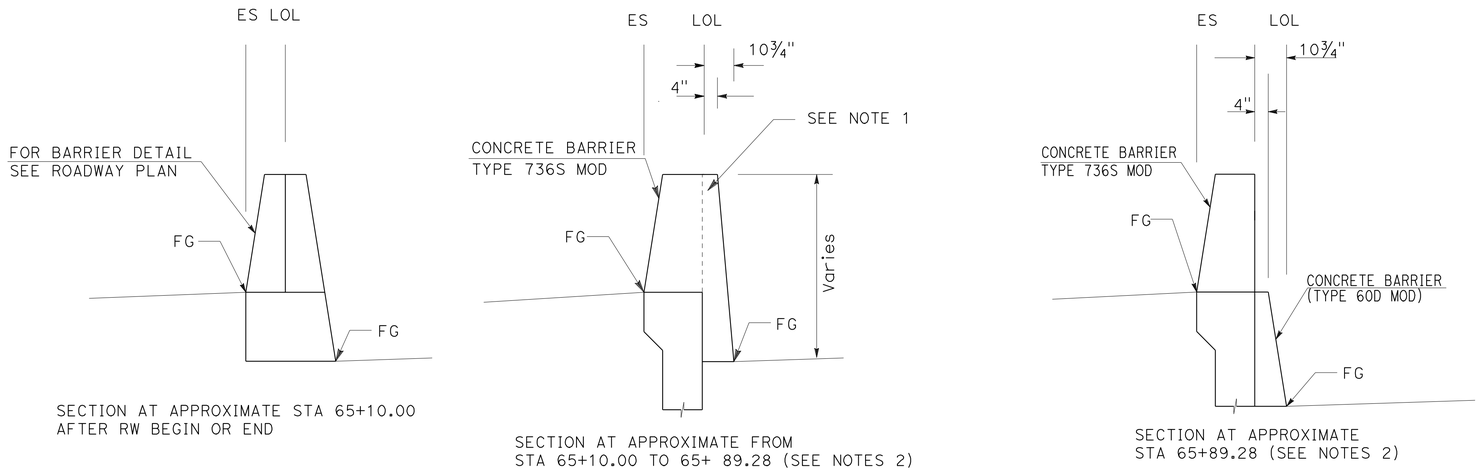

CONCRETE BARRIER TRANSITION 60 MOD AND TYPE 736S MOD DETAILS

NO SCALE

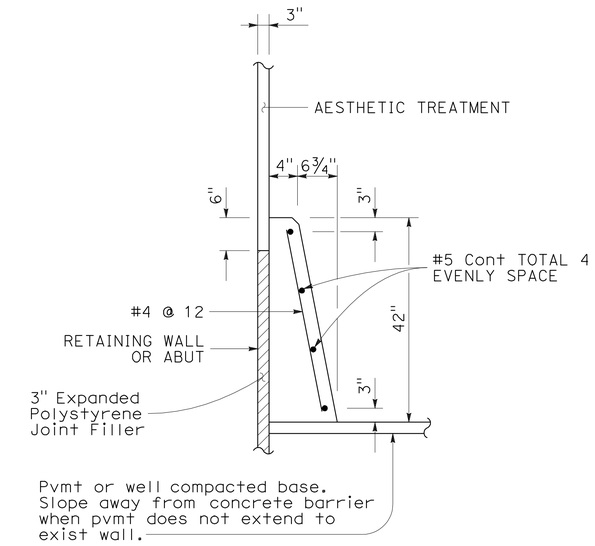

CONCRETE BARRIER (TYPE 60D MOD)

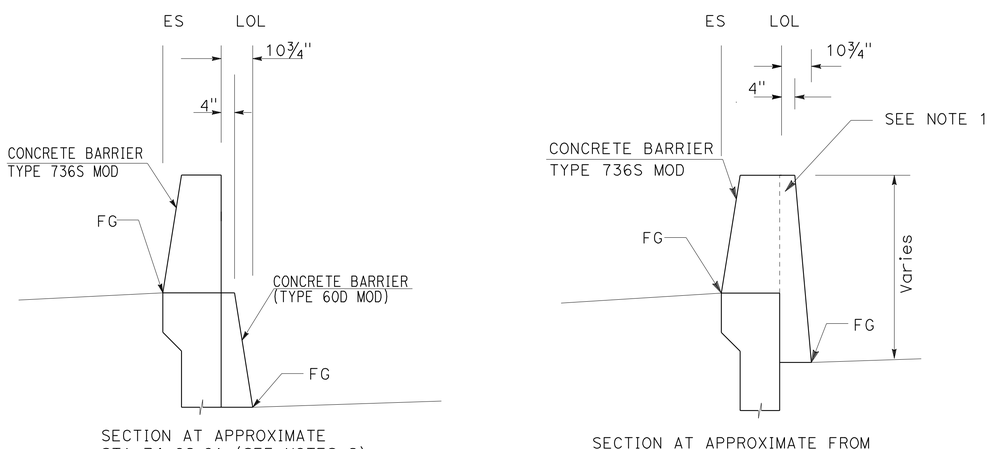

CONCRETE BARRIER TRANSITION 60 MOD AND TYPE 736S MOD DETAILS

NO SCALE

SCALE 1"=20'

APPROVED FOR RETAINING WALL WORK ONLY

RETAINING WALL DETAILS

RETAINING WALL No. 65

SCALE AS SHOWN **R12-4**

STATE OF CALIFORNIA - DEPARTMENT OF TRANSPORTATION
Caltrans® DESIGN

FUNCTIONAL SUPERVISOR: BEN AMIRI
CALCULATED-DESIGNED BY: VINH TRUONG
CHECKED BY: DAT H. WONG
REVISED BY
DATE REVISED

LAST REVISION 01-02-12
DATE PLOTTED => 17-APR-2012
TIME PLOTTED => 19:06

DIST	COUNTY	ROUTE	POST MILES TOTAL PROJECT	SHEET No.	TOTAL SHEETS
08	Riv,SBd	91,215	21.5/21.7, 43.2/45.2,0.0/5.1	765	1743

REGISTERED CIVIL ENGINEER 1-2-12 DATE

4-16-12
PLANS APPROVAL DATE

REGISTERED PROFESSIONAL ENGINEER JUSTINE NIU No. C 62897 Exp. 06-30-12 CIVIL STATE OF CALIFORNIA

The State of California or its officers or agents shall not be responsible for the accuracy or completeness of electronic copies of this plan sheet.

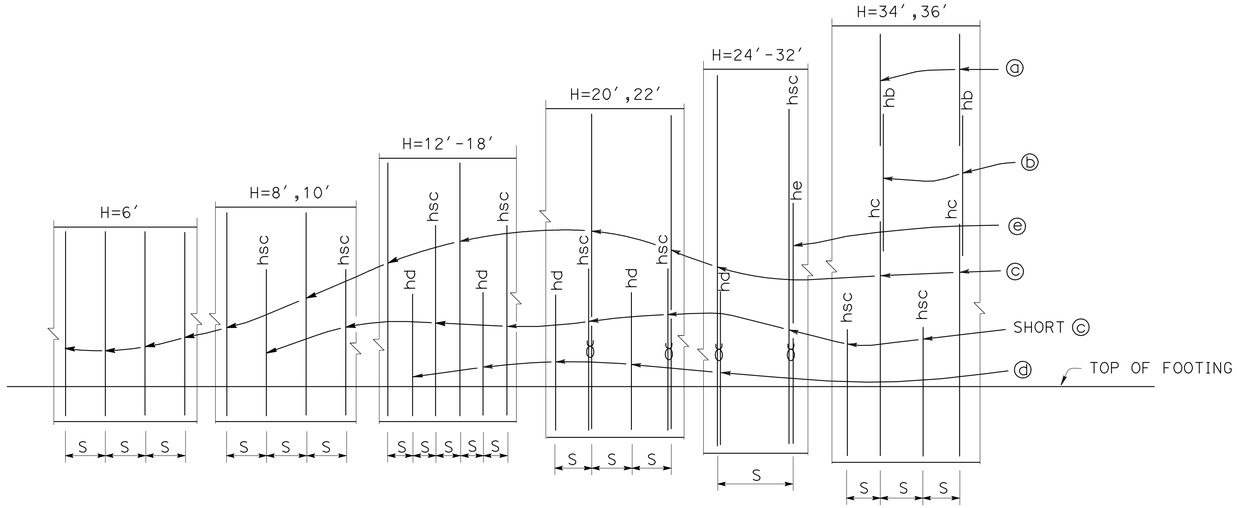

ELEVATION
No Scale

NOTE:

"hb", "hsc", "hc", "hd" and "he" above bars indicate distance from top of footing to upper end of the bars, see table.

DESIGN DATA

Design: AASHTO LRFD Bridge Design Specifications, 4th edition with California Amendments

LS: Varied surcharge on level ground surface

CT: 54 kip maximum traffic impact loading evenly distributed over 10 feet at top of the barrier and 1:1 distribution down and outward

EQE: Mononabe-Okabe Method
K_h = 0.2
K_v = 0.0

Soil: ϕ = 34°
γ = 120 pcf

Reinforced Concrete: f′c = 3600 psi
fy = 60,000 psi

Load Combinations and Limit States

Service I Q=1.00DC+1.00EV+1.00EH+1.00LS+Td

Strength I Q=aDC+BEV+1.50EH+1.75LS+Td

Extreme I Q=1.00DC+1.00EV+1.00EH+1.00EQD+1.00EQE+Td

Extreme II Q=1.00DC+1.00EV+1.00EH+1.00CT+Td

Where:
- Q: Force Effects
- a: 1.25 or 0.90, Which ever Controls Design
- B: 1.35 or 1.00, which ever Controls Design
- DC: Dead Load of Structure Components
- EV: Vertical Earth Fill Pressure
- LS: Live Load Surcharge
- EQE: Seismic Earth Pressure
- EQD: Soil and Structure Components Inertia. Soil inertia ignored for stem design
- CT: Vehicular Collision Force
- Td: Anchor Design Load

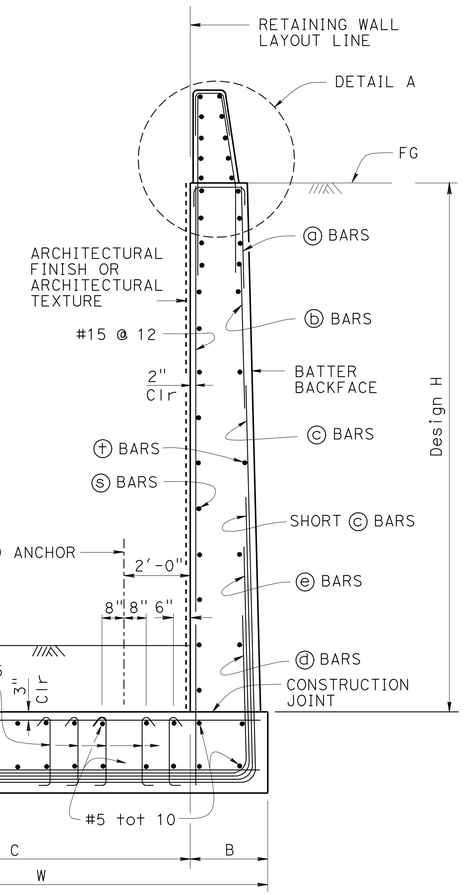

SPREAD FOOTING SECTION
No Scale

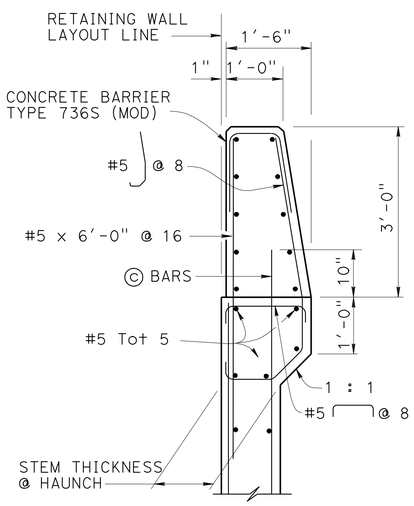

DETAIL A - WITH HAUNCH
¾ = 1′-0"

For Details not shown, see "DETAIL A - WITHOUT HAUNCH"

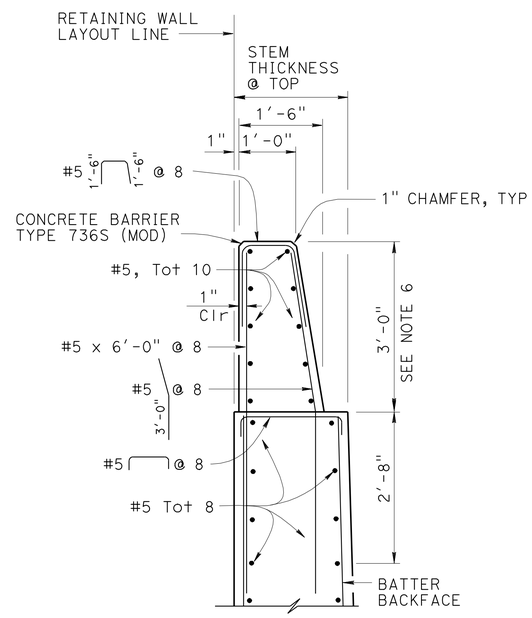

DETAIL A - WITHOUT HAUNCH
¾ = 1′-0"

NOTES:

1. For Retaining wall Architectural finish or texture see Details elsewhere in Project Plans
2. For Details not shown and Drainage Notes see (3-5)
3. Footing cover, 2′-0" minimum.
4. For H=6′ through 10′, extend ⓑ bars into Barrier for stem with haunch.
5. Shift ⓒ bars, ⓓ bars and ⓔ bars as required to clear formed hole for ground anchor.
6. Dimensions may vary with roadway cross slope and with certain thickness of surfacing. See Project Plans.
7. Footing is designed to resist 1.33 Td assuming the maximum anchor spacing shown in the table.

RETAINING WALL PLAN R 12-5

RETAINING WALL NO. 65

RETAINING WALL TYPE 7B - DETAILS NO. 1

_____ STANDARD DRAWING

FILE NO. **xs14-375-1**

APPROVAL DATE X-X-X

STATE OF **CALIFORNIA** DEPARTMENT OF TRANSPORTATION

DIVISION OF ENGINEERING SERVICES

BRIDGE NO. X

POST MILE X

DS OSD 2147A (ENGLISH STANDARD DRAWING "XS" BORDER REV. (02-02-11)

ORIGINAL SCALE IN INCHES FOR REDUCED PLANS 0 1 2 3

UNIT: 2242
PROJECT NUMBER & PHASE: 08000005061 CONTRACT NO.: X

DISREGARD PRINTS BEARING EARLIER REVISION DATES

REVISION DATES | SHEET X | OF X

FILE => 80m94uq1005.dgn

USERNAME => s124196 DATE PLOTTED => 17-APR-2012 TIME PLOTTED => 19:06

DIST	COUNTY	ROUTE	POST MILES TOTAL PROJECT	SHEET No.	TOTAL SHEETS
08	Riv,SBd	91,215	21.5/21.7, 43.2/45.2,0.0/5.1	766	1743

REGISTERED CIVIL ENGINEER 1-2-12 DATE

4-16-12
PLANS APPROVAL DATE

REGISTERED PROFESSIONAL ENGINEER
JUSTINE NIU
No. C 62897
Exp. 06-30-12
CIVIL
STATE OF CALIFORNIA

The State of California or its officers or agents shall not be responsible for the accuracy or completeness of electronic copies of this plan sheet.

TABLE OF WALL DIMENSIONS, REINFORCING STEEL AND BEARING STRESS DATA

DESIGN H	STEM WITH HUANCH			STEM WITHOUT HUANCH												
	6′	8′	10′	12′	14′	16′	18′	20′	22′	24′	26′	28′	30′	32′	34′	36′
W	8′-3″	8′-3″	8′-3″	8′-3″	10′-0″	8′-3″	8′-6″	9′-0″	10′-0″	10′-9″	11′-9″	12′-6″	13′-6″	14′-6″	15′-6″	16′-0″
C	7′-0″	7′-0″	6′-9″	6′-6″	8′-3″	6′-6″	6′-6″	6′-9″	7′-6″	8′-0″	9′-0″	9′-0″	9′-9″	10′-6″	11′-6″	11′-9″
B	1′-3″	1′-3″	1′-6″	1′-9″	1′-9″	1′-9″	2′-0″	2′-0″	2′-6″	2′-9″	2′-9″	3′-6″	3′-9″	4′-0″	4′-0″	4′-3″
F	1′-9″	1′-9″	1′-9″	1′-9″	2′-0″	2′-4″	2′-6″	2′-6″	2′-9″	2′-9″	3′-0″	3′-3″	3′-6″	3′-9″	3′-9″	4′-0″
STEM THICKNESS AT TOP				1′-7″	1′-7″	1′-7″	1′-9″	1′-9″	1′-9″	2′-0″	2′-0″	2′-0″	2′-3″	2′-3″	2′-3″	2′-6″
STEM THICKNESS AT HAUNCH	1′-0″	1′-0″	1′-3″													
BATTER	0	0	0	0	0	0	0	0	1/4:12	1/4:12	1/4:12	1/2:12	1/2:12	1/2:12	1/2:12	1/2:12
S	0′-8″	0′-8″	0′-7″	0′-6″	0′-5 2/3″	0′-5″	0′-4 1/3″	0′-8″	0′-7 1/2″	0′-9″	0′-7 1/2″	0′-8″	0′-7″	0′-6″	0′-6″	0′-5 1/2″
ⓐ BARS															#5	#5
ⓑ BARS															#8	#7
hb															28′-3″	29′-0″
ⓒ BARS	#5	#5	#5	#5	#5	#5	#5	#5 ℧	#5 ℧	#5	#5	#5	#5	#5	#11	#11
hsc		7′-10″	9′-10″	11′-10″	13′-10″	13′-6″	11′-6″	17′-3″	16′-3″	20′-0″	18′-9″	20′-6″	21′-6″	23′-0″	17′-0″	17′-9″
hc															22′-0″	25′-0″
ⓓ BARS				#5	#7	#7	#7	#10	#10	#7	#7	#7	#7	#7		
hd				3′-3″	5′-6″	6′-0″	6′-6″	11′-3″	12′-0″	13′-0″	16′-6″	16′-0″	17′-0″	19′-3″		
ⓔ BARS										#10	#10	#11	#11	#11		
he										12′-9″	13′-6″	14′-0″	12′-3″	16′-6″		
ⓖ BARS						#5 @ 15	#5 @ 13	#5 @ 16	#6 @ 15	#7 @ 18	#5 @ 15	#8 @ 16	#7 @ 14	#7 @ 12	#5 @ 6	#5 @ 5 1/2
BARS BUNDLED WITH ⓖ in ftg						SHORT ⓒ	SHORT ⓒ	ⓓ	ⓓ	SHORT ⓒ & ⓔ	SHORT ⓒ & ⓔ	SHORT ⓒ & ⓔ	SHORT ⓒ & ⓔ	SHORT ⓒ & ⓔ	ⓒ & SHORT ⓒ	ⓒ & SHORT ⓒ
ⓗ BARS															#5 @ 24	#5 @ 11
ⓢ BARS	#4 @ 12	#4 @ 12	#5 @ 15	#5 @ 12	#5 @ 12	#5 @ 12	#5 @ 12	#5 @ 12	#6 @ 12	#6 @ 12	#6 @ 12	#6 @ 12	#7 @ 12	#7 @ 12	#7 @ 12	#7 @ 12
ⓣ BARS	#4 @ 18	#4 @ 18	#4 @ 18	#4 @ 12	#4 @ 12	#4 @ 12	#4 @ 12	#4 @ 12	#4 @ 12	#4 @ 12	#5 @ 12	#5 @ 12	#5 @ 12	#5 @ 12	#5 @ 12	#5 @ 12
Td (KIPS/FT)	0	0	0	0	0	3	6.75	9.75	11.25	12.75	13.5	18.75	19.5	21.75	21.75	26.25
To (KIPS/FT)	0	0	0	0	0	*	*	*	*	*	*	*	*	*	*	*
Tp = Larger of 1.33 Td & 1.25 To (KIPS/FT)	0	0	0	0	0	*	*	*	*	*	*	*	*	*	*	*
MAX. ANCHOR SPACING						10′-6″	10′-6″	8′-3″	6′-3″	7′-9″	7′-3″	7′-0″	6′-9″	6′-0″	6′-0″	5′-0″
SER I: B′(ft), q_0' (ksf)	8.6, 0.3	8.1, 0.4	7.6, 0.5	7.1, 0.8	8.9, 0.7	5.8, 1.9	6.1, 2.7	6.5, 3.3	7.1, 3.5	7.8, 3.7	8.7, 3.6	9.1, 4.5	10.0, 4.5	10.7, 4.6	11.6, 4.5	12.1, 5.0
STR Ia: B′(ft), q_0(ksf)	8.3, 1.0	7.6, 1.2	7.0, 1.4	6.2, 1.8	8.0, 1.8	4.7, 3.8	4.9, 4.9	5.2, 5.7	5.8, 6.3	6.2, 6.4	6.7, 6.4	7.3, 7.6	8.1, 7.6	8.6, 7.9	9.4, 7.7	9.8, 8.6
STR, Ib: B′(ft), q_0(ksf)	7.8, 0.8	6.9, 1.0	6.0, 1.3	5.0, 1.8	6.6, 1.7	3.4, 4.4	3.8, 5.4	4.1, 6.1	4.6, 6.4	5.0, 6.9	5.2, 7.1	5.9, 8.2	6.6, 8.1	7.0, 8.5	7.6, 8.3	8.0, 9.1
Ext I: B′(ft), q_0(ksf)	7.9, 0.8	7.1, 0.9	6.2, 1.2	5.0, 1.7	6.3, 1.8	2.8, 5.2	2.9, 7.1	3.2, 8.3	3.5, 9.3	3.6, 9.6	4.6, 11.3	4.3, 11.5	4.6, 11.7	4.9, 12.4	5.2, 12.2	5.3, 13.8
Ext II: B′(ft), q_0(ksf)	2.8, 2.0	2.9, 2.3	3.2, 2.4	3.3, 2.7	6.0, 1.7	3.8, 3.6	4.7, 4.1	5.6, 4.5	6.5, 4.5	7.4, 4.5	8.8, 5.1	9.0, 5.1	10.1, 5.1	10.9, 5.2	11.9, 4.9	12.4, 5.4

Note: ⓗ Bar spacing shown is along the length of the retaining wall.
* denotes values to be determined by designer, and this note is removed afterwards.

Symbols:

SER: service limit state
STR: strength limit state
EXT: extreme event limit state
B′: effective footing width (ft)
q_0': net bearing stress (ksf)
q_0: gross uniform bearing stress (ksf)
℧: 2 bar bundle
To: Anchor Lockoff Load
Tp: Anchor Factored Test Load

RETAINING WALL PLAN R12-6

RETAINING WALL NO. 65

RETAINING WALL TYPE 7B - DETAILS NO. 2

_____ STANDARD DRAWING

FILE NO. **xs14-375-2**

APPROVAL DATE X-X-X

STATE OF **CALIFORNIA** DEPARTMENT OF TRANSPORTATION

DIVISION OF ENGINEERING SERVICES

BRIDGE NO. X

POST MILE X

DS OSD 2147A (ENGLISH STANDARD DRAWING "XS" BORDER REV. (02-02-11)

ORIGINAL SCALE IN INCHES FOR REDUCED PLANS 0 1 2 3

UNIT: 2242
PROJECT NUMBER & PHASE: 08000005061 CONTRACT NO.: X

DISREGARD PRINTS BEARING EARLIER REVISION DATES

REVISION DATES | SHEET X | OF X

FILE => 80m94uq1006.dgn

USERNAME => s124496 DATE PLOTTED => 17-APR-2012 TIME PLOTTED => 19:06

DIST	COUNTY	ROUTE	POST MILES TOTAL PROJECT	SHEET No.	TOTAL SHEETS
08	Riv,SBd	91,215	21.5/21.7, 43.2/45.2,0.0/5.1	767	1743

REGISTERED CIVIL ENGINEER 1-2-12 DATE

4-16-12
PLANS APPROVAL DATE

REGISTERED PROFESSIONAL ENGINEER LARRY WU No. C57035 Exp. 6-30-13 CIVIL STATE OF CALIFORNIA

The State of California or its officers or agents shall not be responsible for the accuracy or completeness of electronic copies of this plan sheet.

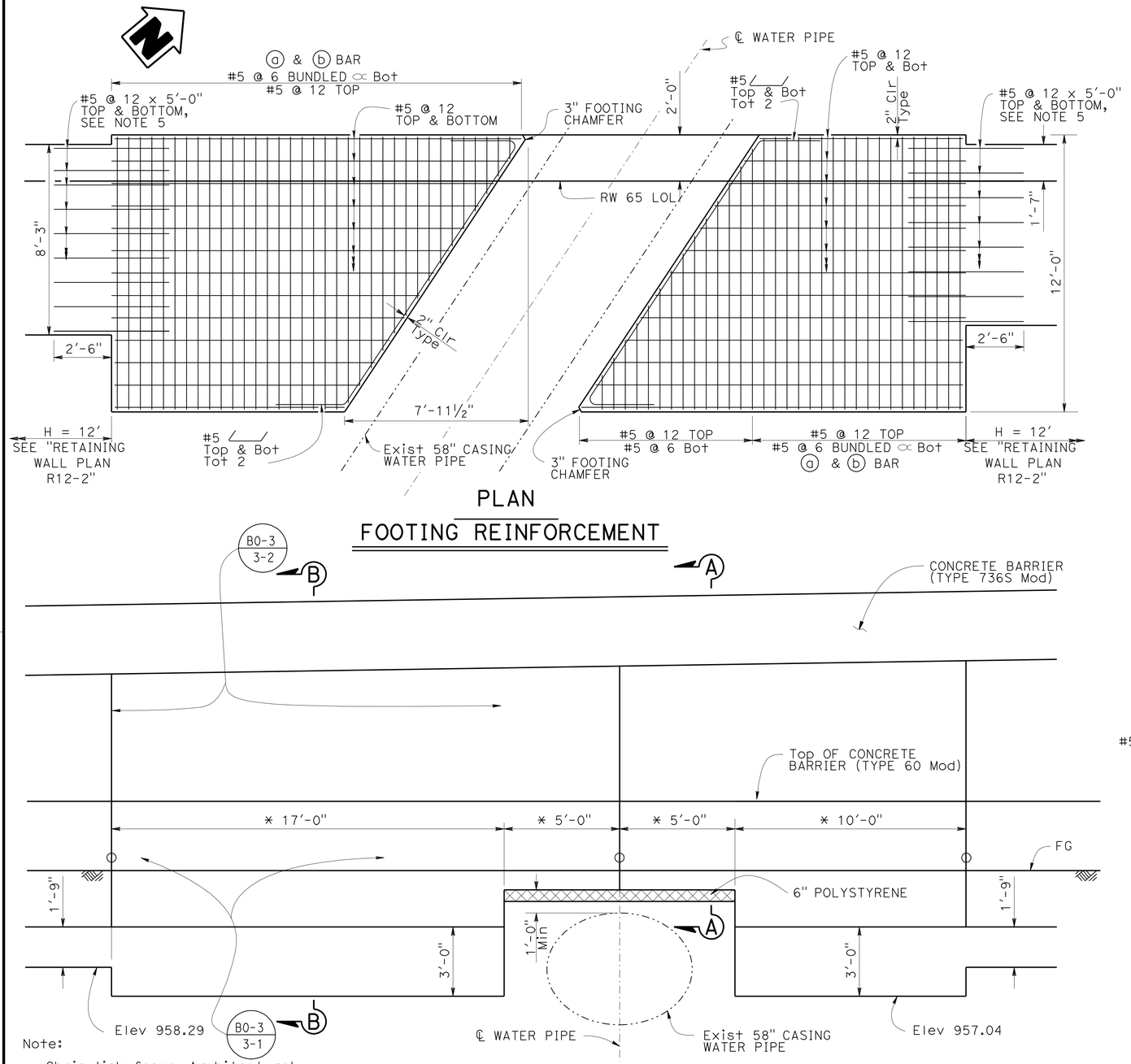

PLAN
FOOTING REINFORCEMENT

Note:
Chain link fence, Architectural treatment not shown.

ELEVATION
RETAINING WALL NO. 65

⅜" = 1'-0"
Sta 70+64.80±

NOTE:
THE CONTRACTOR SHALL VERIFY ALL CONTROLLING FIELD DIMENSIONS BEFORE ORDERING OR FABRICATING ANY MATERIAL.

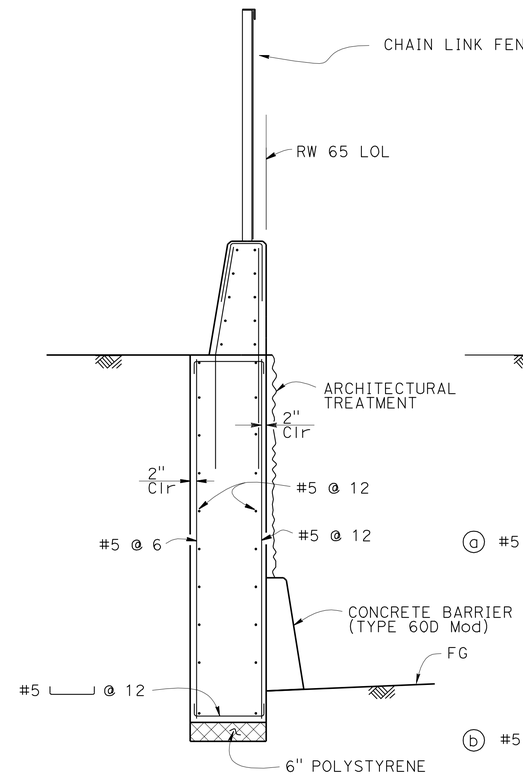

SECTION A-A

½" = 1'-0"

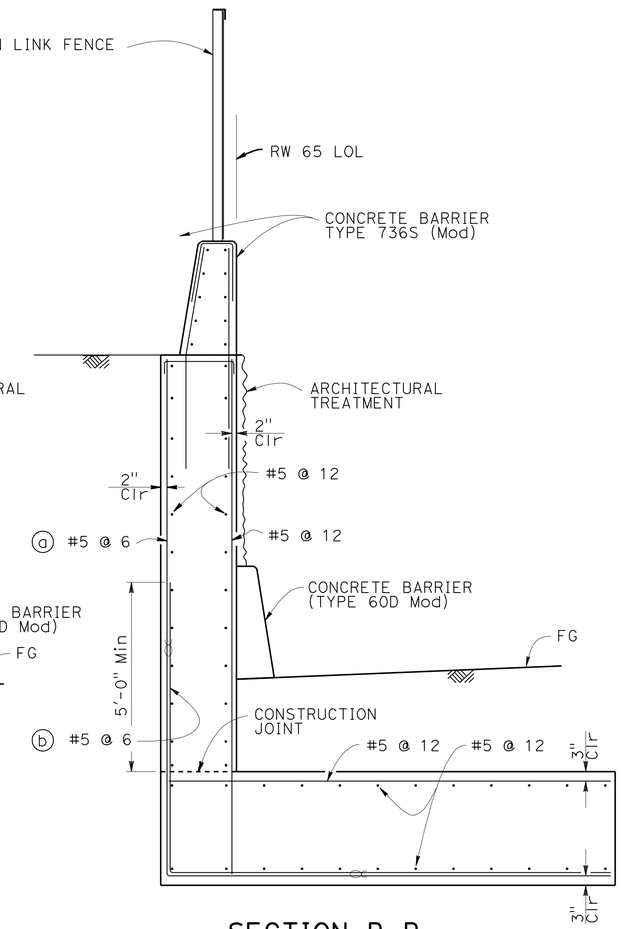

SECTION B-B

½" = 1'-0"

Note:

1. For Concrete Barrier Type 736S (Mod) detail, see " Detail A - without haunch" on "Retaining Wall Type 7B - Details No. 1" sheet.
2. For chain link fence, Architectural treatment and concrete barrier (type 60D Mod), see "Retaining Wall Plan R65-B".
3. ⓐ and ⓑ bar shall be bundled.
4. Previous backfill and wheep hole not shown in Section A-A and Section B-B.
5. Place the bottom rebars spanning from standard Type 7B retaining wall footing.

Legend:

* Indicates dimension along RW 65LOL.

R12-7

DESIGN	BY Jun Ki Jung	CHECKED	
DETAILS	BY Yingjue Feng	CHECKED	
QUANTITIES	BY	CHECKED	

STATE OF CALIFORNIA
DEPARTMENT OF TRANSPORTATION

DIVISION OF ENGINEERING SERVICES
STRUCTURE DESIGN
DESIGN BRANCH 10

BRIDGE NO. RW 65
POST MILE X

RETAINING WALL NO. 65
RETAINING WALL TYPE 7B MOD DETAILS

STRUCTURES DESIGN DETAIL SHEET (ENGLISH) (REV. 09-01-10)

ORIGINAL SCALE IN INCHES FOR REDUCED PLANS 0 1 2 3

UNIT: 3589
PROJECT NUMBER & PHASE: 08000005061
CONTRACT NO.: 08-0M9401

DISREGARD PRINTS BEARING EARLIER REVISION DATES

REVISION DATES 9-16-11 10-5-11 SHEET OF

FILE => 80m94uq1007.dgn

USERNAME => s124496 DATE PLOTTED => 17-APR-2012 TIME PLOTTED => 19:06

Dist	COUNTY	ROUTE	POST MILES TOTAL PROJECT	SHEET No.	TOTAL SHEETS
08	Riv,SBd	91,215	21.5/21.7, 43.2/45.2,0.0/5.1	768	1743

REGISTERED CIVIL ENGINEER 1-2-12 DATE

4-16-12
PLANS APPROVAL DATE

REGISTERED PROFESSIONAL ENGINEER JUSTINE NIU No. C 62897 Exp. 6-30-12 CIVIL STATE OF CALIFORNIA

THE STATE OF CALIFORNIA OR ITS OFFICERS OR AGENTS SHALL NOT BE RESPONSIBLE FOR THE ACCURACY OR COMPLETENESS OF SCANNED COPIES OF THIS PLAN SHEET.

NOTES

1. SEE RETAINING WALL DETAILS FOR CONCRETE BARRIER (TYPE 60D MOD).
2. CONTRACTOR OPTIONS FOR FILL BETWEEN CONCRETE BARRIER WALLS:
   A. PLACE 4" PCC AT BASE BETWEEN CONCRETE BARRIER WALLS.
   B. PLACE 12" OF GRANULAR MATERIAL AT BASE BETWEEN WALLS.
   C. PLACE GRANULAR MATERIAL FROM BASE TO BOTTOM OF 4" CAP.
   D. MONOLITHIC CONCRETE WITH FOAM BLOCKOUTS IS NOT PERMITTED.
3. REINFORCING STEEL SHALL EXTEND CONTINUOUS THROUGH CONSTRUCTION JOINTS.
4. ADJUST HEIGHT OF CONCRETE BARRIER WALL ON LOW SIDE OF OFFSET OR SUPERELEVATED ROADWAYS TO PROVIDE LEVEL GRADE ACROSS TOP OF CONCRETE BARRIER CAP.
5. PULL BOXES TO BE PLACED AS SHOWN OR AS DIRECTED BY THE ENGINEER.

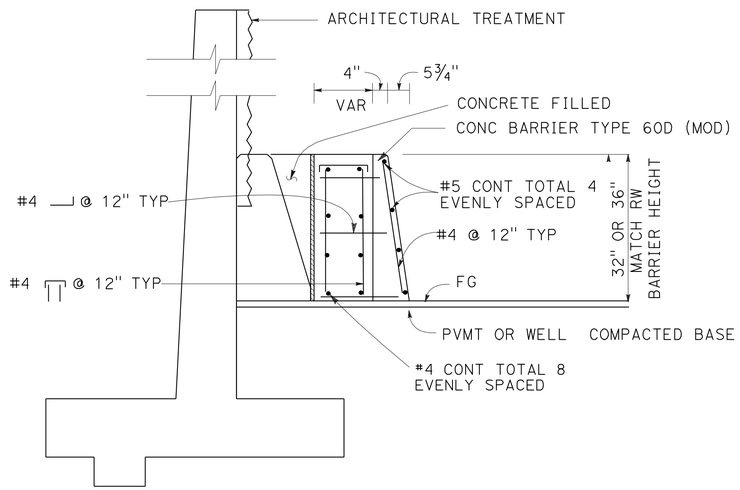

DETAIL A

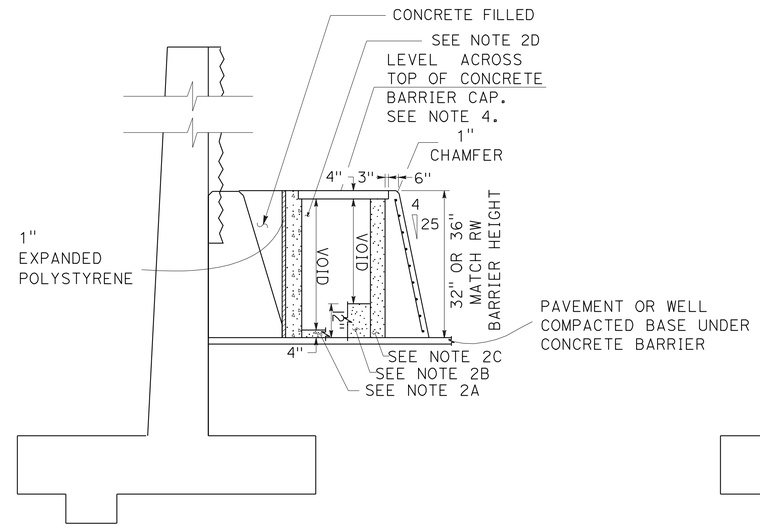

SECTION A-A

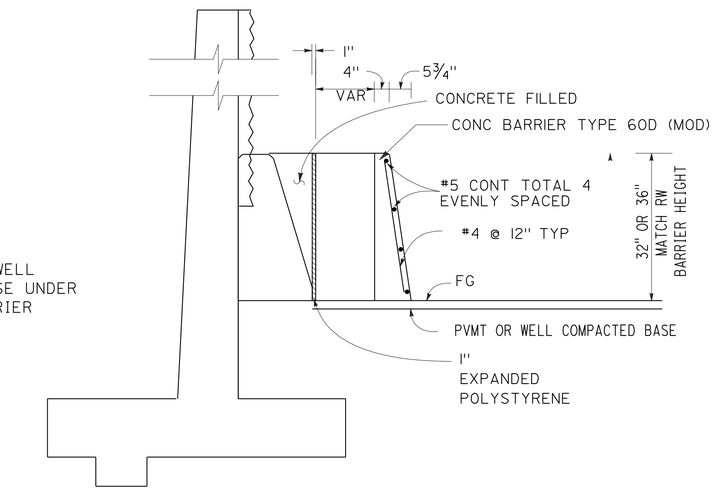

SECTION B-B

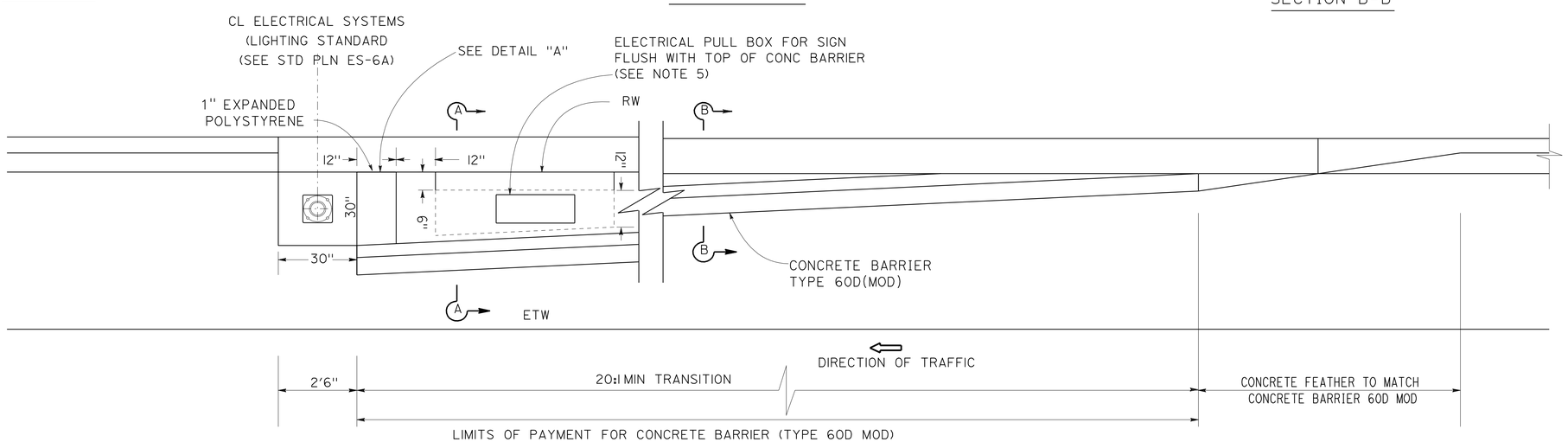

CONCRETE BARRIER 60D MOD TRANISTION DETAILS FOR LIGHTING STANDARD

NO SCALE

RETAINING WALL DETAILS

RETAINING WALL No. 65

SCALE AS SHOWN **R12-8**

APPROVED FOR RETAINING WALL WORK ONLY

STATE OF CALIFORNIA - DEPARTMENT OF TRANSPORTATION
DESIGN

FUNCTIONAL SUPERVISOR: BEN AMIRI
CALCULATED-DESIGNED BY: DAT H. WONG
CHECKED BY: JUSTINE NIU
REVISED BY / DATE REVISED

LAST REVISION 01-02-12
DATE PLOTTED => 17-APR-2012
TIME PLOTTED => 19:06

Dist	COUNTY	ROUTE	POST MILES TOTAL PROJECT	SHEET No.	TOTAL SHEETS
08	Riv,SBd	91,215	21.5/21.7, 43.2/45.2,0.0/5.1	769	1743

LICENSED LANDSCAPE ARCHITECT

4-16-12
PLANS APPROVAL DATE

LICENSED LANDSCAPE ARCHITECT
RAY T. DESSELLE No. 2544
Signature
11/30/13
Renewal Date
01/02/12
Date
STATE OF CALIFORNIA

THE STATE OF CALIFORNIA OR ITS OFFICERS OR AGENTS SHALL NOT BE RESPONSIBLE FOR THE ACCURACY OR COMPLETENESS OF SCANNED COPIES OF THIS PLAN SHEET.

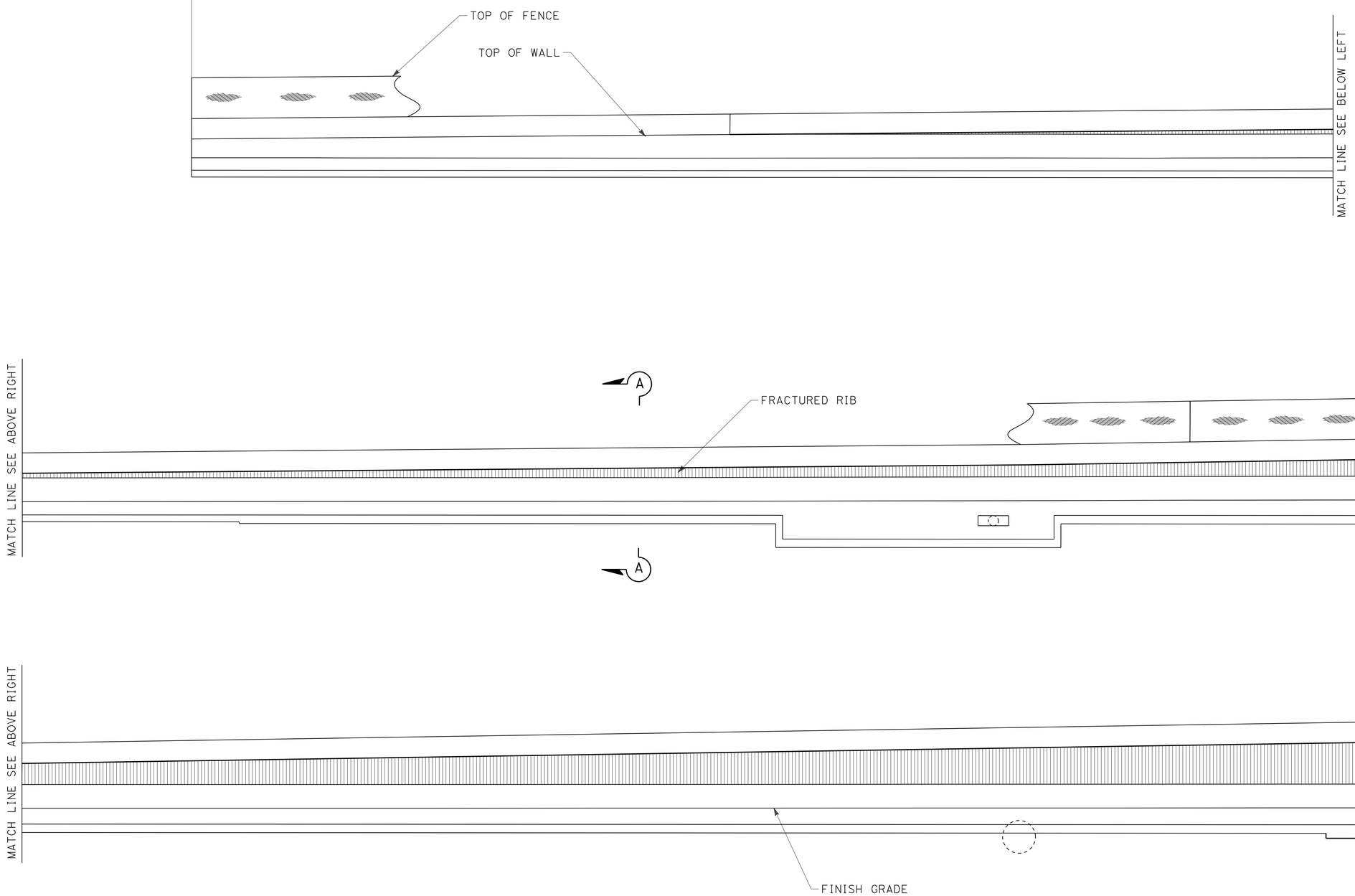

ELEVATION FOR FRACTURED RIB WITH RIBBON MOTIF RETAINING WALL No. 65

APPROVED FOR RETAINING WALL WORK ONLY

ARCHITECTURAL SURFACE
RETAINING WALL No. 65

SCALE: 1/8"=1'0

R12-9

STATE OF CALIFORNIA - DEPARTMENT OF TRANSPORTATION
Caltrans® LANDSCAPE ARCHITECTURE

SENIOR LANDSCAPE ARCHITECT: RAY DESSELLE
CALCULATED-DESIGNED BY: MATTHEW HALL
CHECKED BY: MIRIAM BISHOP
REVISED BY
DATE REVISED

LAST REVISION 01-02-12
DATE PLOTTED => 17-APR-2012
TIME PLOTTED => 19:06

Dist	COUNTY	ROUTE	POST MILES TOTAL PROJECT	SHEET No.	TOTAL SHEETS
08	Riv,SBd	91,215	21.5/21.7, 43.2/45.2,0.0/5.1	770	1743

LICENSED LANDSCAPE ARCHITECT

4-16-12
PLANS APPROVAL DATE

LICENSED LANDSCAPE ARCHITECT
RAY L. DESSELLE No. 2544
Signature
11/30/13
Renewal Date
01/02/12
Date
STATE OF CALIFORNIA

THE STATE OF CALIFORNIA OR ITS OFFICERS OR AGENTS SHALL NOT BE RESPONSIBLE FOR THE ACCURACY OR COMPLETENESS OF SCANNED COPIES OF THIS PLAN SHEET.

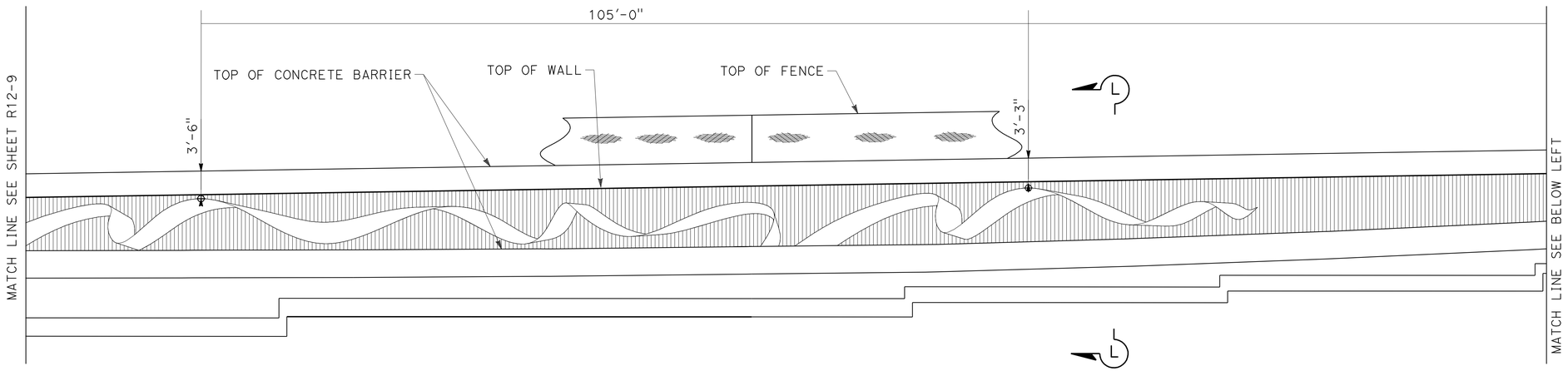

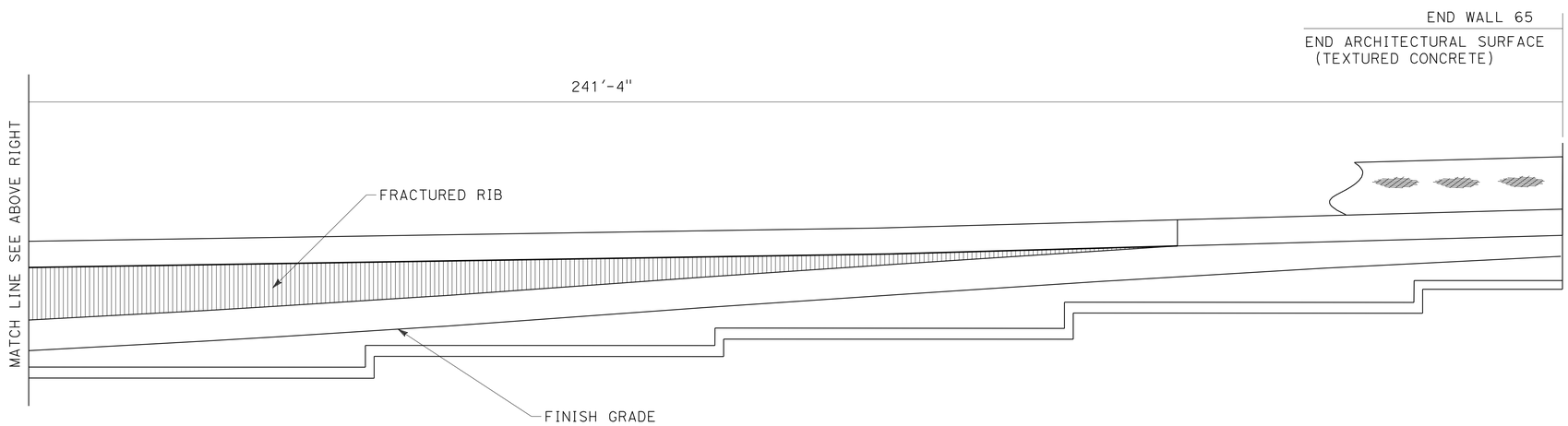

ELEVATION FOR FRACTURED RIB WITH RIBBON MOTIF RETAINING WALL No. 65

APPROVED FOR RETAINING WALL WORK ONLY

ARCHITECTURAL SURFACE
RETAINING WALL No. 65

SCALE: 1/8"=1'0

R12-10

STATE OF CALIFORNIA - DEPARTMENT OF TRANSPORTATION
Caltrans® LANDSCAPE ARCHITECTURE

SENIOR LANDSCAPE ARCHITECT: RAY DESSELLE
CALCULATED-DESIGNED BY: MATTHEW HALL
CHECKED BY: MIRIAM BISHOP
REVISED BY
DATE REVISED

LAST REVISION 01-02-12
DATE PLOTTED => 17-APR-2012
TIME PLOTTED => 19:06

FED. ROAD DIST. NO.	STATE	PROJ. NO.	FISCAL YEAR	SHEET NO.	TOTAL SHEETS
7	CAL.	08-0M9401		139	115

DIST.	COUNTY	ROUTE	PREFIX	SHEET NO.	TOTAL SHEETS
VIII	SBd	215	F	7	7

Date Approved: April 2, 1958

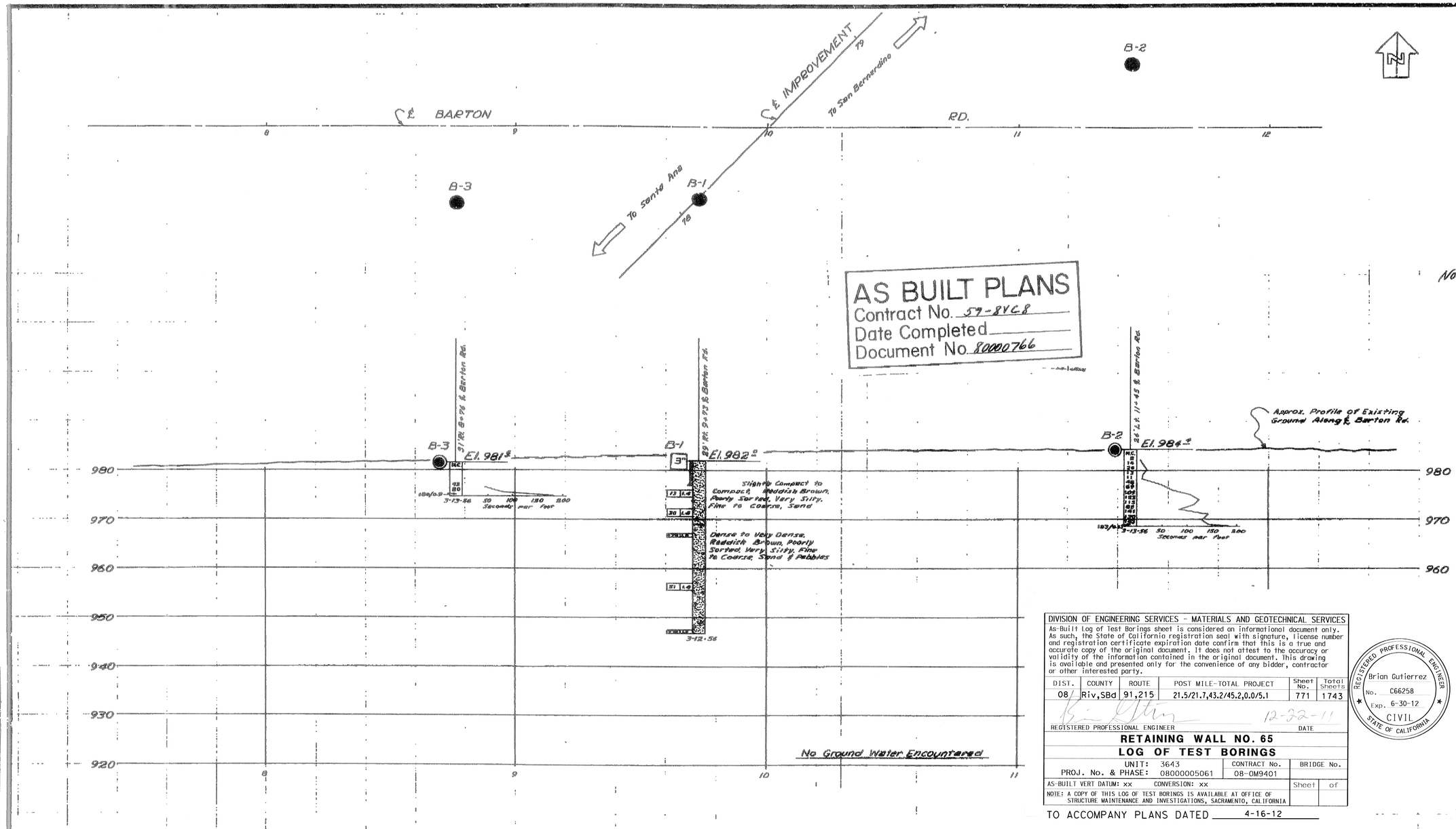

AS BUILT PLANS
Contract No. 59-8VC8
Date Completed
Document No. 80000766

AS BUILT
No CORRECTIONS BY G.G. Moore
CONTRACT NO. 59-8VC8-F

DIVISION OF ENGINEERING SERVICES - MATERIALS AND GEOTECHNICAL SERVICES

As-Built Log of Test Borings sheet is considered an informational document only. As such, the State of California registration seal with signature, license number and registration certificate expiration date confirm that this is a true and accurate copy of the original document. It does not attest to the accuracy or validity of the information contained in the original document. This drawing is available and presented only for the convenience of any bidder, contractor or other interested party.

DIST.	COUNTY	ROUTE	POST MILE-TOTAL PROJECT	Sheet No.	Total Sheets
08	Riv,SBd	91,215	21.5/21.7,43.2/45.2,0.0/5.1	771	1743

REGISTERED PROFESSIONAL ENGINEER — DATE 12-22-11

REGISTERED PROFESSIONAL ENGINEER Brian Gutierrez No. C66258 Exp. 6-30-12 CIVIL STATE OF CALIFORNIA

RETAINING WALL NO. 65

LOG OF TEST BORINGS

UNIT: 3643	CONTRACT No.	BRIDGE No.
PROJ. No. & PHASE: 08000005061	08-0M9401	
AS-BUILT VERT DATUM: xx CONVERSION: xx	Sheet	of

NOTE: A COPY OF THIS LOG OF TEST BORINGS IS AVAILABLE AT OFFICE OF STRUCTURE MAINTENANCE AND INVESTIGATIONS, SACRAMENTO, CALIFORNIA

TO ACCOMPANY PLANS DATED 4-16-12

B.M. P.S.C. 12A-54
Sp. hd. nail in 2" x 2" wd. hub buried 14". 250' Ely. of La Crosse Ave. 35' Nly of ℄ Barton Rd.
Elev. 985.73

CLASSIFICATION OF MATERIAL BASED ON STANDARD GRADE SIZE LIMITS

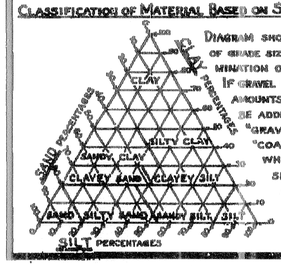

DIAGRAM SHOWING THE BASIS FOR ESTIMATES OF GRADE SIZE DISTRIBUTION USED IN DETERMINATION OF CLASS NAMES.

IF GRAVEL IS PRESENT IN APPRECIABLE AMOUNTS THE TERM "GRAVELLY" MAY BE ADDED TO THE CLASS NAME, VIZ. "GRAVELLY SAND." THE TERMS "COARSE", "MEDIUM" AND "FINE" WHEN USED TO DESCRIBE SAND, SILT AND GRAVEL REFER TO STANDARD GRADE SIZE LIMITS.

LEGEND OF EARTH MATERIALS

- GRAVEL
- SAND
- SILT
- CLAY
- SANDY CLAY OR CLAYEY SAND
- SANDY SILT OR SILTY SAND
- SILTY CLAY OR CLAYEY SILT
- PEAT AND/OR ORGANIC MATTER
- FILL MATERIAL
- IGNEOUS ROCK
- SEDIMENTARY ROCK
- METAMORPHIC ROCK

LEGEND OF BORING OPERATIONS

- PLAN OF ANY BORING
- PENETROMETER
- 2½" CONE PENETROMETER
- SAMPLER BORING (DRY)
- ROTARY BORING (WET)
- AUGER BORING (DRY)
- JET BORING
- CORE BORING
- TEST PIT

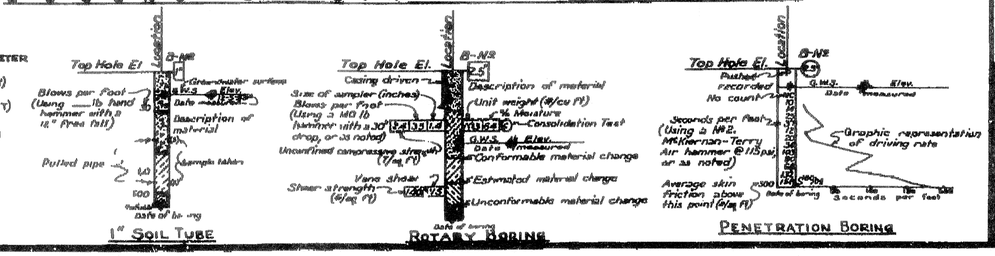

NOTES

The contractor's attention is directed to Section 2, Article (c) of the Standard Specifications, and to the Special Provisions accompanying this set of plans.

Classification of earth material as shown on this sheet is based upon field inspection and is not to be construed to imply mechanical analysis.

STATE OF CALIFORNIA
DEPARTMENT OF PUBLIC WORKS
DIVISION OF HIGHWAYS

BARTON RD. OVERCROSSING

LOG OF TEST BORINGS

SCALE	BRIDGE	FILE	DRAWING
Horiz. 1"=20' Vert. 1"=10'	54-528	E-54	C4958-7

PREL. DRAWING NO. 4958 10

BRIDGE DEPARTMENT

CHECKED

Dist	COUNTY	ROUTE	POST MILES TOTAL PROJECT	SHEET No.	TOTAL SHEETS
08	Riv,SBd	91,215	21.5/21.7, 43.2/45.2,0.0/5.1	772	1743

REGISTERED CIVIL ENGINEER 1-2-12 DATE

4-16-12
PLANS APPROVAL DATE

REGISTERED PROFESSIONAL ENGINEER JUSTINE NIU No. C 62897 Exp. 6-30-12 CIVIL STATE OF CALIFORNIA

THE STATE OF CALIFORNIA OR ITS OFFICERS OR AGENTS SHALL NOT BE RESPONSIBLE FOR THE ACCURACY OR COMPLETENESS OF SCANNED COPIES OF THIS PLAN SHEET.

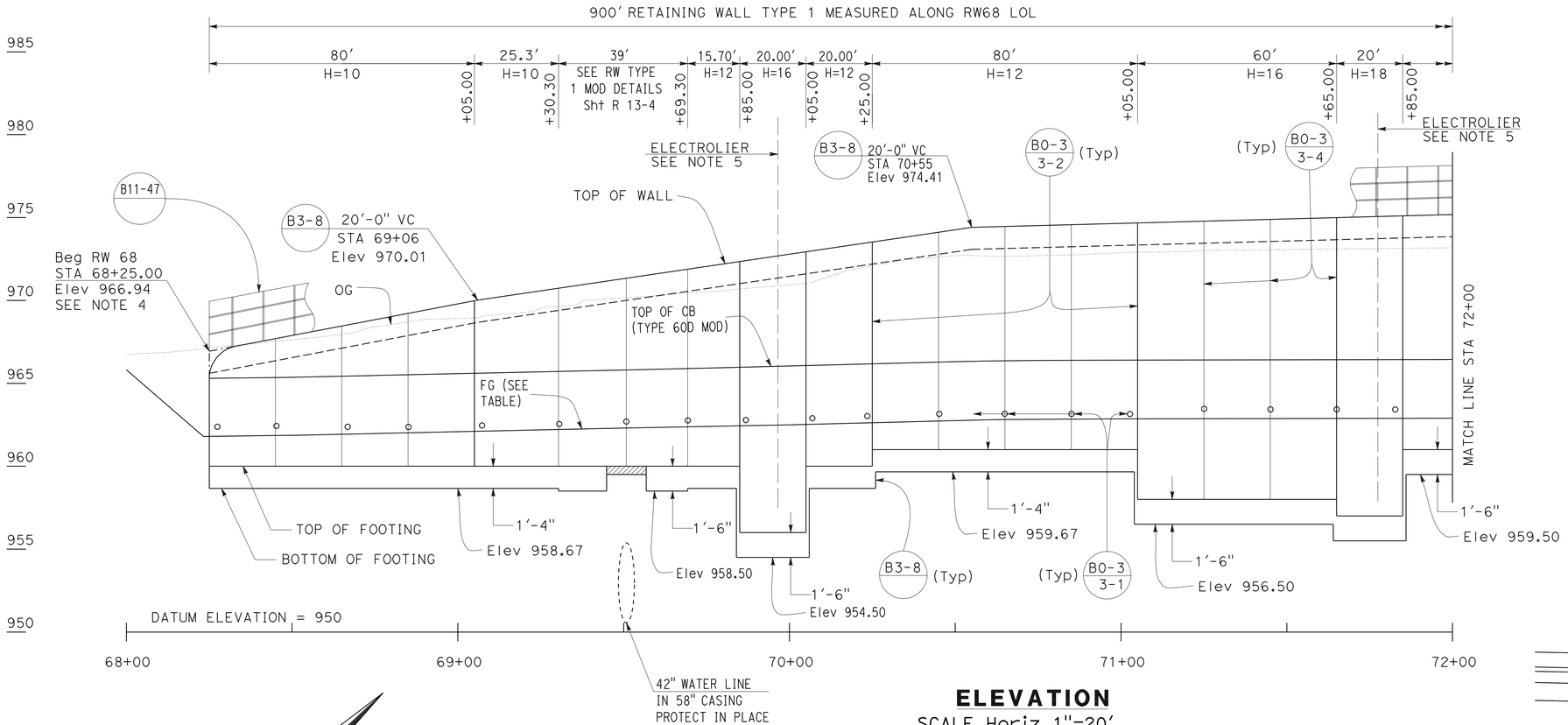

ELEVATION

SCALE Horiz 1"=20'
Vert 1"=4'

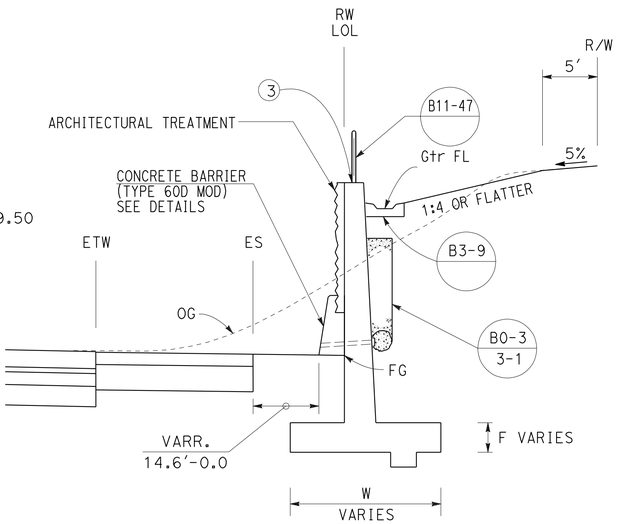

TYPICAL SECTION

NO SCALE
FROM STA 68+25.00 TO STA 77+25.00

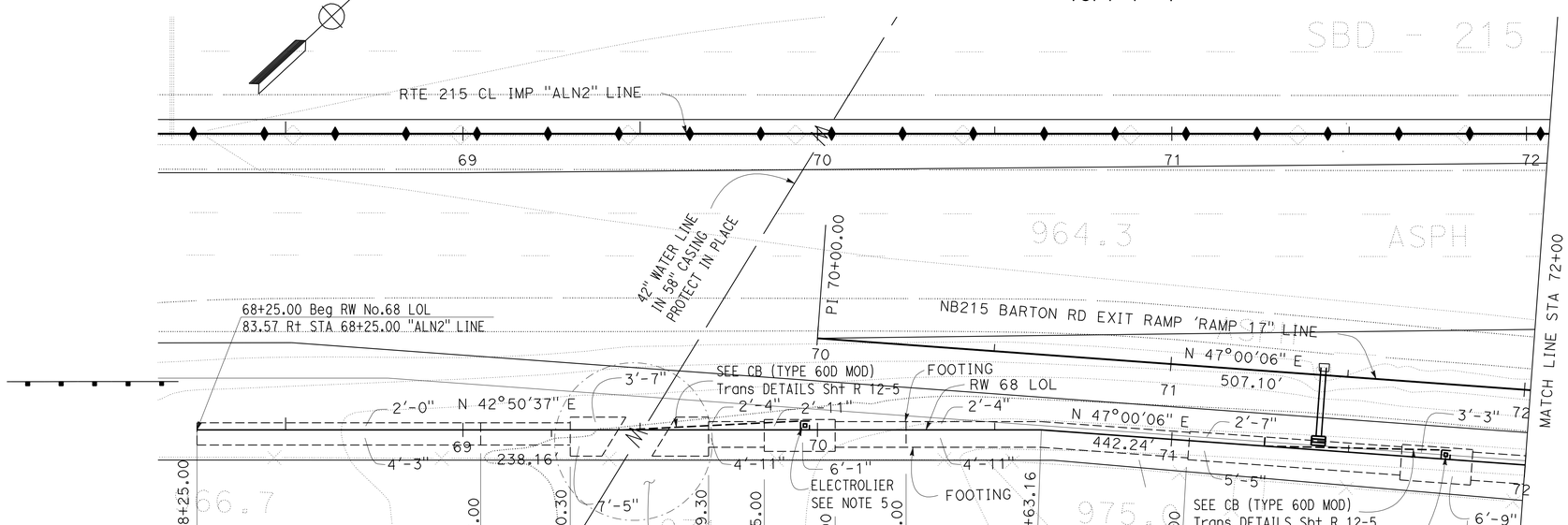

PLAN

SCALE 1"=20'

APPROVED FOR RETAINING WALL WORK ONLY

NOTES:

1. ARCHITECTURAL TREATMENT SHOULD EXTEND 6 IN BELOW FG OR 6 IN BELOW TOP CB (TYPE 60D MOD)
2. FOR STRUCTURAL SECTIONS, SEE ROADWAY PLANS
3. FOR POST ANCHORAGE DETAILS, SEE B11-52
4. FOR ROUNDING DETAILS, SEE ARCHITECTURAL TREATMENT PLANS
5. FOR ELECTROLIER DETAILS, SEE ELECTRICAL DETAILS SHEETS. FOR MOUNTING DETAILS, SEE STANDARD PLANS B11-56

RETAINING WALL PLAN

RETAINING WALL No. 68

SCALE AS SHOWN **R13-1**

STATE OF CALIFORNIA - DEPARTMENT OF TRANSPORTATION
Caltrans®
DESIGN
FUNCTIONAL SUPERVISOR: BEN AMIRI
CALCULATED-DESIGNED BY: VINH TRUONG
CHECKED BY: DAT H. WONG
REVISED BY / DATE REVISED

LAST REVISION 01-02-12
DATE PLOTTED => 17-APR-2012
TIME PLOTTED => 19:42

Dist	COUNTY	ROUTE	POST MILES TOTAL PROJECT	SHEET No.	TOTAL SHEETS
08	Riv,SBd	91,215	21.5/21.7, 43.2/45.2,0.0/5.1	773	1743

REGISTERED CIVIL ENGINEER 1-2-12 DATE

4-16-12
PLANS APPROVAL DATE

REGISTERED PROFESSIONAL ENGINEER JUSTINE NIU No. C 62897 Exp. 6-30-12 CIVIL STATE OF CALIFORNIA

THE STATE OF CALIFORNIA OR ITS OFFICERS OR AGENTS SHALL NOT BE RESPONSIBLE FOR THE ACCURACY OR COMPLETENESS OF SCANNED COPIES OF THIS PLAN SHEET.

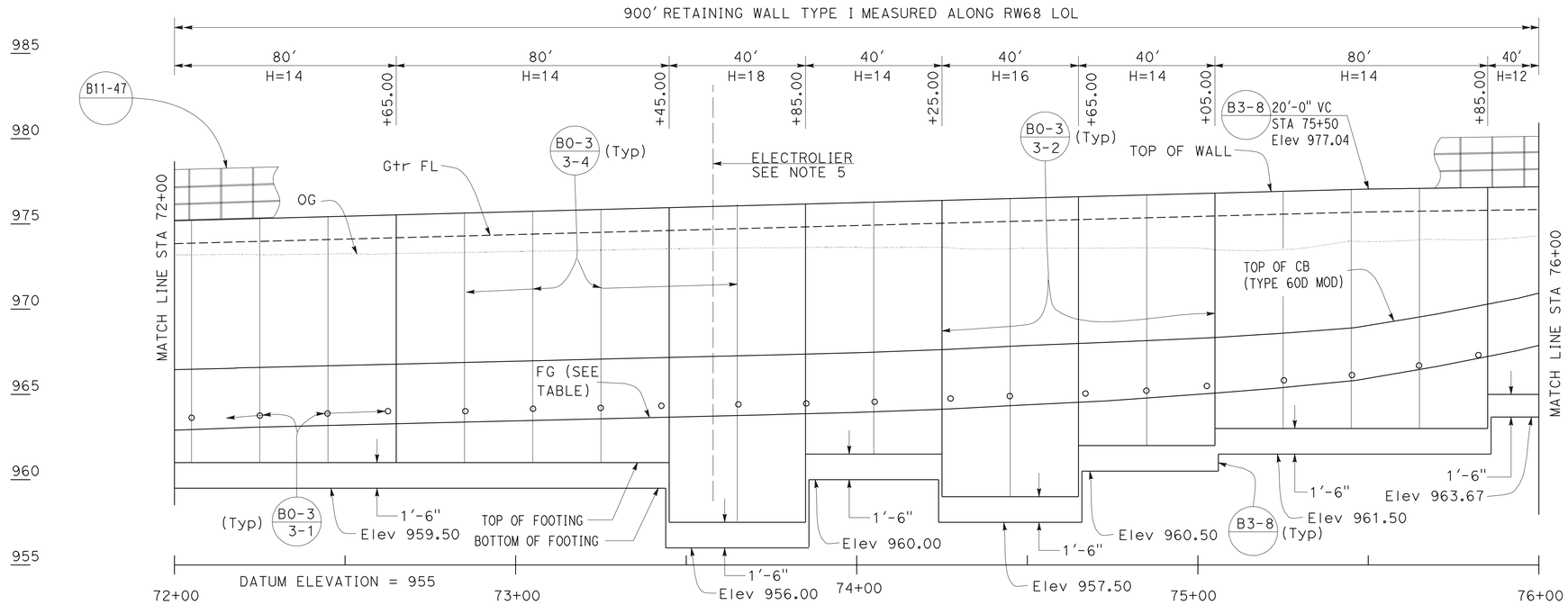

ELEVATION

SCALE Horiz 1"=20'
Vert 1"=4'

ELEVATION TABLE	
STATION	FG
68+25.00	961.80
68+50.00	961.86
69+00.00	962.09
69+50.00	962.30
70+00.00	962.50
70+50.00	962.76
71+00.00	962.85
71+50.00	962.87
72+00.00	962.90
72+50.00	963.20
73+00.00	963.45
73+50.00	963.69
74+00.00	963.94
74+50.00	964.39
75+00.00	965.00
75+50.00	965.95
76+00.00	967.87
76+50.00	970.80
77+00.00	974.37
77+25.00	977.67

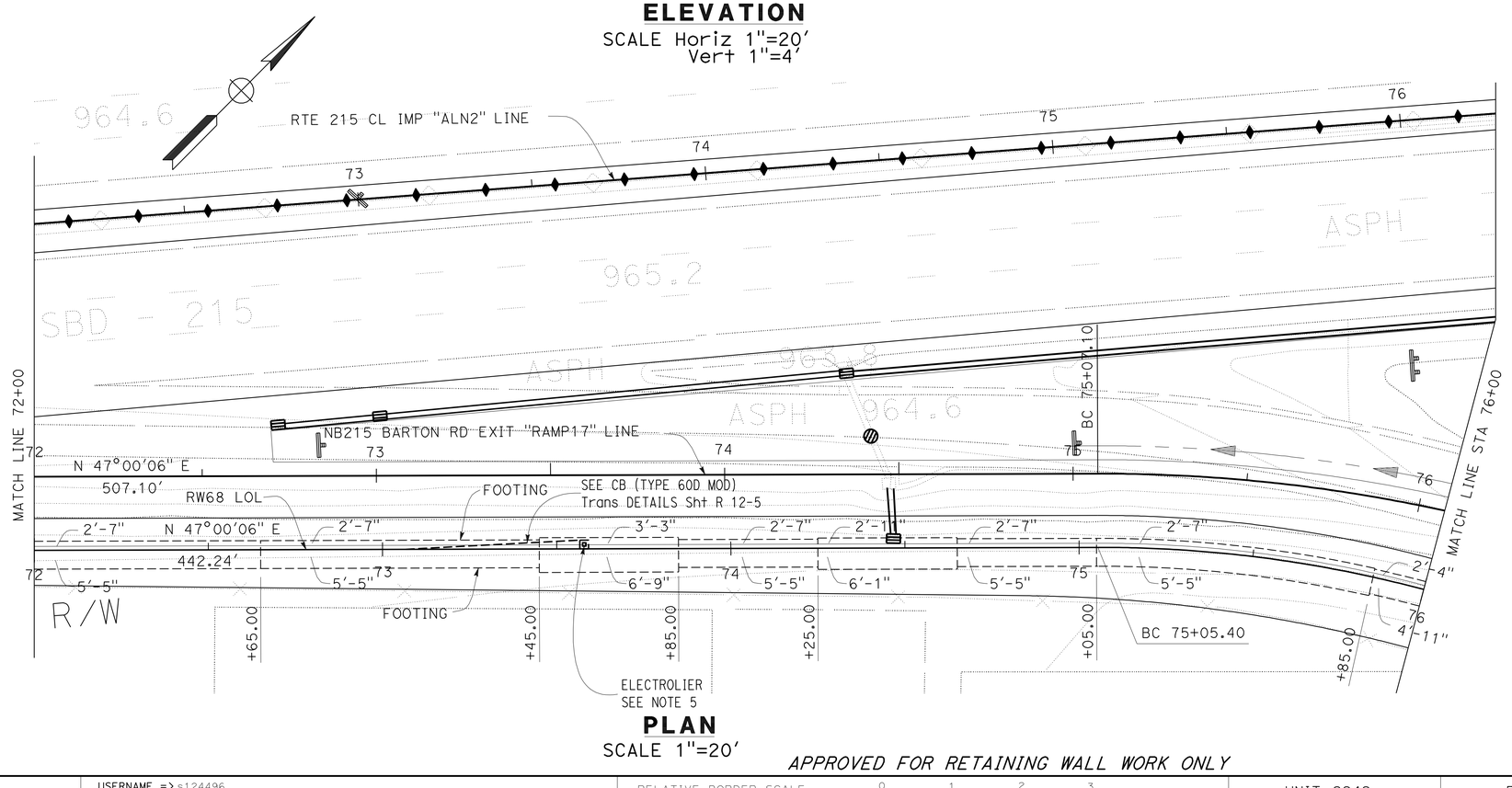

PLAN

SCALE 1"=20'

APPROVED FOR RETAINING WALL WORK ONLY

RETAINING WALL PLAN

RETAINING WALL No. 68

SCALE AS SHOWN **R13-2**

REVISED BY | DATE REVISED
VINH TRUONG | DAT H. WONG
CALCULATED-DESIGNED BY | CHECKED BY
FUNCTIONAL SUPERVISOR: BEN AMIRI

STATE OF CALIFORNIA - DEPARTMENT OF TRANSPORTATION
Caltrans® DESIGN

LAST REVISION 01-02-12 | DATE PLOTTED => 17-APR-2012 | TIME PLOTTED => 19:42

Dist	COUNTY	ROUTE	POST MILES TOTAL PROJECT	SHEET No.	TOTAL SHEETS
08	Riv,SBd	91,215	21.5/21.7, 43.2/45.2,0.0/5.1	774	1743

REGISTERED CIVIL ENGINEER 1-2-12 DATE

4-16-12
PLANS APPROVAL DATE

REGISTERED PROFESSIONAL ENGINEER JUSTINE NIU No. C 62897 Exp. 6-30-12 CIVIL STATE OF CALIFORNIA

THE STATE OF CALIFORNIA OR ITS OFFICERS OR AGENTS SHALL NOT BE RESPONSIBLE FOR THE ACCURACY OR COMPLETENESS OF SCANNED COPIES OF THIS PLAN SHEET.

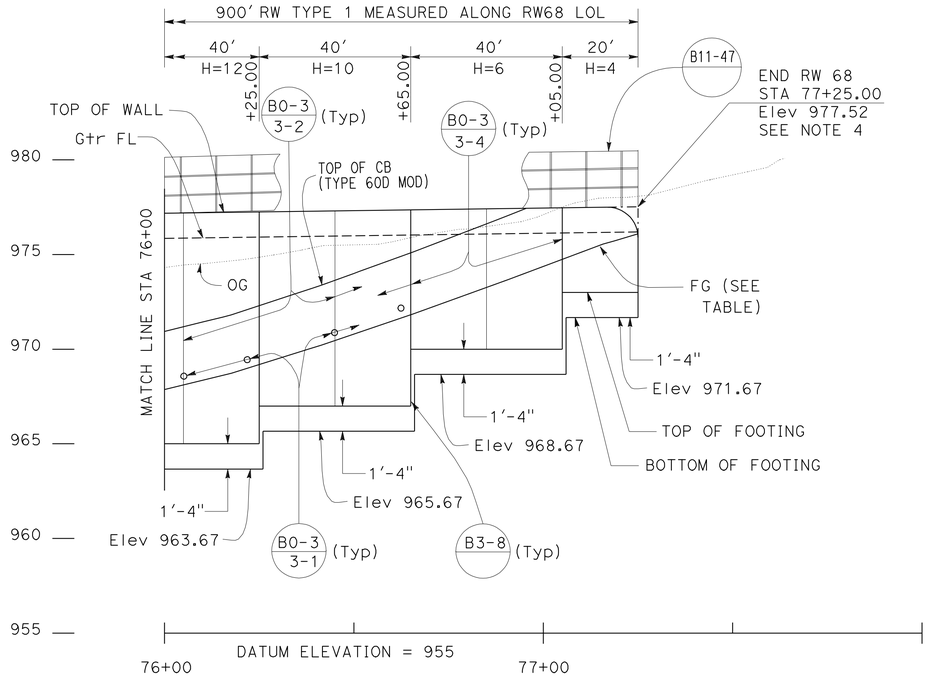

ELEVATION

SCALE Horiz 1"=20'
Vert 1"=4'

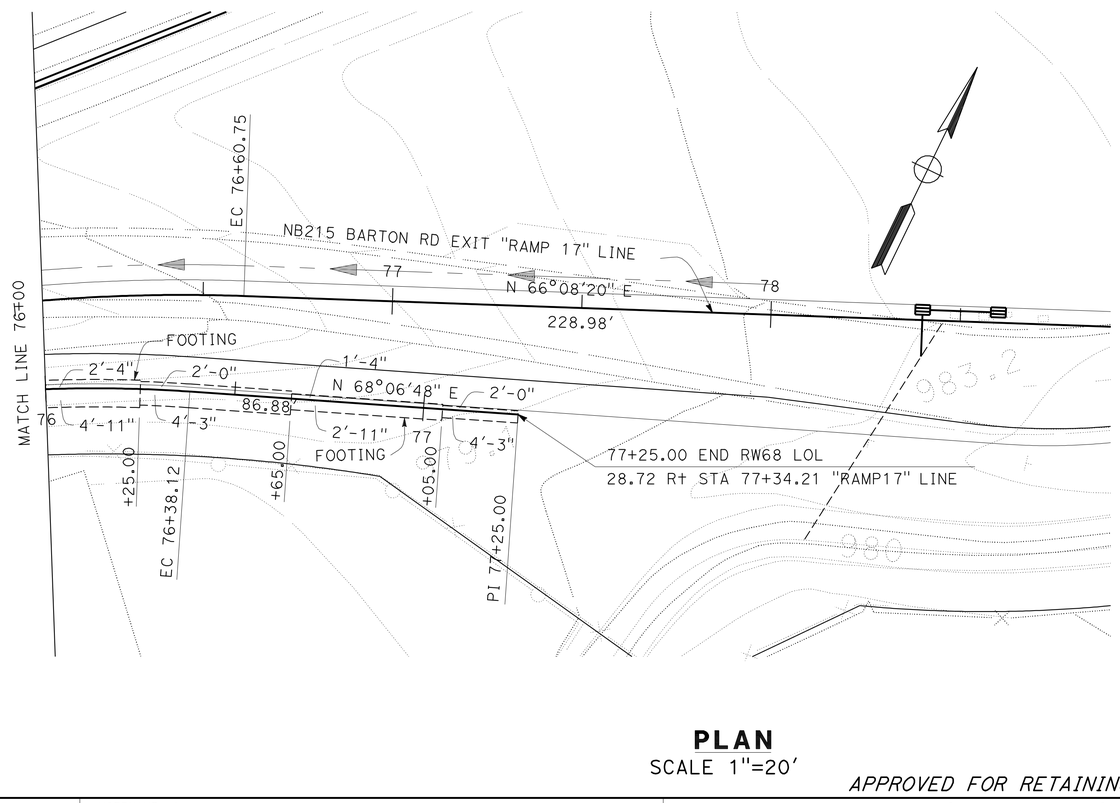

PLAN

SCALE 1"=20'

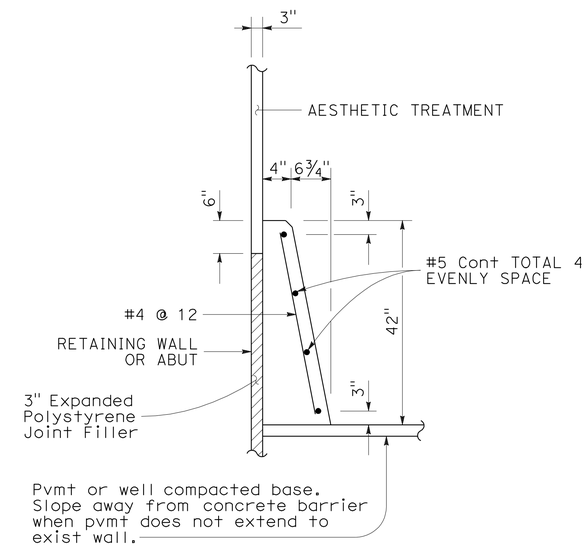

CONCRETE BARRIER (TYPE 60D MOD)

QUANTITIES

STRUCTURAL CONCRETE (RETAINING WALL)	939.2	CY
BAR REINFORCING STEEL (RETAINING WALL)	95009	LB
STRUCTURAL EXCAVATION (RETAINING WALL)	3413.7	CY
STRUCTURAL BACKFILL (RETAINING WALL)	2185.1	CY
PERVIOUS BACKFILL MATERIAL (RETAINING WALL)	212.6	CY
CONCRETE BARRIER (TYPE 60D MOD)	900.0	LF
CABLE RAILING	900.0	LF
MINOR CONCRETE (GUTTER)	900.0	LF
PLASTIC PIPE (N)	49.1	LF
WATERSTOP (N)	174.4	LF
ARCHITECTURE SURFACE (TEXTURE CONCRETE)	6544	SF

(N) = NOT A SEPARATE PAY ITEM, FOR INFORMATION ONLY

RETAINING WALL PLAN

RETAINING WALL No. 68

SCALE AS SHOWN **R13-3**

APPROVED FOR RETAINING WALL WORK ONLY

STATE OF CALIFORNIA - DEPARTMENT OF TRANSPORTATION
Caltrans
DESIGN

FUNCTIONAL SUPERVISOR: BEN AMIRI
CALCULATED-DESIGNED BY: VINH TRUONG
CHECKED BY: DAT H. WONG
REVISED BY / DATE REVISED

LAST REVISION 01-02-12
DATE PLOTTED => 17-APR-2012
TIME PLOTTED => 19:42

DIST	COUNTY	ROUTE	POST MILES TOTAL PROJECT	SHEET No.	TOTAL SHEETS
08	Riv,SBd	91,215	21.5/21.7, 43.2/45.2,0.0/5.1	775	1743

REGISTERED CIVIL ENGINEER 1-2-12 DATE

4-16-12
PLANS APPROVAL DATE

REGISTERED PROFESSIONAL ENGINEER LARRY WU No. C57035 Exp. 6-30-13 CIVIL STATE OF CALIFORNIA

The State of California or its officers or agents shall not be responsible for the accuracy or completeness of electronic copies of this plan sheet.

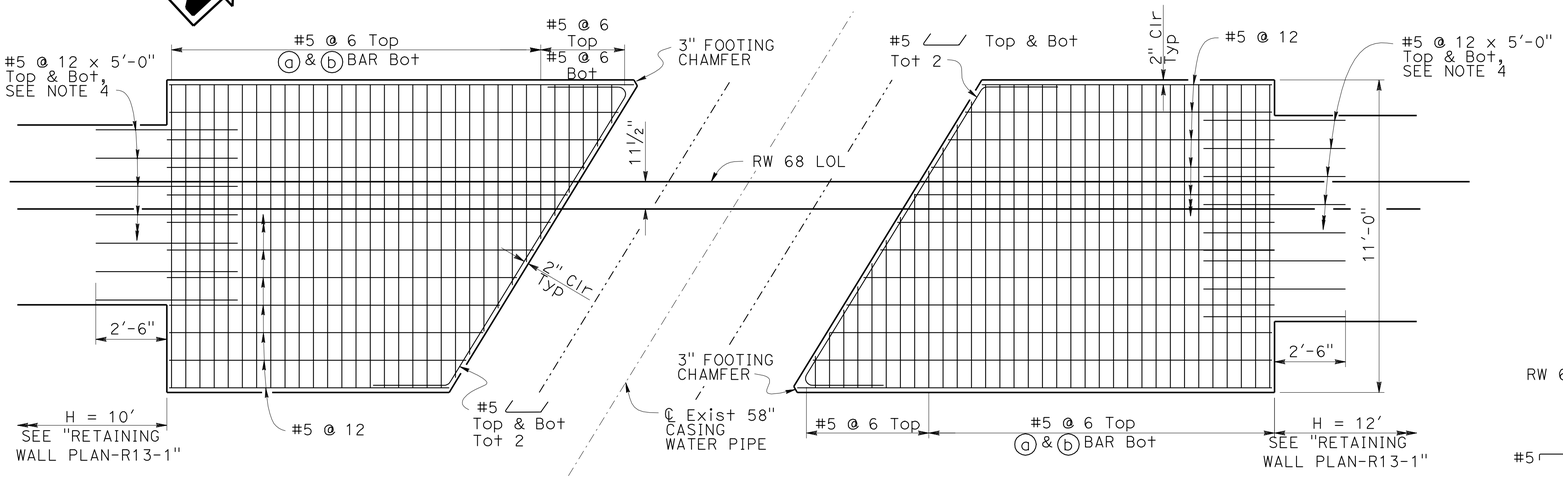

PLAN
FOOTING REINFORCEMENT

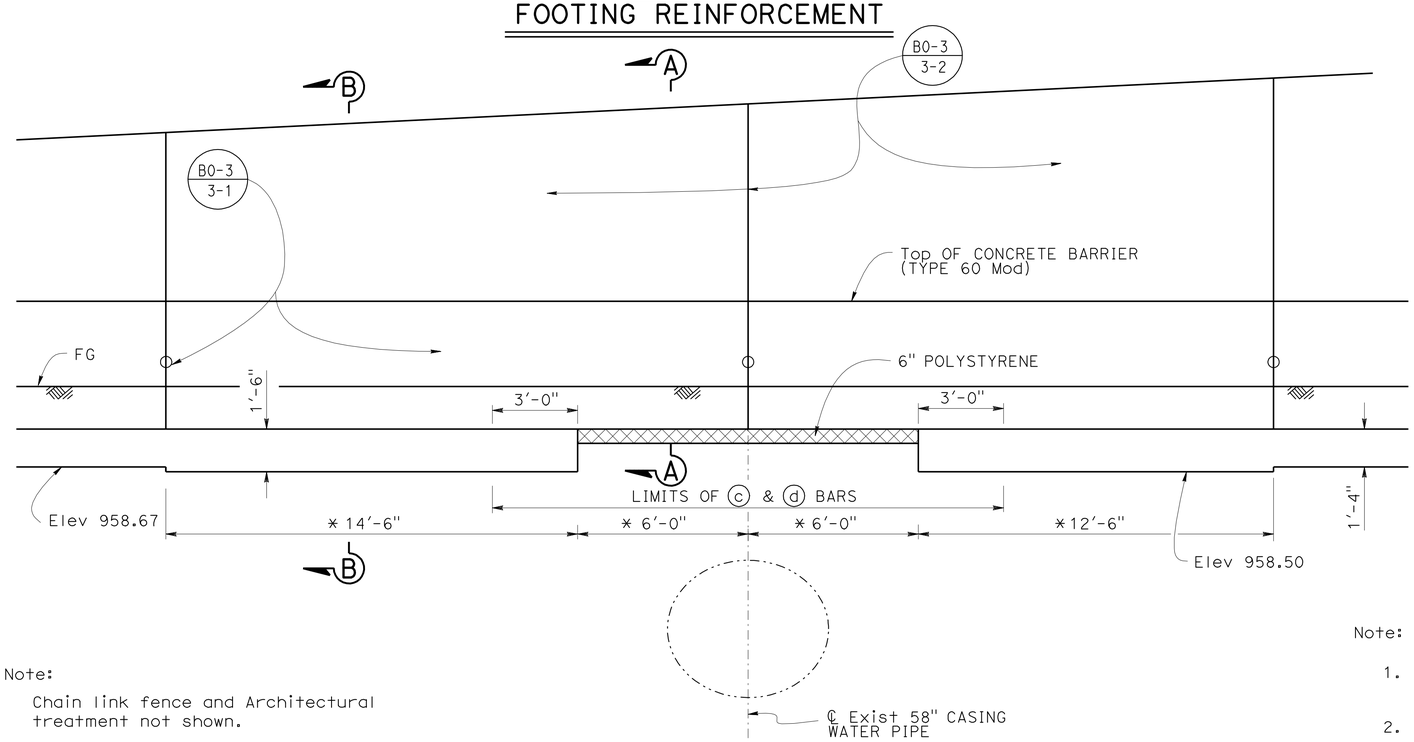

ELEVATION
RETAINING WALL NO. 68

⅜" = 1'-0"

Sta 69+50.88±

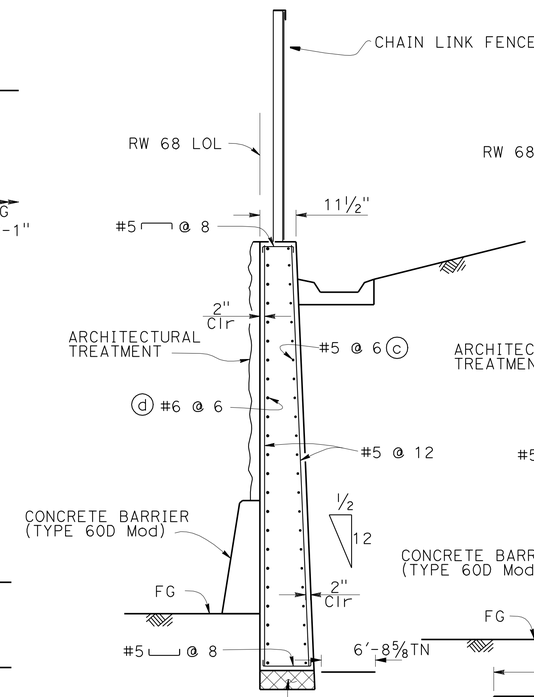

SECTION A-A

½" = 1'-0"

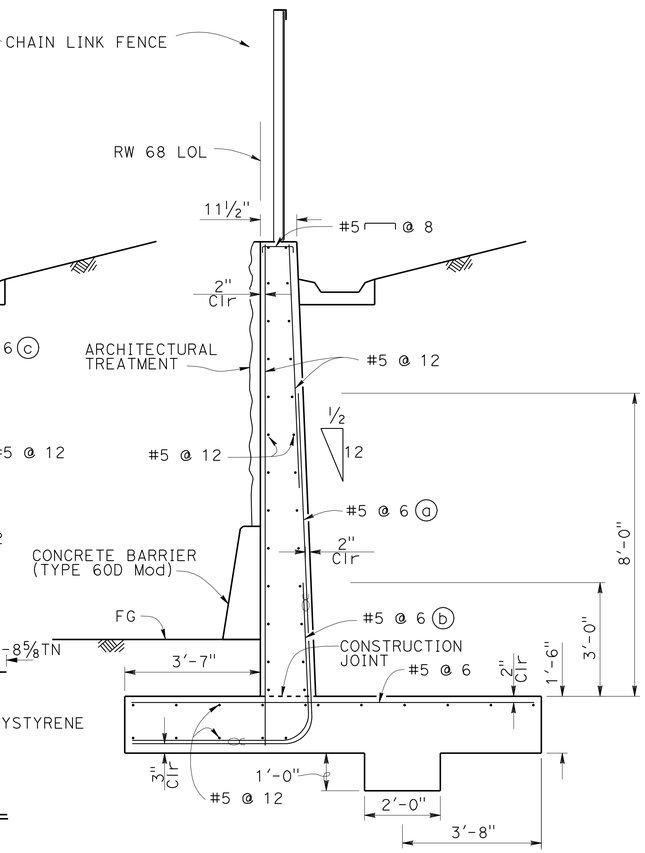

SECTION B-B

½" = 1'-0"

Note:

Chain link fence and Architectural treatment not shown.

NOTE:
THE CONTRACTOR SHALL VERIFY ALL CONTROLLING FIELD DIMENSIONS BEFORE ORDERING OR FABRICATING ANY MATERIAL.

Note:

1. Previous backfill and wheep holes not shown in Section A-A and Section B-B.
2. For details not shown, see "Retaining Wall Plan RW- 68A".
3. ⓐ and ⓑ bar shall be bundled.
4. Place the bottom rebars on short ⓒ bar for Type 1 Retaining wall shown on "Standard Plan B3-1".

Legend:

* Indicates dimensions along RW 68 LOL.

R13-4

DESIGN	BY Jun Ki Jung	CHECKED	
DETAILS	BY Yingjue Feng	CHECKED	
QUANTITIES	BY	CHECKED	

STATE OF CALIFORNIA
DEPARTMENT OF TRANSPORTATION

DIVISION OF ENGINEERING SERVICES
STRUCTURE DESIGN
DESIGN BRANCH 10

BRIDGE NO. RW 68
POST MILE X

RETAINING WALL NO. 68
RETAINING WALL TYPE 1 MOD DETAILS

STRUCTURES DESIGN DETAIL SHEET (ENGLISH) (REV. 09-01-10)

ORIGINAL SCALE IN INCHES FOR REDUCED PLANS 0 1 2 3

UNIT: 3589
PROJECT NUMBER & PHASE: 08000005061
CONTRACT NO.: 08-0M9401

DISREGARD PRINTS BEARING EARLIER REVISION DATES

REVISION DATES: 9-23-11 10-3-11 10-5-11 10-6-11 SHEET OF

FILE => 80m94uqm004.dgn

USERNAME => s124496 DATE PLOTTED => 17-APR-2012 TIME PLOTTED => 19:42

Dist	COUNTY	ROUTE	POST MILES TOTAL PROJECT	SHEET No.	TOTAL SHEETS
08	Riv,SBd	91,215	21.5/21.7, 43.2/45.2,0.0/5.1	776	1743

REGISTERED CIVIL ENGINEER 1-2-12 DATE

4-16-12
PLANS APPROVAL DATE

REGISTERED PROFESSIONAL ENGINEER JUSTINE NIU No. C 62897 Exp. 6-30-12 CIVIL STATE OF CALIFORNIA

THE STATE OF CALIFORNIA OR ITS OFFICERS OR AGENTS SHALL NOT BE RESPONSIBLE FOR THE ACCURACY OR COMPLETENESS OF SCANNED COPIES OF THIS PLAN SHEET.

NOTES

1. SEE RETAINING WALL DETAILS FOR CONCRETE BARRIER (TYPE 60D MOD).
2. CONTRACTOR OPTIONS FOR FILL BETWEEN CONCRETE BARRIER WALLS:
   A. PLACE 4" PCC AT BASE BETWEEN CONCRETE BARRIER WALLS.
   B. PLACE 12" OF GRANULAR MATERIAL AT BASE BETWEEN WALLS.
   C. PLACE GRANULAR MATERIAL FROM BASE TO BOTTOM OF 4" CAP.
   D. MONOLITHIC CONCRETE WITH FOAM BLOCKOUTS IS NOT PERMITTED.
3. REINFORCING STEEL SHALL EXTEND CONTINUOUS THROUGH CONSTRUCTION JOINTS.
4. ADJUST HEIGHT OF CONCRETE BARRIER WALL ON LOW SIDE OF OFFSET OR SUPERELEVATED ROADWAYS TO PROVIDE LEVEL GRADE ACROSS TOP OF CONCRETE BARRIER CAP.
5. PULL BOXES TO BE PLACED AS SHOWN OR AS DIRECTED BY THE ENGINEER.

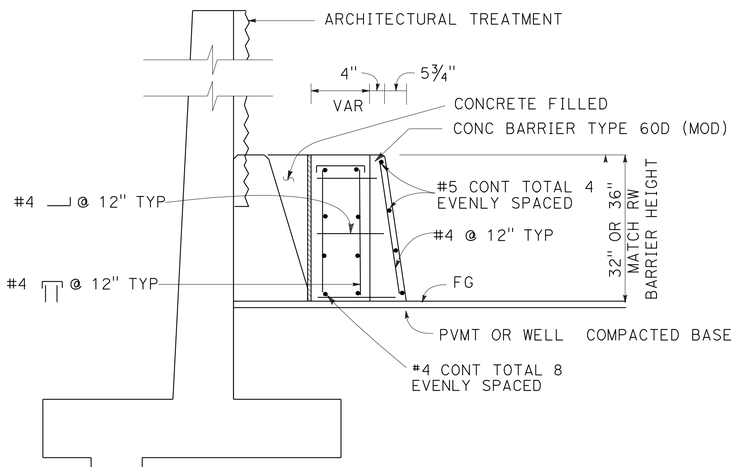

DETAIL A

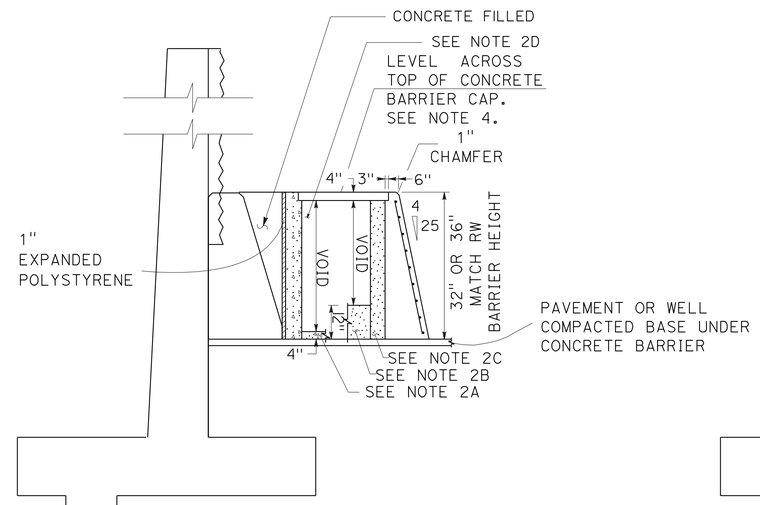

SECTION A-A

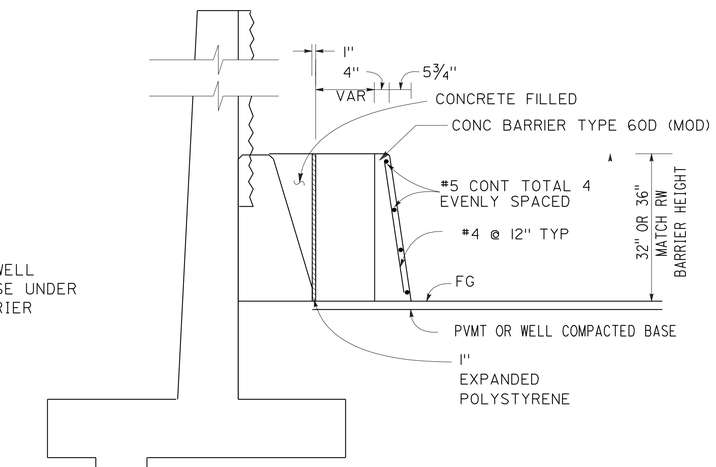

SECTION B-B

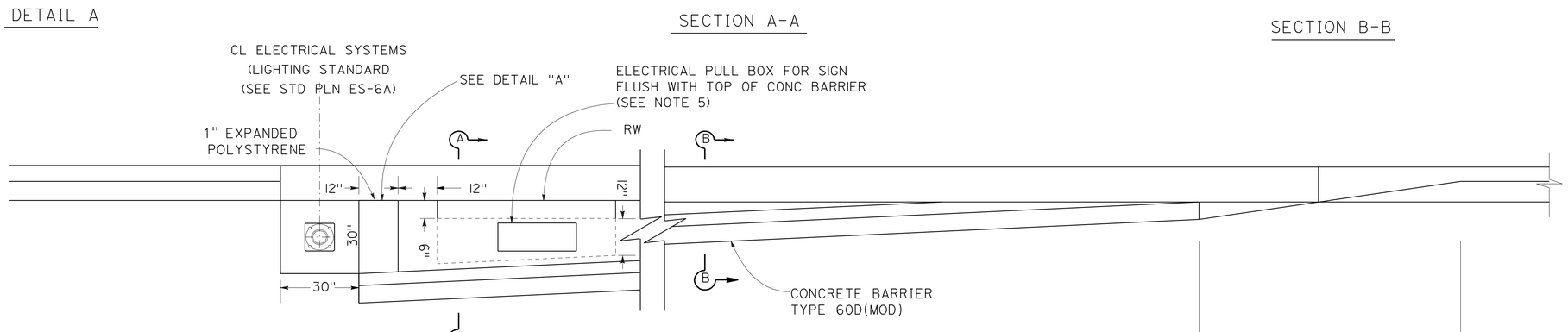

CONCRETE BARRIER 60D MOD TRANISTION DETAILS FOR LIGHTING STANDARD

NO SCALE

APPROVED FOR RETAINING WALL WORK ONLY

RETAINING WALL DETAILS

RETAINING WALL No. 68

SCALE AS SHOWN **R13-5**

STATE OF CALIFORNIA - DEPARTMENT OF TRANSPORTATION
Caltrans® DESIGN

FUNCTIONAL SUPERVISOR: BEN AMIRI
CALCULATED-DESIGNED BY: DAT H. WONG
CHECKED BY: JUSTINE NIU
REVISED BY
DATE REVISED

LAST REVISION 01-02-12
DATE PLOTTED => 17-APR-2012
TIME PLOTTED => 19:42

Dist	COUNTY	ROUTE	POST MILES TOTAL PROJECT	SHEET No.	TOTAL SHEETS
08	Riv,SBd	91,215	21.5/21.7, 43.2/45.2,0.0/5.1	777	1743

LICENSED LANDSCAPE ARCHITECT

4-16-12
PLANS APPROVAL DATE

LICENSED LANDSCAPE ARCHITECT
RAY A. DESSELLE No. 2272
Signature
11/30/13
Renewal Date
01/02/12
Date
STATE OF CALIFORNIA

THE STATE OF CALIFORNIA OR ITS OFFICERS OR AGENTS SHALL NOT BE RESPONSIBLE FOR THE ACCURACY OR COMPLETENESS OF SCANNED COPIES OF THIS PLAN SHEET.

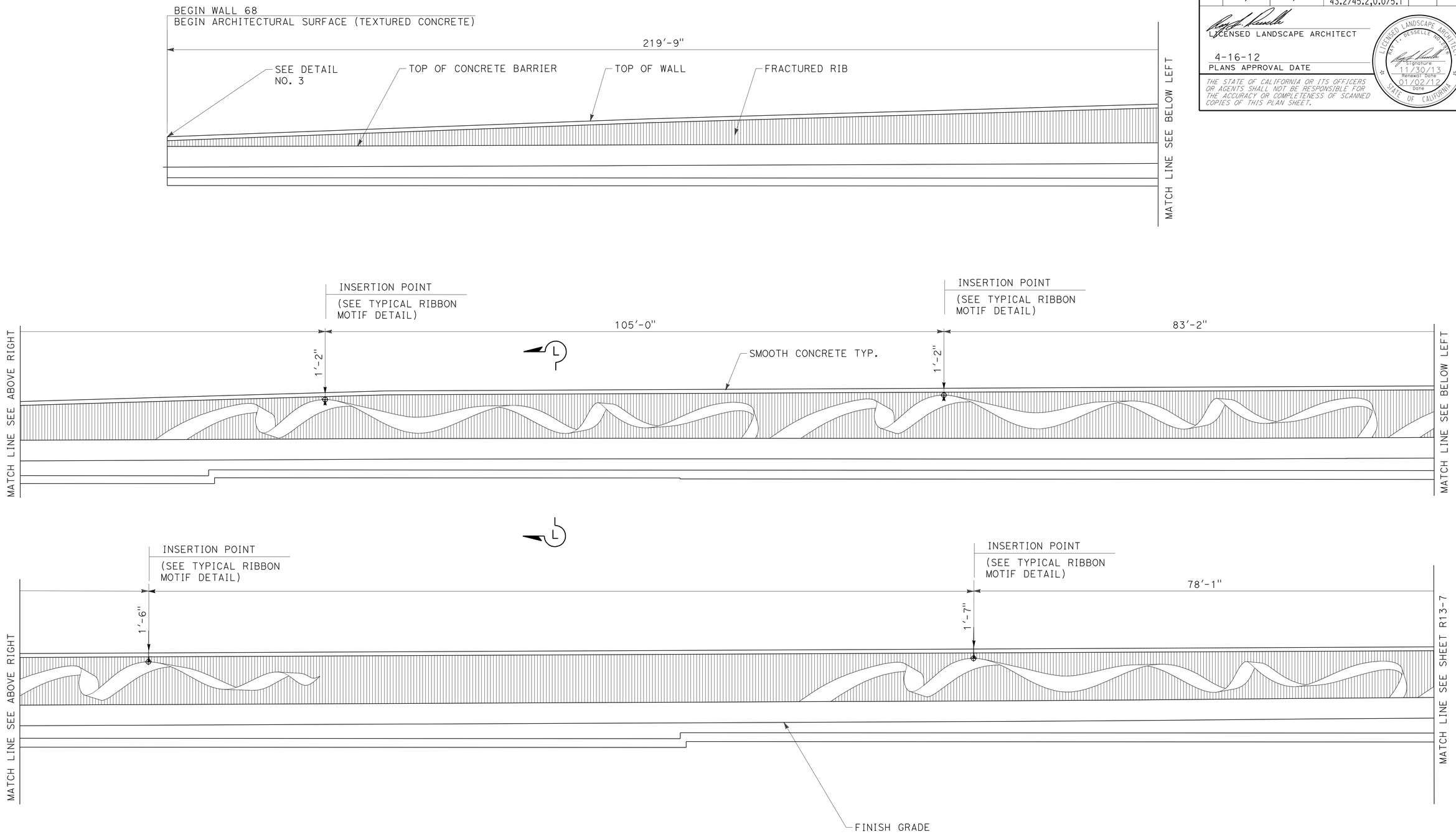

ELEVATION FOR FRACTURED RIB WITH RIBBON MOTIF RETAINING WALL No. 68

APPROVED FOR RETAINING WALL WORK ONLY

ARCHITECTURAL SURFACE
RETAINING WALL No. 68

SCALE: 1/8"=1'0

R13-6

REVISED BY | DATE REVISED
MATTHEW HALL | MIRIAM BISHOP
CALCULATED-DESIGNED BY | CHECKED BY
SENIOR LANDSCAPE ARCHITECT
RAY DESSELLE

STATE OF CALIFORNIA - DEPARTMENT OF TRANSPORTATION
Caltrans® LANDSCAPE ARCHITECTURE

LAST REVISION 01-02-12 | DATE PLOTTED => 17-APR-2012 | TIME PLOTTED => 19:42

Dist	COUNTY	ROUTE	POST MILES TOTAL PROJECT	SHEET No.	TOTAL SHEETS
08	Riv,SBd	91,215	21.5/21.7, 43.2/45.2,0.0/5.1	778	1743

LICENSED LANDSCAPE ARCHITECT

4-16-12
PLANS APPROVAL DATE

LICENSED LANDSCAPE ARCHITECT
RAY DESSELLE No. 2543
Signature
11/30/13
Renewal Date
01/02/12
Date
STATE OF CALIFORNIA

THE STATE OF CALIFORNIA OR ITS OFFICERS OR AGENTS SHALL NOT BE RESPONSIBLE FOR THE ACCURACY OR COMPLETENESS OF SCANNED COPIES OF THIS PLAN SHEET.

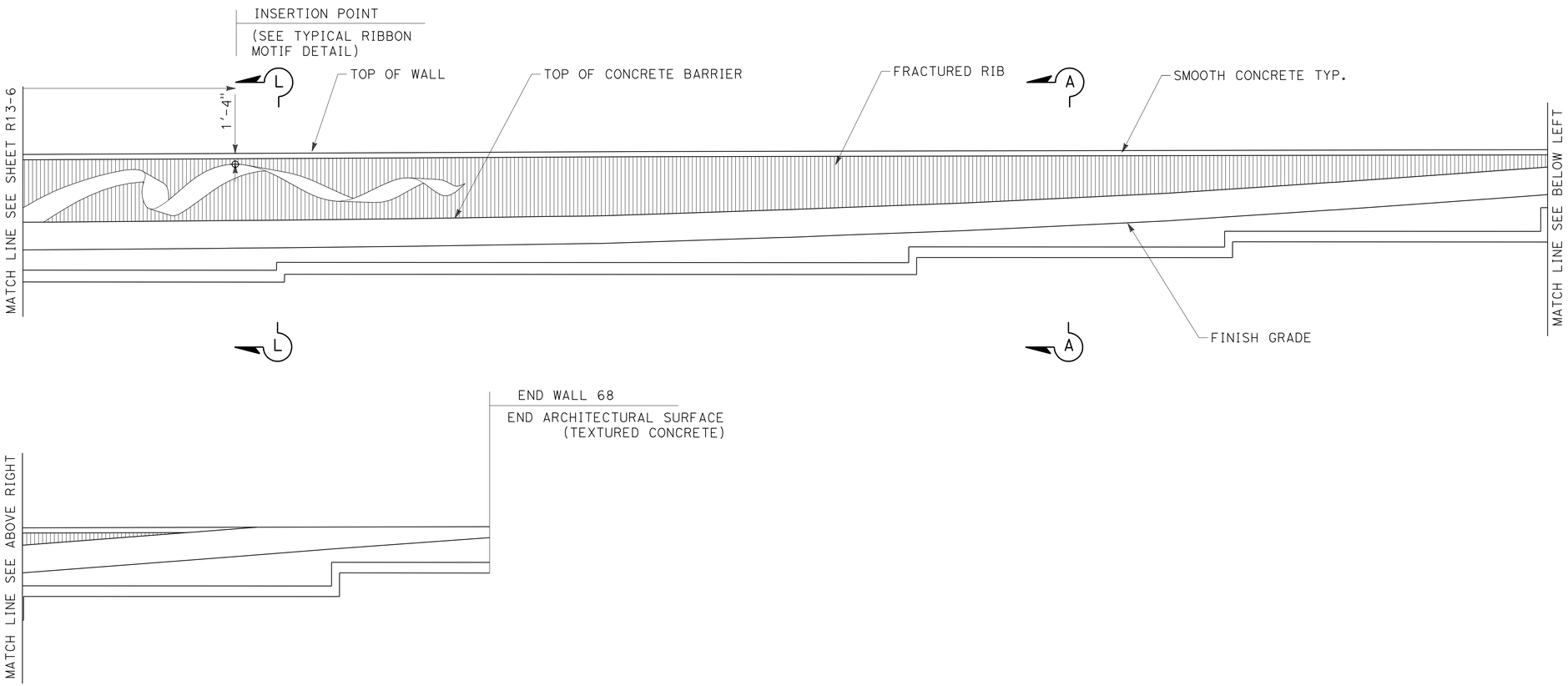

ELEVATION FOR FRACTURED RIB WITH RIBBON RETAINING WALL No. 68

APPROVED FOR RETAINING WALL WORK ONLY

ARCHITECTURAL SURFACE
RETAINING WALL No. 68

SCALE: 1/8"=1'0

R13-7

STATE OF CALIFORNIA - DEPARTMENT OF TRANSPORTATION
Caltrans® LANDSCAPE ARCHITECTURE

SENIOR LANDSCAPE ARCHITECT: RAY DESSELLE

CALCULATED-DESIGNED BY: MATTHEW HALL
CHECKED BY: MIRIAM BISHOP

REVISED BY | DATE REVISED

LAST REVISION 01-02-12 | DATE PLOTTED => 17-APR-2012 | TIME PLOTTED => 19:42

FED. ROAD DIST. NO.	STATE	PROJ. NO.	FISCAL YEAR	SHEET NO.	TOTAL SHEETS
7	CAL.	DP 01(244)		139	115

DIST.	COUNTY	ROUTE	SECTION	SHEET NO.	TOTAL SHEETS
VIII	SBd	215	F	7	7

Chief, Bridge Engineer, Southern Zone

DATE APPROVED: Aug. 2, 1958

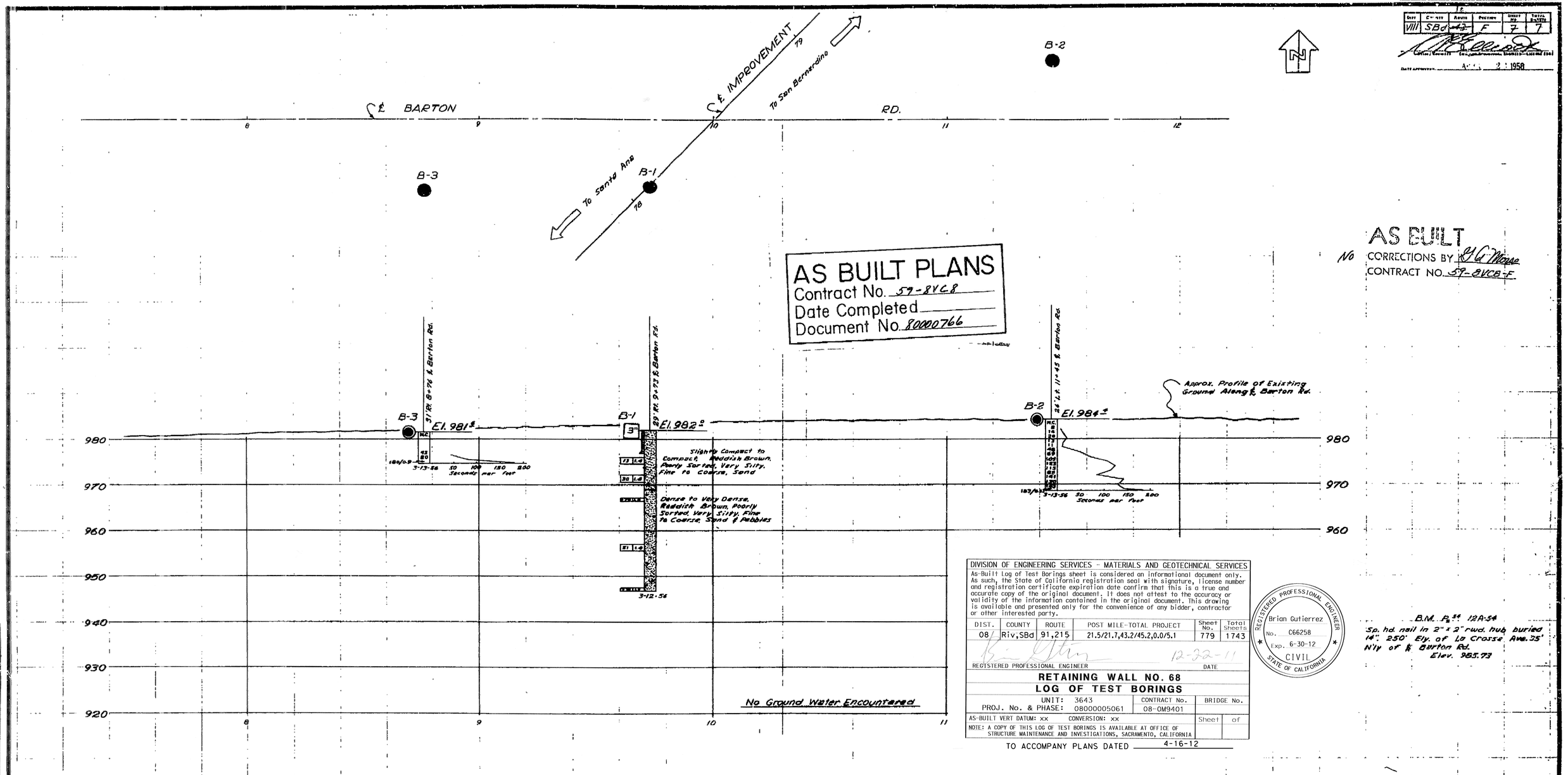

AS BUILT PLANS
Contract No. 59-8VC8
Date Completed
Document No. 80000766

AS BUILT
No CORRECTIONS BY
CONTRACT NO. 59-8VC8-F

DIVISION OF ENGINEERING SERVICES - MATERIALS AND GEOTECHNICAL SERVICES					
As-Built log of Test Borings sheet is considered an informational document only. As such, the State of California registration seal with signature, license number and registration certificate expiration date confirm that this is a true and accurate copy of the original document. It does not attest to the accuracy or validity of the information contained in the original document. This drawing is available and presented only for the convenience of any bidder, contractor or other interested party.					
DIST.	COUNTY	ROUTE	POST MILE-TOTAL PROJECT	Sheet No.	Total Sheets
08	Riv,SBd	91,215	21.5/21.7,43.2/45.2,0.0/5.1	779	1743
REGISTERED PROFESSIONAL ENGINEER			12-22-11 DATE		

REGISTERED PROFESSIONAL ENGINEER
Brian Gutierrez
No. C66258
Exp. 6-30-12
CIVIL
STATE OF CALIFORNIA

RETAINING WALL NO. 68
LOG OF TEST BORINGS

UNIT: 3643	CONTRACT No.	BRIDGE No.
PROJ. No. & PHASE: 08000005061	08-0M9401	
AS-BUILT VERT DATUM: xx CONVERSION: xx	Sheet	of
NOTE: A COPY OF THIS LOG OF TEST BORINGS IS AVAILABLE AT OFFICE OF STRUCTURE MAINTENANCE AND INVESTIGATIONS, SACRAMENTO, CALIFORNIA		

TO ACCOMPANY PLANS DATED 4-16-12

B.M. P.S.S. 12A-54
Sp. hd. nail in 2" x 2" rwd. hub buried 14". 250' Ely. of La Crosse Ave. 35' Nly of ℄ Barton Rd.
Elev. 985.73

BRIDGE DEPARTMENT

CHECKED By R.C.M. Date 4-4-56
Approved Date 4-4-56

CLASSIFICATION OF MATERIAL BASED ON STANDARD GRADE SIZE LIMITS

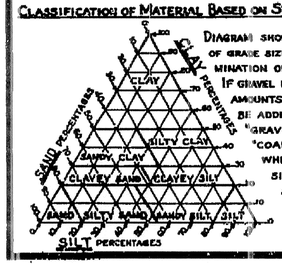

DIAGRAM SHOWING THE BASIS FOR ESTIMATES OF GRADE SIZE DISTRIBUTION USED IN DETERMINATION OF CLASS NAMES.

IF GRAVEL IS PRESENT IN APPRECIABLE AMOUNTS THE TERM "GRAVELLY" MAY BE ADDED TO THE CLASS NAME, VIZ. "GRAVELLY SAND." THE TERMS "COARSE," "MEDIUM" AND "FINE" WHEN USED TO DESCRIBE SAND, SILT AND GRAVEL REFER TO STANDARD GRADE SIZE LIMITS.

LEGEND OF EARTH MATERIALS

- GRAVEL
- SAND
- SILT
- CLAY
- SANDY CLAY OR CLAYEY SAND
- SANDY SILT OR SILTY SAND
- SILTY CLAY OR CLAYEY SILT
- PEAT AND/OR ORGANIC MATTER
- FILL MATERIAL
- IGNEOUS ROCK
- SEDIMENTARY ROCK
- METAMORPHIC ROCK

LEGEND OF BORING OPERATIONS

- PLAN OF ANY BORING
- PENETROMETER
- 2½" CONE PENETROMETER
- SAMPLER BORING (DRY)
- ROTARY BORING (WET)
- AUGER BORING (DRY)
- JET BORING
- CORE BORING
- TEST PIT

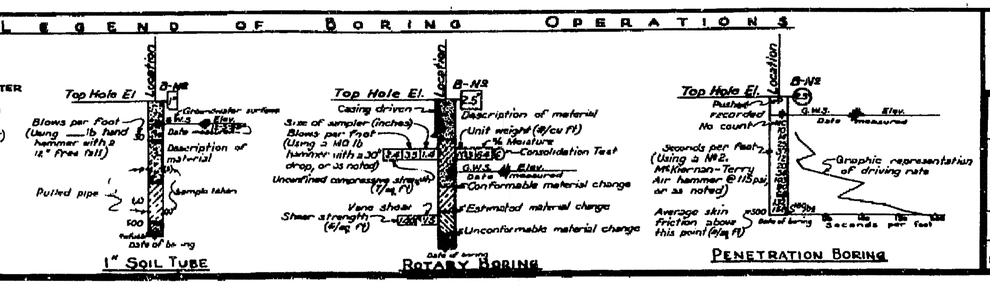

NOTES

The contractor's attention is directed to Section 2, Article (c) of the Standard Specifications, and to the Special Provisions accompanying this set of plans.

Classification of earth material as shown on this sheet is based upon field inspection and is not to be construed to imply mechanical analysis.

STATE OF CALIFORNIA
DEPARTMENT OF PUBLIC WORKS
DIVISION OF HIGHWAYS

BARTON RD. OVERCROSSING

LOG OF TEST BORINGS

SCALE	BRIDGE	FILE	DRAWING
Horiz. 1"=20' Vert. 1"=10'	54-528	E-54	C-4958-7

PREL. DRAWING NO. 4958 10

80m94uqm008.tif

Dist	COUNTY	ROUTE	POST MILES TOTAL PROJECT	SHEET No.	TOTAL SHEETS
08	Riv,SBd	91,215	21.5/21.7, 43.2/45.2,0.0/5.1	780	1743

REGISTERED CIVIL ENGINEER 1-2-12 DATE

4-16-12
PLANS APPROVAL DATE

REGISTERED PROFESSIONAL ENGINEER JUSTINE NIU No. C 62897 Exp. 6-30-12 CIVIL STATE OF CALIFORNIA

THE STATE OF CALIFORNIA OR ITS OFFICERS OR AGENTS SHALL NOT BE RESPONSIBLE FOR THE ACCURACY OR COMPLETENESS OF SCANNED COPIES OF THIS PLAN SHEET.

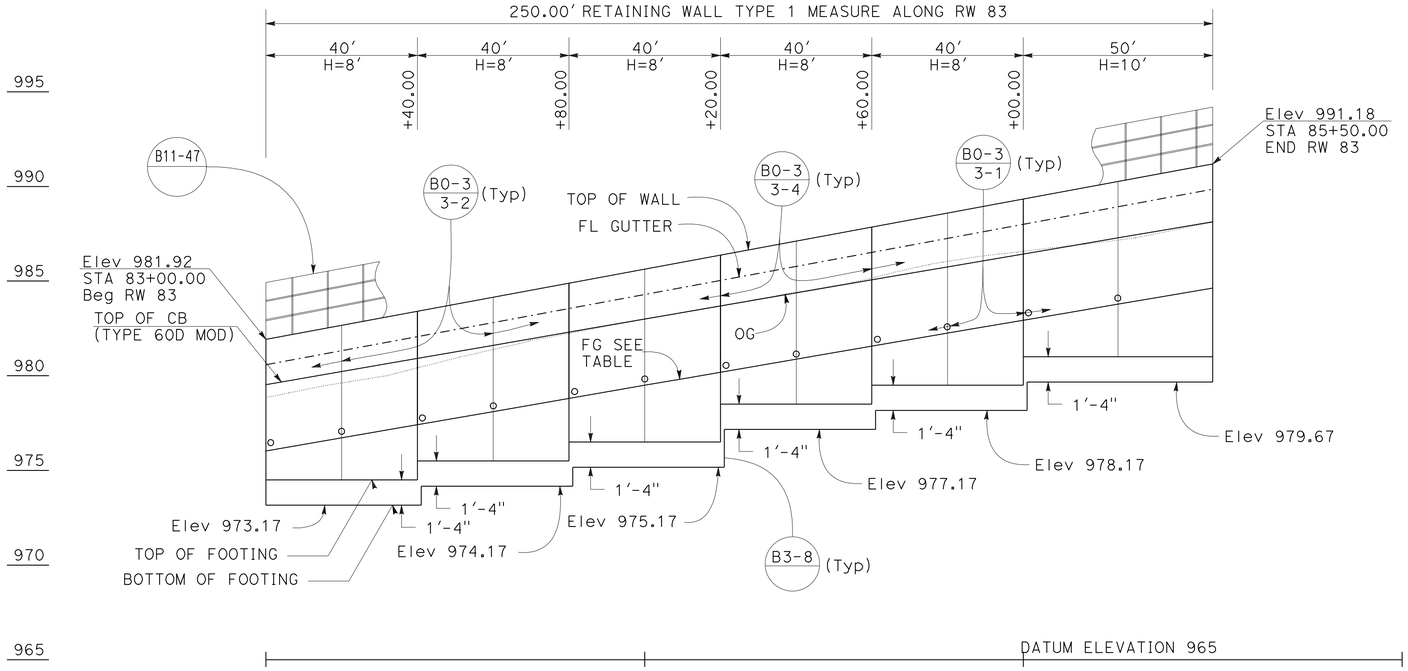

ELEVATION

SCALE Horiz 1"=20'
Vert 1"=4'

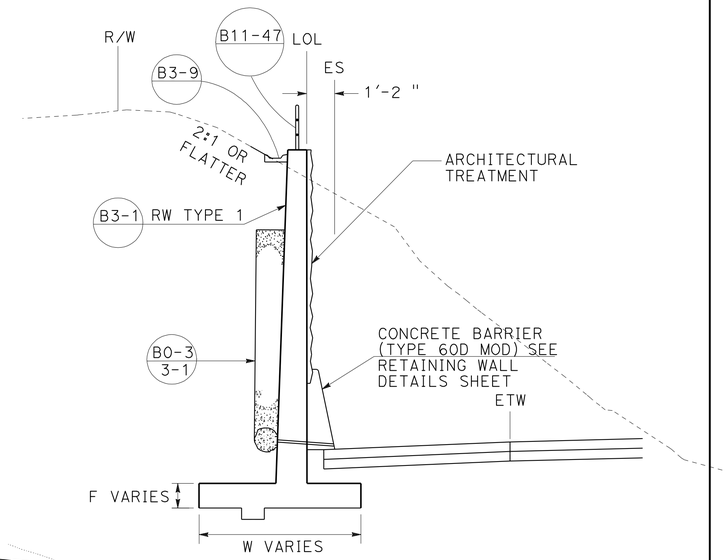

TYPICAL SECTION

STA 83+00 TO 85+50.00
NO SCALE

NOTES:

1. ARCHITECTURAL TREATMENT SHOULD EXTEND 6 IN BELOW FG OR 6 IN BELOW TOP CB (TYPE 60D MOD)
2. FOR STRUCTURAL SECTIONS, SEE ROADWAY PLANS
3. FOR POST ANCHORAGE DETAILS, SEE B11-52
4. FOR ROUNDING DETAILS, SEE ARCHITECTURAL TREATMENT PLANS

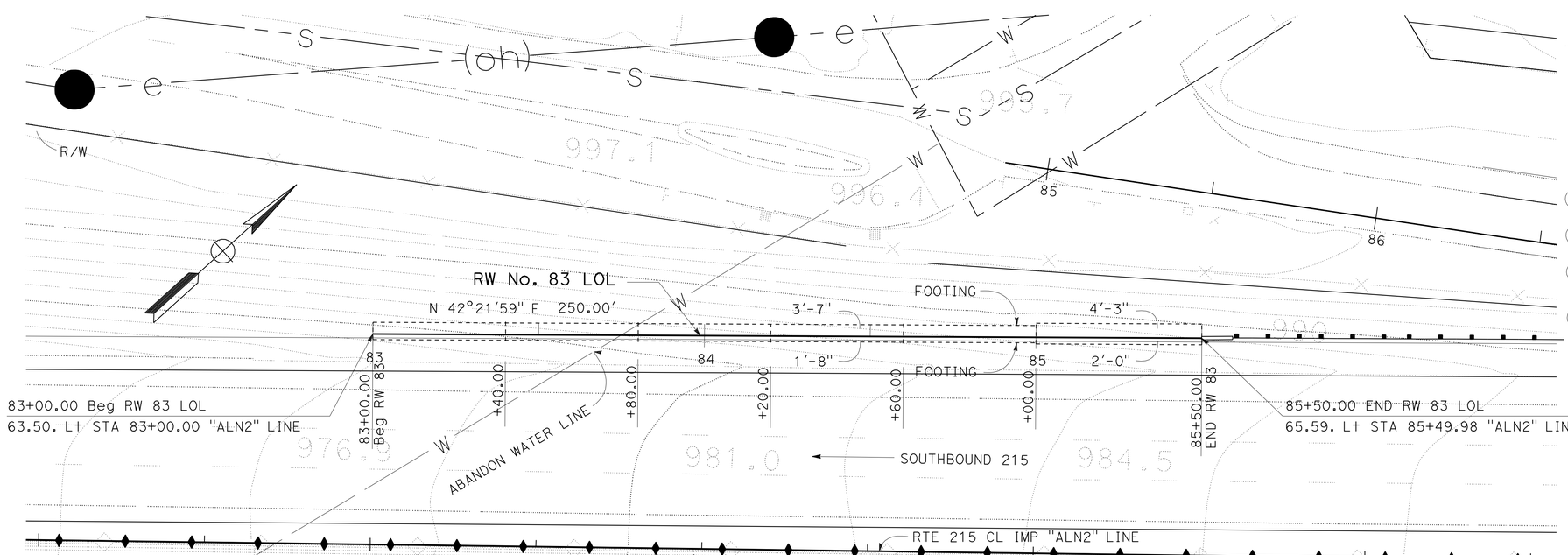

PLAN

SCALE 1"=20'

APPROVED FOR RETAINING WALL WORK ONLY

ELEVATION TABLE	
STATION	FG
83+00.00	976.03'
83+50.00	977.76'
84+00.00	979.50'
84+50.00	981.22'
85+00.00	982.93'
85+50.00	984.63'

RETAINING WALL PLAN

RETAINING WALL No. 83

SCALE AS SHOWN

R14-1

REVISED BY | DATE REVISED
DAT H. WONG | JUSTINE NIU
CALCULATED-DESIGNED BY | CHECKED BY
FUNCTIONAL SUPERVISOR: BEN AMIRI

STATE OF CALIFORNIA - DEPARTMENT OF TRANSPORTATION
Caltrans
DESIGN

LAST REVISION 01-02-12
DATE PLOTTED => 17-APR-2012
TIME PLOTTED => 19:42

Dist	COUNTY	ROUTE	POST MILES TOTAL PROJECT	SHEET No.	TOTAL SHEETS
08	Riv,SBd	91,215	21.5/21.7, 43.2/45.2,0.0/5.1	781	1743

REGISTERED CIVIL ENGINEER 1-2-12 DATE

4-16-12
PLANS APPROVAL DATE

REGISTERED PROFESSIONAL ENGINEER
JUSTINE NIU
No. C 62897
Exp. 6-30-12
CIVIL
STATE OF CALIFORNIA

THE STATE OF CALIFORNIA OR ITS OFFICERS OR AGENTS SHALL NOT BE RESPONSIBLE FOR THE ACCURACY OR COMPLETENESS OF SCANNED COPIES OF THIS PLAN SHEET.

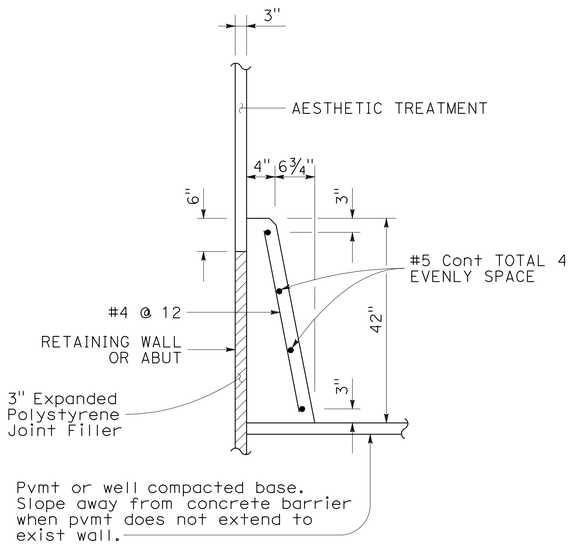

CONCRETE BARRIER
(TYPE 60D MOD)

QUANTITIES

STRUCTURAL CONCRETE (RETAINING WALL)	172.6	CY
BAR REINFORCING STEEL (RETAINING WALL)	10709	LB
STRUCTURAL EXCAVATION (RETAINING WALL)	443.7	CY
STRUCTURAL BACKFILL (RETAINING WALL)	280.3	CY
PERVIOUS BACKFILL MATERIAL (RETAINING WALL)	27.3	CY
CONCRETE BARRIER (TYPE 60D MOD)	250.0	LF
CABLE RAILING	250.0	LF
MINOR CONCRETE (GUTTER)	250.0	LF
PLASTIC PIPE (N)	15.6	LF
WATERSTOP (N)	31.0	LF
ARCHITECTURE SURFACE (TEXTURE CONCRETE)	801	SF

(N) = NOT A SEPARATE PAY ITEM, FOR INFORMATION ONLY

PLAN
SCALE 1"=20'

APPROVED FOR RETAINING WALL WORK ONLY

RETAINING WALL DETAILS
RETAINING WALL No. 83

SCALE AS SHOWN **R14-2**

STATE OF CALIFORNIA - DEPARTMENT OF TRANSPORTATION
Caltrans®
DESIGN

FUNCTIONAL SUPERVISOR: BEN AMIRI
CALCULATED-DESIGNED BY: DAT H. WONG
CHECKED BY: JUSTINE NIU
REVISED BY
DATE REVISED

LAST REVISION 01-02-12
DATE PLOTTED => 17-APR-2012
TIME PLOTTED => 19:43

Dist	COUNTY	ROUTE	POST MILES TOTAL PROJECT	SHEET No.	TOTAL SHEETS
08	Riv,SBd	91,215	21.5/21.7, 43.2/45.2,0.0/5.1	782	1743

LICENSED LANDSCAPE ARCHITECT

4-16-12
PLANS APPROVAL DATE

THE STATE OF CALIFORNIA OR ITS OFFICERS OR AGENTS SHALL NOT BE RESPONSIBLE FOR THE ACCURACY OR COMPLETENESS OF SCANNED COPIES OF THIS PLAN SHEET.

LICENSED LANDSCAPE ARCHITECT
RAY T. DESSELLE No. 2544
Signature
11/30/13
Renewal Date
01/02/12
Date
STATE OF CALIFORNIA

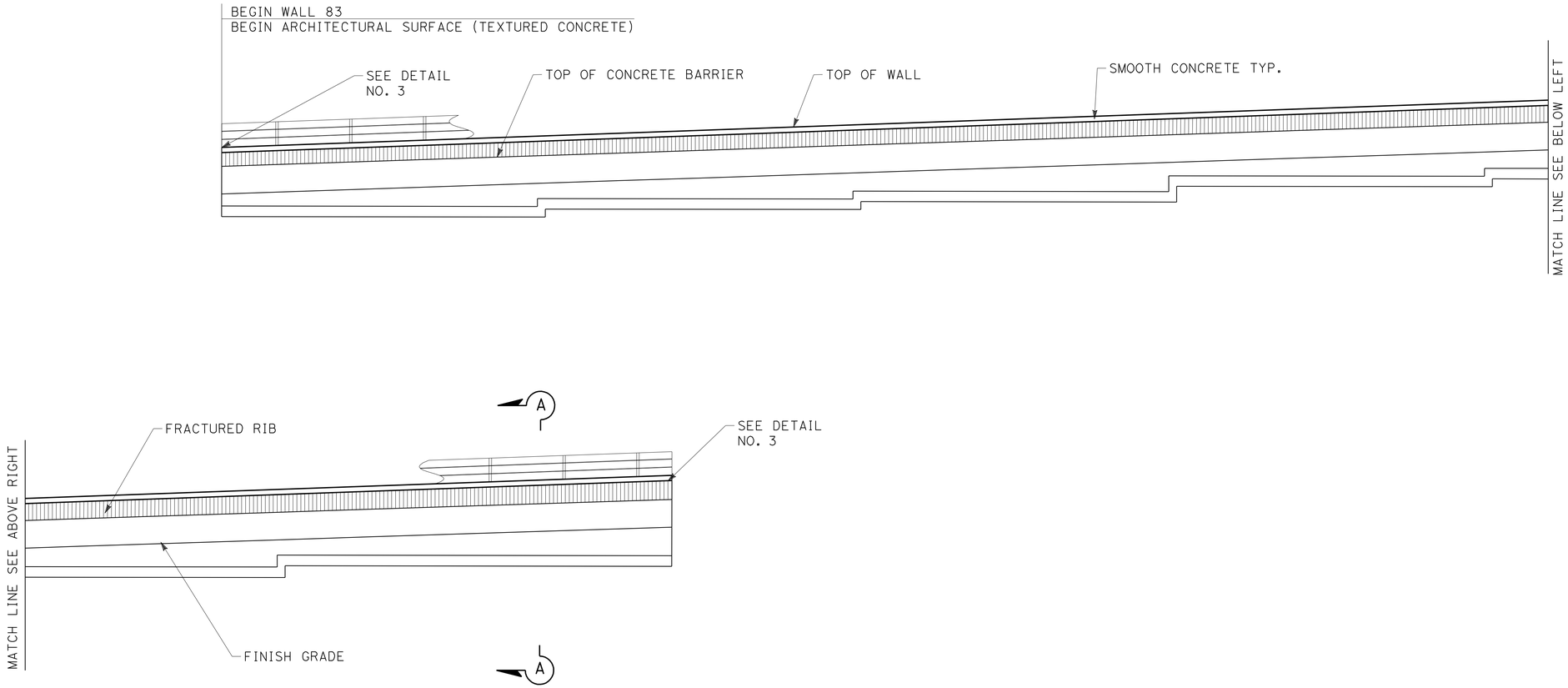

ELEVATION FOR FRACTURED RIB RETAINING WALL No. 83

APPROVED FOR RETAINING WALL WORK ONLY

ARCHITECTURAL SURFACE
RETAINING WALL No. 83

SCALE: 1/8"=1'0

R14-3

STATE OF CALIFORNIA - DEPARTMENT OF TRANSPORTATION
Caltrans LANDSCAPE ARCHITECTURE

SENIOR LANDSCAPE ARCHITECT: RAY DESSELLE
CALCULATED-DESIGNED BY: MATTHEW HALL
CHECKED BY: MIRIAM BISHOP
REVISED BY
DATE REVISED

LAST REVISION 01-02-12
DATE PLOTTED => 17-APR-2012
TIME PLOTTED => 19:43

FED ROAD DIV NO	STATE	PROJ NO	FISCAL YEAR	SHEET NO	TOTAL SHEETS
7	CAL.	08-0M9401		139	115

DIST	COUNTY	ROUTE	PREFIX	SHEET NO	TOTAL SHEETS
VIII	SBd	215	F	7	7

Caltrans District Engineer (Signature, Registration Number, Registered Professional Engineer Stamp)

DATE APPROVED: Aug 2 1958

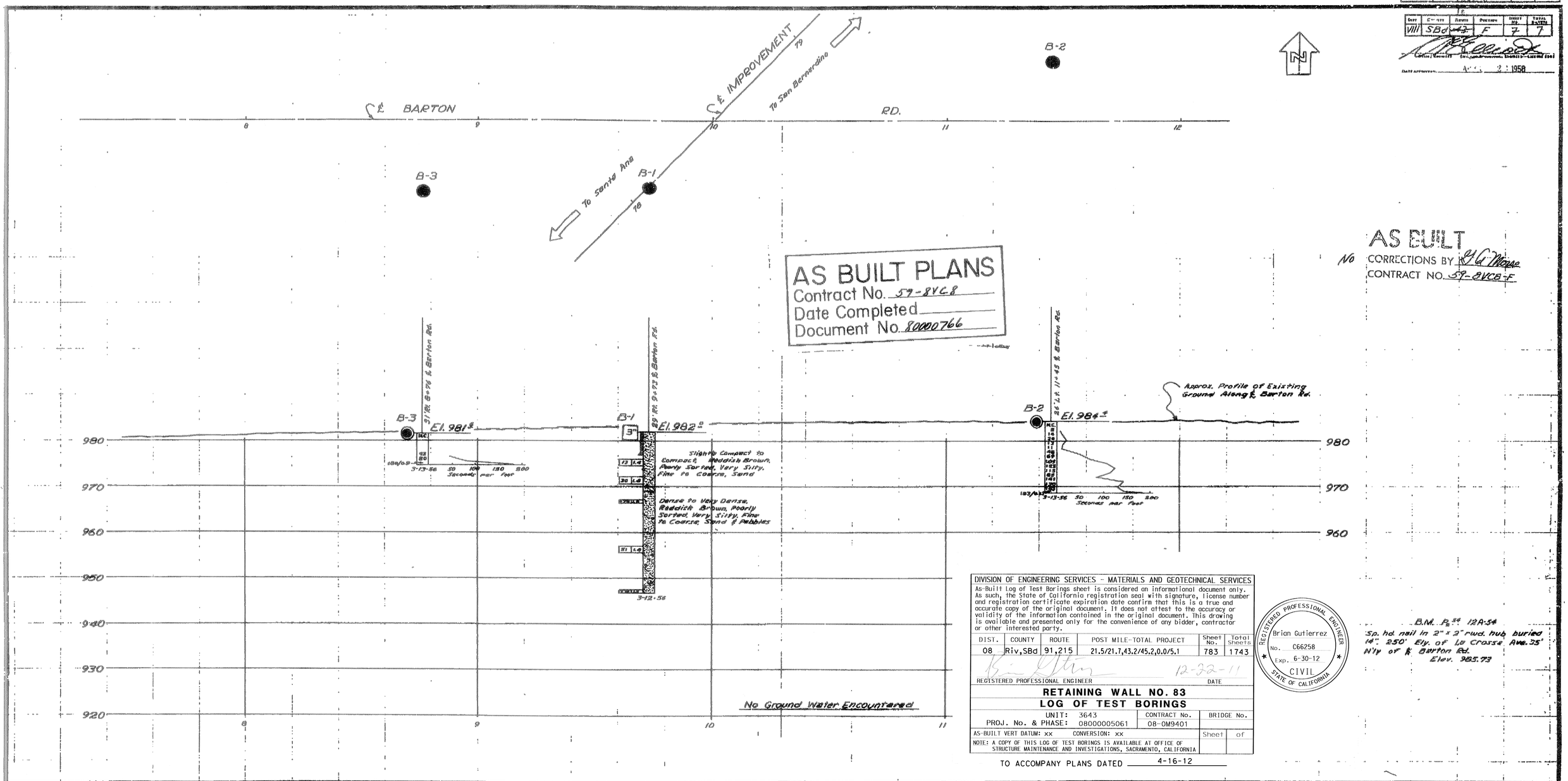

DIVISION OF ENGINEERING SERVICES - MATERIALS AND GEOTECHNICAL SERVICES

As-Built Log of Test Borings sheet is considered an informational document only. As such, the State of California registration seal with signature, license number and registration certificate expiration date confirm that this is a true and accurate copy of the original document. It does not attest to the accuracy or validity of the information contained in the original document. This drawing is available and presented only for the convenience of any bidder, contractor or other interested party.

DIST.	COUNTY	ROUTE	POST MILE-TOTAL PROJECT	Sheet No.	Total Sheets
08	Riv,SBd	91,215	21.5/21.7,43.2/45.2,0.0/5.1	783	1743

REGISTERED PROFESSIONAL ENGINEER — DATE 12-22-11

REGISTERED PROFESSIONAL ENGINEER Brian Gutierrez No. C66258 Exp. 6-30-12 CIVIL STATE OF CALIFORNIA

RETAINING WALL NO. 83

LOG OF TEST BORINGS

UNIT: 3643	CONTRACT No.	BRIDGE No.
PROJ. No. & PHASE: 08000005061	08-0M9401	
AS-BUILT VERT DATUM: xx CONVERSION: xx	Sheet	of

NOTE: A COPY OF THIS LOG OF TEST BORINGS IS AVAILABLE AT OFFICE OF STRUCTURE MAINTENANCE AND INVESTIGATIONS, SACRAMENTO, CALIFORNIA

TO ACCOMPANY PLANS DATED 4-16-12

B.M. R.S.# 12A-54
Sp. hd. nail in 2" x 2" rwd. hub buried 14". 250' Ely. of La Crosse Ave. 35' N'ly of ℄ Barton Rd.
Elev. 985.73

CLASSIFICATION OF MATERIAL BASED ON STANDARD GRADE SIZE LIMITS

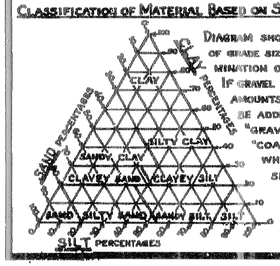

DIAGRAM SHOWING THE BASIS FOR ESTIMATES OF GRADE SIZE DISTRIBUTION USED IN DETERMINATION OF CLASS NAMES.

IF GRAVEL IS PRESENT IN APPRECIABLE AMOUNTS THE TERM "GRAVELLY" MAY BE ADDED TO THE CLASS NAME, VIZ. "GRAVELLY SAND." THE TERMS "COARSE", "MEDIUM" AND "FINE" WHEN USED TO DESCRIBE SAND, SILT AND GRAVEL REFER TO STANDARD GRADE SIZE LIMITS.

LEGEND OF EARTH MATERIALS

- GRAVEL
- SAND
- SILT
- CLAY
- SANDY CLAY OR CLAYEY SAND
- SANDY SILT OR SILTY SAND
- SILTY CLAY OR CLAYEY SILT
- PEAT AND/OR ORGANIC MATTER
- FILL MATERIAL
- IGNEOUS ROCK
- SEDIMENTARY ROCK
- METAMORPHIC ROCK

LEGEND OF BORING OPERATIONS

- PLAN OF ANY BORING
- PENETROMETER
- 2½" CONE PENETROMETER
- SAMPLER BORING (DRY)
- ROTARY BORING (WET)
- AUGER BORING (DRY)
- JET BORING
- CORE BORING
- TEST PIT

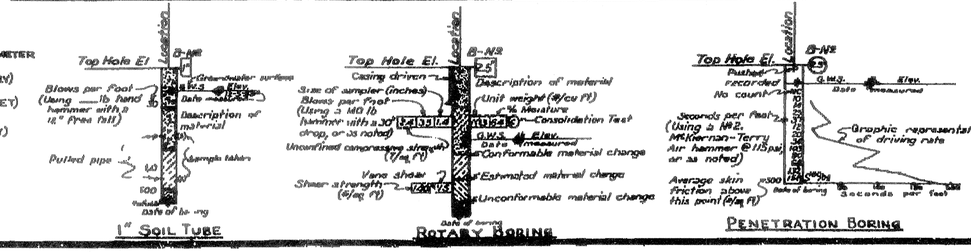

NOTES

The contractor's attention is directed to Section 2, Article (c) of the Standard Specifications, and to the Special Provisions accompanying this set of plans.

Classification of earth material as shown on this sheet is based upon field inspection and is not to be construed to imply mechanical analysis.

STATE OF CALIFORNIA
DEPARTMENT OF PUBLIC WORKS
DIVISION OF HIGHWAYS

BARTON RD. OVERCROSSING

LOG OF TEST BORINGS

SCALE	BRIDGE	FILE	DRAWING
Horiz. 1"=20' Vert. 1"=10'	54-528	E-54	C4958-7

PREL. DRAWING NO. 4958 10

BRIDGE DEPARTMENT

CHECKED: R.K.W. 8-18-58
Approved: R.R. Sequeira 8-18-58
Approved: Chief Bridge Engineer

Dist	COUNTY	ROUTE	POST MILES TOTAL PROJECT	SHEET No.	TOTAL SHEETS
08	Riv,SBd	91,215	21.5/21.7, 43.2/45.2,0.0/5.1	784	1743

REGISTERED CIVIL ENGINEER 2-15-12 DATE

4-16-12
PLANS APPROVAL DATE

REGISTERED PROFESSIONAL ENGINEER JUSTINE NIU No. C 62897 Exp. 6-30-12 CIVIL STATE OF CALIFORNIA

THE STATE OF CALIFORNIA OR ITS OFFICERS OR AGENTS SHALL NOT BE RESPONSIBLE FOR THE ACCURACY OR COMPLETENESS OF SCANNED COPIES OF THIS PLAN SHEET.

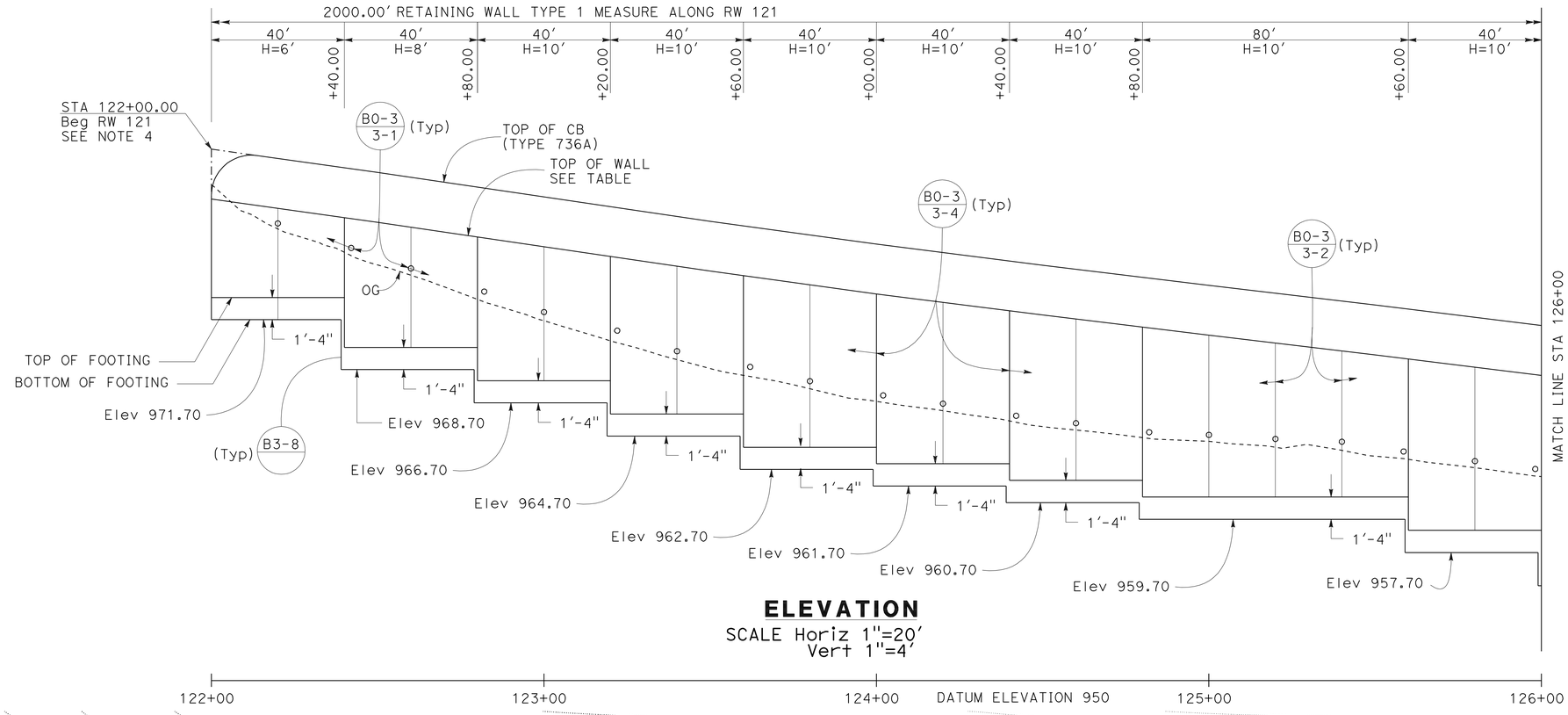

ELEVATION

SCALE Horiz 1"=20'
Vert 1"=4'

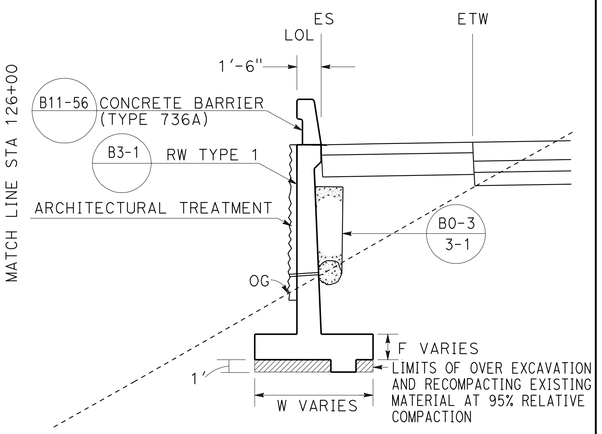

TYPICAL SECTION

122+00.00 TO 142+00.00
NO SCALE

NOTES:

1. ARCHITECTURAL TREATMENT SHOULD EXTEND 6 IN BELOW FG OR 6 IN BELOW TOP CB (TYPE 60D MOD)
2. FOR STRUCTURAL SECTIONS, SEE ROADWAY PLANS
3. WATERSTOP IN EXPANSION JOINT SHALL BE EXTEND 6 IN INTO THE BARRIER
4. FOR ROUNDING DETAILS, SEE ARCHITECTURAL TREATMENT PLANS

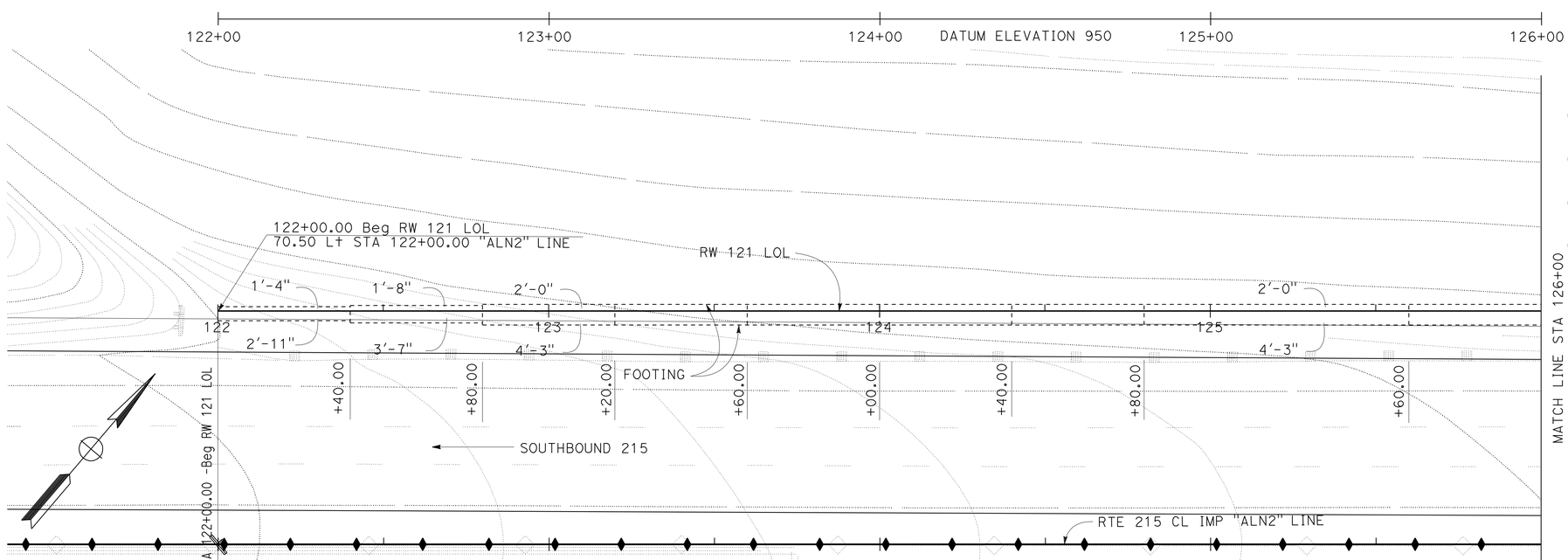

PLAN

SCALE 1"=20'

APPROVED FOR RETAINING WALL WORK ONLY

RETAINING WALL PLAN

RETAINING WALL No. 121

SCALE AS SHOWN **R15-1**

STATE OF CALIFORNIA - DEPARTMENT OF TRANSPORTATION
Caltrans
DESIGN

FUNCTIONAL SUPERVISOR: BEN AMIRI
CALCULATED-DESIGNED BY: DAT H. WONG
CHECKED BY: JUSTINE NIU
REVISED BY
DATE REVISED

LAST REVISION 02-15-12
DATE PLOTTED => 17-APR-2012
TIME PLOTTED => 19:43

Dist	COUNTY	ROUTE	POST MILES TOTAL PROJECT	SHEET No.	TOTAL SHEETS
08	Riv,SBd	91,215	21.5/21.7, 43.2/45.2,0.0/5.1	785	1743

REGISTERED CIVIL ENGINEER 1-2-12 DATE

4-16-12
PLANS APPROVAL DATE

REGISTERED PROFESSIONAL ENGINEER JUSTINE NIU No. C 62897 Exp. 6-30-12 CIVIL STATE OF CALIFORNIA

THE STATE OF CALIFORNIA OR ITS OFFICERS OR AGENTS SHALL NOT BE RESPONSIBLE FOR THE ACCURACY OR COMPLETENESS OF SCANNED COPIES OF THIS PLAN SHEET.

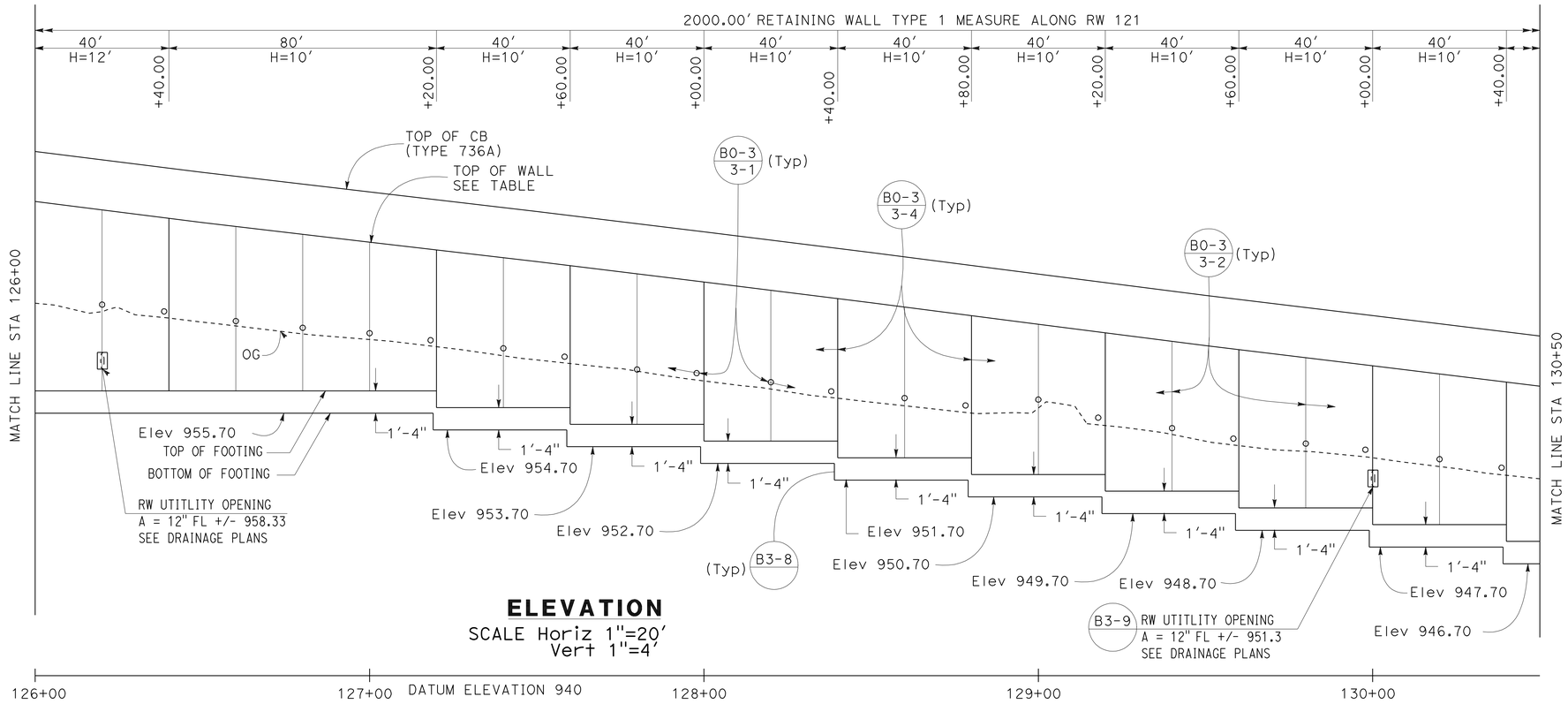

ELEVATION

SCALE Horiz 1"=20'
Vert 1"=4'

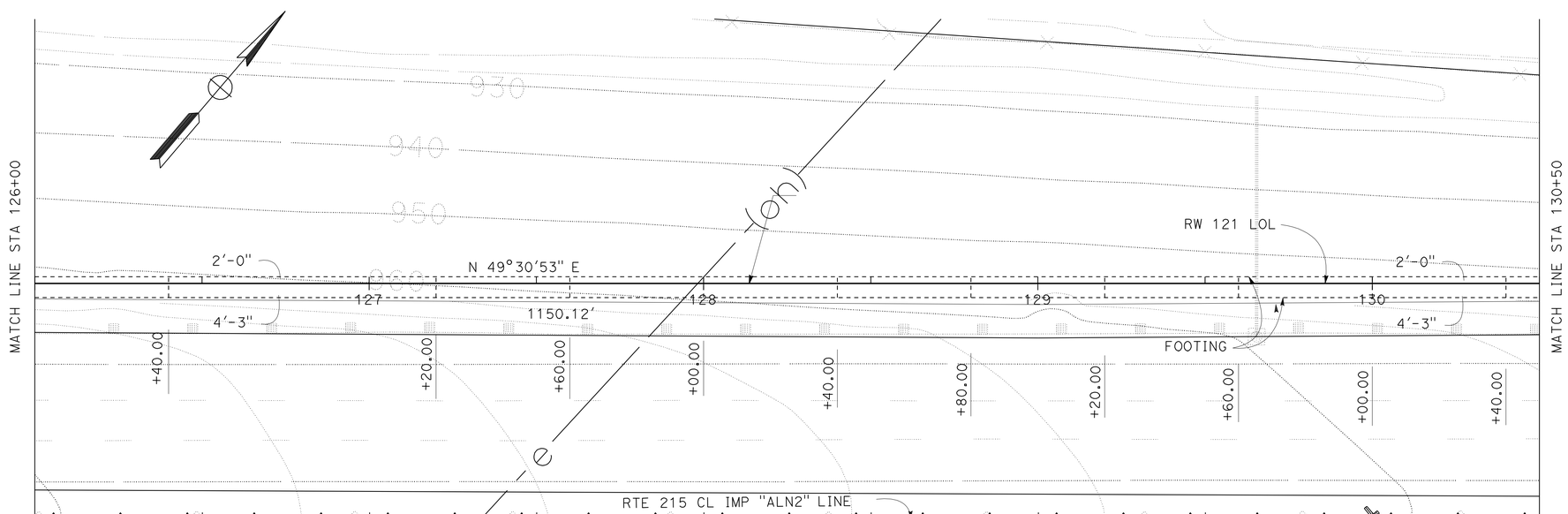

PLAN

SCALE 1"=20'

APPROVED FOR RETAINING WALL WORK ONLY

ELEVATION TABLE	
STATION	TOP OF WALL
122+00.00	979.15
122+50.00	977.63
123+00.00	976.04
123+50.00	974.57
124+00.00	973.18
124+50.00	971.90
125+00.00	970.68
125+50.00	969.50
126+00.00	968.26
126+50.00	967.00
127+00.00	965.81
127+50.00	964.62
128+00.00	963.39
128+50.00	962.14
129+00.00	960.85
129+50.00	959.59
130+00.00	958.39
130+50.00	957.19
131+00.00	955.92
131+50.00	954.69
132+00.00	953.49
132+50.00	952.30
133+00.00	951.13
133+50.00	949.90
134+00.00	948.50
134+50.00	947.17
135+00.00	945.90
135+50.00	944.60
136+00.00	943.29
136+50.00	942.03
137+00.00	940.77
137+50.00	939.70
138+00.00	938.64
138+50.00	937.82
139+00.00	937.08
139+50.00	936.59
140+00.00	936.18
140+50.00	935.93
141+00.00	935.70
141+50.00	935.55
142+00.00	935.39

RETAINING WALL PLAN
RETAINING WALL No. 121

SCALE AS SHOWN **R15-2**

STATE OF CALIFORNIA - DEPARTMENT OF TRANSPORTATION
Caltrans® DESIGN

FUNCTIONAL SUPERVISOR: BEN AMIRI
CALCULATED-DESIGNED BY: DAT H. WONG
CHECKED BY: JUSTINE NIU
REVISED BY / DATE REVISED

LAST REVISION 01-02-12 | DATE PLOTTED => 17-APR-2012 | TIME PLOTTED => 19:43

Dist	COUNTY	ROUTE	POST MILES TOTAL PROJECT	SHEET No.	TOTAL SHEETS
08	Riv,SBd	91,215	21.5/21.7, 43.2/45.2,0.0/5.1	786	1743

REGISTERED CIVIL ENGINEER 1-2-12 DATE

4-16-12
PLANS APPROVAL DATE

REGISTERED PROFESSIONAL ENGINEER
JUSTINE NIU
No. C 62897
Exp. 6-30-12
CIVIL
STATE OF CALIFORNIA

THE STATE OF CALIFORNIA OR ITS OFFICERS OR AGENTS SHALL NOT BE RESPONSIBLE FOR THE ACCURACY OR COMPLETENESS OF SCANNED COPIES OF THIS PLAN SHEET.

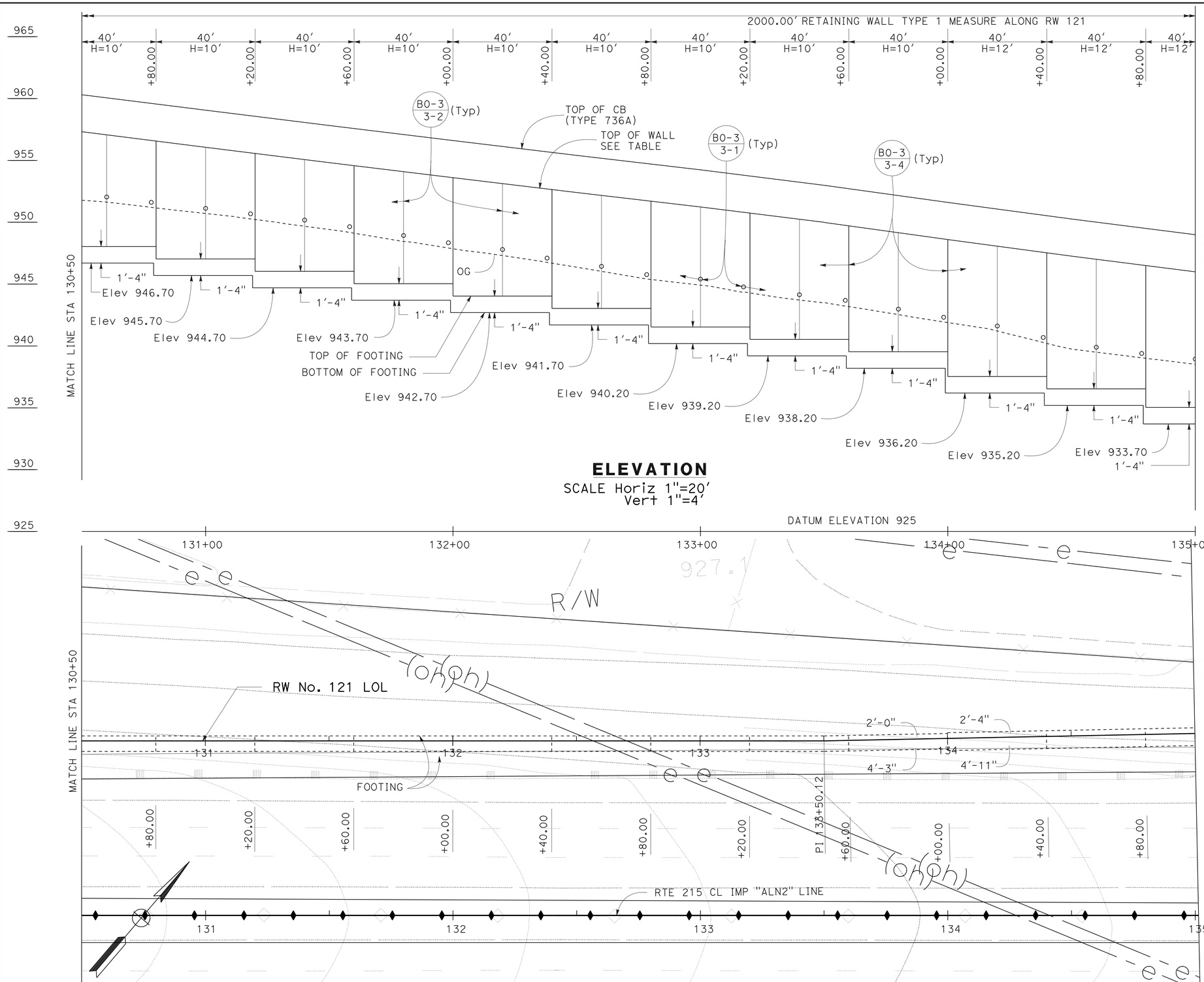

ELEVATION
SCALE Horiz 1"=20'
Vert 1"=4'

PLAN
SCALE 1"=20'

APPROVED FOR RETAINING WALL WORK ONLY

RETAINING WALL PLAN
RETAINING WALL No. 121

SCALE AS SHOWN **R15-3**

STATE OF CALIFORNIA - DEPARTMENT OF TRANSPORTATION
Caltrans®
DESIGN

FUNCTIONAL SUPERVISOR: BEN AMIRI
CALCULATED-DESIGNED BY: DAT H. WONG
CHECKED BY: JUSTINE NIU
REVISED BY
DATE REVISED

LAST REVISION 01-02-12
DATE PLOTTED => 17-APR-2012
TIME PLOTTED => 19:43

Dist	COUNTY	ROUTE	POST MILES TOTAL PROJECT	SHEET No.	TOTAL SHEETS
08	Riv,SBd	91,215	21.5/21.7, 43.2/45.2,0.0/5.1	787	1743

REGISTERED CIVIL ENGINEER 1-2-12 DATE

4-16-12
PLANS APPROVAL DATE

REGISTERED PROFESSIONAL ENGINEER JUSTINE NIU No. C 62897 Exp. 6-30-12 CIVIL STATE OF CALIFORNIA

THE STATE OF CALIFORNIA OR ITS OFFICERS OR AGENTS SHALL NOT BE RESPONSIBLE FOR THE ACCURACY OR COMPLETENESS OF SCANNED COPIES OF THIS PLAN SHEET.

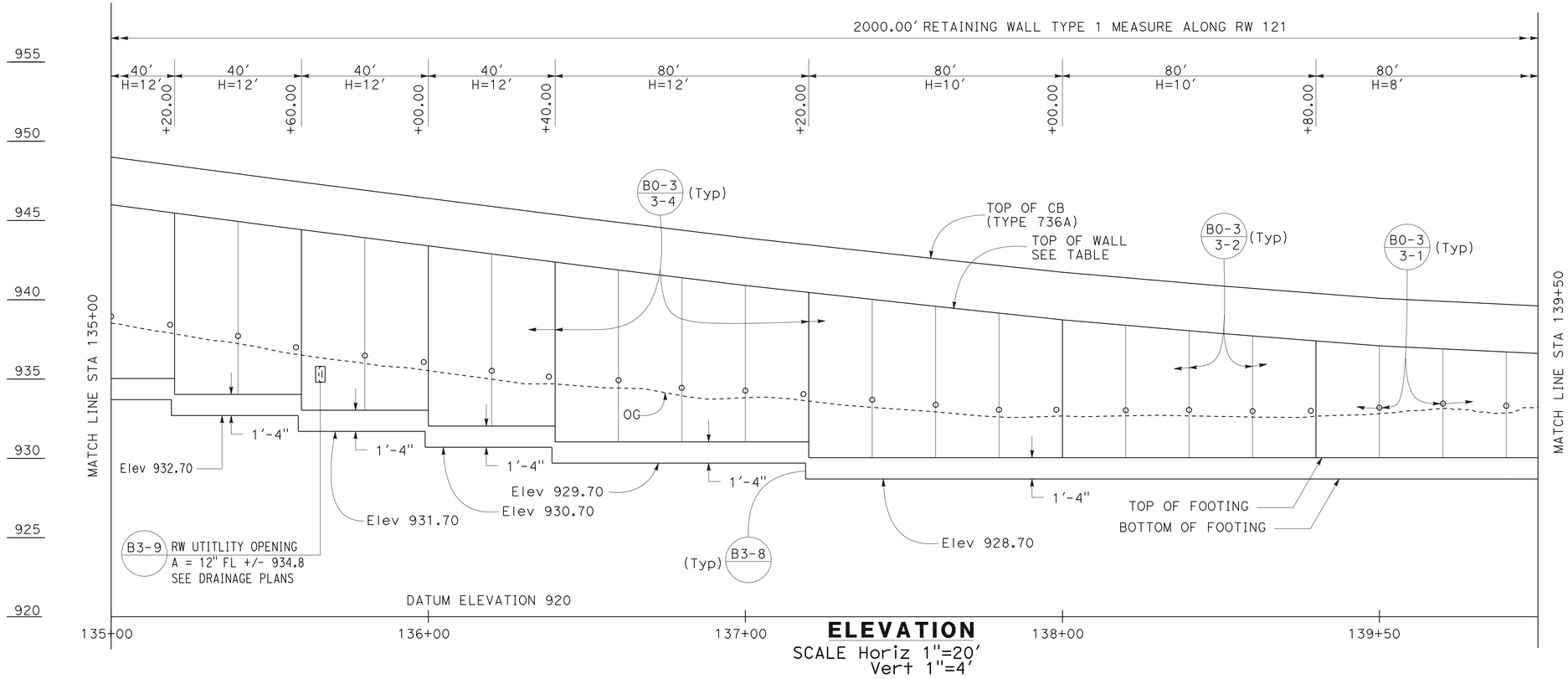

ELEVATION
SCALE Horiz 1"=20'
Vert 1"=4'

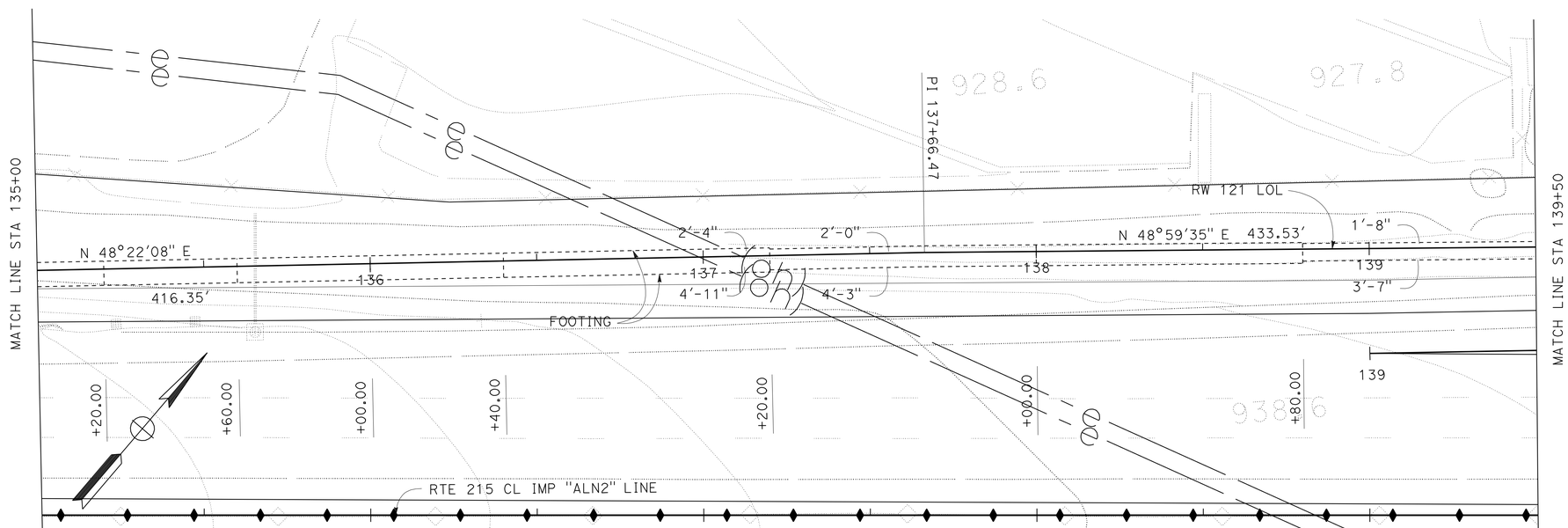

PLAN
SCALE 1"=20'

APPROVED FOR RETAINING WALL WORK ONLY

RETAINING WALL PLAN
RETAINING WALL No. 121

SCALE AS SHOWN **R15-4**

STATE OF CALIFORNIA - DEPARTMENT OF TRANSPORTATION
Caltrans® **DESIGN**

FUNCTIONAL SUPERVISOR: BEN AMIRI
CALCULATED-DESIGNED BY: DAT H. WONG
CHECKED BY: JUSTINE NIU
REVISED BY / DATE REVISED

LAST REVISION 01-02-12
DATE PLOTTED => 17-APR-2012
TIME PLOTTED => 19:43

Dist	COUNTY	ROUTE	POST MILES TOTAL PROJECT	SHEET No.	TOTAL SHEETS
08	Riv,SBd	91,215	21.5/21.7, 43.2/45.2,0.0/5.1	788	1743

REGISTERED CIVIL ENGINEER 2-15-12 DATE

4-16-12
PLANS APPROVAL DATE

REGISTERED PROFESSIONAL ENGINEER
JUSTINE NIU
No. C 62897
Exp. 6-30-12
CIVIL
STATE OF CALIFORNIA

THE STATE OF CALIFORNIA OR ITS OFFICERS OR AGENTS SHALL NOT BE RESPONSIBLE FOR THE ACCURACY OR COMPLETENESS OF SCANNED COPIES OF THIS PLAN SHEET.

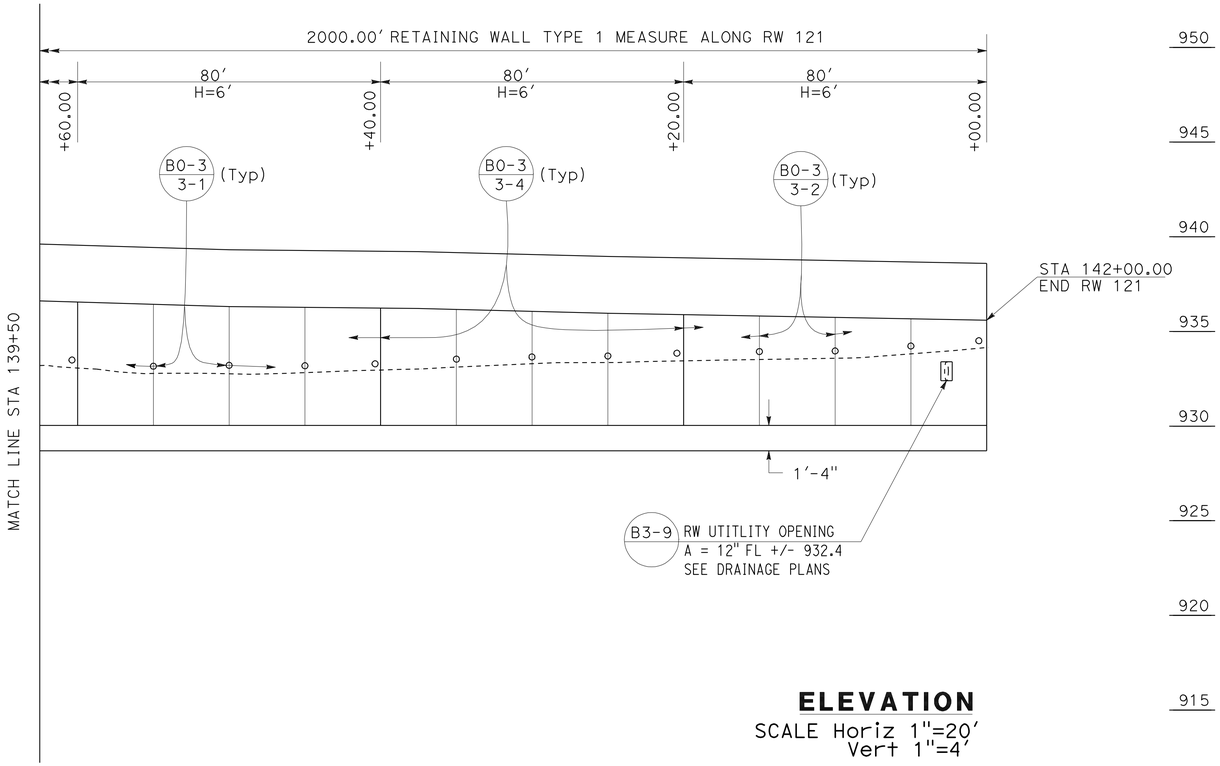

ELEVATION

SCALE Horiz 1"=20'
Vert 1"=4'

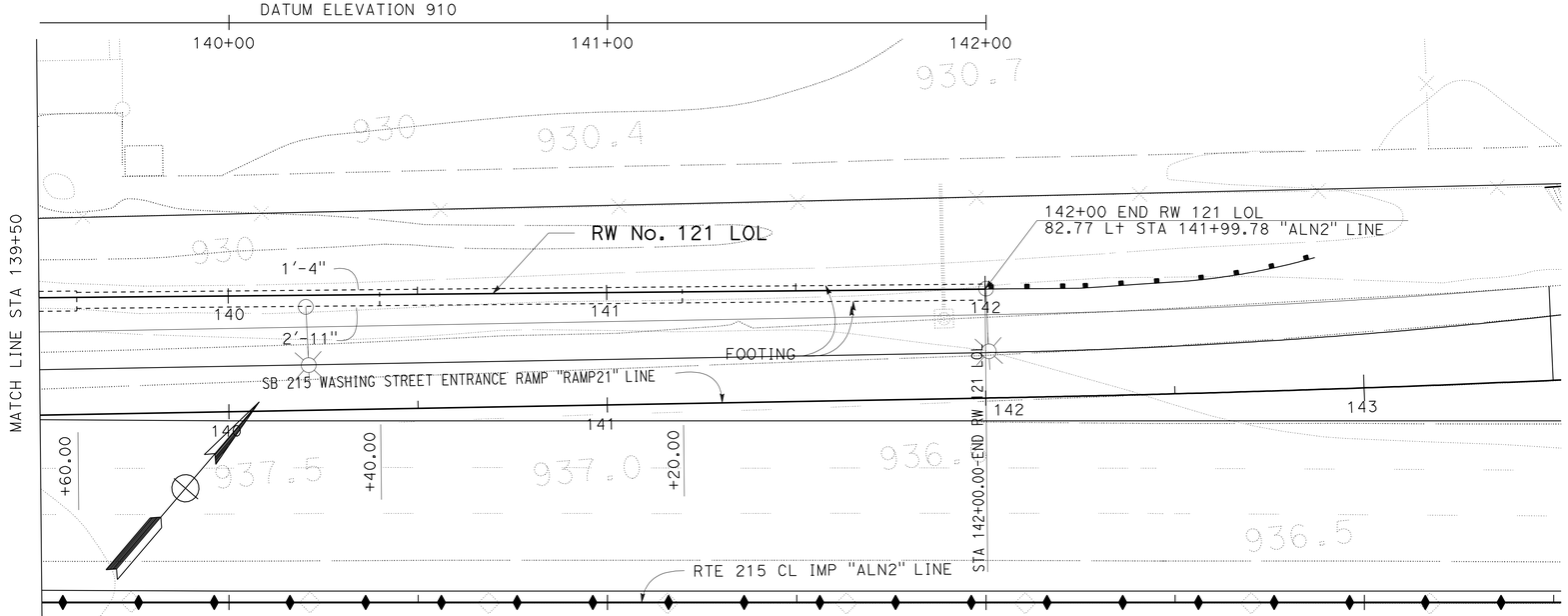

PLAN

SCALE 1"=20'

APPROVED FOR RETAINING WALL WORK ONLY

QUANTITIES

STRUCTURAL CONCRETE (RETAINING WALL)	1518.5	CY
BAR REINFORCING STEEL (RETAINING WALL)	124670	LB
STRUCTURAL EXCAVATION (RETAINING WALL)	3599.0	CY
STRUCTURAL BACKFILL (RETAINING WALL)	3094.4	CY
PERVIOUS BACKFILL MATERIAL (RETAINING WALL)	177.3	CY
CONCRETE BARRIER (TYPE 736A)	2000.0	LF
PLASTIC PIPE (N)	129.0	LF
WATERSTOP (N)	247.2	LF
ARCHITECTURE SURFACE (TEXTURE CONCRETE)	12099	SF

(N) = NOT A SEPARATE PAY ITEM, FOR INFORMATION ONLY

RETAINING WALL PLAN

RETAINING WALL No. 121

SCALE AS SHOWN **R15-5**

STATE OF CALIFORNIA - DEPARTMENT OF TRANSPORTATION
Caltrans®
DESIGN

FUNCTIONAL SUPERVISOR: BEN AMIRI
CALCULATED-DESIGNED BY: DAT H. WONG
CHECKED BY: JUSTINE NIU
REVISED BY
DATE REVISED

LAST REVISION 02-15-12
DATE PLOTTED => 17-APR-2012
TIME PLOTTED => 19:43

Dist	COUNTY	ROUTE	POST MILES TOTAL PROJECT	SHEET No.	TOTAL SHEETS
08	Riv,SBd	91,215	21.5/21.7, 43.2/45.2,0.0/5.1	789	1743

LICENSED LANDSCAPE ARCHITECT

4-16-12
PLANS APPROVAL DATE

LICENSED LANDSCAPE ARCHITECT
RAY J. DESSELLE No. 2544
Signature
11/30/13
Renewal Date
01/02/12
Date
STATE OF CALIFORNIA

THE STATE OF CALIFORNIA OR ITS OFFICERS OR AGENTS SHALL NOT BE RESPONSIBLE FOR THE ACCURACY OR COMPLETENESS OF SCANNED COPIES OF THIS PLAN SHEET.

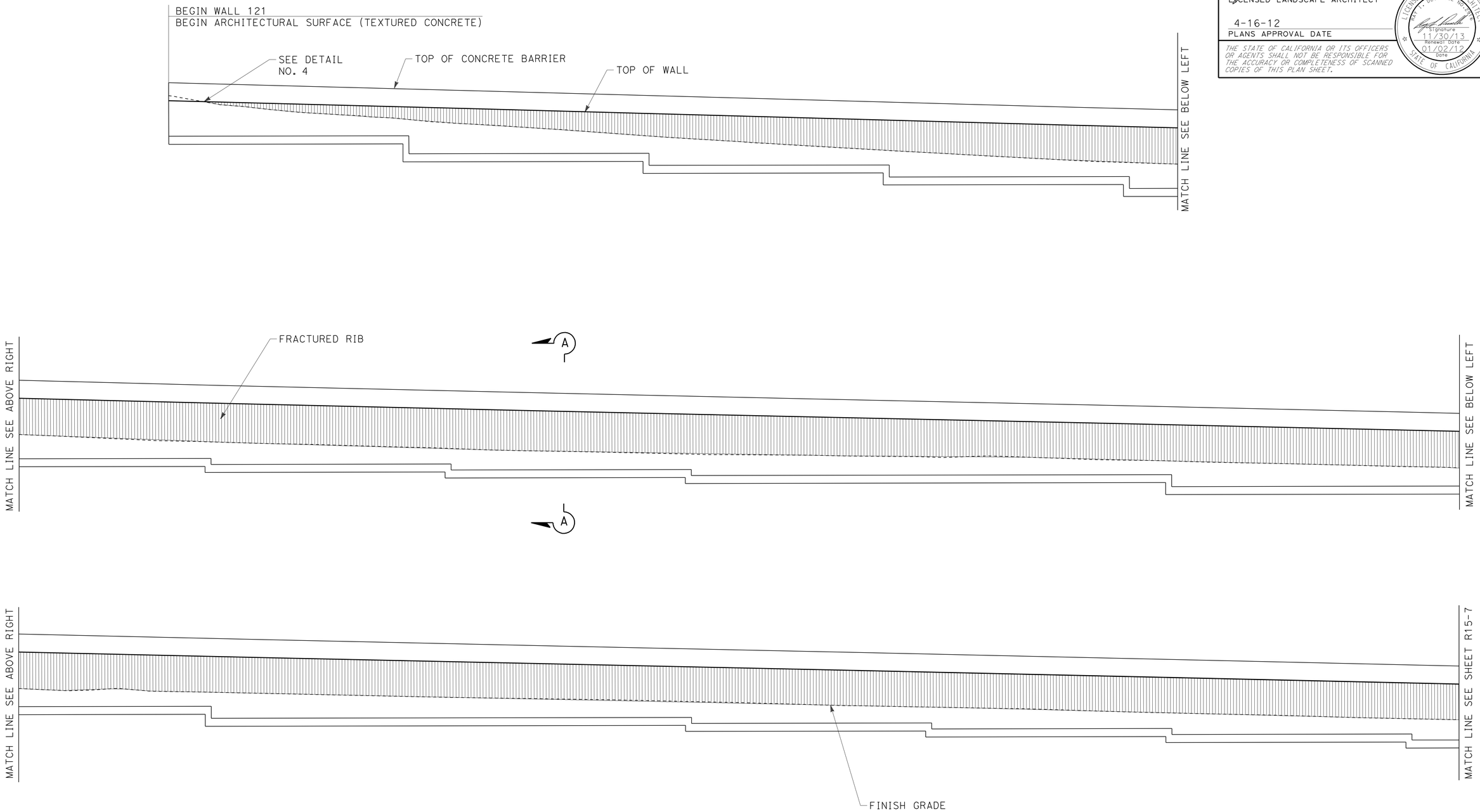

ELEVATION FOR FRACTURED RIB RETAINING WALL No. 121

ARCHITECTURAL SURFACE
RETAINING WALL No. 121

SCALE: 1/8"=1'0

R15-6

APPROVED FOR RETAINING WALL WORK ONLY

STATE OF CALIFORNIA - DEPARTMENT OF TRANSPORTATION
Caltrans® LANDSCAPE ARCHITECTURE

SENIOR LANDSCAPE ARCHITECT: RAY DESSELLE
CALCULATED-DESIGNED BY: MATTHEW HALL
CHECKED BY: MIRIAM BISHOP
REVISED BY
DATE REVISED

LAST REVISION 01-02-12
DATE PLOTTED => 17-APR-2012
TIME PLOTTED => 19:43

Dist	COUNTY	ROUTE	POST MILES TOTAL PROJECT	SHEET No.	TOTAL SHEETS
08	Riv,SBd	91,215	21.5/21.7, 43.2/45.2,0.0/5.1	790	1743

LICENSED LANDSCAPE ARCHITECT

4-16-12
PLANS APPROVAL DATE

LICENSED LANDSCAPE ARCHITECT
RAY J. DESSELLE No. 2522
Signature
11/30/13
Renewal Date
01/02/12
Date
STATE OF CALIFORNIA

THE STATE OF CALIFORNIA OR ITS OFFICERS OR AGENTS SHALL NOT BE RESPONSIBLE FOR THE ACCURACY OR COMPLETENESS OF SCANNED COPIES OF THIS PLAN SHEET.

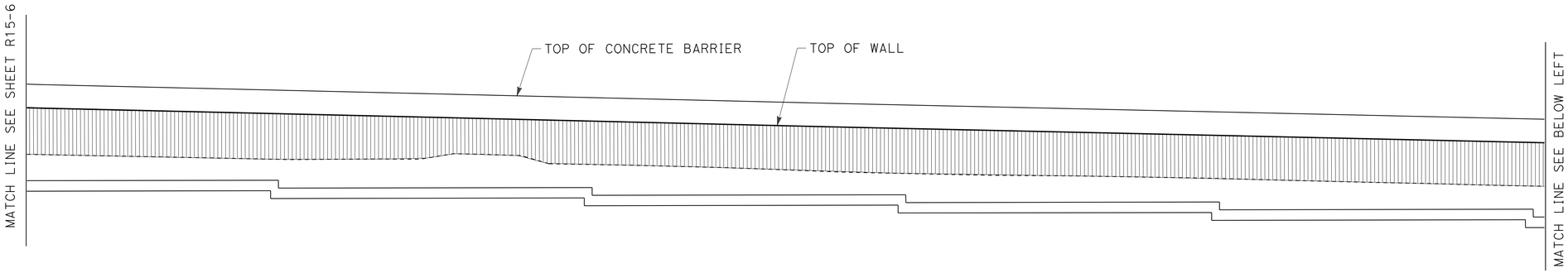

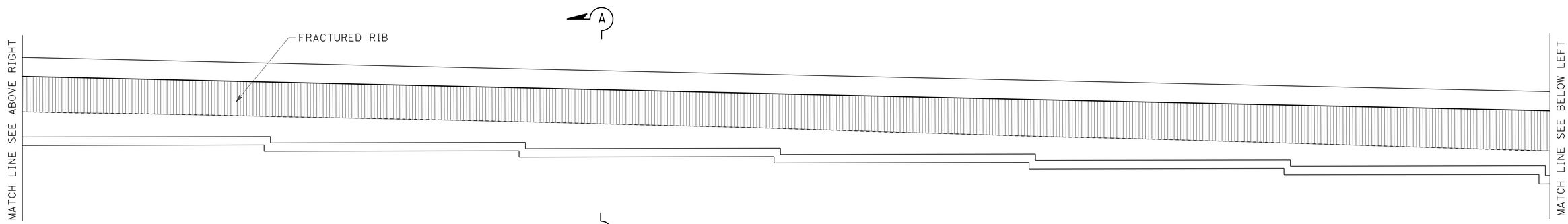

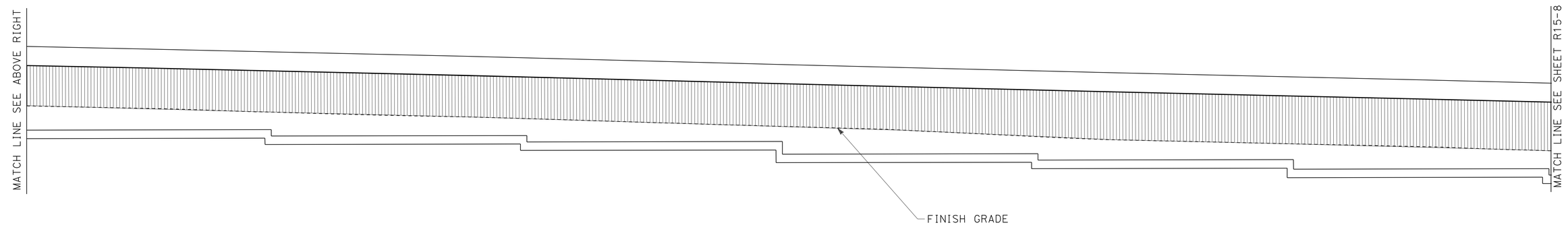

ELEVATION FOR FRACTURED RIB RETAINING WALL No. 121

ARCHITECTURAL SURFACE
RETAINING WALL No. 121

SCALE: 1/8"=1'0

R15-7

APPROVED FOR RETAINING WALL WORK ONLY

STATE OF CALIFORNIA - DEPARTMENT OF TRANSPORTATION
Caltrans® LANDSCAPE ARCHITECTURE

SENIOR LANDSCAPE ARCHITECT: RAY DESSELLE
CALCULATED-DESIGNED BY: MATTHEW HALL
CHECKED BY: MIRIAM BISHOP
REVISED BY
DATE REVISED

LAST REVISION 01-02-12
DATE PLOTTED => 17-APR-2012
TIME PLOTTED => 19:43

Dist	COUNTY	ROUTE	POST MILES TOTAL PROJECT	SHEET No.	TOTAL SHEETS
08	Riv,SBd	91,215	21.5/21.7, 43.2/45.2,0.0/5.1	791	1743

LICENSED LANDSCAPE ARCHITECT

4-16-12
PLANS APPROVAL DATE

LICENSED LANDSCAPE ARCHITECT
RAY J. DESSELLE No. 2522
Signature
11/30/13
Renewal Date
01/02/12
Date
STATE OF CALIFORNIA

THE STATE OF CALIFORNIA OR ITS OFFICERS OR AGENTS SHALL NOT BE RESPONSIBLE FOR THE ACCURACY OR COMPLETENESS OF SCANNED COPIES OF THIS PLAN SHEET.

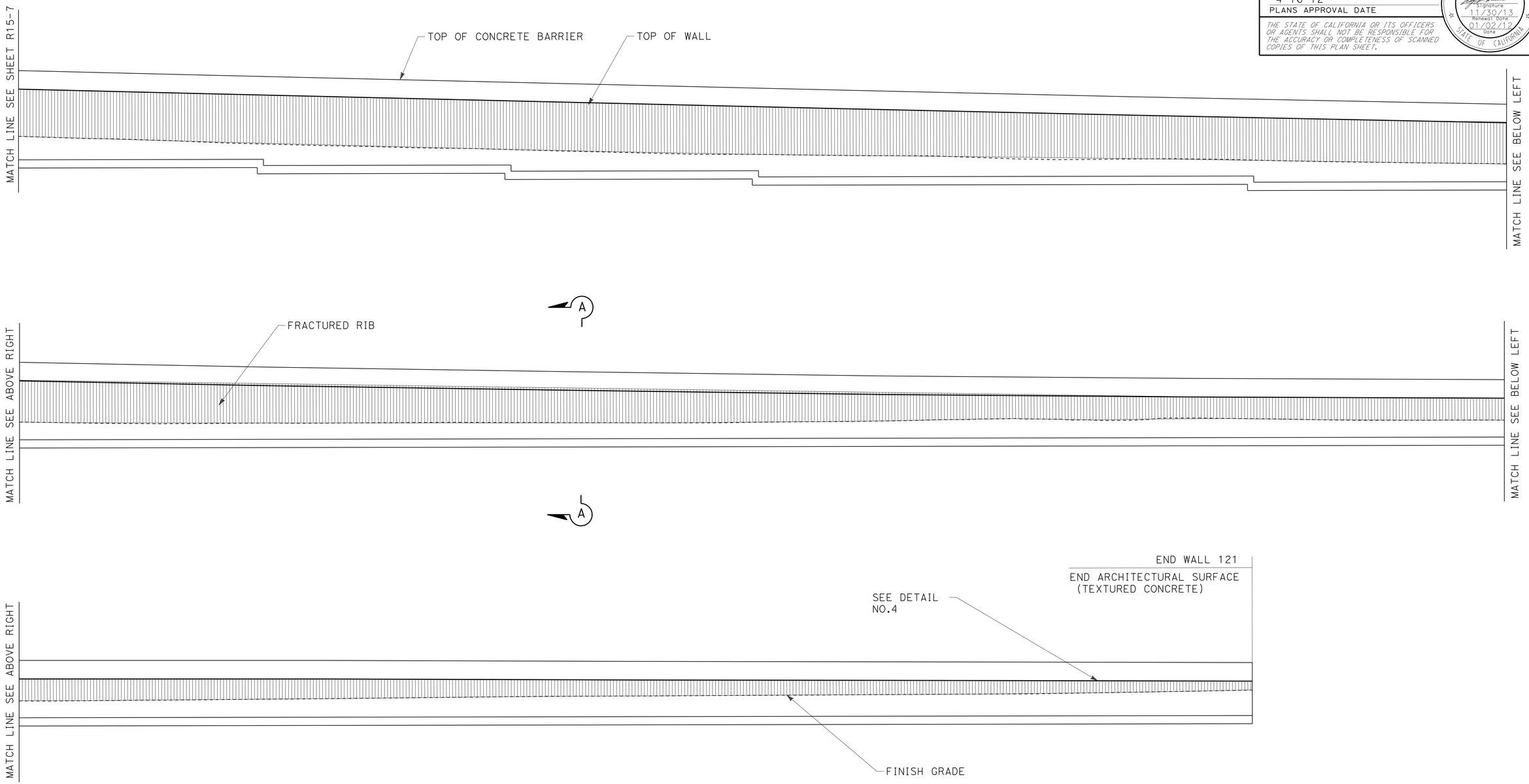

ELEVATION FOR FRACTURED RIB RETAINING WALL No. 121

ARCHITECTURAL SURFACE
RETAINING WALL No. 121

SCALE: 1/8"=1'0

R15-8

APPROVED FOR RETAINING WALL WORK ONLY

STATE OF CALIFORNIA - DEPARTMENT OF TRANSPORTATION
Caltrans® LANDSCAPE ARCHITECTURE

SENIOR LANDSCAPE ARCHITECT: RAY DESSELLE
CALCULATED-DESIGNED BY: MATTHEW HALL
CHECKED BY: MIRIAM BISHOP
REVISED BY
DATE REVISED

LAST REVISION 01-02-12
DATE PLOTTED => 17-APR-2012
TIME PLOTTED => 19:43

Dist	COUNTY	ROUTE	POST MILES TOTAL PROJECT	SHEET No.	TOTAL SHEETS
08	Riv,SBd	91,215	21.5/21.7, 43.2/45.2,0.0/5.1	792	1743

REGISTERED CIVIL ENGINEER 2-15-12 DATE

4-16-12
PLANS APPROVAL DATE

REGISTERED PROFESSIONAL ENGINEER JUSTINE NIU No. C 62897 Exp. 6-30-12 CIVIL STATE OF CALIFORNIA

THE STATE OF CALIFORNIA OR ITS OFFICERS OR AGENTS SHALL NOT BE RESPONSIBLE FOR THE ACCURACY OR COMPLETENESS OF SCANNED COPIES OF THIS PLAN SHEET.

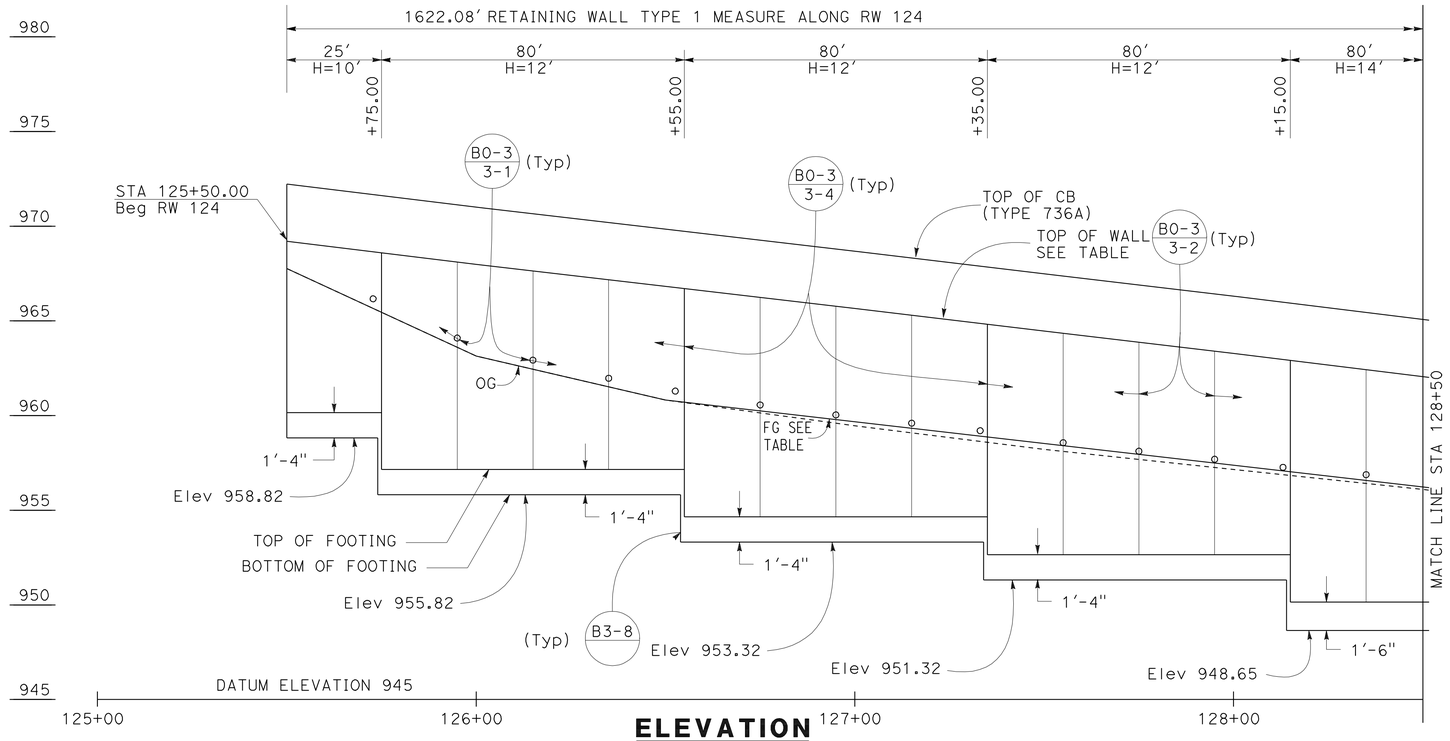

ELEVATION

SCALE Horiz 1"=20'
Vert 1"=4'

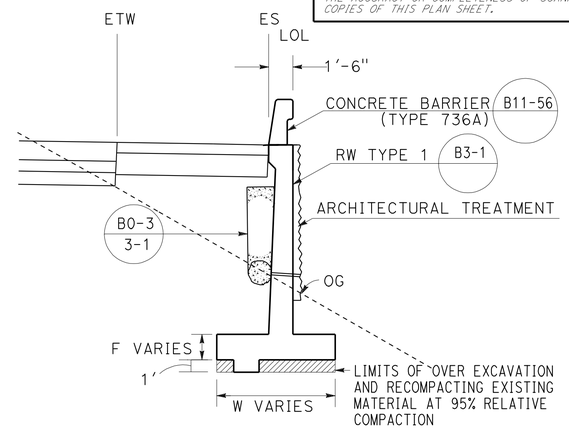

TYPICAL SECTION

125+50.00 TO 141+72.08
NO SCALE

NOTES:

1. ARCHITECTURAL TREATMENT SHOULD EXTEND 6 IN BELOW FG OR 6 IN BELOW TOP CB (TYPE 60D MOD)
2. FOR STRUCTURAL SECTIONS, SEE ROADWAY PLANS
3. WATERSTOP IN EXPANSION JOINT SHALL BE EXTEND 6 IN INTO THE BARRIER
4. FOR ROUNDING DETAILS, SEE ARCHITECTURAL TREATMENT PLANS

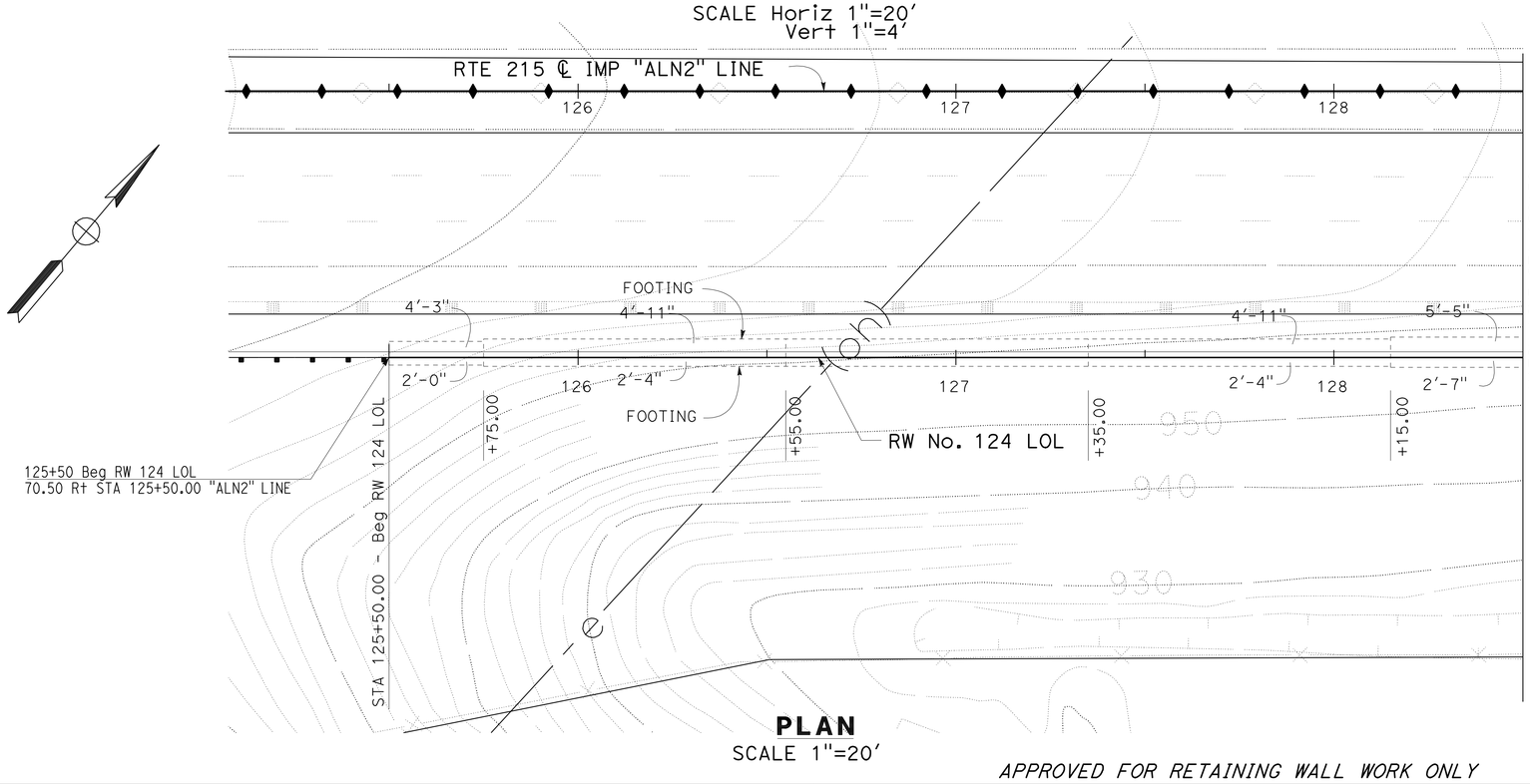

PLAN

SCALE 1"=20'

ELEVATION TABLE	
STATION	FG
125+50.00	967.77
126+00.00	963.14
126+50.00	960.82
129+50.00	953.93
130+50.00	951.03
131+50.00	948.79
133+50.00	943.38
134+00.00	942.38
135+00.00	939.62
136+00.00	934.91
137+00.00	932.05
137+50.00	931.25
138+50.00	931.43
140+50.00	931.68
141+50.00	933.80
141+72.08	935.10

RETAINING WALL PLAN

RETAINING WALL No. 124

SCALE AS SHOWN **R16-1**

APPROVED FOR RETAINING WALL WORK ONLY

STATE OF CALIFORNIA - DEPARTMENT OF TRANSPORTATION
Caltrans DESIGN

FUNCTIONAL SUPERVISOR: BEN AMIRI
CALCULATED-DESIGNED BY: JUSTINE NIU
CHECKED BY: DAT H. WONG
REVISED BY / DATE REVISED

LAST REVISION 02-15-12
DATE PLOTTED => 17-APR-2012
TIME PLOTTED => 19:43

Dist	COUNTY	ROUTE	POST MILES TOTAL PROJECT	SHEET No.	TOTAL SHEETS
08	Riv,SBd	91,215	21.5/21.7, 43.2/45.2,0.0/5.1	793	1743

REGISTERED CIVIL ENGINEER 1-2-12 DATE

4-16-12
PLANS APPROVAL DATE

REGISTERED PROFESSIONAL ENGINEER JUSTINE NIU No. C 62897 Exp. 6-30-12 CIVIL STATE OF CALIFORNIA

THE STATE OF CALIFORNIA OR ITS OFFICERS OR AGENTS SHALL NOT BE RESPONSIBLE FOR THE ACCURACY OR COMPLETENESS OF SCANNED COPIES OF THIS PLAN SHEET.

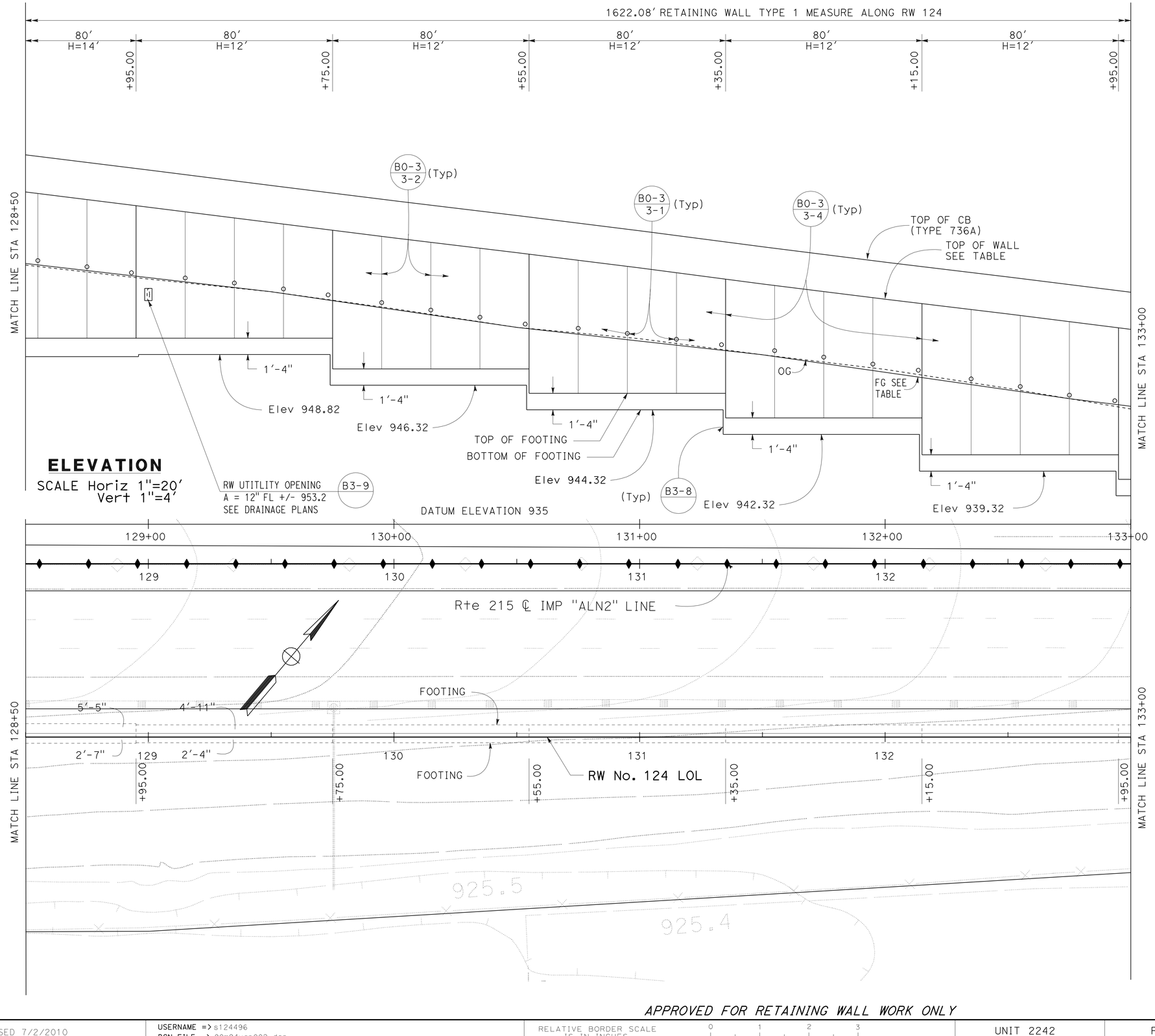

ELEVATION

SCALE Horiz 1"=20'
Vert 1"=4'

ELEVATION TABLE	
STATION	TOP OF WALL
125+50.00	969.20
126+00.00	967.98
126+50.00	966.82
127+00.00	965.65
127+50.00	964.47
128+00.00	963.28
128+50.00	962.05
129+00.00	960.81
129+50.00	959.56
130+00.00	958.31
130+50.00	957.11
131+00.00	955.86
131+50.00	954.56
132+00.00	953.32
132+50.00	952.12
133+00.00	950.87
133+50.00	949.59
134+00.00	948.34
134+50.00	947.12
135+00.00	945.86
135+50.00	944.53
136+00.00	943.20
136+50.00	941.88
137+00.00	940.71
137+50.00	939.48
138+00.00	938.34
138+50.00	937.70
139+00.00	937.29
139+50.00	937.22
140+00.00	937.34
140+50.00	937.57
141+00.00	937.73
141+50.00	937.82
141+72.08	937.72

RETAINING WALL PLAN

RETAINING WALL No. 124

SCALE AS SHOWN **R16-2**

APPROVED FOR RETAINING WALL WORK ONLY

STATE OF CALIFORNIA - DEPARTMENT OF TRANSPORTATION
Caltrans® DESIGN

FUNCTIONAL SUPERVISOR: BEN AMIRI
CALCULATED-DESIGNED BY: JUSTINE NIU
CHECKED BY: DAT H. WONG
REVISED BY
DATE REVISED

LAST REVISION 01-02-12
DATE PLOTTED => 17-APR-2012
TIME PLOTTED => 19:43

Dist	COUNTY	ROUTE	POST MILES TOTAL PROJECT	SHEET No.	TOTAL SHEETS
08	Riv,SBd	91,215	21.5/21.7, 43.2/45.2,0.0/5.1	794	1743

REGISTERED CIVIL ENGINEER 1-2-12 DATE

4-16-12
PLANS APPROVAL DATE

REGISTERED PROFESSIONAL ENGINEER
JUSTINE NIU
No. C 62897
Exp. 6-30-12
CIVIL
STATE OF CALIFORNIA

THE STATE OF CALIFORNIA OR ITS OFFICERS OR AGENTS SHALL NOT BE RESPONSIBLE FOR THE ACCURACY OR COMPLETENESS OF SCANNED COPIES OF THIS PLAN SHEET.

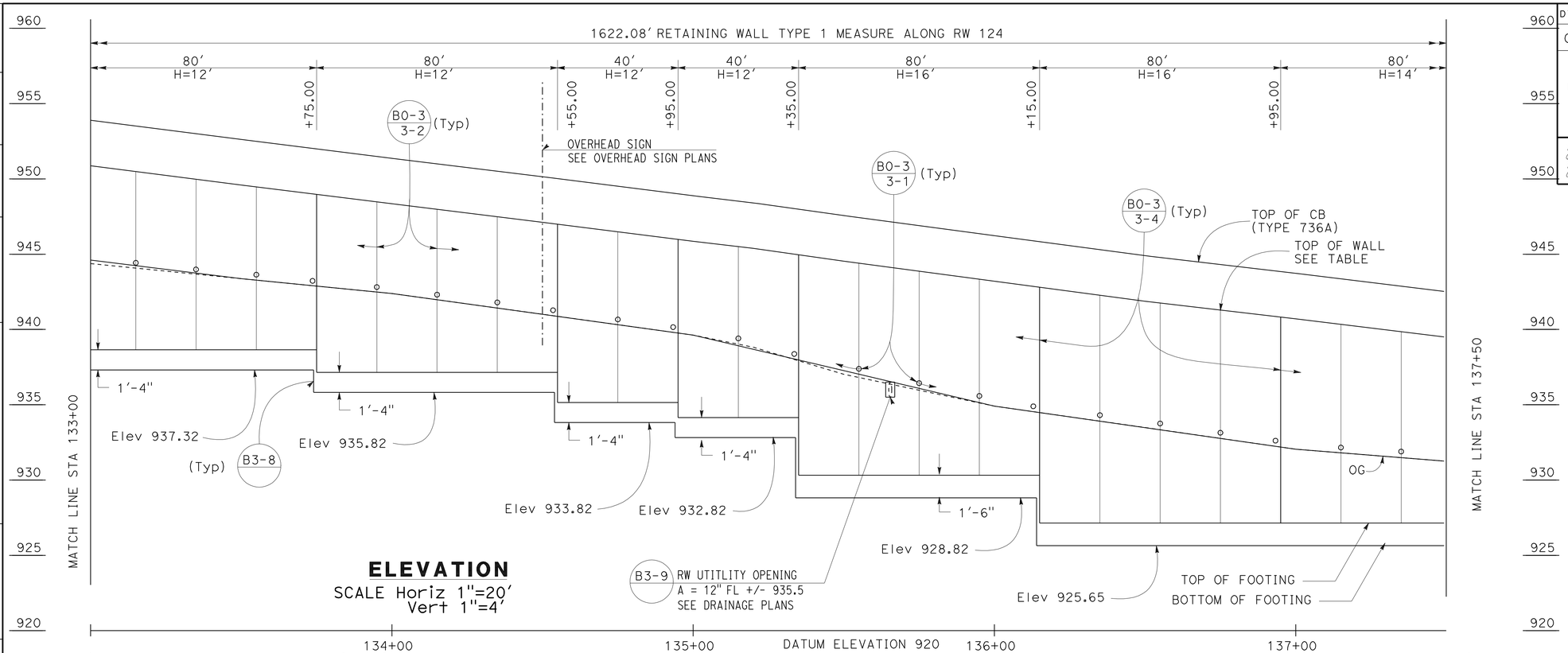

ELEVATION
SCALE Horiz 1"=20'
Vert 1"=4'

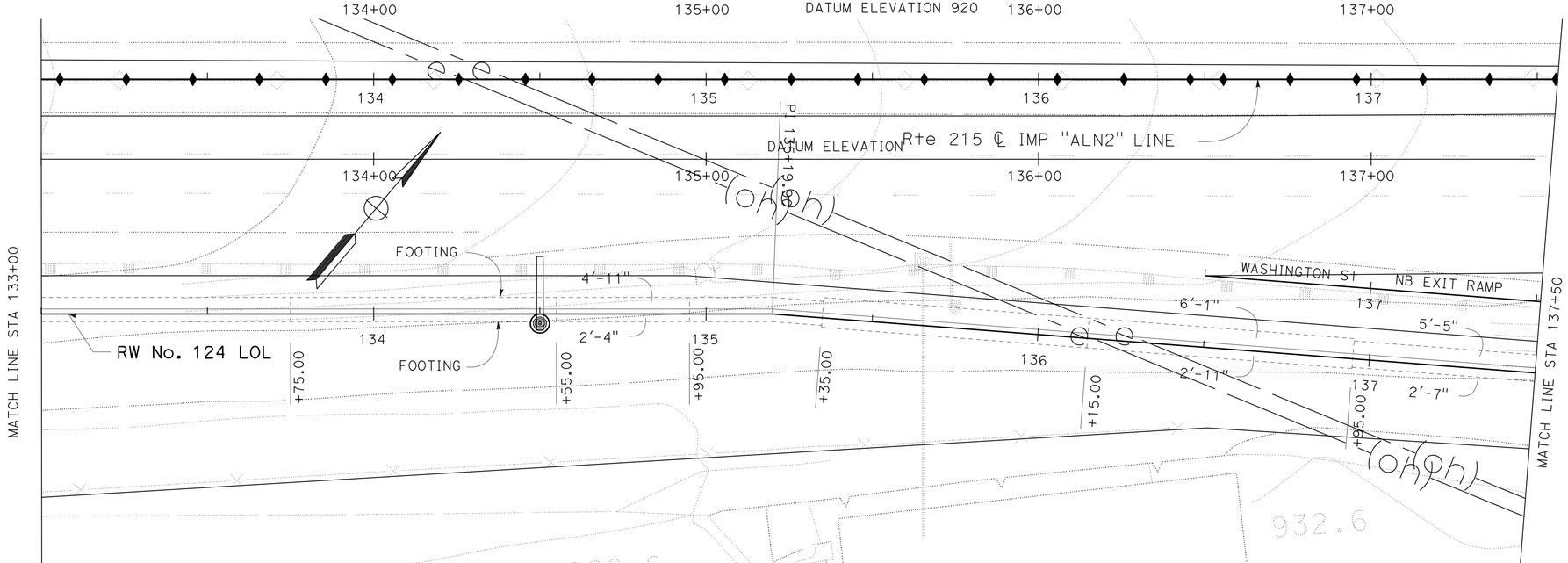

PLAN
SCALE 1"=20'

APPROVED FOR RETAINING WALL WORK ONLY

RETAINING WALL PLAN
RETAINING WALL No. 124

SCALE AS SHOWN **R16-3**

REVISED BY | DATE REVISED
JUSTINE NIU | DAT H. WONG
CALCULATED-DESIGNED BY | CHECKED BY
FUNCTIONAL SUPERVISOR: BEN AMIRI

STATE OF CALIFORNIA - DEPARTMENT OF TRANSPORTATION
Caltrans
DESIGN

LAST REVISION 01-02-12 | DATE PLOTTED => 17-APR-2012 | TIME PLOTTED => 19:43

Dist	COUNTY	ROUTE	POST MILES TOTAL PROJECT	SHEET No.	TOTAL SHEETS
08	Riv,SBd	91,215	21.5/21.7, 43.2/45.2,0.0/5.1	795	1743

REGISTERED CIVIL ENGINEER 2-29-12 DATE

4-16-12
PLANS APPROVAL DATE

REGISTERED PROFESSIONAL ENGINEER JUSTINE NIU No. C 62897 Exp. 6-30-12 CIVIL STATE OF CALIFORNIA

THE STATE OF CALIFORNIA OR ITS OFFICERS OR AGENTS SHALL NOT BE RESPONSIBLE FOR THE ACCURACY OR COMPLETENESS OF SCANNED COPIES OF THIS PLAN SHEET.

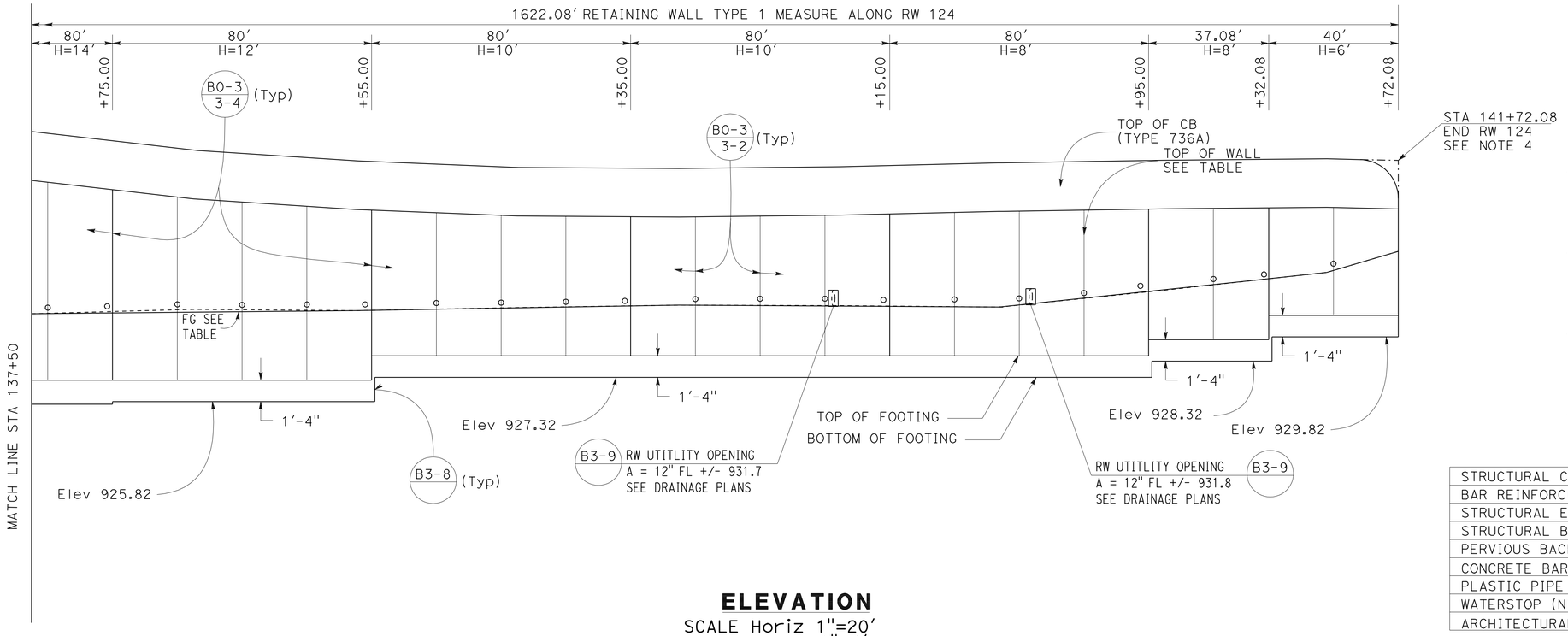

ELEVATION

SCALE Horiz 1"=20'
Vert 1"=4'

QUANTITIES

STRUCTURAL CONCRETE (RETAINING WALL)	1529.1	CY
BAR REINFORCING STEEL (RETAINING WALL)	138 735	LB
STRUCTURAL EXCAVATION (RETAINING WALL)	4229.1	CY
STRUCTURAL BACKFILL (RETAINING WALL)	4292.6	CY
PERVIOUS BACKFILL MATERIAL (RETAINING WALL)	166.0	CY
CONCRETE BARRIER (TYPE 736A)	1622.1	LF
PLASTIC PIPE (N)	111.3	LF
WATERSTOP (N)	143.5	LF
ARCHITECTURAL SURFACE (TEXTURED CONCRETE)	10410	SQFT

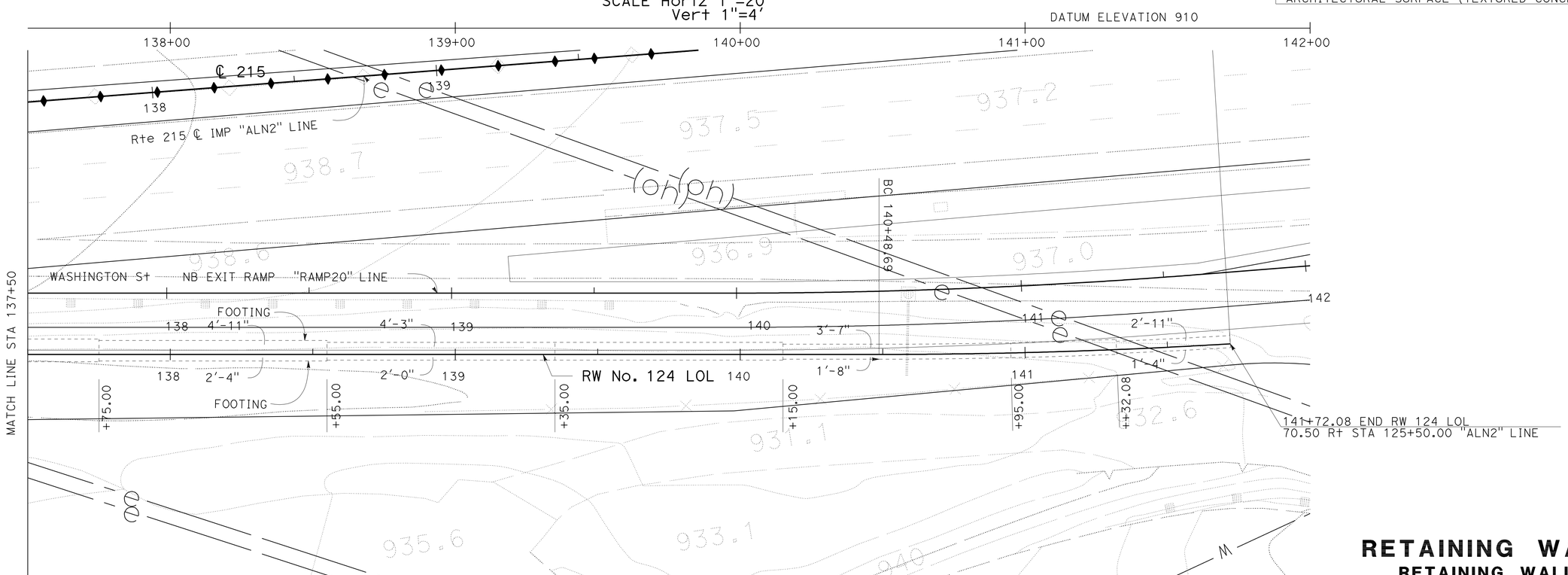

PLAN

SCALE 1"=20'

APPROVED FOR RETAINING WALL WORK ONLY

RETAINING WALL PLAN

RETAINING WALL No. 124

SCALE AS SHOWN

R16-4

STATE OF CALIFORNIA - DEPARTMENT OF TRANSPORTATION
Caltrans
DESIGN

FUNCTIONAL SUPERVISOR: BEN AMIRI
CALCULATED-DESIGNED BY: JUSTINE NIU
CHECKED BY: DAT H. WONG
REVISED BY
DATE REVISED

LAST REVISION 02-29-12
DATE PLOTTED => 17-APR-2012
TIME PLOTTED => 19:43

Dist	COUNTY	ROUTE	POST MILES TOTAL PROJECT	SHEET No.	TOTAL SHEETS
08	Riv,SBd	91,215	21.5/21.7, 43.2/45.2,0.0/5.1	796	1743

LICENSED LANDSCAPE ARCHITECT

4-16-12
PLANS APPROVAL DATE

LICENSED LANDSCAPE ARCHITECT
RAY T. DESSELLE No. 2272
Signature
11/30/13
Renewal Date
01/02/12
Date
STATE OF CALIFORNIA

THE STATE OF CALIFORNIA OR ITS OFFICERS OR AGENTS SHALL NOT BE RESPONSIBLE FOR THE ACCURACY OR COMPLETENESS OF SCANNED COPIES OF THIS PLAN SHEET.

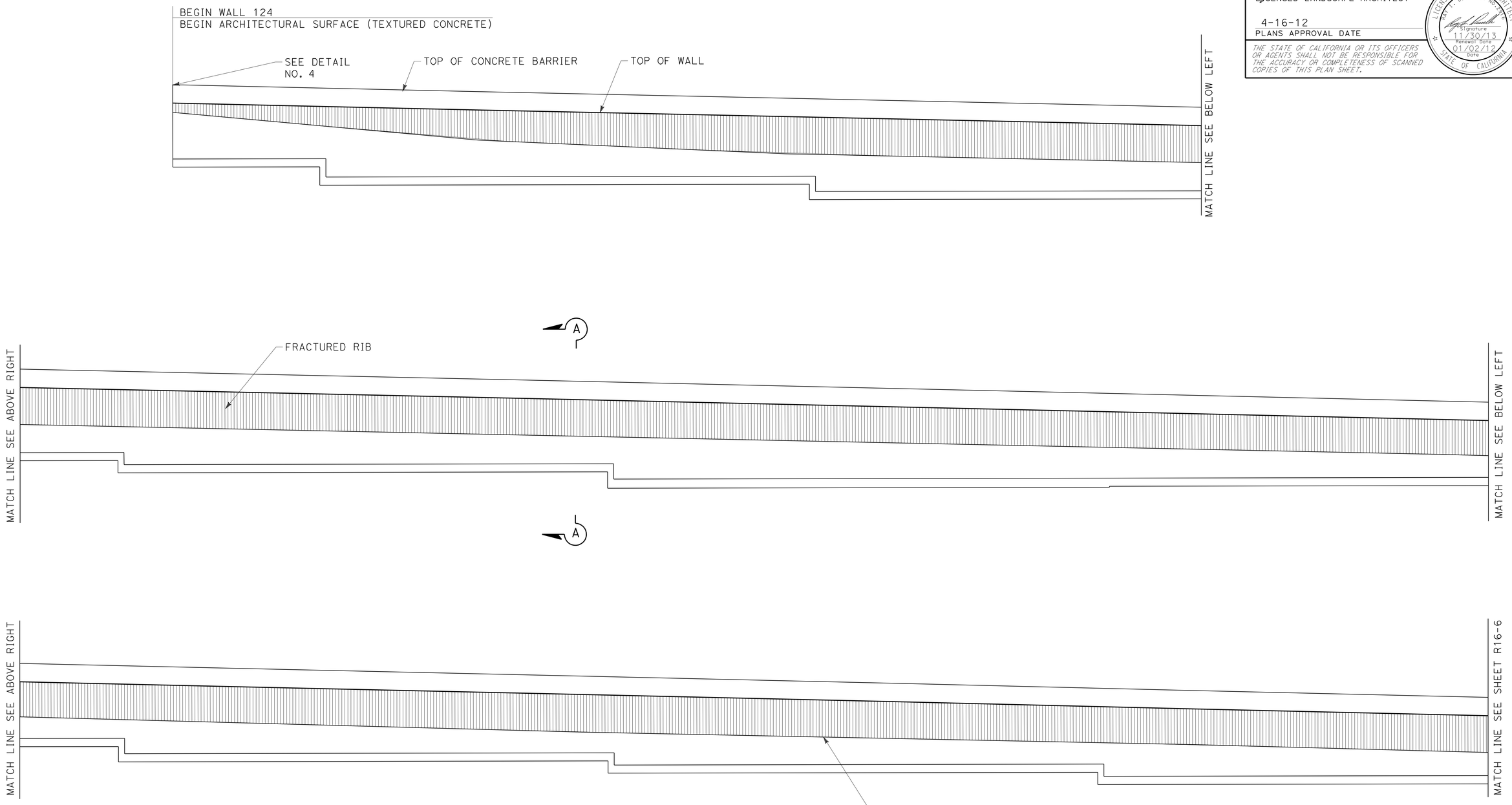

ELEVATION FOR FRACTURED RIB RETAINING WALL No. 124

ARCHITECTURAL SURFACE
RETAINING WALL No. 124

SCALE: 1/8"=1'0

R16-5

APPROVED FOR RETAINING WALL WORK ONLY

STATE OF CALIFORNIA - DEPARTMENT OF TRANSPORTATION
Caltrans LANDSCAPE ARCHITECTURE

SENIOR LANDSCAPE ARCHITECT: RAY DESSELLE
CALCULATED-DESIGNED BY: MATTHEW HALL
CHECKED BY: MIRIAM BISHOP
REVISED BY
DATE REVISED

LAST REVISION 01-02-12
DATE PLOTTED => 17-APR-2012
TIME PLOTTED => 19:43

Dist	COUNTY	ROUTE	POST MILES TOTAL PROJECT	SHEET No.	TOTAL SHEETS
08	Riv,SBd	91,215	21.5/21.7, 43.2/45.2,0.0/5.1	797	1743

LICENSED LANDSCAPE ARCHITECT

4-16-12
PLANS APPROVAL DATE

LICENSED LANDSCAPE ARCHITECT
RAY DESSELLE
Signature
11/30/13
Renewal Date
01/02/12
Date
STATE OF CALIFORNIA

THE STATE OF CALIFORNIA OR ITS OFFICERS OR AGENTS SHALL NOT BE RESPONSIBLE FOR THE ACCURACY OR COMPLETENESS OF SCANNED COPIES OF THIS PLAN SHEET.

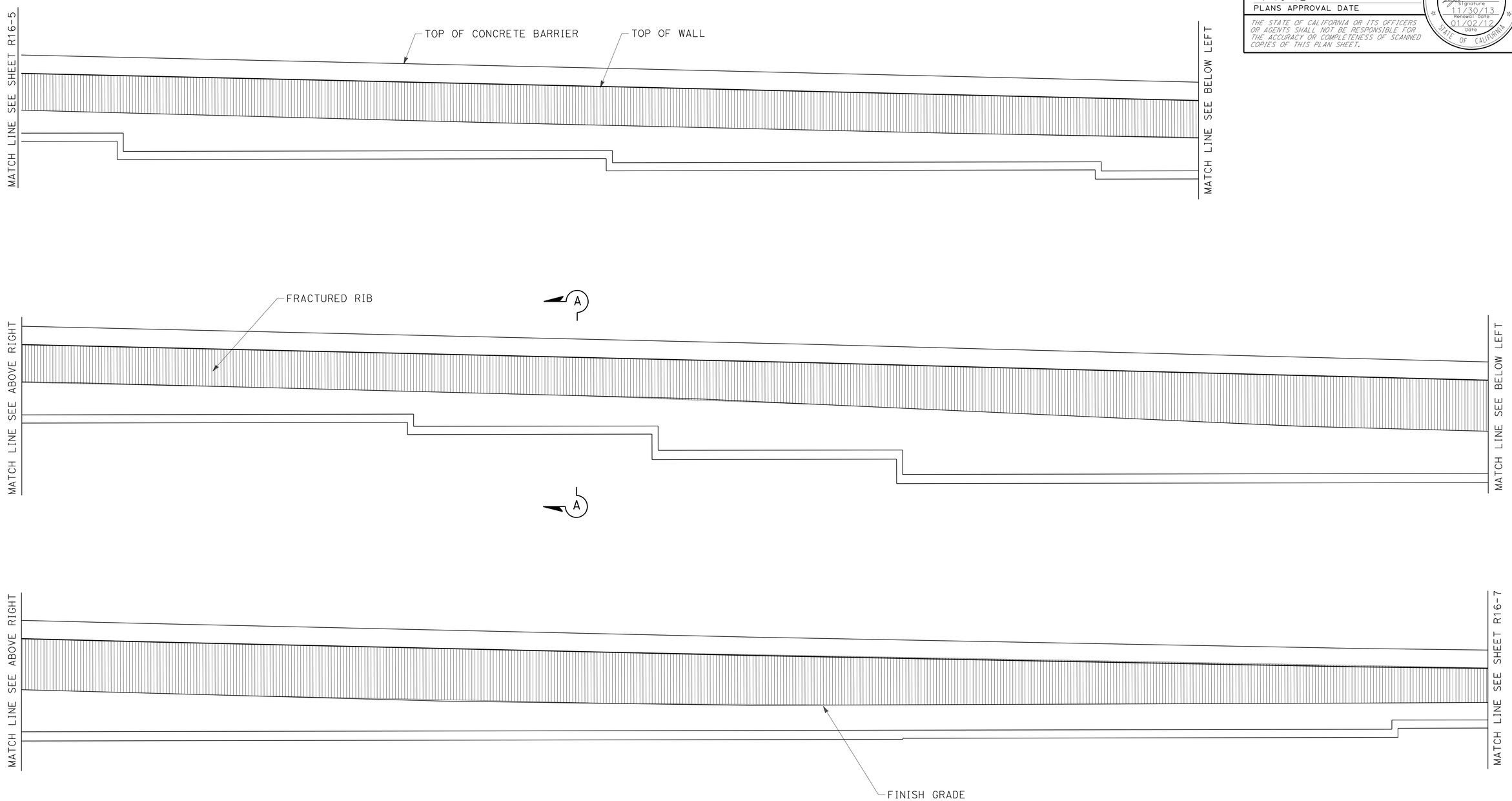

ELEVATION FOR FRACTURED RIB RETAINING WALL No. 124

ARCHITECTURAL SURFACE
RETAINING WALL No. 124

SCALE: 1/8"=1'0

R16-6

APPROVED FOR RETAINING WALL WORK ONLY

STATE OF CALIFORNIA - DEPARTMENT OF TRANSPORTATION
Caltrans® LANDSCAPE ARCHITECTURE

SENIOR LANDSCAPE ARCHITECT: RAY DESSELLE

CALCULATED-DESIGNED BY: MATTHEW HALL
CHECKED BY: MIRIAM BISHOP

REVISED BY
DATE REVISED

LAST REVISION 01-02-12
DATE PLOTTED => 17-APR-2012
TIME PLOTTED => 19:43

Dist	COUNTY	ROUTE	POST MILES TOTAL PROJECT	SHEET No.	TOTAL SHEETS
08	Riv,SBd	91,215	21.5/21.7, 43.2/45.2,0.0/5.1	798	1743

LICENSED LANDSCAPE ARCHITECT

4-16-12
PLANS APPROVAL DATE

LICENSED LANDSCAPE ARCHITECT
RAY L. DESSELLE No. 2528
Signature
11/30/13
Renewal Date
03/22/12
Date
STATE OF CALIFORNIA

THE STATE OF CALIFORNIA OR ITS OFFICERS OR AGENTS SHALL NOT BE RESPONSIBLE FOR THE ACCURACY OR COMPLETENESS OF SCANNED COPIES OF THIS PLAN SHEET.

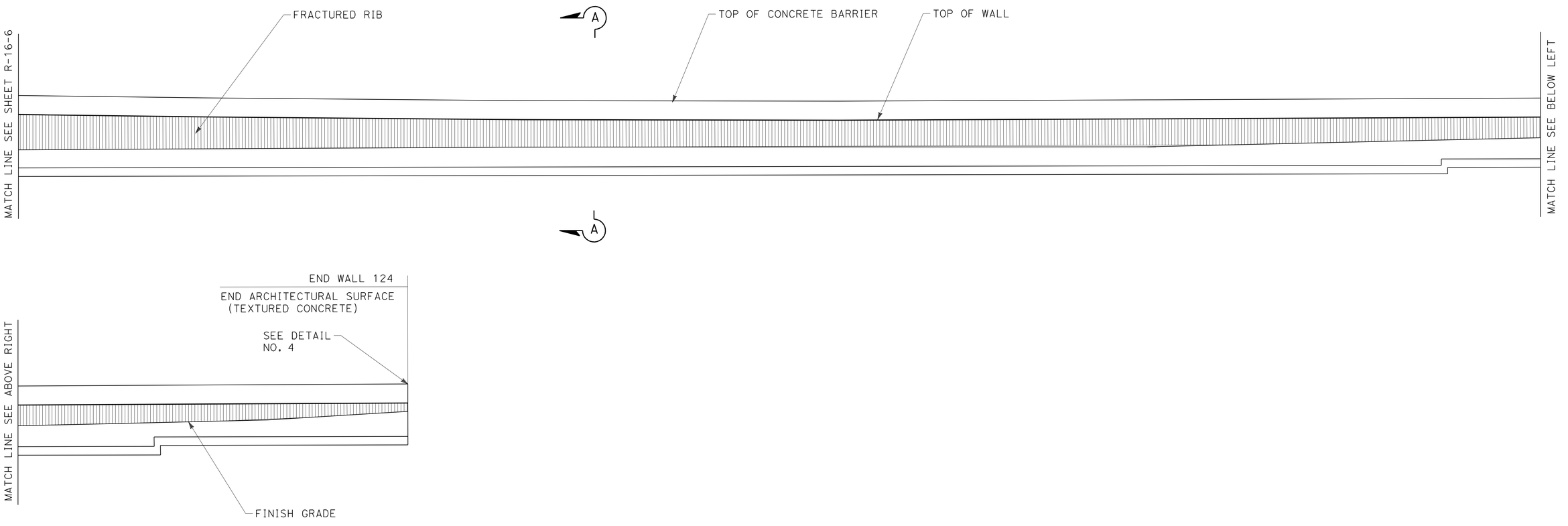

ELEVATION FOR FRACTURED RIB
RETAINING WALL No. 124

APPROVED FOR RETAINING WALL WORK ONLY

ARCHITECTURAL SURFACE
RETAINING WALL No. 124

SCALE: 1/8"=1'0

R16-7

STATE OF CALIFORNIA - DEPARTMENT OF TRANSPORTATION
Caltrans® LANDSCAPE ARCHITECTURE

SENIOR LANDSCAPE ARCHITECT: RAY DESSELLE
CALCULATED-DESIGNED BY: MATTHEW HALL
CHECKED BY: MIRIAM BISHOP
REVISED BY
DATE REVISED

LAST REVISION 03-22-12
DATE PLOTTED => 17-APR-2012
TIME PLOTTED => 19:43

Dist	COUNTY	ROUTE	POST MILES TOTAL PROJECT	SHEET No.	TOTAL SHEETS
08	Riv,SBd	91,215	21.5/21.7, 43.2/45.2,0.0/5.1	799	1743

REGISTERED CIVIL ENGINEER 1-2-12 DATE

4-16-12
PLANS APPROVAL DATE

REGISTERED PROFESSIONAL ENGINEER JUSTINE NIU No. C 62897 Exp. 6-30-12 CIVIL STATE OF CALIFORNIA

THE STATE OF CALIFORNIA OR ITS OFFICERS OR AGENTS SHALL NOT BE RESPONSIBLE FOR THE ACCURACY OR COMPLETENESS OF SCANNED COPIES OF THIS PLAN SHEET.

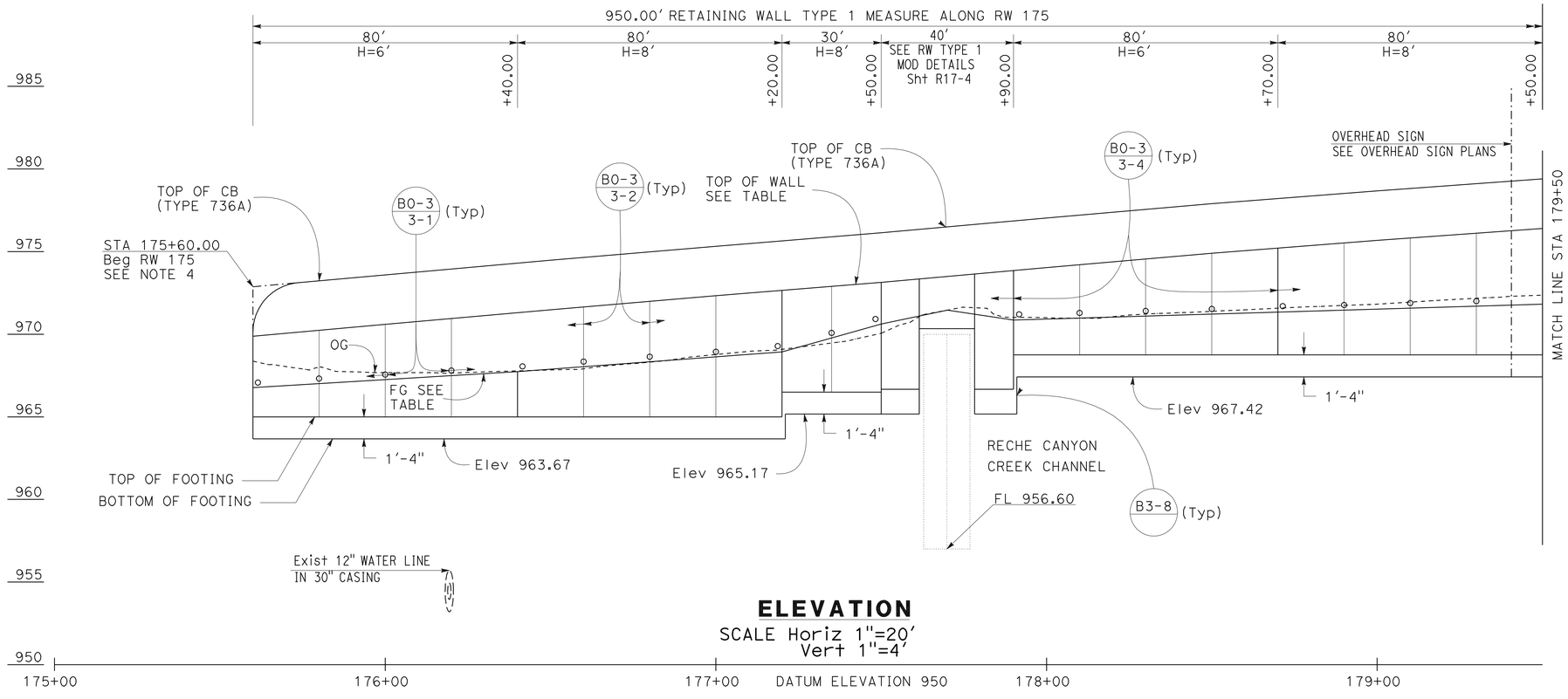

ELEVATION

SCALE Horiz 1"=20'
Vert 1"=4'

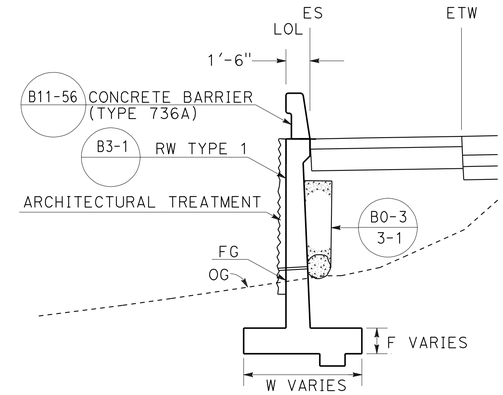

TYPICAL SECTION

175+60.00 TO 185+10.00
NO SCALE

NOTES:

1. ARCHITECTURAL TREATMENT SHOULD EXTEND 6 IN BELOW FG OR 6 IN BELOW TOP CB (TYPE 60D MOD)
2. FOR STRUCTURAL SECTIONS, SEE ROADWAY PLANS
3. WATERSTOP IN EXPANSION JOINT SHALL BE EXTEND 6 IN INTO THE BARRIER
4. FOR ROUNDING DETAILS, SEE ARCHITECTURAL TREATMENT PLANS
5. FOR ELECTROLIER DETAILS, SEE ELECTRICAL DETAILS SHEETS.FOR MOUNTING DETAILS, SEE STANDARD PLANS B11-56

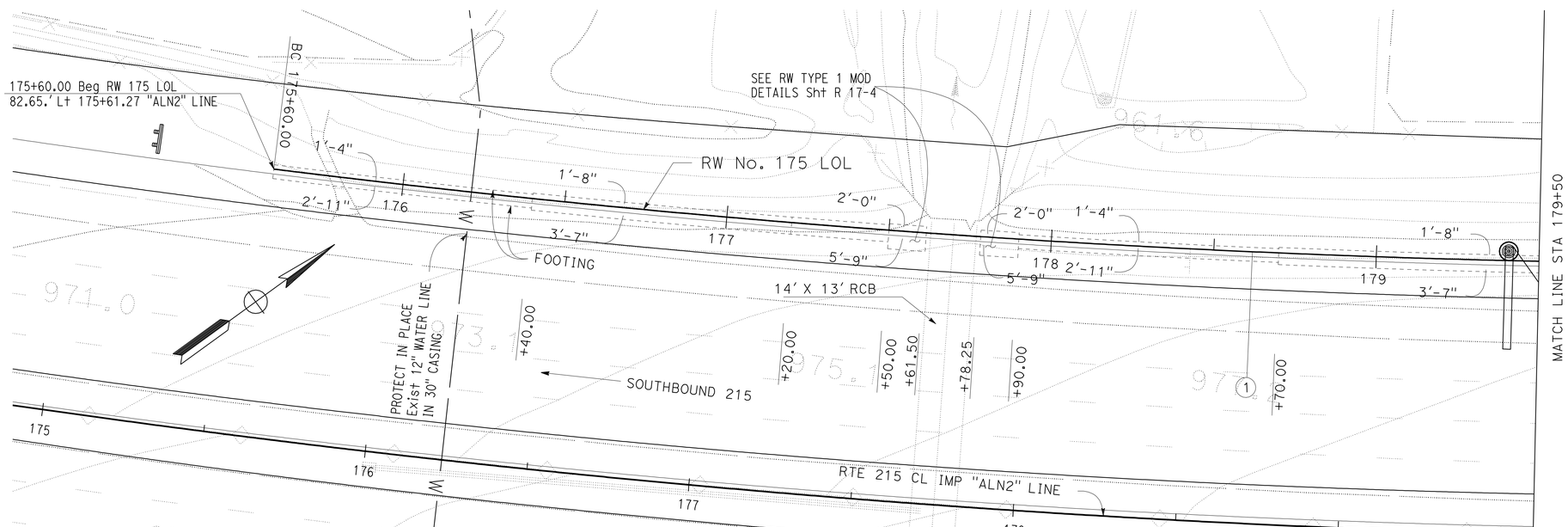

PLAN

SCALE 1"=20'

CURVE DATA

No.	R	Δ	T	L
1	3814'	10°51'44"	362.61'	723.05'
2	3638'	3°34'26"	113.51'	226.95'

ELEVATION TABLE	
STATION	FG
175+60.00	966.77
176+40.00	967.73
177+20.00	968.92
177+70.00	971.46
177+90.00	970.86
183+00.00	973.91
184+30.00	974.18
185+00.00	975.23
186+60.00	975.59
187+00.00	975.08
189+00.00	974.23
191+49.95	974.01

RETAINING WALL PLAN

RETAINING WALL No. 175

SCALE AS SHOWN **R17-1**

APPROVED FOR RETAINING WALL WORK ONLY

STATE OF CALIFORNIA - DEPARTMENT OF TRANSPORTATION
DESIGN
FUNCTIONAL SUPERVISOR: BEN AMIRI
CALCULATED-DESIGNED BY: DAT H. WONG
CHECKED BY: JUSTINE NIU
REVISED BY / DATE REVISED

LAST REVISION 01-02-12
DATE PLOTTED => 17-APR-2012
TIME PLOTTED => 19:43

Dist	COUNTY	ROUTE	POST MILES TOTAL PROJECT	SHEET No.	TOTAL SHEETS
08	Riv,SBd	91,215	21.5/21.7, 43.2/45.2,0.0/5.1	800	1743

REGISTERED CIVIL ENGINEER 1-2-12 DATE

4-16-12
PLANS APPROVAL DATE

REGISTERED PROFESSIONAL ENGINEER
JUSTINE NIU
No. C 62897
Exp. 6-30-12
CIVIL
STATE OF CALIFORNIA

THE STATE OF CALIFORNIA OR ITS OFFICERS OR AGENTS SHALL NOT BE RESPONSIBLE FOR THE ACCURACY OR COMPLETENESS OF SCANNED COPIES OF THIS PLAN SHEET.

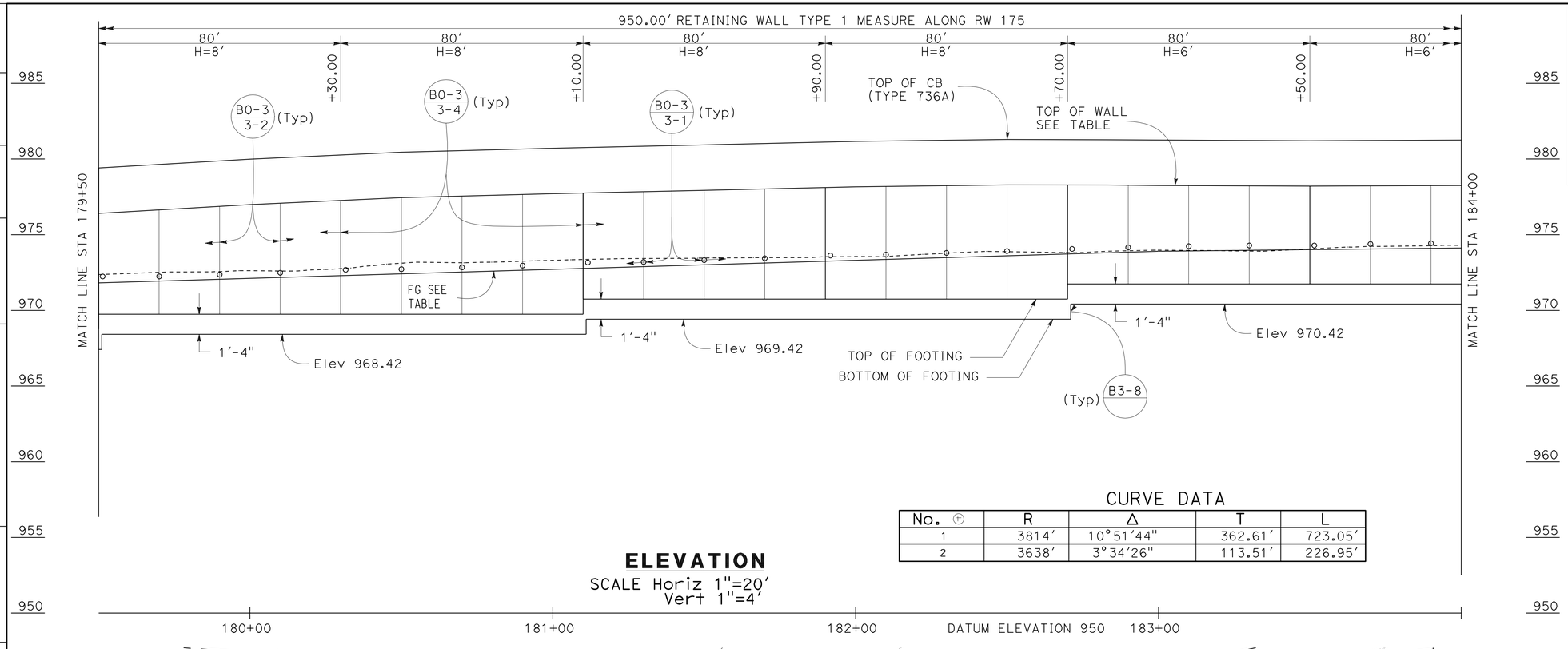

ELEVATION

SCALE Horiz 1"=20'
Vert 1"=4'

CURVE DATA

No. ⑪	R	Δ	T	L
1	3814'	10°51'44"	362.61'	723.05'
2	3638'	3°34'26"	113.51'	226.95'

ELEVATION TABLE

STATION	TOP OF WALL
175+60.00	970.04
176+00.00	970.74
176+50.00	971.61
177+00.00	972.46
177+50.00	973.28
178+00.00	974.19
178+50.00	975.08
179+00.00	975.82
179+50.00	976.49
180+00.00	976.99
180+50.00	977.48
181+00.00	977.81
181+50.00	978.07
182+00.00	978.22
182+50.00	978.34
183+00.00	978.37
183+50.00	978.34
184+00.00	978.32
184+50.00	978.36
185+00.00	978.35
185+10.00	978.35

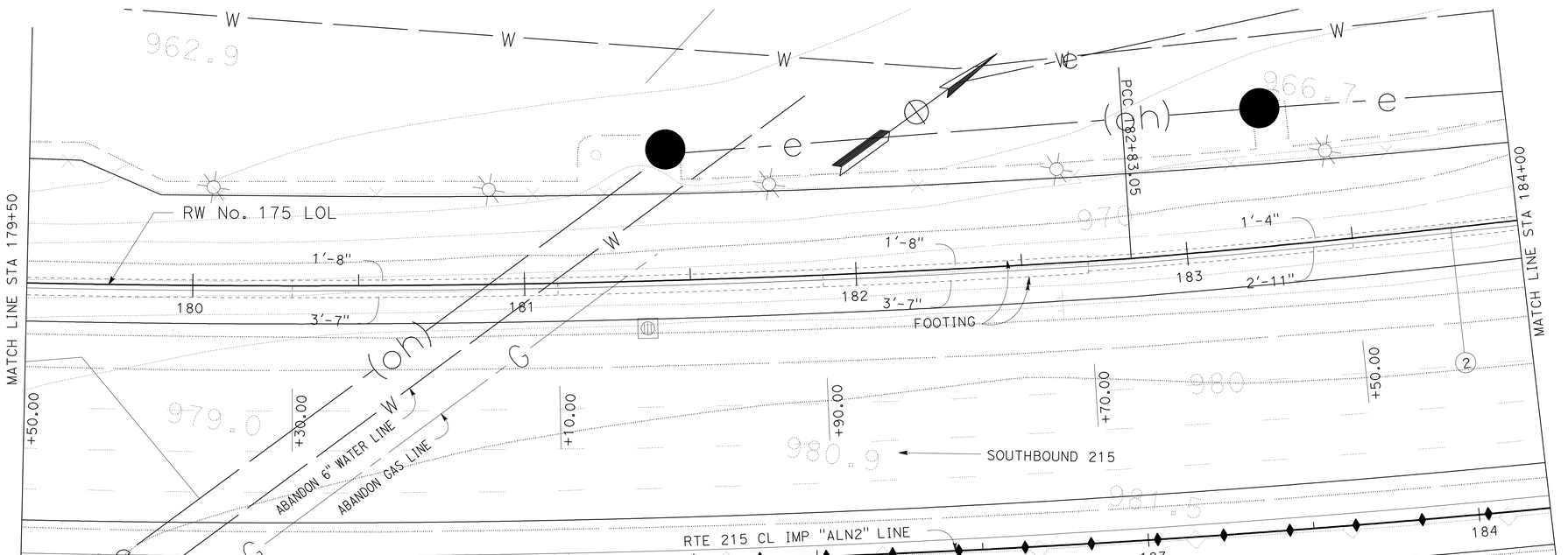

PLAN

SCALE 1"=20'

APPROVED FOR RETAINING WALL WORK ONLY

RETAINING WALL PLAN

RETAINING WALL No. 175

SCALE AS SHOWN **R17-2**

STATE OF CALIFORNIA - DEPARTMENT OF TRANSPORTATION
Caltrans® DESIGN

FUNCTIONAL SUPERVISOR: BENJAMIN MIRI
CALCULATED-DESIGNED BY: DAT H. WONG
CHECKED BY: JUSTINE NIU
REVISED BY
DATE REVISED

LAST REVISION 01-02-12
DATE PLOTTED => 17-APR-2012
TIME PLOTTED => 19:43