Dist	COUNTY	ROUTE	POST MILES TOTAL PROJECT	SHEET No.	TOTAL SHEETS
08	Riv,SBd	91,215	21.5/21.7, 43.2/45.2,0.0/5.1	201	1743

REGISTERED CIVIL ENGINEER 1-2-12 DATE

4-16-12
PLANS APPROVAL DATE

REGISTERED PROFESSIONAL ENGINEER JUSTINE NIU No. C 62897 Exp. 6-30-12 CIVIL STATE OF CALIFORNIA

THE STATE OF CALIFORNIA OR ITS OFFICERS OR AGENTS SHALL NOT BE RESPONSIBLE FOR THE ACCURACY OR COMPLETENESS OF SCANNED COPIES OF THIS PLAN SHEET.

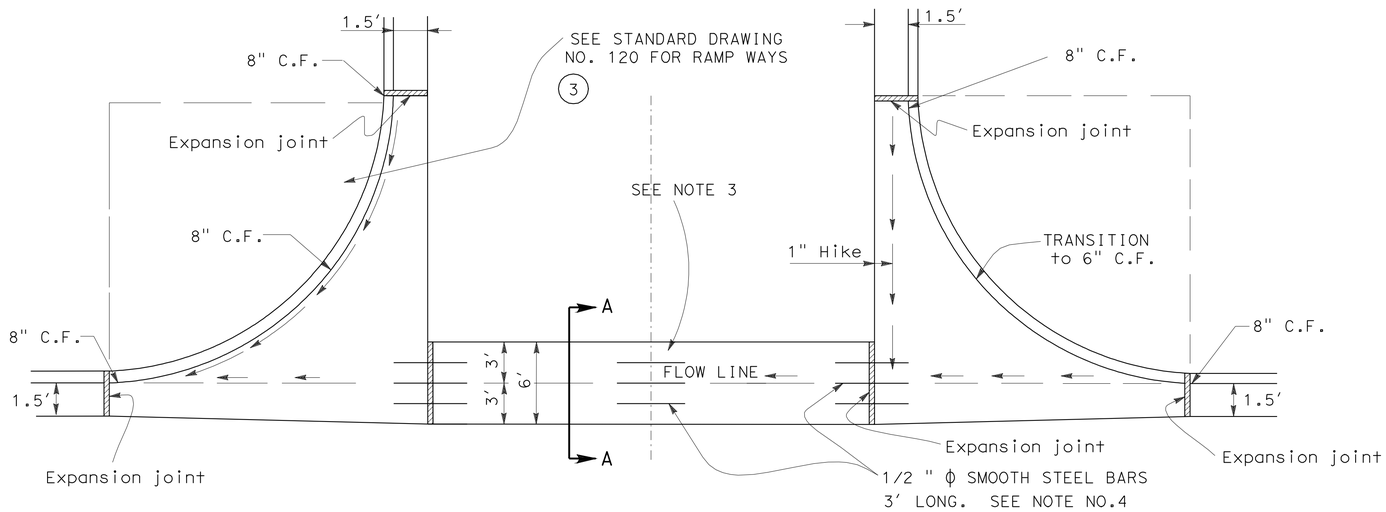

PLAN OF CROSS GUTTER

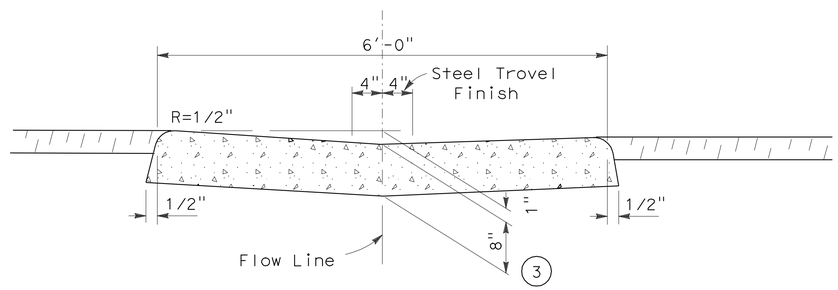

SECTION A-A

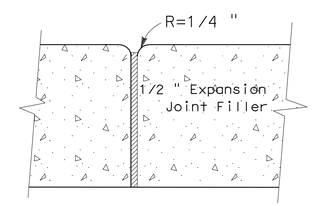

EXPANSION JOINT

NOTES

1. Minimum Flow Line Grade 0.40% unless otherwise approved by City Engineer.
2. Cross Gutter to be Class "B" Portland Cement Concrete (5 sack)
3. If length exceeds 40′, or 1/2 of Cross Gutter is Constructed at a time an extra expansion joint with steel bars shall be installed at center.
4. Half of smooth steel bars shall be cited.
5. Compaction shall be 90% minimum.
6. Cross Gutters Per City Of Colton.

CROSS GUTTERS

CONSTRUCTION DETAILS

NO SCALE

C-80

STATE OF CALIFORNIA - DEPARTMENT OF TRANSPORTATION
Caltrans DESIGN

FUNCTIONAL SUPERVISOR: BEN AMIRI
CALCULATED-DESIGNED BY: JOE DAMIAN
CHECKED BY: JUSTINE NIU
REVISED BY
DATE REVISED

LAST REVISION 01-02-12
DATE PLOTTED => 17-APR-2012
TIME PLOTTED => 17:26

Dist	COUNTY	ROUTE	POST MILES TOTAL PROJECT	SHEET No.	TOTAL SHEETS
08	Riv,SBd	91,215	21.5/21.7, 43.2/45.2,0.0/5.1	202	1743

REGISTERED CIVIL ENGINEER 1-2-12 DATE

4-16-12
PLANS APPROVAL DATE

REGISTERED PROFESSIONAL ENGINEER
JUSTINE NIU
No. C 62897
Exp. 6-30-12
CIVIL
STATE OF CALIFORNIA

THE STATE OF CALIFORNIA OR ITS OFFICERS OR AGENTS SHALL NOT BE RESPONSIBLE FOR THE ACCURACY OR COMPLETENESS OF SCANNED COPIES OF THIS PLAN SHEET.

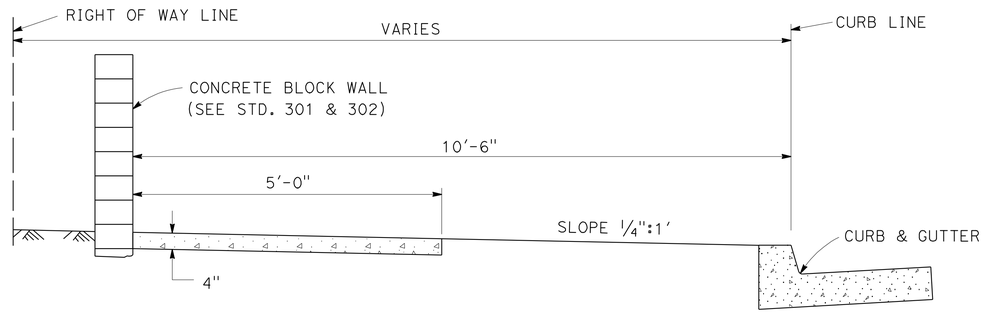

TYPE "A"

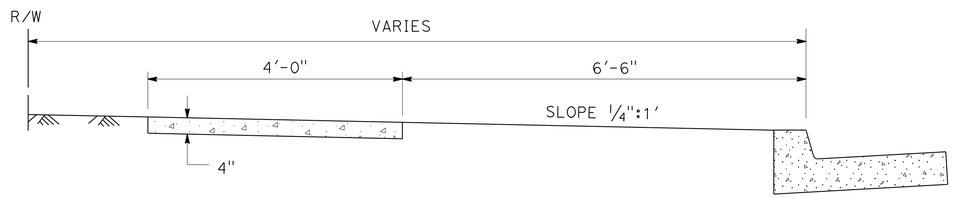

TYPE "B"

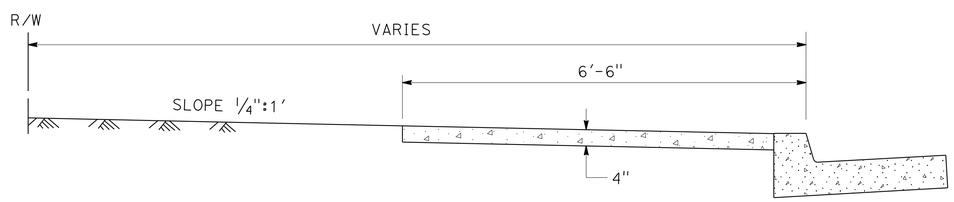

TYPE "C"

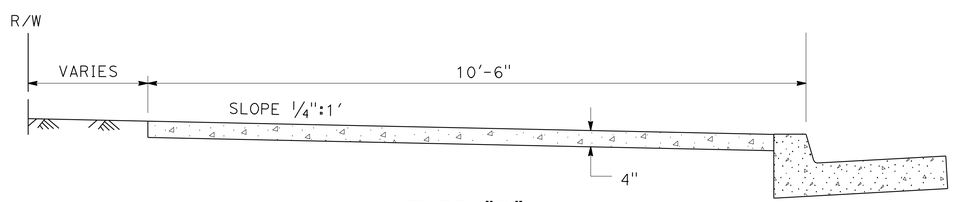

TYPE "D"

NOTES:

1. TYPE "C" SIDEWALKS ADJACENT TO CURB SHALL ONLY BE USED ON LOCAL AND COLLECTOR STREETS AND ONLY UPON APPROVAL OF THE TRANSPORTATION DEPT.
2. SIDEWALK SHALL BE CONSTRUCTED OF CLASS "B" CONCRETE.
3. WEAKENED PLANE JOINTS SHALL BE CONSTRUCTED ON 10' SPACING.
4. SCORING SIDEWALK WILL BE PERMITTED.
5. IN EXPANSIVE SOIL AREAS, REFER TO SECTION 73 OF THE COUNTY SPECIFICATIONS.
6. CURB AND GUTTER PER SAN BERNARDINO COUNTY TRANPORTATION DEPARTMENT.

SIDEWALK

CONSTRUCTION DETAILS
NO SCALE

C-81

STATE OF CALIFORNIA - DEPARTMENT OF TRANSPORTATION
Caltrans®
DESIGN
FUNCTIONAL SUPERVISOR: BEN AMIRI
CALCULATED-DESIGNED BY: JOE DAMIAN
CHECKED BY: JUSTINE NIU
REVISED BY
DATE REVISED

LAST REVISION 01-02-12
DATE PLOTTED => 17-APR-2012
TIME PLOTTED => 17:26

Dist	COUNTY	ROUTE	POST MILES TOTAL PROJECT	SHEET No.	TOTAL SHEETS
08	Riv,SBd	91,215	21.5/21.7, 43.2/45.2,0.0/5.1	203	1743

REGISTERED CIVIL ENGINEER 1-2-12 DATE

4-16-12
PLANS APPROVAL DATE

REGISTERED PROFESSIONAL ENGINEER
JUSTINE NIU
No. C 62897
Exp. 6-30-12
CIVIL
STATE OF CALIFORNIA

THE STATE OF CALIFORNIA OR ITS OFFICERS OR AGENTS SHALL NOT BE RESPONSIBLE FOR THE ACCURACY OR COMPLETENESS OF SCANNED COPIES OF THIS PLAN SHEET.

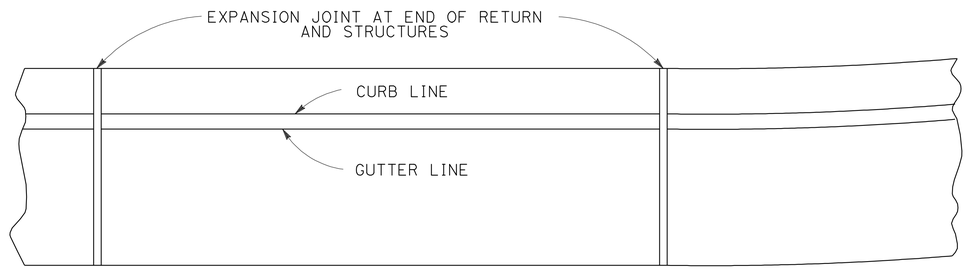

PLAN

0.0535 CUBIC YARDS PER LINEAL FOOT
18.7 LINEAL FEET PER CUBIC YARD.

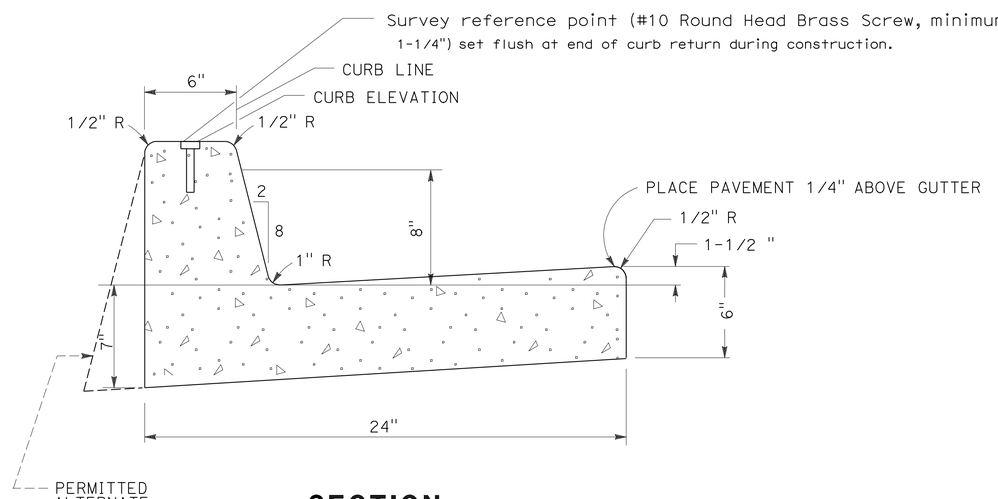

SECTION

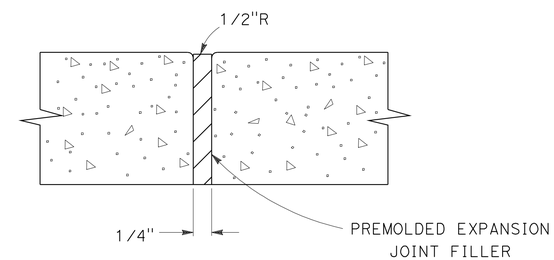

EXPANSION JOINT

8" CURB AND GUTTERS

NOTES

1. CURB AND GUTTER SHALL BE CONSTRUCTED MONOLITHICALLY OF CLASS "B" CONCRETE.
2. WIDTHS OF STANDARD STREET SECTIONS SHOWN ON PLANS ARE TO CURB LINE UNLESS OTHERWISE INDICATED.
3. WEAKENED PLANE JOINTS SHALL BE CONSTRUCTED AT 10-FEET INTERVALS, EXCEPT THAT THE INTERVAL SHALL BE VARIED TO ALLOW MATCHING OF JOINTS IN ADJACENT EXISTING IMPROVEMENTS.
4. CURING COMPOUND SHALL BE SPRAYED UNIFORMLY ON EXPOSED SURFACES.
5. WHEN CURB AND GUTTER IS PLACED BY AN EXTRUSION MACHINE MINOR FINISHING MAY BE DONE TO PROVIDE AN ACCEPTABLE FINISH AND THE WEAKENED PLANE JOINTS MAY BE SAWCUT.
6. CURB AND GUTTER PER SAN BERNARDINO COUNTY ROAD DEPARTMENT.

CONSTRUCTION DETAILS
NO SCALE

C-82

REVISED BY	DATE REVISED

CALCULATED-DESIGNED BY	CHECKED BY
JOE DAMIAN	JUSTINE NIU

FUNCTIONAL SUPERVISOR: BEN AMIRI

STATE OF CALIFORNIA - DEPARTMENT OF TRANSPORTATION
Caltrans
DESIGN

LAST REVISION 01-02-12
DATE PLOTTED => 17-APR-2012
TIME PLOTTED => 17:26

Dist	COUNTY	ROUTE	POST MILES TOTAL PROJECT	SHEET No.	TOTAL SHEETS
08	Riv,SBd	91,215	21.5/21.7, 43.2/45.2,0.0/5.1	204	1743

REGISTERED CIVIL ENGINEER 1-2-12 DATE

4-16-12
PLANS APPROVAL DATE

REGISTERED PROFESSIONAL ENGINEER
JUSTINE NIU
No. C 62897
Exp. 6-30-12
CIVIL
STATE OF CALIFORNIA

THE STATE OF CALIFORNIA OR ITS OFFICERS OR AGENTS SHALL NOT BE RESPONSIBLE FOR THE ACCURACY OR COMPLETENESS OF SCANNED COPIES OF THIS PLAN SHEET.

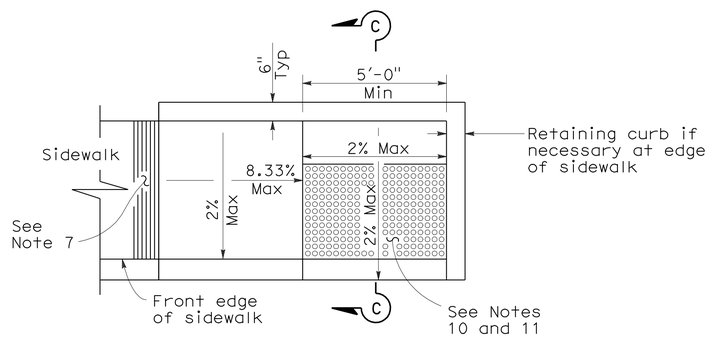

CURB RAMP CASE C (MOD)

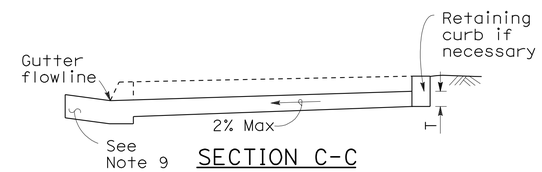

SECTION C-C

NOTES

1. FOR ALL NOTES AND ADDITIONAL DETAILS, SEE 2006 STANDARD PLAN A88A

CONSTRUCTION DETAILS

NO SCALE

C-83

STATE OF CALIFORNIA - DEPARTMENT OF TRANSPORTATION
Caltrans
DESIGN

FUNCTIONAL SUPERVISOR: BEN AMIRI
CALCULATED-DESIGNED BY: JOE DAMIAN
CHECKED BY: JUSTINE NIU
REVISED BY
DATE REVISED

LAST REVISION 01-02-12
DATE PLOTTED => 17-APR-2012
TIME PLOTTED => 17:27

Dist	COUNTY	ROUTE	POST MILES TOTAL PROJECT	SHEET No.	TOTAL SHEETS
08	Riv,SBd	91,215	21.5/21.7, 43.2/45.2,0.0/5.1	205	1743

REGISTERED CIVIL ENGINEER 1-2-12 DATE

4-16-12
PLANS APPROVAL DATE

REGISTERED PROFESSIONAL ENGINEER JUSTINE NIU No. C 62897 Exp. 6-30-12 CIVIL STATE OF CALIFORNIA

THE STATE OF CALIFORNIA OR ITS OFFICERS OR AGENTS SHALL NOT BE RESPONSIBLE FOR THE ACCURACY OR COMPLETENESS OF SCANNED COPIES OF THIS PLAN SHEET.

NOTES:

1. See Standard Plan A76B for details of Concrete Barrier Type 60 end anchors, connection to structures and transitions to Concrete Barrier Type 50 and Concrete Barrier Type 60S.
2. See Standard Plan A76C for Concrete Barrier Type 60 transitions at bridge column and sign pedestals.
3. Where glare screen is required on Concrete Barrier Type 60, use Concrete Barrier Type 60G.
4. Where the concrete barrier is added to the face of existing concrete structure, match existing weep holes.
5. Expansion joints in concrete barrier shall be located at all deck, pavement and principal wall joints. Expansion joint filler material shall be the same size as joint or ½" minimum.
6. Where roadway offset is greater than 1½", see Concrete Barrier Type 60C.
7. Barrier delineation to be used when required by the Special Provisions.
8. Spacing of barrier markers to match spacing of raised pavement markers on the adjacent median edgeline pavement delineation.
9. Reinforcing stirrup not required for roadway offsets less than 1'-0".
10. For roadway surfaces offset greater than 1½" to 3", no rebars required. For roadway surfaces offset greater than 3" to 8" use two #4 rebars at 3" above the lower roadway surface. For roadway surfaces offset greater than 8" to 12", use two #4 rebars at 3" above the lower roadway surface and two #4 rebars at 8" above the lower roadway surface. For roadway surfaces offset greater than 12" to 36", use two #4 rebars at 3" above the lower roadway surface and two #4 rebars at every 8" increment vertical spacing above the first two #4 rebars.
11. Footing monolithic or doweled with 2-#8 x 8" @ 2'-0".

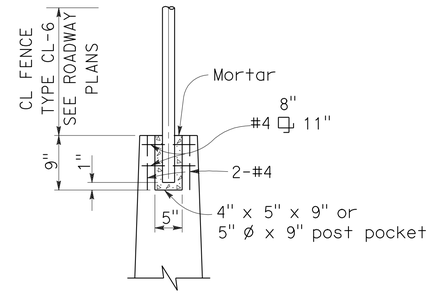

POST POCKET

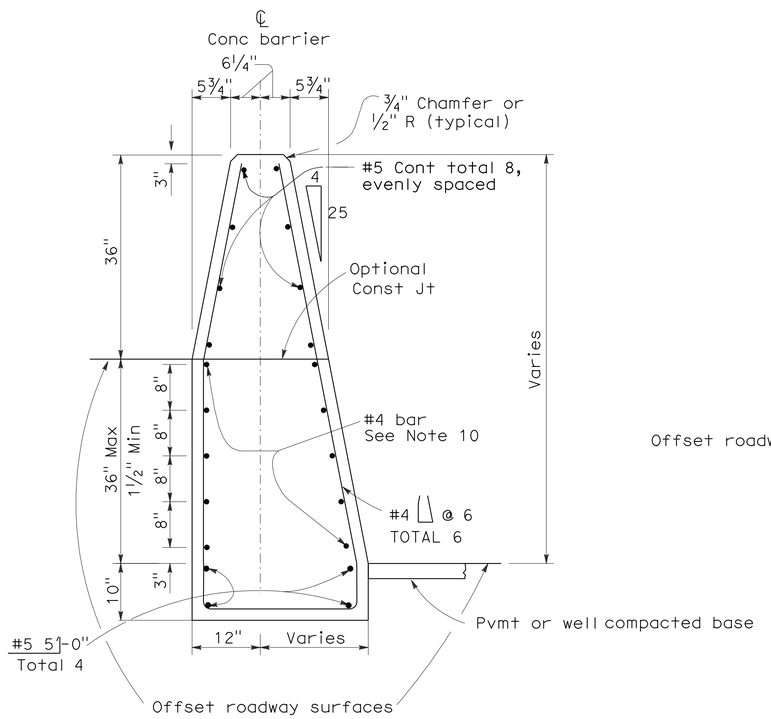

SECTION A-A

CONCRETE BARRIER END ANCHORAGE
(10' BEGIN AND END OF BARRIER)

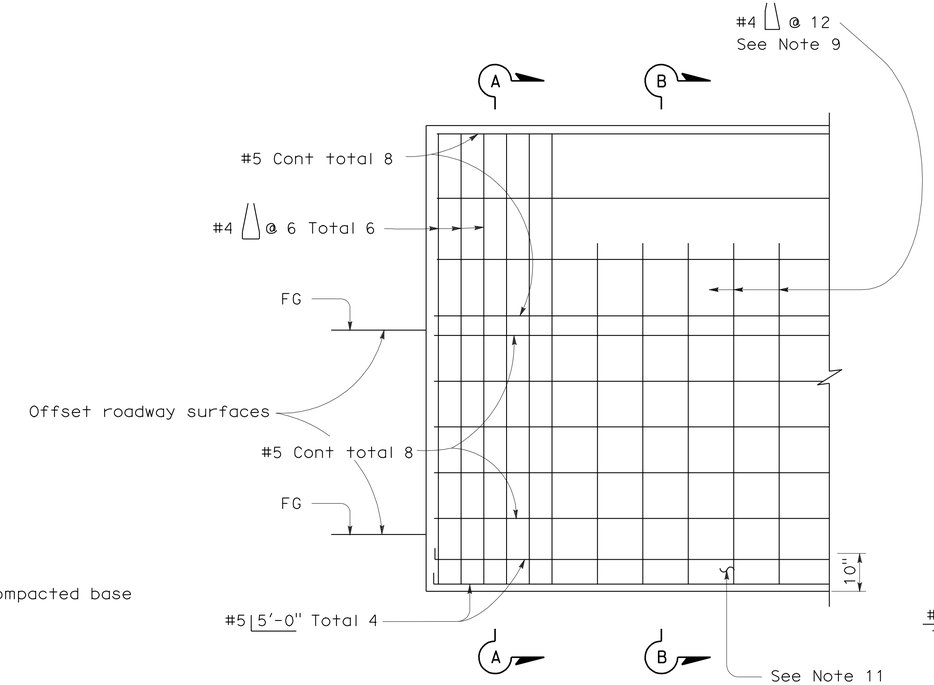

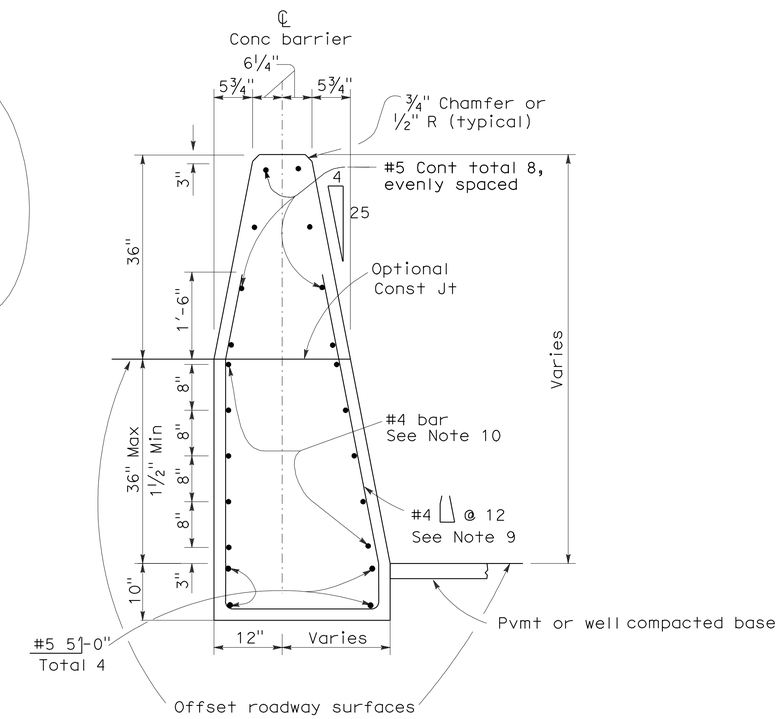

SECTION B-B

CONCRETE BARRIER TYPE 60C (MOD)

Details similar to Type 60 except as noted.
Concrete barrier end anchor when necessary.
36" roadway surfaces offset shown.

CONSTRUCTION DETAILS

NO SCALE

C-84

STATE OF CALIFORNIA - DEPARTMENT OF TRANSPORTATION
Caltrans® DESIGN

FUNCTIONAL SUPERVISOR: BEN AMIRI
CALCULATED-DESIGNED BY: JOE DAMIAN
CHECKED BY: JUSTINE NIU
REVISED BY
DATE REVISED

LAST REVISION 01-02-12
DATE PLOTTED => 17-APR-2012
TIME PLOTTED => 17:27

Dist	COUNTY	ROUTE	POST MILES TOTAL PROJECT	SHEET No.	TOTAL SHEETS
08	Riv,SBd	91,215	21.5/21.7, 43.2/45.2,0.0/5.1	206	1743

REGISTERED CIVIL ENGINEER 1-2-12 DATE

4-16-12
PLANS APPROVAL DATE

REGISTERED PROFESSIONAL ENGINEER JUSTINE NIU No. C 62897 Exp. 6-30-12 CIVIL STATE OF CALIFORNIA

THE STATE OF CALIFORNIA OR ITS OFFICERS OR AGENTS SHALL NOT BE RESPONSIBLE FOR THE ACCURACY OR COMPLETENESS OF SCANNED COPIES OF THIS PLAN SHEET.

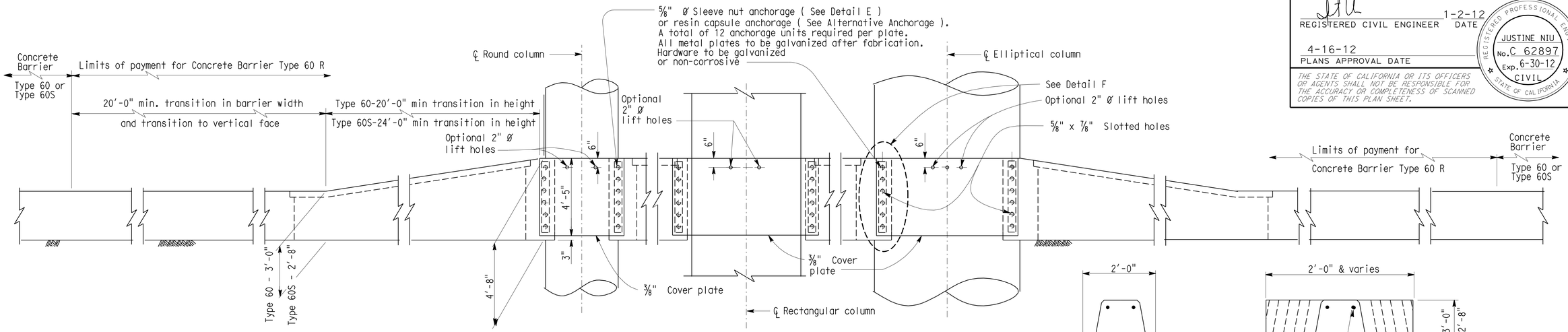

ELEVATION

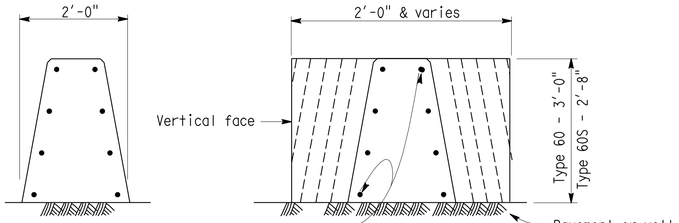

SECTION A-A

SECTION B-B

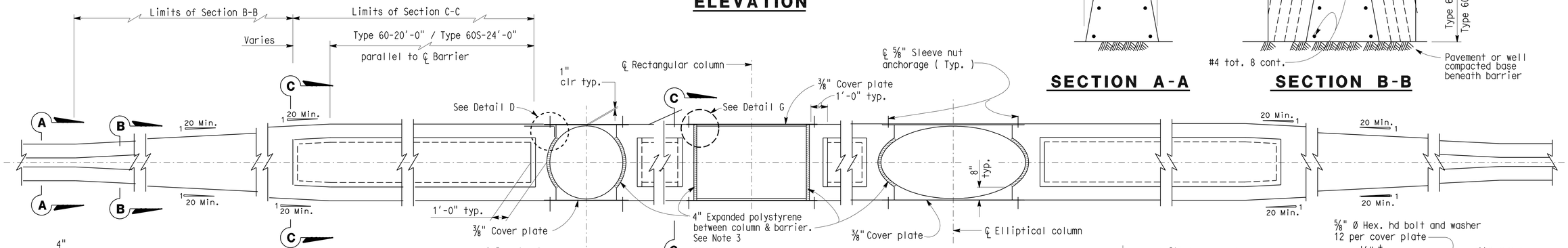

PLAN

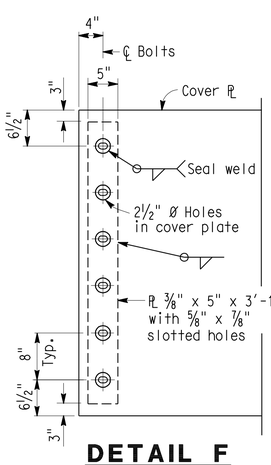

DETAIL F

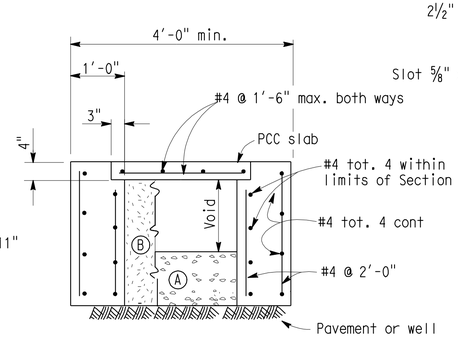

SECTION C-C

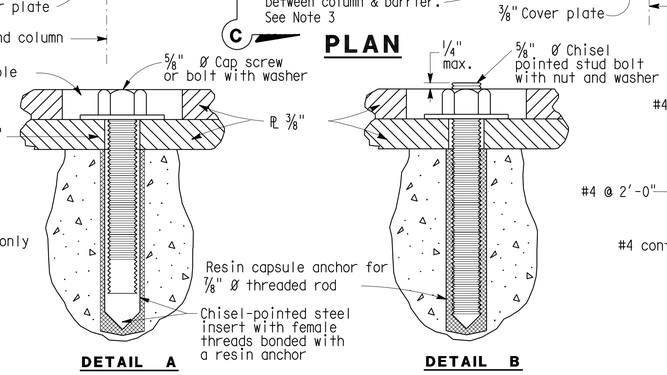

ALTERNATIVE ANCHORAGE

NOTES: 1) Resin capsule anchorage is subject to approval of the Engineer. Installation procedures shall comply with manufacturer's instructions. 2) Detail B similar to Detail A except for anchorage devices.

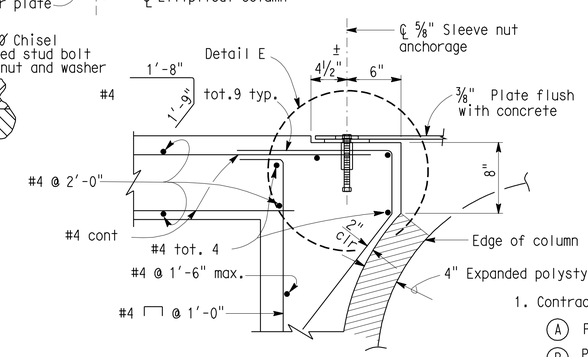

DETAIL D

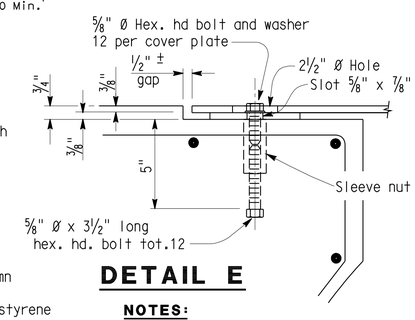

DETAIL E

NOTES:

1. Contractor options for fill between barrier walls.
   - (A) Place 2'-0" PCC at base between barrier walls.
   - (B) Place granular material from base to bottom of 4" cap.
2. Forming material for 4" cap may remain in place.
3. Enclose column with 4" expanded polystyrene at locations where concrete or cement treated base encases the column.
4. For Detail G, see Transition at Bridge Column sheet 2 of 2.

CONCRETE BARRIER TYPE 60R (MOD) TRANSITION AT BRIDGE COLUMN SHEET 1 OF 2

CONSTRUCTION DETAILS

NO SCALE

C-85

STATE OF CALIFORNIA - DEPARTMENT OF TRANSPORTATION
Caltrans DESIGN

FUNCTIONAL SUPERVISOR: BEN AMIRI
CALCULATED-DESIGNED BY: JOE DAMIAN
CHECKED BY: JUSTINE NIU
REVISED BY
DATE REVISED

LAST REVISION 01-02-12
DATE PLOTTED => 17-APR-2012
TIME PLOTTED => 17:27

Dist	COUNTY	ROUTE	POST MILES TOTAL PROJECT	SHEET No.	TOTAL SHEETS
08	Riv,SBd	91,215	21.5/21.7, 43.2/45.2,0.0/5.1	207	1743

REGISTERED CIVIL ENGINEER 1-2-12 DATE

4-16-12
PLANS APPROVAL DATE

REGISTERED PROFESSIONAL ENGINEER JUSTINE NIU No. C 62897 Exp. 6-30-12 CIVIL STATE OF CALIFORNIA

THE STATE OF CALIFORNIA OR ITS OFFICERS OR AGENTS SHALL NOT BE RESPONSIBLE FOR THE ACCURACY OR COMPLETENESS OF SCANNED COPIES OF THIS PLAN SHEET.

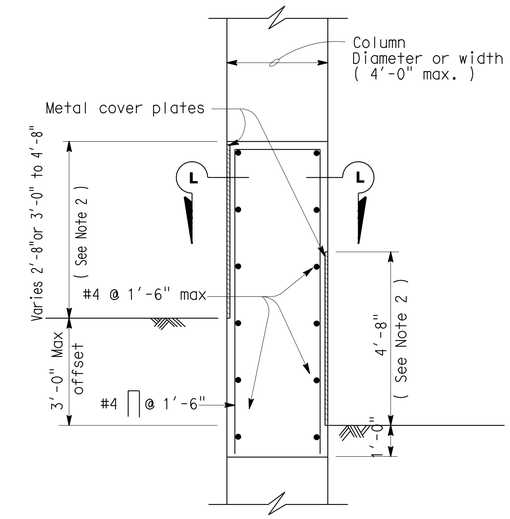

TYPICAL SECTION

Roadway offset 3'-0" or less
Column width less than 4'-0"

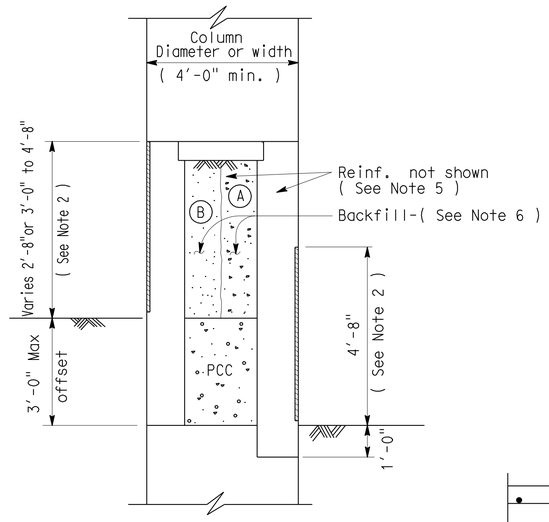

TYPICAL SECTION

Roadway offset 3'-0" or less
Column width less than 4'-0"

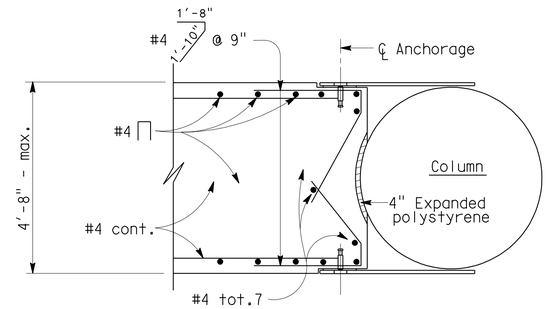

SECTION L-L

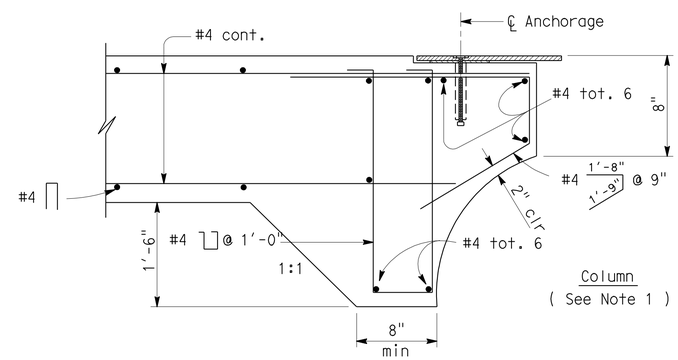

SECTION M-M

NOTES:

1. These details are to be combined with "Concrete Barrier Type 60 R" Sheet No.1. Details not indicated are similar to the details shown elsewhere on said sheet.
2. Metal plate details at columns shown on Concrete Barrier Type 60 R Sheet No.1.
3. For Retaining Wall Type 1A details, see Standard Plans.
4. Extend retaining wall footing dimension "B" to satisfy column width as indicated.
5. Extend reinforcement as shown in Section C-C on Concrete Barrier Type 60 R Sheet No.1.
6. Contractor options for fill between barrier walls:
   - (A) Place PCC between barrier walls, may be placed monolithic.
   - (B) Place granular material from base to bottom of concrete cap.

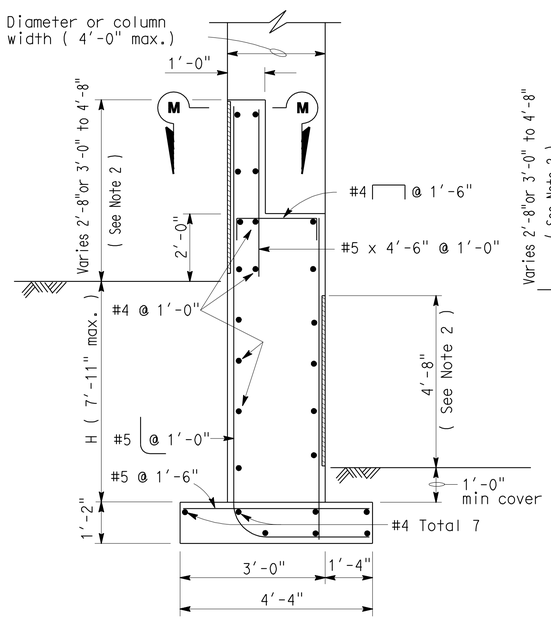

TYPICAL SECTION

Roadway offsets greater than 3'-0"
Column widths 4'-4" or less

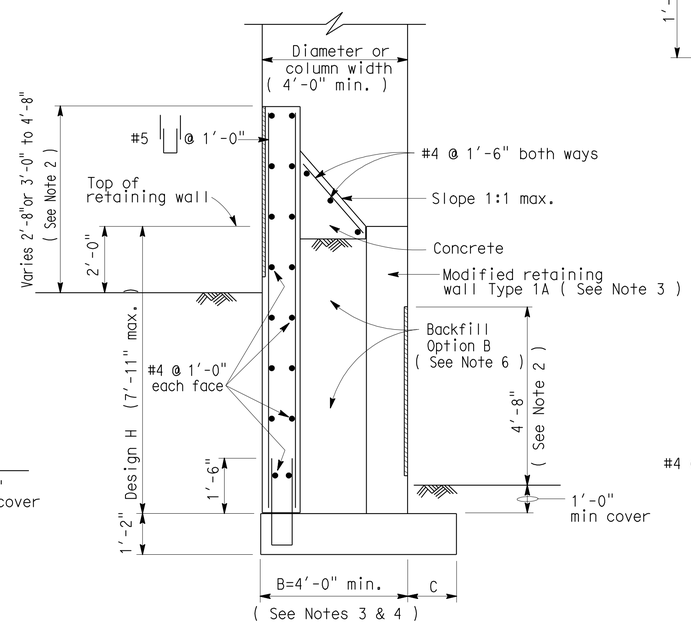

TYPICAL SECTION

Roadway offsets greater than 3'-0"
Column widths greater than 4'-0"

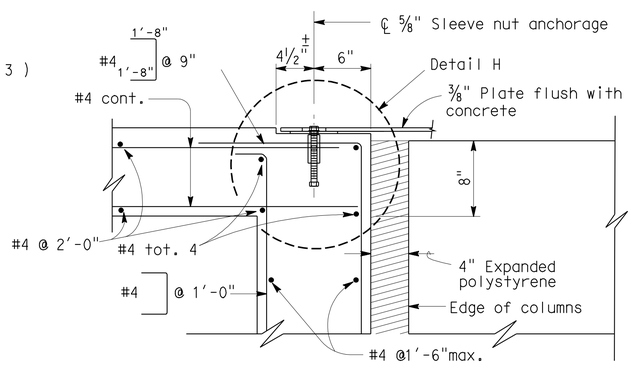

DETAIL G

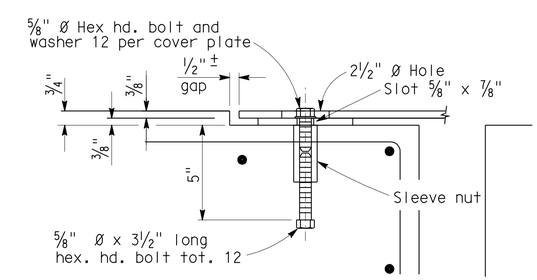

DETAIL H

CONCRETE BARRIER TYPE 60R (MOD) TRANSITION AT BRIDGE COLUMN SHEET 2 OF 2

CONSTRUCTION DETAILS

NO SCALE

C-86

STATE OF CALIFORNIA - DEPARTMENT OF TRANSPORTATION
DESIGN
FUNCTIONAL SUPERVISOR: BEN AMIRI
CALCULATED-DESIGNED BY: JOE DAMIAN
CHECKED BY: JUSTINE NIU
REVISED BY
DATE REVISED

LAST REVISION 01-02-12
DATE PLOTTED => 17-APR-2012
TIME PLOTTED => 17:27

Dist	COUNTY	ROUTE	POST MILES TOTAL PROJECT	SHEET No.	TOTAL SHEETS
08	Riv,SBd	91,215	21.5/21.7, 43.2/45.2,0.0/5.1	208	1743

REGISTERED CIVIL ENGINEER 1-2-12 DATE

4-16-12
PLANS APPROVAL DATE

REGISTERED PROFESSIONAL ENGINEER
JUSTINE NIU
No. C 62897
Exp. 6-30-12
CIVIL
STATE OF CALIFORNIA

THE STATE OF CALIFORNIA OR ITS OFFICERS OR AGENTS SHALL NOT BE RESPONSIBLE FOR THE ACCURACY OR COMPLETENESS OF SCANNED COPIES OF THIS PLAN SHEET.

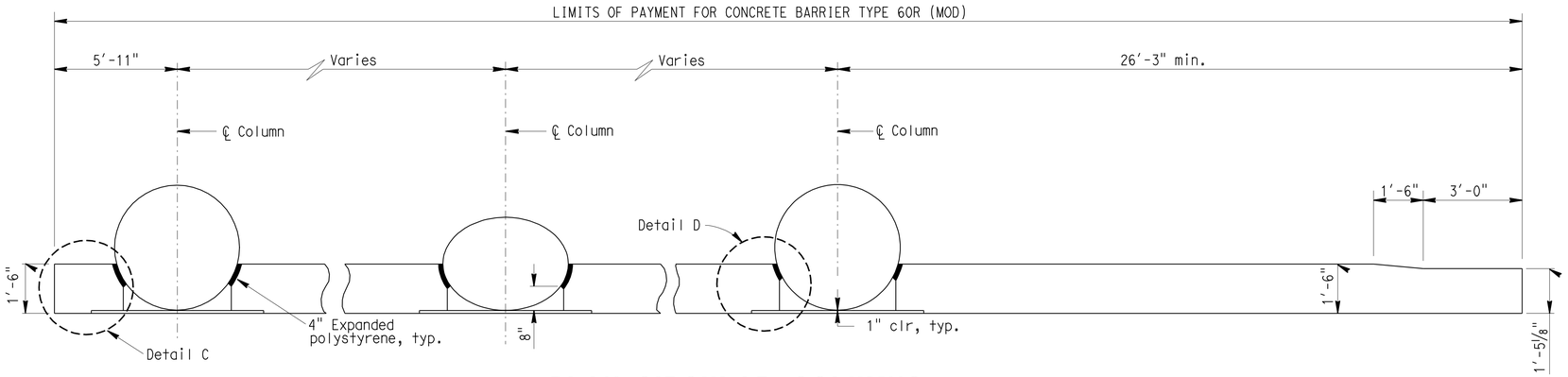

PLAN-CIRCULAR COLUMNS

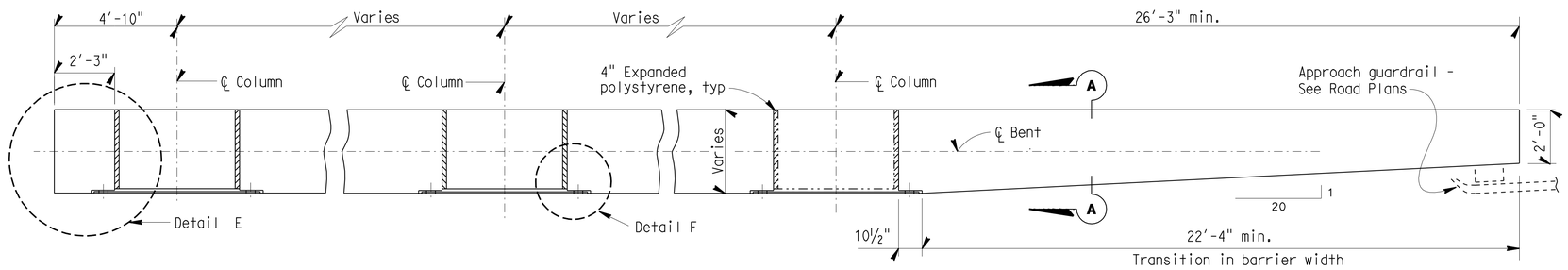

PLAN-RECTANGULAR COLUMNS

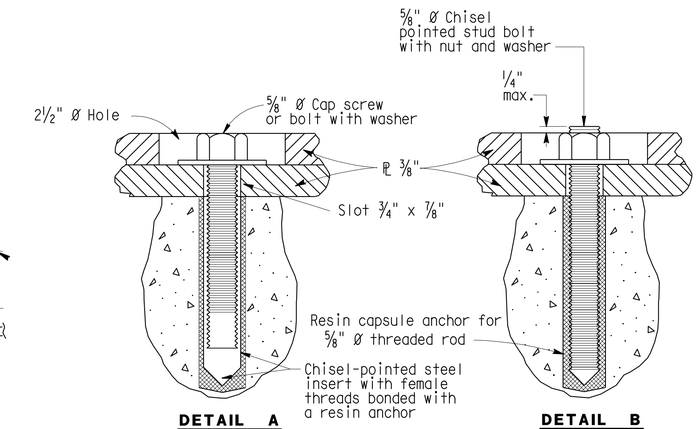

ALTERNATIVE ANCHORAGE

See Notes 1 and 2

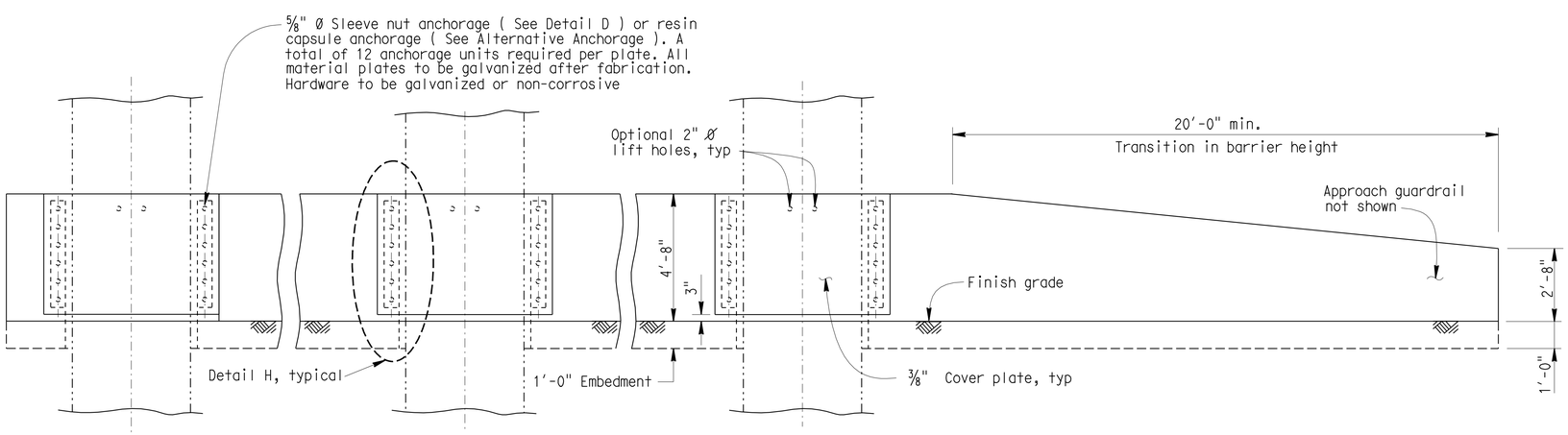

ELEVATION

NOTES:

1. Resin capsule anchorage is subject to approval of the engineer. Installation procedures shall comply with manufacturer's instructions.
2. Detail B similar to Detail A except for anchorage devices.
3. For drainage control, see "Roadway Plans".
4. The contractor shall verify all controlled field dimensions before ordering or fabricating any materials.

CONCRETE BARRIER TYPE 60R (MOD) VERTICAL FACE FOR SIDE OF ROAD SHEET 1 OF 2

CONSTRUCTION DETAILS

NO SCALE

C-87

STATE OF CALIFORNIA - DEPARTMENT OF TRANSPORTATION
Caltrans®
DESIGN
FUNCTIONAL SUPERVISOR: BEN AMIRI
CALCULATED-DESIGNED BY: JOE DAMIAN
CHECKED BY: JUSTINE NIU
REVISED BY
DATE REVISED

LAST REVISION 01-02-12
DATE PLOTTED => 17-APR-2012
TIME PLOTTED => 17:27

Dist	COUNTY	ROUTE	POST MILES TOTAL PROJECT	SHEET No.	TOTAL SHEETS
08	Riv,SBd	91,215	21.5/21.7, 43.2/45.2,0.0/5.1	209	1743

REGISTERED CIVIL ENGINEER 1-2-12 DATE

4-16-12
PLANS APPROVAL DATE

REGISTERED PROFESSIONAL ENGINEER
JUSTINE NIU
No. C 62897
Exp. 6-30-12
CIVIL
STATE OF CALIFORNIA

THE STATE OF CALIFORNIA OR ITS OFFICERS OR AGENTS SHALL NOT BE RESPONSIBLE FOR THE ACCURACY OR COMPLETENESS OF SCANNED COPIES OF THIS PLAN SHEET.

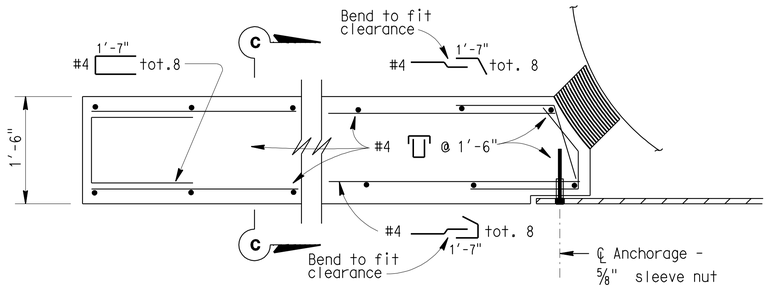

DETAIL C

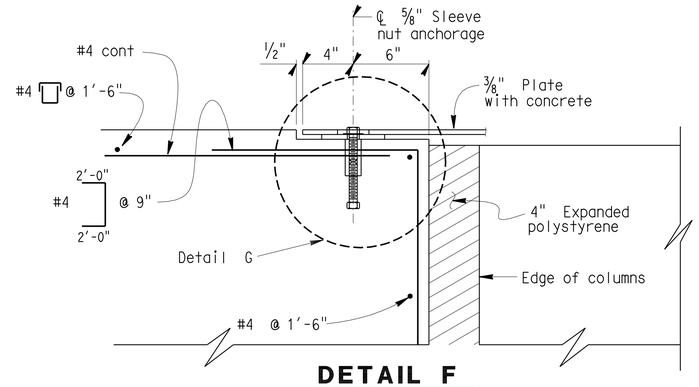

DETAIL F

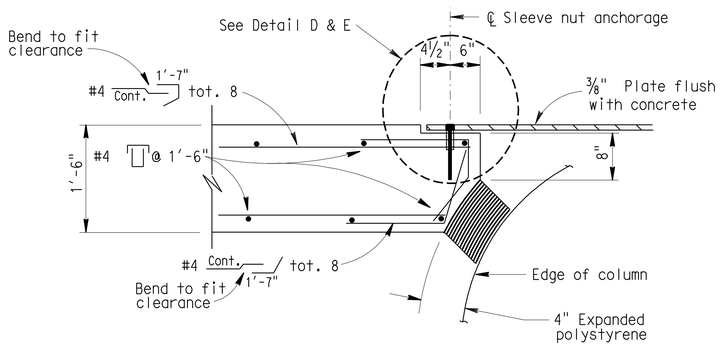

DETAIL D

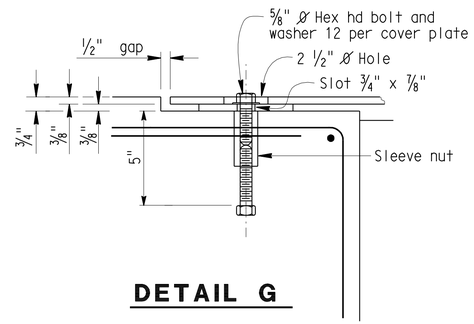

DETAIL G

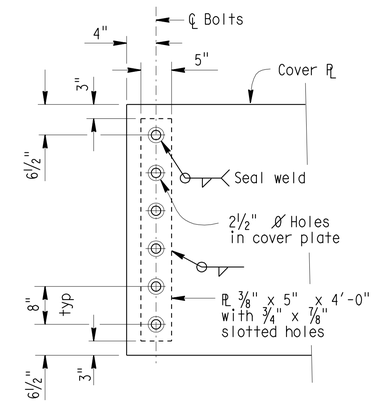

DETAIL H

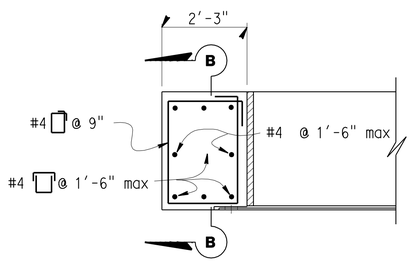

DETAIL E

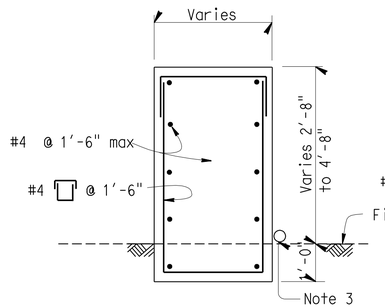

SECTION A-A

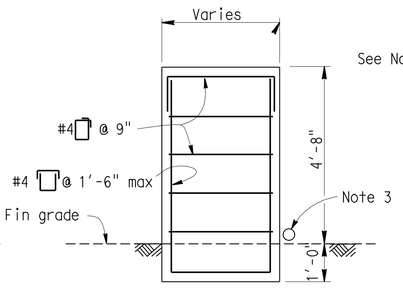

SECTION B-B

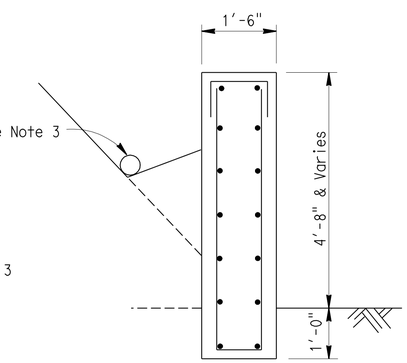

SECTION C-C

CONCRETE BARRIER TYPE 60R (MOD)
VERTICAL FACE FOR SIDE OF ROAD
SHEET 2 OF 2

CONSTRUCTION DETAILS

NO SCALE

C-88

STATE OF CALIFORNIA - DEPARTMENT OF TRANSPORTATION
Caltrans®
DESIGN
FUNCTIONAL SUPERVISOR: BEN AMIRI
CALCULATED-DESIGNED BY: JOE DAMIAN
CHECKED BY: JUSTINE NIU
REVISED BY
DATE REVISED

LAST REVISION 01-02-12
DATE PLOTTED => 17-APR-2012
TIME PLOTTED => 17:27

Dist	COUNTY	ROUTE	POST MILES TOTAL PROJECT	SHEET No.	TOTAL SHEETS
08	Riv,SBd	91,215	21.5/21.7, 43.2/45.2,0.0/5.1	210	1743

REGISTERED CIVIL ENGINEER 1-2-12 DATE

4-16-12
PLANS APPROVAL DATE

REGISTERED PROFESSIONAL ENGINEER JUSTINE NIU No. C 62897 Exp. 6-30-12 CIVIL STATE OF CALIFORNIA

THE STATE OF CALIFORNIA OR ITS OFFICERS OR AGENTS SHALL NOT BE RESPONSIBLE FOR THE ACCURACY OR COMPLETENESS OF SCANNED COPIES OF THIS PLAN SHEET.

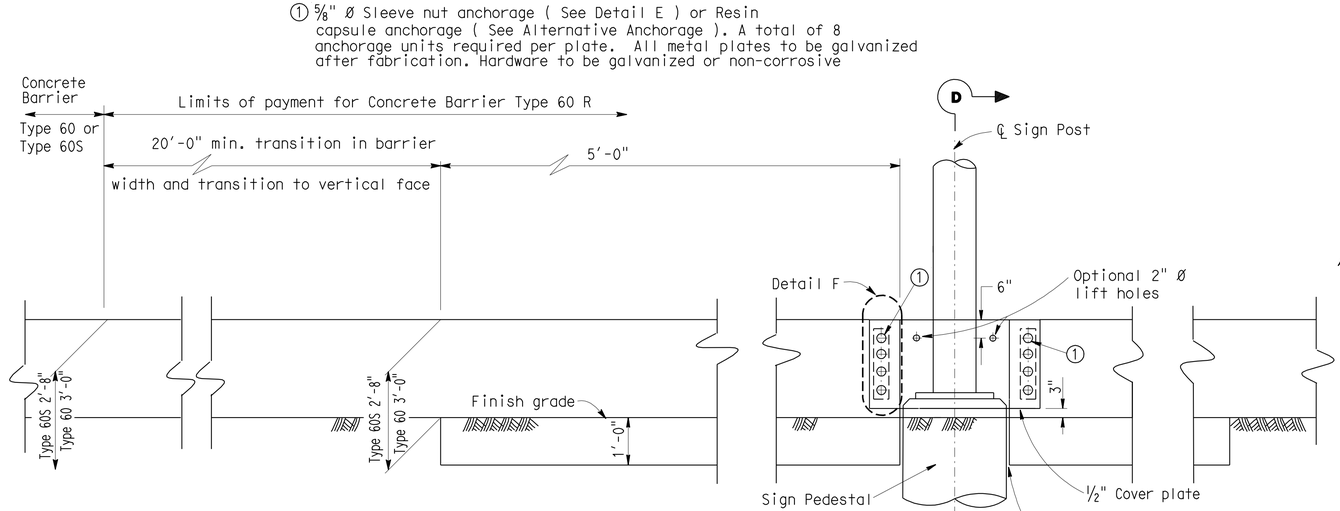

ELEVATION

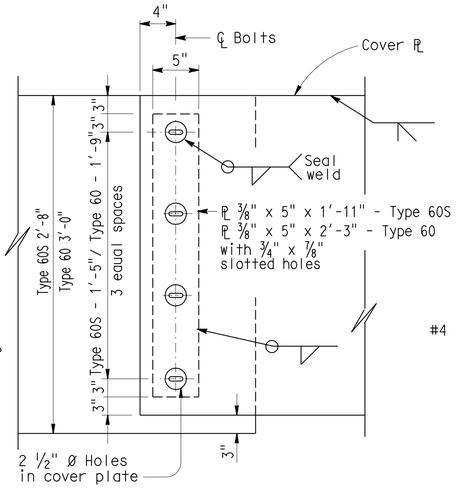

DETAIL F

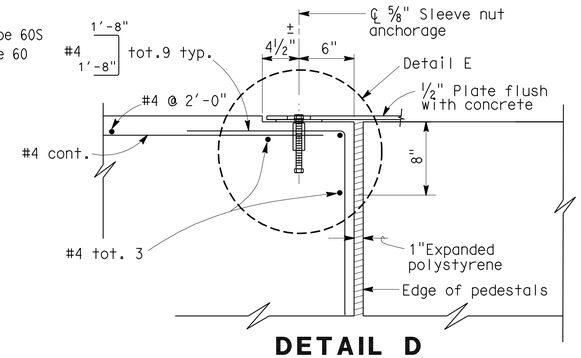

DETAIL D

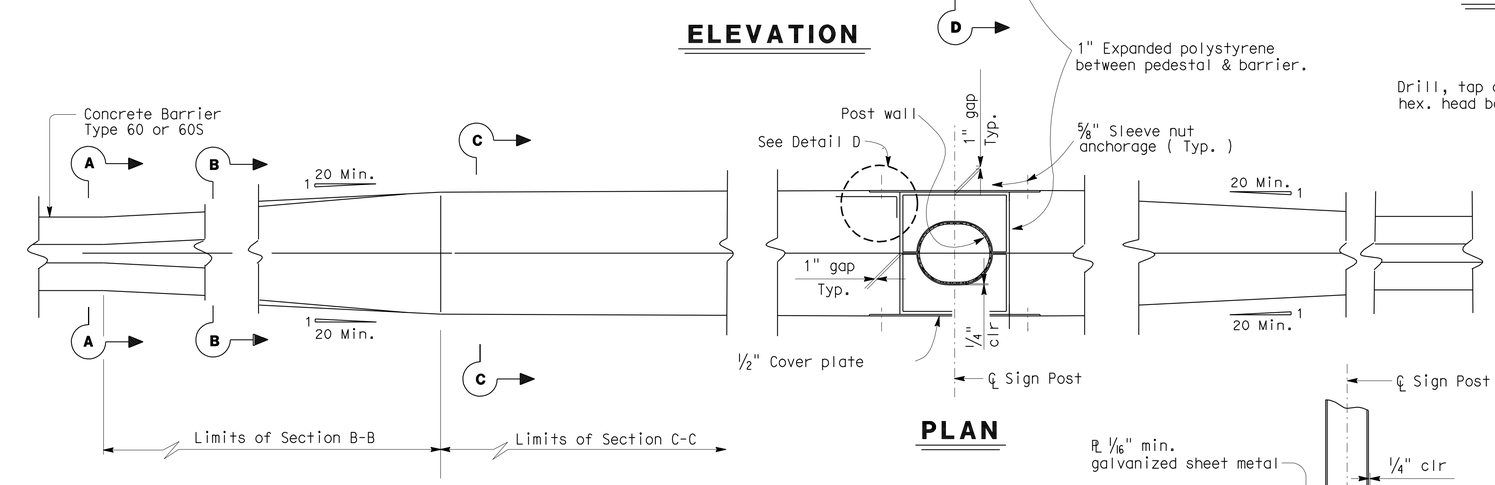

PLAN

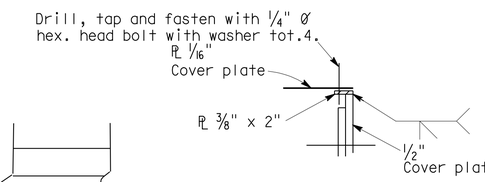

DETAIL G

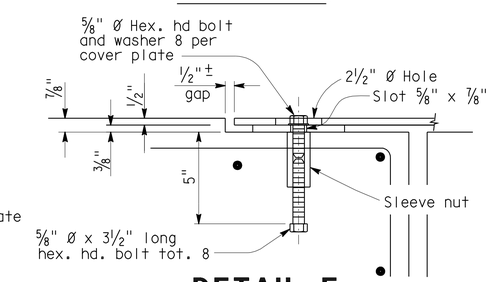

DETAIL E

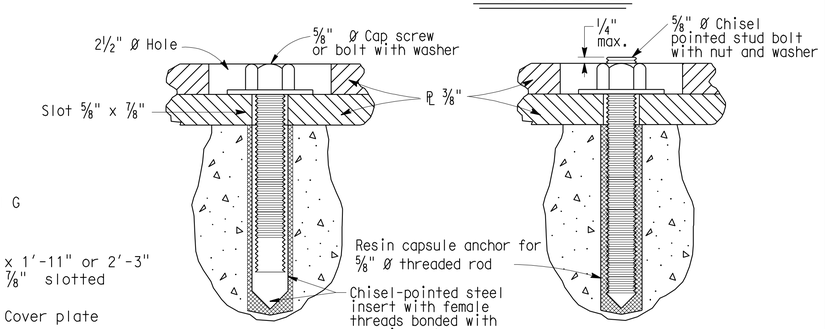

DETAIL A DETAIL B

ALTERNATIVE ANCHORAGE

NOTES: 1) Resin capsule anchorage is subject to approval of the Engineer. Installation procedures shall comply with manufacturer's instructions.

2) Detail B similar to Detail A except for anchorage devices.

NO SCALE

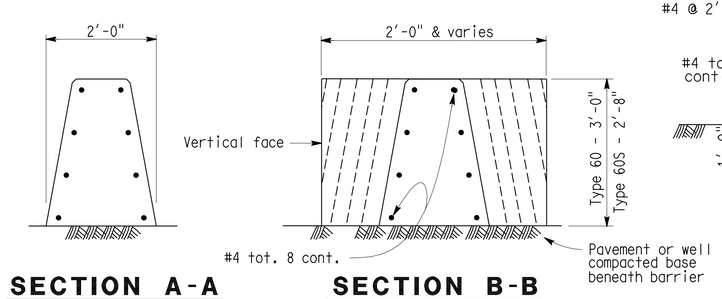

SECTION A-A

SECTION B-B

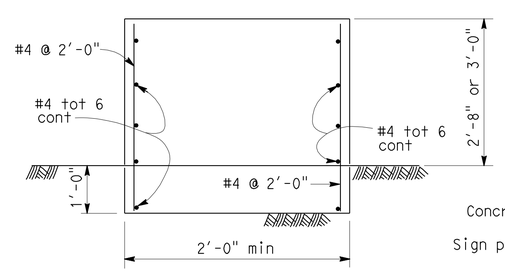

SECTION C-C

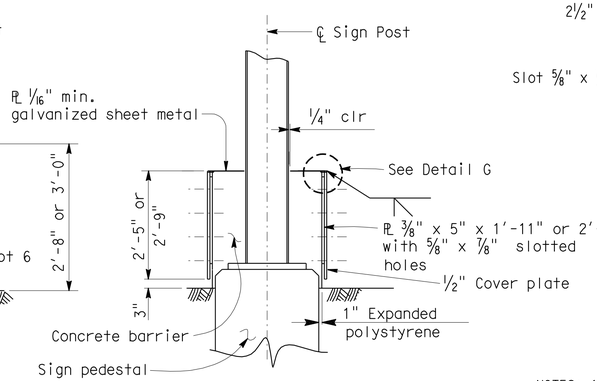

SECTION D-D

Note: Concrete Barrier Type 60 R is symmetrical about ℄ of sign post.

CONCRETE BARRIER TYPE 60R (MOD) TRANSITION AT SIGN POST SHEET 1 OF 1

CONSTRUCTION DETAILS

NO SCALE

C-89

STATE OF CALIFORNIA - DEPARTMENT OF TRANSPORTATION
DESIGN
FUNCTIONAL SUPERVISOR: BEN AMIRI
CALCULATED-DESIGNED BY: JOE DAMIAN
CHECKED BY: JUSTINE NIU
REVISED BY / DATE REVISED

LAST REVISION 01-02-12
DATE PLOTTED => 17-APR-2012
TIME PLOTTED => 17:27

Dist	COUNTY	ROUTE	POST MILES TOTAL PROJECT	SHEET No.	TOTAL SHEETS
08	Riv,SBd	91,215	21.5/21.7, 43.2/45.2,0.0/5.1	211	1743

REGISTERED CIVIL ENGINEER 1-2-12 DATE

4-16-12
PLANS APPROVAL DATE

REGISTERED PROFESSIONAL ENGINEER
JUSTINE NIU
No. C 62897
Exp. 6-30-12
CIVIL
STATE OF CALIFORNIA

THE STATE OF CALIFORNIA OR ITS OFFICERS OR AGENTS SHALL NOT BE RESPONSIBLE FOR THE ACCURACY OR COMPLETENESS OF SCANNED COPIES OF THIS PLAN SHEET.

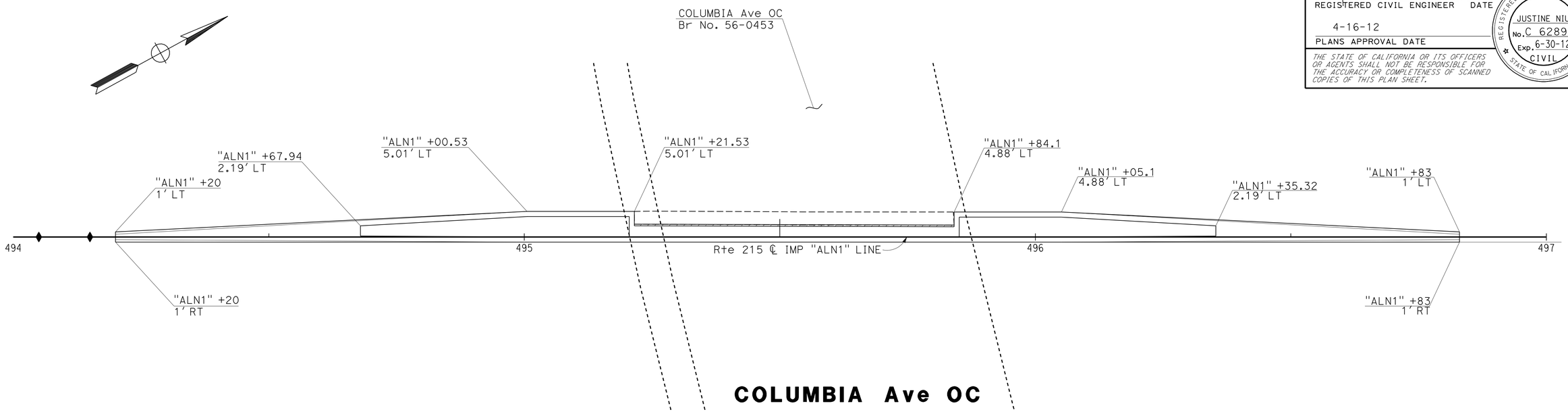

COLUMBIA Ave OC

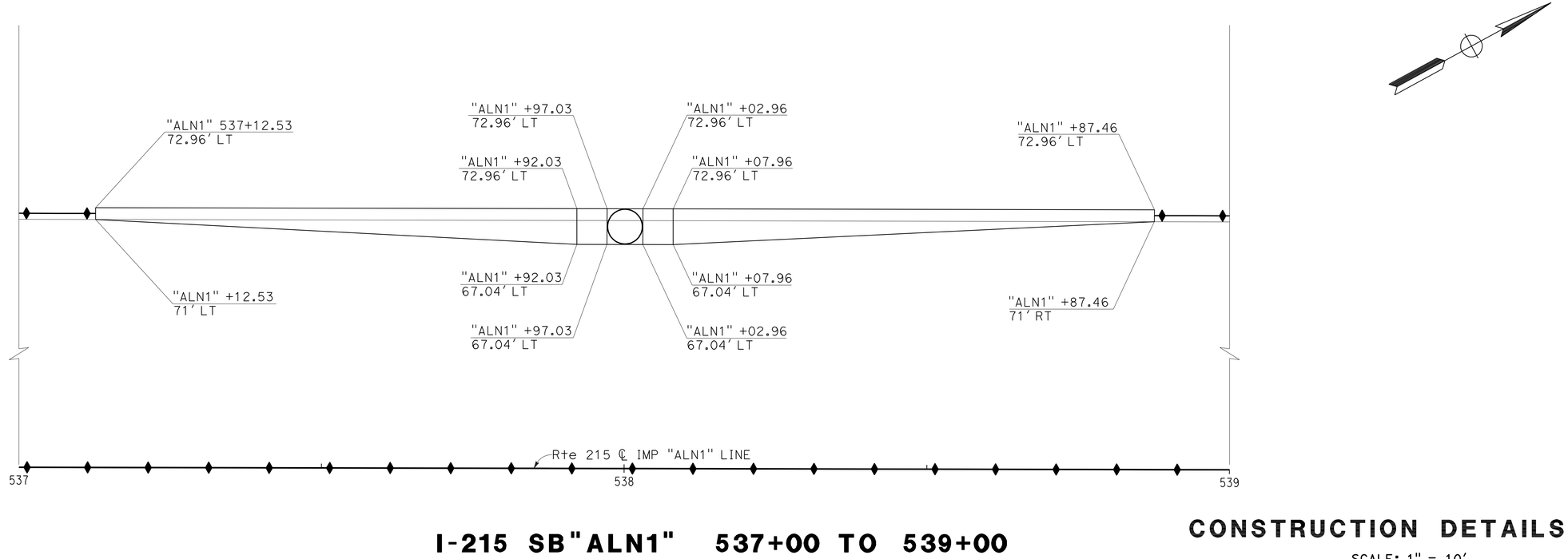

I-215 SB"ALN1" 537+00 TO 539+00

CONSTRUCTION DETAILS

SCALE: 1" = 10'

C-90

STATE OF CALIFORNIA - DEPARTMENT OF TRANSPORTATION
Caltrans
DESIGN

FUNCTIONAL SUPERVISOR: BEN AMIRI
CALCULATED-DESIGNED BY: JOE DAMIAN
CHECKED BY: JUSTINE NIU
REVISED BY
DATE REVISED

LAST REVISION 10-02-12
DATE PLOTTED => 17-APR-2012
TIME PLOTTED => 17:28

Dist	COUNTY	ROUTE	POST MILES TOTAL PROJECT	SHEET No.	TOTAL SHEETS
08	Riv,SBd	91,215	21.5/21.7, 43.2/45.2,0.0/5.1	212	1743

REGISTERED CIVIL ENGINEER 1-2-12 DATE

4-16-12
PLANS APPROVAL DATE

REGISTERED PROFESSIONAL ENGINEER
JUSTINE NIU
No. C 62897
Exp. 6-30-12
CIVIL
STATE OF CALIFORNIA

THE STATE OF CALIFORNIA OR ITS OFFICERS OR AGENTS SHALL NOT BE RESPONSIBLE FOR THE ACCURACY OR COMPLETENESS OF SCANNED COPIES OF THIS PLAN SHEET.

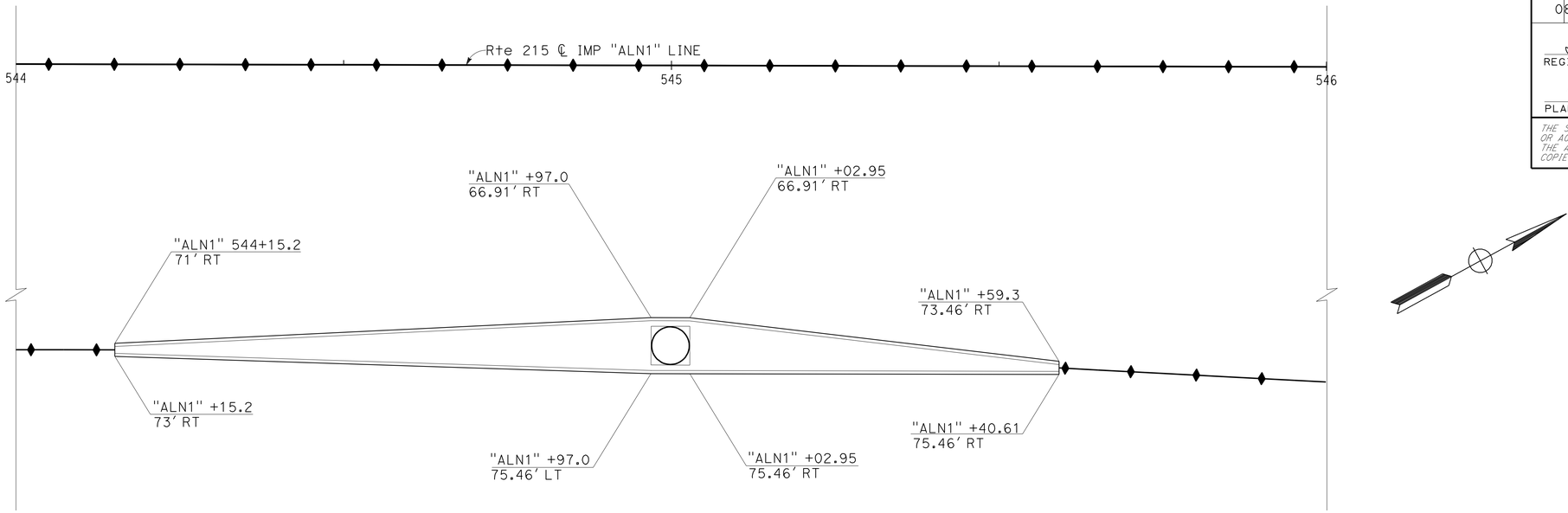

I-215 NB"ALN1" 544+00 TO 546+00

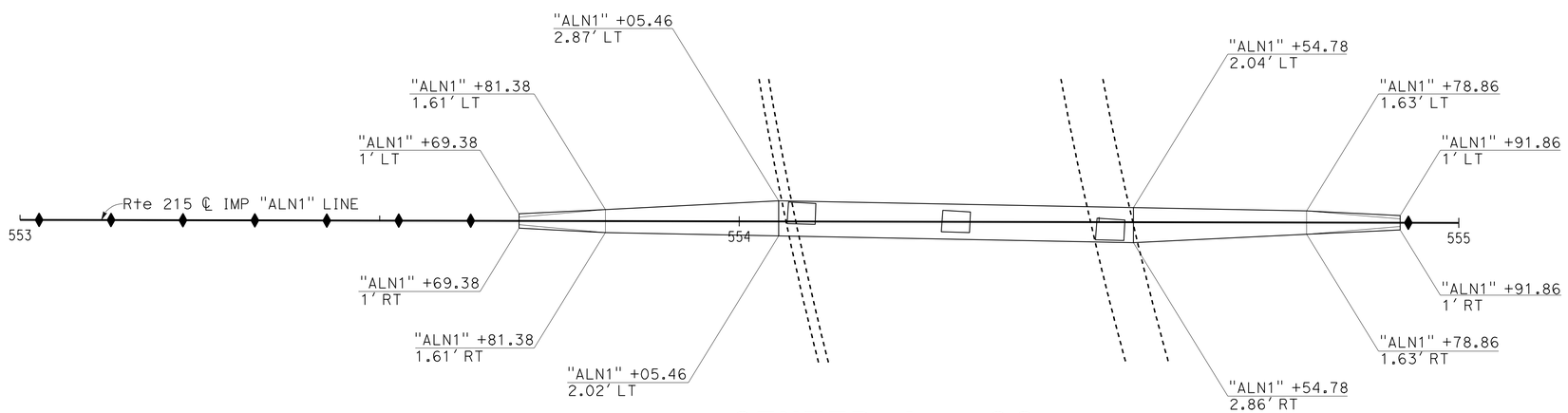

CENTER Ave OC

CONSTRUCTION DETAILS

SCALE: 1" = 10'

C-91

STATE OF CALIFORNIA - DEPARTMENT OF TRANSPORTATION
Caltrans
DESIGN

FUNCTIONAL SUPERVISOR: BEN AMIRI
CALCULATED-DESIGNED BY: JOE DAMIAN
CHECKED BY: JUSTINE NIU
REVISED BY
DATE REVISED

LAST REVISION 01-02-12
DATE PLOTTED => 17-APR-2012
TIME PLOTTED => 17:28

Dist	COUNTY	ROUTE	POST MILES TOTAL PROJECT	SHEET No.	TOTAL SHEETS
08	Riv,SBd	91,215	21.5/21.7, 43.2/45.2,0.0/5.1	213	1743

REGISTERED CIVIL ENGINEER 1-2-12 DATE

4-16-12
PLANS APPROVAL DATE

REGISTERED PROFESSIONAL ENGINEER
JUSTINE NIU
No. C 62897
Exp. 6-30-12
CIVIL
STATE OF CALIFORNIA

THE STATE OF CALIFORNIA OR ITS OFFICERS OR AGENTS SHALL NOT BE RESPONSIBLE FOR THE ACCURACY OR COMPLETENESS OF SCANNED COPIES OF THIS PLAN SHEET.

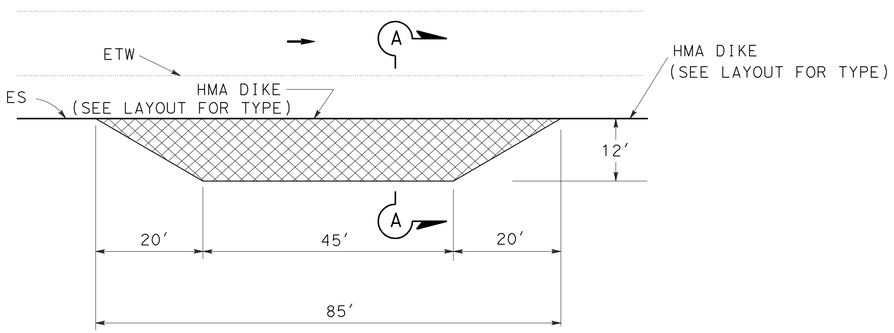

PLAN

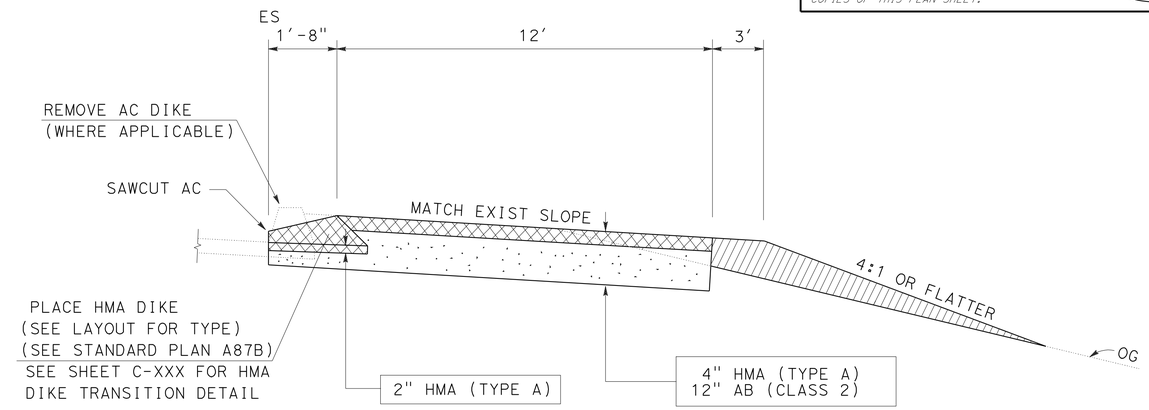

SECTION A-A

4" HMA (TYPE A)

CLASS 2 AB

IMPORTED BORROW

MVP MAINTENANCE VEHICLE PULLOUT

NOTES:

1. ALL DIMENSIONS ARE IN FEET UNLESS OTHERWISE SHOWN.
2. DIMENSIONS OF THE STRUCTURAL SECTIONS ARE SUBJECT TO TOLERANCES SPECIFIED IN THE STANDARD SPECIFICATIONS.
3. THE CONTRACTOR SHALL VERIFY ALL CONTROLLING FIELD DIMENSIONS BEFORE ORDERING OR FABRICATING.
4. SUPERELEVATION AS SHOWN OR AS DIRECTED BY ENGINEER.

MAINTENANCE VEHICLE PULLOUT WITH HMA DIKE
(TYPICAL)

CONSTRUCTION DETAILS

NO SCALE

C-92

STATE OF CALIFORNIA - DEPARTMENT OF TRANSPORTATION
Caltrans®
DESIGN

FUNCTIONAL SUPERVISOR: BEN AMIRI
CALCULATED-DESIGNED BY: JOE DAMIAN
CHECKED BY: JUSTINE NIU
REVISED BY
DATE REVISED

LAST REVISION 01-02-12
DATE PLOTTED => 17-APR-2012
TIME PLOTTED => 17:28

Dist	COUNTY	ROUTE	POST MILES TOTAL PROJECT	SHEET No.	TOTAL SHEETS
08	Riv,SBd	91,215	21.5/21.7, 43.2/45.2,0.0/5.1	214	1743

REGISTERED CIVIL ENGINEER 3-23-12 DATE

4-16-12
PLANS APPROVAL DATE

REGISTERED PROFESSIONAL ENGINEER
JUSTINE NIU
No. C 62897
Exp. 6-30-12
CIVIL
STATE OF CALIFORNIA

THE STATE OF CALIFORNIA OR ITS OFFICERS OR AGENTS SHALL NOT BE RESPONSIBLE FOR THE ACCURACY OR COMPLETENESS OF SCANNED COPIES OF THIS PLAN SHEET.

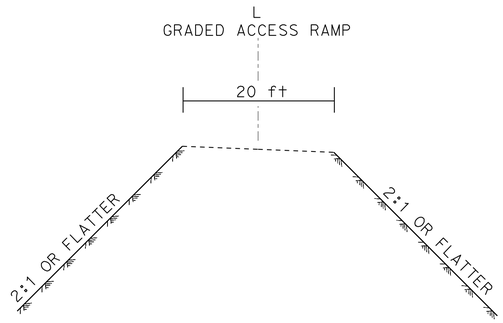

TYPICAL CROSS SECTION

NOT SCALE

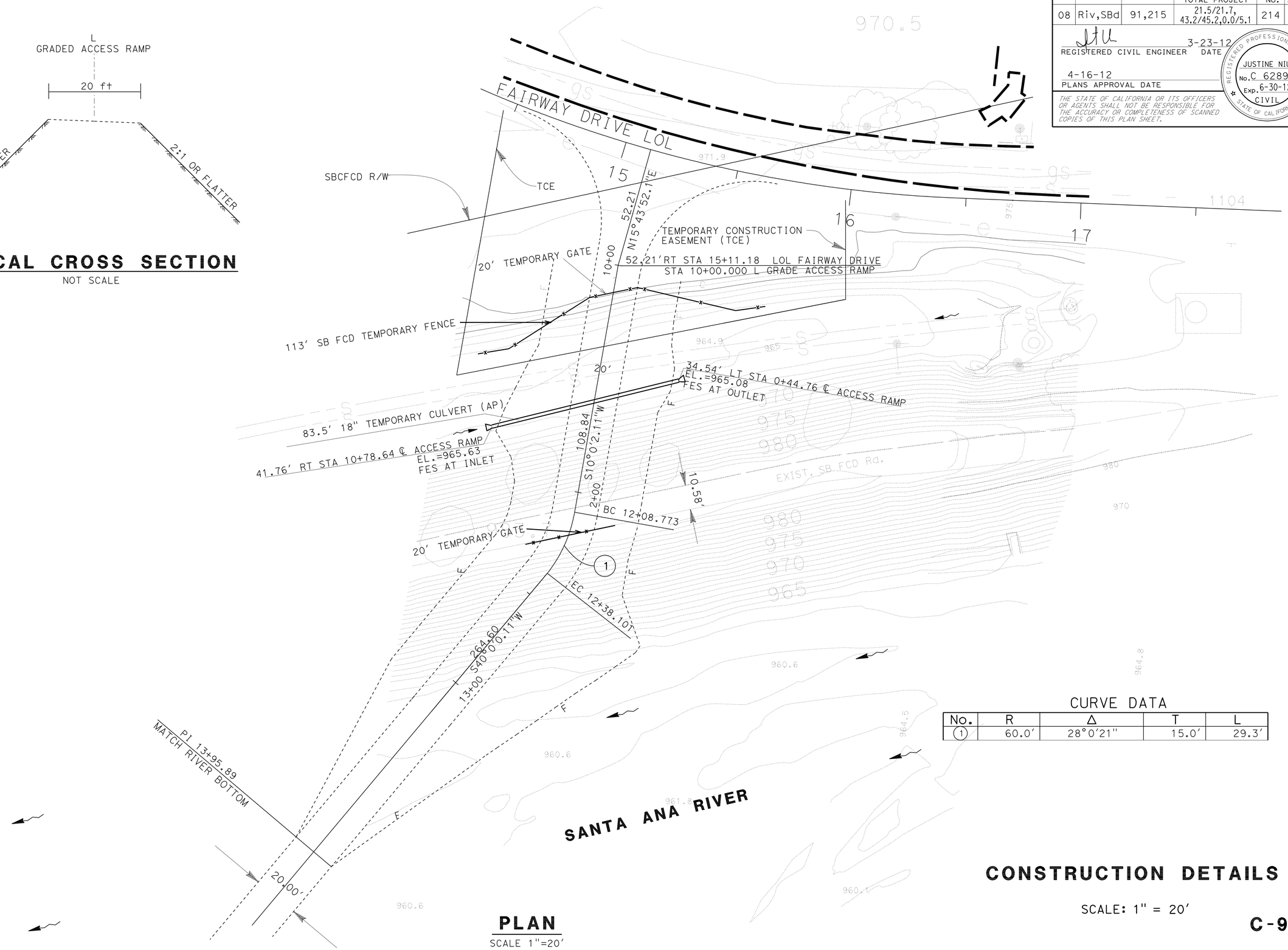

PLAN

SCALE 1"=20'

CURVE DATA

No.	R	Δ	T	L
1	60.0'	28°0'21"	15.0'	29.3'

CONSTRUCTION DETAILS

SCALE: 1" = 20'

C-93

STATE OF CALIFORNIA - DEPARTMENT OF TRANSPORTATION
Caltrans
DESIGN

FUNCTIONAL SUPERVISOR: BEN AMIRI
CALCULATED-DESIGNED BY: MICHAEL MAKARY
CHECKED BY: JUSTINE NIU
REVISED BY
DATE REVISED

LAST REVISION 03-23-12
DATE PLOTTED => 17-APR-2012
TIME PLOTTED => 17:28

Dist	COUNTY	ROUTE	POST MILES TOTAL PROJECT	SHEET No.	TOTAL SHEETS
08	Riv,SBd	91,215	21.5/21.7, 43.2/45.2,0.0/5.1	215	1743

REGISTERED CIVIL ENGINEER 1-2-12 DATE

4-16-12
PLANS APPROVAL DATE

REGISTERED PROFESSIONAL ENGINEER
JUSTINE NIU
No. C 62897
Exp. 6-30-12
CIVIL
STATE OF CALIFORNIA

THE STATE OF CALIFORNIA OR ITS OFFICERS OR AGENTS SHALL NOT BE RESPONSIBLE FOR THE ACCURACY OR COMPLETENESS OF SCANNED COPIES OF THIS PLAN SHEET.

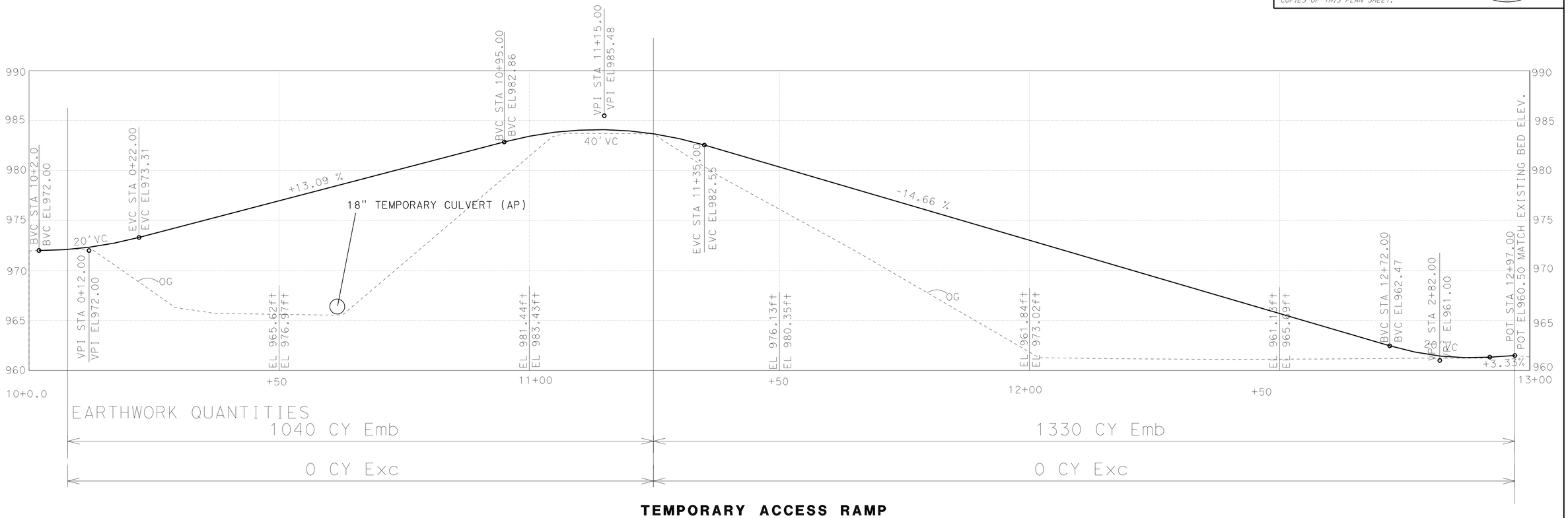

TEMPORARY ACCESS RAMP

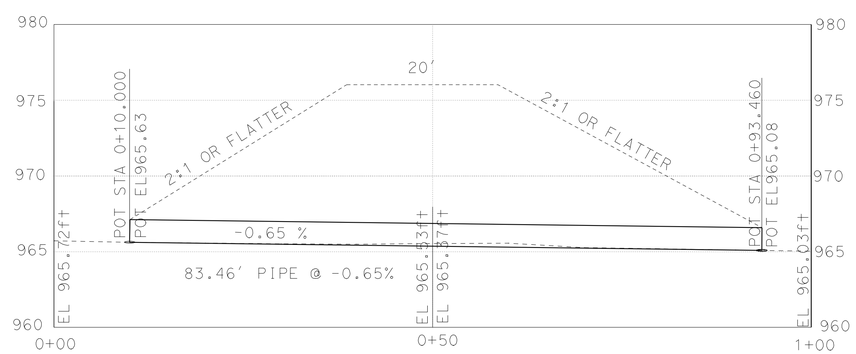

18" TEMPORARY CULVERT(AP)

TOTAL EARHWORK QUANTITIES	
EMBANKMENT	2370 CY
EXCAVATION	0

CONSTRUCTION DETAILS

NO SCALE

C-94

REVISED BY | DATE REVISED
MICHAEL MAKARY | JUSTINE NIU
CALCULATED-DESIGNED BY | CHECKED BY
FUNCTIONAL SUPERVISOR: BEN AMIRI
STATE OF CALIFORNIA - DEPARTMENT OF TRANSPORTATION
Caltrans
DESIGN

LAST REVISION 01-02-12 | DATE PLOTTED => 17-APR-2012 | TIME PLOTTED => 17:28

Dist	COUNTY	ROUTE	POST MILES TOTAL PROJECT	SHEET No.	TOTAL SHEETS
08	Riv,SBd	91,215	21.5/21.7, 43.2/45.2,0.0/5.1	216	1743

REGISTERED CIVIL ENGINEER 1-2-12 DATE

4-16-12
PLANS APPROVAL DATE

REGISTERED PROFESSIONAL ENGINEER TRUC L. BUI No. C72902 Exp. 12-31-12 CIVIL STATE OF CALIFORNIA

THE STATE OF CALIFORNIA OR ITS OFFICERS OR AGENTS SHALL NOT BE RESPONSIBLE FOR THE ACCURACY OR COMPLETENESS OF SCANNED COPIES OF THIS PLAN SHEET.

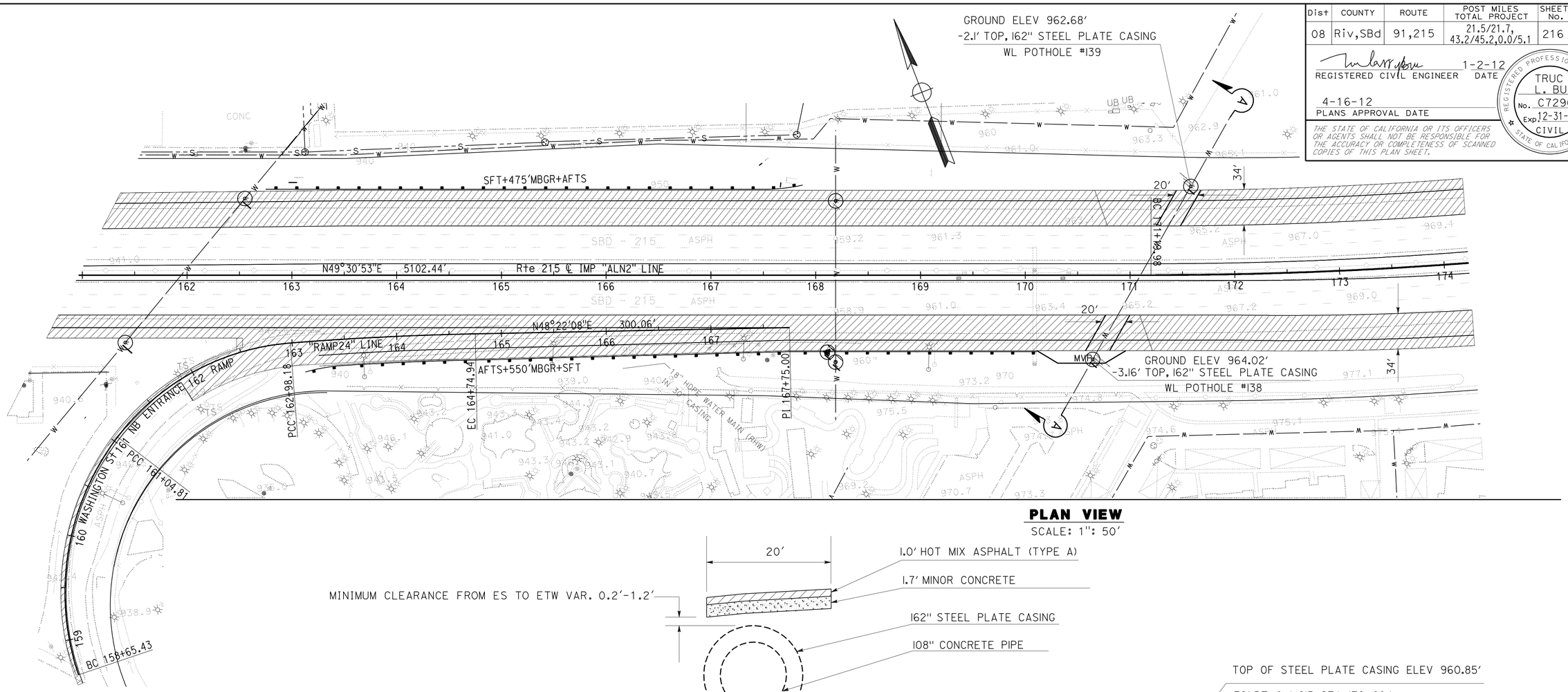

PLAN VIEW
SCALE: 1": 50'

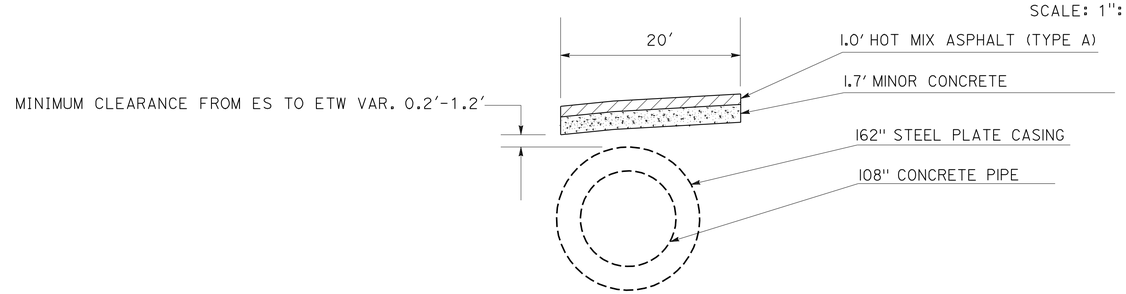

SECTION B-B

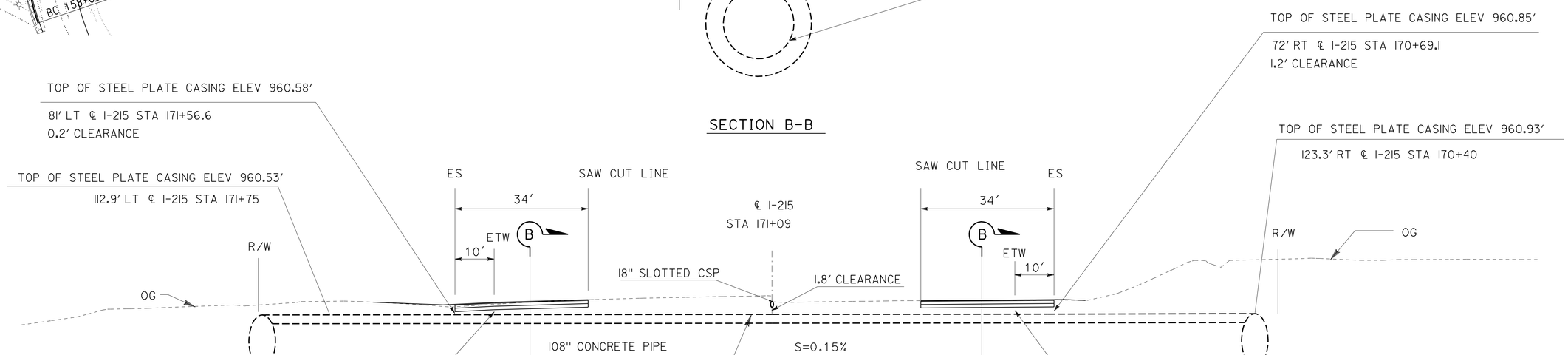

SECTION A-A
NO SCALE

CONSTRUCTION DETAILS
C-95

REVISED BY	DATE REVISED
TRUC L. BUI	JUSTINE NIU
CALCULATED-DESIGNED BY	CHECKED BY
FUNCTIONAL SUPERVISOR	BEN AMIRI

STATE OF CALIFORNIA - DEPARTMENT OF TRANSPORTATION
Caltrans
DESIGN

LAST REVISION 01-02-12 | DATE PLOTTED => 17-APR-2012 | TIME PLOTTED => 17:28

Dist	COUNTY	ROUTE	POST MILES TOTAL PROJECT	SHEET No.	TOTAL SHEETS
08	Riv,SBd	91,215	21.5/21.7, 43.2/45.2,0.0/5.1	217	1743

REGISTERED CIVIL ENGINEER 3-29-12 DATE

4-16-12
PLANS APPROVAL DATE

REGISTERED PROFESSIONAL ENGINEER JUSTINE NIU No. C 62897 Exp. 6-30-12 CIVIL STATE OF CALIFORNIA

THE STATE OF CALIFORNIA OR ITS OFFICERS OR AGENTS SHALL NOT BE RESPONSIBLE FOR THE ACCURACY OR COMPLETENESS OF SCANNED COPIES OF THIS PLAN SHEET.

TABLE 1
DEAD-END POLE WITH ATTACHMENTS (WITH GUYWIRE)

BUNDLE TYPE	MAXIMUM MESSENGER WIRE SPAN	MINIMUM WOOD POLE CLASS	MINIMUM POLE EMBEDMENT DEPTH "E"	GUYWIRE MINIMUM CABLE SIZE
1	50′	4	7′	5/16"
	100′	4	8′	3/8"
	150′	4	8′	7/16"
2	50′	4	8′	3/8"
	100′	4	8′	7/16"
	150′	3	8′	7/16"

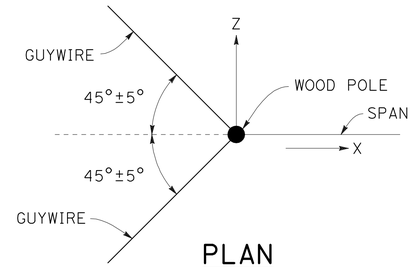

PLAN

TABLE 2
DEAD-END POLE WITH ATTACHMENTS (WITHOUT GUYWIRE)

BUNDLE TYPE	MAXIMUM MESSENGER WIRE SPAN	MINIMUM WOOD POLE CLASS	MINIMUM POLE EMBEDMENT DEPTH "E"
1	50′	H-2	10′
	100′	H-4	11′
2	50′	H-2	10′
	100′	H-6	12′

DESIGN NOTES:

Design: AASHTO Standard Specifications for Structural Supports for Highway Signs, Luminaires and Traffic Signals, Fifth Edition (LTS-5).

GROUP LOAD COMBINATIONS:

I Dead Load
II Dead Load + Wind Load
III Dead Load + 0.5 (Wind Load) + Ice Load
IV Fatigue: Not used

LOADING:

Wind Loading: 100 mph (3-second gust)
Wind Recurrence Interval: 10 years
Combined height, exposure, and elevated terrain factor = 1.05
(Exposure C, structure is not located on or over the top half of a ridge, hill, or escarpment)

Ice Loading: 3.0 psf on surfaces, 0.60 in radial thickness of ice at a unit weight of 60 pcf on bundles

BASIC DESIGN VALUES:

Timber Poles: Fb = 1850 psi
Fv = 110 psi
Fcp = 230 psi
Fc = 950 psi
E = 1500 x 10^3 psi

DESIGN WIRE BREAKING STRENGTHS:

ASTM A475, Utilities Grade, 7 strand modified by termination efficiency factor of 0.8

FOUNDATION DESIGN NOTES:

1. Pole embedment depth design is based on Broms' approximate procedure as described in Article 13.6 of AASHTO LTS-5.
2. Standard embedment depth is calculated based on level ground assumption (up to slope 1V:4H).
3. Embedment depth is calculated based on following soil parameters,
   Cohesive Soil:
   Shear strength of soil c = 1500 psf.
   Cohesionless Soil:
   Ø = 30 deg, γ = 120 pcf.
   Soil is assumed to be unsaturated.
4. An overload factor of 2.0 and an undercapacity factor of 0.7 were used for safety factor of 2.86.
5. If pole is located on or near a steep slope (up to 1H:2V) add 2 feet extra embedment.
6. Allowable vertical bearing pressure at the end bearing of poles is 3000 psf at 6 feet or more embedment.

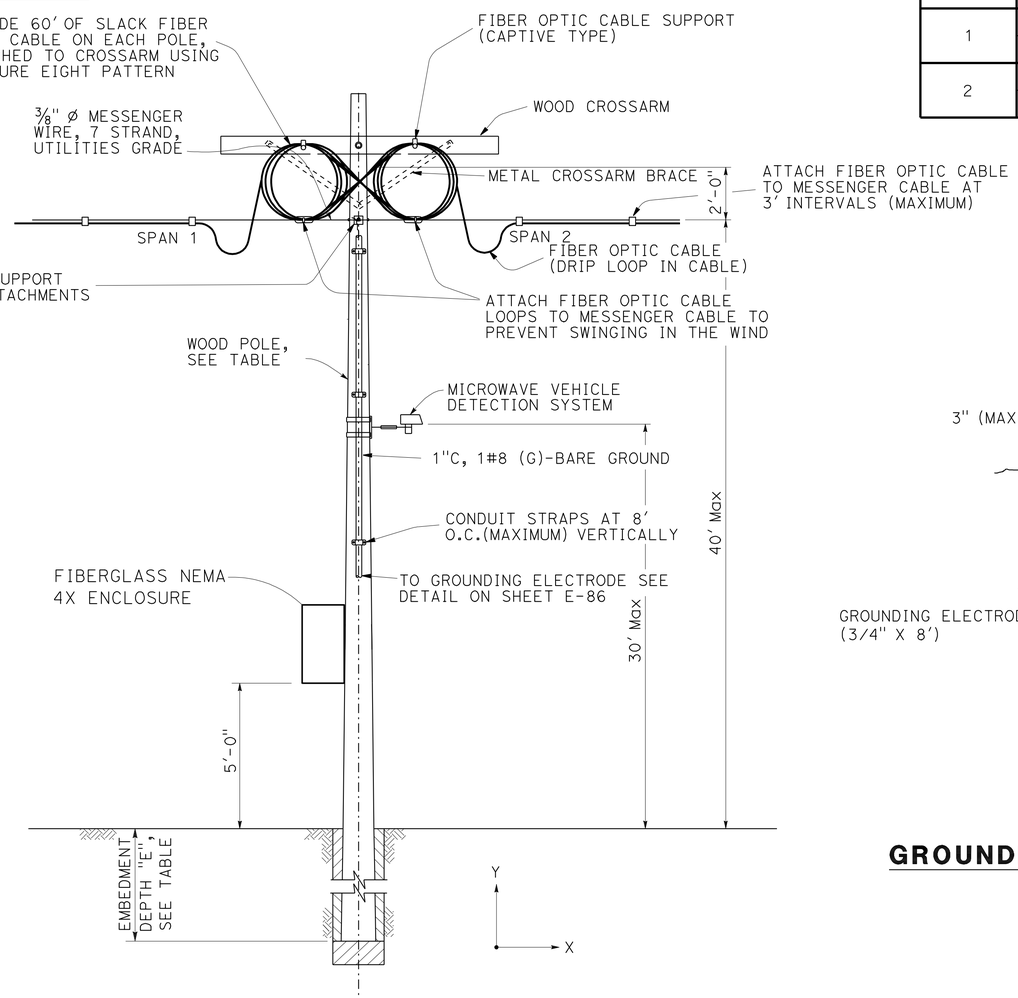

ELEVATION

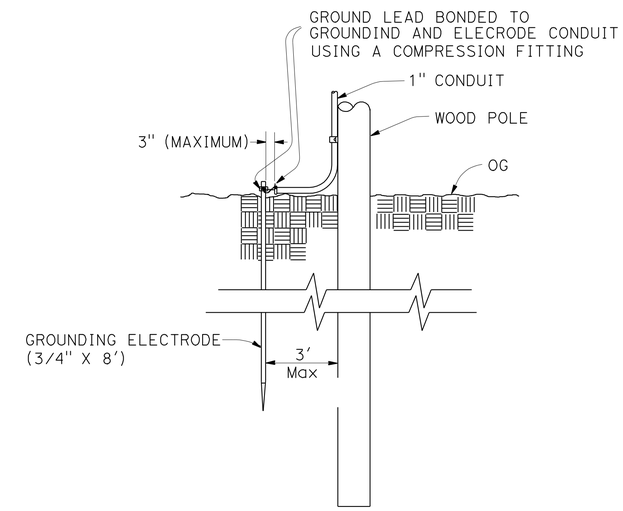

GROUNDING OF MESSENGER CABLE

CONSTRUCTION DETAILS
NO SCALE

C-96

STATE OF CALIFORNIA - DEPARTMENT OF TRANSPORTATION
DESIGN
FUNCTIONAL SUPERVISOR: BEN AMIRI
CALCULATED-DESIGNED BY: KATHERINE DINH
CHECKED BY: FERDINAND DE LA CRUZ
REVISED BY
DATE REVISED

LAST REVISION 03-29-12
DATE PLOTTED => 17-APR-2012
TIME PLOTTED => 17:28

Dist	COUNTY	ROUTE	POST MILES TOTAL PROJECT	SHEET No.	TOTAL SHEETS
08	Riv,SBd	91,215	21.5/21.7, 43.2/45.2,0.0/5.1	218	1743

REGISTERED CIVIL ENGINEER 3-29-12 DATE

4-16-12
PLANS APPROVAL DATE

REGISTERED PROFESSIONAL ENGINEER JUSTINE NIU No. C 62897 Exp. 6-30-12 CIVIL STATE OF CALIFORNIA

THE STATE OF CALIFORNIA OR ITS OFFICERS OR AGENTS SHALL NOT BE RESPONSIBLE FOR THE ACCURACY OR COMPLETENESS OF SCANNED COPIES OF THIS PLAN SHEET.

TANGENT POLE WITHOUT ATTACHMENTS			
BUNDLE TYPE	MAXIMUM MESSENGER WIRE SPAN	MINIMUM WOOD POLE CLASS	MINIMUM POLE EMBEDMENT DEPTH "E"
1	50′	2	9′
	100′	H-1	10′
	150′	H-3	10′
2	50′	1	9′
	100′	H-2	10′
	150′	H-4	11′

DESIGN NOTES:

Design: AASHTO Standard Specifications for Structural Supports for Highway Signs, Luminaires and Traffic Signals, Fifth Edition (LTS-5).

GROUP LOAD COMBINATIONS:

I Dead Load
II Dead Load + Wind Load
III Dead Load + 0.5 (Wind Load) + Ice Load
IV Fatigue: Not used

LOADING:

Wind Loading: 100 mph (3-second gust)
Wind Recurrence Interval: 10 years
Combined height, exposure, and elevated terrain factor = 1.05 (Exposure C, structure is not located on or over the top half of a ridge, hill, or escarpment)

Ice Loading: 3.0 psf on surfaces, 0.60 in radial thickness of ice at a unit weight of 60 pcf on bundles

BASIC DESIGN VALUES:

Timber Poles: Fb = 1850 psi
Fv = 110 psi
Fcp = 230 psi
Fc = 950 psi
E = 1500 x 10^3 psi

WIRE BREAKING STRENGTHS:

ASTM A475, Utilities Grade, 7 strand modified by termination efficiency factor of 0.8

DESIGN FOUNDATION DESIGN NOTES:

1. Pole embedment depth design is based on Broms′ approximate procedure as described in Article 13.6 of AASHTO LTS-5.
2. Standard embedment depth is calculated based on level ground assumption (up to slope 1V:4H).
3. Embedment depth is calculated based on following soil parameters,
   Cohesive Soil:
   Shear strength of soil c = 1500 psf.
   Cohesionless Soil:
   ø = 30 deg, γ = 120 pcf.
   Soil is assumed to be unsaturated.
4. An overload factor of 2.0 and an undercapacity factor of 0.7 were used for safety factor of 2.86.
5. If pole is located on or near a steep slope (up to 1H:2V) add 2 feet extra embedment.
6. Allowable vertical bearing pressure at the end bearing of poles is 3000 psf at 6 feet or more embedment.

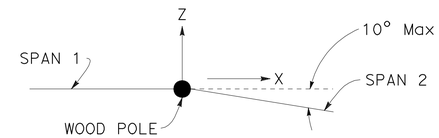

PLAN

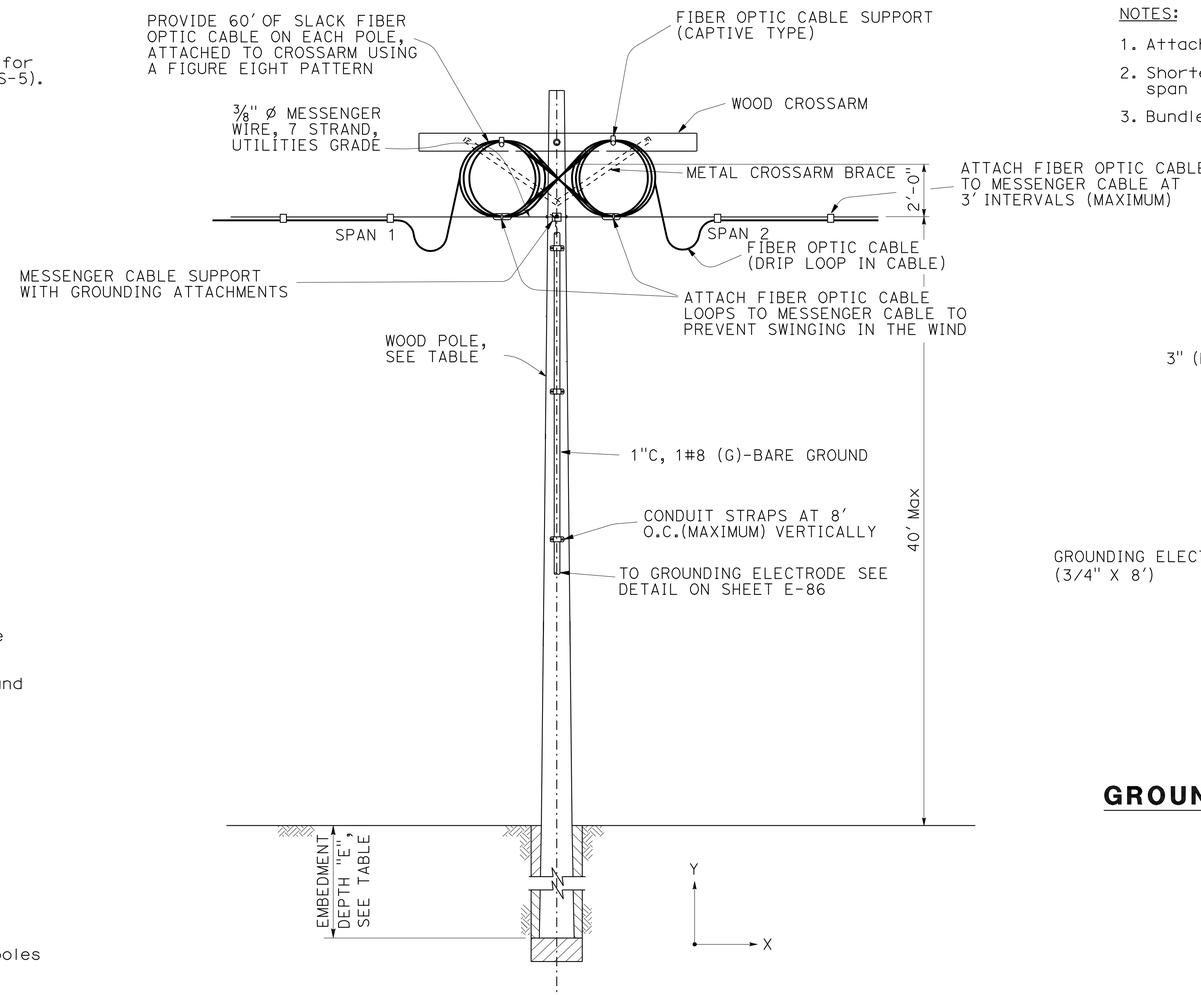

ELEVATION

NOTES:

1. Attachments not allowed.
2. Shorter span length must be at least 95% of longer span length.
3. Bundle for Span 1 and Span 2 must be the same.

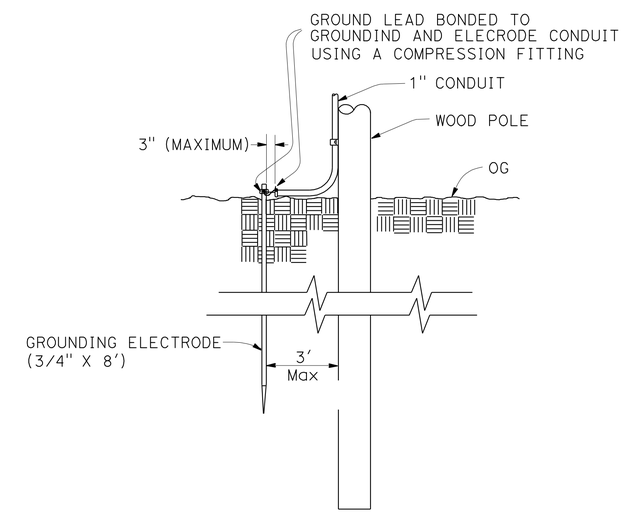

GROUNDING OF MESSENGER CABLE

CONSTRUCTION DETAILS

NO SCALE

C-97

REVISED BY | DATE REVISED
KATHERINE DINH | FERDINAND DE LA CRUZ
CALCULATED-DESIGNED BY | CHECKED BY
FUNCTIONAL SUPERVISOR | BEN AMIRI
STATE OF CALIFORNIA - DEPARTMENT OF TRANSPORTATION
Caltrans® DESIGN

LAST REVISION 03-29-12 | DATE PLOTTED => 17-APR-2012 | TIME PLOTTED => 17:28

Dist	COUNTY	ROUTE	POST MILES TOTAL PROJECT	SHEET No.	TOTAL SHEETS
08	Riv,SBd	91,215	21.5/21.7, 43.2/45.2,0.0/5.1	219	1743

REGISTERED CIVIL ENGINEER 3-29-12 DATE

4-16-12
PLANS APPROVAL DATE

REGISTERED PROFESSIONAL ENGINEER JUSTINE NIU No. C 62897 Exp. 6-30-12 CIVIL STATE OF CALIFORNIA

THE STATE OF CALIFORNIA OR ITS OFFICERS OR AGENTS SHALL NOT BE RESPONSIBLE FOR THE ACCURACY OR COMPLETENESS OF SCANNED COPIES OF THIS PLAN SHEET.

TANGENT POLE WITH ATTACHMENTS

BUNDLE TYPE	MAXIMUM MESSENGER WIRE SPAN	MINIMUM WOOD POLE CLASS	MINIMUM POLE EMBEDMENT DEPTH "E"
1	50′	H-1	10′
	100′	H-3	10′
	150′	H-4	11′
2	50′	H-2	10′
	100′	H-4	11′
	150′	H-6	11′

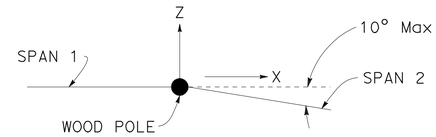

PLAN

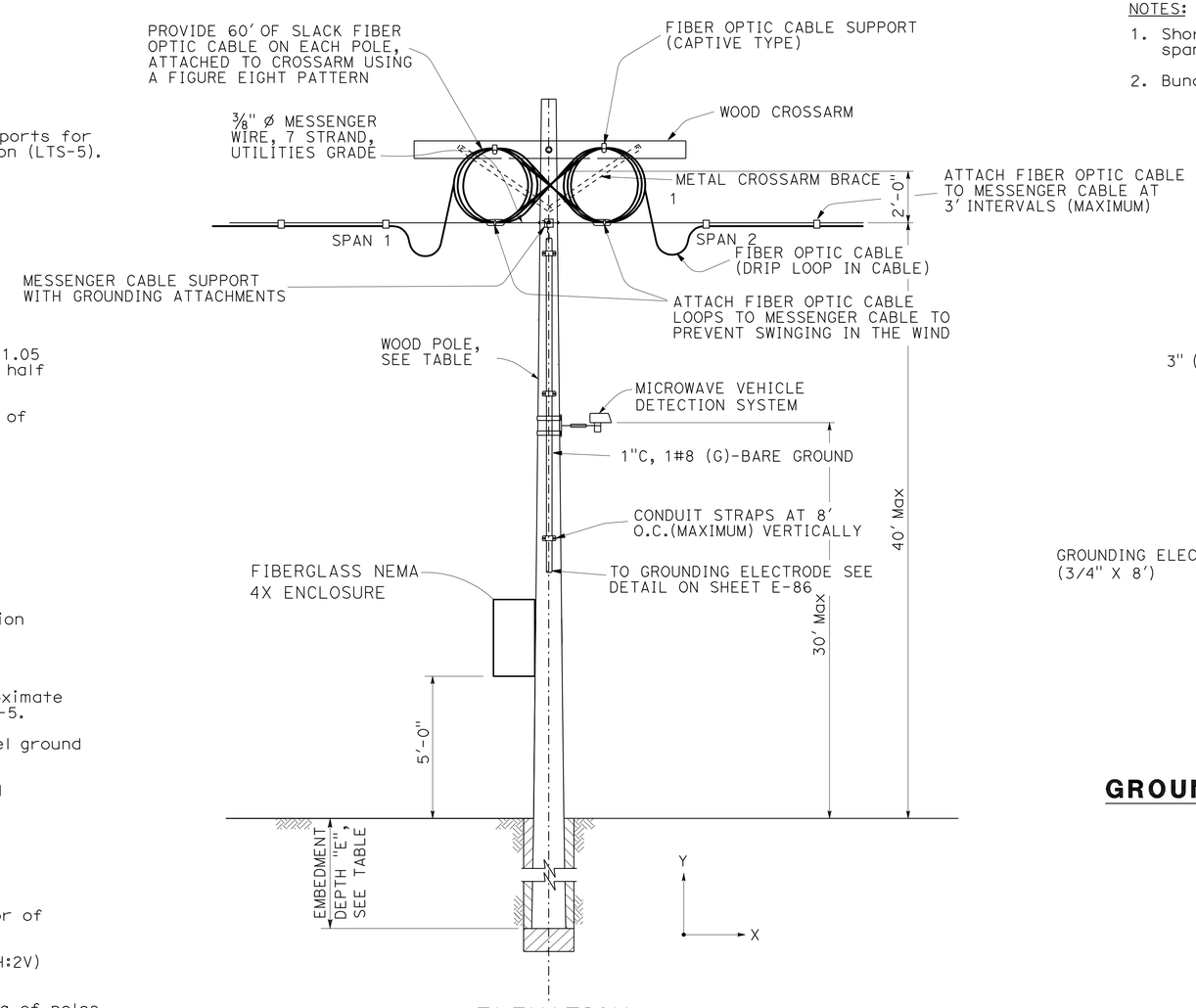

ELEVATION

NOTES:

1. Shorter span length must be at least 95% of longer span length.
2. Bundle for Span 1 and Span 2 must be the same.

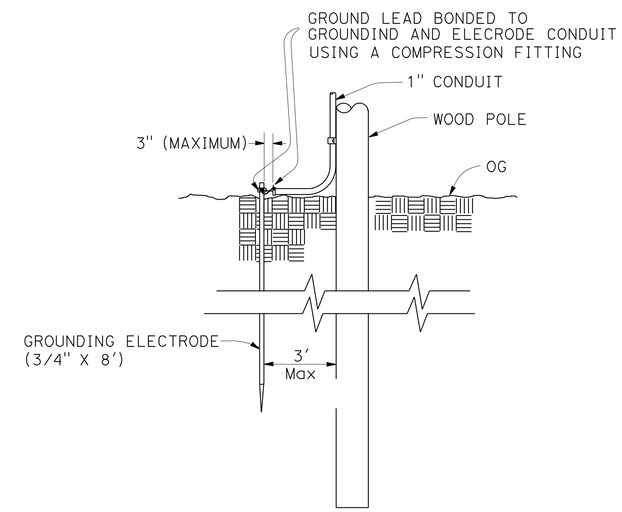

GROUNDING OF MESSENGER CABLE

DESIGN NOTES:

Design: AASHTO Standard Specifications for Structural Supports for Highway Signs, Luminaires and Traffic Signals, Fifth Edition (LTS-5).

GROUP LOAD COMBINATIONS:

I Dead Load
II Dead Load + Wind Load
III Dead Load + 0.5 (Wind Load) + Ice Load
IV Fatigue: Not used

LOADING:

Wind Loading: 100 mph (3-second gust)
Wind Recurrence Interval: 10 years
Combined height, exposure, and elevated terrain factor = 1.05 (Exposure C, structure is not located on or over the top half of a ridge, hill, or escarpment)

Ice Loading: 3.0 psf on surfaces, 0.60 in radial thickness of ice at a unit weight of 60 pcf on bundles

BASIC DESIGN VALUES:

Timber Poles: Fb = 1850 psi
Fv = 110 psi
Fcp = 230 psi
Fc = 950 psi
E = 1500 x 10^3 psi

DESIGN WIRE BREAKING STRENGTHS:

ASTM A475, Utilities Grade, 7 strand modified by termination efficiency factor of 0.8

FOUNDATION DESIGN NOTES:

1. Pole embedment depth design is based on Broms' approximate procedure as described in Article 13.6 of AASHTO LTS-5.
2. Standard embedment depth is calculated based on level ground assumption (up to slope 1V:4H).
3. Embedment depth is calculated based on following soil parameters,
   Cohesive Soil:
   Shear strength of soil c = 1500 psf.
   Cohesionless Soil:
   Ø = 30 deg, γ = 120 pcf.
   Soil is assumed to be unsaturated.
4. An overload factor of 2.0 and an undercapacity factor of 0.7 were used for safety factor of 2.86.
5. If pole is located on or near a steep slope (up to 1H:2V) add 2 feet extra embedment.
6. Allowable vertical bearing pressure at the end bearing of poles is 3000 psf at 6 feet or more embedment.

REVISED BY | DATE REVISED
KATHERINE DINH | FERDINAND DE LA CRUZ
CALCULATED-DESIGNED BY | CHECKED BY
FUNCTIONAL SUPERVISOR: BEN AMIRI
STATE OF CALIFORNIA - DEPARTMENT OF TRANSPORTATION
DESIGN
Caltrans

CONSTRUCTION DETAILS

NO SCALE

C-98

LAST REVISION 03-29-12 | DATE PLOTTED => 17-APR-2012 | TIME PLOTTED => 17:29

Dist	COUNTY	ROUTE	POST MILES TOTAL PROJECT	SHEET No.	TOTAL SHEETS
08	Riv,SBd	91,215	21.5/21.7, 43.2/45.2,0.0/5.1	220	1743

REGISTERED CIVIL ENGINEER 3-29-12 DATE

4-16-12
PLANS APPROVAL DATE

REGISTERED PROFESSIONAL ENGINEER JUSTINE NIU No. C 62897 Exp. 6-30-12 CIVIL STATE OF CALIFORNIA

THE STATE OF CALIFORNIA OR ITS OFFICERS OR AGENTS SHALL NOT BE RESPONSIBLE FOR THE ACCURACY OR COMPLETENESS OF SCANNED COPIES OF THIS PLAN SHEET.

CORNER POLE WITH ATTACHMENTS (NO GUYWIRE)

BUNDLE TYPE	MAXIMUM MESSENGER WIRE SPAN	MINIMUM WOOD POLE CLASS	MINIMUM POLE EMBEDMENT DEPTH "E"
1	50′	H-3	10′
	100′	H-6	11′
2	50′	H-4	11′

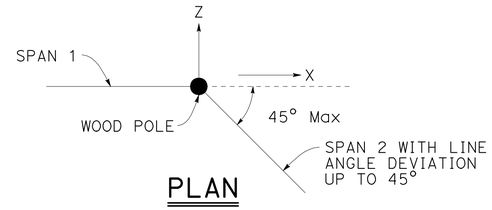

PLAN

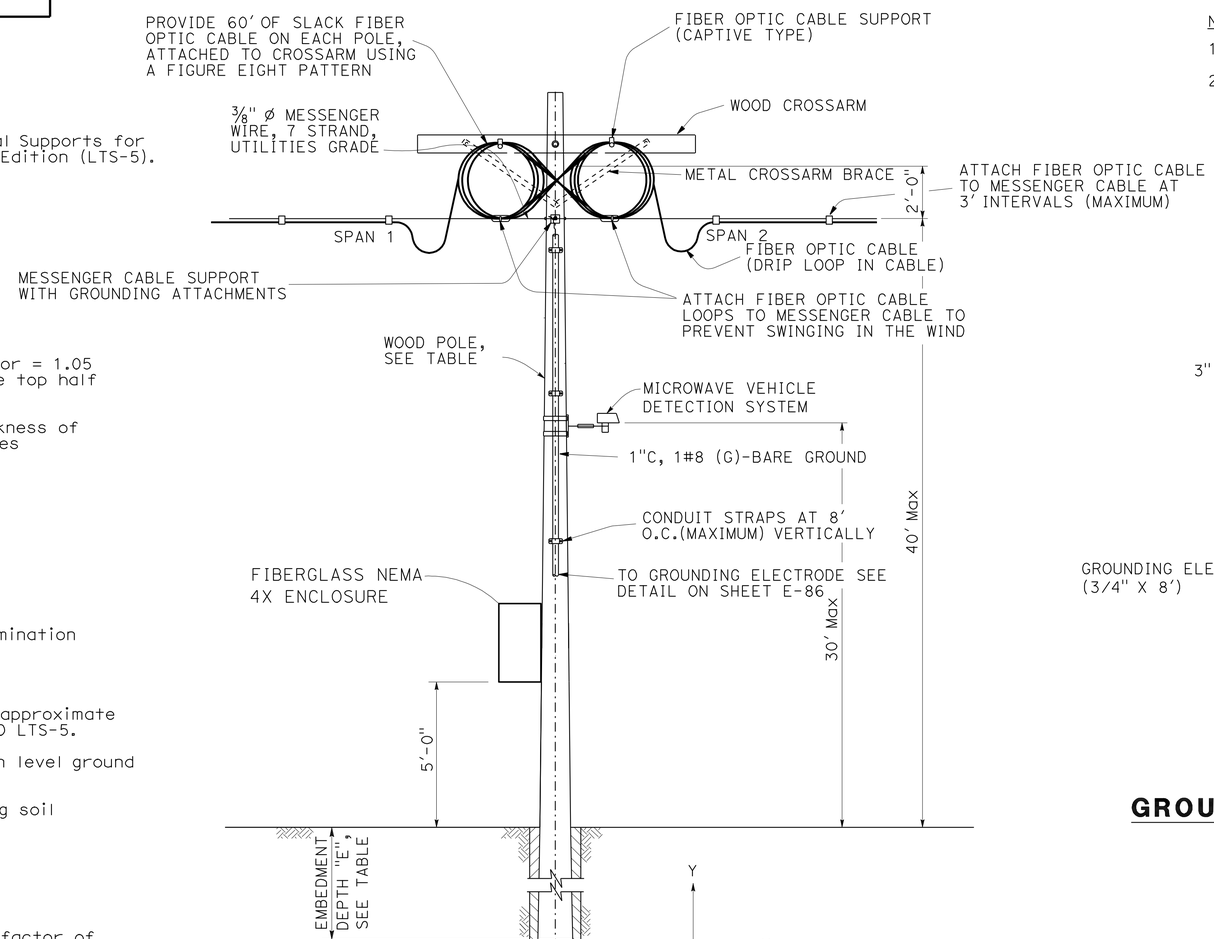

ELEVATION

NOTES:

1. Bundle for Span 1 and Span 2 must be the same.
2. Shorter span length must be at least 95% of longer span length.

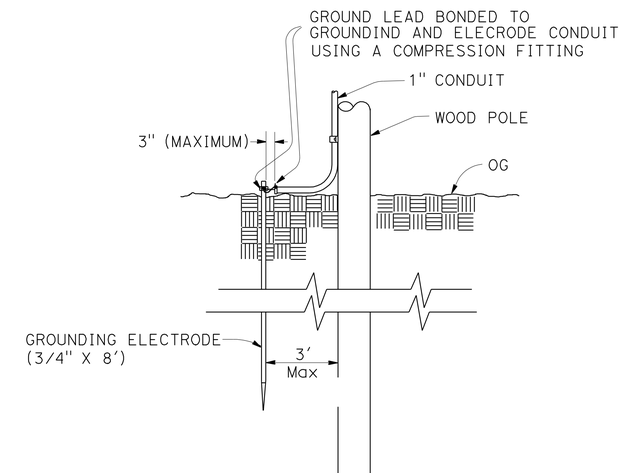

GROUNDING OF MESSENGER CABLE

DESIGN NOTES:

Design: AASHTO Standard Specifications for Structural Supports for Highway Signs, Luminaires and Traffic Signals, Fifth Edition (LTS-5).

GROUP LOAD COMBINATIONS:

I Dead Load
II Dead Load + Wind Load
III Dead Load + 0.5 (Wind Load) + Ice Load
IV Fatigue: Not used

LOADING:

Wind Loading: 100 mph (3-second gust)
Wind Recurrence Interval: 10 years
Combined height, exposure, and elevated terrain factor = 1.05 (Exposure C, structure is not located on or over the top half of a ridge, hill, or escarpment)

Ice Loading: 3.0 psf on surfaces, 0.60 in radial thickness of ice at a unit weight of 60 pcf on bundles

BASIC DESIGN VALUES:

Timber Poles: Fb = 1850 psi
Fv = 110 psi
Fcp = 230 psi
Fc = 950 psi
E = 1500 x 10^3 psi

DESIGN WIRE BREAKING STRENGTHS:

ASTM A475, Utilities Grade, 7 strand modified by termination efficiency factor of 0.8

FOUNDATION DESIGN NOTES:

1. Pole embedment depth design is based on Broms′ approximate procedure as described in Article 13.6 of AASHTO LTS-5.
2. Standard embedment depth is calculated based on level ground assumption (up to slope 1V:4H).
3. Embedment depth is calculated based on following soil parameters,
   Cohesive Soil:
   Shear strength of soil c = 1500 psf.
   Cohesionless Soil:
   Ø = 30 deg, γ = 120 pcf.
   Soil is assumed to be unsaturated.
4. An overload factor of 2.0 and an undercapacity factor of 0.7 were used for safety factor of 2.86.
5. If pole is located on or near a steep slope (up to 1H:2V) add 2 feet extra embedment.
6. Allowable vertical bearing pressure at the end bearing of poles is 3000 psf at 6 feet or more embedment.

CONSTRUCTION DETAILS

NO SCALE

C-99

STATE OF CALIFORNIA - DEPARTMENT OF TRANSPORTATION
DESIGN
Caltrans
FUNCTIONAL SUPERVISOR: BEN AMIRI
CALCULATED-DESIGNED BY: KATHERINE DINH
CHECKED BY: FERDINAND DE LA CRUZ
REVISED BY
DATE REVISED

LAST REVISION 03-29-12
DATE PLOTTED => 17-APR-2012
TIME PLOTTED => 17:29

Dist	COUNTY	ROUTE	POST MILES TOTAL PROJECT	SHEET No.	TOTAL SHEETS
08	Riv,SBd	91,215	21.5/21.7, 43.2/45.2,0.0/5.1	221	1743

REGISTERED CIVIL ENGINEER 3-29-12 DATE

4-16-12
PLANS APPROVAL DATE

REGISTERED PROFESSIONAL ENGINEER JUSTINE NIU No.C 62897 Exp. 6-30-12 CIVIL STATE OF CALIFORNIA

THE STATE OF CALIFORNIA OR ITS OFFICERS OR AGENTS SHALL NOT BE RESPONSIBLE FOR THE ACCURACY OR COMPLETENESS OF SCANNED COPIES OF THIS PLAN SHEET.

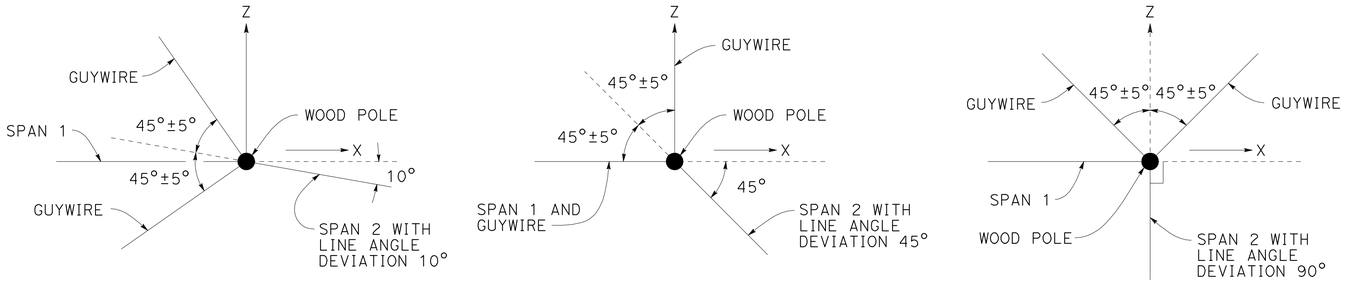

PLAN

NOTES:

1. Guywires shall always be provided on the opposite side of larger span.
2. Bundle for Span 1 must be the same as bundle for Span 2.
3. Span 1 must be less than 95% of Span 2.

DESIGN NOTES:

Design: AASHTO Standard Specifications for Structural Supports for Highway Signs, Luminaires and Traffic Signals, Fifth Edition (LTS-5).

GROUP LOAD COMBINATIONS:

I Dead Load
II Dead Load + Wind Load
III Dead Load + 0.5 (Wind Load) + Ice Load
IV Fatigue: Not used

LOADING:

Wind Loading: 100 mph (3-second gust)
Wind Recurrence Interval: 10 years
Combined height, exposure, and elevated terrain factor = 1.05 (Exposure C, structure is not located on or over the top half of a ridge, hill, or escarpment)

Ice Loading: 3.0 psf on surfaces, 0.60 in radial thickness of ice at a unit weight of 60 pcf on bundles

BASIC DESIGN VALUES:

Timber Poles: Fb = 1850 psi
Fv = 110 psi
Fcp = 230 psi
Fc = 950 psi
E = 1500 x 10^3 psi

DESIGN WIRE BREAKING STRENGTHS:

ASTM A475, Utilities Grade, 7 strand modified by termination efficiency factor of 0.8

FOUNDATION DESIGN NOTES:

1. Pole embedment depth design is based on Broms' approximate procedure as described in Article 13.6 of AASHTO LTS-5.
2. Standard embedment depth is calculated based on level ground assumption (up to slope 1V:4H).
3. Embedment depth is calculated based on following soil parameters,
   Cohesive Soil:
   Shear strength of soil c = 1500 psf.
   Cohesionless Soil:
   ø = 30 deg, γ = 120 pcf.
   Soil assumed to be unsaturated.
4. An overload factor of 2.0 and an undercapacity factor of 0.7 were used for safety factor of 2.86.
5. If pole is located on or near a steep slope (up to 1H:2V) add 2 feet extra embedment.
6. Allowable vertical bearing pressure at the end bearing of poles is 3000 psf at 6 feet or more embedment.

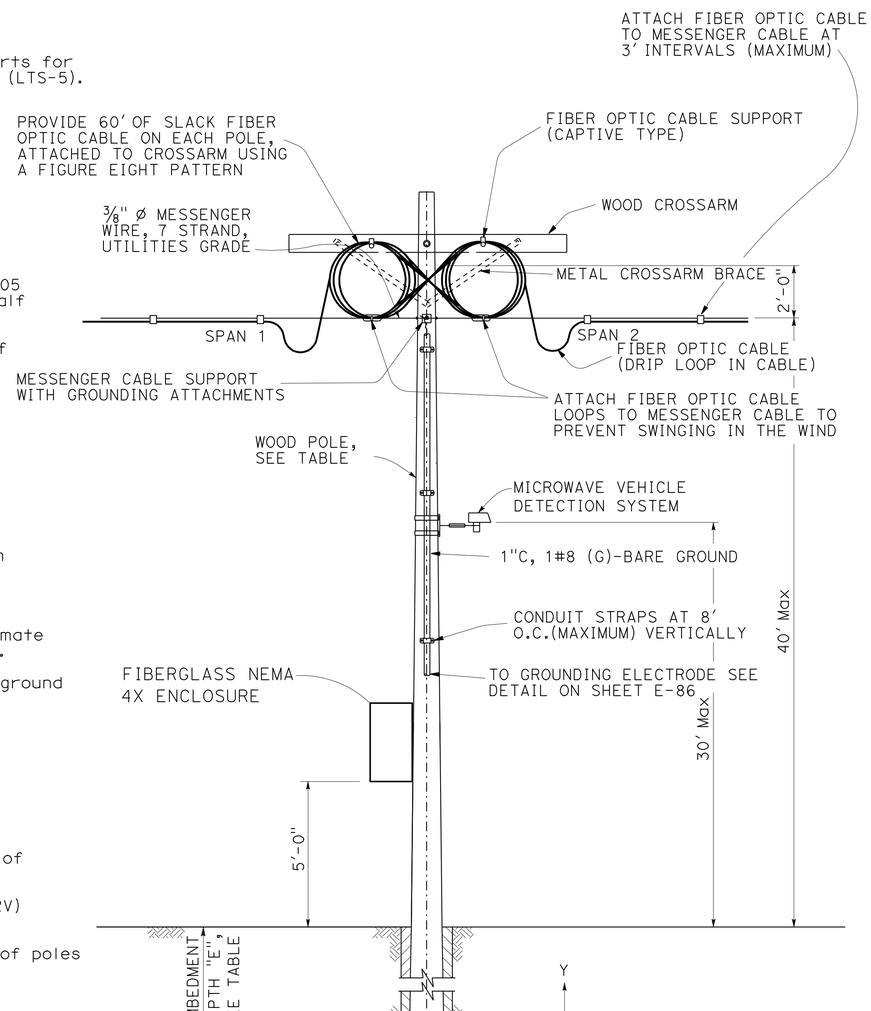

ELEVATION

TABLE 1-CORNER POLE WITH OR WITHOUT ATTACHMENTS (WITH GUYWIRE)

DEVIATION ANGLE	MESSENGER WIRE SPAN		MINIMUM WOOD POLE CLASS	MINIMUM POLE EMBEDMENT DEPTH "E"	GUYWIRE MINIMUM CABLE SIZE
	SPAN 1 MINIMUM	SPAN 2 MAXIMUM			
10°	50	100	4	8'	3/8"
45°	50	100	2	9'	7/16"
90°	50	100	2	9'	1/2"

TABLE 2-CORNER POLE WITHOUT ATTACHMENTS (WITH GUYWIRE)

DEVIATION ANGLE	MESSENGER WIRE SPAN		MINIMUM WOOD POLE CLASS	MINIMUM POLE EMBEDMENT DEPTH "E"	GUYWIRE MINIMUM CABLE SIZE
	SPAN 1 MINIMUM	SPAN 2 MAXIMUM			
10°	100	150	4	8'	7/16"
45°	100	150	H-1	9'	1/2"
90°	100	150	1	9'	2-7/16"

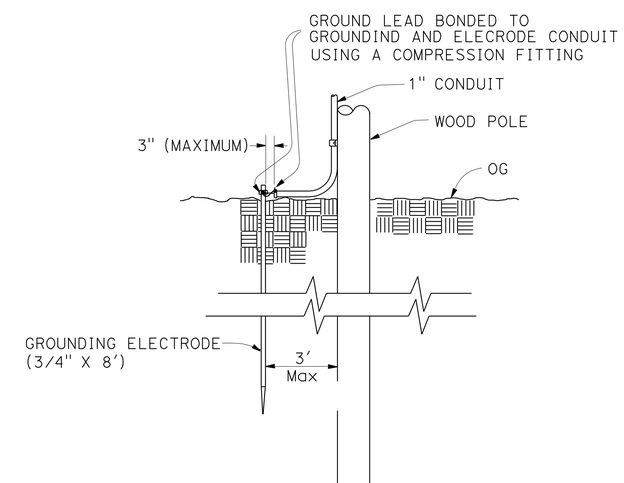

GROUNDING OF MESSENGER CABLE

CONSTRUCTION DETAILS

NO SCALE

C-100

REVISED BY | DATE REVISED
KATHERINE DINH | FERDINAND DE LA CRUZ
CALCULATED-DESIGNED BY | CHECKED BY
FUNCTIONAL SUPERVISOR: BEN AMIRI
STATE OF CALIFORNIA - DEPARTMENT OF TRANSPORTATION
Caltrans DESIGN

LAST REVISION 03-29-12 | DATE PLOTTED => 17-APR-2012 | TIME PLOTTED => 17:29

Dist	COUNTY	ROUTE	POST MILES TOTAL PROJECT	SHEET No.	TOTAL SHEETS
08	Riv,SBd	91,215	21.5/21.7, 43.2/45.2,0.0/5.1	222	1743

Touhida Haider 2-21-12
REGISTERED CIVIL ENGINEER DATE

4-16-12
PLANS APPROVAL DATE

REGISTERED PROFESSIONAL ENGINEER
TOUHIDA HAIDER
No. 74470
Exp. 12-31-13
CIVIL
STATE OF CALIFORNIA

THE STATE OF CALIFORNIA OR ITS OFFICERS OR AGENTS SHALL NOT BE RESPONSIBLE FOR THE ACCURACY OR COMPLETENESS OF SCANNED COPIES OF THIS PLAN SHEET.

TEMPORARY CONSTRUCTION SITE BMPs

TEMPORARY CONSTRUCTION SITE BMPs	UNITS	QUANTITIES
TEMPORARY FIBER ROLL	LF	90000
TEMPORARY CONSTRUCTION ENTRANCE	EA	10
TEMPORARY CHECK DAM	LF	5500
MOVE-IN/MOVE-OUT (TEMPORARY EROSION CONTROL)	EA	12
TEMPORARY DRAINAGE INLET PROTECTION	EA	185
TEMPORARY CONCRETE WASHOUT BIN	EA	15
TEMPORARY SOIL BINDER	SQYD	1030924
RAIN EVENT ACTION PLAN	EA	40
STORM WATER ANNUAL REPORT	EA	3
STORM WATER SAMPLING AND ANALYSIS DAY	EA	33

NOTE:

1. THE QUANTITY OF CONSTRUCTION SITE BMPs SHOWN ON THIS QUANTITIY SHEET (WPCQ-1) ARE INTENDED TO BE USED AS GUIDE LINES ONLY. FIELD CONDITION MAY NECESSITATE MODIFICATION OR RELOCATION OF BMPs. AND ITS QUANTITIES AS PER INSTRUCTION OF ENGINEER.

TEMPORARY WATER POLLUTION CONTROL QUANTITIES

NO SCALE

WPCQ- 1

REVISED BY | DATE REVISED
TOUHIDA HAIDER | GEORGE MORHIG
CALCULATED-DESIGNED BY | CHECKED BY
FUNCTIONAL SUPERVISOR: GEORGE MORHIG
STATE OF CALIFORNIA - DEPARTMENT OF TRANSPORTATION
Caltrans DESIGN

LAST REVISION 02-21-12 | DATE PLOTTED => 17-APR-2012 | TIME PLOTTED => 16:18

Dist	COUNTY	ROUTE	POST MILES TOTAL PROJECT	SHEET No.	TOTAL SHEETS
08	Riv,SBd	91,215	21.5/21.7, 43.2/45.2,0.0/5.1	223	1743

REGISTERED CIVIL ENGINEER 1-2-12 DATE

4-16-12
PLANS APPROVAL DATE

REGISTERED PROFESSIONAL ENGINEER
REFAAT ELSHERIF
No. C67382
Exp. 9-30-12
CIVIL
STATE OF CALIFORNIA

THE STATE OF CALIFORNIA OR ITS OFFICERS OR AGENTS SHALL NOT BE RESPONSIBLE FOR THE ACCURACY OR COMPLETENESS OF SCANNED COPIES OF THIS PLAN SHEET.

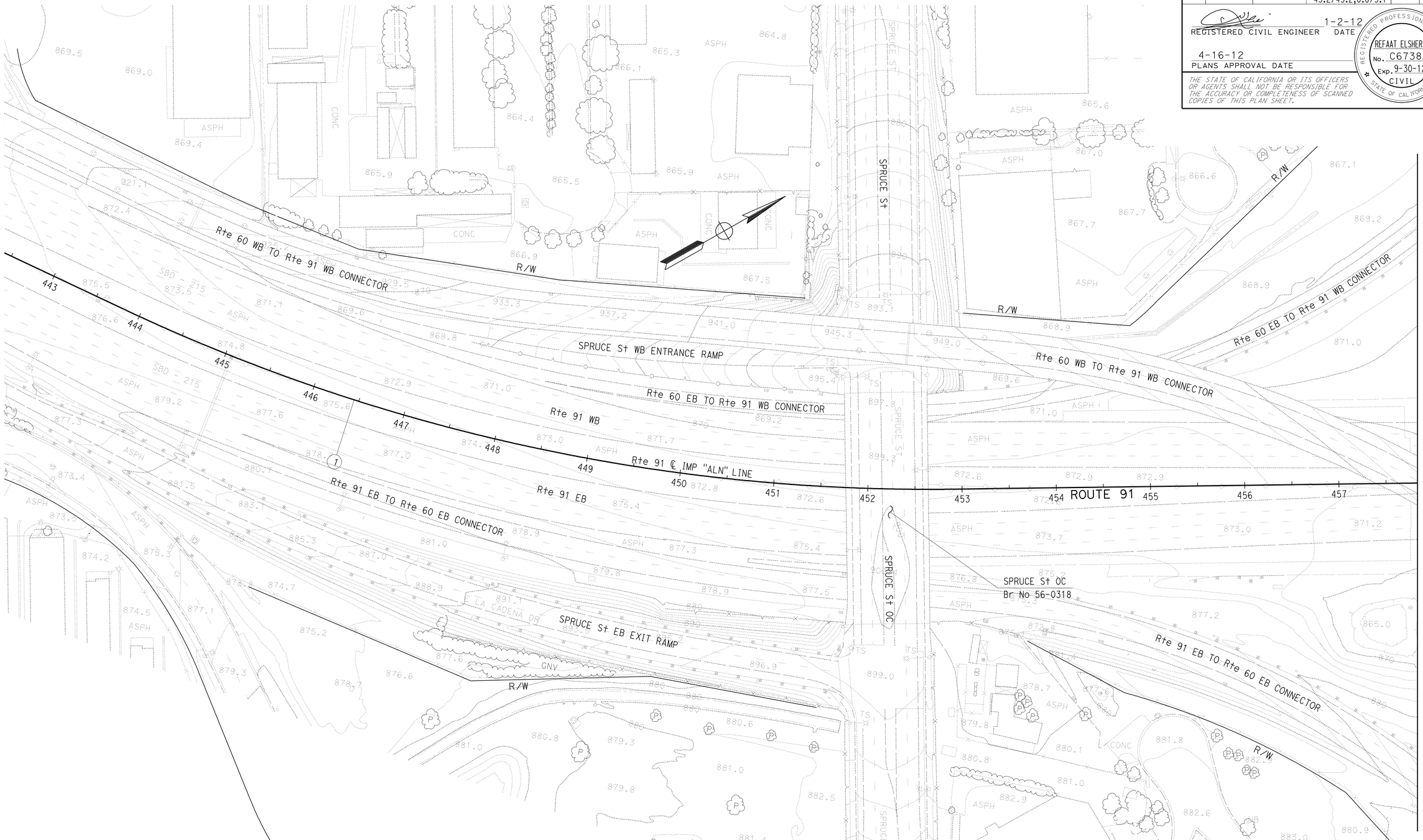

CONTOUR GRADING

SCALE: 1" = 50'

G-1

APPROVED FOR CONTOUR GRADING WORK ONLY

STATE OF CALIFORNIA - DEPARTMENT OF TRANSPORTATION
Caltrans
DESIGN

FUNCTIONAL SUPERVISOR: BEN AMIRI
CALCULATED-DESIGNED BY: CAT QUACH
CHECKED BY: TUAN TROUNG
REVISED BY
DATE REVISED

LAST REVISION 01-02-12
DATE PLOTTED => 17-APR-2012
TIME PLOTTED => 16:18

Dist	COUNTY	ROUTE	POST MILES TOTAL PROJECT	SHEET No.	TOTAL SHEETS
08	Riv,SBd	91,215	21.5/21.7, 43.2/45.2,0.0/5.1	224	1743

REGISTERED CIVIL ENGINEER 1-2-12 DATE

4-16-12
PLANS APPROVAL DATE

REGISTERED PROFESSIONAL ENGINEER
REFAAT ELSHERIF
No. C67382
Exp. 9-30-12
CIVIL
STATE OF CALIFORNIA

THE STATE OF CALIFORNIA OR ITS OFFICERS OR AGENTS SHALL NOT BE RESPONSIBLE FOR THE ACCURACY OR COMPLETENESS OF SCANNED COPIES OF THIS PLAN SHEET.

NOTES:

1. FOR COMPLETE RIGHT OF WAY AND ACCURATE ACCESS DATA, SEE RIGHT OF WAY RECORD MAPS AT DISTRICT OFFICE.

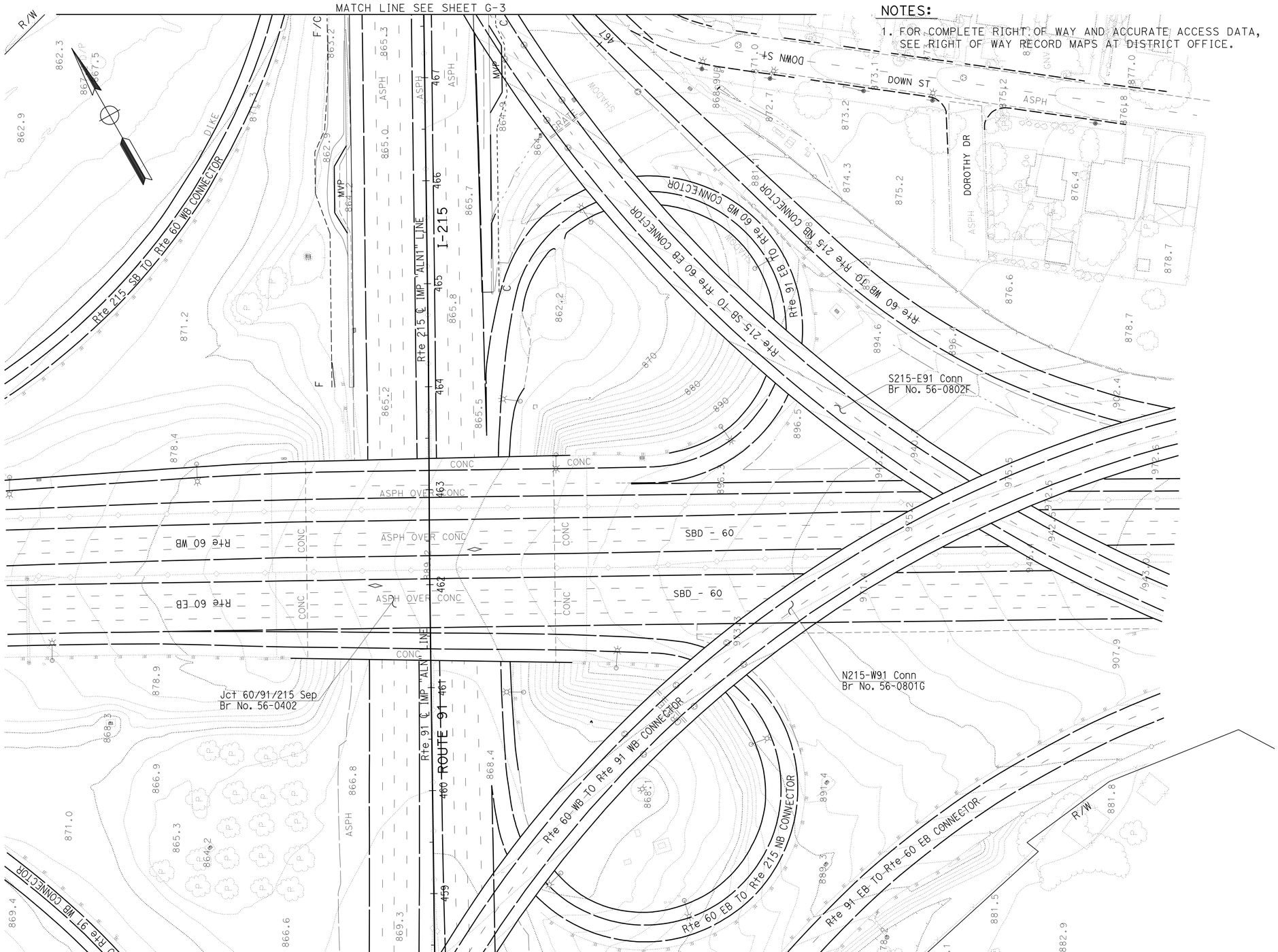

CONTOUR GRADING

SCALE: 1" = 50'

G-2

APPROVED FOR CONTOUR GRADING WORK ONLY

STATE OF CALIFORNIA - DEPARTMENT OF TRANSPORTATION
Caltrans®
DESIGN

FUNCTIONAL SUPERVISOR: BEN AMIRI
CALCULATED-DESIGNED BY: CAT QUACH
CHECKED BY: TUAN TROUNG
REVISED BY
DATE REVISED

LAST REVISION 01-02-12
DATE PLOTTED => 17-APR-2012
TIME PLOTTED => 16:19

Dist	COUNTY	ROUTE	POST MILES TOTAL PROJECT	SHEET No.	TOTAL SHEETS
08	Riv,SBd	91,215	21.5/21.7, 43.2/45.2,0.0/5.1	225	1743

REGISTERED CIVIL ENGINEER 1-2-12 DATE

4-16-12
PLANS APPROVAL DATE

REGISTERED PROFESSIONAL ENGINEER
REFAAT ELSHERIF
No. C67382
Exp. 9-30-12
CIVIL
STATE OF CALIFORNIA

THE STATE OF CALIFORNIA OR ITS OFFICERS OR AGENTS SHALL NOT BE RESPONSIBLE FOR THE ACCURACY OR COMPLETENESS OF SCANNED COPIES OF THIS PLAN SHEET.

MATCH LINE SEE SHEET G-4

NOTES:

1. FOR COMPLETE RIGHT OF WAY AND ACCURATE ACCESS DATA, SEE RIGHT OF WAY RECORD MAPS AT DISTRICT OFFICE.

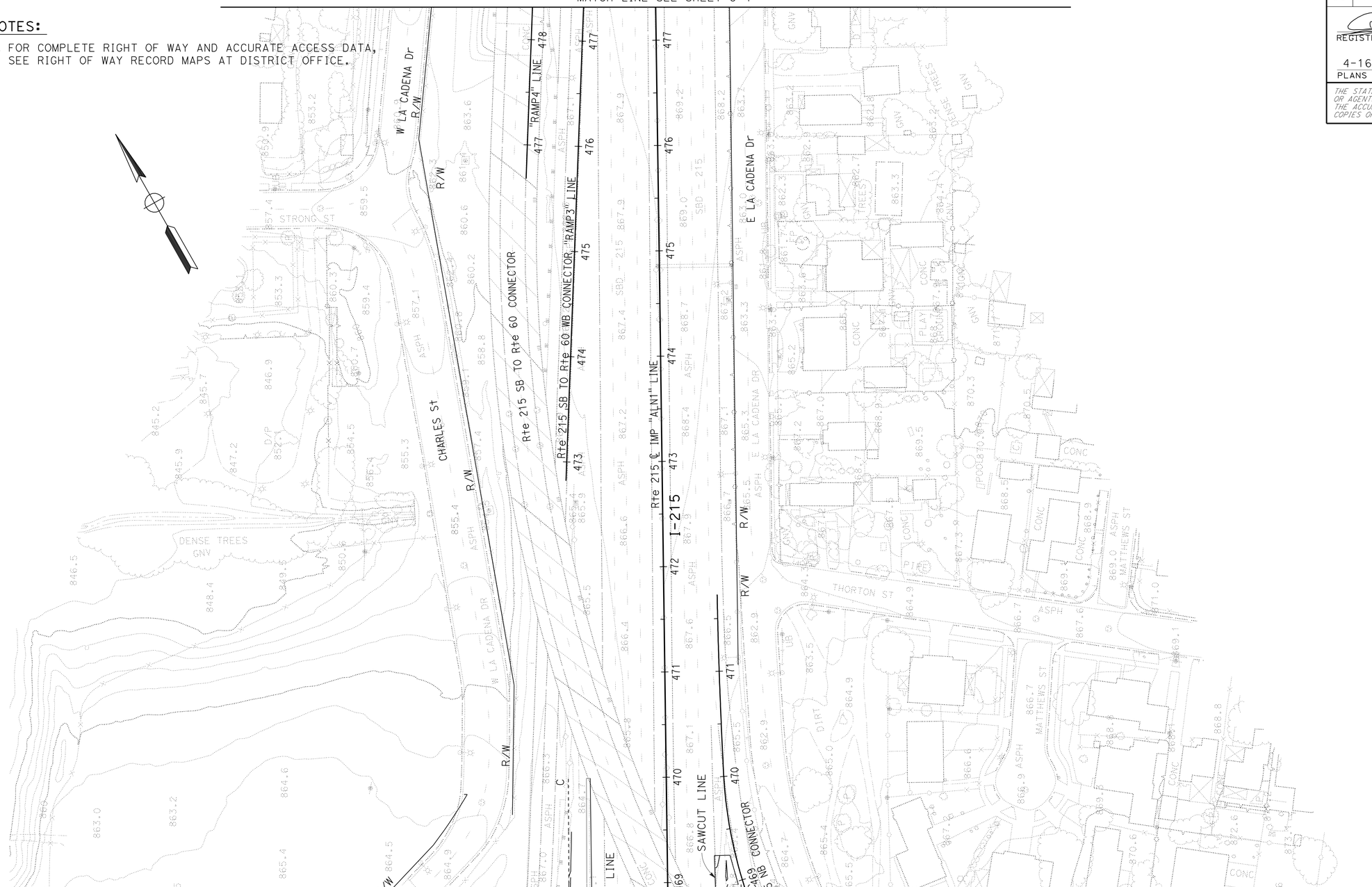

CONTOUR GRADING

SCALE: 1" = 50'

G-3

APPROVED FOR CONTOUR GRADING WORK ONLY

STATE OF CALIFORNIA - DEPARTMENT OF TRANSPORTATION
Caltrans
DESIGN

FUNCTIONAL SUPERVISOR: BEN AMIRI
CALCULATED-DESIGNED BY: CAT QUACH
CHECKED BY: TUAN TROUNG
REVISED BY
DATE REVISED

LAST REVISION 01-02-12
DATE PLOTTED => 17-APR-2012
TIME PLOTTED => 16:19

Dist	COUNTY	ROUTE	POST MILES TOTAL PROJECT	SHEET No.	TOTAL SHEETS
08	Riv,SBd	91,215	21.5/21.7, 43.2/45.2,0.0/5.1	226	1743

REGISTERED CIVIL ENGINEER 1-2-12 DATE

4-16-12
PLANS APPROVAL DATE

REGISTERED PROFESSIONAL ENGINEER
REFAAT ELSHERIF
No. C67382
Exp. 9-30-12
CIVIL
STATE OF CALIFORNIA

THE STATE OF CALIFORNIA OR ITS OFFICERS OR AGENTS SHALL NOT BE RESPONSIBLE FOR THE ACCURACY OR COMPLETENESS OF SCANNED COPIES OF THIS PLAN SHEET.

NOTES:

1. FOR COMPLETE RIGHT OF WAY AND ACCURATE ACCESS DATA, SEE RIGHT OF WAY RECORD MAPS AT DISTRICT OFFICE.

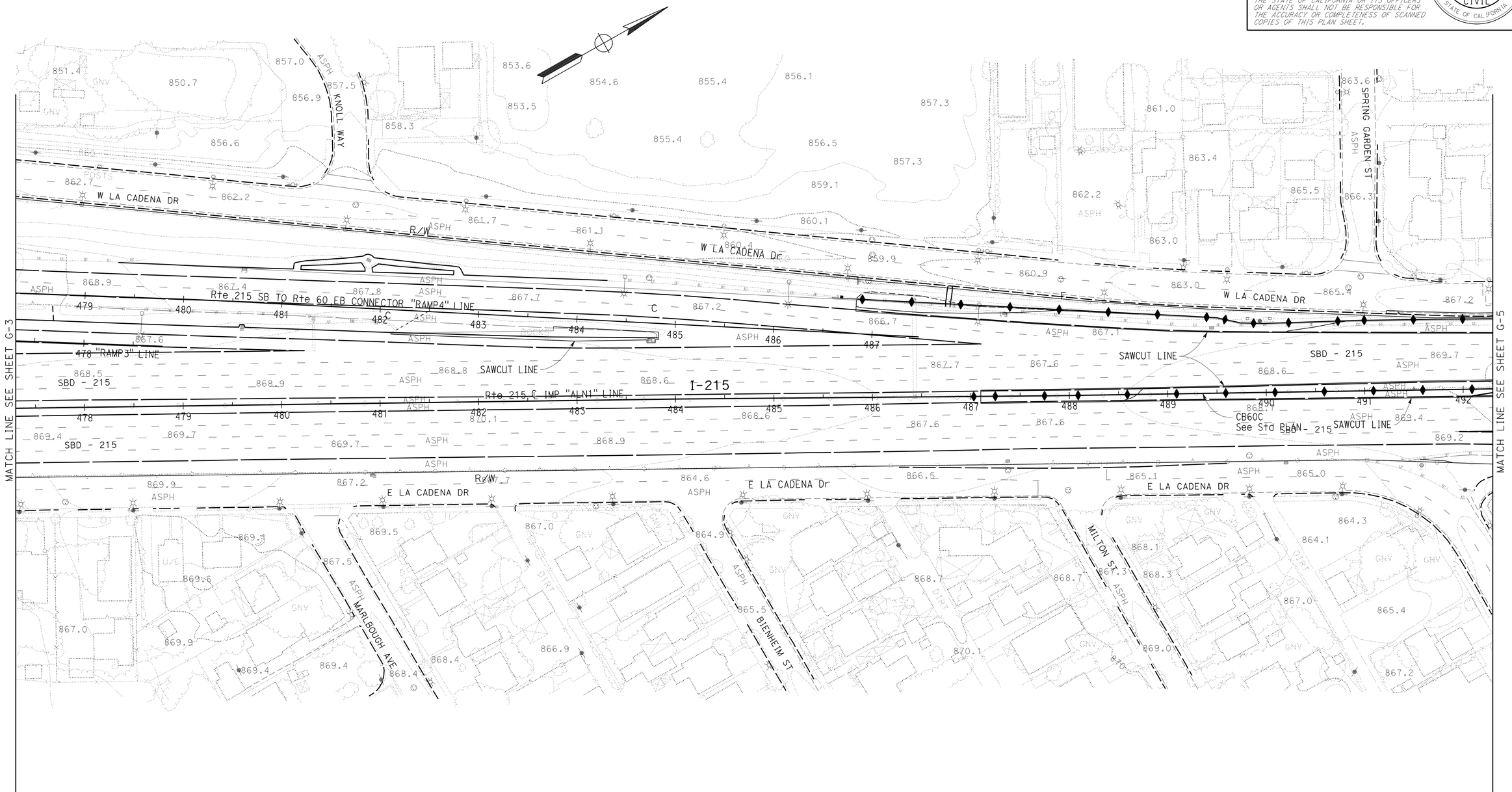

CONTOUR GRADING

SCALE: 1" = 50'

G-4

APPROVED FOR CONTOUR GRADING WORK ONLY

STATE OF CALIFORNIA - DEPARTMENT OF TRANSPORTATION
Caltrans
DESIGN

FUNCTIONAL SUPERVISOR: BEN AMIRI
CALCULATED-DESIGNED BY: CAT QUACH
CHECKED BY: TUAN TROUNG
REVISED BY
DATE REVISED

LAST REVISION 01-02-12
DATE PLOTTED => 17-APR-2012
TIME PLOTTED => 16:19

Dist	COUNTY	ROUTE	POST MILES TOTAL PROJECT	SHEET No.	TOTAL SHEETS
08	Riv,SBd	91,215	21.5/21.7, 43.2/45.2,0.0/5.1	227	1743

REGISTERED CIVIL ENGINEER 1-2-12 DATE

4-16-12
PLANS APPROVAL DATE

REGISTERED PROFESSIONAL ENGINEER
REFAAT ELSHERIF
No. C67382
Exp. 9-30-12
CIVIL
STATE OF CALIFORNIA

THE STATE OF CALIFORNIA OR ITS OFFICERS OR AGENTS SHALL NOT BE RESPONSIBLE FOR THE ACCURACY OR COMPLETENESS OF SCANNED COPIES OF THIS PLAN SHEET.

NOTES:

1. FOR COMPLETE RIGHT OF WAY AND ACCURATE ACCESS DATA, SEE RIGHT OF WAY RECORD MAPS AT DISTRICT OFFICE.

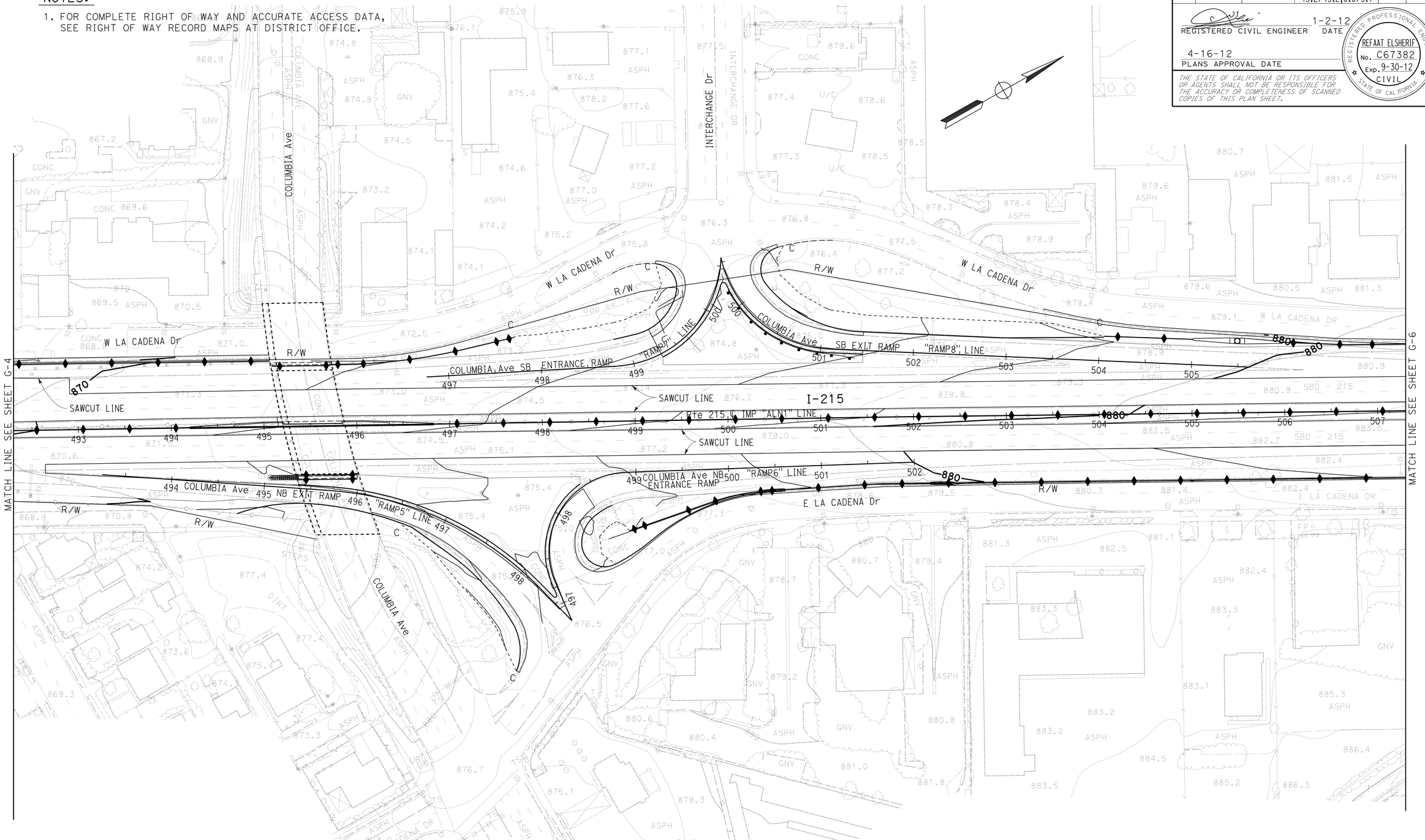

CONTOUR GRADING

SCALE: 1" = 50'

G-5

APPROVED FOR CONTOUR GRADING WORK ONLY

STATE OF CALIFORNIA - DEPARTMENT OF TRANSPORTATION
DESIGN
Caltrans

FUNCTIONAL SUPERVISOR: BEN AMIRI
CALCULATED-DESIGNED BY: CAT QUACH
CHECKED BY: TUAN TROUNG
REVISED BY
DATE REVISED

LAST REVISION 01-02-12
DATE PLOTTED => 17-APR-2012
TIME PLOTTED => 16:19

Dist	COUNTY	ROUTE	POST MILES TOTAL PROJECT	SHEET No.	TOTAL SHEETS
08	Riv,SBd	91,215	21.5/21.7, 43.2/45.2,0.0/5.1	228	1743

REGISTERED CIVIL ENGINEER 1-2-12 DATE

4-16-12
PLANS APPROVAL DATE

REGISTERED PROFESSIONAL ENGINEER
REFAAT ELSHERIF
No. C67382
Exp. 9-30-12
CIVIL
STATE OF CALIFORNIA

THE STATE OF CALIFORNIA OR ITS OFFICERS OR AGENTS SHALL NOT BE RESPONSIBLE FOR THE ACCURACY OR COMPLETENESS OF SCANNED COPIES OF THIS PLAN SHEET.

NOTES:

1. FOR COMPLETE RIGHT OF WAY AND ACCURATE ACCESS DATA, SEE RIGHT OF WAY RECORD MAPS AT DISTRICT OFFICE.

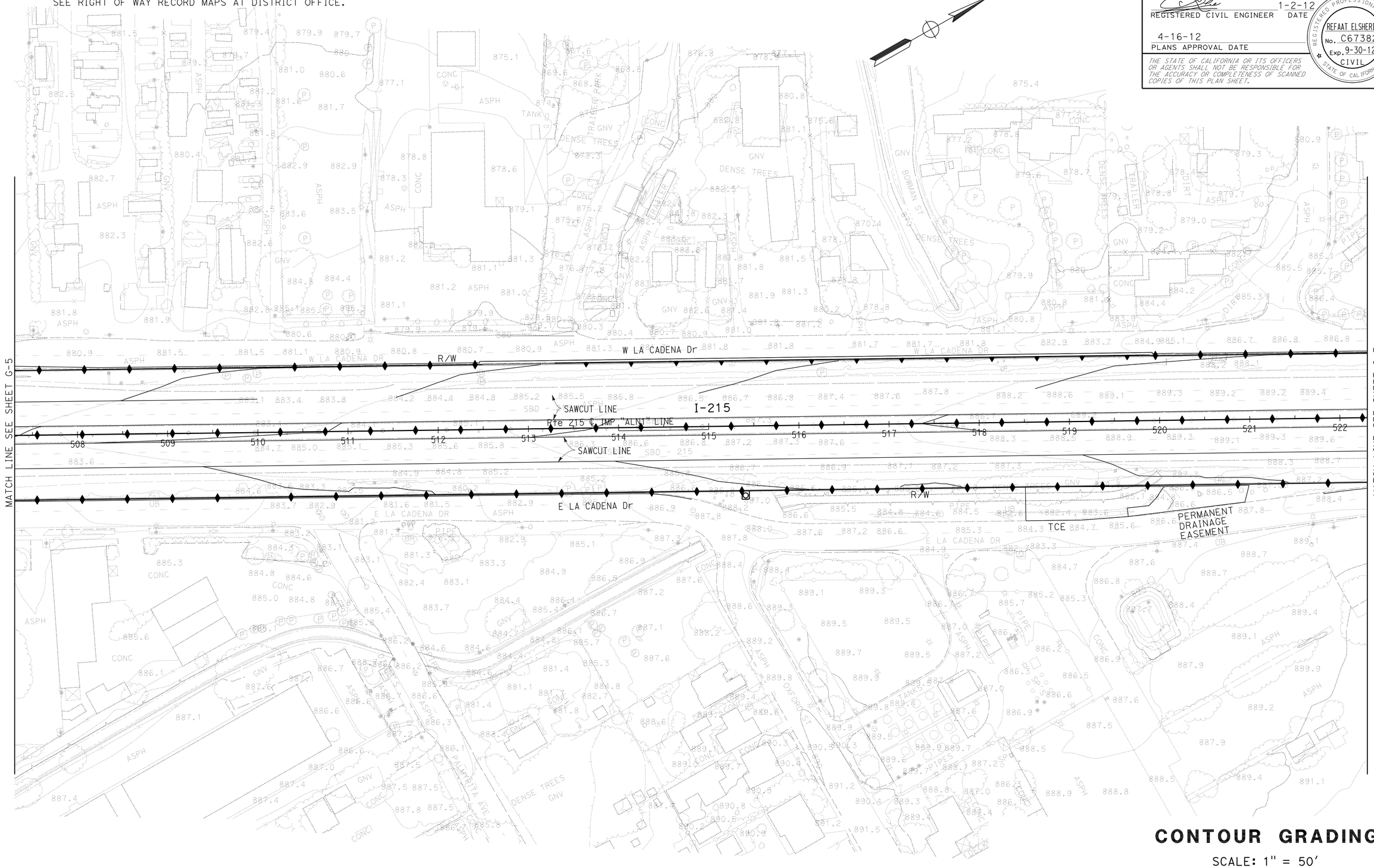

CONTOUR GRADING

SCALE: 1" = 50'

G-6

APPROVED FOR CONTOUR GRADING WORK ONLY

STATE OF CALIFORNIA - DEPARTMENT OF TRANSPORTATION

Caltrans

DESIGN

FUNCTIONAL SUPERVISOR: BEN AMIRI

CALCULATED-DESIGNED BY: CAT QUACH

CHECKED BY: TUAN TROUNG

REVISED BY

DATE REVISED

LAST REVISION 01-02-12

DATE PLOTTED => 17-APR-2012
TIME PLOTTED => 16:19

Dist	COUNTY	ROUTE	POST MILES TOTAL PROJECT	SHEET No.	TOTAL SHEETS
08	Riv,SBd	91,215	21.5/21.7, 43.2/45.2,0.0/5.1	229	1743

REGISTERED CIVIL ENGINEER 1-2-12 DATE

4-16-12
PLANS APPROVAL DATE

REGISTERED PROFESSIONAL ENGINEER
REFAAT ELSHERIF
No. C67382
Exp. 9-30-12
CIVIL
STATE OF CALIFORNIA

THE STATE OF CALIFORNIA OR ITS OFFICERS OR AGENTS SHALL NOT BE RESPONSIBLE FOR THE ACCURACY OR COMPLETENESS OF SCANNED COPIES OF THIS PLAN SHEET.

NOTES:

1. FOR COMPLETE RIGHT OF WAY AND ACCURATE ACCESS DATA, SEE RIGHT OF WAY RECORD MAPS AT DISTRICT OFFICE.

CONTOUR GRADING

SCALE: 1" = 50'

G-7

APPROVED FOR CONTOUR GRADING WORK ONLY

STATE OF CALIFORNIA - DEPARTMENT OF TRANSPORTATION
Caltrans
DESIGN

FUNCTIONAL SUPERVISOR: BEN AMIRI

CALCULATED-DESIGNED BY: CAT QUACH
CHECKED BY: TUAN TROUNG

REVISED BY
DATE REVISED

LAST REVISION 01-02-12
DATE PLOTTED => 17-APR-2012
TIME PLOTTED => 16:19

Dist	COUNTY	ROUTE	POST MILES TOTAL PROJECT	SHEET No.	TOTAL SHEETS
08	Riv,SBd	91,215	21.5/21.7, 43.2/45.2,0.0/5.1	230	1743

REGISTERED CIVIL ENGINEER 1-2-12 DATE

4-16-12
PLANS APPROVAL DATE

REGISTERED PROFESSIONAL ENGINEER
REFAAT ELSHERIF
No. C67382
Exp. 9-30-12
CIVIL
STATE OF CALIFORNIA

THE STATE OF CALIFORNIA OR ITS OFFICERS OR AGENTS SHALL NOT BE RESPONSIBLE FOR THE ACCURACY OR COMPLETENESS OF SCANNED COPIES OF THIS PLAN SHEET.

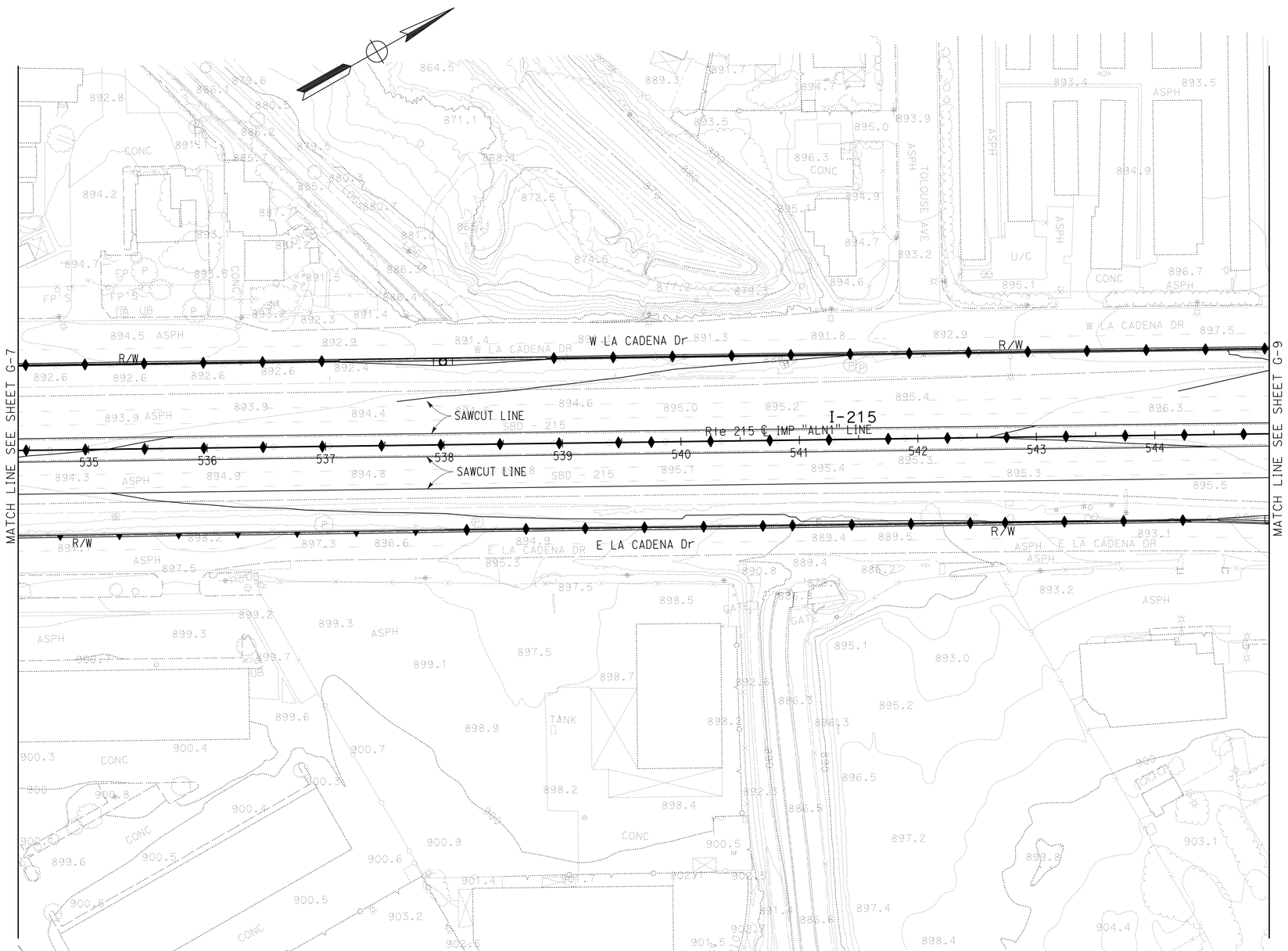

CONTOUR GRADING

SCALE: 1" = 50'

G-8

APPROVED FOR CONTOUR GRADING WORK ONLY

STATE OF CALIFORNIA - DEPARTMENT OF TRANSPORTATION
Caltrans
DESIGN

FUNCTIONAL SUPERVISOR: BEN AMIRI
CALCULATED-DESIGNED BY: TUAN TROUNG
CHECKED BY: CAT QUACH
REVISED BY
DATE REVISED

LAST REVISION 01-02-12
DATE PLOTTED => 17-APR-2012
TIME PLOTTED => 16:19

Dist	COUNTY	ROUTE	POST MILES TOTAL PROJECT	SHEET No.	TOTAL SHEETS
08	Riv,SBd	91,215	21.5/21.7, 43.2/45.2,0.0/5.1	231	1743

REGISTERED CIVIL ENGINEER 1-2-12 DATE

4-16-12
PLANS APPROVAL DATE

REGISTERED PROFESSIONAL ENGINEER REFAAT ELSHERIF No. C67382 Exp. 9-30-12 CIVIL STATE OF CALIFORNIA

THE STATE OF CALIFORNIA OR ITS OFFICERS OR AGENTS SHALL NOT BE RESPONSIBLE FOR THE ACCURACY OR COMPLETENESS OF SCANNED COPIES OF THIS PLAN SHEET.

NOTES:

1. FOR COMPLETE RIGHT OF WAY AND ACCURATE ACCESS DATA, SEE RIGHT OF WAY RECORD MAPS AT DISTRICT OFFICE.

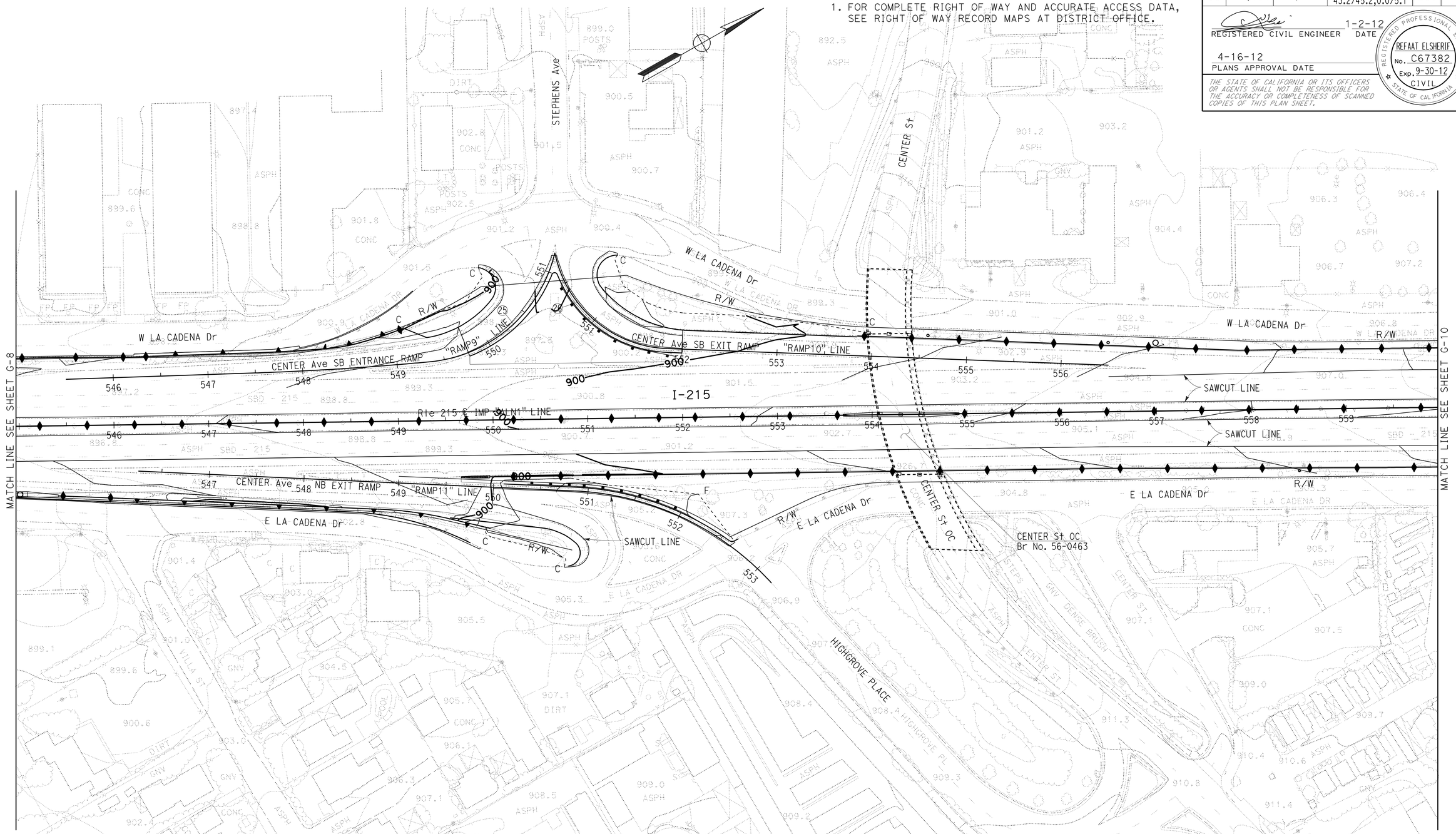

CONTOUR GRADING

SCALE: 1" = 50'

G-9

APPROVED FOR CONTOUR GRADING WORK ONLY

STATE OF CALIFORNIA - DEPARTMENT OF TRANSPORTATION
Caltrans
DESIGN

FUNCTIONAL SUPERVISOR: BEN AMIRI
CALCULATED-DESIGNED BY: TUAN TROUNG
CHECKED BY: CAT QUACH
REVISED BY
DATE REVISED

LAST REVISION 01-02-12
DATE PLOTTED => 17-APR-2012
TIME PLOTTED => 16:19

Dist	COUNTY	ROUTE	POST MILES TOTAL PROJECT	SHEET No.	TOTAL SHEETS
08	Riv,SBd	91,215	21.5/21.7, 43.2/45.2,0.0/5.1	232	1743

REGISTERED CIVIL ENGINEER 1-2-12 DATE

4-16-12
PLANS APPROVAL DATE

REGISTERED PROFESSIONAL ENGINEER
REFAAT ELSHERIF
No. C67382
Exp. 9-30-12
CIVIL
STATE OF CALIFORNIA

THE STATE OF CALIFORNIA OR ITS OFFICERS OR AGENTS SHALL NOT BE RESPONSIBLE FOR THE ACCURACY OR COMPLETENESS OF SCANNED COPIES OF THIS PLAN SHEET.

NOTES:

1. FOR COMPLETE RIGHT OF WAY AND ACCURATE ACCESS DATA, SEE RIGHT OF WAY RECORD MAPS AT DISTRICT OFFICE.

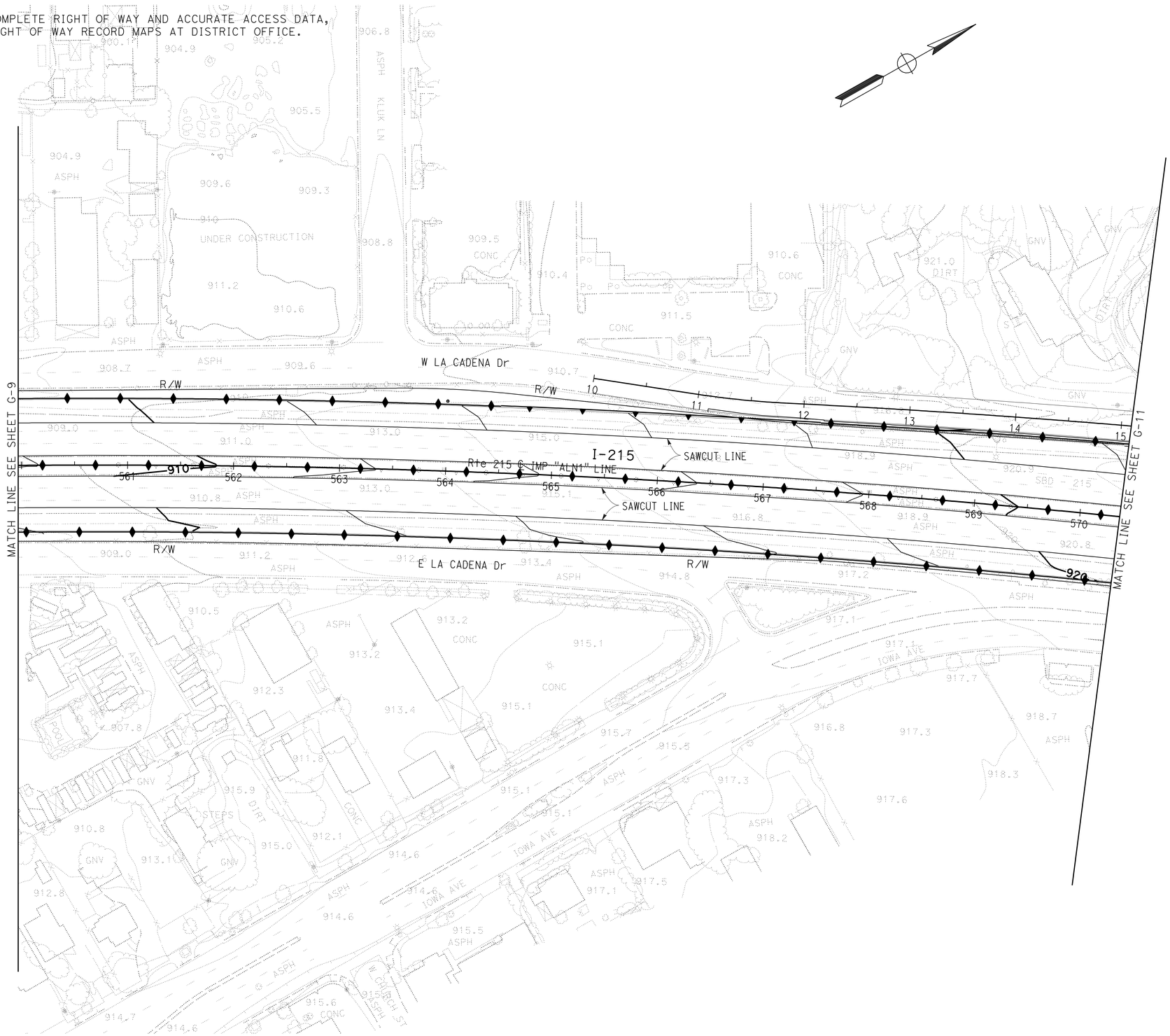

CONTOUR GRADING

SCALE: 1" = 50'

G-10

APPROVED FOR CONTOUR GRADING WORK ONLY

STATE OF CALIFORNIA - DEPARTMENT OF TRANSPORTATION
Caltrans
DESIGN

FUNCTIONAL SUPERVISOR: BEN AMIRI
CALCULATED-DESIGNED BY: CAT QUACH
CHECKED BY: TUAN TROUNG
REVISED BY
DATE REVISED

LAST REVISION 01-02-12
DATE PLOTTED => 17-APR-2012
TIME PLOTTED => 16:20

Dist	COUNTY	ROUTE	POST MILES TOTAL PROJECT	SHEET No.	TOTAL SHEETS
08	Riv,SBd	91,215	21.5/21.7, 43.2/45.2,0.0/5.1	233	1743

REGISTERED CIVIL ENGINEER 1-2-12 DATE

4-16-12
PLANS APPROVAL DATE

REGISTERED PROFESSIONAL ENGINEER
REFAAT ELSHERIF
No. C67382
Exp. 9-30-12
CIVIL
STATE OF CALIFORNIA

THE STATE OF CALIFORNIA OR ITS OFFICERS OR AGENTS SHALL NOT BE RESPONSIBLE FOR THE ACCURACY OR COMPLETENESS OF SCANNED COPIES OF THIS PLAN SHEET.

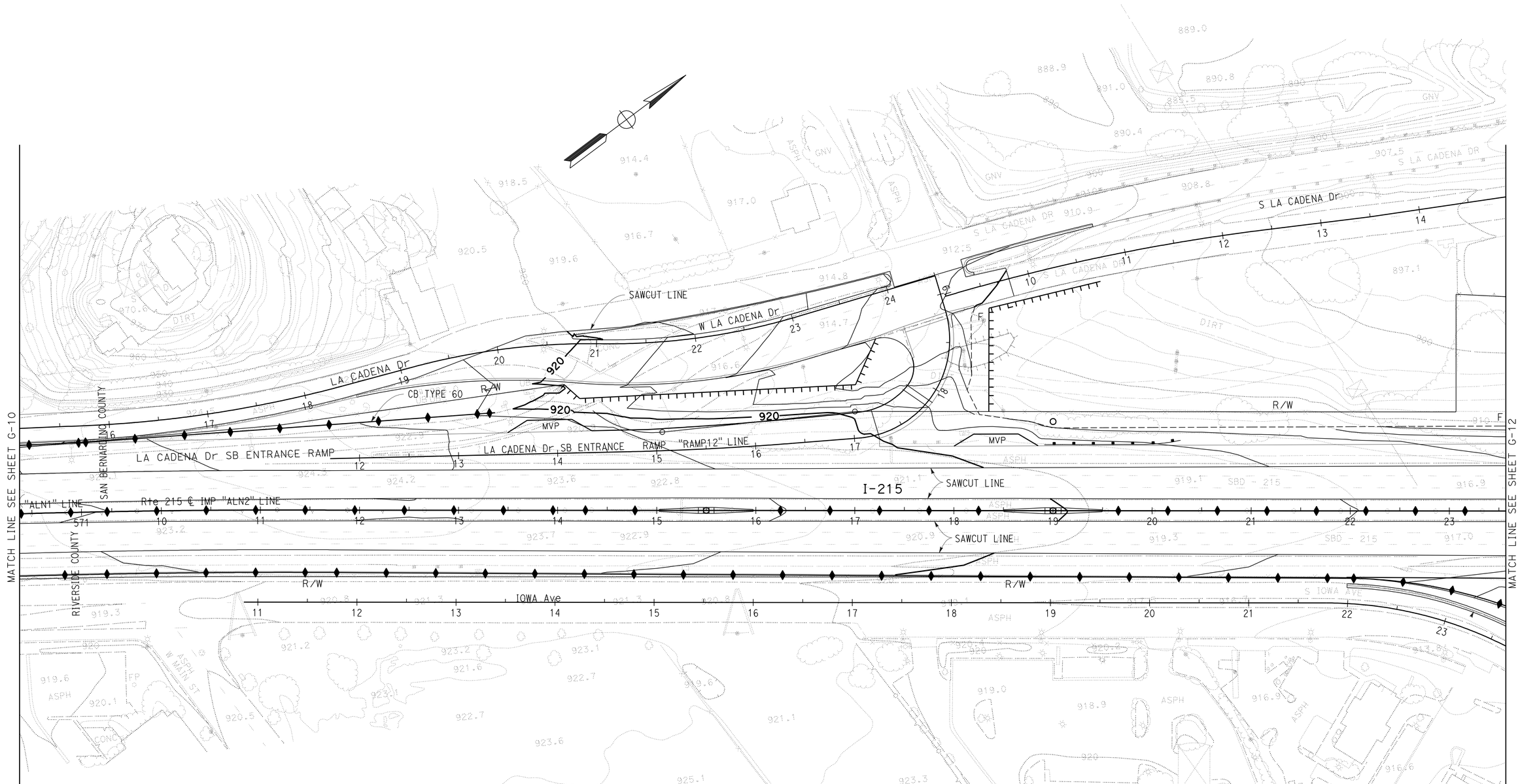

CONTOUR GRADING

SCALE: 1" = 50'

G-11

APPROVED FOR CONTOUR GRADING WORK ONLY

STATE OF CALIFORNIA - DEPARTMENT OF TRANSPORTATION
Caltrans
DESIGN

FUNCTIONAL SUPERVISOR: BEN AMIRI
CALCULATED-DESIGNED BY: TUAN TROUNG
CHECKED BY: CAT QUACH
REVISED BY
DATE REVISED

LAST REVISION 01-02-12
DATE PLOTTED => 17-APR-2012
TIME PLOTTED => 16:20

Dist	COUNTY	ROUTE	POST MILES TOTAL PROJECT	SHEET No.	TOTAL SHEETS
08	Riv,SBd	91,215	21.5/21.7, 43.2/45.2,0.0/5.1	234	1743

REGISTERED CIVIL ENGINEER 1-2-12 DATE

4-16-12
PLANS APPROVAL DATE

REGISTERED PROFESSIONAL ENGINEER REFAAT ELSHERIF No. C67382 Exp. 9-30-12 CIVIL STATE OF CALIFORNIA

THE STATE OF CALIFORNIA OR ITS OFFICERS OR AGENTS SHALL NOT BE RESPONSIBLE FOR THE ACCURACY OR COMPLETENESS OF SCANNED COPIES OF THIS PLAN SHEET.

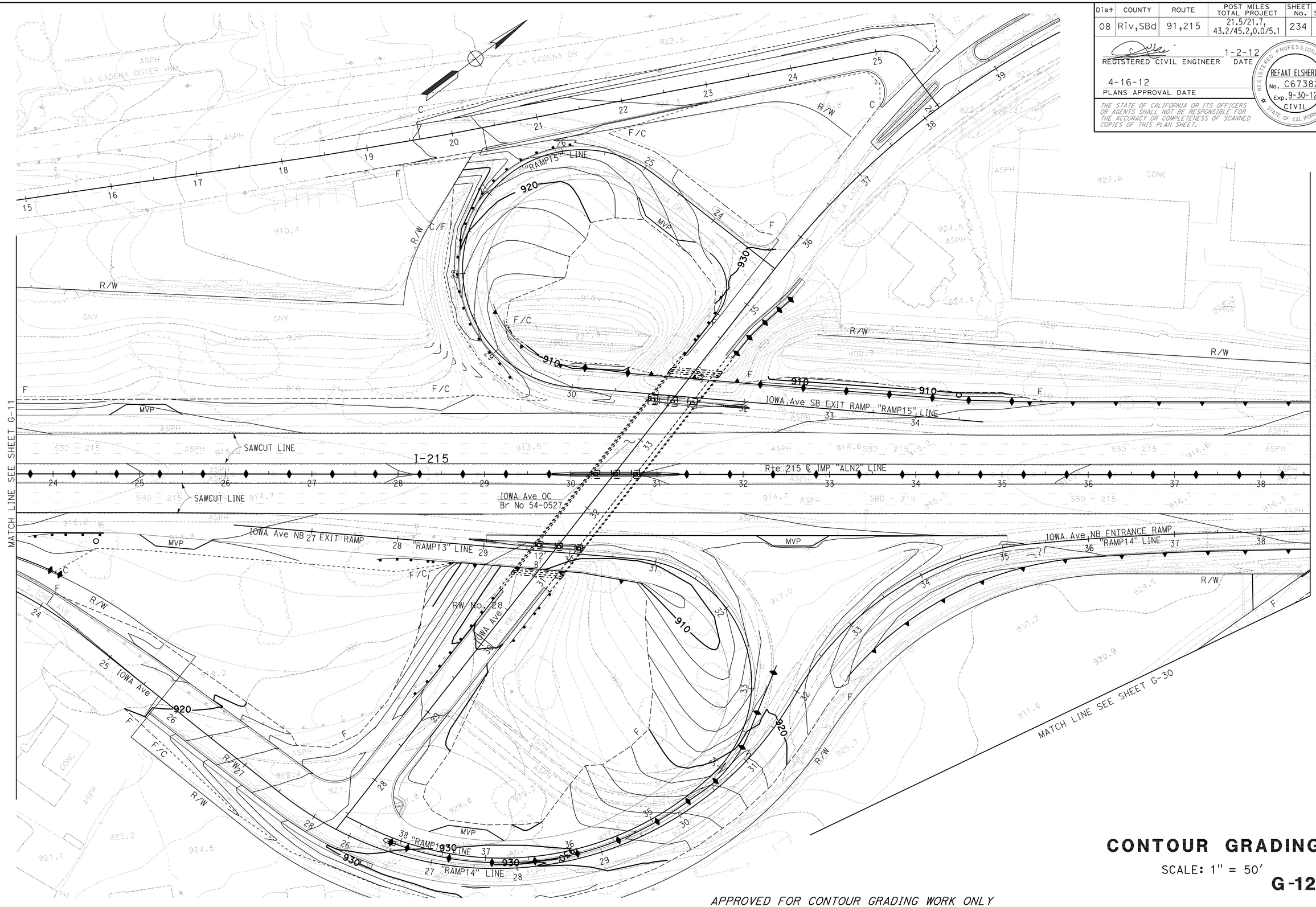

CONTOUR GRADING

SCALE: 1" = 50'

G-12

APPROVED FOR CONTOUR GRADING WORK ONLY

STATE OF CALIFORNIA - DEPARTMENT OF TRANSPORTATION

Caltrans DESIGN

FUNCTIONAL SUPERVISOR: BEN AMIRI

CALCULATED-DESIGNED BY: CAT QUACH

CHECKED BY: TUAN TROUNG

REVISED BY / DATE REVISED

LAST REVISION 01-02-12 | DATE PLOTTED => 17-APR-2012 | TIME PLOTTED => 16:20

Dist	COUNTY	ROUTE	POST MILES TOTAL PROJECT	SHEET No.	TOTAL SHEETS
08	Riv,SBd	91,215	21.5/21.7, 43.2/45.2,0.0/5.1	235	1743

REGISTERED CIVIL ENGINEER 1-2-12 DATE

4-16-12
PLANS APPROVAL DATE

REGISTERED PROFESSIONAL ENGINEER
REFAAT ELSHERIF
No. C67382
Exp. 9-30-12
CIVIL
STATE OF CALIFORNIA

THE STATE OF CALIFORNIA OR ITS OFFICERS OR AGENTS SHALL NOT BE RESPONSIBLE FOR THE ACCURACY OR COMPLETENESS OF SCANNED COPIES OF THIS PLAN SHEET.

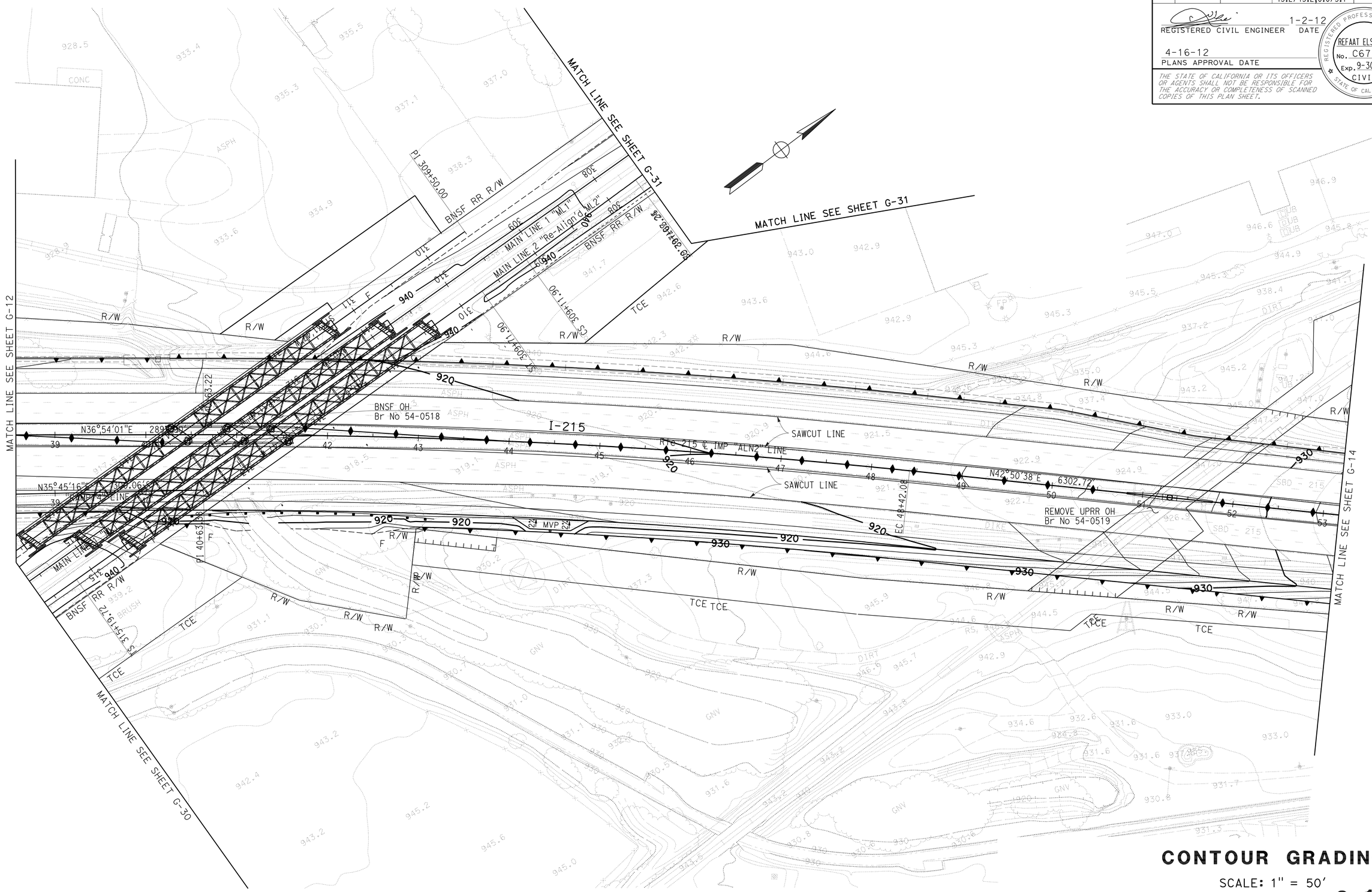

CONTOUR GRADING

SCALE: 1" = 50'

G-13

APPROVED FOR CONTOUR GRADING WORK ONLY

STATE OF CALIFORNIA - DEPARTMENT OF TRANSPORTATION
Caltrans
DESIGN

FUNCTIONAL SUPERVISOR: BEN AMIRI
CALCULATED-DESIGNED BY: CAT QUACH
CHECKED BY: TUAN TROUNG
REVISED BY
DATE REVISED

LAST REVISION 01-02-12
DATE PLOTTED => 17-APR-2012
TIME PLOTTED => 16:20

BORDER LAST REVISED 7/2/2010
USERNAME => s135318
DGN FILE => 80m94uha013.dgn
RELATIVE BORDER SCALE IS IN INCHES 0 1 2 3
UNIT 2242
PROJECT NUMBER & PHASE 08000005061

Dist	COUNTY	ROUTE	POST MILES TOTAL PROJECT	SHEET No.	TOTAL SHEETS
08	Riv,SBd	91,215	21.5/21.7, 43.2/45.2,0.0/5.1	236	1743

REGISTERED CIVIL ENGINEER 1-2-12 DATE

4-16-12
PLANS APPROVAL DATE

REGISTERED PROFESSIONAL ENGINEER
REFAAT ELSHERIF
No. C67382
Exp. 9-30-12
CIVIL
STATE OF CALIFORNIA

THE STATE OF CALIFORNIA OR ITS OFFICERS OR AGENTS SHALL NOT BE RESPONSIBLE FOR THE ACCURACY OR COMPLETENESS OF SCANNED COPIES OF THIS PLAN SHEET.

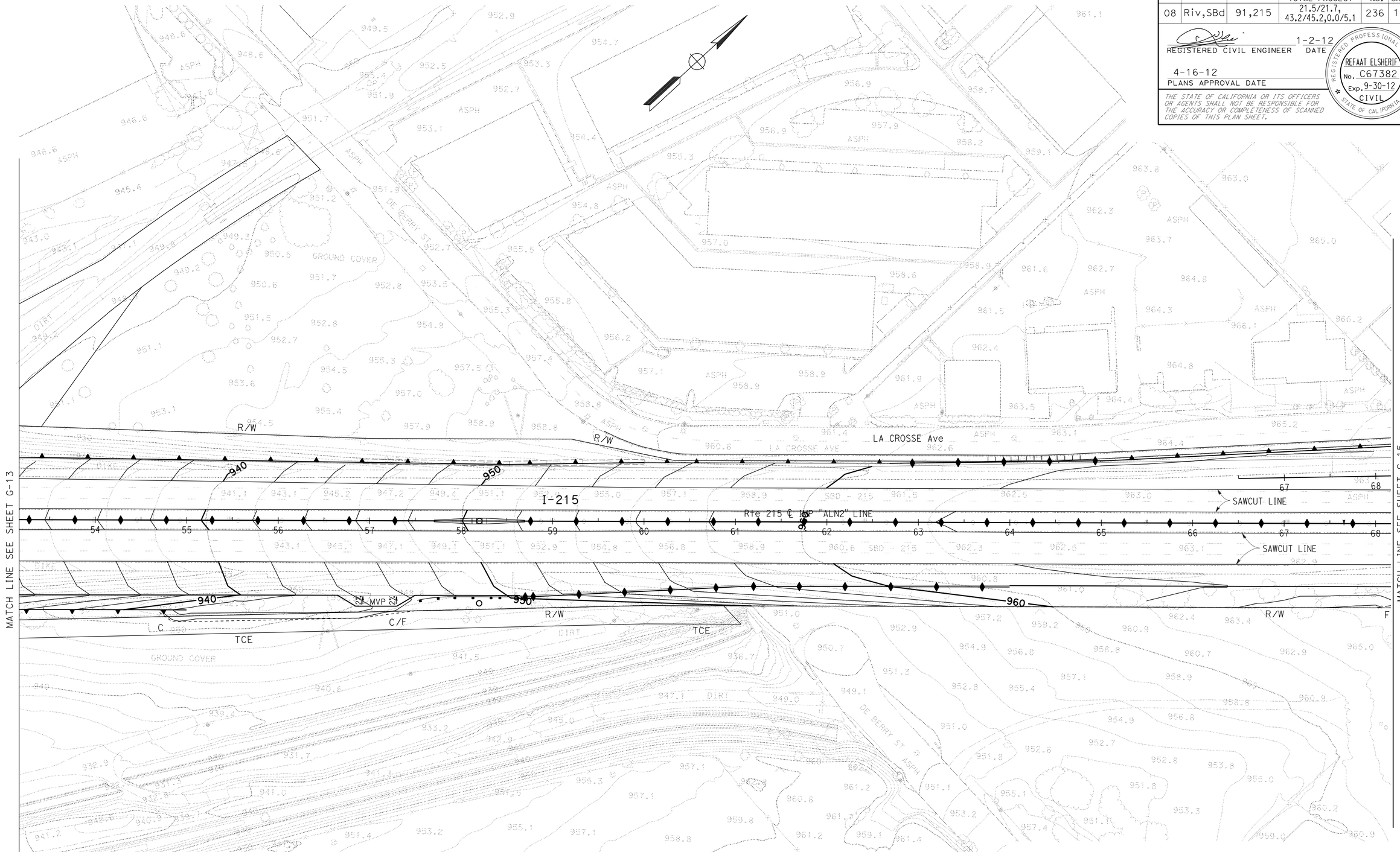

CONTOUR GRADING

SCALE: 1" = 50'

G-14

APPROVED FOR CONTOUR GRADING WORK ONLY

REVISED BY	DATE REVISED

CALCULATED-DESIGNED BY: CAT QUACH
CHECKED BY: TUAN TROUNG
FUNCTIONAL SUPERVISOR: BEN AMIRI

STATE OF CALIFORNIA - DEPARTMENT OF TRANSPORTATION
Caltrans
DESIGN

LAST REVISION 01-02-12
DATE PLOTTED => 17-APR-2012
TIME PLOTTED => 16:20

Dist	COUNTY	ROUTE	POST MILES TOTAL PROJECT	SHEET No.	TOTAL SHEETS
08	Riv,SBd	91,215	21.5/21.7, 43.2/45.2,0.0/5.1	237	1743

REGISTERED CIVIL ENGINEER 1-2-12 DATE

4-16-12
PLANS APPROVAL DATE

REGISTERED PROFESSIONAL ENGINEER
REFAAT ELSHERIF
No. C67382
Exp. 9-30-12
CIVIL
STATE OF CALIFORNIA

THE STATE OF CALIFORNIA OR ITS OFFICERS OR AGENTS SHALL NOT BE RESPONSIBLE FOR THE ACCURACY OR COMPLETENESS OF SCANNED COPIES OF THIS PLAN SHEET.

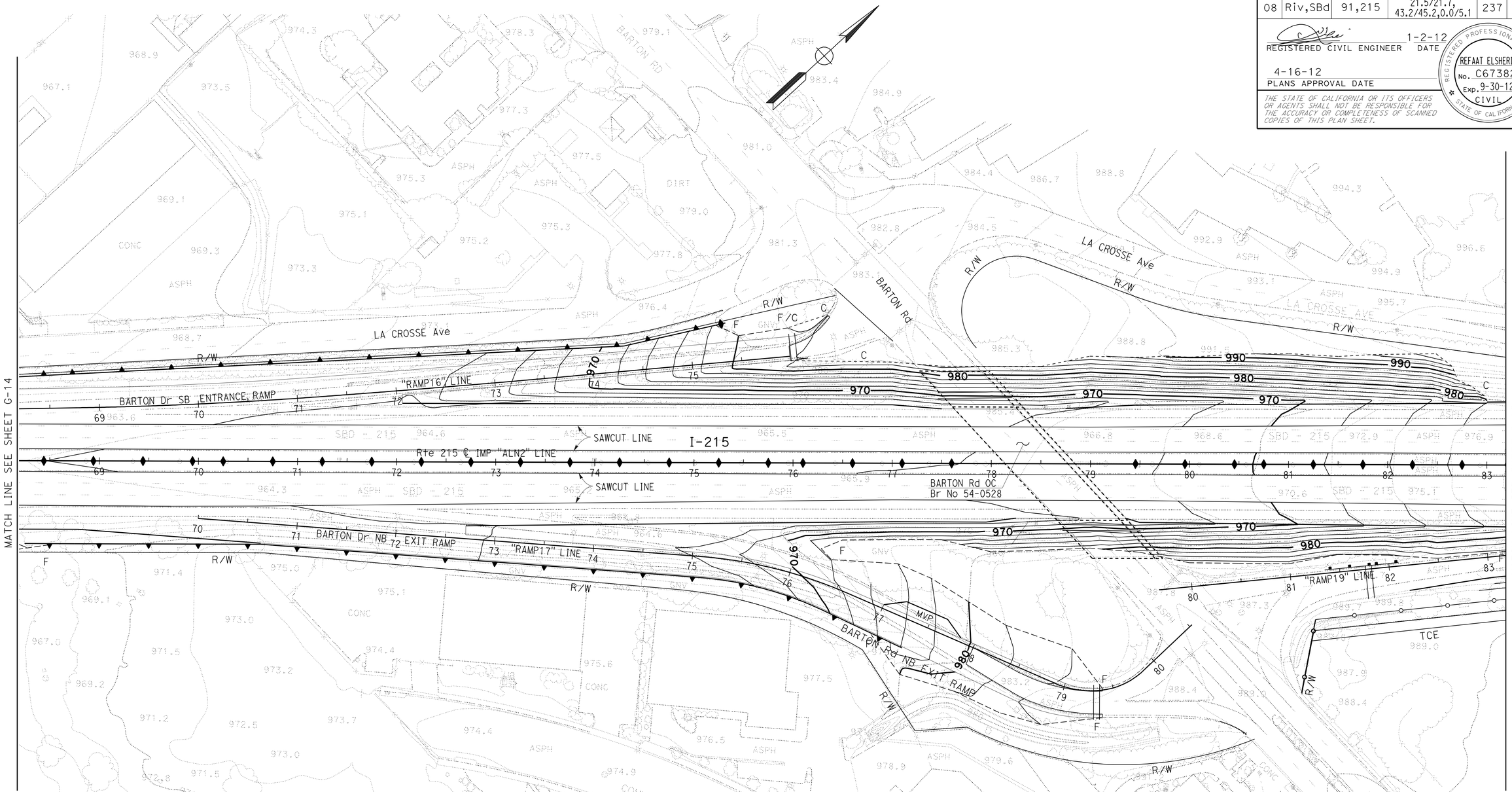

CONTOUR GRADING

SCALE: 1" = 50'

G-15

APPROVED FOR CONTOUR GRADING WORK ONLY

STATE OF CALIFORNIA - DEPARTMENT OF TRANSPORTATION
Caltrans
DESIGN

FUNCTIONAL SUPERVISOR: BEN AMIRI
CALCULATED-DESIGNED BY: TUAN TROUNG
CHECKED BY: CAT QUACH
REVISED BY
DATE REVISED

LAST REVISION 01-02-12
DATE PLOTTED => 17-APR-2012
TIME PLOTTED => 16:20

Dist	COUNTY	ROUTE	POST MILES TOTAL PROJECT	SHEET No.	TOTAL SHEETS
08	Riv,SBd	91,215	21.5/21.7, 43.2/45.2,0.0/5.1	238	1743

REGISTERED CIVIL ENGINEER 1-2-12 DATE

4-16-12
PLANS APPROVAL DATE

REGISTERED PROFESSIONAL ENGINEER REFAAT ELSHERIF No. C67382 Exp. 9-30-12 CIVIL STATE OF CALIFORNIA

THE STATE OF CALIFORNIA OR ITS OFFICERS OR AGENTS SHALL NOT BE RESPONSIBLE FOR THE ACCURACY OR COMPLETENESS OF SCANNED COPIES OF THIS PLAN SHEET.

NOTES:

1. FOR COMPLETE RIGHT OF WAY AND ACCURATE ACCESS DATA, SEE RIGHT OF WAY RECORD MAPS AT DISTRICT OFFICE.

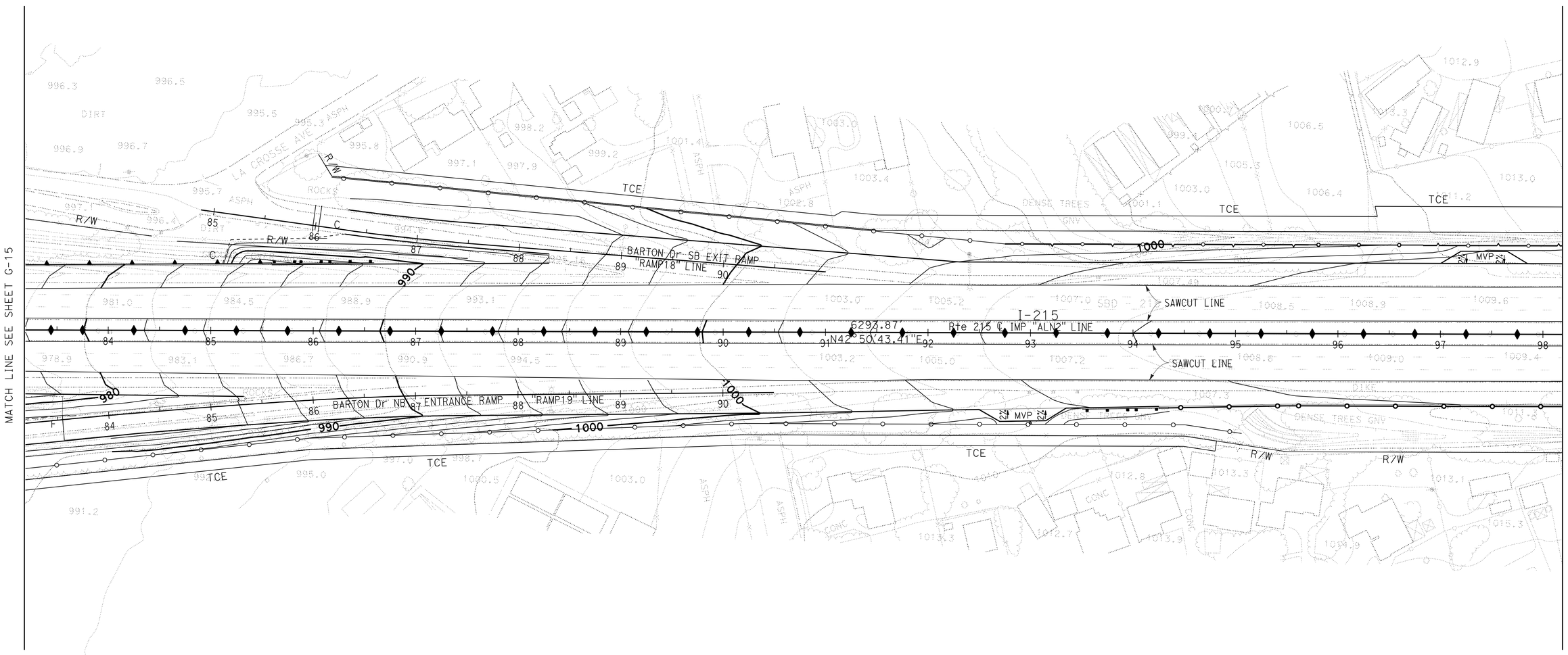

CONTOUR GRADING

SCALE: 1" = 50'

G-16

APPROVED FOR CONTOUR GRADING WORK ONLY

REVISED BY | DATE REVISED
CAT QUACH | TUAN TROUNG
CALCULATED-DESIGNED BY | CHECKED BY
FUNCTIONAL SUPERVISOR
BEN AMIRI

STATE OF CALIFORNIA - DEPARTMENT OF TRANSPORTATION
Caltrans
DESIGN

LAST REVISION 01-02-12 | DATE PLOTTED => 17-APR-2012 | TIME PLOTTED => 16:20

Dist	COUNTY	ROUTE	POST MILES TOTAL PROJECT	SHEET No.	TOTAL SHEETS
08	Riv,SBd	91,215	21.5/21.7, 43.2/45.2,0.0/5.1	239	1743

REGISTERED CIVIL ENGINEER 1-2-12 DATE

4-16-12
PLANS APPROVAL DATE

REGISTERED PROFESSIONAL ENGINEER
REFAAT ELSHERIF
No. C67382
Exp. 9-30-12
CIVIL
STATE OF CALIFORNIA

THE STATE OF CALIFORNIA OR ITS OFFICERS OR AGENTS SHALL NOT BE RESPONSIBLE FOR THE ACCURACY OR COMPLETENESS OF SCANNED COPIES OF THIS PLAN SHEET.

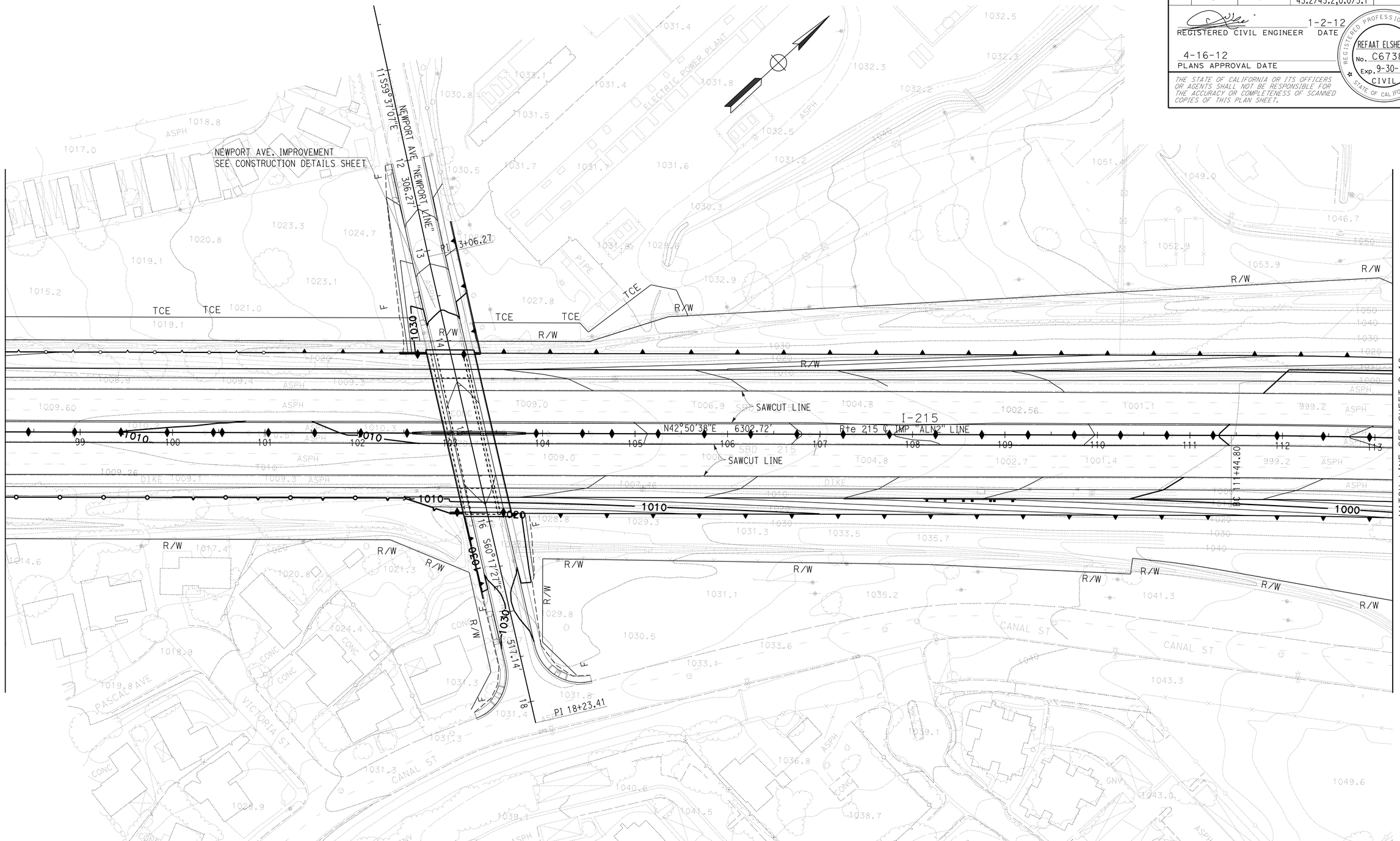

CONTOUR GRADING

SCALE: 1" = 50'

G-17

APPROVED FOR CONTOUR GRADING WORK ONLY

STATE OF CALIFORNIA - DEPARTMENT OF TRANSPORTATION
Caltrans
DESIGN

FUNCTIONAL SUPERVISOR: BEN AMIRI
CALCULATED-DESIGNED BY: CAT QUACH
CHECKED BY: TUAN TROUNG
REVISED BY
DATE REVISED

LAST REVISION 01-02-12
DATE PLOTTED => 17-APR-2012
TIME PLOTTED => 16:20

Dist	COUNTY	ROUTE	POST MILES TOTAL PROJECT	SHEET No.	TOTAL SHEETS
08	Riv,SBd	91,215	21.5/21.7, 43.2/45.2,0.0/5.1	240	1743

REGISTERED CIVIL ENGINEER 1-2-12 DATE

4-16-12
PLANS APPROVAL DATE

REGISTERED PROFESSIONAL ENGINEER
REFAAT ELSHERIF
No. C67382
Exp. 9-30-12
CIVIL
STATE OF CALIFORNIA

THE STATE OF CALIFORNIA OR ITS OFFICERS OR AGENTS SHALL NOT BE RESPONSIBLE FOR THE ACCURACY OR COMPLETENESS OF SCANNED COPIES OF THIS PLAN SHEET.

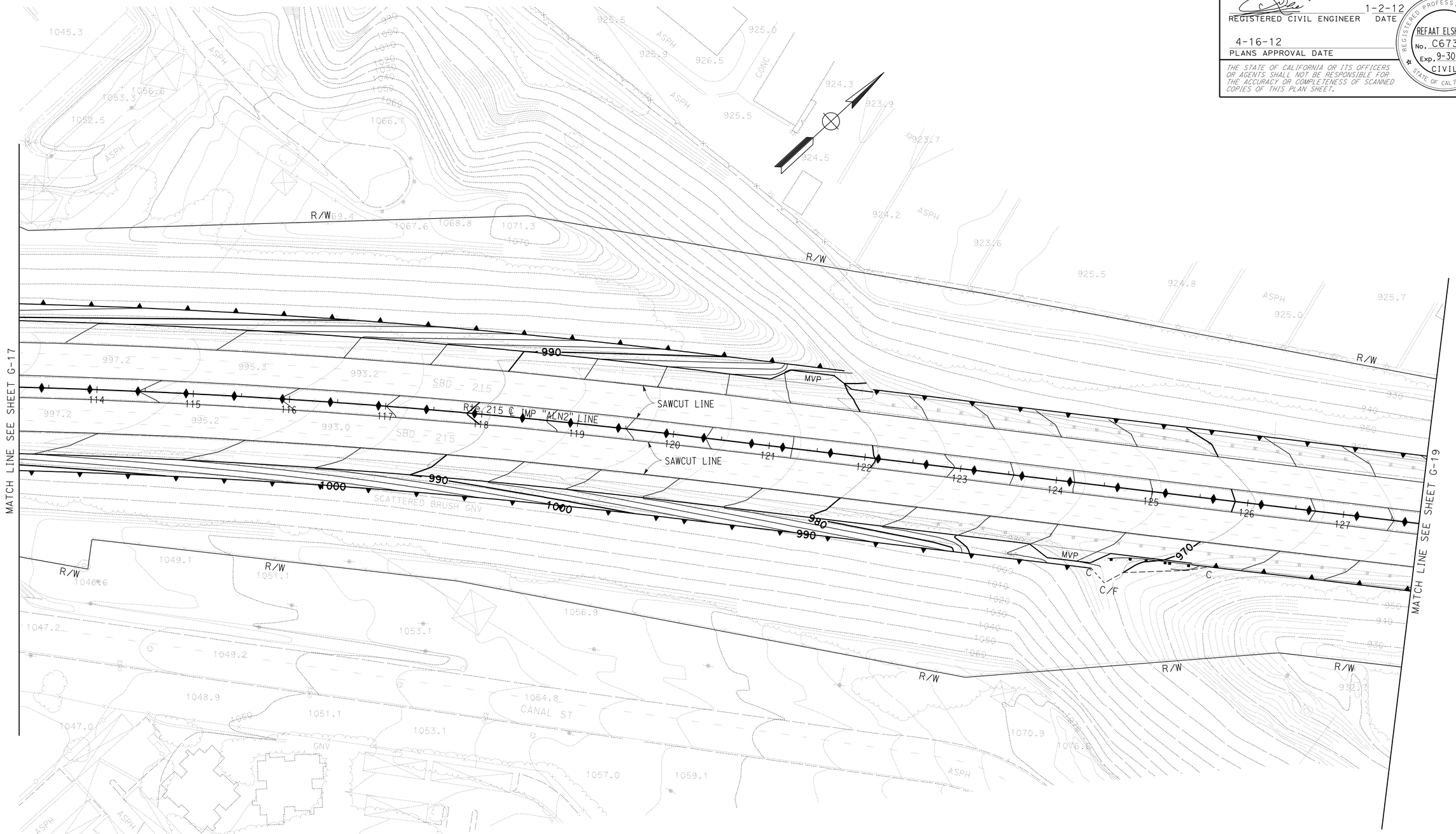

CONTOUR GRADING

SCALE: 1" = 50'

G-18

APPROVED FOR CONTOUR GRADING WORK ONLY

STATE OF CALIFORNIA - DEPARTMENT OF TRANSPORTATION
Caltrans
DESIGN

FUNCTIONAL SUPERVISOR: BEN AMIRI
CALCULATED-DESIGNED BY: CAT QUACH
CHECKED BY: TUAN TROUNG
REVISED BY
DATE REVISED

LAST REVISION 01-02-12
DATE PLOTTED => 17-APR-2012
TIME PLOTTED => 16:20

Dist	COUNTY	ROUTE	POST MILES TOTAL PROJECT	SHEET No.	TOTAL SHEETS
08	Riv,SBd	91,215	21.5/21.7, 43.2/45.2,0.0/5.1	241	1743

REGISTERED CIVIL ENGINEER 1-2-12 DATE

4-16-12
PLANS APPROVAL DATE

REGISTERED PROFESSIONAL ENGINEER
REFAAT ELSHERIF
No. C67382
Exp. 9-30-12
CIVIL
STATE OF CALIFORNIA

THE STATE OF CALIFORNIA OR ITS OFFICERS OR AGENTS SHALL NOT BE RESPONSIBLE FOR THE ACCURACY OR COMPLETENESS OF SCANNED COPIES OF THIS PLAN SHEET.

NOTES:

1. FOR COMPLETE RIGHT OF WAY AND ACCURATE ACCESS DATA, SEE RIGHT OF WAY RECORD MAPS AT DISTRICT OFFICE.

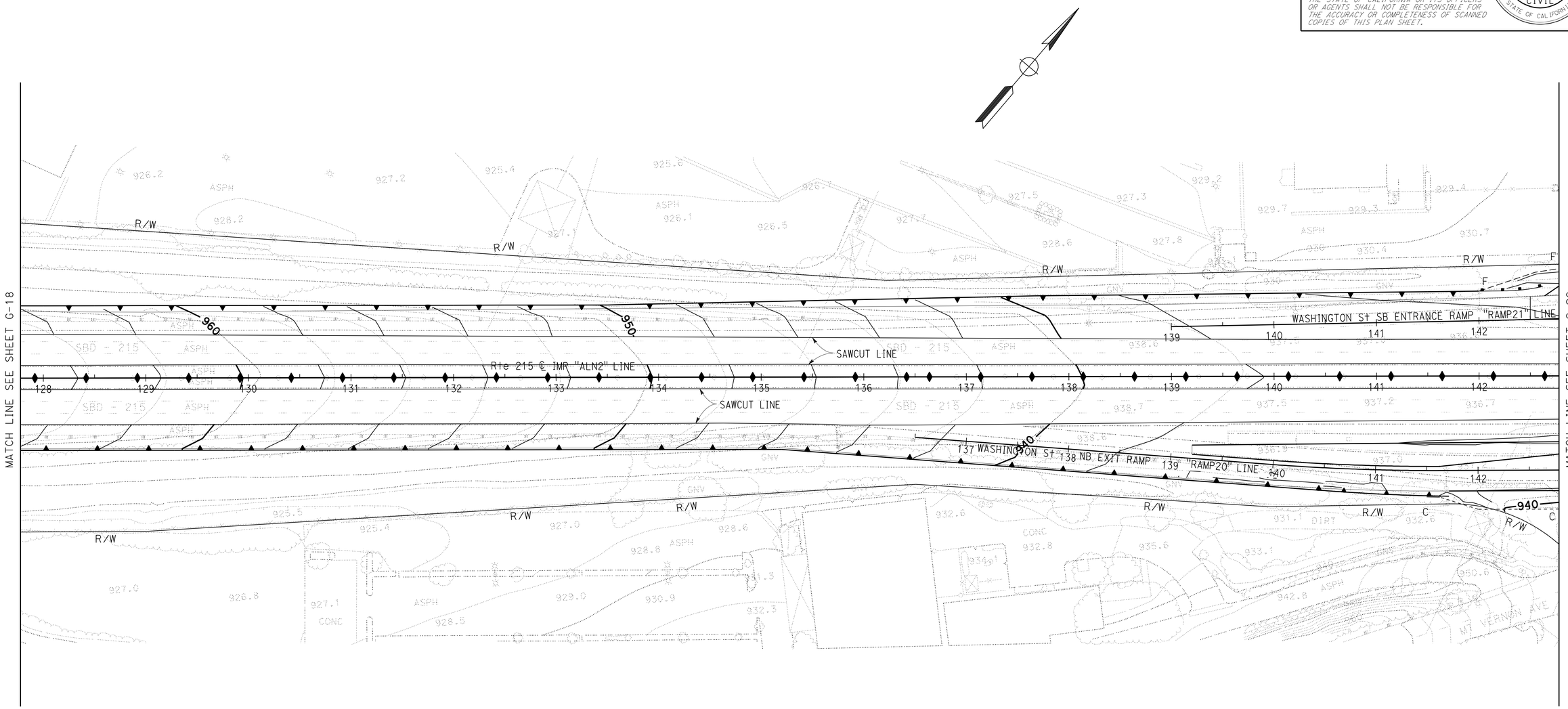

CONTOUR GRADING

SCALE: 1" = 50'

G-19

APPROVED FOR CONTOUR GRADING WORK ONLY

STATE OF CALIFORNIA - DEPARTMENT OF TRANSPORTATION
Caltrans
DESIGN

FUNCTIONAL SUPERVISOR: BEN AMIRI
CALCULATED-DESIGNED BY: CAT QUACH
CHECKED BY: TUAN TROUNG
REVISED BY
DATE REVISED

LAST REVISION 01-02-12
DATE PLOTTED => 17-APR-2012
TIME PLOTTED => 17:05

Dist	COUNTY	ROUTE	POST MILES TOTAL PROJECT	SHEET No.	TOTAL SHEETS
08	Riv,SBd	91,215	21.5/21.7, 43.2/45.2,0.0/5.1	242	1743

REGISTERED CIVIL ENGINEER 1-2-12 DATE

4-16-12
PLANS APPROVAL DATE

REGISTERED PROFESSIONAL ENGINEER
REFAAT ELSHERIF
No. C67382
Exp. 9-30-12
CIVIL
STATE OF CALIFORNIA

THE STATE OF CALIFORNIA OR ITS OFFICERS OR AGENTS SHALL NOT BE RESPONSIBLE FOR THE ACCURACY OR COMPLETENESS OF SCANNED COPIES OF THIS PLAN SHEET.

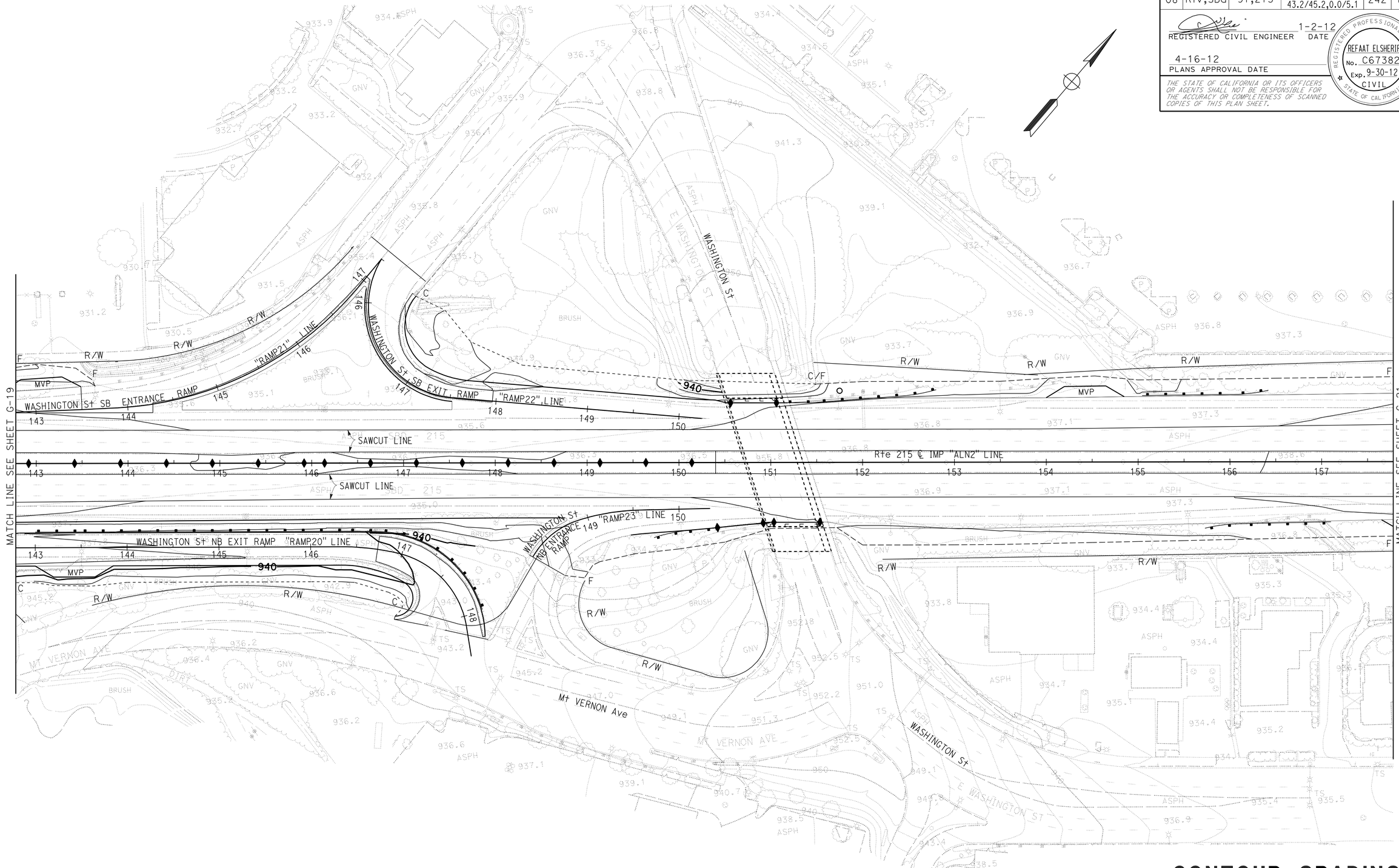

CONTOUR GRADING

SCALE: 1" = 50'

G-20

APPROVED FOR CONTOUR GRADING WORK ONLY

STATE OF CALIFORNIA - DEPARTMENT OF TRANSPORTATION
Caltrans
DESIGN

FUNCTIONAL SUPERVISOR: BEN AMIRI
CALCULATED-DESIGNED BY: CAT QUACH
CHECKED BY: TUAN TROUNG
REVISED BY
DATE REVISED

LAST REVISION 01-02-12
DATE PLOTTED => 17-APR-2012
TIME PLOTTED => 17:05

Dist	COUNTY	ROUTE	POST MILES TOTAL PROJECT	SHEET No.	TOTAL SHEETS
08	Riv,SBd	91,215	21.5/21.7, 43.2/45.2,0.0/5.1	243	1743

REGISTERED CIVIL ENGINEER 1-2-12 DATE

4-16-12
PLANS APPROVAL DATE

REGISTERED PROFESSIONAL ENGINEER
REFAAT ELSHERIF
No. C67382
Exp. 9-30-12
CIVIL
STATE OF CALIFORNIA

THE STATE OF CALIFORNIA OR ITS OFFICERS OR AGENTS SHALL NOT BE RESPONSIBLE FOR THE ACCURACY OR COMPLETENESS OF SCANNED COPIES OF THIS PLAN SHEET.

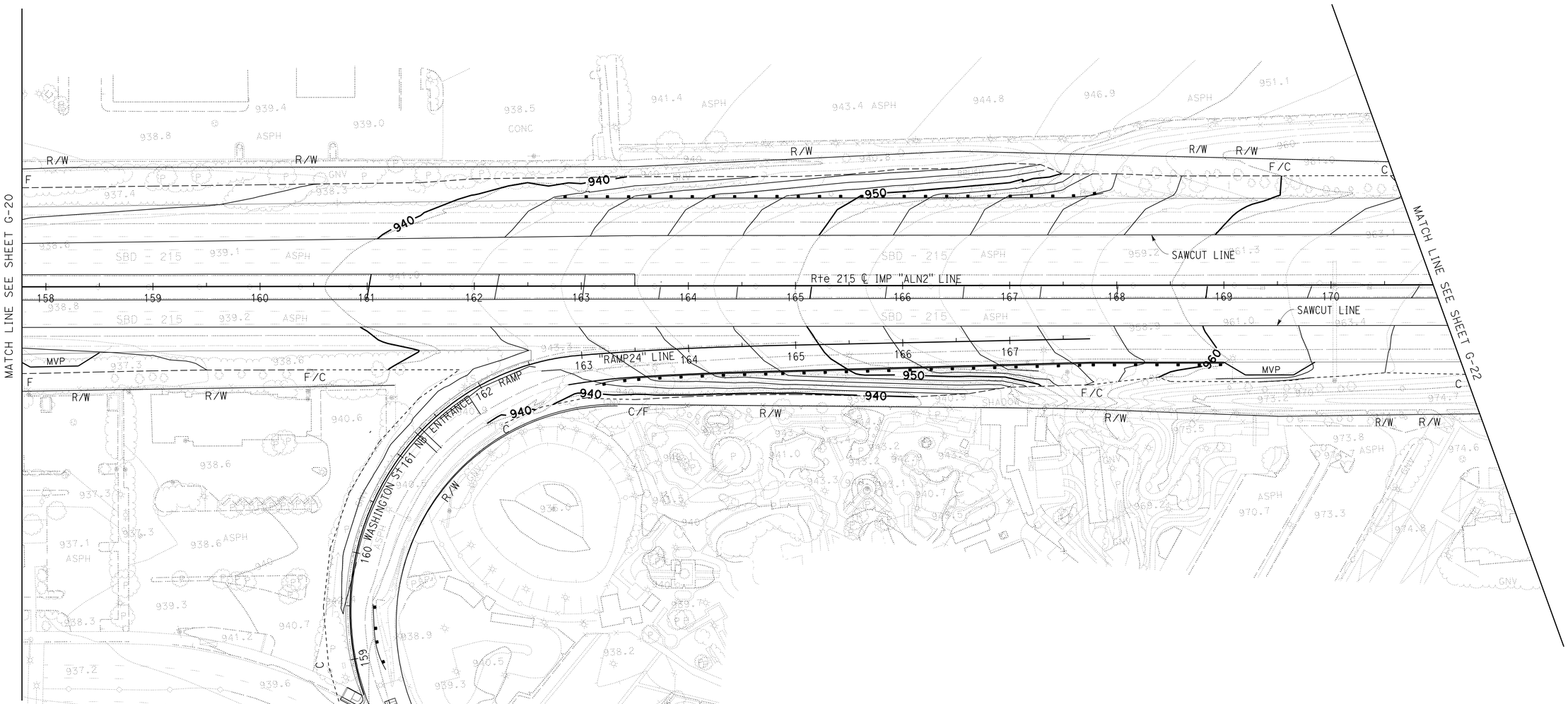

CONTOUR GRADING

SCALE: 1" = 50'

G-21

APPROVED FOR CONTOUR GRADING WORK ONLY

STATE OF CALIFORNIA - DEPARTMENT OF TRANSPORTATION
Caltrans®
DESIGN

FUNCTIONAL SUPERVISOR: BEN AMIRI
CALCULATED-DESIGNED BY: CAT QUACH
CHECKED BY: TUAN TROUNG
REVISED BY
DATE REVISED

LAST REVISION 01-02-12
DATE PLOTTED => 17-APR-2012
TIME PLOTTED => 17:05

Dist	COUNTY	ROUTE	POST MILES TOTAL PROJECT	SHEET No.	TOTAL SHEETS
08	Riv,SBd	91,215	21.5/21.7, 43.2/45.2,0.0/5.1	244	1743

REGISTERED CIVIL ENGINEER 1-2-12 DATE

4-16-12
PLANS APPROVAL DATE

REGISTERED PROFESSIONAL ENGINEER
REFAAT ELSHERIF
No. C67382
Exp. 9-30-12
CIVIL
STATE OF CALIFORNIA

THE STATE OF CALIFORNIA OR ITS OFFICERS OR AGENTS SHALL NOT BE RESPONSIBLE FOR THE ACCURACY OR COMPLETENESS OF SCANNED COPIES OF THIS PLAN SHEET.

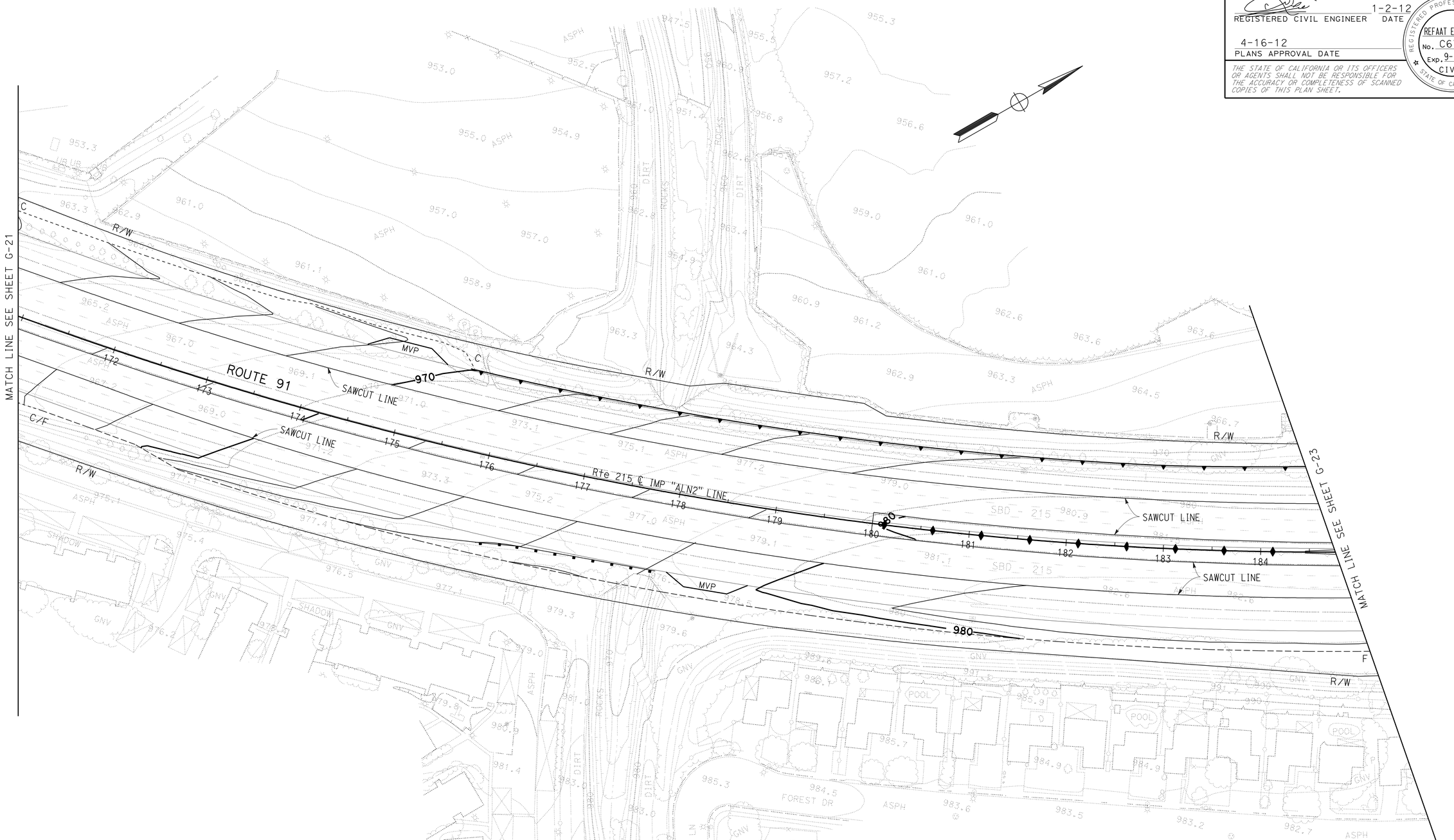

CONTOUR GRADING

SCALE: 1" = 50'

G-22

APPROVED FOR CONTOUR GRADING WORK ONLY

STATE OF CALIFORNIA - DEPARTMENT OF TRANSPORTATION
Caltrans
DESIGN

FUNCTIONAL SUPERVISOR: BEN AMIRI
CALCULATED-DESIGNED BY: TUAN TROUNG
CHECKED BY: CAT QUACH
REVISED BY
DATE REVISED

LAST REVISION 01-02-12
DATE PLOTTED => 17-APR-2012
TIME PLOTTED => 17:05

Dist	COUNTY	ROUTE	POST MILES TOTAL PROJECT	SHEET No.	TOTAL SHEETS
08	Riv,SBd	91,215	21.5/21.7, 43.2/45.2,0.0/5.1	245	1743

REGISTERED CIVIL ENGINEER 1-2-12 DATE

4-16-12
PLANS APPROVAL DATE

REGISTERED PROFESSIONAL ENGINEER
REFAAT ELSHERIF
No. C67382
Exp. 9-30-12
CIVIL
STATE OF CALIFORNIA

THE STATE OF CALIFORNIA OR ITS OFFICERS OR AGENTS SHALL NOT BE RESPONSIBLE FOR THE ACCURACY OR COMPLETENESS OF SCANNED COPIES OF THIS PLAN SHEET.

CONTOUR GRADING

SCALE: 1" = 50'

G-23

APPROVED FOR CONTOUR GRADING WORK ONLY

STATE OF CALIFORNIA - DEPARTMENT OF TRANSPORTATION
Caltrans
DESIGN

FUNCTIONAL SUPERVISOR: BEN AMIRI
CALCULATED-DESIGNED BY: TUAN TROUNG
CHECKED BY: CAT QUACH
REVISED BY
DATE REVISED

LAST REVISION 01-02-12
DATE PLOTTED => 17-APR-2012
TIME PLOTTED => 17:05

Dist	COUNTY	ROUTE	POST MILES TOTAL PROJECT	SHEET No.	TOTAL SHEETS
08	Riv,SBd	91,215	21.5/21.7, 43.2/45.2,0.0/5.1	246	1743

REGISTERED CIVIL ENGINEER 1-2-12 DATE

4-16-12
PLANS APPROVAL DATE

REGISTERED PROFESSIONAL ENGINEER
REFAAT ELSHERIF
No. C67382
Exp. 9-30-12
CIVIL
STATE OF CALIFORNIA

THE STATE OF CALIFORNIA OR ITS OFFICERS OR AGENTS SHALL NOT BE RESPONSIBLE FOR THE ACCURACY OR COMPLETENESS OF SCANNED COPIES OF THIS PLAN SHEET.

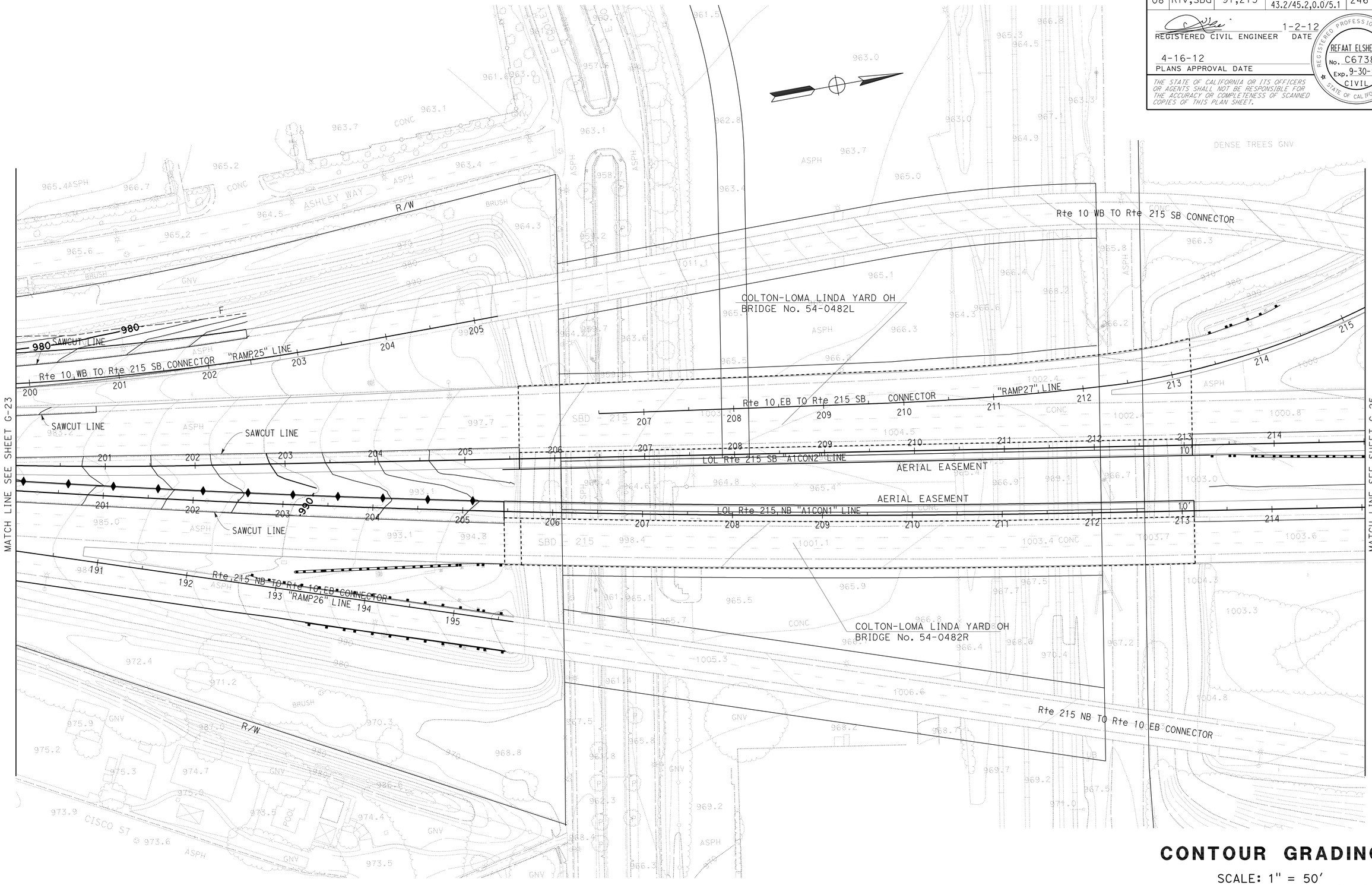

CONTOUR GRADING

SCALE: 1" = 50'

G-24

APPROVED FOR CONTOUR GRADING WORK ONLY

STATE OF CALIFORNIA - DEPARTMENT OF TRANSPORTATION
Caltrans
DESIGN

FUNCTIONAL SUPERVISOR: BEN AMIRI
CALCULATED-DESIGNED BY: CAT QUACH
CHECKED BY: TUAN TROUNG
REVISED BY
DATE REVISED

LAST REVISION 01-02-12
DATE PLOTTED => 17-APR-2012
TIME PLOTTED => 17:05

Dist	COUNTY	ROUTE	POST MILES TOTAL PROJECT	SHEET No.	TOTAL SHEETS
08	Riv,SBd	91,215	21.5/21.7, 43.2/45.2,0.0/5.1	247	1743

REGISTERED CIVIL ENGINEER 1-2-12 DATE

4-16-12
PLANS APPROVAL DATE

REGISTERED PROFESSIONAL ENGINEER
REFAAT ELSHERIF
No. C67382
Exp. 9-30-12
CIVIL
STATE OF CALIFORNIA

THE STATE OF CALIFORNIA OR ITS OFFICERS OR AGENTS SHALL NOT BE RESPONSIBLE FOR THE ACCURACY OR COMPLETENESS OF SCANNED COPIES OF THIS PLAN SHEET.

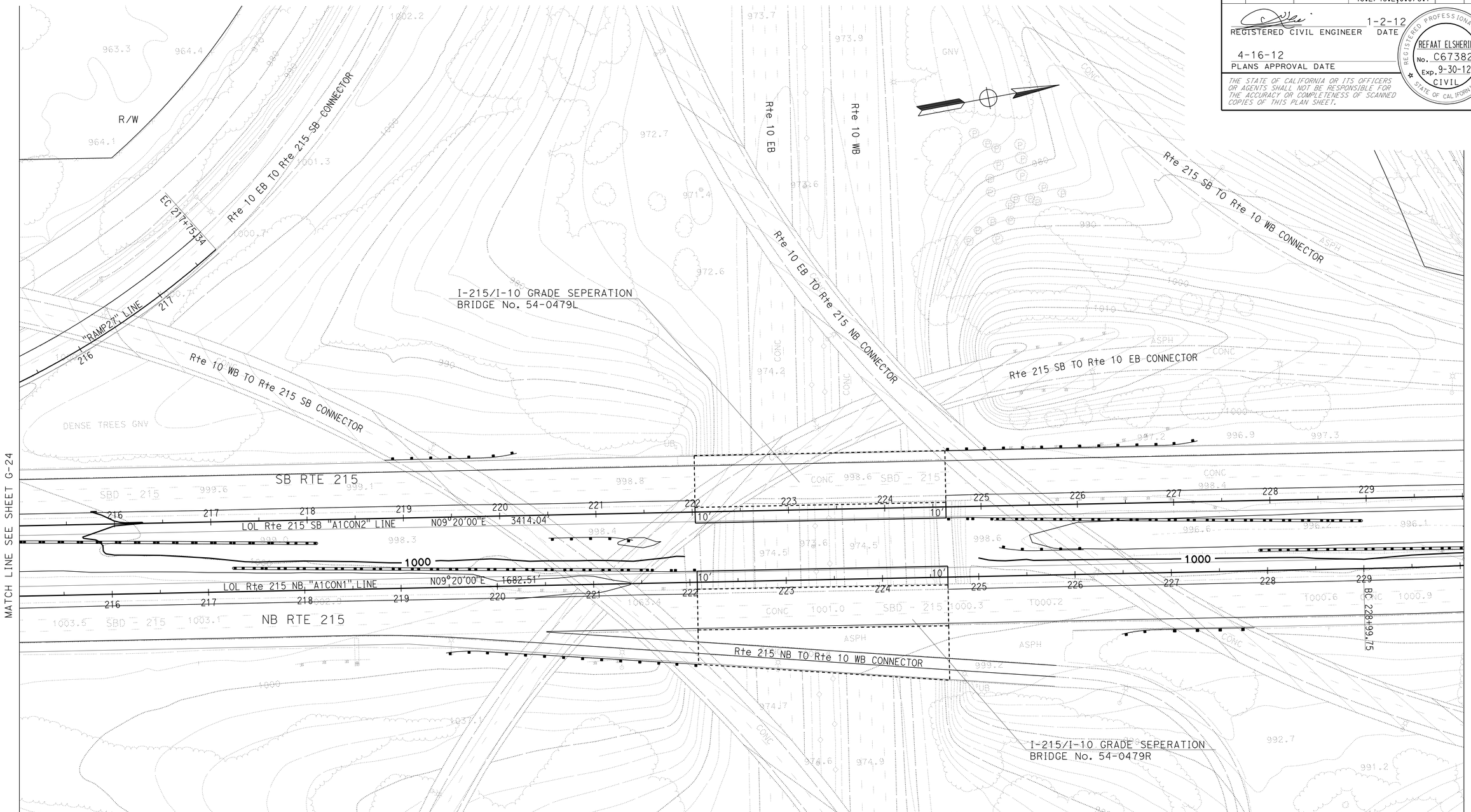

CONTOUR GRADING

SCALE: 1" = 50'

G-25

APPROVED FOR CONTOUR GRADING WORK ONLY

STATE OF CALIFORNIA - DEPARTMENT OF TRANSPORTATION
Caltrans
DESIGN

FUNCTIONAL SUPERVISOR: BEN AMIRI
CALCULATED-DESIGNED BY: CAT QUACH
CHECKED BY: TUAN TROUNG
REVISED BY
DATE REVISED

LAST REVISION 01-02-12
DATE PLOTTED => 17-APR-2012
TIME PLOTTED => 17:05

BORDER LAST REVISED 7/2/2010
USERNAME => s114640
DGN FILE => 80m94uha025.dgn
RELATIVE BORDER SCALE IS IN INCHES 0 1 2 3
UNIT 2242
PROJECT NUMBER & PHASE 08000005061

Dist	COUNTY	ROUTE	POST MILES TOTAL PROJECT	SHEET No.	TOTAL SHEETS
08	Riv,SBd	91,215	21.5/21.7, 43.2/45.2,0.0/5.1	248	1743

REGISTERED CIVIL ENGINEER 1-2-12 DATE

4-16-12
PLANS APPROVAL DATE

REGISTERED PROFESSIONAL ENGINEER
REFAAT ELSHERIF
No. C67382
Exp. 9-30-12
CIVIL
STATE OF CALIFORNIA

THE STATE OF CALIFORNIA OR ITS OFFICERS OR AGENTS SHALL NOT BE RESPONSIBLE FOR THE ACCURACY OR COMPLETENESS OF SCANNED COPIES OF THIS PLAN SHEET.

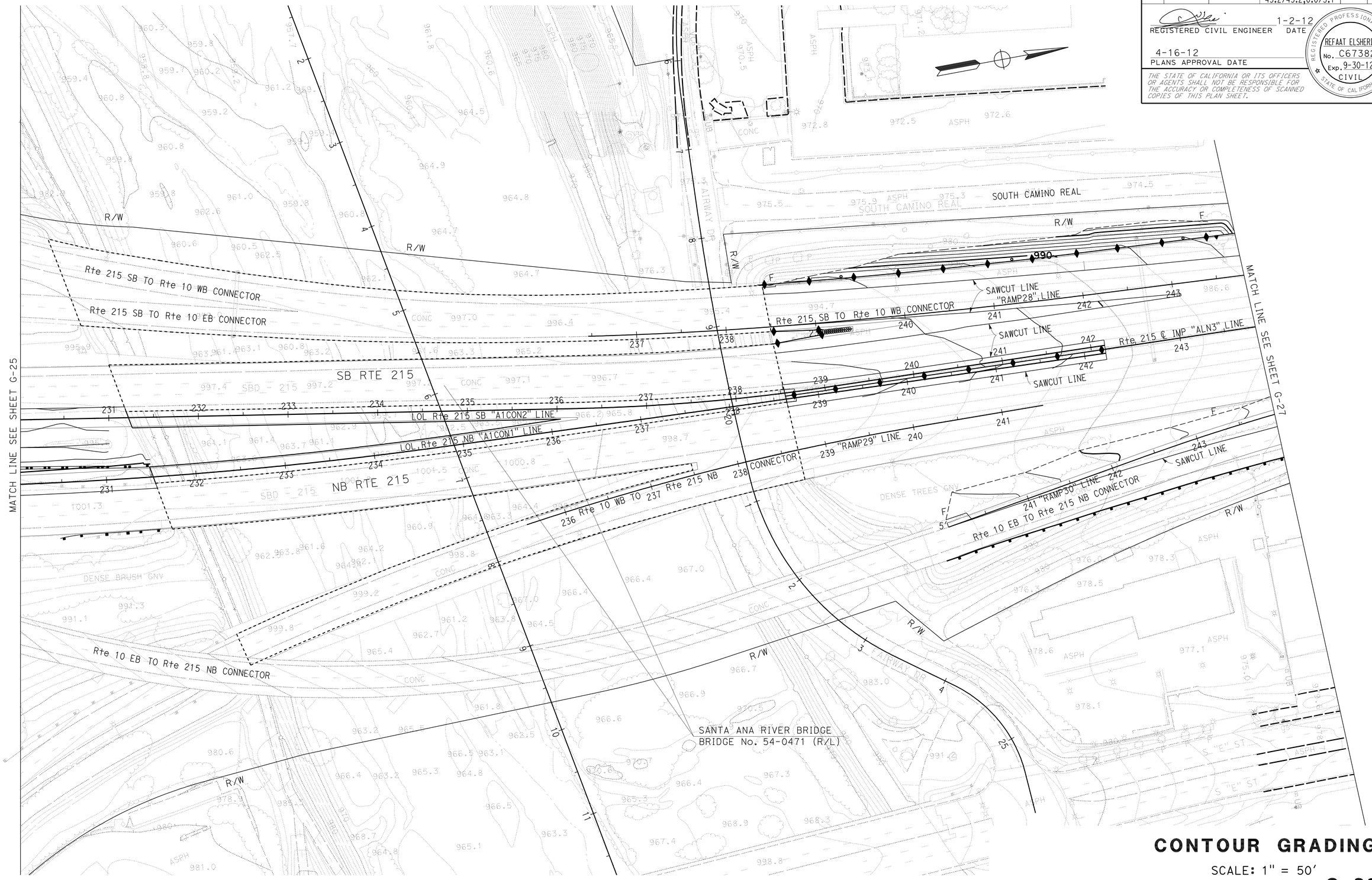

CONTOUR GRADING

SCALE: 1" = 50'

G-26

APPROVED FOR CONTOUR GRADING WORK ONLY

STATE OF CALIFORNIA - DEPARTMENT OF TRANSPORTATION
Caltrans
DESIGN

FUNCTIONAL SUPERVISOR: BEN AMIRI
CALCULATED-DESIGNED BY: TUAN TROUNG
CHECKED BY: CAT QUACH
REVISED BY
DATE REVISED

LAST REVISION 01-02-12
DATE PLOTTED => 17-APR-2012
TIME PLOTTED => 17:05

Dist	COUNTY	ROUTE	POST MILES TOTAL PROJECT	SHEET No.	TOTAL SHEETS
08	Riv,SBd	91,215	21.5/21.7, 43.2/45.2,0.0/5.1	249	1743

REGISTERED CIVIL ENGINEER 1-2-12 DATE

4-16-12
PLANS APPROVAL DATE

REGISTERED PROFESSIONAL ENGINEER
REFAAT ELSHERIF
No. C67382
Exp. 9-30-12
CIVIL
STATE OF CALIFORNIA

THE STATE OF CALIFORNIA OR ITS OFFICERS OR AGENTS SHALL NOT BE RESPONSIBLE FOR THE ACCURACY OR COMPLETENESS OF SCANNED COPIES OF THIS PLAN SHEET.

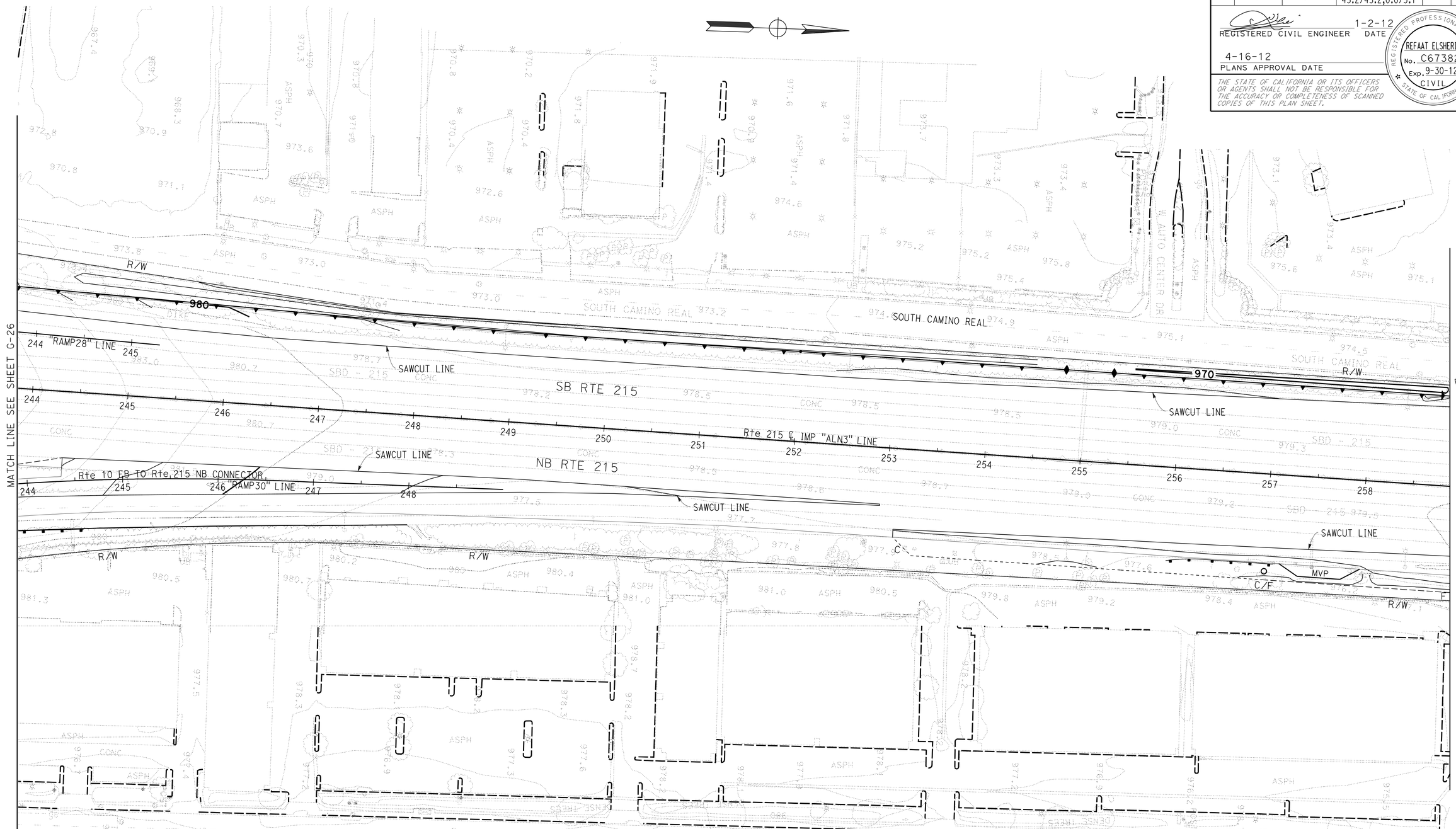

CONTOUR GRADING

SCALE: 1" = 50'

G-27

APPROVED FOR CONTOUR GRADING WORK ONLY

STATE OF CALIFORNIA - DEPARTMENT OF TRANSPORTATION
Caltrans
DESIGN

FUNCTIONAL SUPERVISOR: BEN AMIRI
CALCULATED-DESIGNED BY: CAT QUACH
CHECKED BY: TUAN TROUNG
REVISED BY
DATE REVISED

LAST REVISION 01-02-12
DATE PLOTTED => 17-APR-2012
TIME PLOTTED => 17:05

Dist	COUNTY	ROUTE	POST MILES TOTAL PROJECT	SHEET No.	TOTAL SHEETS
08	Riv,SBd	91,215	21.5/21.7, 43.2/45.2,0.0/5.1	250	1743

REGISTERED CIVIL ENGINEER 1-2-12 DATE

4-16-12
PLANS APPROVAL DATE

REGISTERED PROFESSIONAL ENGINEER
REFAAT ELSHERIF
No. C67382
Exp. 9-30-12
CIVIL
STATE OF CALIFORNIA

THE STATE OF CALIFORNIA OR ITS OFFICERS OR AGENTS SHALL NOT BE RESPONSIBLE FOR THE ACCURACY OR COMPLETENESS OF SCANNED COPIES OF THIS PLAN SHEET.

CONTOUR GRADING

SCALE: 1" = 50'

G-28

APPROVED FOR CONTOUR GRADING WORK ONLY

STATE OF CALIFORNIA - DEPARTMENT OF TRANSPORTATION
Caltrans
DESIGN

FUNCTIONAL SUPERVISOR: BEN AMIRI
CALCULATED-DESIGNED BY: CAT QUACH
CHECKED BY: TUAN TROUNG
REVISED BY
DATE REVISED

LAST REVISION 01-02-12
DATE PLOTTED => 17-APR-2012
TIME PLOTTED => 17:05

Dist	COUNTY	ROUTE	POST MILES TOTAL PROJECT	SHEET No.	TOTAL SHEETS
08	Riv,SBd	91,215	21.5/21.7, 43.2/45.2,0.0/5.1	251	1743

REGISTERED CIVIL ENGINEER 1-2-12 DATE

4-16-12
PLANS APPROVAL DATE

REGISTERED PROFESSIONAL ENGINEER
REFAAT ELSHERIF
No. C67382
Exp. 9-30-12
CIVIL
STATE OF CALIFORNIA

THE STATE OF CALIFORNIA OR ITS OFFICERS OR AGENTS SHALL NOT BE RESPONSIBLE FOR THE ACCURACY OR COMPLETENESS OF SCANNED COPIES OF THIS PLAN SHEET.

CURVE DATA

No. ⊕	R	Δ	T	L
14	2999′	31°7′28″	835.11′	1628.95′

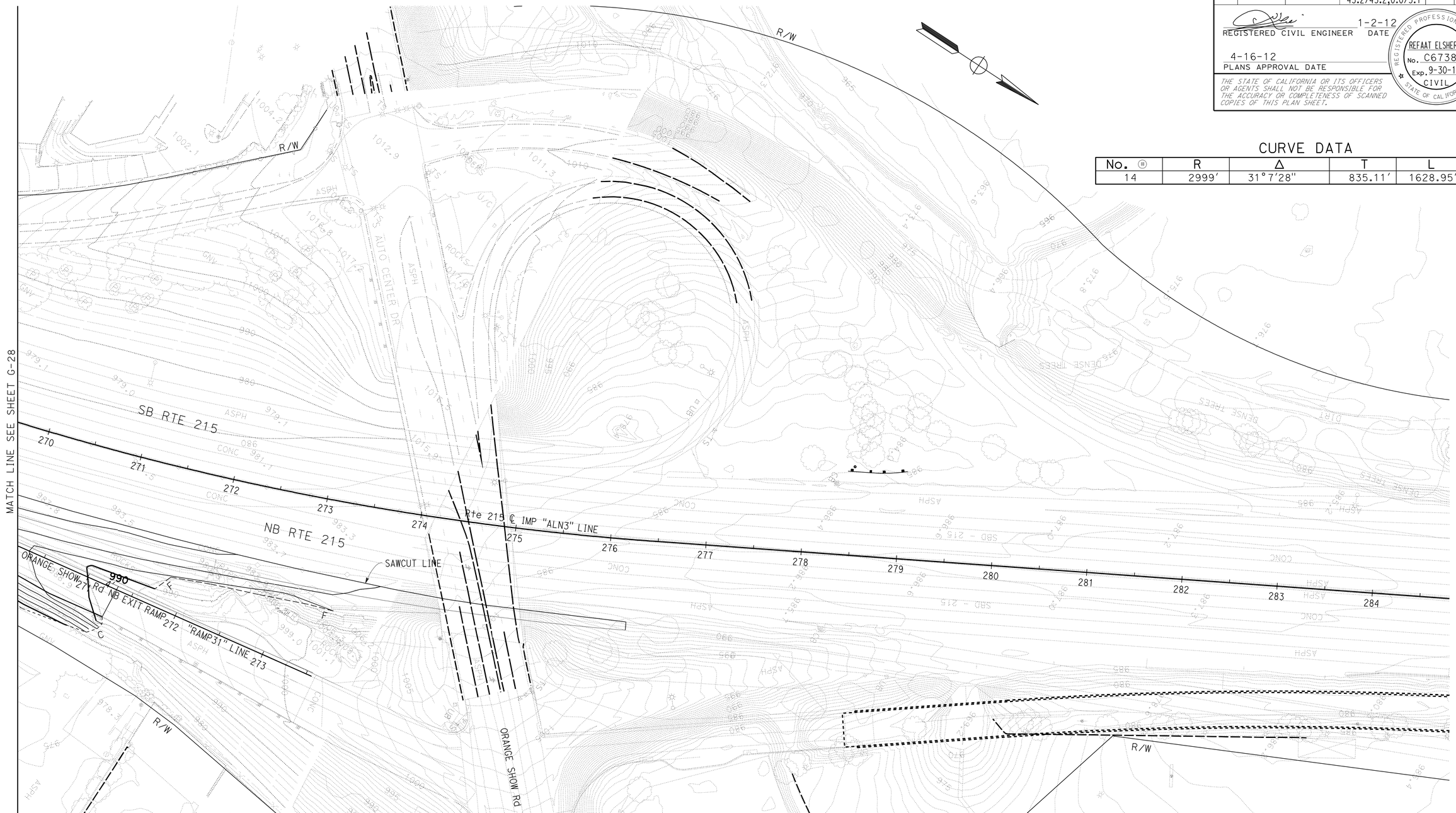

CONTOUR GRADING

SCALE: 1" = 50′

G-29

APPROVED FOR CONTOUR GRADING WORK ONLY

STATE OF CALIFORNIA - DEPARTMENT OF TRANSPORTATION
Caltrans
DESIGN

FUNCTIONAL SUPERVISOR: BEN AMIRI
CALCULATED-DESIGNED BY: CAT QUACH
CHECKED BY: TUAN TROUNG
REVISED BY
DATE REVISED

LAST REVISION 01-02-12
DATE PLOTTED => 17-APR-2012
TIME PLOTTED => 17:05

Dist	COUNTY	ROUTE	POST MILES TOTAL PROJECT	SHEET No.	TOTAL SHEETS
08	Riv,SBd	91,215	21.5/21.7, 43.2/45.2,0.0/5.1	252	1743

REGISTERED CIVIL ENGINEER 3-23-12 DATE

4-16-12
PLANS APPROVAL DATE

REGISTERED PROFESSIONAL ENGINEER
REFAAT ELSHERIF
No. C67382
Exp. 9-30-12
CIVIL
STATE OF CALIFORNIA

THE STATE OF CALIFORNIA OR ITS OFFICERS OR AGENTS SHALL NOT BE RESPONSIBLE FOR THE ACCURACY OR COMPLETENESS OF SCANNED COPIES OF THIS PLAN SHEET.

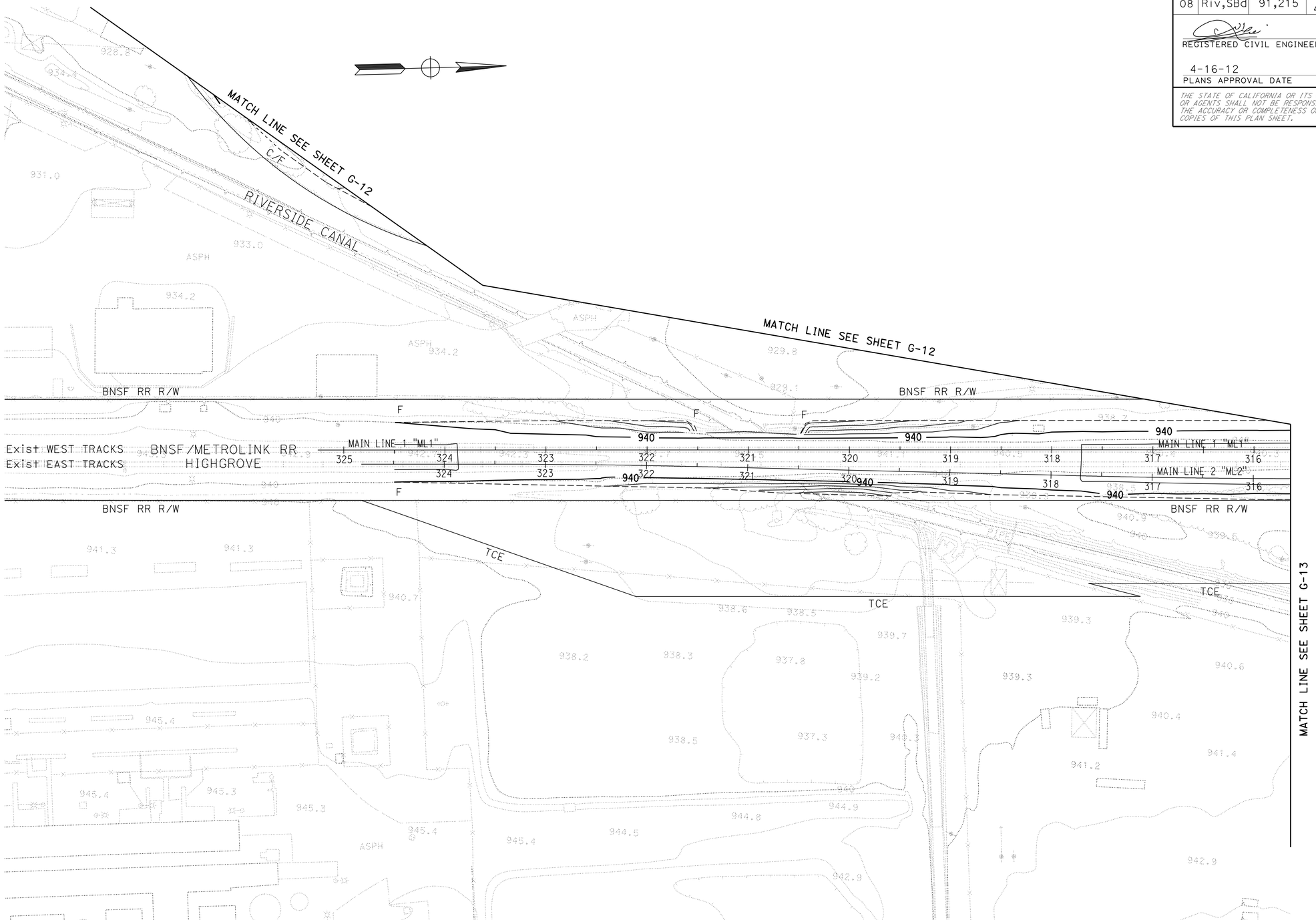

CONTOUR GRADING

SCALE: 1" = 50'

G-30

APPROVED FOR CONTOUR GRADING WORK ONLY

STATE OF CALIFORNIA - DEPARTMENT OF TRANSPORTATION
Caltrans
DESIGN

FUNCTIONAL SUPERVISOR: BEN AMIRI
CALCULATED-DESIGNED BY: TUAN TROUNG
CHECKED BY: CAT QUACH
REVISED BY
DATE REVISED

LAST REVISION 03-23-12
DATE PLOTTED => 17-APR-2012
TIME PLOTTED => 17:05

Dist	COUNTY	ROUTE	POST MILES TOTAL PROJECT	SHEET No.	TOTAL SHEETS
08	Riv,SBd	91,215	21.5/21.7, 43.2/45.2,0.0/5.1	253	1743

REGISTERED CIVIL ENGINEER 3-23-12 DATE

4-16-12
PLANS APPROVAL DATE

REGISTERED PROFESSIONAL ENGINEER
REFAAT ELSHERIF
No. C67382
Exp. 9-30-12
CIVIL
STATE OF CALIFORNIA

THE STATE OF CALIFORNIA OR ITS OFFICERS OR AGENTS SHALL NOT BE RESPONSIBLE FOR THE ACCURACY OR COMPLETENESS OF SCANNED COPIES OF THIS PLAN SHEET.

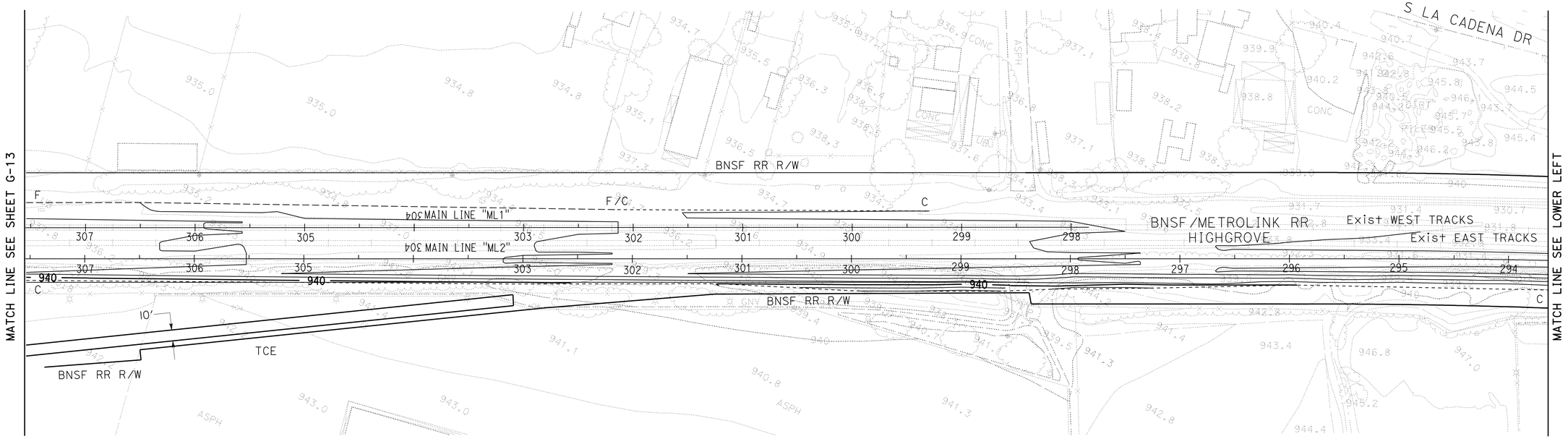

APPROVED FOR CONTOUR GRADING WORK ONLY

CONTOUR GRADING

SCALE: 1" = 50'

G-31

STATE OF CALIFORNIA - DEPARTMENT OF TRANSPORTATION
Caltrans
DESIGN

FUNCTIONAL SUPERVISOR: BEN AMIRI
CALCULATED-DESIGNED BY
CHECKED BY: TUAN TROUNG
REVISED BY: CAT QUACH
DATE REVISED

LAST REVISION 03-23-12
DATE PLOTTED => 17-APR-2012
TIME PLOTTED => 17:05

Dist	COUNTY	ROUTE	POST MILES TOTAL PROJECT	SHEET No.	TOTAL SHEETS
08	Riv,SBd	91,215	21.5/21.7, 43.2/45.2,0.0/5.1	254	1743

REGISTERED CIVIL ENGINEER 3-23-12 DATE

4-16-12
PLANS APPROVAL DATE

REGISTERED PROFESSIONAL ENGINEER
REFAAT ELSHERIF
No. C67382
Exp. 9-30-12
CIVIL
STATE OF CALIFORNIA

THE STATE OF CALIFORNIA OR ITS OFFICERS OR AGENTS SHALL NOT BE RESPONSIBLE FOR THE ACCURACY OR COMPLETENESS OF SCANNED COPIES OF THIS PLAN SHEET.

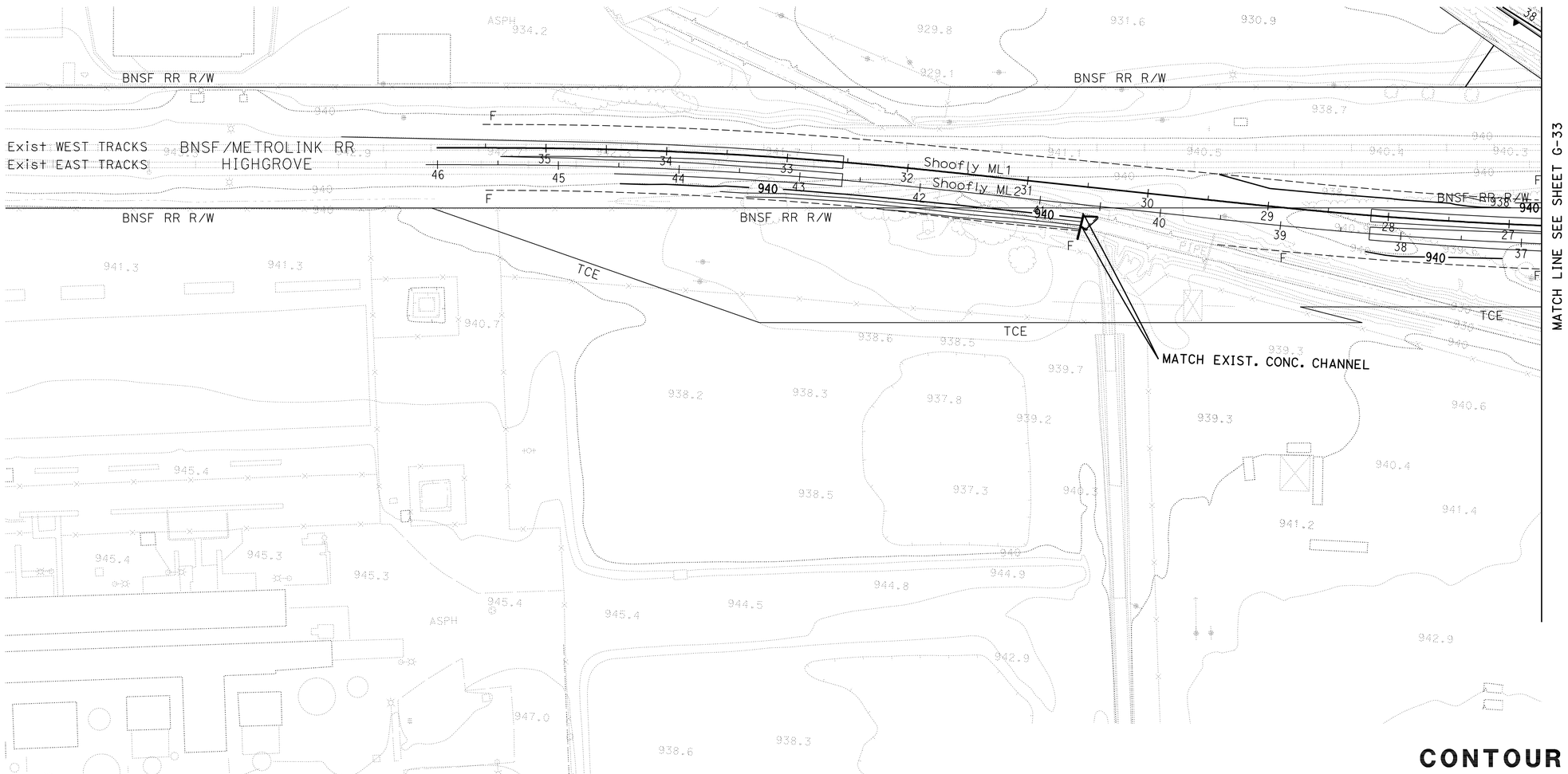

CONTOUR GRADING

SCALE: 1" = 50'

G-32

APPROVED FOR CONTOUR GRADING WORK ONLY

STATE OF CALIFORNIA - DEPARTMENT OF TRANSPORTATION
Caltrans
DESIGN

FUNCTIONAL SUPERVISOR: BEN AMIRI
CALCULATED-DESIGNED BY: CAT QUACH
CHECKED BY: TUAN TROUNG
REVISED BY
DATE REVISED

LAST REVISION 03-23-12
DATE PLOTTED => 17-APR-2012
TIME PLOTTED => 17:05

Dist	COUNTY	ROUTE	POST MILES TOTAL PROJECT	SHEET No.	TOTAL SHEETS
08	Riv,SBd	91,215	21.5/21.7, 43.2/45.2,0.0/5.1	255	1743

REGISTERED CIVIL ENGINEER 3-23-12 DATE

4-16-12
PLANS APPROVAL DATE

REGISTERED PROFESSIONAL ENGINEER
REFAAT ELSHERIF
No. C67382
Exp. 9-30-12
CIVIL
STATE OF CALIFORNIA

THE STATE OF CALIFORNIA OR ITS OFFICERS OR AGENTS SHALL NOT BE RESPONSIBLE FOR THE ACCURACY OR COMPLETENESS OF SCANNED COPIES OF THIS PLAN SHEET.

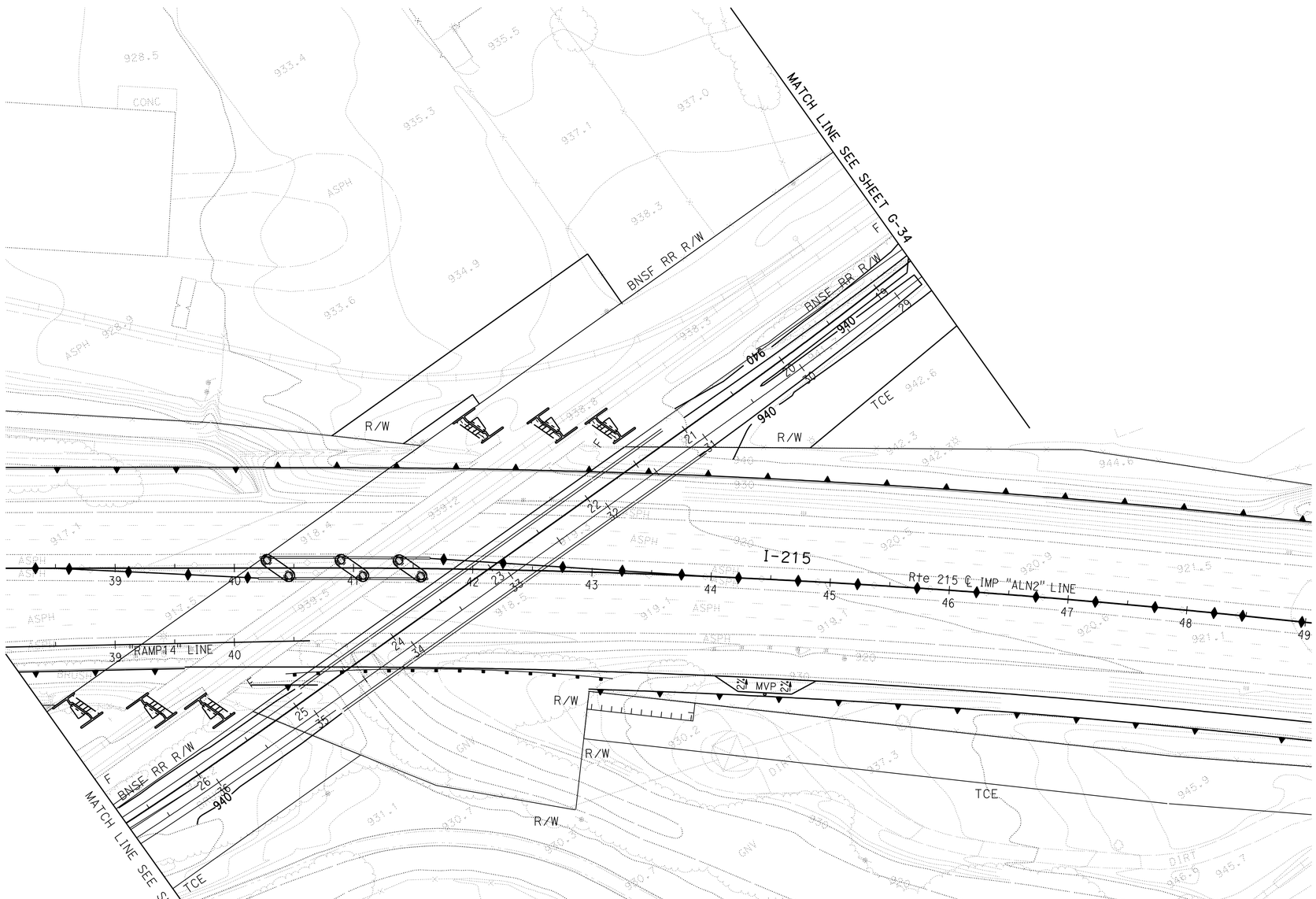

CONTOUR GRADING

SCALE: 1" = 50'

G-33

APPROVED FOR CONTOUR GRADING WORK ONLY

STATE OF CALIFORNIA - DEPARTMENT OF TRANSPORTATION
Caltrans
DESIGN

FUNCTIONAL SUPERVISOR: BEN AMIRI
CALCULATED-DESIGNED BY: TUAN TROUNG
CHECKED BY: CAT QUACH
REVISED BY
DATE REVISED

LAST REVISION 03-23-12
DATE PLOTTED => 17-APR-2012
TIME PLOTTED => 17:05

Dist	COUNTY	ROUTE	POST MILES TOTAL PROJECT	SHEET No.	TOTAL SHEETS
08	Riv,SBd	91,215	21.5/21.7, 43.2/45.2,0.0/5.1	256	1743

REGISTERED CIVIL ENGINEER 3-23-12 DATE

4-16-12
PLANS APPROVAL DATE

REGISTERED PROFESSIONAL ENGINEER
REFAAT ELSHERIF
No. C67382
Exp. 9-30-12
CIVIL
STATE OF CALIFORNIA

THE STATE OF CALIFORNIA OR ITS OFFICERS OR AGENTS SHALL NOT BE RESPONSIBLE FOR THE ACCURACY OR COMPLETENESS OF SCANNED COPIES OF THIS PLAN SHEET.

CONTOUR GRADING

SCALE: 1" = 50'

G-34

APPROVED FOR CONTOUR GRADING WORK ONLY

STATE OF CALIFORNIA - DEPARTMENT OF TRANSPORTATION
Caltrans
DESIGN

FUNCTIONAL SUPERVISOR: BEN AMIRI
CALCULATED-DESIGNED BY: CAT QUACH
CHECKED BY: TUAN TROUNG
REVISED BY
DATE REVISED

LAST REVISION 03-23-12
DATE PLOTTED => 17-APR-2012
TIME PLOTTED => 17:05

Dist	COUNTY	ROUTE	POST MILES TOTAL PROJECT	SHEET No.	TOTAL SHEETS
08	Riv,SBd	91,215	21.5/21.7, 43.2/45.2,0.0/5.1	257	1743

REGISTERED CIVIL ENGINEER 1-2-12 DATE

4-16-12
PLANS APPROVAL DATE

REGISTERED PROFESSIONAL ENGINEER REFAAT ELSHERIF No. C67382 Exp. 9-30-12 CIVIL STATE OF CALIFORNIA

THE STATE OF CALIFORNIA OR ITS OFFICERS OR AGENTS SHALL NOT BE RESPONSIBLE FOR THE ACCURACY OR COMPLETENESS OF SCANNED COPIES OF THIS PLAN SHEET.

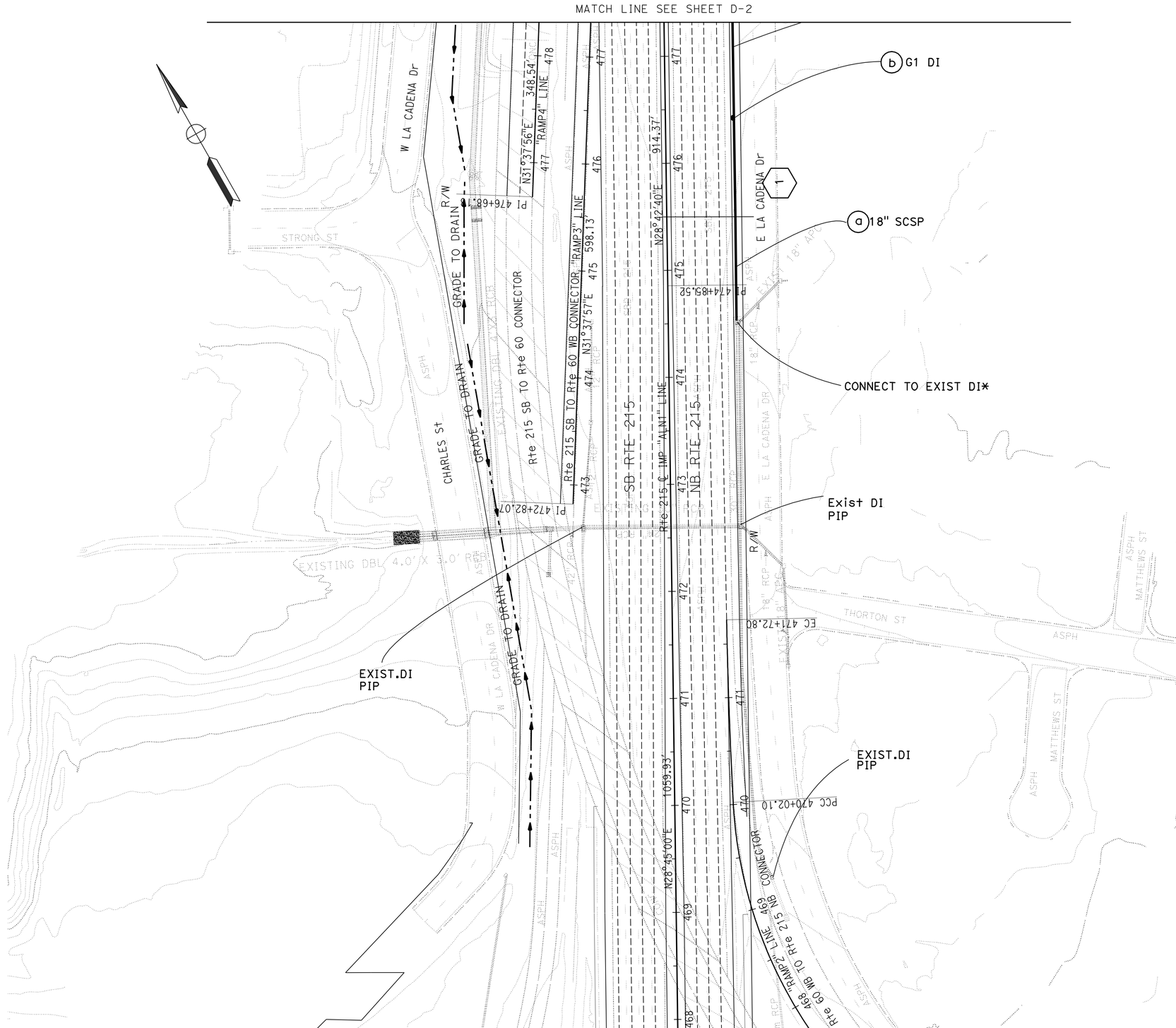

NOTES:

1. FOR ACCURATE RIGHT OF WAY DATA, CONTACT RIGHT OF WAY ENGINERING AT THE DISTRICT OFFICE.
2. TOP OF GRATE ELEVATIONS INCLUDE INLET DEPRESSION.
3. TOP OF GRATE ELEVATIONS ARE TO FLOW LINE OF GRATE UNLESS OTHERWISE NOTED.
4. INLET GRATES SHALL BE HORIZONTAL (0% SLOPE), UNLESS OTHERWISE NOTED.

LEGEND:

- DRAINAGE SYSTEM NUMBER
- DRAINAGE ITEM
- DIRECTION OF DITCH FLOW
- GRADE TO DRAIN
- ✳ SEE DRAINAGE DETAILS SHEET

ABBREVIATIONS:

DRCB	DOUBLE REINFORCED CONCRETE BOX
HMAOD	HOT MIX ASPHALT OVERSIDE DRAIN
DA	DEPRESSED APRON
TCE	TEMPORARY CONSTRUCTION EASEMENT
CSP DD	CSP DOWNDRAIN
PIP	PROTECT IN PLACE
SCSP	SLOTTED CORRUGATED STEEL PIPE
APC	ALTERNATIVE PIPE CULVERT
CSP	CORRUGATED STEEL PIPE
TS	TRANSITION STRUCTURE

DRAINAGE PLAN

SCALE: 1" = 50'

D-1

STATE OF CALIFORNIA - DEPARTMENT OF TRANSPORTATION
Caltrans
DESIGN

FUNCTIONAL SUPERVISOR: BEN AMIRI
CALCULATED-DESIGNED BY: JOYA GILSTER
CHECKED BY: REFAAT ELSHERIF
REVISED BY
DATE REVISED

LAST REVISION 01-02-12
DATE PLOTTED => 17-APR-2012
TIME PLOTTED => 17:05

Dist	COUNTY	ROUTE	POST MILES TOTAL PROJECT	SHEET No.	TOTAL SHEETS
08	Riv,SBd	91,215	21.5/21.7, 43.2/45.2,0.0/5.1	258	1743

REGISTERED CIVIL ENGINEER 1-2-12 DATE

4-16-12
PLANS APPROVAL DATE

REGISTERED PROFESSIONAL ENGINEER
REFAAT ELSHERIF
No. C67382
Exp. 9-30-12
CIVIL
STATE OF CALIFORNIA

THE STATE OF CALIFORNIA OR ITS OFFICERS OR AGENTS SHALL NOT BE RESPONSIBLE FOR THE ACCURACY OR COMPLETENESS OF SCANNED COPIES OF THIS PLAN SHEET.

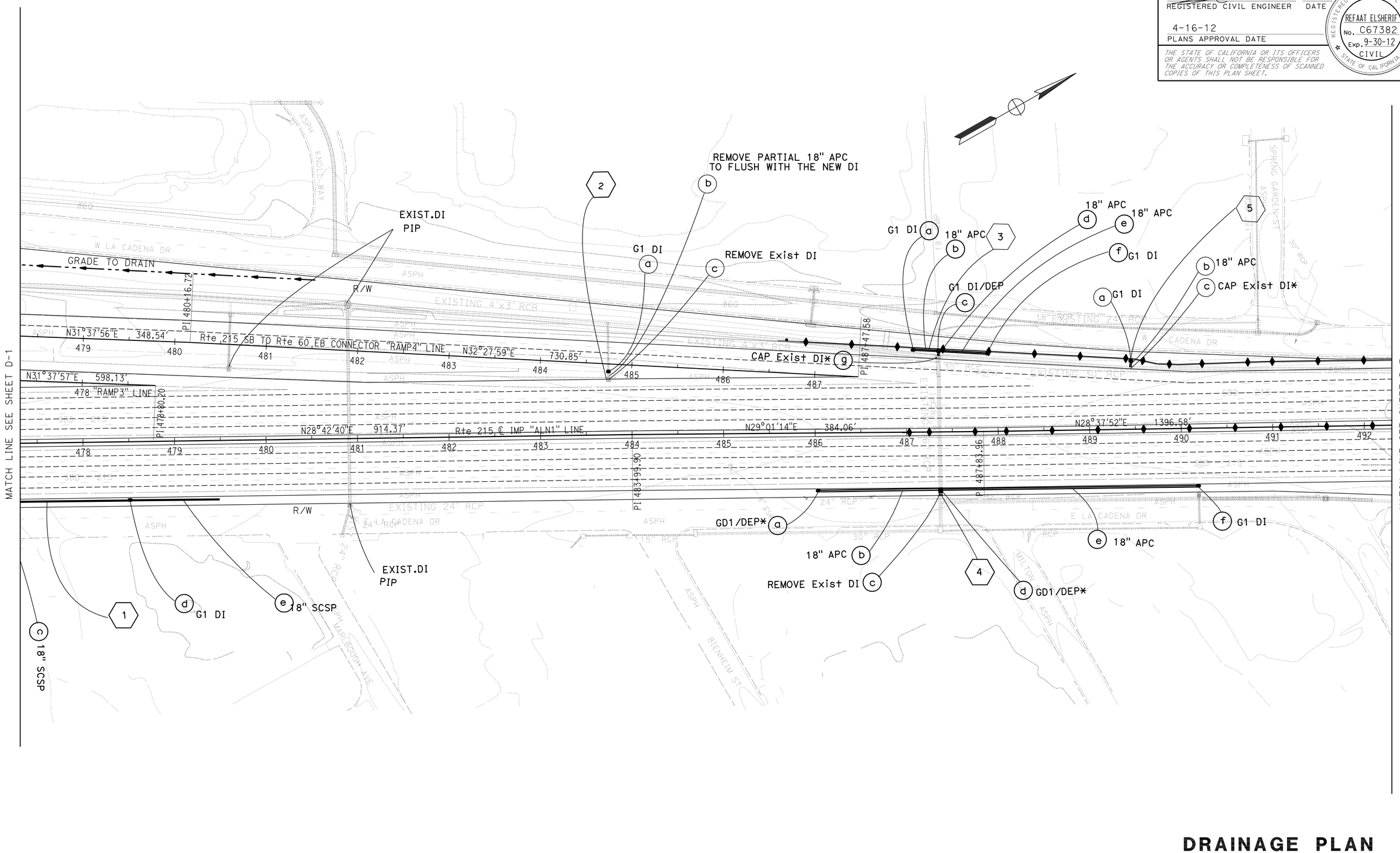

DRAINAGE PLAN

SCALE: 1" = 50'

D-2

STATE OF CALIFORNIA - DEPARTMENT OF TRANSPORTATION
Caltrans®
DESIGN

FUNCTIONAL SUPERVISOR: BEN AMIRI
CALCULATED-DESIGNED BY: JOYA GILSTER
CHECKED BY: REFAAT ELSHERIF
REVISED BY
DATE REVISED

LAST REVISION 01-02-12
DATE PLOTTED => 17-APR-2012
TIME PLOTTED => 17:05

Dist	COUNTY	ROUTE	POST MILES TOTAL PROJECT	SHEET No.	TOTAL SHEETS
08	Riv,SBd	91,215	21.5/21.7, 43.2/45.2,0.0/5.1	259	1743

REGISTERED CIVIL ENGINEER 2-10-12 DATE

4-16-12
PLANS APPROVAL DATE

REGISTERED PROFESSIONAL ENGINEER REFAAT ELSHERIF No. C67382 Exp. 9-30-12 CIVIL STATE OF CALIFORNIA

THE STATE OF CALIFORNIA OR ITS OFFICERS OR AGENTS SHALL NOT BE RESPONSIBLE FOR THE ACCURACY OR COMPLETENESS OF SCANNED COPIES OF THIS PLAN SHEET.

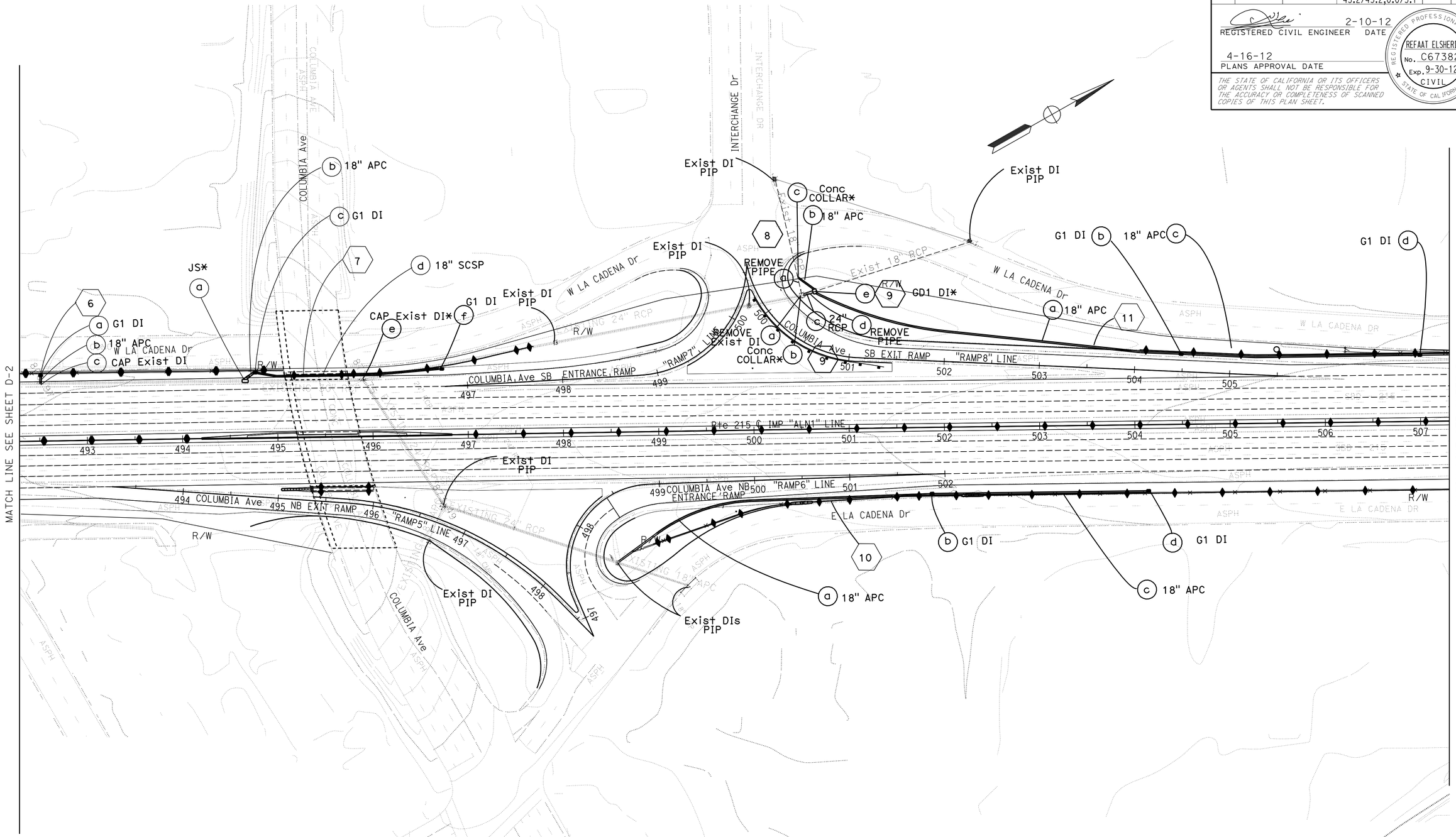

DRAINAGE PLAN

SCALE: 1" = 50'

D-3

STATE OF CALIFORNIA - DEPARTMENT OF TRANSPORTATION
Caltrans DESIGN

FUNCTIONAL SUPERVISOR: BEN AMIRI
CALCULATED-DESIGNED BY: JOYA GILSTER
CHECKED BY: REFAAT ELSHERIF
REVISED BY
DATE REVISED

LAST REVISION 02-10-12
DATE PLOTTED => 17-APR-2012
TIME PLOTTED => 17:05

Dist	COUNTY	ROUTE	POST MILES TOTAL PROJECT	SHEET No.	TOTAL SHEETS
08	Riv,SBd	91,215	21.5/21.7, 43.2/45.2,0.0/5.1	260	1743

REGISTERED CIVIL ENGINEER 2-29-12 DATE

4-16-12
PLANS APPROVAL DATE

REGISTERED PROFESSIONAL ENGINEER
REFAAT ELSHERIF
No. C67382
Exp. 9-30-12
CIVIL
STATE OF CALIFORNIA

THE STATE OF CALIFORNIA OR ITS OFFICERS OR AGENTS SHALL NOT BE RESPONSIBLE FOR THE ACCURACY OR COMPLETENESS OF SCANNED COPIES OF THIS PLAN SHEET.

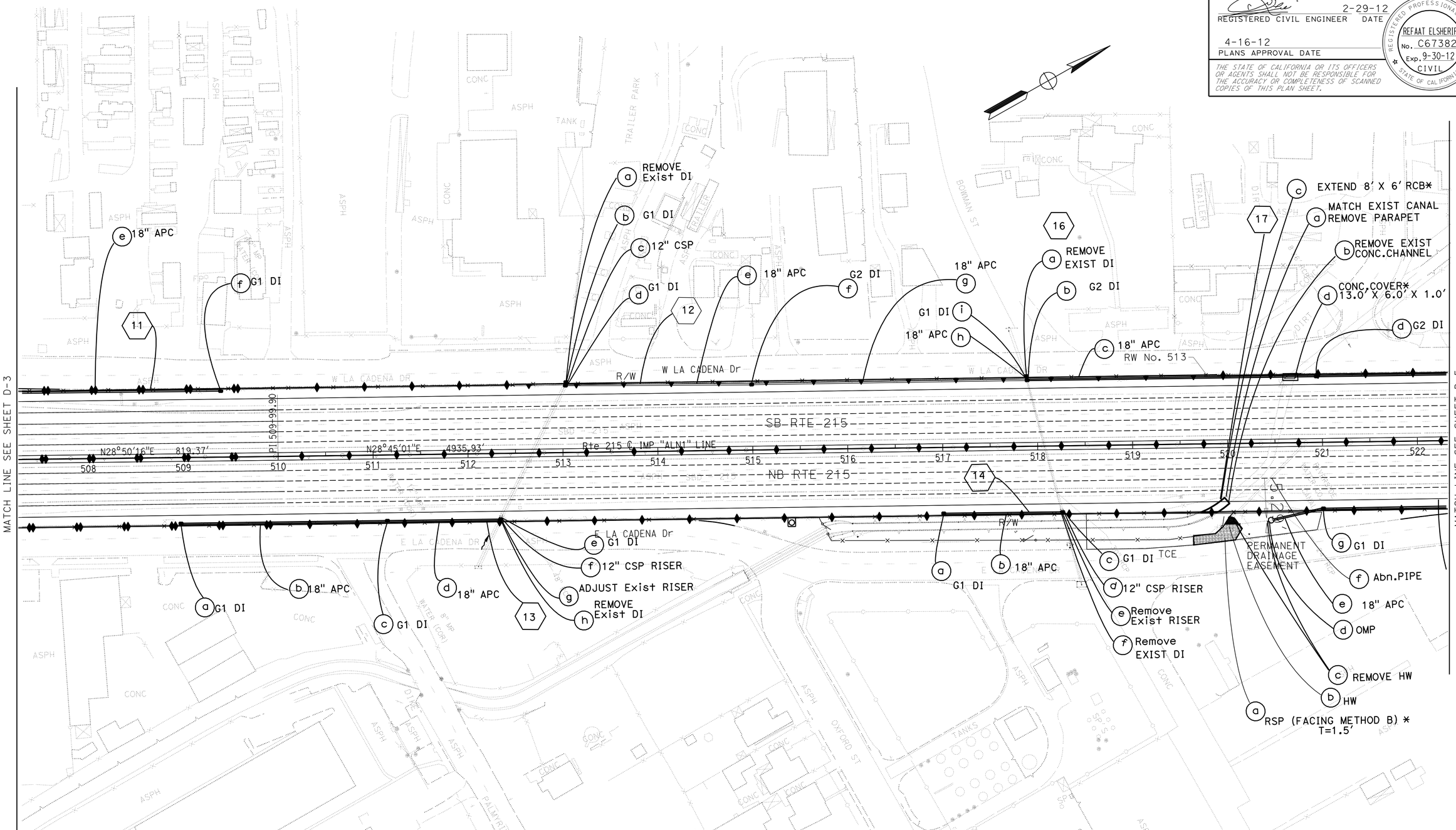

DRAINAGE PLAN

SCALE: 1" = 50'

D-4

STATE OF CALIFORNIA - DEPARTMENT OF TRANSPORTATION
DESIGN
Caltrans

FUNCTIONAL SUPERVISOR: BEN AMIRI
JOYA GILSTER
REFAAT ELSHERIF
CALCULATED-DESIGNED BY
CHECKED BY
REVISED BY
DATE REVISED

LAST REVISION 02-29-12
DATE PLOTTED => 04-MAY-2012
TIME PLOTTED => 12:47

Dist	COUNTY	ROUTE	POST MILES TOTAL PROJECT	SHEET No.	TOTAL SHEETS
08	Riv,SBd	91,215	21.5/21.7, 43.2/45.2,0.0/5.1	261	1743

REGISTERED CIVIL ENGINEER 2-27-12 DATE

4-16-12
PLANS APPROVAL DATE

REGISTERED PROFESSIONAL ENGINEER
REFAAT ELSHERIF
No. C67382
Exp. 9-30-12
CIVIL
STATE OF CALIFORNIA

THE STATE OF CALIFORNIA OR ITS OFFICERS OR AGENTS SHALL NOT BE RESPONSIBLE FOR THE ACCURACY OR COMPLETENESS OF SCANNED COPIES OF THIS PLAN SHEET.

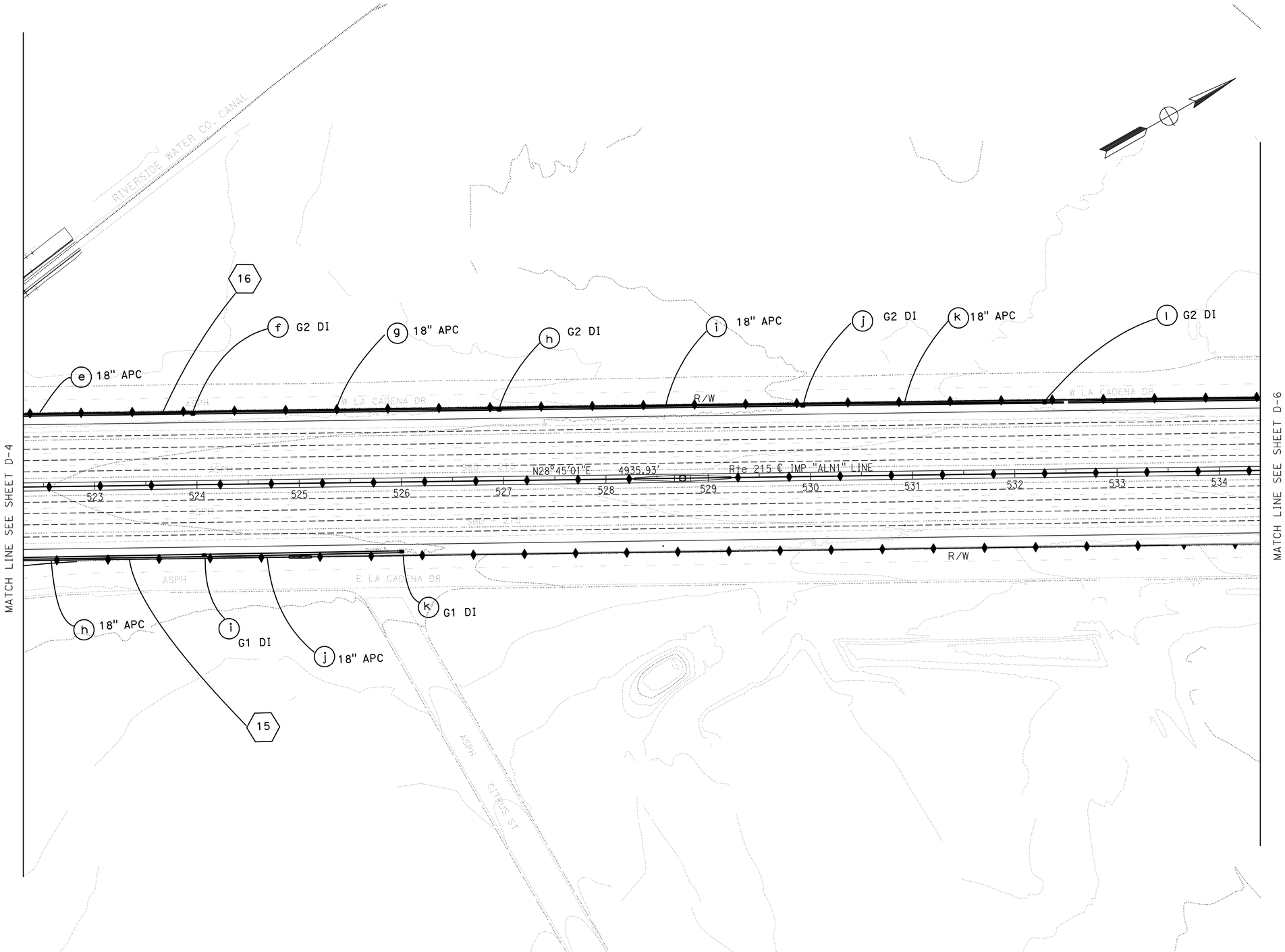

DRAINAGE PLAN

SCALE: 1" = 50'

D-5

STATE OF CALIFORNIA - DEPARTMENT OF TRANSPORTATION
Caltrans
DESIGN

FUNCTIONAL SUPERVISOR: BEN AMIRI
CALCULATED-DESIGNED BY: JOYA GILSTER
CHECKED BY: REFAAT ELSHERIF
REVISED BY
DATE REVISED

LAST REVISION 02-27-12
DATE PLOTTED => 17-APR-2012
TIME PLOTTED => 17:05

Dist	COUNTY	ROUTE	POST MILES TOTAL PROJECT	SHEET No.	TOTAL SHEETS
08	Riv,SBd	91,215	21.5/21.7, 43.2/45.2,0.0/5.1	262	1743

REGISTERED CIVIL ENGINEER 1-2-12 DATE

4-16-12
PLANS APPROVAL DATE

REGISTERED PROFESSIONAL ENGINEER
REFAAT ELSHERIF
No. C67382
Exp. 9-30-12
CIVIL
STATE OF CALIFORNIA

THE STATE OF CALIFORNIA OR ITS OFFICERS OR AGENTS SHALL NOT BE RESPONSIBLE FOR THE ACCURACY OR COMPLETENESS OF SCANNED COPIES OF THIS PLAN SHEET.

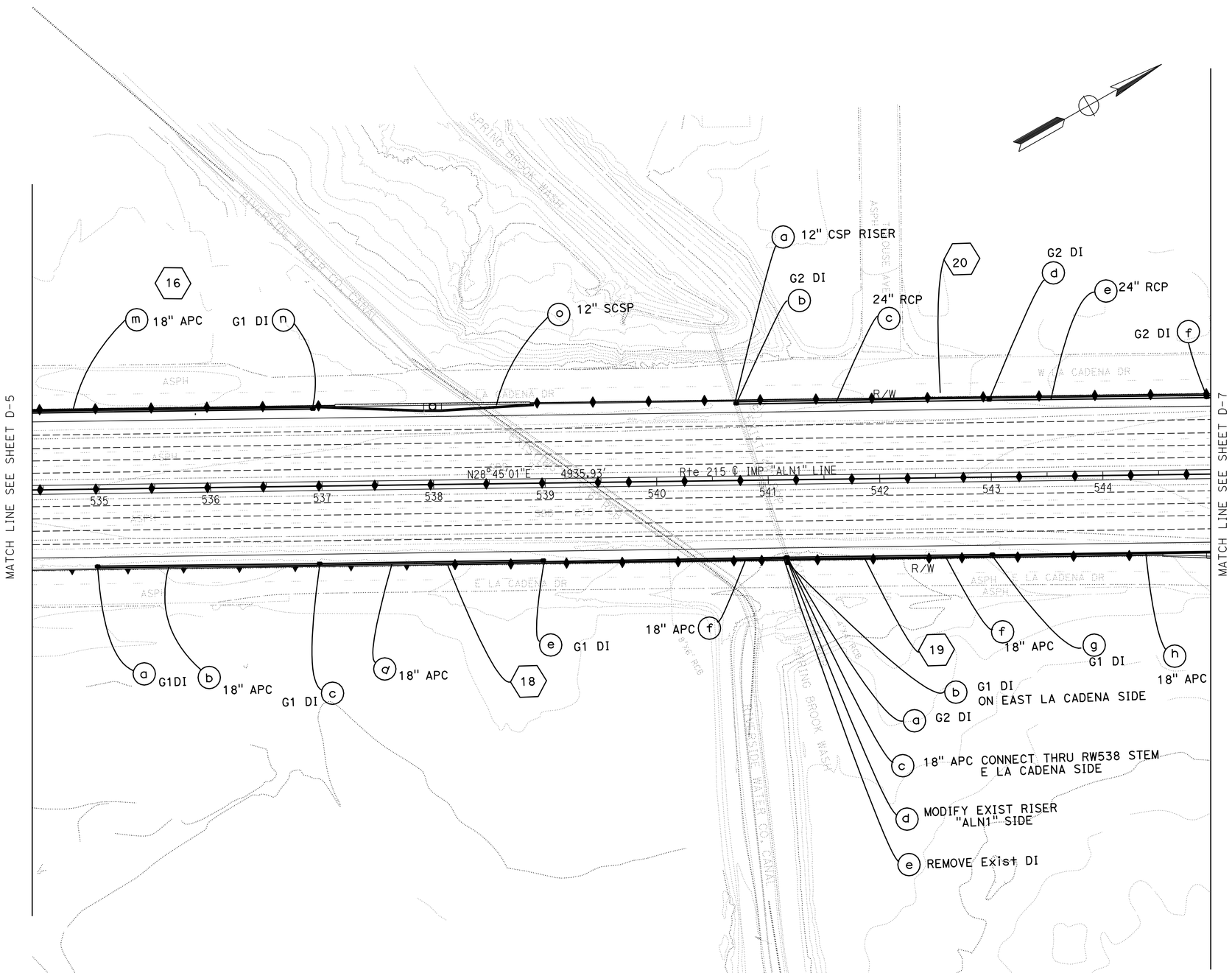

DRAINAGE PLAN

SCALE: 1" = 50'

D-6

JOYA GILSTER	REFAAT ELSHERIF	REVISED BY	DATE REVISED
CALCULATED-DESIGNED BY	CHECKED BY		
FUNCTIONAL SUPERVISOR	BEN AMIRI		

STATE OF CALIFORNIA - DEPARTMENT OF TRANSPORTATION

Caltrans

DESIGN

LAST REVISION 01-02-12 | DATE PLOTTED => 17-APR-2012 | TIME PLOTTED => 17:05

Dist	COUNTY	ROUTE	POST MILES TOTAL PROJECT	SHEET No.	TOTAL SHEETS
08	Riv,SBd	91,215	21.5/21.7, 43.2/45.2,0.0/5.1	263	1743

REGISTERED CIVIL ENGINEER 2-10-12 DATE

4-16-12
PLANS APPROVAL DATE

REGISTERED PROFESSIONAL ENGINEER
REFAAT ELSHERIF
No. C67382
Exp. 9-30-12
CIVIL
STATE OF CALIFORNIA

THE STATE OF CALIFORNIA OR ITS OFFICERS OR AGENTS SHALL NOT BE RESPONSIBLE FOR THE ACCURACY OR COMPLETENESS OF SCANNED COPIES OF THIS PLAN SHEET.

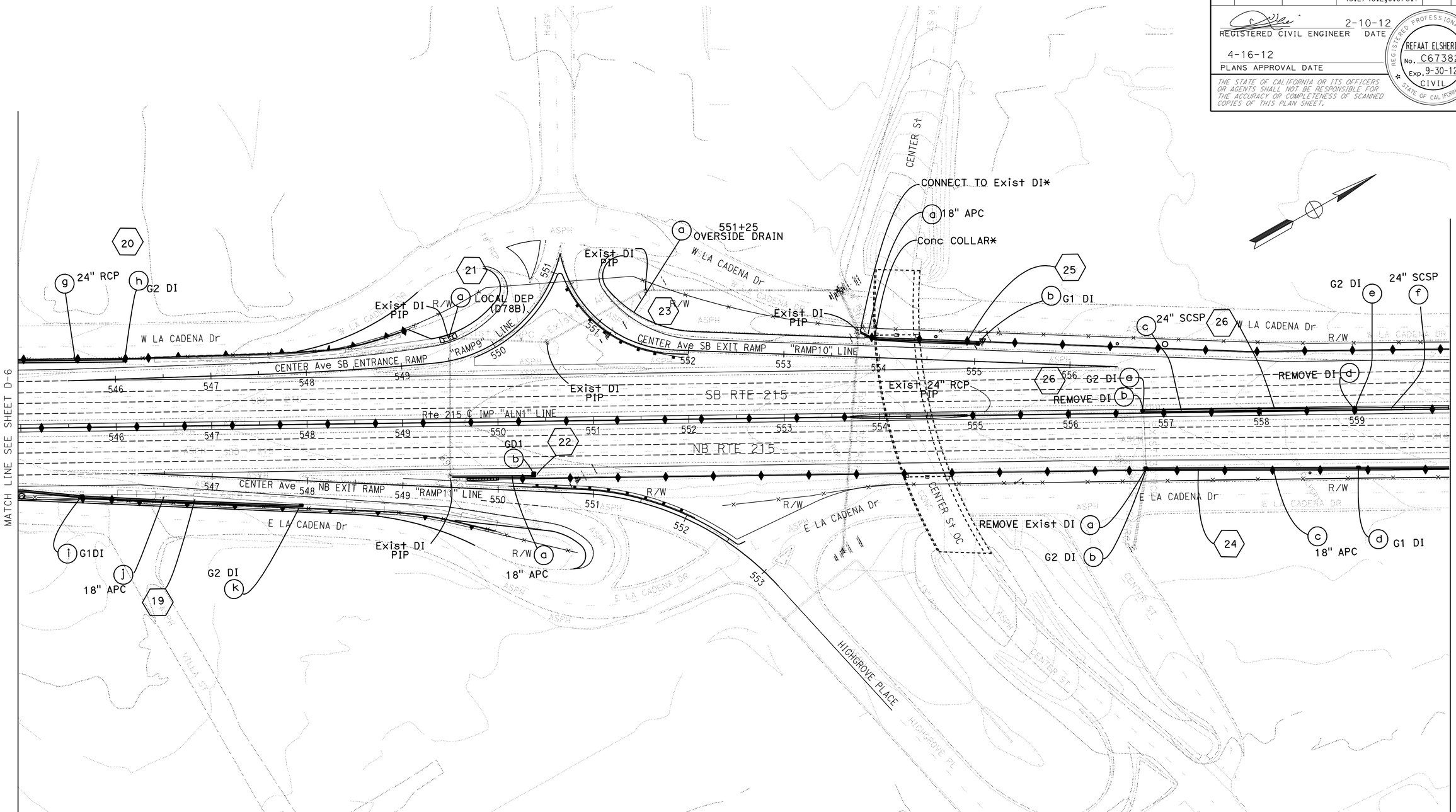

DRAINAGE PLAN

SCALE: 1" = 50'

D-7

STATE OF CALIFORNIA - DEPARTMENT OF TRANSPORTATION
Caltrans DESIGN

FUNCTIONAL SUPERVISOR: BEN AMIRI
CALCULATED-DESIGNED BY: JOYA GILSTER
CHECKED BY: REFAAT ELSHERIF
REVISED BY
DATE REVISED

LAST REVISION 02-10-12
DATE PLOTTED => 17-APR-2012
TIME PLOTTED => 17:06

Dist	COUNTY	ROUTE	POST MILES TOTAL PROJECT	SHEET No.	TOTAL SHEETS
08	Riv,SBd	91,215	21.5/21.7, 43.2/45.2,0.0/5.1	264	1743

REGISTERED CIVIL ENGINEER 4-6-12 DATE

4-16-12
PLANS APPROVAL DATE

REGISTERED PROFESSIONAL ENGINEER
REFAAT ELSHERIF
No. C67382
Exp. 9-30-12
CIVIL
STATE OF CALIFORNIA

THE STATE OF CALIFORNIA OR ITS OFFICERS OR AGENTS SHALL NOT BE RESPONSIBLE FOR THE ACCURACY OR COMPLETENESS OF SCANNED COPIES OF THIS PLAN SHEET.

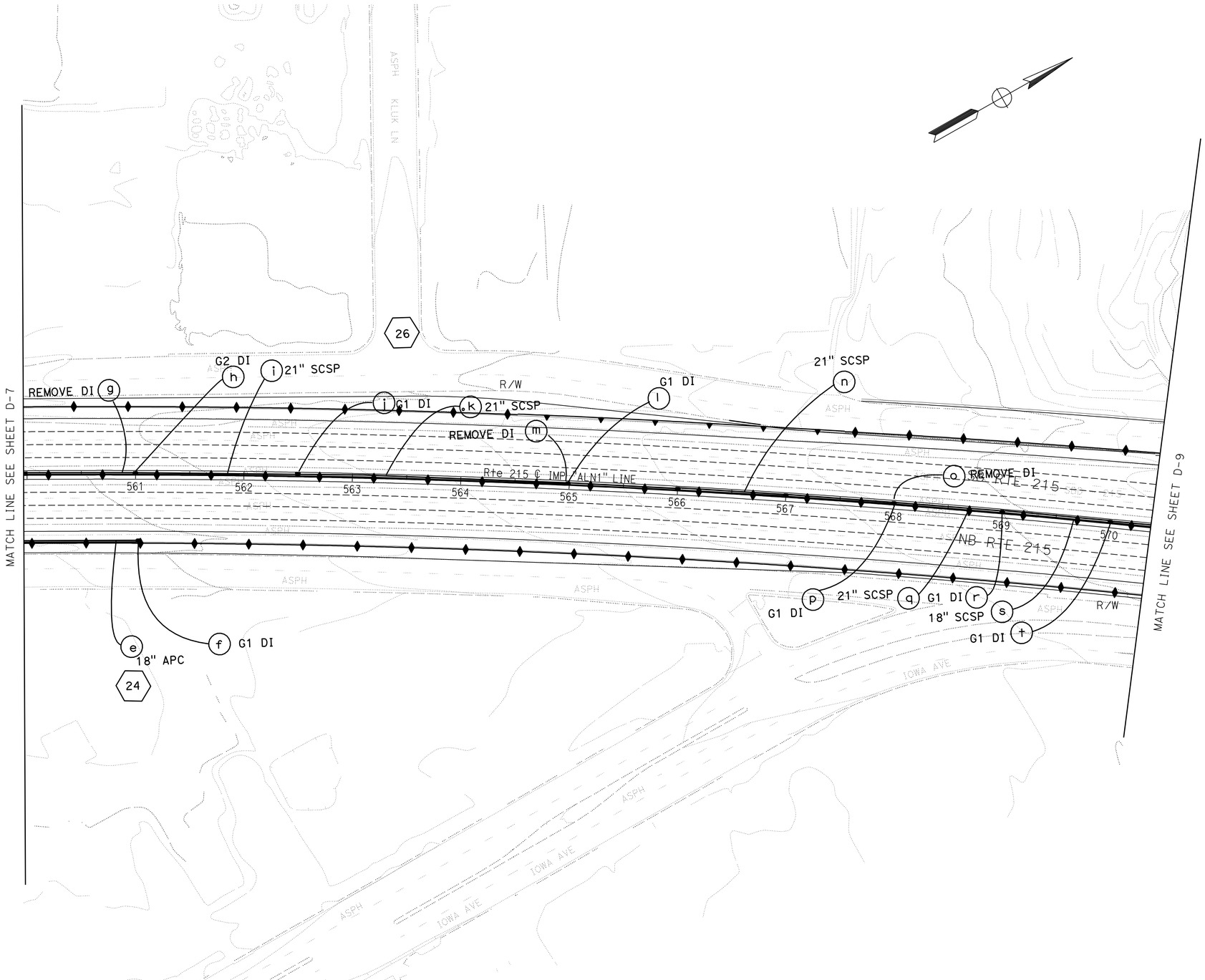

DRAINAGE PLAN

SCALE: 1" = 50'

D-8

STATE OF CALIFORNIA - DEPARTMENT OF TRANSPORTATION
Caltrans
DESIGN

FUNCTIONAL SUPERVISOR: BEN AMIRI
CALCULATED-DESIGNED BY: JOYA GILSTER
CHECKED BY: REFAAT ELSHERIF
REVISED BY
DATE REVISED

LAST REVISION 04-06-12
DATE PLOTTED => 17-APR-2012
TIME PLOTTED => 17:06

Dist	COUNTY	ROUTE	POST MILES TOTAL PROJECT	SHEET No.	TOTAL SHEETS
08	Riv,SBd	91,215	21.5/21.7, 43.2/45.2,0.0/5.1	265	1743

REGISTERED CIVIL ENGINEER 2-10-12 DATE

4-16-12
PLANS APPROVAL DATE

REGISTERED PROFESSIONAL ENGINEER
REFAAT ELSHERIF
No. C67382
Exp. 9-30-12
CIVIL
STATE OF CALIFORNIA

THE STATE OF CALIFORNIA OR ITS OFFICERS OR AGENTS SHALL NOT BE RESPONSIBLE FOR THE ACCURACY OR COMPLETENESS OF SCANNED COPIES OF THIS PLAN SHEET.

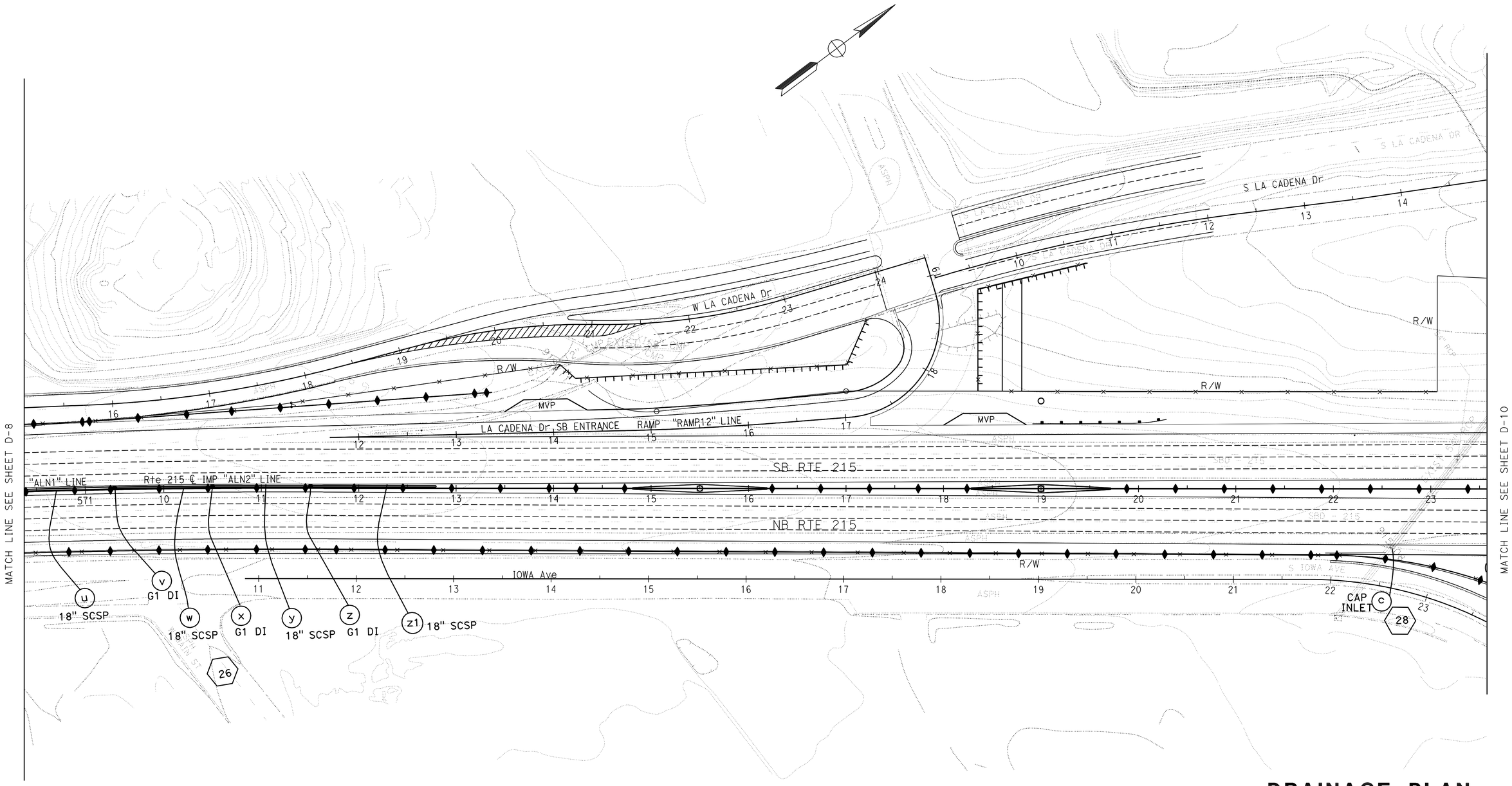

DRAINAGE PLAN

SCALE: 1" = 50'

D-9

STATE OF CALIFORNIA - DEPARTMENT OF TRANSPORTATION
Caltrans
DESIGN

FUNCTIONAL SUPERVISOR: BEN AMIRI

CALCULATED-DESIGNED BY: JOYA GILSTER
CHECKED BY: REFAAT ELSHERIF

REVISED BY
DATE REVISED

LAST REVISION 02-10-12
DATE PLOTTED => 17-APR-2012
TIME PLOTTED => 17:06

Dist	COUNTY	ROUTE	POST MILES TOTAL PROJECT	SHEET No.	TOTAL SHEETS
08	Riv,SBd	91,215	21.5/21.7, 43.2/45.2,0.0/5.1	266	1743

REGISTERED CIVIL ENGINEER 4-5-12 DATE

4-16-12
PLANS APPROVAL DATE

REGISTERED PROFESSIONAL ENGINEER REFAAT ELSHERIF No. C67382 Exp. 9-30-12 CIVIL STATE OF CALIFORNIA

THE STATE OF CALIFORNIA OR ITS OFFICERS OR AGENTS SHALL NOT BE RESPONSIBLE FOR THE ACCURACY OR COMPLETENESS OF SCANNED COPIES OF THIS PLAN SHEET.

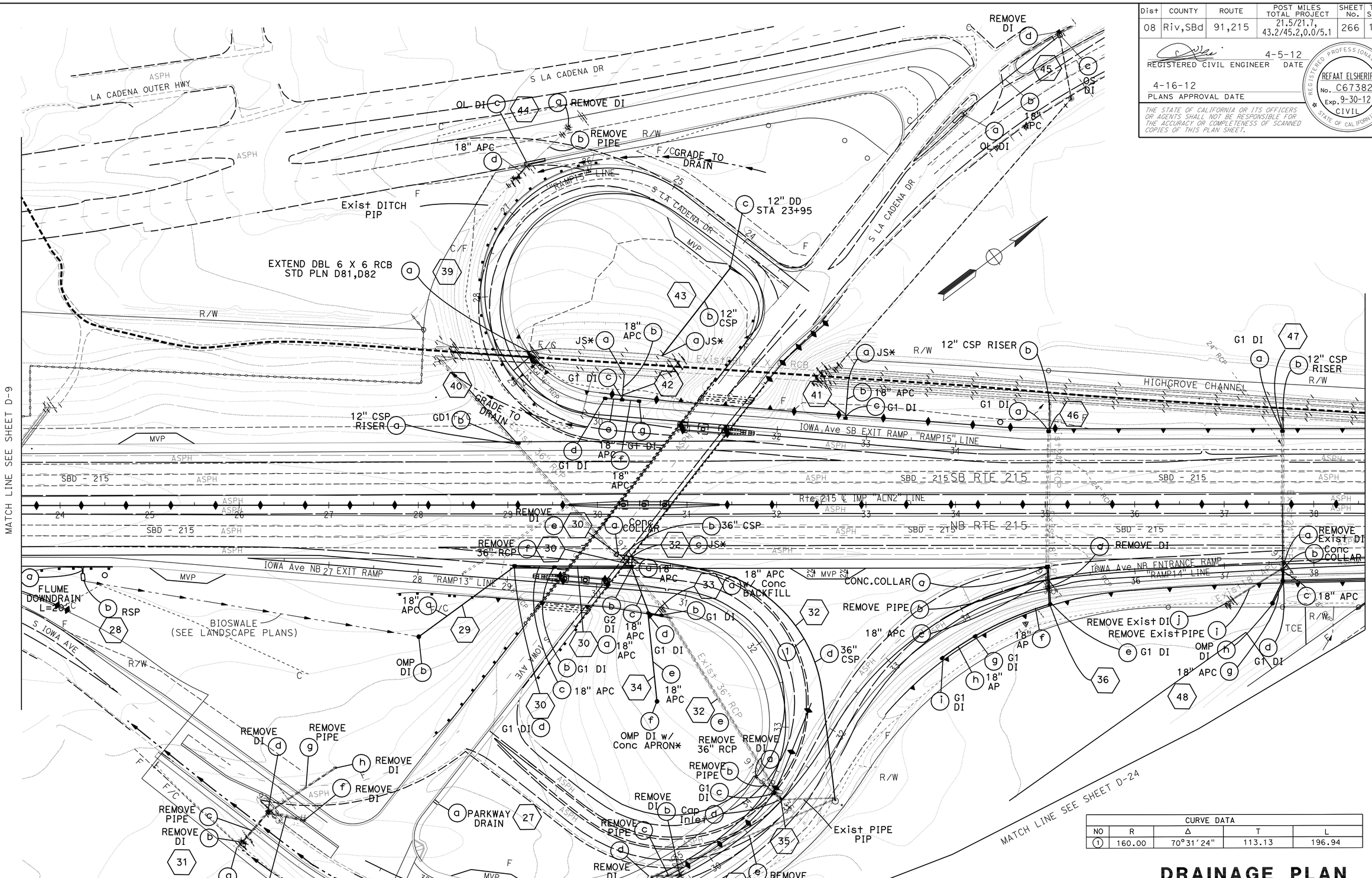

CURVE DATA				
NO	R	Δ	T	L
1	160.00	70°31′24″	113.13	196.94

DRAINAGE PLAN

SCALE: 1" = 50′

D-10

APPROVED FOR DRAINAGE WORK ONLY

STATE OF CALIFORNIA - DEPARTMENT OF TRANSPORTATION
Caltrans DESIGN

FUNCTIONAL SUPERVISOR: BEN AMIRI
CALCULATED-DESIGNED BY: JOYA GILSTER
CHECKED BY: REFAAT ELSHERIF
REVISED BY
DATE REVISED

LAST REVISION 04-05-12
DATE PLOTTED => 06-JUN-2012
TIME PLOTTED => 13:58

Dist	COUNTY	ROUTE	POST MILES TOTAL PROJECT	SHEET No.	TOTAL SHEETS
08	Riv,SBd	91,215	21.5/21.7, 43.2/45.2,0.0/5.1	267	1743

REGISTERED CIVIL ENGINEER 4-5-12 DATE

4-16-12
PLANS APPROVAL DATE

REGISTERED PROFESSIONAL ENGINEER
REFAAT ELSHERIF
No. C67382
Exp. 9-30-12
CIVIL
STATE OF CALIFORNIA

THE STATE OF CALIFORNIA OR ITS OFFICERS OR AGENTS SHALL NOT BE RESPONSIBLE FOR THE ACCURACY OR COMPLETENESS OF SCANNED COPIES OF THIS PLAN SHEET.

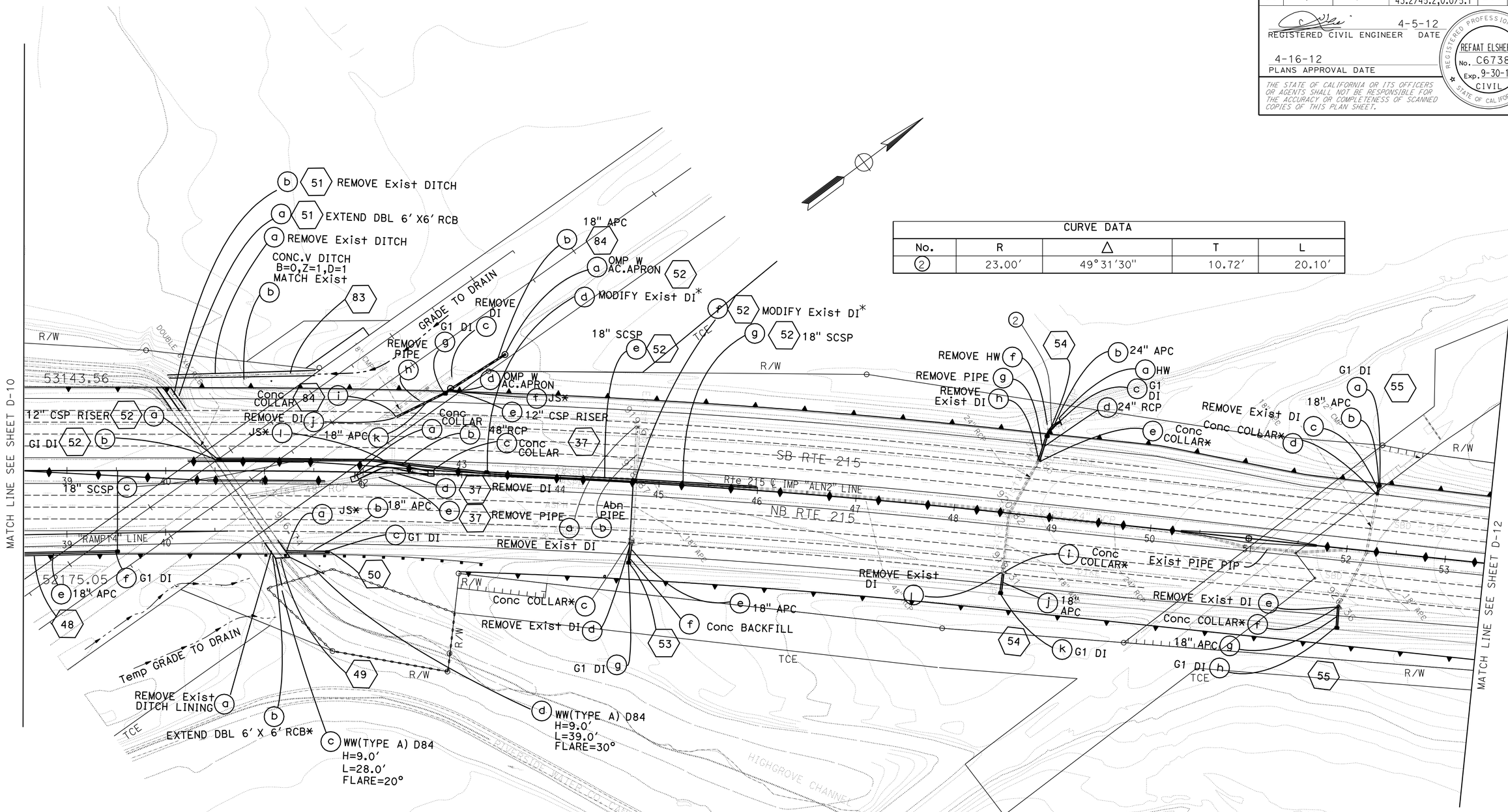

CURVE DATA				
No.	R	Δ	T	L
2	23.00′	49°31′30″	10.72′	20.10′

DRAINAGE PLAN

SCALE: 1" = 50′

D-11

STATE OF CALIFORNIA - DEPARTMENT OF TRANSPORTATION
Caltrans
DESIGN

FUNCTIONAL SUPERVISOR: BEN AMIRI
CALCULATED-DESIGNED BY: JOYA GILSTER
CHECKED BY: REFAAT ELSHERIF
REVISED BY
DATE REVISED

LAST REVISION 04-05-12
DATE PLOTTED => 17-APR-2012
TIME PLOTTED => 17:06

Dist	COUNTY	ROUTE	POST MILES TOTAL PROJECT	SHEET No.	TOTAL SHEETS
08	Riv,SBd	91,215	21.5/21.7, 43.2/45.2,0.0/5.1	268	1743

REGISTERED CIVIL ENGINEER 2-10-12 DATE

4-16-12
PLANS APPROVAL DATE

REGISTERED PROFESSIONAL ENGINEER
REFAAT ELSHERIF
No. C67382
Exp. 9-30-12
CIVIL
STATE OF CALIFORNIA

THE STATE OF CALIFORNIA OR ITS OFFICERS OR AGENTS SHALL NOT BE RESPONSIBLE FOR THE ACCURACY OR COMPLETENESS OF SCANNED COPIES OF THIS PLAN SHEET.

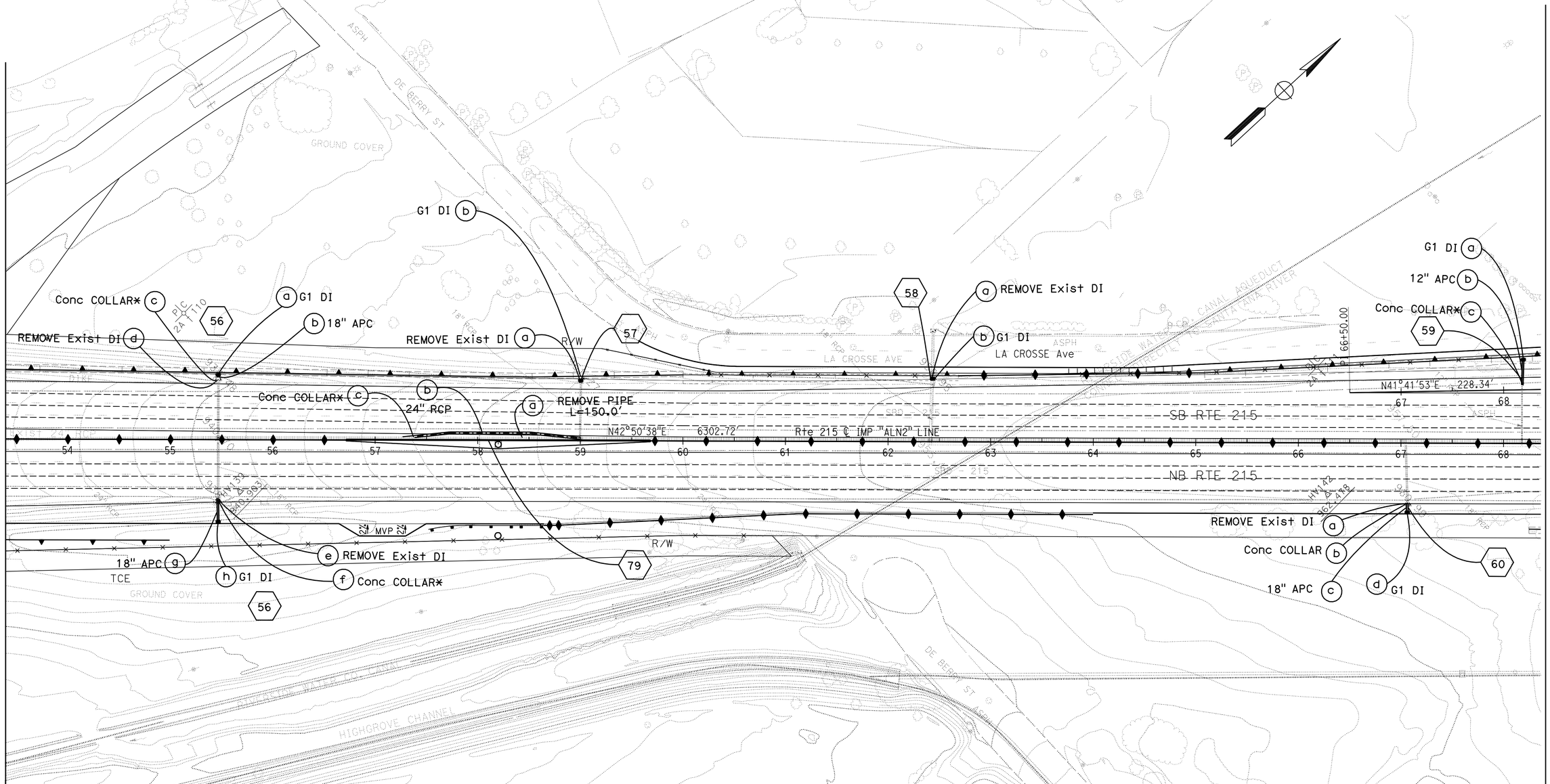

DRAINAGE PLAN

SCALE: 1" = 50'

D-12

REVISED BY	DATE REVISED

CALCULATED- DESIGNED BY: JOYA GILSTER
CHECKED BY: REFAAT ELSHERIF
FUNCTIONAL SUPERVISOR: BEN AMIRI

STATE OF CALIFORNIA - DEPARTMENT OF TRANSPORTATION
Caltrans
DESIGN

LAST REVISION 02-10-12
DATE PLOTTED => 23-APR-2012
TIME PLOTTED => 10:44

Dist	COUNTY	ROUTE	POST MILES TOTAL PROJECT	SHEET No.	TOTAL SHEETS
08	Riv,SBd	91,215	21.5/21.7, 43.2/45.2,0.0/5.1	269	1743

REGISTERED CIVIL ENGINEER 2-10-12 DATE

4-16-12
PLANS APPROVAL DATE

REGISTERED PROFESSIONAL ENGINEER
REFAAT ELSHERIF
No. C67382
Exp. 9-30-12
CIVIL
STATE OF CALIFORNIA

THE STATE OF CALIFORNIA OR ITS OFFICERS OR AGENTS SHALL NOT BE RESPONSIBLE FOR THE ACCURACY OR COMPLETENESS OF SCANNED COPIES OF THIS PLAN SHEET.

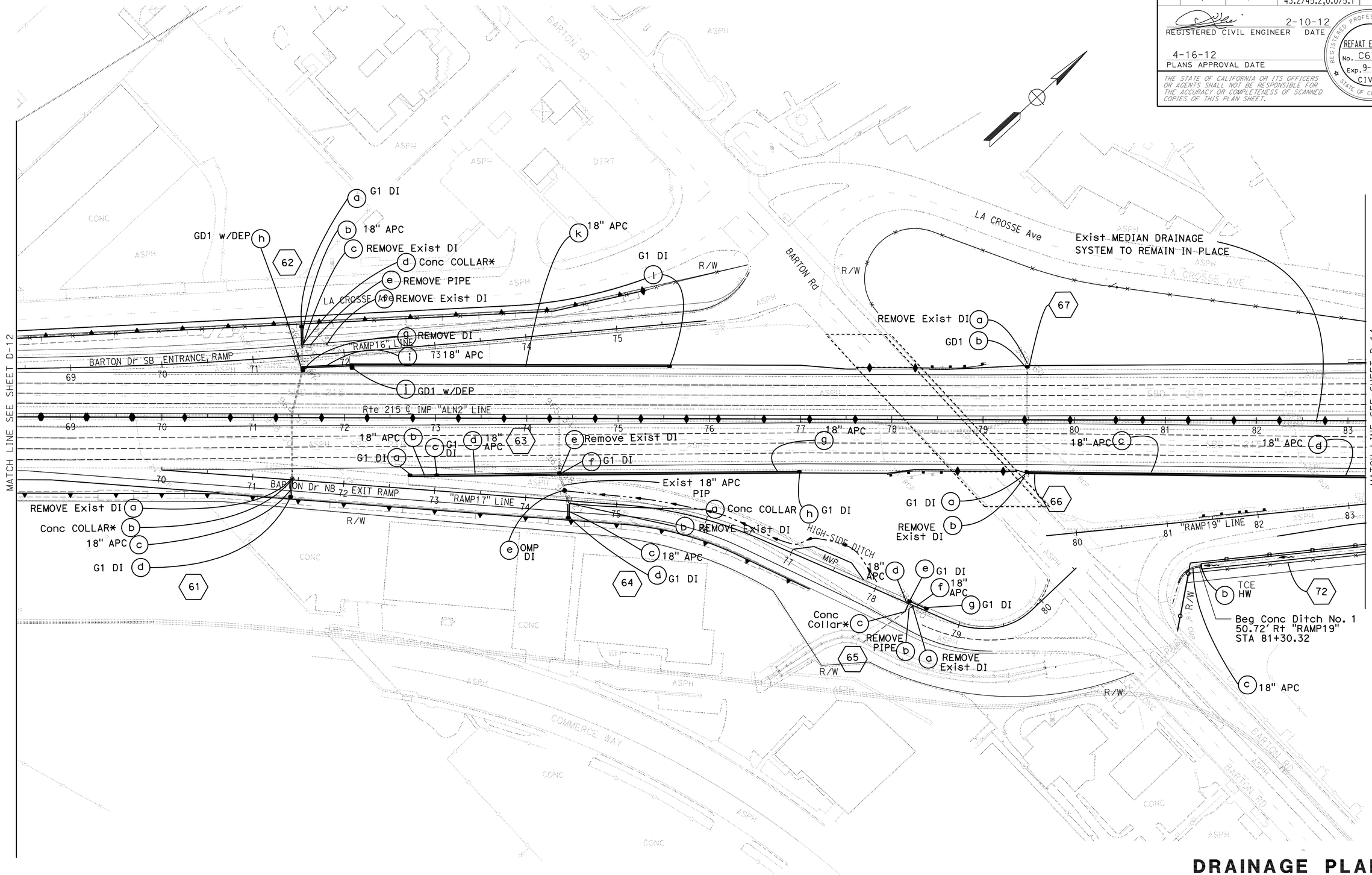

DRAINAGE PLAN

SCALE: 1" = 50'

D-13

STATE OF CALIFORNIA - DEPARTMENT OF TRANSPORTATION
Caltrans DESIGN

FUNCTIONAL SUPERVISOR: BEN AMIRI
CALCULATED-DESIGNED BY: JOYA GILSTER
CHECKED BY: REFAAT ELSHERIF
REVISED BY
DATE REVISED

LAST REVISION 02-10-12
DATE PLOTTED => 17-APR-2012
TIME PLOTTED => 17:06

Dist	COUNTY	ROUTE	POST MILES TOTAL PROJECT	SHEET No.	TOTAL SHEETS
08	Riv,SBd	91,215	21.5/21.7, 43.2/45.2,0.0/5.1	270	1743

REGISTERED CIVIL ENGINEER 3-23-12 DATE

4-16-12
PLANS APPROVAL DATE

REGISTERED PROFESSIONAL ENGINEER REFAAT ELSHERIF No. C67382 Exp. 9-30-12 CIVIL STATE OF CALIFORNIA

THE STATE OF CALIFORNIA OR ITS OFFICERS OR AGENTS SHALL NOT BE RESPONSIBLE FOR THE ACCURACY OR COMPLETENESS OF SCANNED COPIES OF THIS PLAN SHEET.

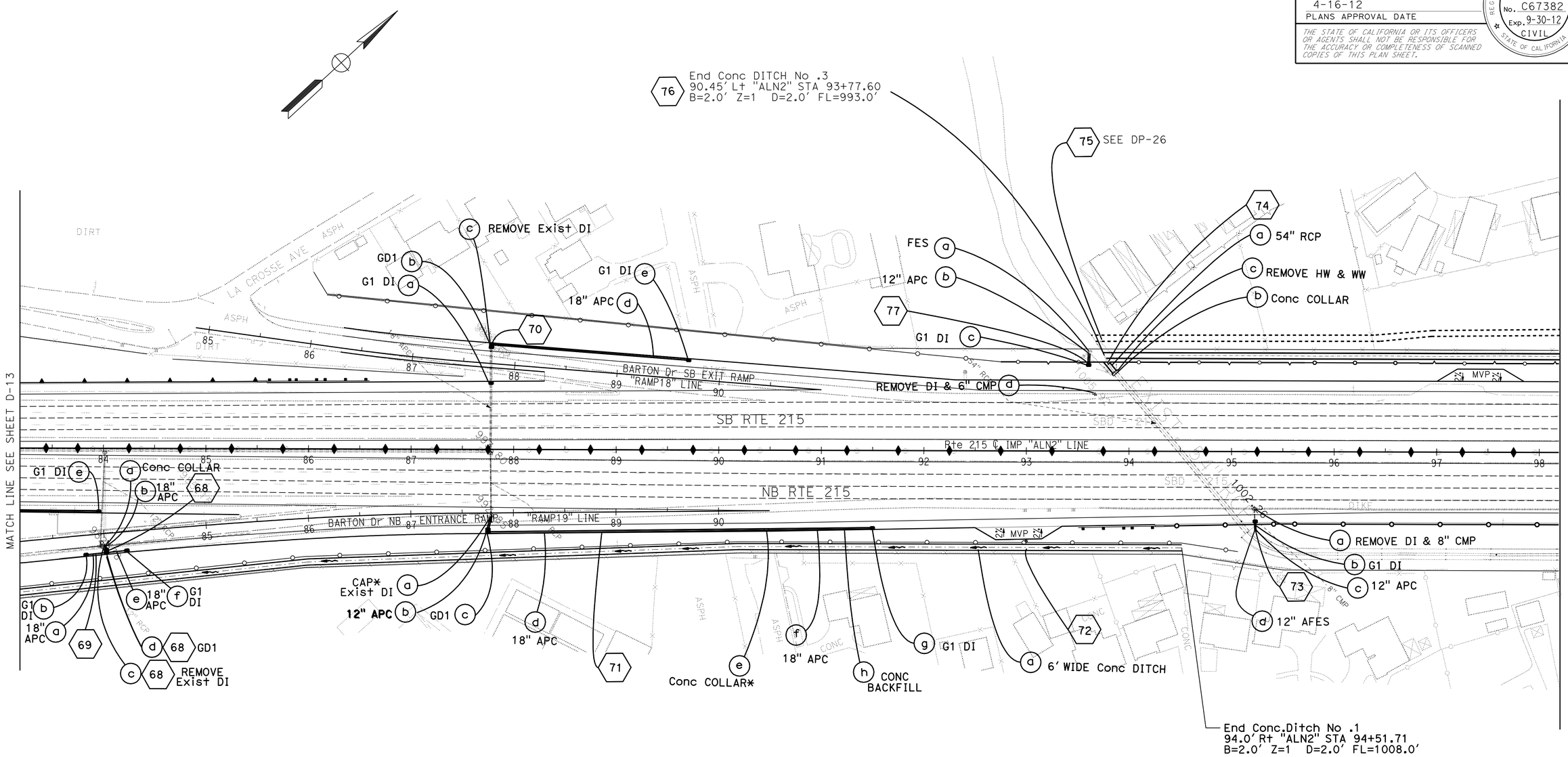

DRAINAGE PLAN

SCALE: 1" = 50'

D-14

REVISED BY | DATE REVISED

JOYA GILSTER | REFAAT ELSHERIF

CALCULATED-DESIGNED BY | CHECKED BY

FUNCTIONAL SUPERVISOR: BEN AMIRI

STATE OF CALIFORNIA - DEPARTMENT OF TRANSPORTATION

Caltrans

DESIGN

LAST REVISION 03-23-12 | DATE PLOTTED => 17-APR-2012 | TIME PLOTTED => 17:06

Dist	COUNTY	ROUTE	POST MILES TOTAL PROJECT	SHEET No.	TOTAL SHEETS
08	Riv,SBd	91,215	21.5/21.7, 43.2/45.2,0.0/5.1	271	1743

REGISTERED CIVIL ENGINEER 4-6-12 DATE

4-16-12
PLANS APPROVAL DATE

REGISTERED PROFESSIONAL ENGINEER REFAAT ELSHERIF No. C67382 Exp. 9-30-12 CIVIL STATE OF CALIFORNIA

THE STATE OF CALIFORNIA OR ITS OFFICERS OR AGENTS SHALL NOT BE RESPONSIBLE FOR THE ACCURACY OR COMPLETENESS OF SCANNED COPIES OF THIS PLAN SHEET.

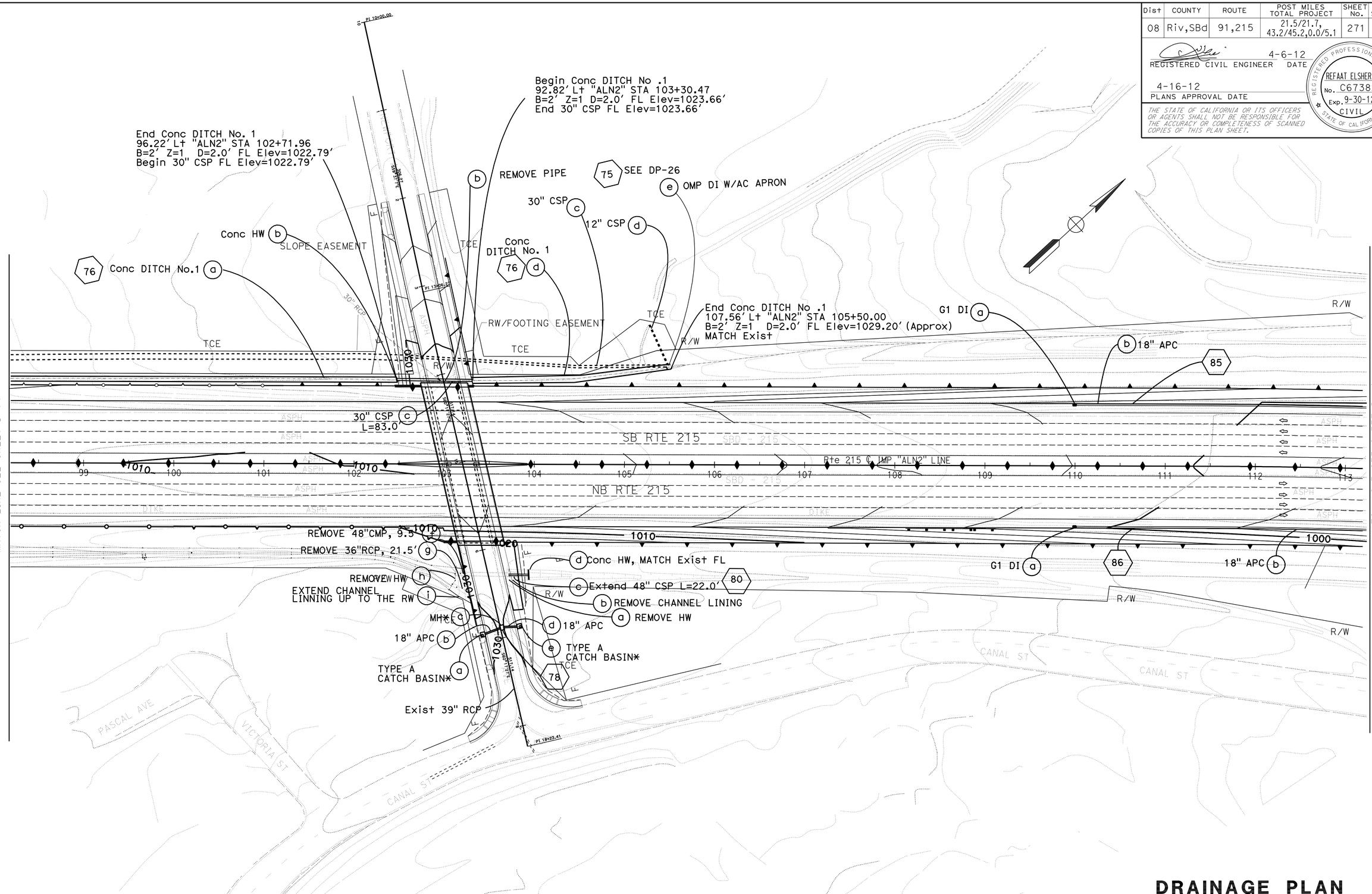

DRAINAGE PLAN

SCALE: 1"=50'

D-15

APPROVED FOR DRAINAGE WORK ONLY

STATE OF CALIFORNIA - DEPARTMENT OF TRANSPORTATION

DESIGN

FUNCTIONAL SUPERVISOR: BEN AMIRI

CALCULATED-DESIGNED BY: JOYA GILSTER

CHECKED BY: REFAAT ELSHERIF

REVISED BY

DATE REVISED

LAST REVISION 04-06-12

DATE PLOTTED => 04-MAY-2012
TIME PLOTTED => 12:47

Dist	COUNTY	ROUTE	POST MILES TOTAL PROJECT	SHEET No.	TOTAL SHEETS
08	Riv,SBd	91,215	21.5/21.7, 43.2/45.2,0.0/5.1	272	1743

REGISTERED CIVIL ENGINEER 1-2-12 DATE

4-16-12
PLANS APPROVAL DATE

REGISTERED PROFESSIONAL ENGINEER
REFAAT ELSHERIF
No. C67382
Exp. 9-30-12
CIVIL
STATE OF CALIFORNIA

THE STATE OF CALIFORNIA OR ITS OFFICERS OR AGENTS SHALL NOT BE RESPONSIBLE FOR THE ACCURACY OR COMPLETENESS OF SCANNED COPIES OF THIS PLAN SHEET.

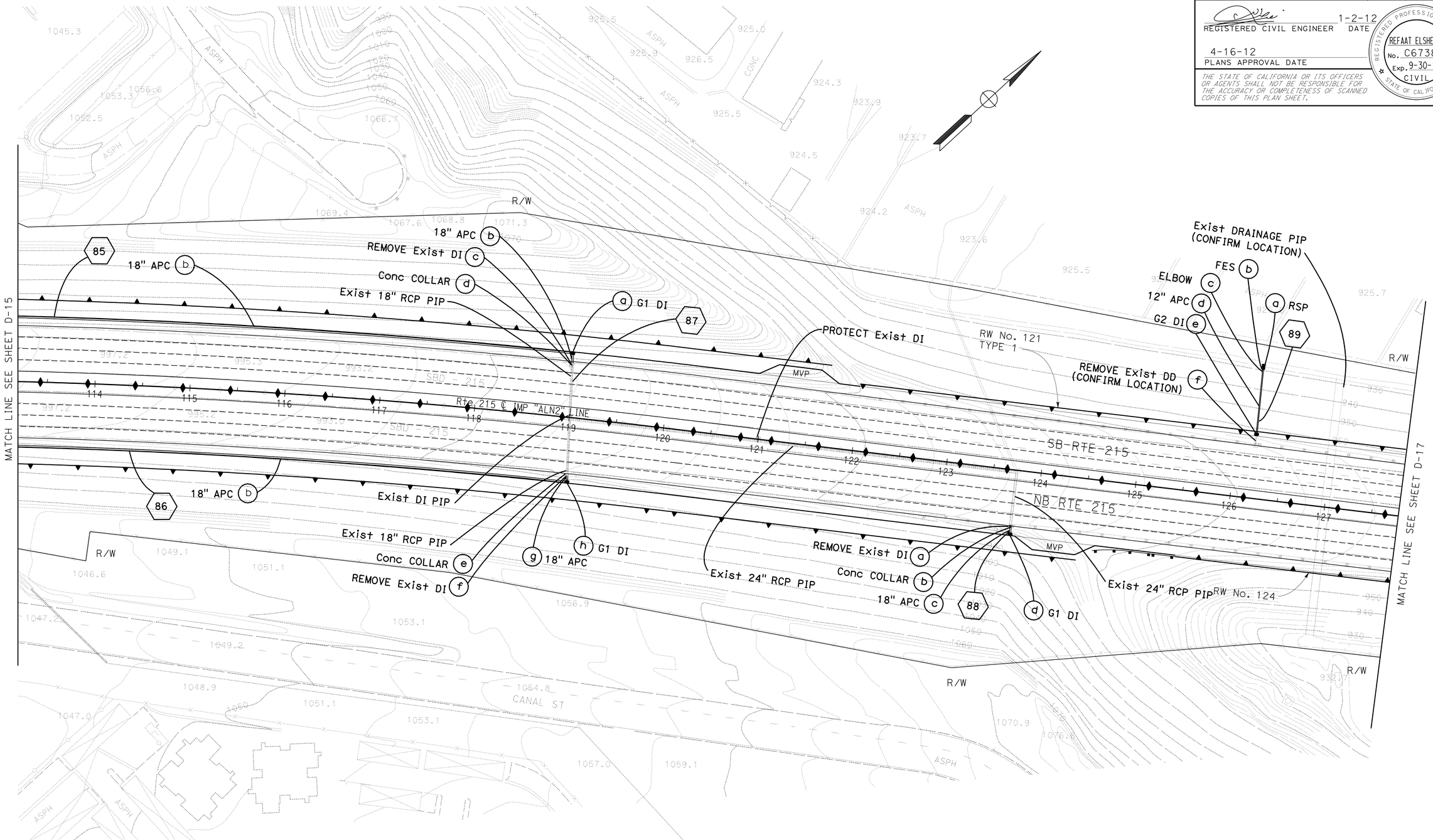

DRAINAGE PLAN

SCALE: 1"=50'

D-16

STATE OF CALIFORNIA - DEPARTMENT OF TRANSPORTATION
Caltrans
DESIGN

FUNCTIONAL SUPERVISOR: BEN AMIRI
CALCULATED-DESIGNED BY: REFAAT ELSHERIF
CHECKED BY: JOYA GILSTER
REVISED BY
DATE REVISED

LAST REVISION 01-02-12
DATE PLOTTED => 17-APR-2012
TIME PLOTTED => 16:31

Dist	COUNTY	ROUTE	POST MILES TOTAL PROJECT	SHEET No.	TOTAL SHEETS
08	Riv,SBd	91,215	21.5/21.7, 43.2/45.2,0.0/5.1	273	1743

REGISTERED CIVIL ENGINEER 1-2-12 DATE

4-16-12
PLANS APPROVAL DATE

REGISTERED PROFESSIONAL ENGINEER REFAAT ELSHERIF No. C67382 Exp. 9-30-12 CIVIL STATE OF CALIFORNIA

THE STATE OF CALIFORNIA OR ITS OFFICERS OR AGENTS SHALL NOT BE RESPONSIBLE FOR THE ACCURACY OR COMPLETENESS OF SCANNED COPIES OF THIS PLAN SHEET.

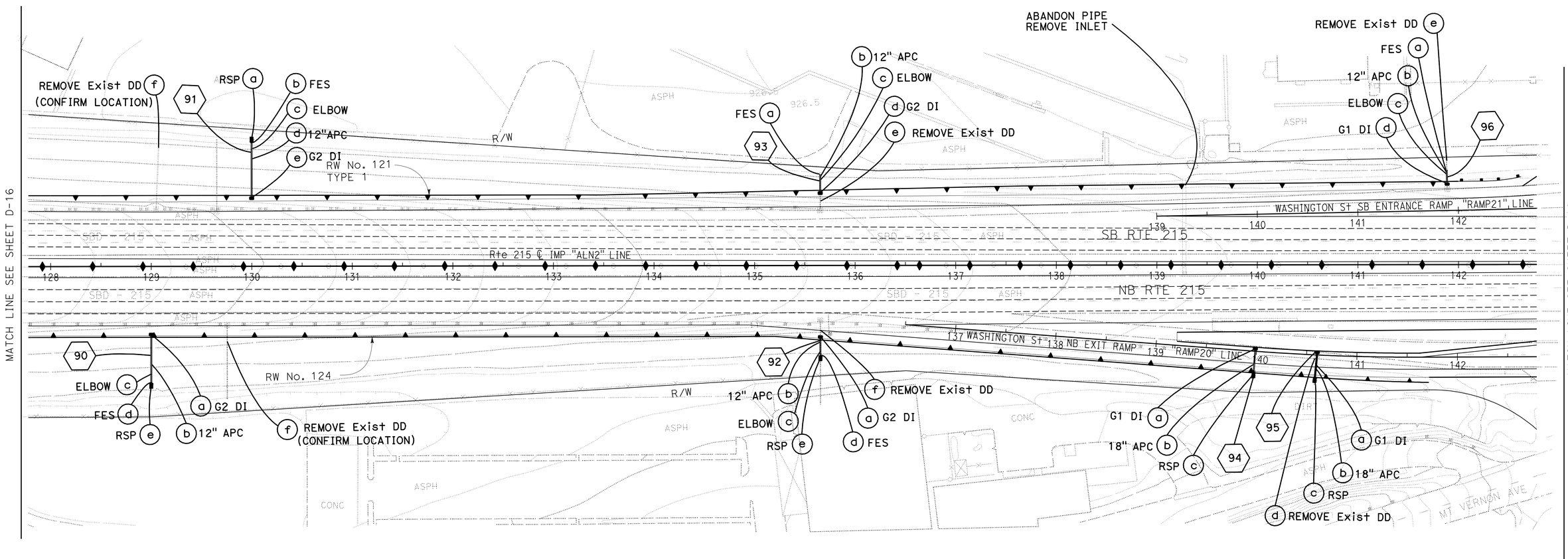

DRAINAGE PLAN

SCALE: 1"=50'

D-17

STATE OF CALIFORNIA - DEPARTMENT OF TRANSPORTATION
DESIGN
Caltrans

FUNCTIONAL SUPERVISOR: BEN AMIRI
CALCULATED-DESIGNED BY: JOYA GILSTER
CHECKED BY: REFAAT ELSHERIF
REVISED BY
DATE REVISED

LAST REVISION 01-02-12
DATE PLOTTED => 17-APR-2012
TIME PLOTTED => 16:31

Dist	COUNTY	ROUTE	POST MILES TOTAL PROJECT	SHEET No.	TOTAL SHEETS
08	Riv,SBd	91,215	21.5/21.7, 43.2/45.2,0.0/5.1	274	1743

REGISTERED CIVIL ENGINEER 1-2-12 DATE

4-16-12
PLANS APPROVAL DATE

REGISTERED PROFESSIONAL ENGINEER
REFAAT ELSHERIF
No. C67382
Exp. 9-30-12
CIVIL
STATE OF CALIFORNIA

THE STATE OF CALIFORNIA OR ITS OFFICERS OR AGENTS SHALL NOT BE RESPONSIBLE FOR THE ACCURACY OR COMPLETENESS OF SCANNED COPIES OF THIS PLAN SHEET.

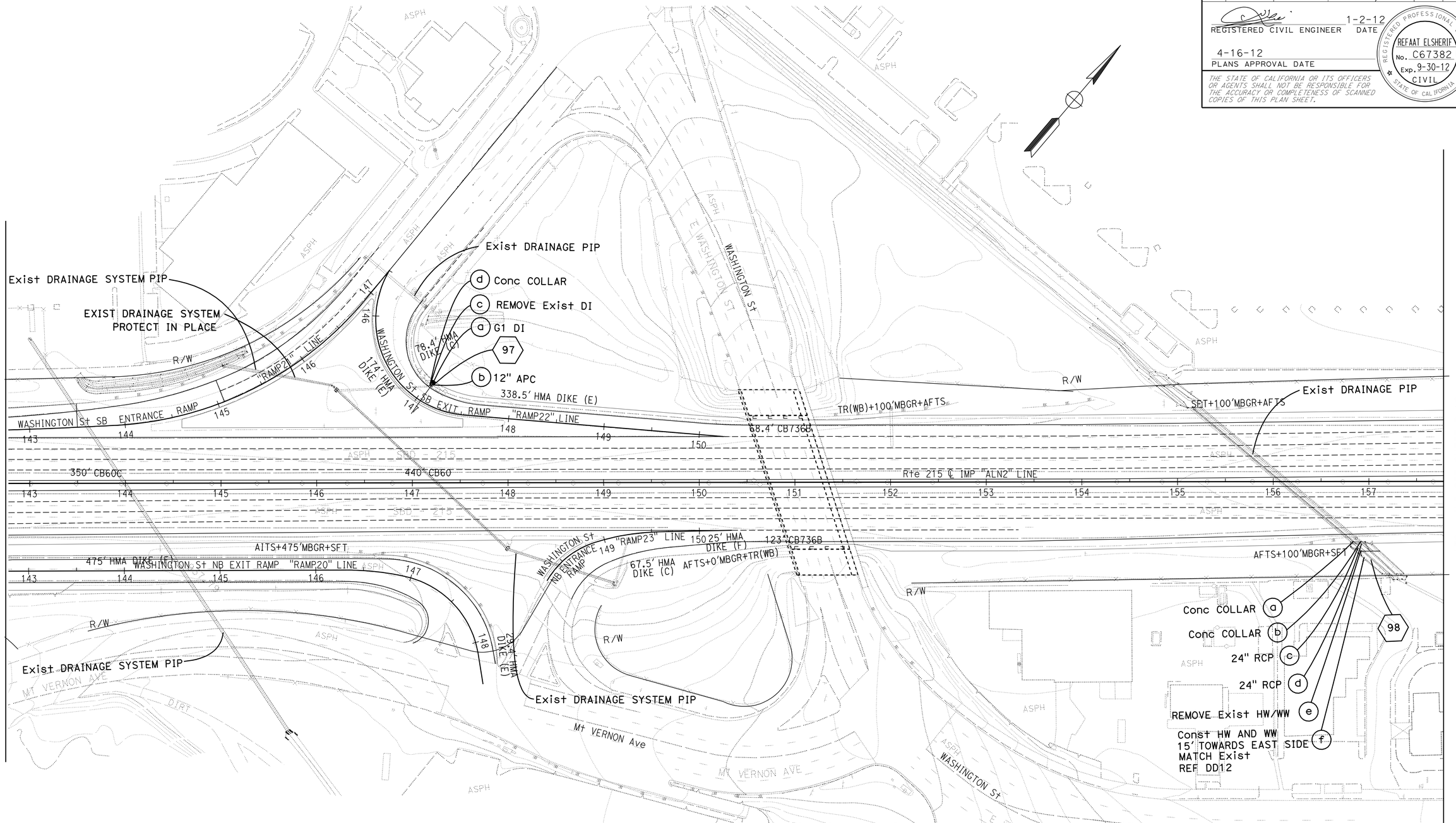

DRAINAGE PLAN

SCALE: 1"=50'

D-18

REVISED BY	DATE REVISED
JOYA GILSTER	REFAAT ELSHERIF
CALCULATED-DESIGNED BY	CHECKED BY
FUNCTIONAL SUPERVISOR	BEN AMIRI

STATE OF CALIFORNIA - DEPARTMENT OF TRANSPORTATION
Caltrans
DESIGN

LAST REVISION 01-02-12 DATE PLOTTED => 17-APR-2012 TIME PLOTTED => 16:31

Dist	COUNTY	ROUTE	POST MILES TOTAL PROJECT	SHEET No.	TOTAL SHEETS
08	Riv,SBd	91,215	21.5/21.7, 43.2/45.2,0.0/5.1	275	1743

REGISTERED CIVIL ENGINEER 2-10-12 DATE

4-16-12
PLANS APPROVAL DATE

REGISTERED PROFESSIONAL ENGINEER
REFAAT ELSHERIF
No. C67382
Exp. 9-30-12
CIVIL
STATE OF CALIFORNIA

THE STATE OF CALIFORNIA OR ITS OFFICERS OR AGENTS SHALL NOT BE RESPONSIBLE FOR THE ACCURACY OR COMPLETENESS OF SCANNED COPIES OF THIS PLAN SHEET.

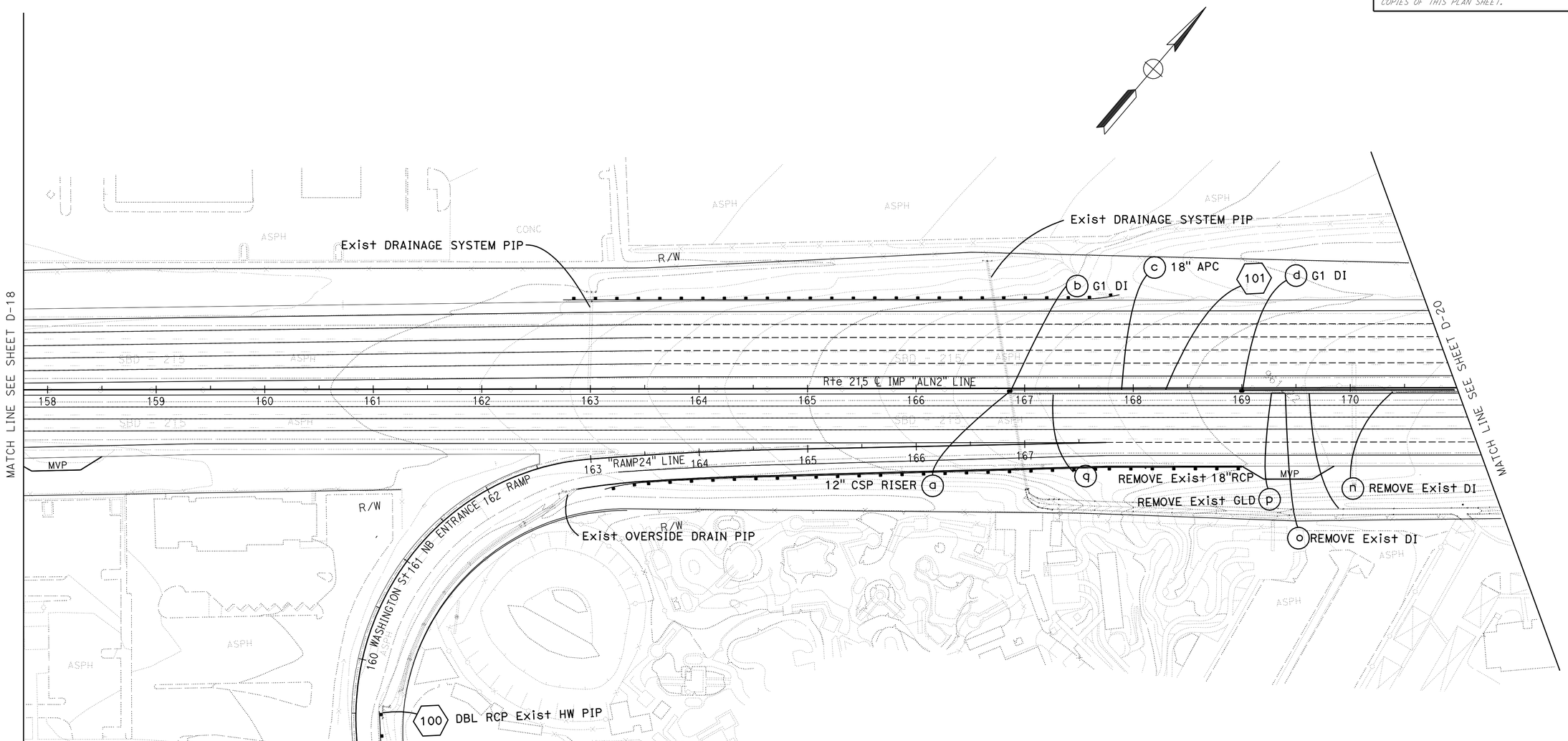

DRAINAGE PLAN

SCALE: 1"=50'

D-19

STATE OF CALIFORNIA - DEPARTMENT OF TRANSPORTATION
Caltrans
DESIGN

FUNCTIONAL SUPERVISOR: BEN AMIRI
CALCULATED-DESIGNED BY: JOYA GILSTER
CHECKED BY: REFAAT ELSHERIF
REVISED BY
DATE REVISED

LAST REVISION 02-10-12
DATE PLOTTED => 17-APR-2012
TIME PLOTTED => 16:31

Dist	COUNTY	ROUTE	POST MILES TOTAL PROJECT	SHEET No.	TOTAL SHEETS
08	Riv,SBd	91,215	21.5/21.7, 43.2/45.2,0.0/5.1	276	1743

REGISTERED CIVIL ENGINEER 1-2-12 DATE

4-16-12
PLANS APPROVAL DATE

REGISTERED PROFESSIONAL ENGINEER
REFAAT ELSHERIF
No. C67382
Exp. 9-30-12
CIVIL
STATE OF CALIFORNIA

THE STATE OF CALIFORNIA OR ITS OFFICERS OR AGENTS SHALL NOT BE RESPONSIBLE FOR THE ACCURACY OR COMPLETENESS OF SCANNED COPIES OF THIS PLAN SHEET.

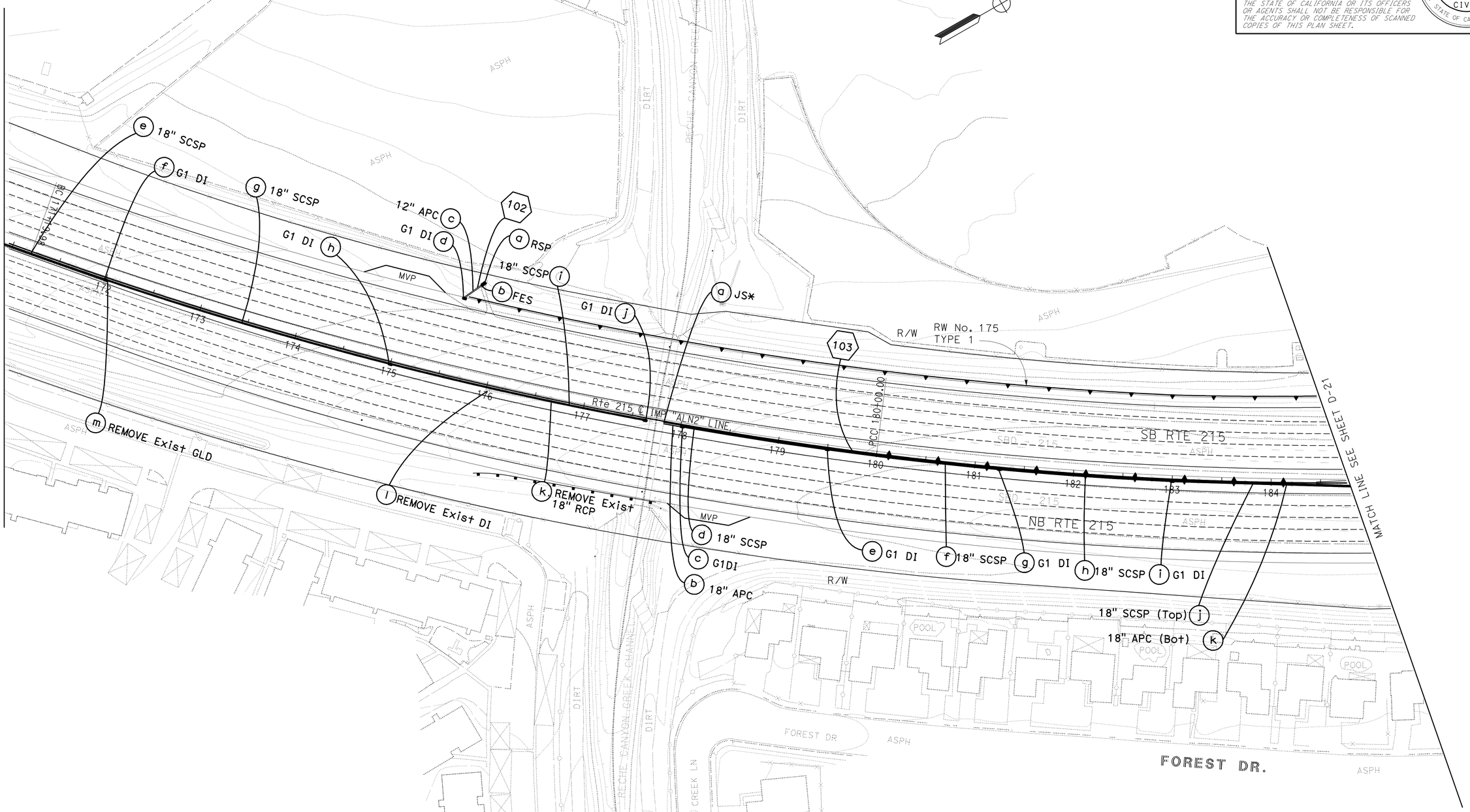

DRAINAGE PLAN

SCALE: 1"=50'

D-20

STATE OF CALIFORNIA - DEPARTMENT OF TRANSPORTATION
Caltrans
DESIGN

FUNCTIONAL SUPERVISOR: BEN AMIRI
CALCULATED-DESIGNED BY: JOYA GILSTER
CHECKED BY: REFAAT ELSHERIF
REVISED BY
DATE REVISED

LAST REVISION 01-02-12
DATE PLOTTED => 17-APR-2012
TIME PLOTTED => 16:31

BORDER LAST REVISED 7/2/2010
USERNAME => s119571
DGN FILE => 80m94uid020.dgn
RELATIVE BORDER SCALE IS IN INCHES 0 1 2 3
UNIT 2242
PROJECT NUMBER & PHASE 08000005061

Dist	COUNTY	ROUTE	POST MILES TOTAL PROJECT	SHEET No.	TOTAL SHEETS
08	Riv,SBd	91,215	21.5/21.7, 43.2/45.2,0.0/5.1	277	1743

REGISTERED CIVIL ENGINEER 1-2-12 DATE

4-16-12
PLANS APPROVAL DATE

REGISTERED PROFESSIONAL ENGINEER
REFAAT ELSHERIF
No. C67382
Exp. 9-30-12
CIVIL
STATE OF CALIFORNIA

THE STATE OF CALIFORNIA OR ITS OFFICERS OR AGENTS SHALL NOT BE RESPONSIBLE FOR THE ACCURACY OR COMPLETENESS OF SCANNED COPIES OF THIS PLAN SHEET.

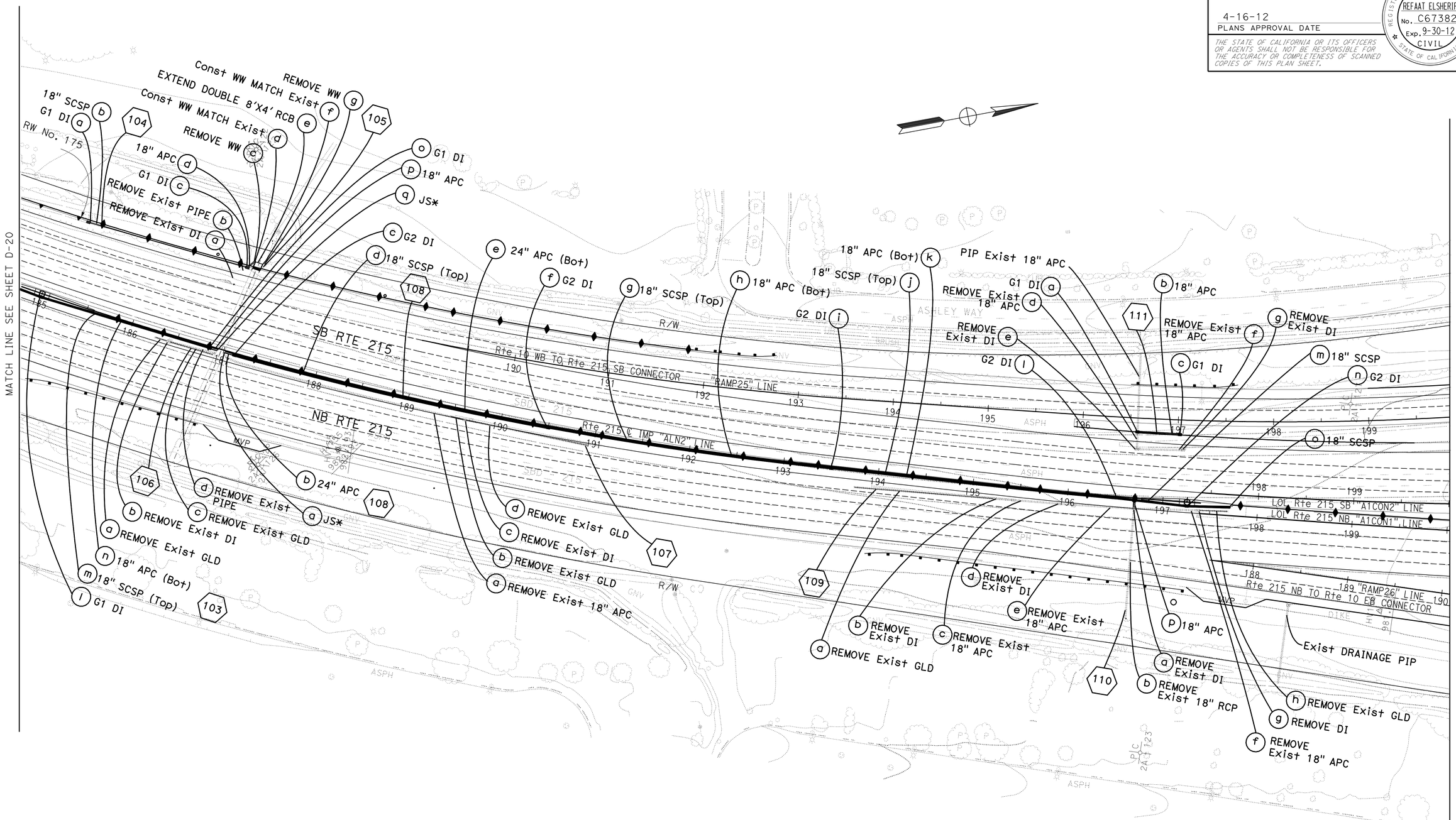

DRAINAGE PLAN

SCALE: 1"=50'

D-21

STATE OF CALIFORNIA - DEPARTMENT OF TRANSPORTATION
Caltrans DESIGN

FUNCTIONAL SUPERVISOR: BEN AMIRI
CALCULATED-DESIGNED BY: JOYA GILSTER
CHECKED BY: REFAAT ELSHERIF
REVISED BY
DATE REVISED

LAST REVISION 01-02-12
DATE PLOTTED => 23-APR-2012
TIME PLOTTED => 10:45

Dist	COUNTY	ROUTE	POST MILES TOTAL PROJECT	SHEET No.	TOTAL SHEETS
08	Riv,SBd	91,215	21.5/21.7, 43.2/45.2,0.0/5.1	278	1743

REGISTERED CIVIL ENGINEER 1-2-12 DATE

4-16-12
PLANS APPROVAL DATE

REGISTERED PROFESSIONAL ENGINEER
REFAAT ELSHERIF
No. C67382
Exp. 9-30-12
CIVIL
STATE OF CALIFORNIA

THE STATE OF CALIFORNIA OR ITS OFFICERS OR AGENTS SHALL NOT BE RESPONSIBLE FOR THE ACCURACY OR COMPLETENESS OF SCANNED COPIES OF THIS PLAN SHEET.

DRAINAGE PLAN

SCALE: 1"=50'

D-22

STATE OF CALIFORNIA - DEPARTMENT OF TRANSPORTATION
Caltrans
DESIGN

FUNCTIONAL SUPERVISOR: BEN AMIRI
CALCULATED-DESIGNED BY: JOYA GILSTER
CHECKED BY: REFAAT ELSHERIF
REVISED BY
DATE REVISED

LAST REVISION 01-02-12
DATE PLOTTED => 23-APR-2012
TIME PLOTTED => 10:45

Dist	COUNTY	ROUTE	POST MILES TOTAL PROJECT	SHEET No.	TOTAL SHEETS
08	Riv,SBd	91,215	21.5/21.7, 43.2/45.2,0.0/5.1	279	1743

REGISTERED CIVIL ENGINEER 4-4-12 DATE

4-16-12
PLANS APPROVAL DATE

REGISTERED PROFESSIONAL ENGINEER
REFAAT ELSHERIF
No. C67382
Exp. 9-30-12
CIVIL
STATE OF CALIFORNIA

THE STATE OF CALIFORNIA OR ITS OFFICERS OR AGENTS SHALL NOT BE RESPONSIBLE FOR THE ACCURACY OR COMPLETENESS OF SCANNED COPIES OF THIS PLAN SHEET.

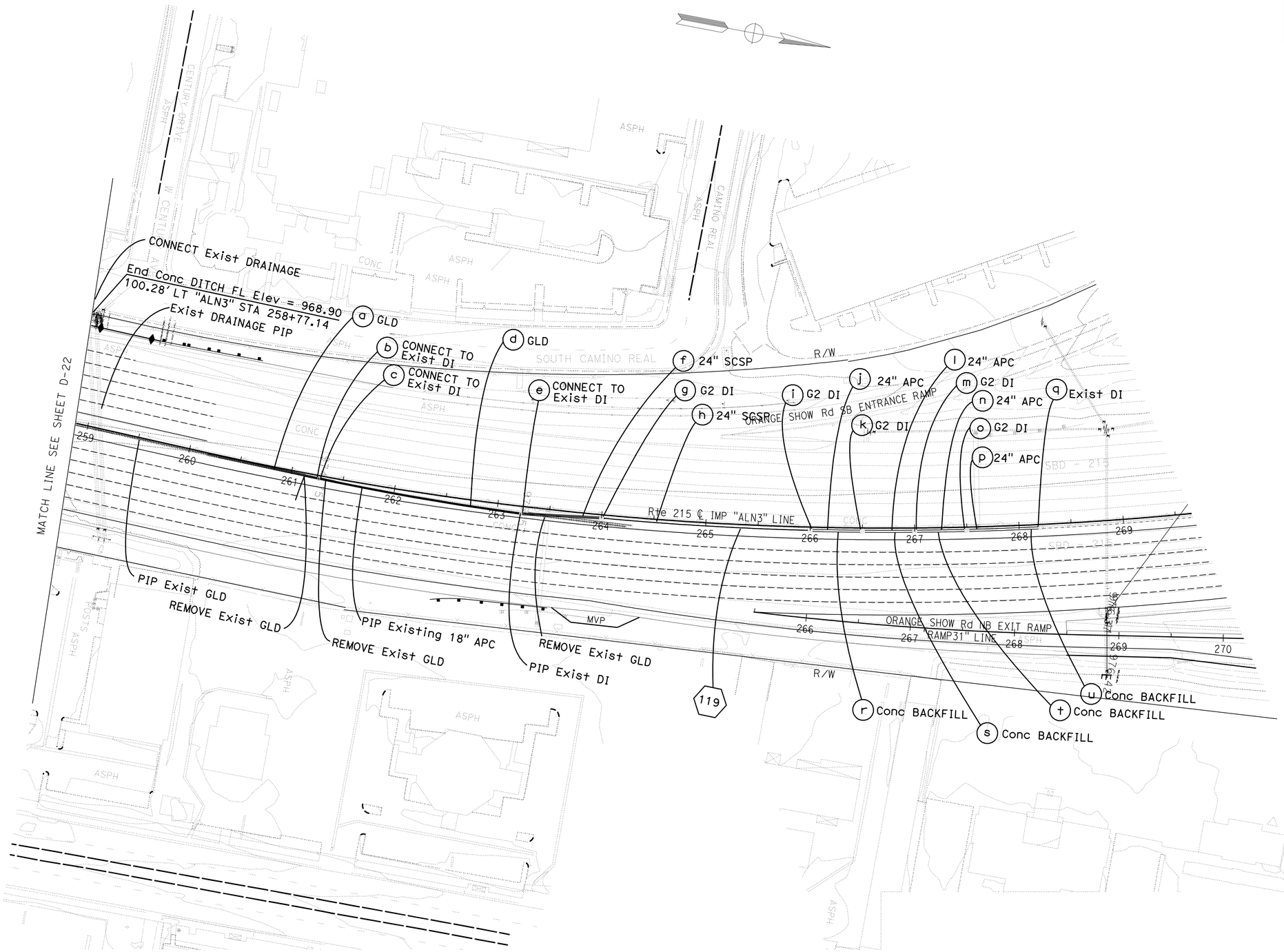

DRAINAGE PLAN

SCALE: 1"=50'

D-23

STATE OF CALIFORNIA - DEPARTMENT OF TRANSPORTATION
Caltrans
DESIGN

FUNCTIONAL SUPERVISOR: BEN AMIRI
CALCULATED-DESIGNED BY: JOYA GILSTER
CHECKED BY: REFAAT ELSHERIF
REVISED BY
DATE REVISED

LAST REVISION 04-04-12
DATE PLOTTED => 17-APR-2012
TIME PLOTTED => 16:32

BORDER LAST REVISED 7/2/2010
USERNAME => s119571
DGN FILE => 80m94uia023.dgn
RELATIVE BORDER SCALE IS IN INCHES 0 1 2 3
UNIT 2242
PROJECT NUMBER & PHASE 08000005061

Dist	COUNTY	ROUTE	POST MILES TOTAL PROJECT	SHEET No.	TOTAL SHEETS
08	Riv,SBd	91,215	21.5/21.7, 43.2/45.2,0.0/5.1	280	1743

REGISTERED CIVIL ENGINEER 3-23-12 DATE

4-16-12
PLANS APPROVAL DATE

REGISTERED PROFESSIONAL ENGINEER
REFAAT ELSHERIF
No. C67382
Exp. 9-30-12
CIVIL
STATE OF CALIFORNIA

THE STATE OF CALIFORNIA OR ITS OFFICERS OR AGENTS SHALL NOT BE RESPONSIBLE FOR THE ACCURACY OR COMPLETENESS OF SCANNED COPIES OF THIS PLAN SHEET.

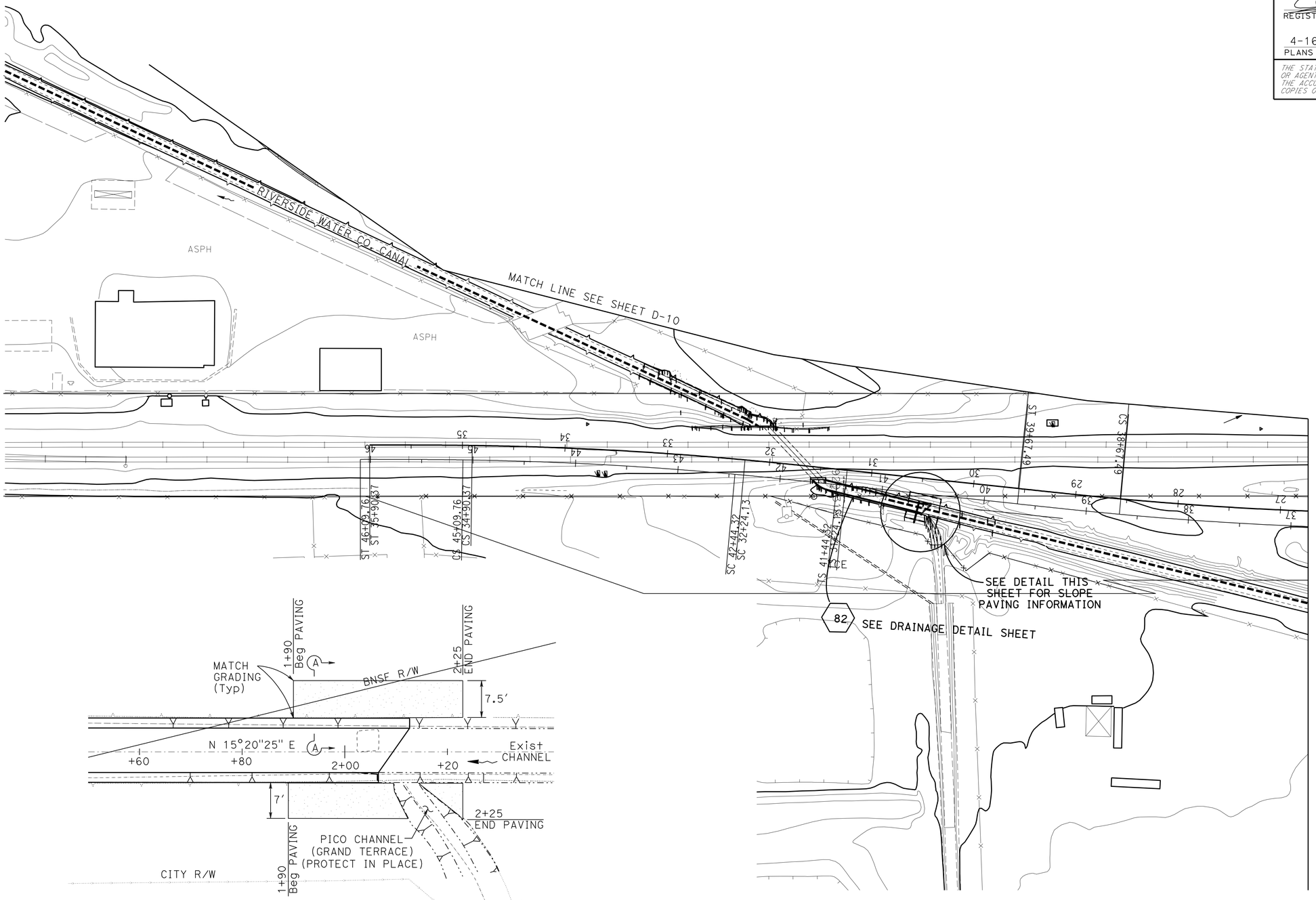

RIVERSIDE CANAL
SLOPE PAVE LIMITS

DRAINAGE PLAN

SCALE: 1"=50'

APPROVED FOR DRAINAGE WORK ONLY

D-24

STATE OF CALIFORNIA - DEPARTMENT OF TRANSPORTATION
Caltrans DESIGN

FUNCTIONAL SUPERVISOR: BEN AMIRI
CALCULATED-DESIGNED BY: JOYA GILSTER
CHECKED BY: REFAAT ELSHERIF
REVISED BY
DATE REVISED

LAST REVISION 03-23-12
DATE PLOTTED => 24-APR-2012
TIME PLOTTED => 10:37

Dist	COUNTY	ROUTE	POST MILES TOTAL PROJECT	SHEET No.	TOTAL SHEETS
08	Riv,SBd	91,215	21.5/21.7, 43.2/45.2,0.0/5.1	281	1743

REGISTERED CIVIL ENGINEER 1-2-12 DATE

4-16-12
PLANS APPROVAL DATE

REGISTERED PROFESSIONAL ENGINEER REFAAT ELSHERIF No. C67382 Exp. 9-30-12 CIVIL STATE OF CALIFORNIA

THE STATE OF CALIFORNIA OR ITS OFFICERS OR AGENTS SHALL NOT BE RESPONSIBLE FOR THE ACCURACY OR COMPLETENESS OF SCANNED COPIES OF THIS PLAN SHEET.

NOTES:

DRAINAGE SYSTEM 75 IS A TEMPORARY DRAINAGE SYSTEM TO BE KEPT IN PLACE UNTIL DRAINAGE SYSTEM 76 IS BUILT.

ALL PAY ITEMS ARE IN DRAINAGE QUANTITIES (SEE SHEET DQ-21)

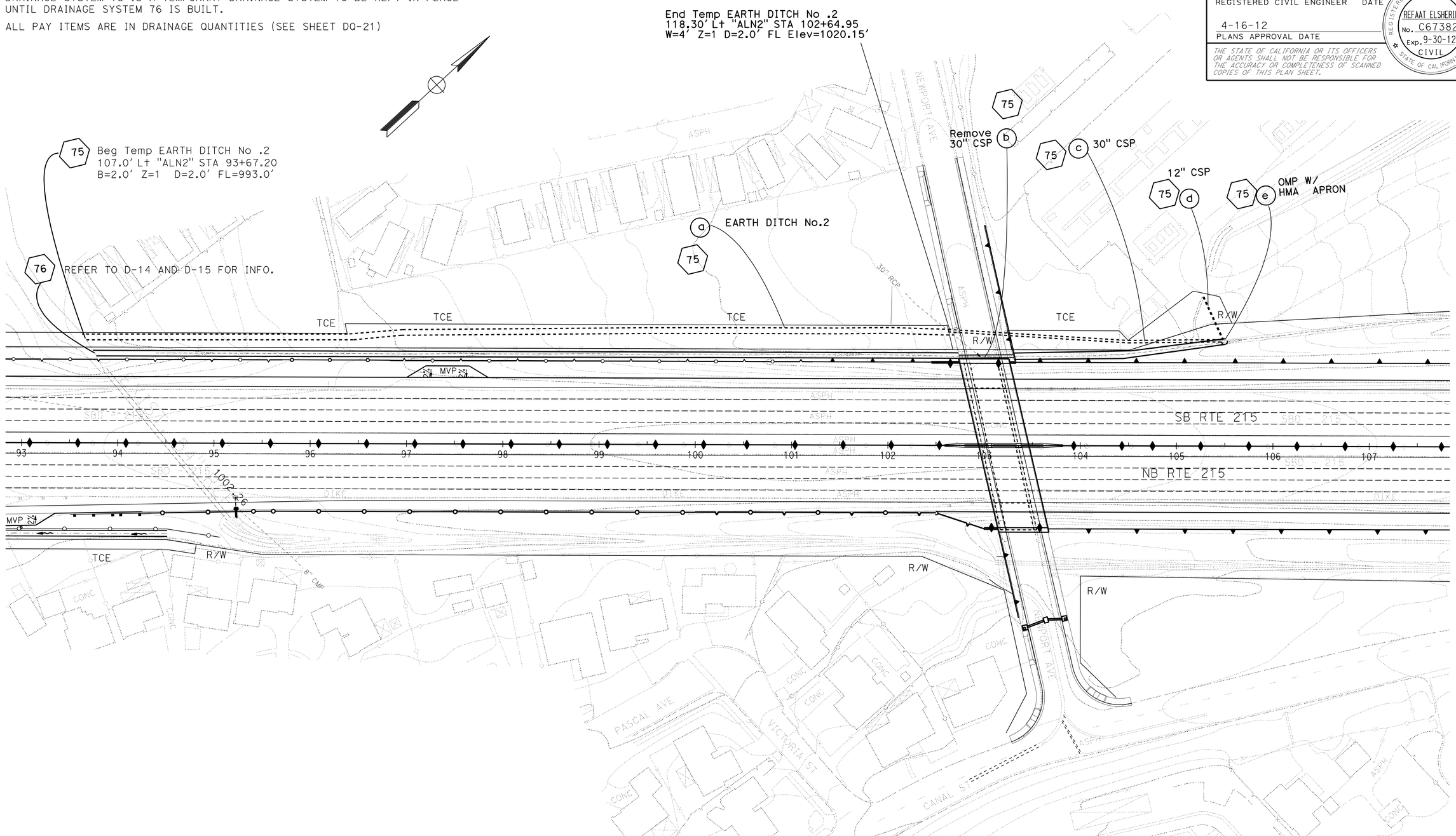

TEMPORARY DRAINAGE SYSTEM 75
DRAINAGE PLAN

SCALE: 1"=50'

D-25

APPROVED FOR DRAINAGE WORK ONLY

STATE OF CALIFORNIA - DEPARTMENT OF TRANSPORTATION
Caltrans DESIGN

FUNCTIONAL SUPERVISOR: BEN AMIRI
CALCULATED-DESIGNED BY: JOYA GILSTER
CHECKED BY: REFAAT ELSHERIF
REVISED BY
DATE REVISED

LAST REVISION 01-02-12
DATE PLOTTED => 17-APR-2012
TIME PLOTTED => 16:32

Dist	COUNTY	ROUTE	POST MILES TOTAL PROJECT	SHEET No.	TOTAL SHEETS
08	Riv,SBd	91,215	21.5/21.7, 43.2/45.2,0.0/5.1	282	1743

REGISTERED CIVIL ENGINEER 3-23-12 DATE

4-16-12
PLANS APPROVAL DATE

REGISTERED PROFESSIONAL ENGINEER
REFAAT ELSHERIF
No. C67382
Exp. 9-30-12
CIVIL
STATE OF CALIFORNIA

THE STATE OF CALIFORNIA OR ITS OFFICERS OR AGENTS SHALL NOT BE RESPONSIBLE FOR THE ACCURACY OR COMPLETENESS OF SCANNED COPIES OF THIS PLAN SHEET.

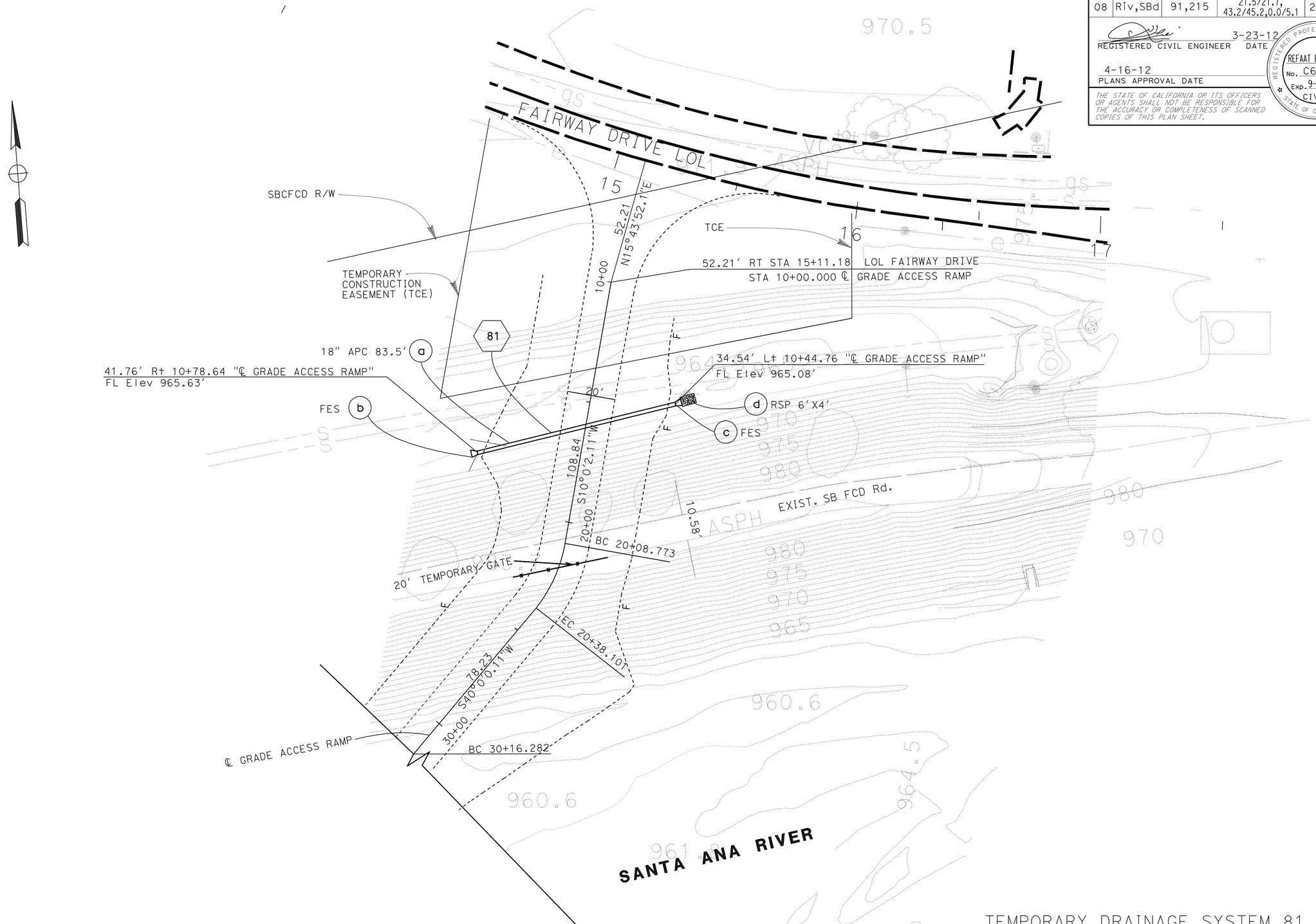

PLAN
SCALE: 1"=20'

APPROVED FOR DRAINAGE WORK ONLY

TEMPORARY DRAINAGE SYSTEM 81
DRAINAGE PLAN
SCALE: 1"=20'

D-26

STATE OF CALIFORNIA - DEPARTMENT OF TRANSPORTATION
Caltrans
DESIGN

FUNCTIONAL SUPERVISOR: BEN AMIRI
CALCULATED-DESIGNED BY: JOYA GILSTER
CHECKED BY: REFAAT ELSHERIF
REVISED BY
DATE REVISED

LAST REVISION 03-23-12
DATE PLOTTED => 23-APR-2012
TIME PLOTTED => 10:45

Dist	COUNTY	ROUTE	POST MILES TOTAL PROJECT	SHEET No.	TOTAL SHEETS
08	Riv,SBd	91,215	21.5/21.7, 43.2/45.2,0.0/5.1	283	1743

REGISTERED CIVIL ENGINEER 3-23-12 DATE

4-16-12
PLANS APPROVAL DATE

REGISTERED PROFESSIONAL ENGINEER REFAAT ELSHERIF No. C67382 Exp. 9-30-12 CIVIL STATE OF CALIFORNIA

THE STATE OF CALIFORNIA OR ITS OFFICERS OR AGENTS SHALL NOT BE RESPONSIBLE FOR THE ACCURACY OR COMPLETENESS OF SCANNED COPIES OF THIS PLAN SHEET.

NOTES:

1. FOR ACCURATE RIGHT OF WAY DATA, CONTACT RIGHT OF WAY ENGINERING AT THE DISTRICT OFFICE.
2. TOP OF GRATE ELEVATIONS INCLUDE INLET DEPRESSION.
3. TOP OF GRATE ELEVATIONS ARE TO FLOW LINE OF GRATE UNLESS OTHERWISE NOTED.
4. INLET GRATES SHALL BE HORIZONTAL (0% SLOPE), UNLESS OTHERWISE NOTED.
5. DRAINAGE SYSTEM WITH "REMOVAL ONLY" ARE NOT SHOWN. SEE DRAINAGE QUANTITY SHEETS FOR INFORMATION.
6. REFER TO STANDARD PLANS FOR ANY DETAILS NOT SHOWN .
7. ALL AS-BUILT(EXISTING) FLOWLINE ELEVATIONS WILL BE VERIFIED IN FIELD.
8. STATION-OFFSET REFERENCE POINT OF A DRAINAGE INLET STRUCTURE IS DEFINED AS THE MIDDLE POINT OF THE OUTER EDGE (NEXT TO WALL, BARRRIER OR DIKE) OF THE CONCRETE INLET STRUCTURE.

LEGEND:

⬡	DRAINAGE SYSTEM NUMBER
○	DRAINAGE ITEM
~→	DIRECTION OF FLOW
→- - →	GRADE TO DRAIN
TOG	TOP OF GRATE ELEVATION
JS	JUNCTION STRUCTURE
PIP	PROTECT IN PLACE
**	SEE NOTE 7
TW	TOP OF WALL

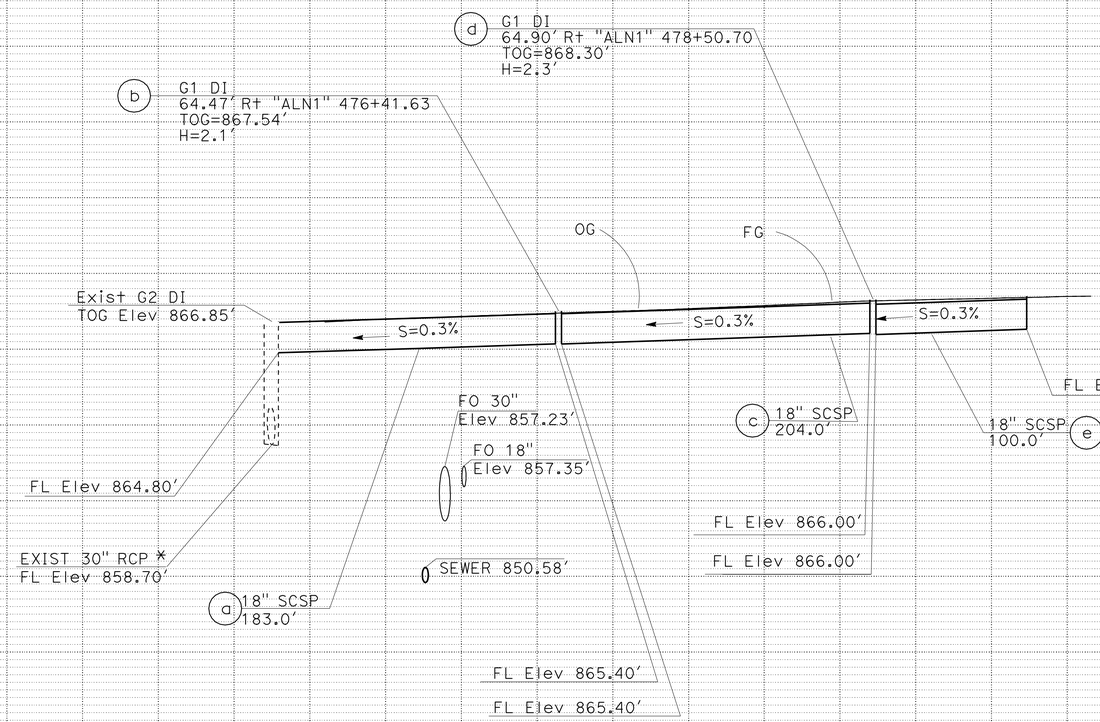

DRAINAGE SYSTEM No. 1

63.94' Rt "ALN1" 474+53.80

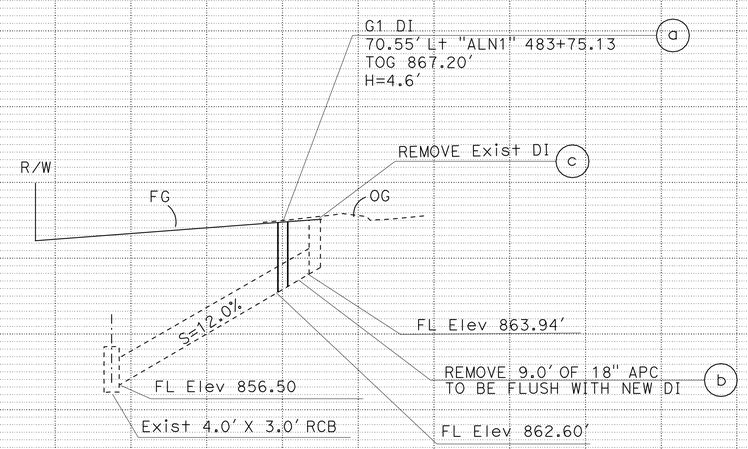

DRAINAGE SYSTEM No. 2

67.50' Lt "ALN1" 483+72.39

SCALE: Horiz 1": 20'
Vert 1": 5'

DRAINAGE PROFILE

SCALE: Horiz 1": 50'
Vert 1": 5'

DP- 1

STATE OF CALIFORNIA - DEPARTMENT OF TRANSPORTATION
DESIGN
FUNCTIONAL SUPERVISOR: BEN AMIRI
CALCULATED-DESIGNED BY: JOYA GILSTER
CHECKED BY: REFAAT ELSHERIF
REVISED BY
DATE REVISED

LAST REVISION 03-23-12
DATE PLOTTED => 17-APR-2012
TIME PLOTTED => 16:33

Dist	COUNTY	ROUTE	POST MILES TOTAL PROJECT	SHEET No.	TOTAL SHEETS
08	Riv,SBd	91,215	21.5/21.7, 43.2/45.2,0.0/5.1	284	1743

REGISTERED CIVIL ENGINEER 3-23-12 DATE

4-16-12
PLANS APPROVAL DATE

REGISTERED PROFESSIONAL ENGINEER REFAAT ELSHERIF No. C67382 Exp. 9-30-12 CIVIL STATE OF CALIFORNIA

THE STATE OF CALIFORNIA OR ITS OFFICERS OR AGENTS SHALL NOT BE RESPONSIBLE FOR THE ACCURACY OR COMPLETENESS OF SCANNED COPIES OF THIS PLAN SHEET.

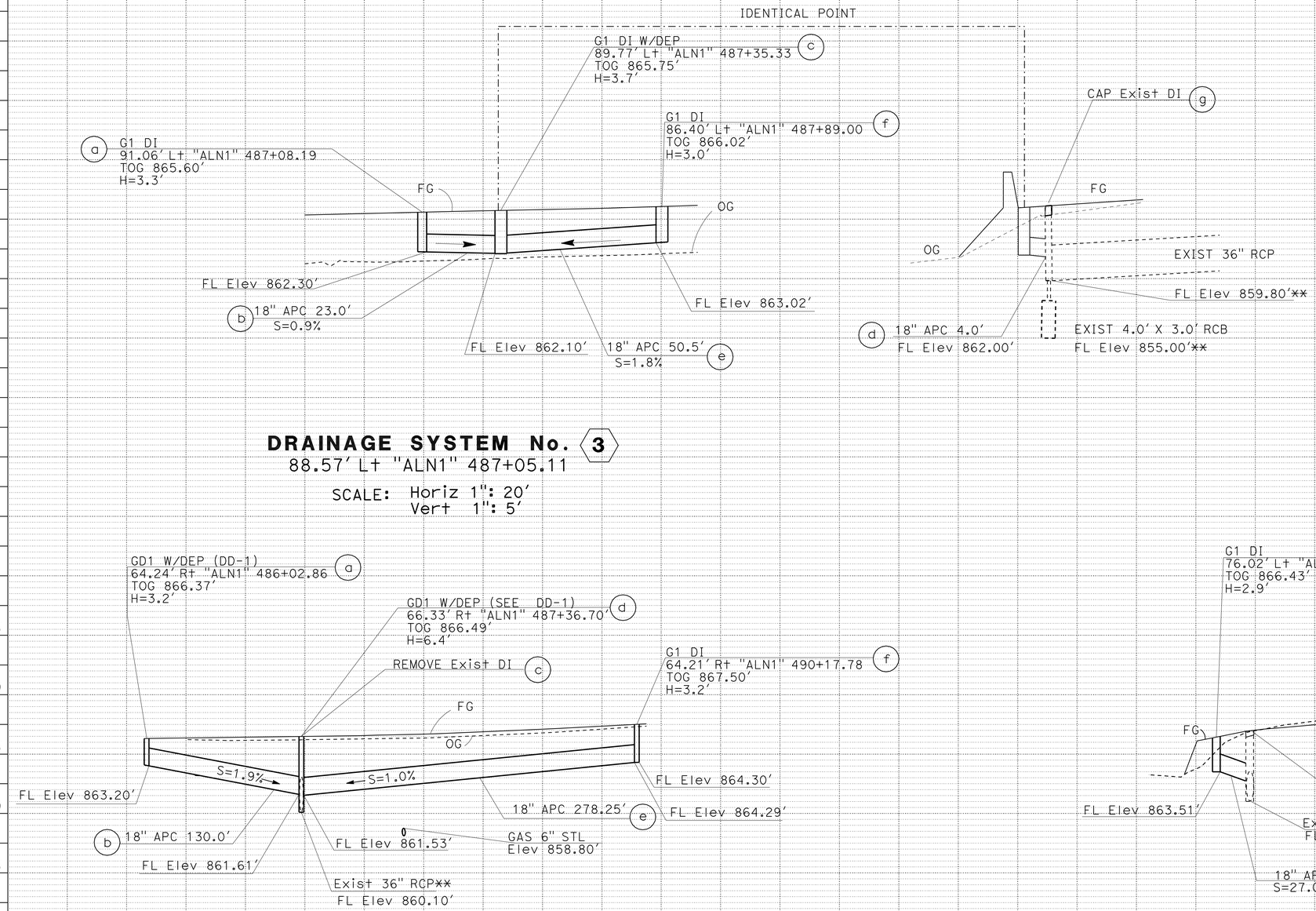

DRAINAGE SYSTEM No. 3

88.57' Lt "ALN1" 487+05.11

SCALE: Horiz 1": 20'
Vert 1": 5'

DRAINAGE SYSTEM No. 4

66.11' Rt "ALN1" 486+01.20

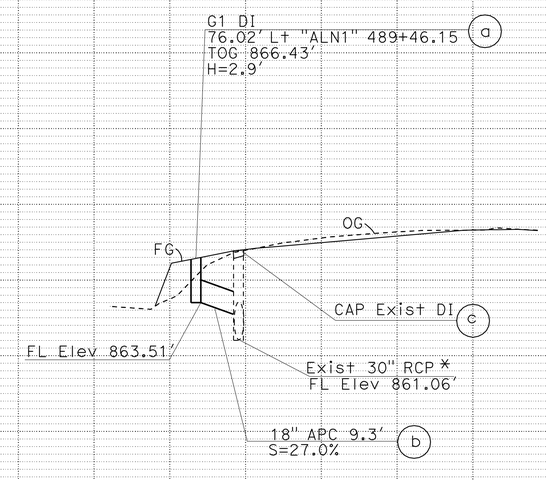

DRAINAGE SYSTEM No. 5

76.47' Lt "ALN1" 489+43.27

SCALE: Horiz 1": 20'
Vert 1": 5'

DRAINAGE PROFILE

SCALE: Horiz 1": 50'
Vert 1": 5'

DP- 2

STATE OF CALIFORNIA - DEPARTMENT OF TRANSPORTATION
Caltrans
DESIGN
FUNCTIONAL SUPERVISOR: BEN AMIRI
CALCULATED-DESIGNED BY: REFAAT ELSHERIF
CHECKED BY: JOYA GILSTER
REVISED BY
DATE REVISED

LAST REVISION 03-23-12
DATE PLOTTED => 17-APR-2012
TIME PLOTTED => 16:33

Dist	COUNTY	ROUTE	POST MILES TOTAL PROJECT	SHEET No.	TOTAL SHEETS
08	Riv,SBd	91,215	21.5/21.7, 43.2/45.2,0.0/5.1	285	1743

REGISTERED CIVIL ENGINEER 3-23-12 DATE

4-16-12
PLANS APPROVAL DATE

REGISTERED PROFESSIONAL ENGINEER REFAAT ELSHERIF No. C67382 Exp. 9-30-12 CIVIL STATE OF CALIFORNIA

THE STATE OF CALIFORNIA OR ITS OFFICERS OR AGENTS SHALL NOT BE RESPONSIBLE FOR THE ACCURACY OR COMPLETENESS OF SCANNED COPIES OF THIS PLAN SHEET.

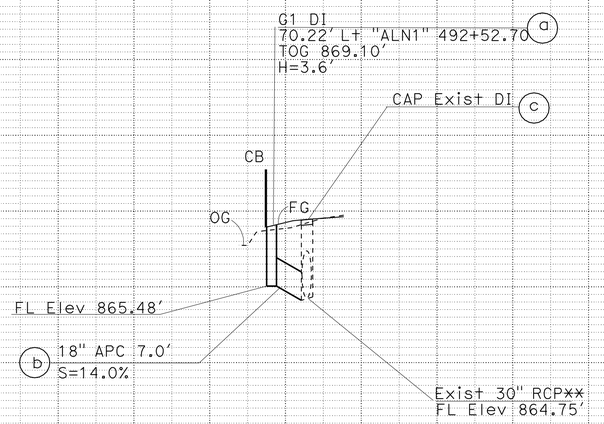

DRAINAGE SYSTEM No. 6

70.22' Lt "ALN1" 492+50.00

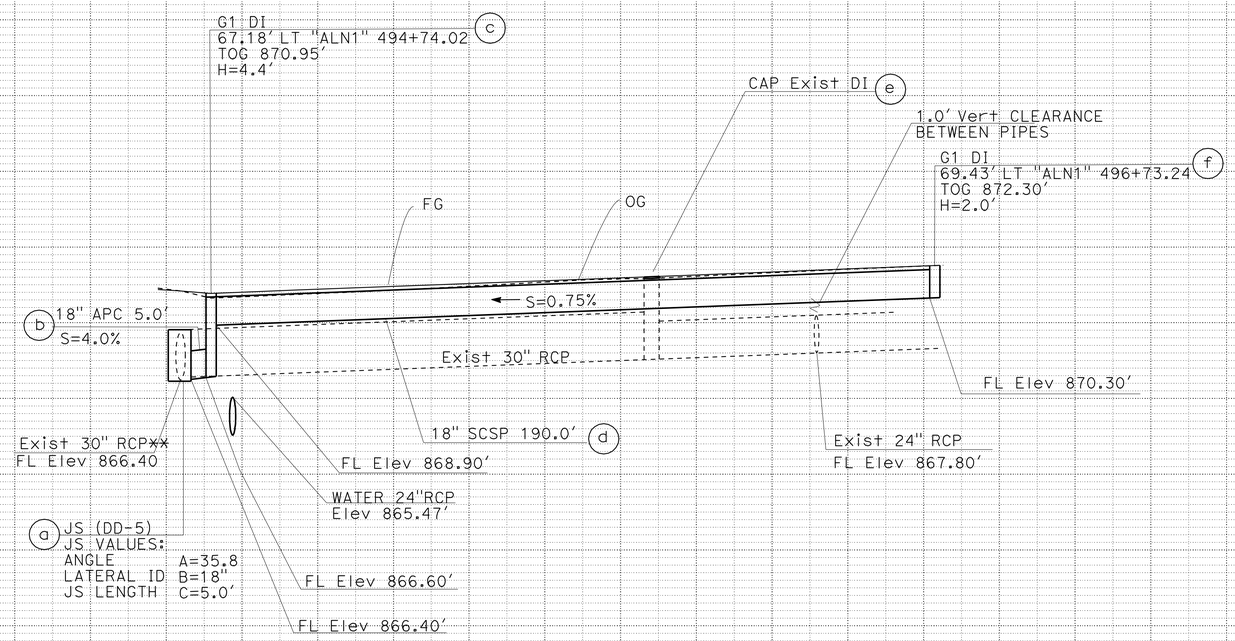

DRAINAGE SYSTEM No. 7

67.18' Lt "ALN1" 494+74.11

DRAINAGE PROFILE

SCALE: Horiz 1": 20'
Vert 1": 4'

DP- 3

REVISED BY | DATE REVISED
SHAHID AHMED | REFAAT ELSHERIF
CALCULATED-DESIGNED BY | CHECKED BY
FUNCTIONAL SUPERVISOR | BEN AMIRI
STATE OF CALIFORNIA - DEPARTMENT OF TRANSPORTATION
Caltrans | DESIGN

LAST REVISION 03-23-12 | DATE PLOTTED => 17-APR-2012 | TIME PLOTTED => 16:33

Dist	COUNTY	ROUTE	POST MILES TOTAL PROJECT	SHEET No.	TOTAL SHEETS
08	Riv,SBd	91,215	21.5/21.7, 43.2/45.2,0.0/5.1	286	1743

REGISTERED CIVIL ENGINEER 1-2-12 DATE

4-16-12
PLANS APPROVAL DATE

REGISTERED PROFESSIONAL ENGINEER
REFAAT ELSHERIF
No. C67382
Exp. 9-30-12
CIVIL
STATE OF CALIFORNIA

THE STATE OF CALIFORNIA OR ITS OFFICERS OR AGENTS SHALL NOT BE RESPONSIBLE FOR THE ACCURACY OR COMPLETENESS OF SCANNED COPIES OF THIS PLAN SHEET.

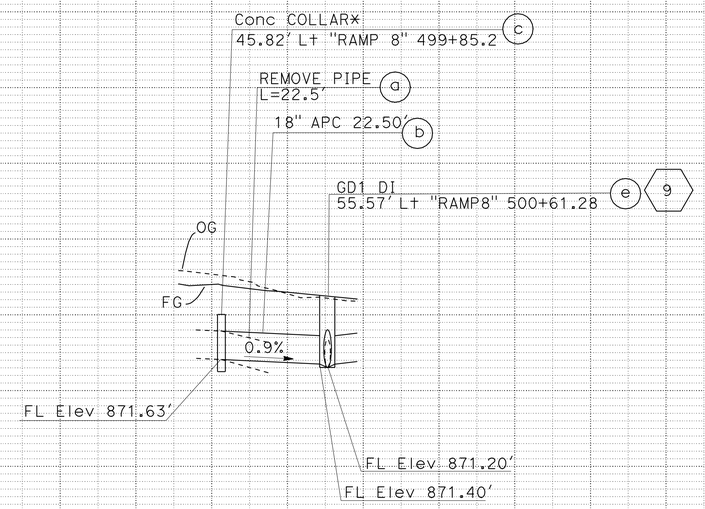

DRAINAGE SYSTEM No. 8
55.56' Lt "RAMP8" 500+61.28

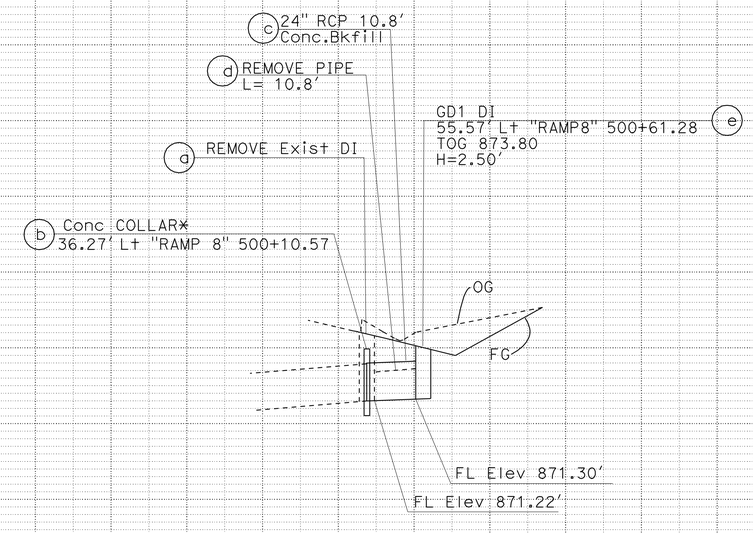

DRAINAGE SYSTEM No. 9
55.56' Lt "RAMP8" 500+61.28

DRAINAGE PROFILE

SCALE: Horiz 1": 20'
Vert 1": 4'

DP- 4

STATE OF CALIFORNIA - DEPARTMENT OF TRANSPORTATION
Caltrans
DESIGN

FUNCTIONAL SUPERVISOR: BEN AMIRI
CALCULATED-DESIGNED BY: SHAHID AHMED
CHECKED BY: REFAAT ELSHERIF
REVISED BY
DATE REVISED

LAST REVISION 11-15-11
DATE PLOTTED => 17-APR-2012
TIME PLOTTED => 16:33

Dist	COUNTY	ROUTE	POST MILES TOTAL PROJECT	SHEET No.	TOTAL SHEETS
08	Riv,SBd	91,215	21.5/21.7, 43.2/45.2,0.0/5.1	287	1743

REGISTERED CIVIL ENGINEER 3-23-12 DATE

4-16-12
PLANS APPROVAL DATE

REGISTERED PROFESSIONAL ENGINEER REFAAT ELSHERIF No. C67382 Exp. 9-30-12 CIVIL STATE OF CALIFORNIA

THE STATE OF CALIFORNIA OR ITS OFFICERS OR AGENTS SHALL NOT BE RESPONSIBLE FOR THE ACCURACY OR COMPLETENESS OF SCANNED COPIES OF THIS PLAN SHEET.

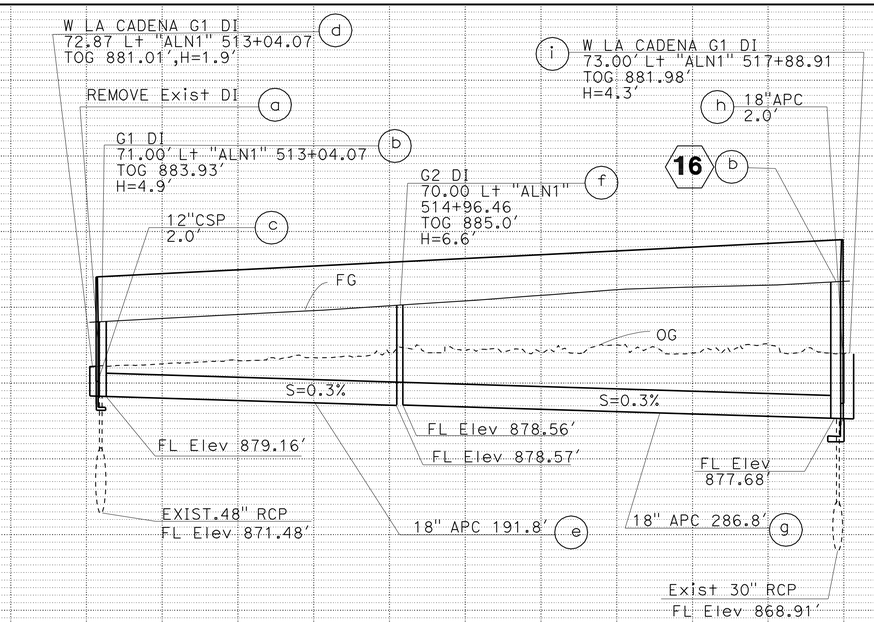

DRAINAGE SYSTEM No. 12
75.00' Lt "ALN1" 513+04.07

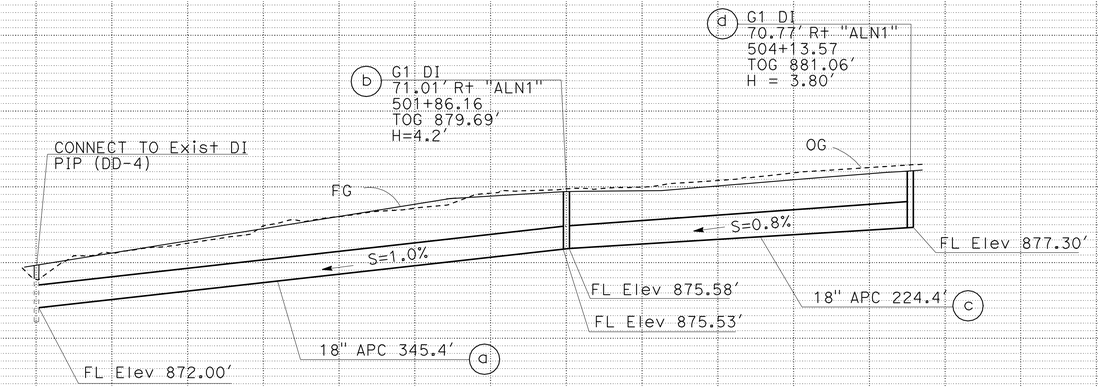

DRAINAGE SYSTEM No. 10
137.12' Rt "ALN1" 498+57.59

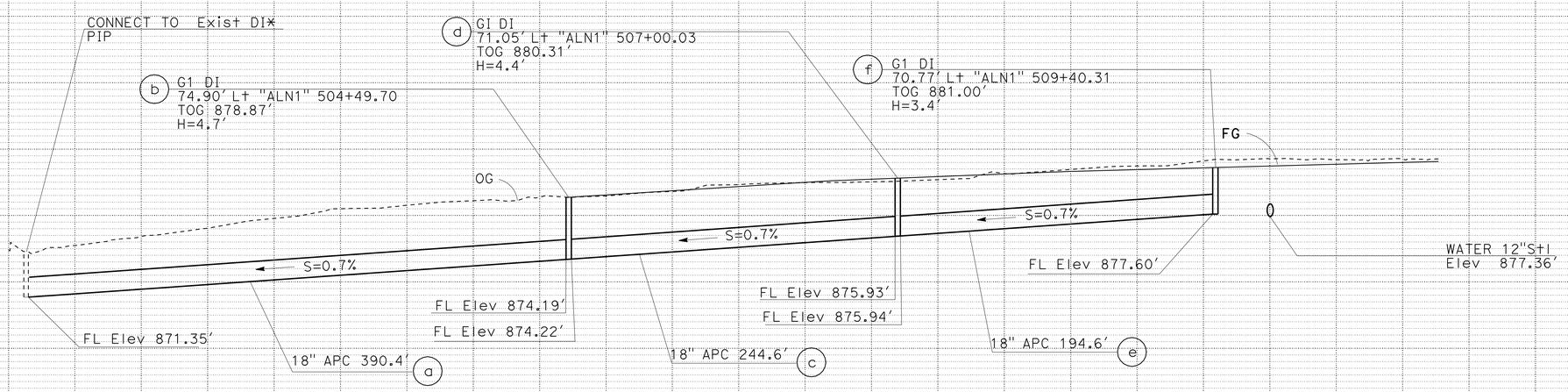

DRAINAGE SYSTEM No. 11
139.69' Lt "ALN1" 500+46.94

DRAINAGE PROFILE
SCALE: Horiz 1": 50'
Vert 1": 5'

DP- 5

STATE OF CALIFORNIA - DEPARTMENT OF TRANSPORTATION
Caltrans® DESIGN
FUNCTIONAL SUPERVISOR BEN AMIRI
CALCULATED-DESIGNED BY JOYA GILSTER
CHECKED BY REFAAT ELSHERIF
REVISED BY
DATE REVISED

LAST REVISION 03-23-12 | DATE PLOTTED => 17-APR-2012 | TIME PLOTTED => 16:33

Dist	COUNTY	ROUTE	POST MILES TOTAL PROJECT	SHEET No.	TOTAL SHEETS
08	Riv,SBd	91,215	21.5/21.7, 43.2/45.2,0.0/5.1	288	1743

REGISTERED CIVIL ENGINEER 4-6-12 DATE

4-16-12
PLANS APPROVAL DATE

REGISTERED PROFESSIONAL ENGINEER REFAAT ELSHERIF No. C67382 Exp. 9-30-12 CIVIL STATE OF CALIFORNIA

THE STATE OF CALIFORNIA OR ITS OFFICERS OR AGENTS SHALL NOT BE RESPONSIBLE FOR THE ACCURACY OR COMPLETENESS OF SCANNED COPIES OF THIS PLAN SHEET.

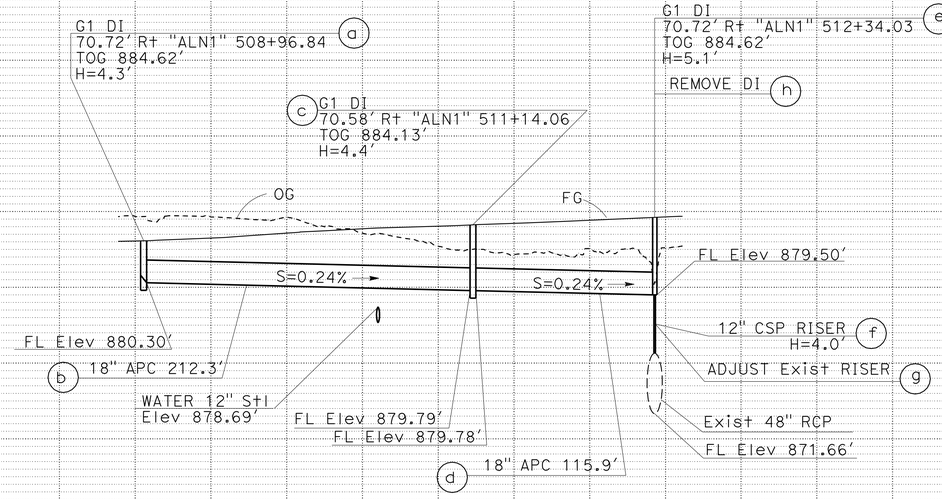

DRAINAGE SYSTEM No. 13

68.13' Rt "ALN1" 508+95.82

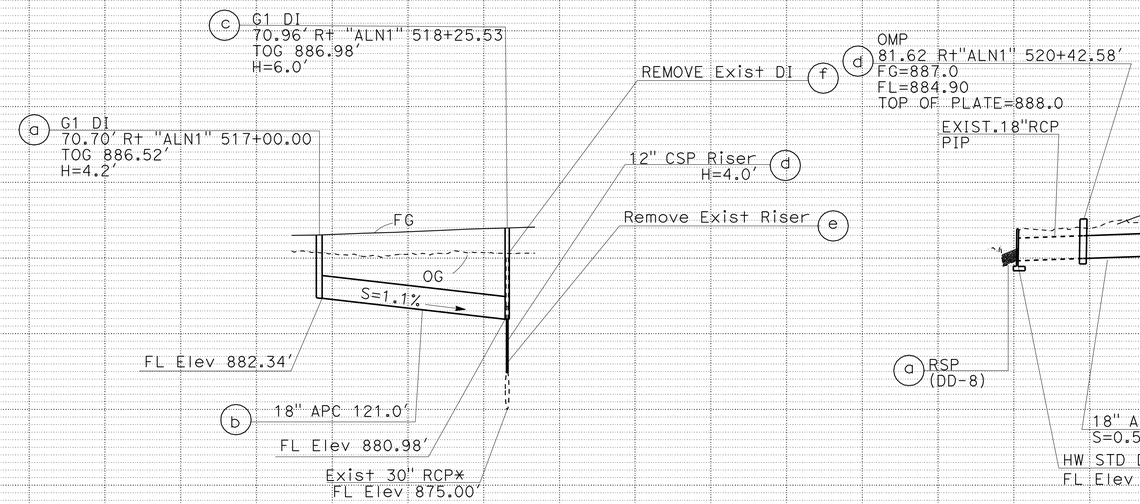

DRAINAGE SYSTEM No. 14

70.70' Rt "ALN1" 517+00.00

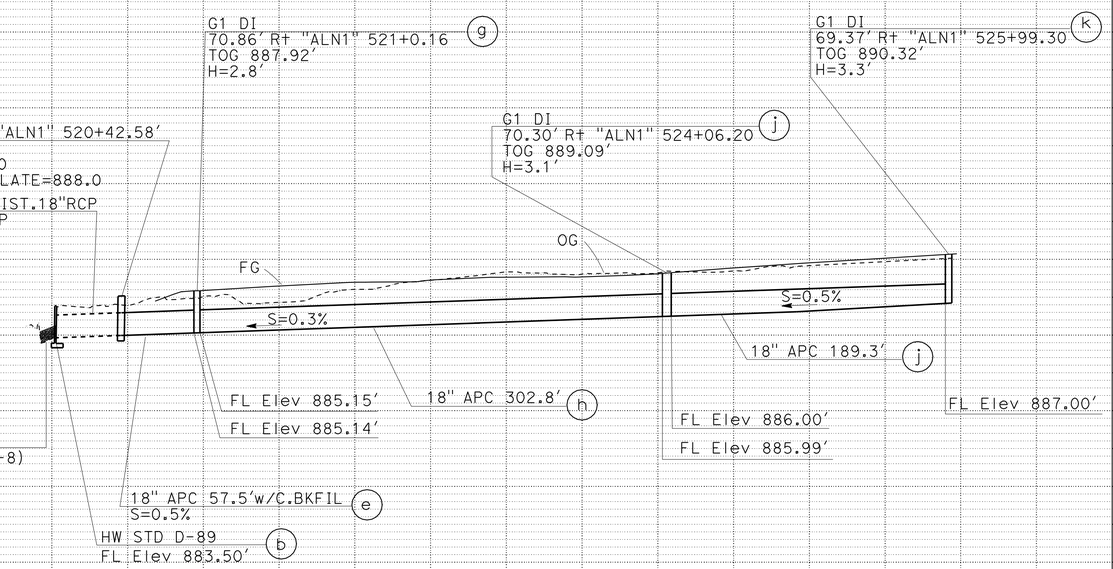

DRAINAGE SYSTEM No. 15

81.63' Rt "ALN1" 520+09.26

DRAINAGE PROFILE

SCALE: Horiz 1": 50'
Vert 1": 5'

DP- 6

STATE OF CALIFORNIA - DEPARTMENT OF TRANSPORTATION
DESIGN
Caltrans
FUNCTIONAL SUPERVISOR: BEN AMIRI
CALCULATED-DESIGNED BY: JOYA GILSTER
CHECKED BY: REFAAT ELSHERIF
REVISED BY
DATE REVISED

LAST REVISION 04-06-12
DATE PLOTTED => 17-APR-2012
TIME PLOTTED => 16:33

Dist	COUNTY	ROUTE	POST MILES TOTAL PROJECT	SHEET No.	TOTAL SHEETS
08	Riv,SBd	91,215	21.5/21.7, 43.2/45.2,0.0/5.1	289	1743

REGISTERED CIVIL ENGINEER 3-23-12 DATE

4-16-12
PLANS APPROVAL DATE

REGISTERED PROFESSIONAL ENGINEER REFAAT ELSHERIF No. C67382 Exp. 9-30-12 CIVIL STATE OF CALIFORNIA

THE STATE OF CALIFORNIA OR ITS OFFICERS OR AGENTS SHALL NOT BE RESPONSIBLE FOR THE ACCURACY OR COMPLETENESS OF SCANNED COPIES OF THIS PLAN SHEET.

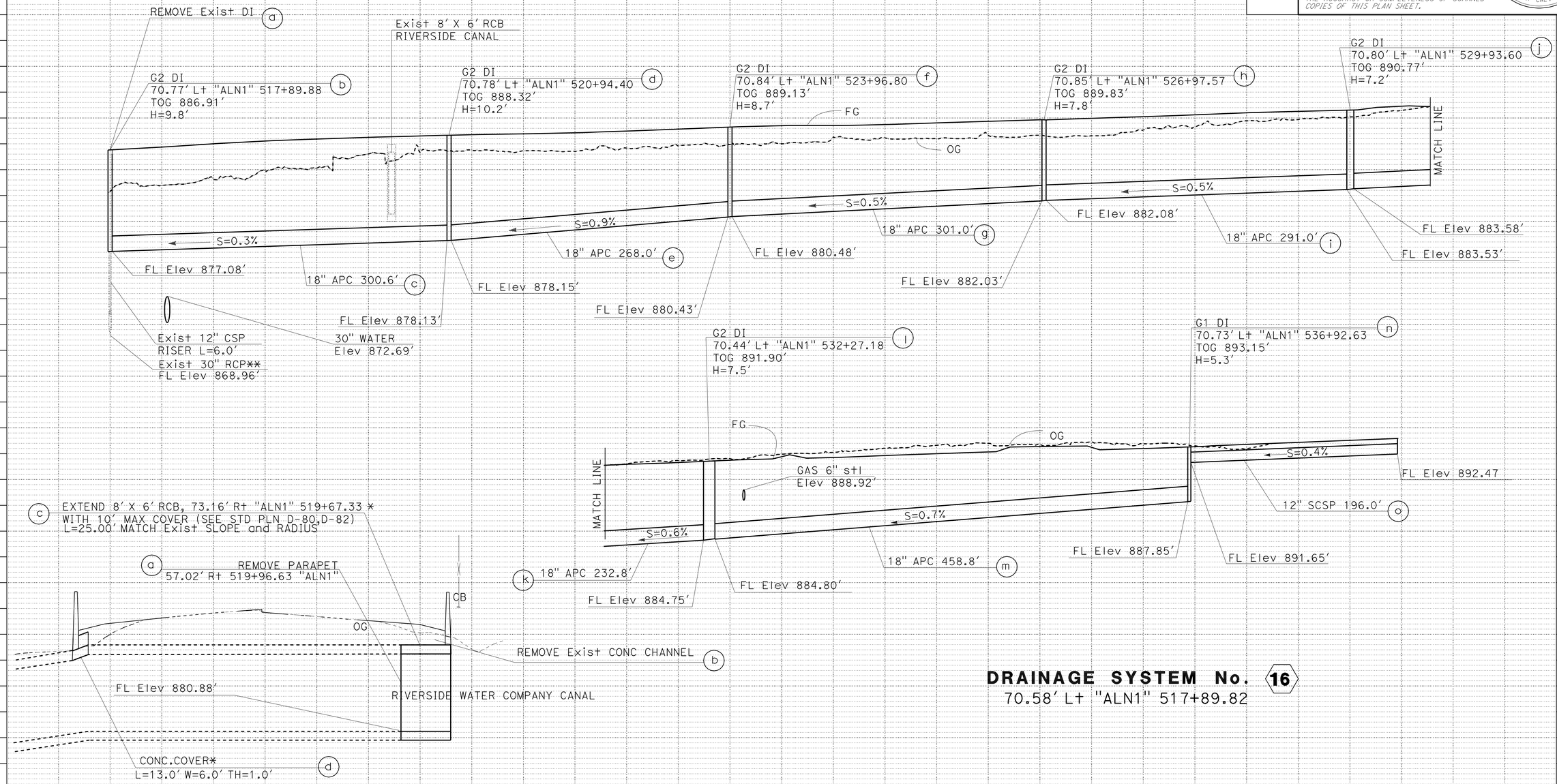

DRAINAGE SYSTEM No. 16
70.58' Lt "ALN1" 517+89.82

DRAINAGE SYSTEM No. 17
73.16' Rt "ALN1" 519+67.33

* CULVERT CONSTRUCTION IS RESTRICTED TO 2 WEEKS DURATION PER CITY OF RIVERSIDE

Horiz 1": 20'
Vert 1": 4'

DRAINAGE PROFILE

SCALE: Horiz 1": 50'
Vert 1": 5'

DP- 7

STATE OF CALIFORNIA - DEPARTMENT OF TRANSPORTATION
Caltrans
DESIGN
FUNCTIONAL SUPERVISOR: BEN AMIRI
CALCULATED-DESIGNED BY: JOYA GILSTER
CHECKED BY: REFAAT ELSHERIF
REVISED BY
DATE REVISED

LAST REVISION 03-23-12
DATE PLOTTED => 17-APR-2012
TIME PLOTTED => 16:33

Dist	COUNTY	ROUTE	POST MILES TOTAL PROJECT	SHEET No.	TOTAL SHEETS
08	Riv,SBd	91,215	21.5/21.7, 43.2/45.2,0.0/5.1	290	1743

REGISTERED CIVIL ENGINEER 3-23-12 DATE

4-16-12
PLANS APPROVAL DATE

REGISTERED PROFESSIONAL ENGINEER REFAAT ELSHERIF No. C67382 Exp. 9-30-12 CIVIL STATE OF CALIFORNIA

THE STATE OF CALIFORNIA OR ITS OFFICERS OR AGENTS SHALL NOT BE RESPONSIBLE FOR THE ACCURACY OR COMPLETENESS OF SCANNED COPIES OF THIS PLAN SHEET.

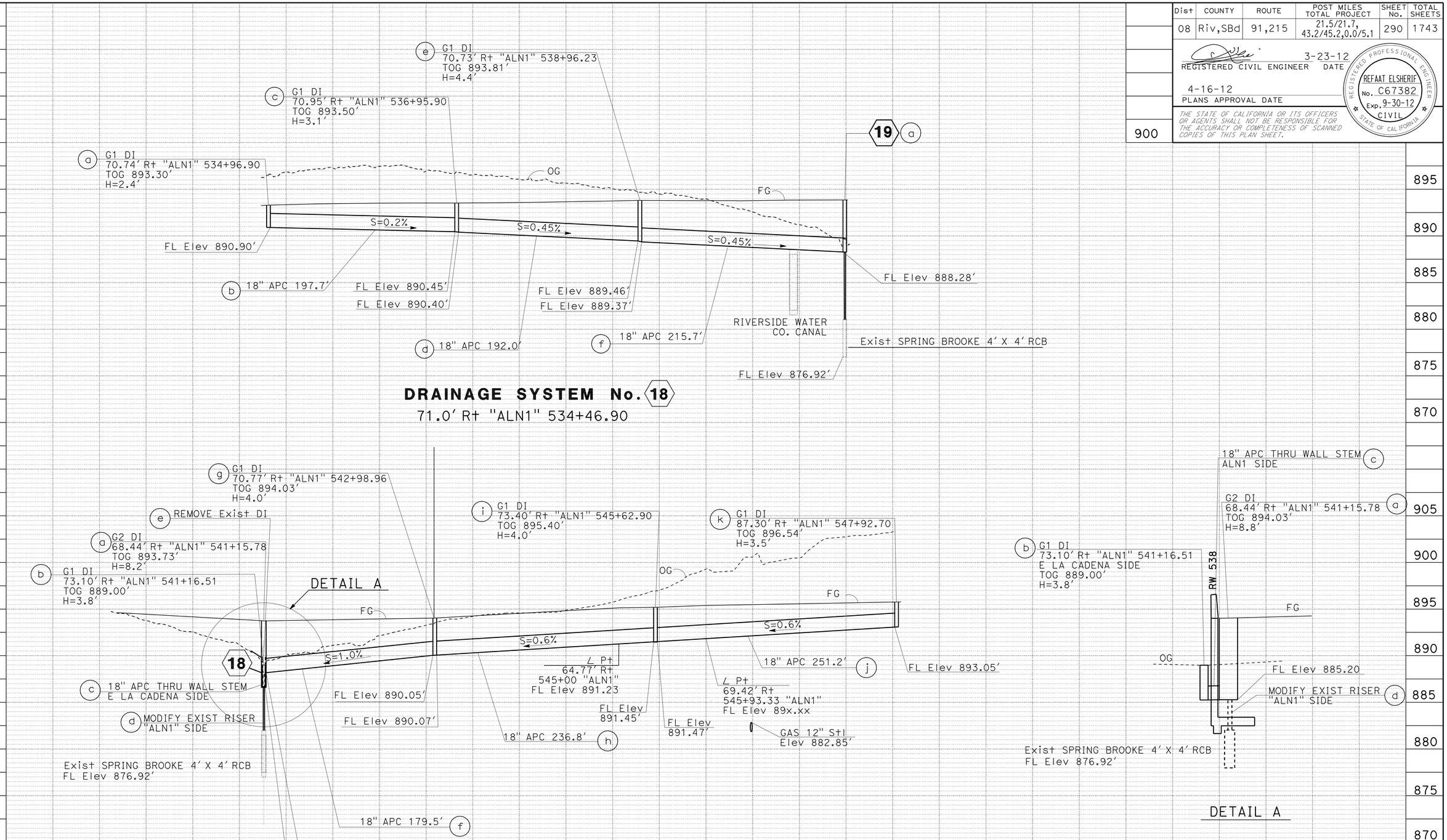

DRAINAGE PROFILE

SCALE: Horiz 1": 50'
Vert 1": 5'

DP- 8

REVISED BY	DATE REVISED
JOYA GILSTER	REFAAT ELSHERIF
CALCULATED-DESIGNED BY	CHECKED BY
FUNCTIONAL SUPERVISOR	BEN AMIRI

STATE OF CALIFORNIA - DEPARTMENT OF TRANSPORTATION
Caltrans
DESIGN

LAST REVISION 03-23-12
DATE PLOTTED => 17-APR-2012
TIME PLOTTED => 16:33

Dist	COUNTY	ROUTE	POST MILES TOTAL PROJECT	SHEET No.	TOTAL SHEETS
08	Riv,SBd	91,215	21.5/21.7, 43.2/45.2,0.0/5.1	291	1743

REGISTERED CIVIL ENGINEER 3-23-12 DATE

4-16-12
PLANS APPROVAL DATE

REGISTERED PROFESSIONAL ENGINEER REFAAT ELSHERIF No. C67382 Exp. 9-30-12 CIVIL STATE OF CALIFORNIA

THE STATE OF CALIFORNIA OR ITS OFFICERS OR AGENTS SHALL NOT BE RESPONSIBLE FOR THE ACCURACY OR COMPLETENESS OF SCANNED COPIES OF THIS PLAN SHEET.

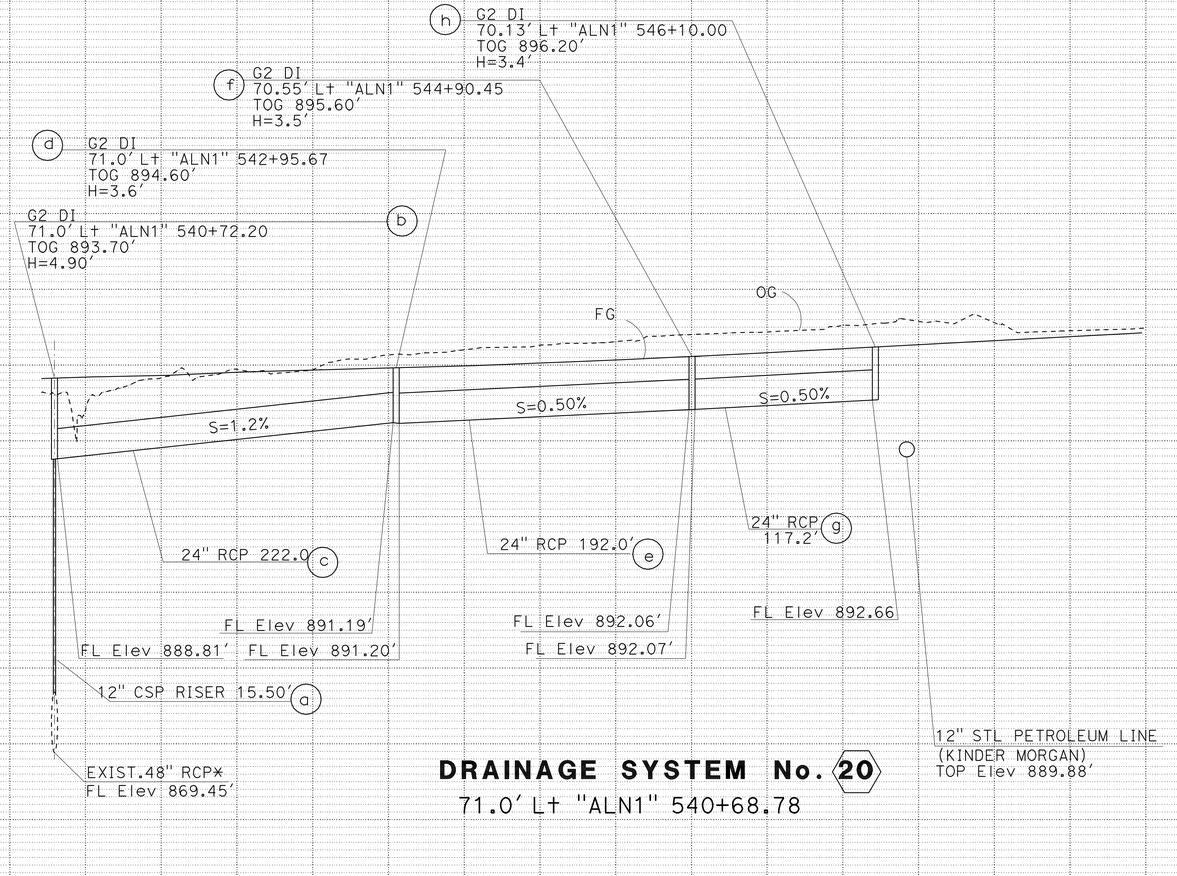

DRAINAGE SYSTEM No. 20

71.0' Lt "ALN1" 540+68.78

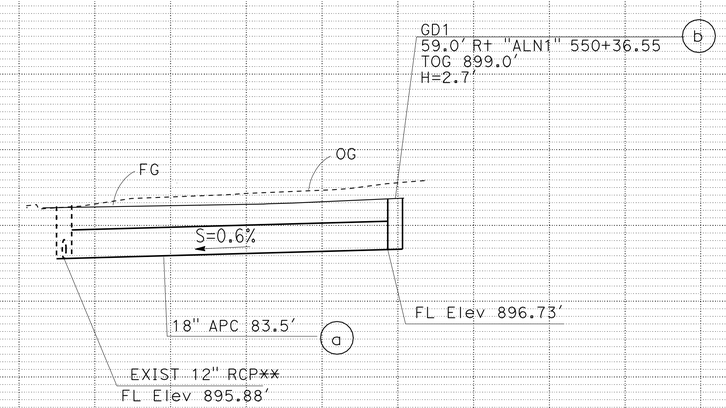

DRAINAGE SYSTEM No. 22

60.29' Rt "ALN1" 547+93.82
Horiz 1": 20'
Vert 1": 4'

DRAINAGE PROFILE

SCALE: Horiz 1": 50'
Vert 1": 5'

DP- 9

STATE OF CALIFORNIA - DEPARTMENT OF TRANSPORTATION
Caltrans
DESIGN
FUNCTIONAL SUPERVISOR: BEN AMIRI
CALCULATED-DESIGNED BY: JOYA GILSTER
CHECKED BY: REFAAT ELSHERIF
REVISED BY
DATE REVISED

LAST REVISION 03-23-12
DATE PLOTTED => 17-APR-2012
TIME PLOTTED => 16:33

Dist	COUNTY	ROUTE	POST MILES TOTAL PROJECT	SHEET No.	TOTAL SHEETS
08	Riv,SBd	91,215	21.5/21.7, 43.2/45.2,0.0/5.1	292	1743

REGISTERED CIVIL ENGINEER 3-23-12 DATE

4-16-12
PLANS APPROVAL DATE

REGISTERED PROFESSIONAL ENGINEER REFAAT ELSHERIF No. C67382 Exp. 9-30-12 CIVIL STATE OF CALIFORNIA

THE STATE OF CALIFORNIA OR ITS OFFICERS OR AGENTS SHALL NOT BE RESPONSIBLE FOR THE ACCURACY OR COMPLETENESS OF SCANNED COPIES OF THIS PLAN SHEET.

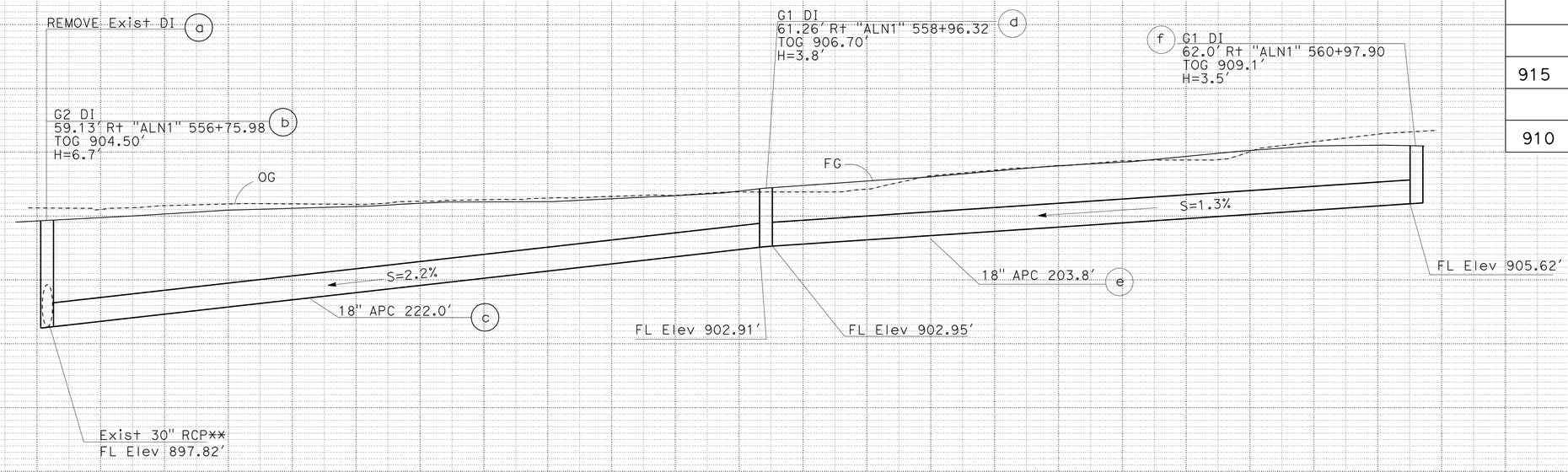

DRAINAGE SYSTEM No. 24

61.0' Rt "ALN1" 556+75.34

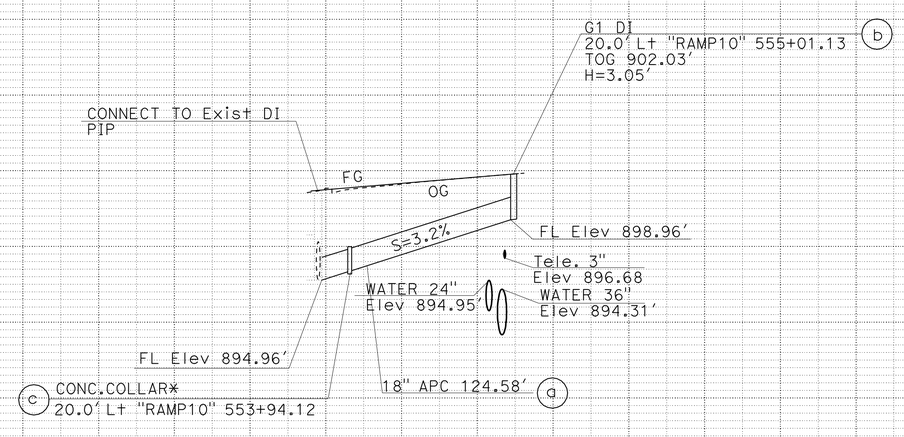

DRAINAGE SYSTEM No. 25

20.0' Lt "RAMP10" 555+01.13

Horiz 1": 50'
Vert 1": 5'

DRAINAGE PROFILE

SCALE: Horiz 1": 20'
Vert 1": 4'

APPROVED FOR DRAINAGE WORK ONLY

DP-10

REVISED BY | DATE REVISED

SHAHID AHMED | REFAAT ELSHERIF

CALCULATED-DESIGNED BY | CHECKED BY

FUNCTIONAL SUPERVISOR: BEN AMIRI

STATE OF CALIFORNIA - DEPARTMENT OF TRANSPORTATION

Caltrans® DESIGN

DATE PLOTTED => 17-APR-2012
TIME PLOTTED => 19:24
LAST REVISION 03-23-12

Dist	COUNTY	ROUTE	POST MILES TOTAL PROJECT	SHEET No.	TOTAL SHEETS
08	Riv,SBd	91,215	21.5/21.7, 43.2/45.2,0.0/5.1	293	1743

REGISTERED CIVIL ENGINEER 2-10-12 DATE

4-16-12
PLANS APPROVAL DATE

REGISTERED PROFESSIONAL ENGINEER REFAAT ELSHERIF No. C67382 Exp. 9-30-12 CIVIL STATE OF CALIFORNIA

THE STATE OF CALIFORNIA OR ITS OFFICERS OR AGENTS SHALL NOT BE RESPONSIBLE FOR THE ACCURACY OR COMPLETENESS OF SCANNED COPIES OF THIS PLAN SHEET.

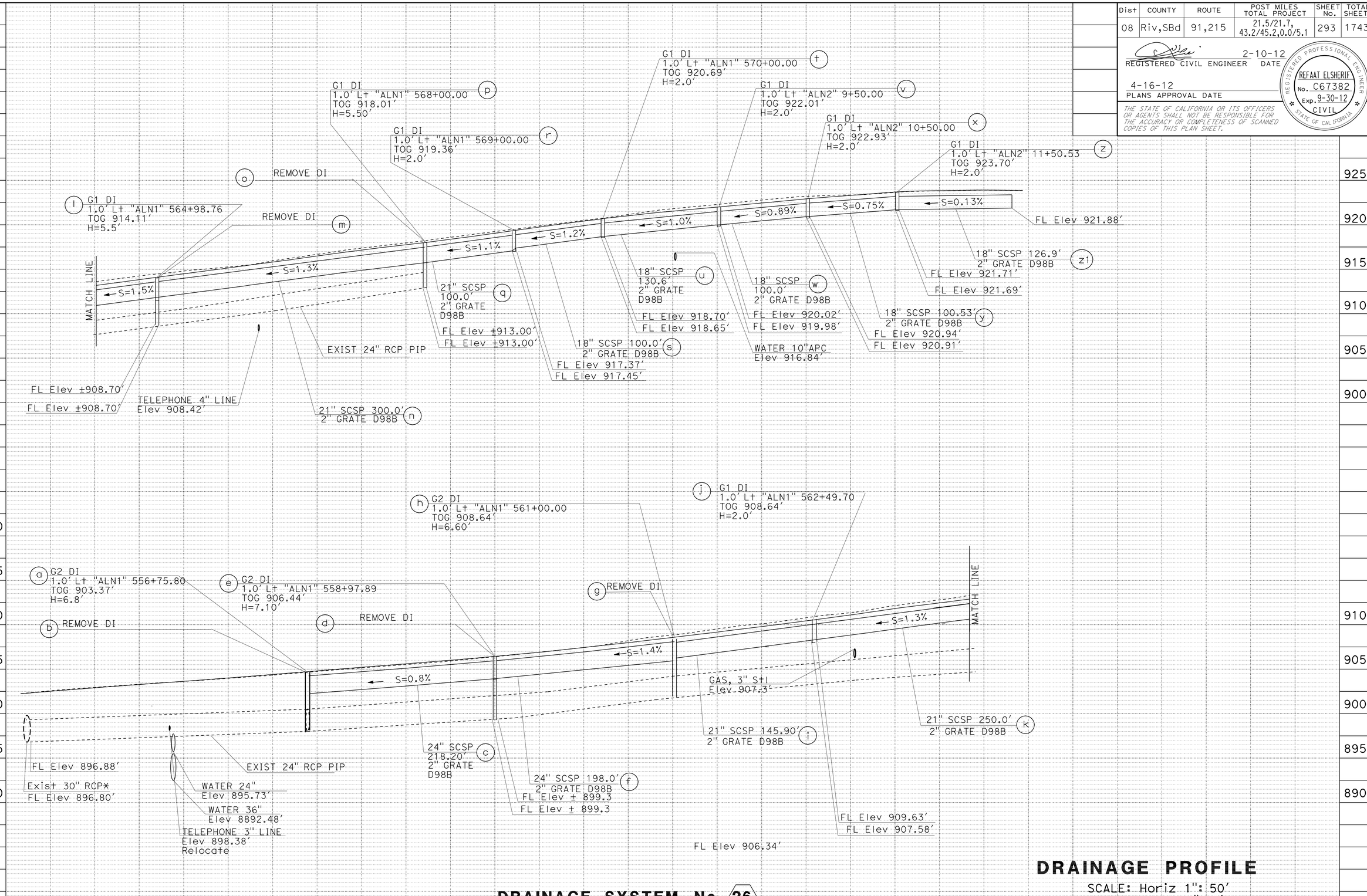

DRAINAGE SYSTEM No. 26

0.00' Lt "ALN1" 553+69.38

DRAINAGE PROFILE

SCALE: Horiz 1": 50'
Vert 1": 5'

DP- 11

STATE OF CALIFORNIA - DEPARTMENT OF TRANSPORTATION
Caltrans
DESIGN
FUNCTIONAL SUPERVISOR: BEN AMIRI
CALCULATED-DESIGNED BY: JOYA GILSTER
CHECKED BY: REFAAT ELSHERIF
REVISED BY
DATE REVISED

LAST REVISION 02-10-12
DATE PLOTTED => 17-APR-2012
TIME PLOTTED => 19:24

Dist	COUNTY	ROUTE	POST MILES TOTAL PROJECT	SHEET No.	TOTAL SHEETS
08	Riv,SBd	91,215	21.5/21.7, 43.2/45.2,0.0/5.1	294	1743

REGISTERED CIVIL ENGINEER 1-2-12 DATE

4-16-12
PLANS APPROVAL DATE

REGISTERED PROFESSIONAL ENGINEER
REFAAT ELSHERIF
No. C67382
Exp. 9-30-12
CIVIL
STATE OF CALIFORNIA

THE STATE OF CALIFORNIA OR ITS OFFICERS OR AGENTS SHALL NOT BE RESPONSIBLE FOR THE ACCURACY OR COMPLETENESS OF SCANNED COPIES OF THIS PLAN SHEET.

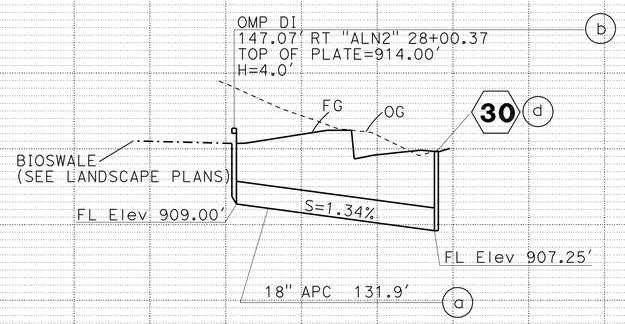

DRAINAGE SYSTEM No. 29
147.07' Rt "ALN2" 28+00.37

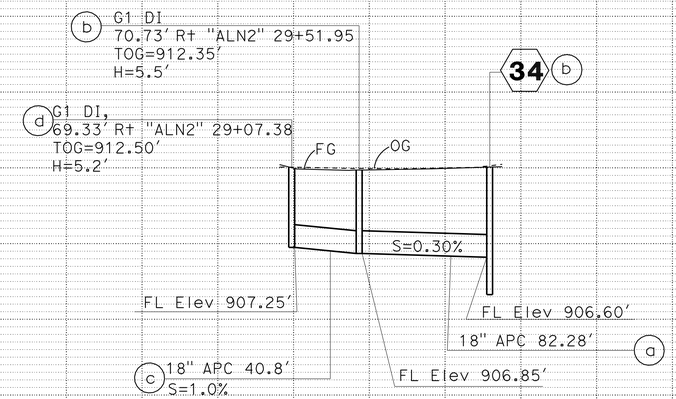

DRAINAGE SYSTEM No. 30
69.33' RT "ALN2" 29+7.38

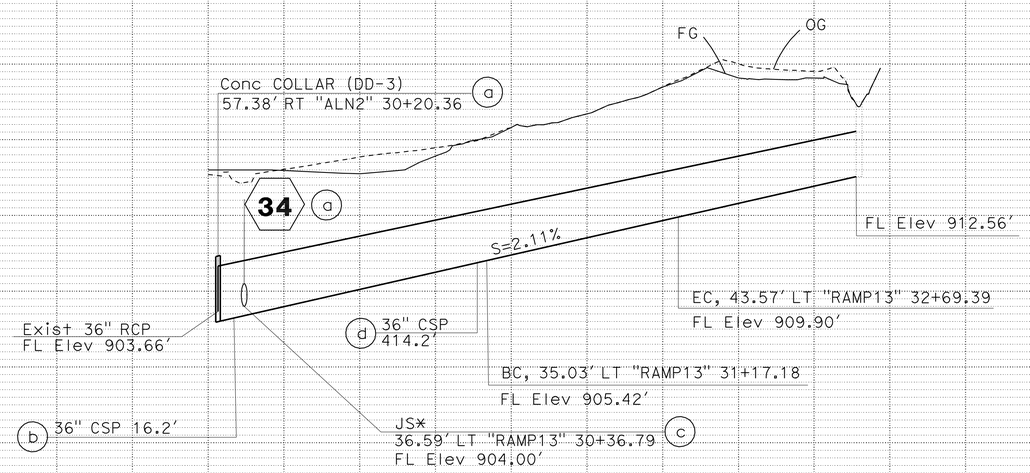

DRAINAGE SYSTEM No. 32
57.38' RT "ALN2" 30+20.36

DRAINAGE PROFILE
SCALE: Horiz 1": 20'
Vert 1": 4'

DP-12

STATE OF CALIFORNIA - DEPARTMENT OF TRANSPORTATION
Caltrans
DESIGN
FUNCTIONAL SUPERVISOR: BEN AMIRI
CALCULATED-DESIGNED BY: SHAHID AHMED
CHECKED BY: REFAAT ELSHERIF
REVISED BY
DATE REVISED

LAST REVISION 01-02-12
DATE PLOTTED => 17-APR-2012
TIME PLOTTED => 19:24

Dist	COUNTY	ROUTE	POST MILES TOTAL PROJECT	SHEET No.	TOTAL SHEETS
08	Riv,SBd	91,215	21.5/21.7, 43.2/45.2,0.0/5.1	295	1743

REGISTERED CIVIL ENGINEER 1-2-12 DATE

4-16-12
PLANS APPROVAL DATE

REGISTERED PROFESSIONAL ENGINEER REFAAT ELSHERIF No. C67382 Exp. 9-30-12 CIVIL STATE OF CALIFORNIA

THE STATE OF CALIFORNIA OR ITS OFFICERS OR AGENTS SHALL NOT BE RESPONSIBLE FOR THE ACCURACY OR COMPLETENESS OF SCANNED COPIES OF THIS PLAN SHEET.

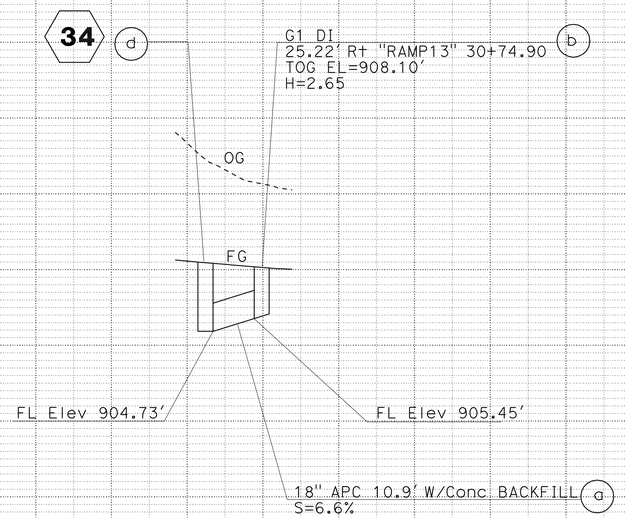

DRAINAGE SYSTEM No. 33
25.22' RT "RAMP13" 30+74.90

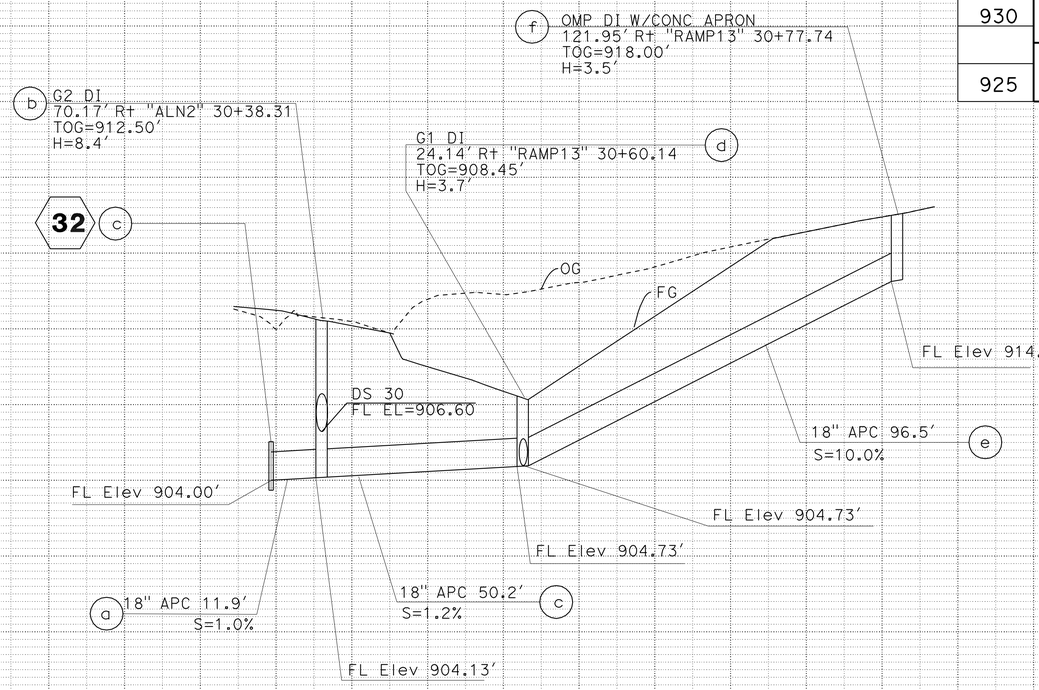

DRAINAGE SYSTEM No. 34
"RAMP13" LINE STA 30+60.00

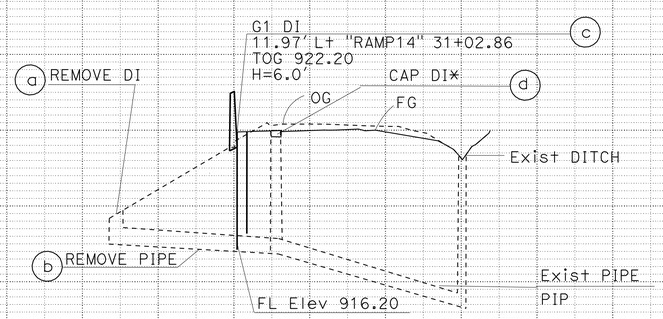

DRAINAGE SYSTEM No. 35
11.97' LT "RAMP14" 31+02.85

DRAINAGE PROFILE

SCALE: Horiz 1": 50'
Vert 1": 5'

DP-13

STATE OF CALIFORNIA - DEPARTMENT OF TRANSPORTATION
Caltrans
DESIGN
FUNCTIONAL SUPERVISOR: BEN AMIRI
CALCULATED-DESIGNED BY: JOYA GILSTER
CHECKED BY: REFAAT ELSHERIF
REVISED BY
DATE REVISED

LAST REVISION 01-02-12
DATE PLOTTED => 17-APR-2012
TIME PLOTTED => 19:24

Dist	COUNTY	ROUTE	POST MILES TOTAL PROJECT	SHEET No.	TOTAL SHEETS
08	Riv,SBd	91,215	21.5/21.7, 43.2/45.2,0.0/5.1	296	1743

REGISTERED CIVIL ENGINEER 4-6-12 DATE

4-16-12
PLANS APPROVAL DATE

REGISTERED PROFESSIONAL ENGINEER REFAAT ELSHERIF No. C67382 Exp. 9-30-12 CIVIL STATE OF CALIFORNIA

THE STATE OF CALIFORNIA OR ITS OFFICERS OR AGENTS SHALL NOT BE RESPONSIBLE FOR THE ACCURACY OR COMPLETENESS OF SCANNED COPIES OF THIS PLAN SHEET.

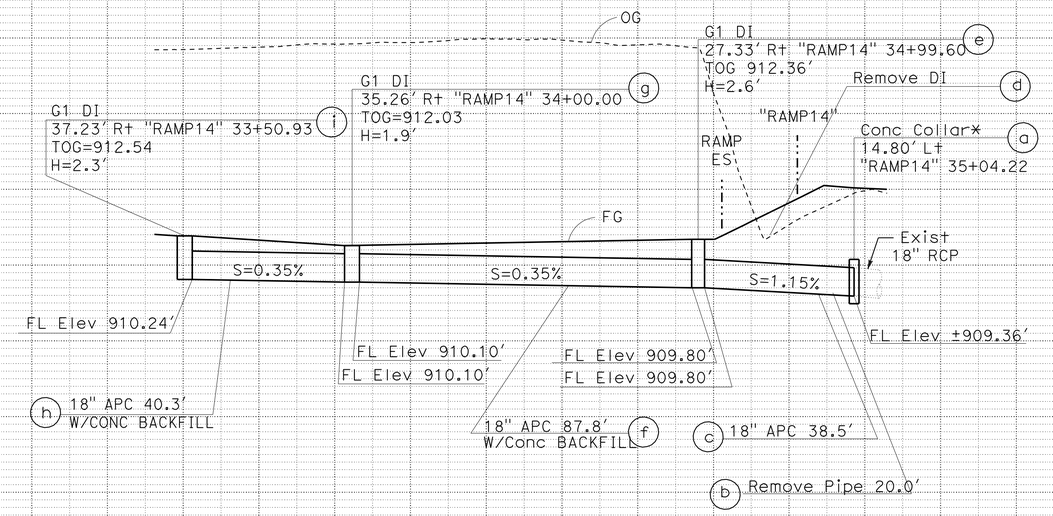

DRAINAGE SYSTEM No. 36
70.26' Rt "ALN2" 35+02.97

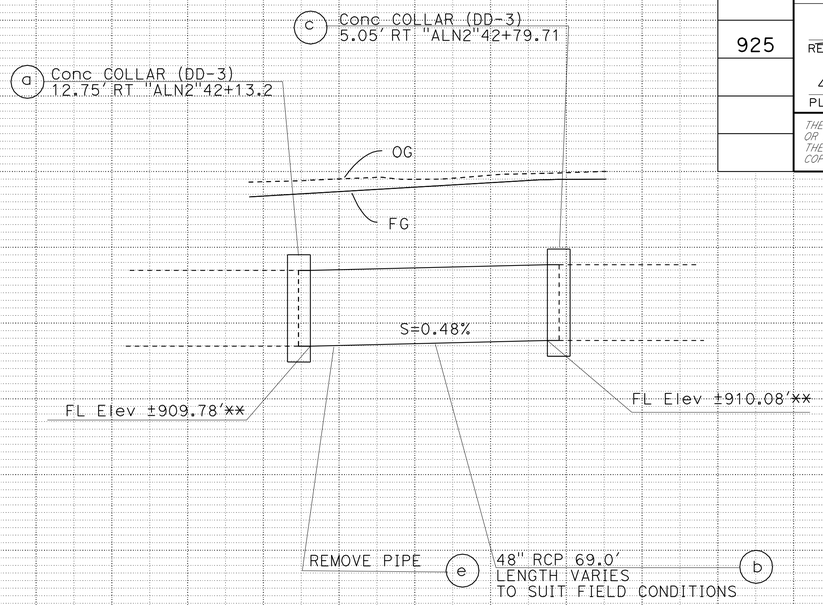

DRAINAGE SYSTEM No. 37
12.75' Rt "ALN2" 42+13.20

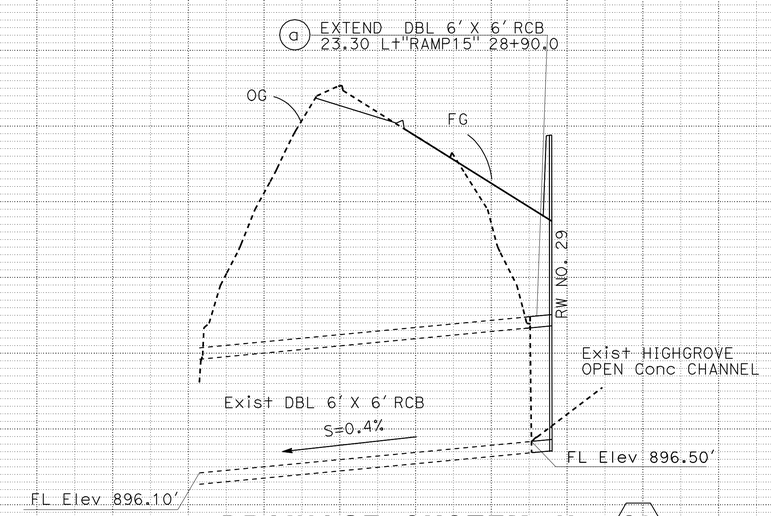

DRAINAGE SYSTEM No. 39
"RAMP15" 29+00.00

DRAINAGE PROFILE

SCALE: Horiz 1": 20'
Vert 1": 4'

DP-14

STATE OF CALIFORNIA - DEPARTMENT OF TRANSPORTATION
Caltrans® DESIGN

FUNCTIONAL SUPERVISOR: BEN AMIRI

CALCULATED-DESIGNED BY: SHAHID AHMED
CHECKED BY: REFAAT ELSHERIF

REVISED BY | DATE REVISED

DATE PLOTTED => 17-APR-2012
TIME PLOTTED => 19:24
LAST REVISION 04-06-12

Dist	COUNTY	ROUTE	POST MILES TOTAL PROJECT	SHEET No.	TOTAL SHEETS
08	Riv,SBd	91,215	21.5/21.7, 43.2/45.2,0.0/5.1	297	1743

REGISTERED CIVIL ENGINEER 3-23-12 DATE

4-16-12
PLANS APPROVAL DATE

REGISTERED PROFESSIONAL ENGINEER
REFAAT ELSHERIF
No. C67382
Exp. 9-30-12
CIVIL
STATE OF CALIFORNIA

THE STATE OF CALIFORNIA OR ITS OFFICERS OR AGENTS SHALL NOT BE RESPONSIBLE FOR THE ACCURACY OR COMPLETENESS OF SCANNED COPIES OF THIS PLAN SHEET.

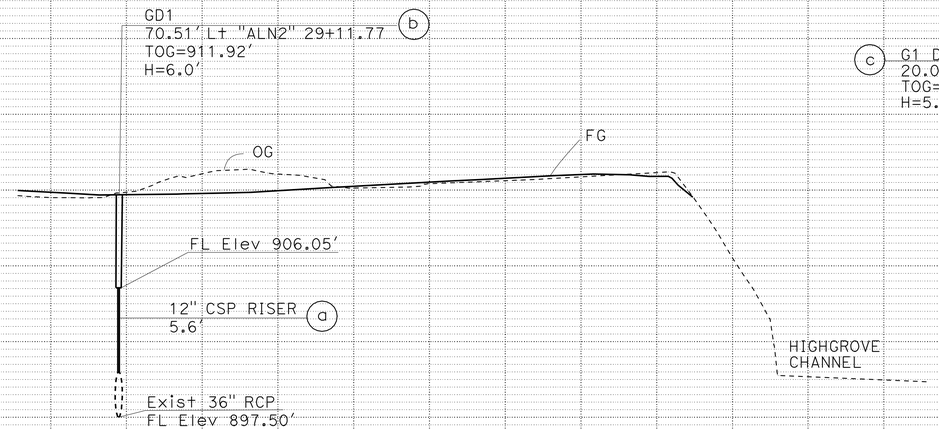

DRAINAGE SYSTEM No. 40
70.00' Lt "ALN2" 29+10.89

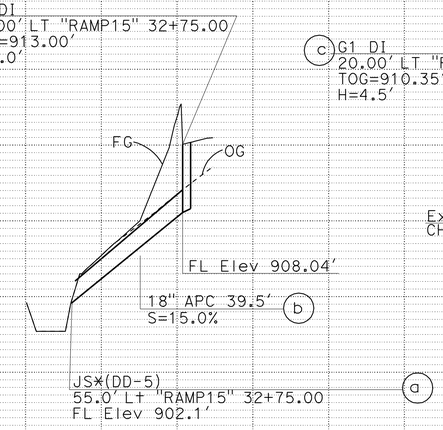

DRAINAGE SYSTEM No. 41
20.00' Lt "RAMP15" 32+75.00

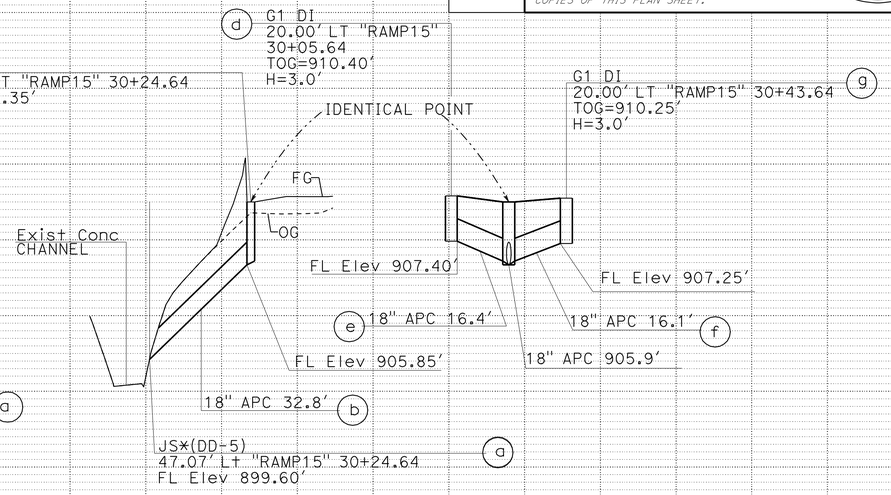

DRAINAGE SYSTEM No. 42
20.00' Lt "RAMP15" 30+24.64

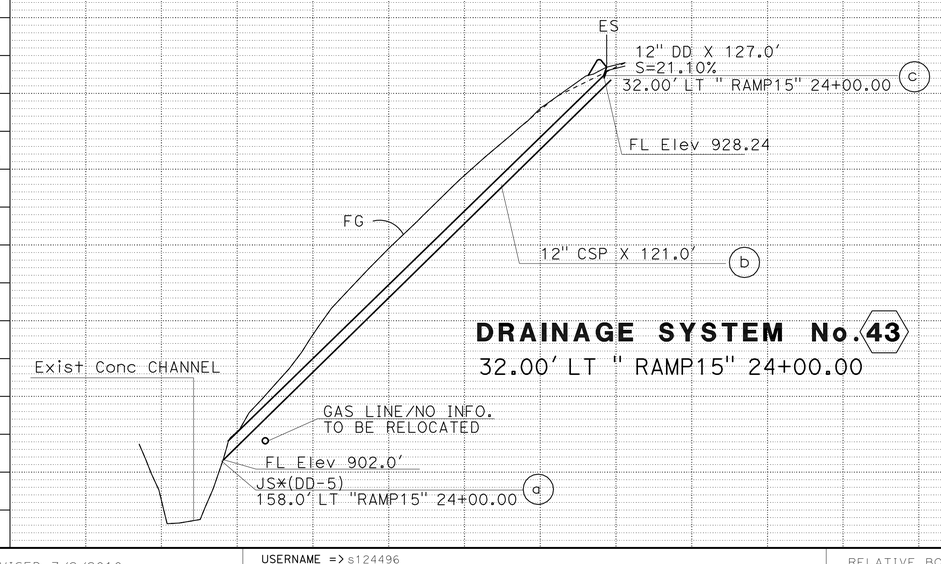

DRAINAGE SYSTEM No. 43
32.00' LT " RAMP15" 24+00.00

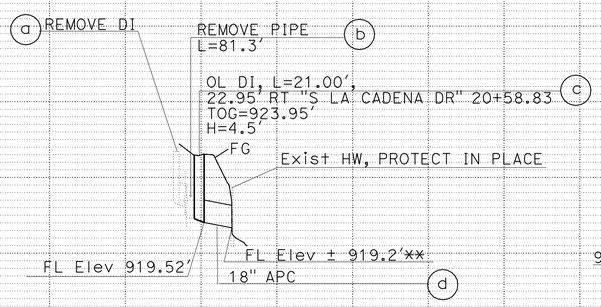

DRAINAGE SYSTEM No. 44
22.95' Rt "S LA CADENA DR" 20+58.83

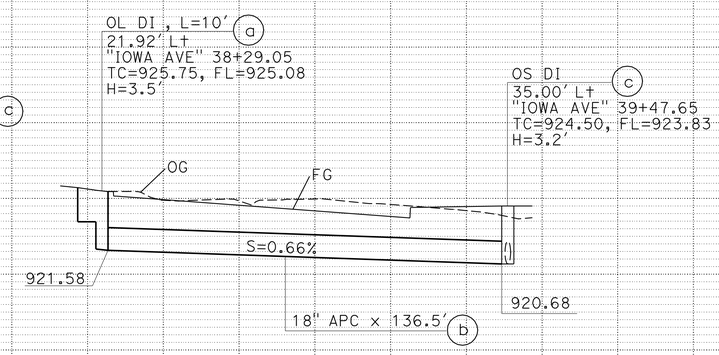

DRAINAGE SYSTEM No. 45
25.20' Lt "IOWA AVE" 38+29.05

DRAINAGE PROFILE
SCALE: Horiz 1": 50'
Vert 1": 5'

DP-15

STATE OF CALIFORNIA - DEPARTMENT OF TRANSPORTATION
Caltrans
DESIGN
FUNCTIONAL SUPERVISOR: BEN AMIRI
CALCULATED-DESIGNED BY: JOYA GILSTER
CHECKED BY: REFAAT ELSHERIF
REVISED BY
DATE REVISED

LAST REVISION 03-23-12
DATE PLOTTED => 17-APR-2012
TIME PLOTTED => 19:24

Dist	COUNTY	ROUTE	POST MILES TOTAL PROJECT	SHEET No.	TOTAL SHEETS
08	Riv,SBd	91,215	21.5/21.7, 43.2/45.2,0.0/5.1	298	1743

REGISTERED CIVIL ENGINEER 3-23-12 DATE

4-16-12
PLANS APPROVAL DATE

REGISTERED PROFESSIONAL ENGINEER REFAAT ELSHERIF No. C67382 Exp. 9-30-12 CIVIL STATE OF CALIFORNIA

THE STATE OF CALIFORNIA OR ITS OFFICERS OR AGENTS SHALL NOT BE RESPONSIBLE FOR THE ACCURACY OR COMPLETENESS OF SCANNED COPIES OF THIS PLAN SHEET.

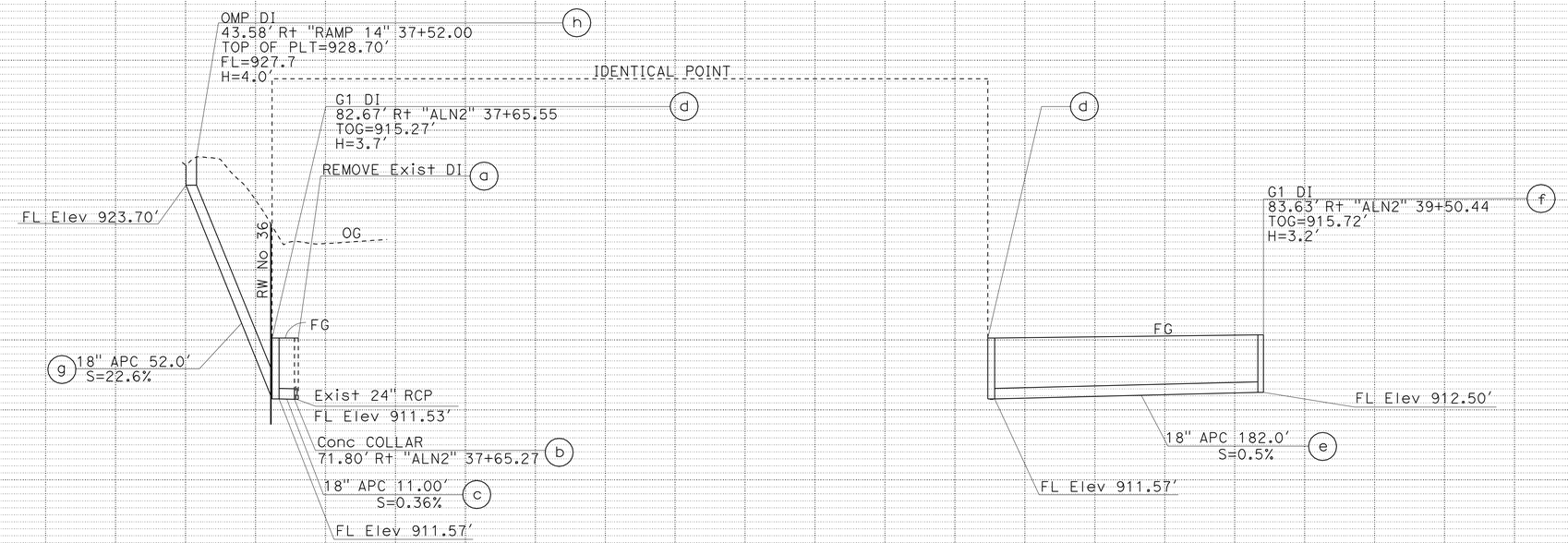

DRAINAGE SYSTEM No.48
83.63' Rt "ALN2" 37+65.55

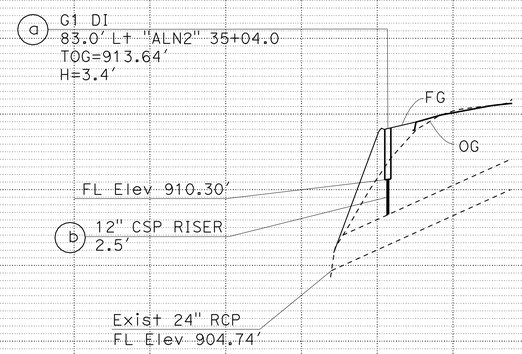

DRAINAGE SYSTEM No.46
82.83' Lt "ALN2" 35+04.00

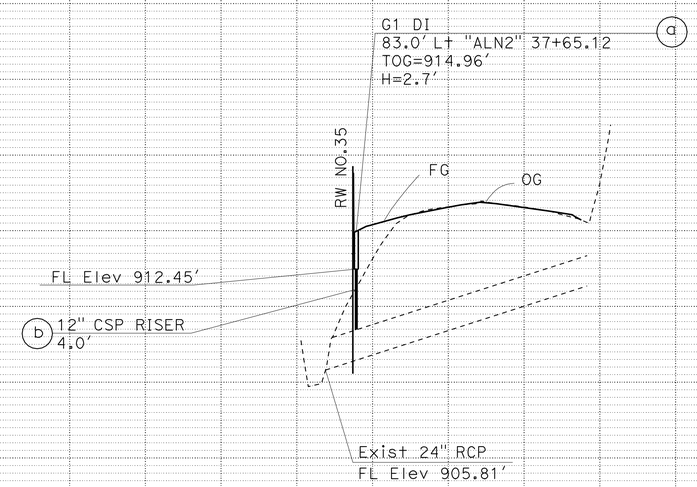

DRAINAGE SYSTEM No.47
83.00' Lt "ALN2" 37+65.11

DRAINAGE PROFILE

SCALE: Horiz 1": 50'
Vert 1": 5'

DP-16

STATE OF CALIFORNIA - DEPARTMENT OF TRANSPORTATION
Caltrans
DESIGN
FUNCTIONAL SUPERVISOR: BEN AMIRI
CALCULATED-DESIGNED BY: JOYA GILSTER
CHECKED BY: REFAAT ELSHERIF
REVISED BY
DATE REVISED

LAST REVISION 03-23-12
DATE PLOTTED => 17-APR-2012
TIME PLOTTED => 19:24

Dist	COUNTY	ROUTE	POST MILES TOTAL PROJECT	SHEET No.	TOTAL SHEETS
08	Riv,SBd	91,215	21.5/21.7, 43.2/45.2,0.0/5.1	299	1743

REGISTERED CIVIL ENGINEER 4-5-12 DATE

4-16-12
PLANS APPROVAL DATE

REGISTERED PROFESSIONAL ENGINEER
REFAAT ELSHERIF
No. C67382
Exp. 9-30-12
CIVIL
STATE OF CALIFORNIA

THE STATE OF CALIFORNIA OR ITS OFFICERS OR AGENTS SHALL NOT BE RESPONSIBLE FOR THE ACCURACY OR COMPLETENESS OF SCANNED COPIES OF THIS PLAN SHEET.

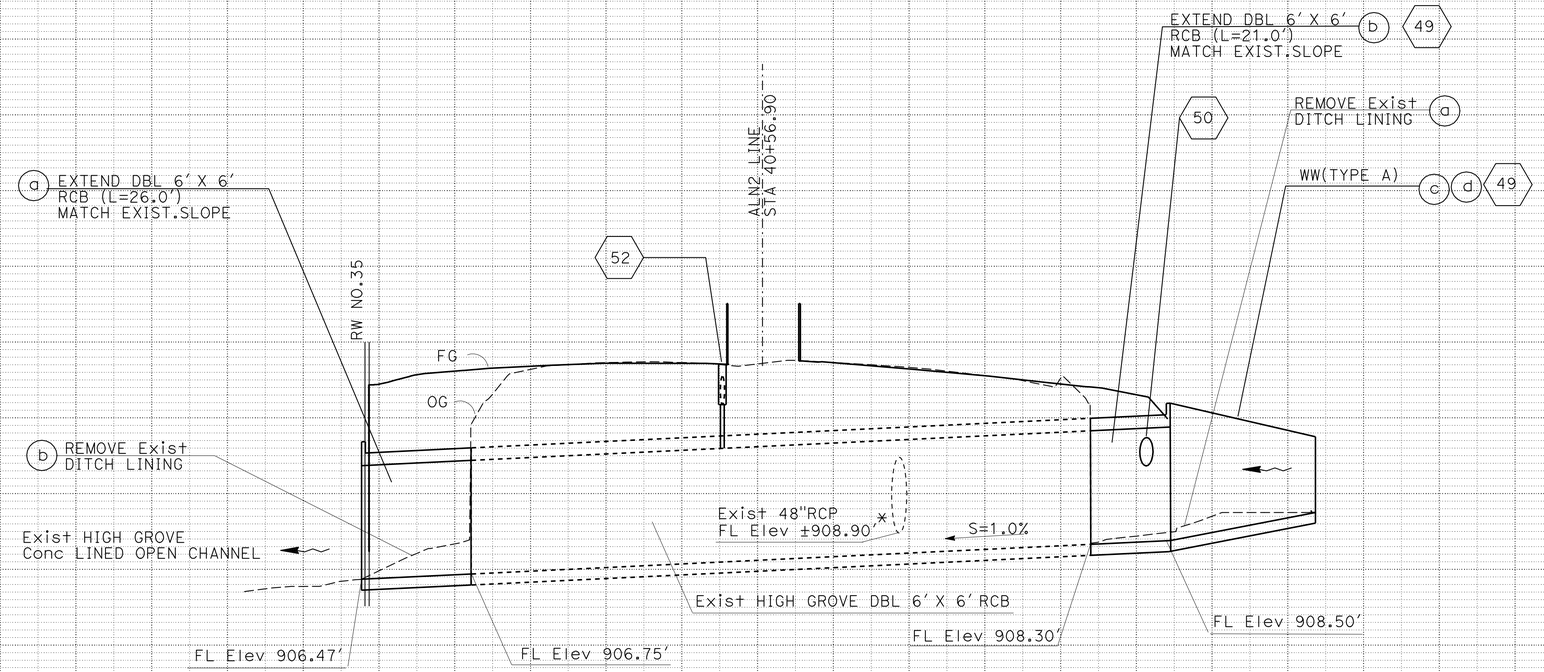

DRAINAGE SYSTEM No. 51

FROM 63.03' Lt "ALN2" 40+12.34
TO 84.53' Lt "ALN2" 39+97.90

DRAINAGE SYSTEM No. 49

FROM 70.52' Rt "ALN2" 41+06.3
TO 87.92' Rt "ALN2" 41+19.24

DRAINAGE PROFILE

SCALE: Horiz 1": 20'
Vert 1": 4'

DP-17

STATE OF CALIFORNIA - DEPARTMENT OF TRANSPORTATION
Caltrans
DESIGN
FUNCTIONAL SUPERVISOR: BEN AMIRI
CALCULATED-DESIGNED BY: SHAHID AHMED
CHECKED BY: REFAAT ELSHERIF
REVISED BY
DATE REVISED

LAST REVISION 04-05-12
DATE PLOTTED => 17-APR-2012
TIME PLOTTED => 19:24

Dist	COUNTY	ROUTE	POST MILES TOTAL PROJECT	SHEET No.	TOTAL SHEETS
08	Riv,SBd	91,215	21.5/21.7, 43.2/45.2,0.0/5.1	300	1743

REGISTERED CIVIL ENGINEER 3-23-12 DATE

4-16-12
PLANS APPROVAL DATE

REGISTERED PROFESSIONAL ENGINEER REFAAT ELSHERIF No. C67382 Exp. 9-30-12 CIVIL STATE OF CALIFORNIA

THE STATE OF CALIFORNIA OR ITS OFFICERS OR AGENTS SHALL NOT BE RESPONSIBLE FOR THE ACCURACY OR COMPLETENESS OF SCANNED COPIES OF THIS PLAN SHEET.

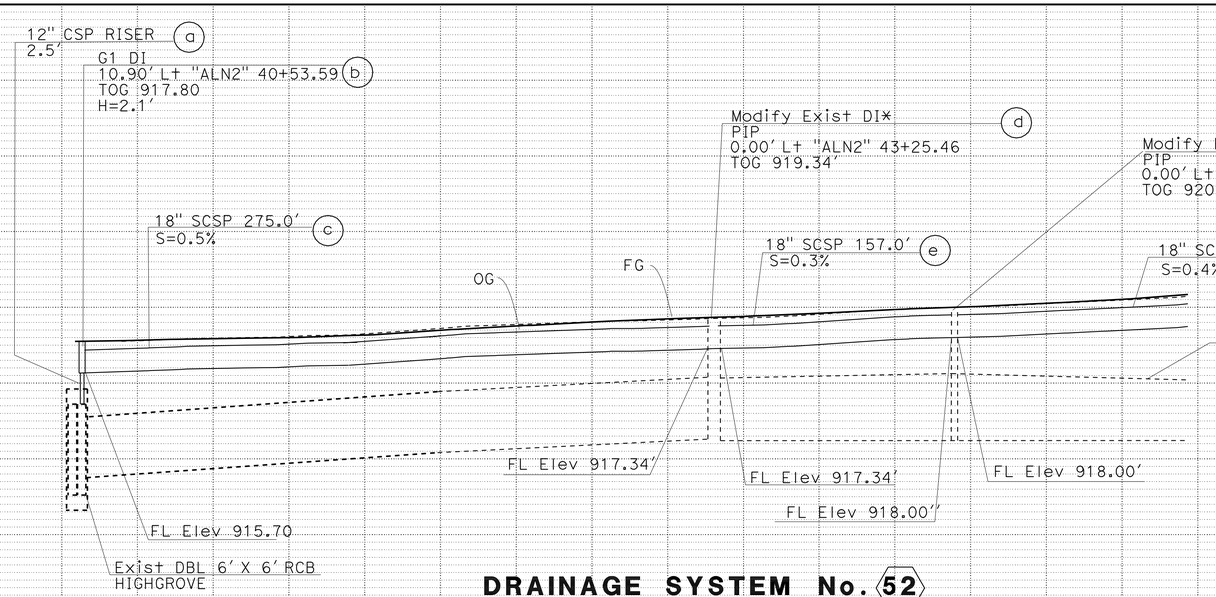

DRAINAGE SYSTEM No. 52
0.00' Lt "ALN2" 42+28.40

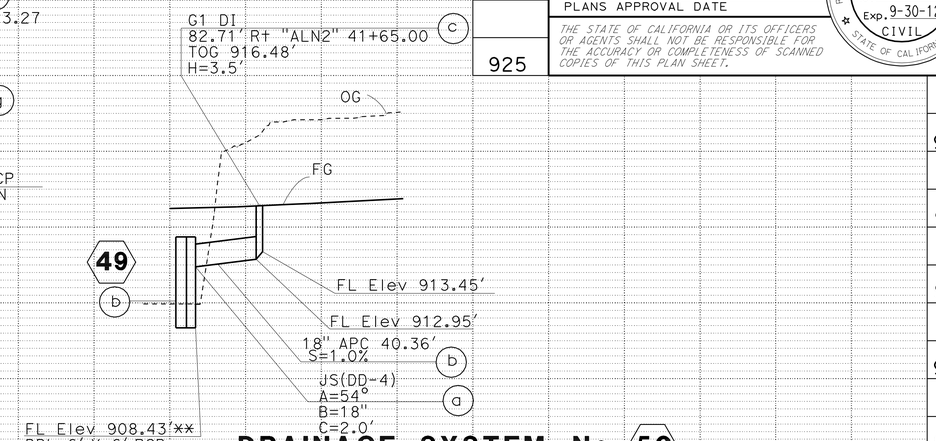

DRAINAGE SYSTEM No. 50
80.96' Rt "ALN2" 41+21.19

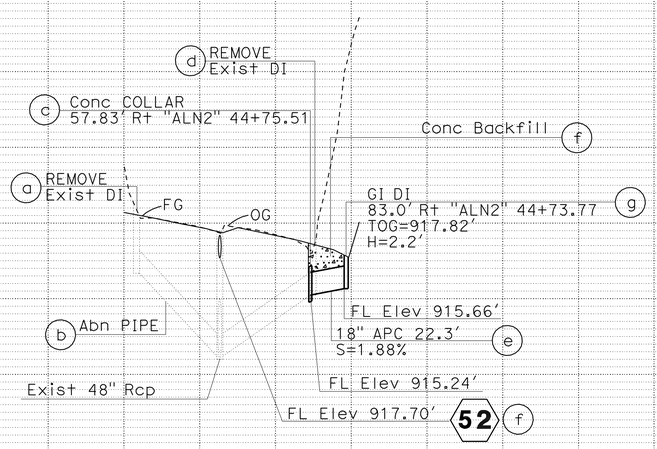

DRAINAGE SYSTEM NO. 53
83.0' Rt "ALN2" 44+73.77

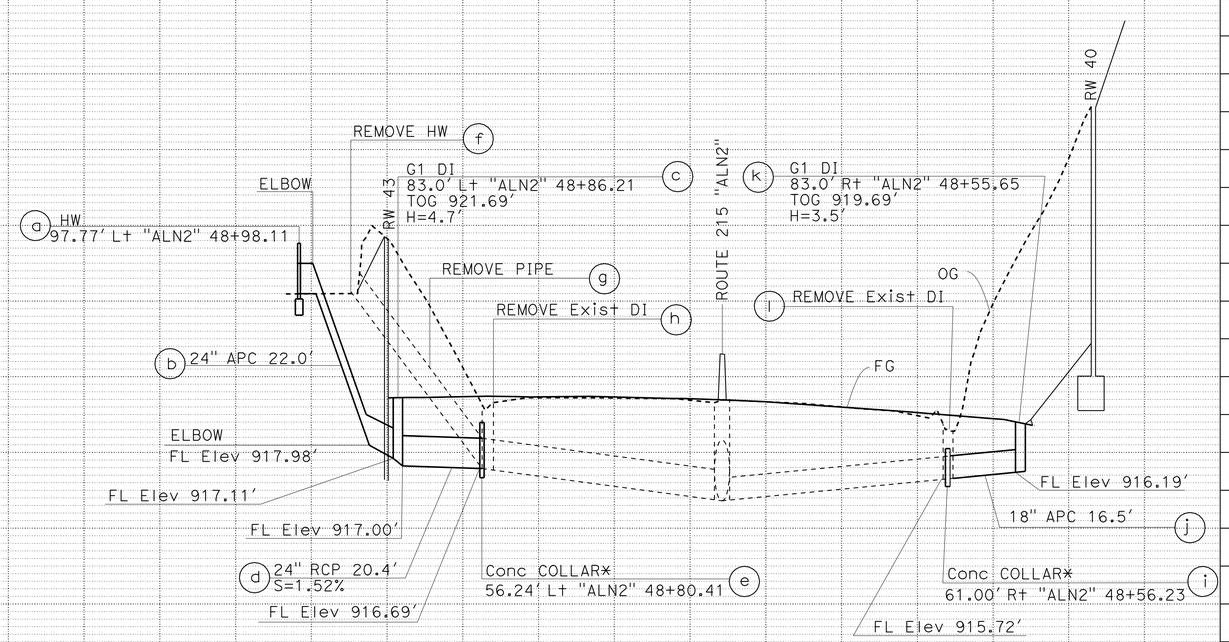

DRAINAGE SYSTEM No. 54
"ALN2" 48+56.38

DRAINAGE PROFILE

SCALE: Horiz 1": 50'
Vert 1": 5'

DP-18

STATE OF CALIFORNIA - DEPARTMENT OF TRANSPORTATION
DESIGN
FUNCTIONAL SUPERVISOR: BEN AMIRI
CALCULATED-DESIGNED BY: JOYA GILSTER
CHECKED BY: REFAAT ELSHERIF
REVISED BY
DATE REVISED

LAST REVISION 03-23-12
DATE PLOTTED => 17-APR-2012
TIME PLOTTED => 19:25